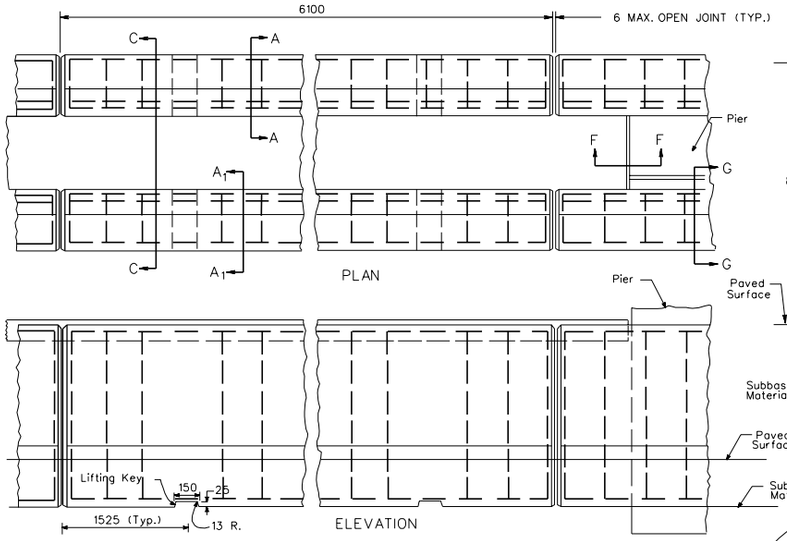


380 X 815 PRECAST CONCRETE BARRIER CURB UNIT

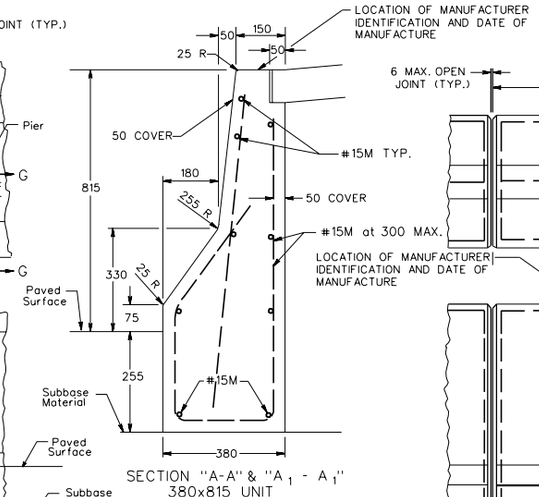


SECTION "A-A" & "A1 - A1"
380x815 UNIT

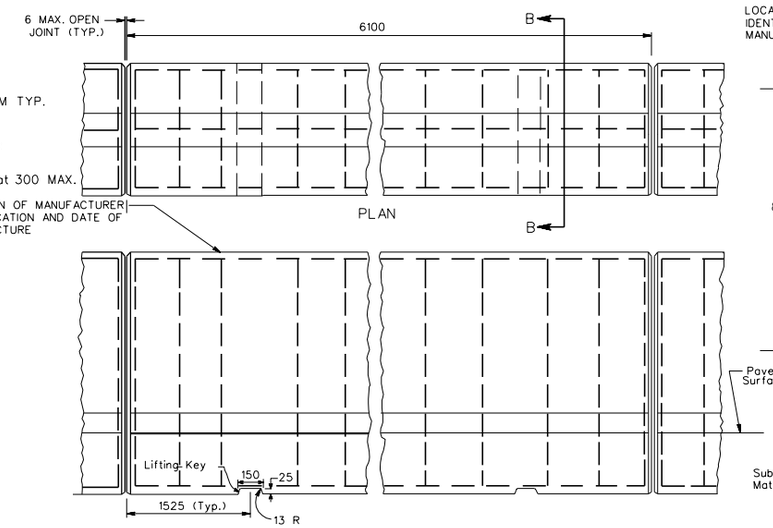


ELEVATION

610x815 PRECAST CONCRETE BARRIER CURB UNIT

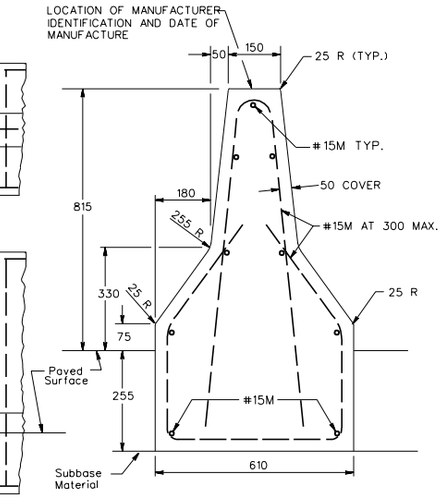


SECTION "B-B"
610x815 UNIT

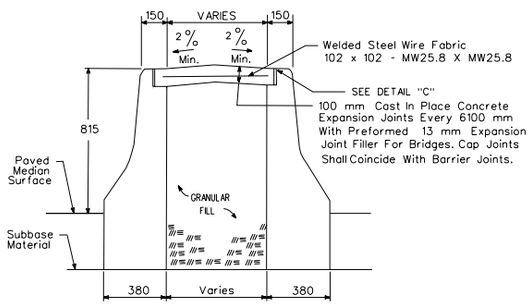


SECTION "C-C"

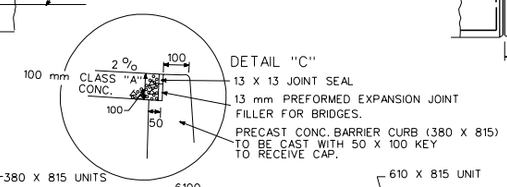


DETAIL "C"

13 X 13 JOINT SEAL

13 mm PREFORMED EXPANSION JOINT FILLER FOR BRIDGES.

PRECAST CONC. BARRIER CURB (380 X 815) TO BE CAST WITH 50 X 100 KEY TO RECEIVE CAP.

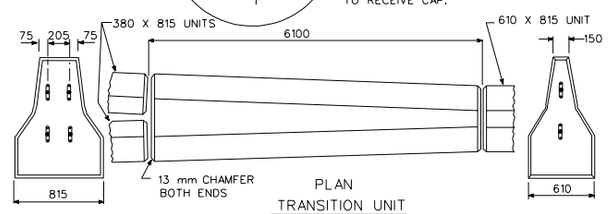


END VIEW

PLAN
TRANSITION UNIT

END VIEW

TRANSITION UNIT - USED TO TRANSITION FROM 380 X 815 UNITS TO 610 X 815 UNIT (PAID AS 610 X 815)

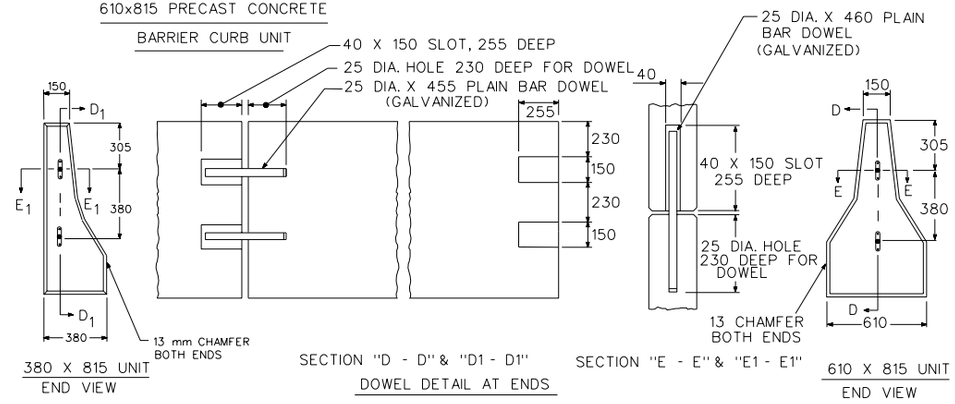


380 X 815 UNIT
END VIEW

SECTION "D - D" & "D1 - D1"
DOWEL DETAIL AT ENDS

SECTION "E - E" & "E1 - E1"

610 X 815 UNIT
END VIEW

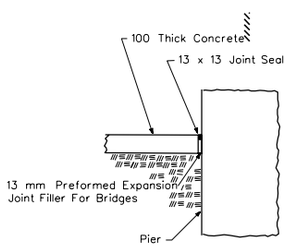


SECTION "F-F"

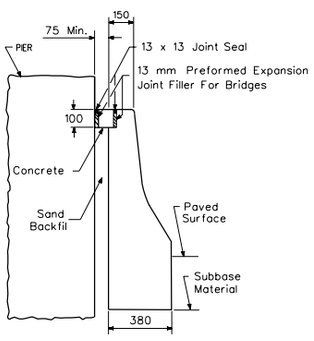


SECTION "G-G"

NOTES

1. ALTERNATE DESIGNS FOR THE FOLLOWING ITEMS MAY BE SUBMITTED TO THE ENGINEER FOR APPROVAL
   a) UNIT END CONNECTIONS SIMILAR TO THE DESIGNS SHOWN
   b) LIFTING HOLES, KEYS OR OTHER HANDLING DEVICES
2. TERMINAL END TREATMENTS SHALL BE CONSTRUCTED AS SHOWN ON THE PLANS OR AS DIRECTED BY THE ENGINEER

MANUAL REVISIONS TO THIS DOCUMENT ARE PROHIBITED. ALL REVISIONS MUST BE PERFORMED ON
Cadd File: GSA2-(200,200)821A.DGN

CONNECTICUT DOT. OFFICE OF ENGINEERING COMPUTER AIDED DESIGN

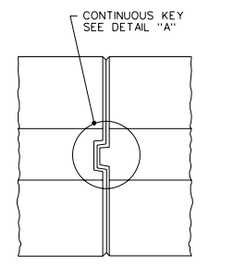


PLAN VIEW 610 X 815 UNIT

ALTERNATE CONNECTION AT ENDS

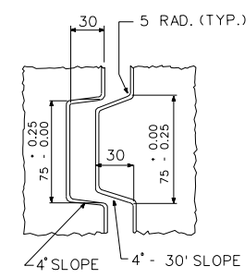


DETAIL "A"

ALL DIMENSIONS ARE IN MILLIMETERS (mm) EXCEPT AS NOTED.

PRECAST CONCRETE BARRIER CURB

CONN. DEPT. OF TRANSPORTATION 8/95
CONN. DEPT. OF TRANSPORTATION 8/95

M821-A