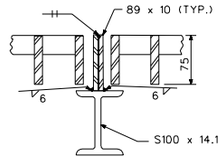

DETAIL "C"

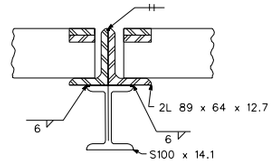

DETAIL "D"

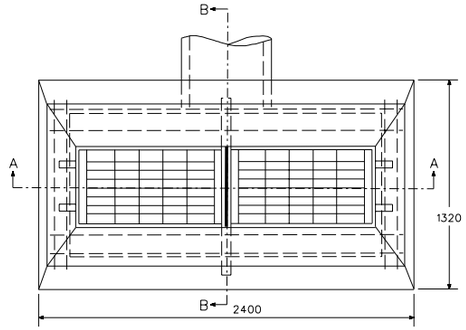

PLAN

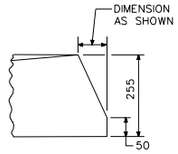

DETAIL "E"

ALTERNATE CONSTRUCTION OF TYPE II TOP

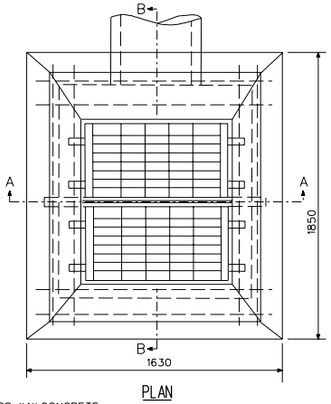

PLAN

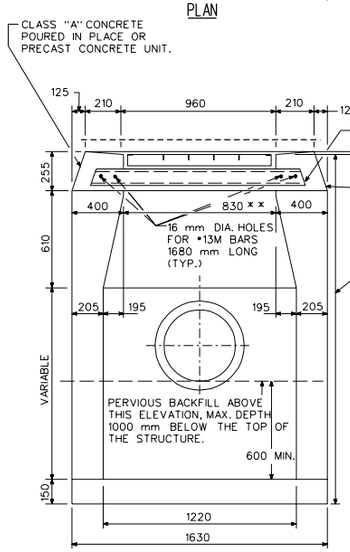

SECTION A-A

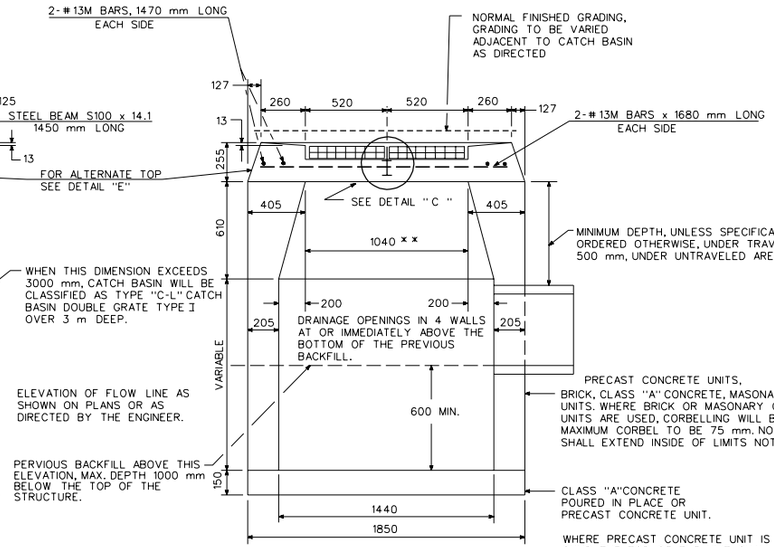

SECTION B-B

WHERE PRECAST CONCRETE UNIT IS USED FOR SUMP, THE TOP OF THE UNIT SHALL BE AT LEAST 150 mm BELOW THE BOTTOM OF THE PIPE OUTLETTING FROM THE CATCH BASIN.

TYPE "C-L" CATCH BASIN DOUBLE GRATE - TYPE I

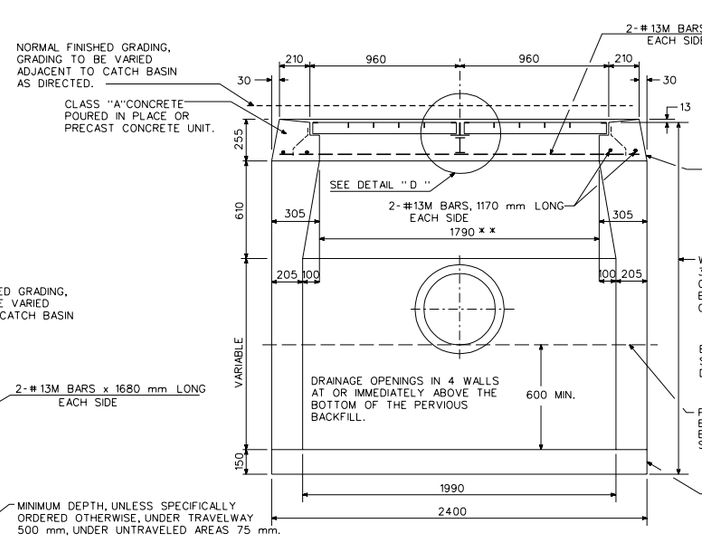

SECTION A-A

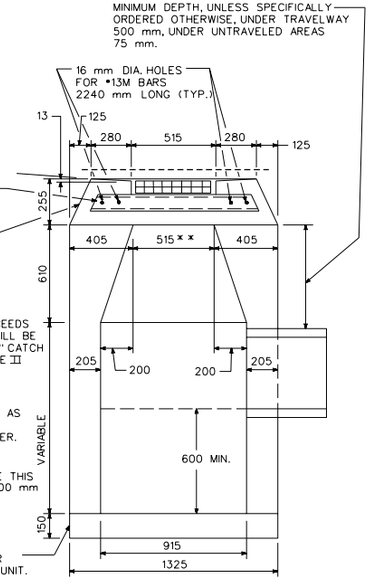

SECTION B-B

TYPE "C-L" CATCH BASIN DOUBLE GRATE - TYPE II

NOTES :

1. FOR DETAILS OF STEEL FRAME & GRATE SEE STANDARD SHEET NO. M507-K TWO FRAMES & GRATES REQUIRED FOR EACH CATCH BASIN.
2. WALLS OF ALL CATCH BASINS OVER 3000 mm DEEP TO BE INCREASED TO 305 mm THICKNESS, INSIDE DIMENSIONS TO REMAIN THE SAME.
3. ALL STEEL, EXCEPT REINFORCING BARS, SHALL BE GALVANIZED IN ACCORDANCE WITH M.06.03.
4. ALL BARS SHALL HAVE 50 mm COVER.
5. ALL REBARS ARE METRIC DESIGNATIONS.
6. SEE STANDARD SHEET NO. M507-H FOR DETAILS OF PRECAST CONCRETE UNITS.
7. ALL DIMENSIONS ARE IN MILLIMETERS (mm) EXCEPT AS NOTED.

FILE: 507E.STD

DATE: Nov.-20-97

TYPE "C-L" CATCH BASIN DOUBLE GRATE – TYPE I AND II M507-E