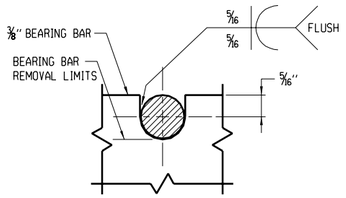

NOTE:
5/8" DIA. ROUND BAR SHALL CONTACT BEARING BAR AT BOTTOM AND BE FLUSH AT TOP.

ROUND BAR ATTACHMENT

CATCH BASIN GRATE
TYPE A

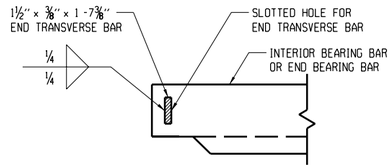

END TRANSVERSE BAR ATTACHMENT

CATCH BASIN GRATE
TYPE A & B

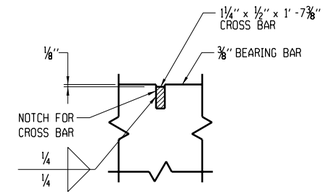

CROSS BAR ATTACHMENT

CATCH BASIN GRATE
TYPE B

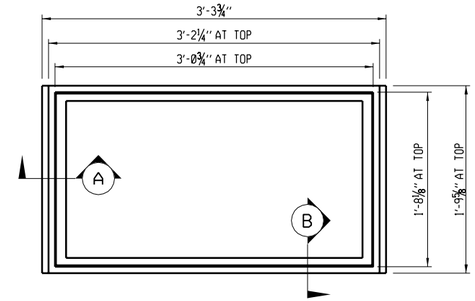

PLAN

GENERAL NOTES:

1. STEEL OR CAST IRON SHALL BE USED FOR FRAMES. STEEL SHALL BE USED FOR TYPE "A" & "B" GRATES.

2. TYPE "A" GRATES SHALL BE USED ON ALL ROADWAYS WHERE BICYCLE TRAFFIC IS ALLOWED OR AS DIRECTED BY THE ENGINEER.

3. TYPE "B" GRATES SHALL BE USED ON ALL LIMITED ACCESS HIGHWAYS, RAMPS AND WHERE BICYCLE TRAFFIC IS NOT ALLOWED OR AS DIRECTED BY THE ENGINEER.

4. STEEL FRAMES AND GRATES SHALL BE GALVANIZED IN ACCORDANCE WITH ARTICLE M.06.03.

5. DO NOT GALVANIZE CAST IRON FRAMES.

6. DIMENSIONAL TOLERANCES SHALL BE ±1/16".

7. ALL STEEL BARS SHALL BE WELDED AT ALL INTERSECTIONS.

8. ALL WELDING SHALL CONFORM TO THE REQUIREMENTS OF AWS STRUCTURAL WELDING CODE, D1.1.

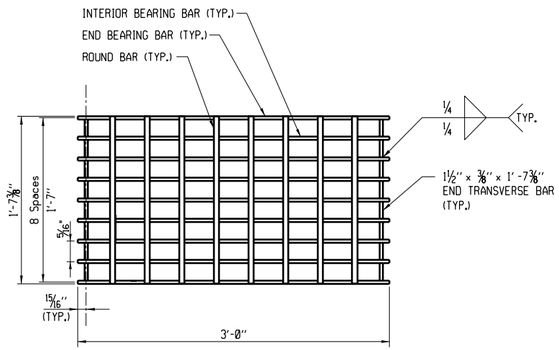

PLAN

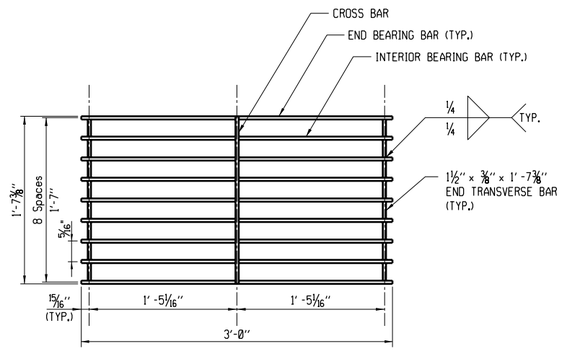

PLAN

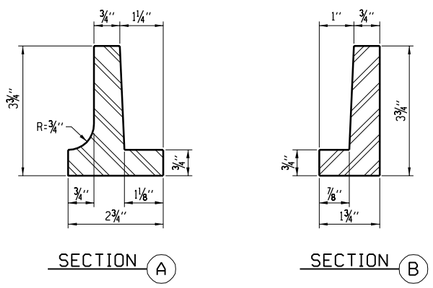

CAST IRON FRAME ALTERNATE

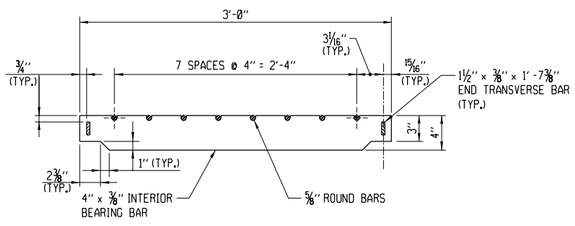

ELEVATION - INTERIOR BEARING BAR

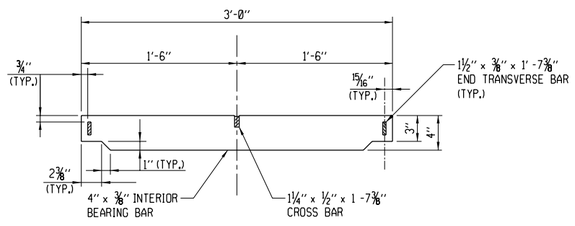

ELEVATION - INTERIOR BEARING BAR

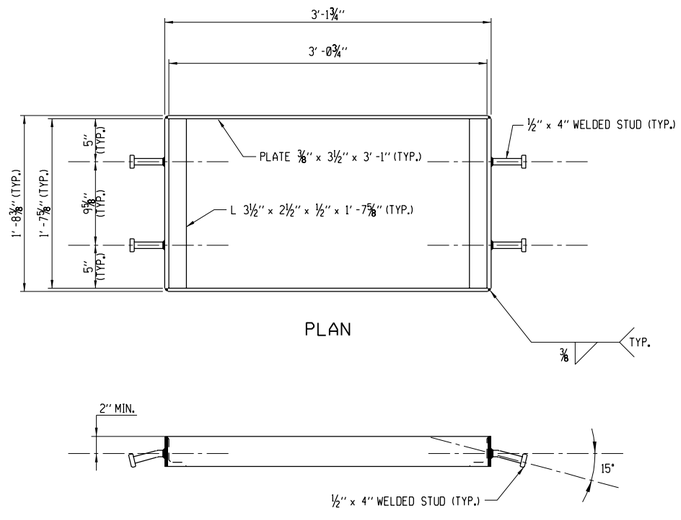

PLAN

WELDED STUD ANCHOR DETAILS

STEEL FRAME

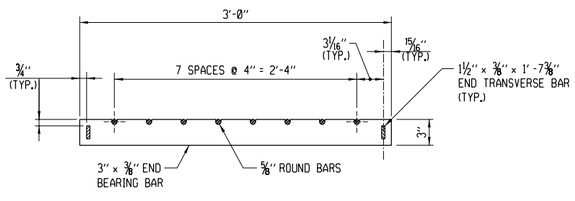

ELEVATION - END BEARING BAR

CATCH BASIN GRATE TYPE A

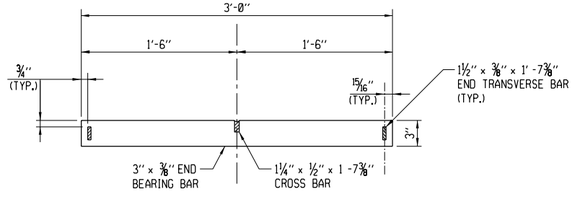

ELEVATION - END BEARING BAR

CATCH BASIN GRATE TYPE B

REVISION NO.	DATE	DESCRIPTION

SUBMITTED BY: TIMOTHY M. WILSON, TRANSPORTATION PRINCIPAL ENGINEER — DATE: 12/01/03
APPROVAL REC. — MANAGER OF DESIGN — DATE:
APPROVED: — TRANSPORTATION ENGINEERING ADMINISTRATOR — DATE:
F.H.W.A. APPROVAL: — DIVISION ADMINISTRATOR — DATE:

CADD FILE: 507k.dgn
PLOTTED DATE: 10-Feb-04
SCALE: NOT TO SCALE

STATE OF CONNECTICUT
DEPARTMENT OF TRANSPORTATION
STANDARD DRAWING

OFFICE OF ENGINEERING

DRAWING TITLE: CATCH BASIN FRAMES AND GRATES

STANDARD NO.: 507-K