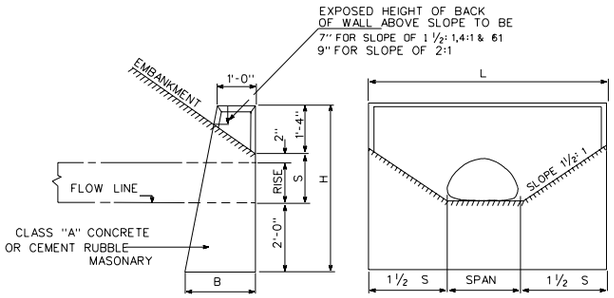

WALL AT FOOT OF SLOPE

FRONT ELEVATION

DIMENSIONS AND QUANTITIES FOR ONE ENDWALL BASED ON S=RISE + 2"							
SPAN	RISE	S	H	L	BATTER	B	VOL.
INS.	INS.	FT.&INS	FT.&INS	FT.&INS	INS/FT	FT.&INS	C.Y.
18	11	1'-1"	4'-5"	4'-9"	2 1/2"	1'-11"	1.13
22	13	1'-3"	4'-7"	5'-7"	2 1/2"	1'-11 1/2"	1.40
25	16	1'-6"	4'-10"	6'-7"	2 1/2"	2'-0 1/4"	1.78
29	18	1'-8"	5'-0"	7'-5"	2 1/2"	2'-0 1/2"	2.12
36	22	2'-0"	5'-4"	9'-0"	2 1/2"	2'-1 3/8"	2.77
43	27	2'-5"	5'-9"	10'-10"	2 1/2"	2'-2 3/8"	3.68
50	31	2'-9"	6'-1"	12'-5"	2 1/2"	2'-3 1/4"	4.57
58	36	3'-2"	6'-6"	14'-4"	3"	2'-7 1/2"	5.17 *
65	40	3'-6"	6'-10"	15'-11"	3"	2'-8 1/2"	6.52 *
72	44	3'-10"	7'-2"	17'-6"	3"	2'-9 1/2"	7.61 *
*VOLUME BASED ON AREA OF PIPE-ARCH AND WALL THICKNESS HAS BEEN DEDUCTED.							
A TOLERANCE OF PLUS OR MINUS INCH WILL BE PERMITTED IN DIMENSIONS SPAN,RISE,H,L AND B.							

STANDARD ENDWALL FOR PIPE-ARCH

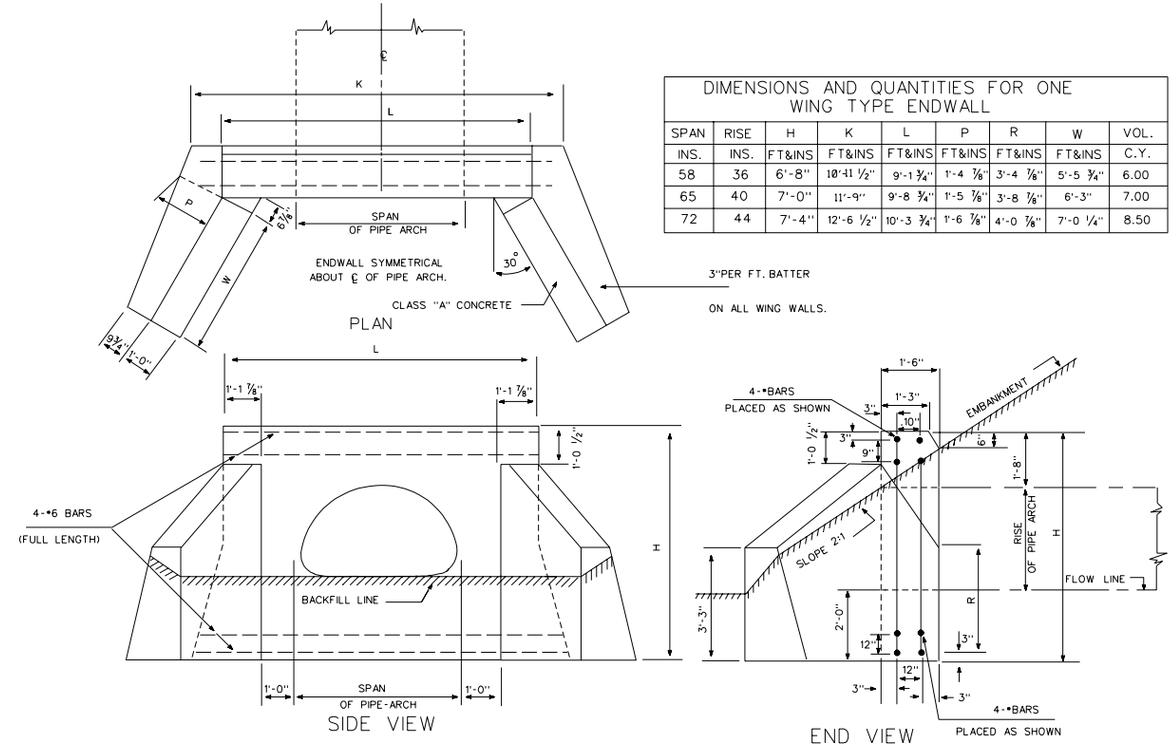

STANDARD WING TYPE ENDWALL FOR PIPE-ARCH

DIMENSIONS AND QUANTITIES FOR ONE WING TYPE ENDWALL								
SPAN	RISE	H	K	L	P	R	W	VOL.
INS.	INS.	FT&INS	FT&INS	FT&INS	FT&INS	FT&INS	FT&INS	C.Y.
58	36	6'-8"	10'-11 1/2"	9'-1 3/4"	1'-4 7/8"	3'-4 7/8"	5'-5 3/4"	6.00
65	40	7'-0"	11'-9"	9'-8 3/4"	1'-5 7/8"	3'-8 7/8"	6'-3"	7.00
72	44	7'-4"	12'-6 1/2"	10'-3 3/4"	1'-6 7/8"	4'-0 7/8"	7'-0 1/4"	8.50

NOTE:

COST OF REINFORCING BARS TO BE INCLUDED IN THE CONTRACT UNIT PRICE FOR CLASS "A" CONCRETE.

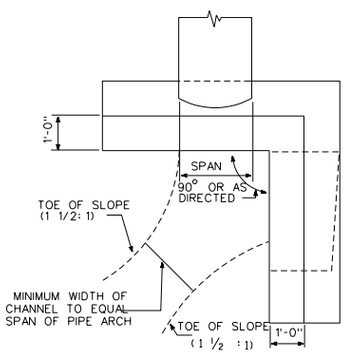

PLAN

DIMENSIONS					
SPAN	RISE	H	1/2L	BATTER	B
INS.	INS.	FT.&INS.	FT.&INS.	INS/FT.	FT.&INS.
18	11	4'-5"	2'-4 1/2"	2 1/2"	1'-11"
22	13	4'-7"	2'-9 1/2"	2 1/2"	1'-11 1/2"
25	16	4'-10"	3'-3 1/2"	2 1/2"	2'-0 1/4"
29	18	5'-0"	3'-8 1/2"	2 1/2"	2'-0 1/2"
36	22	5'-4"	4'-6"	2 1/2"	2'-1 3/8"
43	27	5'-9"	5'-5"	2 1/2"	2'-2 3/8'
50	31	6'-1"	6'-2 1/2"	2 1/2"	2'-3 1/4"
58	36	6'-6"	7'-2"	3"	2'-7 1/2"
65	40	6'-10"	7'-11 1/2"	3"	2'-8 1/2"
72	44	7'-2"	8'-9"	3"	2'-9 1/2"
A TOLERANCE OF PLUS OR MINUS 1 INCH WILL BE PERMITTED IN DIMENSIONS SPAN,RISE,1/2L AND B.					

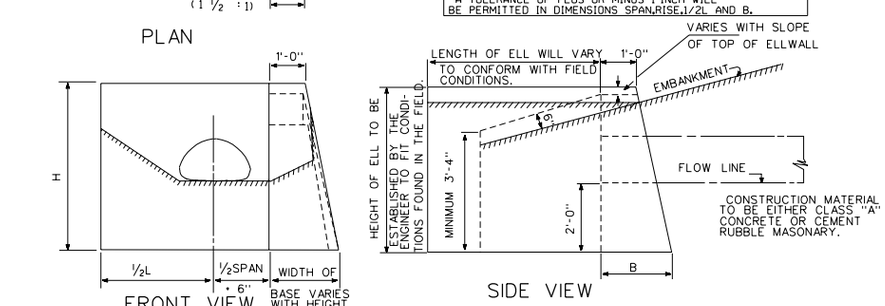

TYPE "L" ENDWALL FOR PIPE-ARCH

H=TOTAL HEIGHT OF ENDWALL
B=BASE
S=HEIGHT OF SLOPE ABOVE FLOW LINE AT FACE OF WALL-MINIMUM=RISE +2"
L=LENGTH OF WALL=3S + SPAN.
ALL EDGES OF EXPOSED SURFACES TO BE CHAMFERED APPROXIMATELY ONE INCH.

NOTE:

ALL CONSTRUCTION DIMENSIONS ARE NOMINAL.

THESE ENDWALLS WILL BE USED ONLY AT LOCATIONS WHERE THEY WILL NOT BE A HAZARD TO VEHICLES THAT RUN OFF THE ROAD.IN NO CASE WILL THE LOCATION OF THESE ENDWALLS BE LESS THAN 30' FROM THE EDGE OF THE TRAVELED WAY.

ENDWALLS FOR PIPE-ARCH

R. F. FELIX	5-22-61
A. BOGAT	9-29-88
T. McMAHON	12-30-88
J.B. JENSEN	1-20-89
D.L. COFFEY	9-25-89
	9-10-90

MANUAL REVISIONS TO THIS DOCUMENT ARE PROHIBITED. ALL REVISIONS MUST BE PERFORMED ON
Cadd File: QSA2:(200,200)506B.DGN

CONNECTICUT D.O.T. OFFICE OF ENGINEERING COMPUTER AIDED DESIGN

506-B