State of Connecticut
Department of Motor Vehicles

Motor Carrier Safety Assistance Program

Motor Carrier Handbook

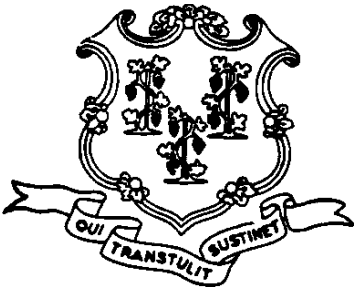

John G. Rowland
Governor

Gary J. DeFilippo
Commissioner

Department of Motor Vehicles

Motor Carrier Handbook

Motor Carrier Safety Assistance Program

A copy of this manual can be accessed through the CT DMV website at http://dmvct.org under Specialized Services.

The Connecticut Department of Motor Vehicles, Commercial Vehicle Safety Division gratefully acknowledges the cooperation of the following for their contribution to this manual:

The Federal Highway Administration's Office of Motor Carriers

The Connecticut Department of Transportation

The Connecticut Department of Environmental Protection

The Connecticut Department of Revenue Services

The Department of Public Safety, Division of State Police

The Motor Transport Association of Connecticut

The purpose of this manual is to provide the reader with general references and to familiarize drivers or companies with the applicable Federal and State laws and regulations pertaining to the motor carrier industry.

The contents of this manual are NOT intended to serve as a precise statement of the General Statutes of the State of Connecticut or the Federal Code of Regulations. The proper legal reference should be consulted for exact requirements of law.

For more information, contact:

DMV-Commercial Vehicle Safety Division
Room 263, 60 State Street
Wethersfield, CT 06161-5517
Phone:(860) 263-5446
On the internet:http://dmvct.org

Prepared by the DMV Commercial Vehicle Safety Division

Edited by DMV Corporate and Public Relations Unit

Revised October 2000

Safety is Our Business

This manual is for you, the professional truck driver. It is important for you to keep up to date on state and federal laws affecting your safety. In addition, you need to be familiar with the safety of commercial motor vehicles, the size and weight of loads that may be carried, and the permits required to operate on our state highways.

Connecticut's major industries are transportation, manufacturing, and fabrication of metals and machinery. Most of these products are transported by truck. Connecticut is the geographical gateway to New England, with a heavy concentration of commercial motor vehicle traffic crossing the state to provide goods and services to other states as well as our own residents.

We count on you, the professional driver, to set the standards for others to follow. We expect you to obey the laws of our State for your own safety, as well as for the safety of the entire motoring public sharing the road with you.

Gary J. DeFilippo
Commissioner
Department of Motor Vehicles

Table of Contents

Safety is Our Business ---------- 3
Do the Regulations Apply to Me? ---------- 7
The Federal Motor Carrier Safety Regulations ---------- 9
U.S. Department of Transportation Number for
Interstate and Intrastate Carriers ---------- 10
International Registration Plan (IRP) ---------- 11
Single State Registration System (SSRS) ---------- 12
International Fuel Tax Agreement (IFTA) ---------- 14
Driver Qualifications ---------- 14
Commercial Driver's License ---------- 15
Controlled Substance (Drug) and Alcohol Testing ---------- 19
Hours of Service, Maximum Driving
and On-Duty Time ---------- 20
Connecticut Size and Weight Laws ---------- 23
Oversize and/or Overweight Permits ---------- 24
Hazardous Materials Transportation ---------- 25
Appendix
Driver/Vehicle Inspection Procedures ---------- 28
Bridge Formula Weight Chart ---------- 33

Remember: Always Buckle Up for Safety

The primary objective of the Connecticut Department of Motor Vehicles' Motor Carrier Safety Assistance Program (MCSAP) is to reduce the number of accidents and hazardous materials incidents involving commercial motor vehicles. One of the ways we can assist in reducing highway accidents and incidents is by identifying and removing unsafe vehicles, drivers, and loads from our highways.

Safety Regulations Found in Connecticut Law

Connecticut General Statutes, Section 14-103: Inspection of Motor Vehicles:

"(a) The commissioner (of motor vehicles), by himself or an Inspector authorized by him, may examine any motor vehicle, its number, equipment and identification....."

"(c) All State..... officers, whenever they see a motor vehicle being operated in apparent violation of any statute relative to the equipment of a motor vehicle, may stop such vehicle....."

Connecticut General Statutes, Section 14-163: Motor Carrier Safety Regulations for Commercial Motor Vehicles in Intrastate or Interstate Commerce.....

Connecticut has adopted certain sections of the Code of Federal Regulations, Title 49 as amended. See Federal Motor Carrier Safety Regulations section in this manual.

Do the Regulations Apply to Me?

The Federal Motor Carrier Safety Regulations apply to the following:

1) Vehicles that have a gross vehicle weight rating (GVWR) or gross combination weight rating (GCWR) of 10,001 or more pounds; (Note: For carriers that operate solely in Intrastate

commerce, the regulations apply at 18,001 pounds or more) **or**

2) A vehicle designed to transport 16 or more passengers, including the driver; **or**
3) A vehicle used in the transportation of hazardous materials in any quantity requiring placarding.

In addition to the general regulations, Commercial Drivers Licence (CDL), and Controlled Substance Testing (Drug) and Alcohol testing apply when the commercial motor vehicle:

1) Has a gross combination weight rating of 26,001 pounds or more inclusive of a towed unit with a gross vehicle weight rating of more than 10,000 pounds; **or**
2) Has a gross vehicle weight rating of 26,001 pounds or more; **or**
3) Is designed to transport 16 or more passengers, including the driver; **or**
4) Is of any size and is used for the transportation of hazardous materials in a quantity requiring placarding.

Definitions

"Interstate commerce" means trade, traffic, or transportation in the United States which is between a place in a state and a place outside of such state (including a place outside the United States) or is between two places in a state through another state or a place outside the United States.

"Intrastate commerce" means any trade, traffic, or transportation which is not described in the term "interstate commerce."

"Gross vehicle weight rating (GVWR)" means the value specified by the manufacturer as the loaded weight of a single motor vehicle.

"Gross combination weight rating (GCWR) " means the value specified by the manufacturer as the loaded weight rating of a combination (articulated) motor vehicle. In the absence of a value specified by the manufacturer, GCWR will be determined by adding the GVWR of the power unit and the total weight of the towed unit and any load thereon.

Federal Motor Carrier Safety Regulations

Connecticut has adopted the Federal Motor Carrier Safety Regulations (FMCSR), as amended, that apply to interstate motor carriers. Intrastate carriers operate under the same rules as interstate carriers with two exceptions:

1) The regulations for intrastate vehicles apply when the GVWR or GCWR is 18,001 pounds or greater. Interstate carriers are subject to the regulations at 10,001 pounds GVWR or GCWR.

2) Drivers of a subject intrastate vehicle are required to be 18 years of age, not 21 years old as for interstate vehicles.

The following sections of 49 CFR were adopted:

- Part 382, “Controlled Substances and Alcohol Use and Testing”.
- Part 383, “Commercial Driver’s License Standards, Requirements, and Penalties”.
- Part 385, “Safety Fitness Procedures”.
- Part 386, “Rules of Practice for Motor Carrier Safety and Hazardous Materials Proceedings”.
- Part 387, “Minimum Levels of Financial Responsibility for Motor Carriers”.
- Part 390, “Federal Motor Carrier Safety Regulations, General”.
- Part 391, “Qualifications of Drivers”.
- Part 392, “Driving of Motor Vehicles”.
- Part 393, “Parts and Accessories Necessary for Safe Operation”.
- Part 395, “Hours of Service of Drivers”.
- Part 396, “Inspection, Repair, and Maintenance”.
- Part 397, “Transportation of Hazardous Materials, Driving and Parking Rules”.

US DOT Numbers for Interstate and Intrastate Vehicles

All **Interstate** commercial motor vehicles, that are subject to the regulations, are required to display their assigned “USDOT” number or their assigned “ICC” number on each side of their vehicle.

All **Intrastate** commercial motor vehicles operating in Connecticut, that are subject to the regulations, are required to display their "USDOT" number followed by "CT".

Companies may apply for a DOT number (Interstate or Intrastate) by completing a MCS-150 form. When the number is issued, it would be applied to both sides of the vehicle with the other required information. Only one number is issued to a carrier. The same number would be displayed on all power units.

The following markings are required to be displayed on each side of a vehicle:

1) The name or trade name of the motor carrier operating the vehicle.
2) The USDOT number preceded by the letters "USDOT". Additionally, the number shall have the suffix "CT" if the carrier is an Intrastate only carrier.
3) If the name of any other person, other than the operating carrier appears on the motor vehicle, either alone or in combination, the information must be preceded by "operated by".

The size, shape, location and color of the marking must be as follows:

1) Appear on both sides of the self-propelled vehicle.
2) Be in letters that contrast sharply in color with the background.
3) Be readily legible, during daylight hours, from a distance of 50 feet while the vehicle is stationary.

For more information on the DOT numbering requirements or to apply for a number contact:

Interstate

United States Department of Transportation
Federal Motor Carrier Safety Administration
628-2 Hebron Avenue
Glastonbury, CT 06033
Phone:(860) 659-6700 (Ext. 3020)

Intrastate

Connecticut Department of Motor Vehicles
Commercial Vehicle Safety Division
Attn: US DOT Number Application Unit
Room 263, 60 State Street
Wethersfield, CT 06161-5517
Phone:(860) 263-5446

IRP Section - International Registration Plan

Connecticut is a member of the International Registration Plan (IRP) Program. Except for Alaska and Hawaii, all states and the District of Columbia are members, as well as certain Canadian provinces.

The International Registration Plan Program (IRP) is a method of registering commercial vehicles that are engaged in interstate operations. Vehicles registering under the IRP Program will be properly registered for operation in those IRP jurisdictions that appear on the vehicle's IRP cab card issued by the base state. A commercial motor vehicle must EITHER be registered under the IRP Program OR operate under a 72 hour IRP trip permit if the vehicle travels in Connecticut and any other IRP jurisdiction in which the vehicle will be operated and the vehicle is used for the transportation of persons for hire or is designed, used, or maintained primarily for the transportation of property AND:

- Is a power unit having two axles and a gross vehicle weight or registered gross vehicle weight in excess of 26,000 pounds; **or**
- Is a power unit having three or more axles regardless of weight; **or**
- Is used in combination when the weight of such exceeds 26,000 pounds gross vehicle weight.

Vehicles, or combinations thereof, having a gross vehicle weight of 26,000 pounds or less, two-axle vehicles and buses used in

transportation of chartered parties may be proportionally registered at the option of the registrant.

72 Hour IRP trip permits must be obtained prior to entry into Connecticut. This permit may be purchased from a wire service.

If the IRP program applies to you, do not renew your Commercial Registrations.

You must fill out IRP Schedules A/E and B. Schedule A/E requires information on each vehicle. Schedule B requires an estimated mileage figure to be travelled in each state. After the forms are processed, you will receive a bill. Payment of fees for IRP new accounts and renewals must be made in the form of GUARANTEED FUNDS: **CERTIFIED CHECK, BANK CHECK, OR MONEY ORDER.** After you have paid the bill you will receive an apportioned plate and cabcard, which will identify your vehicle, its registered weight and the jurisdictions where it is properly registered. Note: Certain states may require additional requirements/fees in addition to the IRP registration.

Office hours are as follows: **Window Service Hours:** Tuesday through Friday 8:30 A.M. to 12:OO P.M. Window Service closes promptly at 12:OO P.M.; therefore, IRP customers must arrive in sufficient time for their transactions to be completed prior to 12:OO P.M. **Telephone, Fax Inquiries, IRP Drop Off-Box**: Tuesday through Friday 8:30 A.M. to 4:30 P.M. Mondays for telephone and fax inquiries only: 8:30 A.M. to 4:00 P.M. **IRP telephone (860) 263-5281, fax (860) 263-5582.** IRP office is located at DMV, 60 State Street Room 104, Wethersfield, CT 06161

SSRS Section - Single State Registration System

Connecticut is a member of the Single State Registration System (SSRS). Under Federal requirements, a carrier must enroll in the SSRS program administered by their base jurisdiction, except under certain circumstances as are outlined in the SSRS Procedures Manual available from the SSRS Section.

The Single State Registration System (SSRS) Program is the registration of the mandatory insurance coverages for **FOR HIRE** freight/passenger-carrier vehicles engaged in interstate operations.

As Connecticut is a member of the SSRS program, all owners of **FOR-HIRE** vehicles, who operate interstate, must comply with the mandates of this program.

Prior to contacting the SSRS section, a commercial vehicle owner must first contact the U.S. Department of Transportation, which is administering the duties of the former federal Interstate Commerce Commission. The vehicle owner must call the USDOT's automated response phone (202) 358-7000 or the duty officer at (202) 358-7027 to obtain the necessary forms to file and then to be issued USDOT authority. Once the commercial vehicle owner has been issued ICC/USDOT authority, the vehicle owner must contact the SSRS section to apply for an SSRS registration receipt. Carriers who transport EXEMPT commodities need not contact USDOT for authority but must contact SSRS Section to apply for an SSRS-ICC/USDOT-EXEMPT registration receipt. An SSRS-ICC/USDOT-EXEMPT registration receipt issued to a carrier covers the transportation of exempt commodities only.

HouseHold Goods (HHG) carriers also must contact ConnDOT for HHG authorization, and SSRS-EXEMPT carriers also must contact ConnDOT to determine if they must apply for **INTRASTATE** authority for their vehicles.

Payments for all SSRS transactions must be made in the form of GUARANTEED FUNDS: **CERTIFIED CHECK, BANK CHECK, or MONEY ORDER.**

Office hours are as follows: **Window Service Hours:** Tuesday through Friday 8:30 A.M. to 12:OO P.M. Window Service closes promptly at 12:OO P.M.; therefore, SSRS customers must arrive in sufficient time for their transactions to be completed prior to 12:OO P.M. **Telephone, Fax Inquiries, SSRS Drop Off-Box:** Tuesday through Friday 8:30 A.M. to 4:30 P.M. Mondays for Telephone and Fax inquiries only: 8:30 A.M. to 4:OO P.M.

SSRS Telephone (860) 263-5281, Fax (860) 263-5582.

SSRS office is located at DMV 60 State St. Room 104 Wethersfield, CT 06161

International Fuel Tax Stickers

What is the international Fuel Tax Agreement?

IFTA is a cooperative agreement among all 48 contiguous states and 10 Canadian provinces to simplify the permitting of, and reporting of fuel use tax by interstate motor carriers. Under IFTA, a carrier can obtain his fuel tax license for all qualified motor vehicles and report to his base jurisdiction his fuel used in all jurisdictions that are IFTA members.

Who Must Comply?

A motor vehicle or combination of vehicles used, designed or maintained for the transportation of persons or property having:

- Two axles and a gross vehicle weight or registered gross vehicle weight over 26,000 pounds; **or**
- Three or more axles regardless of weight; **or**
- A combination gross vehicle weight over 26,000 pounds.

Vehicles such as motor homes, pickup trucks with attached campers when used exclusively for personal pleasure by an individual are exempt from IFTA fuel tax reporting.

Is an operator of a qualified motor vehicle in Connecticut required to have an IFTA license and decals?

You must register in the IFTA program if you are based in Connecticut and the qualified vehicle travels or anticipates traveling outside of Connecticut. For carriers based in another jurisdiction, their IFTA license and decals will satisfy Connecticut's fuel use tax requirements.

If your qualfied vehicle stays strictly in the state of Connecticut, you must register the vehicle for a Connecticut only fuel tax sticker.

FOR ADDITIONAL INFORMATION

Specific questions should be addressed to the Excise Division of the Department of Revenue Services at 25 Sigoumey Street, Hartford, CT 06106 or call (860) 541-3222. To apply for IFTA sticker, call (860) 297-4753 or go on-line to www.drs.state.ct.us/ifta.

Driver Qualifications

1) Must have a valid driver's license for the class of vehicle you are operating.
2) Must be medically examined every 24 months and have in your possession the original or legible copy of a medical

examiner's certificate. Copies of the physical examination form and the medical examiner's certificate appear in this manual.

3) Must be 21 years old (18 if you are operating intrastate).
4) Can speak, read and write English well enough to do your job.
5) Can drive your truck safely.
6) Can tell if your truck is safely loaded.
7) Know how to tie down your cargo.
8) Completed a detailed job application form on file with your employer.
9) Have a good driving record and have not been disqualified.

Commercial Driver's License

On October 26, 1986, Congress passed the Commercial Motor Vehicle Safety Act of 1986. This law requires each State to meet the same minimum standards for commercial driver licensing. The minimum standards require commercial motor vehicle drivers to get a Commercial Driver's License (CDL). You must have a CDL to drive a Commercial Motor Vehicle (CMV). A commercial motor vehicle is defined as a motor vehicle designed or used to transport passengers or property if the vehicle:

- Has a gross vehicle weight rating of 26,001 or more pounds; **or**
- Is designed to transport 16 or more passengers, including the driver; or is designed to transport more than 10 passengers, including the driver, and used to transport students under the age of twenty-one years to and from school; **or**
- Is transporting hazardous materials and is required to be placarded.

Vehicles Exempt From CDL

- Vehicles used for farming (within 150 air mile radius)
- Fire fighting apparatus
- Authorized emergency vehicles
- Recreational vehicles
- Military vehicles operated by military personnel

Legal Age

- You must be at least 18 years of age to apply for a learner's permit.
- You must be at least 18 years of age to get a CDL.
- You must be at least 21 years of age to haul hazardous materials. You must be at least 21 years of age to drive interstate.

Physical Requirements

You must certify, on the application form for a CDL, that you meet all the physical requirements in accordance with CFR Title 49, Part 391.41, as amended. Your certification will be required before you take any knowledge tests for a CDL. Proof that you meet the physical requirements as set forth in CFR Title 49, Part 391.41, as amended, must be carried with you when operating a commercial motor vehicle. You may be required to show proof that you meet these physical requirements when you renew your CDL.

Note: Medical waivers may be available for certain physical conditions. Check with Department of Motor Vehicles, Medical Review Division at (860) 263-5223.

Disqualifications

Any person who is disqualified shall not drive a commercial motor vehicle. An employer shall not knowingly allow, require, permit, or authorize any person who is disqualified to drive a commercial motor vehicle.

Disqualifying offenses include: driving a commercial motor vehicle (CMV) while under the influence of alcohol; driving a CMV while under the influence of a controlled substance; leaving the scene of an accident involving a CMV; committing a felony involving the use of a CMV; and the use of a CMV in the commission of a felony involving manufacturing, distributing, or dispensing of a controlled substance.

Excessive speeding, reckless driving and a violation of a state or local law relating to motor vehicle traffic control (other than a

parking violation) arising in connection with a fatal traffic accident are also disqualifying offenses if committed while operating a CMV.

A CDL will not be issued to any person subject to disqualifications, suspension, revocation, or cancellation actions or who already has a CDL.

Classifications

A commercial driver's license or "CDL" is a license issued with the following classifications, endorsements and restrictions:

A - Any combination of vehicles with a (gross combined weight rating) GCWR of 26,001 or more pounds provided the (gross vehicle weight rating) GVWR of the vehicle(s) being towed is in excess of 10,000 pounds. (Holders of class A licenses may, with any appropriate endorsements and/or permits, operate all vehicles within classes B and C)

B - Any single vehicle with a GVWR of 26,001 or more pounds, or any such vehicle towing a vehicle not in excess of 10,000 pounds GVWR. (Holders of class B licenses may, with any appropriate endorsements and/or permits, operate all vehicles within class C).

C - Any single vehicle, or combination of vehicles, that does not meet the definition of class A or class B as contained herein, but that is designed to transport 16 or more passengers, including the driver; or is placarded for hazardous materials; or is designed to transport more than 10 passengers, including the driver, and used to transport students under the age of twenty-one years to and from school.

M - Alone or combined with any other class evidences that the holder is licensed to operate a motorcycle.

Endorsements

A = None
H = Hazardous Material
N = Liquid Bulk/Cargo Tank
P = Passenger Transportation
S = School Bus
T = Doubles/Triples
X = *N* + H Combined

Restrictions

A = None
B = Corrective lenses
C = Mechanical Aid
D = Prosthetic Aid
E = Automatic Transmission
F = Outside Mirror
(In addition to statutory requirements)

J = Weight Restricted - Under 18,001 pounds
K = CDL Intrastate only
L = Vehicles without air brakes
T = Taxicab, service bus, motor vehicle in livery service, coach, motorbus
V = STVs and vehicles listed under restriction T
W = Medical Waiver Required
Z = School Bus Only

Expiration

Your commercial driver's license will expire within a period not to exceed four years following the date of your next birthday.

Renewal

Before your license is due to expire, you will receive a license renewal application in the mail. Your license must be renewed before your birth date. Your license will not be renewed if it is under suspension.

You will not get your renewal application if you have changed your address and did not notify the Department of Motor Vehicles of the new address. See CHANGE OF NAME OR ADDRESS section below.

If you do not receive your license renewal application in the mail, please contact any office of the Department of Motor Vehicles.

Renewal of Hazardous Materials Endorsement

CDL operators who wish to maintain their license endorsement to haul hazardous materials or hazardous waste must pass the hazardous materials endorsement test at each renewal. This requirement will ensure that drivers are updated on any new safety regulations relative to the transportation of hazardous materials or hazardous waste.

Lost CDL

If your CDL is lost or destroyed, you must apply for a duplicate. Duplicate CDLs may be obtained at any full-service motor vehicle branch office. You must bring with you three forms of identification, one of which must be a certified copy of your birth certificate.

Change of Name or Address

State law requires you to notify the Department of Motor Vehicles within 48 hours if you change your name or address. Change of name and/or address forms are available at any Motor Vehicle branch office.

CDL Learners' Permits

Drivers operating commercial motor vehicles with CDL learners permits must be accompanied by a qualified CDL operator (instructor) who is properly licensed for the vehicle being operated. Any person instructing another in the use of any motor vehicle shall be responsible for the operation thereof. The instructed person must be in possession of a valid commercial drivers license learner's permit while operating a commercial motor vehicle.

Controlled Substance (Drug) and Alcohol Testing

Operators of commercial motor vehicles requiring a Commercial Drivers Licence (CDL) are subject to controlled substance and alcohol testing by Federal and State regulation.

Companies must conduct controlled substance and alcohol testing.

Any driver refusing to take a required test is considered positive for use of controlled substances and/or alcohol.

There are several types of controlled substance testing described below:

- Pre-employment: No employer shall allow a driver to perform a safety sensitive function until they receive a negative controlled substance test result.
- Post-Accident: If a driver is involved in an accident resulting in a fatality, **or** a DOT recordable accident in

which he receives a citation for a moving violation, the employer shall require the driver to be tested for alcohol within 2 to 8 hours and for controlled substances within 32 hours. Note: A DOT recordable accident is defined as an accident in which anybody is injured and immediately medically treated away from the scene **or** any vehicle is towed due to disabling damage.

- Random: Companies are to randomly test 50% of the drivers for controlled substance and 25 percent for alcohol per year. All drivers must have an equal chance of being selected for testing.
- Reasonable Cause: If a properly trained company official or supervisor has observed and documented a driver's behavior indicating he may be under the influence of alcohol or controlled substance, testing must be conducted.
- Return to Duty: Before a driver who tested positive returns to a safety sensitive position, they must undergo further controlled substance and/or alcohol testing resulting in a negative test result and confirmed by the company's Medical Review Officer.
- Follow-up: A substance abuse professional must require testing after a driver has been found positive. At least six tests in the first twelve months must be conducted.

Hours of Service Maximum Driving and On-Duty Time

Under Federal law, you may not drive more than ten (10) hours following eight (8) consecutive hours off duty or drive for any period after having been on duty fifteen (I 5) hours following eight (8) consecutive hours off duty.

Unless you are exempt, you must complete a Record of Duty Status (Log Book) in duplicate for each day, whether or not work is done. Management and drivers are equally responsible for the maintenance and retention of the driver's Record of Duty Status in accordance with Federal and State requirements.

You are exempt under the 100-air mile radius rule **if all** of the following conditions are met:

1. The driver operates within a 100-air mile radius of the normal reporting location, **and**
2. The driver, except a driver-salesperson, returns to the work reporting location and is released from work within 12 hours, **and**
3. At least 8 consecutive hours off duty separate each 12 hours on duty, **and**
4. The driver does not exceed 10 hours maximum driving time following 8 consecutive hours off duty, **and**
5. The motor carrier that employs the driver maintains and retains for a period of 6 months accurate and true records showing the time the driver reported for work, his total hours on duty and the time released each day.

These records must be available at your place of employment for inspection by DMV Inspectors.

Supporting documents such as toll receipts, fueling records, and delivery documents must also be kept on file and identified by the driver.

When You get Stopped for Inspection

Your truck may be stopped and inspected by a Motor Carrier Inspector who has been certified by the Commercial Vehicle Safety Alliance (CVSA). You will be asked to produce certain paperwork during the inspection which includes:

- Your driver's licence
- Your medical examiner's certificate
- Your medical waiver, if applicable
- Your record of duty status (logbook)
- Your trip receipts
- Your shipping/delivery papers or manifest
- A vehicle registration for each unit
- An SSRS registration, if applicable
- Current annual inspections for each unit
- Your driver's daily vehicle inspection report

Additional documents will be needed if your shipment contains hazardous materials.

The Motor Carrier Inspector will prepare an inspection report. All violations will be shown on the report and if no violations are noted the report will so indicate. You will be asked to sign a copy of the report indicating that you received a copy.

There are five types (levels) of inspections as follows:

Level 1 - An inspection of the driver and documents, vehicle, load, underside of the vehicle, in cab components, and safety equipment.

Level 2 - An inspection as described in level 1 except items requiring the Inspector to get underneath the vehicle are excluded.

Level 3 - A driver only inspection.

Level 4 - A special operations inspection.

Level 5 - Is a level 1 inspection done at a terminal not including the driver information.

Your vehicle may be weighed using either portable or fixed scales.

The diesel fuel in the fuel tanks may be checked to ensure compliance with IRS dyed fuel requirements.

The exhaust may be sampled to ensure the vehicle's exhaust discharge is within allowable standards.

Vehicles subjected to a level 1 or 5 inspection and found to be without substantial defect will be given a CVSA sticker. CSVA stickers are honored nationwide for ninety days. Inspectors will generally not inspect a vehicle bearing a valid CVSA decal unless noted violations are detected or other problems exist.

If defects were reported, within fifteen days your company must ensure repairs have been made, have the mechanic and a company official sign, and return the report. Failure to sign and return the report may result in suspension of the operating privilege of the vehicle or company. The Inspector may also issue fines (a summons or mail in infraction). The case must be settled

with the proper court by the date indicated on the summons or infraction notice.

Questions about inspections should be directed to:

Connecticut Department of Motor Vehicles
Commercial Vehicle Safety Division
Room 263, 60 State Street
Wethersfield, CT 06161-5517
Phone: (860) 263-5446

Inspection Procedures

See Appendix for information and diagram.

Connecticut Size and Weight Laws

Length **-** (Including Load) - Single unit vehicle 45 feet: tractor semitrailer combination, no overall length limit, semitrailer limited to 48 feet:

The following vehicles are restricted to the designated highway:

System: Tractor multi-trailer (doubles) combinations, no overall length limit, trailers limited to 28 feet in length. Tractor semitrailer combination, no overall length limit, semitrailer limited to 53 feet, a maximum distance between the kingpin and the center of the rear-most axle of 43 feet.

Width - 102.37 Inches

Height - 13 Feet 6 Inches

Maximum Weight Practicable - 80,000 pounds on 5 axles with a 51 foot wheelbase.

Axle Weights - Axles spaced less than 6 feet apart, 18,000 pounds per axle or axles spaced 6 feet or greater, 22,400 pounds per axle.

Tires - Load per inch width of tire 600 pounds maximum.

Single Unit - 2 axle vehicle 32,000 pounds, 36,000 pounds when axle weight does not exceed 18,000 pounds or 40,000 pounds when the wheelbase is 10 feet or more; 3 axle vehicle 53,800 pounds; 4 axle vehicle 67,400 pounds or 73,000 pounds

permitted when the distance between the first and last axle is 28 feet or more; 5 axle vehicle 73,000 pounds.

Tractor Semi-Trailer - 3 axle combination 58,400 pounds: 4 axle combination 67,400 pounds, if wheelbase is 28 feet or more 73,000 pounds: 5 or more axle combination 73,000 pounds.

Gross Vehicle Weights Over 73,000 Pounds - A maximum gross weight of 80,000 pounds is allowed when all the requirements of the Federal Bridge Formulas are met.

Oversize and/or Overweight Permits

Oversize and Overweight Permits are issued by the Motor Transport Services Section of the Department of Transportation. With a few exceptions, permits in Connecticut are issued on a per trip basis for three-day periods and only for non-divisible loads. Applications can be made by telephone, mail or in person.

All applications must provide the following information:

- Date
- Origin
- Destination
- Routes to be traveled
- Overall height, length and width
- Gross Weight
- Number of Axles
- Description of Load
- Registration Number of Tractor and Trailer

Permit inquiries and information:

Connecticut Department of Transportation
Motor Transport Services
Oversize/Overweight Permit Unit
2800 Berlin Turnpike
P.O. Box 317546
Newington, CT 06131-7546
Phone (860) 594-2880 Fax (860) 665-8334
or visit us at www.dot.state.ct.us

Bridge Formula/Weight Chart

See Appendix for chart.

Hazardous Materials Transportation

A hazardous material is any product that the Secretary of the United States Department of Transportation has named as being a risk to health, safety or property.

A permit is required by the Connecticut Department of Environmental Protection for the transportation of hazardous wastes and certain non-hazardous, Connecticut regulated wastes. You may not transport waste oil, petroleum or chemical liquids or hazardous waste without a permit from the Commissioner of the Department of Environmental Protection (DEP). Also, you may not transport hazardous wastes in or through Connecticut without having received a permit from the Commissioner of the DEP.

Therefore, a permit is required to transport:

1. Hazardous waste as identified in Title 40 of the Code of Federal Regulations Part 261;
2. Certain non-hazardous, Connecticut regulated wastes, such as waste oil, waste water soluble oil, waste PCBs and waste chemical liquids.

Additional information concerning the permit requirements or a permit application package may be obtained by contacting the DEP, Waste Engineering and Enforcement Division at (860) 424-3372 or at www.dep.state.ct.us

There are both civil and criminal penalties for violation of these requirements.

When you are hauling hazardous materials:

1. Be sure you have shipping papers listing the proper name of the hazardous material, the numerical class of material, the identification number, the assigned packaging group and the amount of the material. Also, the emergency response phone number, and an MSDS (Material Safety Data Sheet) or an emergency response guidebook are required.
2. Be sure your truck is placarded properly if placards are required.
3. Be sure to check your tires every 100 miles or two (2) hours. If one is leaking, flat or overheated, it must be changed.

4. Be sure that the load is secure and free of leaks.
5. If you are hauling explosives, flammables or oxidizers, no smoking is permitted on or within 25 feet of the truck and that includes while you are driving.
6. If you are hauling explosives, you can't leave your truck unattended unless you park the truck at one of these locations:
   a) On your employer's property.
   b) On the shipper's or receiver's property.
   c) In a safe haven, or
   d) On a construction or survey site, if the truck is loaded with 50 pounds or less of explosives.
7. If you are hauling explosives, don't park your truck where there is a possible danger to people or property. Don't park:
   a) On the roadway or within five (5) feet of it.
   b) On private property without permission of the person in charge.
   c) Within 300 feet of a bridge, tunnel, house, or any place where people work or gather unless absolutely needed.

If you are hauling any other kind of hazardous material and you need to stop, park at least five (5) feet from the highway, if possible.

Choose your routes carefully, no matter what kind of hazardous materials you're hauling. Avoid routes that go through or near areas where people live or work, any place where crowds gather, tunnels and narrow streets or alleys.

If you're hauling explosives, you must have a written route plan before leaving. Your supervisor should write the plan. You can write the route plan if the trip does not begin in the terminal.

If there is an incident involving a hazardous material, you must immediately report all the facts to:

The Department of Environmental Protection
Oil and Chemical Spill Section
79 Elm Street
Hartford, Connecticut 06106
24-hour Phone: (860) 424-3338
and
Contact Nearest Emergency Service at 911

APPENDIX

Inspection Procedures

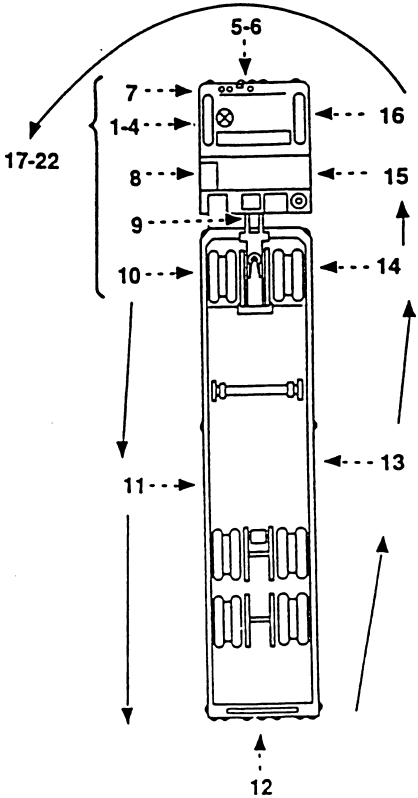

1. PREPARE THE VEHICLE AND DRIVER

2. CHECK DRIVER'S REQUIREMENTS

- DRIVER LICENSE
- MEDICAL CERTIFICATE
- MEDICAL WAIVER (If applicable)
- RECORD OF DUTY STATUS
- DRIVER VEHICLE INSPECTION REPORT
- SHIPPING PAPERS/BILL OF LADING
- SEAT BELT
- ALCOHOL AND DRUGS

3. CHECK FOR PRESENCE OF HAZARDOUS MATERIALS

- PLACARDS
- LEAKS, SPILLS, UNSECURE CARGO
- MARKINGS
- LABELS

4. INSIDE CAB

- STEERING LASH

4. (continued)

• STEERING COLUMN

5. FRONT OF TRACTOR

• HEAD LAMPS, TURN SIGNALS, EMERGENCY FLASHERS

• WINDSHIELD WIPERS

• WINDSHIELD

6. STEERING AXLE

• STEERING SYSTEM

• FRONT SUSPENSION

• FRONT BRAKES

• FRONT AXLE

• FRAME and FRAME ASSEMBLY

• FRONT BRAKES

• FRONT AXLE

• FRAME and FRAME ASSEMBLY

7. LEFT FRONT SIDE OF TRACTOR

• LEFT FRONT WHEEL & RIM

• LEFT FRONT TIRE

8. LEFT SADDLE TANK AREA

• LEFT FUEL TANK(S)

• TRACTOR FRAME

(continued)

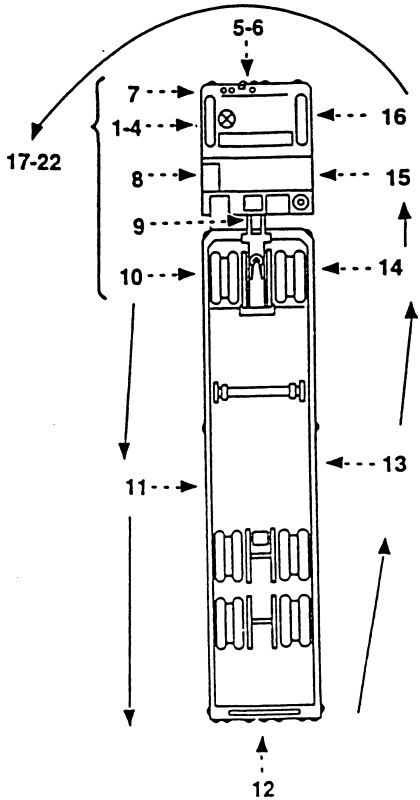

8. (Continued)

• EXHAUST SYSTEM

9. TRAILER FRONT

• AIR & ELECTRICAL LINES

• FRONT END PROTECTION

10. LEFT REAR TRACTOR AREA

• WHEELS, RIMS & TIRES

• LOWER FIFTH WHEEL

• UPPER FIFTH WHEEL

• SLIDING FIFTH WHEEL

• SUSPENSION

11. LEFT SIDE OF TRAILER

• FRAME AND BODY

• CARGO SECUREMENT

• WHEELS, RIMS & TIRES

• SLIDING TANDEM

• SUSPENSION

• BRAKES

12. REAR OF TRAILER

• TAIL, STOP & TURN LAMPS AND EMERGENCY FLASHERS

• CARGO SECUREMENT

(continued)

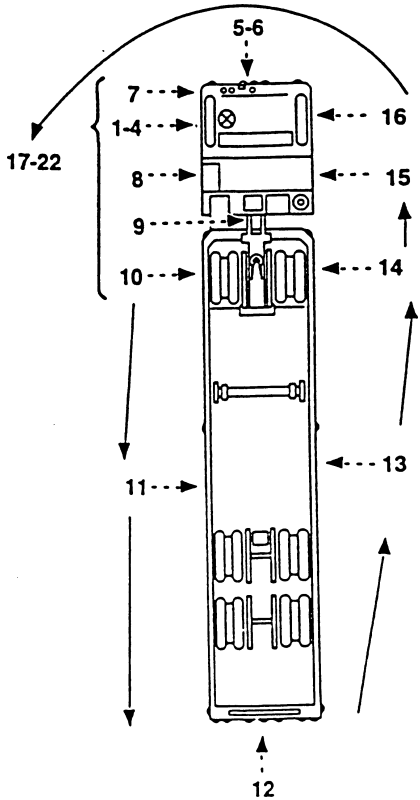

13. RIGHT SIDE OF TRAILER

• CHECK ALL ITEMS AS ON LEFT SIDE

14. RIGHT REAR TRACTOR AREA

• CHECK ALL ITEMS AS ON LEFT SIDE

15. RIGHT SADDLE TANK AREA

• CHECK ALL ITEMS AS ON LEFT SIDE

16. RIGHT FRONT SIDE OF TRACTOR

• CHECK ALL ITEMS AS ON LEFT SIDE

17. BRAKE ADJUSTMENT CHECK

• MEASURE PUSH ROD TRAVEL (All Brakes)

18. FIFTH WHEEL MOVEMENT CHECK

• PREPARE THE VEHICLE AND DRIVER

• CONDUCT THE PROCEDURE

19. AIR LOSS RATE

• WHEN TO CONDUCT THE TEST

• CONDUCT THE PROCEDURE

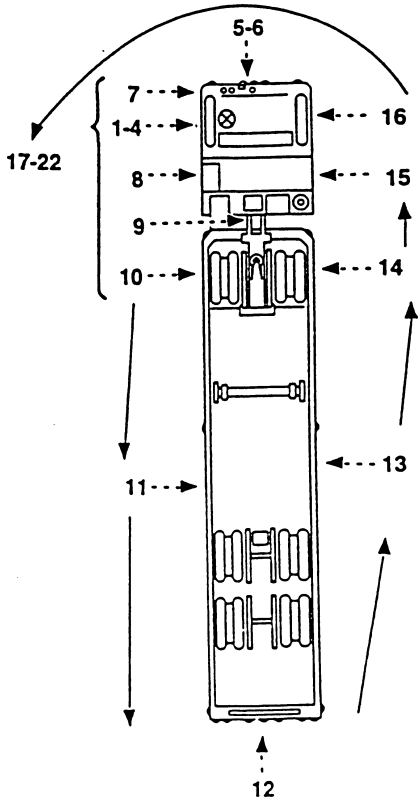

(continued)

20. LOW AIR PRESSURE WARNING

• TEST WARNING DEVICE

21. TRACTOR PROTECTION VALVE

• CONDUCT THE TEST

• OBSERVE THE DASH GAUGE

22. COMPLETE THE INSPECTION

• COMPLETE THE PAPER WORK

• CONCLUDE WITH THE DRIVER

• APPLY C.V.S.A. DECAL

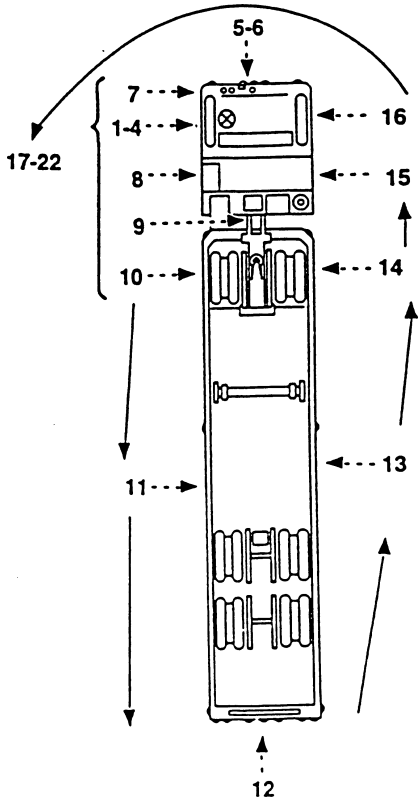

Bridge Formula Weight Chart

W = MAXIMUM WEIGHT IN POUNDS CARRIED ON ANY GROUP OF TWO OR MORE AXLES COMPUTED TO THE NEAREST 500 POUNDS.
L = DISTANCE IN FEET BETWEEN THE EXTREMES OF ANY GROUP OF TWO OR MORE CONSECUTIVE AXLES.
N = NUMBER OF AXLES IN ANY GROUP UNDER CONSIDERATION.

DISTANCE IN FEET BETWEEN THE EXTREMES OF ANY GROUP OF 2 OR MORE CONSECUTIVE AXLES	MAXIMUM LOAD IN POUNDS CARRIED ON ANY GROUP OF 2 OR MORE CONSECUTIVE AXLES.					
	2 AXLES	3 AXLES	4 AXLES	5 AXLES	6 AXLES	7 AXLES
4	36,000					
5	36,000					
6	36,000					
7	36,000					
8	36,000	42,000				
9	39,000	42,500				
10	40,000	43,500				
11		44,000				
12		45,000	50,000			
13		45,500	50,500			
14		46,500	51,500			
15		47,000	52,000			
16		48,000	52,500	58,000		
17		48,500	53,500	58,500		
18		49,500	54,000	59,000		
19		50,000	54,500	60,000		
20		51,000	55,500	60,500	66,000	
21		51,500	56,000	61,000	66,500	
22		52,500	56,500	61,500	67,000	
23		53,000	57,500	62,500	68,000	
24		54,000	58,000	63,000	68,500	74,000
25		54,500	58,500	64,500	69,000	74,500
26		55,500	59,500	65,000	69,500	75,000
27		56,000	60,000	65,000	70,000	75,500
28		57,000	60,500	65,500	71,000	76,500
29		57,500	61,500	66,000	71,500	77,000
30		58,500	62,000	66,500	72,000	77,500
31		59,000	62,500	67,500	72,500	78,000
32		60,000	63,500	68,000	73,000	78,500
33			64,000	68,500	74,000	79,000
34			64,500	69,000	74,500	80,000
35			65,500	70,000	75,000	
36			66,000	70,500	75,500	
37			66,500	71,000	76,000	
38			67,500	72,000	77,000	
39			68,000	72,500	77,500	
40			68,500	73,000	78,000	
41			69,500	73,500	78,500	
42			70,000	74,000	79,000	
43			70,500	75,000	80,000	
44			71,500	75,500		
45			72,000	76,000		
46			72,500	76,500		
47			73,500	77,500		
48			74,000	78,000		
49			74,500	78,500		
50			75,500	79,000		
51			76,000	80,000		
52			76,500			
53			77,500			
54			78,000			
55			78,500			
56			79,500			
57			80,000			