Section 1.9.0
Method Summary, MetOne BAM-1020
List of Headings

Heading Description	**Part No.**
Method Summary, MetOne BAM-1020	0.0

Section 1.9.0
Method Summary, MetOne BAM-1020
List of Figures

Figure Description	**Figure No.**
Not applicable	

0.0 Method Summary, MetOne BAM-1020

When the high-energy electrons emanating from the radioactive decay of carbon-14 (^{14}C) interact with nearby matter, they loose their energy and, in some cases, are absorbed by the matter. These emitted radioactive decay high-energy electrons are known as beta rays. The process is known as beta-ray attenuation. When matter is placed between the radioactive ^{14}C source and a device designed to detect beta rays, the beta rays are absorbed and/or their energy diminished. This results in a reduction in the number of beta particles detected. The magnitude of the reduction in detected beta particles is a function of the mass of the absorbing matter between the ^{14}C beta source and the detector. The number of beta particles passing through absorbing matter, such as particulate deposited on a filter tape, decrease nearly exponentially with the mass through which they much pass.

During sampling incoming particulate-laden air is brought through an external PM_{10} inlet head (and an optional $PM_{2.5}$ cyclone) under vacuum to remove particles greater than 10 (or 2.5) µm in aerodynamic diameter. The air then goes through the filter tape, where particles less than or equal to 10 (2.5) µm in diameter are deposited. (Anything smaller than about 0.2 µm goes through to the exhaust.) First the filter tape is advanced 4 sampling areas (~50-mm) from the counting station to the sampling nozzle. Next the nozzle is lowered to the tape surface and the vacuum pump is turned on. At the end of the sampling period the pump is turned off, the nozzle is raised and the tape is moved backward the same distance (4 sampling areas) to the counting station.

The final part of the normal operation mode is the counting of the beta particles through the sampled section of tape then calculation and logging of the particulate concentration. The tape is then advanced one more sampling area (~12.5-mm) to begin the next cycle. At the end of the measurement day (just before or just after midnight) the tape is advanced an extra sampling area to separate daily entries.

Section 1.9.1
Procurement, MetOne BAM-1020
List of Headings

Heading Description	**Part No.**
Procurement of Equipment & Supplies, MetOne BAM-1020	1.0
Continuous Monitors	1.1
Peripheral Equipment (recording, test and sampling equipment, etc.)	1.2
Supplies	1.3

Section 1.9.1
Procurement, MetOne BAM-1020
List of Figures

Figure Description	**Figure No**
Acceptance Testing Data Sheets (Page 1 of 2)	191.1
Acceptance Testing Data Sheets (Page 2 of 2)	191.2

1.0 Procurement of Equipment & Supplies, MetOne BAM-1020

An important function of the Quality Assurance Group is to provide a systematic procedure for evaluating and purchasing monitoring equipment to ensure a proper balance between needs and available resources. This document covers a number of elements, which should be considered in procuring monitors, test equipment and other materials related to the collection of quality data.

1.1 Continuous Monitors

A. Warranty

A warranty must accompany each monitor, equal to or exceeding the following: free parts and service for one year from the date of receipt of a monitor which has been deemed by the State of Connecticut as complying with bid specifications and is initially operating satisfactorily.

B. Inspection

Each new monitor must be inspected for damage or missing components when received.

C. Testing

Each analyzer must be tested and must pass the performance specifications as specified in the Operator's Manual as soon after receipt as possible. Acceptance testing data sheets are developed for each type of monitor purchased. Figures 191.1 & 191.2 are the MetOne BAM-1020 acceptance testing data sheets.

D. Modifications

A monitor may be modified for special sampling situations provided equivalency (when applicable) and manufacturers' warranty are not affected. Communication with the manufacturer must be maintained concerning problems and/or modifications, which would affect data quality.

E. Inventory

Projected needs and rate of failure must be determined and an adequate inventory of spare parts maintained.

1.2 Peripheral Equipment (recording, test and sampling equipment, etc.).

A. Warranty

Evaluate warranty to ensure it meets the needs of the Agency.

B. Inspection and Testing

Inspect all equipment when received. Purchased equipment should be tested and evaluated as soon after receipt as possible to ensure manufacturers' specifications are met in order to take full advantage of the warranty period.

C. Inventory

Projected needs and rate of failure must be assessed and an adequate inventory maintained.

1.3 Supplies

A. Inventory (spare parts, expendables, standards).

An adequate inventory must be maintained.

B. Special Requirements

The vendor, when required, must provide certificate of analysis and traceability documentation.

Met One Instruments BAM 1020 Acceptance Check Sheet Serial Number

		OK	NG	
DATA Array Channel 6 Configuration				
		Expected	As is	As left
CLOCK screen	Date	Today's date		
	Clock	Time in EST		
SAMPLE screen	RS-232	9600 N 8 1		
	Station ID	Last 2 digits of asset #		
	Range	0.250 mg		
	BAM Sample Period	30 min		
	Met Sample Period	60 min		
	Offset	-0.005 mg		
CALIBRATE screen	Flow Rate	16.7		
(see appendix B)	Cv			
" " "	ABS			
" " "	K			
	Heater Control	Auto		
	Flow Type	Actual		
(see appendix B)	Qo			
" " "	μ_w			
" " "	BKGD			
(see appendix B)	e1			
	e2	Not used		
	e3	0.000		
	e4	15.00		
ERROR screen	EUMILRNFPDCT	000100010011		
	AP FR1 FRh	150 15 18		
INTERFACE setup	Cycle Mode	Early		
SENSOR screen	Prec	3		
	Mult	01.000		
	Offset	-0.005		
	Range	1		
HEATER screen	RH control	Yes		
	RH setting	35%		
	Datalog RH	Yes		
	Delta-T Control	Yes		
	Delta-T Setpoint	5 °C		
	Datalog Delta-T	Yes		
NORMAL screen	Last m (w/in 5%)			% Diff

Figure 191.1
Acceptance Testing Data Sheet
(Page 1 of 2)

Met One Instruments BAM 1020 Acceptance Check Sheet Serial Number

TEST FLOW screen	Reference	BAM	Adjusted
Pressure (mmHg)			
Temperature (°C)			
Flow 16.7 LPM			
(change flow in *CALIBRATE screen*) 15.0 LPM			
" " " " " 18.4 LPM			

TEST DAC screen	**Lab**			**Field**	
Voltage Comparison	DVM	OK	Adjusted	DL	OK
BAM setting 10.00		→		←	
5.000		→		←	
2.000		→		←	
1.000		→		←	
0.000		→		←	

Installation	**Lab**	OK	NG	**Field**	OK
Inlet Perpendicularity					
Set Screws Tight					
Ground					
Pump Connections					
Temperature Probe					
Water-tight					
Perform SELF TEST					

Set Analog output controls: SW1 ON(0-10 VDC) SW2 OFF(0-16 mA)

Released for field _____ _____
Initials date

Figure 191.2
Acceptance Testing Data Sheet
(Page 2 of 2)

Section 1.9.2
Installation, MetOne BAM-1020
List of Headings

Heading Description	**Part No.**
Installation of Equipment, MetOne BAM-1020	2.0
Safety	2.1
Electrical Requirements	2.2
Internal Site Requirements	2.3
Siting Requirements	2.4
Data Recording and Transmission	2.5
Applicable Instrument	2.6.0
Particulars	.1
Installation Performance Check	.2

Section 1.9.2
Installation, MetOne BAM-1020
List of Figures

Figure Description	**Figure No.**
Analyzer Manufacturer's Requirements	192.1
Sampling Manifold Siting	192.2
BAM-1020 PM_{10} Configuration	192.3
BAM-1020 $PM_{2.5}$ Configuration	192.4
Equipment Sign In/Out Log	192.5
BAM-1020 Data Logger Hook-ups	192.6
Operations Check Sheet for the BAM-1020 (OPSTsheet)	192.7

2.0 Installation of Equipment, MetOne BAM-1020

It shall be the responsibility of Data Equipment Technicians to install and/or remove monitors in the field.

Whenever the MetOne BAM-1020 monitor is moved the cover/door must be on and securely fastened. This prevents the monitor cabinet from flexing and disrupting the continuity of electronic circuitry. When a monitor is shipped it must be transported in the original shock-absorbing shipping containers.

2.1 Safety

The primary consideration when installing any piece of equipment must be **SAFETY.** Protection must be provided for operators of equipment and for persons who live or pass near the sampling site.

Sites must have adequate safeguards to prevent injuries from falls since monitor inlets must be located at heights of 2 - 15 meters. Sites will require ladder access and must be kept as free of obstructions as possible. Field personnel shall be trained in safe ladder use.

All equipment left unattended at a site must be securely fastened. It should be kept in mind that wind gusts in Connecticut of up to 60 mph can be expected in any season of the year and that hurricane force winds are not uncommon. Equipment should be secured to withstand these conditions.

2.2 Electrical Requirements

All wiring shall comply with Connecticut State Code. All electrically operated equipment at sampling sites shall have a third-wire safety ground power line. All outlets supplying power to a site must also be equipped with an adequate ground and must be tested before use to assure that they are properly installed, polarized and grounded. Wire used must be of the correct size to carry the required current and voltage. It is recommended that sunlight resistant types be used when exposure to the elements is anticipated.

Provisions should be made to supply adequate electrical power at each site. It is recommended that a fused capacity of 15 amperes per sampler be available at each site.

2.3 Internal Site Requirements

A. See analyzer manufacturer's requirements, Figure 192.1.

2.3 Internal Site Requirements

B. Shelter temperature will be maintained between 4.5°C to 32.5°C at sites where it is possible to maintain near ambient temperature. Other instrumentation housed at these sites may have more restrictive temperature requirements, which will be followed.

C. The site data logger shall monitor site voltages. Voltages may range from 105 to 125 VAC. Continuous monitors will be plugged into power conditioners to minimize voltage fluctuations. Additionally, the circuit breaker boxes are equipped with surge protectors.

D. A complete set of pertinent operating manuals, check sheets and logbooks will be present at each site.

E. Sites shall be kept as clean and unobstructed as possible to provide ease of access to monitor front and rear panels, data logger leads and monitor sample inlets.

2.4 Siting Requirements

Each monitor must be sited in accordance with the recommended siting criteria for PM_{10} or $PM_{2.5}$ as presented in 40 CFR Part 58, Appendix E, § 8. It is important to keep this criteria in mind when selecting new sites or upgrading existing ones. It should be noted that siting criteria for $PM_{2.5}$ is not the same as for the PM_{10}. Figure 192.2 is a brief synopsis of these criteria along with BAM-1020 specific criteria.

2.5 Data Recording and Transmission

A. Each shelter containing continuous monitors shall be equipped with a telephone and modem to transmit data to a polling computer. The data logger is to be considered the primary data collection system. A PC is to be linked to the data logger at each site. The PC will be used as back-up storage of the data.

B. A monitor logbook is maintained for each monitor installed. These logs contain the history of the monitor. Whenever a monitor is installed at a site, its logbook must accompany it. The same applies for removal of a monitor from a site.

C. Various log and operational check sheets will be maintained. Periodically (monthly) the original will be brought to the OPS Lab for examination and filing. A carbon copy will be filed in the monitor logbook.

2.6.0 Applicable Instrument

The MetOne Instruments, Inc. Beta Attenuation Monitor model BAM-1020 will be employed for reporting the Air Quality Index and for providing data to EPA's Air Now near-real time forecasting website, http://www.epa.gov/airnow/.

The BAM-1020 will be equipped with a standard low volume PM_{10} inlet, Figure 192.3. CTDEP will operate one BAM-1020 as a PM_{10} continuous monitor. The BAM-1020 is an EPA PM_{10} Equivalent Method when operated in this manner. All other BAM-1020's will have a $PM_{2.5}$ very sharp cut cyclone installed directly below (downstream) of the PM_{10} inlet (Figure 192.4). They will operate as continuous $PM_{2.5}$ monitors. There is no EPA $PM_{2.5}$ Equivalent Method at present.

2.6.1 Particulars

Be sure to sign out the sampler on the Equipment Sign In/Out Log (Figure 192.5) before leaving the lab with a monitor. Check for a release tag on the monitor. Take the monitor logbook also as it shall remain within the monitor at the sampling site.

Operations check sheets are to be filled out by the person responsible for installing and or removing a monitor from a site. The following documentation must appear in the Comments Section on the check sheets for both monitors during replacement:

1. Date and time monitor was shut OFF for removal.
2. SN of monitor being removed.
3. SN of monitor being installed.
4. Date and time installed monitor was turned ON (for warm-up purposes).
5. Reason for replacement/installation.

Items 3, 4 & 5 apply for installing a monitor at a new site.

Installation at a new site will require more extensive set-up procedures. The operator's manual has detailed instructions for new installations. Refer to chapter 2, parts 2.5 –2.6. The Data Logger hook-ups are illustrated in Figure 192.6.

Maintenance must be performed on the sample train (inlet, cyclone & down-tube) if a monitor is used to replace an existing monitor at a site. This entails replacing the inlet, cleaning or replacing the cyclone and cleaning the down-tube.

A complete performance check must be done after installation at a sampling site. See part 2.6.2. If any or all of these checks are out-of-spec a calibration will be required. If the initial performance check is OK, an initial calibration is not required.

2.6.2 Installation Performance Check

Installation Performance will be done after a 1-hour warm-up. Checks will consist of five activities:

- Date/Time Check
- Leak Check
- Ambient Pressure Sensor Check
- Ambient Temperature Probe Check
- Flow Rate Check

The Date/Time check must be done for proper synchronization with the site data logger. Record this information on the Operations Check Sheet for the BAM-1020 (OPSTsheet), Figure 192.7 in the space provided. The bottom of the Sheet is the Performance Check section. It must be used to record performance check data.

A. The BGI tetraCal performance check device (Figure 182.3) will be allowed to adapt to site conditions for approximately 10-minutes before turning it on.

B. Turn ON the tetraCal after acclimating period. The ON/OFF toggle switch is located on the right side. The screen will display the following message: *Please insert Venturi 1-2-3*

C. Select venturi 1 (6-30 lpm range). With the venturi held vertically, plain end down ("O" rings up) insert the venturi into the top of the tetraCal. The tetraCal will display its software version, serial number and range of the venturi in use before performing a self-calibration. The tetraCal will then display:
battery life %, BP, Tfil, Tamb, Q: Under range

D. Select an appropriate tubing cap and place it onto the venturi. Select the tubing to attach to the tubing cap.

E. Insert the temperature cable in the 3-prong receptacle on the right side of the tetraCal. Its display will read:
Tfil

F. Place tetraCal in a safe location until use.

G. Record the date of the check and your initials in performance check section.

H. Perform a leak check:

2.6.2 <u>Installation Performance Check</u>

H. 1. Remove the PM_{10} inlet from the top of the down tube.

2. Attach a flow audit adapter (FAA) where the PM_{10} inlet was removed.
3. Close the FFA valve.
4. From the *Main Menu*, press **TEST**.
5. In the *TEST Menu*, select **TAPE** to advance the tape.
6. Press **TEST** again then select **PUMP** to turn on the pump.
7. Record the indicated flow rate on the OPSTsheet. The flow rate should be drop below 1.5 lpm. A successful leak check is indicated with a leak rate of <1.5 lpm due to the nozzle/tape interface. Under these test conditions, the pressure differential (ΔP) across this interface is 21" Hg. This ΔP is an order of magnitude greater than the BAM will encounter during sampling and indicative of a successful leak check.
8. Indicate (Y or N) if this check is within spec.
9. Press **EXIT** to return to the *Main Menu*.
10. Slowly open the FFA valve. Do not remove the FAA, it will be need for the flow check.

NOTE: Performing a leak check will generate an error code due to insufficient flow through the inlet. A "SELF TEST" is required to reset the sampler, see step L, below.

I. Compare the tetraCal vs. BAM1020 pressure readings:
1. Document ambient pressure from the tetraCal Psensor in "Hg on the OPSTsheet as the Reference Pressure.
2. From the *Main Menu*, press **TEST**.
3. In the *TEST Menu*, arrow to FLOW and press **SELECT**.
4. The *Enter Password screen* is displayed. Press the function keys **F1**, **F2**, **F3**, **F4**.
5. Record the BAM Pressure on the OPSTsheet.
6. Remain in the *Flow Screen* for the two following checks.
7. Indicate (Y or N) if this check is within spec. If these two readings are not within 10 mm Hg, bring the tetraCal to the QA Lab for recertification. If the tetraCal is found to be within spec, the sampler APS will need recalibration.

J. Check the ambient temperature: This check is done from the *Flow screen*. If not in the *Flow screen* from step C, press **EXIT** until the *Main Menu screen* appears then, follow steps C.2-4.

2.6.2 <u>Installation Performance Check</u>

J. 1. Insert the tetraCal temperature probe into the aspirated shielding of the sampler ambient temperature probe (ATP) to determine ambient

temperature.

2. Allow it ~ 1-minute to stabilize. Record this reading in ^{o}C on the OPSTsheet as the Reference Temperature.
3. Record the BAM ambient temperature reading on the OPSTsheet.
4. Indicate (Y or N) if this check is within spec. The two readings should be within 4°C. If not:
   a. Loosen the screws that secure the BAM temperature probe in its shield.
   b. Use tie wraps or an elastic to secure the temprobe to the BAM temperature probe. Shield both from direct or indirect sunlight and the elements for accurate readings. Allow ~ 1-minute to stabilize.
   c. Record these two readings on the OPSTsheet.
   e. If these two readings are not within 4°C, bring the temprobe to the QA Lab for recalibration. If the temprobe is found to be within spec, the BAM temperature probe will need recalibration.
   f. Return the BAM temperature probe to its shield and re-secure it.
5. Remove the temprobe from the aspirated shield.
6. Remain in the *Flow Screen* for the following check.

K. To perform a Flow Rate check: This check is done from the top of the down tube with the FAA in place & the tape advanced from step H and using the *Flow screen* from step I & J.

1. From the *Flow Screen*, press **PUMP ON**.
2. The cursor will automatically move to the VOLUMETRIC FLOWRATE row under the column labeled REFERENCE. The value in the BAM column reads 16.7. Record this value on the OPSTsheet.
3. Secure the tetraCal within reach of the sampler inlet tube.
4. Attach tubing from venturi cap to the FAA. (already installed on the inlet tube).
5. Allow the flow rate to stabilize before recording the tetraCal reading (Reference Flow) on the OPSTsheet.
6. Indicate (Y or N) if this check is within spec. If the flow rate is found to be out-of-spec, the BAM flow controller will need recalibration.
7. Press **EXIT** until the *Main Menu screen* appears.
8. Remove the FTS and replace the PM_{10} inlet.

2.6.2 <u>Installation Performance Check</u>

L. Self Test: The BAM has a built in self-test function. It checks both the current operational status and resets any error code that may exist. It is accessed from the *Main Menu screen*.

1. Press **TAPE**.
2. Press **SELF TEST**. The BAM will automatically go through a series of internal checks that takes approximately 4-minutes.
3. The results of these checks will be sequentially displayed. If a check passes, the word OK will be displayed. If a check fails, the word FAIL will be displayed. Record all results. Document failed results in the Comments section of the OPSTsheet.
4. Upon completion of the SELF TEST, press **EXIT** to return to the *Main Menu screen*.

Manufacturer's Equivalent Method Designation Requirements for PM_{10}

Parameter	Requirement
Range	0.0 – 1000 $\mu g/m^3$
Averaging Time	24-hour average with one-hour filter change frequency
Temperature Range	0 to 40^oC
Relative Humidity	non-condensing & $\leq$ 90%
Line Voltage	105 to 125 VAC @ 50/60 Hertz
Temperature, Pressure & Flow	Actual conditions at 16.7 lpm
Inlet head	PM_{10} inlet

CTDEP has chosen the $PM_{2.5}$ very sharp cut cyclone as the secondary impactor for AQI reporting and forecasting. (There presently is no equivalent method for $PM_{2.5}$).

Figure 192.1
Analyzer Manufacturer's Requirements

Siting Requirements:

Inlet radius clearance: The BAM-1020 inlet must have a 1-meter radius free of any objects that may influence airflow characteristics, including the airflow radius of another instrument. For example, if a BAM-1020 is to be installed at a station with another BAM-1020 or a $PM_{2.5}$ FRM sampler, the inlets of each sampler must be no less than 2-meters apart from each other. If installing near a High Volume PM_{10} sampler (HiVol), then the distance between the inlets of the BAM-1020 and the HiVol must be no less than 3-meters. These distances are Federal EPA requirements (40 CFR Part 58).

Inlet height: The height of the inlet should be equal to the height of the federal reference method filter samplers such as the PM_{10} inlet on the $PM_{2.5}$ FRM or the PM_{10} impactor on the HiVol. The inlet should be 2-meters from the roof if the BAM-1020 is not collocated with other particulate samplers.

Distance between BAM-1020 and station ceiling: A minimum distance of at least 8” is required between the top of the BAM-1020 and ceiling. This is to accommodate the aluminum can style heater that incorporates a filter RH and Filter temperature sensor to control the heater based on these measurements. The aluminum can heater is 4” long and connects to the back of the BAM-1020. These measurements suggest that the minimum distance between the BAM-1020 central unit and the ceiling should be NO less than 8”.

Inlet: The straight, vertical inlet tubing of the BAM-1020 limits the placement of the BAM-1020 central unit. The BAM-1020 inlet tubing is a 1-5/16” OD, 8’ long rigid aluminum tube. The lower end of the inlet tube inserts directly into the top of the BAM-1020 housing, the other end points horizontally upward through all roofing material and above the roofline. The selected particle size inlet(s) are mounted on the upper end of the inlet tube as discussed above. Provisions must be made during installation to allow future removal, maintenance and re-installation of all equipment.

Figure 192.2
Sampling Manifold Siting

Figure 192.3
BAM-1020 PM_{10} Configuration

Figure 192.4
BAM-1020 $PM_{2.5}$ Configuration

CTDEP Air Monitoring

EQUIPMENT SIGN-IN/OUT LOG

equiplog rev 1/8/04

Equipment	SN	DEP#	To	From	Init	Date

Figure 192.5
Equipment Sign In/Out Log

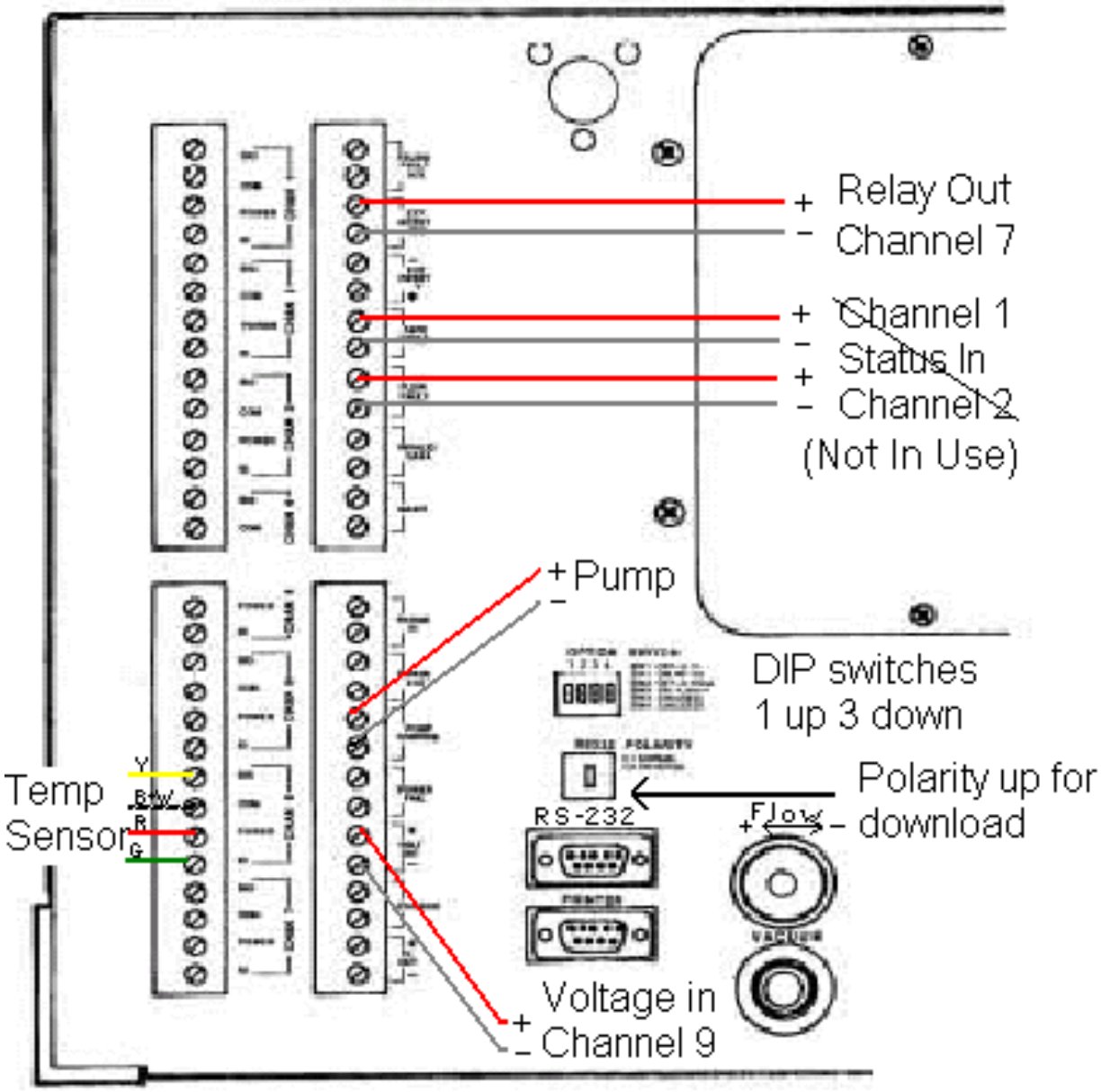

Figure 192.6
BAM-1020 Data Logger Hook-ups

Weekly Operations Check Sheet
Met One Beta Attenuation Monitor, BAM-1020

Town/ Site _____ Month/Year _____

BAM-1020 SN _____ Sampling for: $PM_{2.5}$ PM_{10} m from appendix B_____

Day of Month/ Time	/	/	/	/	/	/	/
Operator							
Site Temp (Must be 68°- 86°F)							
PERFORM OPERATIONAL CHECKS, RECORD THESE VALUES FROM THE DISPLAY							
Last m value							
% D of appen B vs. last m w/in 5%							
BAM Time vs. DL Time	/	/	/	/	/	/	/
Check error log, document errors below							
Filter tape intact? (Y or N)							
Filter tape changed? (Y or N)							
Weekly nozzle cleaning ✔							
Data Start date							
Rejection: EST							
Enter Reason End date Under Comments. EST							
End Time EST							
COMMENTS: Perform any necessary corrective/preventative maintenance. Clearly document any problem and the corrective action taken in the Comment Section to the right.							

Monthly duties section

Last Inlet/Cyclone cleaning date		New Inlet/Cyclone cleaning date			
Date of Monthly checks:		Reference	BAM	Specification	W/in spec
tetraCal S.N.	Leak Check			<1.0 lpm	
	Pressure			W/in +/- 10 mmHg	
tetraCal Cert due date	Temperature			W/in 4°C	
	Flow			W/in +/-4%	

Figure 192.7
Operations Check Sheet for the BAM-1020
(OPSTsheet)

Section No. 1.9.3
Calibration, MetOne BAM-1020
List of Headings

Heading Description	**Part No.**
Calibration of Equipment, MetOne BAM-1020	3.0
Flow Rate Transfer Standard	3.1.0
Certification Schedule	.1
Environmental Conditions	.2
Applicable Standards	.3
Equipment and Supplies	.4
Flow Transfer Standard Certification	.5
Meteorological Equipment	3.2.0
Certification Schedule	.1
Environmental Conditions	.2
Applicable Standards	.3
Equipment and Supplies	.4
Temperature Certification	.5
Pressure Certification	.6
MetOne BAM-1020 Calibration	3.3.0
Schedule	.1
Equipment and Supplies	.2
Site Operating Conditions	.3
Calibration	.4

Section No. 1.9.3
Calibration, MetOne BAM-1020
List of Figures

Figure Description		**Figure No.**
Certification Setup	Option A	193.1a
	Option B	193.1b
Flow Transfer Standard Certification Work Sheet (Cert Sheet)		
	Option A	193.2a
	Option B	193.2b
Manometer Zeroing		193.3
Flow Certification Spreadsheet	Option A	193.4a
	Option B	193.4b
BGI tetraCal Performance Check Device		193.5
Temperature Probes (temprobe)		193.6
Pressure Sensor (Psensor)		193.7
Flow Audit Adapter (FAA)		193.8
Visitor Check Sheet		193.9
OPSTsheet		193.10
BGI Incorporated triCal		193.11
Calibration Sheet (Cal sheet)		193.12

3.0 Calibration of Equipment, MetOne BAM-1020

All instrumentation associated with data collection requires periodic calibration to assure accuracy. This section contains detailed narratives and procedures concerning the various calibration functions.

3.1.0 Flow Rate Transfer Standard

The MetOne BAM-1020 uses actual flow rate to determine particulate concentration. The field technician servicing the site checks the flow rate monthly through a performance check. This section concerns certification of the equipment needed to do the flow performance check.

3.1.1 Certification Schedule

Flow rate transfer standards use for performance checks will be certified annually or sooner if warranted by unusual results.

3.1.2 Environmental Conditions

All standards will be certified under proper environmental conditions so that accuracy is assured. Certification areas will be kept as free of dust and vibration as possible. Temperature will be maintained between 20 and 30° C.

3.1.3 Applicable Standards

Option A - See Figure 193.1a for the certification set-up including all these listed standards:

- BIOS DryCal Definer 220 High Flow Cell Primary Flow Meter.
- Digital manometer (10" H_2O equivalent).
- Chinook Engineering Streamline Flow Transfer Standard (FTS).
- Certified temprobe.
- Certified Psensor.

Option B - See Figure 193.1b for the certification set-up including all these listed standards:

- BIOS Definer 220 High Flow Cell Primary Flow Meter.
- BGI tetraCal Performance Check Device (temperature & pressure recently certified).

3.1.4 Equipment and Supplies

- Ballpoint pen or indelible ink (not pencil or felt tip pen)

3.1.4 Equipment and Supplies

- Transfer Standard Certification Work Sheet (Cert Sheet) Figure 193.2a for use with Option A, Figure 193.2b for use with Option B.
- Standards set-up as in Figures 193.1a & b. This includes a transition piece, flow audit adapter (FAA) and a sampler.
- PC with EXCEL spread sheet program "PM flow cert".

3.1.5 Transfer Standard Certification

Perform the following steps when certifying a transfer standard:

A. Assemble the equipment shown in Figure 193.1a or 193.1b.

B. Option A - Turn ON the digital manometer then press the two ZEROING buttons simultaneously. This zeroes the manometer (Figure 193.3). The transfer standard and manometer must remain as a paired system.
Option B - Turn ON the tetraCal with the 6 –30 lpm venturi installed.

C. Turn ON the sampler. Allow the electronics to warm-up for at least 5-minutes.

D. Record the date, transfer standard and digital manometer or venturi serial numbers and your initials on the appropriate Cert Work Sheet.

E. Adjust the sampler to obtain a low flow rate (15.0 lpm).

F. Record: Option A - the manometer reading before and after each flow trial if using the Chinook FTS and digital manometer.
Option B – volumetric flow rate if using the tetraCal

G. Replace the transfer standard with the BIOS definer 220 high flow unit. Take a minimum of three flow trials in the BURST mode. Five trials are preferable. Record the average flow rate results of each trial on the Cert Sheet.

H. Perform steps E - G four more times for the five evenly spaced points from 15.0 to 18.4 lpm.

I. Transfer the data from the Cert Sheet to the Flow Certification Spreadsheet program:
Option A - Figure 193.4a (displayed as a desktop icon) Click on the Chinook tab at the bottom of the spreadsheet. Enter data in the areas in shades of blue. Run the regression tool to calculate the slope (m), y-intercept (b) and correlation

3.1.5 Transfer Standard Certification

I. coefficient for the line best described by the five data points.

1. *Click* on **Tools** in the menu bar.
2. *Click* on **Data Analysis** in the drop down menu.
3. *Click* on **Regression** in the next drop down menu.
4. In the Regression workbox click on Input **Y-RANGE:** window. Use the mouse to position the cursor on the spreadsheet on cell **B17**. Highlight this column to **B21** by pressing and holding the left mouse key while dragging the cursor down.
5. In the Regression workbox click on Input **X-RANGE:** window. Use the mouse to position the cursor on the spreadsheet on cell A**17**. Highlight this column to **A21** by pressing and holding the left mouse key while dragging the cursor down.
6. *Click* on the circle to the left of **Output Range** in the output options section of the regression workbox. *Click* on the **Output Range:** window in the regression workbox.
7. Use the mouse to position the cursor on the spreadsheet on the field labeled SUMMARY OUTPUT. This should correspond with the box **A28**.
8. Click on the OK button in the regression workbox.
9. A query box will appear asking OK to overwrite existing data. *Click* **OK**.

After completing the above procedure, compare the percent difference between actual flow and calculated flow at each of the five points. If the percent difference is greater than +/- 1.0% for any point, redo the calibration. If the percent difference is less than +/- 1.0% for all points, the line equation generated in step H is considered valid.

Each time the transfer standard is certified, the new flow equation should be compared to the previous one. Changes in slope of 2% or more and/or changes in y-intercept of 0.1 units or more should be investigated and another operator should redo the calibration. If the difference is less then 2%, continue using the original curve.

Option B - Figure 193.4b (same desktop icon as Option A) Click on the tetraCal tab at the bottom of the spreadsheet. Enter data in the areas in shades of blue. The relative standard deviation (RSD) between the primary flow meter (BIOS) and the transfer standard (tetraCal) are automatically calculated. The tetraCal is considered certified (for 1-year) if the RSD is 3.00% or less. If the RSD is greater than 3.00% the certification should be investigated (check temperature and pressure certifications) and another operator should redo the flow certification. Call the tetraCal manufacturer if it still fails. Arrange for return to factory for service and certification: BGI phone (781) 891 – 9380.

3.2.0 Meteorological Equipment

Meteorological equipment is necessary to determine actual flow rate. The MetOne BAM-1020 is equipped with both a temperature probe and pressure sensor. The field technician servicing the site checks these parameters monthly through performance checks. This section concerns certification of the equipment needed to do the performance checks.

3.2.1 Certification Schedule

Meteorological equipment used for performance checks will be certified every 6-months or sooner if warranted by unusual results.

3.2.2 Environmental Conditions

All standards will be certified under proper environmental conditions so that accuracy is assured. Certification areas will be kept as free of dust and vibration as possible. Room ambient temperature will be maintained between 20 and 30° C.

3.2.3 Applicable Standards

- NIST certified Fisher Scientific liquid-in-glass thermometer, -1 to 101°C in 0.1^{o}C increments
- Official NWS barometric pressure reading

3.2.4 Equipment and Supplies

- Ballpoint pen or indelible ink (not pencil or felt tip pen)
- Meteorological certification logbook
- Ice/water bath with an immersion-circulating heater
- Thermometer stand
- PC with internet access

3.2.5 Temperature Certification

Record the date, primary thermometer SN and temprobe #(s) in the logbook. Temperature probes will be immersed along with the primary thermometer in an ice/water bath and allowed to stabilize at each level. A stable reading is determined by observing the primary thermometer over a 1-minute period. The primary thermometer should not change by more than ½ of a minor division (0.05^{o}C) to be considered stable. Record the stable readings from the primary thermometer and the temprobe(s) in the logbook.

3.2.5 Temperature Certification

Record both ^{o}C & ^{o}F for the temprobe(s). Adjust the immersion-circulating heater in 5°C increments from 0 to 40°C. Allow stabilization at each increment. The average temperature difference should not exceed +/-0.5^{o}C. A correction factor will be applied to any temprobe exceeding this limit with the exception of the temprobe for the BGI units. If these fail to meet spec trouble shoot by exchanging temprobes to determine if the problem is with the temprobe or the base unit. Contact BGI at (781) 891 – 9380 for return/repair/recertification.

Fill out a label with the temprobe #, certification date and certification due date (6-months after the certification date). Include any necessary correction factor. Remove the previous certification label and affix the new one to the temprobe.

3.2.6 Pressure Certification

The Psensors are equipped with adjustable altitude compensation, which will be/have been used as trim pots during calibration. Check the label affixed to the Psensor for the correct altitude setting. Press and hold the Psensor MODE button for ~3-seconds to display the altitude setting. If necessary, use the ▲ or ▼ buttons to reset the elevation to this setting prior to certification. Press the MODE button 6-times to return to the normal ambient mode. A flashing ambient display indicates resetting of the altimeter. Wait for the flashing to stop before using the Psensor. Also of importance is the small box to the left of the pressure display. This value must be set to 0 (zero). If this value is not 0 press and hold the HISTORY button until 0 appears.

Record the date and the official NWS barometric pressure reading in ”Hg from Bradley International Airport. This pressure reading is available from the inter-net at http://iwin.nws.noaa.gov/iwin/ct/hourly.html. The most recent reading must be corrected for elevation difference at the Windsor Lab facilities. This correction factor is -0.05”Hg. Record both the correction factor and the corrected reading in the logbook. Record the Psensor #, ambient pressure and altitude setting (see paragraph above). The Psensor ambient pressure reading must not exceed the official, corrected NWS reading by more than +/- 0.05”Hg. If necessary, adjust the altitude setting to bring the Psensor ambient pressure reading within this limit. A change of 10-meters in altitude will change the ambient pressure by 0.03 – 0.06”Hg. The pressure display flashes when the altitude setting is changed. Wait for the flashing to stop before recording the new ambient Psensor pressure reading and adjusted altitude setting in the logbook.

The BGI units are not user adjustable. Contact BGI at (781) 891 – 9380 for return/repair/recertification if a BGI Psensor fails to meet spec.

3.2.6 Pressure Certification

Fill out a label with the Psensor #, certification date, certification due date (6-months after the certification date) and the altitude setting. Remove the previous certification label and affix the new one to the Psensor.

3.3.0 MetOne BAM-1020 Calibration

This section includes detailed narratives for calibration of the Met One, Inc. BAM-1020, (monitor or BAM) ambient pressure, ambient temperature and volumetric air flow systems using the BGI triCal.

3.3.1 Schedule

Samplers will be calibrated on a quarterly basis. Unscheduled calibrations are required when any of the following conditions arise:

- A power interruption of more than 48-hours
- Sampler repairs, which could affect its calibration
- Sampler installation performance check, monthly performance check or audit results outside:
  1. +/- 4°C for the temperature probe
  2. +/- 10 mm Hg for the pressure transducer
  3. Flow rate check > +/- 4% from indicated
- Audit flow rate check > +/- 5% from design flow rate
- Unusual or abnormal sampler performance

3.3.2 Equipment and Supplies

- Ballpoint pen or indelible ink, (no red ink, pencil or felt tip).
- D.V.M., (necessary for troubleshooting).
- Met One, Inc. BAM-1020 operator's manual.
- Visitor Check Sheet, (Figure 193.9).
- OPSTsheet, (Figure 193.10).
- Met One, Inc. BAM-1020 logbook, specific to the monitor at the site.
- Site logbook.
- Data Logger/ P.C. Procedure, ESC 8816 Data Logger Standard Operating Procedure, (ESC 8816 SOP).
- BGI triCal volumetric air flow calibrator, (Figure 193.11).
- Calibration Sheet, (Cal sheet, Figure 193.12).

3.3.3 Site Operating Conditions

- Monitor in continuous operation for at least 60 minutes.
- Site inside temperature is within either 5°C of ambient or within the 20 to 30°C (depending upon the site).
- Ambient $PM_{2.5}$ levels < 49μg/m^3, (<112 μg/m^3 for PM_{10} monitors) **if not, do not** place channel in *Maintenance*.

The Site Logbook is to be filled out every time a site is visited. Include your initials, EST time entered, reason for visit, (even if just to use the phone) and EST time left. Make sure that site inside temperature is within either 5°C of ambient or within the 20 to 30° C (depending upon the site) before performing any checks. Document on OPSTsheet any temperature exceedance back to the last visit. Ensure ambient particulate levels at $PM_{2.5}$ sites are <49 μg/m^3 (<112 μg/m^3 for PM_{10} monitors) before *Disabling* the BAM channel. If particulate levels are ≥49 μg/m^3, (≥112 μg/m^3 for PM_{10} monitors), do not *Disable* the channel. **Do not perform any checks if the channel is not *Disabled***. You will have to perform the calibration at a later time.

A. Enter the following information on the OPSTsheet, (Figure 193.10):
   1. Day of Month/Time in EST. This is the time the channel is *Disabled*, see step D below.
   2. Operator's Initials.
   3. Site Temperature (DL reading).
   4. Particulate levels <49 μg/m^3, (<112 μg/m^3 for PM_{10} monitors)? **Do not** place in *Maintenance* or do any checks if levels are ≥49 μg/m^3 (<112 μg/m^3 for PM_{10} monitors).

B. *Disable* the BAM channel by following the steps for sites with ESC 8816 data logger (DL) and PC**:** Refer to ESC 8816 SOP. The BAM channel is labeled PM2.5 or PM10 on the site DL.

C. Document the following information for the channel in an historic memo per ESC 8816 S.O.P.:
   1. Range in μg/m^3.
   2. Operator's initials.

NOTE: The following information is automatically provided whenever a memo is created in an historic strip chart:
- Site ID.
- Parameter.
- Charting interval.
- Date.
- Time (EST).

3.3.3 Site Operating Conditions

C. Create all memos at the time the channel was put in *Maintenance*. Always include Monitor SN and operator's initials.

3.3.4 Calibration

NOTE: The following instructions may refer to operating the front panel display of the BAM-1020 Monitor. Refer to the Operation Manual, section 3, for details on how to navigate through the menus.

A. Record all header information required on the Cal sheet.

B. Perform a leak check:
1. Remove the PM_{10} inlet from the top of the down tube.
2. Attach a flow audit adapter where the PM_{10} inlet was removed.
3. From the *Main Menu*, press **TEST**.
4. In the *TEST Menu*, select **TAPE** to advance the tape.
5. Press **TEST** again then select **PUMP** to turn on the pump.
6. Let flow rate stabilize then close the flow audit adapter valve.
7. Record the indicated flow rate on the OPSTsheet. The flow rate should be drop below 1.5 lpm. A successful leak check is indicated with a leak rate of <1.5 lpm due to the nozzle/tape interface. Under these test conditions, the pressure differential (ΔP) across this interface is 21" Hg. This ΔP is an order of magnitude greater than the BAM will encounter during sampling and indicative of a successful leak check.
8. Indicate (Y or N) if this check is within spec.
9. Press **EXIT** to return to the *Main Menu*.
10. Slowly open the flow audit adapter valve.
11. The flow audit adapter can remain in place for the flow rate check. The PM_{10} inlet will be replaced on the top of the down tube after the flow rate check from step E.

NOTE: Performing a leak check will generate an error code due to insufficient flow through the inlet. A "SELF TEST" is required to reset the sampler, see step F, below.

C. Ambient pressure check/adjustment:
1. Document ambient pressure from the triCal on the Cal sheet in mmHg as the Reference Pressure.
2. From the *Main Menu*, press **TEST**.

3. In the *TEST Menu*, arrow to FLOW and press **SELECT**.

3.3.4 <u>Calibration</u>

C. 4. The *Enter Password screen* is displayed. Press the function keys **F1**, **F2**, **F3**, **F4**.
5. Record the BAM Pressure on the Cal sheet.
6. Remain in the *Flow Screen* for the two following checks.
7. Indicate (Y or N) if this check is within spec. If these two readings are not within 10 mm Hg, the BAM pressure will need adjustment. Follow the next two steps (8 & 9). Otherwise go to step D.
8. Use the BAM keypad to enter the reference pressure.
9. Press **ADJUST/SAVE**.

D. Ambient temperature check/adjustment: This check is done from the *Flow screen*. If not in the *Flow screen* from step C, press **EXIT** until the *Main Menu screen* appears then, follow steps C.2-4.
1. Insert the triCal temperature probe into the aspirated shielding of the sampler ambient temperature probe (ATP) to determine ambient temperature.
2. Allow ~ 1-minute to stabilize. Record this reading in ^{o}C on the Cal sheet as the Reference Temperature.
3. Record the BAM ambient temperature reading on the Cal sheet.
4. Indicate (Y or N) if this check is within 2°C. If Y, skip to step 5. If not:
   a. Loosen the screws that secure the BAM temperature probe in its shield.
   b. Use tie wraps or an elastic to secure the triCal temperature probe to the BAM temperature probe. Shield both from direct or indirect sunlight and from the elements for accurate readings. Allow ~ 1-minute to stabilize.
   c. Record these two readings on the Cal sheet.
   d. If these two readings are still not within 2°C, the BAM ATP will need adjustment. Follow the next three steps (e & f). Otherwise go to step D.4.g.
   e. Use the BAM keypad to enter the reference pressure.
   f. Press **ADJUST/SAVE**.
   g. Return the BAM temperature probe to its shield and re-secure it.
5. Remove the temprobe from the aspirated shield if not already done.
6. Remain in the *Flow Screen* for the following check.

E. Flow Rate check/adjustment: This check is done from the top of the down tube with the flow audit adapter in place of the PM_{10} inlet, with the tape advanced as in step B.1-6 and using the *Flow screen* from step C & D.

3.3.4 Calibration

E. 1. From the *Flow Screen*, press **PUMP ON**.
2. The cursor will automatically move to the VOLUMETRIC FLOWRATE row under the column labeled REFERENCE. The value in the BAM column reads 16.7.
3. Attach tubing to the triCal Flow Transfer Standard (FTS) and the flow audit adapter on the down tube.
4. Let stabilize for 5-minutes.
5. The triCal will measure and calculate the flow rate. Record this reading on the Cal sheet as the measured flow.
6. Indicate (Y or N) if this check is within +/-4%. If the flow rate is found to be out-of-spec, the BAM flow controller will need adjustment. Follow the steps below.
7. Enter the triCal flow rate in the VOLUMETRIC FLOWRATE, REFERENCE field.
8. Press **ADJUST/SAVE**.
9. Repeat steps 4-8 until the desired flow is achieved.
10. Press **EXIT** until the *Main Menu screen* appears.
11. Remove the flow audit adapter and replace the PM_{10} inlet.

F. Self Test: The BAM has a built in self-test function. It checks both the current operational status and resets any error code that may exist. It is accessed from the *Main Menu screen*.
1. Press **TAPE**.
2. Press **SELF TEST**. The BAM will automatically go through a series of internal checks that takes approximately 4-minutes.
3. The results of these checks will be sequentially displayed. If a check passes, the word OK will be displayed. If a check fails, the word FAIL will be displayed. Record all results. Document failed results in the Comments section of the OPSTsheet.
4. Upon completion of the SELF TEST, press **EXIT** to return to the *Main Menu screen*.

G. *Enable* BAM channel per ESC 8816 SOP. This is the End Time for step H below.

H. Complete documentation required on the Cal sheet, OPSTsheet and historic memo. Include End Time in EST on all documentation including the historic memo. SAVE then EXIT the historic memo, refer to ESC 8816 SOP.

I. Complete visitors check sheet (Figure 193.9) and site log book, prior to leaving site.

Figure 193.1a
Option A - Certification Setup

Figure 193.1b
Option B - Certification Setup

Option A Flow Transfer Standard Work Sheet

Date Operator	Flowmeter S.N. /	Manometer S.N.	Trans Std S.N.	Prev. Slope	Prev. Intercept	Temprobe S.N.
Temp, ^{O}C (start)						Press. "Hg (start)
Begin Orifice delta P ("H2O)						
Flow trials (lpm) 1						
2						Psensor S.N.
3						
4						
5						
End Orifice delta P ("H2O)						Press. "Hg (end)
Temp, ^{O}C (end)						

Figure 193.2a
Option A - Flow Transfer Standard Certification Work Sheet
(Cert Sheet)

Option B Flow Transfer Standard Work Sheet

Date Operator	Flowmeter S.N.	Primary set to Volumetric	Temp STD set to 25^{0}C	Standard DEP#	Venturi S.N.
		Y N	Y N		
Set Points (volumetric lpm)	15.0	15.9	16.7	17.5	18.4
Transfer Standard Flow					
Flow trials (lpm) 1					
2					
3					
4					
5					
Transfer Standard Flow					

Figure 193.2b
Option B - Flow Transfer Standard Certification Work Sheet
(Cert Sheet)

gned to
IIN/MAX
lso
ears in the
is used
unit in
er is
at

Mode
Program

er the
enters the
mory.
editing

3. Press MIN/MAX and HOLD keys at the same time. (See figure 1)	Top line of display reads "ZERO IN PROGRESS" while bottom line counts down from 9. Zeroing is complete when unit returns to **Measure Mode**.

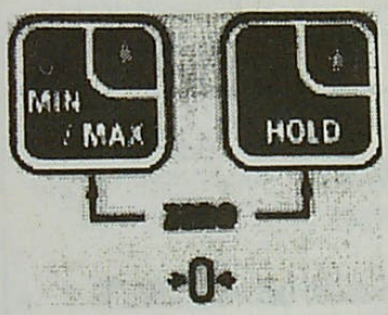

Figure 1.

Note: All Models and ranges can be zeroed only if the new Zero is within ± 5% of the original factory calibration zero. If outside this limit a "ZERO ERROR" message appears and the manometer will not zero.

3

Figure 193.3
Manometer Zeroing

Option A - Flow Transfer Standard Certification

Sampler S.N. 20153 used as an air mover.

Date / Operator 02/23/07 RRM	Flowmeter S.N B2841 H815	Manometer S.N. 911860-m14	Trans Std S.N. 000606	Prev. Slope(m) 0.4043	Prev. Intercept(b -0.4914	Temprobe S.N. dep #003
Temp, ^{O}C (start)	21.2	21.6	21.7	21.5	21.8	P "Hg (start)
Beginning Orifice delta P ("H_2O	4.81	5.36	5.88	6.44	7.10	29.74
Flow trials 1	14.51	15.40	16.15	17.00	17.84	Psensor #14
(lpm) 2	14.49	15.41	16.16	16.98	17.82	
3	14.49	15.41	16.16	16.97	17.82	
4	14.48	15.42	16.15	17.00	17.83	
5	14.49	15.37	16.16	16.98	17.81	
Ending Orifice delta P ("H_2O)	4.77	5.37	5.88	6.42	7.11	P "Hg (end)
Temp, ^{O}C (end)	21.6	21.6	21.5	21.7	22.0	29.74
Absolute T (Kelvin)	294.4	294.6	294.6	294.6	294.9	average P "Hg
Inlet Pressure (atm)	0.994	0.994	0.994	0.994	0.994	29.74
Avg. delta P (inches H_2O)	4.79	5.37	5.88	6.43	7.11	
X	Y	Q from prev eq	%d calc-meas	Q from this cert	%d this-prev	
37.67	14.49	14.74	1.73%	14.50	-1.63%	
39.89	15.40	15.64	1.56%	15.40	-1.53%	
41.75	16.16	16.39	1.42%	16.16	-1.40%	
43.65	16.99	17.16	1.00%	16.93	-1.34%	
45.93	17.82	18.08	1.46%	17.86	-1.22%	
OUTPUT		% change in m	1.43%		-1.42%	
Slope (m) =	0.4065	0.22%	avg %d		avg %d	
Intercept (b) =	-0.8106	ABS change in b				
Coefficient =	0.9996	0.32				

Swap Method

X = Square root of (Orifice delta P x Ambient T in Kelvin / Ambient Pressure in atmospheres)
Y = average measured flow in actual lpm.

SUMMARY OUTPUT

Regression Statistics	
Multiple R	0.999632622
R Square	0.999265378
Adjusted R Square	0.999020504
Standard Error	0.040836991
Observations	5

ANOVA

	df	*SS*	*MS*	*F*	*Significance F*
Regression	1	6.80527702	6.80527702	4080.734446	8.4524E-06
Residual	3	0.00500298	0.00166766		
Total	4	6.81028			

	Coefficients	*Standard Error*	*t Stat*	*P-value*	*Lower 95%*	*Upper 95%*	*Lower 95.0%*	*Upper 95.0%*
Intercept	-0.810583414	0.266475288	-3.041870863	0.055784794	-1.658627505	0.037460677	-1.658627505	0.037460677
X Variable 1	0.406495845	0.006363367	63.88062653	8.4524E-06	0.386244754	0.426746937	0.386244754	0.426746937

Figure 193.4a
Option A - Flow Certification Spreadsheet

Option B - Flow Transfer Standard Certification

Sampler S.N. 20153 used as an air mover.

Date	Operator	Primary Flowmeter S.N.	Primary set to Volumetric	Temp STD set to 25°C	Transfer Standard DEP#	Venturi S.N.
			Y	Y		
Set Points (volumetric lpm)		15.00	15.90	16.70	17.50	18.40
Transfer Standard Flow		15.00	15.90	16.70	17.50	18.40
Flow trials (volumetric lpm)	1	15.60	16.54	17.37	18.20	19.14
	2	15.60	16.54	17.37	18.20	19.14
	3	15.60	16.54	17.37	18.20	19.14
	4	15.60	16.54	17.37	18.20	19.14
	5	15.60	16.54	17.37	18.20	19.14
Transfer Standard Flow		15.00	15.90	16.70	17.50	18.40
Avg Flow Trials & Trans Std		15.43	16.35	17.18	18.00	18.93
Flow RSD		1.90	1.90	1.90	1.90	1.90
Flow RSD within spec		pass	pass	pass	pass	pass

Figure 193.4b
Option B - Flow Certification Spreadsheet

Figure 193.5
BGI tetraCal Performance Check Device

Figure 193.6
Temperature Probes
(Temprobes)

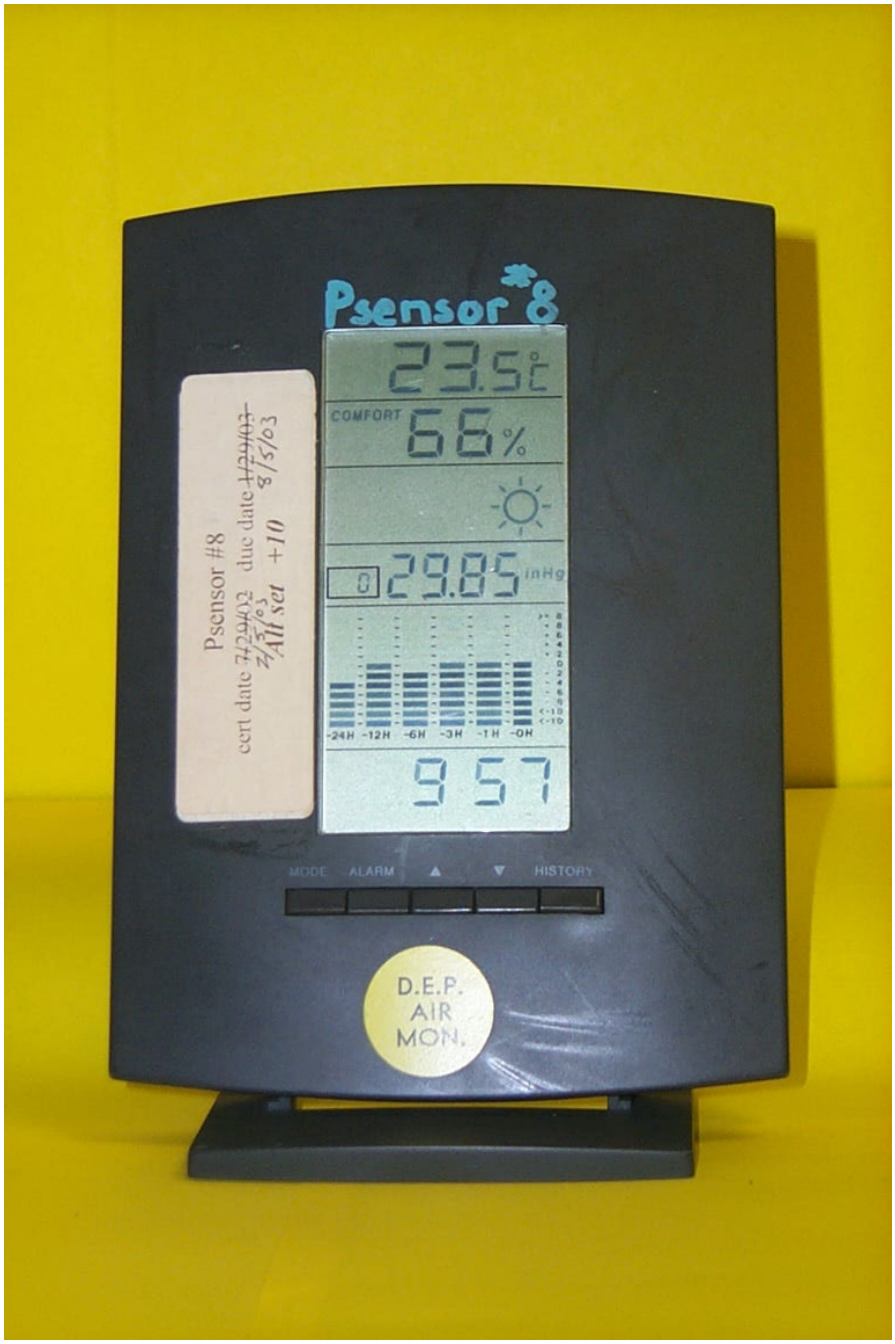

Figure 193.7
Pressure Sensor
(Psensor)

Figure 193.8
Flow Audit Adapter
(FAA)

Visitor Check Sheet

Town _____ Site _____ ID _____ Month/Year _____

Visitors initials														
Date														
D.L. / P.C. (ESC 8816)														
Check for messages														
Channels taken out of Maintenance (OPS) or Enabled (QA)														
Phone handset properly positioned														
Modem ON														
TE Model 42C NO/NO_X & TE Model 175 GPT Cal														
DIP switch 6 ON														
LED REMOTE displayed														
Site cal cylinder **CLOSED**														
Compressor OFF (only at sites without 48i-TLE CO) & Drained														
Sample line properly connected														
TE Model 43CTL SO_2 & TE Model 145 Perm Cal														
Range @ 0.5 ppm														
Perm cal rotameter in NORMAL														
Perm cal mode switch in REMOTE														
Sample & perm cal lines properly connected														
TE Model 48i-TLE CO														
LED SAMPLE displayed														
Sample & Prec Gas lines properly connected														
Compressor ON & Drained														
Site cylinder main valve **CLOSED**														
TE Model 49C O_3														
LED SAMPLE & REMOTE displayed														
Sample & auto cal lines properly connected														
Auto cal pump unobstructed & OFF														
Met One Model BAM-1020 particulates														
Main menu status ON														
Climatronics														
Temperature translator in OPERATE														
Wind translator in OPERATE														
Dew point translator in OPERATE														
Barometric pressure translator in OPERATE														
Site														
Check heater location and controls														
Check air conditioner louvers and controls														
Lights out														

Comments:

Lock door with **506** lock.....**HAVE YOUR KEYS ?**

forms\visitrck.ops rev. 10/24/07

Figure 193.9
Visitor Check Sheet

Weekly Operations Check Sheet
Met One Beta Attenuation Monitor, BAM-1020

Town/ Site _____ Month/Year _____

BAM-1020 SN _____ Sampling for: $PM_{2.5}$ PM_{10} m from appendix B_____

Day of Month/ Time	/	/	/	/	/	/	/
Operator							
Site Temp (Must be 68°- 86°F)							
PERFORM OPERATIONAL CHECKS, RECORD THESE VALUES FROM THE DISPLAY							
Last m value							
% D of appen B vs. last m w/in 5%							
BAM Time vs. DL Time	/	/	/	/	/	/	/
Check error log, document errors below							
Filter tape intact? (Y or N)							
Filter tape changed? (Y or N)							
Weekly nozzle cleaning ✔							
Data Start date							
Rejection: EST							
Enter Reason End date Under Comments. EST							
End Time EST							
COMMENTS: Perform any necessary corrective/preventative maintenance. Clearly document any problem and the corrective action taken in the Comment Section to the right.							

Monthly duties section

Last Inlet/Cyclone cleaning date			New Inlet/Cyclone cleaning date		
Date of Monthly checks: tetraCal S.N.	Leak Check	Reference	BAM	Specification <1.0 lpm	W/in spec
	Pressure			W/in +/- 10 mmHg	
tetraCal Cert due date	Temperature			W/in 4°C	
	Flow			W/in +/-4%	

Figure 193.10
OPSTsheet

Figure 193.11
BGI Incorporated triCal

CALIBRATION DATA SHEET
Continuous Particulate Sampler

Date_____

Town _____ Site_____ Operator _____

Reason for Cal: Initial Routine Final Other:

Analyzer Manufacturer/SN MetOne/_____ Sampling for: $PM_{2.5}$ PM_{10}

Cal System Manufacturer/SN BGI Inc /_____ Certification date _____

Cal System Cell Reference Number _____ Start Time _____ EST

	BAM	BGI	Specification	W/in spec	Adjusted Value
Leak Check (lpm)			< 1.5lpm	Y N	
Ambient Pressure (mmHg)			with in 10 mmHg	Y N	
Ambient Temperature (°C)			with in 2°C	Y N	
Volumetric Flow Rate (lpm)			with in 4% diff*	Y N	

* Flow % diff = (BAM flow – BGI flow) / BGI flow x 100 = _____

Self Test: PASS FAIL End Time EST

Comments:

Forms/BAMcal rev. 11/15/04

Figure 193.12
Calibration Sheet
(Cal sheet)

Section No. 1.9.4
Equipment Operation, Met One BAM-1020
List of Headings

Heading Description	**Part No.**
Equipment Operation	4.0
Operating Intervals	4.1
Operations Record Keeping	4.2
Environmental Conditions	4.3
Operating a BAM site	4.4.0
Applicable Instrument	.1
Equipment and Supplies	.2
Conditions	.3
Weekly Operation Procedures	.4
Monthly Operation Procedures	.5

Section No. 1.9.4
Equipment Operation, Met One BAM-1020
List of Figures

Figure Description	**Figure No.**
Visitor Check Sheet	194.1
Operations Check Sheet (OPSTsheet)	194.2
Preventive Maintenance Check Sheet (PM sheet)	194.3
Met One Model BAM-1020	194.4
Normal Sampling Configuration for $PM_{2.5}$	194.5
Normal Sampling Configuration for PM_{10}	194.6
BAM-1020 Filter Tape	194.7

4.0 Equipment Operation

Monitors, sensors and other equipment must be properly operated to ensure complete and accurate data collection. Written procedures ensure standardization of such operation.

4.1 Operating Intervals

A. Operational Check.
- Operational Site Visit - Once a week, minimum.

B. Monitor Preventive Maintenance Schedule.
- Sample particulate filter tape - Replace as needed.
- Clean/Change PM_{10} inlet (& cyclone) - Every 2 months.
- Remove/replace pump biannually.

C. Performance Check.
- Dynamic Systems Performance Check – Once a month, minimum.

D. Download.
- Download serial data – Once a month.

4.2 Operations Record Keeping

Records of all site visits must be recorded on appropriate forms. These include:
- Site Log Book.
- Visitor Check Sheet, Figure 194.1.
- Operation Check Sheet, (OPSTsheet) Figure 194.2.
- Preventive Maintenance Check Sheet, Figure 194.3.

4.3 Environmental Conditions

All equipment will be operated under proper environmental conditions. Sites will be kept clean and free of obstruction. Shelter temperature will be maintained between 4.5^{o}C to 32.5^{o}C at sites where it is possible to maintain near ambient temperature. Other instrumentation housed at these sites may have more restrictive temperature requirements, which will be followed. Line voltage will be regulated within 105 to 125 VAC.

These parameters will be monitored to ensure manufacturer's guidelines are followed.

4.4.0 Operating a BAM Site

BAM sites house beta attenuation mass monitors for hourly particulate concentration measurements.

4.4.1 Applicable Instrument

Met One, Inc. BAM-1020, (monitor or BAM, Figure 194.4).

4.4.2 Equipment and Supplies

- Ballpoint pen or indelible ink, (no red ink, pencil or felt tip).
- D.V.M., (necessary for troubleshooting).
- Met One, Inc. BAM-1020 operator's manual.
- Visitor Check Sheet, (Figure 194.1).
- OPSTsheet, (Figure 194.2).
- Preventive Maintenance Check Sheet, (Figure 194.3).
- Met One, Inc. BAM-1020 logbook, specific to the monitor at the site.
- Site logbook.
- Data Logger/ P.C. Procedure, ESC 8816 Data Logger Standard Operating Procedure, (ESC 8816 SOP).
- Cotton swabs.
- ISO alcohol.
- Dental pick or similar tool.
- Performance check kit.

4.4.3 Site Operating Conditions

- Monitor set up as depicted in Figure 194.5 for $PM_{2.5}$, Figure 194.6 for PM_{10}.
- In continuous operation for at least 60 minutes.
- Site inside temperature is within either 5°C of ambient or within the 20 to 30°C (depending upon the site).
- Ambient $PM_{2.5}$ levels < 49μg/m^3, (<112 μg/m^3 for PM_{10} monitors) **if not, do not** place channel in *Maintenance*.

4.4.4 Weekly Operation Procedures

The Site Logbook is to be filled out every time a site is visited. Include your initials, EST time entered, reason for visit, (even if just to use the phone) and EST time left. Make sure that site inside temperature is within either 5°C of ambient or within the 20 to 30° C

4.4.4 Weekly Operation Procedures

(depending upon the site) before performing any checks. Document on OPSTsheet any temperature exceedance back to the last visit. Ensure ambient particulate levels at $PM_{2.5}$ sites are <49 μg/m^3 (<112 μg/m^3 for PM_{10} monitors) before placing the BAM channel in *Maintenance*. If particulate levels are ≥49 μg/m^3, (≥112 μg/m^3 for PM_{10} monitors), do not place channel in *Maintenance*. **Do not perform any checks if the channel is not in *Maintenance***. You will have to perform the checks at a later time.

A. Enter the following information on the OPSTsheet, (Figure 194.2):
   1. Day of Month/Time in EST. This is the time the channel is placed in *Maintenance*, see step D below.
   2. Operator's Initials.
   3. Site Temperature (DL reading).
   4. Particulate levels <49 μg/m^3, (<112 μg/m^3 for PM_{10} monitors)? **Do not** place in *Maintenance* or do any checks if levels are ≥49 μg/m^3 (<112 μg/m^3 for PM_{10} monitors).

B. Place the BAM channel in *Maintenance* by following the steps for sites with ESC 8816 data logger (DL) and PC**:** Refer to ESC 8816 SOP. The BAM channel is labeled PM2.5 or PM10 on the site DL.

C. Document the following information for the channel in an historic memo per ESC 8816 S.O.P.:
   1. Range in μg/m^3.
   2. Operator's initials.

NOTE: The following information is automatically provided whenever a memo is created in an historic strip chart:

- Site ID.
- Parameter.
- Charting interval.
- Date.
- Time (EST).

Create all memos at the time the channel was put in *Maintenance*. Always include Monitor SN and operator's initials.

4.4.4 Weekly Operation Procedures

NOTE: The following instructions refer to operating the front panel display of the BAM-1020 Monitor, Figure 194.4. Refer to the Operation Manual, section 3, for more details on how to navigate through the menus.

E. Determine the m value percent difference (%D) as compared to the m value from appendix B of the operator's manual (This page from appendix B has been reproduced and mounted inside the front panel). The appendix B m value is recorded on the top right of the OPSTsheet. (This value is to be recorded on the new OPSTsheet when the OPSTsheet is changed.)

1. Record the Last m value from the *Normal Mode* screen.
2. Calculate and record %D for the m value.

   %D = (Last m value – appendix B m value)/appendix B m value x 100

F. Compare and record the time from the BAM to the DL time in EST. The BAM time will need to be adjusted if it differs from the DL by more than 5-minutes fast or slow. To adjust the BAM time:

1. From the *Main Menu*, press **SETUP**.
2. From the *Setup Screen*, arrow to CLOCK, press **ENTER**.
3. From the *Clock Screen*, arrow left or right to toggle between date and time.
4. Use the up/down arrows to adjust time.
5. Press **SAVE** to lock-in the change.

G. Check and record the monitor's errors log. Document specific errors in the comments section. Refer to operator's manual for troubleshooting errors.

H. Open the front panel to check that the sample tape is intact, Figure 194.7. (If it is not, an error log will be recorded.) Document the result of this inspection.

I. Check the amount of filter tape left on the supply reel. Install a new tape if this reel has less than 0.25" of tape left (a tape should last about two months). Use clean lint free gloves to install the tape. To change the tape (refer to Figure 194.7):

1. From the *Main Menu*, press **TAPE** to go to the *Filter Tape Loading Menu*.
2. From the *Filter Tape Loading Menu* press **TENSION** to lift the nozzle. Verify the nozzle is in the UP position.
3. Unscrew the knobs holding the spool covers in place to remove the covers.
4. Lift the pinch rollers and latch in place.
5. Remove the roll of exposed tape from both spools.

4.4.4 Weekly Operation Procedures

I.
6. Clean the nozzle at this time, see step J.
7. Install an empty tape tube on the take-up (left side) spool.
8. Install a full roll (or reinstall the partial roll) on the supply (right side) spool. The tape must feed up on the extreme right side.
9. Pass tape clockwise over supply tension roller.
10. Feed tape counter-clockwise over the right end roller.
11. Thread tape through sampling/measuring area.
12. Feed tape counter-clockwise over the left end roller.
13. Pass tape clockwise over take-up tension roller.
14. Feed the end of a new tape to the empty tape tube (or reinstall the partial roll) on the take-up (left side) spool. The tape must feed down on the extreme left side.
15. Use adhesive tape to attach the end to the take-up tube.
16. Gently remove slack by hand.
17. Install spool covers and holding knobs.
18. Support each pinch rollers by hand while releasing its latch.
19. From the *Filter Tape Loading Menu* press **TENSION** to tension the tape.
20. Press **EXIT**. Used filter tapes may be discarded. Save the empty tape tube for the next tape installation.

J. Clean the nozzle:
1. Remove the tape as per steps I.1-5 above.
2. Press **EXIT** to return to the main menu.
3. From the *Main Menu*, press **TEST** then **PUMP** to lower the nozzle.
4. Manually lift the spring tensioner to lift the nozzle.
5. Place an ISO alcohol dampened cotton swab under the nozzle then manually lower the nozzle.
6. Manually rotate the nozzle assembly slowly about ten times to clean it.
7. **EXIT** to the *Main Menu*, press **TAPE**, then **TENSION** to mechanically lift the nozzle.
8. Clean the vane area with a sharp tool such as a dental pick. Gently scrape the outside rim and the cross piece to remove any accumulated filter paper.
9. Return to the filter tape loading procedure above, step I.7 for a new roll, step I.8 if reinstalling the in-use tape.

K. Self Test: The BAM has a built in self-test function. It checks both the current operational status and resets any error code that may exist. It is accessed from the *Main Menu screen*.

4.4.4 Weekly Operation Procedures

K. 1. Press **TAPE**.
2. Press **SELF TEST**. The BAM will automatically go through a series of internal checks that takes approximately 4-minutes.
3. The results of these checks will be sequentially displayed. If a check passes, the word OK will be displayed. If a check fails, the word FAIL will be displayed. Record all results (i.e. *Self test OK*) and document failed results in the Comments section of the OPSTsheet.
4. Upon completion of the SELF TEST, press **EXIT** to return to the *Main Menu screen*.

L. Take the BAM channel out of *Maintenance* per ESC 8816 SOP. This is the End Time for step K below.

M. Complete documentation required on the OPSTsheet and historic memo. Include End Time in EST on the historic memo. SAVE then EXIT the historic memo, refer to ESC 8816 SOP.

N. Complete visitors check sheet (Figure 194.1) and site log book, prior to leaving site.

4.4.5 Monthly Operation Procedures

Provide documentation as in Part 4.4.4 above. The results of the monthly checks are to be recorded on the OPSTsheet and on the historic memo. Ensure ambient particulate levels at $PM_{2.5}$ sites are <49 μg/m^3 (<112 μg/m^3 for PM_{10} monitors) before placing the BAM channel in *Maintenance*. If particulate levels are ≥49 μg/m^3, (≥112 μg/m^3 for PM_{10} monitors), do not place channel in *Maintenance*. **Do not perform any checks if the channel is not in *Maintenance***. You will have to perform the checks at a later time.

Monthly checks must include all checks done under part 4.4.4 Weekly Operation Procedures. Additionally, the inlet (and cyclone, where applicable) is to be either changed or cleaned and a dynamic systems performance check (P✓) is to be done. Document the date of the inlet/cyclone maintenance on the PM sheet, Figure 194.3, and in the space provided on the OPSTsheet and on the historic memo. Space is provided at the bottom of the OPSTsheet to record the P✓. This should be done after all other weekly checks are done.

To perform the monthly P✓:

4.4.5 Monthly Operation Procedures

A. The BGI tetraCal performance check device (Figure 182.3) will be allowed to adapt to site conditions for approximately 10-minutes before turning it on.

B. Turn ON the tetraCal after acclimating period. The ON/OFF toggle switch is located on the right side. The screen will display the following message: *Please insert Venturi 1-2-3*

C. Select venturi 1 (6-30 lpm range). With the venturi held vertically, plain end down ("O" rings up) insert the venturi into the top of the tetraCal. The tetraCal will display its software version, serial number and range of the venturi in use before performing a self-calibration. The tetraCal will then display:
battery life %, BP, Tfil, Tamb, Q: Under range

D. Select an appropriate tubing cap and place it onto the venturi. Select the tubing to attach to the tubing cap.

E. Insert the temperature cable in the 3-prong receptacle on the right side of the tetraCal. Its display will read:
Tfil

F. Place tetraCal in a safe location until use.

G. Record the date of the check and your initials in performance check section.

H. Perform a leak check:
1. Remove the PM_{10} inlet from the top of the down tube.
2. Attach a flow audit adapter (FAA) where the PM_{10} inlet was removed.
3. Close the FFA valve.
4. From the *Main Menu*, press **TEST**.
5. In the *TEST Menu*, select **TAPE** to advance the tape.
6. Press **TEST** again then select **PUMP** to turn on the pump.
7. Record the indicated flow rate on the OPSTsheet. The flow rate should be drop below 1.5 lpm. A successful leak check is indicated with a leak rate of <1.5 lpm due to the nozzle/tape interface. Under these test conditions, the pressure differential (ΔP) across this interface is 21" Hg. This ΔP is an order of magnitude greater than the BAM will encounter during sampling and indicative of a successful leak check.
8. Indicate (Y or N) if this check is within spec.

4.4.5 Monthly Operation Procedures

H. 9. Press **EXIT** to return to the *Main Menu*.
10. Slowly open the FFA valve. Do not remove the FAA, it will be need for the flow check.

NOTE: Performing a leak check will generate an error code due to insufficient flow through the inlet. A "SELF TEST" is required to reset the sampler, see step L, below.

I. Compare the tetraCal vs. BAM1020 pressure readings:
1. Document ambient pressure from the tetraCal Psensor in "Hg on the OPSTsheet as the Reference Pressure.
2. From the *Main Menu*, press **TEST**.
3. In the *TEST Menu*, arrow to FLOW and press **SELECT**.
4. The *Enter Password screen* is displayed. Press the function keys **F1**, **F2**, **F3**, **F4**.
5. Record the BAM Pressure on the OPSTsheet.
6. Remain in the *Flow Screen* for the two following checks.
7. Indicate (Y or N) if this check is within spec. If these two readings are not within 10 mm Hg, bring the tetraCal to the QA Lab for recertification. If the tetraCal is found to be within spec, the sampler APS will need recalibration.

J. Check the ambient temperature: This check is done from the *Flow screen*. If not in the *Flow screen* from step C, press **EXIT** until the *Main Menu screen* appears then, follow steps C.2-4.
1. Insert the tetraCal temperature probe into the aspirated shielding of the sampler ambient temperature probe (ATP) to determine ambient temperature.
2. Allow it ~ 1-minute to stabilize. Record this reading in ^{o}C on the OPSTsheet as the Reference Temperature.
3. Record the BAM ambient temperature reading on the OPSTsheet.
4. Indicate (Y or N) if this check is within spec. The two readings should be within 4°C. If not:
   a. Loosen the screws that secure the BAM temperature probe in its shield.
   b. Use tie wraps or an elastic to secure the temprobe to the BAM temperature probe. Shield both from direct or indirect sunlight and the elements for accurate readings. Allow ~ 1-minute to stabilize.

4.4.5 <u>Monthly Operation Procedures</u>

J. 4. c. Record these two readings on the OPSTsheet.

e. If these two readings are not within 4°C, bring the temprobe to the QA Lab for recalibration. If the temprobe is found to be within spec, the BAM temperature probe will need recalibration.

f. Return the BAM temperature probe to its shield and re-secure it.

5. Remove the temprobe from the aspirated shield.

6. Remain in the *Flow Screen* for the following check.

K. To perform a Flow Rate check: This check is done from the top of the down tube with the FAA in place & the tape advanced from step H and using the *Flow screen* from step I & J.

1. From the *Flow Screen*, press **PUMP ON**.
2. The cursor will automatically move to the VOLUMETRIC FLOWRATE row under the column labeled REFERENCE. The value in the BAM column reads 16.7. Record this value on the OPSTsheet.
3. Secure the tetraCal within reach of the sampler inlet tube.
4. Attach tubing from venturi cap to the FAA. (already installed on the inlet tube).
5. Allow the flow rate to stabilize before recording the tetraCal reading (Reference Flow) on the OPSTsheet.
6. Indicate (Y or N) if this check is within spec. If the flow rate is found to be out-of-spec, the BAM flow controller will need recalibration.
7. Press **EXIT** until the *Main Menu screen* appears.
8. Remove the FTS and replace the PM_{10} inlet.

L. Self Test: The BAM has a built in self-test function. It checks both the current operational status and resets any error code that may exist. It is accessed from the *Main Menu screen*.

5. Press **TAPE**.
6. Press **SELF TEST**. The BAM will automatically go through a series of internal checks that takes approximately 4-minutes.
7. The results of these checks will be sequentially displayed. If a check passes, the word OK will be displayed. If a check fails, the word FAIL will be displayed. Record all results. Document failed results in the Comments section of the OPSTsheet.
8. Upon completion of the SELF TEST, press **EXIT** to return to the *Main Menu screen*.

4.4.5 <u>Monthly Operation Procedures</u>

M. Download the serial data via laptop computer (The laptop must have the program

HYPERTERMINAL installed). The BAM must be in the *Main Menu* in order to communicate via the RS-232 interface. Communications are set at 9600 baud, 8 bit, no parity. To download:

1. Connect the laptop via an RS-232 cable to the BAM serial interface #1 on the monitor's rear panel.
2. Ensure the DIP SWITCH is set for "COMPUTER".
3. Press **ENTER** on the laptop until the command prompt appears (this is an asterisk). If the command prompt does not appear, verify the RS-232 cable is secure. If still unable to enter command mode, change the POLARITY setting (it should be UP for downloading).
4. Type **H** or **?** on the laptop to enter the system menu.
5. Type **3** on the laptop to select O*ption 3 - Display New Data*.
6. Serial data will download to the laptop. When transfer is complete press **ENTER** on the laptop to exit the option.
7. Press **EXIT** on the BAM to return to the *Main Menu*.
8. Disconnect the RS-232 cable from the rear of the BAM.

N. Perform any additional PM activities and **<u>document activity on the historic memo, OPSTsheet and in the PM logbook</u>**.

O. Take the BAM channel out of *Maintenance* per ESC 8816 SOP. This is the End Time for steps J & M below.

P. Complete documentation required on the OPSTsheet.

Q. Remove and replace the OPSTsheet and carbon copy within the first seven days of the month. Secure the carbon copy in the Monitor logbook. Return the original to the Field Operations Laboratory by the 15th of the month.

NOTE: Check Sheet changes are to be done on the first to the seventh of each month. All OPSTsheets are to be handed in to the Head of Operations no later than the fifteenth of each month.

R. Fill out the header of the new OPSTsheet and include all data from the last entry on the last months OPSTsheet. Include the appendix B m value with the header information.

4.4.5 <u>Monthly Operation Procedures</u>

S. Complete documentation required on the historic memo. Include End Time in EST on the historic memo. SAVE then EXIT the historic memo, refer to ESC

8816 SOP.

T. Complete visitors check sheet and site log book prior to leaving site.

Visitor Check Sheet

Town _____ Site _____ ID _____ Month/Year _____

Visitors initials														
Date														
D.L. / P.C. (ESC 8816)														
Check for messages														
Channels taken out of Maintenance (OPS) or Enabled (QA)														
Phone handset properly positioned														
Modem ON														
TE Model 42C NO/NO_X & TE Model 175 GPT Cal														
DIP switch 6 ON														
LED REMOTE displayed														
Site cal cylinder **CLOSED**														
Compressor OFF (only at sites without 48i-TLE CO) & Drained														
Sample line properly connected														
TE Model 43CTL SO_2 & TE Model 145 Perm Cal														
Range @ 0.5 ppm														
Perm cal rotameter in NORMAL														
Perm cal mode switch in REMOTE														
Sample & perm cal lines properly connected														
TE Model 48i-TLE CO														
LED SAMPLE displayed														
Sample & Prec Gas lines properly connected														
Compressor ON & Drained														
Site cylinder main valve **CLOSED**														
TE Model 49C O_3														
LED SAMPLE & REMOTE displayed														
Sample & auto cal lines properly connected														
Auto cal pump unobstructed & OFF														
Met One Model BAM-1020 particulates														
Main menu status ON														
Climatronics														
Temperature translator in OPERATE														
Wind translator in OPERATE														
Dew point translator in OPERATE														
Barometric pressure translator in OPERATE														
Site														
Check heater location and controls														
Check air conditioner louvers and controls														
Lights out														

Comments:

Lock door with **506** lock.....**HAVE YOUR KEYS ?**

forms\visitrck.ops rev. 10/24/07

Figure 194.1
Visitor Check Sheet

Weekly Operations Check Sheet
Met One Beta Attenuation Monitor, BAM-1020

Town/ Site _____ Month/Year _____

BAM-1020 SN _____ Sampling for: $PM_{2.5}$ PM_{10} m from appendix B_____

Day of Month/ Time	/	/	/	/	/	/	/
Operator							
Site Temp (Must be 68°- 86°F)							
PERFORM OPERATIONAL CHECKS, RECORD THESE VALUES FROM THE DISPLAY							
Last m value							
% D of appen B vs. last m w/in 5%							
BAM Time vs. DL Time	/	/	/	/	/	/	/
Check error log, document errors below							
Filter tape intact? (Y or N)							
Filter tape changed? (Y or N)							
Weekly nozzle cleaning ✔							
Data Start date							
Rejection: EST							
Enter Reason End date Under Comments. EST							
End Time EST							
COMMENTS: Perform any necessary corrective/preventative maintenance. Clearly document any problem and the corrective action taken in the Comment Section to the right.							

Monthly duties section

Last Inlet/Cyclone cleaning date		New Inlet/Cyclone cleaning date			
Date of Monthly checks: tetraCal S.N.	Leak Check	Reference	BAM	Specification <1.0 lpm	W/in spec
	Pressure			W/in +/- 10 mmHg	
tetraCal Cert due date	Temperature			W/in 4°C	
	Flow			W/in +/-4%	

Figure 194.2
Operations Check Sheet
(OPSTsheet)

Preventive Maintenance Check Sheet Side 1 of 2

Town _____ Site _____ ID _____ Year _____

Field Technician Responsibility (Data Equipment Tecs see other side.)

Item	Duty	Frequency(months)	Initials/Date
A/C	Clean filter	1	
Shed	Clean interior	6	
	Clean exterior	12	
Manifold	Clean	3	
	Oil fan	6	
TE Model 42C - NO	Clean cooling fan filters, Model 42C & 145	1	
wTE Model 175 - GPT Cal	Check capillaries (QA responsibility)	3	
	Change exhaust scrubber	4	
	Clean thermal cooling fins	6	
	Change sample line, filter holder & tee	6	
see TE 48i-TLE CO also	Change zero air scrubbers	6	
TE Model 43CTL - SO_2	Clean cooling fan filters	1	
wTE Model 145 - Perm Cal	Check capillary	3	
	Change sample line, filter holder & tee	6	
TE Model 48i-TLE - CO	Clean cooling fan filters	1	
	Check capillary	3	
	Change inside sample line & filter holder	6	
See TE 175 – GPT Cal also	Change purge scrubbers	6	
TE Model 49C - O_3	Clean cooling fan filters	1	
(6 month season)	Change sample line, filter holder & tee	3	
Met One Model 1020 - BAM	Clean inlets & down tube	2	
R&P Series 8500 - FDMS	Clean inlets & down tube	2	
Magee Model AE-21 - BC	Clean inlets	1	

Preventive Maintenance Check Sheet Side 2 of 2

Town _____ Site _____ ID _____ Year _____

Data Equipment Technician Responsibility (Field Tecs see other side.)

Item	Duty	Frequency(months)	Initials/Date
TE Model 42C & 175 - NO	Yearly swap for PM	12	
TE Model 43CTL&145- SO_2	Yearly swap for PM	12	
TE Model 48i-TLE - CO	Yearly swap for PM	12	
TE Model 49C - O_3	Install @ start of season	n/a	
(6 month season)	Remove @ end of season	n/a	
Met One Model 1020 - BAM	Biennial pump change	24	
Magee Model AE-21 - BC	Yearly swap for PM	12	
R&P Series 8500 -FDMS	Yearly swap for PM	12	
Temperature/Line Voltage	Calibrate electronics	6	
Wind system	Calibrate electronics	6	
	Check cross-arm orientation	6	
Dewpoint	Calibrate electronics	6	
	Change sensor	3	
Barometric pressure	Calibrate electronics	6	
Rain Gage	Calibrate electronics	6	
	Clean/Level	6	
Manifold	Flow Check	6	
ESC 8816 DL	Check calibration of analog input	6	

Comments:

form/pmcheck.ops Revised 10/24/07

Figure 194.3
Preventive Maintenance Check Sheet
(PM sheet)

Figure 194.4
Met One, Inc. Model BAM-1020

Figure 194.5
Normal Sampling Configuration for $PM_{2.5}$

Figure 194.6
Normal Sampling Configuration for PM_{10}

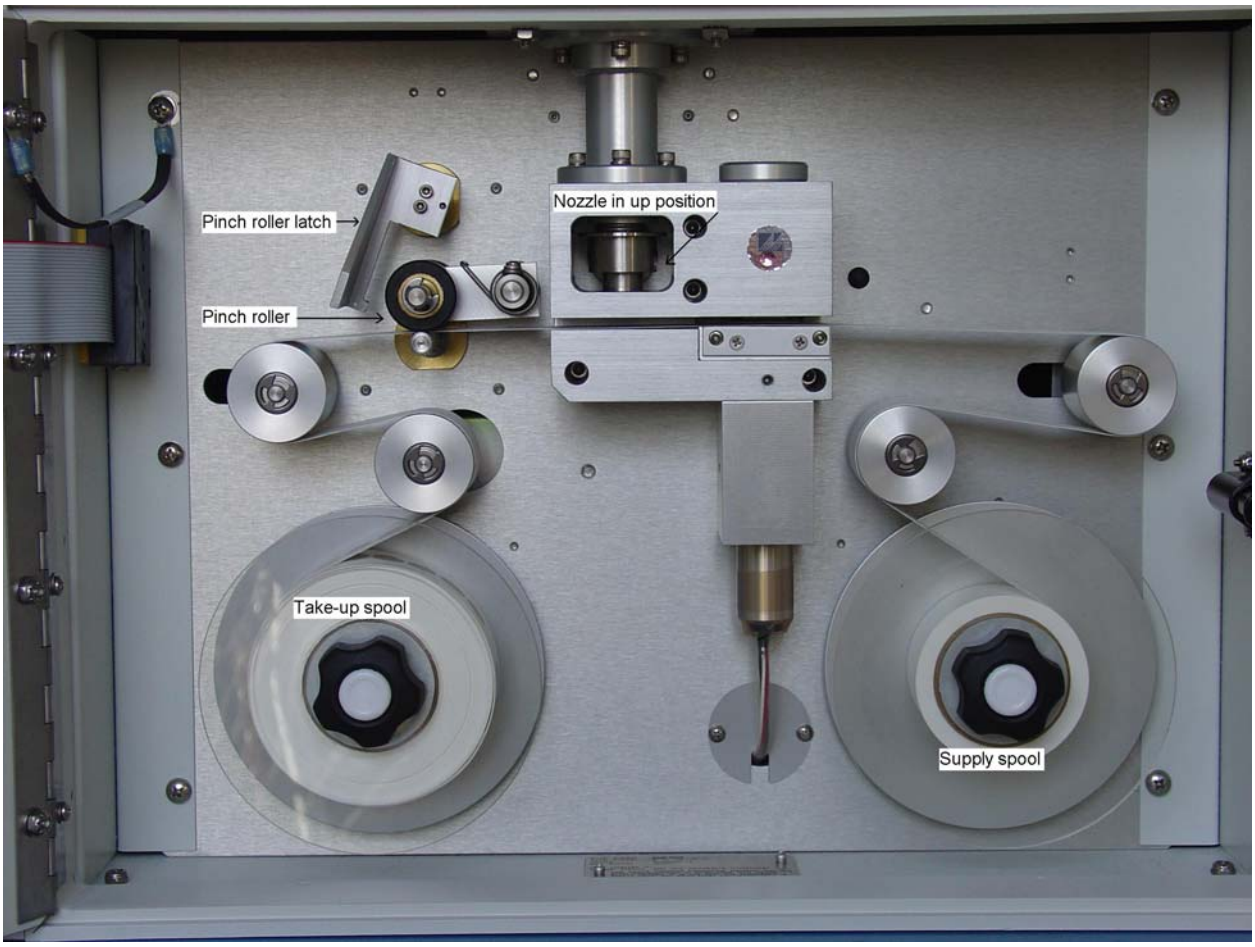

Figure 194.7
BAM-1020 Filter Tape

Section 1.9.5
Sample Analysis, MetOne BAM-1020
List of Headings

Heading Description	Part No.
Sample Analysis, MetOne BAM-1020	10.0

Section 1.9.5
Sample Analysis, MetOne BAM-1020
List of Figures

Figure Description	Figure No.
Not applicable	

5.0 Sample Analysis, MetOne BAM-1020

When the high-energy electrons emanating from the radioactive decay of carbon-14 (^{14}C) interact with nearby matter, they loose their energy and, in some cases, are absorbed by the matter. These emitted radioactive decay high-energy electrons are known as beta rays. The process is known as beta-ray attenuation. When matter is placed between the radioactive ^{14}C source and a device designed to detect beta rays, the beta rays are absorbed and/or their energy diminished. This results in a reduction in the number of beta particles detected. The magnitude of the reduction in detected beta particles is a function of the mass of the absorbing matter between the ^{14}C beta source and the detector. The number of beta particles passing through absorbing matter, such as particulate deposited on a filter tape, decrease nearly exponentially with the mass through which they much pass. Equation 195.1 shows this relationship.

Equation 195.1 $I = I_O e^{\propto X}$

Where:

- I = measured beta ray intensity (counts per unit time), of the attenuated beta ray (particulate laden filter tape)
- I_O = measured beta ray intensity of the un-attenuated beta ray (clean filter tape)
- $\propto$ = absorption cross section of the material absorbing the beta rays (cm^2/g)
- X = mass density of the absorbing matter (g/cm^2)

Equation 195.1 very closely resembles the Lambert-Beers Law, which is used in spectrometric analysis. Equation 195.1 is an idealized simplification of the true processes occurring meant to simplify the corresponding mathematics. However, experimental measurement shows that in properly designed monitors the use of this equation introduces no substantial error.

Equation 195.1 may be rearranged to solve for X, the mass density of the absorbing matter. This is shown in Equation 195.2.

Equation 195.2 $-1 / \grave{I} * ln(I / I_O) = 1 / \grave{I} * ln(I_O / I) = X$

The absorption cross section is experimentally determined during the calibration process. Once I and I_O are experimentally measured, the predicted mass density, X can be calculated.

In practice, ambient air is sampled at a constant flow rate (Q) for a specified time Δt. This

5.0 Sample Analysis – MetOne BAM-1020

sampled air is passed through a filter of surface area A. Once X has been determined, it is possible to calculate the ambient concentration of particulate matter ($\mu g/m^3$) with Equation 195.3.

Equation 195.3 $C = 10^6 A / (Q\ddot{A}\ \Delta t\ \grave{I})$

Where:
- C = ambient particulate concentration ($\mu g/m^3$)
- A = cross sectional area on the tape over which particulate is being deposited (cm^2)
- Q = rate at which particulate matter is being collected on the filter tape (liters per minute)
- Δt = sampling time (minutes)

Combining these equations 195.2 & 195.3 yields the final expression for the ambient particulate concentration in terms of measured quantities. This is shown in Equation 195.4.

Equation 195.4 $C = \{10^6 A / (Q\ddot{A}\ \Delta t\ \grave{I})\} * \mathit{ln}(I_O / I)$

Beta attenuation monitors are almost insensitive to the nature of the matter being measured. This makes the BAM-1020 very insensitive to the chemical composition of the material being collected. It is instructive to perform a conventional propagation of errors analysis on Equation 195.4 to develop an equation for the relative concentration error ($\mathring{o}_C/C$) as a function of the uncertainty in each of the parameters of Equation 195.4. This leads to Equation 195.5.

Equation 195.5 $\mathring{o}_C/C = [\mathring{o}_A^2/A^2 + \mathring{o}_Q^2/Q^2 + \mathring{o}_t^2/t^2 + \mathring{o}^2\grave{I}/\grave{I}^2 + \mathring{o}_I^2/\{I^2 \mathit{ln}(I/I_O)^2\} + \mathring{o}_{Io}^2/\{I_O^2 \mathit{ln}(I/I_O)^2\}]^{-2}$

The relative uncertainty of the concentration ($\mathring{o}_C/C$) is decreased (improved) by increasing the; flow rate (Q); sampling time (t), absorption cross-section (μ), I, I_O and filter tape cross sectional area (A).

The uncertainty associated with the filter area ($\mathring{o}_A$ /A) may be minimized by ensuring that the tape is in exactly the same position during the I_O measurement as in the I measurement phase. Proper design of the shuttle mechanism inside of the BAM-1020 will lead to minimal error here.

5.0 Sample Analysis – MetOne BAM-1020

The uncertainty in the flow rate (δ_Q /Q) may be minimized by properly controlling instrument flow. For the BAM-1020 equipped with the mass flow controller device, (δ_Q / Q) the flow rate uncertainty is controlled to within +/-1%.

The relative error due to the uncertainly in the absorption cross section ($\delta\mu/\mu$), is due to its slight variation as a function of the chemical composition of the matter being monitored. With judicious selection of the calibrated value of μ, this relative error is on the order of +/-2-3%.

The uncertainty associated with the measurement of I and I_O has to do with the physical nature of the process leading to the emission of beta particles from the decay of ^{14}C. This process follows Poisson statistics. Poisson statistics show the uncertainty in the measurement of I (δ_I /I) and I_O (δ_{Io} /I_O) are minimized by increasing the sampling time. Mathematical analysis shows that doubling the sampling time and hence the measured intensity of I or I_O, will reduce the uncertainty of the measurement by a factor of 1.414 (square-root of 2).

Section 1.9.6
Maintenance, MetOne BAM-1020
List of Headings

Heading Description	**Part No.**
Maintenance	6.0
Continuous Particulate Sampler Preventive Maintenance	6.1.0
Applicable Instrument	.1
Schedule	.2
Procedure	.3
Troubleshooting	6.2

Section 1.9.6
Maintenance, MetOne BAM-1020
List of Figures

Figure Description	**Figure No.**
Preventive Maintenance Check Sheet	196.1
Operations Check Sheet	196.2
Maintenance Request Form	196.3

6.0 Maintenance

System failure involving data collection or calibration functions results in a decrease of data quantity and/or quality. The following preventive maintenance procedures focus on components of equipment which may degrade during normal operation and which may be easily replaced before failure occurs.

In general, maintenance is performed in conformance with manufacturer's recommendations. Where a significant improvement in quality assurance cost-effectiveness can be realized, scheduling is modified to affect a different rate of replacement.

6.1.0 Continuous Particulate Analyzer Preventive Maintenance

Routine maintenance of monitors is important in order to maintain both data quality and quantity. This document presents a maintenance schedule and procedures for activities, which may be performed on-site. All preventative maintenance done on-site will be documented on the site preventive maintenance check sheet (Figure 196.1), on the Operations Check Sheet (Figure 196.2) and in historic memos.

Designated Field personnel will remove and replace the analyzer vacuum pump in the field on a biennial basis. They will be responsible for filling out a maintenance request form (Figure 196.3) if the monitor is returned to the Windsor lab for maintenance/troubleshooting. The monitor's logbook must accompany the monitor when it is removed from the field.

Maintenance personnel will be responsible for ensuring an adequate supply of spare parts (NOT consumables, these are the responsibility of the Operations Group).

6.1.1 Applicable Instrument

Met One Beta Attenuation Monitor, model BAM-1020.

6.1.2 Schedule

A. Sample filter tape: check weekly, replace as needed.

B. Nozzle cleaning: weekly.

C. BAM vs. DL time check: weekly.

6.1.2 Schedule

D. Clean or replace manifold, inlet (and cyclone where applicable): every two months.

6.1.3 Procedure

These procedures can be found in Section 1.9.4, Equipment Operation.

6.2 Troubleshooting

Troubleshooting problems in the field should be limited to those found in chapter 9 of the operator's manual. Document any actions taken to diagnose and/or repair the monitor on the operations check sheet.

It may become necessary to remove the monitor from the field for more extensive troubleshooting purposes. Data equipment technicians will bear this responsibility. They will be responsible for filling out a maintenance request form (Figure 196.3) if the monitor is returned to the Windsor lab for maintenance/troubleshooting.

Data equipment technicians will work in conjunction with the vendor to resolve any problems for monitors requiring extensive troubleshooting. All work done must be documented. The documentation must be placed in the monitor logbook.

Preventive Maintenance Check Sheet

Side 1 of 2

Town _____ Site _____ ID _____ Year _____

Field Technician Responsibility (Data Equipment Tecs see other side.)

Item	Duty	Frequency (months)	Initials/Date					
A/C Shed	Clean filter	1						
	Clean interior	6						
	Clean exterior	12						
Manifold	Clean	3						
	Oil fan	6						
TE Model 42C - NO w/TE Model 145 - Site Cal	Clean cooling fan filters, Model 42C & 145	1						
	Check capillaries (QA responsibility)	3						
	Change exhaust scrubber	4						
	Clean thermal cooling fins	6						
	Change sample line, filter holder & tee	6						
	Change zero air scrubbers	6						
TE Model 43A - SO_2 w/TE Model 145 - Auto Cal	Clean cooling fan filters, Models 43A & 145	1						
	Check capillary	3						
	Change sample line, filter holder & tee	6						
TE Model 48C - CO	Clean cooling fan filters	1						
	Check capillary	3						
	Change inside sample line & filter holder	6						
	Clean condensation chamber	6						
	Change zero filter & leak check zero path	6						
TE Model 49C - O_3 (6 month season)	Clean cooling fan filters	1						
	Change sample line, filter holder & tee	3						
Met One Model 1020 - BAM	Clean inlets & down tube	2						
Magee Model AE21 - BC	Clean inlets	1						

Preventive Maintenance Check Sheet

Side 2 of 2

Town Site ID Year

Data Equipment Technician Responsibility (Field Tecs see other side.)

Item	Duty	Frequency (months)	Initials/Date	
TE Model 42C & 145 - NO	Yearly swap for PM	12		
TE Model 43A & 145 - SO_2	Yearly swap for PM	12		
TE Model 48C - CO	Yearly swap for PM	12		
TE Model 49C - O_3	Install @ start of season	n/a		
(6 month season)	Remove @ end of season	n/a		
TE Model 145	Yearly swap for PM	12		
Met One Model 1020 - BAM	Biennial pump change	24		
Magee Model AE21 - BC	Yearly swap for PM	12		
Temperature/Line Voltage	Calibrate electronics	6		
Wind system	Calibrate electronics	6		
	Check cross-arm orientation	6		
Dew point	Calibrate electronics	6		
	Change sensor	3		
Barometric pressure	Calibrate electronics	6		
Rain Gage	Calibrate electronics	6		
	Clean/Level	6		
Manifold	Flow Check	6		
ESC 8816 DL	Check calibration of analog input	6		

Comments:

fm-ozmpmcheck.wpd Revised 11/15/04

Figure 196.1
Preventive Maintenance Sheet

Operations Check Sheet
Met One Beta Attenuation Monitor, BAM-1020

Town/ Site _____ Month/Year _____

BAM-1020 SN Sampling for: $PM_{2.5}$ PM_{10} m from appendix B

Day of Month/ Time	/	/	/	/	/	/	/
Operator Site Temp							
PERFORM OPERATIONAL CHECKS, RECORD THESE VALUES FROM THE DISPLAY							
Last m value							
% D of appen B vs. last m w/in 5%							
BAM Time vs. DL Time	/	/	/	/	/	/	/
Check error log, document errors below							
Filter tape intact? (Y or N)							
Filter tape changed? (Y or N)							
Weekly nozzle cleaning ✔							
Monthly Download ✔							
Data Rejection: Start date EST Enter Reason Under Comments. End date EST							
End Time EST							
COMMENTS: Perform any necessary corrective and/or preventative maintenance. Clearly document any problem and the corrective action taken in the Comment Section to the right. %D = (Last m value – appendix B m value)/appendix B m value x 100							

Last Inlet/Cyclone cleaning date			New Inlet/Cyclone cleaning date			
Date of Monthly checks/initials:		Reference	BAM	Specification	W/in spec	
	Leak Check			<1.5 lpm	Y	N
Pressure (”Hg)	x 25.4 =			W/in +/- 10 mmHg	Y	N
	Temperature			W/in 4°C	Y	N
Manometer reading:	Flow			W/in +/-4%	Y	N

form\BAMcheck.wpd rev 11/15/04

Figure 196.2
Operations Check Sheet, Met One BAM-1020

Maintenance Request Form

**********To Be Filled Out By Field Personnel**********

Type of Equipment Model

Serial # DEP #

Previous Location _____ Date _____

Requesters Init.

Requested Action: Repair ? PM ? Modification ? Other ?

Describe Problem: _____

_____

_____

_____

**********To Be Filled Out By Maintenance**********

Work Taken By: _____

Date: _____

Forms/MaintRequest.rev 10/1/03

Figure 196.3
Maintenance Request Sheet

Section 1.9.7
Audits, Met One BAM-1020
List of Headings

Heading Description	**Part No.**
Audits	7.0.0
System Audits	.1
Performance Audit	.2
BAM-1020 Sampler	7.1
BAM-1020 Sampler Siting Criteria	7.2
Flow Transfer Standard (FTS)	7.3.0
BGI triCal	.1
Streamline Flow Transfer Standard	.2
Temperature Instrumentation	7.4.0
Fisherbrand (DHT) Digital Hygrometer Thermometer	.1
Dickson TH300 Temperature/RH Indicator	.2
Temprobe	.3
Digital pressure Sensor (Psensor)	7.5
Merriam Smart Manometer	7.6
Equipment/Supplies	7.7
BAM-1020 Sampler Audit Procedures	7.8.0
Clock Time Audit	.1
Barometric Pressure Audit	.2
Ambient Temperature Audit	.3
Leak Check	.4
Flow Rate Audit	.5
Self Test	.6

Section 1.9.7
Audits, Met One BAM-1020
List of Figures

Figure Description	**Figure No.**
MetOne BAM-1020 Sampler	197.1
BGI triCal	197.2
Chinook Streamline Flow Transfer Standard	197.3
Fisherbrand (DHT) Digital Hygrometer/Thermometer	197.4
Dickson TH300 Temperature/RH Indicator	197.5
Fluke Series 87 III Multi-meter	197.6
Temprobe	197.7
Psensor	197.8
Merriam Smart Manometer	197.9
Flow Audit Adapter	197.10
BAM-1020 Audit Sheet	197.11

7.0.0 Audits

Audits are independent checks on the instrumentation of a monitoring network. Its purpose is to:

1. Identify analyzers or samplers operating outside of the required specifications.

2. Identify laboratory instrumentation or equipment operating outside of the required specifications.

3. Identify systematic bias of the monitoring network.

4. Measure improvement in the data quality.

5. Assess accuracy of the monitored data.

Audits do not improve data nor can they be used to correct or reject data. They provide assurance that the work being done by air monitoring and contracted source personnel is being done properly. Audits are categorized into two groups: system and performance.

7.0.1 System Audit

A system audit is a qualitative on-site inspection and review of the entire air monitoring network. EPA Region I personnel perform a system audit on Connecticut's air monitoring network approximately every two years.

7.0.2. Performance Audit

A performance audit is an independent and quantitative evaluation of the data generated by the total measurement system. The auditor must not be the technician or engineer who conducts the routine service, calibration, or analysis. The auditor must have extensive background experience with the measurement system being audited.

The standards and equipment used for auditing must be different from the standards and equipment used for calibrations. This audit equipment is designated for audit use only and is certified on a designated schedule, as recommended by the manufacturer.

7.1.0 MetOne BAM-1020 Sampler

The BAM-1020 is designed to automatic measure $PM_{2.5}$, $PM_{10,}$ or TSP in ambient air. It is USEPA certified as an Equivalent Method for PM_{10}. It may be equipped with a $PM_{2.5}$

7.1.0 MetOne BAM-1020 Sampler

WINS impactor or $PM_{2.5}$ sharp cut cyclone for monitoring of fine particulate matter. It can also be configured to monitor total suspended particulate.

The BAM-1020 uses the principle of beta ray attenuation to determine the mass concentration of particulate matter in units of $\mu g/m^3$. A small beta source (<60 μCu) emits a constant source of high-energy electrons, known as beta particles. These beta particles are detected and measured by an ultra-sensitive detector. A filter tape is placed between the beta source and the detector.

Ambient air is drawn into the sampler's inlet and deposited on the filter paper. As the mass deposited on the filter tape increases, the decrease in signal detected by the counter is inversely proportional to the mass loading on the filter tape.

7.2.0 BAM-1020 Sampler Siting Conditions

1. The BAM-1020 Sampler inlet must be 2-7 meters above ground level for micro-scale monitoring and 2-15 meters above ground level for middle or larger scale monitoring.

2. There must be unrestricted airflow in an arc of 270° around the BAM-1020 Sampler, except for street canyon sites.

3. The BAM-1020 Sampler must be located away from obstacles, such as buildings, so that the distance between obstacles and the sampler is at least twice the height that the obstacle protrudes above the sampler, except for street canyon sites.

4. If the BAM-1020 Sampler is located on a roof or similar structure, there must be a minimum 2 meters separation from walls, parapets, penthouses, etc.

5. The BAM-1020 Sampler should be at least 20 meters from the drip line of trees. However, if the tree is classified as an obstruction, the sampler must be placed at least 10 meters from the drip line.

6. Spacing from roadways varies, depending on traffic, sampling scale and sampler height. See 40 CFR Part 58, Appendix E, §8.3, for additional information.

7. No active furnace or incineration flues should be nearby.

Waivers have been granted by EPA, for sites not meeting all of the siting criteria.

7.3.0 Flow Transfer Standard (FTS)

Flow rate audits can be performed with either a BGI triCal or the Chinook Streamline Flow Transfer Standard.

7.3.1 BGI triCal

The triCal measures volumetric flow rates by utilizing a pressure transducer to assess the pressure drop by air being drawn through a venturi. As the flow rate through the venturi increases, the pressure drop increases as the square root.

Measurements are made at nearly the true operating conditions of the sampler, due to most of the pressure drop being fully recovered in the expansion section of the venturi. The triCal is furnished with 3 auto-ranging venturies, which cover a 0.1 – 30.0 lpm range. Barometric pressure and temperature are monitored and displayed on a continuous basis, when the triCal is on.

The triCal is returned to BGI Inc. on a yearly basis for re-certification. A certificate of this calibration is filed in the audit file cabinet at the DEP Lab Facility.

7.3.2 Chinook Streamline Flow Transfer Standard (FTS)

The Streamline FTS, manufactured by Chinook Engineering, is an orifice type flow meter used to perform flow rate audits. It is designed to fit directly on Rupprecht and Patashnick (R&P) single filter and sequential $PM_{2.5}$ samplers.

The actual flow rate (Q_a) through the Streamline FTS is a function of the pressure drop through the device ()P), the ambient air temperature (T_{amb}), and the ambient pressure (P_{amb}). Each Streamline FTS has a unique pair of calibration constants, m and b, which are derived from a NIST traceable certification.

Utilizing Bernoulli's Theorem, the volumetric flow rate through an orifice is proportional to the square root of the pressure drop across the orifice and the fluid density (in this application, ambient air). Thus:

$$Qa = \left[m\,x \left(\sqrt{\frac{(\Delta P) - (Tamb)}{(Pamb)}} \right) + b \right]$$

Where:

Q_a = actual flow rate	T_{amb} = ambient temperature
m = FTS slope	P_{amb} = ambient pressure
)P = pressure drop across the orifice	b = FTS intercept

7.3.2 Chinook Streamline Flow Transfer Standard (FTS)

The Streamline FTS is returned to Chinook Engineering on a yearly basis for re-certification. A certificate of this calibration is filed in the audit file cabinet at the DEP Lab Facility.

7.4 Temperature Instrumentation

Temperature audits can be performed with the BGI triCal, Fisherbrand Digital Hygrometer/Thermometer or a Dickson TH300 Temperature/RH Indicator.

7.4.1 Fisherbrand (DHT) Digital Hygrometer/Thermometer

The Fisherbrand (DHT) Digital Hygrometer/Thermometer is an instrument used to perform relative humidity and temperature audits.

The DHT is a combination probe containing two sensors. One sensor is a thermister that is calibrated by the manufacturer against a NIST traceable temperature so that it measures the ambient or dry bulb temperature in the weighing/conditioning room.

The digital hygrometer component of the probe is a precision, thin-film (semi-permeable membrane) capacitance sensor. The circuitry of the combination probe uses the pre-calibrated thermister output and the calibrated capacitance change resulting from the amount of moisture allowed into the sensor by the semi-permeable membrane to calculate the RH.

The DHT is returned to the Control Company on a yearly basis for re-certification. A certificate of this calibration is filed in the audit file cabinet at the DEP Lab Facility.

7.4.2 Dickson TH300 Temperature/RH Indicator

The Dickson TH300 Temperature/RH Indicator is an instrument used to perform relative humidity and temperature audits.

The Dickson TH300 is returned to the Control Company on a yearly basis for re-certification. A certificate of this calibration is filed in the audit file cabinet at the DEP Lab Facility.

7.4.3 Temprobe

A Fluke 87 III true RMS multi-meter with a Fluke 80T-1500 temperature probe is used to

7.4.2 Temprobe

perform temperature audits. Together this is referred to as temprobe.

The temprobe is re-certified every 6 months at the Windsor Air Lab. The certification results are kept in a logbook at the DEP Lab Facility.

7.5 Digital Pressure Sensor (Psensor)

The Psensor is an electronic digital barometer that measures the current atmospheric pressure from 23.45 to 31.01 "Hg (595.63 to 787.65 mm Hg). It can also measure time, temperature, relative humidity, and altitude.

The Psensor is re-certified every 6 months at the Windsor Air Lab. The certification results are kept in a logbook at the DEP Lab Facility.

7.6 Merriam Smart Manometer

The Merriam Smart Manometer is a microprocessor based, pressure sensing device that can be used to directly measure pressure.

The Smart Manometer is returned to Merriam Instruments on a yearly basis for re-certification. A certificate of this calibration is filed in the audit file cabinet at the DEP Lab Facility.

7.7.0 Equipment/Supplies

BAM-1020 Sampler (Figure 197.1)
BGI triCAL (Figure 197.2)
Chinook Streamline Flow Transfer Standard (Figure 197.3)
Fisherbrand (DHT) Digital Hygrometer/Thermometer (Figure 197.4)
Dickson TH300 Temperature/RH Indicator (Figure 197.5)
Fluke, Series 87 III, Multi-meter (Figure 197.6)
Temprobe (Figure 197.7)
Digital Pressure Sensor (Psensor, Figure 197.8)
Merriam Smart Manometer (Figure 197.9)
Flow Audit Adapter (FAA, Figure 197.10)
BAM-1020 Sampler Audit Sheet (Figure 197.11)
BAM-1020 Sampler Operator's Manual and Audit Procedures
Tool Case and Ball point or indelible pen (black or blue)

7.8.0 BAM-1020 Sampler Audit Procedures

If the BGI triCal will be used for this audit, it should be removed from its carrying case and allowed to adapt to site conditions for approximately 10 minutes before turning it on. Switch the triCal using the off/on switch, located on the right side.
The screen will display the following message: **Please insert Venturi 1-2-3.**

Select venturi 1 (6-30 lpm range). With the venturi held vertically, plain end downwards ("O" rings up) insert the venturi into the hole in the top of the triCal. **The triCal will display the version, its serial number and the range of the venturi inserted.** Then a triCal will perform a self-calibration. When finished, **the battery life %, BP, Tfil, Tamb, and Q: Under range** will be displayed.

Select a tubing cap for the tubing needed to attach the triCal to the Flow Audit Adapter (FAA) and place it onto the venturi. Attach one end of the tubing to the cap.

Insert the temperature cable to the 3-prong opening, located on the right side of the triCal. When, inserted, the Tfil temperature will be displayed on the triCal's LED. Place triCal in a safe location until use.

A. Document the following information onto the Audit Sheet:

1. Town/Site
2. BAM-1020 Sampler SN
3. Date/Time
4. Pressure Sensor Mfr/SN and date of last certification
5. Temprobe Mfr/SN and date of last certification
6. Flow Transfer Standard Mfr/SN and date of last certification
7. Flow Transfer Standard slope and intercept

B. Ensure ambient particulate levels at $PM_{2.5}$ sites are <49 μg/m^3 (<112 μg/m^3 for PM_{10} monitors) before disabling the BAM channel. If particulate levels are ≥49 μg/m^3, (≥112 μg/m^3 for PM_{10} monitors), do not place channel in *Maintenance*. **Do not perform any audits if the channel is not disabled**.

C. Disable the BAM channel following the steps for sites with ESC 8816 data logger (DL) and PC**:** Refer to ESC 8816 SOP. The BAM channel is labeled PM2.5 or PM10 on the site DL.

7.8.1 Clock Time Audit

A. Compare the BAM sampler's date and time to the Psensor time or the site Data Logger. The Psensor time is adjusted to the Data Logger time at the DEP Lab. The sampler date and time can be taken from the **Normal Mode Screen**. Record both the Sampler and Audit date and time onto the Audit Sheet.

7.8.2 Barometric Pressure Audit

The auditor has the option of either using the triCal or Psensor. All instruments are NIST traceable.

A. Press the ***TEST*** key. Using the right arrow key, move the cursor over to the word **"FLOW"** and press ***SELECT***. A screen with "Enter Password" will be displayed. Enter the assigned password.

B. Record the BAM and reference barometric pressure value onto the Audit Sheet.

C. If using the triCal, record the stable BP reading on the Audit Sheet.

D. If using the Psensor, follow instructions from the bold print below and record the ambient pressure, in mm Hg (*inches Hg x 25.4 = mm Hg*), on the Audit sheet. The Psensor always remains on until battery life is depleted.

The Psensors are equipped with an adjustable altitude compensation, which is used as a trim pot during calibration. Check the label affixed to the back of the Psensor for the correct altitude setting. If the setting is incorrect, adjust to the correct setting. Check the small box to the left of the pressure display. This value must be set to A0≅ (zero). If this value is not A0≅, press and hold the AHISTORY≅ button until A0≅ appears. The audit ambient barometric pressure should only be taken when the above conditions are met.

E. Document on the Audit Sheet whether the ambient pressure was within 10 mm Hg and whether the Audit passed or failed.

F. If the BAM's barometric pressure differs from the audit barometric pressure by more than 10 mm Hg, notify the Head of Field Operations/Monitoring. The triCal or Psensor should be returned to the QA Lab for comparison against a NIST standard. If it is found to be within spec, the BAM's ambient pressure sensor will need to be re-calibrated by QA.

G. Remain in the *Audit Screen* for the following procedure.

7.8.3 <u>Ambient Temperature Audit</u>

The auditor has the option of either using the triCal, Dickson TH300, Fisherbrand DHT, or temprobe. All instruments are NIST traceable.

A. Record the BAM and reference ambient temperature value onto the Audit Sheet.

B. If using the triCal, insert the temperature probe into the ambient temperature shield housing the $PM_{2.5}$'s ambient temperature probe. Allow the temperature reading to stabilize before recording it on the Audit Sheet.

C. If using the Dickson TH300 Temperature/RH Indicator, remove the DHT from its carrying case. Turn the unit on by pressing the On/Off keypad. Press the T/RH/DP keypad until the digital display indicates the temperature in ^{o}C. Place the DHT temperature probe next to the ambient temperature shield. Protect the DHT probe from direct or indirect sunlight and from inclement weather to ensure an accurate reading. Allow the temperature reading to stabilize, before recording it on the Audit Sheet.

D. If using the Fisherbrand DHT, remove the DHT from its carrying case. Turn the unit on by pressing the On/Off keypad. When the digital display indicates the temperature in ^{o}C, press the Hold/Scroll keypad. Place the DHT temperature probe next to the ambient temperature shield. Protect the DHT probe from direct or indirect sunlight and from inclement weather to ensure an accurate reading. Allow the temperature reading to stabilize, before recording it on the Audit Sheet.

E. If using the temprobe, turn on the fluke by moving the selector switch from off to mV. Turn on the temprobe by moving the selector switch from off to ^{o}C. Insert the temprobe into the ambient temperature shield housing the $PM_{2.5}$'s ambient temperature probe. Allow the temperature reading to stabilize before recording it on the Audit Sheet

F. Document on the Audit Sheet whether the ambient temperature was within 10 ^{o}C and whether the Audit passed or failed.

G. If the BAM's temperature differs from the audit temperature by more than 10 ^{o}C, notify the Head of Field Operations/Monitoring. The audit device used should be returned to the QA Lab for comparison against a NIST standard. If it is found to be within spec, the BAM's ambient temperature probe will need to be re-calibrated by QA.

7.8.4 Leak Check

A. Remove the PM_{10} head from the BAM inlet system. Attach a flow audit adapter, with the valve closed, to the end of the inlet.

B. In the **Main Menu**, press ***TEST.*** In the ***TEST*** menu, select ***TAPE*** to advance the tape one window.

C. From the **Main Menu**, press ***TEST.*** In the ***TEST*** menu, select ***PUMP*** and turn on the pump.

D. Record the indicated flow rate onto the Audit Sheet. The flow rate should be < 1.5 lpm. The reason there is a 1.5 lpm allowance is due to the nozzle filter paper interface. Under these test conditions, the pressure differential across this interface is 21"Hg. This is an order of magnitude greater than the BAM-1020 will encounter during sampling. If the flow is < 1.5 lpm, there will not be a leak during normal operation.

E. Slowly open the flow audit adapter valve. Remove the flow audit adapter from the end of the inlet. Replace the PM_{10} head onto the inlet.

F. Performing a leak check will generate an error code, due to insufficient flow through the inlet. A **"SELF TEST"**, which will be performed after the flow rate audit, is required to reset the sampler.

7.8.5 Flow Rate Audit

A. In the **Main Menu**, press ***TEST.*** In the ***TEST*** menu, select ***TAPE*** and advance the tape one window.

B. Press the ***TEST*** key**.** Using the right arrow key, move the cursor over to the word **'FLOW'** and press the ***Select*** key.

C. Press the **"PUMP ON"** key and allow the pump to run for several minutes. The cursor will automatically move to the **'VOLUMETRIC FLOWRATE'** row under the column labeled **'REFERENCE'.** The value in the **"VOLUMETRIC FLOWRATE'** row under the **'BAM'** column, must read 16.7.

D. Record the BAM and the reference Vol. Flow Rate onto the Audit Sheet.

E. Remove the PM_{10} inlet from the BAM sampler. Place it in a safe location.

7.8.5 <u>Flow Rate Audit</u>

F. If using the triCal, attach the open end of the hose to the FAA. When the flow has stabilized, record the Q value, from the triCal LED, onto the Audit Sheet.

G. If using the Streamline FTS, attach it to the down tube. Leave the PM2.5 inlet on, if the BAM Sampler is monitoring for PM2.5.

H. Using tygon hosing, attach the P1 port of the manometer to the port on the side of the FTS. Uncap the P2 port of the manometer. P2 should be open to atmospheric pressure.

I. Turn ON the digital manometer. "Zero" the manometer by pressing the two >ZERO= buttons simultaneously.

J. Allow the manometer reading to stabilize before recording it onto the Audit Sheet.

K. Calculate the actual volumetric flow rate in lpm. Record this value on the Audit Sheet. Use the provided slope and intercept for the FTS with the following equation

$$Qa = \left[m\,x\left(\sqrt{\frac{(\Delta P) - (Tamb)}{(Pamb)}}\right) + b \right]$$

Where: Q = actual flow rate in liters per minute.
m = slope.
Manometer = manometer reading in inches of water

L. Perform a final leak check following the steps in Section 7.8.4.

M. If the BAM flow rate differs from the audit flow rate by +/- 10%, notify the Head of Field Operations/Monitoring. The BAM will require recalibration.

7.8.6 <u>Self Test</u>

A. The BAM-1020 has a built in self-test function. That checks both the current operational status and resets any error code that may exist.

B. Return to the **Main Menu**. Press ***TEST*** and then press ***SELF TEST***. The sampler will automatically go through a series of internal checks. The test takes approximately 4 minutes.

7.8.6 <u>Self Test</u>

C. The results of these checks will be sequentially displayed. If the check passed, the word **OK** will be displayed. If the check failed, the word **FAIL** will be displayed.

D. Upon completion of the **"SELF TEST",** press ***EXIT*** to return to the **Main Menu.**

E. Enable the BAM channel following the steps for sites with ESC 8816 data logger (DL) and PC**:** Refer to ESC 8816 SOP. The BAM channel is labeled PM2.5 or PM10 on the site DL.

Figure 197.1
BAM-1020 Sampler

Figure 197.2
BGI triCal

Figure 197.3
Chinook Streamline Flow Transfer Standard

Figure 197.4
Fisherbrand (DHT) Digital Hygrometer/Thermometer

Figure 197.5
Dickson TH300 Temperature/RH Indicator

Figure 197.6
Fluke Series 87 III Multi-meter

Figure 197.7
Temprobe

Figure 197.8
Psensor

Figure 197.9
Merriam Smart Manometer

Figure 197.10
Flow Audit Adapter

Met One Instruments

BAM-1020 Particulate Monitor Audit Sheet

Town/Site _____ Sampler SN _____

Date/Time (EST) _____ Auditor _____

Pressure Sensor MFG/SN _____ Data of last Cert _____

Temperature Sensor MFG/SN _____ Data of last Cert _____

Smart Manometer MFR/SN _____ Data of last Cert _____

Flow Transfer Std MFG/SN _____ Data of last Cert _____

If Chinook FTS is used: slope_____ intercept _____

****

Leak Check

Flow Rate _____ lpm Flow Rate < 1.5 lpm Yes No Pass Fail

If Chinook is used: Smart Manometer Reading _____

Parameter	BAM	Reference	Audit	Diff from BAM
Date/Time		**XXXXXXX**		
Ambient Temp. (^{o}C)				
Bar. Pressure (mmHg)				
Vol. Flow Rate (lpm)				

Self Test: Pass Fail **Audit: Pass Fail**

Comments:

Reviewed by _____

Figure 197.11
BAM-1020 Audit Sheet

Section 1.9.8
Data Handling, MetOne BAM-1020
List of Headings

Heading Description	**Part No.**
Data Handling	8.0
Accuracy	8.1
Correction and Rejection of Data	8.2
Data Reduction	8.3
Reporting	8.4.0
Quarterly Reports	.1
Annual Reports	.2

Section 1.9.8
Data Handling, MetOne BAM-1020
List of Figures

Figure Description	**Figure No.**
Data Handling Flow Chart	198.1
Met One Instruments BAM-1020 Particulate Monitor Audit Sheet (Performance Audit Data Sheet)	198.2
Operations Check Sheet Met One Beta Attenuation Monitor, Model BAM-1020 (OPS ✔ sheet)	198.3
Calibration Data Sheet, Continuous particulate Sampler	198.4
Monthly Report, BAM	198.5
Quarterly Data Check-Off Sheet	198.6
Data Validation Sheet	198.7
Submittal Letter to EPA Region 1	198.8
Accuracy Report	198.9
AIRS SLAMS Quick Look Report	198.10
AIRS SLAMS Report Cover Letter	198.11

8.0 Data Handling

Two separate but interdependent data sets are generated when continuous analyzers are used to measure ambient pollutant levels. The first set contains raw ambient pollutant concentrations. A second set consisting of calibrations, audits and performance checks is required to correct, verify and assess the reported ambient pollutant concentrations. Figure 198.1 is a flow diagram of the data handling sequence. This diagram illustrates how the information is interrelated and demonstrates the data processing sequence.

8.1 Accuracy

A. Performance Audit

A designated Quality Assurance person audits approximately one quarter of each pollutant network each calendar quarter. Particulate analyzer temperature, pressure and flow are measured and the responses recorded on the Met One Instruments BAM-1020 Particulate Monitor Audit Sheet (Performance Audit Data Sheet, Figures 198.2). The Data Group enters this data into the **PARSV2 program for Accuracy**.

1. Log on to the PC where the PARSV2 program has been loaded.
2. Click on the PARSV2 icon.
3. Follow the PARSV2 user guide and enter data.
4. Name each file by quarter and save.

Use the Export database function for submitting data to AIRS.

B. System Audit

EPA Region I performs systems audits on a biyearly basis. The purpose of a systems audit is to qualitatively appraise quality assurance activities and to precipitate corrective action where needed. The audit results will lead to improvement of data accuracy, but make no quantitative judgment of accuracy in itself.

8.2 Correction and Rejection of Data

Analyzer operating parameters and sampling site conditions are frequently checked and documented by Operations and Quality Assurance personnel. These checks may result in ambient data being corrected or rejected. The following subsections will address criteria for data correction and rejection.

8.2 Correction and Rejection of Data

A. Data Correction

Operations (OPS) Air Pollution Control Technicians (field tecs) and Data Equipment Technicians (DETs) will document potential data correction information on the Operations Check Sheet, Met One Beta Attenuation Monitor, BAM-1020 (OPS ✓ sheet, Figure 198.3) and Calibration Data Sheet (Figure 198.4). The Data Group will use this information for their quarterly report.

1. Flow Drift
   When flow drift is between 4% and 10% (inclusive) data is corrected halfway back to the last acceptable flow check.
2. Other
   When data is affected by any other quantifiable cause (such as temperature and/or pressure drift that will affect flow rate) that data will be corrected in a reasonable manner.

B. Data Rejection

Field tecs and DETs will review all electronic strip charts during their weekly site check and document all anomalies on the OPS ✓ sheet (Figure 198.3). They will be responsible for reviewing the inside site temperatures and rejecting any data outside the inside site temperature criteria (68° to 86^oF) for sites with instrumentation limitations. (Some BAM monitors will be housed at sites where the inside temperature must be kept within 5^oC of ambient.) OPS DETs will review electronic strip charts and monthly printouts to document data rejection information on the ESC system. Data Group personnel will use this information for their quarterly report. All rejected and missing data will be assigned a null data code ("AM").

1. Flow Drift
   When flow drift is greater than 10%, data is rejected back to the time of the last acceptable flow check.
2. Other
   When data is affected by any other means, (i.e. analyzer malfunctions, power outages, collection errors), that data will be rejected accordingly.

8.3 Data Reduction

Ambient data is telemetered to a central location and also recorded at the site on PCs. This data is subsequently edited and corrected in the sequence depicted in the Quarterly **Data Reduction**

Data Check-Off Sheet (Figure 198.5) and as described here to obtain the most complete and accurate data set.

A. Data Monthly Report

OPS DETs will run a Monthly Report (Figure 198.6) on the ESC system and review for fill-ins. They will get minute averages when necessary. **To produce the Monthly Report:**

1. Log on to a PC linked to the ESC data system.
2. Double click on "edasmenu" icon.
3. Click on "Reports". A pop-up window will appear. Select "Monthly Report".
4. Enter the month, select the site or sites you wish the report on. Check the Null Code box, check "NEW ($$)" then select "view or print".
5. For the most readable printouts do the following from "view":
   a. Highlight the text of the document.
   b. Click on "Format – Font"
   c. Select "bold" size "8".
   d. Click OK.
   e. Go to file page setup. Select "landscape".
   f. Click OK.
   g. Go to file print preview. If it looks good then click on "print"
   h. Click OK.

B. Voids

1. The DET will determine inside temperature problems and others reasons to void data.
2. All corrections and changes are entered thru the ESC system **"Add or Edit Offline". To access this subroutine:**
   a. Log on to a PC linked to the ESC data system.
   b. Double click on "edasmenu" icon.
   c. Click on "Editors". From pull down menu select "Add or Edit Offline Data".
   d. Select site and parameter you wish to edit. Click OK.
   e. Enter date and click on "Retrieve" button.
   f. 24-hours of data will appear on your screen. You can change a value or enter a null code. CTDEP will use the NEW AIRS code of AM as a universal null code.

8.3 Data Reduction

B. 2. g. When done click OK.

h. Click “Yes” to save changes.

3. Run another Monthly Report from the ESC system and review for correct data entry.

C. Transfer Data to POLL2

OPS DET will transfer the completed finalized data to the Data Group’s POLL2 PC.

1. Create a New Folder
   a. Double click on the “My Computer” icon.
   b. Double click on the “C:\” from the list of drives.
   c. Single click on the “File” option in the upper left-hand corner of the screen.
   d. Highlight the “NEW” option from the drop down menu and click once.
   e. Highlight the “Folder” option from the second drop down menu and click once.
   f. In the box with the highlighted text “ New Folder” type in the name of the month in which the data is to be transferred and the word “data” following it, then hit the enter key once. (ie. if the transfer of August data was being done the new folder name would read augustdata.
   g. After the New folder is created close out the screen by clicking once on the “X” in the upper right hand corner.
2. Copy The Months Data to The New Folder
   a. Double click on the “My Computer” icon.
   b. Double click on the “C:\” drive from the list of drives.
   c. Double click on the Newly created folder from the steps above. The folder will appear on the screen and at should be empty.
   d. Double click on “My Computer” to leave that folder open.
   e. From the available list of drives double click on “C:\”. This will generate a list of all the folders located on C:.
   f. Locate the folder “ESCDATA” and double click on it. This will produce a listing of all the files located in the “ESCDATA” folder.
   g. With the 2 folders open and next to each other drag the required files from the “C:\ESCDATA” directory to the “C:\Augustdata” directory. This is done by highlighting the required files and while

8.3 Data Reduction

C. 2. g. pressing the “CTRL” button on the keyboard click and drag with the left hand mouse button the file from the “ESCDATA” directory

to the "Augustdata" directory then release the left hand mouse button. Warning, please don't forget to hold the "CTRL" key while dragging the files. It will move the file instead of copy the file.

h. The following is a list of files to be transferred:
Auxiliary data Files- Aux0008 & Aux0008.inx

Calibration Data	- Cal0008 & Cal0008.inx
Hourly Data	- Hly0008 & Hly0008.inx
Minute Data	- M??$$$$$ & M??$$$$$.inx
Raw Aux. Data	- Rwa0008 & Rwa0008.inx
Raw Hourly Data	- Rwh0008 & Rwh0008.inx

Where M = minute, ?? = Site ID, $$$$$ = Julian Year & Day

3. Transfer From Poll1 To Poll2
   a. With everything closed and facing poll1, double click on the "My Computer icon.
   b. From the available disk drive screen double click on the "C:\" option.
   c. From the C:\ screen double click on the "Augustdata" folder. This will produce a listing of all the files located in the directory.
   d. Leaving the "Augustdata" folder open double click on the "MY Computer" icon.
   e. From the available drive list Double click on the disk drive labeled "ESCdata on Air-field PC\C drive (z)". This will produce a listing of files contained in the Poll2 ESCdata directory.
   f. With both folders opened and being displayed next to each other click once on the first file in the "C:\ Escdata" folder. Using the scroll arrow scroll down to the last file in the same directory and by holding the "Shift" key down left click once on the last file in the directory. This will cause all the files in the directory to be selected.
   g. To start the transfer of the files press and hold the "Ctrl" key and using the left mouse button click on the selected file list and drag it to the "ESCdata on Air-field PC\C drive (z)" folder. This will cause the file transfer box to appear and the transfer will take approximately 90 minutes.
   h. After the transfer is complete close all the folders by clicking once on the "X" in the upper right hand corner of the directory box.

8.3 Data Reduction

C. 3. i. E-mail the Data Group that the files have been transferred.
   j. After a weeks time double click on the "MY Computer" icon. From the available drive list double click on "c:\". This will

produce a listing of all available folders in the C drive.

l. Locate the folder that was created for the file transfer in this case "Augustdata" and click once on the folder. This will cause the folder to be highlighted.

m. With the folder highlighted press the "Delete" key on the keyboard. A question box will appear asking if you want to delete the directory and send all of its contents to the recycling bin. Answer yes. This will delete the directory.

This completes the file transfer procedure. This needs to be done after the first of the month and before the 10th of the month.

D. Data Validation

1. The Data group will run a **Frequency Report** from the ESC system to check for correct data entry.
   a. Log on to the POLL2 PC.
   b. Double click on "edasmenu" icon.
   c. Click on "Ambient". A pop-up window will appear. Select "Frequency Report".
   d. Enter the parameter then select the month you wish the report on. Click 'OK'.
   e. For the most readable printouts do the following from "view":
      1 Highlight the text of the document.
      2 Click on "Format – Font"
      3 Select "bold" size "8".
      4 Click OK.
      5 Go to file page setup.
      6 Select "landscape".
      7 Click OK.
      8 Go to file print preview.
      9 If it looks good click on "print"
      10 Click OK.

8.3 Data Reduction

D. 2. The Data group will also run a **Concentration Distribution Report** to look for possible values to validate.
   a. Log on to the POLL2 PC.
   b. Double click on "edasmenu" icon.

c. Click on “Ambient”. A pop-up window will appear. Select “Concentration Distribution Report”.
d. Enter the parameter then select the month you wish the report on.
e. For the most readable printouts do the following from “view”:
   1 Highlight the text of the document.
   2 Click on “Format – Font”
   3 Select “bold” size “8”.
   4 Click OK.
   5 Go to file page setup.
   6 Select “landscape”.
   7 Click OK.
   8 Go to file print preview.
   9 If it looks good then click on “print”
   10 Click OK.

3. Choose BAM values to be validated. Look for possible anomalies (high values, low values, step functions). Chosen values are listed on the Data Validation Sheet (Figure 198.7).
4. Check BAM data for the hours chosen above and document the results adjacent to the original values on the Data Validation Sheets. A person other than the one who did the original fill-ins should perform this. For all values outside the acceptable criteria (1 $\mu g/m^3$ or 10%, whichever is greater), continue to validate values to either side of the failed validation values until they fall into the acceptable range. If the results are consistently biased, further investigation will be needed to identify which is correct and which needs correction. Indicate the new values on the Data Validation Sheets and on the second Monthly Report using a red pen.
5. All corrections/changes are entered thru “Add or Edit Offline” via ESC.
6. For each month, locate the maximum-recorded value and ensure that these values have been validated. It is mandatory to validate data values meeting the following criteria:

   $PM_{2.5}$ continuous measurement method:
   $\geq$ 200 $\mu g/m^3$ for 1-hour average
   $\geq$ 65 $\mu g/m^3$ for 24-hour average

8.3 Data Reduction

D. 6. PM_{10} continuous measurement method:
   $\geq$ 250 $\mu g/m^3$ for 1-hour average
   $\geq$ 150 $\mu g/m^3$ for 24-hour average

8.3 Reporting

Reporting of ambient air quality data is a Data Group function. The following sections detail this process.

8.4.1 Quarterly Reports

A. Ambient Air Quality Data

1. Each quarter's data is processed as described in section 8.3. The files generated by the Data Group are electronically transferred to the NCC computer in North Carolina in New AIRS format. See part 8.4.1.B.2.e below.
2. Load the data to the Screening File. The Load Summary Report is produced. It states how many AIRS records are being loaded into the screening file. The total number of AIRS records on this report should equal the total number of AIRS records transferred. **To Load the Screening File:**
   a. Log on to a PC with INTERNET EXPLORER.
   b. Log on to **AIRS**. You must be a registered user with a valid password.
   c. Select "Screening Group".
   d. Select Batch from Main Menu.
   e. Click "CDX".
   f. Select file(s) to be sent to AQS and click 'Send'.
   g. Exit CDX.
   h. Click LOAD File on Batch Load tab.
   i. Use Refresh button to check session status until Session Status is not 'Active'.
   j. If there are errors see "Using Correct to Change Records" (Step 3, following). Otherwise:
   k. Click Stat CR from Batch Load tab.
   l. Run Scan and Stats Eval reports from Batch Report tab.
   m. Click Post on the Batch Load tab.

8.4.1 Quarterly Reports

A. 2. n. If 'CR exists', 'Stats exists' or 'Monitor Locked' is not 'N' on Raw Overview tab, review records. Otherwise:
   o. Click Raw Data tab and 'Post Data to Production' buttons.
   p. Click the Return to Batch Processing on Raw Data tab.
   q. Use Refresh button to verify Session Status is 'Completed'.
   r. Click the Raw Data Inventory on Batch Reports tab.

3. If errors exist, correct then use the **Correct Records in Staging Table procedure by:**
   a. From Main Menu, click Correct, Raw.
   b. Enter identifying information, Execute Query.
   c. Correct errors.
   d. Click Save icon.
   e. Click 'Submit Correct Data' on Batch Load tab. This will correct the remaining records.
4. Once all the data has been accepted and posted the data will be in the AQS Master File and can be accessed for reports.
5. Submit a letter (Figure 198.8) to the EPA Region 1 Director of Air, Pesticides and Toxic Management Division and our EPA Region I Air Monitoring contact person. This letter states that the quarterly Air Quality Report has been electronically submitted to the NCC computer in North Carolina.
6. The Data Group is responsible for answering any questions or resolving any problems concerning the Quarterly Report and will reply to EPA Region 1 accordingly.

B. Data Assessment Report

The Quarterly Air Quality Assessment Report should be submitted within 15 days after the Quarterly Air Quality Data Report is completed.

1. Accuracy
   a. Enter results from the Performance Audit Sheet (Figure 198.2) for all BAM sites into the PARSV2 for Accuracy as in part 8.1.A.1-3.
   b. Check for possible transfer errors or incorrect calibration factors.
   c. Flag any data pairs which differ by 10% or greater.
   d. Validate flagged data pairs by reviewing the Performance Audit Data Sheet.
   e. If the data pairs still differ by 10% or greater, notify the QA Group to further investigate.

8.4.1 Quarterly Reports

B. 1. f. See part 8.4.2, Annual Report, subpart B. Data Quality Assessment.

2. Accuracy Editing and Reporting
   a. Once the Accuracy data entries have been completed, generate a hard copy report (Figure 198.9).
   b. Edit report for correct keypunching and any other anomalies. Make appropriate corrections if necessary.

c. Write completed Accuracy data to a floppy disc.
d. Upload files to the "C" drive of your P.C.
e. Electronically **transfer files to the NCC computer** in North Carolina.
   1 Log on to a PC with INTERNET EXPLORER.
   2 Log on to **AIRS.** You must be a registered user with a valid password.
   3 Select "Screening Group".
   4 Select Batch from Main Menu.
   5 Click "CDX".
   6 Select file(s) to be sent to AQS and click 'Send'.
   7 Exit CDX.
   8 Click LOAD File on Batch Load tab.
   9 Use Refresh button to check session status until Session Status is not 'Active'.
   10 If there are errors see "Using Correct to Change Records" (See step A.3, above). Otherwise:
   11 Click Stat CR from Batch Load tab.
   12 Run Scan and Stats Eval. Reports from Batch Report tab.
   13 Click Post on the Batch Load tab.
   14 If 'CR exists', 'Stats exists' or Monitor Locked' is not 'N' on Raw Overview tab; review records. Otherwise:
   15 Click Raw Data tab and 'Post Data to Production' buttons.
   16 Click the Return to Batch Processing on Raw Data tab.
   17 Use Refresh button to verify Session Status is 'Completed'.
   18 Click the Raw Data Inventory on Batch Reports tab.

The Data Group is responsible for answering any questions or resolving any problems concerning the Quarterly Report and will reply to EPA Region I accordingly.

8.4.2 Annual Reports

A. SLAMS

An annual SLAMS report must be sent to EPA Region 1 by June 30th of each year. The report will cover data collected in the previous calendar year. Retrieve the **AIRS Quick Look Report:**

1. Log on to a PC with INTERNET EXPLORER.
2. Click on CDX logon icon.
3. Type user name, password and "aqsprod" for database.

4. Select “Read Only User”.
5. From the menu bar select "Retrievals". Pull down “Standard Report Selection”.
6. Click on the criteria set pull down and choose report code AMP450 for “Quick Look” or AMP240 for “P/A reporting Org Summary”. Click ok.
7. On the Selection menu enter State “09”, Pollutant type “Criteria”, then put in begin and end dates in the “yyyymmdd” format.
8. Go to report selection and click on generate report.
9. The report will return to your screen in “pdf” format, which can then be sent to a printer.

This creates an EPA work file of the data at NCC. Submit a hard copy AIRS Quick Look Report (Figure 198.10) along with a cover letter (Figure 198.11) to EPA Region I.

B. Data Quality Assessment

This is actually part of the SLAMS report and is the 95% confidence limits for the entire year’s precision and accuracy results from Part 8.4.1.B of this section.

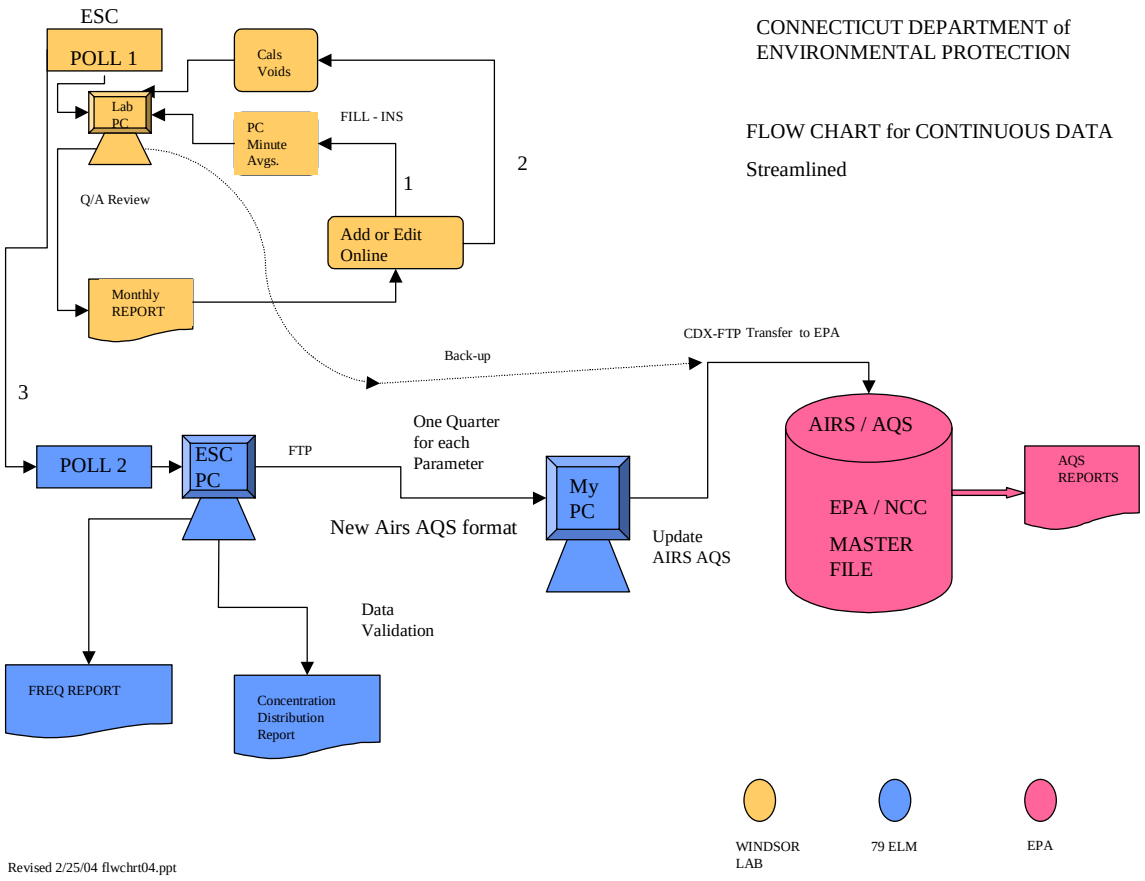

Figure 198.1
Data Handling Flow Chart

Met One Instruments

BAM-1020 Particulate Monitor Audit Sheet

Town/Site _____ Sampler SN _____

Date/Time (EST) _____ Auditor _____

Flow Transfer Std MFG/SN _____ Data of last Cert _____

****

*

Leak Check

Flow Rate _____ lpm Flow Rate < 1.5 lpm Yes No Pass Fail

Parameter	BAM	Reference	Audit	Diff from BAM
Date/Time		**XXXXXXX**		
Ambient Temp. (^{o}C)				
Bar. Pressure (mmHg)				
Vol. Flow Rate (lpm)				

Self Test: Pass Fail Audit: Pass Fail

****

*

Comments:

Reviewed by _____

Figure 198.2
Met One Instruments BAM-1020 Particulate Monitor Audit Sheet
(Performance Audit Sheet)

Operations Check Sheet
Met One Beta Attenuation Monitor, BAM-1020

Town/ Site _____ Month/Year _____

BAM-1020 SN Sampling for: $PM_{2.5}$ PM_{10} m from appendix B

Day of Month/ Time	/	/	/	/	/	/	/
Operator Site Temp							
PERFORM OPERATIONAL CHECKS, RECORD THESE VALUES FROM THE DISPLAY							
Last m value							
% D of appen B vs. last m w/in 5%							
BAM Time vs. DL Time	/	/	/	/	/	/	/
Check error log, document errors below							
Filter tape intact? (Y or N)							
Filter tape changed? (Y or N)							
Weekly nozzle cleaning ✔							
Monthly Download ✔							
Data Start date Rejection: EST Enter Reason End date Under Comments. EST							
End Time EST							
COMMENTS: Perform any necessary corrective and/or preventative maintenance. Clearly document any problem and the corrective action taken in the Comment Section to the right. %D = (Last m value – appendix B m value)/appendix B m value x 100							

Last Inlet/Cyclone cleaning date			New Inlet/Cyclone cleaning date			
Date of Monthly checks/initials:		Reference	BAM	Specification	W/in spec	
	Leak Check			<1.5 lpm	Y	N
Pressure (”Hg)	x 25.4 =			W/in +/- 10 mmHg	Y	N
	Temperature			W/in 4°C	Y	N
Manometer reading:	Flow			W/in +/-4%	Y	N

form\BAMcheck.xls rev 11/15/04

Figure 198.3
Operations Check Sheet Met One Beta Attenuation Monitor, BAM-1020
(OPS ✔ sheet)

CALIBRATION DATA SHEET
Continuous Particulate Sampler

Date_____

Town _____ Site_____ Operator _____

Reason for Cal: Initial Routine Final Other:

Analyzer Manufacturer/SN MetOne / _____ Sampling for: $PM_{2.5}$ PM_{10}

Cal System Manufacturer/SN BGI Inc / _____ Certification date _____

Cal System Cell Reference Number _____ Start Time _____ EST

	BAM	BGI	Specification	W/in spec		Adjusted Value
Leak Check (lpm)			< 1.5lpm	Y	N	
Ambient Pressure (mmHg)			with in 10 mmHg	Y	N	
Ambient Temperature (°C)			with in 2°C	Y	N	
Volumetric Flow Rate (lpm)			with in 4% diff*	Y	N	

* Flow % diff = (BAM flow – BGI flow) / BGI flow x 100 = _____

Self Test: PASS FAIL End Time EST

Comments:

Forms/BAMcal rev. 11/15/04

Figure 198.4
Calibration Data Sheet Continuous Particulate Sampler

CONNECTICUT

QUARTER_____ **QUARTERLY DATA CHECK-OFF SHEET** YEAR_____

INTMP INTMP INTMP /home/vyanosy/AirsNew/DATA/Y.....

POLL	MONTH #1 ESC	MONTH #2 ESC	MONTH #3 ESC	2nd EDIT sent to Q/A	Q/A Valid. Done	3rd EDIT DATE	VERIFY CAL	CONVERT NEW AIRS	RENAME (AllnoAirTl.doc)	FTP To G:	CDX To NCC	Load/stat-cr Scan/stat-ev	Post Update Inventory
CO													
SOx													
BAM													
NO													
NOx													
NOx													
O3													

POLL	MONTH #1 EXCELL	MONTH #2 EXCELL	MONTH #3 EXCELL	EDIT VERIFY DATE	SDEV DATE	2ND EDIT VERIFY DATE	VALID DONE	CONVERT TO AIRS	EDIT Method, units Intervals nulls	FTP TO PC DSN	FTP TO NCC	NEW AIRS PROCEDURE DATE	POST FOR UPDATE INVENTORY
PM10 STP													
OLD SO4													
OLD NO3													
PM2.5 LC													
PM2.5 P&A													
	PASSED	SEND to QC	QC REVIEWED	FTP PC	FTP NCC	LOAD			REFERE				
P & A													

QUART2

Figure 198.5
Quarterly Data Check Off Sheet

Monthly Parameter Report - Hourly Averages
poll2
09/04

Logger Id : 5A
Site Name : Mohawk Mountain
Parameter : PM-25
Units : UG/M3
Avg Interval : 01

++++++++++ AIRS Codes ++++++++++
Transaction : 1 State : 09 County : 005 Site : 0005
Parameter : 88101 POC : 1 Interval : 1 Units : 105
Frequency : 1 Method : 731

Hours

Day	00	01	02	03	04	05	06	07	08	09	10	11	12	13	14	15	16	17	18	19	20	21	22	23	Max	Avg	Rds
01	11.5	13.0	16.0	8.0	15.7	13.0	11.9	8.8	9.4	9.7	9.2	10.3	16.8	12.6	10.2	8.4	7.7	6.8	8.9	10.6	11.4	8.8	6.4	7.7	16.8	10.5	24
02	8.0	6.8	6.9	7.7	4.9	5.7	11.0	9.0	6.1	4.9	.7	.9	2.9	4.2	5.7	5.1	2.0	4.1	9.8	8.7	5.9	4.2	4.2	7.3	11.0	5.6	24
03	9.3	8.3	5.9	3.5	5.5	9.6	10.9	11.9	9.1	8.0	9.4	17.2	12.1	10.0	8.5	9.2	16.1	15.7	22.3	11.6	15.8	13.8	14.0	13.9	22.3	11.3	24
04	18.4	14.0	14.0	14.4	23.2	14.3	26.4	24.3	16.3	20.5	22.8	26.4	28.5	29.7	31.2	31.3	35.6	36.8	36.1	37.2	39.3	28.6	20.9	22.1	39.3	25.5	24
05	25.2	15.0	14.2	10.8	5.2	5.2	7.5	4.6	2.8	1.3	2.5	6.0	7.2	7.3	7.2	4.5	1.0	1.1	2.8	7.5	7.3	5.9	7.8	6.9	25.2	6.9	24
06	4.3	1.1	1.3	7.2	13.2	11.0	5.1	4.8	5.1	2.5	4.1	4.4	-.9	-1.3	.9	2.9	4.0	5.3	4.4	1.1	2.2	5.6	6.1	4.8	13.2	4.1	24
07	5.9	3.0	3.2	4.0	4.7	8.8	7.6	.9	1.6	4.5	2.6	5.5	9.9	6.6	4.0	9.1	9.8	11.8	11.6	7.8	6.7	6.3	5.8	1.7	11.8	5.9	24
08	.0	1.2	2.8	5.3	3.9	4.2	4.5	4.3	7.4	4.6	1.8	1.5	.1	1.9	6.9	5.1	.5	2.7	6.1	4.7	.0	-3.1	-.5	2.2	7.4	2.8	24
09	3.6	5.0	3.6	3.0	1.2	1.3	1.2	-2.5	.0	.3	-.1	6.3	8.8	7.4	7.0	6.6	9.1	10.3	11.1	12.2	12.8	11.9	9.3	10.8	12.8	5.8	24
10	11.3	9.6	8.4	6.0	5.3	5.3	6.3	6.5	4.5	3.1	-.9	.8	5.0	3.2	-1.3	.0	3.4	4.8	4.6	2.4	.4	5.5	8.2	4.6	11.3	4.4	24
11	5.5	7.0	5.1	2.9	2.9	3.4	5.2	7.1	6.6	5.8	4.0	1.8	.9	.2	1.3	3.0	1.3	2.5	5.6	7.4	10.4	7.1	6.2	8.0	10.4	4.6	24
12	5.4	4.3	2.4	.9	2.8	6.2	11.6	18.9	10.9	10.9	10.1	12.3	9.8	4.7	8.0	17.8	17.9	22.0	15.6	21.9	18.5	22.3	19.8	24.2	24.2	12.4	24
13	22.8	28.5	19.9	30.2	27.5	23.7	25.2	22.6	28.4	30.6	28.1	25.3	24.0	17.1	14.7	19.3	20.4	22.6	17.0	11.9	15.9	11.7	7.1	3.7	30.6	20.7	24
14	1.5	1.8	6.7	6.0	4.9	5.7	6.1	7.0	6.7	1.0	1.1	2.5	8.0	7.6	8.3	8.6	7.7	10.1	11.9	10.5	10.0	7.5	7.9	5.0	11.9	6.4	24
15	2.1	8.3	10.3	7.4	6.9	5.7	4.1	4.6	4.0	4.6	7.3	6.7	.4	-.3	5.7	6.0	6.5	5.9	6.0	10.7	9.1	8.4	7.7	4.8	10.7	5.9	24
16	3.2	.0	-1.6	2.1	5.2	4.3	5.6	2.9	.0	4.3	3.2	1.2	1.1	-3.2	-.8	8.3	12.2	11.3	12.6	14.1	21.4	21.1	23.3	16.6	23.3	7.0	24
17	24.2	26.5	27.6	25.6	32.0	25.2	22.6	20.9	27.5	32.7	29.6	28.1	24.6	28.1	30.2	26.2	30.3	28.6	24.8	35.0	39.2	19.3	16.0	6.6	39.2	26.3	24
18	4.9	3.4	4.4	4.1	2.0	5.5	3.4	-2.2	-.2	1.6	2.3	2.3	4.1	4.3	2.6	2.3	3.8	3.2	3.8	6.0	5.1	7.6	9.9	7.8	9.9	3.8	24
19	6.5	5.3	4.4	9.0	10.2	5.5	3.0	4.8	6.7	3.4	3.0	3.8	-1.1	1.6	3.2	.1	.5	1.0	2.6	3.0	2.7	2.4	6.4	7.5	10.2	3.9	24
20	4.6	5.9	3.3	1.6	3.5	6.4	7.3	5.0	6.2	6.5	3.4	1.7	3.9	1.5	.2	.8	.3	2.6	3.5	4.6	4.3	4.4	3.5	1.7	7.3	3.6	24
21	.5	1.2	3.1	3.6	2.1	3.5	7.8	7.8	8.1	5.2	.0	-.6	4.8	7.5	8.6	11.1	9.6	6.0	8.4	9.2	6.7	6.1	7.3	6.6	11.1	5.5	24
22	4.9	6.9	8.9	9.4	11.2	12.6	19.8	20.1	16.1	10.4	17.3	18.7	17.3	16.0	24.4	20.7	15.3	17.2	16.0	19.0	21.4	20.6	22.1	21.3	24.4	16.1	24
23	15.7	15.0	19.1	21.8	22.1	19.8	25.7	20.6	19.5	18.4	10.7	18.2	12.4	10.9	7.8	5.7	6.6	8.8	7.7	8.9	10.9	5.5	3.6	4.5	25.7	13.3	24
24	3.7	3.7	2.7	5.0	7.7	6.9	6.3	7.0	6.4	3.3	-.2	-.5	2.5	3.1	-.5	3.3	9.8	12.5	12.6	12.8	14.2	13.5	12.7	13.1	14.2	6.7	24
25	9.1	7.9	11.9	11.4	9.1	6.4	6.5	6.7	5.5	9.5	14.4	18.5	13.0	23.3	22.2	19.4	20.6	24.4	17.2	27.0	26.9	30.5	28.0	30.8	30.8	16.6	24
26	30.2	16.1	14.4	12.0	10.9	8.9	4.9	5.9	11.0	13.8	10.9	7.8	6.2	6.2	6.9	6.2	7.3	8.4	9.3	8.3	4.8	5.2	6.2	6.8	30.2	9.5	24
27	7.8	6.0	4.3	5.0	3.7	1.5	3.2	5.7	3.2	3.5	9993	3.5	3.6	8.3	10.6	11.6	11.3	10.8	10.1	17.0	18.8	15.9	14.3	14.7	18.8	8.4	23
28	19.4	24.8	14.0	13.2	11.2	9.7	8.7	7.4	1.8	-1.3	3.4	4.9	.9	-1.1	.7	1.6	3.8	9.6	13.2	12.0	19.2	26.0	19.5	33.7	33.7	10.6	24
29	24.5	31.3	27.1	15.5	12.0	5.7	5.4	8.8	6.2	4.5	5.1	1.9	2.7	5.7	7.1	6.9	3.3	5.8	5.3	5.0	6.6	4.7	6.3	4.6	31.3	8.8	24
30	.4	1.3	5.8	6.8	3.8	3.1	4.2	4.0	2.4	3.9	7.0	5.6	5.1	5.5	8.5	10.9	9.6	10.9	12.3	10.0	8.9	4.2	3.5	6.3	12.3	6.0	24
Max	30.2	31.3	27.6	30.2	32.0	25.2	26.4	24.3	28.4	32.7	29.6	28.1	28.5	29.7	31.2	31.3	35.6	36.8	36.1	37.2	39.3	30.5	28.0	33.7	39.3		
Avg	9.8	9.4	9.0	8.7	9.1	8.2	9.3	8.6	7.9	7.7	7.3	8.1	7.8	7.6	8.3	9.0	9.5	10.7	11.1	11.9	12.5	11.0	10.4	10.3		9.3	

Figure 198.6
Monthly Report, BAM

DATA VALIDATION

POLLUTANT_____ **MONTH_____**
YEAR _____

TOWN/SITE	DATE DD/HH:00	ORIGINAL VALUE	RE-READ VALUE	COMMENTS

Figure 198.7
Data Validation Sheet

October 27, 2004

Ms. Katrina Kipp
Manager Ecosystems Assessment Unit
USEPA-Region I
11 Technology Drive
North Chelmsford, MA 01863

Dear Ms. Kipp:

In accordance with 40 CFR 58.35, the Quarterly Report of Ambient Air Quality data for the second quarter of 2004, was submitted by electronic transfer to the National Computer Center in North Carolina on October 20, 2004.

All data have been passed through anomaly screening and have been corrected and verified.

If you have any questions, please contact Randall Semagin at 860-424-3514.

Sincerely,

Ellen M. Pierce, Ph.D.
Supervising Environmental Analyst
Toxics Air Pollutant Group

cc: Mary Jane Cuzzupe

EP:RS
kipp
file 10.2.2

Figure 198.8
Submittal Letter to EPA Region 1

UNITES STATES ENVIRONMENTAL PROTECTION AGENCY
AIR QUALITY SYSTEM

User ID: VWY

ACCURACY REPORT

Report Request ID: 187410 Report Code: AMP247 Dec. 1, 2004

GEOGRAPHIC SELECTIONS

State	County	Site	Parameter	POC	City	AQCR	UAR	MSA	CMSA	EPA Region	Zip Code	Method	Duration	Begin Date	End Date
09			88101	3										2004 01 01	2004 12 01

SELECTED OPTIONS

Option Type	Option Value
MERGE PDF FILES	NO

UNITED STATES ENVIRONMENTAL PROTECTION AGENCY
AIR QUALITY SYSTEM
ACCURACY REPORT

01 December 2004

Parameter: (88101) PM2.5 - Local Conditions
State: CONNECTICUT
Agency: Connecticut Department of Environmental Protection

Accuracy Type	Monitor ID	Conc Level	Date	Above Criteria	Unit Desc	Actual Value	Indicated Value	Relative % Diff
PE	09-001-0010-88101-3	2	20040224	N	Liters/minute STP	16.49	16.70	1.3
PE	09-001-0010-88101-3	2	20040624	N	Liters/minute STP	16.36	16.80	2.7
PE	09-001-0010-88101-3	2	20040803	N	Liters/minute STP	16.8	16.7	-0.6
PE	09-003-2006-88101-3	2	20041007	N	Liters/minute STP	16.58	16.70	0.7
PE	09-005-0005-88101-3	2	20040301	N	Liters/minute STP	16.49	16.70	1.3
PE	09-005-0005-88101-3	2	20040805	N	Liters/minute STP	16.54	16.70	1.0
PE	09-009-0027-88101-3	2	20040628	N	Liters/minute STP	16.62	16.70	0.5
PE	09-009-0027-88101-3	2	20040803	N	Liters/minute STP	16.65	16.70	0.3
PE	09-009-1123-88101-3	2	20040224	N	Liters/minute STP	16.77	16.60	-1.0
PE	09-009-2123-88101-3	2	20040224	N	Liters/minute STP	16.61	16.70	0.5
PE	09-009-2123-88101-3	2	20041025	N	Liters/minute STP	16.56	16.70	0.8

Figure 198.9
Accuracy Report

Parameter	Unit	POC	Rep Org	Year	Meth	# Obs	1st Max Value	2nd Max Value	3rd Max Value	4th Max Value	Arith. Mean	Duration	EDT
Site ID: 09-001-0010 City: Bridgeport		County: Fairfield				Address: ROOSEVELT SCHOOL PARK AVE.							
88101 PM2.5 - Local Conditions	UG/CU Meter (LC)	3	0251	2004	731	8432	100.6	80.1	78.0	77.2	16.06	1 HOUR	0
Site ID: 09-003-1018 City: Hartford		County: Hartford				Address: CORNER OF SHELDON ST. AND COLUMBUS BLVD							
88101 PM2.5 - Local Conditions	UG/CU Meter (LC)	3	0251	2004	731	2867	54.0	51.9	51.5	51.5	14.96	1 HOUR	0
Site ID: 09-003-2006 City: East Hartford	(Town of)	County: Hartford				Address: 85 HIGH STREET EAST HARTFORD							
88101 PM2.5 - Local Conditions	UG/CU Meter (LC)	3	0251	2004	731	5422	137.7	108.5	82.0	81.4	16.72	1 HOUR	0
Site ID: 09-005-0005 City: Cornwall		County: Litchfield				Address: MOHAWK MTN MICROWAVE TOWER							
88101 PM2.5 - Local Conditions	UG/CU Meter (LC)	3	0251	2004	731	7015	119.4	113.4	111.1	101.2	9.39	1 HOUR	0
Site ID: 09-009-0027 City: New Haven		County: New Haven				Address: 1JAMES STREET							
88101 PM2.5 - Local Conditions	UG/CU Meter (LC)	3	0251	2004	731	6695	89.7	85.7	79.5	78.3	15.64	1 HOUR	0
Site ID: 09-009-1123 City: New Haven		County: New Haven				Address: 715 STATE STREET							
88101 PM2.5 - Local Conditions	UG/CU Meter (LC)	3	0251	2004	731	1373	53.4	52.3	52.1	50.9	14.82	1 HOUR	0
Site ID: 09-009-2123 City: Waterbury		County: New Haven				Address: SHED MEADOW AND BANK STREET							
88101 PM2.5 - Local Conditions	UG/CU Meter (LC)	3	0251	2004	731	8551	115.5	106.1	62.1	61.1	12.85	1 HOUR	0

Figure 198.10
AIRS Quick Look Report

July 1, 2004

Mr. David Lutz
Environmental Scientist
U.S. EPA – OAQPS/EMAD
MQAG C339-02
RTP, NC 27711

RE: 2003 SLAMS Data Certification

Dear Mr. Lutz:

In response to your request for certification of the 2003 SLAMS data reported in Air Quality Subsystem, my staff has reviewed and edited the report for the period January l, 2003 to December 3l, 2003. The revised version is enclosed.

The data reported for 2003 was collected in conformance with the applicable quality assurance (QA), air monitoring methodology, probe siting criteria and reporting requirements of 40 CFR 58, appendices A, C, E and F. The PM_{10} data, in terms of standard conditions, was certified and submitted to AIRS. $PM_{2.5}$ data was collected using applicable QA and methodology.

I hereby certify, as required by 40 CFR 58, Subpart C, that the 2003 Annual SLAMS Quicklook report in AIRS is accurate to the best of my knowledge. Furthermore, there have been no air pollution incidents during which ambient levels reached or exceeded levels, which could cause significant harm to public health as specified in 40 CFR 5l.l5l.

If you have any questions regarding the SLAMS data for 2003 or the edited report, please contact Mr. Randall Semagin of my staff at (860) 424-3027.

Sincerely,

Anne Gobin, Acting Chief
Bureau of Air Management

AG:RS:rs
CC: Carol Wood
Wendy McDougall
(2)
File 10.2.3

Figure 198.11
AIRS SLAMS Report Cover Letter

Section No. 1.9.9
Standards & Traceability, MetOne BAM-1020
List of Headings

Heading Description	**Part No.**
Standards & Traceability, MetOne BAM-1020	9.0
Flow Rate Standards	9.1
Met Standards	9.2

Section No. 1.9.9
Standards & Traceability, MetOne BAM-1020
List of Figures

Figure Description	**Figure No.**
Not applicable	

9.0 Standards & Traceability, MetOne BAM-1020

Our standards are discussed in section 1.9.3 of this SOP.

Primary standards must be traceable to the National Institute of Standards and Technology (NIST).

Traceability refers to establishing a comparison/trace of accuracy between CTDEP's highest-level (primary) standard and the portable secondary standards and ambient data (sampler and analytical laboratory data).

9.1 Flow Rate Standards

CTDEP's Quality Assurance (QA) primary standard for flow rate measurement is a BIOS International Corporation DryCal®DC-1 Primary Flow Meter. This Primary Standard must be certified traceable to NIST. Manufacturer certification will be done on a regular basis.

The secondary flow rate standard used to calibrate or check field samplers is a Meriam Instruments Smart Manometer. This digital manometer is set to inches of water at 20°C. A Chinook Engineering Streamline™ Flow Transfer Standard (FTS) is used to transfer authority from the BIOS to the digital manometer.

CTDEP's Audit Group also uses the Meriam Instruments Smart Manometer and a Chinook Engineering Streamline™ Flow Transfer Standard as flow rate standard. The BGI triCal model TC12 volumetric airflow calibrator is also used as a flow rate standard for flow auditing. All are manufacturer certified annually.

The standard used to check field performance by site technicians is the BGI tetraCal. This device is certified annually via the BIOS Definer 220 as described in Section 1.9.3 of this SOP.

9.2 Met Standards

The QA primary standard for temperature is a NIST certified Fisher Scientific liquid-in-glass thermometer, -1 to 101°C in 0.1^{o}C increments.

The secondary temperature standard used for calibration or field checks will be Fluke Temperature Probes, model 80T-150U and/or ERTCO dial type stem thermometers. These will be certified as per section 1.8.3. Fisherbrand™ dual range min/max digital

9.2 Met Standards

temperature probes will be used to determine transportation temperature. These will be certified as per section 1.9.3 but at only two temperatures, 4 ^{o}C & 25°C.

The field performance check temperature standard is the temperature probe of the BGI tetraCal. These will be certified as per section 1.9.3.

The primary pressure standard will be the official NWS barometric pressure reading from Bradley International Airport. This pressure reading is available from the inter-net at http://iwin.nws.noaa.gov/iwin/ct/hourly.html. The most recent reading is corrected for the elevation difference at the Windsor Lab facilities.

The secondary pressure standard used for calibration or field checks will be a digital pressure sensor certified as per section 1.9.3.

The field performance check pressure standard is the pressure sensor of the BGI tetraCal. These will be certified as per section 1.9.3.

CTDEP's Audit Group maintains the primary humidity standard as NIST traceable. A Dickson model TH300 Digital Temperature/RH Indicator will be manufacturer certified annually. Audit personnel will use it to check both temperature and humidity at the analytical laboratory and as the field audit unit.

Section 1.9.10
Methods, MetOne BAM-1020
List of Headings

Heading Description	**Part No.**
Methods	10.0
Equivalent Method – MetOne BAM-1020	10.1
Non-designated Method Use – MetOne BAM-1020	10.2

Section 1.9.10
Methods, MetOne BAM-1020
List of Figures

Figure Description	**Figure No.**
Not applicable	

10.0 Methods

EPA has identified appropriate methods for analyzing the ambient air for the various criteria pollutants. Equivalent methods have been identified for continuous sampling of particulate matter with an aerodynamic diameter of 10-microns or less. EPA has yet to identify a method for continuous sampling of particulate matter with an aerodynamic diameter of 2.5-microns. CTDEP will use the designated equivalent PM_{10} method for continuous PM_{10} sampling. CTDEP will also modify this method for continuous $PM_{2.5}$ sampling.

10.1 Equivalent Method, MetOne BAM-1020

EPA designated the MetOne Instruments, Inc. Beta Attenuation Monitor, BAM-1020 for continuous PM_{10} sampling on August 3, 1998. The designation number is EQPM-0798-122. The MetOne BAM-1020 can be must be used in conjunction with the BX-802 sampling inlet, operated for 24-hour average measurements, with a filter change frequency of one hour, with glass fiber filter tape. The system must be operated under the following conditions:

RANGE	1.000-milligram/cubic meter
SAMPLE	Pump time: 50 minutes

CTDEP will use the MetOne BAM-1020 with these options, which do not affect the equivalency designation:

BX-827	120 VAC heater kit
BX-961	mass flow controller

10.2 Non-designated Method Use, MetOne BAM-1020

CTDEP will also operate the MetOne BAM-1020 as above with the addition of the Very Sharp Cut Cyclone (VSCC) manufactured by BGI. The VSCC will be placed directly below (downstream) of the PM_{10} inlet. Use of the VSCC cuts the coarse fraction particulate from the sample stream. This creates a continuous, non-designated method of $PM_{2.5}$ sampling. Use of the MetOne BAM-1020 in this configuration will be for AQI reporting and forecasting of fine particulate population exposure.

On-going comparison of this data to the manual reference method for $PM_{2.5}$ sampling will ensure the AQI reporting and forecasting is appropriate and consistent.

Section 1.9.11
Special Purpose Monitoring, MetOne BAM-1020
List of Headings

Heading Description	**Part No.**
Special Purpose Monitoring – Met One BAM-1020	11.0

Section 1.9.11
Special Purpose Monitoring, MetOne BAM-1020
List of Figures

Figure Description	Figure No.
Not applicable	

11.0 Special Purpose Monitoring, MetOne BAM-1020

Since use of the MetOne BAM-1020 for continuous $PM_{2.5}$ monitoring is not an EPA approved reference or equivalent method any reference to continuous $PM_{2.5}$ monitoring in this entire Standard Operating Procedure can be considered special purpose monitoring.

Section 1.9.12
Chain of Custody, MetOne BAM-1020
List of Headings

Heading Description	**Part No.**
Chain of Custody, MetOne BAM-1020	12.0
Sample/Data Collection	12.1
Sample Data Handling	12.2
Analysis of Sample Data	12.3
Reporting	12.4

Section 1.9.12
Chain of Custody, MetOne BAM-1020
List of Figures

Figure Description	**Figure No.**
Check Sheet Custody – Field Operations	1912.1
Quarterly Data Check Off Sheet	1912.2
Automated Data Flow Path	1912.3

12.0 Chain of Custody, MetOne BAM-1020

Integrity of air quality data must be assured. Several people may be involved in the generation of the final product; therefore a chain of responsibility and control must be established linking various activities of the monitoring program.

This document provides a description of the chain of custody (CoC) for ambient particulate data generated by a continuous method. The chief responsibility lies with the supervisors in charge of the Quality Assurance, Operations and Data Groups. Engineers and technicians perform most of the functions involved.

12.1 Sample/Data Collection

A. General Operation

EPA has certified the MetOne BAM-1020 as an equivalent continuous PM_{10} method. EPA has not yet determined an equivalent continuous $PM_{2.5}$ method. Each analyzer and major piece of equipment is identified with an individual number. Whenever an activity is performed that might affect data quality, all pertinent I.D. numbers are documented along with a description of the activity (this is usually done on standard forms). The initials of the person performing said activity is required on each piece of documentation, as are the location, date and time. All documentation is to be done in ballpoint pen or indelible ink. Pencil and felt tip pens will not be used.

Operating parameters pertinent to data quality are also recorded. Completed standard forms are duplicated and kept in different locations from the original. There is room on these forms to document non-standard occurrences. Errors will be crossed out with a single line, dated and initialed.

Standard procedures for all actions related to data quality will be followed. These EPA approved procedures follow proper methodology. Where needed, additional training is provided to assure competence of personnel.

B. Accuracy

Accuracy is assured through periodic flow checks. A chain of traceability is maintained between primary standards and all other standards used in the field checks. The original raw data of comparisons (between standards) is maintained. This includes the type of information mentioned in the previous General section above. Again, all errors will be crossed out with a single line, dated and initialed.

12.1 Sample/Data Collection

B. Accuracy
Field checks on accuracy are done manually. Manual checks and calibrations are documented on standard forms. The originals are kept in a specified location.

C. Recording
All sites with continuous analyzers are equipped with data loggers and PC's. Manual checks are made to assure that the relationship between time and data is correct. Additionally, air quality data is transmitted via phone line to a polling PC (POLL1). The POLL1 data is backed-up weekly.

12.2 Sample Data Handling

A. Identification
All data is stored for use in monthly printouts. Such data is printed in standard SAROAD format, which identifies the data as it goes through the editing and validation chain as described in Section 1.9.8 of this SOP. Minute averages are used extensively in this process, which enhances the accurate identification of data.

B. Security
Data loggers and support documentation is kept initially at a locked site. The support documentation is then transported in a car (locked when parked) and stored in an area protected by a security system outside of working hours. During working hours, lunch hours are staggered so that someone is always present in the work area.

Automated data is also protected by a 24-hr security system. In addition, a series of passwords are required to gain access to this data through terminals.

C. Chain of Custody
Operational Check Sheets are removed from field sites at the beginning of each month. They are to be turned in to the Head of Operations within five (5) working days. There, they are logged in (Figure 1912.1) copied then transferred to the Data Group. The originals are kept on file by the QA Group.

The Data Group logs in the Check Sheets. Needed data is read from them i.e. performance checks, operator comments/data rejection etc. As steps are completed, dates and initials are recorded on the Quarterly Data Check-off Sheet

12.2 Sample Data Handling

C. Chain of Custody

(Figure 1912.2). The final data set is permanently stored in a secure, designated area for five (5) years.

Automated data follows the chain depicted in Figure 1912.3. As the major steps are completed, dates and initials are recorded on the Quarterly Data Check-off Sheet.

12.3 Analysis of Sample Data

The physical particulate data (printout) is augmented by various Quality Assurance tests (mentioned in Section 1.9.12.1 of this section), which are used in particulate data verification. The Data Group will follow approved internal procedures (see Section 1.9.8 of this SOP) to obtain the most complete and accurate set of ambient air data possible.

Records of reduced data are kept in a secure location on standard forms and the initials of the person performing an activity are required (plus the date) on each piece of documentation. Training of personnel is specific to the task.

12.4 Reporting

The aforementioned procedures and accumulation of data serve as a foundation for various written reports (see Section 1.9.8 of this SOP). A copy of every report is kept within the Data Group in a secure location for up to five years. The records are destroyed according to record retention schedules after five years.

	Check Sheet Custody - Field Operations					
Town	**Site**	**Sheet type**	**Date In**	**Init.**	**Date to QA**	**Init.**
Bridgeport	Edison School - 0012	SO_2				
Bridgeport	Roosevert School - 0010	BAM				
Cornwall	Mohawk Mountain - 0005	O_3				
Cornwall	Mohawk Mountain - 0005	BAM				
Cornwall	Mohawk Mountain - 0005	SO2				
Cornwall	Mohawk Mountain - 0005	SO4				
Cornwall	Mohawk Mountain - 0005	OCEC				
Danbury	WCSU - 1123	SO_2				
Danbury	WCSU - 1123	O_3				
East Hartford	McAuliffe Park - 1003	O_3				
East Hartford	McAuliffe Park - 1003	NO/NO_X				
East Hartford	McAuliffe Park - 1003	CO				
East Hartford	High Street - 2006	BAM				
East Hartford	High Street - 2006	SO_2				
Greenwich	Point Park - 0017	O_3				
Groton	Avery Point, Acad. Bldg. - 0008	O_3				
Hartford	Morgan Street - 0017	CO				
Madison	Hamonasset Beach S.P. - 3002	O_3				
Middletown	CVH, Shew Hall - 0007	O_3				
New Haven	Stiles Street - 0018	BAM				
New Haven	Courthouse - 0025	CO				
New Haven	Criscuolo Park - 0027	SO_2				
New Haven	Criscuolo Park - 0027	O_3				
New Haven	Criscuolo Park - 0027	NO/NO_X				
New Haven	Criscuolo Park - 0027	BAM				
New Haven	Criscuolo Park - 0027	TEOM				
Stafford	Shenipset State Forest - 1001	O_3				
Stamford	Ferguson Library - 0020	CO				
Stamford	High School - 2124	SO_2				
Stratford	USCG Lighthouse - 3007	O_3				
Waterbury	Meadow & Bank Streets - 2123	SO_2				
Waterbury	Meadow & Bank Streets - 2123	BAM				
Westport	Sherwood Island S.P. - 9003	SO_2				
Westport	Sherwood Island S.P. - 9003	O_3				
Westport	Sherwood Island S.P. - 9003	NO/NO_X				
Month / Year					excel/OPS sheet custody rev.07/21/04	

Figure 1912.1
Check Sheet Custody – Field Operations

CONNECTICUT

QUARTER_____ **QUARTERLY DATA CHECK-OFF SHEET** YEAR_____

INTMP INTMP INTMP /home/vyanosy/AirsNew/DATA/Y.....

POLL	MONTH #1 ESC	MONTH #2 ESC	MONTH #3 ESC	2nd EDIT sent to Q/A	Q/A Valid. Done	3rd EDIT DATE	VERIFY CAL	CONVERT NEW AIRS	RENAME (AllnoAirTl.dat)	FTP To G:	CDX To NCC	Load/stat-cr Scan/stat-ev	Post Update Inventory
CO													
SO2													
BAM													
NO													
NO2													
NO2													
O3													

POLL	MONTH #1 EXCELL	MONTH #2 EXCELL	MONTH #3 EXCELL	EDIT VERIFY DATE	SDEV DATE	2ND EDIT VERIFY DATE	VALID DONE	CONVERT TO AIRS	EDIT Method, units Intervals nulls	FTP TO PC DSN	FTP TO NCC	NEW AIRS PROCEDURE DATE	POST FOR UPDATE INVENTORY
PM10 STP													
OLD SO4													
OLD NO3													
PM2.5 LC													
PM2.5 P&A													
	PASSED	SEND to QC	QC REVIEWED	FTP PC	FTP NCC	LOAD			REFERI				
P & A													

QUART2

Figure 1912.2
Quarterly Data Check-off Sheet

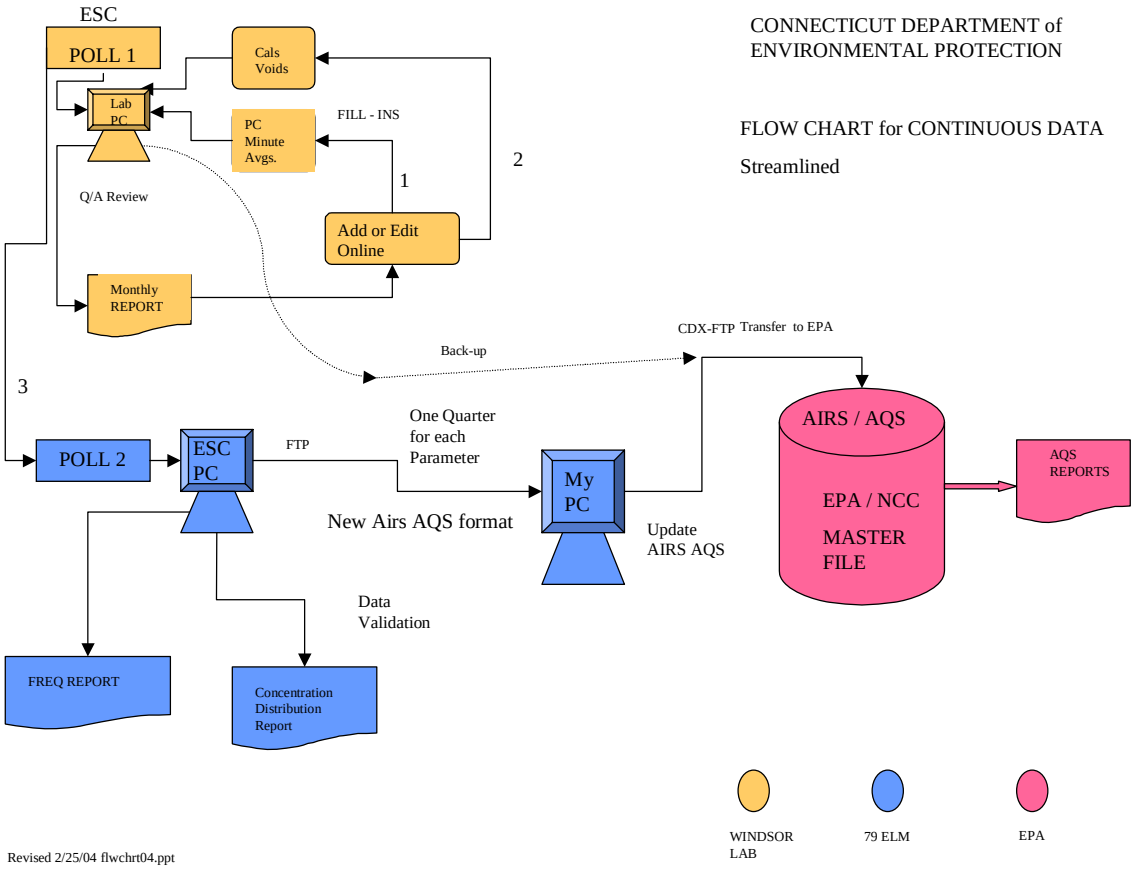

Figure 1912.3
Automated Data Flow Path