8.0.0.0 Title Page

STANDARD OPERATING PROCEDURES FOR THE AMBIENT VOLATILE ORGANIC GAS (VOC) ANALYSIS USING GAS CHROMATOGRAPHY AND FLAME IONIZATION DETECTORS

Prepared for: Connecticut Department of Environmental Protection, Bureau of Air Management, Planning and Standards Division, Data and New Monitoring Initiatives Group and US EPA

Prepared by: _____ Date: _____
Steve Bailey, EP Air Pollution Control Engineer III
CT DEP, Bureau of Air Management, Planning and Standards, Toxics and Special Studies Group

Approved by: _____ Date: _____
Paul Norton, EP Air Pollution Supervisor Engineer
CT DEP, Bureau of Air Management, Planning and Standards, Field Operations Monitoring

Approved by: _____ Date: _____
Dick Siscanaw, Quality Assurance Chemist, New England Regional Office (USEPA-R1)

8.0.0.1 Table of Contents:

Section Description	Section Number	Page
Title Page	8.0.0.0	1
Table of Contents	8.0.0.1	2
Table of Figures	8.0.0.2	4
Introduction	8.0.1.0	1
Scope and Application	8.0.1.1	1
Summary	8.0.1.2	3
Definition	8.0.1.3	4
Interference	8.0.1.4	5
Health and Safety	8.0.1.5	6
Reagents and Material	8.0.2.0	1
Reagents	8.0.2.1	1
Instrumentation	8.0.2.2	2
Volatile Organic Carbon (VOC) Analyses	8.0.3.0	1
Schedule	8.0.3.1	1
Documentation	8.0.3.2	1
Daily Initial Review	8.0.3.3	2
Routine Site Visit	8.0.3.4	2
Calibration and Analyses	8.0.3.5	5
Quantitation	8.0.3.6	7
Retention Times	8.0.3.7	9
Sample Reduction	8.0.3.8	11
Maintenance and Troubleshooting	8.0.4.0	1
Schedule	8.0.4.1	1
Checklists	8.0.4.2	2
Leak Checks	8.0.4.3	2
Maintenance	8.0.4.4	6
Troubleshooting the Perkin Elmer GC	8.0.4.5	14
Quality Control	8.0.5.0	1
National Performance Audit Program	8.0.5.1	1
EPA Round Robin Samples/PAMS Check Can Audit	8.0.5.2	2
Quality Assurance/NIST Sample	8.0.5.3	2
Method Detection Limit	8.0.5.4	3

Data Handling	8.0.6.0	1
Data Review	8.0.6.1	1
Create a Data Set	8.0.6.2	1
Data Review Using VOCdat	8.0.6.3	3
VOCdat Submission to AQS	8.0.6.4	5
Specific Operating Procedure for the Perkin-Elmer Gas Chromatograph	8.0.7.0	1
Initial Start up	8.0.7.1	1
Start up Procedure- ATD400	8.0.7.2	1
Start up of the Auto System GC	8.0.7.3	3
Programming the Auto System Analyzer Keypad	8.0.7.4	4
TotalChrom	8.0.7.5	6
Method Summary	8.0.7.6	8
Report	8.0.7.7	14
Graphic Edit	8.0.7.8	16
Generate a Sequence	8.0.7.9	19
Run Setup	8.0.7.10	23
Prepare PC to Collect Data	8.0.7.11	23
Viewing Chromatograms	8.0.7.12	24
Optimizing a Method	8.0.7.13	26
ATD400 Shut Down Procedure	8.0.7.14	28
GC Shutdown Procedure	8.0.7.15	28
Procurement of Equipment and Supplies	8.0.8.0	1
Analysis Instrumentation	8.0.8.1	1
Operational Supplies	8.0.8.2	1
Primary Calibration Material Standards	8.0.8.3	2
Acceptance Testing	8.0.8.4	3
Warranties	8.0.8.5	3
Installation of Equipment	8.0.9.0	1
Environmental Conditions	8.0.9.1	1
Sampling Probes	8.0.9.2	1
Network Configuration Documentation	8.0.9.3	2
Data Recording and Transmission	8.0.9.4	2
References	8.0.10.0	1
Document EPA/600-8-91/125, Technical Assistance Document for Sampling and Analysis of Ozone Precursors	8.0.10.1	1

Code of Federal Regulations (CFR), Title 40, Part 58, Appendix A	8.0.10.2	1
Code of Federal Regulations (CFR), Title 40, Part 136, Appendix B (MDLs)	8.0.10.3	1
Perkin Elmer AutoSystem Gas Chromatograph User Manual	8.0.10.4	1
Perkin Elmer ATD 400 User Manual	8.0.10.5	1

8.0.0.2 Table of Figures:

Figure Description	Figure Number	Page
VOC Analysis		
VOC Data Validation 803.1	13	
PAMS AQS Summary Sheet	803.2A&B	14&15
Electronic Text Log	803.3	16
Perkin-Elmer GC Settings	803.4	17
Perkin-Elmer ATD 400 Settings	803.5	18
VOC Operational Gas Status	803.6	19
PAMS AQS Null Data Codes	803.7	20
PAMS Site Check Sheet	803.8	21
Calibration Configuration	803.9	22
Master Calibration	803.10A&B	23&24
Maintenance and Troubleshooting		
Preseason Site Checklist	804.1	20
Postseason Site Checklist	804.2	21
Calibration Cylinder Tracking Sheet	804.3	22
Operational Gas Status	804.4	23
PE Gas Delivery System	804.5	24
Signal and Control Cables	804.6A-D	25-28
Data Handling		
PAMS Response Factor Calculation Worksheet	806.1	8

Specific Operating Procedure for the
Perkin-Elmer Gas Chromatograph

ATD Settings and Options	807.1	30
Gas Chromatograph Conditions	807.2	31
System Configuration	807.3	32
PE Column and Supplies	807.4	33
PE Master Calibration	807.5A&B	34&35
PE Elution Order	807.6	36

Installation of Instrumentation

Humidification Tee	8.0.9.1	3

8.0.1.0 Introduction

8.0.1.1 Scope and Application

Each Photochemical Assessment Monitoring Stations (PAMS) site monitors for a select group of 56 photochemically reactive compounds in the C_2-C_{12} carbon range. Historically, the database has shown that not all of these compounds are present in the air masses sampled; however, there is a common repeatable baseline profile. These compounds are generally present at concentrations varying from 0.1 parts per billion carbon (ppbc) to about 60 ppbc. Occasionally during an ozone or meteorological event, higher concentrations may be expected.

8.0.1.1.1 Target List (1998)

AQS	Compound
43203	Ethylene
43206	Acetylene
43202	Ethane
43205	Propylene
43204	Propane
43214	Isobutane
43280	1-Butene
43212	n-Butane
43216	trans-2-Butene
43217	cis-2-Butene
43221	Isopentane
43224	1-Pentene
43220	n-Pentane
43243	Isoprene
43226	trans-2-Pentene
43227	cis-2-Pentene
43244	2,2-Dimethylbutane
43242	Cyclopentane
43284	2,3-Dimethylbutane
43285	2-Methylpentane
43230	3-Methylpentane
43245	1-Hexene (optional)
43231	n-Hexane
43262	Methylcyclopentane
43247	2,4-Dimethylpentane
45201	Benzene
43248	Cyclohexane

43263 2-Methylhexane
43291 2,3-Dimethylpentane
43249 3-Methylhexane
43250 2,2,4-Trimethylpentane
43232 n-Heptane
43261 Methylcyclohexane
43252 2,3,4-Trimethylpentane
45202 Toluene
43960 2-Methylheptane
43253 3-Methylheptane
43233 n-Octane
45203 Ethylbenzene
45109 m,p-Xylene
45220 Styrene
45204 o-Xylene
43235 n-Nonane
45210 Isopropylbenzene
45209 n-Propylbenzene
45212 m-Ethyltoluene
45213 p-Ethyltoluene
45207 1,3,5-Trimethylbenzene
45211 o-Ethyltoluene
45208 1,2,4-Trimethylbenzene
43238 n-Decane
45225 1,2,3-Trimethylbenzene
45218 m-Diethylbenzene
45219 p-Diethylbenzene
43954 n-Undecane
43141 n-Dodecane (optional)
43102 TNMOC (total C2-C12)
43000 PAMHC (total target)
43131 Total Unidentified VOCs (total non-target)

8.0.1.1.2 TARGET VOC OZONE COMPOUND PRECURSORS CLASSIFICATION

Alkyne	**Paraffin**
Acetylene	Isopentane
	3-Methylheptane
Aromatic	2-Methylheptane
Styrene	n-Octane
m-/p-Xylene	2,3,4-Trimethylpentane
o-Xylene	Ethane
Toluene	Propane

Ethylbenzene	Isobutane
n-Propylbenzene	n-Nonane
1,2,4-Trimethylbenzene	n-Butane
1,3,5-Trimethylbenzene	2,2,4-Trimethylpentane
1,2,3-Trimethylbenzene	n-Hexane
Benzene	n-Pentane
Isopropylbenzene	3-Methylpentane
m-Ethyltoluene	2-Methylpentane
p-Diethylbenzene	Cyclopentane
o-Ethyltoluene	2,3-dimethylbutane
p-Ethyltoluene	Methylcyclopentane
m-Diethylbenzene	2,4-Dimethylpentane
	2,2-Dimethylbutane
	n-Heptane
	3-Methylhexane
Olefin	2,3-Dimethylpentane
1-Hexene (optional)	Cyclohexane
1-Butene	2-Methylhexane
Isoprene	Methylcyclohexane
trans-2-Butene	n-Decane
trans-2-Pentene	n-Undecane
cis-2-Pentene	n-Dodecane
Propylene	
Ethylene	
1-Pentene	
c-2-Butene	

8.0.1.2 Summary

8.0.1.2.1 The sample is drawn in through a stainless steel or nickel sample line, and passes through a Nafion dryer to remove water vapor. Some loss of polar compounds occurs in the Nafion dryer. The volatile organic carbons (VOCs) are extracted from the air stream and concentrated on a multi-component carbon molecular sieve adsorbent that is thermoelectrically cooled to -30°C. After the 40-minute collection/concentration period, the sample is then thermally desorbed at 325°C off the trap. Helium carrier gas sweeps the sample onto two different columns maintained in a temperature controlled oven. Separation of the sample components occurs in the columns over approximately 45 minutes. As the components elute from the column they are combusted in a flame ionization detector. The ionization potential of the combustion gases is measured, and converted to an electrical signal. The signal is conditioned (digitized) and interfaced with personal computer based analytical software for analysis and storage. The time of elution is characteristic to specific compounds, and provides the means of identification. The quantification of each peak is derived from the

strength of the electronic signal. Neither the identification nor quantification is absolute as it is possible for other components to have the same elution time. Thus these co-eluting components may be mistaken for, and quantified as the targeted component.

8.0.1.2.2 The GC/FID analytical system is a Perkin Elmer (PE) VOC Ozone Precursor Analyzer System. It consists of an Auto System gas chromatograph, ATD 400 Automatic Thermal Desorption unit, BPI and PLOT columns, and Dean®Switch.

The GC is coupled with sophisticated peak identification software TotalChrom, which provides for reasonable estimates of both the identity and quantity of the target species to the extent that the analytical column is capable of separating them and the system has been adequately characterized and calibrated. The retention characteristics of the analytical column are determined for each target compound using a certified multi-component standard supplied by the US EPA.

8.0.1.3 Definitions:

8.0.1.3.1 Absolute pressure - Pressure measured with reference to absolute zero pressure (as opposed to atmospheric pressure), usually expressed as kPa, mm Hg or psia.

8.0.1.3.2 Gauge pressure - Pressure measured above ambient atmospheric pressure (as opposed to absolute pressure). Zero gauge pressure is equal to ambient atmospheric (barometric) pressure.

8.0.1.3.3 System Blank - Humidified nitrogen or zero air, usually attached to sample line. This represents the system blank or zero calibration.

8.0.1.3.4 Batch of Samples – A number of samples that are analyzed as a group. For this method, it is typically the number of samples that analyzed between standards.

8.0.1.3.5 Round Robin or PAMS Check can- A quality control sample. An ambient sample collected by the EPA and analyzed by all the New England (NE) states and EPA for comparison.

8.0.1.3.6 NPAP – National Performance Audit Program. A quality control sample that is analyzed to evaluate the data nationally.

8.0.1.3.7 PAMS -Photochemical Assessment Monitoring Stations.

8.0.1.3.8 MDL – Method Detection Limit. Minimum concentration of an analyte that can be reported with 95% confidence that the value is above zero, based on a standard deviation of at least seven repetitive measurements of the analyte in the matrix of concern at a concentration near the low standard.

8.0.1.3.9 ppbc – Reported concentration based on the carbon number of the compound.

ppbc = number of carbons * part per billion volume (ppbv).

8.0.1.3.10 Stock Standard - Stock gas standard supplied by the EPA, RTP, NC to identify and quantitate the PAMS VOC compounds. The propane and benzene are National Institute of Standards and Technology (NIST) traceable and used for the quantitation of all measured components. All 56 compounds are in the 10 – 40 ppbc range. This is used in the calibration and verification of the working standard.

8.0.1.3.10.1 The retention time (RT) calibration standard is composed of 56 target compounds. Within this mix, two key compounds, propane and benzene have been certified against a NIST standard and are used to develop the response factors (RF) for the target compounds. Propane is the reference compound for the porous layer open tubular (PLOT) column and benzene is the reference compound for the BP-1 column. This in turn is used to convert area counts into concentration units (ppbc) for every peak in the chromatogram. The remaining components within the standard are quantitated and used as quality control.

The retention time calibration standard is used during the initial setup of the gas chromatograph/flame ionization detector (GC/FID) system to optimize critical peak separation parameters and determine individual retention times for each of the target compounds.

The retention time/calibration standard is also used during the routine operation of the GC/FID system as a quality control (QC) standard for verifying retention times.

The response of the GC/FID to selected hydrocarbons in this standard can be used to monitor FID performance and determine when recalibration of the FID using the primary calibration standard is necessary.

8.0.1.3.11 Working Standard - Diluted stock solution (1:10). This is used to verify or calibrate the instrument every 50 hours.

8.0.1.4 Interferences

8.0.1.4.1 Contamination – Since this method measures extremely low hydrocarbons, any contamination will interfere with the analysis. It is critical to use gloves and use clean analytical parts with this system. The operational gases are potential sources of contamination.

8.0.1.4.2 Coelution - Although the peak identification and quantification expected with proper use of GC/FID systems is acceptable for meeting the objectives of the

enhanced O_3 monitoring requirements, this technique is vulnerable to some inherent limitations. The systems rely primarily on the practical use of retention times to make compound identifications for each chromatographic peak. Therefore, GC/FID systems configured for VOC analyses must have proven stability of system parameters to ensure adequate peak identification based on relative retention time.

Gas chromatographic peak misidentification typically occurs as a result of retention time shifting and interferences due to non-target co-elution compounds. The GC capillary columns are generally capable of adequately separating the targeted compounds; however, co-elution of unidentified specifies with the targeted species can and does occur. The identification and quantitative uncertainty resulting from co-elution will depend on the type of unidentified compound and the abundance relative to the affected target VOC. The target VOCs are exclusively hydrocarbons, which are primarily emitted into the atmosphere by mobile sources and generally dominate most urban samples. Concentration estimates of the substituted hydrocarbon species such as oxygenated or halogenated hydrocarbons using FID are uncertain since these compounds do not respond to the FID solely on a per carbon basis. Generally, the targeted compound will not be significantly affected unless a substituted species co-elutes with the target compound at a significant concentration; however, the total non-methane organic carbon (NMOC) estimate can be greatly affected if significant concentrations of substituted hydrocarbons are present.

Quantitative errors can be reduced by careful attention to calibration details, frequent response checks using canister samples containing target compound mixtures of known concentration, and periodic performance audits or proficiency studies using independent reference materials. Periodic re-integration of related raw chromatographs is strongly suggested to verify proper selection of peak integration parameters. The effort devoted to peak identification and quantification confirmation is important to the quality of the collected data.

8.0.1.5 Health and Safety

8.0.1.5.1 Appropriate personal protective equipment (PPE) (such as safety glasses) must be worn when handling gas cylinders. No ignition source may be located near stored or in use hydrogen cylinders. See Section 8.0.4.4.6 for details.

8.0.1.5.2 All electrical wiring shall comply with Connecticut State Code.

8.0.2.0 REAGENTS & MATERIALS

8.0.2.1 Reagents

8.0.2.1.1 Stock Standard - The primary calibration/retention time standard, a multi-component mixture containing all target VOCs at concentration levels in the range of 20-60 ppbc. The propane and benzene are NIST certified for quantitation. The stock standard is used to fill a canister (typically 6 – 33 liter volume) to 45psia (30psi), which is then humidified by adding distilled water. The canister is then deployed to field sites. Wetted surfaces of the canister are specially treated or electroplated to ensure inertness to the hydrocarbon mix employed.

8.0.2.1.2 Working Standard: A 1:10 dilution in nitrogen or zero air of the stock standard. Using the certified absolute pressure gauge, 4.5 psia of the stock standard is added to a 6 - 33 L canister humidified by addition of distilled water and pressurized to 45 psia (30 psi).

8.0.2.1.3 System Blank – Humidified nitrogen or zero air canister used to flush out the analytical system and monitor the system's background. The system blank is humidified by adding distilled water to a 6 to 33 L canister and pressurized to 45 psia (30 psi) with the stock standard.

8.0.2.1.4 Nitrogen or Air– Zero Grade used to prepare the working standard and laboratory blank.

8.0.2.1.5 EPA Region 1 QC Standard - Scott cylinder used to check the instrument over the entire PAMS range. The acceptance ranges are advisory based on EPA, Region 1. EPA Region 1 has supplied this gas in the past, but at this time is not providing the service. Should the reference material become available in the future, CTDEP will again make use of this resource.

8.0.2.1.6 NIST Cylinder (SRM1800) used to check the instrument. A multi-component QC standard from the US EPA New England, Chelmsford, MA, for the purpose of testing the accuracy of the system. The advisory acceptance is 25% agreement with the true value. EPA Region 1 has supplied this gas in the past, but at this time is not providing the service. Should the reference material become available in the future, CTDEP will again make use of this resource.

8.0.2.1.7 Supply Gases

8.0.2.1.7.1 Carrier Gas: Helium UHP 99.995% purity or better

8.0.2.1.7.2. Detector Fuel: Hydrogen UHP 99.999% purity or better

8.0.2.1.7.3 Detector Air: Air supplied from a Balston High Efficiency Gas Generator, Model #78-30-M130 or similar, or compressed gas cylinder of ultra zero air (Dry Air Purge for NAFION Dryer)

8.0.2.1.8 Matheson Model 8066 thermal conductivity leak detector or similar, used to check for leaks at compression fittings delivering operational gases, or column connections.

8.0.2.1.9 Snoop, a leak detecting surfactant solution, (for gas cylinder regulators).

8.0.2.1.10 VOC free deionized (DI) Water, used to humidify the canisters and sample line for the cylinders

8.0.2.2 Instrumentation

8.0.2.2.1 Automated Gas Chromatographs, Perkin Elmer VOC Analyzer

8.0.2.2.2 Sample concentrators - Perkin Elmer ATD 400

8.0.2.2.3 Mass flow controller, 0-50 cc/min range

8.0.2.2.4 Sample Pump & Flow controllers

8.0.2.2.5 Computers: PC (Pentiums)

8.0.2.2.6 Columns

8.0.2.2.6.1 Perkin Elmer PLOT – 50 m x 0.32 mm ID, 5μ thickness,Al_2O_3/Na_2SO_4. For separation of the C_2-C_6 compounds.

Note: PLOT Al_2O_3 analytical columns are very susceptible to retaining polar compounds such as water because the alumina layer is active. Polar compounds cause column deactivation and shifting of peak retention times. The removal of moisture and other polar compounds from the sample stream is accomplished by the NAFION membrane dryer.

8.0.2.2.6.2 Perkin Elmer BP-1 – 50 m x 0.25 mm ID, 1.0 micron coating. For separation of the C_6 – C_{12} compounds.

8.0.2.2.7 Absolute Pressure Gauge – Used to verify pressure delivered to, and contained within SUMMA type 33 L canisters used as working standards, and system blanks.

8.0.2.2.8 Canisters: Specially prepared canisters such as Summa polished canisters, silica lined, or electroplated internal surfaces designed to be non-reactive to

hydrocarbon species of an appropriate volume, typically 6 to 33 liters. Each to have an external pressure gauge on the valve.

8.0.2.2.9 Scrubbers: Helium carrier gas purifiers

8.0.2.2.9.1 Perkin Elmer: high capacity gas purifier for removal of water or equivalent

8.0.2.2.9.2 Perkin Elmer: oxygen trap or equivalent

8.0.2.2.9.3 Perkin Elmer: hydrocarbon (HC) Trap or equivalent

8.0.2.2.10 Environmental Conditions/Support Equipment - Analytical systems are backed up with a 3KVA matrix uninterruptible power supply. In the event of power loss, this unit will supply power to the systems for a period of approximately 50 minutes:

8.0.2.2.11 Manifolds – 4-inch borosilicate glass with 10 ports

8.0.2.2.12 Tubing - Pre-cleaned copper for the operational gas delivery, chromatographic grade

8.0.2.2.13 Tubing – nickel, stainless steel, or Silcosteel for sample lines

8.0.2.2.14 Replacement ferrules for the PLOT (PE order number 992105, part number 0726542) and BP-1 columns (order number 992104, part number 0726543)

8.0.2.2.15 FID ferrules (PE order number 9903981, part number 0726214); clean septa.

8.0.3.0 VOC ANALYSIS

8.0.3.1 Schedule

Daily - Call in to check the operation of the site. The chromatographic data is reviewed for baseline and quantitation abnormalities.
Every 50 runs - Auto calibration using a 1:10 standard
Bi-Weekly - Routine Site Visit
Bi-weekly - Stock Calibration and System Blank

8.0.3.2 Documentation

It is very important to data quality that careful records are kept. Unlike most criteria pollutant monitoring there is no strip chart backup that allows convenient reviewing to help identify problems or unusual events, or verify time of collection.

Three forms are especially important in this regard. They are:

A. VOC Data Validation Sheet, Figure 803.1. This form allows the operator to make detailed notes concerning maintenance, calibration, or problems and their resolution. It is important to note here the time and date of events as an aid in verifying the time and date stamps associated with the instrument files. All calibrations for example should have the time recorded as the hour that actual sample collection on the trap occurred in a bracketed hour format. Thus if the calibration sample was drawn in between 0905 and 0945 EST, the time of collection would be noted as 0900 to 1000 EST. Note if the actual duration of sample collection is other than 40 minutes.

B. PAMS AQS Summary Sheet, Figure 803.2A&B. This form will be used during the data validation process to flag anomalies in the data reported to EPA. It is best filled out on site at the time of ambient data interruption, as this will be the least error prone. The convention will be to identify the hour as that hour when ambient sample collection started. For example if an ambient sample was collected from 0905 EST to 0945 EST that sample would be labeled 0900 EST.

C. PC Electronic Text Log, Figure 803.3. The current directory used for data storage should have a notepad text log file to accomplish electronic transfer of notes affecting data quality review. The file name should be of the form (site code)(year)(log)(sequential number).txt. Minimum information contained in the file should be an introductory header, sequence run identification, date, time and comments. Include here all basic information given in Step A above. The file will be electronically transferred to the main office at time of data down load for near real

time data review.

Redundancy is designed into these forms as experience has demonstrated the necessity of thorough, detailed notes and records.

8.0.3.3 Daily Initial Data Review

A. Review each chromatogram using **TotalChrom CHROMATOGRAMS**. As many as 30 chromatograms may be viewed at once. In conjunction with the site log, electronic site text file, or other related documentation, note the time and run number of each calibration, audit, missing data hour, or otherwise suspect data on the PAMS AQS Summary Sheet, Figure 803.2A&B.

B. Verify that chromatograms were collected within the valid hourly period by viewing the header information.

C. Quantitation and retention times are checked using Sections 8.0.3.5, 8.0.3.6 and 8.0.3.7.

D. Generate a **SEQUENCE.seq** (Section 8.0.7.9) using all available monthly runs and set up with correct **METHOD.mth**. Delete out any invalid runs after creating the **SEQUENCE.SEQ**. **REPROCESS** the data for initial review.

8.0.3.4 Routine Site Visit - Perkin-Elmer Gas Chromatograph

8.0.3.4.1 Sign into the **Site Log** upon arrival with the following information: initials, date, time and reason for visit.

8.0.3.4.2 Check the PE Operational Status

Details and settings to the VOC system are provided in Section 8.0.7.

A. Verify the GC is using the correct **METHOD.mth** settings and pressures for its temperature program, Figure 803.4.

B. Verify the ATD-400 display for correct settings, Figure 803.5.

C. Verify the ATD-400 injection time and duration. Ambient sample collection starts at 5 (–5/+10) minutes past the hour and ends 45 (–5/+15) minutes past the hour for a total sample time of 40 minutes.

D. Verify that the sample flow meter is set and operating at 15cc/minute.

8.0.3.4.3 Review Chromatograms

Upon each site visit chromatograms should be reviewed to ensure the system is operating properly. Particular attention should be given to retention time shifts, or evidence of unusual responses.

A. Verify the current run number in **DETAILS**. Go to **WINDOWS EXPLORER** and verify that runs are being sent to and stored in the correct subdirectory.

B. From the **TotalChrom** main menu select **CHROMATOGRAMS** and view several current hours of chromatograms and verify that the system is performing correctly. If time allows review all chromatograms acquired since the last visit. Note any suspect chromatograms on the PAMS AQS Summary Sheet, Figure 803.2A&B, PC Notepad Text Log, Figure 803.3, and the VOC Data Validation Sheet, Figure 803.1.

C. Verify that the present retention time **METHOD.mth** file is adequately quantitating and identifying peaks. This is not required at the site and can be done at the Windsor lab.

1. From **GRAPHIC METHOD** select a current chromatogram. Using **SHOW WINDOWS** and **PEAK REPORT** verify that peaks are falling within specified identification windows and are quantitated correctly.

2. If peaks are not identified or quantified correctly, updating of the retention time and/or calibration in the **METHOD.mth** is required, refer to Sections 8.0.3.6 for quantitation and 8.0.3.7 for retention times.

8.0.3.4.4 Check Operational Supplies

A. Check operational compressed gas pressures and record on VOC Operational Gas Status Sheet, Figure 803.6. Replace any gas cylinder that has less than 300 psig. Ensure that second stage regulator pressures are set at 60 psig.

B. Check the pressure of the working standard cylinder and replace if the pressure is below 5 psi. See Section 8.0.3.5.1 for installation and leak checking.

C. Empty any accumulated moisture from the expansion tank reservoir on the Gast Zero Air Supply (GZAS).

Note: The Perkin-Elmer will go to **STANDBY** mode with the display stating UNABLE TO PROCEED if insufficient air pressure is available during pneumatic solenoid switching. Be careful not to allow the air pressure to go below 60 psi.

D. Check the gas line indicating scrubbers (oxygen and moisture) - replace the appropriate large capacity pre-scrubber if the indicating type shows breakthrough.

E. Verify that the Balston Zero Air Supply heater LED is operational.

F. Check the available memory of the PC and delete the temporary directory if needed.

G. If use, refresh with DI water the humidification tee in the sample and calibration line, date and initial the site log.

H. Check if a calibration is scheduled. If a calibration is scheduled, refer to Section 8.0.3.5 for the procedure.

8.0.3.4.5 Verify the interface's internal clock by checking the chromatogram's internal sample time stamp from either the **REPORT HEADER** option under the **DISPLAY** drop down menu, or the header information that appears when calling up a chromatogram from **FILE**, **NEW DATA FILE**. The clock is corrected by running **SETUP** from the main **TotalChrom** screen. Ensure that the computer time is correct and agrees with the Operations Group data logger. Ensure that the PC clock is 'up' on the display at all times.

8.0.3.4.6 After completion of all tasks and checks, verify all required paperwork has been filled out, and relevant notes have been made. Record the number, date, and time of sample collection of a current run (bracket hours of ambient sample collection, 0900-1000) on the VOC Data Validation Sheet, Figure 803.1 and PAMS AQS Summary Sheet, Figure 803.2A&B as an aid in data validation.

8.0.3.4.7 Any runs that are invalid data due to maintenance, calibrations, etc., or not collected because the system was off line at any time is recorded on the PAMS AQS Summary Sheet, Figure 803.2A&B with the applicable Null Data Code, Figure 803.7. Also make appropriate notes on the VOC Data Validation Sheet. Additionally, add all information found in the VOC Data Validation Sheet to a Notepad Electronic Text File, Figure 803.3, under the appropriate directory. This file is retrieved with electronic data transfer allowing reviewers to have full information on all runs daily.

Note: The convention for designating the hour of a sample will be to refer to the hour when sampling started. The sample collected from 0905EST to 0945EST would

be 0900EST.

8.0.3.4.8 Verify that data acquired since the last visit is being acquired in the correct PC directory for the site and month.

8.0.3.4.9 Complete all the items listed on the PAMS Site Check Sheet, Figure 803.8.

8.0.3.4.10 Sign out in the site log notebook noting the time of your departure.

8.0.3.5 Calibration and Analyses.

8.0.3.5.1 Working Standard.

A. The working standard is a 1:10 dilution of the EPA's stock standard. This is introduced through the auto calibration port and is automatically analyzed every 50 runs. No laboratory blank is run after this standard.

B. Attach a 1/8" nickel or Silcosteel delivery line from the working standard cylinder to the PE GC autocalibration port, keeping the delivery line as short as is practicable. If a humidification tee is to be used, position it in an easily assessable position to facilitate replenishing the DI water.

C. Open the working standard valve, and leak check fittings using a DI water or thermal conductivity leak detector. Leave the cylinder valve open for automatic calibrations.

Note: The Perkin-Elmer gas chromatographic system is programmed in the **SEQUENCE.seq** to perform calibrations automatically at a user selected time or frequency, typically every 50 hours. The Sequence must be set to turn on the calibration control valve during the run <u>before</u> the calibration run. The valve must then be shut off <u>during</u> the calibration run or the calibration cylinder will continue to operate.

D. In the **TotalChrom** window open **MODIFY**, then **ACTIVE SEQUENCE**. Open the **SEQUENCE.seq** being used and click on the A channel **INST METHOD** box for the run number <u>before</u> the hour desired. From the CHANGE drop down menu select **BROWSE**, then the auto-calibration **METHOD.mth**. This is done only for the A column. It will be of the form:

(site code)(C for calibration)(column).mth

E. For column A only, click on the **INST METHOD** box for the last calibration run

desired, typically the next run. From **CHANGE** on the drop down menu, select **BROWSE**, then the ambient **METHOD.mth**. It will be of the form:

(site code)(A for ambient)(column).mth

F. Typically, calibration runs will be selected at the time of **SEQUENCE.seq** creation. Every fiftieth run will be a calibration run. This would mean, as an example, that run 49 would be set with the calibration **METHOD.mth** and run 50 would be set with the ambient **METHOD.mth**. This would cause run 50 to be a calibration run through the calibration port, returning to ambient at run 51.

G. Select **SAVE** and close out of the **SEQUENCE.seq** window.

Note: The component retention times generated through the calibration port are often slightly different then when generated through the sample line. Quantification factors do not seem to be affected.

8.0.3.5.2 EPA Stock Standard.

A. The gas chromatograph (GC) is challenged with the stock standard bi-weekly. Two laboratory blanks are run after the stock standard to flush out the system. These samples are introduced through the sample line off the manifold.

B. Attach a 1/8" nickel or Silcosteel delivery line fitted with a mass flow meter and an atmospheric vent line to the outlet of the regulator, Figure 803.9 Calibration Configuration. Keep the delivery line as short as possible.

C. Determine when the GC will commence collection of an ambient sample. Approximately five minutes before the start of the next ambient sample collection cycle disconnect the GC sample line with attached humidification tee (if used) from the upstream side of the inlet line sample probe. Attach the calibration cylinder delivery line to the sample line. Open the valve and set the mass flow controller to about 18-20 cc/minute (GC requires 15).

D. Verify that excess flow is present at the atmospheric vent. Use water only to determine excess flow (no Snoop or detergent leak test liquid).

E. Allow the GC to collect sample from the calibration cylinder for the entire sample collection period (40 minutes). Periodically check for excess flow at the atmospheric vent and adjust as required.

F. At the end of sample collection shut off the calibration cylinder output valve and main valve. Remove the calibration cylinder delivery line from the GC sample line and connect the humidified blank to run two blanks to flush out the system. After the blanks have collected reconnect to the sampling manifold.

G. Record the run identification number in the site Electronic Text Log and the Enhanced Ozone Monitoring VOC Data Validation Sheet along with the calibration cylinder identification number, date and time that the calibration occurred (bracket the hour i.e. 0900-1000 EST).

H. Record on the PAMS AQS Summary Sheets the appropriate Null Data Code and the calibration time as that time when the sample collection started, i.e., if the sample was collected between 0900 hours and 1000 hours, record as 0900.

8.0.3.6 Quantitation

Using **GRAPHIC EDIT**, **SHOW WINDOWS** and **PEAK REPORT**, review the last working or stock standard for the values for propane on column A and benzene on column B. If the concentration differs by more than $\pm$10% from the true value, update the RF in the calibration file, **METHOD.mth**.

8.0.3.6.1 Updating Quantitation.

A. Using **GRAPHIC EDIT** select the working or stock standard run. Select the proper **METHOD.mth** to be used with the applicable channel. Whether channel A or B is being edited the following steps are the same.

B. Verify the quantified peak(s) for the propane and benzene identification. Select **PEAK REPORT** from the **DISPLAY** drop down menu and select the appropriate REPORT format from the **REPORT** drop down menu, under **NEW REPORT FORMAT.** Click the mouse on the quantified peak, and it will be highlighted in the report.

C. Note the area of propane found on the PLOT column, and benzene found on the BP-1 column. Determine the response factor for each quantified component using the formula:

Note: Concentration is in ppbc.

$$RF = \frac{\text{Area of Quantified Component Peak}}{\text{Concentration ppbc}}$$

D. Input the new RF in each column's **METHOD.mth** file by: selecting **RETURN** from the menu bar to return to **GRAPHIC EDIT** window. Select **OTHER**, then **METHOD**, **FILE**, **OPEN**, and browse for the **METHOD.mth** desired from the appropriate directory. **OPEN** the **METHOD.mth** and when the correct **METHOD.mth** is displayed, continue with the following steps.

Note: Rather than entering a calibration factor for each component on the calibration list, enter it only into ethane and hexane. All other components are **CAL REFERENCED** to these compounds. This makes updating response factors much quicker and easier and greatly reduces the risk of error.

E. From the **COMPONENTS** drop down menu select **EDIT COMPONENT** and click on the **CALIBRATION** tab. A peak list will appear with the first component highlighted (ethane or hexane). Ensure ethane or hexane is highlighted by clicking on each if needed, then select **USE CALIBRATION FACTOR**, and **AREA** response. Enter the RF calculated from Step C into the **CAL FACTOR** box. Click on **NEXT**.

F. The information for the next peak of the list should appear. Select **CALIBRATE BY REFERENCE** from the **CALIBRATION TYPE** menu. From the **CAL REFERENCE** drop down menu select ethane if using an A column **METHOD.mth**, or hexane if using a B column **METHOD.mth**. Click **NEXT** to continue to the rest of the components, each referencing ethane or hexane. When done, select **APPLY**.

G. From the **COMPONENTS** drop down menu select the **IDENTIFICATION** tab. Click on and select **COMPONENT TYPE PEAK**, set **ABSOLUTE WINDOW** at 12.00 sec. and **RELATIVE WINDOW** at 0.1%. The **REFERENCE** box will show a relative retention time (RRT) component that is set in **GRAPHIC EDIT**. **FIND TALLEST PEAK IN WINDOW** may be checked if it aids in component identification as determined by **GRAPHIC EDIT** review. Click on **APPLY** and close **COMPONENT** window.

H. From **COMPONENTS** select **GLOBAL INFORMATION**, and enter the RF calculated in Step 3 into the **CALIBRATION FACTOR** window. Select either **ALWAYS USE CALIBRATION FACTOR** or **USE NEAREST REFERENCE**. Click on **CONVERT UNKNOWN SAMPLES TO CONCENTRTION UNITS**. Use the default settings of **VOLUME UNITS** =CC, **QUANTITATION UNITS** = nanogram (ng), **SAMPLE VOLUME, cubic centimenter (cc)** = 1.00 and **VOID TIME (min)** = 0.000 and **EXTERNAL STANDARD**. Click on **OK**.

I. From **COMPONENTS**, select **DEFAULTS**. Click on the **IDENTIFICATION** tab and select **PEAK**. The **ABSOLUTE** and **RELATIVE WINDOW** settings should be 12 seconds and 0.10 % as set in Step G above. Click on the **CALIBRATION** tab, and select **CALIBRATE BY REFERENCE** and select ethane for a PLOT **METHOD.mth**, or hexane for BP-1 **METHOD.mth**. Click on **APPLY**.

J. Save the **METHOD.mth** with the new response factor. From the **METHOD EDITOR** window select **FILE** then **DESCRIPTION**. Enter the run number used to generate the response factor and any other desired information. From the **FILE** drop down menu select **SAVE** or **SAVE AS** and give the **METHOD.mth** a name in the form:

(site)(month)(year)(column)(1, 2, ...).MTH

Example: the second Perkin-Elmer GC **METHOD.mth** file at the New Haven site in June 2006 on the PLOT column would be N0606PL2.MTH.

K. If required enter the **SEQUENCE** using **MODIFIED**, **MODIFIED ACTIVE** and edit the appropriate channel(s) **INST METHOD**, **CALIB METHOD** and **PROC METHOD** columns to insert the newly modified **METHOD.mth**. This will ensure that the updated **METHOD.mth** will be used during **BATCH** processing.

8.0.3.7 Retention Times

View the calibration chromatograms of the working standard from each column using the **TotalChrom GRAPHIC EDIT** and the current **METHOD.mth** file. Using **SHOW WINDOWS** from the **CALIBRATION** drop down menu and **PEAK REPORT** features from the **DISPLAY** drop down menu determine if identifications are being properly made or if retention times should be updated. Compare the identifications to the Master Calibration for the instrument, Figure 803.10A&B. Also verify that the Perkin-Elmer Dean Switch is correct and that hexane is the first peak on the B channel.

.

8.0.3.7.1 Updating Retention Times.

Retention times can be updated in **GRAPHIC EDIT,** which is quicker, or manually entered in the Navigator screen **METHOD EDITOR** under the **CALIBRATION** and **COMPONENTS** list option. The following steps are for **GRAPHIC EDIT**.

A. From Turbochrom **GRAPHIC EDIT** bring up the chromatogram of the working standard. Select the correct **METHOD.mth**. Select the **SHOW WINDOWS** option

under the **CALIBRATION** drop down menu.

B. Select the **EDIT COMPONENTS** option from the **CALIBRATION** drop down menu. The screen that appears allows ready access to update both retention times and names.

C. Using the mouse select the peak to be updated starting with the retention time reference peaks (propane, butane, and pentane for the A channel; benzene, toluene, m/p-xylene and 1,2,3- trimethylbenzene for the B channel). If the correct peak has been found by the tolerance window, click the mouse on the **RESET RT** box. If the peak was not found, select its name from the **NAME** drop down menu in the **NAME** box. Alternatively the name may be typed manually as well. Select the **REF** box for each of these components.

D. Use the **PREV** and **NEXT** keys to select the remainder of the peaks and provide identifications.

E. Set appropriate search window tolerances. Typically set 8.0 –12.0 sec for the **ABSOLUTE WINDOW** and 0.1% for the **RELATIVE WINDOW**. Actual values may vary from typical depending on a peak's characteristics. For instance, the windows should be set to minimize overlap on closely eluting peaks.

F. Select a relative retention time reference (RRT) component for each compound (propane, butane, and pentane for the A channel; benzene, toluene, m/p-xylene and 1,2,3- trimethylbenzene for the B channel).

G. Save the new **METHOD.mth** with updated retention time values. Click on **RETURN** to go to **GRAPHIC METHOD EDITOR** window. From the **FILE** drop down menu select **DESCRIPTION**. Enter the run number used to generate the response factor, the run number used to update the RT and any other desired information. From the FILE drop down menu select **SAVE** or **SAVE AS** and give the **METHOD.mth** a name in the form:

   (site)(month)(year)(column)(1, 2, ...).MTH

   Example: the second Perkin-Elmer GC **METHOD.mth** file at the New Haven site in June 2006 on the PLOT column would be N0606PL2.mth.

H. If required enter the **SEQUENCE**.**seq** using **MODIFIED**, **MODIFY ACTIVE** and edit the appropriate channel(s) **INST METHOD**, **CALIB METHOD** and **PROC METHOD** columns to insert the newly modified **METHOD.mth**. starting with the row of first use.

Select **CHANGE**, **BROWSE** to locate the directory for the **METHOD**.mth, then click **SELECT**. The **METHOD.mth** will be inserted into the **SEQUENCE.seq** at the row number highlighted by the user. Then select **CHANGE**, **FILL DOWN** from the drop down menu. The updated **METHOD.mth** will be used for chromatographic runs collected after the insertion point.

I. See Section 8.0.7.6.3 for setting the bunching and integration factor.

8.0.3.8 Sample Reduction

Each individual chromatogram must be viewed in **GRAPHIC EDIT** and matched to the appropriate **METHOD.mth** to ensure proper identifications, baseline resolution and quantification are being performed. This step requires referral to site documentation forms such as the PAMS AQS Summary Sheet, Figure 803.2A&B, VOC Data Validation Sheet, Figure 803.1 and Notepad Electronic Text File, Figure 803.3. A table of chromatogram run numbers identifying the appropriate **METHOD.mth** to be used should be generated during review.

At this time any suspect data should be noted and all calibrations, audits or maintenance activities verified.

A **SEQUENCE.seq** is generated according to instructions in Section 8.0.7.9. Delete each **SEQUENCE.seq** row containing invalid data hours. Retain hours containing such QA activities as calibrations and audits. Run a **BATCH** reprocess with the **SEQUENCE**.**seq** to generate a set of TX0 or report files.

Note: **TotalChrom** will attempt to print each file as it is created. Use the **WINDOWS PRINT** control to set up a dummy printer before running a **BATCH REPROCESS** to prevent unneeded printing.

The **BATCH** reprocess will create two files of the type (site)(month)(year)(column) using the corresponding information found in the reprocessed ***.RAW** file. One file will have the extension **RST** which is only readable within the TotalChrom software (i.e. may not be exported into other software tools); the second will have the extension **TXO**, and is a text file type format. This file may be exported into other software formats such as EXCEL or VOCdat (Sonoma Technologies data manipulation software) for review, generation of summary tables, or other data purposes.

The *.TXO file contains information on the **METHOD.mth** used in collecting and processing the data. It also contains the information selected in the report format described in 807.7.

Corrective Action Table			
Item	**Frequency**	**Criteria**	**Corrective Action**
Call In – chromatograms	Daily	Normal chromatograms, missing data	Check method, visit site for corrective action, run QC samples
Call in – Quantitation (working std)	Daily	< 10 %D for propane and benzene, 80-120% rec. for other compds	Establish a new RF and/or investigate baseline drift, inst parameters, call PE
Call in – Qualitation	Daily	Missing peaks	Reset the retention times for the reference peaks and missing peaks
Humidified Blank	Biweekly	≤ 0.2 ppbc and TNMOC < 10 ppbc per column	Clean system
Stock Calibration	Biweekly	< 10 %D or Missing peaks	Establish new RFs and new windows

SITE_____ YEAR_____ PAGE #_____

DATE/HOUR	RUN #	INIT	COMMENTS

FIGURE 803.1

VOC DATA VALIDATION

PAMS AIRS SUMMARY SHEET

SITE _____ YEAR _____ MONTH _____ INSTRUMENT _____

DAY	HOUR	0100	0200	0300	0400	0500	0600	0700	0800	0900	1000	1100	1200	1300 1	1400 2	1500 3	1600 4	1700 5	1800 6	1900 7	2000 8	2100 9	2200 10	2300 11	2400 12
	1																								
	2																								
	3																								
	4																								
	5																								
	6																								
	7																								
	8																								
	9																								
	10																								
	11																								
	12																								
	13																								
	14																								
	15																								

FIGURE 803.2A

PAMS AQS SUMMARY SHEET

PAMS AIRS SUMMARY SHEET

SITE _____ YEAR _____ MONTH _____ INSTRUMENT _____

DAY	HOUR	0100	0200	0300	0400	0500	0600	0700	0800	0900	1000	1100	1200	1300	1400	1500	1600	1700	1800	1900	2000	2100	2200	2300	2400
														1	2	3	4	5	6	7	8	9	10	11	12
16																									
17																									
18																									
19																									
20																									
21																									
22																									
23																									
24																									
25																									
26																									
27																									
28																									
29																									
30																									
31																									

FIGURE 803.2B

PAMS AQS SUMMARY SHEET

New Haven PAMS 2005

7/13/05 8-9:00 N75*309 EPA Round Robin canister SN 13501 excess flow rate of 15.5 starting pressure in can 25psi . Thru tee with DI and heated sample line using needle valve assembly sent by EPA to control overage. Using MFM Sierra SN 34607 to determine overage.
7/13/05 9-10:00 N75*310 Zero Air canister SN23175 (can only registers 0, overage on MFC unit #1 show 7l.5) thru tee with DI, MFC unit #1 and sample line.
Note: this run, 310 as well as 311 are not good zeros. Can must be MT enough that room air was drawn in when using atmospheric vent.
7/13/05 10-11:00 N75*311 Zero Air canister SN 23175 thru tee with DI, MFC unit #1 and sample line.
H2 tank changed before run 311 flames relit at 4 minutes into GC run tank all the way on at 2400 psi
7/14 N75*336 11-1200 Placekeeper. Dropped off spare H2, picked up MT H2. He= 850, H2=1900, Gast ~90. Auto cal cyl 12629 at 26psi.
7/27/05 6-7:00 N75*643 HI RT cal cylinder SN14190 thru tee with fresh DI, MFC unit #1 and heated sample line. H2=1640 He=800 Air =80.
7/27/05 7-8:00 N75*644 HI RT cal cylinder SN14190 thru tee with DI, MFC unit #1, and heated sample line.
7/27/05 8-9:00 N75*645 EPA QC cal cylinder SN ALM03887 thru tee with DI, MFC unit #1 and heated sample line.
7/27/05 9-10:00 N75*646 Zero Air cal cylinder SN 12628 thru tee with DI, MFC unit #1 and heated sample line.
7/27/05 10-11:00 N75*647 Zero Air cal cylinder SN 12628 thru tee with DI, MFC unit #1 and heated sample line.
8/01/05 7:41 changed to 0805 sequence through PCAnywhere.DJT
8/4/05 12-1300 N85*078 Round Robin can 13501 thru supplied tee, needle valve, sample line. Excess flow measured by Alltech meter at about 10cc/min. He=800, H2=1200, Gast 95. Autocal cyl 12629 at 4 psi.

8/8/05 8-9:00 HI RT cal cylinder SN 14190 thru tee with fresh DI MFC unit#1 and heated sample line. He=760 H2=1000 Air=95
8/8/05 9-10:00 HI RT cal cylinder SN 14190 thru tee with DI, MFC unit #1 and heated sample line.
8/8/05 10-11:00 Zero air cal cylinder SN 12628 thru tee with DI, MFC unit #1 and heated sample line. Approximately 20 ul of 1,3 Butadiene injected into sample line after the tee just at start of sample collection.
8/11/05 Auto cal cylinder SN 12629 replaced with Auto cal cylinder SN14192 30 psi

8/22/05 Site not answering by PCAnywhere at office. Arrived to do site check, changed H2 tank and rebooted computer to reset modem. H2=200/2550 He= 700 Air=90. Run N85*504 looks ok.
upon reboot changed password to Manager3 in drop down of manager
8/23/05 7-8:00 N85*529 HI RT cal cylinder SN 14190 thru tee with fresh DI, MFC unit #1 and heated sample line. He=700 H2=2450 Air=90
8/23/05 8-9:00 N85*530 HI RT cah cylinder SN 14190 thru tee with DI, MFC unit #3 and heated sample line.
8/23/05 9-10:00 N85*531 EPA QC canister SN ALM03887 thru tee with DI, MFC unit #1 and heated sample line.
8/23/05 10-11:00 Zero Air cal cylinder SN 12628 thru tee with DI, MFC unit #1 and heated sample line.
8/23/05 11-12:00 Pump off zero check. Reconnected sample line after zero air run and turned off Austin pump. Tylan flow meter reads 00.1

FIGURE 803.3
ELECTRONIC TEXT LOG

TEMPERATURE PROGRAM

TEMP 1 = 45°C	TIME 1= 15 minutes	RATE 1= 5.0^{O}C/MIN
TEMP 2 = 170°C	TIME 2 = 0 minutes	RATE 2 = 15.0^{O}C/MIN
TEMP 3 = 190°C	TIME 2 = 7 minutes	RATE 3 = END

OVEN END = 48.0 MINUTES PRESSURE SET = ~17 (varies) VALVE 2 INITIAL = ON

FID 1 TEMPERATURE = 250	FID 2 TEMPERATURE = 250
FID 1 RANGE INITIAL = 1	FID 2 RANGE INITIAL = 1
INT 1 OUTPUT INITIAL = FID 1	INT 2 OUTPUT INITIAL = FID 2
FID 1 A/Z INITIAL = ON	FID 2 A/Z INITIAL = ON

TIME EVENT VALVE 2 ON = 0.010
TIME EVENT VALVE 2 OFF = (varies, approximately 12 minutes)

FIGURE 803.4

PERKIN-ELMER GAS CHROMATOGRAPH SETTINGS
OZONE METHOD SETTINGS

PERKIN-ELMER ATD METHOD 1

			SET	ACT
MODE	2	OVEN TEMP	250	As Found
FIRST TUBE	1	DSRB TIME	1.0	As Found
LAST TUBE	1	VALVE TEMP	175	As Found

Press PAGE key

INJ/TUBE	99	TRAP LOW	-30	As Found
TRAP FAST	YES	TRAP HIGH	325	As Found
CYCLE TIME	60	TRAP HOLD	8.0	As Found

Press PAGE key

IN SPLIT	NO	LINE TEMP	200
OUT SPLIT	YES	MIN PSI	0 (varies up to ~40)
RECYCLE	NO	STD INJ	40.0 (actual sample run time)

Press STOP key:

Choice one - Press 0 key to stop after this tube
Choice two - Press 1 key to stop immediately
Choice three - Press 2 key to stop after this injection
Choice four - Press page key to cancel stop

FIGURE 803.5

PERKIN-ELMER ATD400 SETTINGS

PAMS OPERATIONAL GAS STATUS

SITE _____ INSTRUMENT _____ YEAR _____

Date	He	H2	Air Pump	MFC

Date	He	H2	Air Pump	MFC

FIGURE 803.6

VOC OPERATIONAL GAS STATUS

NULL DATA CODES for INVALID DATA

Revision 20.2 wpdoc/null20 Revised 01/08/03

The following is a list representative of null data codes for invalid data with definitions as used by the state of Connecticut. It will be used with **AQS.** Codes are assigned based on comments from Operations check sheets, historic memos, QA Report sheets, QA calibrations, temperatures and line voltage flags and Daily Reports.

New	Old	Label	Definition
BH	9965	COEL	INTERFERENCE/CO-ELUTION – For GC measurements, peaks eluting so closely that quantification and identification of either is unreliable.
AE	9971	TEMP	TEMPERATURE - Any sample or data rejected for out of spec shelter temperature.
AL	9978	VOID	VOIDED BY OPERATOR - Any sample or data rejected for: Out-of-spec voltage, water in analyzer, (see also 9970-STRM or 9981-WTHR), manifold problems.
AV	9988	POWR	POWER FAILURE - Any power outage causing a sample or data to be lost or invalid. A power outage of >10 minutes in any one-hour of a continuous analyzer's operation.
AZ	9992	AUDT	QUALITY ASSURANCE AUDITS - Data lost during analyzer or sampler audits by Quality Assurance personnel.
BA	9993	MAIN	ROUTINE MAINTENANCE or REPAIR - Any sample or data lost during routine site visits, preventive maintenance or repair. i.e. manifold cleaning, capillary inspection, inline filter changes, G.C. column, scrubber or trap changes. Routine analyzer, sampler, D.L. or PC change over.
BC	9995	MULT	MULTI-POINT CALIBRATION - Any data lost during a multi-point, initial or final calibration or auto (site) calibrator certification.
BD	9996	AUTO	AUTO- CALIBRATION - Any data lost during an *automatic* calibration cycle for zero and/or precision and/or span.

FIGURE 803.7

PAMS AQS NULL DATA CODES

SITE _____ INSTRUMENT _____ YEAR _____

COMPUTER DATE										
IS TURBOCHROM NAVIGATOR UP?										
ARE ALL DISKS REMOVED FROM DRIVES?										
IS THE INTERFACE TIME AND DATE OK?										
IS THE PHONE LINE CONNECTED AND THE MODEM ON?										

GAS CHROMATOGRAPH										
IS THE SAMPLE LINE CONNECTED TO THE MANIFOLD?										
ARE THERE ADEQUATE OPERATIONAL GASES?										
IS THE GC SAMPLING 5-45 MINUTES PAST THE HOUR?										
DO CHROMATOGRAMS APPEAR NORMAL?										
WAS A 'PLACEKEEPER' RUN RECORDED ON THE PAMS AQS SHEET?										
IS A CAL RUN REQUIRED (BI-WEEKLY)?										
IS THE SAMPLE PUMP ON AND FLOW OK?										

Site Check										
WAS CONDENSATION DRAINED FROM THE EXPANSION TANK?										
IS THE PRESSURE 60-80 psi?										
IS THE SCRUBBER LIGHT ON?										
LOCK ALL DOORS AND GATES WHEN LEAVING										

FIGURE 803.8

PAMS SITE CHECK SHEET

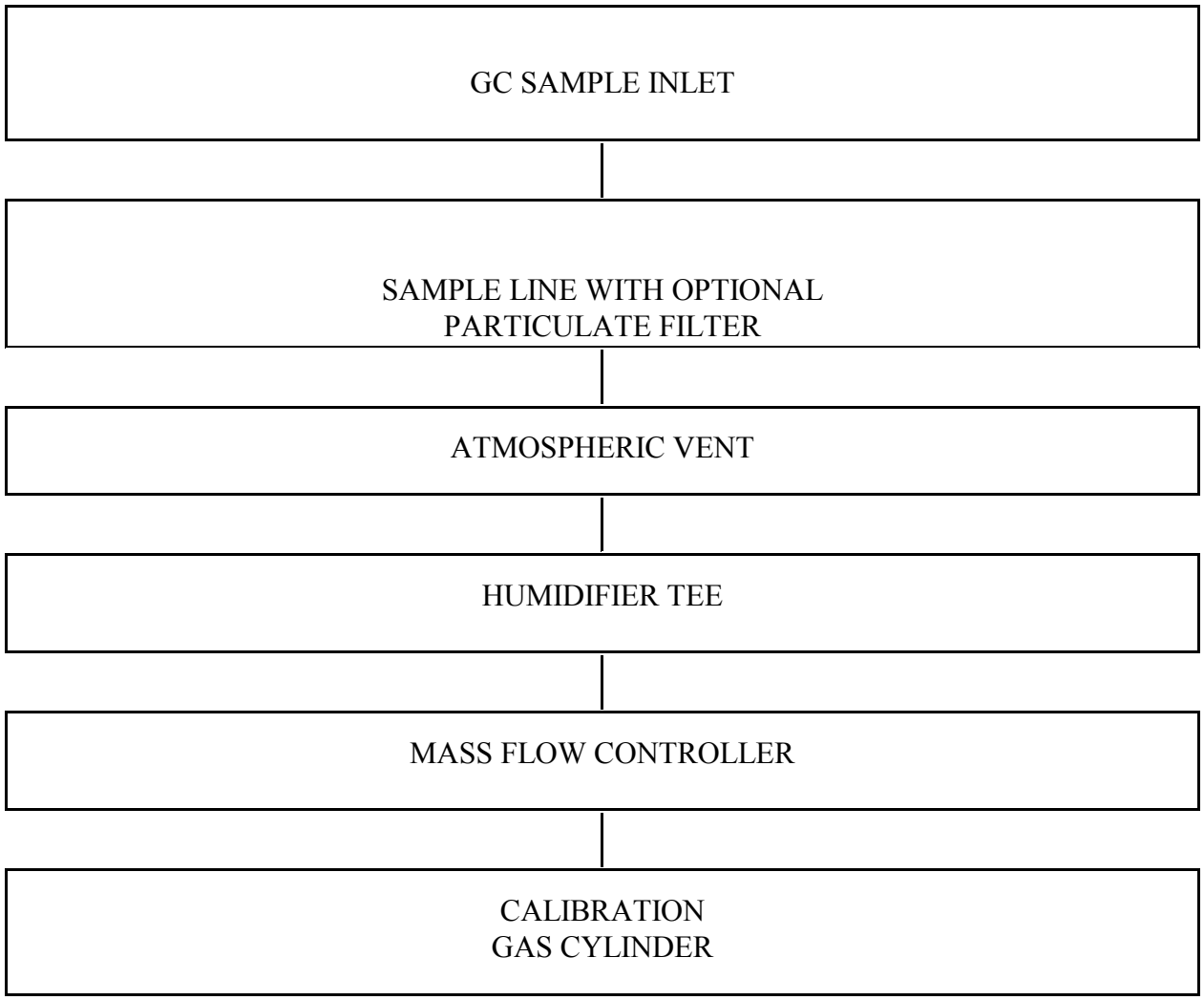

FIGURE 803.9

CALIBRATION CONFIGURATION

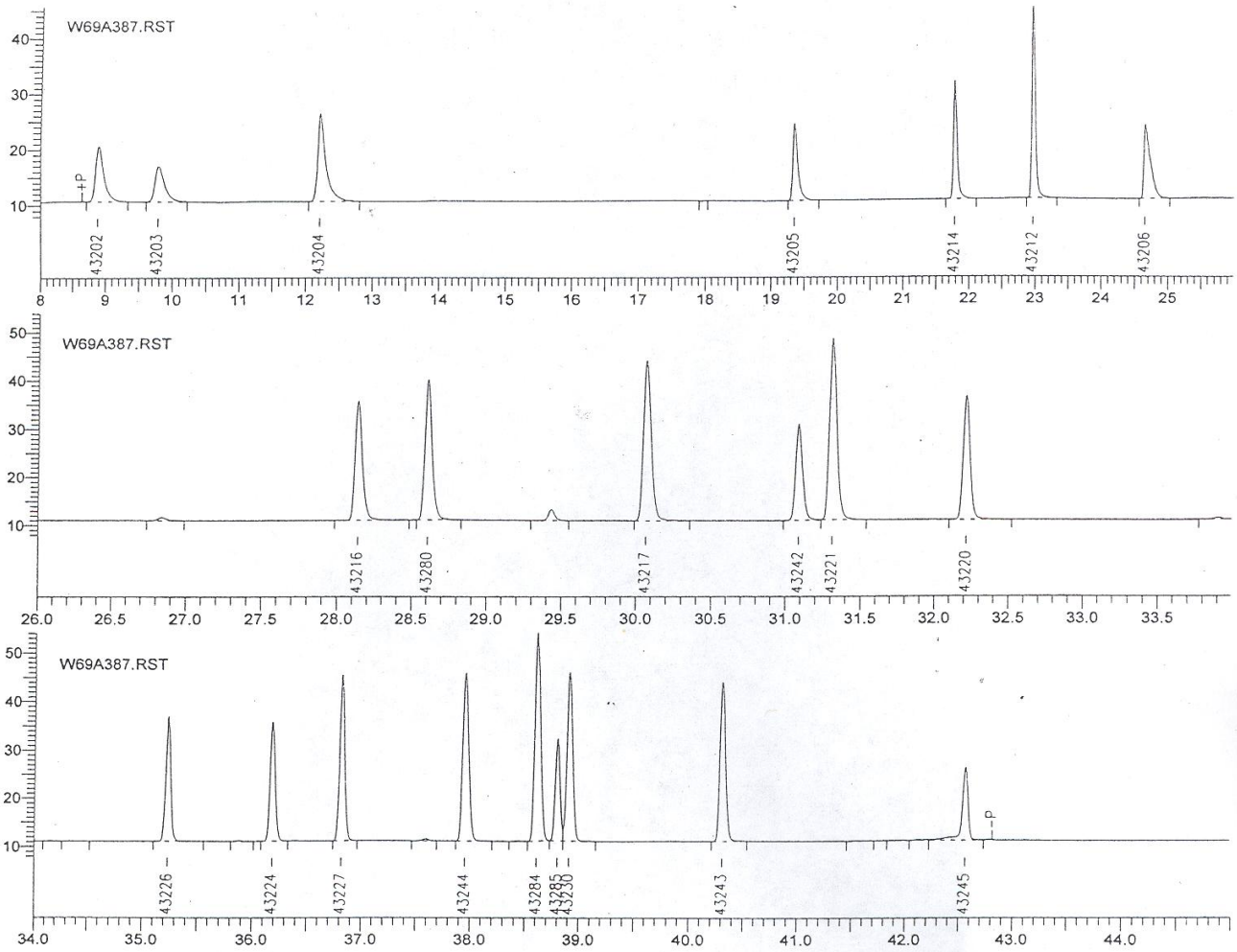

FIGURE 803.10A

MASTER CALIBRATION

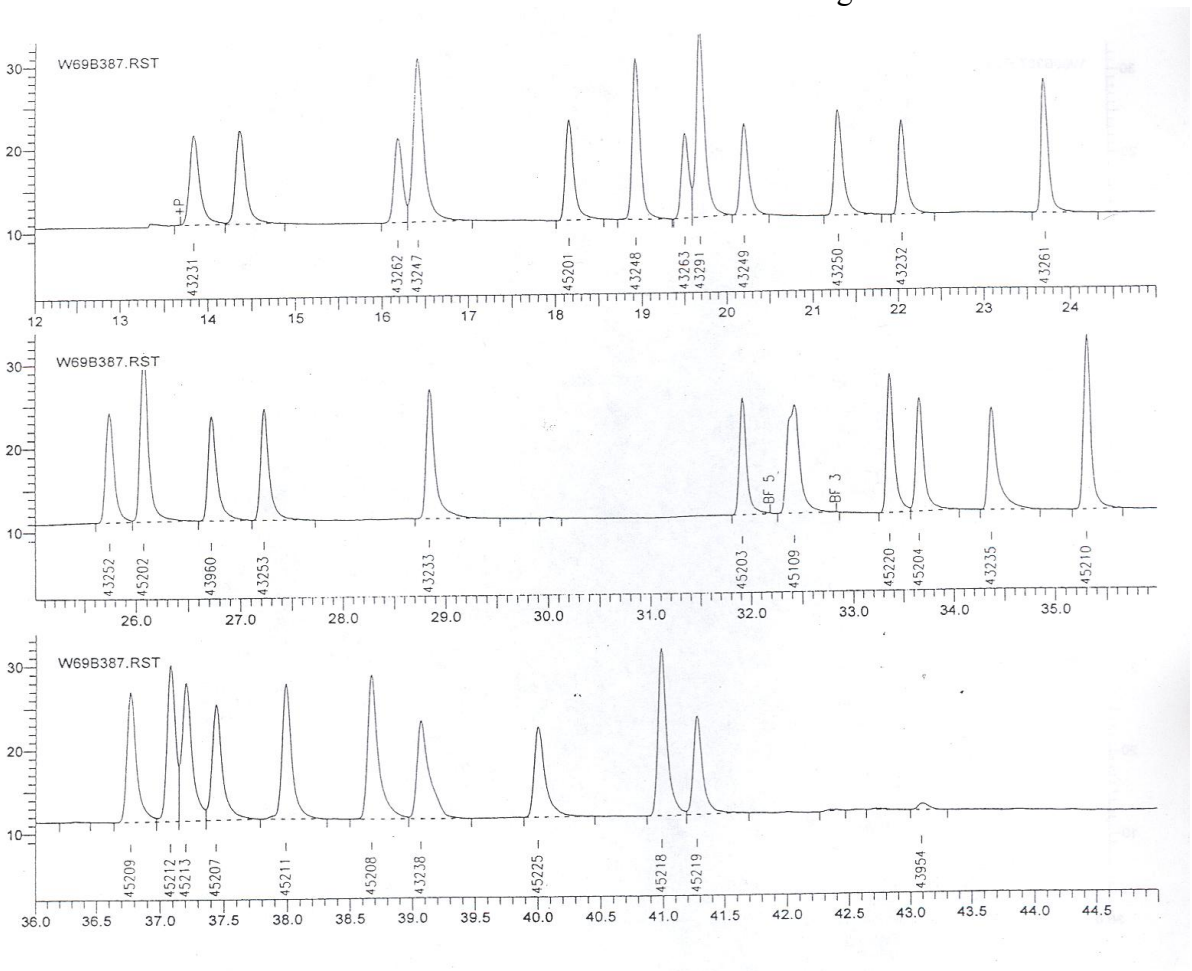

FIGURE 803.10B

MASTER CALIBRATION

8.0.4.0 MAINTENANCE AND TROUBLESHOOTING:

System failures involving data collection result in a decrease of data quantity and quality. Maintenance and preventive maintenance procedures focus on components of equipment which may degrade during normal operation and which need to be replaced before failure occurs. In general maintenance is performed in conformance with manufacturer's recommendations.

All maintenance and repairs must be recorded with sufficient detail on the VOC Data Validation Sheet, Figure 803.1 and the Electronic Text Log, Figure 803.3. If any maintenance requires the GC to be off-line resulting in data loss, the time frame and run numbers affected must be recorded on the PAMS AQS Summary Sheet, Figure 803.2A&B using the applicable code from the Null Data Code Sheet, Figure 803.7 to classify the cause of data loss.

8.0.4.1 Schedule

The following table represents the maintenance and replacement schedule:

Bi-Weekly Site Visits
- Fill the humidification tee with DI water
- Verify canister pressure greater than 5 psi for the working standard
- Verify operating gas pressures are greater than 300 psi
- Verify PC operation, METHOD.mth and adequate storage space exists on hard drive

Monthly
- Instrument mass flow controllers (sample) checked monthly to ensure proper sample collection rates.
- Leak check - monthly or as required

Preseason or Annually
- PLOT column replacement annually
- BP-1 column replacement annually
- Indicating scrubbers replaced when >75% consumed
- Non-indicating scrubbers when indicating scrubbers show breakthrough
- Carbosieve trap - annually, or as required
- Check the split vent and desorb flow rate
- 2-5 micron particulate filter (if used) replaced annually, or as required
- Delivery lines should be cleaned or replaced annually or earlier if contamination is suspected
- The Balston zero air supply filters should be checked or replaced before the start of the monitoring season. See manual for procedure

- Preseason checklist, Figure 804.1, completed
- Nafion tubing replaced

Postseason:
- Postseason checklist, Figure 804.2, completed

As Needed:
- FID's are replaced when noise, spiking or other indications of poor performance are evident. See instrument manual for procedure.
- Pelltier cooler deiced, ATD tube replacement

8.0.4.2 Check Lists

A. Pre-Season Check List

At a reasonable time before it is anticipated that the GC systems will be operated for the PAMS season, each site should be visited and a Pre-Season Site Check Sheet, Figure 804.1, filled out. The sheet is designed to ensure that required supplies, equipment, etc., are available when needed. Any deficiencies will be noted and corrected before the monitoring season.

B. Post-Season Check List

After the end of the sampling season, a Post-Season Check List, Figure 804.2, is completed. It will help identify problems or deficiencies allowing adequate time to resolve issues before the next monitoring season.

C. Calibration Cylinder Tracking Sheet

For historical records it is necessary to identify specific cylinders and their contents. The Calibration Cylinder Tracking Sheet, Figure 804.3 is completed each time a cylinder is permanently assigned to a site, cleaned and refilled with calibration gas, or returned to a vender.

8.0.4.3 Leak Checks

8.0.4.3.1 Pressure Leak Check

It is possible to leak check the ATD, transfer line and GC columns using a pressure test. The test will verify that all user-made and manufacturer connections are leak free.

Note: Be certain to note system “as found” pressure settings before starting this

procedure to reset them upon reassembly.

8.0.4.3.2 Entire System

A. Place the ATD in STANDBY mode and turn off the hydrogen gas supply. Remove the columns from the FIDs and plug the ends with septa. (Note: the detectors are very hot, 250° C. Powering down the unit and opening the GC oven door for about 1 hour will allow the fittings to cool somewhat. Restore power to the GC after removing the FID connections). Alter the GC METHOD to create a midpoint setting at ~48. Press the GC CARRIER key so as to display the midpoint pressure and using the GC midpoint pressure regulator, adjust the pressure to approximately 45. Note: if the GC METHOD is not altered, it will prevent increasing the midpoint pressure.

B. Press the ATD keypad **PAGE** key until the SYSTEM PRESSURE is displayed. Adjust the system pressure (using the pressure regulator at the top rear left of the ATD) to approximately 45. Allow the pressure to stabilize within the system for a few minutes and note the reading on the ATD SYSTEM PRESSUE display and the GC CARRIER PRESSURE display. Rapidly turn each pressure regulator fully out (CCW) to isolate the transfer line, columns and effected pressure regulators. The pressures displayed on the ATD and GC will initially drop about 5 psi and will then stabilize. Observe the pressures for 5 minutes. If there are minimal leaks the pressures will decrease less than 2-3 units over 5 minutes (0 drop is ideal).

   If the pressures drop more than 2-3 units over 5 minutes, a leak of concern exists. Tightening of all connections is called for, followed by a repeat of the above pressure check to verify that the leak has been sealed. If the leak is severe or difficult to locate, the ATD and GC portions may be isolated to more quickly locate the leaking area.

8.0.4.3.3 ATD and transfer line

A. Place the ATD in STANDBY mode. Cool the GC oven and cut the BP-1 column about 1 inch below the transfer line union and plug each cut end with clean septa. Using the ATD system pressure gauge located at the top left rear of the unit, set the system pressure as read on the ATD SYTEM PRESSURE display to an elevated setting (~45psi). After allowing it to stabilize, rapidly back out the pressure knob fully CCW. Observe the ATD pressure reading, it will drop rapidly about 5 units, then should stabilize and hold at an elevated pressure, dropping no more than 2-3 units over 5 minutes. A dropping pressure reading indicates a leak. If a leak is indicated, leak test affected fittings in the ATD and transfer line or tighten each in turn until an acceptable leak check is maintained.

Note: Be certain the leak is not at the septa. Start by reinserting the fused silica into the septa and rechecking the pressure test.

8.0.4.3.4 GC portion

A. Seal the BP-1 removed from the transfer line with a clean septa. Remove the PLOT and fused silica restrictor line from the FIDs and seal with clean septa. Using the MIDPOINT knob adjust located at the top rear center of the GC, turn the midpoint pressure as read on the GC to an elevated value such as 45 psi (it will go up more rapidly if the GC METHOD is first set at the higher value of 45). Allow the pressure to stabilize and rapidly back the knob out CCW. Observe the GC midpoint pressure, it will decrease slightly about 5 units, then should stabilize and hold at an elevated pressure, dropping no more than 2-3 units over 5 minutes. A steadily dropping pressure reading indicates a leak in a column connection, the Dean switch, or the midpoint valve itself. Leak check or tighten each fitting and repeat the pressure test until an acceptable condition exists.

   Note: be certain the leak is not at the septa. Start by reinserting the lines in the septa and rechecking the pressure test.

B. When an acceptable leak free condition has been established, remove septa and reset pressures at the GC and ATD to normal operating conditions. Install fresh ferrules and replace fittings, then cut fresh ends on the columns to remove contaminates or particles of septa and reassemble.

8.0.4.3.5 Thermal Conductivity Leak Check

Use of a thermal conductivity leak detector is the preferred method of checking pneumatic connections in the GC system, as it is non-contaminating. The detector must be interpreted carefully as false positives (false leaks) may be indicated in cases of rapid temperature changes such as when first inserting the leak detector probe near a hot surface.

8.0.4.3.6 GC Connections

A. Open the GC oven door to gain access to the columns. Place the probe of the thermal detector near each fitting. Observe carefully for evidence of leaks. If a leak is found, carefully tighten the connection and retest. Be careful not to over tighten fittings as the column may be crushed at the ferrule and break.

B. Using the same technique check all pneumatic lines that are accessible.

8.0.4.3.7 ATD400 Connections

A. All operational gases should be connected and regulators turned on for this procedure.

B. Check all operational gas connections located at the rear of the ATD400.

C. The sample and calibration line connections must be checked while under positive pressure. Connect a low-pressure calibration gas cylinder to the line being checked and open the cylinder valve. Check each connection and watch for evidence of leaks. Tighten as required if leaks are found.

8.0.4.3.8 Liquid Leak Check

Use of liquid media for leak detection **IS NOT** the preferred method of leak detection at any point in the chromatographic system, from the operational gas supplies to the detector of the FID. Water or alcohols will cause serious retention times shifts on the PLOT column and soap based solutions can contaminate internal plumbing lines and columns.

If required, Snoop solution is only used on the gas cylinders. Do not use soap-based solutions or alcohols for leak checking pneumatic lines or chromatographic column connections. Severe contamination of the system could occur if they were used and entered the system. For any other application, use only deionized (DI) water or a hydrocarbon such as hexane applied with a syringe or dropper. As any bubbles formed from a leak will not be as apparent as with a soap solution, careful observation of each fitting is important.

8.0.4.3.9 GC Connections

A. Open the GC oven door to gain access to the columns. Using a syringe or dropper, place a small amount of leak check solution on each connection, one at a time. Observe carefully for evidence of leaks. If a leak is found, carefully tighten the connection and retest. Be careful not to over tighten fittings as the column may be crushed at the ferrule and break. Recall that the temperature within the oven will cause the liquid to evaporate quickly.

B. Using the same technique check all pneumatic lines that are accessible.

8.0.4.3.10 ATD400 Connections

A. All operational gases should be connected and regulators turned on for this

procedure.

B. Using DI water, check all operational gas connections located at the rear of theATD400.

C. The sample and calibration line connections must be checked while under positive pressure. Connect a low-pressure calibration gas cylinder to the line being checked and open the cylinder valve. Deliver the leak check solution to each connection and watch for evidence of leaks. Tighten as required if leaks are found.

8.0.4.4 Maintenance

8.0.4.4.1 Data Acquisition System

In general data acquisition will be by personal computer. Other than periodic cleaning of keyboards and display screens little or no maintenance is required. Symptoms of problems such as noisy disk drives, malfunctioning keyboards, monitor failures etc, should be reported to the appropriate individual or group responsible for computer related issues.

8.0.4.4.2 Balston Zero Air Supply with Gast Compressor

Drain accumulated moisture from the Gast pump expansion tank by opening the 'T' handle drain located at the bottom of the expansion tank. Lifting the far end will facilitate drainage. The Gast may be outfitted with an optional solenoid that will vent moisture automatically every hour, however experience has shown the automatic vents fail at an unacceptably high rate and will not normally be used.

8.0.4.4.3 Filter Replacements

A. Turn off Gast supply pump and relieve pressure in the system before performing Steps B-E.

B. Locate the two filter holders on the rear panel of the BZAS. Remove by loosening the connection at the top of the filter holder. Unscrew the holders and examine the filters for dirt or contaminants.

C. Replace the filter element with one of the same type.

Note: The filter elements are different in each holder but the difference cannot be seen. Be sure to install the correct filter part number in the holder.

D. Replace the final filter module at half the frequency of the other filters. Unscrew the filter bowl from the housing and remove filter. Be certain to replace it with the correct type of filter.

E. Clean accumulated dust/dirt from the cooling coil and fan screen.

F. At infrequent intervals the BZAS converter will require replacement. Refer to the Balston 78-30 TOC Maintenance Manual for procedure.

8.0.4.4.4 Replacement of Delivery Lines

The sample line from the manifold to the ATD should be removed and replaced annually at the start of the sample season. This includes the probe portion of the sample line inserted in the manifold. Replace with stainless steel, silica lined stainless steel or nickel line. The sample line may be insulated to help prevent the formation of condensate in the sample line upon entering the air conditioned shed.

The auto-calibration gas delivery line may be changed at a less frequent interval as it is exposed only to calibration gas. Replace with stainless steel, silica lined stainless steel or nickel line if contamination is suspected.

8.0.4.4.5 Scrubbers

Moisture and oxygen scrubbers are installed on the delivery lines for helium. An indicating type scrubber follows a large capacity non-indicating type. When the indicating type shows a color change, the large capacity pre-filter should be changed. The indicating type need only be changed when 75% of its capacity is expended.

Caution: Be very careful not to expose oxygen scrubbers to water as they contain lithium and may spontaneously combust. Humidity in room air is potentially sufficient to cause an exothermic reaction. Leave the gas cylinder on when attaching replacement scrubbers to minimize the amount of moisture and oxygen the scrubber is exposed to and work quickly.

8.0.4.4.6 Cylinder Gases

Operational gases must be checked weekly to ensure adequate volume remains. Anticipated usages are;

- Helium carrier = approximately 300 ft^3/3 months
- Hydrogen fuel = approximately 300 ft^3/2 months

Note the pressure remaining in each cylinder, as well as the Gast compressor pressure on the VOC Operational Gas Status Sheet, Figure 804.5.

SAFETY NOTE- Compressed gas cylinders are under high pressure, up to 2500PSI. Severe injury can occur if compressed gas cylinders are not handled properly. **Additionally, hydrogen is highly flammable.** Ensure no ignition source is near stored or in use hydrogen cylinders.

- Ensure each cylinder is securely held in place by a chain or rope such that it can not tip over.
- Do not remove protective caps covering the valve until the cylinder is placed in use. Recap the cylinder after removal of regulator even if empty.
- When installing or removing a regulator, wear safety glasses. Ensure cylinder main valve is OFF before removing an in use regulator.
- Label an empty cylinder as empty by writing MT on the cylinder neck with a magic marker.
- After installing a regulator, back out the second stage pressure valve fully before turning the main cylinder valve on. This prevents damage to the second stage when the full cylinder pressure is allowed into the regulator.

8.0.4.4.6.1 Operational Gas Cylinder Change Out

When replacing the helium carrier gas, be mindful of the fact that the columns can be damaged if the flow is off while the oven is being heated.

A. When it is necessary to change cylinders, be certain to effect the change as rapidly as possible to minimize the exposure of the regulator inner surfaces to ambient air. Where so fitted with bleed valves, bleed the regulator after reinstalling on a new cylinder.

B. Position the replacement cylinder adjacent to the one to be replaced. Removal of the new main cylinder shut off valve handle may be required so that a wrench may be used on the stem. Frequently the high pressure in replacement cylinders prevents hand opening (or closing) of the main valve.

C. Using a small adjustable wrench or the cylinder main valve handle shut off the cylinder to be changed. Quickly back out the second stage regulator adjustment knob so as to seal it from the inlet. This also prevents damage to the second stage when re-pressurized by the replacement cylinder. Remove the regulator and place on a new cylinder. Tighten securely.

D. If fitted with a vent valve, bleed the regulator sufficiently to remove any volume of room air that may have gotten into the system from the change out.

E. Turn on the cylinder main valve using a small adjustable wrench or main valve. Slowly bring the second stage pressure up to 60 psig. Leak-check the connection.

F. It may be necessary to relight the FID's after a change out. Always attempt to change a cylinder of operational gas at a point in the cycle other than during the generation of a chromatogram.

8.0.4.4.7 Split Vent and Desorb Flow Rate

The flows are checked during annual preseason maintenance. Refer to the instructions in the Perkin Elmer User Manual.

8.0.4.4.8 ATD Tube Replacement

On rare occasions the sample tube may not mate with the holder or may slip from the correct position and need to be reinstalled. The tube may also become stuck in the sampling position if the GC loses power. The condition may be indicated by the ATD error message TUBE DEVIATION, LOW AIR PRESSURE or UNABLE TO PROCEED.

A. Power down the ATD400 and unplug it from the AC circuit. Remove the ATD400 cover, disconnecting the ground lead in the top left rear access panel.

B. Loosen the two black thumbscrews holding the carousel assembly to the ATD base and rotate the carousel up and out of the way.
Note: If the tube is still in the sampling position the unloading arm will hit the tube when raising the carousal. Pull back on the clamped arms holding the tube in place to release the tube. Be certain to leave the jaws in the outward position.

C. Extract the sample tube and carefully examine it for chips or cracks.

D. Remove the white Teflon caps from the carrousel pneumatic holder by pushing the jaws of the carrousel tube holder inward. Needle-nose pliers or a screwdriver help in removing the caps. Replace the caps onto the sample tube. Be certain to return the jaws to the outward position.

E. Reposition the carrousel and screw it down. Replace the ATD400 cover, connecting the ground strap.

F. Power up the unit. The carousel will automatically cycle. Place the sample tube into the carousel at the number 1 position.

G. Press "Start" on the ATD400 control panel at 2 minutes past the hour to resume sampling. The interface and GC have to be in the READY mode.

H. Be certain to record all steps taken in the VOC Data Validation Sheet, Figure 803.1, PAMS AQS Summary Sheet, Figure 803.2A&B and any hours lost due to maintenance on the PAMS Electronic Text Log, Figure 803.3.

8.0.4.4.9 Peltier Cooler

The Peltier cooler may occasionally retain excess moisture as ice. The indication will be an extension of the ATD400 desorb mode causing a delayed start for the next injection. Drying the Peltier cooler resolves the problem.

A. Power down the ATD and disconnect the AC cord. Remove the cover to the ATD400, disconnecting the ground strap located under the top left rear access panel.

B. Locate a sealed 'box' on the center right of the instrument, behind the carrousel. Directly in front of it is a two-wire connector. Unplug either one.

C. Remove the cover plate from the 'box' and examine the gasket for damage. Replace if required.

D. Using a heat gun or dry air source melt any ice present and dry thoroughly. Do not overheat.

E. Replace the cover and snug screws down evenly. Replace the wire connection.

F. Replace the ATD400 cover, and reconnect the ground strap. Power up the ATD, and restart the system by pressing the Start key at two minutes past the hour.

G. Be certain to record the maintenance on the VOC Data Validation Sheet, Figure 803.1, PAMS AQS Summary Sheet, Figure 803.2A&B and any hours lost due to maintenance on the PAMS Electronic Text Log, Figure 803.3.

H. Perkin-Elmer service technicians can install a vent line from the zero air supply to flush the cooler housing and prevent ice formation.

8.0.4.4.10 Column Replacement

The Ct. DEP maintains a warranty service contract with Perkin-Elmer. PE technicians will replace the columns annually as part of the service contract. Be certain to note any

column change in the Enhanced Ozone Monitoring VOC Data Validation Sheet, Figure 803.1, and the Electronic Text Log, Figure 803.3.

Note: The GC oven and FID's are very hot, up to 250C. The GC may be powered down, and the oven door opened for about an hour to allow the oven area to cool. Otherwise, be very careful not to touch surfaces.

A. Open the GC oven door to gain access to the columns. Whether the PLOT or BP-1 column is to be replaced, the process is the same. Be certain to verify that correct ferrules are on hand before attempting the procedure. The required ferrules are:
   -PLOT = PN 0726542
   -BP-1 = PN 0726543
   -FID = PN 0726214

B. Using the proper sized wrenches loosen the column Swageloc type fittings at each end of the column (at the junction of the transfer line and Dean Switch for the BP-1, or the Dean Switch and FID for the PLOT).

C. Carefully remove the columns from the fittings. Be certain to measure the exposed portion of the column (extending beyond the fitting) as the new column will be set the same. This is especially important at the Dean switch and FID connections.

D. Remove the fittings from the removed column. This often requires cutting the column behind the fitting as the ferrules become welded to the column material. Plug each end of the column with a clean septa, mark it as used by site and removal date, and store in a safe location. It may serve as a backup column if needed.

E. Push the new column's end through a clean septa which will be used as a depth marker as indicated in Step C. Place the Swageloc fitting over one end of the column (the columns are unidirectional, i.e. there is no "in" or "out" end). Place a new ferrule on the column being certain to note the orientation of the ferrule- the pointed end faces away from the receiving fitting, the opposite configuration of a conventional Swageloc ferrule appearance.

F. Cut a fresh end on the column using a column cutter. Examine carefully for a proper cut. Recut if needed. Adjust the septa along the column until the correct length of column is exposed beyond the fitting face. Avoid touching the end with bare fingers.

G. Insert the column into the receiving fitting, and snug securely. Do not over-tighten. Note: Fittings commonly need re-snugging after undergoing several heat/cool cycles of the GC oven. Repeat Steps E, F & G for the column's other end connection.

H. With the helium carrier gas on, test each fitting for leaks with a thermal conductivity leak detector.

8.0.4.4.11 Replacing the FID Jets

Occasionally poor performance, noise or spikes will indicate that the FID units need to be disassembled and replaced. Refer to the Perkin-Elmer 8700 Reference Manual, Vol. II for instructions. Note any cleaning in the Enhanced Ozone Monitoring VOC Data Validation form, Figure 803.1 and the Electronic Text Log, Figure 803.3.

8.0.4.4.12 Adjusting the Dean Switch

The Dean Switch controls the time at which the BP-1 column switches flow from the PLOT column. It should switch immediately before hexane starts to elute from the BP-1 column. The time is determined by letting the GC run on the BP-1 column only, identifying when hexane elutes and then setting the switch in the GC METHOD to 0.1 min before that time.

A. Allow the GC to collect and run a sample of calibration gas containing hexane. Carefully note the time that hexane starts to elute from the BP-1 column.

B. Edit the GC METHOD, Valve 2, TIMED EVENTS by setting the final relay event - relay 2 - to "off" at 0.2 minutes before the time that hexane eluted from the BP-1 column. The current in-use METHOD may not be altered while in use, another METHOD must be installed before the in use METHOD may be adjusted.

1. Press the blue GC keypad **METHOD** key. Use the arrow key to select **SETUP**, then select a METHOD not in use. Press **ENTER** from the GC keypad. The selected METHOD will become loaded and becomes the in-use METHOD.
2. Select ENTER, and SAVE using the keypad buttons.
3. Press the blue GC keypad **METHOD** key, then select **EDIT**, and use the arrow key to select the METHOD to be updated, typically METHOD 1. Press **ENTER**.
4. Press **VALVE** to view the settings for VALVE 2 which controls the Dean Switch time. Press **ENTER** until the VALVE 2 OFF time appears. Using the GC number pad, enter the desired Dean Switch OFF time (for example 12.4 for 12.4 minutes).
5. Press ENTER, to record the setting, then STATUS/ESCAPE. The screen will ask the user to SAVE or ABANDON. Press SAVE.
6. Press the blue GC keypad **METHOD** key, then select **SETUP**. Select the METHOD with the corrected Dean Switch time, typically METHOD 1. Press

ENTER, then select **SAVE**.

C. Accept the GC METHOD and return to the normal view screen that displays the real time chromatogram. Reintroduce the calibration gas containing hexane and view the resulting chromatogram to verify that hexane is the first peak, and is not partially cut off. If it is not the first peak, or shows signs of being cut off, another adjustment to the "off" time of Valve 2 is required.

D. Document the Dean Switch check and adjustment on the Data Validation Sheet, Figure 803.1 and the Electronic Text Log, Figure 803.3. Note the time that the GC was not sampling ambient on the PAMS AQS Summary Sheet, Figure 803.2A&B using the correct code from the AQS Null Data Codes, Figure 803.7.

8.0.4.4.13 Mass Flow Controller

The flow rate of the sample pump mass flow controller (MFC) is checked at each site visit to ensure that the flow rate is correct. The volume collected must remain constant, as variances will affect the quantification factor, and thus accuracy of measurements. The MFC should be set to 15cc/minute. The MFC indication is recorded on the VOC Operational Gas Status Sheet, Figure 803.6.

Before the start of PAMS season, and periodically through the season the actual flow should be verified using a calibrated mass flow meter (MFM).

A. Remove the rectangular cover at the rear of the ATD and set the cover aside. The ATD MFC is mounted vertically inside.

B. Remove the 1/8 inch fitting from the bottom of the ATD MFC and connect the test MFM to the fitting. Ensure the test MFM is set to METER, not CONTROL. Use the SET control knob of the ATD MFC to set the flow at several settings over the range of the meter, typically 5 to 50 cc/minute. Allow the flow to stabilize at each point, and record the ATD MFC reading and the calibrated MFM reading on the Data Validation Sheet, Figure 803.1 and the Electronic Text Log, Figure 803.3.

C. Set the ATD MFC to 15+/-1cc/minute as read on the calibrated MFM. Record the readings from both meters as in Step B above. The ATD MFC will be set to this value for normal operation.

D. Check the maximum flow attainable by turning the ATD MFC to at least 75cc/minute and record the actual flow from the MFM. If the maximum flow is not attained on the MFM, it is an indication that the system sample pump or ATD MFC is not performing to full capability and may need replacement. Repair or replacement is covered under

the Perkin-Elmer service contract.

8.0.4.4.14 Nafion Replacement

Annually, the Nafion tubing should be replaced.

Required supplies are: replacement Nafion tubes and appropriate O-rings (Perma Pure PN MD-050-48E-S).

Note: The ATD should be set in a stand-by position.

A. Shut off the Nafion purge air by closing the toggle next to the lower Nafion fitting. Remove the stainless steel tubing with Nafion liner from the ATD. Cap the stainless steel tube with 1/8" plugs.

B. Uncap the seals on the replacement Nafion dryer tubing. Attach the replacement assembly to the ATD.

C. Turn on the purge air toggle.

8.0.4.5 Troubleshooting Perkin-Elmer Gas Chromatograph

This Section will cover certain common problems experienced with the Perkin-Elmer GC. It is not intended to be all-inclusive or to replace the Troubleshooting section of the manual.

Figures have been included in this document to assist the operator in verifying pneumatic, compressed gas and wiring hookups;

- Figure 804.5 = Perkin-Elmer Gas Delivery Systems
- Figure 804.6A-D = Perkin-Elmer Signal and Control Cables

8.0.4.5.1 ZONES NOT READY

1. Generally means one or more programmed temperatures have not been reached and stabilized. Scroll through ATD display to obtain SET and ACTUAL temperatures to verify status. Verify SET values are correct (see Section 8.0.7)

2. May also mean that the 970 interface or the computer is not on and is not ready to receive data. Ensure the computer is in **TOTALCHROM** and **ATTACHED** and the 970 interface is ON, with **SAMPLING** engaged.

8.0.4.5.2 UNABLE TO PROCEED

Means an operational requirement has not been met. The most common problem is lack of air pressure to the ATD. Air pressure must be approximately 60 psi to operate the ATD pneumatic valves.

8.0.4.5.3 ATD FAILED LEAK CHECK

1. Some event occurred causing the tube leak check to fail. The leak check is performed only when initiating sampling, each subsequent sample is collected without the leak check. Usually merely restarting the ATD allows a valid leak check to occur. If not, then the sample system must be checked to find the problem. Be certain to allow at least 10 seconds of downtime before attempting to restart the ATD. This allows surge protection thermistors to cool to a less sensitive state.

2. One of the first items to verify is that the sample tube has not slipped from its bracket or that the caps installed on it at Standby mode are not jammed. See Section 8.0.4.4.8 of this document - ATD Tube Replacement.

8.0.4.5.4 Power Disruptions

1. AC power interruptions will cause the GC/ATD to come up in STANDBY mode. The GC will often display a POWER RESTORED-METHOD RETAINED message. Firmware to automatically restart the system has been installed but the time of sample collection is not respected.

2. At every indication of an AC power interruption verify the time of sample collection and reset if required. Verify computer and interface time and date are correct as well.

   Note: If the sample time and **TOTALCHROM** record times do not agree, the operator must run SETUP in order to reload the correct time to the interface.

8.0.4.5.5 Shifting Retention Times

Small retention times shifts are common especially on the PLOT column and do not necessarily indicate a problem. Normally updating the retention times using GRAPHIC EDIT solves the problem, Section 8.0.3.7.

If the retention times of individual components drift significantly between runs the following steps should be taken.

Note: Be aware that it is not unusual, nor does it necessarily indicate a problem, for

acetylene to drift over time.

A. Leak check column and system. Verify that SYSTEM PRESSURE is as it should be.
Check pneumatic connections for leaks.

B. Desorption from the trap is not rapid enough. Check the desorption temperature, flows and if there is any Peltier icing.

C. Partial blockage of the column has occurred. Check the column flow rate and compare to the flow found upon installation.

D. GC temperature ramp has been changed. Check the monitor display and verify that the proper **GC METHOD** is in use. Compare settings to those given in Section 8.0.7.

E. System pressure settings may have been changed. Check to verify they are set properly.

F. The PLOT column is very susceptible to retention time shifts if exposed to water. If the retention times vary greatly, often run to run, check that the Nafion counter-flow toggle valve is open.

G. Replace the appropriate column.

8.0.4.5.6 Broadened or diminished peaks

A. Trap efficiency may be poor. Replace the cold trap.

B. DESORB functions may be poor. Check the DESORB flows, and temperatures.

C. Ice may have formed on the Peltier cooler. See Section 8.0.4.4.9.

8.0.4.5.7 Components on the DB-1 column eluting after ethylbenzene greatly attenuated

A. Calibration cylinder or sample line is not humidified. Check and refill the humidification tee with deionized water. Also, the calibration canister may not be humidified.

8.0.4.5.8 Some problems may be traced to loose or improperly joined electrical connections, or leaking gas lines and fittings. To aid in tracing those types of problems refer to:

Figure 804.5 = Perkin-Elmer Gas Delivery Systems
Figure 804.6A-D = Perkin-Elmer Signal and Control Cables

8.0.4.5.9 Baseline of chromatograms is wavy or has a cyclic drift.

Pressure regulation is inadequate, probably from the helium source. Check the helium regulator for proper operation. Installation of a more sensitive regulator into the delivery line may be required. Poor air pressure regulation may also cause baseline disruptions.

8.0.4.5.10 Instantaneous spikes are seen in the chromatogram.

A. Electronic spikes are being recorded. Check for loose wiring, and steady AC source.

B. Dirty FIDs can also cause spikes. Disassemble and clean FIDs.

C. On the OPS systems, the FIDs are exposed. Air currents caused by opening of doors or operators passing by the system can cause spikes. PE has a replacement cover that shields the FIDs and prevents the problem.

8.0.4.5.11 Runs are being overwritten or starting at the incorrect run number.

When stopping a sequence, and restarting, be certain to use the **TOTALCHROM**, **MODIFY**, **ACTIVE SEQUENCE** function as opposed to entering the **SEQUENCE** function. Go to **SETUP**, to restart with the correct run number.

8.0.4.5.12 Ambient or calibration runs appear as blanks.

Trap may have frozen due to excess water. Check the mass flow controller display during sample collection. If it is near zero, the trap is frozen. It may be cleared by heating and desorbing the trap. Check that the air purge toggle to the Nafion is open. The situation will clear itself after several runs once the source of excess moisture is removed.

8.0.4.5.13 Chromatogram time of collection is incorrect, but ATD is starting at the correct time.

It is possible for the chromatograph record time to not match the actual time. This occurs because the interface, not the computer establishes the time stamp. It is necessary to run **SETUP** from the main **TOTALCHROM** window to reset the interface time and date.

8.0.4.5.14 Chromatogram start times vary.

Usually chromatograms are found to start later then they should. The most probable cause is icing of the Peltier cooler causing a longer DESORB time. Remove the ATD

cover and locate the oven (behind the carousel). Disconnect one of the wires leading to it and remove the oven cover. Clear any ice and dry as discussed in 8.0.4.4.9.

Corrective Action Table			
Item	**Frequency**	**Criteria**	**Corrective Action**
Settings	Weekly	GC, ATD Setting: 15 cc/min, supplies, times	Correct the instrument setting
Cylinder pressure	Weekly	< 300 psi	Replace
Standard pressure	Weekly	Cal std < 5 psi	Replace canister and record
Leak Check (system, GC, ATD)	Monthly	> 3 psi drop	Correct leak and record
Sampler MFC	Monthly	Within 1 cc/min	Adjust and record
Column Replacement	Annually	≤ ppbc and TNMOC < 10 ppbc per column	Replace column or correct background problem
Split vent and desorb flows	Annually	Within 10 % of the set value	Adjust and record
Delivery Lines	Annually	≤ ppbc and TNMOC < 10 ppbc per column	Correct background problem
Nafion Dryer	Annually	≤ ppbc and TNMOC < 10 ppbc per column	Replace dryer and record

Site _____ Date _____ Reviewer _____

Operational Gases

- Helium and regulator on site? Yes ____ No ____
- Spare helium on site? Yes ____ No ____
- Hydrogen and regulator on site? Yes ____ No ____
- Spare hydrogen on site? Yes ____ No ____
- Gast pump OK? Yes ____ No ____
- Balston on site, filters OK? Yes ____ No ____
- Autocal cylinder on site? Yes ____ No ____
- Safety glasses and leather gloves on site? Yes ____ No ____
- Gas storage area properly vented? Yes ____ No ____
- MSD sheets on site? Yes ____ No ____

Site Issues

- Manifold cleaned pre-season? Yes ____ No ____
- Manifold fan working properly? Yes ____ No ____
- Unused manifold ports capped off? Yes ____ No ____
- Required hand tools present (12"& 6" adjustable, common & Phillips screwdriver, " & 9/16" wrench)? Yes ____ No ____
- SOP and instrument manuals on site? Yes ____ No ____
- Site log and floppy disks on site? Yes ____ No ____
- PAMS phone list on site? Yes ____ No ____
- Paper towels and clean tap water on site? Yes ____ No ____

Gas Chromatographic Systems

- Spare used A & B columns on site? Yes ____ No ____
- Fresh DI water for humidifier tee on site? Yes ____ No ____
- MFC calibrated pre-season? Yes ____ No ____
- Sample probe and line cleaned/replaced? Yes ____ No ____
- Nafion drier replaced? Yes ____ No ____
- Master calibration chromatogram on site? Yes ____ No ____
- Auto-cal cylinder connected to span line? Yes ____ No ____
- Gas line scrubbers OK/replaced? Yes ____ No ____
- PC loaded with proper Sequence and file structure? Yes ____ No ____
- GC Method 1 loaded and correct? Yes ____ No ____
- ATD Method 1 loaded and correct? Yes ____ No ____
- Spare cold trap and sample tube on site? Yes ____ No ____

Comments:

FIGURE 804.1

PRE-SEASON CHECK LIST

PAMS Site Postseason Check List

Site _____ Date _____ Reviewer _____

Operational Gases

- Helium and regulator on site? (note pressure) Yes _____ No ____
- Spare helium on site? Yes _____ No ____
- Hydrogen and regulator on site? (note pressure) Yes _____ No ____
- Spare hydrogen on site? Yes _____ No ____
- Hydrogen cylinder shut off at cylinder and regulator? Yes _____ No ____
- Any empty cylinders requiring removal? Yes _____ No ____
- Gast pump require a rebuild before next season? Yes _____ No ____
- Balston on site, filters replaced? Yes _____ No ____
- Autocal cylinder(s) returned to lab? Yes _____ No ____
- Safety glasses and leather gloves on site? Yes _____ No ____
- Gas storage area properly vented? Yes _____ No ____
- MSD sheets on site? Yes _____ No _____

Site Issues

- Manifold fan working properly, left unplugged? Yes _____ No ____
- Unused manifold ports capped off? Yes _____ No ____
- Required hand tools present (12"& 6" adjustable, common & Phillips screwdriver, " & 9/16" wrench)? Yes _____ No ____
- SOP and instrument manuals on site? Yes _____ No ____
- Site log and floppy disks on site? Yes _____ No ____
- PAMS phone list on site? Yes _____ No ____
- Paper towels and clean tap water on site? Yes _____ No ____

Gas Chromatographic Systems

- DI water for humidifier tee removed for cleaning/refill? Yes _____ No ____
- MFC calibrated post-season? Yes _____ No ____
- Does Nafion drier need replacement? Yes _____ No ____
- Sample line heater off? Yes _____ No ____
- GC Method 1 loaded and correct? Yes _____ No ____
- ATD Method 1 loaded and correct? Yes _____ No ____
- Sample line tee removed for cleaning? Yes _____ No ____
- Sample line and autocal line plugged off? Yes _____ No ____
- Cal cylinders removed and SN's recorded? Yes _____ No ____

Comments

FIGURE 804.2

POSTSEASON SITE CHECKLIST

CYLINDER MFG ID _____ DEP PROPERTY ID _____

OTHER ID _____ RECIEVED BY DEP _____

Cleaned by _____ on ___/___/____ to a vacuum of _____ units _____.
Filled from source cyl. ID_____ by _____ on ___/___/____ to
_____ units _____ pressure.
Type of gas (RT, RF, Zero, etc.) _____. In use on ___/___/___ at site _____.
Comments:

Cleaned by _____ on ___/___/____ to a vacuum of _____ units _____.
Filled from source cyl. ID_____ by _____ on ___/___/____ to
_____ units _____ pressure.
Type of gas (RT, RF, Zero, etc.) _____. In use on ___/___/___ at site _____.
Comments:

Cleaned by _____ on ___/___/____ to a vacuum of _____ units _____.
Filled from source cyl. ID_____ by _____ on ___/___/____ to
_____ units _____ pressure.
Type of gas (RT, RF, Zero, etc.) _____. In use on ___/___/___ at site _____.
Comments:

Cleaned by _____ on ___/___/____ to a vacuum of _____ units _____.
Filled from source cyl. ID_____ by _____ on ___/___/____ to
_____ units _____ pressure.
Type of gas (RT, RF, Zero, etc.) _____. In use on ___/___/___ at site _____.
Comments:

FIGURE 804.3

CALIBRATION CYLINDER TRACKING SHEET

PAMS OPERATIONAL GAS STATUS

SITE _____ INSTRUMENT _____ YEAR _____

Date	He	H2	Air Pump	MFC

Date	He	H2	Air Pump	MFC

FIGURE 804.4

OPERATIONAL GAS STATUS

Helium Cylinder _____ Indicating
60 PSI Scrubber
(Optional Flow |
Restrictor at Regulator) Oxygen Scrubber
|
Oxygen Scrubber
|
Dririte and Molecular
Sieve Scrubber
|
| _ GC Carrier Port
|_ ATD Carrier Port

****

Hydrogen Cylinder _____ GC H_2 Port
60 PSI (Optional Flow
Restrictor At Regulator)

****

Air Cylinder _____ _____ GC Air Port
60 PSI (Optional
Flow Restrictor
At Regulator) 4 WAY
UNION

Balston Zero ATD Air Port
Air Supply _____ _____ Peltier Cooler

****

Sample Pump _____ ATD Pump Port

****

Station Manifold _____ ATD Sample Port

FIGURE 804.5

PE GAS DELIVERY SYSTEM

GC Terminal Block #1

			970 Interface
#4	|	green	Floating
#5	Lo	black	CH A-
#7	10v	red	CH A+

****

GC Terminal Block #2

			970 Interface
#4	|	green	Floating
#5	Lo	black	CH B-
#7	10v	red	CH B+

****

GC Terminal Block #3			970 Interface
#5		black	Com
#6		red	Start In
#7		black	#16 Ready
#8		red	#15 Ready
#2	C	black	ATD Input/Output
#3	NO	purple	ATD Input/Output
#9	Lo	grn/yel	ATD Input/Output

FIGURE 804.6A

SIGNAL AND CONTROL CABLES

SIGNAL AND CONTROL CABLES

GC Terminal Block #3				970 Interface
#10	Hi	green	----------	ATD Input/Output

****

GC Terminal Block #4				ATD
#7		red	----------	Input/Output
#8		blue	----------	Input/Output
#9		green	----------	Input/Output
#10		yellow	----------	Input/Output

****

970 Interface Rack/Vial	----------	ATD Input/Output

FIGURE 804.6B

SIGNAL AND CONTROL CABLES

INTERFACE			ATD-400
Relay 6 high	Blue	----------	Sample/Calibration Controller
Relay 6 low	Red	----------	Sample/Calibration Controller
Relay 7 high	Yellow	----------	Sample/Calibration Controller
Relay 7 low	Green	----------	Sample/Calibration Controller

INTERFACE			OPS GC
Chan A+	Red	----------	Amp A # 14
Chan A-	Black	----------	Amp A # 13
Chan B+	Red	----------	Amp B # 16
Chan B-	Black	----------	Amp B # 15
Ground Nut	Green	----------	Cover Ground Nut (With Shields From Channels A & B)

FIGURE 804.6C

SIGNAL AND CONTROL CABLES

```
INTERFACE                                                    OPS GC

Remote
Start In  ------------------------------------------------------------  Red       Terminal # 8

  Com     ------------------------------------------------------------  Black     Terminal # 7

TERMINUS                                                     OPS GC

GC Ignitor  ------------------------------------------------------------  Black     Terminal # 1

ATD Cabl    ----------------------------------------------  Yellow/Green  Terminal # 3

                                  --------------------  Green     Terminal # 4
                                  |
                                  |--------------  Green/Brown  Terminal # 10
                                  |
                                  |-------------------  White     Terminal # 11

                                                  --------  Terminal # 5
                                                  |
                                                  --------  Terminal # 6
```

FIGURE 804.6D

SIGNAL AND CONTROL CABLES

8.0.5.0 QUALITY CONTROL:

External standards and internal audits are important parts of Quality Assurance functions. Ideally, they provide a measure of the accuracy and precision of monitored data.

8.0.5.1 National Performance Audit Program

Known as NPAP, this audit protocol is no longer offered by EPA for the PAMS program. Should the program be re-instituted, CTDEP would participate.

A. A Performance Evaluation Audit is a quantitative evaluation of the measurement system and includes all associated data collection and analysis procedures. A Performance Evaluation Audit involves the analysis of a reference material of known value.

B. For the automated VOC sampling systems, the audit sample consists of a 1.5 liter compressed gas cylinder containing 10 -50 of the target VOC compounds at varying concentrations, a precision regulator and detailed instructions for conducting the audit.

C. Performance Evaluation Audits are conducted on the automated system as offered during the 6-month operational period.

D. The audit sample is introduced to the sample concentrator through the sample port of the ATD 400 sample concentrator.

E. Two - three consecutive analytical runs are made. This process will take into account any system variability that may occur and will provide greater objectivity when evaluating the accumulated data sets.

F. Upon completion of this test sequence, verify that the Channel A and B chromatograms are acceptable (peak symmetry separation, resolution and area counts). Perform peak identification and quantification for each channel against the current channel master calibration.

G. Carefully review each analysis report. Fill out the supplied audit result sheet and send to EPA. EPA will then compare the reported results to the expected results and issue a report.

H. Acceptance Criteria

If the results are outside the acceptance limits as defined by NPAP, report the cause and corrective action to the reporting agency.

8.0.5.2 EPA Round Robin Sample / PAMS Check Can Audit

A. The US EPA Region lab, Chelmsford, MA, supplies this sample. It is an actual ambient air sample taken at a location within the Boston Metropolitan area that represents an air mass that is primarily impacted by vehicular emissions.

B. This single sample is initially analyzed by the EPA Region 1 lab and then is sent to each of the PAMS sites within Region 1. After all agencies have analyzed the sample and submitted their test results to EPA, a composite test report is generated and sent back to the respective states for evaluation.

C. Sample introduction is to be through the sample port.

D. One to three sample runs are to be made.

E. Upon completion of this test sequence, verify that the Channel A and B chromatograms are acceptable (peak symmetry, separation, resolution and area counts). Perform peak identification and quantification for each channel using the current channel master calibration, Figure 803.10A&B.

F. Send completed data report to EPA Region 1 or to designated data coordinator for this project.

8.0.5.3 Quality Assurance / NIST Standard

When available, the CTDEP will use independently quantified standards to verify system response. One type of standard is a NIST traceable mix of VOC delivered

in a SUMMA type canister. A second type of standard is a Quality Assurance (QA mix), which has in the past been made available to States from the EPA Region I lab. Should NIST or QA standards be made available in the future, CTDEP will utilize the resource.

A. Once per month the NIST standard is analyzed for a secondary external standard. This is to check the stock and working standards.

B. Sample introduction is to be through the sample port.

C. Upon completion of this test sequence, verify that the Channel A and B chromatograms are acceptable (peak symmetry, separation, resolution and area counts). Perform peak identification and quantification for each channel using the current channel master calibration Figure 803.10A&B.

D. Acceptance Criteria
   - Propane and benzene are to be within 10% of the NIST value. QA component tolerances are to be within the specified ranges based on actual concentration of the individual components:
     - Corrective Action; concentration =/> 5.0ppbc must be +/-30%
     - Warning Level #1; concentration >3/< 5.0ppbc must be +/-50%
     - Warning Level #2; concentration >1/< 3.0ppbc must be +/-75%

E. Typically other components contained in the QC cylinder are listed as being within +/- 20% of the indicated value. Each component is reviewed to verify identification (retention time), and response accuracy within the specified accuracy tolerance.

8.0.5.4 Method Detection Limit

A. This multi-component standard at a concentration of 0.3 - 1 ppbc is made by diluting the PAMS calibration standard gas with zero air or nitrogen in a SUMMA type canister. The evaluation is done in May prior to the commencement of the official monitoring season (June - August) to ensure that the PAMS analytical system is performing satisfactorily and will meet the monitoring criteria.

B. The procedure chosen to define the MDL is that given in the Technical

C. The MDL is defined for each system by making seven replicate measurements of the compounds of interest at a concentration near the expected detection limit, computing the standard deviation for the seven replicate concentrations and multiplying this value by three.

D. Perform this test during the month of May after the analytical system has received its annual preventative maintenance and has been satisfactorily calibrated.

E. Introduce the standard through the calibration port of the ATD 400. Collect 7 to 10 replicate runs of the MDL standard.

F. Upon completion of this test sequence, verify that the Channel A and B chromatograms are acceptable (peak symmetry, separation, resolution and area counts). Perform peak identification and quantification for each channel using the current channel master calibration, Figure 803.10A&B.

G. Carefully review each analysis data set to make sure it is complete. Export the 7 to 10 analytical runs for each channel into an EXCEL spreadsheet that has been formatted to calculate the MDL for each compound. Review the data and edit as is necessary. The acceptable value for each compound should be less than 0.5 ppbc.

Corrective Action Table			
Item	**Frequency**	**Criteria**	**Corrective Action**
NPAP	As available	< 30 %D performance limits	Investigate cause, corrective action and send report
EPA Round Robin	2 – 3 per year	< 30 % of EPA value greater than 5 ppbc	Examine the chromatogram, repeat
NIST	Monthly	< 10 %D for propane and benzene	Repeat, investigate the working std
EPA QC	Monthly	Within EPA windows	Examine the chromatogram, repeat
MDL	Annual	< 0.5 ppbc	Check area reject, examine chromatogram, troubleshoot GC

8.0.6.0 DATA HANDLING

8.0.6.1 Data Review

Initial data review and validation will be performed following the procedures found in Section 8.0.3, VOC Analysis, Sections 8.0.3.8 and 8.0.3.9. From this review identify ambient samples that are found to be valid, note ambient samples that require further review, identify all calibration and audit chromatograms. Once all data are properly QA'd, and invalid data have been identified, data are prepared for submission to AQS.

8.0.6.2 Create a Data Set

Data are typically handled in calendar month units and collected under a single SEQUENCE.seq. After the data review and validation steps are completed as described in 8.0.3, a SEQUENCE.seq is created in **TOTALCHROM**. The SEQUENCE.seq utilizes the **METHOD.mth(s)** created to incorporate the proper response factor, retention times, noise and area threshold parameters identified in the **GRAPHIC EDIT** review of Section 8.0.3. A **REPORT FORMAT** is utilized that will allow seamless submission of data to AQS. Any chromatograms found to be invalid are removed from the **SEQUENCE.seq** before reprocessing under **BATCH**.

CTDEP had previously been using an average response factor (RF) calculated by averaging the RF using the last calibration run from the previous time period (typically the previous month), all calibration runs in the current time period and the first from the following time period. Effective with the 2007 sampling season, CTDEP will use the RF found at the biweekly calibration (by averaging the two consecutive calibration runs typically performed) until later calibrations indicate a RF shift greater than +/-10% has occurred. Should a RF shift greater than +/-10% from the initial calibration be found, the new RF will be used in the **Method.mth** used to process data.

The form found in Figure 1, PAMS Response Factor Calculation Worksheet, is used to track such information as the calibration cylinder used, the actual certified concentration of propane or benzene and the calibration chromatographic run ID. The **PEAK AREA** is recorded from which the RF is calculated using the equation found in Section 8.0.3.6.1.

If maintenance, repair or instrument upset causes the individual RF(s) to vary by more than +/-10% during the period, a different RF would be used for the data from that period best representing the instrument conditions before and following the instrument change. This is accomplished by identifying the time of the RF change (maintenance, repair or instrument upset, etc) and using a RF calculated by the method explained above starting with the first calibration of the preceeding period and ending with the event causing the RF change. The RF after the change would then be calculated as the RF found after the change based on the first calibration from the

following time period. In this event, a single month would have more than one RF, easily incorporated by the use of separate **Method.mth(s)** in the **SEQUENCE**.

The RF(s) is incorporated into any and all **METHOD.mth(s)** used in reprocessing data for the time period.

A. From the **TOTALCHROM** main window, select **BATCH**. Using the drop down window options, select **FILE**, **SEQUENCE**. A window appears offering several options:
   - **SEQUENCE FILE** = browse for the **SEQUENCE.seq** desired
   - **ACTUAL DATA PATH** = browse for the directory containing the chromatographs of interest
   - **STARTING ROW** = enter the first row number desired to start creating data files
   - **ENDING ROW** = enter the last row number desired to be processed. In practice it is best to process data in smaller (<200 rows) than larger batches. This can help in preventing the temporary memory from overloading the **BATCH** print queue.
   - **DUAL CHANNEL** = select **CHANNEL A**, and/or **CHANNEL B** as desired
   - **START ANALYSIS** = select **PEAK DETECTION**
   - **END ANALYSIS** = select **REPORT GENERATION**
   - **BATCH EXECUTION** = select **INTERACTIVE**
   - **BATCH PRINTER** = select a **NULL** print port
   - **BATCH PLOTTER** = select a **NULL** print port
   - **UPDATE EXISTING RAW FILE HEADER WITH NEW SEQUENCE** = select on
   - Click on **OK**.

   Note: if a null printer is not selected as a default printer, **TOTALCHROM** will print a hardcopy of each chromatogram as the **BATCH PROCESS** proceeds.

B. A **BATCH REPROCESS** window opens listing the selected chromatograms.

C. From the **REPROCESS** drop down menu, select **START**. The chromatographic runs will start processing, creating text and result files in the form:

   (site)(month)(year)(channel)(sequential number).TX0 and RST

   for example, the first run from the PLOT column at New Haven, June, 2006 would be N0606A001.TX0 for the text file and N0606A001.RST for the result file.

D. When the runs have been processed, the **BATCH REPROCESS** window remains open, but without any runs listed.

E. Click on Windows **START**, **SETTINGS**, **PRINTERS**, and select the **NULL** printer, which

has received the print command from the reprocess queue. From the **FILE** drop down menu, clear the print queue as a hardcopy is unwanted.

F. Return to the **BATCH REPROCESS** window and prepare the next batch of chromatograms for reprocessing as described above.

G. When all chromatograms have been reprocessed, close the **REPROCESS** window.

8.0.6.3 Data Review Using VOCdat

VOCdat review is done periodically throughout the season and at the end as a final review before data is submitted into AQS. See Section 8.0.6.4 for detailed instructions in preparing data files for submission to AQS. This step requires referral to site documentation forms such as the VOC Data Validation Sheet, Figure 803.1, PAMS AQS Summary Sheet, Figure 803.2A&B and Notepad Electronic Text File, Figure 803.3. The review aids in confirming that appropriate **METHOD.mth(s)** were used in processing the data. Refer to the table of chromatogram run numbers identifying the appropriate **METHOD.mth** generated in Section 8.0.3.8.

A. Generate a VOCdat file from the TX0 files created from the batch reprocess.

1. Create a **SEQUENCE** using the **METHOD.mth** created by following the procedures outlined in Sections 8.0.3.6 and 8.0.3.7. Use the **SEQUENCE** to **BATCH** integrate the desired **METHOD.raw** files (chromatographic runs) using the instructions in Section 8.0.6.2.

2. Open VOCdat. Click on **FILE**, **IMPORT DATA**, and from the window that opens select TX0. From the **SELECT DATA FILES** window, browse to the directory containing TX0 files of interest. All TX0 files in that directory will appear highlighted. If only a subset of the TX0 files are desired they may be selected using the **CONTROL** and **SHIFT** keys. Click on **OK**.

3. A **VOC FILE HEADER** window will appear. Fill in **SITE NAME** using the site and town. Fill in **SITE CODE** using the format (site)(month,month)(year,year). Fill in the nine digit **AQS CODE** boxes. Select **OK**, and a **SAVE AS** window appears. Browse for the appropriate directory and give the file a name in the format: (site)(month,month)(year,year)wrk.voc. For example the VOCdat file for New Haven, June 2006 would be:

   N0606wrk.voc

   The ***wrk.*** stands for working file. This will be used for QA review and provides the

base file used in creating specific files for submission to AQS.

B. From the VOCdat window, bring up a **TIME SERIES GRAPH** of a component that is usually low in ambient data such as c-2-butene, so that calibrations will be quite evident. In practice, other components may provide as good a view, it does not matter which component is actually used so long as calibration data is readily apparent. From the **EDIT** drop down window select **ENABLE EDITING** and **EDIT QC DEFINITIONS** and select the desired fields. From the **GRAPH** drop down menu, select **SHOW ALL QC's**, **SHOW LINES**, **SHOW POINTS**, and **POINT COLOR=QC**.

C. Compare the VOCDat file to the site notes and verify periods of calibration, audits, or other QA activities. To flag these hours of data, click on the graph at the hour value to highlight it, then click on the buttons at the top right of the screen that provide QA flags. The relevant buttons are: R= selects all components in run for the QA flag, not just the selected component. If only the individual component is to be flagged, do not click on R, but use only the buttons below.

0= Flags the data as valid. This is used only when reassigning valid status to a data point previously receiving another QA flag.
1= Calibration
2= QC audit
3= Voided by Operator- used to invalidate data not falling into a more specific category
4= power failure
5= maintenance
6= machine malfunction

Using the **EDIT**, **EDIT QC DEFINITIONS** commands flagged data may be included or excluded from the graph for review purposes, but remain a part of the file.

D. Bring up a **TIME SERIES GRAPH** and select **TNMOC**, **PAMS TARGET**, and **UNIDENTIFIED**. Mark each hour with the appropriate code for calibration, audit, operator void, etc if not previously identified. View the graph and look for indications of suspect data. Indicators are such items as unusually high (or low) values, periods of time where all three values are not present (may indicate an invalid A or B run of a pair), unidentified are unusually high, or PAMS target is greater than TNMOC. Ensure that PAMS target and unidentified equal the TNMOC. Note any discrepancies for further investigation.

1. Verify that values are present for all hours previously identified as valid. Note any discrepancies or QA out any invalid data that may have been reprocessed.

2. View calibration data only by selecting the **EDIT**, **EDIT QC DEFINITION** mode and

checking only **CALIBRATION**. Bring up each component from the species list 3 or 4 at a time. Compare relative values between runs. Misidentifications often show up quickly during this examination, as will shifts in response factor. Also verify that high calibrations are properly quantified by the comparing values to the certified values provided by the EPA for the calibration standard used.

3. View valid ambient data. Using the species list, view all species 3 or 4 at a time. Look for unusually high, or low values, ensure that calibration/audit/invalid data is properly QA'd out, and that data looks reasonable. Note any potential problems and their time period for chromatographic review.

4. Any hours found to be suspect from the VOCDat checks may be reviewed in **GRAPHIC EDIT**. Some possible sources of error may be:

   - Incorrect **METHOD.mth** used in sequence **INST METHOD**, **PROC METHOD**, or **CALIB METHOD** column
   - **METHOD.mth** used incorrect RF
   - **METHOD.mth** provided incorrect identifications
   - Chromatogram invalid, but not previously identified as such
   - **REPORT** format not setup correctly before running **BATCH**. See Section 807.7 for correct REPORT format.

5. Based on VOCDat review, verify/rectify apparent problem(s) in **GRAPHIC EDIT** and correct/update **METHOD.mth** or **REPORT** format as required. Reprocess chromatographic runs **METHOD.raw** as required in **BATCH**. A new VOCDAT.wrk file incorporating the newly reprocessed data will need to be created and QA'd as above.

8.0.6.4 VOCDat Submission to AQS

Generate a **SEQUENCE.seq** according to instructions in 8.0.7A.4.10. Delete each sequence row containing invalid data hours. Retain hours containing such QA activities as calibrations and audits. Run a BATCH reprocess with the SEQUENCE.seq to generate a set of TX0, or report files.

A. Generate a VOCdat file from the TX0 files created from the batch reprocess as described in Section 806.3. The file will be named of the form (site)(month)(year)WRK.VOC.

B. From the **FILE** drop down menu, select **EXPORT DATA**, **AQS**. The AQS INFORMATION window will open.

   1. Ensure the **AQS CODE** is correct. Amend as needed.

2. Set the **POC CODE** to: "**1**" for Westport and New Haven sites, or "**5**" for East Hartford.
3. Set the **METHOD CODE** to **128**.
4. Check **ON** the **FILL TIME GAPS** box.
5. Under the **SPECIES TO OUTPUT** box, uncheck the **PAMSHC** and **TNMOC** boxes in the components list. Scroll down the list of components and ensure that any component that has a value associated with it in the **MINIMUM** or **MAXIMUM** columns has a check mark. Uncheck any box that does not have a value associated with it.
6. **NULL DATA CODE (NEW AQS)** should be **AN**
7. **SAMPLE DURATION** is: **1 – 1 hour**.
8. **SAMPLING FREQUENCY** should be: **A – DAILY: 24 1-HOUR SAMPLES (PAMS).**
9. Select **OK**. The VODCat window reappears, and the file will be updated as verified by the progression of blocks at the top of the screen indicating progress.

C. Open WINDOWS EXPLORER, and go to the directory where VOCDat files are stored. Two files will have been created under Step B, one with an extension *WRK.LGT with a file size of 0KB. The other will have the extension *WRK.R2 and typically be about 2,900KB in size. The *.LGT file is saved as is. Rename the *.R2 file in the form of (site)(month)(year)AIR.AIR. For example the VOCDat file for June 2005, from the New Haven site would be:

N0605AIR.AIR

D. Reopen the *WRK.VOCDat file referenced in Step A above. From the **FILE** drop down menu, select **EXPORT DATA**, **AQS**. The **AQS INFORMATION** window will open.

1. Ensure the **AQS CODE** is correct. Amend as needed.
2. Set the **POC CODE** to: "**1**" for Westport and New Haven sites, or "**5**" for East Hartford.
3. Set the **METHOD CODE** to **200**.
4. Check **ON** the **FILL TIME GAPS** box.
5. Under the **SPECIES TO OUTPUT** box, click on the **CLEAR** box which will uncheck all components listed. Click **ON** only the **PAMSHC** and **TNMOC** boxes in the components list. Scroll down the list of components and ensure that every other box is unchecked.
6. **NULL DATA CODE (NEW AQS)** should be **AN**
7. **SAMPLE DURATION** is: **1 – 1 hour**.
8. **SAMPLING FREQUENCY** should be: **A – DAILY: 24 1-HOUR SAMPLES (PAMS)**.
9. Select **OK**. The VODCat window reappears and the file will be updated as verified by the progression of blocks at the top of the screen indicating progress.

E. Open Windows Explorer, and go to the directory where VOCDat files are stored. Two files will have been created under Step D, one with an extension *WRK.LGT with a file size of 0KB. The other will have the extension *WRK.R2 and typically be about 100KB in size.

F. The *.LGT file is saved as is. Rename the *WRK.R2 file in the form of (site)(month)(year)TOT.AIR. For example the VOCDat file for June 2006, from the New Haven site would be:

N0606TOT.AIR

G. The *AIR.AIR, and *TOT.AIR files are now ready for submission to the national AQS data base.

Format used to Track and Calculate Propane Response Factor

Reference Peak	Actual PPBC	Run #	Peak Area	RF
Propane				
Cal Cyl ID				

Reference Peak	Actual PPBC	Run #	Peak Area	RF
Propane				
Cal Cyl ID				

Format used to Track and Calculate Benzene Response Factor

Reference Peak	Actual PPBC	Run #	Peak Area	RF
Benzene				
Cal Cyl ID				

Reference Peak	Actual PPBC	Run #	Peak Area	RF
Benzene				
Cal Cyl ID				

FIGURE 806.1

PAMS RESPONSE FACTOR CALCULATION WORKSHEET

8.0.7.0 Specific Operating Procedure for the Perkin-Elmer GC:

This document gives detailed instructions for the start-up, operation and trouble shooting of the Perkin-Elmer (PE) Auto System gas chromatograph with ATD400. Detailed instructions are given for using the PC-based TOTALCHROM software and data handling operations.

8.0.7.1 Initial Start up

The following is the proper order of events to initiate sampling by the Perkin-Elmer GC.

A. Power up the Balston Zero Air Supply (BZAS), and Gast compressor 12 hours before valid sampling is to start. Set the compressor outlet pressure to 80 - 90 psig. Do not operate the Balston Zero Air Supply scrubber unit without the compressor pump being on or the hydrocarbon thermal scrubber may be irreversibly damaged.

B. Prepare required operational gases and regulators. Install oxygen and moisture scrubbers in helium delivery lines.

C. Power up the GC, ATD400, sample pump, mass flow controller (flow set at 15cc/min), sample line heater, interface and data collection system including computer, and modem. Ensure humidification tee in sample line has fresh deionized (DI) water.

D. Verify/create a METHOD for the PE-ATD400 and AutoSystem GC.

E. Prepare TOTALCHROM to receive data using TOTALCHROM Navigator.

   1. Create required **METHOD.mth** files.

   2. Create a SEQUENCE.seq file.

   3. Start monitoring in SETUP.

8.0.7.2 Start up Procedure - ATD400

The ATD keypad only controls the ATD, and is used to set the timed functions and temperature levels required for collecting sample and injecting sample onto the GC columns.

A. Ensure the interface box is properly connected to the GC and computer and is powered up. The systems cannot come READY i.e. collect sample, until all components are connected and powered up. See Section 8.0.4, Maintenance and Troubleshooting, for complete wiring and gas line connection diagrams.

B. Ensure the BZAS is powered up and the system pressure as measured at the external gauge reads > 55 psig. If pressure is low the ATD400 display will display an UNABLE TO PROCEED error message.

C. Power up the ATD400 with the main switch located on the lower left side. The ATD400 will equilibrate and go to STANDBY mode.

D. The current METHOD will come up in the display. The correct METHOD is METHOD 1, or OZONE METHOD. The correct settings are shown in Figure 807.1 and Figure 807.2 for the Auto System GC.

E. The operator can switch between windows by pressing the **PAGE** key.

F. Sampling cannot be started until the ATD400 and GC have stabilized at operational temperatures, the interface unit is powered up and the GC monitor displays the message READY.

G. When these conditions are met, press the ATD **START** key 2 minutes past the top of the hour. It takes the ATD400 about 3 minutes to perform a leak check and start sampling. This allows the collection of an ambient sample from 5 past the hour to 45 minutes past the hour.

H. If the initial leak check fails, look in the ATD400 carousel to be certain the glass or stainless steel tube is in position and has not fallen out. If it is out, go to Section 8.0.4 - Maintenance, for replacement instructions. When attempting ATD restart, be aware of the sample cycle time. The ATD needs to commence sample collection 5 minues +10/-5 minutes past the hour Eastern Standard Time. It may be necessary to wait until the next hourly cycle to reattempt start-up. See Section 8.0.4 and the Troubleshooting guide of the ATD400 instruction manual.

I. Press ATD **PAGE** key until the window containing the line STD INJ appears. When the timer begins running on that line, ambient sampling has started. Verify that start time is acceptable, 5 minutes +10/-5 minutes past the hour Eastern Standard Time.

8.0.7.3 Start-up of the Auto System GC

Reference: Auto System Instrument Manual

Note: Sampling cannot commence until the ATD-400 is READY, and the interface is powered up in the SAMPLE mode. The PC must be on with TOTALCHROM up. Be certain that the helium carrier gas is flowing to the columns before attempting to operate the GC.

A. Turn on the GC power switch located on the lower left side of the GC. The display will become active after a few moments. Method 1 should be displayed on the keypad screen.

Note: see Section 8.0.7 to program the GC.

B. Allow the GC to stabilize to the starting operational temperatures (oven, cold trap, valve, and transfer line). The system will not "come ready" until these temperatures have reached their set points.

C. Turn on operational gases (hydrogen, and helium) and set second stage regulator pressure to 60 psig. Press the **CARRIER** key on the GC and verify that the pressure is as set at initial startup, typically about 18. Adjust if needed using the large knob marked MIDPOINT at the top rear of the GC.

D. Ignite the FIDs

Open the GC top covers- one protects the FIDs, one houses the igniter. Turn off the air needle valve located at the top rear of the GC (the valve for the front FID is on the left, for the rear FID, on the right). Place the igniter on the appropriate FID. When it glows, slowly turn on the air, an audible pop should be heard at ignition. Repeat for the second FID.

Note: Do not over tighten the valves because they are easily deformed.

Place a cool metal object against the FID ports and a small amount of condensation should form indicating a flame. If not, repeat the ignition process. Replace the igniter and close the covers.

F. Verify that the GC mass flow controller (MFC) is set at 15cc/m, and that the Balston scrubber light is illuminated (the Balston needs about 12 hours warm up to be fully effective).

G. The GC is capable of running when the display reads READY indicating that all temperatures are at target values and stable. Press **START** on the ATD400 keypad at 2 minutes past the hour to start sampling.

Note: The complete sampling system is displayed in Figure 807.3. See Section 8.0.4 for wiring and gas line connection diagrams.

8.0.7.4 Programming the Auto System Analyzer Keypad

8.0.7.4.1 Blue keys

The VOC GC key board has four blue colored keys on the left-hand side. These provide an overview of the GC programming. Pressing the SET key moves to the next selection, the ENTER key moves to the next screen. The arrow keys allow moving within a screen.

A. METHOD

This key allows the operator to create and edit instrument methods, temperatures, times, etc. Up to four methods may be retained at one time. Proper values are:
Temp 1 = 45°; time 1 = 15 min; rate 1 = 5°/min; temp 2 = 170°; time 2 = 0min; rate 2 = 15°/min; temp 3 = 190/^{o}; time 3= 7 min; rate 3= end; pres 2 set = XX.X PSI; valve 2 initial = off; FID 1 = 250°; FID 2 = 250°; FID 1 range initial = 1; FID 2 range initial = 1; Int 1 output initial = FID 1; Int 2 output initial = FID 2; Int 1 atten initial = 1; Int 2 atten initial = 1; FID 1 A/Z initial = on; FID 2 A/Z initial = on; time event value = 0.10; valve 2 = off; time event value = XXX (Dean switch time); valve 2 = on. Press STATUS/ESCAPE to return to the main screen. Either Save or Abandon must be selected, then press ENTER.

B. SYSTEM

This key has two main functions; to provide access to a stopwatch used in measuring flows, and to provide a listing of GC settings. To access the stopwatch press the key twice, then enter in the desired volume to be measured. It is necessary to press the CE key between each flow measurement to clear the watch. If ENTER is pressed after the SYSTEM key, the following list is accessed. Press ENTER between each screen to move to the next.

Oven Maximum Temp = 200; Calibrate = No; Equil time = 0.1m; Sleep time= off; Heating delay set= Off; Time of Day Set Clock= No; Startup Time, Set a Time= No; Flame Out= Off; Coolant = none; Injector 1 = none; Injector 2 = none; Gas display 1 = none; Gas display 2 = psig; Valve 1 = none; Valve 2 = valv; Valve 3-6 = none; Detector 1

= FID; FID 1 filter = 200; Detector 2 = FID; FID 2 filter = 200; Aux = none; Output 1 = integrator; Output 2 = integrator; Int 1 = 5.0mv; Int 2 = 5.0mv.

C. AUTO

This key is not configured under this application.

D. BACKGROUND

This key allows for background compensation. It is utilized during initial instrument setup. It should be off under normal use.

8.0.7.4.2. Grey and / or White keys

Grey and / or White keys allow viewing and editing of GC parameters. There is considerable redundancy between the keys. In some instances pressing the key repeatedly yields one set of information, while pressing ENTER after scrolls through other screens.

A. Oven Prog

Temp 1 = 45; time 1= 15 min; rate 1= 5.0^{o}/m; temp 2 = 170°; time 2 = 0.0 m; rate 2 = 15.0^{o}/m; temp 3 = 190°; time 3 = 7.00m; rate 3= end.

B. Time

Pressing TIME three times scrolls through the temperature ramp given above. Pressing ENTER scrolls through the temperatures and times given above.

C. Rate

As 2 above.

D. Inj Prog

Not Configured.

E. Carrier Prog

XX.X PSI; Valve 2 = off; Initial = off; FID 1 temp = 250; FID 2 temp = 250; FID 1 range = 1; FID 2 range = 1; Int 1 output = FID 1; Int 2 output = FID 2; Int 1 Atten = 1; Int 2 Atten = 1; FID 1 A/Z = XX.Xmv; FID 2 A/Z = XX.X mv; Timed event value =

0.10 valve 2 on; timed event = XXX valve 2 on (XXX = Dean Switch set time). Note: XX.X is determined at the time of system start up.

F. Valve

Yields same information as CARRIER GAS.

G. Detector Control

Yields detector temperatures and ranges listed in previous Steps.

H. Range

Yields FID ranges and attenuations found in previous Steps.

I. Output

Yields information listed in previous Steps.

J. Atten

Yields detector information listed in previous Steps.

K. AutoZero

Yields information listed in previous Steps.

L. Events

Yields valve settings and temperature programs found in previous Steps.

8.0.7.5 TOTALCHROM

TOTALCHROM (TCNAV) software runs under the Windows environment. Operators should familiarize themselves with Windows before attempting to operate TOTOLCHROM.

In working with a METHOD.mth, SEQUENCE.seq, or certain other files a red lettered flag, MODIFIED, will appear in the lower right corner of the screen. Before the operator will be allowed to exit the program the operator will be presented with the option to SAVE, or SAVE AS and it is important to understand the difference between the two.

SAVE - Records a file, as altered, under the existing file name and overwriting the original. The original will not be retrievable.

SAVE AS - Records a file, as altered, under a new name defined by the operator. The original remains unchanged and is still available.

The TOTALCHROM **METHOD.mth** identifies the parameters to be used in collecting and manipulating data. The **METHOD.mth** is composed of the following sections, the first three of which are integral components of the **METHOD.mth**.

A. Instrument Parameters - the file defines the instrument in use, and the number of channels generating data.

B. Process Paramaters - the process file directs TOTALCHROM in handling the data analysis including peak detection, integration, and scale factors.

C. Calibration Parameters - the calibration file contains calibration data including retention times, component names, response factors, type of calibration and information on processing unknowns.

D. Report Parameters - the report file defines the appearance of the final report, specifies information to be included, and the format in which data appears.

Note: The report parameters are not an integral part of the **METHOD.mth**.

E. After creating these four Sections, the operator can then create a SEQUENCE.seq. The SEQUENCE.seq causes data to be handled in the specified manner and establishes the path data will follow for storage or manipulation.

F. The actual number of characters allowed in the name the SEQUENCE.raw file (the actual chromatogram) is not restricted to eight as in earlier versions of the software. In the SEQUENCE.raw file the first several characters are user selectable and designate the site, month, and year of data collection. The next letter designates the column, A for the PLOT and B for the BP-1. The final three characters (fixed and non-user selectable) will be the software designated three digit sequential run numbers (limited to 999 runs), followed by RAW, TOTALCHROM's indication of the chromatograph. By convention the format to be used in all file names is:

(SITE)(MONTH)(YEAR)(SEQUENTIAL RUN NUMBER).(EXTENSION)

Thus the third chromatographic run from New Haven, June, 2006 would be:

N0606A003.RAW

The **METHOD.mth** uses a similar naming convention, the PLOT being designated by PL, and the BP-1 by BP (instead of A or B as for the chromatograms). Thus the second METHOD.mth for the New Haven site in June, 2006, for the PLOT column would be:

N0606PL2.mth

Note: While a **METHOD.mth** can be generated as an original it is easier and quicker to call up an existing **METHOD.mth**, alter as required, then SAVE AS a new name preserving the original. Be certain the **METHOD.mth** is valid as any errors in it will then be entered into the new **METHOD.mth** created.

8.0.7.6 Method Summary

A separate **METHOD.mth** file must be created for each column type (PLOT and BP-1), each containing component identifications and retention times. Thus each SEQUENCE.seq will have a minimum of two **METHOD.mth**. The steps below summarize the process and the sections following provide the specific details.

Additionally, an autocalibration **METHOD.mth** may be created and inserted in the SEQUENCE.seq to automatically perform calibration through the GC calibration line. It is placed in the sequence for the row number before the run desired to be a calibration. To return to the ambient sample line an ambient **METHOD.mth** must then be placed in the sequence row where a return to ambient sampling is desired. The autocalibration and ambient specific **METHOD.mth** are placed into the A channel of the SEQUENCE.SEQ only, under the INSTRUMENT column.

A. Double click on the TCNAV icon from Program Manager TCNAV group. The TOTALCHROM Navigator window will appear.

B. Click on the **BUILD METHOD** icon from the Navigator screen. The METHOD EDITOR window will appear.

C. Click on **FILE** menu bar, then **OPEN** from the drop down menu. Select a file applicable to the GC column from the directories.

D. Select choices needed as applicable to the system. See the following sections for

specific details.

E. Click on the File menu bar, then select **SAVE AS** from the drop down menu. Give the instrument file a path and name then click on **OK**.

Example: The first Perkin-Elmer **METHOD.mth** file for the PLOT column during the June 2006 period at the New Haven site would be:

N0606XX#.mth

where N= New Haven; XX = column type i.e. PL for the PLOT, and BP for the BP-1; # = the sequential number of the Method (1, 2, ...).

Note: data paths may be selected by the user as desired.

8.0.7.6.1 Creating a Method

A. To perform component identification and quantification, a component list must be generated that supplies TOTALCHROM with expected retention times and quantification factors. There are two avenues by which this may be done: METHOD EDIT or GRAPHIC EDIT.

B. Using GRAPHIC EDIT is easier in that a printout of the calibration chromatogram(s) or report(s) is not required and naming of components occurs with the chromatogram in view on the screen. However, certain parameters such as calibration by reference and handling of unknowns must be done in METHOD EDIT.

8.0.7.6.2 Method Edit

From the NAVIGATOR screen select the **BUILD METHOD** icon. From the **FILE** drop down menu select **NEW** to create a calibration file or **LOAD RECENTLY EDITED METHOD** if an existing file is to be updated. The following instructions assume an existing **METHOD.mth** is to be employed.

A. Select an applicable **METHOD.mth** from the browse window. Click on OK. A METHOD EDIT window will open.

B. Select the INSTRUMENT drop down menu.

C. Select the PROCESS drop down menu, then select INTEGRATION. From this window:

- set BUNCHING FACTOR= 3
- NOISE THRESHOLD = 25 (actual will be determined from GRAPHIC EDITOR review)
- AREA THRESHOLD = 75 (actual will be determined from GRAPHIC EDITOR review)
- WIDTH RATION = 0.20
- VALLEY TO PEAK RATIO = 0.010
- PEAK HEIGHT RATIO = 5.0
- ADJUSTED HEIGHT = 4.0
- VALLEY HEIGHT = 3.0

D. From the same window, select the REPLOT tab.
- Click on = GENERATE A SEPARATE REPORT
- NUMBER OF PAGES = 1
- ORIENTATION = LANDSCAPE
- RETENTION LABELS = TOP OF PLOT
- COMPONENT LABELS = ACTUAL TIME
- START TIME (MIN) = 0
- END TIME (MIN) = 48
- PLOT TITLE = CHROMATOGRAM
- X AXIS LABEL = TIME (MIN)
- Y AXIS LABEL = RESPONSE (MV)
- Click on = DRAW BASELINES
- Click on = TIMED EVENTS

Select OK or APPLY.

Note: the other tabs on the INTEGRATION tab (BASELINE TIMED EVENTS, OPTIONAL REPORTS, USER PROGRAMS) are left blank and are generally unused except certain BASELINE TIMED EVENTS will be set in GRAPHIC METHOD EDITOR. These timed events are the start and stop times for peak recognition, Dean Switch operation time, custom bunching factors or other provisions required to meet specific operational conditions found.

E. Data channels = select dual, 1 volt, delay time is 0.0 minutes, run time is 48.0 minutes. Set peak width at 6 and sampling rate at 3. They will be optimized in GRAPHIC EDIT (see Optimizing a Method).

F. Real-time plot scale = offset at 0.0, full scale at 50.0, # of pages at 1 for both channels.

G To develop an auto-calibration **METHOD.mth**, select control options and

instrument control from the INSTRUMENT drop down menu.

- To initiate auto-calibration, select relay 6 on at 0.1 minutes and off at 0.2 minutes.

- To initiate return to ambient sampling, select relay 7 on at 0.1 minutes, and off at 0.2 minutes.

H. Give each a specific name of the form (site)(year)(amb for ambient, cal for calibration)(pl).mth. It must be placed in a SEQUENCE.SEQ as the instrument **METHOD.mth** to initiate calibration or ambient sampling.

8.0.7.6.3 Process

The following steps require a chromatogram and METHOD.mth be open in GRAPHIC EDIT.

A. Select **PROCESS** from the main menu bar; from the drop down menu verify that:

1. NOISE / AREA THRESHOLD - Underline an area of baseline containing no peaks. A NOISE/AREA THRESHOLD window opens. Type in a NOISE THRESHOLD of **25** and an AREA THRESHOLD of **50** as defaults. The final values for each may be set in GRAPHIC EDITOR while optimizing the **METHOD.mth**.

2. SAMPLING RATE / BUNCHING FACTOR - Highlight a narrow peak in the chromatogram. A SAMPLING RATE / BUNCHING FACTOR window opens. Accept the default SAMPLING RATE of 3.125. Type in a BUNCHING FACTOR of **3**. This is used for all chromatograms except for specific cases, which may require an alternate setting, typically to enable separation of closely eluting components or to join closely eluting components as in the case of meta/paraxylene. Click on OK.

3. PEAK SEPARATION / EXPO SKIM - Accept the default settings of: WIDTH RATIO= **0.2**; VALLEY TO PEAK RATIO= **0.01**; PEAK HEIGHT RATIO= **5.0**; ADJUSTED HEIGHT RATIO= **4.0**, VALLEY HEIGHT RATIO= **3.0**.

4. BASELINE EVENTS - Using the drop down menu, select (highlight) **-P DISABLE PEAK DETECTION**. Click on the chromatogram baseline at the beginning of the chromatogram. A red –P will appear.

5. Click a second time on the baseline immediately after the last named peak, 1-

hexene on the PLOT or undecane on the BP-1 column. A red –P will appear.

6. Using the drop down menu, select (highlight) **+P ENABLE PEAK DETECTION**. Click on the baseline immediately before ethane on the PLOT, or immediately before hexane on the BP-1. A red **+P** will appear. Click on **RETURN**.

7. If a –P, or +P is misplaced, click on **DELECT EVENTS**. From the resulting drop down menu, click on the **–P** or **+P** to be removed, then click on **OK**. The command will be removed from the chromatogram. Click on **RETURN** when finished.

8. BASELINE EVENTS - Using the drop down menu, select **BF SET BUNCHING FACTOR**. Enter **5** into the VALUE box. Click on the baseline of the BP-1 column immediately before meta/paraxylene. A red 5 will appear.

9. Click on **the VALUE** box and change the setting to **3**. Click on the baseline of the BP-1 chromatogram immediately following meta/paraxylene. A red 3 will appear. Click on **OK**. This causes the closely eluting meta/para isomers to be found as a singe peak.

10. When finished, click on **RETURN**.

8.0.7.6.4 Calibration Components

A. From METHOD EDITOR window select the **COMPONENTS** drop down window. Select **GLOBAL INFORMATION**.

- Enter the RF calculated in 803.6.1 and 806.2 into the CALIBRATION FACTOR window.
- Select either **ALWAYS USE CALIBRATION FACTOR** or **USE NEAREST REFERENCE**.
- Click on **CONVERT UNKNOWN SAMPLES TO CONCENTRTION UNITS**.
- Use the default settings of VOLUME UNITS =**CC**, QUANTITATION UNITS = **NG**, SAMPLE VOLUME (cc) = **1.00**, and VOID TIME (min) = **0.000** and **EXTERNAL STANDARD**.

  Click on **OK**

B. From METHOD EDITOR window select the **COMPONENTS** drop down window.

Select **DEFAULTS**. From the resulting tabbed window:

1. USER VALUES Tab = leave all boxes unchecked
2. IDENTIFICATION Tab:
   - COMPONENT TYPE = PEAK
   - ABSOLUTE WINDOW = 12.0
   - RELATIVE WINDOW = 0.10
   - FIND TALLEST PEAK IN WINDOW = Unselected
   - REFERENCE = Unselected
   - INTERNAL STANDARD = Unselected

C. From METHOD EDITOR window select the **COMPONENTS** drop down window. Select **EDIT COMPONENTS**.
   1. IDENTIFICATION tab = leave all boxes unchecked
   2. USER VALUES/LIMS tab = all USER VALUE boxes **at 0.0**
   3. CALIBRATION tab
      - Click on first component name in the species list- ethane for the PLOT, or hexane for the BP-1.
      - Click on = **USE CALIBRATION FACTOR**, and enter the Quantification Factor calculated for the METHOD.mth in Section 803.6.1.
      - Click on = **AREA**
   4. Select **NEXT** or click the mouse on the next component in the species list.
      - Click on = **CALIBRATE by REFERENCE**
      - From the CAL REFERENCE drop down menu, select ethane for the PLOT or hexane for the BP-1.
      - Set the CAL REFERENCE FACTOR = **1.00**
      - Select **OK**.

D. From the METHOD EDITOR window select **FILE**, and **DESCRIPTION** from the drop down window. Enter any pertinent information such as the chromatographic run(s) from which the Quantification Factor(s) was calculated, the run used for updating Retention Time of components, or any other information that would be useful to assist in evaluating the METHOD.mth.

E. From the METHOD EDITOR window select **FILE**, and **SAVE** or **SAVE AS** as applicable from the drop down menu. Browse to the pertinent directory, and provide a name for the METHOD.mth in the form:

   (site code)(month)(year)(column)(sequential number).mth

   Thus the second PLOT column METHOD.mth for New Haven in June, 2006 would be:

N0606PL2.mth

8.0.7.7 Report

From METHOD EDITOR window, select **OTHER**, then **REPORT FORMAT EDITOR** from the drop down menu. The **REPORT FORMAT EDITOR** window opens with a DEFAULT REPORT.

A. Click on **USER NOTES** and from the drop down menu, select **TITLE**. Enter information such as site name, and year. Click on **OK**.

B. Click on **USER NOTES** and from the drop down menu, select **FOOTER**. Site information is entered here in a specific format as it will be used by VOCDat as identifiers. Enter site info in the form:

(site code/year)space(time in EST)space(XXspaceXXXspaceXXXX)space(site name)

where X = nine digit AQS code for the site.

Thus the footer for New Haven, Criscuolo Park, for June 2006 would be:

NH06 EST 09 009 0027 New Haven Criscuolo Park

Click on OK.

C. Click on **REPORT** and from the drop down menu, select **COMPONENT NAME**. The COMPONENT window will open. From this select:

- COLUMN NUMBER = **1**
- COLUMN WIDTH = **16**
- COLUMN LABEL = **COMPONENT**
- SECOND LABEL = **NONE**
- Select **INSERT**

D. From the **REPORT** drop down menu, select **RAW AMOUNT**. A RAW AMOUNT window will open. From this select:

- COLUMN NUMBER = 2
- COLUMN WIDTH = 10
- DIGITS = 4

- COLUMN LABEL = RAW
- SECOND LABEL = PPBC
- Select INSERT

E. From the **REPORT** drop down menu, select **RETENTION TIME**. A **RETENTION TIME** window will open. From this select:

- COLUMN NUMBER = **3**
- COLUMN WIDTH = **7**
- DIGITS = **2**
- COLUMN LABEL = **TIME**
- SECOND LABEL = **MIN**
- Select **INSERT**

F. When reviewing calibrations it is necessary to determine the area of the NIST traceable peaks used to calculate the QF (propane and benzene). For this purpose an additional column is required, giving the peak area. This column <u>should not</u> be included in the REPORT FORMAT used to integrate data for VOCDat review and AQS submission as data will not seamlessly enter the AQS system with this additional column. Thus this is used only in a REPORT FORMAT used for QA review and data validation.

1. From the **REPORT** drop down menu, select **PEAK AREA**. A PEAK AREA window will open. From this select:

   - COLUMN NUMBER = **4**
   - COLUMN WIDTH = **6**
   - DIGITS = **2**
   - COLUMN LABEL = **AREA**
   - SECOND LABEL = **uVS**
   - Select **INSERT**

G. From the FILE drop down menu select **DESCRIPTION**. Enter any pertinent information desired such as site or calibration information, purpose of the particular REPORT FORMAT etc. When completed click on OK.

H. From the **REPORT FORMAT EDITOR** window select **FILE** and **SAVE** or **SAVE AS**. Browse for the appropriate directory, and give the REPORT FORMAT a name to include a site, and year, and **SAVE** the file. For example the New Haven 2006 REPORT FORMAT would be:

N2006.rpt

8.0.7.8 Graphic Edit

GRAPHIC EDIT offers the operator many options in terms of viewing chromatograms and establishing integration parameters. GRAPHIC EDIT can be used to:

A. View chromatograms with identifications, and easily test calibration **METHOD.mth** for retention time drift or quantification factor shifts.

B. Create or edit calibration files and update retention time information and search windows. UANTIFICATION FACTORS may not be entered in Graphic Editor, only in METHOD EDIT when entered from the Navigator screen BUILD METHOD icon. Alternatively a **METHOD.mth** may be selected from the **GRAPHIC EDIT, OTHER** drop down menu.

C. Establish Processing parameters such as NOISE and AREA THRESHOLD, BASELINE EVENT (used to disable methane identification, start and stop peak identification, etc.), establish the sampling rate and determine the number of data points averaged to determine peak shape.

8.0.7.8.1 From the Navigator screen, select the **GRAPHIC EDIT** icon. Select the directory where files of interest are located and double click on the file name. The chromatogram will be brought up on the display.

A. To view other chromatograms click **FILE**, select **NEW DATA FILE** and select the chromatogram desired.

B. From the **FILE** drop down menu select **NEW** to create a new calibration **METHOD.mth**, or **OPEN** to update an existing **METHOD.mth**. OPEN allows the operator to **SAVE** or **SAVE AS** with a new name.

8.0.7.8.2 Enable Peak Detection, Disable Methane and End Chromatogram

A. The methane peak is disabled to prevent its being included in the total non-methane organic carbon sum for the run as well as any peaks before hexane. Additionally all components after 1-hexene (43245) and dodecane (43141) are disabled.

B. Call up a PLOT column retention time run in Graphic Edit. Select the appropriate METHOD.mth from the **OPEN** choice under **FILE** drop down menu.

C. Locate the methane peak, if present. Alternatively locate the ethane (43212) peak.

D. From the **PROCESS** drop down menu select **BASELINE EVENTS**. A small drop down menu will appear. Click on the down arrow to view all commands. Select **-P-DISABLE PEAK DETECTION**. Click the mouse on the baseline at the start of the chromatogram. A small **-P** will appear confirming that peak identification is disabled.

E. Click the mouse on the baseline after 1-hexene elutes. Another small **-P** will appear.

F. Click on **+P-ENABLE PEAK DETECTION** from the drop down menu. Click on the baseline immediately before ethane, and after methane. A small +P will appear to allow the software to detect peaks.

G. If a **-P**, or **+P** was misplaced, select **DELETE EVENTS** from the main menu bar. A **DELETE TIMED EVENTS** window will appear listing all timed events. Click on the timed event to be deleted highlighting it, then click on **OK**.

H. When completed click on **RETURN** to return to GRAPHIC EDIT. From the **FILE** drop down menu select **SAVE** or **SAVE AS** to store the updated **METHOD.mth**.

I. Select a BP-1 chromatogram and BP-1 METHOD.mth as above. Following the steps outlined above disable peak detection for peaks eluting before hexane and after dodecane. Be certain to **SAVE** or **SAVE AS** when completed.

8.0.7.8.3 From the **PROCESS** drop down menu select:

A. NOISE/AREA THRESHOLD - outline a representative area of baseline. Note the recommended thresholds and repeat in two other areas. Use the average of the values by manually typing it in. Typically **25** is used as a default NOISE THRESHOLD, and **75** as the default AREA THRESHOLD.

B. SAMPLING RATE/BUNCHING FACTOR - outline a peak and view suggested values. Manually set SAMPLING RATE at **3**, and BUNCHING FACTOR at **3**. These values are used throughout the PLOT and BP-1 chromatograms.

Note: there are instances where a different bunching factor may be more useful. Verify that the software is finding and quantifying problematic peaks, usually ones that nearly coelute such as meta and para-xylene. Peaks in that region may require a different bunching factor.

C. PEAK SEPARATION/EXPO SKIM - use the default values of WIDTH at **0.2**, VALLEY TO PEAK RATIO of **0.01**, PEAK HEIGHT RATIO of **5.0**, ADJUSTED

HEIGHT RATIO of **4.0** and VALLEY HEIGHT RATIO of **3.0**.

8.0.7.8.4 Calibration Component

This provides identification names and AQS numbers for the identified components in the chromatogram and establishes search tolerances for the analysis software.

A. From the **CALIBRATION** drop down menu select **SHOW WINDOWS**. Brackets will appear corresponding to where the software is looking for a peak if editing an existing calibration **METHOD.mth**. If **NEW** was selected under **FILE** no brackets will be available. Refer to Figures 807.5A&B, Perkin-Elmer Master Calibration to compare to peaks in the calibration chromatogram.

B. From the CALIBRATION drop down menu, select EDIT COMPONENTS:

- drag the mouse over a section of the chromatogram to enlarge it for better resolution. Click on the first peak of interest, which should be a retention time reference (propane, butane, pentane on the PLOT, benzene, toluene, m-p-xylenes and 1,2,3-trimethylbenzene on the BP-1).
- Assign it a name or select one from the drop down menu, referring to FIGURE 807.5A&B and click on **REF** if a reference peak. (Note; If creating a new **METHOD.mth** the reference peaks will be identified and designated as such first as other peaks will need to be referenced to them). If the peak is within its bracket, click on **RESET RT**. When selecting a peak to be used as a relative retention time standard, click **FIND LARGEST PEAK IN WINDOW**.
- Set the ABSOLUTE WINDOW at **8.0** sec. and RELATIVE WINDOW at **0.1%.** In the case of a relative retention time standard reference peak, set the windows at **12 sec** and **0.2%** respectively.
- The various remaining peaks may be named by selecting **NEXT** or **PREV**. Assign each peak a relative retention time marker listed above. Alternatively, the mouse may be clicked on a peak to go directly to that peak.
- A red MODIFIED flag will appear in the lower right corner as a reminder that changes have been made.
- When completed select **RETURN**.

C. From the **DISPLAY** drop down menu select **PEAK REPORT**. If the calibration run is a quantification factor run obtain the area of the quantified peaks (typically propane, and benzene). Divide the area by the concentration of the quantified component in ppbc to obtain the QUANTIFICATION FACTOR. Alternatively the correct report format may by called-up by selecting **NEW REPORT FORMAT** from the **REPORT** drop down menu. Browse and select the desired **REPORT**

FORMAT to view identifications, and quantifications. See Section 8.0.3 for detailed instructions.

Note: Quantification factors may be entered in METHOD EDIT only. They may not be entered into the METHOD.mth from GRAPHIC EDIT. See Section 8.0.3, Calibration, for more complete details.

D. From the **FILE** drop down menu select **DESCRIPTION**. Enter any notes into the field such as the run number that the **METHOD.mth** was developed from, which runs it is valid for, etc.

E. When finished select SAVE, or SAVE AS from the FILE drop down menu. Use the file name convention of:

(site)(month)(year)(column)(sequential number).mth

For example the second METHOD.mth for the PLOT column for June, 2006 at the New Haven site would be: N0606PL2.mth

8.0.7.9 Generate a Sequence File

The SEQUENCE.seq tells TOTALCHROM what data paths the software will use to process, integrate, name and store the resulting data files for the chromatogram, result file, and report file.

8.0.7.9.1 Create a Data Path

A. Go to WINDOWS EXPLORER and create a directory where data is to be sent and stored. The directory should be of the form:

ROOT\(site)(year)\(site)(month)(year)

where month is the month under which data is to be collected. Create a new subdirectory for each month's monitoring activities.

B. Exit WINDOWS EXPLORER.

C. From Program Manager double click on the **TCNav** icon. From the NAVIGATOR screen click on **BUILD** from the top menu bar or the **BUILD SEQUENCE** icon. Select **CONFIGURATION**, **USER**, **QUICK PATHS**. Browse for the directory to be used for data storage from the right hand window, and click the mouse on the first

directory listed in the left window. Both directories should be highlighted. Select **INSERT**, the directory should be added to the top of the left list. Select **OK**.

Note: the directory may be included by using ADD, but will be added to the bottom of the list.

D. Close the window and return to the TOTALCHROM Navigator screen.

8.0.7.9.2 Create a Sequence File

A. From the Navigator screen click on the **BUILD SEQUENCE** icon. From the **FILE** drop down menu select **CREATE NEW SEQUENCE**. Verify that the default GLOBAL DEFAULT window has:

BUILD PARAMETERS PAGE - Click on **FROM TEMPLATE**
CONFIGURATION PAGE – METHODS = **MULTIPLE PER ROW**
RAW DATA AND RESULT FILES = **SAME NAME**

Click on **OK**.

B. From the SEQUENCE TEMPLATE window - From the METHOD line, CH A, use the drop down menu to browse and select a **METHOD.mth** for the PLOT. Repeat for CH B by selecting the appropriate BP-1 **METHOD.mth**.

C. From the BASE FILE NAME box, type in the path desired as appropriate. Alternatively, open WINDOWS EXPLORER, locate desired directory and click on it. From the EXPLORER ADDRESS window bar, highlight the path and **COPY** it. Return to SEQUENCE TEMPLATE window and **PASTE** the path into the BASE FILE NAME box. Type in the file name at the end of the path string using the naming convention (site code)(month)(year)(column). Do not include sequential run number or extension i.e. for example, type in N0606A for New Haven, June, 2006.

D. Under the SAMPLES section, select:
- SAMPLE NUMBER PATTERN = **###**;
- STARTING NUMBER = **1**;
- #INJECTIONS PER SAMPLE = **1**.
- Set the NUMBER OF SAMPLES as desired, typically **800** to allow for a full month's sampling.

E. Accept the default settings for the AUTOSAMPLER, and CALIBRATION sections. Click on OK.

D. The SEQUENCE INFORMATION windows for CHANNEL A and B will appear.

E. Manually resize the windows to allow viewing several columns and rows. Select CHANNEL A to begin by clicking on its title bar.

F. From the **FORMAT** drop down menu select **HIDE/UNHIDE COLUMNS**. A **HIDE/UNHIDE** window appears in which a number of options are listed. Click on the >> box to send any options listed in the left hand COLUMNS SHOWN list to the right hand COLUMNS HIDDEN list.

G. From the right hand COLUMNS HIDDEN list, select the following items while holding down the CONTROL key:
H. NAME
I. NUMBER
J. INST METHOD
K. PROC METHOD
L. CALIB METHOD
M. RPT FMT FILE
N. DATA

O. Click on the < box to send the selected options to the left hand window COLUMNS SHOWN list. Click on **OK**. The SEQUENCE EDITOR / SEQUENCE INFORMATION page will open.

P. Ensure that the first column and row of the SEQUENCE.seq is in view. The **METHOD.mth** entered above will be found in each of the INST, PROC, CALIB, and RPT FMT columns. Based on chromatographic review of data described in Section 803 other METHOD.mth(s) may need to be inserted into the PROC and CALIB columns in order to properly integrate the data. The proper REPORT file will also need to be inserted.

Q. Use the slider buttons if needed to go to column 1 and row 1 of the CHANNEL A box. Highlight the first box under RPT FMT FILE.

R. From the **CHANGE** drop down menu, select **BROWSE**. Go to the directory containing the proper **REPORT** format for the site and year, select it and click on **SELECT**. The REPORT will be inserted into the RPT FMT box in the SEQUENCE INFORMATION window.

S. From the **CHANGE** drop down menu, select **FILL DOWN**. The REPORT will be "filled down" into each box in the column in the SEQUENCE.seq.

T. Refer to the notes made during chromatographic review to determine what CALIBRATION and PROCESS METHOD is to be used for the various chromatographic runs in the SEQUENCE.seq. Using Steps F-H above, **BROWSE** and **SELECT** the required **METHOD.mth** for runs indicated in the NUMBER COLUMN of the SEQUENCE.seq. Several **METHOD.mth(s)** may be included in each SEQUENCE.SEQ.

U. If auto-calibrations are desired, enter the auto-calibration **METHOD.mth** in the INST METHOD column the row before the calibration, and return to ambient by entering the ambient **METHOD.mth** into the row number of the calibration run. I.e. if run 100 is to be an auto-cal, enter the auto-calibration **METHOD.mth** in row 99 and the ambient **METHOD.mth** in row 100.

Note; the FILL DOWN command will over write any auto-calibration instructions. Put auto-calibration **METHOD.mth** in after all other INST METHODS have been entered.

V. Repeat Steps 10 through 15 for the BP-1 column. It is not necessary to repeat the auto-calibration and ambient **METHOD.mth** in the BP-1 SEQUENCE.SEQ however.

W. When completed select **SAVE AS** from **FILE** drop down menu. Fill in the **DESCRIPTION** box as desired and click on **OK** or cancel to leave description field blank. Close the window.

Provide the file with a name using the convention;

(Site code)(month)(year).seq

For example the SEQUENCE.seq for June, 2006, in New Haven would be: N0606.SEQ.

M. Different **METHOD.mth** files can be inserted into the SEQUENCE.seq at any row, thus one SEQUENCE.seq may have multiple **METHOD.mths** contained within it. This allows the operator to correct for retention time drift and varying response factors. Remember to **FILL DOWN** to insert the new **METHOD.mth** into subsequent runs.

8.0.7.10 Run SETUP

Setup must be initiated to establish communication between the site PC and the P-E interface. The date/time stamp associated with each chromatographic run is also initiated with this step.

A. From the TCNav main menu, click on the **SETUP** icon. Select:
- setup type = **SEQUENCE**
- sequence = use the drop down menu to browse and select a **SEQUENCE.seq** desired. The selected SEQUENCE.seq will load into the interface.

B. From the SETUP PARAMETERS tab select:
- starting row = **1**
- ending row = **800** (this is the number of chromatographic runs anticipated under the SEQUENCE.seq. 800 allows for a full month of data collection)
- processing = **SUPPRESS PROCESSING**
- Click on **OK**.

8.0.7.11 Prepare PC to Collect Data

A. Before data can be collected several steps must be taken:
- The GC and ATD must be up to temperature, on line and in a READY mode.
- The interface box must be correctly wired to the GC and computer.
- The computer must be attached to the interface.

B. See Section 8.0.4, MAINTENANCE, and Section 8.0.3, VOC ANALYSIS, for assistance in starting up the GC and ATD. The sections contain full wiring diagrams and operational gas configurations.

C. To ATTACH the PC to the interface click on **RUN** from the TCNav main window. A query window will appear with an ATTACH option. Click on **ATTACH**. The software should then return to the Navigator screen.

D. Data collection may be stopped by having the PC DETACH from the interface. For this option select **RUN** from the Navigator top menu bar and select **DETACH**. All

systems will continue to run normally, but the PC will accept no data until the **ATTACH** command is reinstated.

8.0.7.12 Viewing Chromatograms

Chromatograms may be viewed to determine valid operation of the system, estimate VOC levels, and perform troubleshooting tasks. Viewing of calibration runs allows on-screen updating of analysis parameters and component names.

Chromatograms may be viewed in GRAPHIC EDIT where adjustments to operational parameters may be made. They may also be viewed in DISPLAY CHROMATOGRAMS from the Navigator screen. Operational parameters may not be changed here, but multiple chromatograms, even from different directories, may be viewed at once. DISPLAY CHROMATOGRAMS also allows the operator to select METHOD.rst providing a view of the chromatograms as integrated with identifications.

8.0.7.12.1 Graphic Editor

A. From the Navigator screen select the **GRAPHIC EDIT** icon.

B. From the **FILE**, **NEW DATA FILE** menu click on the directory containing chromatograms of interest. A list of available chromatograms will appear. Select one of interest and double click on it.

C. From the **FILE** drop down menu select **OPEN**, and choose the file desired. If a new retention timetable is to be made, any **METHOD.mth** file will suffice as long as it is for the correct column.

D. With the selection of the **METHOD.mth** file, PAMS code numbers for the various components will appear beneath the peaks, and the retention time will be noted above the peak. If a quick view of collected chromatograms is all that is required the window may now be closed, or another chromatogram selected by selecting **NEW DATA FILE** from the **FILE** menu bar key. It is only necessary to specify the **METHOD.mth** file once, all succeeding chromatograms viewed will use the same **METHOD.mth** file until a different one is selected from **OPEN** under the **FILE** menu bar choice. If a chromatogram generated by a different column is selected, it will be necessary to select a new appropriate **METHOD.mth** file based on the different column.

E. To determine if identifications are correct select **PEAK REPORT** from the **DISPLAY** drop down menu. If the DEFAULT REPORT window appears, select

NEW REPORT FORMAT from the **REPORT** menu bar, and select the applicable report. Compare peaks from the chromatogram to the Master peak list (Figure 807.5A&B) to see if they are properly identified. Clicking on a peak of the chromatogram will cause the PEAK LIST to go directly to that peak report. Areas where peaks are poorly resolved are most prone to mis-identification.

F. For a quick way to see if the METHOD.mth or calibration file is adequately identifying the peaks select **SHOW WINDOWS** from the **CALIBRATION** drop down menu. Horizontal 'I' bars will appear at each named peak. If the 'I' bars are on the peak the software has found that peak in the search window. If the 'I' bar is below the baseline the peak has not been found. The width of the 'I' bar is the search window within which TOTALCHROM looks for that component. The 'I' bar may be adjusted wider, or narrower and is usually set as part of the METHOD.mth file. The standard values for the search windows are 8 seconds and 0.10%.

G. If the PEAK FILE REPORT or SHOW WINDOWS indicate sufficient RT drift has occurred to warrant altering the METHOD.mth file refer to 8.0.3 for calibration procedures.

H. Select **RETURN** to remove PEAK REPORT screen and return to GRAPHIC EDIT.

I. When finished, **CLOSE** the window to return to the TOTALCHROM Navigator screen.

8.0.7.12.2 Display Chromatograms

DISPLAY CHROMATOGRAMS is used to review chromatograms and also compare them. Multiple chromatograms may be displayed in several views.
If SEQUENCE.raw files are selected only the raw chromatogram without retention times may be viewed. If SEQUENCE.rst files are selected from the **FILES of TYPE** menu, the retention times and identifications are also displayed.

A. From the Navigator screen select **DISPLAY CHROMATOGRAMS**. From the **MULTIPLE FILE OPEN** screen select a directory containing files of interest. Select a file name and click on it. If more than one file is desired, select each with the mouse while holding down the Ctrl key. The files do not have to be sequential and may come from different directories. Double click on the chromatogram name or select OK.

B. Click on File from the menu bar. A drop down menu appears that allows the operator to;

- Open - select a new chromatogram while preserving already selected chromatograms.
- Replace - overwrites any chromatogram on display that has been selected by clicking the mouse on its name bar.
- Close – closes the chromatogram with a highlighted name bar.

- Close All – closes all selected chromatograms.

- Save As, Print, and Copy to Clipboard capabilities are also under File .

Note: If a chromatogram's name bar is clicked upon it becomes highlighted. Any choices made under any menu bar key, with the exception of Close All, will apply to that highlighted chromatogram only.

C. The chromatograms can be manipulated to view or compare sections. From the menu bar select **OPTION**. OPTIONS allows the operator to rescale any or all plots on the screen and alter chromatogram start and stop times.

D. Select desired options concerning the display of the chromatogram and information given on the screen.

E. From the main menu bar select **WINDOW**. The WINDOW drop down menu allows the operator to arrange multiple chromatograms on the screen in vertical or horizontal patterns, as well as stacked or cascade. It also allows overlaying chromatograms to compare alignment or retention time drift.

F. Select **CLOSE** from the **FILE** drop down menu to close the application.

8.0.7.13 Optimizing a Method.

The steps of this section are performed separately on both columns with the exception of Step 3 (baseline). Step 3 removes methane from the database on the PLOT column only. It also prevents unknowns eluting at the end of the run from being added to the total non-methane organic value.

A. From the Navigator screen select **GRAPHIC EDIT** icon. From **FILE**, **OPEN** window select a chromatogram of interest, usually a calibration run.

B. From the **FILE** drop down menu select **NEW** to create an original calibration file or **OPEN** to update an existing file.

C. From the **PROCESS** drop down menu select:

a. Baseline events - select **DISABLE PEAK DETECTION** from the drop down menu, which appears on the screen. Click the mouse on the baseline at the start of the run on the PLOT column. A **-P** will appear. From the drop down menu select **ENABLE PEAK DETECTION** and click on the baseline immediately after methane (A column) or hexane (B column) appears. A **+P** will appear on the baseline. Select **RETURN** from the main menu bar.

b. Baseline events - on the PLOT, and BP-1 columns repeat the **DISABLE PEAK DETECTION** command placing the **-P** on the baseline immediately following the last named component.

c. Noise/area threshold – outline a representative area of baseline which contains no peaks. Record the recommended thresholds and repeat in two other areas. Again select **NOISE/AREA THRESHOLD** and manually type in the average of the values.

d. Sampling rate/bunching factor - outline a peak and view suggested values. Manually set sampling rate at **3**, and bunching factor at **3**.

Note: it may be necessary to use a bunching factor other than 3 to resolve peaks that are nearly co-elutors or in other specific instances. Be certain to carefully screen all areas of several chromatograms to be certain proper identifications are being made.

e. Peak separation/expo skim. Use the default values of;
- **WIDTH** = **0.2**,
- **VALLEY TO PEAK RATIO** = **0.01**,
- **PEAK HEIGHT RATIO** = **5.0**,
- **ADJUSTED HEIGHT RATIO** = **4.0**,
- **VALLEY HEIGHT RATIO** = **3.0**.
- Click on **OK**.

D. From the **CALIBRATION** bar menu select **SHOW WINDOWS**. Brackets will appear corresponding to where the software is looking for a peak (if editing an existing calibration METHOD.mth). Then select from the **CALIBRATION** bar menu:

a. Edit components - drag the mouse over a section of the chromatogram to enlarge

it for better resolution. Click on the first peak of interest. Assign it a name or select one from the drop down menu. If editing an existing **METHOD.mth**, a reference may also be selected. If the **METHOD.mth** is new, a reference will have to be assigned in **METHOD EDIT**, or reference peaks selected and designated as such before other peaks are identified. If the peak is within its bracket click on **RESET RT**. When identifying a retention time reference peak click on **FIND LARGEST PEAK IN WINDOW**. Set the **ABSOLUTE WINDOW** at **8.0 sec**. and **RELATIVE WINDOW** at **0.1%.**

b. If a component is a relative retention time reference peak, set the windows at **12 sec**, and **0.2%** respectively. By selecting **NEXT** or **PREV** the various peaks may be named. Alternatively the mouse may be clicked on a peak to go to that one. A red MODIFIED flag will appear in the lower right corner as a reminder that changes have been made. When completed select **RETURN**. Propane, butane, pentane, benzene, toluene, m/p-xylene, and 1,2,3-trimethylbenzene are the normal relative retention time reference peaks.

E. Select **SAVE** or **SAVE AS** from the **FILE** drop down menu, and assign the **METHOD.mth** a name in the form:
(site)(month)(year)(column)(sequential number).mth

for example the second BP-1 Method for Stafford during June 1995 would be F695DB2.mth.

8.0.7.14 ATD-400 Shutdown Procedure

A. Press the **STOP** key on the ATD400 keypad. A window will appear with four choices. These are:

- Press **0** key to stop after this tube.
- Press **1** key to stop immediately.
- Press **2** key to stop after this injection.
- Press **PAGE** key to cancel stop.

B. Select the choice you require. The ATD400 should stop sampling at the appropriate time and go into a STANDBY mode.

8.0.7.15 GC Shutdown Procedure

A. **SHUT OFF** the hydrogen compressed gas cylinder and the second stage regulator so that the regulator remains pressurized. Allow the hydrogen in the line to come to

atmospheric pressure. The flame for the FIDs will be extinguished.

B. **CLOSE** the hydrogen toggle valves located at the left top rear of the GC on the 8700. On the OPS, backout the needle valves located at the top rear of the GC.

C. If the GC is to be left powered up, **RESET** the FID temperatures to 100°C to save energy.

D. **SHUT OFF** the Balston Zero Air Supply and pump and **DRAIN** any moisture from the expansion tank.

E. Leave the helium carrier on to continuously flush the columns.

Note: In no circumstance should the helium be shut off until the oven has come to the lowest temperature setting. Damage to the columns may otherwise occur. If left without helium flow, the PLOT column may be damaged by water vapor in the air.

F. The GC may now be powered down.

METHOD 1

			SET	ACT
MODE	2	OVEN TEMP	250	As Read
FIRST TUBE	1	DSRB TIME	1.0	As Read
LAST TUBE	1	VALVE TEMP	175	As Read

Press PAGE key

INJ/TUBE	99	TRAP LOW	-30
TRAP FAST	YES	TRAP HIGH	325
CYCLE TIME	60	TRAP HOLD	8.0

Press PAGE key

IN SPLIT	NO	LINE TEMP	200
OUT SPLIT	YES	MIN PSI	0 (varies up to ~40)
RECYCLE	NO	STD INJ	40.0 (actual run time)

Press STOP key

Choice one -	Press 0 key to stop after this tube
Choice two -	Press 1 key to stop immediately
Choice three -	Press 2 key to stop after this injection
Choice four -	Press page key to cancel stop

FIGURE 807.1

ATD SETTINGS AND OPTIONS

OZONE METHOD SETTINGS

SECTION 1 - TEMPERATURE

	1	2	3
OVEN TEMP	45	170	190°C
ISO TIME	15	0	7 MIN
RAMP RATE	5	15 °C	

DET 1 TEMP = 250	FID 1 - SENS HIGH	FID 2 - SENS HIGH
DET 2 TEMP = 250	FID 1 - ZERO ON	FID 2 - ZERO ON

CARRIER 2 XXX PSIG	EQUILIB TIME 0.0 MIN
	RUN NUMBER 1

FIGURE 807.2

GAS CHROMATOGRAPH CONDITIONS

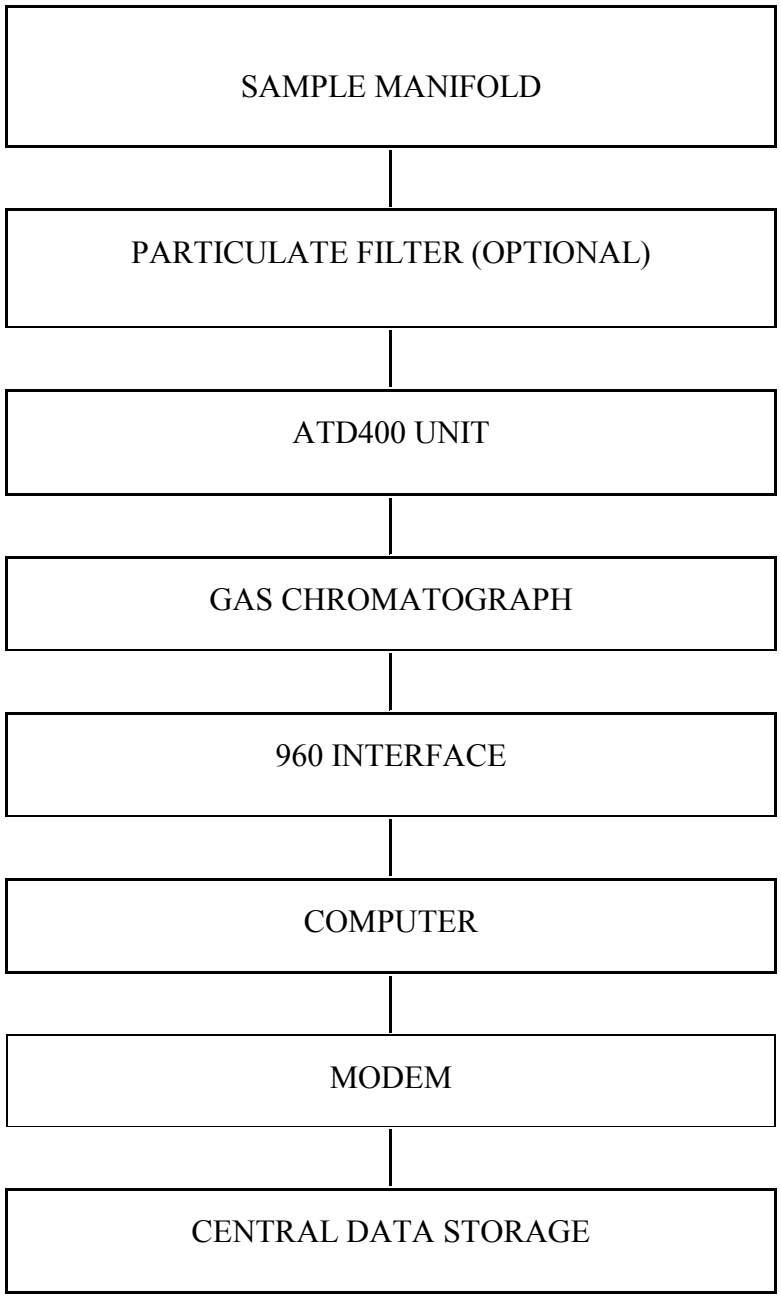

FIGURE 807.3

SYSTEM CONFIGURATION

PERKIN-ELMER COLUMNS

PLOT COLUMN = 50 Meters x .32mm ID,
Al_2O^3 with Na_2SO_4 wash 5u coat
Chrompack Inc., U.S.A.

BP-1 COLUMN = 50 Meters x .23mm 1u coating
Scientific Glass Engineering

COLD TRAP: CARBOSIEVE SIII, AND CARBOTRAP C

REPLACEMENT FERRULES: PLOT (P-E order number 992105, part number 0726542);
BP-1 columns (order number 992104, part number 0726543);
FID (PE order number 9903981, part number 0726214);
Cold Trap (part number L427-5108)
Cold Trap Ferrules (part number L427-1187)

FIGURE 807.4

PE COLUMNS AND SUPPLIES

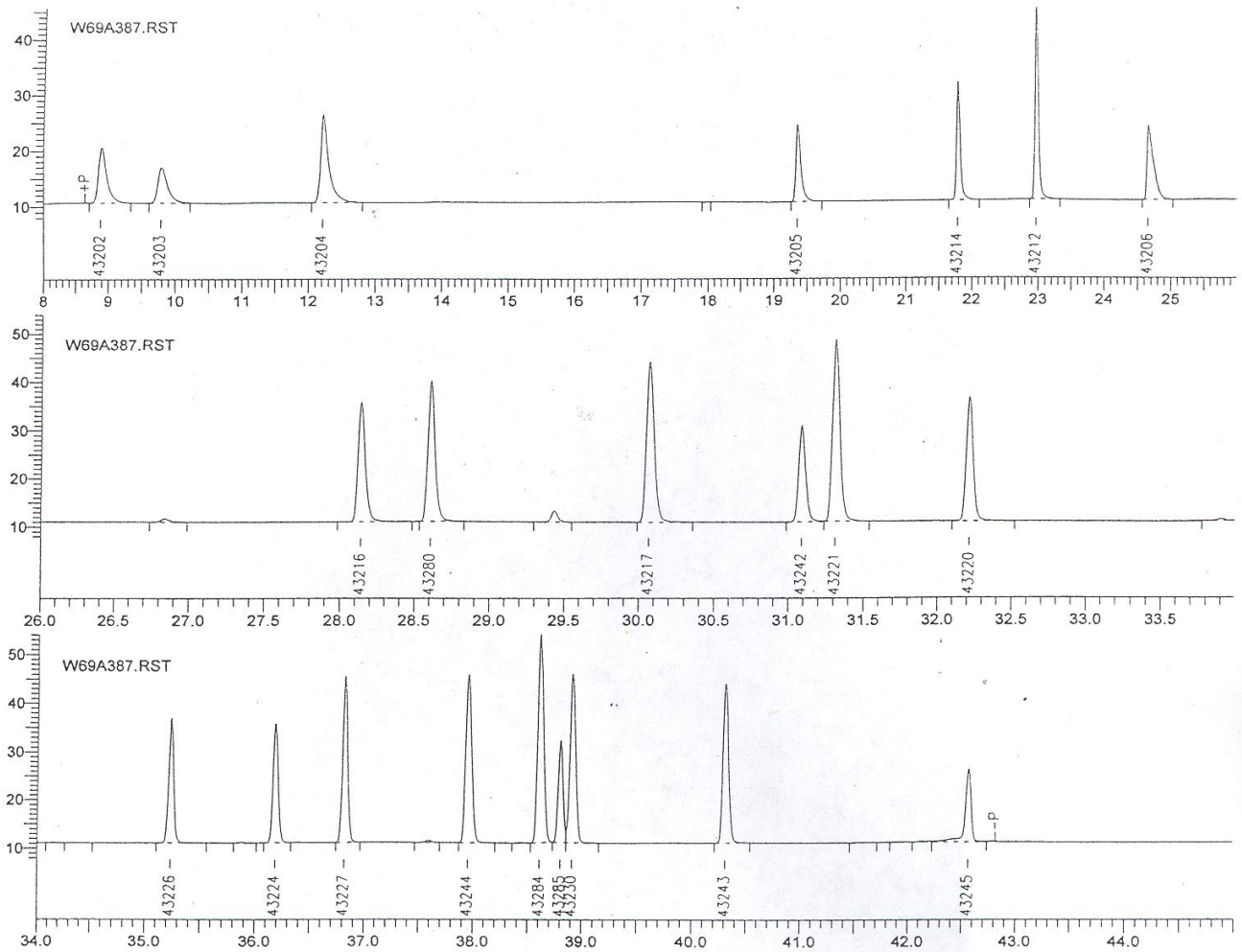

FIGURE 807.5A

PERKIN-ELMER PLOT MASTER CALIBRATION

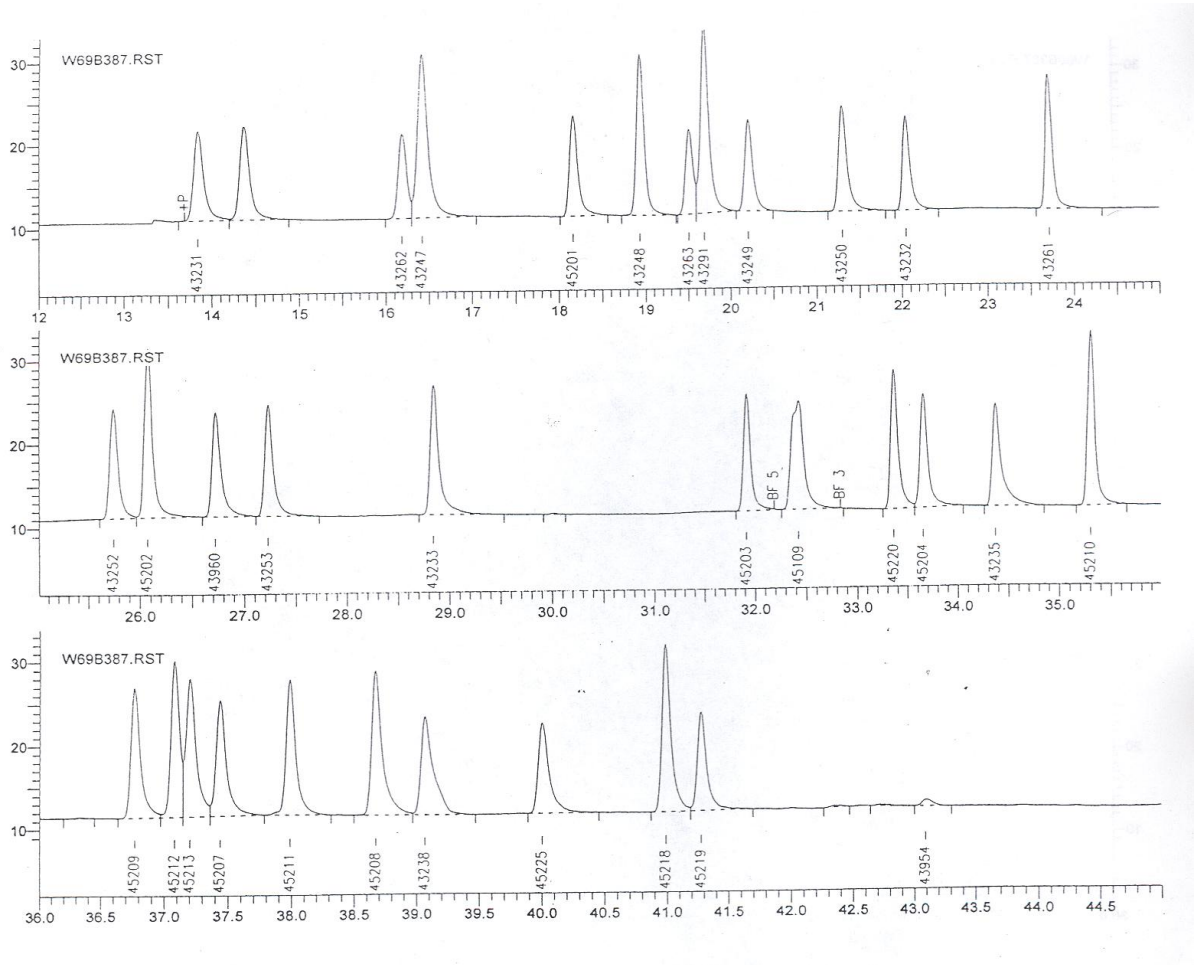

FIGURE 807.5B

PERKIN-ELMER BP-1 MASTER CALIBRATION

PLOT Column Compounds

AIRS CODE	Abbreviation in Method	Compound Name
43202	ethan	Ethane
43203	ethene	Ethylene
43204	propane	Propane
43205	propene	Proylene
43214	i-butane	Isobutane
43212	butane	Butane
43206	acetylen	Acetylene
43216	t2butene	Trans-2-Butene
43280	1butene	1-Butene
43217	c2butene	Cis-2- Butene
43242	Cpentan	Cyclopentane
43221	i-pentan	Isopentane
43220	pentane	Pentane
43226	t2penten	Trans-2-Pentene
43224	1penten	1-Pentene
43227	c2penten	cis-2-Pentene
43244	22Dmbtan	2,2-dimethyl-butane
43284	23Dmbtan	2,3-dimethyl-butane
43285	2Mpentan	2-Methylpentane
43230	3Mpentan	3-Methylpentane
43243	isoprene	Isoprene
43245	1hexene	1-Hexene

BP-1 Column Compounds

AIRS CODE	Abbreviation in Method	Compound Name
43231	hexane	Hexane
43262	Mcpentan	Methylcyclo-pentane
43247	24DMptan	2,4-Dimethyl-pentane

BP-1 Column Compounds

AIRS CODE	Abbreviation in Method	Compound Name
45201	benzene	Benzene
43248	Chexane	Cyclohexane
43263	2Mhexane	2-Methyl-hexane
43291	23Dmptan	2,3-Dimethyl-pentane
43249	3Mhexane	3-Methyl-hexane
43250	224Tmpta	2,2,4TriMethyl-pentane
43232	heptane	Heptane
43261	MChexane	Methylcyclo-hexane
43252	234TMpta	2,3,4-Trimethyl-pentane
45202	toluene	Toluene
43960	2Mheptane	2-Methylheptane
43253	3Mheptane	3-Methylheptane
43233	octane	Octane
45203	Ebenzene	Ethylbenzene
45109	mp-xylene	Meta/para xylene
45220	styrene	Styrene
45204	o-xylene	Ortho-xylene
43235	nonane	Nonane
45210	iPbenzene	Isopropylbenzene
45209	nPbenzene	n-Propylbenzene
45212	mEtoluen	m-Ethyltoluene
45213	pEtoluene	p-Ethyltoluene
45207	135TMben	1,3,5-Trimethyl-benzene
45211	oEtoluen	0-ethyltoluene
45208	124TMben	1,2,4-Trimethyl-benzene
43238	decane	Decane
45225	123TMben	1,2,3-Trimethyl-benzene
45218	mDEbenz	m-Diethylethyl-benzene
45219	pDEbenz	p-Diethylbenzene
43954	undecane	Undecane
43141	dodecane	Dodecane

FIGURE 807.6
PERKIN-ELMER ELUTION ORDER

8.0.8.0 Procurement of Equipment and Supplies

Specifications for ordering various material and equipment can be found in the following subsections. As new equipment is received, it should be put through an acceptance testing procedure to ascertain its compliance with the following specifications. Items not meeting these specifications should be returned to and/or problems corrected by the supplier.

8.0.8.1 Analysis Instrumentation

8.0.8.1.1 Gas Chromatographs

Gas chromatographs (GC) must be able to resolve the 56 components targeted by EPA at a detection level of 0.5 PPBC or less. The GC must be capable of sampling at the required frequency of one cycle per hour and to perform unattended sampling for several days. Currently two columns with flame ionization detectors (FIDs) are the standard to adequately resolve the target components.

8.0.8.1.2 Data Acquisition System

Data acquisition systems must be able to hold several days of data and be configured to allow telecommunications for the purposes of data transfer and to allow an operator to check on the status of the GC remotely.

Minimum requirements of the data acquisition system are:
- 540 megabyte hard-drive storage
- 128 megabytes RAM
- Pentium based
- modem speed of 28.8 kilobaud

8.0.8.2 Operational Supplies

8.0.8.2.1 Compressed Gases

Compressed gases required by the sampling system must have a minimum purity of 99.995%, and have less than;
- 0.5 ppm total hydrocarbon
- 2.0 ppm oxygen
- 5.0 ppm water

Cylinder volume should be as large as is practical to allow a long operational life, typically 300 ft^3.

8.0.8.2.2 Inline Scrubbers

Oxygen and moisture scrubbers installed into operational gas delivery lines must be of the indicating type to alert the operator before their capacity has been exceeded.

8.0.8.2.3 Sample/Gas Delivery Systems

Operational gases shall be delivered to the GC through cleaned copper tubing and brass fittings.

Sample and calibration gas delivery lines will be made of nickel, or stainless steel or be lined with silica glass. The sample manifold shall be made of borosilicate glass.

8.0.8.3 Primary Calibration Material Standard:

Retention Time Standard (RTS) and Quantification Standard (QS) must be contained in clean cylinders, coated or prepared in such a manner as to prevent degradation of the components contained within. Cylinders may be low pressure or high pressure, but must be fitted with a pressure reduction regulator.

8.0.8.3.1 Retention Time Standard

Retention time standards must contain all 56 targeted components in sufficient concentrations as to be readily resolved by the GC. Impurities and unidentified components should be kept to a minimum.

8.0.8.3.2 Quantification Standard

Quantification Standard is used to generate response factors for quantitation of all peaks and typically contains two NIST traceable components, propane and benzene. The propane is used to quantitate the compounds on the PLOT column and the benzene on the BP-1 column. Concentrations should be in the range of 5 - 30 parts per billion carbon.

8.0.8.4 Acceptance Testing

8.0.8.4.1 Sampling and Data Collection Devices

The GC and data collection systems should be installed by the supplier, then operated and calibrated for 30 days. The system must prove to be reliable and stable during this burn-in period.

8.0.8.5 Warranties

The GC and data acquisition system should be warranted for the period of one year after acceptance testing has been completed.

8.0.9.0 **Installation of Instrumentation**

8.0.9.1 Environmental Conditions

8.0.9.1.1 Instrumentation must be installed in a climate controlled environment maintained at a temperature range of 64 to 86 degrees F.

8.0.9.1.2 Line voltage must be maintained within manufactures specifications. Additionally, instruments must be protected against electrical power surges.

8.0.9.2 Sampling Probes

8.0.9.2.1 Sampling manifolds must be made of borosilicate glass, nickel or stainless steel and fitted with an outlet fan drawing approximately 1700 liters/minute.

8.0.9.2.1 The sampling manifold must be cleaned at the start of monitoring and after as required, or 6 months.

8.0.9.2.2 If conditions warrant, a 2-5 micron stainless steel particulate filter may be installed in the sample line and be located as close as possible to the intake manifold.

8.0.9.2.3 All calibration delivery lines, sample lines, and fittings used on the GC will be made from stainless steel, Silcosteel, or nickel.

8.0.9.2.4 The sample probe in the manifold will be directed downstream, and have a tapered opening to minimize particulate intake.

8.0.9.2.5 Connect a calibration canister to the auto-calibration line. A MFC is not required as calibration gas may be delivered at pressure. Do not use an atmospheric vent. Open the valve of the calibration canister and check for leaks. Do not use Snoop or detergent-based leak indicators, or alcohols such as propanol to avoid possible contamination.

8.0.9.2.6 A humidification tee may be installed in the sample line, whether it is a sample line or a calibration line used to deliver the calibration gas. The tee is a ½ inch stainless steel tee with Teflon side caps and filled with distilled, deionized water. This humidifies the sample stream, Figure 809.1.

8.0.9.3 Network Configuration Documentation

8.0.9.3.1 A file shall be maintained for each PAMS monitoring site. Each file shall contain the following information:

- Site location and identifying numbers
- Monitoring purpose for each pollutant measured at that site.
- Analyzer types and serial numbers
- Maintenance schedule for all equipment at the site
- Site evaluation report

8.0.9.3.2 A full set of instrument manuals will be kept on site.

8.0.9.4 Data Recording and Transmission

8.0.9.4.1 Each shelter containing continuous analyzers shall be equipped with a telephone line to transmit data to a central computer.

8.0.9.4.2 Applicable log and operational data sheets will be maintained, and periodically a copy will be brought to the central office for examination and filing.

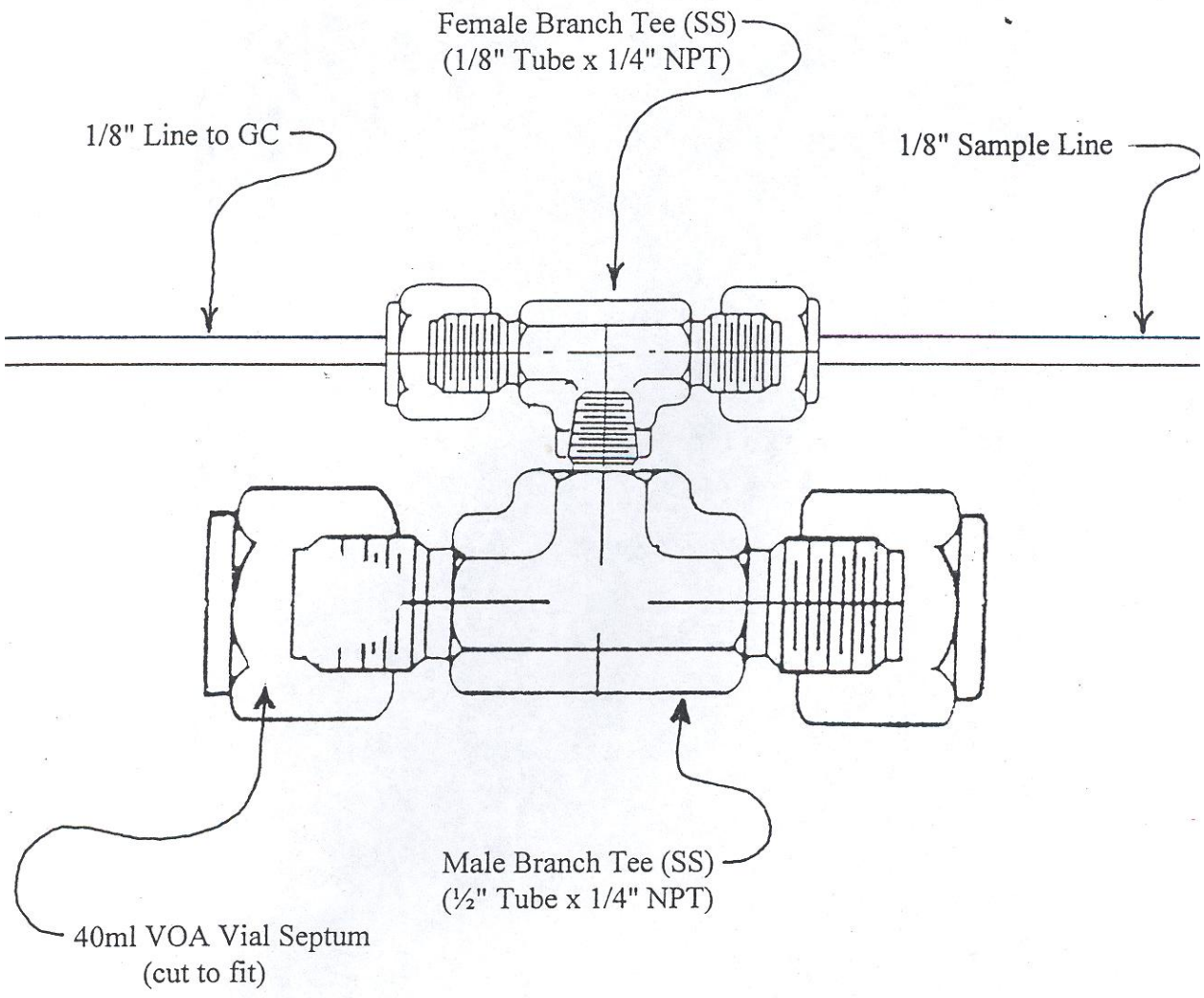

FIGURE 809.1

HUMIDIFICATION TEE

8.0.10.0 **References**

8.0.10.1 Document EPA/600-8-91/125, Technical Assistance Document for Sampling and Analysis of Ozone Precursors, Atmospheric Research and Exposure Assessment Laboratory, Research Triangle Park, N.C.

8.0.10.2 Code of Federal Regulations (CFR), Title 40, Part 58, Appendix A.

8.0.10.3 Code of Federal Regulations (CFR), Title 40, Part 136, Appendix B (MDLs).

8.0.10.4 Perkin Elmer AutoSystem gas chromatograph user manual.

8.0.10.5 Perkin Elmer ATD 400 user manual.

8.0.11 Specific Operating Procedures for the Perkin-Elmer Clarus Automatic Thermal Desorber, and associated Gas Chromatograph

Note: the operational software, TotalChrom (TC), used with the Clarus system is the same as that used by the older Autosystem GC units. Thus, no general operational details concerning TC are included here. However, unlike the Perkin-Elmer AutoSystem, the operational parameters of the gas chromatogram (GC) are controlled by the **METHOD.MTH** and are discussed in 8.0.11.4.1.

The system employs a touch pad screen.

8.0.11.1 Initial Startup:

A- ensure the ATD, GC, and PC are properly linked electronically, and all pneumatic connections made

B- Power up the systems in order of PC, GC, ATD (verify), as the three components must recognize each other

C- The GC is controlled by the PC unlike the previous GC systems. Thus the GC temperature and timing programs are contained in the Method of the operational software (TC), not by the GC touch pad. An operational Method must be developed before the operating the GC system. The program has the same GC parameters as the other PE systems

D- The ATD time and temperature program is controlled by its own keypad

E- Press **START**. The **Status** page will indicate the current step in preparation for sampling.

8.0.11.2 Pneumatic Connections

A- The system requires connection to chromatography grade helium (He) (99.999% pure or better), used as carrier gas for the columns, as well as desorb and backflush for the sample trapping material.

B- The system requires connection to chromatography grade hydrogen (H2) (99.999% pure or better), used as combustion gas for the FID's.

C- The system requires connection to a source of dry, zero grade air (ZA). Cylinder air may be used, but more commonly a compressor and catalytic type scrubber is employed in generating zero air. ZA is used to operate pneumatic switching, as well as supplying combustion gas to the FIDs. See Figure 8.0.11.1

8.0.11.3.0- ATD Operation

A- Upon power up, an alpha numeric keypad will appear on the screen. The password to open the operating software is **HSTD**. Touch **Enter**.

B- The screen will display a functional graph of the ATD operations. To load the correct operational program, touch **TOOLS**, **METHOD EDITIOR**, **FILE**, **OPEN**, and from the drop down menu select **PAMS**. Touch **OK**.

Four windows become available. Note: there is an option for **SET** which gives values as set by the operator or system, or **ACTUAL** which gives values as found. For example the pressures and temperature may vary as the system comes into equilibration. Values should be viewed in **SET** mode.

TEMP:

Valve	= 225 ^{o}C
Transfer	= 200 ^{o}C
Tube	=variable and non-critical (uncontrolled)
High	= 250 ^{o}C
Low	= -30 ^{o}C
Rate	=99C/sec

TIMING:

Purge	= 1.0 min	
Desorb	= 1.0	
Time	= 60 min	
Sample	= 40.0 min	
Trap	= temperature hold time	= 6 min
	=Desorb flow time	=1 min

Events/relay	=Relay number	=1
	=Event time	=1.00 min
	=Action	= OFF

OPTION:

Cycles	= 99
Inlet Split	= Blank
Outlet Split	= Checked
Mode	= On line

PNU:

Outlet Split	= 4 ml/min when desorbing
	= 0 ml/min when sampling
Column Pressure	= Varies, typically 43.0 to 48.0 psi, as set by service personnel
Pump	= 15 ml/min

Touch **TRAP**. This opens a window "**Column setting during trap desorb**" = XX.0 psi as set in Outlet Split above. Press **X** to close.

When finished, touch **FILE** drop down menu. If parameters were changed, press "**SAVE**" or "**SAVE AS**" to save under a different **Method** name.

Press **EXIT EDITOR** to return to main window.

C- The **PAMS** temperature and timing program will load. Specific items are:

a. Cycle time= 60 min
b. Sample flow= 15cc/min
c. Desorb time= XX min (as set, typically 6 minutes)
d. Cold trap temperature= -30 ^{o}C

Desorb temperature= +250 ^{o}C

D- At 0-5 minutes past the hour, touch **START**. The GC and PC must also be **READY** as indicated on the PC TC main screen, meaning that the GC temperature program must be loaded and at its initial state. The Clarus system takes longer to initiate sampling than do the Autosystem analyzers.

When operational three screens are available from the ATD main window, and may be used to verify proper operational settings:

RUN: Tubes = 1 to 1 **METHOD** = PAMS

STATUS: Used to access programming settings (TEMP, TIMING, OPTION, PNU) detailed above.

TRAP- touch **TRAP** to obtain:

TRAP Timing window where:

Temperature hold time = 1.0 min Desorb Flow Time = 0.0 min

Touch **OK**, or **X** to close.

RELAY Box window where:

Relay Number = 1 Event Time = 0.0 min Action = OFF

Touch **OK**, or **X** to close.

TEMP Box window where:

Gage symbol = ~9.3psi Transfer = 200 ^{o}C Tube = varies ^{o}C

Trap Rate = 99 C/S High = 250 ^{o}C Low = -30 ^{o}C

OPTION Box window where:

Inlet Split = unchecked Gage symbol = ~9.3 psi Cycles = 99

Split Flow = Blank Mode = On-Line

PAMS should appear as METHOD in box beside the -/+ key

PNU Box window where:

Column = Pressure varies Tube = 0 Desorb1 = 0 ml/min

Inlet Split = 0 ml/min Outlet= 4 ml/min

Press **TRAP**- opens window Column Setting During Trap Desorb = varies (47.0 psi typical)

8.0.11.4.0 **Gas Chromatograph**

Create an operational **METHOD**.**mth** in TotalChrom using the usual PAMS GC parameters of temperature ramp, and time.

8.0.11.4.1 Specific TC software **METHOD.mth** creation

A- On the TotalChrom main window, click on **METHOD.mth**, select **LOAD METHOD STORED ON DISC**. It is easier to adapt an existing **METHOD.mth** than to create a new one as all 56 components information would have to be entered in a new **METHOD.mth**. Click on **OK**, and select an existing **METHOD.mth** from the drop down window.

B- The **Method Editor** screen will open. Click on: **INSTRUMENT**, **INSTRUMENT CONTROL OPTIONS**, **INST TIMED EVENTS**. A screen will open that allows editing of valve options. Select:

Ambient Operation:	**Initial Setting**
Valve 4 ON at 0.10 min	V1 Off
Valve 4 OFF at xx minutes (Dean Switch Time)	V3 On
	V4 Off

To edit, click on line to be edited in **DEFINED EVENTS** window to highlight it. Edit value desired (**TIME**, **EVENT**, or **VALUE**) from boxes at top of page (not in highlighted area), and select **ADD**, or **REPLACE** as applicable.

Ambient to Autocal:

Valve 4 on at 0.2 min	V1= off
Valve 1 on at 1.0 min	V3 = on

Valve 4 off at XX minutes (XX= Dean Switch Time)	V4= off

Autocal to Ambient:

Valve 4 on at 0.2 min	V1= on
Valve 1 off at 1.0 min	V3 = on
Valve 4 off at XX minutes (XX= Dean Switch Time)	V4= off

Note: The **METHOD.mth(s)** for initiating and ending autocals must be given specific names i.e. **Turbo amb cal** for switching from ambient sampling to calibration, or **Turbo cal amb** for switching from calibration back to ambient sampling.

Click on **INSTRUMENT CONTROL OPTIONS** to open this window:

Under **CARRIER** tab;

Aux 2 Ramp	Rate	Setpoint	Hold
Initial	greyed out (0)	17.0	greyed out (0)
1	greyed out (0)	grey out (0)	greyed out (0)
2	greyed out (0)	grey out (0)	greyed out (0)

Program Time

A. None	-0.0
B. None	0.20
Oven time	47.6
End Date time	47.6

Under **DETECTOR** tab: Detector A - FID

Temp C	= 250	Range	= 1
Time Constant	= 200	Adjust	= greyed out (0)

Autozero	= ON	Value = greyed out (1)
Polarity	= greyed out	
Filiment	= greyed out (on)	

Under **GASES** tab:

H2	=40.0 ml/min
Air	= 40.0 ml/min
None	= greyed out (0)

Under **INT** tab:

Attenuation	= -6
Offset	= 5.0mv

NOTE: Set **Detector B** settings the same as **Detector A**.

Under **OVEN/INLETS** tab:

Oven Ramp	Rate	Temp	Hold
Initial	0.0	48	15.00
1	5.0	170	0.00
2	15.0	190	6.87
3	0.0	greyed out	greyed out

PROGRAM TIME box:

Oven	= 47.6
Inj A	= greyed out
Inj B	= greyed out
Date End Time	= 47.6

CRYO Box:

Coolant	= off
Cut-in Temp	= greyed out (60)
Time Out	= greyed out (999)

OVEN Box:

Max Temp	= 200
Equil Time	= 0

8.0.11.4.2 GC Display Options

Four symbols are seen at the top of the GC display. These symbols allow access to settings for the GC.

1- **A** or **B**
Selects an unused option in the current configuration. Clicking on the symbol toggles between the two unused options.

2- **OVEN SYMBOL**
Gives current oven temperature and rate step, as well as graphic of oven temperature program and time. The elapsed time of sample collection is given if active.

3- **A** or **B FID**
Toggles between A and B FID settings which are the same.
FID TEMP= 250 C
Out Put Integrator

Offset =	5.0mv	filter = 200ms
Flameout =	1.10mv	air = 400
H2 =	40.0	Flame = indicates FID ignition

4- **FLAME SYMBOL**
Indicates ignition of FID

5- **EVENTS**

TIME	EVENT	VALUE
0.10	Valve 4	ON
X.XX	Valve 4	OFF (X.XX= Dean time in minutes)

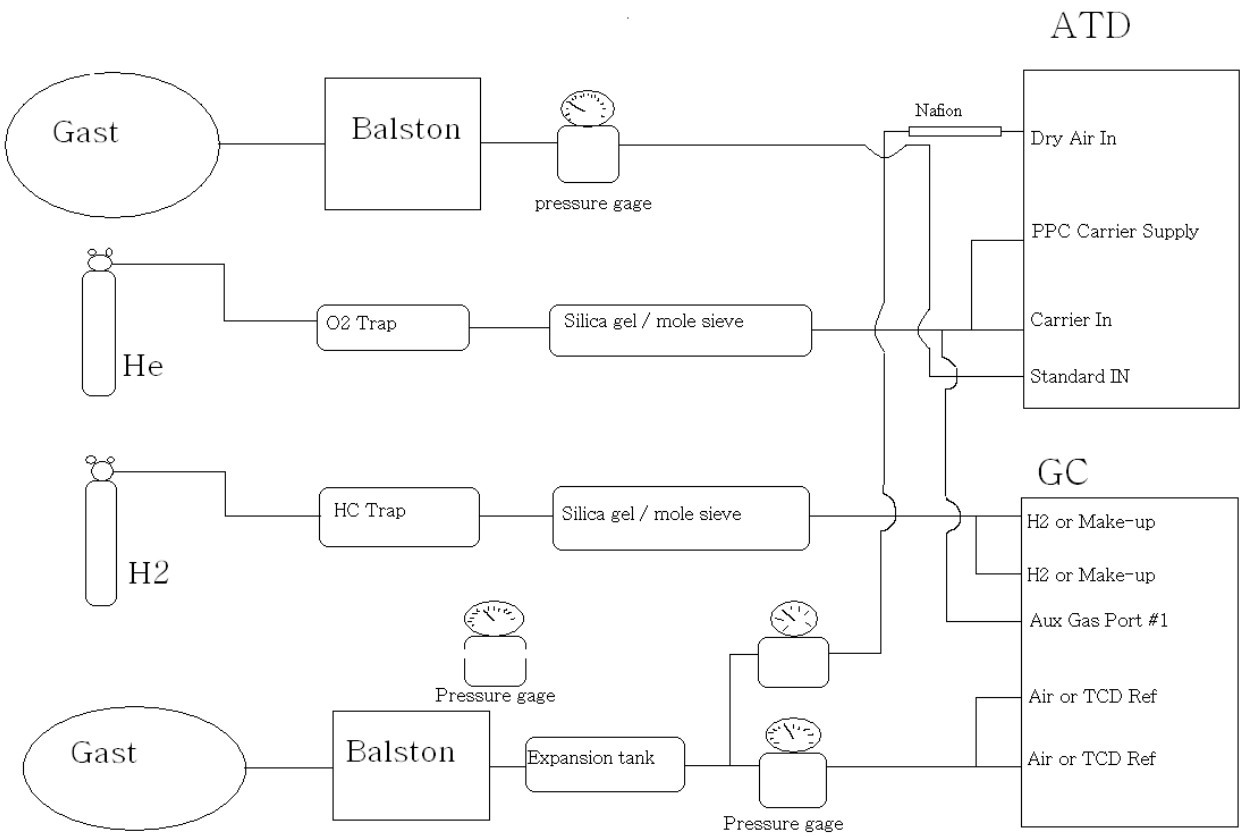

FIGURE 8.0.11.1

P-E CLARUS PNEUMATIC CONNECTIONS

Appendix B

Specific Operating Procedure for Vacuum Cleaning and Filling SUMMA Type Canisters for Volatile Organic Carbon Calibration and Analysis using the Entech Model 3100A and Model 4600A Systems

8.0.12 Calibration Canister Cleaning Procedure

8.0.12.0 Required equipment

- Ultra pure nitrogen (99.999 %) or better
- Volatile Organic Gas (VOC) standard cylinder, typically available from EPA, containing the 54 component PAMS mixture
- Two stage regulator with 580 spuds for N2 and VOC calibration gas
- Sampling canisters of 6 to 33 liter capacity with specially prepared inert internal surfaces. Canisters must have a shut off valve, a –30 to +30 psig pressure gauge, and be able to accept ¼ inch swagelock type fittings
- Entech 3100A Canister cleaning module
- Entech Model L-C canister cleaning oven
- Entech Model 4600A Dynamic Diluter
- Entech operational software to operate cleaning system
- Ultra high purity distilled water for humidification. This is placed into the stainless steel humidification reservoir at the rear of the 3100A and 4600A dilution system

8.0.12.1 Operational conditions

The canisters are used for low level sampling, analysis, or calibration of volatile organic carbon species. It is very important to protect all surfaces of the canisters and cleaning system from grease, oils, solvents, and dust as trace amounts of contaminates may be difficult to remove if they become entrained within the canister cleaning system.

The canisters to be cleaned should have external surfaces wiped free of visible dirt or oils. De-ionized water or solvents which do not leave a residue such as acetone or isopropal alcohol may be used to clean the external surfaces of the system as needed.

The de-ionized water reservoirs at the rear of the 3100A, and 4600A modules should be filled to the indicated mark.

The work area near the canister cleaning system should be kept free of potential contaminates such as oils or solvents, and dust should be minimized.

Approximately 45 minutes are needed to clean two 15 liter canisters, or one 33 liter canister. Approximately 90 minutes are required to fill one 15 liter canister or 180 minutes to fill one 33 liter canister using the 4600a Dynamic Diluter. Figure 8.0.12.1 describes the system configuration.

8.0.12.2 Canister Cleaning Procedure

8.0.12.2.1 Turn on the roughing pump about 5 minutes before starting the cleaning process.

8.0.12.2.2 Install the canister to be cleaned onto one of the oven cleaning ports by removing the ¼ inch plug from the oven port. Use the knurled knob to tighten the fitting to the canister. DO NOT OVERTIGHTEN the fitting, a vespel ferrule is used which deforms easily compared to metal ferrules. This vespel ferrule provides an adequate seal with relatively light tightening. NOTE: be certain to orient the canister so that the external pressure gauge is visible and the knurled knob is easily reached. The oven and canister will be heated, avoid touching metal surfaces after oven heating. Do not open canister valve at this time.

8.0.12.2.3 Turn on the oven and set the dial temperature selector to approximately 100°C. This is the 4 setting on the dial, adjust as needed. Actual temperature will be verified in Step 8.0.12.2.5 below.

8.0.12.2.4 Turn on the ultra-high purity nitrogen cylinder, set the two stage regulator output pressure to 60psi.

8.0.12.2.5 Using the associated PC, mouse click on the **3100** icon to open the canister cleaning software, Figure 8.0.12.2. Click on the **OPEN** icon and using the drop down menu, click on the canister cleaning **Method** desired and select the **Method** (example: C\smart\canclean.m30). Click on the **RUN** icon. The 3000/3001 **RUN CONTROL SCREEN** will open (Figure 8.0.12.3). Verify that the oven temperature is at 100C (Heater 1 & 2 box on screen).

8.0.12.2.6 Click on the **ROUGH PUMP** box to initiate system evacuation. This will evacuate the system from the rough pump to the inlet connections of the canister to be cleaned in the cleaning oven. Allow the system two minutes to stabilize while observing the PRESSURE (psia) value. It should drop to and hold at approximately 0.0.

8.0.12.2.7 Select **ALL OFF** on the 3100A control software screen and observe the PRESSURE (psia) value. It should stabilize and hold at <2.0 indicating no leak in

the system between the pump and closed canister. If the pressure stabilizes above 2.0:

A- but stabilizes below 15 psia after a few minutes, the system had not been allowed adequate time to stabilize from the previous pump down step. The ROUGH PUMP may be turned back on to draw down to <2.0 on the PRESSURE (psia) window to repeat the test.
B- If the pressure continues to increase a leak of concern exists. Check fittings at all points between the rough pump and canister connections and repeat the rough pump vacuum test.

8.0.12.2.8 When no leak is found as verified by the system holding vacuum at <2.0, open the oven door and open the canister valve. **CAUTION**: the oven and canister will be **HOT**. Use gloves to open the canister valve. The vacuum indication may increase as any pressure in the canister is released to the system. This is acceptable.

8.0.12.2.9 From the front of the 3100A Canister cleaner module, press and hold the **START** momentary switch unit until the yellow LED under 27000 RPM is illuminated. Release the switch. The green LED will illuminate indicating the molecular pump is ready, this usually takes less than 1 minute.

8.0.12.2.10 (Optional step for further leak check) Click on the **H.V. PUMP** box on the PC display (Figure 8.0.12.3). In a few seconds the molecular pump will start. It is audible. Allow the system to pump down to <100M TORR. Allow it to stabilize two minutes, then click on **ALL OFF**. The molecular pump will shut off, and the system should hold the 100 mtorr vacuum. If the pressure increases above 100mtorr:

A- but stabilizes in a few minutes the system had not been allowed adequate time to stabilize from the previous pump down step. The H.V. PUMP may be turned back on to draw down to <2.0 on the PRESSURE (psia) window to repeat the test.
B- If the pressure continues to increase a leak of concern exists. Check fittings at all points between the H.V. pump and canister connections and repeat the H.V. pump vacuum test.

8.0.12.2.11 Click on the **GO** icon from the 3000/3001 Run Control Screen to initiate the canister cleaning method (ensure the canisters were opened in Step 8.0.12.2.8 above). The precise cleaning sequence will depend on the method selected. A 3 cycle evacuation with N2 purge is typical. Note: the PC pressure indicators (PRESSURE psia, and mtorr) do not display the entire range. Thus the system may appear to be doing nothing but is in fact evacuating (the PC CYCLE

CLEANING LED will be illuminated, and the CLEANING CANISTER LED on the 3100A will be illuminated). Allow sufficient time for the evacuation to occur.

Vacuum (mtorr) will go to about 1000, and the PRESSURE PSIA to about –0.2. The system is then flooded with N2 to clean and the evacuation steps repeat, typically three times (depending on Method selected).

At the end of the final purge and evacuation cycle, the molecular pump will perform a final vacuum cleaning indicated by the LED icon on the PC software. This step decreases the canister pressure to <50mtorr. When this is achieved the software shuts the pump off.

The particular step being performed will be displayed in the upper right corner of the screen as Rough Pump On, Dilutent On, or Hi Vac Pump On. The cycle number will be displayed in the upper left of the screen. When the cleaning procedure is completed the display will state RUN COMPLETE.

8.0.12.2.12 Mouse click on the **ALL OFF** icon. Click on the **STOP** icon. Turn off the molecular pump by holding the momentary switch at the top right of the 3100A module box to the left until the green LED goes out.

8.0.12.2.13 Open the oven door (the oven may be turned off at this point if no other canisters are to be cleaned). Carefully close the canister valve, and remove canister from oven. CAUTION- surfaces will be very hot, wear protective gloves, or allow system to cool down. NOTE: if more than one canister was cleaned, be certain to close the valves on each before removing any canister. Otherwise, room air will be drawn into the system and each cleaned can require cleaning again.

8.0.12.2.14 Cap the open port in the oven using a clean ¼ inch stainless steel cap. Allow the rough pump to continue to operate for 10 minutes at which time it may be shut off.

8.0.12.2.15 Turn off purge gas (N2 or other) at the cylinder regulator outlet, and main valve.

8.0.12.3.0 **<u>Diluted Calibration Canister Filling Procedure</u>**

If undiluted canister filling is desired, go to Section 8.0.12.4.0

8.0.12.5.1 Required Equipment

- equipment as specified in 8.0.12.1.0
- cleaned and evacuated canister(s)

Click on **4600** icon to open the control software. Click on **OPEN** and select the canister filling Method desired (10 to 1 dilution, 30 to 1 dilution, etc). The Dynamic Dilution System window will open, Figure 8.0.12.4.

8.0.12.3.2 Open the dilution gas cylinder (typically N2, or air), set the second stage delivery pressure to approximately 60.

8.0.12.3.3 Open the calibration gas cylinder (VOC standard) and set the second stage delivery pressure to approximately 60.

8.0.12.3.4 Ensure that BOX 1 displays dilution gas flow desired, and BOX 2 displays calibration gas flow desired. If not as desired, select the correct Method in Step 8.0.12.3.2, or create a new Method.

8.0.12.3.5 Click on **GO** and allow the 4600A dilution control system to purge and stabilize for 5 minutes.

8.0.12.3.6 Open the 4600A isolation valve for 1 minute to allow flows to equilibrate at the set calibration gas flow.

8.0.12.3.7 Attach the 4600A fill line to a cleaned, evacuated calibration canister. When connected, close the 4600A isolation valve, then open the calibration canister valve. NOTE: if additional humidification is desired, add deionized water to the valve of the calibration canister using a clean microsyringe before attaching the 4600A fill line to the valve.

8.0.12.3.8 Observe the PC screen psia reading. It should decrease to approximately 0.0. Close the canister valve and observe the PC screen psia reading and/or the canister pressure gauge. It should hold at approximately 0.0 indicating no leak exists. If the psia reading increases, a leak is present that must be repaired before continuing.

8.0.12.3.9 Open the 4600A isolation valve and the calibration canister valve to initiate canister filling, and observe the PC screen dilution and calibration gas flows to ensure they are as set. Some variation is to be expected during the first few seconds of canister filling, but will stabilize as the mass flow controllers equilibrate and the canister fills. The PC psia indication will increase from 0.0 to approximately 45 at completion of canister filling. Do not overfill.

Note 1: it takes about 90 minutes to fill a 15 liter canister. A vent release at the rear of the 4600A prevents serious overfilling of the canister, but the process should be checked periodically to prevent waste of calibration gas after the canister is filled.

Note 2: 0 psia on the PC = -30 gauge indication on calibration canister being filled.
15 psia on the PC = 0 gauge indication on calibration canister being filled.
30 psia on the PC = 15 gauge indication on calibration canister being filled.
45 psia on the PC = 30 gauge indication on calibration canister being filled.

8.0.12.3.10 When the canister is filled to the desired pressure, click on **STOP** on the PC window. Close the 4600A isolation valve, close the canister valve, and remove the fill line from the canister. Be certain to cap the 4600A fill line. Install the canister knurled cap to protect the fitting.

8.0.12.3.11 If additional canisters are to be filled, return to the applicable Step above and fill the canisters as desired.

8.0.12.3.12 When finished, the PC software may be exited. Be certain to close the calibration gas / dilution gas cylinder second stage regulator outlet, and main cylinder valve.

8.0.12.4.0 **Undiluted Calibration Canister Filling Procedure**

This procedure is used to fill calibration canisters with undiluted calibration gases, typically from high pressure source cylinders. **It is very important that the calibration canister not be over pressurized during this procedure- follow directions carefully. Do not leave the canister unattended during this fill procedure.**

8.0.12.4.1 Required Equipment
- equipment as specified in 8.0.12.1.0
- cleaned and evacuated canister(s)

8.0.12.4.2 Assemble fittings needed to attach the source high pressure calibration cylinder to the cleaned, evacuated canister. Typically, a 1/8 inch fitting is used on the source cylinder delivery line, and the canister is ¼ inch, thus a reducing union is required. Use stainless steel fittings only. NOTE: if canister humidification is desired, add deionized water to the valve of the calibration canister using a clean microsyringe before attaching the fill line to the canister.

8.0.12.4.3 On the calibration gas source high pressure cylinder, back out the second stage pressure regulator, ensure the regulator outlet valve is closed, and open the cylinder. Turn the regulator second stage valve to approximately 20 psi, and open

the regulator outlet valve to flush the delivery line with calibration gas. While the line is flushing, attach the calibration gas outlet line to the calibration canister (ensure any desired deionized water has been added to the canister fitting by this point) and snug the fitting to the canister.

8.0.12.4.4 Open the canister valve allowing calibration gas to start filling the canister. Turn the high pressure source cylinder second stage regulator to approximately 35psi. Observe the canister pressure gauge as the canister fills. At 30 psi on the canister pressure gauge (typical full pressure for canisters), shut off the canister valve, shut off the high pressure regulator output valve, and back off the second stage regulator. Turn off the main valve of the calibration source cylinder. **DO NOT** leave the canister unattended during this procedure to prevent over pressurization of the canister.

By setting the high pressure cylinder regulator output to no higher than 35 psi, the possibility of over pressurizing the canister is minimized.

8.0.12.4.5 Remove the high pressure delivery line from the canister, remove any reducing unions used, and cap the canister with a ¼ inch stainless steel plug. Either cap the high pressure delivery 1/8 inch fitting, or replace it on the rear of the Entech dilution module, Calibration Gas Inlet Port 1.

8.0.12.5.0 **Developing Canister Filling Methods**

Methods can be developed to create different calibrations mixes beyond the 10 to 1 used for automated calibrations, or the 30 to 1 mix used for preparing the Method Detection Level mixtures.

8.0.12.5.1 Double click on the 4600 icon which opens the Dynamic Dilution System window. This is used to set the desired volume in standard cubic centimeters (sccm) of calibration gas and dilution gas.

8.0.12.5.2 Highlight Box 1and type in the diluent flow desired, typically N2 or zero air.

8.0.12.5.3 Highlight Box 2 and type in the calibration gas flow desired.

8.0.12.5.4 Click on the SAVE icon at the top of the screen. In the dialog box which opens give the Method a descriptive name with the extension *.M45. Click Save. The default is to save Methods created in C:\Smart\ directory.

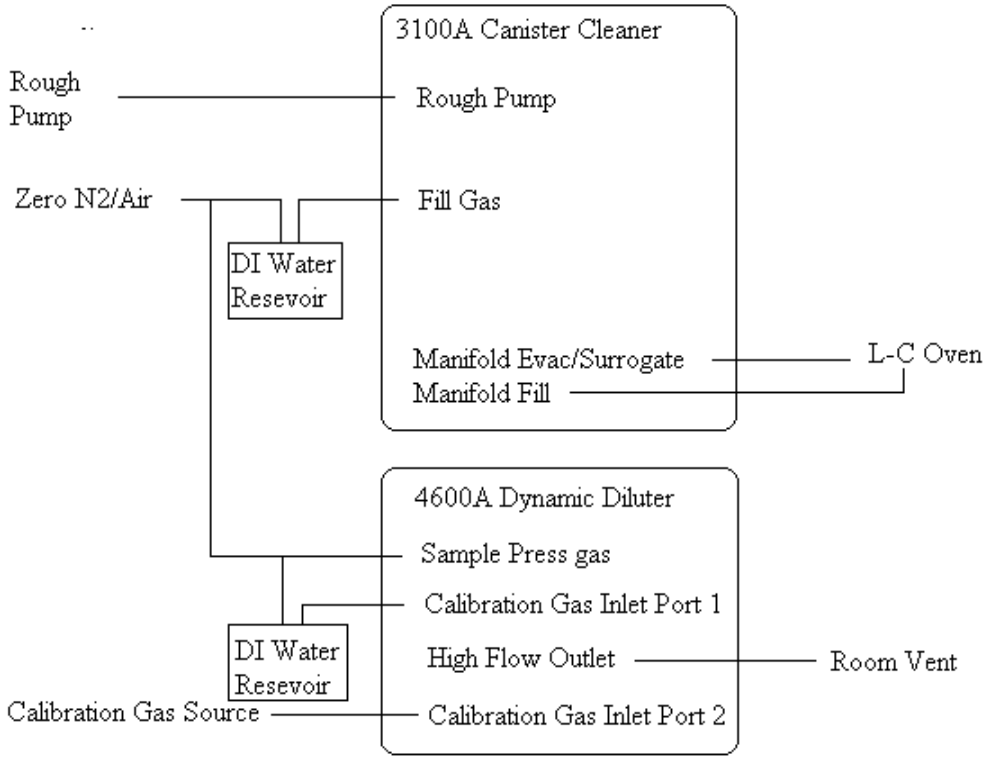

Figure 8.0.12.1

Entech 3100A, 4600A Canister Cleaning and Filling Configuration

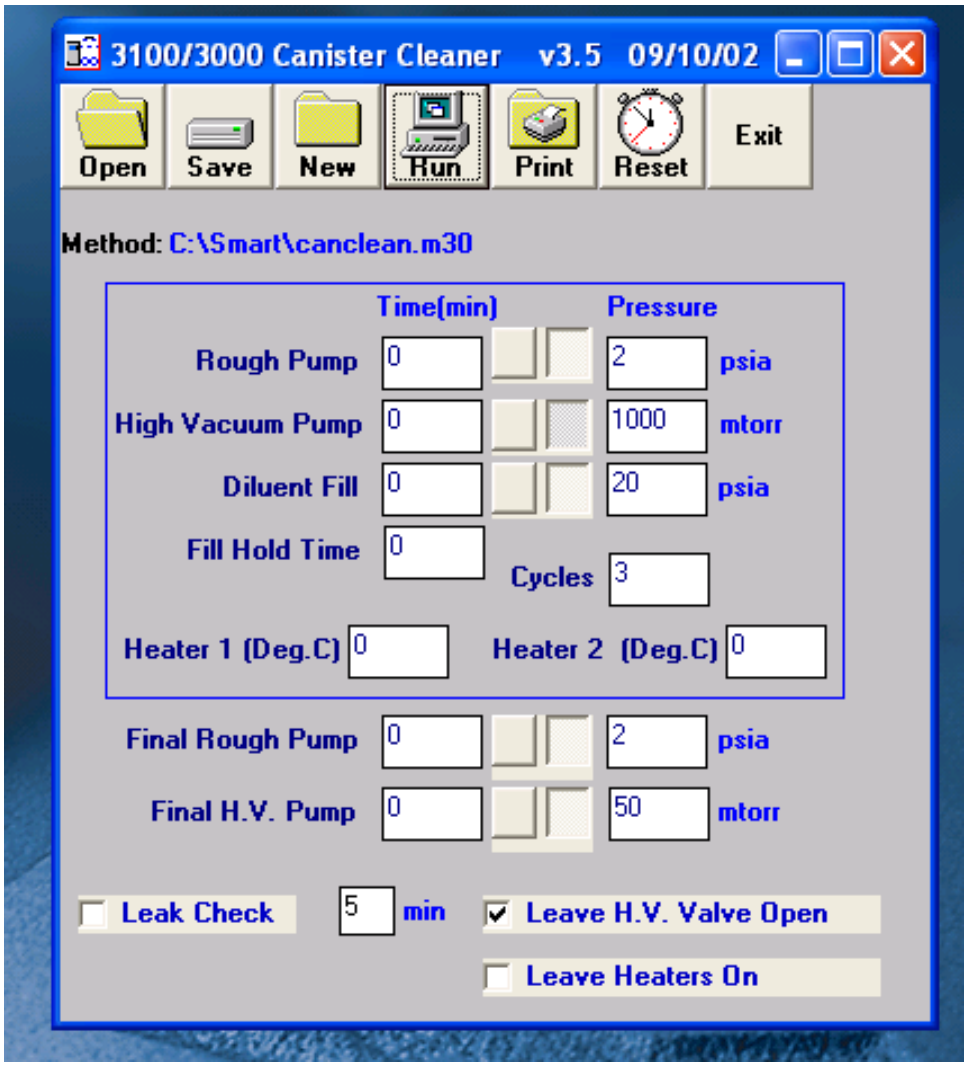

Figure 8.0.12.2

Entech 3100A, Canister Cleaning Main Window

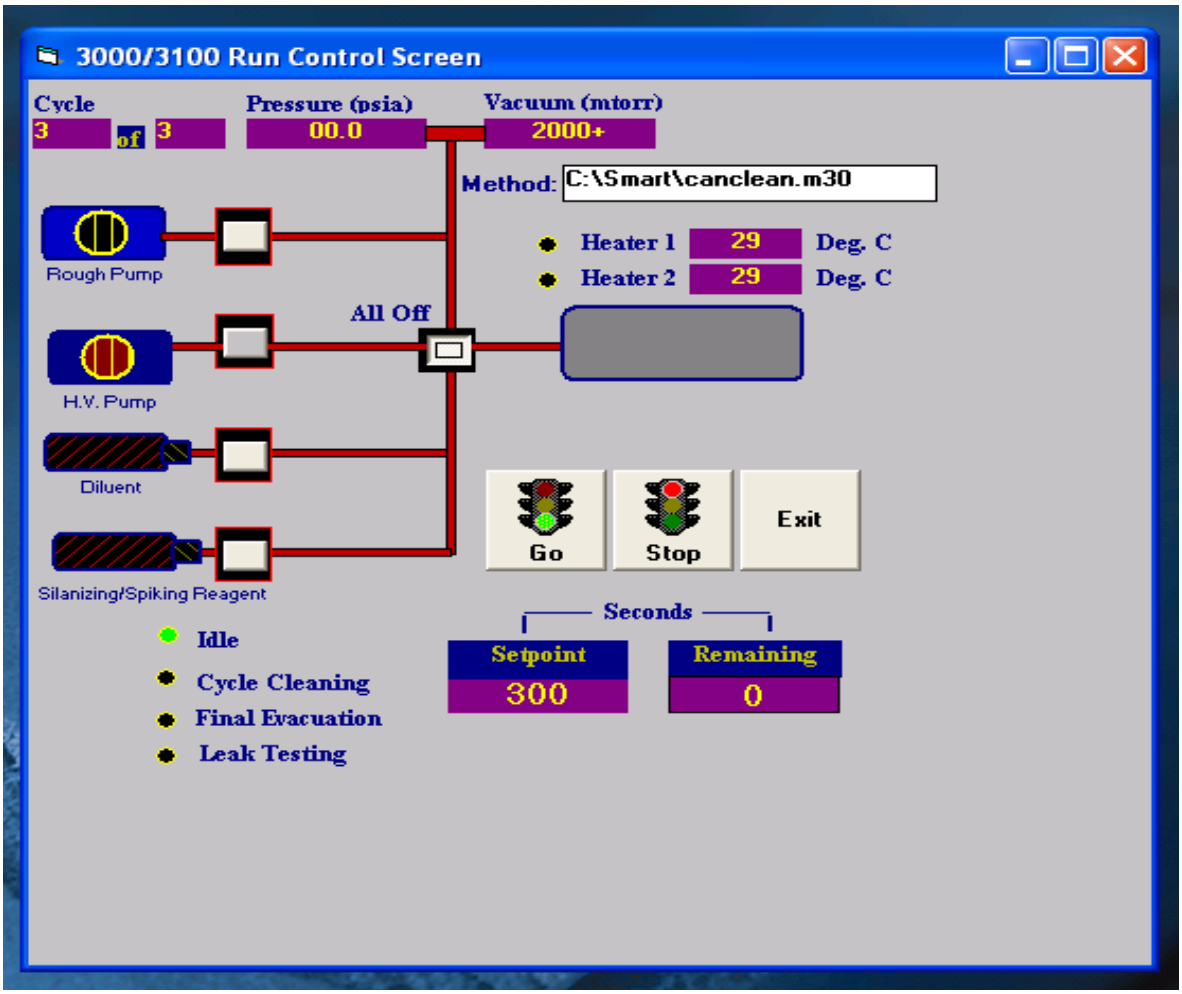

Figure 8.0.12.3

Entech 3100A, Canister Cleaning Control Window

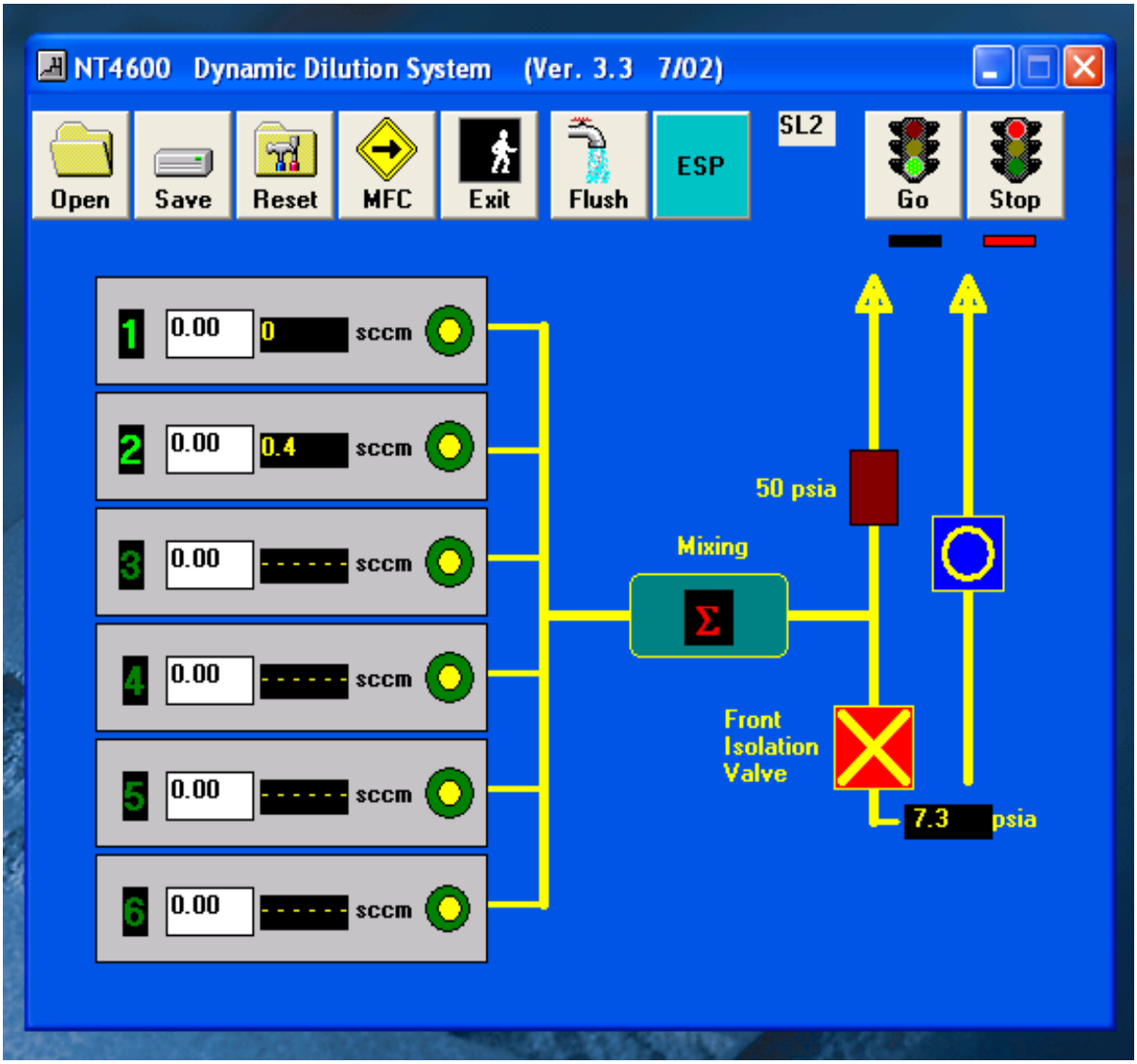

Figure 8.0.12.4

Entech 4600, Canister Dilution Control Window