State of Connecticut Governor's Residence
Carriage House Sump and Pump Installation

Project Number BI-2B-217-A(2)

General Requirements

This facility is a secured facility, your arrival schedule to something that must be coordinated with the Security Program at the Governor's Residence. The Phone number at the facility is 860-523-1382. The person on the site that needs to coordinate your arrival, supplies arrivals, etc. will be Daren Cugno at this number. You are obligated to call each morning that you plan on being on the site. Arrangements can be made to allow you to enter the site after your first visit at the back gate, near the carriage house, this is especially true for material delivery.

You will be responsible for providing a portable toilet for the duration of the work period. Water and electricity will be provided on site.

The DPW project manager for this project is Bruce Bockstael, who can be reached at anytime, his office number is 860-713-5631, his cell is 860-573-9693.

You can expect to provide a schedule for the work.. This schedule will provide the project with the duration of the work on site, the schedule will also include a time line needed for shop drawing preparation and approval. Work to be noted on the schedule as well will be: excavation, installation, connection to power, drain line installation, final site grading.

Payment will be based on simple schedule of values. It is expected that the work duration will only require two payments but if delays occur due to outside issues that will be flexible. A seven and one half percent (7.5%) retainage will be assessed during the project.

Scope of Work

The project is to provide adequate storage and removal of storm water that drains into the lower portion of the basement access drive. During heavy rain, water does not only come from the surface water but becomes a partial watershed for the upper portions of the site. The work will include the removal of unsuitable materials as part of the excavation. A lot of natural material that has decayed over the years can be expected. The work will include bringing in material to support the precast structure from settlement. In addition to the materials shown in the attached diagram, you will be responsible for providing a junction box, necessary conduit for the electrical service within the basement, connecting the appropriate service to the pump with all appropriate safeguards from potentially wet environment. Lastly, you will provide a PVC piping system to bring the discharged water out to the drive as shown on the diagram and allow its discharge onto the surface of the existing drive.

BID Document for

Governor's Carriage House Sump and Pump Installation
DPW Project No. BI-2B-217-A(2)

May 2007

The _____ has prepared a bid for the described work provided by DPW for the above project.

The base bid is a Lump Sum of $ _____.

It is understood that the bid will be awarded to the lowest qualified bidder.

Signed by _____ Date _____
Authorized Representative of the General Cont.

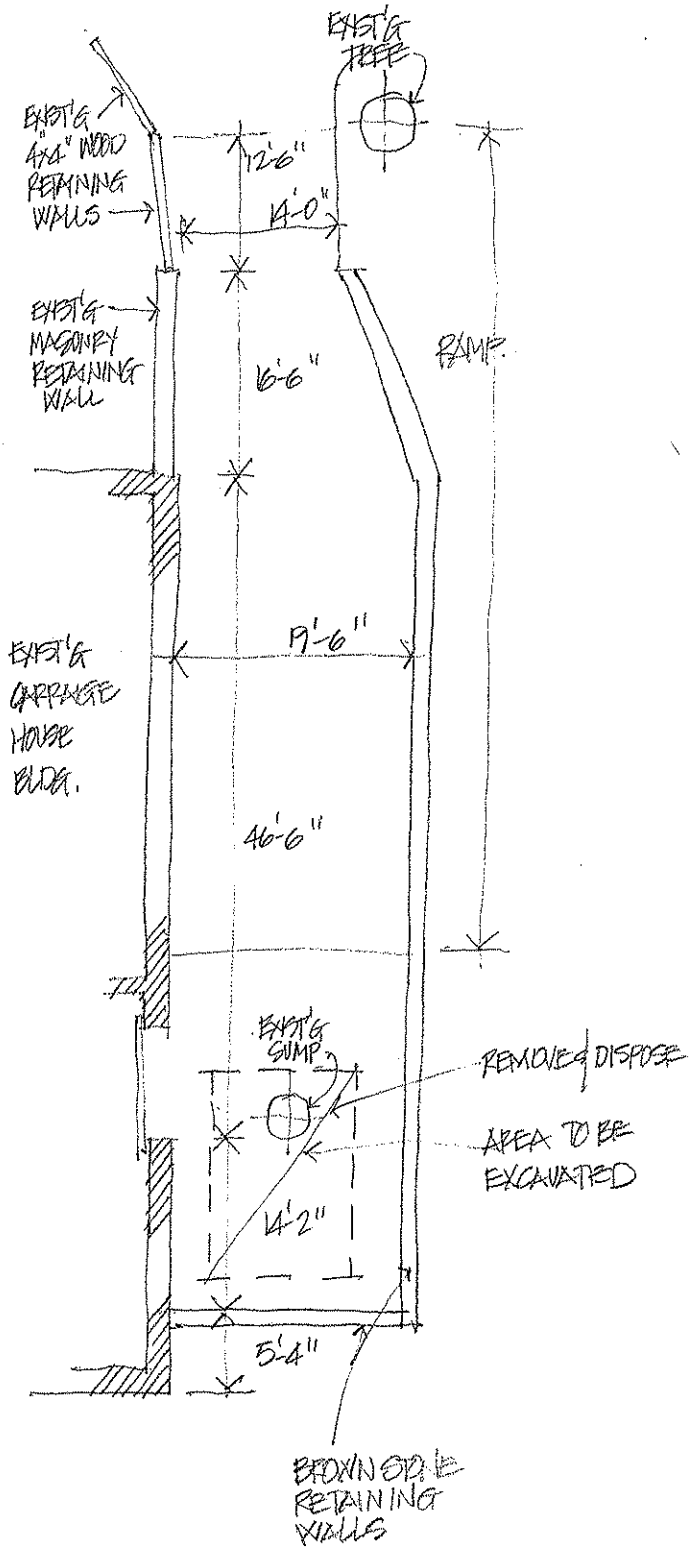

EXISTING SITE PLAN

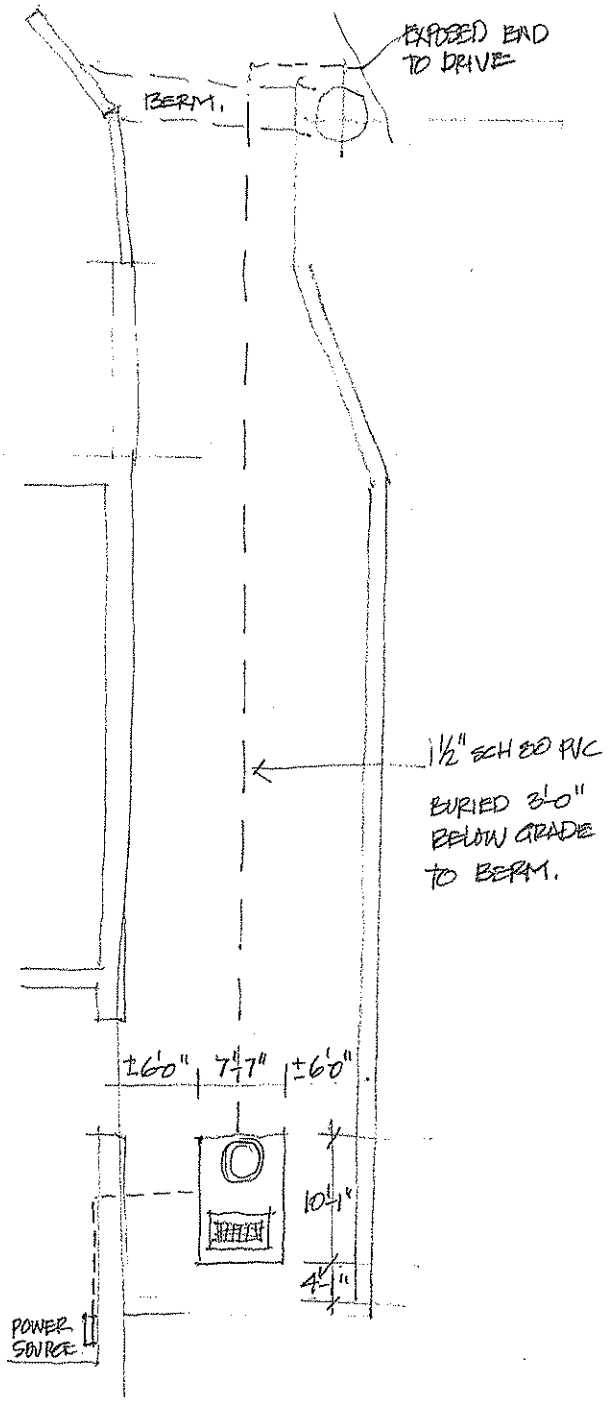

NEW INSTALLATION OF SUMP

GOVERNOR'S CARRIAGE HOUSE
SUMP INSTALLATION

PRECAST SUMP W/ PUMP

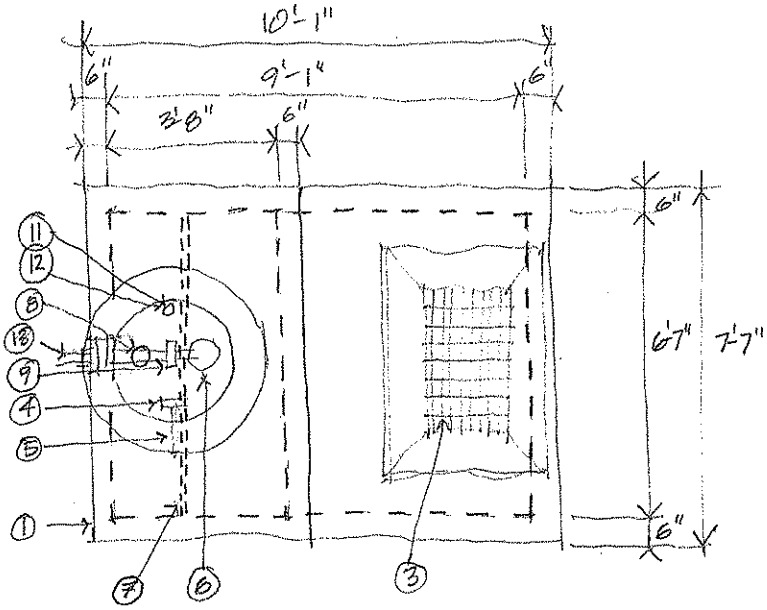
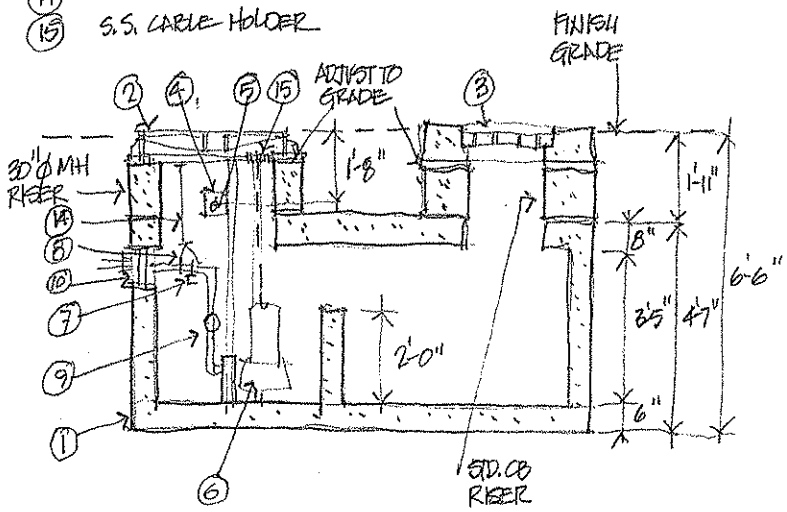
1. UNITED CONC. PUMP CHAMBER MODEL PC 1250
2. 30" CAST IRON FRAME + COVER
3. CL TOP (PAINTED) - INSTALL IN FIELD
4. NEMA 4 JUNCTION BOX
5. 1½" CONDUIT SLEEVE
6. ABS PUMP MODEL EF05XI W/ 5/16" S.S. CHAIN
7. S.S. PIPE SUPPORT
8. 1½" BRONZE GATE VALVE
9. 1½" BRONZE CHECK VALVE
10. 1½" BOOT
11. S.S. UPPER FLOAT POLE BRACKET ON 1½" SCH 80 PVC FLOAT POLE
12. FLOAT SWITCH (3 REQUIRED)
13. 1½" PVC SCH 80 PIPE
14. S.S. EXTENTION HANDLE.
15. S.S. CABLE HOLDER