ENERGY UPGRADES
MILFORD COURTHOUSE
MILFORD, CONNECTICUT
PROJECT: BI- 2B - 315

BID OPENING	**1:00 P.M.**	**MARCH 31, 2010**
ADDENDUM NUMBER 5	**DATE OF ADDENDUM**	**MARCH 31, 2010**

The following clarifications are applicable to drawings and specifications for the project referenced above.

Item 1

The bid opening will be changed from March 31, 2010 at 1:00 P.M. to April 7, 2010 at 1:00 P.M.

All questions must be in writing (not phone or e-mail) and must be forwarded to the consulting Architect/Engineer (Michael Williams, Fax: 860-645-0717) with copies sent to the DPW Project Manager (Ashour Gevargisnia, Fax: 860-713-7261) and the Construction Manager.

End of Addendum Number Five

Mellanie Walton for
David Busanet, Bidding & Contracts Supervisor
Department of Public Works

INTERDEPARTMENTAL MEMORANDUM

TO: David Busanet, Bidding and Contracts Supervisor
Bidding & Contracts, Room G-35
165 Capitol Avenue, Hartford, CT 06106

FROM: Ashour Gevargisnia, Project Manager
Team CSU, Room 460
165 Capitol Avenue, Hartford, CT 06106

3/25/2010

DATE: **3/25/2010**

SUBJECT: ADDENDUM # 4

PROJECT TITLE: ENERGY UPGRADES
MILFORD COURTHOUSE

PROJECT NO.: **BI-2B-315**

SCHEDULED BID OPENING: **MARCH 31, 2010**

Please expedite the attached Addendum # 4.

1. The total number of pages in this addendum is: 3
2. The total number of drawings in this addendum is: N/A.
3. See attached Revised "Bid Released" form (55) dated: N/A.
4. Coordinator to explain reason for addendum: Addendum for clarification purposes. Addendum will not save money.

Attachment
xc: Agency-Vladimir Kubin
Team File:BI-2B-315 (R3)
Project Manager-Ashour Gevargisnia

ENERGY UPGRADES
MILFORD COURTHOUSE
MILFORD, CONNECTICUT
PROJECT: BI- 2B - 315

BID OPENING	**1:00 P.M.**	**MARCH 31, 2010**
ADDENDUM NUMBER 4	**DATE OF ADDENDUM**	**MARCH, 25, 2010**

The following clarifications are applicable to drawings and specifications for the project referenced above.

Item 1

On drawing M-6.0, Mechanical Schedules & Legends, ADD the following note #6 in Air Handling Unit Schedule:

6. Air Handling Unit shall be disassembled to fit thru doors. Air Handling Unit must be broken down beyond shipping splits, to individual panels. Construct Air Handling Unit in basement mechanical room.

Item 2

On drawing M-1.4, Mechanical Part Plans & Schematics, ADD the following note to the Air Riser Schematic Diagram:

NOTE: Return airflows indicated are maximums (full economizer mode). Minimum return airflows (no economizer mode) shall be balanced to the following:

RTU-1: 5340 CFM
RTU-2: 3995 CFM
RTU-3: 3310 CFM
RTU-4: 2500 CFM
RTU-5: 2980 CFM
RTU-6: 3100 CFM
RTU-7: 7380 CFM
RTU-8: 3440 CFM
RTU-9: 2600 CFM
RTU-11: 1600 CFM
RTU-12: 1775 CFM
AHU-13: 3900 CFM

Item 3

In specifications section 00 11 16, Invitation to bid (page 1 of 4), DAS Classification:

DELETE General Trades.

SUBSTITUTE : HVAC

Item 4

In specifications section 00 11 16, Invitation to bid (page 3 of 4), Contract Time Allowed:

DELETE: 150.00 Calendar Days

SUBSTITUTE: 210.00 Calendar Days

Item 5

In specifications section 01 12 16, Work Sequence – Phase(s), part B:

DELETE: 120 Calendar Days

SUBSTITUTE: 210 Calendar Days

ADD: No Rooftop Unit work shall be performed between the dates of June 15th, 2010 and September 1st, 2010.

Item 6

In specifications section 230593, 3.6 (Procedures for Constant Volume Air Systems), Part B:

DELETE: Adjust volume dampers for main duct, submain ducts, and major branch ducts to indicated airflows within specified tolerances.

1. Measure airflow of submain and branch ducts.

    a. Where sufficient space in submain and branch ducts is unavailable for Pitot-tube traverse measurements, measure airflow at terminal outlets and inlets and calculate the total airflow for that zone.

2. Measure static pressure at a point downstream from the balancing damper, and adjust volume dampers until the proper static pressure is achieved.
3. Remeasure each submain and branch duct after all have been adjusted. Continue to adjust submain and branch ducts to indicated airflows within specified tolerances.

B. SUBSTITUTE: Provide and adjust volume dampers for main ducts leaving all air handling equipment and rooftop units, upstream from all terminal outlets. Provide 3 traverse duct measurements for each rooftop unit and air handler. It is not necessary to balance the entire building air distribution system. Only balance the duct mains to airflows indicated on the air riser diagram shown on drawing M-1.4 (revised by this addendum).

1. Measure airflow of main ducts.

a. Where sufficient space in main ducts is unavailable for Pitot-tube traverse measurements, measure airflow in branch ducts and calculate the total airflow for that zone.

2. Measure static pressure at a point downstream from the balancing damper, and adjust volume dampers until the proper static pressure is achieved.
3. Re-measure each main and branch duct after all have been adjusted. Continue to adjust main and branch ducts to indicated airflows within specified tolerances.

Item 6

In specifications section 230593, 3.6 (Procedures for Constant Volume Air Systems):

DELETE: Part C and Part D in their entirety.

All questions must be in writing (not phone or e-mail) and must be forwarded to the consulting Architect/Engineer (Michael Williams, Fax: 860-645-0717) with copies sent to the DPW Project Manager (Ashour Gevargisnia, Fax: 860-713-7261) and the Construction Manager.

End of Addendum Number Four

Mellanee Walton for
David Busanet, Bidding & Contracts Supervisor
Department of Public Works

ENERGY UPGRADES
MILFORD COURTHOUSE
MILFORD, CONNECTICUT
PROJECT: BI- 2B - 315

BID OPENING	**1:00 P.M.**	**MARCH 31, 2010**
ADDENDUM NUMBER 3	**DATE OF ADDENDUM**	**MARCH, 19, 2010**

The following clarifications are applicable to drawings and specifications for the project referenced above.

Item 1

In specifications section 230900, Part 2.1, section A: DELETE Items 1,2,&3.

Item 2

In specifications section 230900, Part 2.1, section A: ADD the following Items:

1. Alerton brand, BACtalk software
2. Automated Logic brand, WebCTRL software
3. Siemens brand, Insight Software

Item 3

In specifications section 230900, Part 2.2: DELETE section C in its entirety.
Owner to provide computer package.

All questions must be in writing (not phone or e-mail) and must be forwarded to the consulting Architect/Engineer (Michael Williams, Fax: 860-645-0717) with copies sent to the DPW Project Manager (Ashour Gevargisnia, Fax: 860-713-7261) and the Construction Manager.

End of Addendum Number Three

Mellanie Walton for
David Busanet, Bidding & Contracts Supervisor
Department of Public Works

INTERDEPARTMENTAL MEMORANDUM

TO: David Busanet, Bidding and Contracts Supervisor
Bidding & Contracts, Room G-35
165 Capitol Avenue, Hartford, CT 06106

FROM: Ashour Gevargisnia ~~Project Manager~~ 3/19/2010
Team CSU, Room 460
165 Capitol Avenue, Hartford, CT 06106

DATE: **3/19/2010**

SUBJECT: ADDENDUM # 2

PROJECT TITLE: Energy Upgrades
Milford Courthouse
14 West River Street Milford, Connecticut

PROJECT NO.: **BI-2B-315**

SCHEDULED BID OPENING: **3/31/2010**

Please expedite the attached Addendum # 2

1. The total number of pages in this addendum is: 1
2. The total number of drawings in this addendum is: 15
   (If not applicable, so state)
3. See attached Revised "Bid Released" form (55) dated: N/A
   (If not applicable, so state)
4. Revised scope, Will addendum save money or cost more. Cost more.

Attachment
xc: Agency Vladimir Kubin Judicial
Team FileBI-2B-315 (R3)
Project Manager Ashour Gevargisnia

ENERGY UPGRADES
MILFORD COURTHOUSE
MILFORD, CONNECTICUT
PROJECT: BI- 2B - 315

BID OPENING	**1:00 P.M.**	**MARCH 31/2010**
ADDENDUM NUMBER 2	**DATE OF ADDENDUM**	**MARCH, 18, 2010**

The following clarifications are applicable to drawings and specifications for the project referenced above.

Item 1

Add scope of work to drawing M-1.3 indicated by attached sketches SK-S01 thru SK-S09.

Item 2

Add scope of work to drawing M-1.1 indicated by attached sketches SK-S10 thru SK-S15.

All questions must be in writing (not phone or e-mail) and must be forwarded to the consulting Architect/Engineer (Michael Williams, Fax: 860-645-0717) with copies sent to the DPW Project Manager (Ashour Gevargisnia, Fax: 860-713-7261) .

End of Addendum Number Two

Mellanee Walton for
David Busanet, Bidding & Contracts Supervisor
Department of Public Works

GENERAL NOTES:

1. THE WORK SHOWN ON THESE DRAWINGS HAS BEEN DESIGNED IN ACCORDANCE WITH THE STRUCTURAL REQUIREMENTS OF THE 2009 CONNECTICUT STATE BUILDING CODE, INCLUDING THE 2003 INTERNATIONAL BUILDING CODE, EXCEPT AS AMENDED, ALTERED OR DELETED BY THE ADDITIONAL PROVISIONS IN THE CONNECTICUT SUPPLEMENT.

2. DIMENSIONS OF EXISTING STRUCTURES SHOWN ON THESE PLANS HAVE BEEN TAKEN FROM THE ORIGINAL DESIGN DRAWINGS AND ARE NOT GUARANTEED. THE CONTRACTOR SHALL VERIFY ALL EXISTING DIMENSIONS IN THE FIELD.

3. THE CONTRACTOR SHALL SUBMIT SHOP DRAWINGS OF GUARDRAILS AND STRUCTURAL STEEL FOR REVIEW BEFORE PROCEEDING WITH WORK. THE CONTRACTOR SHALL CHECK ALL DIMENSIONS AND ACCEPT FULL RESPONSIBILITY FOR DIMENSIONAL CORRECTNESS. SHOP DRAWINGS SHALL BEAR THE REVIEW AND APPROVAL STAMP OF THE CONTRACTOR, IN ACCORDANCE WITH THE GENERAL CONDITIONS.

4. STRUCTURAL PLANS SHALL NOT BE REPRODUCED IN WHOLE OR IN PART FOR USE AS SHOP DRAWINGS OR ERECTION PLANS. (THERE WILL BE NO RELAXATION OF THIS RESTRICTION FOR ANY TRADE).

STRUCTURAL STEEL NOTES:

1. ALL WIDE FLANGE STRUCTURAL SHAPES SHALL BE ASTM A992, GRADE 50.

2. ALL STRUCTURAL STEEL SHALL BE NEW, CLEAN, AND STRAIGHT AND SHALL BE DETAILED, FABRICATED, AND ERECTED IN ACCORDANCE WITH THE A.I.S.C. CODE OF STANDARD PRACTICE (ADOPTED MARCH 18, 2005), EXCEPT AS MODIFIED IN THESE NOTES AND THE PROJECT SPECIFICATIONS.

3. STRUCTURAL STEEL FABRICATION AND ERECTION SHALL COMPLY WITH THE BUILDING CODE, THE SPECIFICATION, AND THE "SPECIFICATION FOR STRUCTURAL STEEL BUILDINGS (ADOPTED JUNE 21, 2005)" OF AISC.

4. ALL WELDING SHALL CONFORM TO THE AMERICAN WELDING SOCIETY. D1.1–92 STRUCTURAL WELDING CODE–STEEL.

5. ALL FILLET WELDING SHALL BE A MINIMUM OF 3/16 INCH WELD UNLESS NOTED OTHERWISE ON DRAWINGS

ABBREVIATIONS AND SYMBOLS:

AISC	AMERICAN INSTITUTE OF STEEL CONSTRUCTION
ASTM	AMERICAN SOCIETY OF TESTING MATERIALS
EXIST	EXISTING
GALV	GALVANIZED
MIN.	MINIMUM
N.T.S.	NOT TO SCALE
O.C.	ON CENTER
PL	PLATE
RTU	ROOF TOP UNIT
STL	STEEL
TYP.	TYPICAL
U.N.O.	UNLESS NOTED OTHERWISE
V.I.F.	VERIFY IN FIELD

File Path: C:\Documents and Settings\SMatthews\Desktop\20050024811_STR01.dwg, Layout: SK-S01
Date: Fri, Mar 12, 2010 - 1:59 PM User: SMatthews

SCALE: AS SHOWN
0 .5 1
GRAPHIC SCALE

PREPARED BY
WWW.FandO.COM
FUSS & O'NEILL
Disciplines to Deliver
148 HARTFORD RD MANCHESTER, CT 06040 860.646.2469

OWNER
STATE OF CONNECTICUT
DEPARTMENT OF PUBLIC WORKS

PROJECT
ROOF TOP UNIT GUARDRAILS
STRUCTURAL NOTES
PROJECT No.: BI-26-315

DATE: MARCH 12, 2010
CAD No.:
DRAWN BY: SMM
APPROVED BY: KAB

SK-S01

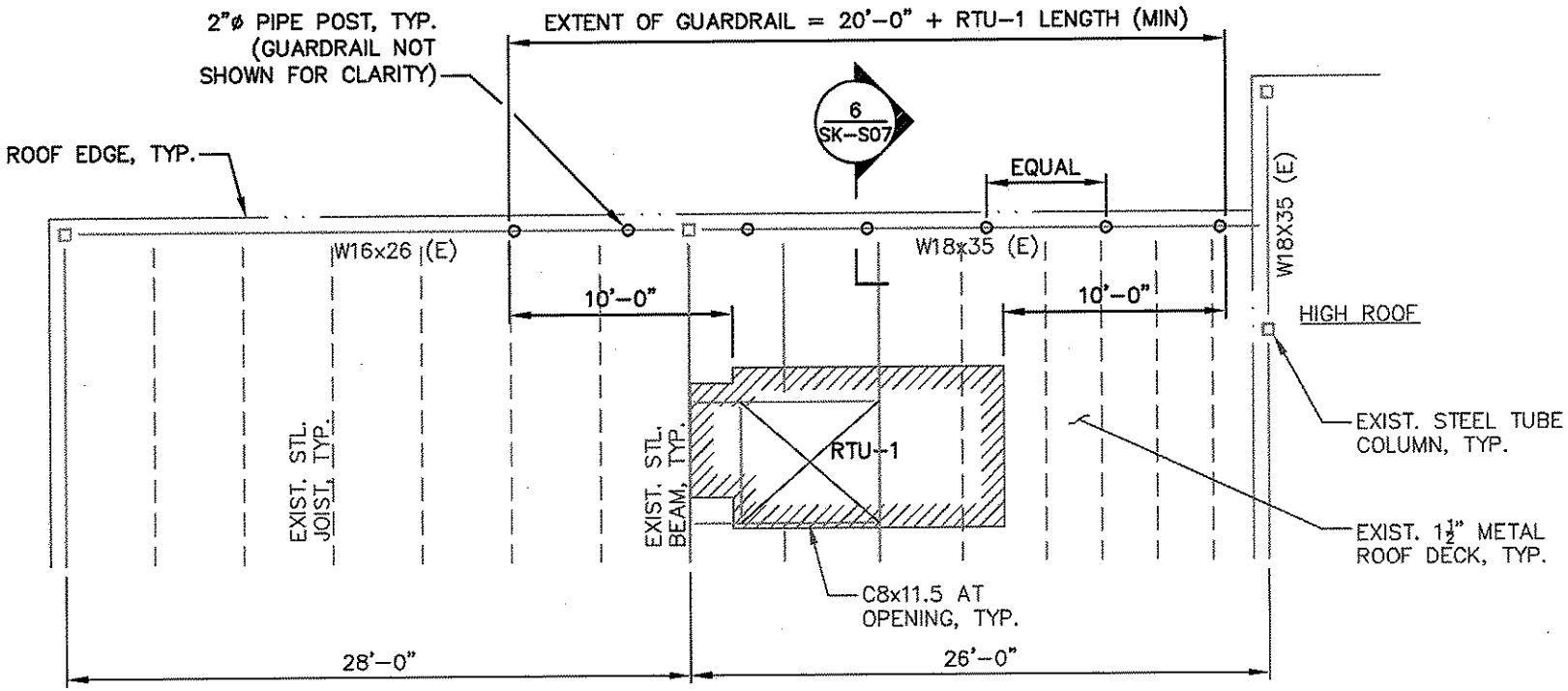

1 RTU-1 PART PLAN

SCALE: 1/8" = 1'-0"

File Path: C:\Documents and Settings\SMatthews\Desktop\2005002481 1_STR01.dwg, Layout: SK-S02
Date: Fri, Mar 12, 2010 - 1:59 PM User: SMatthews

SCALE: AS SHOWN 0 .5 1 GRAPHIC SCALE	PREPARED BY WWW.FandO.COM FUSS & O'NEILL *Disciplines to Deliver* 146 HARTFORD RD MANCHESTER, CT 06040 860.646.2469	OWNER STATE OF CONNECTICUT DEPARTMENT OF PUBLIC WORKS	PROJECT ROOF TOP UNIT GUARDRAILS RTU-1 PART PLAN PROJECT No.: BI-2B-315

DATE: MARCH 12, 2010	
CAD No.:	
DRAWN BY: SMM	
APPROVED BY: KAB	
SK-S02	

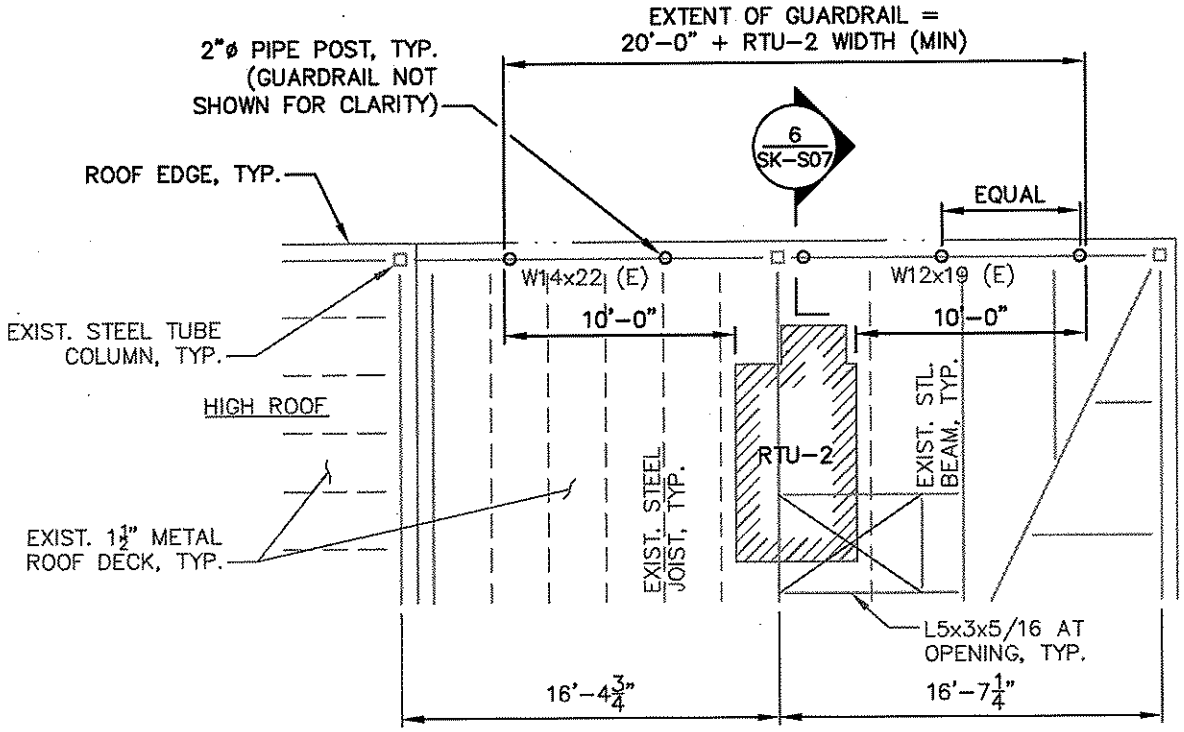

2 RTU-2 PART PLAN

SCALE: 1/8" = 1'-0"

File Path: C:\Documents and Settings\SMatthews\Desktop\20050024B11_STR01.dwg, Layout: SK-S03
Date: Fri, Mar 12, 2010 - 1:59 PM User: SMatthews

SCALE: AS SHOWN 0 .5 1 GRAPHIC SCALE	PREPARED BY WWW.FandO.COM FUSS & O'NEILL *Disciplines to Deliver* 148 HARTFORD RD MANCHESTER, CT 06040 860.646.2469	OWNER STATE OF CONNECTICUT DEPARTMENT OF PUBLIC WORKS	PROJECT ROOF TOP UNIT GUARDRAILS RTU-2 PART PLAN PROJECT No.: BI-28-315

DATE: MARCH 12, 2010
CAD No.:
DRAWN BY: SMM
APPROVED BY: KAB
SK-S03

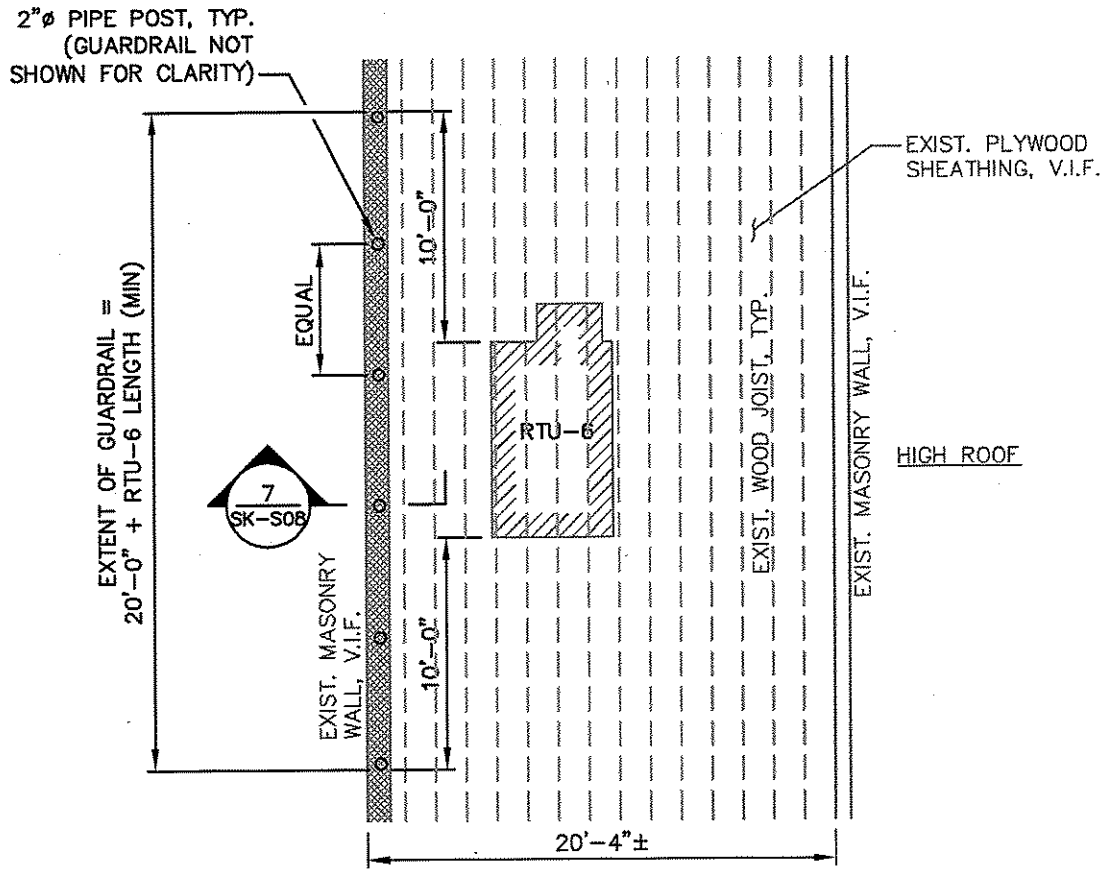

3 RTU-6 PART PLAN

SCALE: 1/8" = 1'-0"

File Path: C:\Documents and Settings\SMatthews\Desktop\2005002481 1_STR01.dwg, Layout: SK-S04
Date: Fri, Mar 12, 2010 - 1:59 PM User: SMatthews

SCALE: AS SHOWN 0 .5 1 GRAPHIC SCALE	PREPARED BY WWW.FandO.COM FUSS & O'NEILL *Disciplines to Deliver* 146 HARTFORD RD MANCHESTER, CT 06040 860.646.2469	OWNER STATE OF CONNECTICUT DEPARTMENT OF PUBLIC WORKS	PROJECT ROOF TOP UNIT GUARDRAILS RTU-6 PART PLAN PROJECT No.: BI-2B-315

DATE: MARCH 12, 2010
CAD No.:
DRAWN BY: SMM
APPROVED BY: KAB
SK-S04

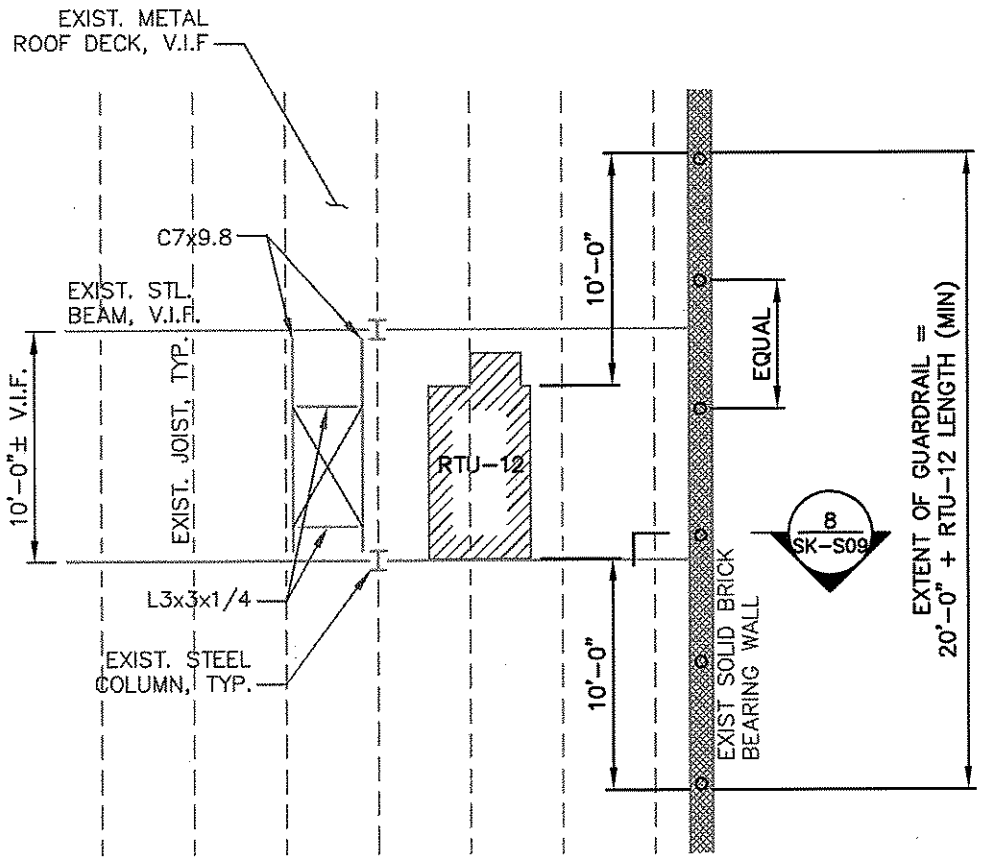

4 RTU-12 PART PLAN

SCALE: 1/8" = 1'-0"

File Path: C:\Documents and Settings\SMatthews\Desktop\20050024B11_STR01.dwg, Layout: SK-S05
Date: Fri, Mar 12, 2010 - 1:59 PM User: SMatthews

SCALE: AS SHOWN 0 .5 1 GRAPHIC SCALE	PREPARED BY WWW.FandO.COM FUSS & O'NEILL *Disciplines to Deliver* 148 HARTFORD RD MANCHESTER, CT 06040 860.646.2469	OWNER STATE OF CONNECTICUT DEPARTMENT OF PUBLIC WORKS	PROJECT ROOF TOP UNIT GUARDRAILS RTU-12 PART PLAN PROJECT No.: BI-2B-315	DATE: MARCH 12, 2010 CAD No.: DRAWN BY: SMM APPROVED BY: KAB SK-S05

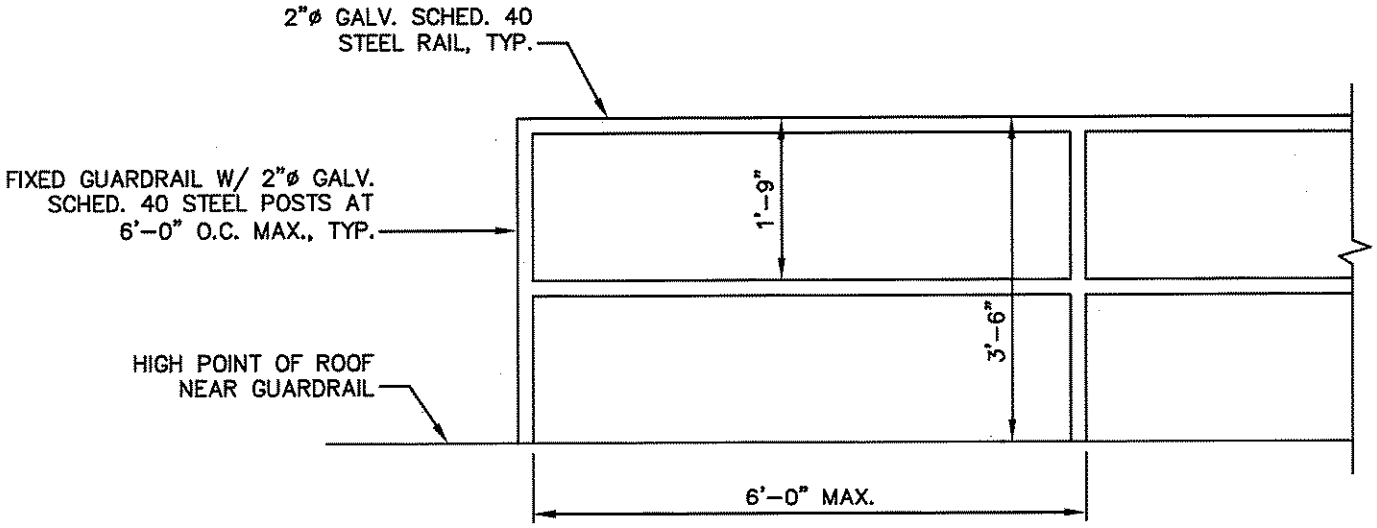

NOTES:
1. SEE DETAILS 6/SK-S07, 7/SK-S08, AND 8/SK-S09 FOR POST CONNECTIONS TO EXISTING STRUCTURE.
2. POST AND HORIZONTAL RAIL DIMENSIONS ARE TYPICAL U.N.O.

5 TYPICAL GUARDRAIL DETAIL

SCALE: 1/2" = 1'-0"

File Path: C:\Documents and Settings\SMatthews\Desktop\2005\0024B11_STR01.dwg, Layout: SK-S06
Date: Fri, Mar 12, 2010 - 1:59 PM User: SMatthews

SCALE: AS SHOWN
0 .5 1
GRAPHIC SCALE

PREPARED BY
WWW.FandO.COM
FUSS & O'NEILL
Disciplines to Deliver
146 HARTFORD RD MANCHESTER, CT 06040 860.646.2469

OWNER
STATE OF CONNECTICUT
DEPARTMENT OF PUBLIC WORKS

PROJECT
ROOF TOP UNIT GUARDRAILS
TYPICAL GUARDRAIL DETAIL
PROJECT No.: BI-2B-315

DATE: MARCH 12, 2010
CAD No.:
DRAWN BY: SMM
APPROVED BY: KAB

SK-S06

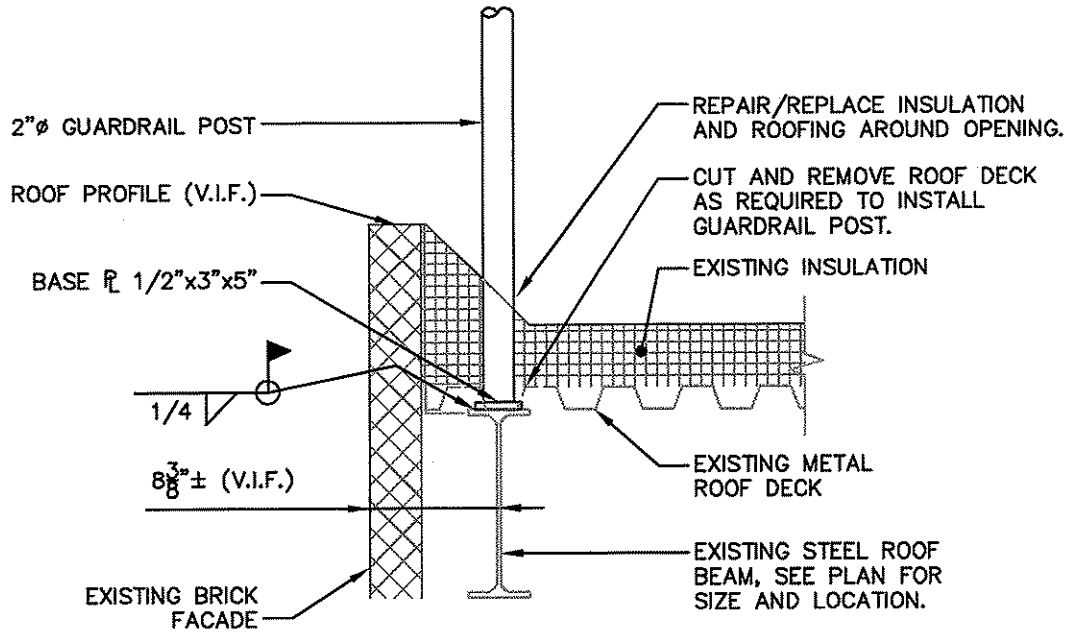

6 POST CONNECTION TO EXISTING STEEL BEAM

SCALE: 1" = 1'-0"

File Path: C:\Documents and Settings\SMatthews\Desktop\20050024B11_STR01.dwg, Layout: SK-S07
Date: Fri, Mar 12, 2010 - 1:59 PM User: SMatthews

SCALE: AS SHOWN 0 .5 1 GRAPHIC SCALE	PREPARED BY WWW.FandO.COM FUSS & O'NEILL *Disciplines to Deliver* 148 HARTFORD RD MANCHESTER, CT 06040 860.646.2469	OWNER STATE OF CONNECTICUT DEPARTMENT OF PUBLIC WORKS	PROJECT ROOF TOP UNIT GUARDRAILS POST CONNECTION TO EXISTING STEEL BEAM PROJECT No.: BI-28-315	DATE: MARCH 12, 2010 CAD No.: DRAWN BY: SMM APPROVED BY: KAB SK-S07

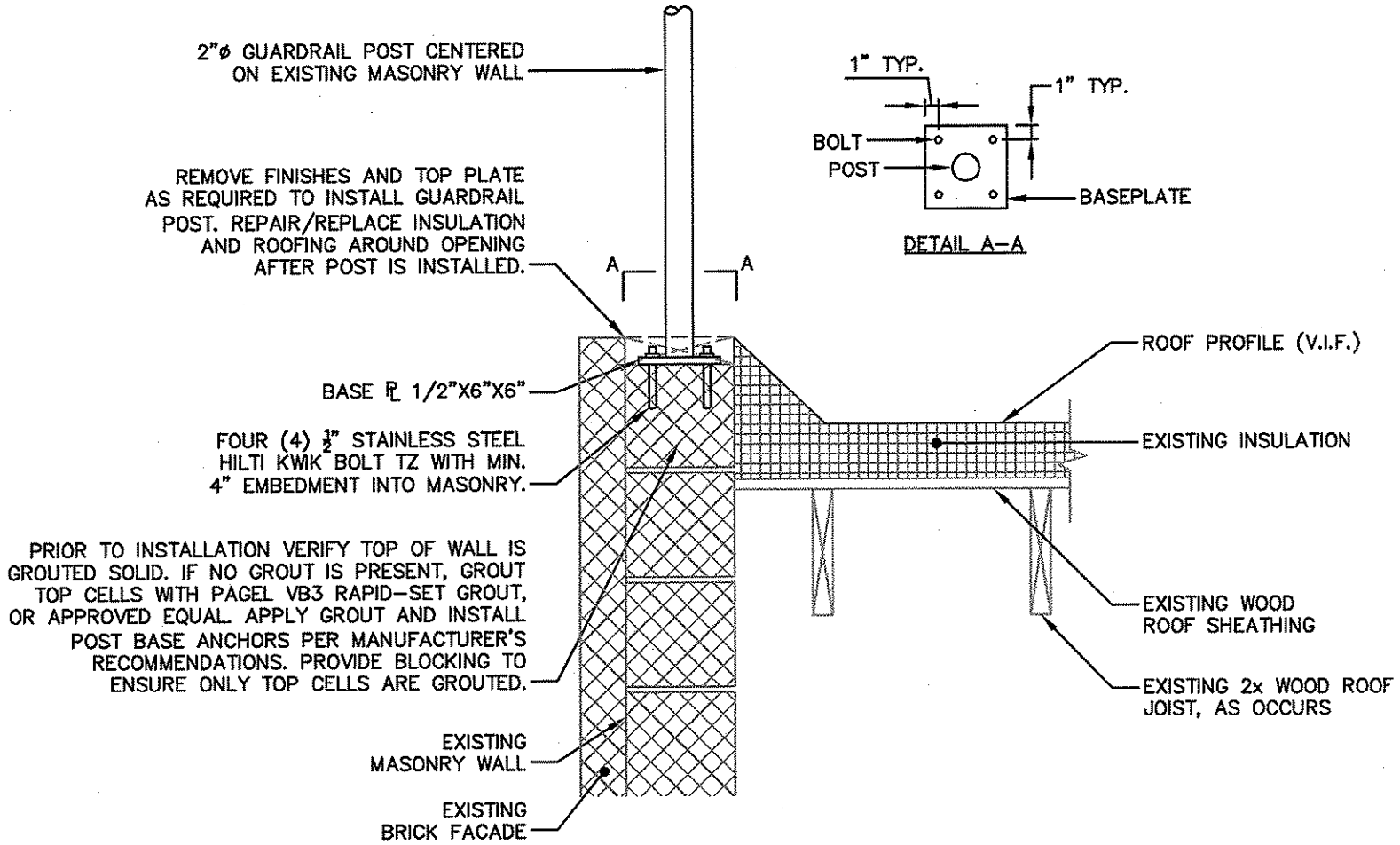

7 POST CONNECTION TO EXISTING MASONRY WALL

SCALE: 1" = 1'-0"

File Path: C:\Documents and Settings\SMatthews\Desktop\2005002481_STR01.dwg, Layout: SK-S08
Date: Fri, Mar 12, 2010 - 1:59 PM User: SMatthews

SCALE: AS SHOWN 0 .5 1 GRAPHIC SCALE	PREPARED BY WWW.FandO.COM FUSS & O'NEILL *Disciplines to Deliver* 146 HARTFORD RD MANCHESTER, CT 06040 860.646.2469	OWNER STATE OF CONNECTICUT DEPARTMENT OF PUBLIC WORKS	PROJECT ROOF TOP UNIT GUARDRAILS POST CONNECTION TO EXISTING MASONRY WALL PROJECT No.: BI-2B-315	DATE: MARCH 12, 2010 CAD No.: DRAWN BY: SMM APPROVED BY: KAB SK-S08

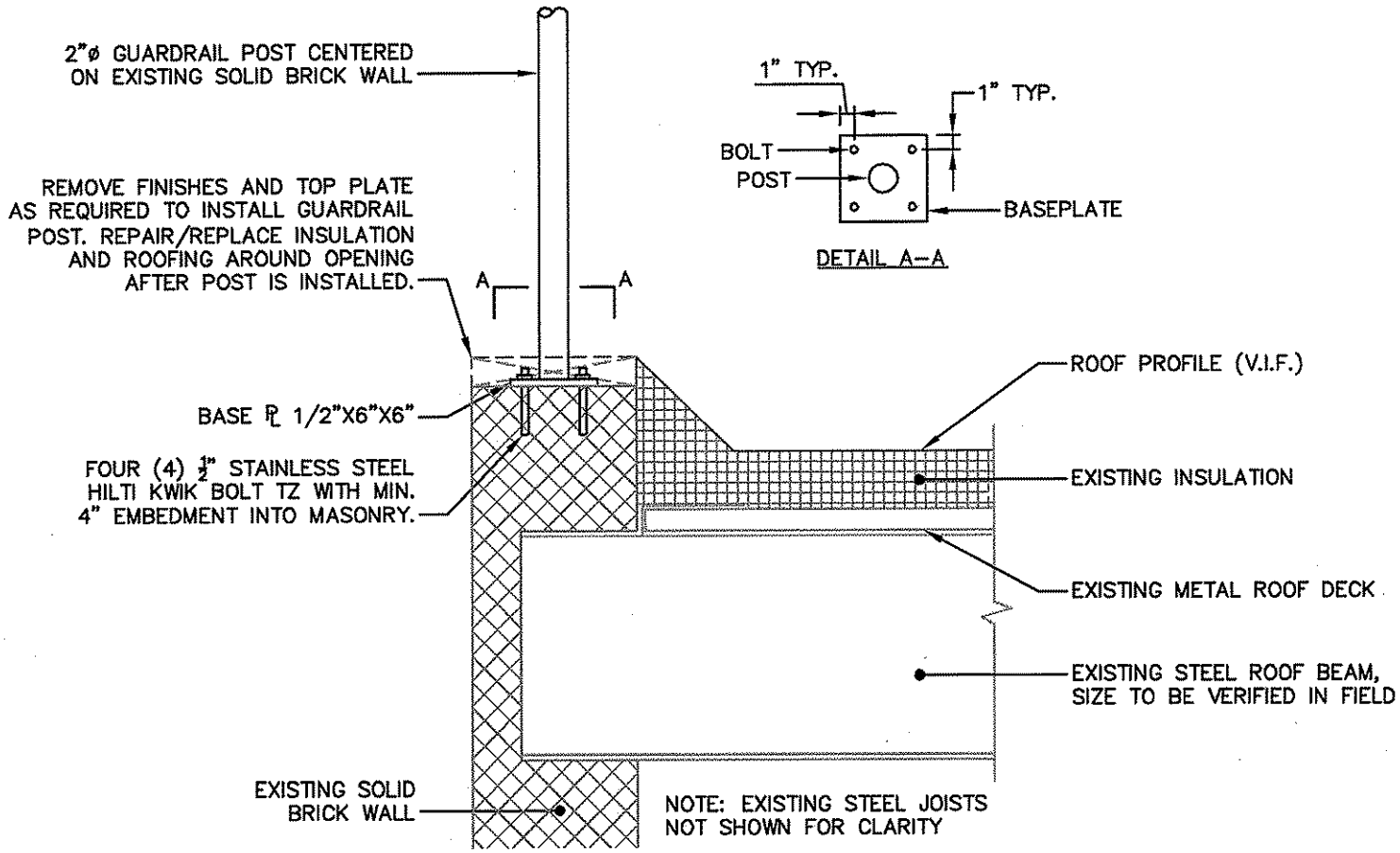

8 POST CONNECTION TO EXISTING SOLID BRICK WALL

SCALE: 1" = 1'–0"

File Path: C:\Documents and Settings\SMatthews\Desktop\2005002481_STR01.dwg, Layout: SK-S09
Date: Fri, Mar 12, 2010 - 1:59 PM User: SMatthews

SCALE: AS SHOWN 0 .5 1 GRAPHIC SCALE	PREPARED BY WWW.FandO.COM FUSS & O'NEILL *Disciplines to Deliver* 146 HARTFORD RD MANCHESTER, CT 06040 860.646.2469	OWNER STATE OF CONNECTICUT DEPARTMENT OF PUBLIC WORKS	PROJECT ROOF TOP UNIT GUARDRAILS POST CONNECTION TO EXISTING SOLID BRICK WALL PROJECT No.: BI-2B-315

DATE: MARCH 12, 2010
CAD No.:
DRAWN BY: SMM
APPROVED BY: KAB
SK-S09

GENERAL NOTES:

1. THE WORK SHOWN ON THESE DRAWINGS HAS BEEN DESIGNED IN ACCORDANCE WITH THE STRUCTURAL REQUIREMENTS OF THE 2009 CONNECTICUT STATE BUILDING CODE, INCLUDING THE 2003 INTERNATIONAL BUILDING CODE, EXCEPT AS AMENDED, ALTERED OR DELETED BY THE ADDITIONAL PROVISIONS IN THE CONNECTICUT SUPPLEMENT.

2. DIMENSIONS OF EXISTING STRUCTURES SHOWN ON THESE PLANS ARE NOT GUARANTEED. THE CONTRACTOR SHALL VERIFY ALL EXISTING DIMENSIONS IN THE FIELD.

3. THE CONTRACTOR SHALL SUBMIT SHOP DRAWINGS OF CONCRETE MIXES AND REINFORCING STEEL FOR REVIEW BEFORE PROCEEDING WITH WORK. THE CONTRACTOR SHALL CHECK ALL DIMENSIONS AND ACCEPT FULL RESPONSIBILITY FOR DIMENSIONAL CORRECTNESS. SHOP DRAWINGS SHALL BEAR THE REVIEW AND APPROVAL STAMP OF THE CONTRACTOR, IN ACCORDANCE WITH THE GENERAL CONDITIONS.

4. STRUCTURAL PLANS SHALL NOT BE REPRODUCED IN WHOLE OR IN PART FOR USE AS SHOP DRAWINGS OR ERECTION PLANS. (THERE WILL BE NO RELAXATION OF THIS RESTRICTION FOR ANY TRADE).

CONCRETE NOTES:

1. ALL CONCRETE WORK SHALL CONFORM TO ACI 301 "SPECIFICATIONS FOR STRUCTURAL CONCRETE FOR BUILDINGS".

2. ALL REINFORCING STEEL SHALL CONFORM TO ASTM A615 GRADE 60 AND BE DETAILED IN ACCORDANCE WITH ACI 315 "MANUAL OF STANDARD PRACTICE FOR DETAILING REINFORCED CONCRETE STRUCTURES".

3. REBARS SHALL HAVE A MINIMUM CONCRETE COVER OF 3".

4. UNLESS NOTED OTHERWISE, CONCRETE SHALL BE AIR-ENTRAINED, NORMAL WEIGHT CONCRETE AND SHALL DEVELOP A COMPRESSIVE STRENGTH OF 4,000 PSI IN 28 DAYS. CONCRETE SHALL HAVE A MAXIMUM AGGREGATE SIZE OF ¾ INCH, A MINIMUM CEMENT CONTENT OF 560 LBS/CY, AND A MAXIMUM SLUMP OF 4 INCHES.

5. SIZES AND LOCATIONS OF ALL REQUIRED EMBEDDED ITEMS FOR ALL TRADES SUCH AS ANCHOR BOLTS, PIPING SLEEVES, HOLDOWN ANCHORS, ETC., SHALL BE COORDINATED BY THE CONTRACTOR WITH OTHER TRADES.

ABBREVIATIONS:

ACI	AMERICAN CONCRETE INSTITUTE
ASTM	AMERICAN SOCIETY OF TESTING MATERIALS
CY	CUBIC YARD
ETC.	ETCETERA
EW	EACH WAY
EXIST	EXISTING
LBS	POUNDS
MIN.	MINIMUM
N.T.S.	NOT TO SCALE
O.C.	ON CENTER
PSI	POUNDS PER SQUARE INCH
TYP.	TYPICAL
U.N.O.	UNLESS NOTED OTHERWISE
V.I.F.	VERIFY IN FIELD

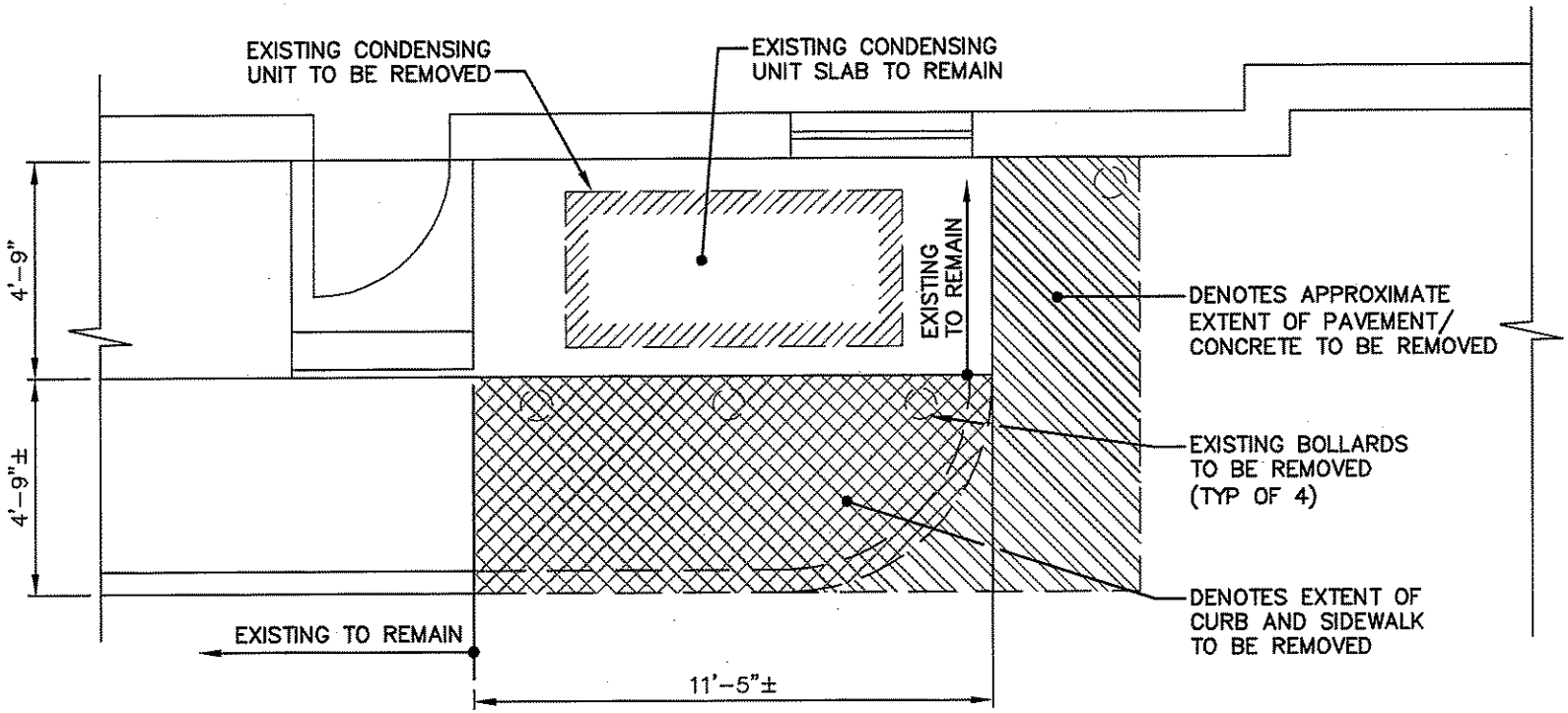

1 CONDENSING UNIT DEMOLITION PLAN

SCALE: 1/4" = 1'-0"

File Path: C:\Documents and Settings\SMatthews\Desktop\20050024B11_STR02.dwg, Layout: SK-S11
Date: Fri, Mar 12, 2010 - 1:48 PM User: SMatthews

SCALE: AS SHOWN 0 .5 1 GRAPHIC SCALE	PREPARED BY WWW.FandO.COM FUSS & O'NEILL *Disciplines to Deliver* 146 HARTFORD RD MANCHESTER, CT 06040 860.646.2469	OWNER STATE OF CONNECTICUT DEPARTMENT OF PUBLIC WORKS	PROJECT CONDENSING UNIT RELOCATION CONDENSING UNIT DEMOLITION PLAN PROJECT No.: BI-28-315

DATE: MARCH 12, 2010
CAD No.:
DRAWN BY: SMM
APPROVED BY: KAB
SK-S11

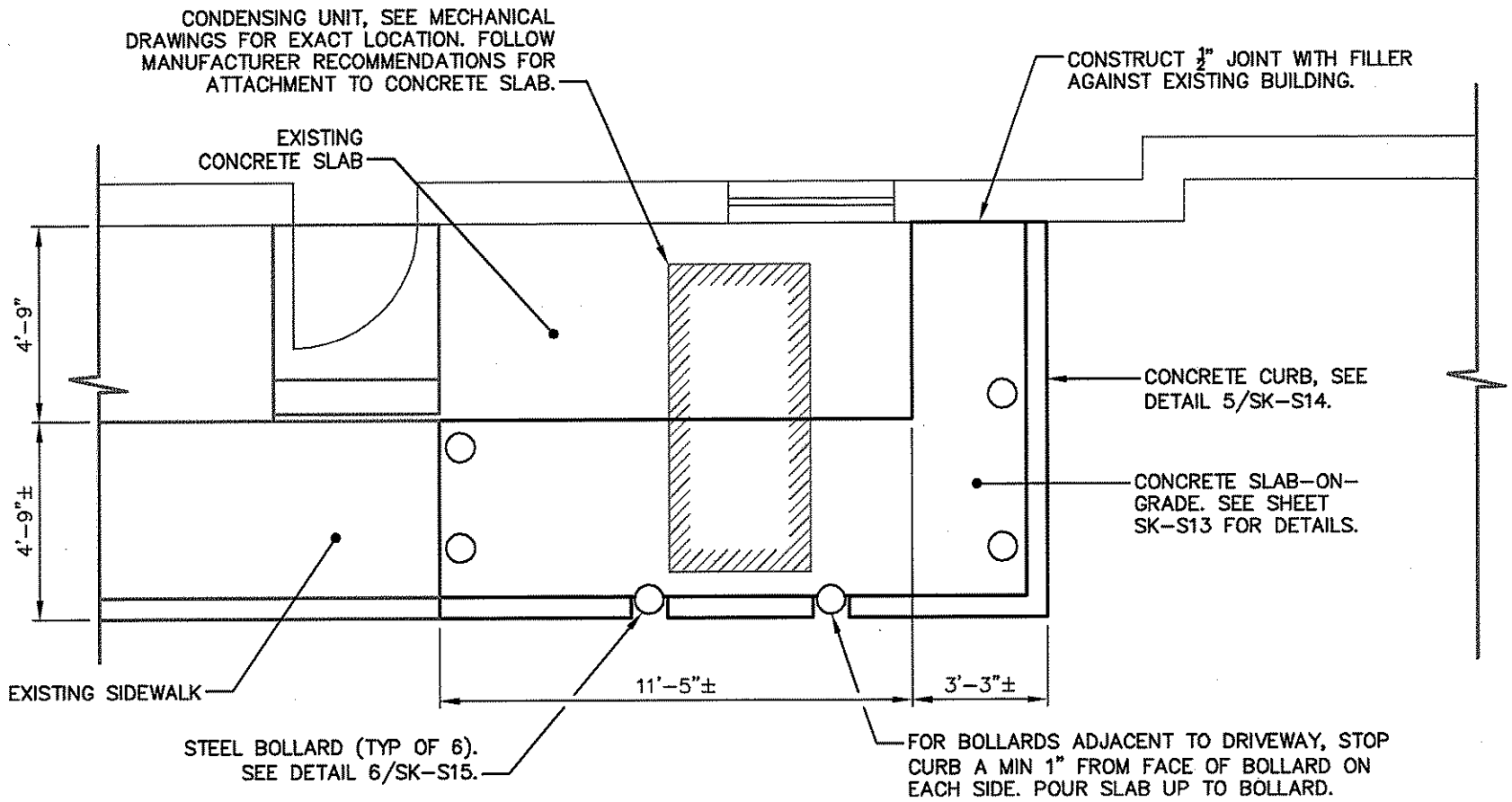

2 CONDENSING UNIT SLAB PLAN

SCALE: 1/4" = 1'-0"

File Path: C:\Documents and Settings\SMatthews\Desktop\20050024B11_STR02.dwg, Layout: SK-S12
Date: Fri, Mar 12, 2010 - 1:48 PM User: SMatthews

SCALE: AS SHOWN 0 .5 1 GRAPHIC SCALE	PREPARED BY WWW.FandO.COM FUSS & O'NEILL *Disciplines to Deliver* 146 HARTFORD RD MANCHESTER, CT 06040 860.646.2469	OWNER STATE OF CONNECTICUT DEPARTMENT OF PUBLIC WORKS	PROJECT CONDENSING UNIT RELOCATION CONDENSING UNIT SLAB PLAN PROJECT No.: BI-28-315	DATE: MARCH 12, 2010 CAD No.: DRAWN BY: SMM APPROVED BY: KAB SK-S12

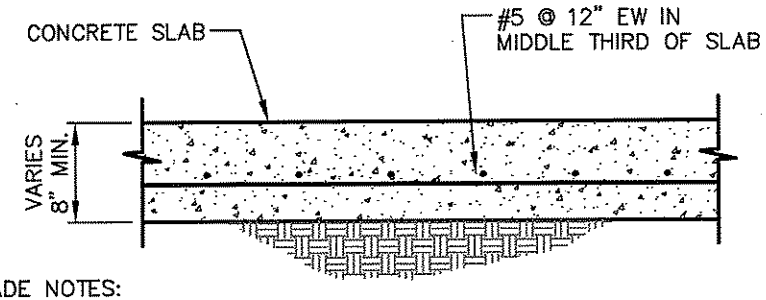

SUBGRADE NOTES:

1. IN AREAS WHERE EXISTING CONCRETE IS REMOVED, PROOF ROLL IN-SITU SUBBASE AND POUR NEW SLAB.
2. DO NOT INSTALL NEW CONCRETE SLAB OVER PAVEMENT. ENSURE ALL BITUMINOUS MATERIALS ARE REMOVED PRIOR TO PROOF ROLLING AND POURING NEW SLAB.
3. IF UNSUITABLE MATERIALS ARE DISCOVERED DURING EXCAVATION REMOVE IN-SITU SOILS UNTIL SUITABLE SOILS ARE ENCOUNTERED AND BACKFILL AND COMPACT AREA WITH FREE DRAINING GRAVEL SUBBASE.

3 CONCRETE SLAB DETAIL OVER IN-SITU SUBBASE

SCALE: N.T.S.

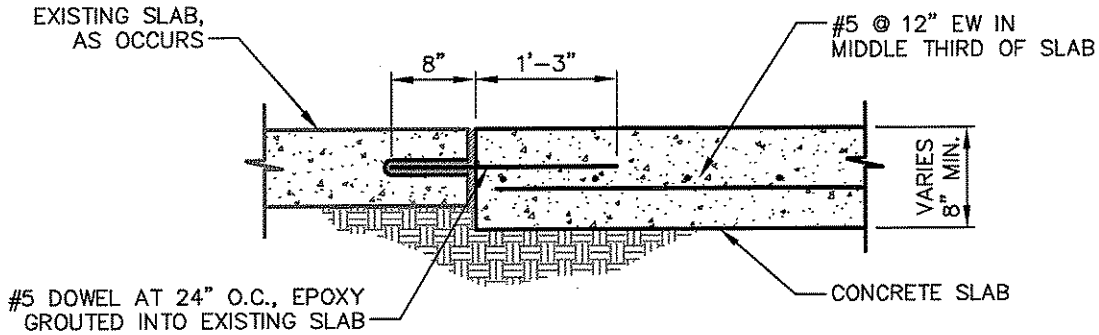

4 CONNECTION DETAIL TO EXISTING CONCRETE SLAB

SCALE: N.T.S.

File Path: C:\Documents and Settings\SMatthews\Desktop\20050024B11_STR02.dwg, Layout: SK-S13
Date: Fri, Mar 12, 2010 - 1:48 PM User: SMatthews

SCALE: AS SHOWN 0 .5 1 GRAPHIC SCALE	PREPARED BY WWW.FandO.COM FUSS & O'NEILL *Disciplines to Deliver* 148 HARTFORD RD MANCHESTER, CT 06040 860.646.2469	OWNER STATE OF CONNECTICUT DEPARTMENT OF PUBLIC WORKS	PROJECT CONDENSING UNIT RELOCATION CONCRETE SLAB-ON-GRADE DETAILS PROJECT No.: BI-28-315	DATE: MARCH 12, 2010 CAD No.: DRAWN BY: SMM APPROVED BY: KAB SK-S13

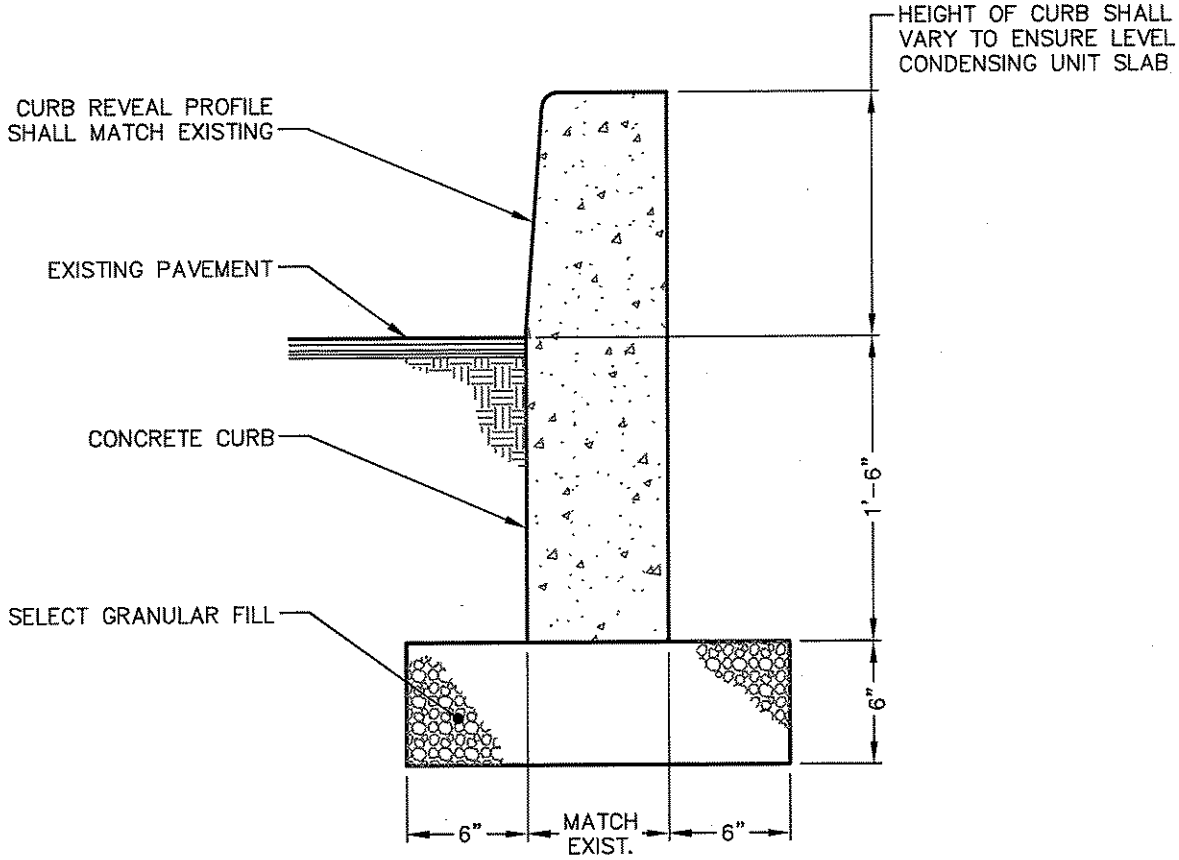

NOTES:

1. 1/2" INCH EXPANSION JOINT AND FILLER SHALL BE INSTALLED BETWEEN CURB AND CONDENSING UNIT SLAB.

5 CONCRETE CURB DETAIL

SCALE: N.T.S.

File Path: C:\Documents and Settings\SMatthews\Desktop\20050024B11_STR02.dwg, Layout: SK-S14
Date: Fri, Mar 12, 2010 - 1:48 PM User: SMatthews

SCALE: AS SHOWN 0 .5 1 GRAPHIC SCALE	PREPARED BY WWW.FandO.COM FUSS & O'NEILL *Disciplines to Deliver* 146 HARTFORD RD MANCHESTER, CT 06040 860.646.2469	OWNER STATE OF CONNECTICUT DEPARTMENT OF PUBLIC WORKS	PROJECT CONDENSING UNIT RELOCATION CONCRETE CURB DETAIL PROJECT No.: BI-2B-315	DATE: MARCH 12, 2010 CAD No.: DRAWN BY: SMM APPROVED BY: KAB SK-S14

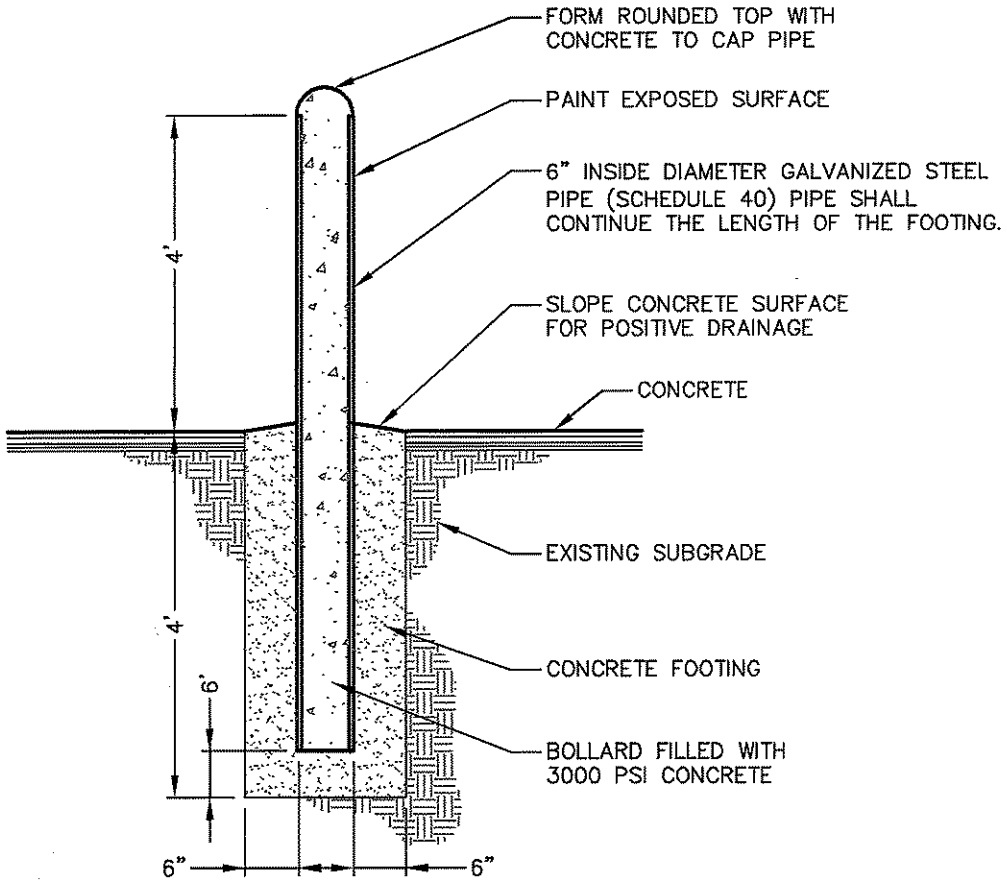

NOTES:

1. BOLLARD FINISH:
   PREPARE GALVANIZED COATING TO RECEIVE PAINTED FINISH. APPLY (1) COAT OF RUST INHIBITOR PRIMER. APPLY (2) COATS OF GLOSS ENAMEL (COLOR TO BE SELECTED BY THE OWNER.)

6 STEEL & CONCRETE BOLLARD

SCALE: N.T.S.

SCALE: AS SHOWN

0 .5 1

GRAPHIC SCALE

PREPARED BY

WWW.FandO.COM

FUSS & O'NEILL

Disciplines to Deliver

146 HARTFORD RD MANCHESTER, CT 06040 860.646.2469

OWNER

STATE OF CONNECTICUT

DEPARTMENT OF PUBLIC WORKS

PROJECT

CONDENSING UNIT RELOCATION

BOLLARD DETAIL

PROJECT No.: BI-2B-315

DATE: MARCH 12, 2010

CAD No.:

DRAWN BY: SMM

APPROVED BY: KAB

SK-S15

File Path: C:\Documents and Settings\SMatthews\Desktop\20050024B11_STR02.dwg, Layout: SK-S15
Date: Fri, Mar 12, 2010 - 1:48 PM User: SMatthews

INTERDEPARTMENTAL MEMORANDUM

TO: David Busanet, Bidding and Contracts Supervisor
Bidding & Contracts, Room G-35
165 Capitol Avenue, Hartford, CT 06106

FROM: Ashour Gevargisnia Project Manager 3/19/2010
Team CSU, Room 460
165 Capitol Avenue, Hartford, CT 06106

DATE: **3/19/2010**

SUBJECT: ADDENDUM # 1

PROJECT TITLE: Energy Upgrades
Milford Courthouse
14 West River Street Milford, Connecticut

PROJECT NO.: **BI-2B-315**

SCHEDULED BID OPENING: **3/31/2010**

Please expedite the attached Addendum # 1

1. The total number of pages in this addendum is: 1
2. The total number of drawings in this addendum is: 1
   (If not applicable, so state)
3. See attached Revised "Bid Released" form (55) dated: N/A
   (If not applicable, so state)
4. Revised Scope addendum added work, Will addendum save money or cost more.
   Cost more.

Attachment
xc: Agency Vladimir Kubin Judicial
Team FileBI-2B-315 (R3)
Project Manager Ashour Gevargisnia

ENERGY UPGRADES
MILFORD COURTHOUSE
MILFORD, CONNECTICUT
PROJECT: BI- 2B - 315

BID OPENING	**1:00 P.M.**	**MARCH 31, 2010**
ADDENDUM NUMBER 1	**DATE OF ADDENDUM**	**MARCH, 18, 2010**

The following clarifications are applicable to drawings and specifications for the project referenced above.

Item 1

Add Alternate #1, RTU-9 replacement to scope of work on drawing M-1. Additional scope of work for Alternate #1 is indicated on attached sketch SKME-1.0. Break out price of work for RTU-9 replacement, and provide a separate cost for the Alternate #1.

All questions must be in writing (not phone or e-mail) and must be forwarded to the consulting Architect/Engineer (Michael Williams, Fax: 860-645-0717) with copies sent to the DPW Project Manager (Ashour Gevargisnia, Fax: 860-713-7261) and the Construction Manager.

End of Addendum Number One

Mellanee Walton for
David Busanet, Bidding & Contracts Supervisor
Department of Public Works

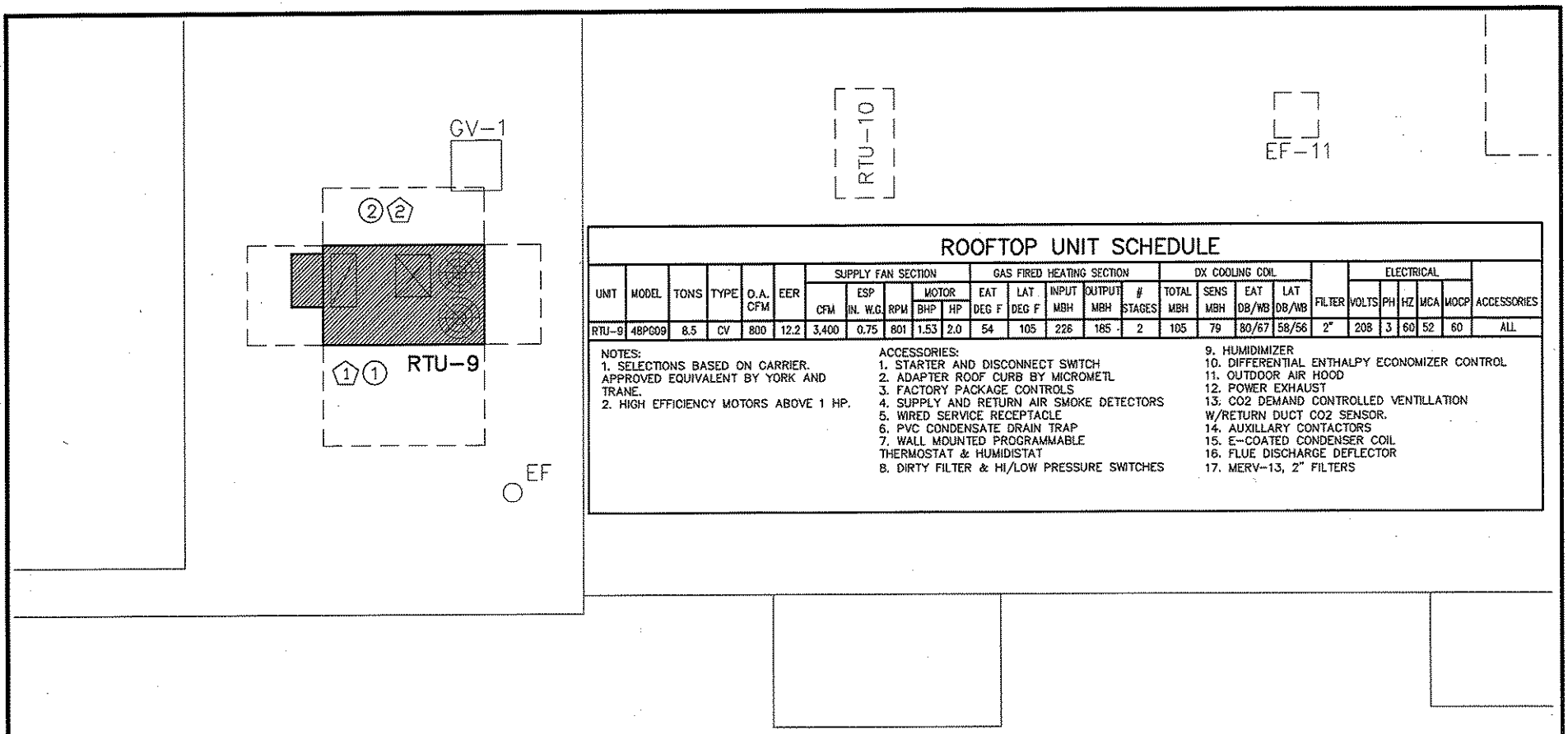

ROOFTOP UNIT SCHEDULE

UNIT	MODEL	TONS	TYPE	O.A. CFM	EER	SUPPLY FAN SECTION					GAS FIRED HEATING SECTION					DX COOLING COIL				FILTER	ELECTRICAL					ACCESSORIES
						CFM	ESP IN. W.G.	RPM	MOTOR BHP	MOTOR HP	EAT DEG F	LAT DEG F	INPUT MBH	OUTPUT MBH	# STAGES	TOTAL MBH	SENS MBH	EAT DB/WB	LAT DB/WB		VOLTS	PH	HZ	MCA	MOCP	
RTU-9	48PG09	8.5	CV	800	12.2	3,400	0.75	801	1.53	2.0	54	105	226	185	2	105	79	80/67	58/56	2"	208	3	60	52	60	ALL

NOTES:
1. SELECTIONS BASED ON CARRIER. APPROVED EQUIVALENT BY YORK AND TRANE.
2. HIGH EFFICIENCY MOTORS ABOVE 1 HP.

ACCESSORIES:
1. STARTER AND DISCONNECT SWITCH
2. ADAPTER ROOF CURB BY MICROMETL
3. FACTORY PACKAGE CONTROLS
4. SUPPLY AND RETURN AIR SMOKE DETECTORS
5. WIRED SERVICE RECEPTACLE
6. PVC CONDENSATE DRAIN TRAP
7. WALL MOUNTED PROGRAMMABLE THERMOSTAT & HUMIDISTAT
8. DIRTY FILTER & HI/LOW PRESSURE SWITCHES
9. HUMIDIMIZER
10. DIFFERENTIAL ENTHALPY ECONOMIZER CONTROL
11. OUTDOOR AIR HOOD
12. POWER EXHAUST
13. CO2 DEMAND CONTROLLED VENTILLATION W/RETURN DUCT CO2 SENSOR.
14. AUXILLARY CONTACTORS
15. E-COATED CONDENSER COIL
16. FLUE DISCHARGE DEFLECTOR
17. MERV-13, 2" FILTERS

MECHANICAL DRAWING KEY NOTES:

1. REMOVE EXISTING ROOFTOP UNIT AND REPLACE WITH NEW RTU-9.
2. PROVIDE CURB ADAPTER. PERFORM FIELD MEASUREMENTS OF EXISTING CURBS PRIOR TO ORDERING ADAPTER CURBS. MODIFY AND EXTEND GAS PIPING AS REQUIRED FOR CONNECTION TO NEW RTU.

ELECTRICAL DRAWING KEY NOTES:

1. EXISTING ELECTRICAL BRANCH CIRCUIT ASSOCIATED WITH MECHANICAL EQUIPMENT SHALL REMAIN IN PLACE FOR CONNECTION TO NEW EQUIPMENT.
2. PROVIDE FINAL CONNECTION TO NEW EQUIPMENT. CHANGE CIRCUIT BREAKER FOR EXISTING BRANCH CIRCUIT TO 60 AMP, 208 VOLT, 3-POLE IN EXISTING POWER PANEL. CONDUIT AND CONDUCTORS SHALL BE REUSED.

A1 MECHANICAL WORK PLAN – ROOF
SCALE: 1/8" = 1'-0"

CTB: LMAN: MS VIEW: UCS:

SCALE:
HORZ.: NONE
VERT.:
DATUM:
HORZ.:
VERT.:
0 0 0
GRAPHIC SCALE

WWW.FandO.COM
FUSS & O'NEILL
Disciplines to Deliver
146 HARTFORD RD MANCHESTER, CT 06040 860.646.2469

STATE OF CONNECTICUT
DEPARTMENT OF PUBLIC WORKS
MILFORD COURTHOUSE ENERGY UPGRADES
14 WEST RIVER STREET MILFORD, CT

PROJ. No.: 20050024.B11
DATE: FEBUARY 11, 2010
SKME1.0

INVITATION TO BID

FOR PROJECTS ESTIMATED TO COST MORE THAN $500,000.00

ADV. NO.: 10-26 ADV. DATE: March 12, 2010

SEALED BIDS FROM CONTRACTORS WHO HAVE BEEN PREQUALIFIED IN THE DAS CLASSIFICATION NOTED BELOW SHALL BE ADDRESSED TO THE DEPARTMENT OF PUBLIC WORKS - STATE OF CONNECTICUT FOR:

Project Title:	Energy Upgrades Milford Courthouse 14 West River Street Milford, CT
Project Number:	BI-2B-315
DAS Classification:	General Trades
Special Requirement:	N/A
Cost Estimate Range:	$837,900.– $926,100.
Plans & Specs Ready Date:	March 17, 2010
A NON-REFUNDABLE FEE OF PER SET IS REQUIRED	$45.00 Checks should be made payable to "Treasurer, State Of Connecticut" and should include the prospective bidder's correct mailing address, telephone and fax numbers of where addendum(a) should be submitted. USE A SEPARATE CHECK FOR EACH PROJECT.
Examination or Purchase of Plans & Specs	at the State Of Connecticut, Department Of Public Works, Plans And Specifications Section, Room No. G-36, 165 Capitol Avenue, Hartford, CT 06106, during the hours of 7:30 A.M. to 3:00 P.M. (Monday-Friday) or by addressing a request to the above address.
Pre-Bid Conference:	All prospective bidders are encouraged to attend a pre-bid conference
Pre-Bid Conference Time	to be held AT 1:00 P.M.
Pre-Bid Conference Date	ON March 22, 2010
Pre-Bid Conference Location	AT Milford Superior Court, 14 West River Street., Milford, CT, meet in the Main Lobby
Pre-Bid Conference Contact	Vladimir, Kubin at 860-706-5266 or 860-539-7791
BID OPENING DATE:	March 31, 2010
Receipt of Bid Package	Bids will be received at the State Office Building, 165 Capitol Avenue, Hartford, CT, 06106 in Room No. G-36 UNTIL 1:00 P.M. on the date shown above and thereafter publicly opened and read aloud in Room No. G-32.

Bid Results:	Bid results are posted on the DPW Website in approximately two (2) days after the bid opening date.
Set-Aside Participation	25%
Including MBE/WBE	6.25%
Gift And Campaign Contribution Certification	If awarded the subject contract and the contract has a value of $50,000 or more the contractor will be required to sign and submit, at the time of contract execution, a Gift And Campaign Contribution Certification. See the DPW home page, http://www.ct.gov/dpw, click on Affidavits. For the purposes of signing the Certification, the "date DPW began planning" the subject project or services is such date noted below.
Date DPW Began Planning the Subject Project:	6/7/2005
Summary and Affidavit Regarding State Ethics	Any one seeking a contract with a value of more than $500,000 shall provide with their bid an Ethics Affidavit *located* at CT DPW Website (www.ct.gov/dpw). Failure to provide this affidavit with the bid proposal shall result in rejection of the bid.
Bid Security	As security, *each* bid must be accompanied by a CERTIFIED CHECK made payable to "Treasurer, State of Connecticut," or the bid must be accompanied by a BID BOND, in the form required by the awarding authority and having surety thereto such Surety Company or Companies as are authorized to do business in this State and/or accepted by the Commissioner of the Department of Public Works for an amount not less than 10% of the bid.
Bidders are advised that *both* the DEPARTMENT OF ADMINISTRATIVE SERVICES PREQUALIFICATION CERTIFICATE and UPDATE STATEMENT must accompany the *bid* proposal for projects *estimated* to *exceed* Five Hundred Thousand Dollars ($500,000.00) (C.G.S. 4b-91 as amended). *Failure to supply them with the bid will result in rejection of the bid*	
Department of Administrative Services (DAS) Contractor Prequalification Program: http://www.das.state.ct.us/busopp.asp	
To access Executive Orders: http://www.ct.gov/governorrell/cwp/browse.asp?a=1719&bc=0&c=18433	
To access the Department of Public Works Web Site: http://www.ct.gov/dpw	

Performance and Labor and Material Bonds to be furnished by the bidder awarded the contract shall be an amount not less than 100% of the contract price.

The Commissioner reserves the right to do any of the following without liability, including but not limited to: (a) waive technical defects in the bid proposal as he or she deems best for the interest of the State; (b) negotiate with a contractor in accordance with Connecticut General Statutes Section 4b-91;(c) reject any or all bids; (d) cancel the award or execution of any contract prior to the issuance of the "Notice To Proceed;" and, (e) advertise for new bids.

Nonresident contractors: At the time of contract signing a certificate from the Commissioner of Revenue Services must be provided which evidences that C.G.S. 12-430 for non-resident contractors has been met. For details call the Department of Revenue Services at (860) 541-3280, ext. 7.

EXECUTIVE ORDERS:

The Contract is subject to the provisions of Executive Order No. Three of Governor Thomas J. Meskill, promulgated June 16, 1971, concerning labor employment practices, Executive Order No. Seventeen of Governor Thomas J. Meskill, promulgated February 15, 1973, concerning the listing of employment openings and Executive Order No. Sixteen of Governor John G. Rowland promulgated August 4, 1999, concerning violence in the workplace, all of which are incorporated into and are made a part of the Contract as if they had been fully set forth in it. At the Contractor's request, the Client Agency shall provide a copy of these orders to the Contractor. The Contract may also be subject to Executive Order No. 7C of Governor M. Jodi Rell, promulgated July 13, 2006, concerning contracting reforms and Executive Order No. 14 of Governor M. Jodi Rell, promulgated April 17, 2006, concerning procurement of cleaning products and services, in accordance with their respective terms and conditions.

This contract is subject to the provisions of the Department of Public Works Sexual Harassment Policy ("Policy") and, as such, the contract may be canceled, terminated, or suspended by DPW for violation of or noncompliance with said Policy. Said document is hereby incorporated herein by reference and made a part hereof as though fully set forth herein. This policy may be found at the Department of Public Works Website at http://www.ct.gov/dpw, under Publications.

All technical questions must be in writing (not phoned or emailed) and faxed to the Architect/Engineer with a copy to the DPW Project Manager listed below.

Architect/Engineer/ Consultant:	Fuss & O'Neill, Inc.	Fax No:	860-645-0717
Construction Administrator	Ashour Gevargisnia	Fax No:	860-713-7261
DPW Project Manager:	Ashour Gevargisnia	Fax No:	860-713-7261

All bid questions should be addressed to the Officer listed below.

Associates Fiscal Administrative Officer:	Mellanee Walton	Fax No:	(860) 713-7395

Contract Time Allowed: 150.00 Calendar Days

Liquidated Damages: $ 1,156.00 Per Calendar Day beyond Substantial Completion

$ 566.00 Per Calendar Day beyond ninety (90) days after Substantial Completion

Prevailing Wage Rates: Prevailing wages are required on this project, in accordance with the schedule provided in the bid documents, pursuant to Connecticut General Statutes Section 31-53 (a) through (h), as amended.

Each contractor who is awarded a contract on or after October 1, 2002 shall be subject to provisions of the Connecticut General Statutes, Section 31-55a concerning annual adjustments to prevailing wages.

Wage Rates will be posted each July 1st on the Department of Labor website: www.ctdol.state.ct.us . Such prevailing wage adjustment shall not be considered a matter for any contract amendment.

The wages paid on an hourly basis to any mechanic, laborer or workman employed upon the work herein contracted to be done and the amount of payment or contribution paid or payable on behalf of each such employee to any employee welfare fund, as defined in subsection (h) of section 31-53 of the Connecticut General Statutes, shall be at a rate equal to the rate customary or prevailing for the same work in the same trade or occupation in the town in which such public works project is being constructed. Any contractor who is not obligated by agreement to make payment or contribution on behalf of such employees to any such employee welfare fund shall pay to each employee as part of his wages the amount of payment or contribution for his classification on each pay day.

Procurement
Department of Public Works