SCSU OLD STUDENT CENTER RENOVATIONS
SCHOOL OF BUSINESS

SOUTHERN CONNECTICUT STATE UNIVERSITY
501 CRESCENT STREET
NEW HAVEN, CT 06515

PROJECT # BI-RS-258

BID OPENING	**1:00 P.M.**	**AUGUST 4, 2010**
ADDENDUM NUMBER NO.2	**DATE OF ADDENDUM**	**JULY 29, 2010**

The following clarifications are applicable to drawings and specifications for the project referenced above.

Item 1

The bid opening will be remain August 4, 2010 at 1:00 P.M.

Item 2

RFI Questions and Answers

2.1 Question

Temperature Controls

On page 9 of 14 of the bid form, under the named HVAC it states "**HVAC includes all controls." This is consistent with what you stated at the pre-bid conference.

On page 3 of 8, in section 01-11-00 - Summary of the Work, item 1.03.A.2 clearly states that, "Division 23 - Instrumentation and Controls is sole source and shall be a separate contract not included in the Mechanical Contractors Bid." Here I would take "mechanical contractor" to mean the "HVAC contractor", since the plumbing contractor would not be concerned with this item.

On page 4 of 9, in section 01-11-00 - Summary of the Work, item 1.03.A.4 it clearly states, " The two separate contracts listed above, Division 23 - Instrumentation and Controls and Division 28 - Fire Alarm are separate contracts with the General Contractor and shall be included in the total bid number.

Based on the information provided above, I believe some further clarification is required.

Answer

The separate price for Division 23 – Instrumentation and Controls Division shall include those controls and items listed under the Table "Points Required by the Campus Energy Management System Shall be Automated Logic" found on Drawing M2.1, "Ground Floor Mechanical Plan", dated 2/24/2010 (01/09/10 Issued for Permit).

Both the HVAC subcontractor and the Automated Logic Subcontractor will be required to provide all work, equipment, and assistance to allow communication through the back-net connection as required on schedule cited above.

It is the HVAC subcontractor's responsibility to provide a technician and related support to allow the soft points shown on table cited above to be provided through back-net to campus energy management system.

2.2 Question

Clarify scope of work in Specification Section 12-22-16 - DRAPERY TRACK AND ACESSORIES, section 2.08 AUTOMATED DAYLIGHTING SOLAR TRACKING SHADE CONTROL SYSTEM and related power requirements for entire system?

Answer

Section 2.08 AUTOMATED DAYLIGHTING SOLAR TRACKING SHADE CONTROL SYSTEM of Specification 12-22-16 - DRAPERY TRACK AND ACESSORIES is based upon Mechoshade Systems, Inc. Hyperion, by Lutron Electronics Company Inc is an acceptable system for a low voltage Shade Control System.

Hyperion by Lutron Electronics Company, Inc: Hyperion is an automated shading system that adjusts Lutron Sivoia® QS shades throughout the day based on the sun's position. It maximizes functional daylight in a space while minimizing glare and solar heat gain to create a comfortable work environment.

Specification Section 12-22-16 - DRAPERY TRACK AND ACESSORIES, 2.08 AUTOMATED DAYLIGHTING SOLAR TRACKING SHADE CONTROL SYSTEM, A.

Add the following:

6. **Shades shall be fully automated, based on unfavorable direct sun glare conditions by utilizing solar adaptive shading functionality. The Solar Adaptive shading feature will be employed via software and/or radiometer measurements, to conditionally control the shades to a digital positional present under such direct glare conditions on each building orientation. The Solar Adaptive Shading software shall be based on specific longitude and latitudes associated with this building, year round sun tracking, sun azimuth angles, interior and exterior shading coefficients, interior work plane locations, and based on specific site conditions, employ full automated comfort shading by providing the necessary automatic shade movements to prevent oppressive direct glare.**

Power Related Requirements:

1. **Junction boxes and associated wiring shown on EP2.1, EP2.2, EP2.3 shown for the Automated Daylight Solar Tracking Shade Control System shall be utilized for manufacturers based upon line voltage**
2. **Junction boxes and associated wiring shown on EP2.1, EP2.2, EP2.3 shown for the Automated Daylight Solar Tracking Shade Control System shall be eliminated for manufacturers based upon low voltage. Low voltage wiring from the power panel to the shade control devices shall be provided by electrical subcontractor.**

General Note:

1. There are no Shade Control systems located in Lobby 002 therefore the related junction boxes and wiring shown on EP2.1 can be eliminated from this scope of work.

2.3 Question

Has a roof cut been made to determine the roofing that must be removed (how many layers, different roofs, etc.). Was the EPDM roofing seen at the walkthrough placed over an existing roof system(s)? Does the existing roofing contain asbestos? Can we take core samples of the roof?

Answer

There is one roof currently installed on the existing building. The existing roofing system is a rubber membrane roof with rigid insulation below. There is some residual debris, adhesives and flashings that were found during the ACM testing process. The removal of all items described above is in this scope of work.

No access or test cuts will be allowed or provided.

2.4 Question

I just received another RFI from my roofing subcontractor and he was wondering about the brackets for the Solar Photovoltaic System. He wanted to know if they are roof penetrating? How they are attached? Also, if they are roof penetrating how many are there? If they are 2 per 10 panels or 2 per panel makes a big difference in pricing his flashing. Please clarify

Answer

Refer to specification section 26-45-00 Photovoltaic System, Section 2.2 MOUNTING SYSTEMS – RAIL RACKING SYSTEM ON STEEL DUNNAGE and drawing S4.100 Part Roof Framing Plan, dated 2/24/2010 from Szewczak Associates for design of steel dunnage for fastening requirements and total number of roof penetrations.

2.5 Question

I have a question regarding some of the condensing units scheduled on this project and am not sure who I should direct it to. The schedule indicates that AC-4 through AC-8 serve units DS-1 through DS-5, but I do not see any units with the DS designation on the plans or in schedules. Would appreciate your help identifying the correct contact person in your office. Thanks – Bob

Answer

Mechanical Drawing:

On drawing M5.2 Delete AC-4, 5, 6, 7, & 8 and all system served equipment referenced from them in the "AIR COOLED CONDENSING UNIT SCHEDULE ".

2.6 Question

The addendum regarding MEP demo drawings is a bit confusing. On page 2 of the addendum, when you indicate " the ACM contractor is responsible for the Plumbing, Mechanical, and Electrical demolition described on the drawing sheets listed below..." do you mean the Owner contracted ACM contractor (i.e., not part of this contract), or does this work have to still be performed by us(and included in our contract) with an ACM contractor of our selection? Please advise, this is crucial to a competitive price. What is the intent here?

Answer

The owner has hired an independent ACM / Demolition contractor to complete work shown on the Plumbing, Mechanical, and Electrical Demolition drawings, it will not be a part of this contract.

All questions must be in writing (not phone or e-mail) and must be forwarded to the consulting Architect/Engineer (Jeff Wyszynski, Fax 860-249-2531) with copies sent to the DPW Project Manager (Robert Prentice, Fax 860-713-7270).

End of Addendum Number Two

Mellanee Walton for
David Busanet, Bidding & Contracts Supervisor
Department of Public Works

SCSU OLD STUDENT CENTER RENOVATIONS
SCHOOL OF BUSINESS

SOUTHERN CONNECTICUT STATE UNIVERSITY
501 CRESCENT STREET
NEW HAVEN, CT 06515

BID OPENING	**1:00 P.M.**	**AUGUST 4, 2010**
ADDENDUM NUMBER NO.1	**DATE OF ADDENDUM**	**JULY 26, 2010**

The following clarifications are applicable to drawings and specifications for the project referenced above.

Item 1

The bid opening will be remain August 4, 2010 at 1:00 P.M.

Item 2

Pre-Bid Meeting Notes:

2.1 Robert Prentice stated pre bid meeting is mandatory.

2.2 All substitutions shall be submitted to Jeff Wyszynski, Tecton Architects, via substitution form for review and inclusion into addendum

2.3 A general overview of the plans was provided by Tecton Architects and CES Consulting Engineers, followed by a site walkthrough of all three levels of the existing building.

2.4 This project will require LEED Silver Certification, responsibilities and requirements of the contract are described in specification sections 01-35-14.01 LEED NC 2009 Credit Summary through 01-35-16.07 LEED Prohibited Content Installer Certification.

2.5 Contractor parking will be remote from the job site.

2.6 All concrete saw cuts shown on sheets A2.101 and A2.102 (slab and bearing walls), shall be provided by the demolition contractor. Scheduling and coordination of this work is the responsibility of the general contractor.

2.7 Subject Asbestos Containing Materials:

The Architectural demolition drawings describe the scope of work related to demolition on the key notes. On drawings A2.101 and A2.102 the items marked with an "X" under "CONTRACT" are those items included as a part of this scope of work. Items marked with an "X" under "OTHER" will be provided by a separate contractor. Portions of the ACM removal and interior demolition will be completed prior to the start of this contract.

Narrative: All work associated with the removal of the exterior windows and roof, inclusive of ACM, shall be included in this scope of work

The following items have been added to the scope of work:

1. All work described in Specification Section 02-82-00 ASBESTOS ABATEMENT

2. All work described in Specification Section 07-08-00 ASBESTOS CONTAINING ROOF REMOVAL

3. All work described on Drawing: SK-1 "Roof Plan", dated 12/25/2009, from ATC Associates Inc. (Project Number RS-09-05)

Narrative: The ACM contractor is responsible for the Plumbing, Mechanical, and Electrical demolition described on the drawing sheets listed below.

The following items have been removed from the scope of work:

1. Drawing PD2.1 Ground Floor Plumbing Demolition Plan, dated 2/24/2010, revised 01/09/10 (Issued for Permit)

2. Drawing PD2.2 First Floor Plumbing Demolition Plan, dated 2/24/2010, revised 01/09/10 (Issued for Permit)

3. Drawing PD2.1 Second Floor Plumbing Demolition Plan, dated 2/24/2010, revised 01/09/10 (Issued for Permit)

4. Drawing MD2.1 Ground Floor Mechanical Demolition Plan, dated 2/24/2010, revised 01/09/10 (Issued for Permit)

5. Drawing MD2.2 First Floor Mechanical Demolition Plan, dated 2/24/2010, revised 01/09/10 (Issued for Permit)

6. Drawing MD2.3 Second Floor Mechanical Demolition Plan, dated 2/24/2010, revised 01/09/10 (Issued for Permit)

7. Drawing ED2.1 Ground Floor Electrical Demolition Plan, dated 2/24/2010, revised 01/09/10 (Issued for Permit)

8. Drawing ED2.2 First Floor Electrical Demolition Plan, dated 2/24/2010, revised 01/09/10 (Issued for Permit

9. Drawing ED2.3 Second Floor Electrical Demolition Plan, dated 2/24/2010, revised 01/09/10 (Issued for Permit

Item 3

RFI Questions and Answers:

3.1 Question

On drawing C.2 can you clarify what the scope of work looks like in the event Supplemental Bid #6 is not accepted? Do the trees remain in the center island area? Do we just patch to match the slate paving once the curtain wall and elevator additions are completed? Will there be any requirement to adjust the grades in the existing areas to meet correctly at the new entry doors? Etc.

Answer

All work is shown on SK-01 on the "Base Bid Grading, Utility, and Landscape Plan" dated July 26, 2010. The two 10" maple trees are to be removed in their entirety, patch and or reset slate patio tile as required. Remove and store existing slate pavers and substrate as required to install new wall, elevator, and entrance

vestibule. Repair slate patio at new to existing and install new slate infill from existing salvaged material. Remove and reset existing slate pavers to provide 1/8" per foot away from building perimeter entrance.

3.2 Question

On drawing L.1 it states all the new plantings are part of Supplemental Bid #6. Can you confirm that the base bid is strictly to restore the existing conditions after the completion of the addition, bridge and exterior façade construction work?

Answer

All plantings shown on L.1 are part of Supplemental Bid #6. The base bid shall include the restoration of existing landscaping and new seeding for all disturbed areas (specified in section 32-92-19 SEEDING)

3.3 Question

On drawings A8.101 there are a number of window types and elevations indicated on the upper left part of the sheet. There are no sections cut through these windows. Can you please confirm if these are hollow metal frames or aluminum storefront materials?

Answer

On drawing A8.101, "Door & Frame Schedule", dated 2/24/2010, Elevations B10, B8, B7, C10, C8 and all items shown on G10 are hollow metal frames (welded frames).

3.4 Question

Can you please verify the hardware information provided on the door schedule on A8.101. Hardware sets in section 08-71-00 are called "sets" and go from 1 to 31. The plan uses a G# (Group Number) for each and goes as high as G39. Also, the automatic operators are listed at hardware sets 01, 02, 04 and 05. Sets 01 and 02 indicate they are at aluminum entrances. None of the aluminum entrances use this designation.

Answer

The hardware set column has been updated to correspond with the specification.

Please refer to the attached updated drawing:

A8.101, "Door & Frame Schedule", dated 2/24/2010, Revision 1, 7/26/2010, Addendum #1

3.5 Question

The specifications contain section 10-51-00 – Lockers. It states there are 3 tier lockers. I can't seem to find them on the drawings. Can you please confirm where they are located?

Answer

Delete section 10-51-00 LOCKERS from the specification. The lockers were eliminated during the final review by the agency.

3.6 Question

There is a specification section 12-24-13 – Interior Roller Shades. Can you please confirm if this is the specification to be used for WT-3 as noted on the finish schedule on A9.101 with corresponding "Materials Legend"? WT-3 is also listed in item 2.02.A.3 of specification section 12-22-13 – Drapery Track and Accessories.

Answer

Narrative: Specification section 12-22-16 DRAPERY TRACK AND ACCESORIES is the specification for WT-1, WT-2.

Specification 12-22-16 DRAPERY TRACK AND ACCESSORIES

Delete item 2.02 Application Scope A. 3. "Shade Type WT-3 manual roller shades on all exterior windows of rooms and spaces shown on Drawings."

Drawing A9.101 "Finish Schedule and Material List", dated 2/24/2010

Under Materials List, Window Treatment, modify note WT-1 from "Electric Controlled Solar Shades" to "Electric Controlled Blackout Shades"

Under Materials List, Window Treatment, modify note WT-2 from "Electric Controlled Blackout Shades" to "Electric Controlled Solar Shades"

Specification 12-24-13 INTERIOR ROLLER SHADES

Narrative: The only room to receive black out shades is Conference Room 104

Add the following: Specification 12-24-13 INTERIOR ROLLER SHADES, 2.02 MANUAL SHADE SYSTEMS Add item "(Shade Type WT-3 manual roller shades on all exterior windows of rooms and spaces shown on Drawings)"

Narrative: Specification section 12-21-13 HORIZONTAL LOUVER BLINDS is the specification for HB-1.

3.7 Question

Can you please confirm the intended materials for waterproofing at the elevator pit? Section 07-14-00 states the fluid applied waterproofing is for use at the elevator pit and the drawings sections only indicated waterproofing at the sidewalls. Section 07-17-13 refers to bentonite panels but the scope description is confusing, listing a joint between the roofing and foundation wall at the elevator pit. I don't believe such a joint exists on this project. Typically we see a bentonite fabric material used under the base mat of the elevator and then either this same material or the material in section 07-14-00 applied to the sidewalls.

Answer

Specification 07-17-13 BENTONITE PANEL WATERPROOFING

Modify item Part 1 General, 1.01 Section Includes, B. from "Bentonite clay waterproofing between roofing and foundation wall at elevator pit." to "Bentonite clay waterproofing under base of footings and slabs"

Specification 01-14-40 FLUID APPLIED WATER PROOFING

Modify item Part 1 General, 1.01 Section Includes. A. from "Fluid applied membrane waterproofing at elevator pit" to "Fluid applied membrane waterproofing at elevator pit foundation walls."

3.8 Question

In section 07-11-13 – Bituminous Dampproofing, the specification refers to a drainage mat and an insulation protection board. The walls sections on A4.201 indicate the dampproofing (spray applied water barrier) at the new foundation walls below grade. No

drainage mat or protection board is indicated. Should both be included? If yes, can the protection board be other products than the same rigid insulation specified in section 07-21-00, as the rigid insulation for thermal protection is indicated on the interior face of the wall, not the exterior face where the dampproofing is installed.

Answer

All new foundation walls shall contain bituminous damp proofing and drainage mat unless otherwise noted. Protective insulation board shall be eliminated from exterior.

3.9 Question

On the north elevation on drawings A3.202 both the far right and left brick panels are type TB-1. If you look on the corresponding meeting corners at the east and west elevations, the brick panels are type TB-2. If we are supposed to use L-return corners in the thin brick system, two corners will be meeting with different thickness bricks. Can you please confirm if this is what is intended?

Answer

Drawing A3.202, "Exterior Elevations – Construction" C9, North Elevation:

Add the following note:

"TB-2 shall return to the control joints shown on the North Elevation, between column centerline 1&2 and 8&9"

3.10 Question

The head, jamb and some sill details at the windows as noted on A4.202 indicate thin brick or stone returns at the windows. Can you please confirm if the intention is to use special L-shaped returns or cut pieces to form the returns? At the heads and sills, I do not believe they make pieces with a return along the long dimension of the units. The brick heads could be made with returns if they are set as a soldier course. The thin stone heads could be constructed using cut pieces for the returns. Can you please confirm the design intention at the head details?

Answer

The head detail as shown in detail C7 on sheet A4.202 "Sectional Details", dated 2/24/2010 indicates an extended aluminum flashing / drip edge to conceal the construction of the thin brick system. This piece shall provided by the thin brick veneer manufacturer as an integral component of the thin brick system.

3.11 Question

Thin brick type TB-3 indicates it is a 1" thick quoin brick accent band. TTB-2 indicates it is 1" thick quoin band. Can you please confirm if TB-2 is the same brick as TB-1 only thicker? Can you also confirm if TB-3 is a different color brick? Specification section 04-24-50, item 3.01.B only refers to one brick type, being the 1/2" thick standard brick and assumed to be type TB-1. Can you also confirm if the quoin brick have any special features such as beveled corners, etc. or are just a thicker unit?

Answer

TB-2 and TB-3 are 1" thick components, same color as field brick. Modifications to section 04-24-50 THIN MASONRY VENEER PANEL SYSTEM have been issued as a part of this addendum.

3.12 Question

There is a specification section 10-11-01 – Visual Display Boards. The only item I can find that may meet this specification is the tackboard units TB1, 2 and 3 as noted on A9.101. The details for these units appears to be a fully fabric wrapped unit over beveled wood edging and a special wood panel area at the acrylic folder holder. These items do not correlate with the specification section. Can you confirm if there are any units required per section 10-11-01 and if the TB1, 2 and 3 units are considered a custom millwork item?

Answer

TB1, TB2, TB3 are custom millwork as detailed on sheet A9.101.

Delete Specification Section 10-11-01 VISUAL DISPLAY BOARDS

3.13 Question

Is there a specification for the operable window types A thru E, manufacturer, series number etc?

Answer

Specification 08-43-13 ALUMINUM FRAMED STOREFRONTS, PART 1 GENERAL, 1.01 SECTION INCLUDES

Add the following: "F. Operable Sash: Aluminum project out awning. To ensure quality of appearance and performance, obtain materials for system from a single manufacturer."

Specification 08-43-13 ALUMINUM FRAMED STOREFRONTS, PART 2 PRODUCTS, 2.02 COMPONENTS

Add the following:

"E. Operable Sash: Awning Units: Operable sash units shall be included as a part of the storefront window system. Basis of specification is Kawneer: Glassvent, or equal. Other manufacturers include Vistawall (Old Castle): 2000 Series Awning, United States Aluminum Corporation: 7500 Concealed Vent Window.

1. **Standard Hardware:**
    a. **Cast White Bronze Cam Locking Handles.**
    b. **Stainless Steel 4-Bar Hinges."**

3.14 Question

Drawing A8.101 makes reference to clear glass with blinds at interior frame types B7, B8, C8 and C10. Is this 1/4" glass with blinds by others or a unit with two lites of glass with internal blinds. If so please provide a spec.

Answer

All interior hollow metal frames shown on Drawings A8.101 "Door and Frame Schedule" shall receive surface mounted Horizontal Louver Blinds fastened to head of frame. Frames to receive blinds include those shown on B10, B8, B7, C10, C8, and G10 shown on drawing A8.101 "Door and Frame Schedule" dated 2/24/2010. Refer to specification section 12-21-13 Horizontal Louver Blinds.

3.15 Question

Hardware sets shown on the door schedule do not match sets shown in section 08-71-00 please clarify.

Answer

Refer to item 3.4

3.16 Question

Dwg. FP2.2 – EC sidewall sprinklers in Adjoining Hallway to 3 story/1 story bldg. – Sidewall sprinklers are required to be located no more than 8" from the wall to the deflector – the existing wall is approx. 4' from the far side of the beam where the sprinklers are shown. Please advise corrective measure?

Answer

Sprinkler main serving extended coverage sprinklers in connecting hallway shall be relocated closer to the hallway south wall so that the sprinkler deflector is no more than 8-inches the wall.

3.17 Question

Section 21-05-00, page 3, item 1.5(G) – Are there any plenums that fit this criteria on this project?

Answer

The current mechanical design does not include any return air plenums.

3.18 Question

Section 21-05-00, page 4, item 1.8 (C) – Valves do not ship with "temporary" protective coating. If not a standard is this required?

Answer

The intent of this paragraph is for the Contractor to protect the valves from damage prior to installing the valve. If protective coatings are not provided by the valve manufacturer of the submitted and approved valve, the Contractor shall protect the valve from damage prior to installation.

3.19 Question

Section 21-05-00, page 7, item 2.0(C) & (D) – Clovis rings and steel channel with "welded spacers" are not the norm for the sprinkler industry, band hangers and either channel or steel pipe are utilized. Is this a requirement of this project?

Answer

Band hangers and other similar types of steel pipe hangers that are UL listed and FM approved for use with sprinkler systems are acceptable.

3.20 Question

Section 21-05-00, page 8(E) – Hanger location and clearances – I believe these requirements exceed NFPA#13 requirements are they a requirement of this project? If yes, please advise which hanger will give you 1 1/2" adj?

Answer

Pipe hanger locations and clearances shall be as required by NFPA 13.

3.21 Question
Section 21-05-00, page 8, item 3.3(A) – Please provide the space requirements around the piping for the different Insulation R-values.

Answer

Spacing requirement for insulation R values shall be coordinated during the shop drawing process.

3.22 Question
Section 21-05-00, page 9, item (I) – Grooved joints – Do you really want us to have a Manufacturer's representative do training on site and periodically visit the job site and review the installation? If yes, how often do you want us to estimate the cost for that representative to visit the site, have our personnel remove a coupling which is installed, have the groove on the pipe inspected and then re-installed? (Grooved installations are a norm in our industry and manufacturer's requirements are complied with).

Answer

Grooved pipe coupling manufacturer's representative on site not necessary. In the event that there is a failure with a submitted coupling, the Contractor shall coordinate corrective measures with the manufacturer.

3.23 Question
Section 21-13-13, page 1, item 1.3 (E) – Interface system with building fire alarm system – What is the requirement of this section?

Answer

Interface system with building fire alarm system means to coordinate all point of the sprinkler system (flow switches, tamper switches and pressure switches) with new addressable fire alarm system. All devices are specified with two form C contacts for fire alarm connection. This is an industry standard.

3.24 Question
Section 21-13-13, page 2, item 1.4(C)-1 – Sprinkler shop drawings do not normally indicate "weights" is this a requirement of this project?

Answer

Weights are not required on shop drawings.

3.25 Question
Section 21-05-00, page 3, item 1.5(F) – Similar class products of the same manufacturer. All products which would be utilized for this project would comply with UL and/or FM per specs – Availability of a product at the time of Installation may require different manufacturers, would this be acceptable?

Answer

Any alternate manufacturers that are not listed in the specifications that the Contractor would like to utilize for this project must be submitted for approval two weeks prior to the bid deadline. See specification section 23-04-00 1.9-H.

3.26 Question

Section 21-05-00, page 8, item 2.4(A) – Steel Pipe – ASTM A53; schedule 40 SEAMLESS pipe, is approx. double the cost A53 welded or A135 ERW (which all meet the NFPA #13 pipe specs), do you still want to keep the specification ASTM A53, Schedule 40 seamless? Also, Schedule 10 pipe is acceptable by code and is utilized in sprinkler systems especially for mains 2 1/2" and larger, would this be an option?

Answer

ASTM A135 - Standard Specification for Electric-Resistance-Welded Steel Pipe or ASTM A795/A795M - Standard Specification for Black and Hot-Dipped Zinc-Coated (Galvanized) Welded and Seamless Steel Pipe for Fire Protection Use are both acceptable. Schedule 10, rolled grooved end piping is acceptable for mains 2-inches and larger, see specification section 21-05-00, 2.4-A-3.

3.27 Question

Dwg. FP2.3 – Anti-Freeze System for sprinkler at top of elevator, can a dry Sidewall Sprinkler fed from the sprinkler line in the area be utilized?

Answer

Dry sprinkler would be an acceptable alternate to the specified anti-freeze system provided a credit is given to the Owner and that the criteria for the sprinkler installation and spacing can be done with on length of dry pipe that is 4 feet long or less.

3.28 Question

Please provide the water flow information for use in determining the sprinkler pipe size.

Answer

Water flow data is given on drawing FP5.1 in Sprinkler System Notes. Contract Documents require the Sprinkler Contractor to perform an additional flow test to confirm the data given. Test results from Contractors flow test shall be used for hydraulic calculation.

3.29 Question

I cannot find any information on the drawings or specifications regarding exterior window schedules. There is no info on glazing types GL-1 thru GL-3 referenced on the building elevations and there is no schedule identifying sizing of windows labeled as A thru E on the building elevations. Are these punched windows, separate from the aluminum panels above and below them, or is this the aluminum storefront per Spec section 08-43-13?

Answer

Drawing A3.202 "Exterior Elevations – Construction" detail 1, Enlarged Window Elevations details the exterior window dimensions by type.

All exterior glazing shall meet the requirements set forth in Specification Section 08-80-00 GLAZING, Part 2 Products, 2.01 Glazing Types A. Sealed Insulated Glass Units.

Refer to item 3.13 for operable window units

Aluminum panel detail is shown on detail G2 on sheet A4.202, "Sectional Details", dated 2/24/2010

3.30 Question

Please reference window elevations B7, B8, B10, C8, and C10 on Drawing A8.101. Are these window frames hollow metal, or aluminum, which specification is pertinent to their construction? Are the blinds referenced internal to the glazing, or external field applied window treatments?

Answer

Refer to item 3.3 and 3.14

3.31 Question

What type of glazing goes into the door panels per Detail E10 on A8.101?

Answer

Refer to specification section 08-80-00 GLAZING PART 2 PRODUCTS, 2.01 GLAZING TYPES, D. Type S-2 – Fire Rated Safety Glazing or Type S-3 – Single Safety Glazing: Non fire rated.

3.32 Question

What type of glazing is used at the transoms and sidelights of door frames, as shown in Detail G10 on A8.101?

Answer

Refer to item 3.31

3.33 Question

Dwg. FP5.1 – Sprinkler System Notes Item #7 – Pipe Velocity – NFPA utilized 32fps and FM was 20fps, which they no longer require. The 18 fps as reference on the drawing notes may increase the pipe sizing, please confirm that this is a requirement.

Answer

The criteria for pipe velocity shall be as noted on Drawing FP5.1, Note #7 under Sprinkler System Notes.

3.34 Question

Please confirm that the exterior aluminum panels are to be 4mm PE core Aluminum Composite Panels. Are Alpolic and Reynobond acceptable manufacturers as Aluma shield, Centria, and Insulated Panel Systems do not make a composite product?
What is the required color for this spec section? Can standard colors be used? The reason for the standard colors is, if we are supplying the flat sheet for the trims as required by detail F7/A4.202 standard color could be bought out thru Alpolic in .032 with no min quantities and if it requires a custom color all three manufactures require a minimum of 4000 SF to 6000 SF of flashings to be purchased when the projects only requires about 200 SF of trim.

Answer

Alpolic and Reynobond are acceptable manufacturers. The color shall be selected from manufacturer's full range of colors.

3.35 Question

The specs did not have a section for Windows. It is not in the Storefront section. Please let me know if there is a section.

Answer

Refer to item 3.13

3.36 Question

Would it be possible to have electronic files uploaded to our sharefile site if I email a link to you? (pdf files).

Answer

Electronic files will be provided after contract has been awarded.

3.37 Question

I cannot find a floor plan drawing to know where B-10, B-8, B-7, C-10 & C-8 windows are located they are not on Elevations Dwgs. Also Doors V & FG 3.

Answer

Elevations shown on drawing A8.101 "Door & Frame Schedule" as keyed into the construction plans. Door elevations V & FG3 are not used on the current door schedule.

3.38 Question

There is a locker specification 10-51-00, but I cannot locate any metal lockers on the drawings. Where are they required?

Answer

Refer to item 3.5

3.39 Question

It is unclear where the bentonite panel waterproofing is required. Reference Spec 07-17-13 paragraph 1.01. Does Item B mean that the entire elevator shaft gets this waterproofing? Please clarify intent of scope. Does Item C occur only where a new footing or wall joins an existing footing or wall? Example, the new areaway wall, where it abuts the existing wall? Please clarify intent of scope. Confirm that no bentonite is required under slabs, as implied in paragraph 3.04.

Answer

Refer to item 3.7

Item 4

Further Clarifications:

4.1 Replace Specification 04-24-50 THIN MASONRY VENEER PANEL SYSTEM dated February 24, 2010 with 04-24-50 THIN MASONRY VENEER PANEL SYSTEM dated February 24, 2010 (Revised Addendum No.1 -7/26/2010).

4.2 On drawings EP2.1, EP2.2, EP2.3

1. Main power data location should be relocated to the opposite wall for the following rooms; 007, 125.1, 124, 107, 106.1, 105.2, 208, 225, 218, 217, 216, 215
2. Add tele/data drop in Rooms 013, 112, 114, 226

4.3 On drawing EP2.1 add Base power in-feed location for systems furniture in Room 016 Adjunct Faculty Office Area. Owner's furniture vendor to provide in-feed/whip Electrical subcontractor to make connections.

Attachments:

Drawings:

1. SKA-01, "Grading, Utility, Landscape Plan – Base Bid", dated 7/26/2010, Addendum No.1, from Tecton Architects, Inc.
2. A8.101, "Door & Frame Schedule", dated 2/24/2010, revision no.1, dated 7/26/2010, Addendum #1, from Tecton Architects, Inc.
3. SK-1 "Roof Plan", dated 12/25/2009, from ATC Associates Inc. (Project Number RS-09-05)

Specifications

1. Section 04-24-50 THIN MASONRY VENEER PANEL SYSTEM, dated February 24, 2010 (Revised Addendum No.1 – 7/26/2010), from Tecton Architects, Inc.
2. Section 02-82-00 ASBESTOS ABATEMENT, dated July 26, 2010, from ATC Associates Inc.
3. Section 07-08-00 ASBESTOS CONTAINING ROOF, dated July 26, 2010, from ATC Associates Inc.

All questions must be in writing (not phone or e-mail) and must be forwarded to the consulting Architect/Engineer (Jeff Wyszynski, Fax 860-249-2531) with copies sent to the DPW Project Manager (Robert Prentice, Fax 860-713-7270).

End of Addendum Number One

Mellanee Walton for
David Busanet, Bidding & Contracts Supervisor
Department of Public Works

PART 1 GENERAL

1.01 PRODUCT & DESCRIPTION

A. **Structural Support Panel System for Thin Masonry Veneer shall be Tabs II, manufactured by Tabs Wall System, LLC, Grandville, MI 49418, M-lock Classic Series by Thin Tech Masonry Panels, LLC, or The LOXON System as manufactured by Universal Brick Systems, Inc. Support panel must include integrated tab & locking system, be G90 hot dipped galvanized and manufactured with .018 (26GA) structural grade steel with thermo set coating. The basis of this specification is the Tabs II system as manufactured by Tabs Wall System, LLC, all components listed below shall be compatible with Thin Brick Veneer system. To ensure quality of appearance and performance, obtain all specified materials for system from a single manufacturer.**

B. Adhesive (Thin Brick or Decorative Block) or Structural Silicone (Natural Stone or Marble), manufactured by Tabs Wall System, LLC, Grandville, MI 49418., **or equal compatible product**

C. Mortar Additive, manufactured by Tabs Wall System LLC, Grandville, MI 49418., **or equal compatible product**

D. Rain Screen (when applicable), manufactured by Tabs Wall System LLC, Grandville, MI 49418, **or equal compatible product**

E. Related Products; Fasteners, Insulation, Veneer, and Flashing materials to meet appropriate ASTM standards, supplied by Tabs Wall System LLC, Grandville, MI 49418., **or equal compatible product**

PART 2 GENERAL

2.01 RELATED DOCUMENTS

A. Drawing and general provisions of the Contract, including General and Supplementary conditions and Division 1 general requirements apply to this section.

2.02 RELATED WORK

A. Cast-In Place Concrete - Section 03 30 04

B. Unit Masonry - Section 04 20 00

C. Structural Steel - Section 05 12 04

D. Rough Carpentry - Section 06 10 00

E. Bituminous Dampproofing - Section 07 11 13

F. Fluid-Applied Waterproofing - Section 07 14 00

G. Weather Barriers - Section 07 25 00

H. Insulated Metal Wall Panels - Section 07 42 14

I. Aluminum-Framed Storefronts - Section 08 43 13

J. Glazed Aluminum Curtain Walls - Section 08 44 13

2.03 SCOPE OF WORK

A. Include all labor, materials and equipment, and perform all operations in connection with the installation of the panel system and all the related work, in strict accordance with drawings, and as specified herein.

B. Products to be considered equal to those specified must be approved in writing by the architect or engineer ten days prior to project bid date.

2.04 SUBMITTALS

A. Samples shall be provided in small-scale form for initial selection purposes to show range of colors, textures, and patterns, for the project for each type of thin veneer. Shop drawings are to be submitted, for clarification if needed, detailing dimensioned plans and elevations that show installation details of connections, joint conditions, and flashings of the project.

B. Provide 4 foot x 8 foot mock-up panel, located as directed by the Architect. The mock-up shall contain all materials included in the panel system including, but not limited to insulation, structural support panel, adhesives, mortar, rain screens, fasteners, flashings, and all varieties of masonry specified.

2.05 QUALITY ASSURANCE

A. Appoint at least one supervisory journeyman who shall be present at all times during execution of work, who shall be thoroughly familiar with design requirements, type of materials being installed, reference standards and other requirements, and who shall direct all work performed at jobsite.

B. Applicator / Contractor shall be ~~**Tabs Wall Systems certified and/or**~~ have at least five years experience in the installation of panel systems.

C. Comply with all applicable codes, regulations, and standards. Where provisions of applicable local codes, regulations and standards conflict with requirements of this section, then the higher specification shall govern.

D. Panel components shall be made using prime materials and meet National Building codes.

E. Panel manufacturer will provide all component and prime material certifications.

1. Metal panel material shall have minimum G90 corrosion protection.
2. Metal panel material shall be of structural grade 33 steel or greater.
3. System manufacturer will provide material certifications to meet appropriate ASTM standards.

2.06 PERFORMANCE CHARACTERISTICS

A. Assembled wall system shall meet or exceed the following performance standards when tested by certified independent testing laboratory in accordance with the following methods:

1. IBC requirement per paragraph 1405.9.1 for veneer surface shear value.
2. ASTM E 297 Shear Bond Strength of Test of Mastic
3. ASTM D 3498 Mastic
4. ASTM C 1135 Freeze-Thaw Tensile Adhesion Properties
5. ASTM E 72 Wind load Test of Building Panels
6. ASTM E 119 Fire Resistance Test

7. ASTM E 84 Surface Burn Spread & Smoke Development
8. ASTM B 117 1000 Hour Salt Spray Test
9. ASTM D 1037 Fastener-Head Pull Through
10. ASTM E 2273 PER EG356-2006 Water Drainage
11. ASTM E 96-05 ICC-ES EG356 Section 3.1.3 Water Vapor Transmission
12. ASTM C 1338 ICC-ES EG356 Section 3.1.1 Fungi Resistance Steel Sheet
13. ICC-ES EG 356 Accelerated Weathering Section 3.1.6
14. ASTM A 395 Steel Panel
15. ASTM A 653 Requirements for Hot-Dip, Zinc-Coated Steel Sheet
16. ASTM C 1088 Thin Brick Veneer
17. ASTM C 1364 Cast Stone
18. ASTM C90 Decorative Block

2.07 WARRANTY

A. Warranty shall be a Full Twenty-Five (25) Year System Warranty, which cover all components; Panel, Adhesive, Silicone, Membrane, Rain Screen, Fasteners, Insulation, Veneer, and Flashing **by single manufacturer** ~~**manufactured or distributed by Tabs Wall Systems**~~. Product warranty will be backed by appropriate insurance certificate & furnished prior to contract.

2.08 DELIVERY, STORAGE AND HANDLING

A. Delivered materials to project sites in their original factory wrappings and containers, clearly labeled with identification of manufacturer, brand name, fire hazard classification, and lot number. Store materials in original undamaged packages and containers, inside a well ventilated area protected from weather, moisture, soiling, extreme temperatures and humidity, laid flat and blocked off-ground to prevent sagging and warping. Mastic and mortar additive are to be stored above 32° Fahrenheit and below 86° Fahrenheit temperatures.

2.09 SEQUENCING AND SCHEDULING

A. Sequence thin veneer system installation in proper order to minimize the possibility of damage during the construction period.

PART 3 PRODUCTS

3.01 MANUFACTURED PRODUCTS

A. Support panel shall be manufactured by Tabs Wall Systems, LLC, **Thin Tech Masonry Panels, LLC, or Universal Brick Systems, Inc.**

1. Various sizes shall be available to facilitate installation.
2. Panel shall have support ledges to support and space veneer.

B. Thin Veneer Brick: Thin brick veneer shall be 9/16 ½" thickness SW (severe weather) grade kiln-fired clay brick and meet ASTM C-216 grade exterior, type FSB. Modular 2 ¼" x 7 5/8" x ½" and **2 ¼" x 7 5/8" x 1"**, Atlantic Series, Staten Island, Velour, Type 8 as manufactured by Watsontown Brick Co.. Alternate Manufactures are: Summitville, thin brick, 95 New Bedford or

Glen Gery Brick, Developer Series, Hazen Red, Modular.

C. Cast Stone Veneer: Cast Stone shall be 12 x 24 x 1: deep stretcher units smooth finish, product #1102 Natural Stone as manufactured by Continental Select Stone Mfg. Inc. 1-800-989-7866. Alternate Manufactures are Stone Series, Off White, as manufactured by Thin Tech Masonry Panels or Rockcast Custom Cast Stone Series, Bone GP-B as manufactured by Reading Rock Inc. 1-513-874-2345.

   1. Special Shape Sill: As indicated on the drawings.

D. Adhesive (Brick or Decorative Block) &/or Structural Silicone (Natural Stone) shall be manufactured by Tabs Wall Systems, LLC, **or equal compatible product.**

E. Grouting Material: Grouting material shall be acrylic latex modified mortar meeting Type S and ANSI Specs A 118.4 requirements with a Portland cement and lime base, with shear properties of 15 kg/cm2 (200 PSI) or greater. CAUTION: Do not use mortar mix with stone veneers.

F. Fasteners: Fasteners shall be corrosive resistant twist shank masonry anchors #8, or larger self-drilling or self-tapping corrosive resistant screws. Panels shall be attached to the wall with a minimum of one fastener per 900 cm2 (1 square foot). Fasteners shall be attached a minimum of 1" into masonry. Fastener shall be approved by a fastener manufacturer with regards to weather conditions, substrate, shear, fatigue, installation methods, and safety.

G. Flashings and trims will be ~~**supplied by Tabs Wall Systems Panel to be;**~~ G90 Hot Dip Galvanized, 26 gauge (.018 thick), with Kynar 500 finish or equal.

H. Water infiltration barrier shall be Green Guard RainDrop Wrap or equal.

I. Insulation shall be tabs green SL insulation, **or equal compatible product**, two layers of 1" thick insulation with staggered joints

PART 4 EXECUTION

4.01 INSPECTION

A. Installer must examine conditions under which the thin veneer system is to be installed and notify Contractor in writing of any unsatisfactory conditions. Do not proceed with installation of the Thin veneer system until the unsatisfactory conditions have been installation of the Thin veneer system until the unsatisfactory conditions have been corrected in a manner acceptable to the installer and general contractor.

B. Installer shall consult the other trades and contractors involved prior to start of the thin veneer system installation. This is to determine any areas of potential interference. Do not start the installation until interferences have been resolved to the satisfaction of the installer or general contractor.

C. Coordinate layout with other work to determine that work schedule is satisfactory with other contractors.

4.02 PREPARATION

A. Wherever possible, take field measurements prior to the preparation of shop drawings and fabrication to insure proper fitting and installation of product.

B. Verify that materials are those specified before installing.

C. Insure walls are plumb and corners are braced to specifications. Maximum wall frame spacing for stud walls = 60mm (24") O.C. Girts = 75mm (30") O.C.

D. Walls must be structurally sound and the substrate system designed with a wall deflection not

greater than L/240. Substrate shall have no planer irregularities greater than 7mm in 3.05 m (¼" in 10').

E. Water infiltration barrier must be installed prior to placement of panel.

F. Trim or flash in place per manufacturer's details and/or BIA Technical Note 7A on flashing of Brick Walls.

G. This project will have fluid-applied Air & Vapor Barrier material applied to the cavity side of the CMU. Special attention and care must be taken to provide a smooth, filled surface to receive the membrane. The care is necessary to insure the design performance of the selected materials. The existing masonry wall shall be prepared as follows to accept the air & vapor barrier:

1. Surfaces shall be free of contaminants such as grease, oil and wax on surfaces to receive membrane
2. The CMU surfaces shall be free from projections.
3. Strike mortar joints full and flush to face of concrete block.
4. Fill voids and holes greater than ½ inch across with mortar or non-shrink grout.
5. Fill cracks, gaps and joints exceeding ¼ inch width with mortar or non-shrink grout.
6. Grind flush or make smooth surface irregularities exceeding ¼ inch in height or sharp to touch.
7. Fill around penetrations with mortar, sealant or other approved fill material and strike flush.
8. If surfaces cannot be made smooth to the satisfaction of the Architect, it will be the responsibility of the trade to alternatively apply a parge coat (typically one part cement to three parts sand) over surface to receive fluid-applied membrane air barrier.
9. Remove mortar droppings on brick ties, shelf angles, brick shelves and other horizontal obstructions.

4.03 INSTALLATION

A. PANELS

1. Exterior walls shall be constructed of structurally sound masonry, wood, or steel studs, with an compatible building sheathing and a water infiltration barrier placed over it. This shall be done prior to the installation of the panel system.
2. Panels shall be mechanically secured to a structural wall with a manufacturer's approved fastener in accordance with the manufacturer's recommendation. Panels shall be attached with a minimum of one fastener per 900 cm2 (square foot).
3. Panels applied to an oblique wall shall be installed with the support tabs aligned and level to each other. Panel joints shall be staggered over sheathing joints.
4. Control joints in the panel system are required to coincide with the building control joints where substrates change, within 2'- 4'of outside corners, then 20' to 25' for wood stud framing (and/or) 25' to 30' for steel stud framing. Horizontal control joints should be every one to two stories for steel stud framing and every one story for wood stud framing. Control joints should be to regional building code standards, but not to exceed 24' in height.

4.04 THIN VENEERS

A. Thin veneers shall be either field applied, factory installed, or panelized into components or

curtain walls (select as required).

B. Thin veneers shall be dry, clean & free of all debris, than adhered to panel using specially formulated Tabs II Adhesive, **or equal compatible product,** in "Quarter" sized dabs or vertical strips 10mm (3/8") wide. Note: Cut veneers not clean & free of debris, must be primed using Tabs P-150 prime, **or equal compatible product** prior to installation. Adhesive can be installed at zero degrees Fahrenheit or greater.

C. Thin veneers shall be applied within 5 to 10 minutes after adhesive has been applied and shall be placed in the bond pattern called for.

4.05 MORTAR

A. When all applied veneers are secured in place, fill joints and seams with Type "S" mortar mix or industry accepted grout for tile or stone, mixed with Tabs II mortar additive, **or equal compatible product**

B. Mortar vertical joints immediately following each fourth horizontal joint.

C. Mortar only an area that can be tooled before mortar becomes to stiff. Mortar should have a dull finish and be moist, but not wet.

4.06 WEATHER REQUIREMENTS

A. In cold weather do not use frozen materials in mortar mix. Do not apply mortar to frozen surfaces containing frost. Do not apply mortar when ambient temperature is less than 2 Degrees Celsius (35 degrees Fahrenheit) without sufficient protection and supplemental heat.

B. In hot weather, protect mortar from uneven and excessive evaporation. Where conditions are hot, dry and/or windy and evaporation is great, veneer shall be fogged with water to allow the mortar enough time to set. Moist curing is not recommended for latex modified mortar.

4.07 CAULKING

A. All areas where thin veneer meets non-veneer surfaces must be caulked with the proper approved sealant for conditions. Thoroughly and neatly caulk joints between thin veneer and abutting material.

4.08 CLEANING

A. Thin veneer shall be cleaned per the appropriate method established by thin veneer manufacturer.

4.09 MAINTENANCE

A. When applied according to **manufacturer's** ~~**Tabs Wall systems**~~ specifications, thin veneer panel system installation should last indefinitely and be maintenance free. However, if for any reason the thin brick panel system should become unattached from its surface, or damaged by severe impact, the affected areas should be cleaned of old mortar and adhesive and a new panel & veneer applied with its approved Tabs adhesive and mortar.

END OF SECTION

PART 1 - GENERAL

1.1 SCOPE

A. The work specified herein shall include the abatement of asbestos-containing materials by persons who are knowledgeable, qualified, and trained in the removal, treatment, handling, and disposal of asbestos-containing material, and the subsequent cleaning of the affected environment. The Contractor shall have a Competent Person in control on the job site at all times and an Asbestos Abatement Site Supervisor during asbestos abatement work. This person must comply with applicable Federal, State and Local regulations that mandate work practices, and be capable of performing the work of this contract.

B. The Asbestos Contractor shall be licensed by the State of Connecticut in accordance with State of Connecticut Regulations, Sections 20-440-1 through 9 and 20-441. Should any portion of the work be subcontracted, the subcontractor must also be licensed in accordance with these regulations. Site supervisors and workers shall be certified in accordance with Sections 20-437 and 20-438 of the Connecticut General Statutes and Section 20-440-5 of the Regulations of Connecticut State Agencies. The licensing and certification requirements are available from the Environmental Health Services Division, Department of Public Health, 410 Capitol Avenue, P.O. Box 340308, Hartford, CT 06134-0308.

C. The Owner will retain the services of a Project Monitor for protection of its interests and those using the building. Abatement monitoring will be conducted as deemed necessary.

D. Restore all work areas and auxiliary areas utilized during abatement to conditions equal to or better than original. Any damage caused during the performance of abatement activities shall be repaired by the Contractor (e.g., paint peeled off by barrier tape, nail holes, water damage, removal of ceiling tiles or concrete blocks, broken glass, etc.) at no additional expense to the Owner.

E. The Contractor shall be responsible for the following general requirements:

1. Obtain all approvals and permits, and submit all notifications required.

2. Provide, erect, and maintain all planking, bracing, shoring, barricades, and warning signs.

3. Materials not scheduled for reuse shall be removed from the site and disposed of in accordance with all applicable Federal, State and Local requirements.

4. Provide OSHA required personal monitoring to ensure adequate respiratory protection for each worker.

1.2 DESCRIPTION OF WORK

A. The Contractor shall supply all labor, materials, equipment, services, insurance (with specific coverage for work on asbestos), and incidentals which are necessary or required to perform the work in accordance with applicable governmental regulations and these specifications

B. Abatement work consists of the removal of windows with asbestos-containing caulking and glazing. Caulking exists around exterior and interior of window openings between metal window frames and masonry. Windows are to be removed completely from the building exterior.

1.3 DEFINITIONS

A. Agency - The authoritative force, usually at the state level, or their representative.

B. ASHERA - Asbestos School Hazard Emergency Response Act - U. S. EPA regulation 40 CFR Part 763 under Section 203 of Title II of the Toxic Substances Control Act (TSCA), 15 U.S.C. 2643. This rule mandates inspections, accreditation of persons involved with asbestos, and final air clearances following abatement in public and private schools, and public and commercial buildings.

C. Alternative Work Practice (AWP) - State of Connecticut Department of Public Health approved deviation from Asbestos Standards (Sections 19a-332a-1 to 19a-332a-16 inclusive). Alternative Work Practice methods may be used with the acceptance of the Owner's Hazardous Materials Design Consultant and approval of DPH. Approval of alternative work practice procedures shall not relieve the Contractor from any codes, regulations or standards required by this specification. Failure to secure AWP acceptance or approval shall not be a basis of a claim for additional compensation.

D. Asbestos Abatement Site Supervisor – Any individual who is employed or engaged by an asbestos contractor to supervise an asbestos abatement project.

E. Asbestos-Containing Waste Materials - Mill tailings or any waste that contains commercial asbestos and is generated by a source subject to the provisions of this subpart. This term includes filters from control devices, friable asbestos waste material, and bags or other similar packaging contaminated with commercial asbestos. As applied to demolition and renovations operations, this term also includes regulated asbestos-containing material waste and materials contaminated with asbestos including disposable equipment and clothing.

F. Asbestos Control Area - An area where asbestos abatement operations are performed which is isolated by physical boundaries, which assist in the prevention of the uncontrolled release of asbestos dust, fibers, or debris. Two examples of an Asbestos Control Area are a "full containment" and a "glove-bag."

G. Authorized Asbestos Disposal Facility - A location approved by the Connecticut Department of Environmental Protection for handling and disposing of asbestos waste or by an equivalent regulatory agency if the material is disposed of outside the State of Connecticut.

H. Category I Non-Friable Asbestos-Containing Material (ACM) - Asbestos-containing packing, gaskets, resilient floor coverings and asphalt roofing products containing more than 1 percent asbestos as determined using the method specified in Appendix A, subpart F, 40 CFR part 763, section 1, Polarized Light Microscopy.

I. Category II Non-Friable ACM - Any material, excluding Category I non-friable ACM, containing more than 1 percent asbestos as determined using the method specified in Appendix A, subpart F, 40 CFR part 763, section 1, Polarized Light Microscopy that when dry, cannot be crumbled, pulverized, or reduced to powder by hand pressure.

J. Class I Asbestos Work - Activities involving the removal of TSI and surfacing ACM and PACM.

K. Class II Asbestos Work - Activities involving the removal of ACM, which is not thermal system insulation or surfacing material. This includes, but is not limited to the removal of asbestos-containing wallboard, floor tile and sheeting, roofing and siding shingles, and construction mastic.

L. Class III Asbestos Work - Repair and maintenance operations, where ACM, including thermal system and surfacing material, is likely to be disturbed.

M. Class IV Asbestos Work - Maintenance and custodial activities during which employees contact ACM and PACM and activities to clean up waste and debris containing ACM and PACM.

N. Competent Person - In addition to the definition in 29 CFR 1926.32(f), one who is capable of identifying existing asbestos hazards in the work place and selecting the appropriate control strategy for asbestos exposure, who has the authority to take prompt corrective measures to eliminate them, as specified in 29 CFR 1926.32(f): in addition for Class I and Class II work who is specially trained in a training course which meet the criteria of 40 CFR 763 (Appendix C to Subpart E - Asbestos Model Accreditation Plan).

O. Critical Barrier - A layer of six (6) mil polyethylene sheeting taped securely over windows, doorways, diffusers, grilles and any other openings between the Work Area and uncontaminated areas outside of the Work Area, including the outside of the building.

P. DEP - The Connecticut Department of Environmental Protection, 79 Elm Street, Hartford, CT 06106.

Q. DPH - The Connecticut Department of Public Health, 410 Capitol Avenue, P.O. Box 340308, Hartford, CT 06134-0308.

R. Differential Pressure - A difference in the static air pressure between the Work Area and occupied areas, and is developed by the use of HEPA filtered exhaust fans. This differential is generally in the range of 0.02 to 0.04 inches of water column.

S. Encapsulation - The treatment of asbestos-containing materials to prevent the release of fibers as the encapsulant creates a membrane over the surface (bridging encapsulant) or penetrates the material and binds its components together (penetrating encapsulant).

T. Engineering Controls - Controls to include, but not be limited to, pressure differential equipment, decontamination enclosures, critical barriers and related procedures.

U. Equipment Decontamination Enclosure System - The portion of a Decontamination Enclosure System designed for controlled transfer of materials and equipment into or out of the Work Area, typically consisting of a Washroom and a Holding Area.

V. Friable Asbestos-Containing Material (ACM) - Material containing more than one percent asbestos which has been applied on ceilings, walls, structural members, piping, duct work, or any other part of a building, which when dry may be crumbled, pulverized or reduced to powder by hand pressure. The term includes non-friable asbestos-containing material after such previously non-friable material becomes damaged to the extent that when dry it may be crumbled, pulverized or reduced to powder by hand pressure.

W. Friable Asbestos-Containing Building Material (ACBM) - Any friable ACM that is in or on interior structural members or other parts of a school or public or commercial building.

X. HEPA Filter Equipment - High-efficiency particulate air (HEPA) filtered vacuum and/or exhaust ventilation equipment with a filter system capable of trapping and retaining asbestos fibers. Filters shall be of 99.97 percent efficiency for retaining fibers of 0.3 microns in diameter or larger.

Y. Lock-down - The procedure of spraying polyethylene sheeting and building materials with an encapsulant type sealant to seal in non-visible asbestos-containing residue.

Z. Major Fiber Release Episode - Any uncontrolled or unintentional disturbance of ACBM, resulting in a visible emission, which involves the falling or dislodging of more than 3 square or 3 linear feet of friable ACBM.

AA. Minor Fiber Release Episode - Any uncontrolled or unintentional disturbance of ACBM, resulting in a visible emission, which involves the falling or dislodging of 3 square or linear feet or less of friable ACBM.

BB. Negative Initial Exposure Assessment - A demonstration by the employer which complies with the criteria in 29 CFR 1926.1101(f)(2)(iii) that employee exposure during an operation is expected to be consistently below the PEL.

CC. Non-Friable Asbestos-Containing Material - Material containing more than 1 percent asbestos as determined using the method specified in Appendix A, subpart F, 40 CFR Part 763, section 1, Polarized Light Microscopy that when dry cannot be crumbled, pulverized or reduced to powder by hand pressure.

DD. Owner or Operator of a Demolition or Renovation Activity - Any person who owns, leases, operates, controls or supervises the facility being demolished or renovated or any person who owns, leases, operates, controls or supervises the demolition or renovation, or both.

EE. Permissible Exposure Limits (PELS) - (1) Time-weighted Average Limit (TWA). The employer shall ensure that no employee is exposed to an airborne concentration of asbestos in excess of 0.1 fiber per cubic centimeter (f/cc) of air as an eight (8) hour time-weighted average (TWA). (2) Excursion Limit. The employer shall ensure that no employee is exposed to an airborne concentration of asbestos in excess of 1.0 fiber per cubic centimeter of air (1 f/cc) as averaged over a sampling period of thirty (30) minutes.

FF. Pre-Clean - The process of cleaning an area before asbestos abatement activities begin to ensure all dust and debris in the area considered asbestos containing are properly contained and disposed of. This increases the likelihood the area will pass aggressive air sampling clearance requirements after asbestos-containing materials have been removed.

GG. Project Monitor - The certified and licensed individual contracted or employed by the building Owner or contractor to supervise and/or conduct air monitoring and analysis schemes. This individual is responsible for recognition of technical deficiencies in procedures during both planning and on-site phases of an abatement project. Requirements for Project Monitor are defined in the Connecticut Department of Public Health Regulations (Sections 20-440-1 to 20-440-9 and 20-441). In addition to these requirements, this person shall be listed in the American Industrial Hygiene Association's Asbestos Analysts Registry.

HH. Regulated Area - Area established by the employer to demarcate areas where Class I, II and III work is conducted, and any adjoining area where debris and waste from such asbestos work accumulate; a work area within which airborne concentrations of asbestos exceed or there is a reasonable possibility they may exceed the PEL.

II. Regulated Asbestos-Containing Material (RACM) - (a) Friable asbestos material, (b) Category I non-friable ACM that has become friable, (c) Category I non-friable ACM that will be or has been subjected to sanding, grinding, cutting, or abrading, or (d) Category II non-friable ACM that has a high probability of becoming or has become crumbled, pulverized, or reduced to powder by the forces expected to act on the material in the course of demolition or renovation operations.

JJ. Visible Emissions - Any emissions, which are visually detectable without the aid of instruments, coming from RACM or asbestos-containing waste material or from any asbestos milling, manufacturing, or fabricating operation. This does not include condensed, uncombined water vapor.

KK. Visible Residue - Any debris or dust on surfaces in areas within the Work Area where asbestos abatement has taken place and which is visible to the unaided eye. All visible residue is assumed to contain asbestos.

LL. Waste Generator - Any Owner or operator of a source whose act or process produces asbestos-containing waste material.

MM. Waste Shipment Record - The shipping document, required to be originated and signed by the waste generator, used to track and substantiate the disposition of asbestos-containing waste material.

NN. Wet Cleaning - The process of eliminating asbestos contamination from building surfaces and objects by using cloths, mops, or other cleaning tools, which have been dampened with water, and afterwards thoroughly decontaminated or disposed of, as asbestos-contaminated waste.

OO. Work Area - Specific area or location where the actual work is being performed or such other area of a facility, which the Commissioner determines, may be hazardous to public health because of such asbestos abatement.

PP. Worker Decontamination Enclosure System - The portion of a Decontamination Enclosure System designed for controlled passage of workers and authorized visitors, typically consisting of a Clean Room, a Shower Room and an Equipment Room.

1.4 REFERENCES

A. The current issue of each document shall govern. Where conflict among requirements or with these specifications exists, the more stringent requirements shall apply.

1. Occupational Safety and Health Administration (OSHA)

   29 CFR 1910.1001 - Asbestos, Tremolite, Anthophyllite, and Actinolite.

   29 CFR 1926.21 - Safety Training and Education.

   29 CFR 1926.32 - Definitions.

   29 CFR 1926.51 - Sanitation.

   29 CFR 1926.55 - Gases, vapors, fumes, dusts, and mists.

   29 CFR 1926.59 - Hazard Communication.

   29 CFR 1926.62 – Lead Exposure in Construction.

   29 CFR 1926.200 - Accident Prevention Signs and Tags.

   29 CFR 1926.417 - Lockout and Tagging of Circuits.

   29 CFR 1926.1101 - Asbestos.

2. Environmental Protection Agency (EPA)
   40 CFR 61, Subpart M - National Emission Standards for Hazardous Air Pollutants; Asbestos NESHAP Revision; Final Rule.

   40 CFR 763, Subpart E - Asbestos School Hazard Emergency Response Act (ASHERA).

   40 CFR 763, Subpart G - Worker Protection Rule.

   40 CFR 763, Appendix C to Subpart E - Asbestos Model Accreditation Plan (MAP).

3. State of Connecticut, Department of Public Health (DPH)

   Section 19a-332a-1 through 19a-332a-16 - Standards for Asbestos Abatement.

   Section 19a-332e-1 through 19a-332a-8 – Civil Penalties for Violation of Asbestos Abatement Laws.

   Section 20-440-1 through 20-440-9 - Licensure and Training Requirements for Persons Engaged in Asbestos Abatement and Asbestos Consultation Services.

   Section 20-441 – Refresher Training.

4. American National Standards Institute (ANSI)

   ANSI Z9.2 - Fundamentals Governing the Design and Operation of Local Exhaust Systems.

   ANSI Z88.2 - Respiratory Protection.

5. American Society of Testing and Materials (ASTM)

   ASTM E 84 - Surface Burning Characteristics of Building Materials.

   ASTM E 96 - Water Vapor Transmission of Materials.

   ASTM E 119 - Fire Tests of Building and Construction Materials.

   ASTM E 736 - Cohesion/Adhesion of Sprayed Fire-Resistive Materials Applied to Structural Members.

   ASTM E 1368 - Visual Inspection of Asbestos Abatement Projects.

   ASTM E 1494 - Encapsulants for Spray- or Trowel- Applied Friable Asbestos-Containing Building Materials.

6. Underwriters Laboratories, Inc. (UL)

   UL 586 - High-Efficiency, Particulate, Air Filter Units.

1.5 DOCUMENTATION

A. Submit two copies of the following documentation to the Owner to ensure compliance with the applicable regulations. An up to date copy shall be retained at the job site at all times.

B. Manufacturer's Catalog Data:

   1. Vacuum Equipment
   2. Respirators
   3. Pressure Differential Automatic Recording Instrument
   4. Surfactant
   5. Chemical Encapsulant
   6. Polyethylene Sheeting

7. Airless Sprayers
8. Portable Shower Units
9. Adhesive Removal Chemicals
10. MSDS for All Materials Delivered to the Site

C. Statements:

1. State Notification
2. Worker Medical Certification
3. Worker Training Certification
4. Worker Respirator Fit Testing
5. OSHA Laboratory Certification
6. Contractor's Project Monitor Certification
7. Landfill Approval
8. Safety Plan
9. Respirator Protection Plan

a. Initial Exposure Assessment

b. Copies of all required notifications, approvals and permits for the removal, disposal and transport asbestos-containing or contaminated materials.

c. Documentation from a physician certifying that all employees who may be exposed to airborne asbestos in excess of the background level have been provided with an opportunity to be medically monitored to determine whether they are physically capable of working while wearing the respirator required without suffering adverse health affects. In addition, document that personnel have received medical monitoring required in 29 CFR 1926.1101. They shall also be informed of the specific types of respirators the employee shall be required to wear and the work he/she will be required to perform as well as special work place conditions such as high temperature, high humidity and chemical contaminants which to which he/she may be exposed

d. Documentation certifying that all employees have received training in the proper handling of materials that contain asbestos; understand the health implications and risks involved, including the illnesses possible from exposure to airborne asbestos fibers; understands the use and limits of respiratory equipment to be used; and understands the results of monitoring of airborne quantities of asbestos as related to health and respiratory equipment as indicated in 29 CFR 1926.1101 on an initial and annual basis.

e. Documentation of respiratory fit testing for all employees who must enter the Work Area. This fit testing shall be in accordance with qualitative procedures as detailed in 29 CFR 1926.1101.

f. Qualifications of the person proposed for air sampling to assure workers are using appropriate respiratory protection in accordance with OSHA Standard 1926.1101. The Project Monitor shall be licensed by Connecticut DPH. Include the name and address of the testing laboratory proposed to perform air monitoring on behalf of the Contractor, along with their NIOSH PAT Program I.D. number.

g. Establish and supervise in accordance with 29 CFR 1926.21, a program for the education and training of workers in the recognition, avoidance and prevention of unsafe conditions and the regulations applicable to the work environment to control or eliminate any hazards or other exposure to illness or injury. Include any site-specific information to address health and safety procedures unique to this project.

h. Establish a written Respiratory Protection Plan in accordance with 29 CFR 1910.134. This plan shall establish procedures governing the selection and use of respirators and shall include such information as training in the proper use of respirators; medical examination of workers to determine whether or not they may be assigned an activity where respiratory protection is required; training in proper use and limitations of respirators; respirator fit testing; regular inspection and evaluation of the continued effectiveness of the program; and other elements included in the standard.

i. Establish a written Hazard Communication Plan in accordance with 29 CFR 1910.1200(e) and 29 CFR 1926.59(e). This plan shall establish procedures describing how the facility will comply with the standard; describe how MSDS will be obtained and made available for each hazardous chemical used in the work area; describe how information and training will be provided to employees; include a list of all toxic chemicals known to be present in the work place, cross-referenced to the MSDS file; explain how workers will be informed of hazards connected with non-routine tasks such as dealing with accidental spills and leaks; explain how workers will be informed of hazards associated with chemicals contained in unlabeled pipes; and, contain information on how other contract employees will be informed about hazards their employees may encounter while working in the facility.

j. Demonstrate that employee's exposure will be below the PEL. For Class I asbestos work until the employer conducts exposure monitoring and documents that employees on that job will not be exposed in excess of the PEL, or otherwise makes a negative exposure assessment, the employer shall presume that employees are exposed in excess of the TWA and excursion limit.

D. Records:

1. Personal Air Sampling Results

2. Waste Shipment Records

3. Rental Equipment Statements

a. When rental equipment is to be used in removal areas or to transport waste materials, submit a copy of written notification provided to the rental company informing them of the nature of use of the rented equipment

1.6 PERSONNEL PROTECTION

A. Respiratory protection shall meet the requirements of OSHA as required in 29 CFR 1910.134 and 29 CFR 1926.1101. Provide appropriate respiratory protection for each worker and ensure usage during potential asbestos exposure. Select respirators from among those jointly approved as being acceptable for protection by the Mine Safety and Health Administration (MSHA) and the National Institute for Occupational Safety and Health (NIOSH) under the provisions of 30 CFR Part 11. Provide an adequate supply of filter elements for respirators in use.

B. Minimum respiratory protection shall be as follows:

Airborne concentration of asbestos, or conditions of use.	Required Respirator
Not in excess of 10 f/cc (100 x PEL)	Any powered air purifying respirator equipped with high efficiency filters or any supplied-air respirator operated in continuous flow mode.
Not in excess of 100 f/cc (1000 x PEL)	Full face piece supplied air respirator operated in pressure demand mode.
Greater than 100 f/cc (>1000 x PEL) or unknown concentration	Full face piece supplied air respirator operated in pressure demand mode, equipped with an auxiliary positive pressure self-contained breathing apparatus.

a. Respirators assigned for higher airborne fiber concentrations may be used at lower concentrations, or when required respirator use is independent of concentration.

b. A high-efficiency filter means a filter that is at least 99.97 percent efficient against mono-dispersed particles of 0.3 microns in diameter or larger.

C. Provide and require all workers to wear protective clothing in Work Areas where asbestos fiber concentrations exceed permissible limits established by OSHA. Protective clothing shall include impervious coveralls with elastic wrists and ankles, head covering, gloves and foot coverings. Ensure all contaminated protective clothing is disposed of as contaminated waste.

1.7 SEQUENCE OF WORK

A. Proceed in accordance with the sequence of work as mutually agreed upon with the Owner. Work shall be divided into convenient Work Areas, each of which is to be completed as a separate unit. The following sequence of work shall be used for the asbestos abatement work:

1. A visual inspection of the Work Area to determine pre-existing damage to facility components.
2. Release of area to the Contractor.
3. Window removal and abatement of all asbestos-containing materials by the Contractor.
4. Visual inspection by the Owner's Project Monitor for completeness.
5. Cleanup by the Contractor.

1.8 DELIVERY, STORAGE AND HANDLING

A. Deliver all materials in the original packages, containers, or bundles bearing the name of the manufacturer and the brand name and product technical description. Do not use damaged or

deteriorating materials. Material that becomes contaminated with asbestos shall be decontaminated or disposed of as asbestos waste.

PART 2 - PRODUCTS

2.1 MATERIALS

A. Fire retardant polyethylene sheet in roll size to minimize the frequency of joints shall be delivered to job site with factory label indicating four (4) or six (6) mil.

B. Polyethylene disposable bags shall be six (6) mil with pre-printed label. Disposable bags shall be opaque.

C. Tape shall be capable of sealing joints in adjacent polyethylene sheets and for attachment of polyethylene sheet to finish or unfinished surfaces. Tape must be capable of adhering under both dry and wet conditions.

D. Surfactant (wetting agent) shall consist of fifty (50) percent polyoxyethylene ether and fifty (50) percent polyoxyethylene ester, or equivalent, and shall be mixed with water to provide a concentration one (1) ounce surfactant to five (5) gallons of water or as directed by the manufacturer.

E. Containers must be impermeable and shall be both air and watertight. Containers shall be labeled in accordance with OSHA Standard 29 CFR 1926.1101 and EPA 40 CFR Part 61.152 as appropriate.

F. Labels and signs shall conform to OSHA Standard 29 CFR 1926.1101.

G. Encapsulant shall be bridging or penetrating type which has been approved by the Design Consultant. Usage shall be in accordance with manufacturer's printed technical data. Encapsulant must be compatible with new materials being installed.

2.2 TOOLS AND EQUIPMENT

A. Tools and equipment shall be suitable for asbestos removal.

B. Protective clothing, respirators, filter cartridges, air filters and sample filter cassettes shall be provided in sufficient quantities for the project.

C. Electrical equipment, protective devices, emergency generators and power cables shall conform to all applicable codes.

D. Shower stalls and plumbing shall include sufficient hose length and drain system or an acceptable alternate. Showers shall be equipped with hot and cold or warm running water. One shower stall shall be provided for each eight workers.

E. Spray equipment shall be capable of mixing wetting agent with water and capable of generating sufficient pressure and volume. Hose length shall be sufficient to reach all of the Asbestos Control Area.

F. Vacuum units, of suitable size and capabilities for the project, shall have HEPA filters capable of trapping and retaining at least 99.97 percent of all monodispersed particles of 0.3 microns in diameter or larger.

G. Ladders and/or scaffolds shall be of adequate length, strength and sufficient quantity to support the work schedule.

H. Other materials such as lumber, nails and hardware necessary to construct and dismantle the decontamination enclosures and the barriers that isolate the Work Area shall be provided as appropriate for the work.

PART 3 - EXECUTION

3.1 GENERAL REQUIREMENTS FOR ASBESTOS ABATEMENT

A. A Competent Person and Asbestos Abatement Site Supervisor shall be on the job at all times to ensure proper work practices are followed through completion of the project.

B. Containerize asbestos-containing waste material removed daily. Do not allow ACM to remain overnight. Fill disposal containers (six (6) mil polyethylene bags or fiber drums) as removal proceeds, seal filled containers, and apply caution labels and clean containers before removal to wash area. Bags shall be securely sealed to prevent accidental opening and leakage by taping in gooseneck fashion. Bags may be placed in drums for staging and transportation to the disposal site. Bags shall be decontaminated by wet cleaning and HEPA vacuuming before being placed in clean drums and sealed with locking ring tops. Wet clean each container thoroughly before moving to a holding area or to the waste storage container.

C. Unprotected individuals shall be prohibited from entering contaminated areas until air sampling and visual inspections determine decontamination.

3.2 PREPARATION OF WORK AREA

A. Prior to beginning work, the Owner, Consultant and Contractor shall perform a visual survey of each Work Area and list all pre-existing damage to building components. The Contractor shall submit to the Construction Administrator a list, of pre-existing damaged areas.

B. Establish Regulated Areas with warning tape and signs meeting the requirements of OSHA 29 CFR 1910.1001 and 29 CFR 1926.1101 at each Regulated Area. In addition, signs shall be posted at all approaches to Regulated Areas so that an employee may read the sign and take the necessary protective steps before entering the area. Additional signs may require posting following construction of work place enclosure barriers.

3.3 REMOVAL OF WINDOWS FROM BUILDING EXTERIOR

A. Cover interior floor surfaces with polyethylene sheeting sealed with tape. Polyethylene shall extend a minimum of 5-feet from walls. Cover ground surfaces with polyethylene sheeting sealed with tape. Polyethylene shall extend a minimum of 10-feet from building exterior. Install critical barriers consisting of polyethylene sheet over the inside of the window opening and seal with tape.

B. The window materials are to be removed from the opening and wrapped in two (2) layers of 6-mil polyethylene sheeting and placed in properly lined waste containers and disposed of as asbestos-containing material. After completion of stripping work, all surfaces from which asbestos has been removed shall be wet brushed, using a nylon brush, wet wiped and sponged or cleaned by an equivalent method to remove all visible residue (wire brushes are not permitted). During this work, the surfaces being cleaned shall be kept wet.

3.4 CLEAN-UP PROCEDURE

A. Remove and containerize all visible accumulations of asbestos-containing and/or asbestos-contaminated debris which may have splattered or collected on the polyethylene floor

or ground covering. Any debris, which may have leaked behind coverings shall be removed by HEPA vacuuming and/or wet cleaning.

B. Remove contamination from the exterior, scaffolding, ladders, extension cords, hoses and other equipment inside the Work Area. Cleaning may be accomplished by brushing, HEPA vacuuming and/or wet cleaning.

C. The Owner's Project Monitor shall conduct a thorough visual inspection to detect visible accumulations of dust or bulk asbestos-containing materials remaining in the Work Area. Should dust, debris or residue be detected, the Contractor shall repeat the cleaning, at the Contractor's expense, until the area is in compliance. The visual inspection will detect incomplete work, damage caused by the abatement activity, and inadequate clean up of the work site.

D. The abatement will be considered complete when there is no visible residue remaining from abated surfaces.

3.5 CONTRACTOR RESPONSIBILITY

A. Conduct air sampling, as necessary, to assure that workers are using appropriate respiratory protection in accordance with OSHA Standard 1926.1101. Perform monitoring to determine accurately the airborne concentrations of asbestos to which employees may be exposed. Determinations of employee exposure shall be made from breathing zone air samples that are representative of the 8-hour TWA and 30-minute short-term exposures of each employee. Documentation of air sampling results must be recorded at the work site within twenty-four (24) hours of receipt of results, and shall be available for review until the job is complete.

3.6 DISPOSAL OF ASBESTOS

A. Disposal of asbestos-containing and/or asbestos contaminated material shall occur at an authorized site and must be in compliance with the requirements of, and authorized by the Office of Solid Waste Management, Department of Environmental Protection, State of Connecticut, or other designated agency having jurisdiction over solid waste disposal.

B. Disposal approval shall be obtained prior to commencement of asbestos removal.

C. Warning signs must be attached to vehicles used to transport asbestos-containing waste. Warning signs shall be posted during loading and unloading of disposal containers. The signs must be posted so that they are plainly visible.

D. Waste removal dumpsters and cargo areas of transport vehicles shall be lined with a layer of six (6) mil polyethylene sheeting to prevent contamination from leaking or spilled containers. Floor sheeting shall be installed first, and shall be extended up sidewalls 12-inches. Wall sheeting shall overlap floor sheeting 24-inches and tape into place.

E. A copy of the completed Waste Shipment Record shall be provided to the Owner.

3.7 ACTION CRITERIA

A. If air samples collected outside of the Work Area during abatement activities indicate airborne fiber concentrations greater than original background levels or greater than 0.010 f/cc, as determined by Phase Contrast Microscopy, whichever is larger, an examination of the Work Area perimeter shall be conducted and the integrity of barriers shall be restored. Cleanup of surfaces outside the Work Area using HEPA vacuum equipment or wet cleaning techniques shall be done prior to resuming abatement activities.

END OF SECTION

PART 1 - GENERAL

1.1 SCOPE

A. The work specified herein shall be the removal of asbestos-containing roofing materials by persons who are knowledgeable, qualified, licensed, and trained in the removal, treatment, handling and disposal of asbestos-containing roofing material, and the subsequent cleaning of the affected environment. The Contractor shall have a Competent Person in control on the job site with authority to take prompt corrective measures at all times during roofing removal work. This person must comply with applicable Federal, State and Local regulations which mandate work practices, and be capable of performing the work of this contract.

B. The Owner may retain the services of a Project Monitor for protection of its interests and those using the building. Area air sampling and visual inspection to ensure proper clean up of the work area will be conducted as deemed necessary.

C. Deviations from the Specification require the written approval of the State of Connecticut.

1.2 DESCRIPTION OF WORK

A. The Contractor shall supply all labor, materials, equipment, services, insurance (with specific coverage for asbestos), and incidentals which are necessary or required to perform the work in accordance with applicable governmental regulations and these specifications

B. The Contractor shall remove and dispose of the asbestos-containing roofing material documented on the attached asbestos inspection report and as indicate on sketch SK-1 at the end of this specification section. Roofing materials to be removed include:

1. Black/Gray Chimney Tar
2. Black Felt Paper
3. Roof Cement and Parts of Old Roof

1.3 DEFINITIONS

A. AGENCY - The authoritative force, usually at the state level, or their representative.

B. ASBESTOS-CONTAINING MATERIAL (ACM) – Any material containing more than one percent asbestos.

C. COMPETENT PERSON – In addition to the definition in 29 CFR 1926.32(f), one who is in the workplace and selecting the appropriate control strategy for asbestos exposure, who has the authority to take prompt corrective measures to eliminate them, as specified in 29 CFR 1926.32(f); in addition, for Class I and Class II work who is specially trained in a training course which meets the criteria of EPA's Model Accreditation plan (40 CFR Part 763) for Supervisor, or its equivalent.

D. HIGH-EFFICIENCY PARTICULATE AIR (HEPA) - A filter capable of trapping and retaining at least 99.97 percent of all mono-dispersed particles 0.3 microns in diameter.

E. LEAK-Tight - Solids or liquids cannot escape or spill out. It also means dust-tight.

F. REGULATED AREA - Area established by the Competent Person to demarcate areas where airborne concentrations of asbestos exceed, or there is a reasonable possibility they may exceed, the Permissible Exposure Limit (PEL).

G. NON-FRIABLE REGULATED ASBESTOS-CONTAINING MATERIAL - Means any material containing more than 1 percent asbestos as determined using the method specified in appendix A, subpart F, 40 CFR part 763, section I, Polarized Light Microscopy, that, when dry, cannot be crumbled, pulverized or reduced to powder by hand pressure.

H. REGULATED ASBESTOS-CONTAINING MATERIAL (RACM) – means (a) Friable asbestos material, (b) Category I non-friable ACM that has become friable, (c) Category I non-friable ACM that will be or has been subjected to sanding, grinding, cutting, or abrading, or (d) Category II non-friable ACM that has high probability of becoming or has become crumbled, pulverized, or reduced to powder by the forces expected to act on the material in the course of demolition or renovation operations regulated by this subpart.

1.4 REFERENCES

A. The current issue of each document shall govern. Where conflict among requirements or with these specifications exists, the more stringent requirements shall apply.

1. Occupational Safety and Health Administration (OSHA) 29 CFR 1926.1101-Asbestos
2. Environmental Protection Agency (EPA) 40 CFR 61, Subpart M-National Emission Standards for Hazardous Air Pollutants; Asbestos NESHAP Revision; Final Rule. 40 CFR 763, Appendix C to Subpart E – Asbestos Model Accreditation Plan (MAP)
3. State of Connecticut, Department of Public Health Regulations (DPH) Sections 19a-332a-1 Through 19a-332a-16 – Standards for Asbestos Abatement

1.5 SUBMITTALS AND NOTICES

A. Prior to commencement of asbestos abatement work, submit to the A/E and Construction Coordinator and receive approval and/or acknowledgement of following:

1. State notifications (when applicable)
2. Asbestos worker medical clearance to wear a respirator documentation
3. Asbestos worker & Competent Person training documentation
4. Asbestos worker respiratory fit testing documentation

B. Within 35 days following the date the asbestos waste trailer leaves the job site, submit to the A/E and DPW Construction Coordinator:

1. Waste shipment record for disposal of asbestos roofing material

1.6 PERSONNEL PROTECTION

A. Provide and require all workers to wear protective clothing and half face respirators when present in the Regulated Area established by the Competent Person.

1.7 WORKER TRAINING REQUIREMENTS

A. Training for the Competent Person, Supervisor, and Workers shall meet the requirements of Federal and State regulations.

PART 2 - PRODUCTS

2.1 MATERIALS

A. Polyethylene sheeting and disposal bags shall be six (6) mil.

B. Labels and signs shall conform to applicable regulations.

2.2 TOOLS AND EQUIPMENT

A. Air monitoring equipment of the type and quantity required to monitor operations and conduct personnel exposure surveillance per OSHA requirements.

B. Protective clothing, respirators, filter cartridges, air filters and sample filter cassettes shall be provided in sufficient quantities for the project.

C. Waste Containers shall be lined with 2 layers of 6 mil polyethylene sheeting and 1 layer of polypropylene burlap.

PART 3 - EXECUTION

3.1 PREPARATION OF WORK AREA

A. Post warning signs meeting the specifications of OSHA 29 CFR 1910 and 29 CFR 1926.1101 at each Regulated Area. In addition, signs shall be posted at all approaches to Regulated Areas so that an employee may read the sign and take the necessary protective steps before entering the area.

B. Prior to start of work, and as needed during the job, the Competent Person shall inspect the work site and determine whether the roofing material is non-friable asbestos containing material and will likely remain non-friable asbestos containing material during removal activities.

C. Shut down and seal (with duct tape and 6-mil. poly sheeting) windows & roof level heating and ventilation air intakes that are in position to entrain dust or vapors from the roofing activities. Coordinate shut down of mechanical systems with Owner personnel. Where intake shutdown is not feasible (as determined by Owner), supply and install horizontal or vertical extensions to relocate the opening of the air intake outside or above the regulated area so as not to entrain dust and vapor emissions from the roofing and re-roofing activity.

3.2 ASBESTOS-CONTAINING ROOFING MATERIAL REMOVAL

A. All work shall be performed in accordance with OSHA Construction Industry Standard (29 CFR 1926.1101) and EPA NESPHAP Standard (40 CFR 61) and applicable State of Connecticut Regulations.

B. A Competent Person shall be on the job at all times to ensure proper work practices throughout the project.

C. The Contractor shall utilize methods which do not sand, grind, cut or abrade the asbestos-containing roofing material. Should roofing materials be identified as regulated asbestos-containing material additional federal and state regulations shall apply.

D. Pick up or HEPA vacuum asbestos-containing roofing debris from non-intact roofs prior to removal of the roofing. Bag debris for disposal.

E. Utilize wet methods to remove asbestos-containing roofing materials unless such wet methods are not feasible or will create safety hazards, as determined and documented in writing by the competent person.

F. HEPA vacuum asbestos-containing dust and debris left after the removal of asbestos-containing roofing. Where asbestos-containing built-up roofing is removed, HEPA vacuum the roof decking following roofing removal. Bag dust and debris for disposal.

G. Remove asbestos-containing flashings and associated cements or mastics using manual methods (such as axe, knife, or shovel). Do not saw, sand, abrade or grind these materials.

H. Asbestos-containing roofing material shall be carried or passed to the ground by hand or lowered to the ground by crane or hoist. Do not drop or throw asbestos-containing roofing material to the ground or into the dumpster. Transfer lowered asbestos-containing roofing material to the leak tight disposal dumpster carefully so as not to disperse dust.

3.3 DISPOSAL OF ASBESTOS-CONTAINING ROOFING MATERIAL

A. Disposal of asbestos-containing and/or asbestos contaminated material shall occur at an authorized site and must be in compliance with the requirements of, and authorized by the Office of Solid Waste Management, Department of Environmental Protection, State of Connecticut, or other designated agency having jurisdiction over solid waste disposal.

B. Asbestos warning signs must be attached to containers used to transport asbestos-containing waste. Warning signs shall be posted during loading and unloading of disposal containers. The signs must be posted so that they are plainly visible.

C. Label containers of asbestos-containing waste material or wrapped asbestos-containing waste material using warning labels specified by OSHA 29 CFR 1926.1101. Label Asbestos-containing waste material destined for off-site transport with the name of the waste generator and the location where the waste was generated.

3.4 CONTRACTOR PERSONAL AIR MONITORING RESPONSIBILITY

A. Conduct air sampling to assure that workers are using appropriate respiratory protection in accordance with OSHA Construction Industry Standard 1926.1101. Documentation of air sampling results must be recorded at the work site within twenty-four (24) hours and shall be available for review until the job is complete.

B. Produce a written initial asbestos exposure assessment prior to starting asbestos roofing removal work in compliance with OSHA Standard 1926.1101. Keep the exposure assessment on site for review by all concerned parties.

END OF SECTION

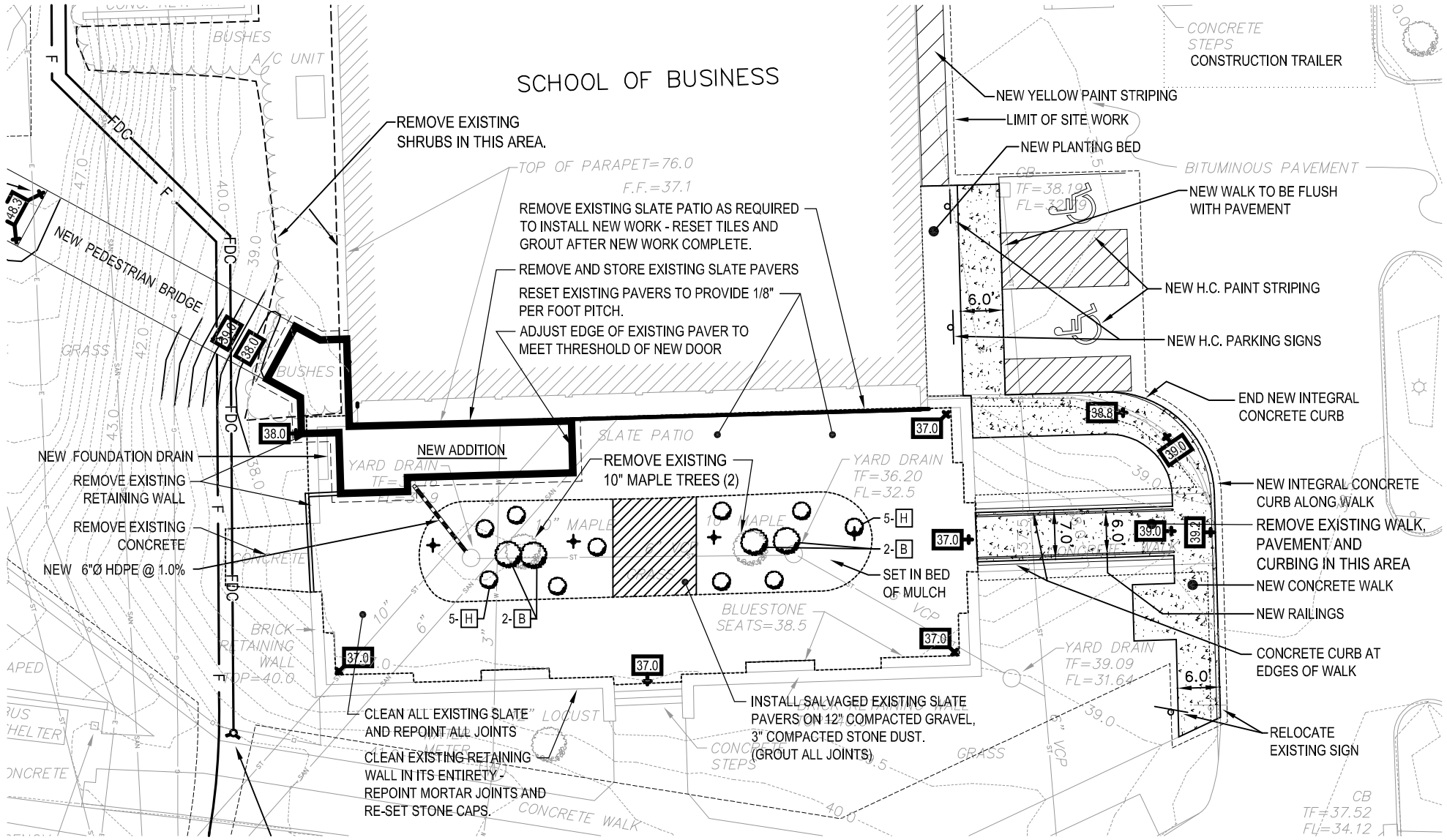

Drawing Title: BASE BID GRADING/UTILITY/LANDSCAPE PLAN	DWG No: SKA-01	Date: 07/26/10
		Scale: 1" = 20'-0"
		Job No: BI-RS-258 (CT-60-AR)
Project: ADDITION & RENOVATIONS TO SCSU SCHOOL OF BUSINESS NEW HAVEN CONNECTICUT	TectonArchitects inc ONE HARTFORD SQUARE WEST HARTFORD CONNECTICUT TEL: 860-548-0802 FAX: 860-249-2531	Revised:

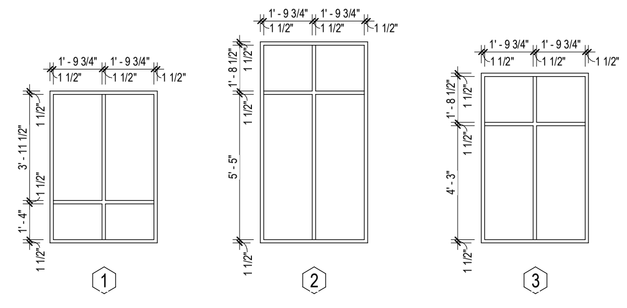

B10 WINDOW ELEVATIONS
1/4" = 1'-0"

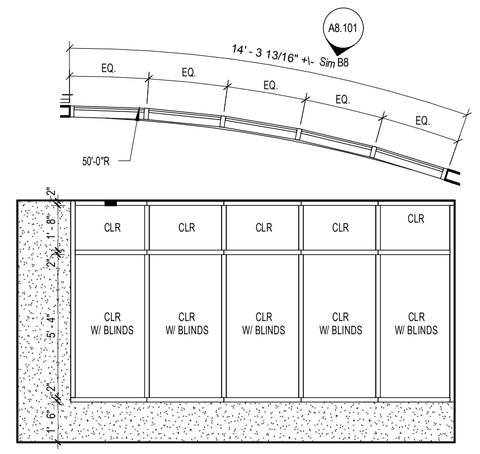

B8 WINDOW ELEVATION
1/4" = 1'-0"

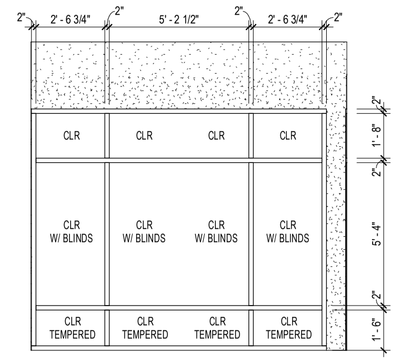

B7 WINDOW ELEVATION
1/4" = 1'-0"

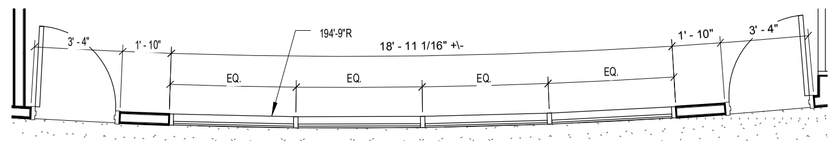

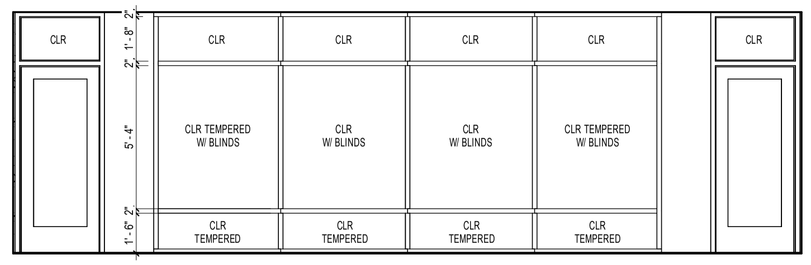

C10 WINDOW ELEVATION
1/4" = 1'-0"

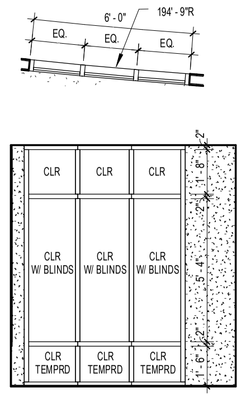

C8 WINDOW ELEVATION
1/4" = 1'-0"

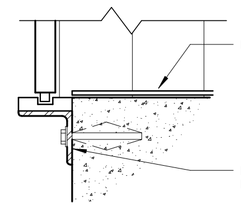

SILL CONDITION

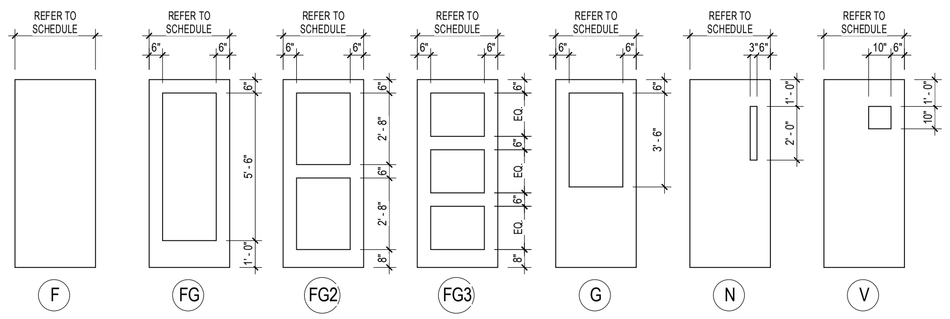

E10 DOOR PANEL ELEVATIONS
1/4" = 1'-0"

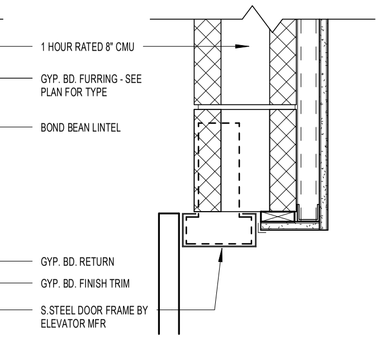

HEAD CONDITION **JAMB CONDITION**

E7 ELEVATOR DOOR DETAILS
1 1/2" = 1'-0"

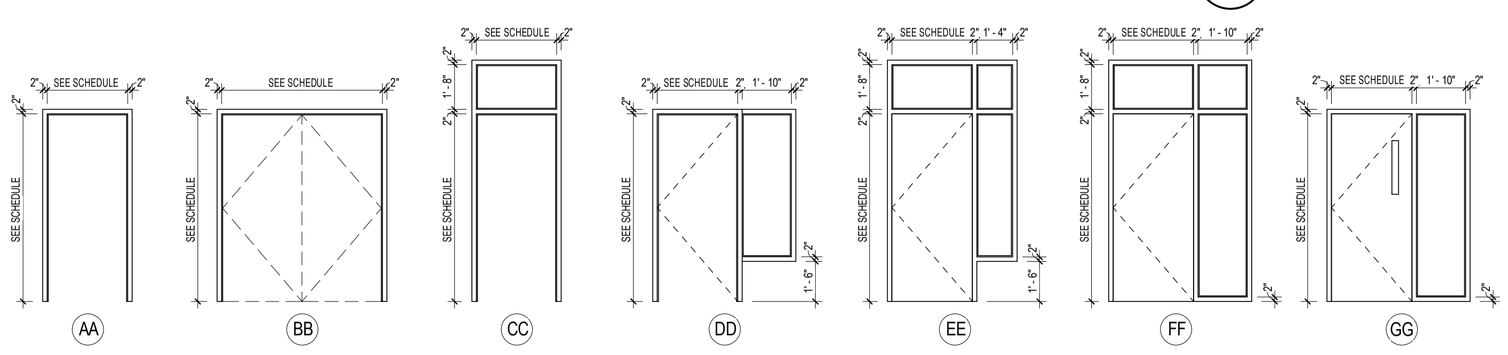

G10 DOOR AND FRAME ELEVATIONS
1/4" = 1'-0"

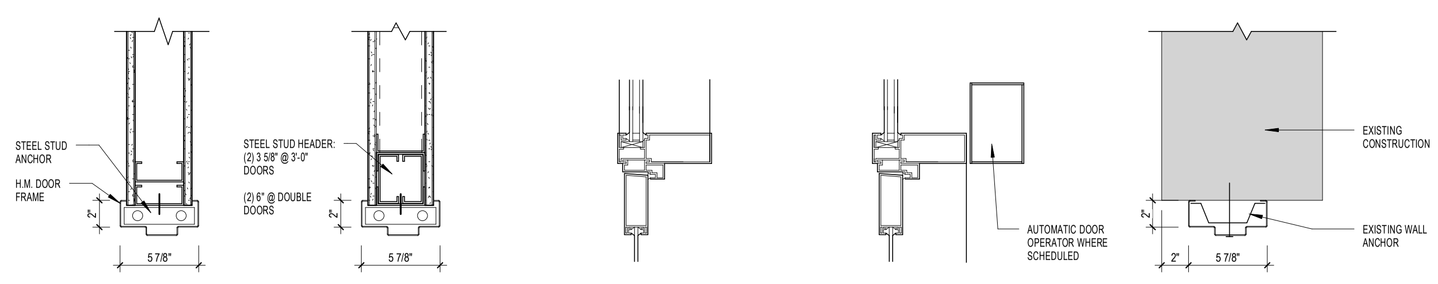

H10 DOOR DETAILS
1 1/2" = 1'-0"

DOOR AND FRAME SCHEDULE

TO ROOM NAME	DOOR NUMBER	FROM ROOM NAME	FROM ROOM NUMBER	FIRE RATING	DOOR LABEL	DOOR SIZE OPENING WIDTH	DOOR SIZE LEAF QUANITY	DOOR SIZE HEIGHT	DOOR DESCRIPTION TYPE	DOOR DESCRIPTION MATERIAL	DOOR DESCRIPTION FINISH	FRAME DESCRIPTION TYPE	FRAME DESCRIPTION MATERIAL	FRAME DESCRIPTION FINISH	FRAME DETAILS HEAD	FRAME DETAILS JAMB	FRAME DETAILS SILL	SPECIAL	HARDWARE SET	HARDWARE THRESHOLD	SIGNAGE	DOOR NUMBER	REMARKS
VESTIBULE	001A					6' - 0"	2	7' - 0 1/2"	FG2	ALUM	PRE-FIN		ALUM	PRE-FIN	D	C	G5/A3.303 SIM		01	AA		001A	
VESTIBULE	001B	LOBBY	002			6' - 0"	2	7' - 0 1/2"	FG2	ALUM	PRE-FIN		ALUM	PRE-FIN	D	C	G5/A3.303 SIM		05	AA		001B	
LOBBY	002	LOBBY	002			3' - 1"	1	7' - 0 1/2"	FG2	ALUM	PRE-FIN		ALUM	PRE-FIN	D	C			03	AA	N.7	002	
STORAGE	004	LOBBY	002	45 MIN	C	3' - 0"	1	7' - 0"	F	WD	STAIN	AA	HM	PAINT	B	A			19		P / N.9	004	
ELEV. ROOM	004.1	STORAGE	004.2	45 MIN	C	3' - 0"	1	7' - 0"	F	WD	STAIN	AA	HM	PAINT	B	A			18		P / N.9	004.1	
TRADING ROOM	005	LOBBY	002			3' - 0"	1	7' - 0"	FG	WD	STAIN	CC	HM	PAINT	B	A			28		P	005	
SEMINAR ROOM B	020.1	LOBBY	002			3' - 0"	1	7' - 0"	N	WD	STAIN	CC	HM	PAINT	B	A			11		P	020.1	
SEMINAR ROOM B	020.1A					2' - 6"	1	7' - 0"	F	WD	STAIN	AA	HM	PAINT	B	A			31		P	020.1A	
SEMINAR ROOM A	020.2	LOBBY	002			3' - 0"	1	7' - 0"	N	WD	STAIN	CC	HM	PAINT	B	A			11		P	020.2	
SEMINAR ROOM A	020.2A					2' - 6"	1	7' - 0"	F	WD	STAIN	AA	HM	PAINT	B	A			31		P	020.2A	
FACULTY OFFICE 3	007	CORRIDOR	006			3' - 0"	1	7' - 0"	N	WD	STAIN	EE	HM	PAINT	B	A			31		B	007	
FACULTY OFFICE 2	008	CORRIDOR	006			3' - 0"	1	7' - 0"	N	WD	STAIN	EE	HM	PAINT	B	A			31		B	008	
STUDENT MEETING	009	CORRIDOR	006			3' - 0"	1	7' - 0"	FG	WD	STAIN	EE	HM	PAINT	B	A			31		P	009	
MECHANICAL ROOM	010	CORRIDOR	006	45 MIN	C	5' - 0"	2	7' - 0"	F	WD	STAIN	AA	HM	PAINT	B	A			13		P / N.7	010	
ELECTRICAL ROOM	011	CORRIDOR	006	45 MIN	C	6' - 0"	2	7' - 0"	F	WD	STAIN	BB	HM	PAINT	B	A			12		P / N.7	011	DOUBLE DOOR WITH CENTER ASTRAGAL
M.D.F. CLOSET	012	CORRIDOR	006	45 MIN	C	6' - 0"	2	7' - 0"	F	WD	STAIN	AA	HM	PAINT	B	A			14		P / N.7	012	
KITCHEN / LOUNGE	013	LOADING DOCK	030			3' - 0"	1	7' - 0"	F	WD	STAIN	AA	HM	PAINT	B	A			27		N.9	013	
SHOWER	014	KITCHEN / LOUNGE	013			3' - 0"	1	7' - 0"	F	WD	STAIN	AA	HM	PAINT	B	A			22	CC	N.10	014	
STAIR	015.1	KITCHEN / LOUNGE	013	90 MIN	B	3' - 0"	1	7' - 0"	F	WD	STAIN	-	-	-	-	-			09		N	015.1	
STAIR	015.2					3' - 0"	1	7' - 0"	F	EXST	PAINT		EXST	PAINT					06		N.7	015.2	EXISTING DOOR - NEW HARDWARE
ADJUCT FACULTY OFFICE AREA	016	KITCHEN / LOUNGE	013			3' - 0"	1	7' - 0"	FG	WD	STAIN	CC	HM	PAINT	B	A			26		P	016	
RECYCLING	016.1	KITCHEN / LOUNGE	013			6' - 0"	2	7' - 0"	F	WD	STAIN	AA	HM	PAINT	B	A			15		P / N.7	016.1	
STORAGE	016.2	ADJUCT FACULTY OFFICE AREA	016			3' - 0"	1	7' - 0"	F	WD	STAIN	AA	HM	PAINT	B	A			30		P	016.2	
WOMENS TOILET	017	CORRIDOR	006			3' - 0"	1	7' - 0"	F	WD	STAIN	AA	HM	PAINT	B	A			21	CC	I	017	
JAN	018	CORRIDOR	006			2' - 6"	1	7' - 0"	F	WD	STAIN	AA	HM	PAINT	B	A			20	CC	P / N.7	018	
MENS TOILET	019	CORRIDOR	006			3' - 0"	1	7' - 0"	F	WD	STAIN	AA	HM	PAINT	B	A			21	CC	J	019	
LOADING DOCK	030			90 MIN	B	6' - 0"	2	7' - 0"	F	HM	PAINT	BB	HM	PAINT	E	E			16			030	
	101A	VESTIBULE	101			6' - 0"	2	6' - 10 3/4"	FG2	ALUM	PRE-FIN		ALUM	PRE-FIN	D	C	G5/A3.303		02	AA		101A	
WAITING / LOBBY	101B	VESTIBULE	101			6' - 0"	2	7' - 0"	FG2	ALUM	PRE-FIN		ALUM	PRE-FIN	D3/A3.303	F10/A4.301			04			101B	
CORRIDOR	102	WAITING / LOBBY	102			3' - 0"	1	7' - 0"	FG	WD	STAIN	AA	HM	PAINT	B	A			26			102	
CONFERENCE ROOM	104A	CORRIDOR	115			3' - 0"	1	7' - 0"	FG	WD	STAIN	CC	HM	PAINT	B	A			24		P	104A	
CONFERENCE ROOM	104B	CORRIDOR	115			3' - 0"	1	7' - 0"	FG	WD	STAIN	CC	HM	PAINT	B	A			24		P	104B	
SECRETARY	105	CORRIDOR	115			3' - 0"	1	7' - 0"	FG	WD	STAIN	EE	HM	PAINT	B	A			29		P	105	
CONFERENCE ROOM	105.1	SECRETARY	105			3' - 0"	1	7' - 0"	G	WD	STAIN	CC	HM	PAINT	B	A			31		P	105.1	
DEAN MBA	105.2	SECRETARY	105			3' - 0"	1	7' - 0"	N	WD	STAIN	CC	HM	PAINT	B	A			31		B	105.2	
UA WAITING	106	CORRIDOR	111			3' - 0"	0	7' - 0"	-	-	-	CC	HM	PAINT	B	A					P	106	
SECRETARY	106.1	UA WAITING	106			3' - 0"	1	7' - 0"	N	WD	STAIN	CC	HM	PAINT	B	A			31		B	106.1	
CHAIR FINANCE / ECONOMICS	107A	CORRIDOR	111			3' - 0"	1	7' - 0"	F	WD	STAIN	CC	HM	PAINT	B	A			31			107A	
CHAIR FINANCE / ECONOMICS	107B	UA WAITING	106			3' - 0"	1	7' - 0"	N	WD	STAIN	EE	HM	PAINT	B	A			31		B	107B	
CHAIR ACCOUNTING	108A	CORRIDOR	111			3' - 0"	1	7' - 0"	F	WD	STAIN	CC	HM	PAINT	B	A			31			108A	
CHAIR ACCOUNTING	108B	UA WAITING	109			3' - 0"	1	7' - 0"	N	WD	STAIN	EE	HM	PAINT	B	A			31		B	108B	
UA WAITING	109	CORRIDOR	111			3' - 0"	0	7' - 0"	-	-	-	CC	HM	PAINT	B	A					P	109	
SECRETARY	109.1	UA WAITING	109			3' - 0"	1	7' - 0"	N	WD	STAIN	CC	HM	PAINT	B	A			31		B	109.1	
CORRIDOR	111	LOBBY	130			3' - 0"	1	7' - 2"	N	WD	STAIN	GG	HM	PAINT	E	E (SIM)			07			111	
STAIR	111.1	CORRIDOR	111	90 MIN	B	3' - 0"	1	7' - 0"	F	WD	STAIN	-	-	-	-	-			09		N	111.1	EXISTING FRAME TO BE REUSED
KITCHENETTE	112	CORRIDOR	111			3' - 0"	1	7' - 0"	FG	WD	STAIN	CC	HM	PAINT	B	A			24		P	112	
WOMENS TOILET	113	CORRIDOR	111			3' - 0"	1	7' - 0"	F	WD	STAIN	AA	HM	PAINT	B	A			21	CC	I	113	
IDF	114.1	MAIL / COPY / WORK ROOM	114			5' - 4"	2	7' - 0"	F	WD	STAIN	BB	HM	PAINT	B	A			17		P / N.9	114.1	
MAIL / COPY / WORK ROOM	114A	CORRIDOR	118			3' - 0"	1	7' - 0"	FG	WD	STAIN	CC	HM	PAINT	B	A			25		P	114A	
MAIL / COPY / WORK ROOM	114B	CORRIDOR	111			3' - 0"	1	7' - 0"	FG	WD	STAIN	CC	HM	PAINT	B	A			25		P	114B	
CHAIR MBA	116A	CORRIDOR	115			3' - 0"	1	7' - 0"	F	WD	STAIN	CC	HM	PAINT	B	A			31			116A	
CHAIR MBA	116B	UA WAITING	117			3' - 0"	1	7' - 0"	N	WD	STAIN	EE	HM	PAINT	B	A			31		B	116B	
UA WAITING	117	CORRIDOR	115			3' - 0"	0	7' - 0"	-	-	-	CC	HM	PAINT	B	A					P	117	
SECRETARY	117.1	UA WAITING	117			3' - 0"	1	7' - 0"	N	WD	STAIN	CC	HM	PAINT	B	A			31		B	117.1	
CORRIDOR	118	LOBBY	130			3' - 0"	1	7' - 2"	N	WD	STAIN	GG	HM	PAINT	E	E (SIM)			07			118	
JAN	118.1	CORRIDOR	118			2' - 6"	1	7' - 0"	F	WD	STAIN	AA	HM	PAINT	B	A			20	CC	P / N.9	118.1	
STAIR	118.2	CORRIDOR	118	90 MIN	B	3' - 0"	1	7' - 0"	F	WD	STAIN	-	-	-	-	-			10		N	118.2	EXISTING FRAME TO BE REUSED
MENS TOILET	119	CORRIDOR	118			3' - 0"	1	7' - 0"	F	WD	STAIN	AA	HM	PAINT	B	A			21	CC	J	119	
GRAD. ASSIST	120	CORRIDOR	118			3' - 0"	1	7' - 0"	FG	WD	STAIN	CC	HM	PAINT	B	A			31		P	120	
UA WAITING	122	CORRIDOR	118			3' - 0"	0	7' - 0"	-	-	-	CC	HM	PAINT	B	A					P	122	
SECRETARY	122.1	UA WAITING	122			3' - 0"	1	7' - 0"	N	WD	STAIN	CC	HM	PAINT	B	A			31		B	122.1	
CHAIR MANAGEMENT / MIS	123A	CORRIDOR	118			3' - 0"	1	7' - 0"	F	WD	STAIN	CC	HM	PAINT	B	A			31			123A	
CHAIR MANAGEMENT / MIS	123B	UA WAITING	122			3' - 0"	1	7' - 0"	N	WD	STAIN	EE	HM	PAINT	B	A			31		B	123B	
CHAIR MARKETING	124A	CORRIDOR	118			3' - 0"	1	7' - 0"	F	WD	STAIN	CC	HM	PAINT	B	A			31		N/A	124A	
CHAIR MARKETING	124B	UA WAITING	125			3' - 0"	1	7' - 0"	N	WD	STAIN	EE	HM	PAINT	B	A			31		B	124B	
UA WAITING	125	CORRIDOR	118			3' - 0"	0	7' - 0"	-	-	-	CC	HM	PAINT	B	A			VP		P	125	
SECRETARY	125.1	UA WAITING	125			3' - 0"	1	7' - 0"	N	WD	STAIN	CC	HM	PAINT	B	A			31		B	125.1	
LOBBY	126A			90 MIN	B	6' - 4"	2	7' - 2"	F	WD	STAIN	BB	HM	PAINT	E	E (SIM)			08			126A	
LOBBY	126B			90 MIN	B	6' - 4"	2	7' - 2"	F	WD	STAIN	BB	HM	PAINT	E	E (SIM)			08			126B	
CORRIDOR	201	RECEPTION / WAITING AREA	201			3' - 0"	1	7' - 0"	N	WD	STAIN	DD	HM	PAINT	B	A			23			201	
FACULTY OFFICE - 11	203	CORRIDOR	225			3' - 0"	1	7' - 0"	N	WD	STAIN	AA	HM	PAINT	B	A			31		B	203	
FACULTY OFFICE - 10	204	CORRIDOR	225			3' - 0"	1	7' - 0"	N	WD	STAIN	AA	HM	PAINT	B	A			31		B	204	
FACULTY OFFICE - 9	205	CORRIDOR	225			3' - 0"	1	7' - 0"	N	WD	STAIN	AA	HM	PAINT	B	A			31		B	205	
FACULTY OFFICE - 8	206	CORRIDOR	225			3' - 0"	1	7' - 0"	N	WD	STAIN	AA	HM	PAINT	B	A			31		B	206	
FACULTY OFFICE - 7	207	CORRIDOR	228			3' - 0"	1	7' - 0"	N	WD	STAIN	AA	HM	PAINT	B	A			31		B	207	
FACULTY OFFICE - 6	208	CORRIDOR	228			3' - 0"	1	7' - 0"	N	WD	STAIN	DD	HM	PAINT	B	A			31		B	208	
FACULTY OFFICE - 5	209	CORRIDOR	228			3' - 0"	1	7' - 0"	N	WD	STAIN	AA	HM	PAINT	B	A			31		B	209	
FACULTY OFFICE - 4	210	CORRIDOR	228			3' - 0"	1	7' - 0"	N	WD	STAIN	AA	HM	PAINT	B	A			31		B	210	
FACULTY OFFICE - 3	211	CORRIDOR	228			3' - 0"	1	7' - 0"	N	WD	STAIN	AA	HM	PAINT	B	A			31		B	211	
FACULTY OFFICE - 2	212	CORRIDOR	228			3' - 0"	1	7' - 0"	N	WD	STAIN	AA	HM	PAINT	B	A			31		B	212	
FACULTY OFFICE -1	213	CORRIDOR	228			3' - 0"	1	7' - 0"	N	WD	STAIN	AA	HM	PAINT	B	A			31		B	213	
FACULTY OFFICE - 21	215	CORRIDOR	233			3' - 0"	1	7' - 0"	N	WD	STAIN	AA	HM	PAINT	B	A			31		B	215	
FACULTY OFFICE - 20	216	CORRIDOR	233			3' - 0"	1	7' - 0"	N	WD	STAIN	AA	HM	PAINT	B	A			31		B	216	
FACULTY OFFICE - 19	217	CORRIDOR	233			3' - 0"	1	7' - 0"	N	WD	STAIN	AA	HM	PAINT	B	A			31		B	217	
FACULTY OFFICE - 18	218	CORRIDOR	233			3' - 0"	1	7' - 0"	N	WD	STAIN	AA	HM	PAINT	B	A			31		B	218	
FACULTY OFFICE - 17	220	CORRIDOR	236			3' - 0"	1	7' - 0"	N	WD	STAIN	AA	HM	PAINT	B	A			31		B	220	
FACULTY OFFICE - 16	221	CORRIDOR	236			3' - 0"	1	7' - 0"	N	WD	STAIN	AA	HM	PAINT	B	A			31		B	221	
FACULTY OFFICE - 15	222	CORRIDOR	236			3' - 0"	1	7' - 0"	N	WD	STAIN	AA	HM	PAINT	B	A			31		B	222	
FACULTY OFFICE - 14	223	CORRIDOR	236			3' - 0"	1	7' - 0"	N	WD	STAIN	AA	HM	PAINT	B	A			31		B	223	
FACULTY OFFICE - 13	224	CORRIDOR	236			3' - 0"	1	7' - 0"	N	WD	STAIN	AA	HM	PAINT	B	A			31		B	224	
FACULTY OFFICE - 12	225	CORRIDOR	225			3' - 0"	1	7' - 0"	N	WD	STAIN	AA	HM	PAINT	B	A			31		B	225	
JAN	226.1	COPY / WORK ROOM	226			3' - 0"	1	7' - 0"	F	WD	STAIN	AA	HM	PAINT	B	A			20	CC	P / N.9	226.1	
ELEC	227	COPY / WORK ROOM	226	45 MIN	C	3' - 0"	1	7' - 0"	F	WD	STAIN	AA	HM	PAINT	B	A			20		P / N.9	227	
TELADF	227.1	ELEC	227	45 MIN	C	2' - 8"	1	7' - 0"	F	WD	STAIN	AA	HM	PAINT	B	A			19		P / N.9	227.1	
STAIR	228	CORRIDOR	228	90 MIN	B	3' - 0"	1	7' - 0"	F	WD	STAIN	-	-	-	-	-			09		N	228	EXISTING FRAME TO BE REUSED
FACULTY OFFICE - 25	229	CORRIDOR	228			3' - 0"	1	7' - 0"	N	WD	STAIN	AA	HM	PAINT	B	A			31		B	229	
FACULTY OFFICE - 24	230	CORRIDOR	228			3' - 0"	1	7' - 0"	N	WD	STAIN	AA	HM	PAINT	B	A			31		B	230	
FACULTY OFFICE - 23	231	CORRIDOR	228			3' - 0"	1	7' - 0"	N	WD	STAIN	AA	HM	PAINT	B	A			31		B	231	
FACULTY OFFICE - 22	232	CORRIDOR	228			3' - 0"	1	7' - 0"	N	WD	STAIN	AA	HM	PAINT	B	A			31		B	232	
TOILET	234	CORRIDOR	233			3' - 0"	1	7' - 0"	F	WD	STAIN	AA	HM	PAINT	B	A			22	CC	H	234	
TOILET	235	CORRIDOR	233			3' - 0"	1	7' - 0"	F	WD	STAIN	AA	HM	PAINT	B	A			22	CC	H	235	
STAIR	236	CORRIDOR	236	90 MIN	B	3' - 0"	1	7' - 0"	F	WD	STAIN	-	-	-	-	-			09		N	236	EXISTING FRAME TO BE REUSED
FACULTY OFFICE - 26	237	CORRIDOR	236			3' - 0"	1	7' - 0"	N	WD	STAIN	AA	HM	PAINT	B	A			31		B	237	
FACULTY OFFICE - 27	238	CORRIDOR	236			3' - 0"	1	7' - 0"	N	WD	STAIN	AA	HM	PAINT	B	A			31		B	238	
FACULTY OFFICE - 28	239	CORRIDOR	236			3' - 0"	1	7' - 0"	N	WD	STAIN	AA	HM	PAINT	B	A			31		B	239	
FACULTY OFFICE - 29	240	CORRIDOR	236			3' - 0"	1	7' - 0"	N	WD	STAIN	AA	HM	PAINT	B	A			31		B	240	

Grand total: 106

DOOR HARDWARE KEY

REFER TO SPEC SECTION 087110 FOR DETAILS HARDWARE DESCRIPTIONS & PRODUCT INFORMATION

THRESHOLD

AA - ALUMINUM EXTERIOR DOOR THRESHOLD
BB - INTERIOR CARPET SEPERATOR
CC - MARBLE SABLE

CONSTRUCTION DOCUMENT SUBMISSION

Drawing Title
DOOR & FRAME SCHEDULE

Revisions

No.	Date	Description
1	07/26/10	Addendum #1

STATE OF CONNECTICUT
DEPARTMENT OF PUBLIC WORKS

Plans Prepared By:
TECTON ARCHITECTS INC
HARTFORD, CT 06106

Project:
SOUTHERN CONNECTICUT STATE UNIVERSITY MBA BUILDING

NEW HAVEN CONNECTICUT

Project Number: BI-RS-258 (CT-60-AR)

Date: 2/24/2010
Scale: As indicated
Production Leader: TRM
Project Manager: JW
Project Architect: JW
Peer Reviewer: PT
Drawing Number: A8.101

7/21/2010 3:13:26 PM C:\Revit Projects\CT - State of\SCSU\MBA Building\Steve_Arch_CT60AR.rvt

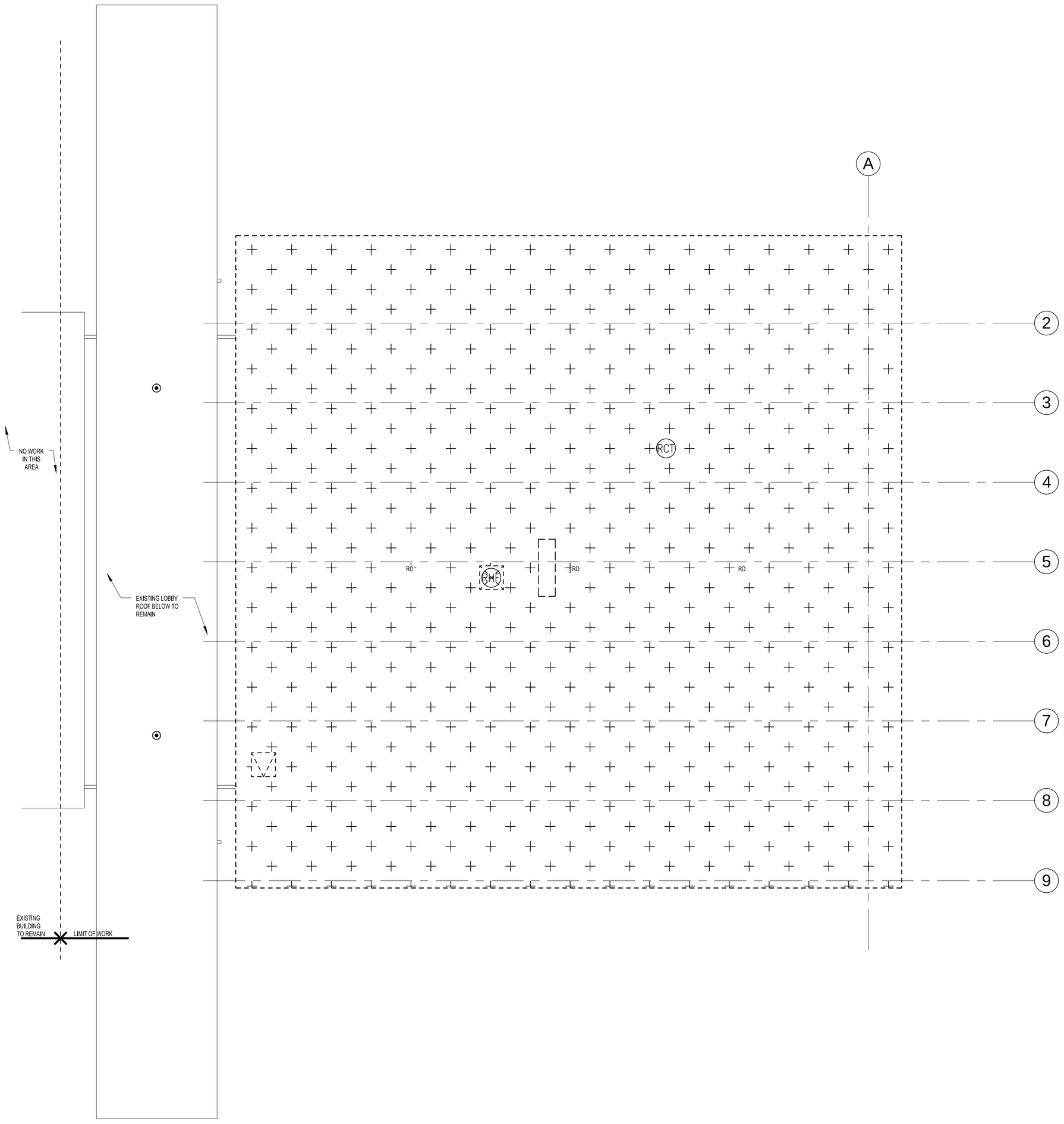

SAMPLE LEGEND

SAMPLE IDENTIFICATION — 1 — SAMPLE RESULT

MATERIAL DESCRIPTION — PERCENTAGE AND TYPE OF ASBESTOS

AN	=	ANTHOPHYLLITE
CA	=	CARPET ADHESIVE
CB	=	COVE BASE
CBA	=	COVE BASE ADHESIVE
CFTA	=	CERAMIC FLOOR TILE ADHESIVE
CFTG	=	CERAMIC FLOOR TILE GROUT
CFTSC	=	CERAMIC FLOOR TILE SETTING COMPOUND
CH	=	CHRYSOTILE
CO	=	COUNTERTOP
CT	=	CEILING TILE
CWTA	=	CERAMIC WALL TILE ADHESIVE
CWTG	=	CERAMIC WALL TILE GROUT
CWTSC	=	CERAMIC WALL TILE SETTING COMPUND
DC	=	DOOR CAULK
DG	=	DOOR GLAZING
DI	=	DUCT INSULATION
DIA	=	DUCT INSULATION ADHESIVE
DS	=	DUCT SEALANT
ECS	=	END CAP SEALANT
EFIS	=	EXTERIOR FINISH INSULATION SYSTEM
EJF	=	EXPANSION JOINT FILLER
FB	=	FIREBRICK
FDI	=	FIRE DOOR INSULATION
FP	=	SPRAY-ON FIREPROOFING
FT	=	FLOOR TILE
FTM	=	FLOOR TILE MASTIC
GB	=	GYPSUM BOARD
GD	=	GLUE DAUB
JC	=	JOINT COMPOUND
LI	=	LINOLEUM
LV	=	LEVELING COMPOUND
MA	=	MISCELLANEOUS ADHESIVE
MC	=	MISCELLANEOUS CAULK
MM	=	MISCELLANEOUS MATERIAL
N	=	NEGATIVE
NA	=	NOT ANALYZED
NAD	=	NO ASBESTOS DETECTED
NAPS	=	NOT ANALYZED POSITIVE STOP
P	=	POSITIVE
PFI	=	PIPE FITTING INSULATION
PI	=	PIPE INSULATION
PIA	=	PIPE INSULATION ADHESIVE
PLCB	=	PLASTER CEILING BASE COAT
PLCS	=	PLASTER CEILING SKIM COAT
PLWB	=	PLASTER WALL BASE COAT
PLWS	=	PLASTER WALL SKIM COAT
PM	=	PIPE MASTIC
PS	=	PENETRATION SEALANT
RC	=	ROOF CEMENT
RCT	=	ROOF CHIMNEY TAR
RDF	=	ROOF DRAIN FELT
RHF	=	ROOF HOOD FELT
RM	=	ROOF MEMBRANE
SCT	=	SUSPENDED CEILING TILE
SU	=	SINK UNDERCOAT
TC	=	TEXTURED CEILING
TR	=	TRACE
VB	=	VAPOR BARRIER
WC	=	WINDOW CAULK
WG	=	WINDOW GLAZING
WP	=	WATERPROOFING
WT	=	WALL TILE

SYMBOL	MATERIAL DESCRIPTION
	ACM RESILIENT FLOORING AND MASTIC
	ACM RESIDUAL ROOFING MATERIALS AND DEBRIS
	ACM WATERPROOFING
S	SUSPENDED CEILING
C	CARPET
BTC	ACM BATH TUB CAULK
CBA	ACM COVE BASE ADHESIVE
CJF	ACM CEILING JOINT FILLER
DC	ACM DOOR CAULK
DIA	ACM DUCT INSULATION ADHESIVE
FDI	ACM FIRE DOOR INSULATION
JC	ACM JOINT COMPOUND
PFI	ACM PIPE FITTING INSULATION
PI	ACM PIPE INSULATION
RCT	ACM ROOF CHIMNEY TAR
RHF	ACM ROOF HOOD FELT
SU	ACM SINK UNDERCOAT
WC	ACM WINDOW CAULK
WG	ACM WINDOW GLAZING

0' 2' 4' 8'

SCALE 1/8"=1'-0"

NOTES

NOT ALL SYMBOLS IN THE LEGEND ARE USED ON THIS DRAWING

Southern Connecticut State University - Old Student Center - Roof

CALLED NORTH

10/15/2009 3:03:04 PM C:\Revit Projects\T-60-ARm_Arch_CTBWR.rvt

Drawing Title: ROOF PLAN

Revisions

No.	Date	Description

STATE OF CONNECTICUT
DEPARTMENT OF PUBLIC WORKS

Plans Prepared By:
ATC ASSOCIATES INC.
290 Roberts St. Ste. 301
East Hartford, CT 06108
Tel:(860)282-9924 Fax:(860)282-9930
PROJECT NO. 61.22573.0015

Project:
SOUTHERN CONNECTICUT STATE UNIVERSITY
OLD STUDENT CENTER
NEW HAVEN, CT

Project Number: RS-09-05

Date: 12/25/09
Scale:
Production Leader:
Project Manager:
Project Architect:
Peer Reviewer:
Drawing Number: SK-1

27 BCG

Attendance Record

State of Connecticut — OLD STUDENT CENTER RENOVATIONS, SCSU — Department of Public Works

PROJECT NUMBER: BI-RS-258 **DATE:** 7/15/10

⊙ Pre-Bid Meeting ○ Pre-Construction Meeting ○ Progress Meeting ○ Special Meeting

	NAME/TITLE/FIRM	ADDRESS		PHONE/FAX/CELL
N	Chris Cucinelli	1 Evergreen Ave St. 23	P	(203) 494-4633
T	Owner/Estimator	Hamden, CT 06518	F	(203) 909-6041
F	CJC Electric		C	(203) 909-6043
N	Thom Dell	350 Bostwick Ave	P	203-367-6220
T	Pres	Bridgeport CT	F	203-334-7096
F	Merritt Contractors		C	203-335-7630
N	ROB PEPIN	6 COMMERCE DRIVE	P	860-456-4576
T	ESTIMATOR	NORTH WINDHAM, CT	F	860-456-8957
F	SARAZIN GEN CON.		C	860-250-3628
N	ERIC HIAGA - SILCOAN	E. WINDSOR, CT - 34 NEWBERRY RD	P	860 627-7400
T	PRO. MGR - EST.		F	860 292-8704
F			C	860 982-4704
N	KEVIN DEANE	707 SUMMER ST.	P	203-359-4704
T	PROJECT MANAGER	STAMFORD, CT 06901	F	203-359-0202
F	A.P. CONSTRUCTION		C	203-410-8160
N	MATTHEW GODI	302 ADAMS ST	P	860-646-3581
T	PROJECT MANAGER	MANCHESTER CT 06042	F	860-643-2124
F	Fibre Optic Plus		C	860-982-8311
N	SCOTT EWEN	175 INDUSTRIAL PARK RD	P	860.347.4000
T	P.M.	MIDDLETOWN, CT	F	860 343.2309
F	KRONENBERGER & SONS		C	
N	RON PENTON	205 Whitney Ave	P	203 562-5559
T	P.M.	Suite 308	F	203 563-3137
F	BoBrdge Facilities Contractor	New Haven CT, 06511	C	203 410-6374
N	KURT BIEDNARCZYK	162 RESEARCH PARKWAY	P	203-235-1770
T	ESTIMATOR	MERIDEN CT, 06450	F	203-599-1621
F	LaROSA BUILDING GROUP		C	
N	MATT PEACOCK	380 HOMESTEAD AVENUE	P	860-247-1414
T	ESTIMATOR PROJECT MGR	HARTFORD CT	F	860-246-0484
F	CAPITAL RESTORATION, INC.	MPEACOCK@CAPRESINC.COM	C	
N			P	
T			F	
F			C	
N			P	
T			F	
F			C	
N			P	
T			F	
F			C	

620F 100207 PMT

Attendance Record

State of Connecticut — Department of Public Works

OLD STUDENT CENTER RENOVATIONS, SCSU

PROJECT NUMBER: BI-RS-258 **DATE:** 7/15/10

⊙ Pre-Bid Meeting ○ Pre-Construction Meeting ○ Progress Meeting ○ Special Meeting

	NAME/TITLE/FIRM	ADDRESS		PHONE/FAX/CELL
N	Stephen Falk	508 Pomfret St.	P	860-928-1975
T	Project Manager	Putnam CT 06260	F	860-928-7863
F	Barr Inc.		C	860-933-9466
N	Joel Yencho	596 John St	P	203 335 4204
T	Project Manager	Bpt CT	F	203 368 3425
F	Holzner Const	06604	C	203 395 8164
N	Bob Garry	701 Winsted Rd	P	203 757-5000
T	Account Executive	Torrington, CT	F	203 757-1945
F	Elevator Service Co.		C	203 819 5433
N	CHRISTOPHER PETRE	64 TRIANGLE ST	P	203-731-3132
T	ESTIMATOR	DANBURY, CT	F	203-748-8747
F	R220 CORP.	06810	C	—
N	Will Benoit	1244 Whalley Avenue	P	203-397-0367
T	Project Manager	New Haven CT	F	203-387-7873
F	DiRienzo Mechanical	06515	C	
N	ROEL LEGASPI	51 OZICK DRIVE, SUITE 100	P	860-349-5674
T	ESTIMATOR	DURHAM, CT 06422	F	860-349-5675
F	NOSAL BUILDERS, INC.		C	860-707-9953
N	NICK BARONE	78 Progress Lane	P	203-597-9014
T	Estimator	Waterbury, CT 06705	F	203-757-6318
F	Montagno Construction	NBarone@montagno.com	C	
N	Bob Sullivan	25 Pinney St.	P	8608961000
T	ESTIMATOR	Ellington, CT	F	871 5982
F	Bestech		C	7986493
N	Ken Strickland	25 Pinney st	P	860-896-1000
T	Operations manager	Ellington CT	F	871-5952
F	Bestech		C	573-4797
N	Sherri McKirdy		P	860-438-3200x163
T	Acct. Manager	smckirdy@simplex	F	860-438-3258
F	Simplex Grinnell	-grinnell.com	C	860-338-1378
N			P	
T			F	
F			C	
N			P	
T			F	
F			C	
N			P	
T			F	
F			C	

* Fire Alarm

620F 100207 PMT

Attendance Record

State of Connecticut — OLD STUDENT CENTER RENOVATIONS, SCSU — Department of Public Works

PROJECT NUMBER: BI-RS-258 **DATE:** 7/15/10

⊙ Pre-Bid Meeting ○ Pre-Construction Meeting ○ Progress Meeting ○ Special Meeting

	NAME/TITLE/FIRM	ADDRESS		PHONE/FAX/CELL
N	~~Andron B~~		P	
T			F	
F			C	
N	Andre Badolato/Andron Construction	31 Anderson Lane	P	914-232-7531
T	Estimator	Goldens Bridge, NY 10526	F	914-232-7536
F	Andron Construction		C	
N	Paul Hollmann	170 Commerce Way	P	860-291-9448
T	Estimator	Southington CT 06489	F	860-289-6352
F	W.J. Mantford Co		C	
N	PAUL PAOLINO	FIVE SHAWS COVE	P	860-444-2567
T	P.M.	NEW LONDON, CT	F	860-447-8705
F	CARLIN CONST. CO.		C	860-867-7808
N	Dave Dyer	21 Acorn Rd	P	203-481-3496
T	Supervisor	Branford, CT 06405	F	203-483-8004
F	A. Secondino & Son	dave@asecondinoandson.com	C	
N	Kevin Bukowski	11 Eastview Drive	P	860 676 9900
T	PE	Farmington CT	F	860 676 0455
F	Lawrence Brunoli Inc	06034	C	
N	Javed Choudhry	156 Fulton Terrace	P	203-469-1397
T	Director of Est.	New Haven CT.	F	203-468-2034
F	A Prete const.		C	
N	Raja MUNSHI	195 Church Street	P	203-789-8700
T	Project Manager	16th Floor	F	203-789-8776.
F	Whiting-Turner.	New Haven, CT.	C	
N	Joe Millard	694 OAKWOOD AVE.	P	860-953-9117
T	ESTIMATOR	WEST HARTFORD CT	F	860 953-0246
F	CT Boiler Repair Inc		C	
N	David Neitz	60 Industrial Park Rd	P	860-871-2839 P
T	Cutter Enterprises	West Tolland CT 06084	F	860-871-3058 F
F			C	
N	JANET Wood	80 CLARK DRIVE	P	860-438-3200
T	Sales	E. Berlin CT 06023	F	860 438-3259
F	Simplex Grinnell		C	860 560-3016
N	John Tancredi	57 Russell St.	P	781-935-0130
T	Estimator	Woburn MA 01801	F	781-935-0048
F	SEAVER Construction Inc.		C	
N	Michael A. Vitello	335 Ferry Boulevard	P	203-378-1876
T	President	Stratford CT.	F	203-375-8319
F	Salce Contrax Inc	06615	C	203-610-4734

(12)

620F 100207 PMT

Attendance Record

State of Connecticut

OLD STUDENT CENTER RENOVATIONS, SCSU

Department of Public Works

PROJECT NUMBER: BI-RS-258

DATE: 7/15/10

⊙ Pre-Bid Meeting ○ Pre-Construction Meeting ○ Progress Meeting ○ Special Meeting

	NAME/TITLE/FIRM	ADDRESS		PHONE/FAX/CELL
N	~~Olympus Construction~~	~~77 Cherry St.~~	P	~~203 258 8341~~
T	~~203 878 1544~~	~~Milford CT~~	F	~~203 878 6430~~
F	~~203 878 6430~~	~~06460~~	C	~~Jim Pino Jr~~
N	~~Mercury Cabling Systems~~	~~300 Avon St~~	P	~~203-378-9008~~
T	~~203-650-0479~~	~~Stratford CT~~	F	~~203-375-9222~~
F	~~203-375-9222~~		C	~~203-650-0479~~
N	~~[illegible]~~	~~[illegible]~~	P	
T	~~[illegible]~~	~~[illegible]~~	F	
F	~~[illegible]~~		C	
N	~~PAUL LESNIEWSKI~~	~~101 ADAMS ST~~	P	
T	~~860-645-8838~~	~~MANCHESTER CT~~	F	
F	~~860-646-[illegible]~~	~~06040~~	C	
N	~~[illegible]~~		P	
T			F	
F			C	
N	Chris Cyr	107 Old Windsor Rd	P	860-242-8586
X T	Estimator	Bloomfield CT 06002	F	860-242-8587
F	PDS Engineering & Const.		C	
N	Jim Pino Jr.	77 Cherry ST	P	203 878 1544
T	President	Milford, CT 06460	F	203 878 6430
X F	Olympus Construction.		C	203 258 8341
N	PAUL LESNIEWSKI	101 ADAMS ST	P	860-645-8838
X T	SPECIALE CONS	MANCHESTER CT	F	860-645-0226
F	ACTION AIR SYS	06040	C	860-482-1879
N	Jason Boudree JR	31 New London Tpke	P	860 (823) 1780
T	Assistant PM	Norwich CT	F	860 885-1421
F	The Nutmeg Co.	06360	C	860 625-5420
N			P	
T			F	
F			C	
N	Michael Eisensmith	300 Avon St	P	203-378-9008
Y T	Project Manager	Stratford CT	F	203-375-9222
F	Mercury cabling systems		C	203-650-0479
N	PETER CHERICHETTI	234 CHURCH ST. SUITE 403	P	203-772-0687
T	PROJECT MANAGER	NEW HAVEN, CT 06510	F	203-772-2732
F	DANIEL O'CONNELL'S SONS		C	203-627-5360
N			P	
T			F	
F			C	

620F 100207 PMT

INVITATION TO BID

FOR PROJECTS ESTIMATED TO COST MORE THAN $500,000.00

ADV. NO.: 10-31 ADV. DATE: June 18, 2010

SEALED BIDS FROM CONTRACTORS WHO HAVE BEEN PREQUALIFIED IN THE DAS CLASSIFICATION NOTED BELOW SHALL BE ADDRESSED TO THE DEPARTMENT OF PUBLIC WORKS - STATE OF CONNECTICUT FOR:

Project Title:	SCSU Old Student Center Renovations School of Business Southern Connecticut State University 501 Crescent Street New Haven, CT
Project Number:	BI-RS-258
DAS Classification:	Group B – General Building Construction
Special Requirement:	N/A
Cost Estimate Range:	$4,393,000. – $4,855,000.
Plans & Specs Ready For Sale Date:	June 23, 2010
A NON-REFUNDABLE FEE OF PER SET IS REQUIRED	$125.00 Checks should be made payable to "Treasurer, State Of Connecticut" and should *include* the prospective bidder's correct mailing address, email address, telephone and fax numbers. USE A SEPARATE CHECK FOR EACH PROJECT.
Examination or Purchase of Plans & Specs	at the State Of Connecticut, Department Of Public Works, Plans And Specifications Section, Room No. G-36, 165 Capitol Avenue, Hartford, CT 06106, during the hours of 7:30 A.M. to 3:00 P.M. (Monday-Friday) or by addressing a request to the above address with your Fedex number.
Pre-Bid Conference:	All prospective bidders are required to attend a **MANDATORY** Pre-Bid Conference
Pre-Bid Conference Time	to be held AT 9:00 AM
Pre-Bid Conference Date	ON July 15, 2010
Pre-Bid Conference Location	AT SCSU Facility Building, 615 Fitch Street, Hamden, CT, 3rd floor conference room.
Pre-Bid Conference Registration	All prospective bidders are required to *properly* register. *Proper* registration means that the attendee has *signed* his or her name to the official roster and *listed* the name and address of the company he or she represents on the official roster no later than the designated start time of the pre-bid conference. No attendee will be allowed to register *after* the advertised start time of the pre-bid conference. Bids submitted by contractors who have *not*

	properly registered and attended the pre-bid conference shall be *rejected* as non-responsive.
Pre-Bid Conference Contact	Robert Sheeley @ 203-392-6050
BID OPENING DATE:	August 4, 2010
Receipt of Bid Package	Bids will be received at the State Office Building, 165 Capitol Avenue, Hartford, CT, 06106 in Room No. G-36 UNTIL 1:00 P.M. on the date shown above and thereafter publicly opened and read aloud in Room No. G-32.
Bid Results:	Bid results are posted on the DPW Website in approximately two (2) days after the bid opening date.
Set-Aside Participation	25%
Including MBE	6.25%
Gift And Campaign Contribution Certification	If awarded the subject contract and the contract has a value of $50,000 or more the contractor will be required to sign and submit, at the time of contract execution, a Gift And Campaign Contribution Certification. See the DPW home page, http://www.ct.gov/dpw, click on Affidavits. For the purposes of signing the Certification, the "date DPW began planning" the subject project or services is such date noted below.
Date DPW Began Planning the Subject Project:	8/11/2008
Summary and Affidavit Regarding State Ethics	Any one seeking a contract with a value of more than $500,000 shall provide with their bid an Ethics Affidavit *located* at CT DPW Website (www.ct.gov/dpw). Failure to provide this affidavit with the bid proposal shall result in rejection of the bid.
Bid Security	As security, *each* bid must be accompanied by a CERTIFIED CHECK made payable to "Treasurer, State of Connecticut," or the bid must be accompanied by a BID BOND, in the form required by the awarding authority and having surety thereto such Surety Company or Companies as are authorized to do business in this State and/or accepted by the Commissioner of the Department of Public Works for an amount not less than 10% of the bid.
Bidders are advised that *both* the DEPARTMENT OF ADMINISTRATIVE SERVICES PREQUALIFICATION CERTIFICATE and UPDATE STATEMENT must accompany the bid proposal for projects *estimated* to *exceed* Five Hundred Thousand Dollars ($500,000.00) (C.G.S. 4b-91 as amended). *Failure to supply them with the bid will result in rejection of the bid*	
Department of Administrative Services (DAS) Contractor Prequalification Program: http://www.das.state.ct.us/Purchase/New_PurchHome/Busopp.asp	
To access Executive Orders: http://www.ct.gov/governorrell/cwp/browse.asp?a=1719&bc=0&c=18433	
To access the Department of Public Works Web Site: http://www.ct.gov/dpw	

Performance and Labor and Material Bonds to be furnished by the bidder awarded the contract shall be an amount not less than 100% of the contract price.

The Commissioner reserves the right to do any of the following without liability, including but not limited to: (a) waive technical defects in the bid proposal as he or she deems best for the interest of the State; (b) negotiate with a contractor in accordance with Connecticut General Statutes Section 4b-91;(c) reject any or all bids; (d) cancel the award or execution of any contract prior to the issuance of the "Notice To Proceed;" and, (e) advertise for new bids.

Nonresident contractors: At the time of contract signing a certificate from the Commissioner of Revenue Services must be provided which evidences that C.G.S. 12-430 for non-resident contractors has been met. For details call the Department of Revenue Services at (860) 541-3280, ext. 7.

EXECUTIVE ORDERS:

The Contract is subject to the provisions of Executive Order No. Three of Governor Thomas J. Meskill, promulgated June 16, 1971, concerning labor employment practices, Executive Order No. Seventeen of Governor Thomas J. Meskill, promulgated February 15, 1973, concerning the listing of employment openings and Executive Order No. Sixteen of Governor John G. Rowland promulgated August 4, 1999, concerning violence in the workplace, all of which are incorporated into and are made a part of the Contract as if they had been fully set forth in it. At the Contractor's request, the Client Agency shall provide a copy of these orders to the Contractor. The Contract may also be subject to Executive Order No. 7C of Governor M. Jodi Rell, promulgated July 13, 2006, concerning contracting reforms and Executive Order No. 14 of Governor M. Jodi Rell, promulgated April 17, 2006, concerning procurement of cleaning products and services, in accordance with their respective terms and conditions.

This contract is subject to the provisions of the Department of Public Works Sexual Harassment Policy ("Policy") and, as such, the contract may be canceled, terminated, or suspended by DPW for violation of or noncompliance with said Policy. Said document is hereby incorporated herein by reference and made a part hereof as though fully set forth herein. This policy may be found at the Department of Public Works Website at http://www.ct.gov/dpw, under Publications.

All technical questions must be in writing (not phoned or emailed) and faxed to the Architect/Engineer with a copy to the DPW Project Manager listed below.

Architect/Engineer/ Consultant:	Tecton Architects, Inc.	Fax No:	860-249-2531
Construction Administrator	Jeffrey J. Wyszynski	Fax No:	860-249-2531
DPW Project Manager:	Robert Prentice	Fax No:	860-713-7270

All bid questions should be addressed to the Officer listed below.

Associates Fiscal Administrative Officer:	Mellanee Walton	Fax No:	(860) 713-7395

Contract Time Allowed: 365 Calendar Days

Liquidated Damages: $ 2,231.00 Per Calendar Day beyond Substantial Completion

$ 1,991.00 Per Calendar Day beyond ninety (90) days after Substantial Completion

Prevailing Wage Rates: Prevailing wages are required on this project, in accordance with the schedule provided in the bid documents, pursuant to Connecticut General Statutes Section 31-53 (a) through (h), as amended.

Each contractor who is awarded a contract on or after October 1, 2002 shall be subject to provisions of the Connecticut General Statutes, Section 31-55a concerning annual adjustments to prevailing wages.

Wage Rates will be posted each July 1st on the Department of Labor website: www.ctdol.state.ct.us . Such prevailing wage adjustment shall not be considered a matter for any contract amendment.

The wages paid on an hourly basis to any mechanic, laborer or workman employed upon the work herein contracted to be done and the amount of payment or contribution paid or payable on behalf of each such employee to any employee welfare fund, as defined in subsection (h) of section 31-53 of the Connecticut General Statutes, shall be at a rate equal to the rate customary or prevailing for the same work in the same trade or occupation in the town in which such public works project is being constructed. Any contractor who is not obligated by agreement to make payment or contribution on behalf of such employees to any such employee welfare fund shall pay to each employee as part of his wages the amount of payment or contribution for his classification on each pay day.

Procurement
Department of Public Works