GEOMATRIX GST™ LEACHING SYSTEM

B-B' CROSS SECTION

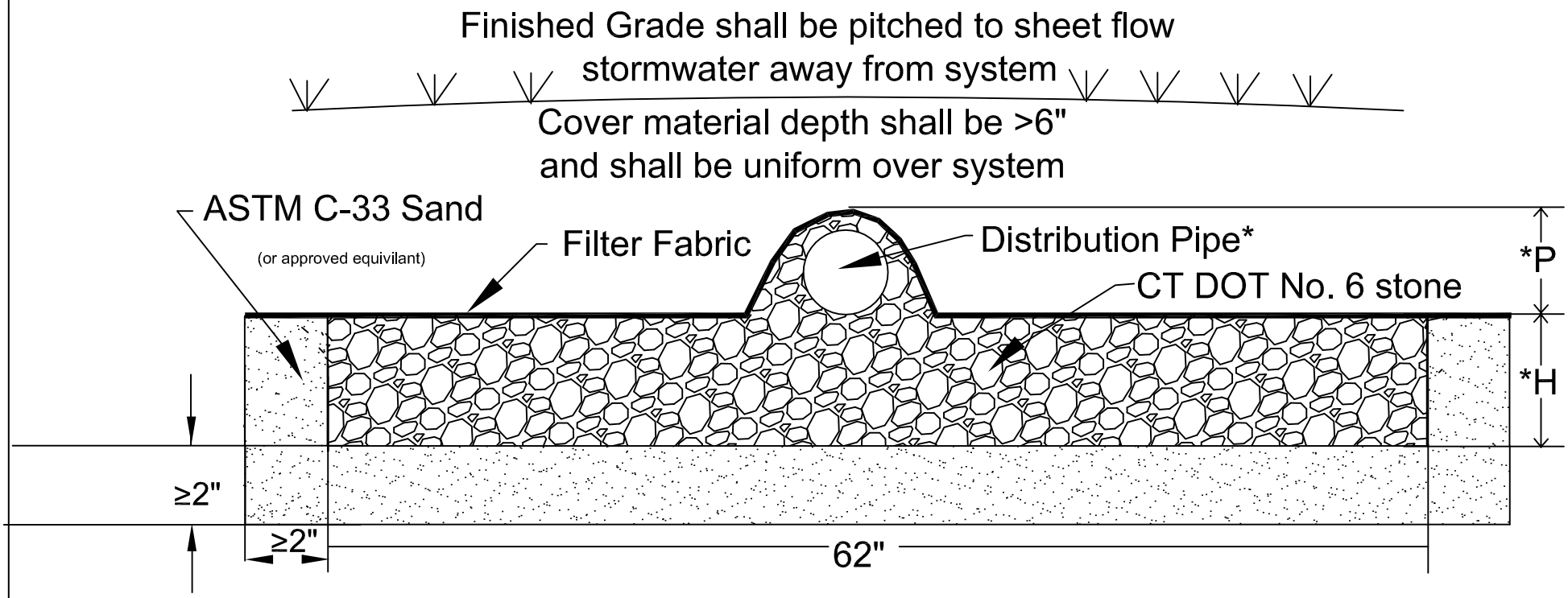

*H= 6" (GST6206)
12" (GST6212)
18" (GST6218)
24" (GST6224)
30" (GST6230)
36" (GST6236)

*P= 2" - 5.5"

*3" min. I.D., ASTM D-3034, SDR 35 pipe for gravity applications
0.75" min. I.D., ASTM D-2665, SCH 40 PVC pipe for pressure applications

Copyright 2007 GEOMATRIX, LLC
Patents Pending

GEOMATRIX ST LEACHING SYSTEM B-B' Cross Section Geomatrix Systems, LLC., Killingworth, CT 860-663-3993	
SCALE NONE	REV. C-01/28/08
DATE 6/28/2007	ACAD No. GEO GLS B-B'.DWG
DRAWN BY: ERP	SHEET 3 OF 3