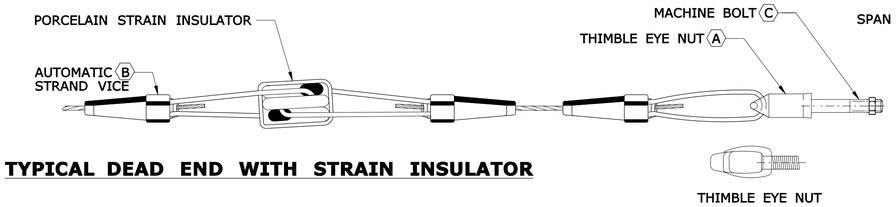

TYPICAL DEAD END WITH STRAIN INSULATOR

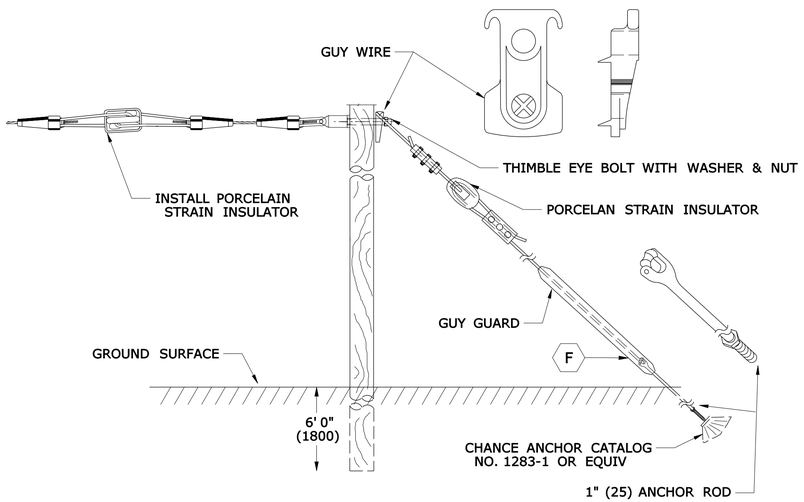

TYPICAL SPAN WIRE TO WOOD POLE INSTALLATION

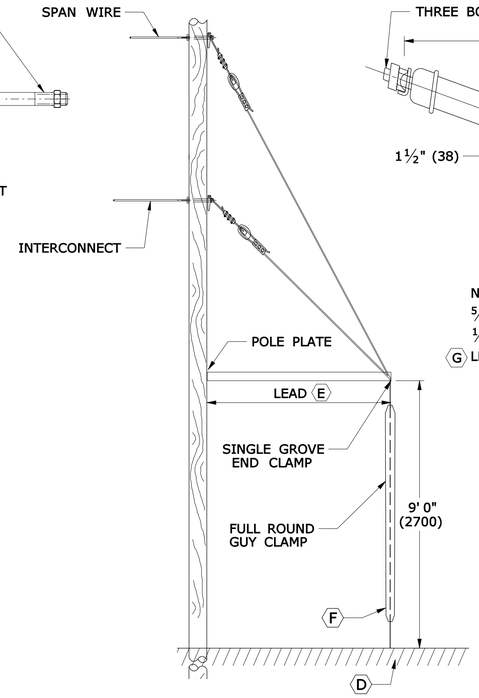

SIDEWALK ANCHOR

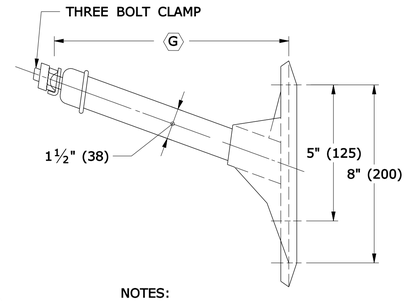

NOTES:
⅝" (16) THROUGH BOLT IN TOP HOLE.
½" (13) X 4" (100) LAG BOLT IN BOTTOM HOLE.
(G) LENGTH REQUIRED TO PROVIDE CLEARANCE IN ACCORDANCE WITH DPUC CONSTRUCTION STANDARD SECTION 16.243.

COMMUNICATION CABLE EXTENSION BRACKET

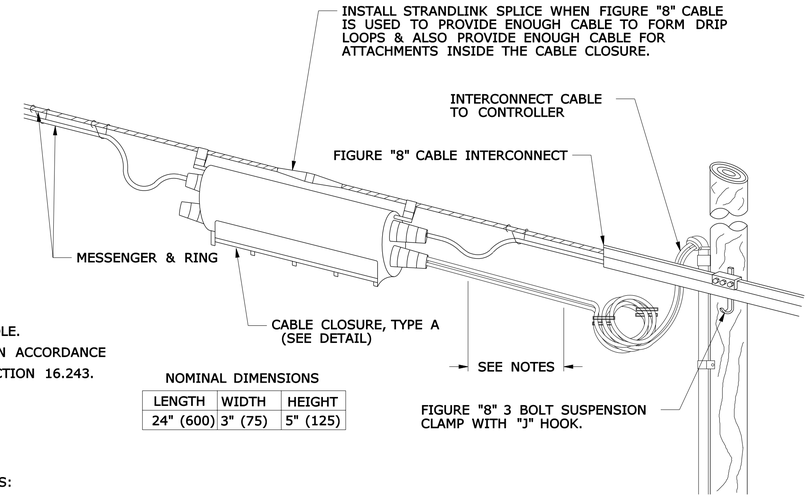

NOMINAL DIMENSIONS

LENGTH	WIDTH	HEIGHT
24" (600)	3" (75)	5" (125)

NOTES:
CABLE LENGTH IS SHOWN EXTENDED TO CLARIFY DRIP LOOP LEADING TO ENTRANCE FITTINGS.
WHEN CABLE IS TOO LARGE TO FORM DRIP LOOPS, INSTALL DIRECTLY INTO CLOSURE WITHOUT DRIP LOOPS.

OVERHEAD INTERCONNECT INSTALLATION

BONDING AND GROUNDING REQUIREMENTS FOR COMMUNICATION CABLES

1. PLACE BOND ON STRAND USING #6 AWG LEAVE COIL OF SUFFICIENT LENGTH TO REACH THE NEXT STRAND AT ALL OF THE FOLLOWING LOCATIONS:
   A. FIRST POLE
   B. LAST POLE
   C. JUNCTION POLE
   CONTACT THE UTILITY THAT OWNS THE NEXT STRAND TO COMPLETE THE BOND.
2. LEAVE COIL #6 AWG WIRE ATTACHED TO CABLE STRAND OF SUFFICIENT LENGTH TO REACH VERTICAL GROUNDING CONDUCTOR AT LEAST EVERY 10 POLES. NOTIFY ELECTRIC COMPANY TO MAKE ATTACHMENT TO GROUNDING CONDUTOR.

NOTES:

- INSTALLATION SHALL CONFORM TO DEPARTMENT OF PUBLIC UTILITY CONTROL, REGULATIONS SECTION 16-243 WITH APPENDIX PLATES AND CURRENT NESC REQUIREMENTS.

(A) THIMBLE EYE BOLT OR THIMBLE EYE NUT WITH MACHINE BOLT ONLY. STANDARD OR OVAL EYE BOLTS OR NUTS ARE NOT ACCEPTABLE.

(B) PREFORMED GUY GRIP MAY BE SUBSTITUTED FOR STRAND VICE.

(C) ANGLE THIMBLE EYE BOLTS ARE NOT ACCEPTABLE FOR DOWN GUY ATTACHMENT.

(D) SCREW OR EXPANSION ANCHOR MAY BE USED TO MINIMIZE EXCAVATION.

(E) USE ENTIRE 10' (3000) LENGTH OF 2" (50) PIPE IF POSSIBLE. MAY BE REDUCED TO KEEP ANCHOR OUTSIDE OF PRIVATE PROPERTY.

(F) USE AUTOMATIC GUY STRAND DEAD END AT ANCHOR END OF GUY.

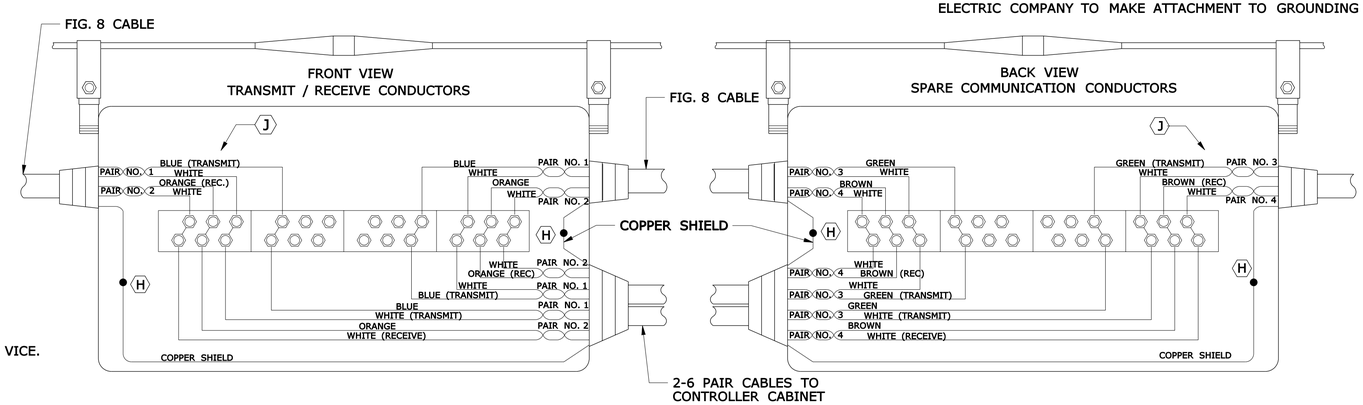

FIG. 8 CABLE			
PAIR #	DOT SPARE	PAIR #	MUNICIPAL SPARES
3	GREEN - WHITE	5	SLATE - WHITE
4	BROWN - WHITE	6	BLUE - RED

6 PAIR, CABLE	
PAIR #	DOT SPARE
5	SLATE - WHITE
6	BLUE - RED

NOTES:
SPARE PAIRS TO BE FOLDED BACK AND NEATLY TIED. GROUP MUNICIPAL SPARES TOGETHER, SEPARATE FROM THOSE RESERVED FOR D.O.T. MUNICIPAL SPARES ARE NOT TO BE CUT.
DO NOT BOND THE CABLE SHEATH TO THE SUPPORT STRAND.
(H) CONNECT ONLY TO SHIELD OF CORRESPONDING 6 PAIR CABLE.
(J) WHEN CONNECTING TO AN EXISTING SYSTEM, VERIFY COLOR CODE OF TRANSMIT AND RECEIVE CONDUCTORS.

TYPICAL COMMUNICATION CABLE CONNECTION IN CABLE CLOSURE, TYPE A

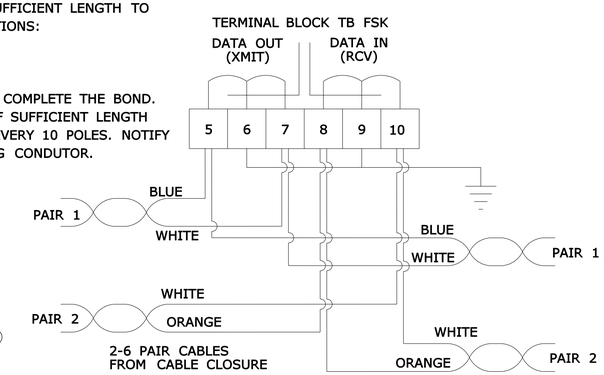

NOTES:

CONNECT SHIELDS TO GROUND ONLY AT EVERY OTHER CABINET, LEAVE SHIELD OPEN AT ALTERNATE CABINETS.
TAG 6 PAIR CABLES WITH INTERSECTION DESTINATION.
SPARE PAIRS TO BE FOLDED BACK AND NEATLY TIED ADJACENT TO TERMINAL BLOCK.

TYPICAL COMMUNICATION CABLE CONNECTION IN CONTROLLER CABINET

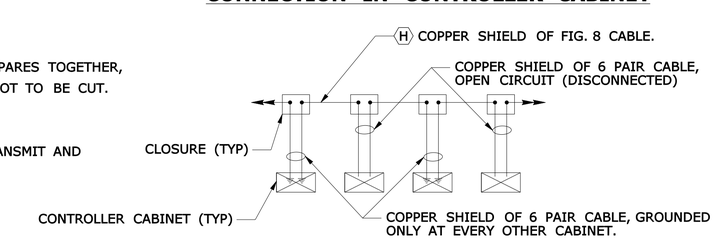

LEGEND AS SHOWN ON TRAFFIC CONTROL SIGNAL PLAN:
- PROPOSED UTILITY POLE
- EXISTING UTILITY POLE
- POLE ANCHOR & GUY
- CABLE CLOSURE

REV.	DATE	INIT	REVISION DESCRIPTION
6	2-09	JFC	REVISED CABLE CLOSURE.
5	1-08	MJG	REVISED FOR 2007 DIGITAL DES. ENVIORN. STANDARDS.

DIMENSIONS ARE IN ENGLISH ('AND ") AND METRIC UNITS (mm). METRIC CONVERSIONS OVER 1" ROUNDED TO NEAREST 5 mm - UNDER 1" TO NEAREST 1 mm.

DESIGNER/DRAFTER: D.K. SWINBURNE
CHECKED BY: R.M. WATERMAN
SCALE - NONE

STATE OF CONNECTICUT
DEPARTMENT OF TRANSPORTATION

SIGNATURE/BLOCK: OFFICE OF ENGINEERING
SUBMITTED BY: M.J. GARVIE
APPROVED BY: R.S. TWORKOWSKI
DATE: 1-31-07

PROJECT TITLE:
TOWN:
PROJECT NO.
DRAWING NO.
DRAWING TITLE: TYPICAL INSTALLATION DETAILS INTERCONNECT CABLE, CABLE CLOSURE & UTILITY POLE ATTACHMENT
SHEET NO. 13

Filename: \\sh3dgs18\CTDOT_projects\999_Misc_Details\Traffic\Typical_Sheets\TRAFFIC_ELECTRICAL\TR_MSH_TYP_E13_R6_2-09.dgn
Plotted: 2/6/2009