Chapter Fourteen

TEMPORARY TRAFFIC CONTROL

Table of Contents

Page

14-1.0 GENERAL ..... 14-1(1)

14-1.01 Responsibilities ..... 14-1(1)
14-1.02 Maintenance and Protection of Traffic (MPT) Plans ..... 14-1(1)

14-2.0 TEMPORARY TRAFFIC CONTROL MANAGEMENT ..... 14-2(1)

14-2.01 Work Zone Type ..... 14-2(1)
14-2.02 Work Zone Traffic Control Strategy ..... 14-2(2)

14-3.0 GEOMETRIC DESIGN ..... 14-3(1)

14-3.01 Design Speed ..... 14-3(1)
14-3.02 Sight Distance ..... 14-3(1)
14-3.03 Lane/Shoulder Widths ..... 14-3(1)
14-3.04 Transition Taper Rates ..... 14-3(2)
14-3.05 Alignment ..... 14-3(2)
14-3.06 Interchanges ..... 14-3(4)
14-3.07 Exceptions ..... 14-3(4)

14-4.0 ROADSIDE SAFETY ..... 14-4(1)

14-4.01 Warrants for Positive Protection ..... 14-4(1)
14-4.02 Clear Zones ..... 14-4(2)
14-4.03 Roadside Barriers ..... 14-4(2)
14-4.04 End Treatments ..... 14-4(2)
14-4.05 Design/Layout ..... 14-4(6)

14-5.0 REFERENCES ..... 14-5(1)

Chapter Fourteen
TEMPORARY TRAFFIC CONTROL

14-1.0 GENERAL

Because much of the Department's highway program will include work on existing highways, highway construction will often disrupt existing traffic operations. Therefore, the designer must devote special attention to temporary traffic control in construction zones to minimize possible operational and safety problems through the work zone.

14-1.01 Responsibilities

The following summarizes the division of responsibilities for the Maintenance and Protection of Traffic (MPT):

1. Designer. The prime designer is responsible for initiating action on the MPT, and he/she will request input from the Division of Traffic Engineering. If a temporary road will be constructed for traffic during construction (i.e., a detour), the designer is responsible for its geometric and roadside safety design. The designer will work with Traffic to determine the traffic control strategy for the MPT on existing roads; see Section 14-2.0. Also, the designer is responsible for ensuring that the highway can be constructed using the developed MPT plans.

2. Division of Traffic Engineering. Traffic will prepare or review the temporary traffic control plans, including all traffic control devices, on all projects on all temporary, proposed and existing roads. Traffic also maintains special standard drawings for traffic control devices, which are included with all projects. For a temporary road that will be used by traffic during construction, Traffic will provide the layout or review the layout of all traffic control devices on that road. Traffic and the designer will work together to determine the temporary traffic control strategy for the MPT.

14-1.02 Maintenance and Protection of Traffic (MPT) Plans

The purpose of the MPT plans is to develop a concept for the safe and efficient movement of traffic through a highway or street construction zone. They may range in scope from a set of plans that describes every detail of traffic accommodation to the standard temporary traffic control plan sheets provided by the Division of Traffic Engineering. The scope of the MPT plans will depend on the complexity and duration of the construction project.

The MPT plans are included in the plans, specifications and estimates (PS&E) submission for every project. These plans should address the following, as applicable:

1. signing;
2. application and removal of pavement markings;
3. temporary signalization;
4. delineation and channelization;
5. lane closures;
6. detours and crossovers;
7. selection and placement of all traffic control devices;
8. locations and types of safety appurtenances;
9. means of maintaining access to and from existing interchange ramps and/or roadside properties;
10. flagging;
11. work scheduling restrictions, if applicable;
12. storage of equipment and materials;
13. traffic regulations, if applicable;
14. duration of use of any traffic control feature (throughout construction period, only during closure of left lane, etc.);
15. surveillance and inspection requirements;
16. contractor access to the work site;
17. coordination with any other construction projects;
18. truck-mounted attenuators;
19. capacity analyses;
20. liquidated damages; and/or
21. use of special materials.

For construction work that may involve a significant disruption to existing traffic operations, the designer should consider during the MPT plan development the likely impact on all affected local interests. These include, where applicable, the operations of the local:

1. public works or highway/street department,
2. police,
3. fire department,
4. ambulance services,
5. public transportation services,
6. school boards,
7. pedestrians and bicyclists,
8. businesses, and
9. homeowners/local access.

14-2.0 TEMPORARY TRAFFIC CONTROL MANAGEMENT

14-2.01 Work Zone Type

There are several basic work zone types that may be considered in a temporary traffic control management plan. Note that work sites which are completely off the roadway and do not disrupt traffic are not addressed because they will generally not have a major effect on traffic. The following presents a description for each of the work zone applications:

1. Lane Constriction. This work zone type is configured by reducing the width of one or more lanes to retain the number of lanes normally available to traffic. This application is the least disruptive of all work zone types, but it is generally appropriate only if the work area is mostly outside the normal traffic lanes. It should be noted that narrow lane widths may reduce the facility's capacity, especially where there is significant truck traffic. The use of shoulders as part of the lane width will help reduce the amount of lane width reduction that may be required. Where this application is applied for long-term work zones, the current lane markings must be obliterated to avoid motorist confusion. Section 14-3.0 discusses the minimum lane widths that must be provided.

2. Lane Closure. This work zone type closes off one or more normal traffic lanes. Capacity and delay analyses may be required to determine whether serious congestion will result from lane closures. In some cases, use of the shoulder or median area as a temporary lane will mitigate the problems arising from the loss in capacity. Upgrading or replacement of existing pavement may be necessary.

3. Alternating One-Way Traffic Operation. This work zone type involves utilizing one lane for both directions of traffic. Flaggers or signals are normally used to coordinate the alternating directions of traffic. Signing alone may be sufficient for short-term work zones on very low-volume, two-lane roads. This work zone type is generally only applicable for low- and intermediate-volume roads or short-term work zones.

4. Temporary Roadway. This work zone involves the total closure of the roadway (one or both directions) where work is being performed and the traffic is rerouted to a temporary roadway. This application may require the purchase of temporary right-of-way and usually requires extensive preparation of the temporary roadway.

5. Intermittent Closure. This work zone type involves stopping all traffic in one or both directions for a relatively short period of time to allow the work to proceed. After a specific time, depending on traffic volumes, the roadway is re-opened and all vehicles can travel through the area. This application is normally only appropriate on low-volume roadways or during time periods where there are very low volumes (e.g., Sunday mornings).

6. Use of Shoulder or Median. This work zone type involves using the shoulder or the median as a temporary traffic lane. To use this technique, it may be necessary to upgrade the shoulder to adequately support the anticipated traffic loads. This technique may be used in combination with other work zone types or as a separate technique.

7. Crossover. This work zone type involves routing a portion or all of one direction of the traffic stream across the median to the opposite traffic lanes. This application might also incorporate the use of shoulders and/or lane constrictions to maintain the same number of lanes. Section 14-3.0 discusses the geometric design criteria that should be used to develop crossovers.

8. Detour. This work zone type involves total closure of the roadway (one or both directions) where work is being performed and rerouting the traffic to existing alternate facilities. This application may be used where there is unused capacity on roads running parallel to the closed roadway.

   The designer must also carefully consider the impact that the detoured traffic will have on other State or local roads. A detour agreement with the town is required when the State highway traffic is detoured onto a local road. The Division of Traffic Engineering is responsible for coordinating between the State and town(s).

14-2.02 Work Zone Traffic Control Strategy

Selection of the appropriate work zone type represents one of the most significant elements of a traffic control strategy. Other elements of a traffic control strategy that should be considered include length of the work zone, time of work, number of lanes, width of lanes, traffic speeds and right-of-way. Considering these and other factors, reasonable alternatives can be narrowed to a selected few for further review. Typically, only a small number of feasible work zone alternatives will emerge for a particular project and, in many cases, only one may be practical. Identification of these alternatives at an early stage in the planning process can reduce significantly the analysis effort necessary.

Figure 14-2A provides guidelines for identifying feasible work zone alternatives based on roadway type, lane closure requirements, shoulder width, traffic volume, and the availability of right-of-way and detour routes. However, it should be recognized that every work zone location will have a wide variation of conditions and that an all-inclusive selection matrix is not practical.

In using Figure 14-2A, local policy and regulations should be recognized. Many jurisdictions have adopted safety regulations and public convenience policies as safeguards against the unacceptable impacts of work zones. These regulations and policies may impose additional constraints regarding the types of control strategies that can be implemented. Knowing these constraints can help eliminate infeasible alternatives from consideration. The public convenience policies or local regulations may specify peak hour restrictions, access requirements, noise level limitations, material storage and handling, excavation procedures, work zone lengths and number of traffic lanes that must remain open.

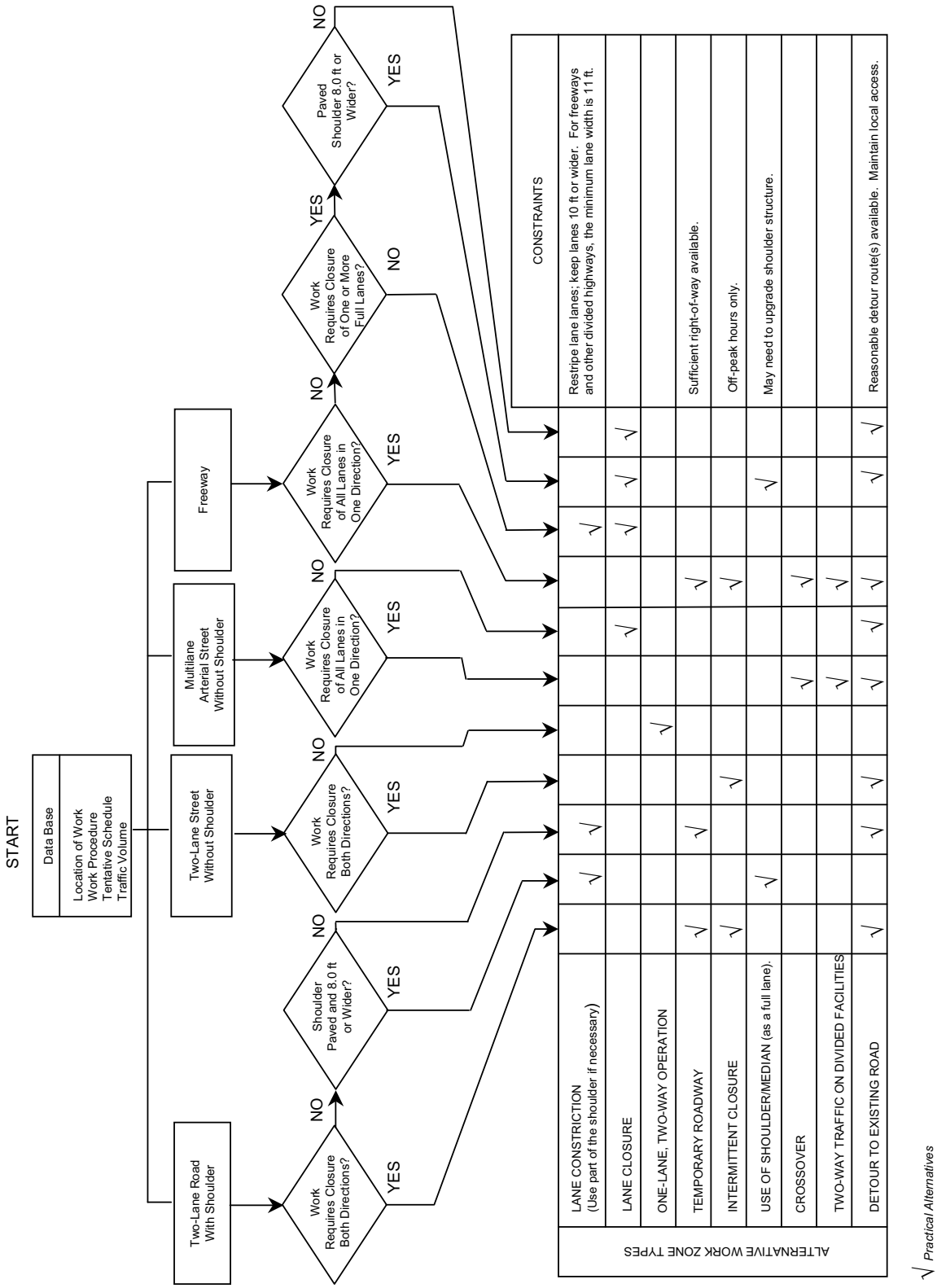

CHART FOR IDENTIFICATION OF FEASIBLE WORK ZONE TYPES

Figure 14-2A

14-3.0 GEOMETRIC DESIGN

The following sections present design criteria that apply to temporary crossovers on divided highways, existing roadways through construction zones and detours specifically designed for construction projects (e.g., crossovers, temporary roadways). These criteria do not apply to detours over existing routes.

14-3.01 Design Speed

Do not select a construction-zone design speed that is significantly lower than a facility's existing design speed and then attempt to mitigate the driver's speed by regulatory or advanced warning means. This may lead to poor operating conditions. With the exception of, perhaps, warning signs at horizontal curves, regulatory and warning speed signs are generally ineffective for controlling excessive vehicular speeds through construction zones. Consider providing a construction-zone design speed that will be the same as that for the existing facility.

14-3.02 Sight Distance

For the approach to the first physical indication of the construction zone, where practical, the sight distance available to the motorist should be based on the decision sight distance criteria provided in Section 7-2.0 and, at a minimum, based on the stopping sight distance criteria provided in Section 7-1.0. Through the construction zone itself, the designer should ensure that at least the stopping sight distance is available to the driver. Unfortunately, the location of many design features is often dictated by construction operations. However, some elements may have an optional location. For example, lane closures and transitions should be located where the approaching driver has decision sight distance available to the lane closure or transition. Through horizontal curves in the construction area, the designer should check the horizontal clearance (i.e., the middle ordinate) of the horizontal curve using its radius and the stopping sight distance for the construction-zone design speed (see Chapter Eight).

14-3.03 Lane/Shoulder Widths

In general, there should not be a reduction in the roadway cross section width through the construction zone. However, this is often not practical. Section 14-3.04 presents the minimum taper rates that should be used on approaches to lane width reductions. The following minimum lane and shoulder widths should be used in construction zones:

1. Divided Highways. For freeways and other divided highways, at a minimum, an 11-ft lane width should be maintained with, preferably, 2-ft or wider right and left shoulders.

2. Undivided Highways. For other highway facilities, the designer should maintain a minimum 11-ft lane width and 1-ft wide shoulder. Under restricted conditions, the shoulder width may be 0 ft.

14-3.04 Transition Taper Rates

Lane closures, lane width reductions and lane shifts require the use of transition tapers to safely maneuver traffic around the encroaching restriction. Figures 14-3A and 14-3B present the minimum taper lengths for various taper applications in construction zones (e.g., lane closures, lane shifts).

14-3.05 Alignment

Once the design speed is selected for the construction zone, the designer will use the criteria in Chapter Two (geometric design of 3R projects) for alignment considerations. Note that, although Chapter Two applies to the permanent design of non-freeways, the 3R criteria in Chapter Two are applicable to the design of the construction zones for all facilities. One application of the 3R criteria, for example, will be the minimum radius for maintaining the normal crown section through a horizontal curve for a given design speed and given (negative) superelevation (see Figure 2-5A). This will then be the minimum radius for a horizontal curve which transitions traffic from the mainline to a temporary roadway without superelevation. For low-speed urban streets, the designer will use Figure 8-3B for the minimum radius for a normal crown section.

Type of Taper	Taper Length
Upstream Tapers	
Merging Taper	L Minimum
Shifting Taper	L/2 Minimum
Shoulder Taper	L/3 Minimum
Alternating One-Way Traffic Taper	100 ft Maximum/50 ft Minimum
Downstream Tapers (Optional)	100 ft per lane

Length "L" is determined using the following:

$L = WS \ (S \geq 45 \text{ mph})$

$$L = \frac{WS^2}{60} \ (S \leq 40 \text{ mph})$$

Where:

L = minimum length of transition (ft)
S = 85th percentile speed (mph), or, at a minimum, posted speed limit before construction (mph)
W = width of offset (ft)

TAPER LENGTH CRITERIA FOR CONSTRUCTION ZONES

Figure 14-3A

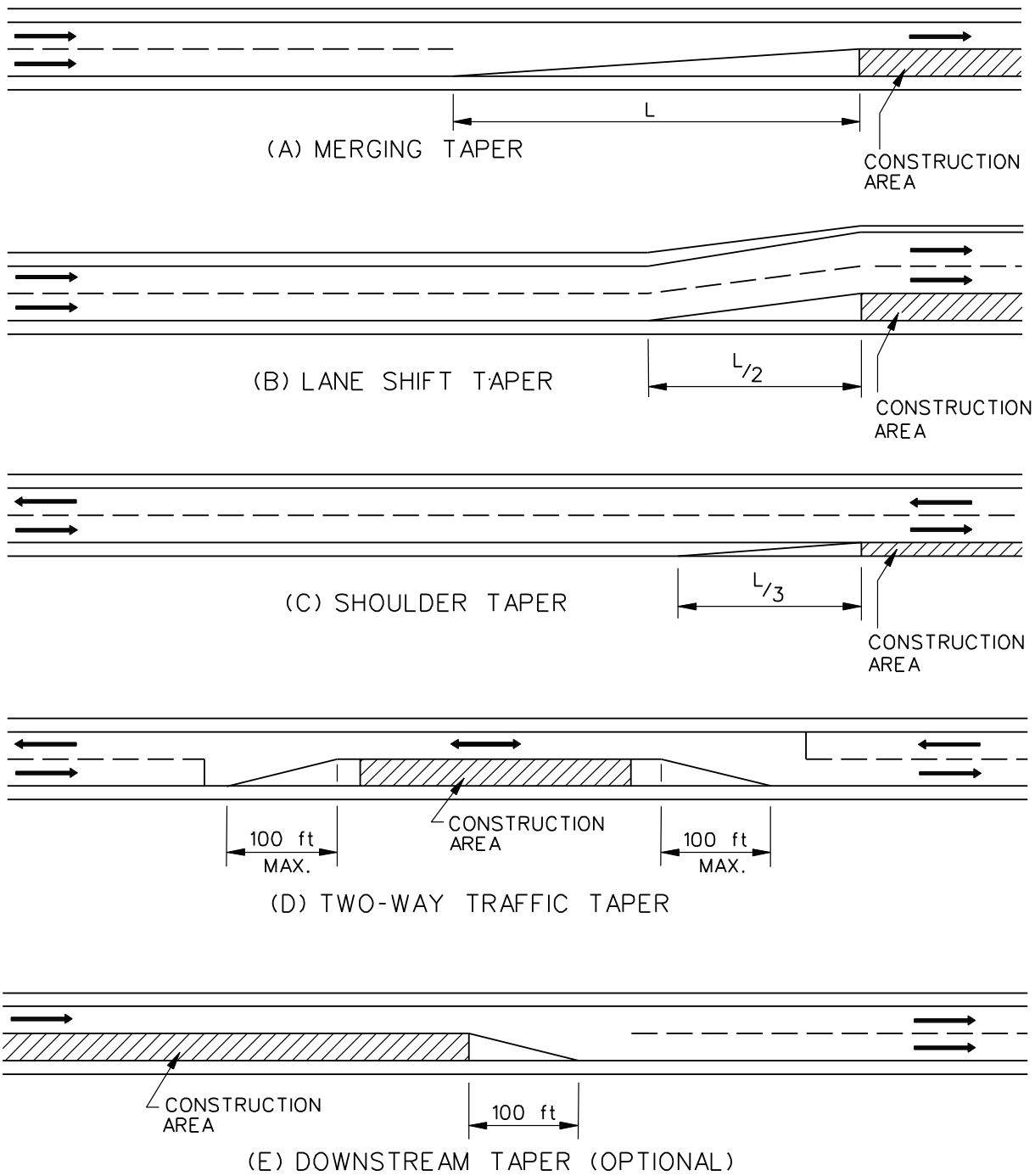

Note: Length "L" is determined from Figure 14-3A.

TAPER LENGTH CRITERIA FOR CONSTRUCTION ZONES
(Application)

Figure 14-3B

14-3.06 Interchanges

For construction zones through interchanges, the designer should review the criteria presented in Chapter 12. In particular, the designer should review the available acceleration and taper areas for on ramps; see Section 12-3.02.

14-3.07 Exceptions

It is not Department policy to obtain formal design exceptions for temporary conditions in construction zones.

14-4.0 ROADSIDE SAFETY

Through a construction zone, drivers are often exposed to numerous hazards (e.g., restrictive geometrics, construction equipment, opposing traffic). The designer must devote special attention to reducing a motorist's exposure to these hazards. The following sections offer roadside safety criteria that apply only to the roadside elements within the construction zone. These criteria do not apply to detours over existing routes.

14-4.01 Warrants for Positive Protection

Positive protection for run-off-the-road vehicles may be warranted in construction zones. This decision will be made on a project-by-project and site-by-site basis. The following factors should be considered:

1. duration of construction activity;
2. traffic volumes (including seasonal fluctuations);
3. nature of hazard (e.g., edge of travel lane drop-offs);
4. design speed;
5. highway functional class;
6. proximity between traffic and construction workers and construction equipment;
7. adverse geometrics which may increase the likelihood of run-off-the-road vehicles;
8. length and depth of dropoffs;
9. length of hazard; and/or
10. lane closures or lane transitions.

During the planning and design of a project, careful consideration should be given to temporary traffic control plan alternatives that do not require the use of temporary barriers. The alternatives include construction of detour roadways, minimizing the exposure time and depth of drop-offs, and providing maximum separation between traffic and workers.

However, even with proper project planning and design, there will be many instances where barriers are clearly needed. In a barrier system, the greatest hazard occurs at the approach end. To achieve the safest condition, three goals are important:

1. flare the approach end to a location outside the clear zone or as far away from the through traffic lanes as practical;

2. if the approach end cannot be placed outside the clear zone, provide the most crashworthy end treatment as technically and economically feasible; and

3. provide adequate delineation in advance of and along the temporary barrier.

Where traffic is directed onto the opposing roadway, the designer should consider the effect this will have on the operational characteristics of roadside appurtenances. For example, existing trailing ends of unprotected bridge rails may require approach guardrail transitions or impact

attenuators, or blunt guardrail terminals may need to be protected with an acceptable end treatment.

14-4.02 Clear Zones

Section 13-2.0 provides the appropriate clear zone values for new construction/reconstruction projects. For construction zones, the clear zone should be the distances in Section 13-2.0. It is important to select the appropriate clear zone based on the construction zone design speed and not the posted speed. If the recommended clear zone cannot be achieved, the safest end treatment should be provided consistent with cost-effectiveness and geometric considerations.

14-4.03 Roadside Barriers

In general, there are two types of roadside barriers — guiderailing and temporary precast concrete barrier curb (TPCBC). Design and installation details for temporary guiderailing should be the same for permanent installations; see Chapter Thirteen for additional information. Metal beam rail must first be stiffened before it is attached to TPCBC.

When it has been determined that TPCBC should be used in a work zone, special care must be given to its layout. Although it provides the greatest protection to the work zone, it is also the least forgiving to the driver. Impact with the blunt end of concrete barrier (including contractor's access openings) will result in an intolerable impact, even at low speeds. All barriers will require an appropriate end treatment; see Section 14-4.04.

TPCBC should be extended at an appropriate flare rate to a point beyond the clear zone. The flare rate for TPCBC on freeways is 1:10, and for non-freeways the flare rates should be based on the design speed through the work zone. The TPCBC flare rates for non-freeways are shown in Figure 14-4A. The designer should meet these flare rates unless extenuating circumstances render these rates impractical (e.g., stop conditions, driveways, intersections).

14-4.04 End Treatments

The end treatments for guiderailing should be designed the same as for permanent installations. See Chapter Thirteen. Figure 14-4B lists acceptable crashworthy end treatments for TPCBC, in descending order of preference, together with recommended specific limitations and/or criteria. Figures 14-4C and 14-4D illustrate typical end treatments for TPCBC.

Design Speed	Flare Rates
≤ 30 mph	4 to 1
> 30 mph < 45 mph	6 to 1
≥ 45 mph	8 to 1

TPCBC FLARE RATES FOR NON-FREEWAYS

Figure 14-4A

Type of End Treatment	Maximum Design Speed	Remarks
Physically connected to existing barrier.	N/A	Ensure connections provide adequate strength and potential for snag is minimized.
Buried in Backslope	N/A	Ditches may pose difficulty.
Terminate end behind existing guiderailing	N/A	Ensure proper deflection of guiderailing is available. See Figure 14-4C.
Protected by a impact attenuator (e.g., sand-filled plastic barrels).	Limited by impact attenuator design and available space.	See Figure 14-4D.

END TREATMENTS FOR TEMPORARY CONCRETE MEDIAN BARRIERS

Figure 14-4B

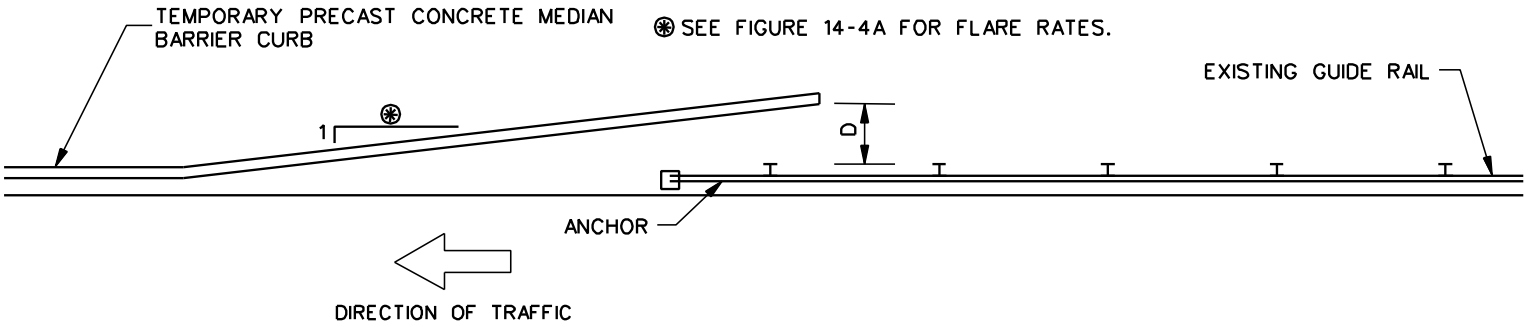

Existing Guiderail Type	Overlap Offset D (ft)
3 Cable Rail I-Beam Posts	12
Cable Rail Wood or Steel Posts	12
Metal Beam Rail Type R-I	8
Metal Beam Rail Type R-B	4
R-I System 2	6
R-I System 3	4.5
R-I System 4	3
R-I System 6	2

TRANSITION OF EXISTING GUIDERAIL TO TEMPORARY PRECAST CONCRETE MEDIAN BARRIER CURB FOR TEMPORARY TRAFFIC CONTROL (One-Way Traffic)

Figure 14-4C

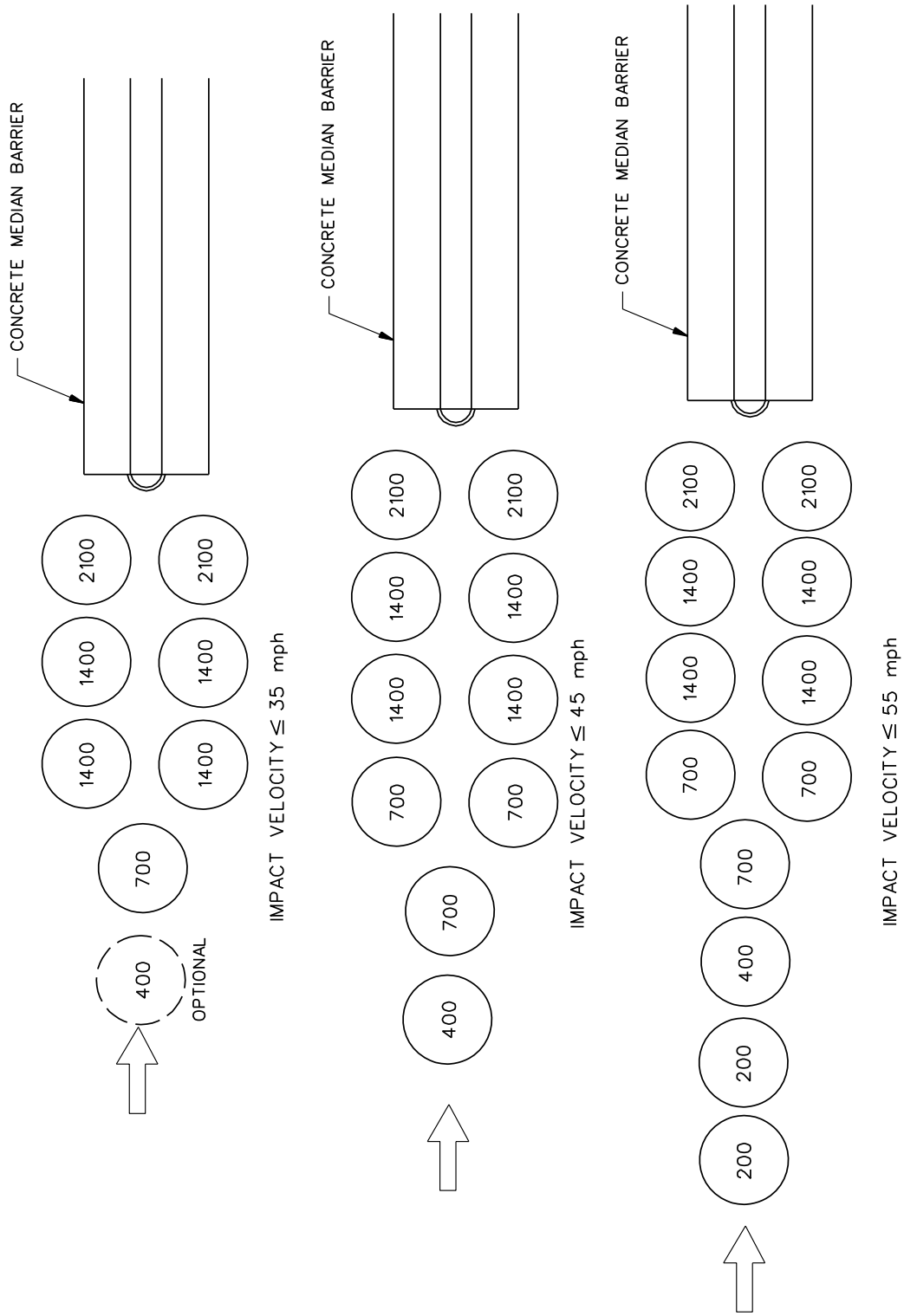

Note: Numbers indicates mass of sand in pounds in each barrel. These array designs should only be used for temporary installations.

INERTIAL SYSTEM (SAND BARRELS)

Figure 14-4D

14-4.05 Design/Layout

Where practical, temporary roadside safety appurtenances should be designed and located as determined in Chapter Thirteen. However, it is usually not cost effective to meet the permanent installation criteria due to the limited time a motorist is exposed to construction hazards. The following offers several alternatives the designer may use in designing and locating temporary roadside safety appurtenances within construction zones:

1. Length of Need. For temporary locations in construction areas, the length of barrier needed can be determined by the intersection of a line along the barrier with a line at an angle of 10° to 15° from the back of the hazard or from the clear zone distance off the travelway, whichever is less. The approach end of the barrier may be flared to a point outside of clear zone or shielded with a crashworthy end terminal or impact attenuator. For barrier lengths less than 100 ft, the designer should consider removing the barrier because the barrier may be more of a hazard than the obstacle itself.

2. Restricted Widths. Where barriers are located near the traveled way on both sides of the roadway, the beginning of the barriers should be staggered to minimize the tendency drivers have to shy away from the barrier ends.

3. Flare Rates. Where practical, the TPCBC terminal should be flared beyond the travelway to a point outside of the construction clear zone. Figure 14-4A presents the flare rates that should be used for the TPCBC based on the selected construction-zone design speed. The designer should provide these flare rates unless extenuating circumstances render this impractical (e.g., stop conditions, driveways, intersections).

4. Openings. Openings in the barriers should be avoided, if practical. Where necessary, barrier ends should have an acceptable end treatment as discussed in Section 14-4.04. This also applies to breaks in the barrier for the contractor's access to the work site.

5. Delineation. Appropriate delineation should be provided in advance of and along the temporary concrete barrier installation. Reflectorized drums or barricades placed according to the MUTCD in advance of the concrete barrier should help to reduce the probability of vehicular encroachment and impact. Reflective devices, as shown on the details of the barrier, should be installed to provide the recommended delineation along the barrier. These should supplement but not replace the need for reflectorized edge line markings.

14-5.0 REFERENCES

1. *Manual on Uniform Traffic Control Devices*, *Millennium Edition*, ATSSA, AASHTO, ITE and FHWA, 2001.

2. *Planning and Scheduling Work Zone Traffic Control*, FHWA-IP-81-6, FHWA, 1981.

3. *A Policy on Geometric Design of Highways and Streets*, AASHTO, 2001.

4. *Roadside Design Guide*, AASHTO, 2002.