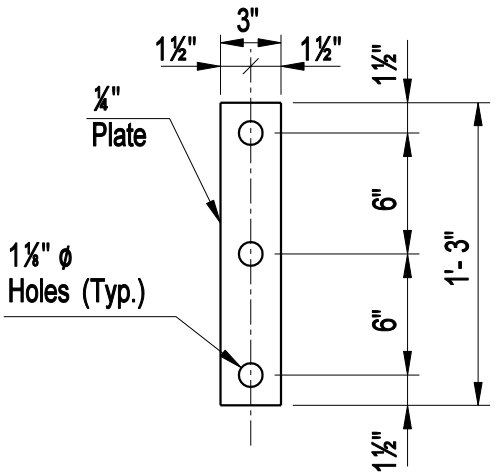

ANCHORAGE PLATE

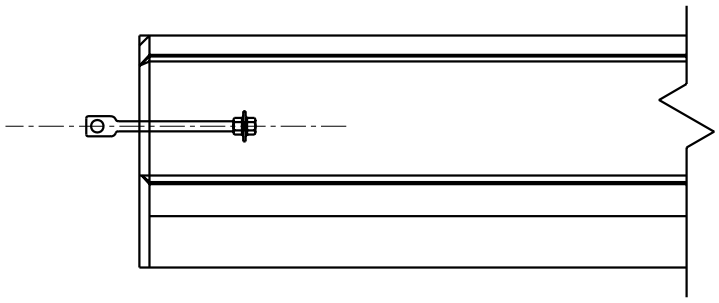

PLAN

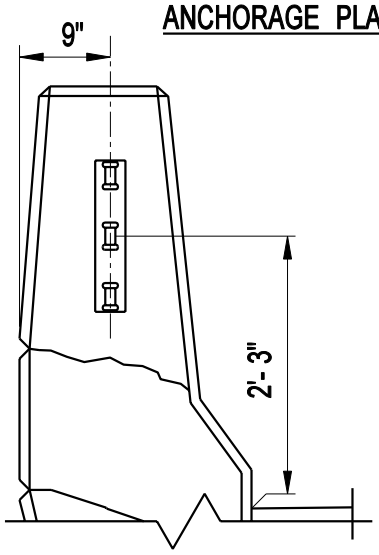

END VIEW

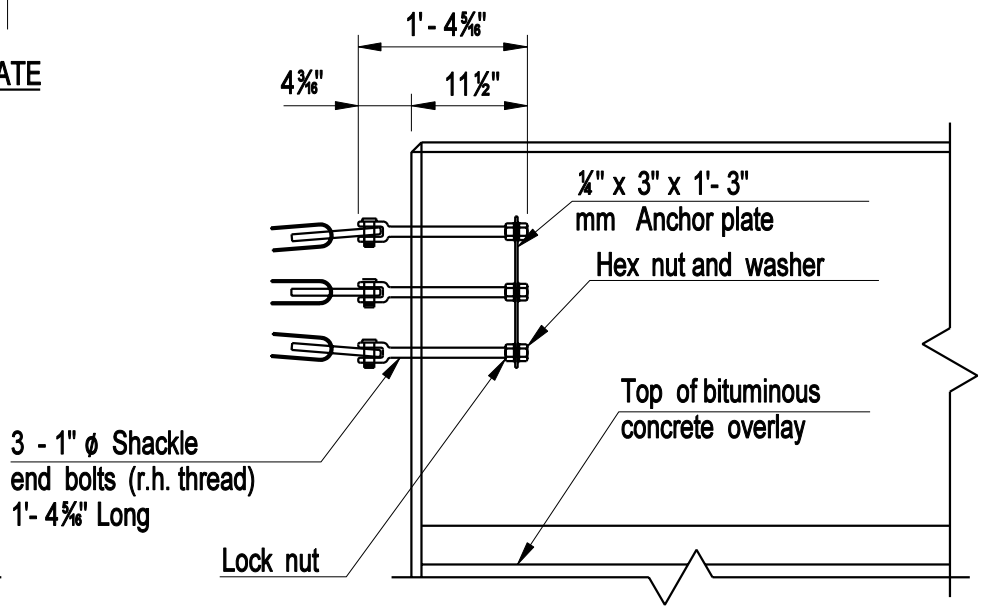

ELEVATION

Notes:

1. The shackle end bolts shall conform to the requirements of ASTM A688 Class E or AISI 1035 forged steel, galvanized in accordance with the requirements of ASTM A153.

2. The standard hex nuts, anchor plates and lock nuts shall conform to the requirements of ASTM A36.

3. Longitudinal reinforcement in parapet to clear anchor plate.

4. All anchorage material shall be paid for as part of the pay item "End Anchorage - Bridge Type" (Roadway Item).

DESIGN INFORMATION

This detail to be used to anchor Three-Cable Guide Railing at trailing end of 3'- 6" high parapets with sloped curb on one-way roads.

CONNECTICUT BRIDGE DESIGN MANUAL	PARAPET ANCHORAGE THREE CABLE GUIDE RAILING (Type I)	Issue Date: 10/03 Revision Date: Plate Number: 8.3.1

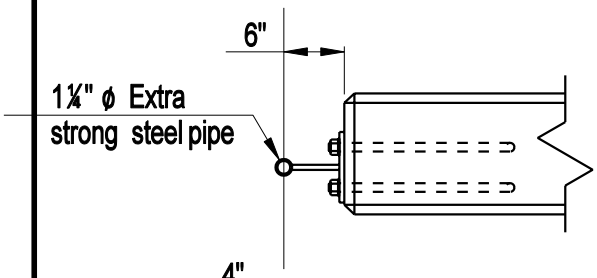

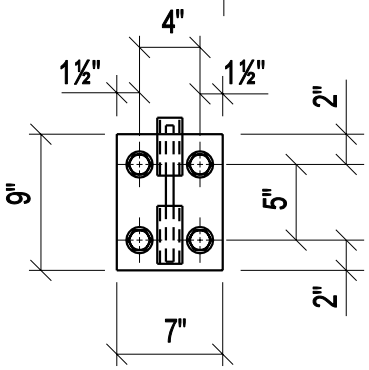

DETAIL A

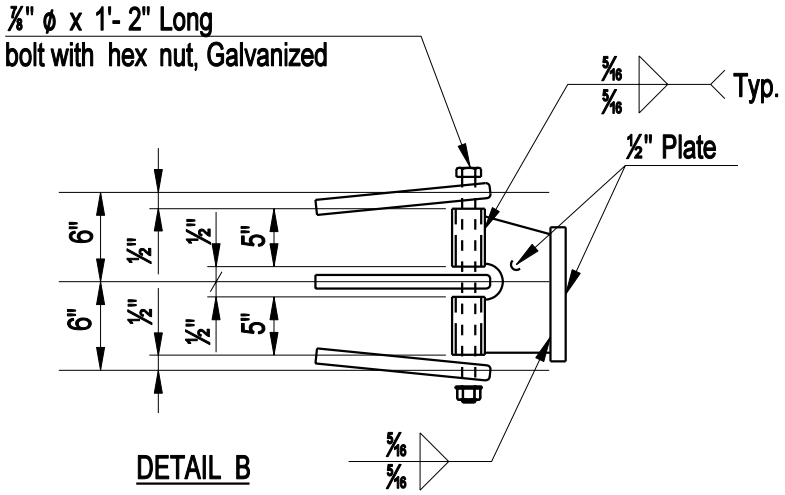

DETAIL B

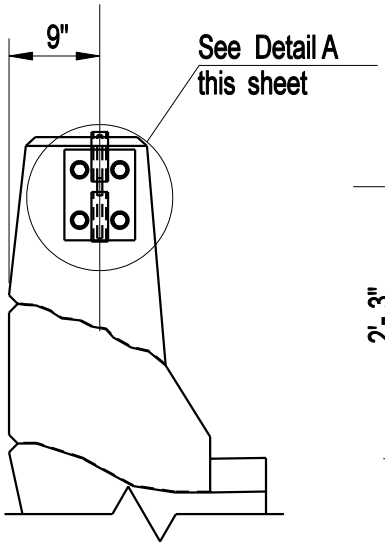

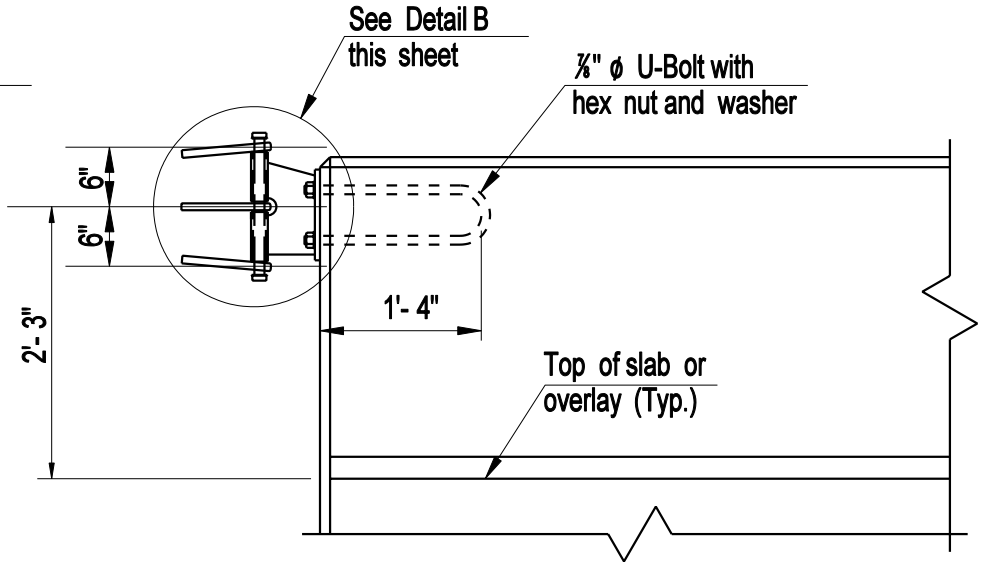

Notes:

1. Anchor bolts shall conform to the requirements of ASTM A449 with nuts and washers conforming to A563 Grade B.
2. Anchor bolts, nuts, washers and exposed metal parts shall be galvanized in conformance with the requirements of ASTM A153.
3. Steel plates shall conform to the requirements of ASTM A36.
4. All anchorage material shall be paid for as part of the pay item for "End Anchorage - Bridge Type" (Roadway Item).
5. Entire anchorage assembly shall be galvanized after fabrication.

DESIGN INFORMATION

This detail is to be used to anchor Three Cable Guide Rail at trailing end of 2'- 8" high parapet with sloped curb on one-way roads.

CONNECTICUT BRIDGE DESIGN MANUAL	PARAPET ANCHORAGE THREE CABLE GUIDE RAILING (Type II)	Issue Date: 10/03 Revision Date: Plate Number: 8.3.2

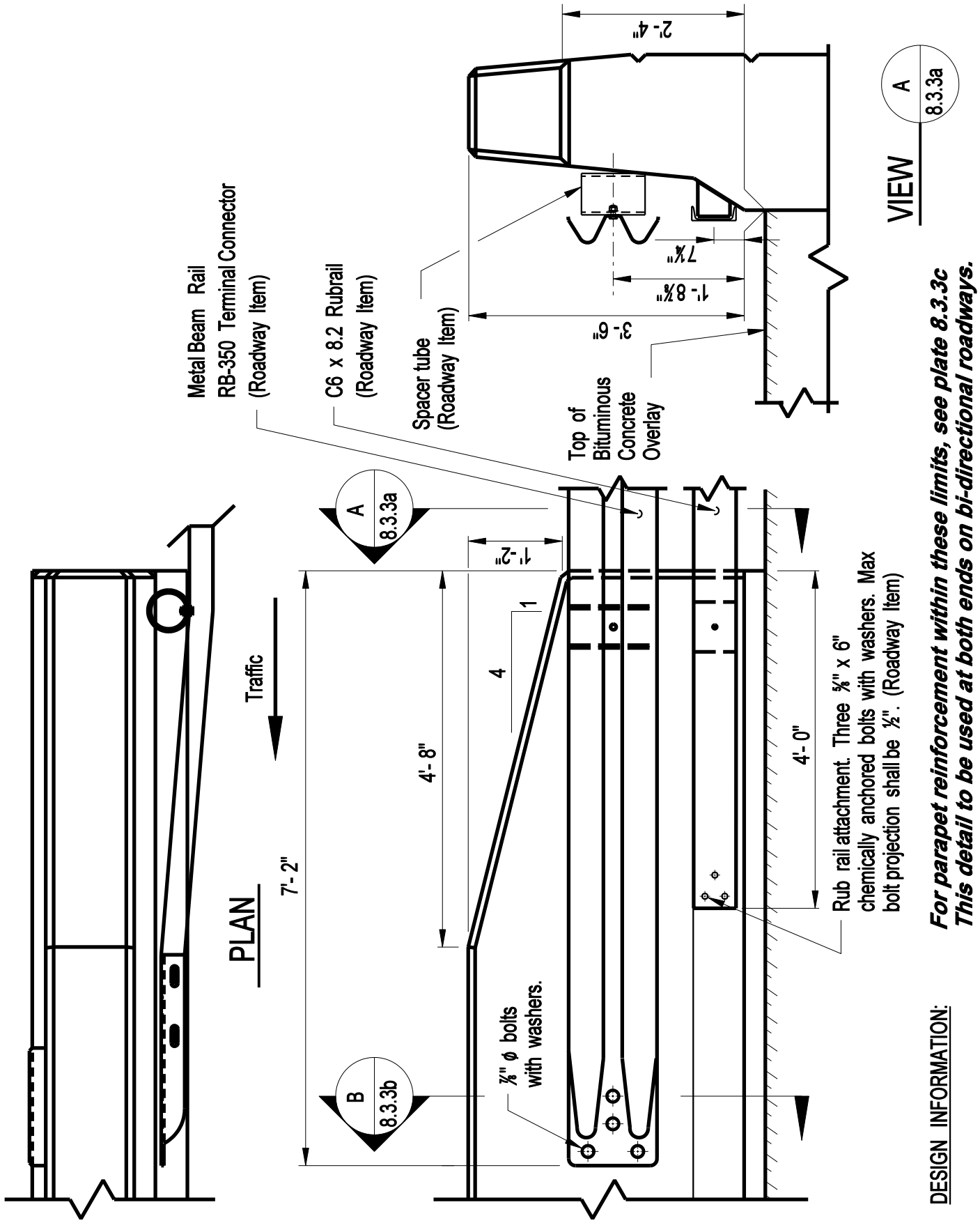

CONNECTICUT BRIDGE DESIGN MANUAL	SAFETY SHAPE TRANSITION FOR BEAM RAIL ATTACHMENT STANDARD PARAPET 42" HIGH LEADING END	Issue Date: 10/03 Revision Date: Plate Number: 8.3.3a

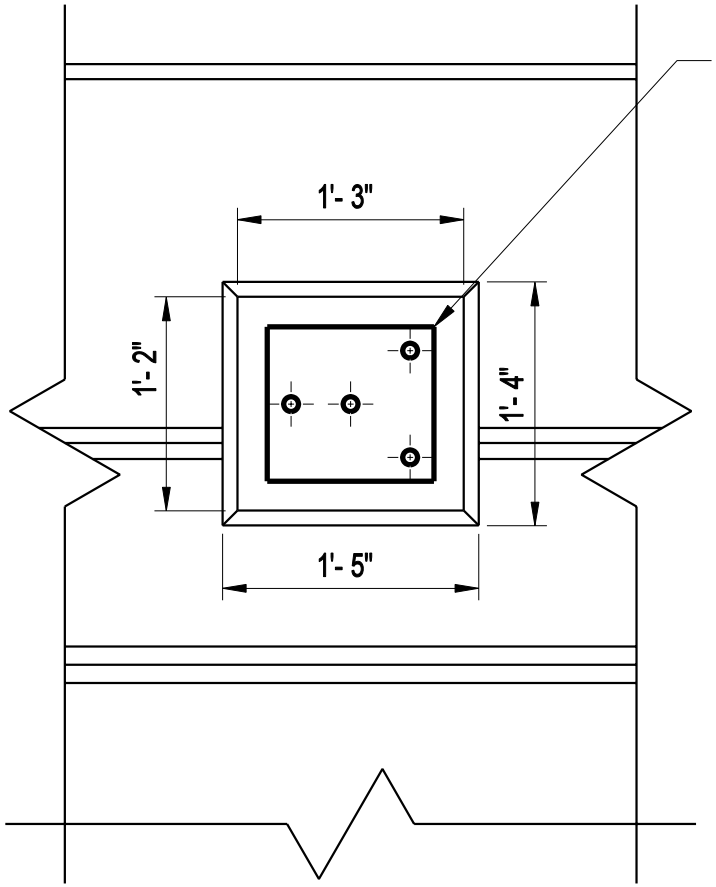

View A / 8.3.3b

See Plate 8.3.3d "Anchor Plate Detail"

1" *Standard pipe sleeve (Typ.) See Note A

Place washer under bolt head (Typ.)

Headed end of bolts shall be placed against rail element (Typ.)

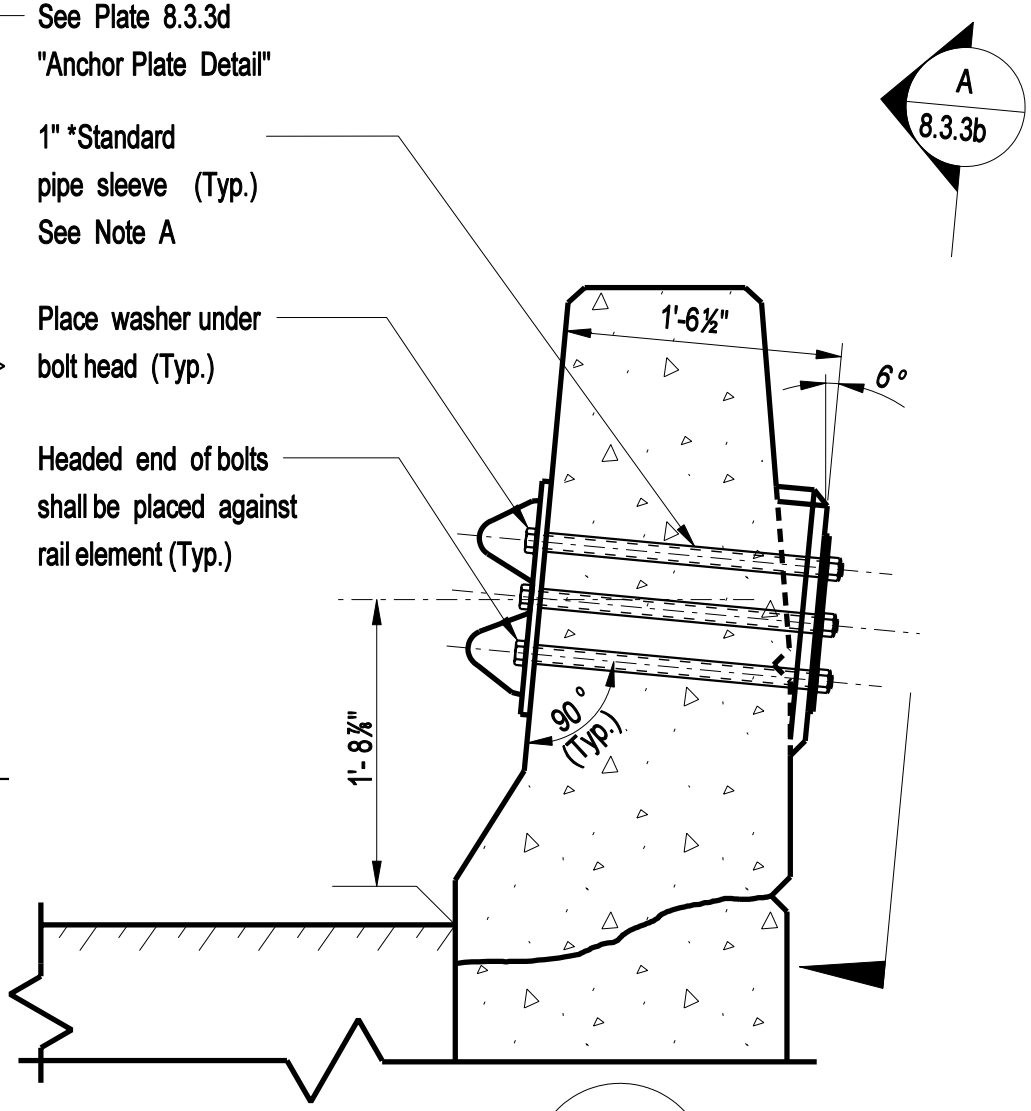

SECTION B / 8.3.3a

NOTE A

1" * pipe shall conform to ASTM A53 Gr. B or ASTM A501 and shall be galvanized in accordance with the requirements of ASTM - A123.

*Dimension taken from top of parapet to intersection of anchor bolt ℄ and face of buildout.

DESIGN INFORMATION:

For reinforcement not shown, see plate 8.3.3d
For parapet dimensions not shown, see plate 3.4.4

LEADING END R-B 350 RAIL ATTACHMENT

CONNECTICUT BRIDGE DESIGN MANUAL

SAFETY SHAPE TRANSITION FOR BEAM RAIL ATTACHMENT
STANDARD PARAPET 42" HIGH
LEADING END

Issue Date: 10/03
Revision Date:
Plate Number: 8.3.3b

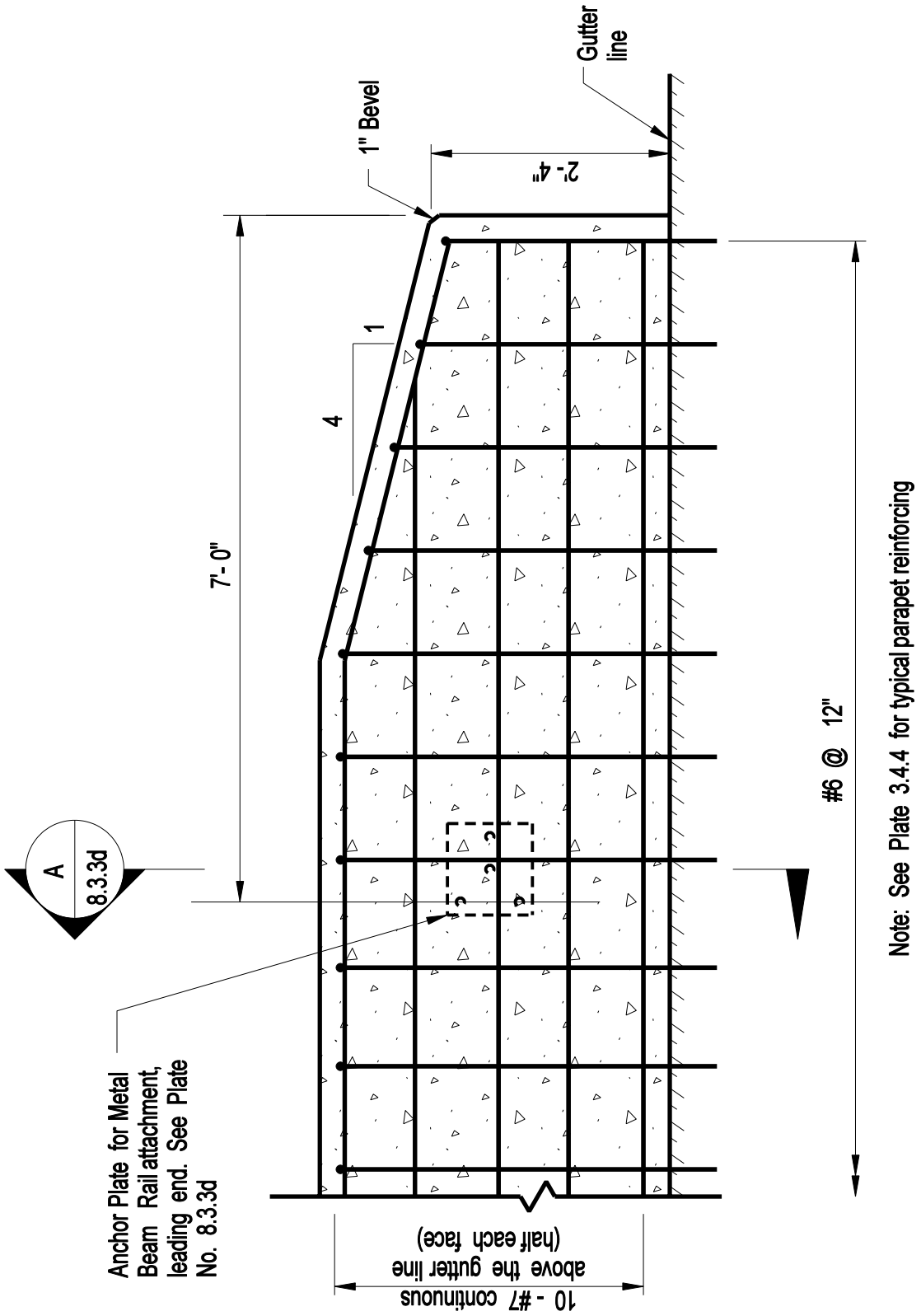

ELEVATION

PARAPET REINFORCEMENT AT LEADING END

CONNECTICUT BRIDGE DESIGN MANUAL	SAFETY SHAPE TRANSITION FOR BEAM RAIL ATTACHMENT STANDARD PARAPET 42" HIGH LEADING END	Issue Date: 10/03 Revision Date: Plate Number: 8.3.3c

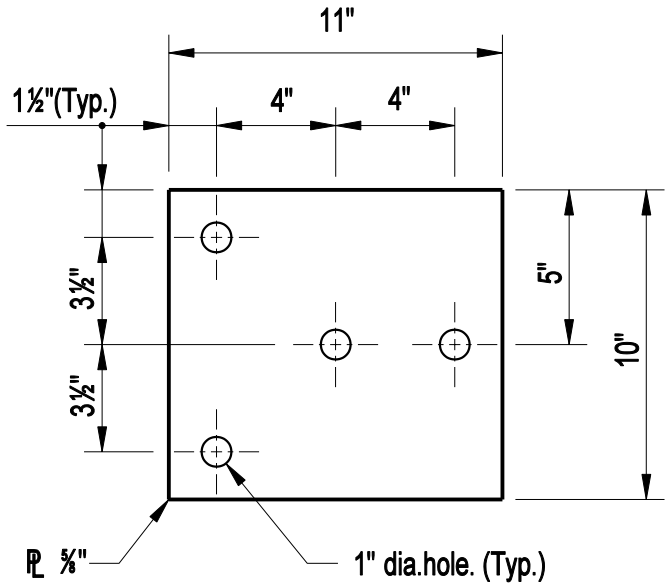

ANCHOR PLATE DETAIL

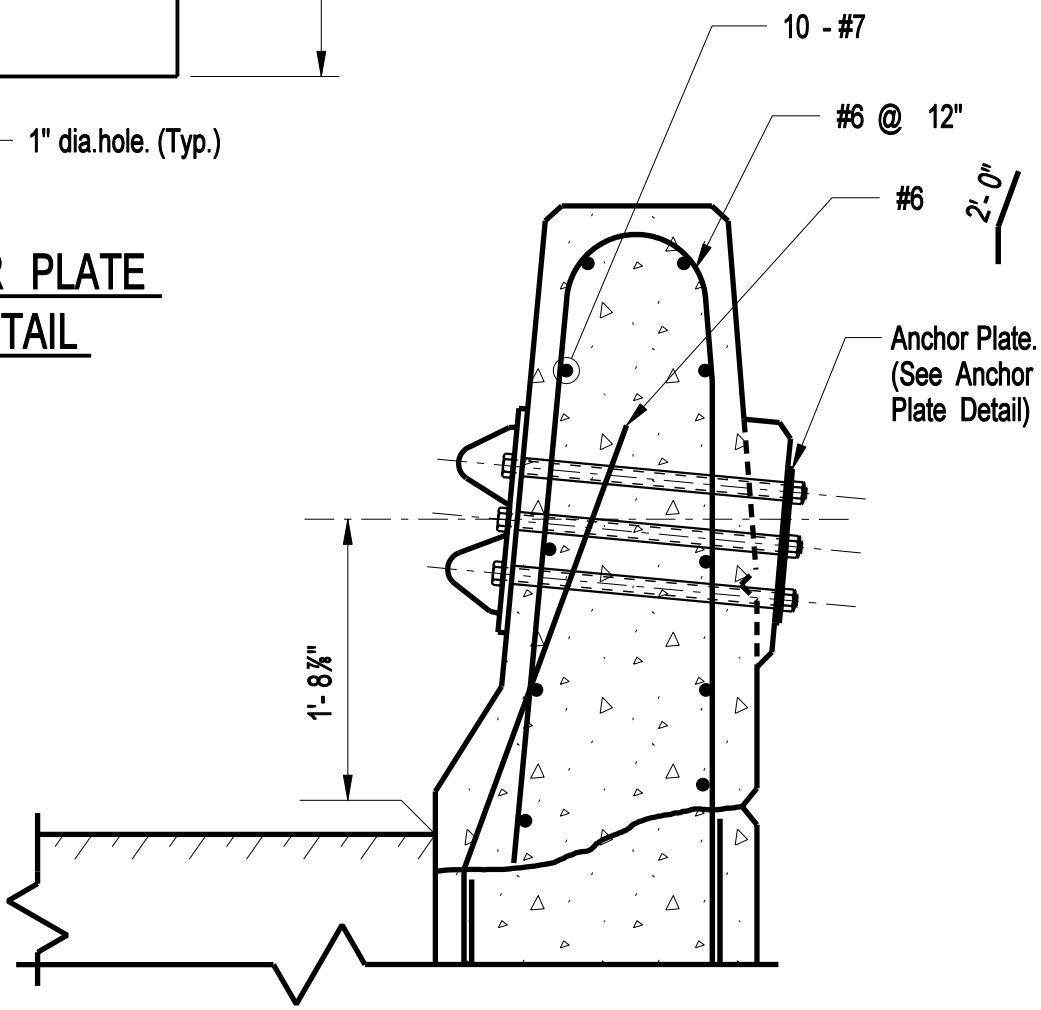

Section A / 8.3.3c

CONNECTICUT BRIDGE DESIGN MANUAL	SAFETY SHAPE TRANSITION FOR BEAM RAIL ATTACHMENT STANDARD PARAPET 42" HIGH LEADING END	Issue Date: 10/03 Revision Date: Plate Number: 8.3.3d

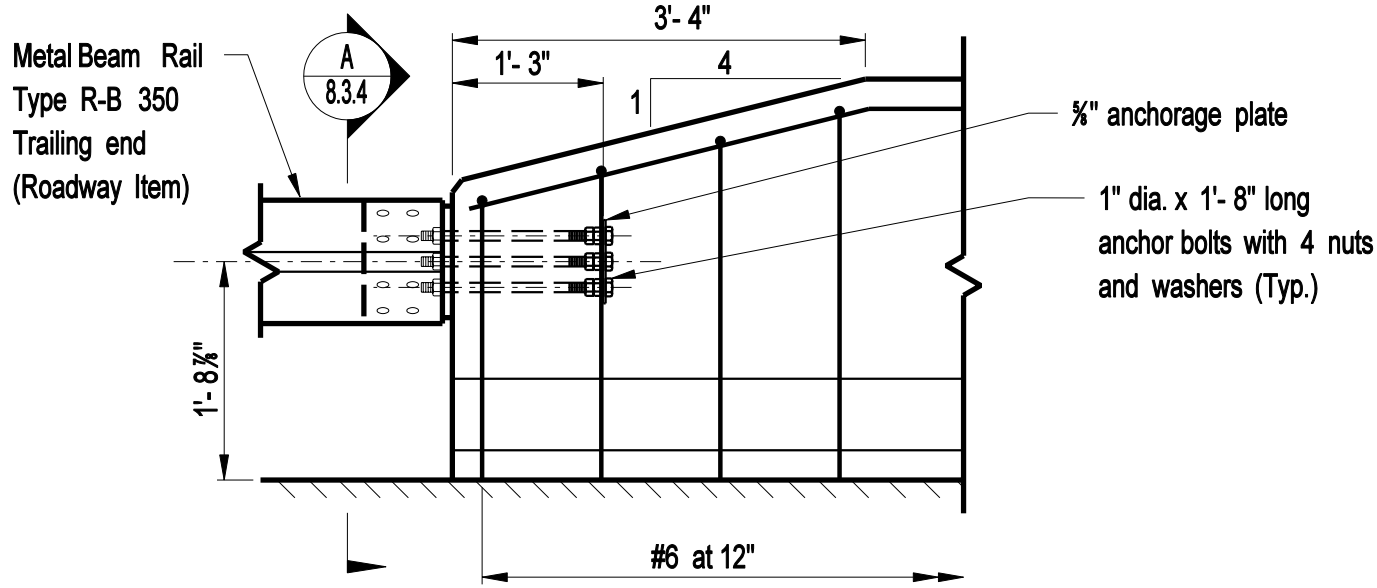

ELEVATION - RB-350 RAIL

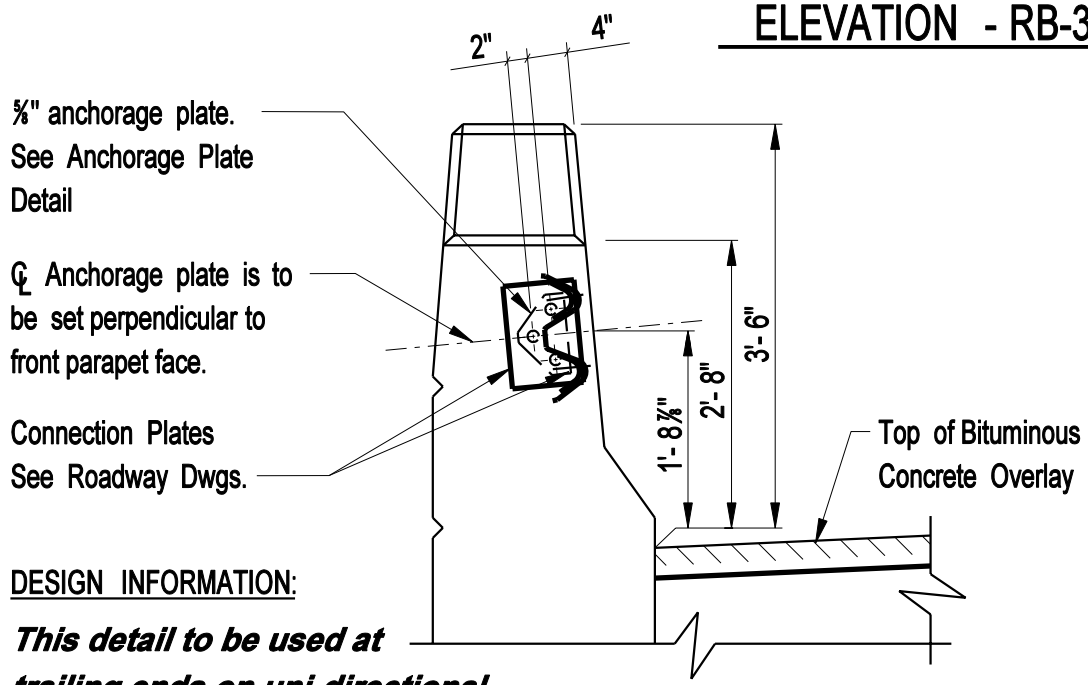

DESIGN INFORMATION:

This detail to be used at trailing ends on uni-directional roadways only.

VIEW A 8.3.4

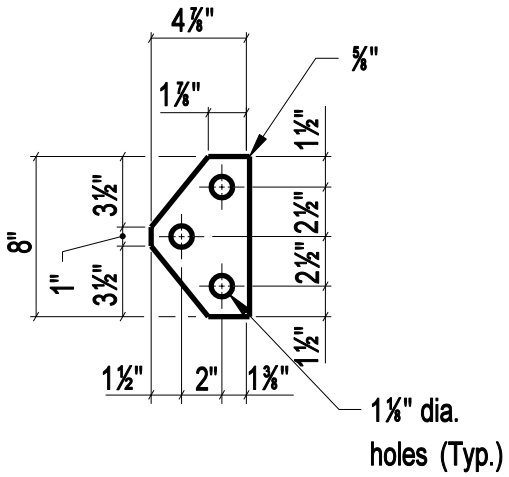

DETAIL
ANCHORAGE PLATE

TRAILING END R-B 350 RAIL ATTACHMENT

CONNECTICUT BRIDGE DESIGN MANUAL

SAFETY SHAPE TRANSITION FOR BEAM RAIL ATTACHMENT
STANDARD PARAPET 42" HIGH
TRAILING END

Issue Date: 10/03
Revision Date:
Plate Number: 8.3.4

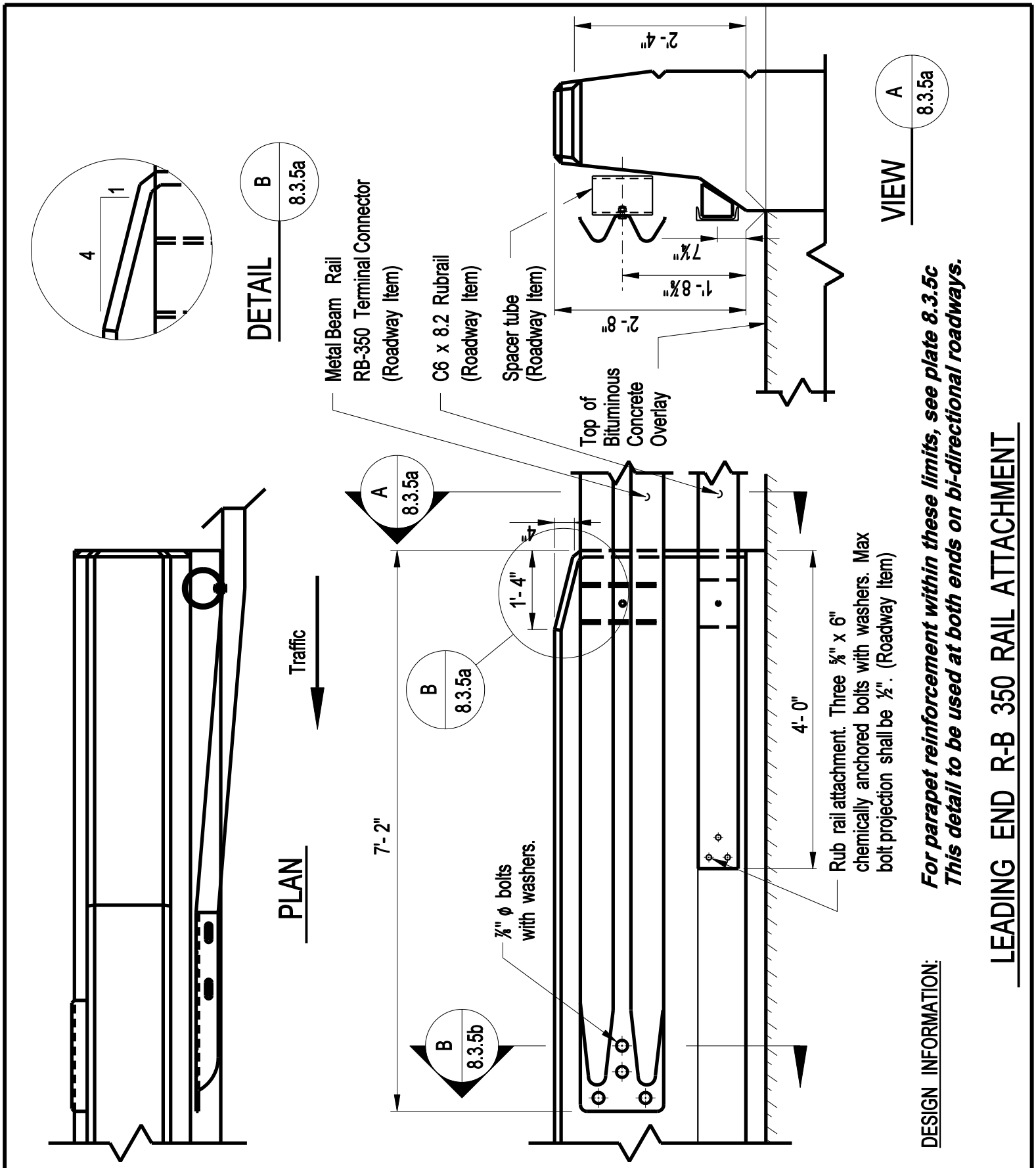

CONNECTICUT BRIDGE DESIGN MANUAL	SAFETY SHAPE TRANSITION FOR BEAM RAIL ATTACHMENT STANDARD PARAPET 32" HIGH LEADING END	Issue Date: 10/03 Revision Date: Plate Number: 8.3.5a

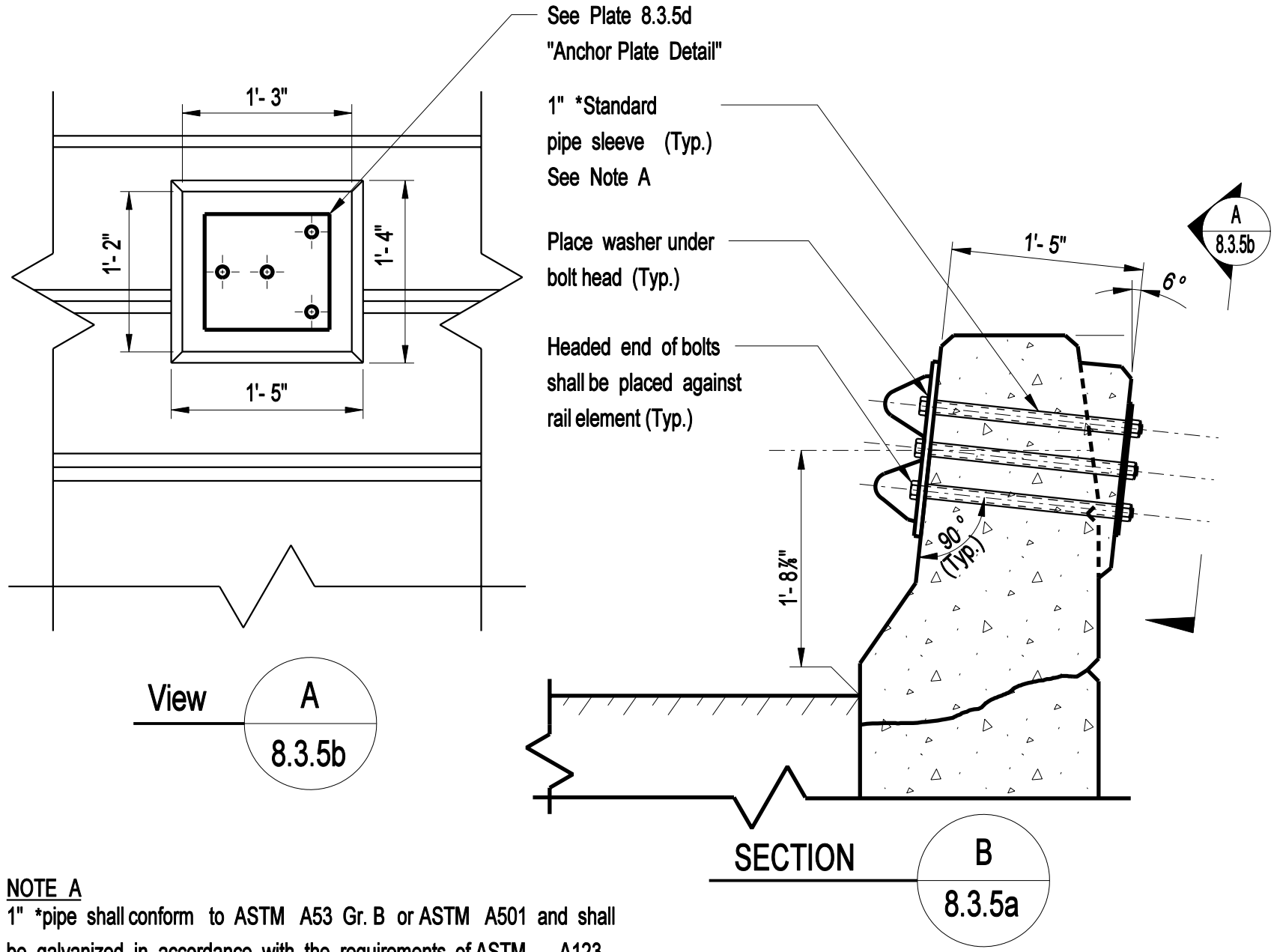

NOTE A

1" *pipe shall conform to ASTM A53 Gr. B or ASTM A501 and shall be galvanized in accordance with the requirements of ASTM - A123.

DESIGN INFORMATION:

For reinforcement not shown, see plate 8.3.5d
For parapet dimensions not shown, see plate 3.4.3

*Dimension taken from top of parapet to intersection of anchor bolt ℄ and face of buildout.

LEADING END R-B 350 RAIL ATTACHMENT

CONNECTICUT BRIDGE DESIGN MANUAL

SAFETY SHAPE TRANSITION FOR BEAM RAIL ATTACHMENT
STANDARD PARAPET 32" HIGH
LEADING END

Issue Date: 10/03
Revision Date:
Plate Number: 8.3.5b

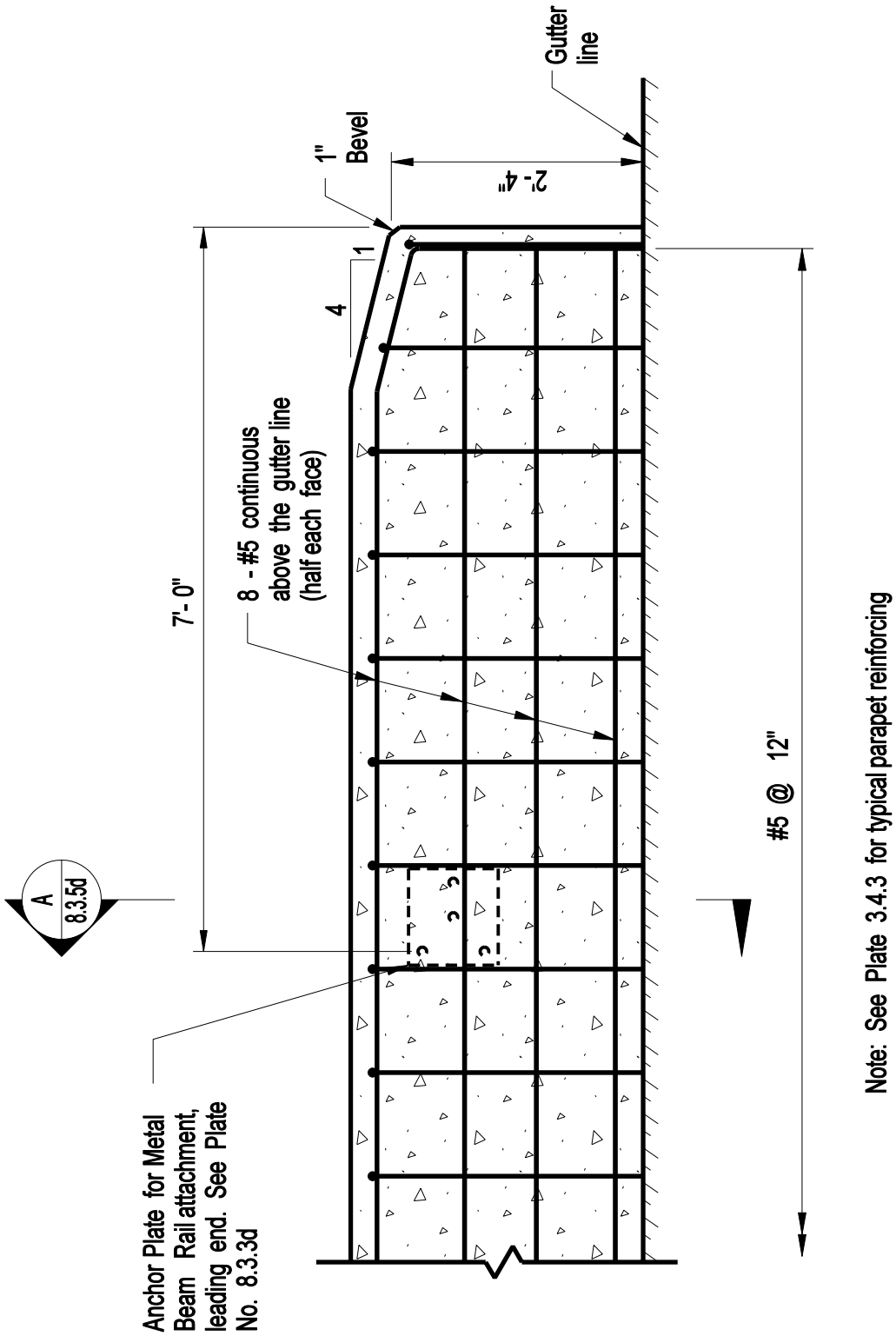

Note: See Plate 3.4.3 for typical parapet reinforcing

ELEVATION

PARAPET REINFORCEMENT AT LEADING END

CONNECTICUT BRIDGE DESIGN MANUAL	SAFETY SHAPE TRANSITION FOR BEAM RAIL ATTACHMENT STANDARD PARAPET 32" HIGH LEADING END	Issue Date: 10/03 Revision Date: Plate Number: 8.3.5c

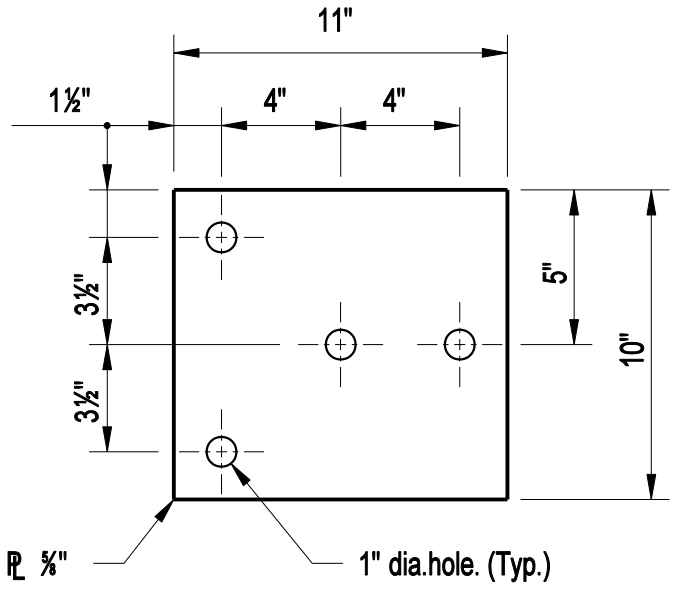

ANCHOR PLATE DETAIL

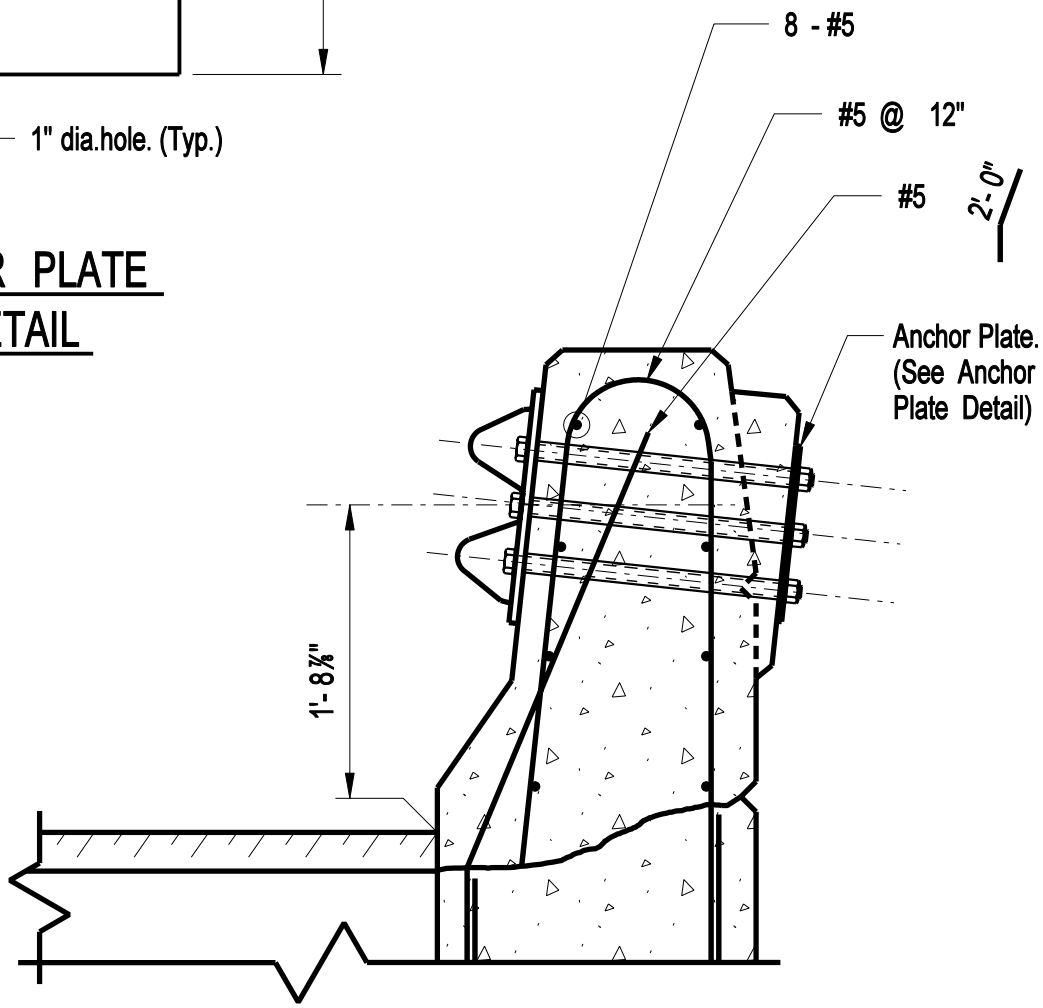

SECTION A / 8.3.5c

CONNECTICUT BRIDGE DESIGN MANUAL	SAFETY SHAPE TRANSITION FOR BEAM RAIL ATTACHMENT STANDARD PARAPET 32" HIGH LEADING END	Issue Date: 10/03 Revision Date: Plate Number: 8.3.5d

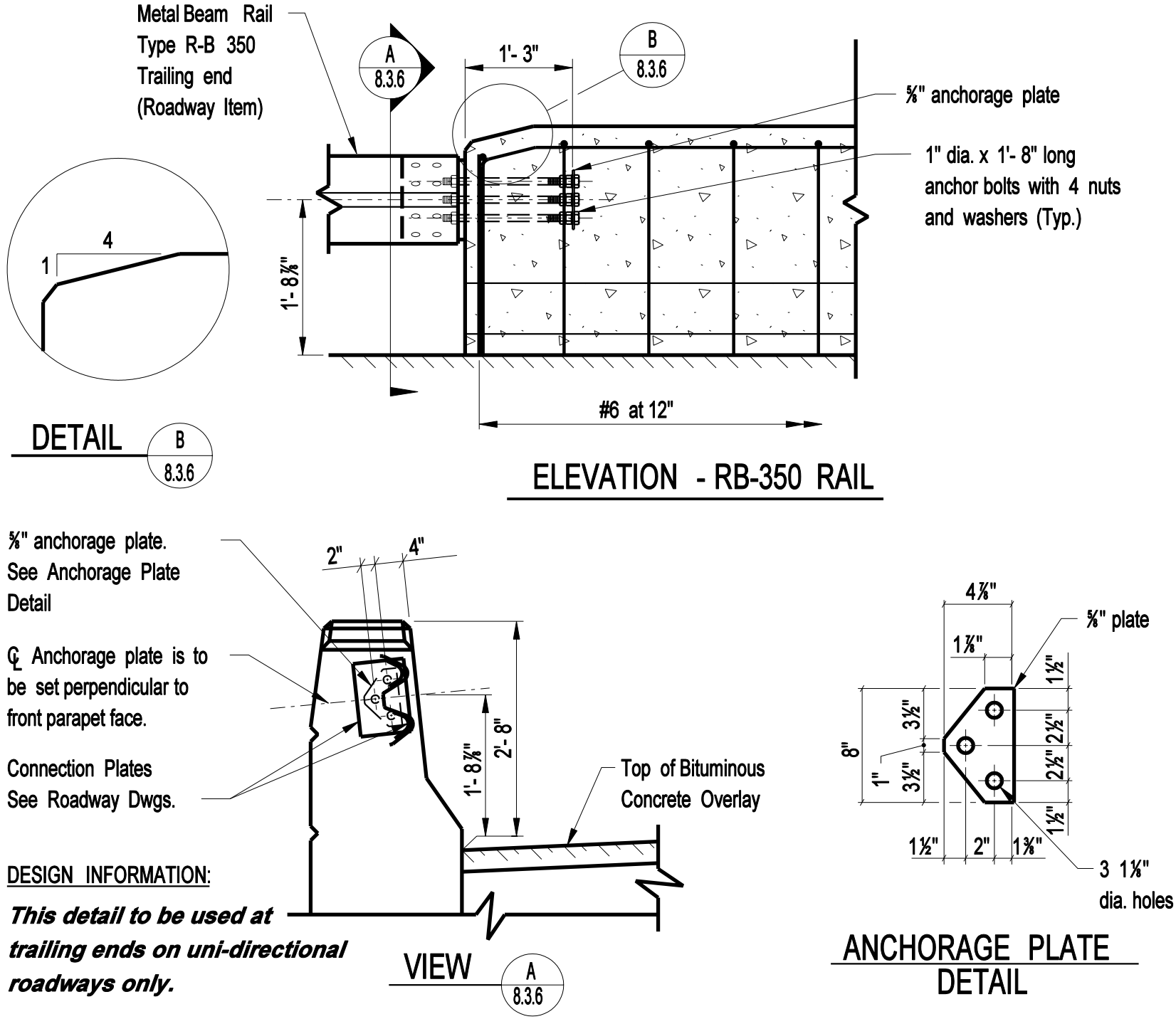

TRAILING END R-B 350 RAIL ATTACHMENT

CONNECTICUT BRIDGE DESIGN MANUAL

SAFETY SHAPE TRANSITION FOR BEAM RAIL ATTACHMENT STANDARD PARAPET 32" HIGH TRAILING END

Issue Date: 10/03

Revision Date:

Plate Number: 8.3.6

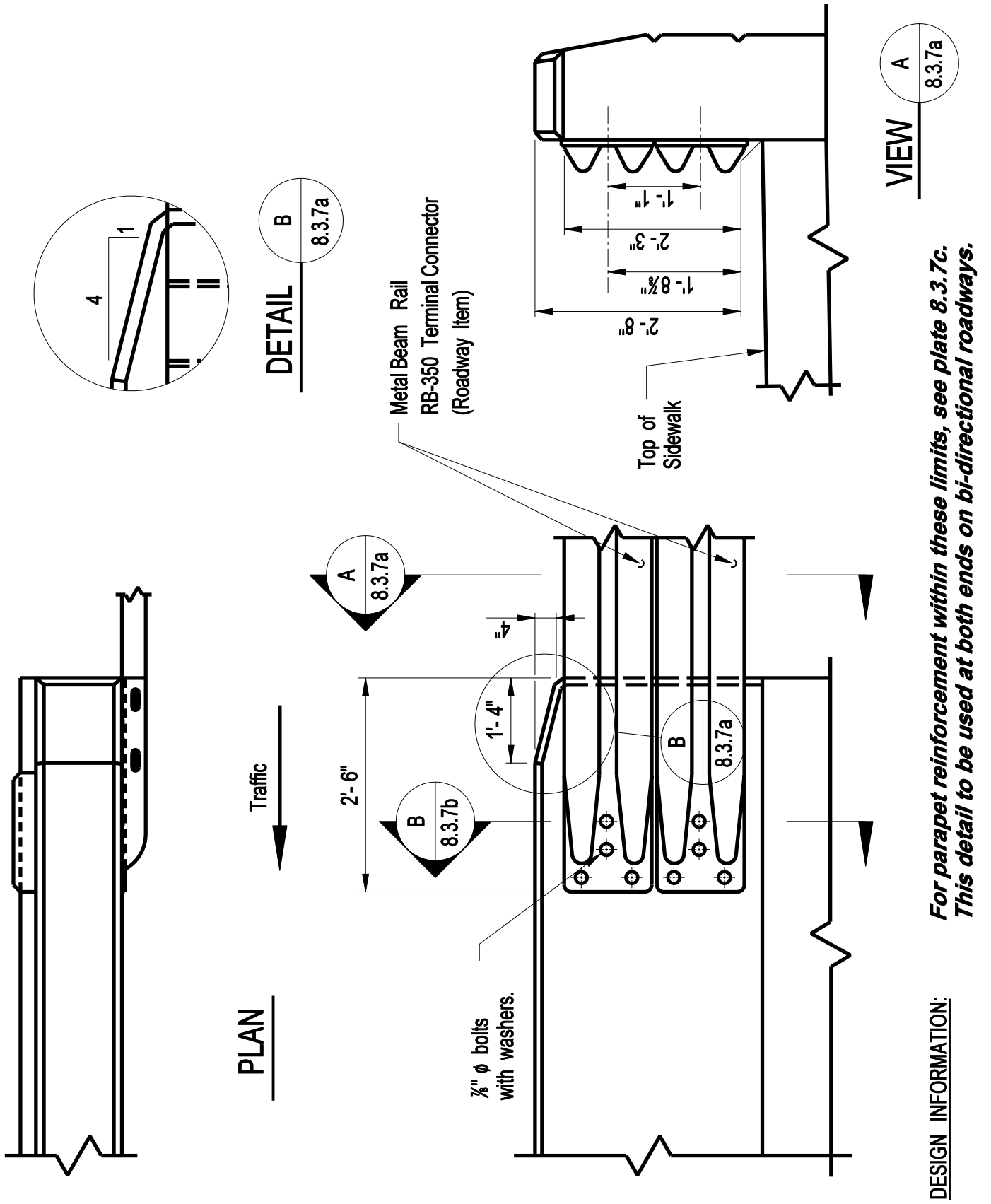

DESIGN INFORMATION:

For parapet reinforcement within these limits, see plate 8.3.7c. This detail to be used at both ends on bi-directional roadways.

LEADING END R-B 350 RAIL ATTACHMENT

CONNECTICUT BRIDGE DESIGN MANUAL	BEAM RAIL ATTACHMENT FOR VERTICAL FACE PARAPET WITH SIDEWALK 32" HIGH LEADING END	Issue Date: 10/03 Revision Date: Plate Number: 8.3.7a

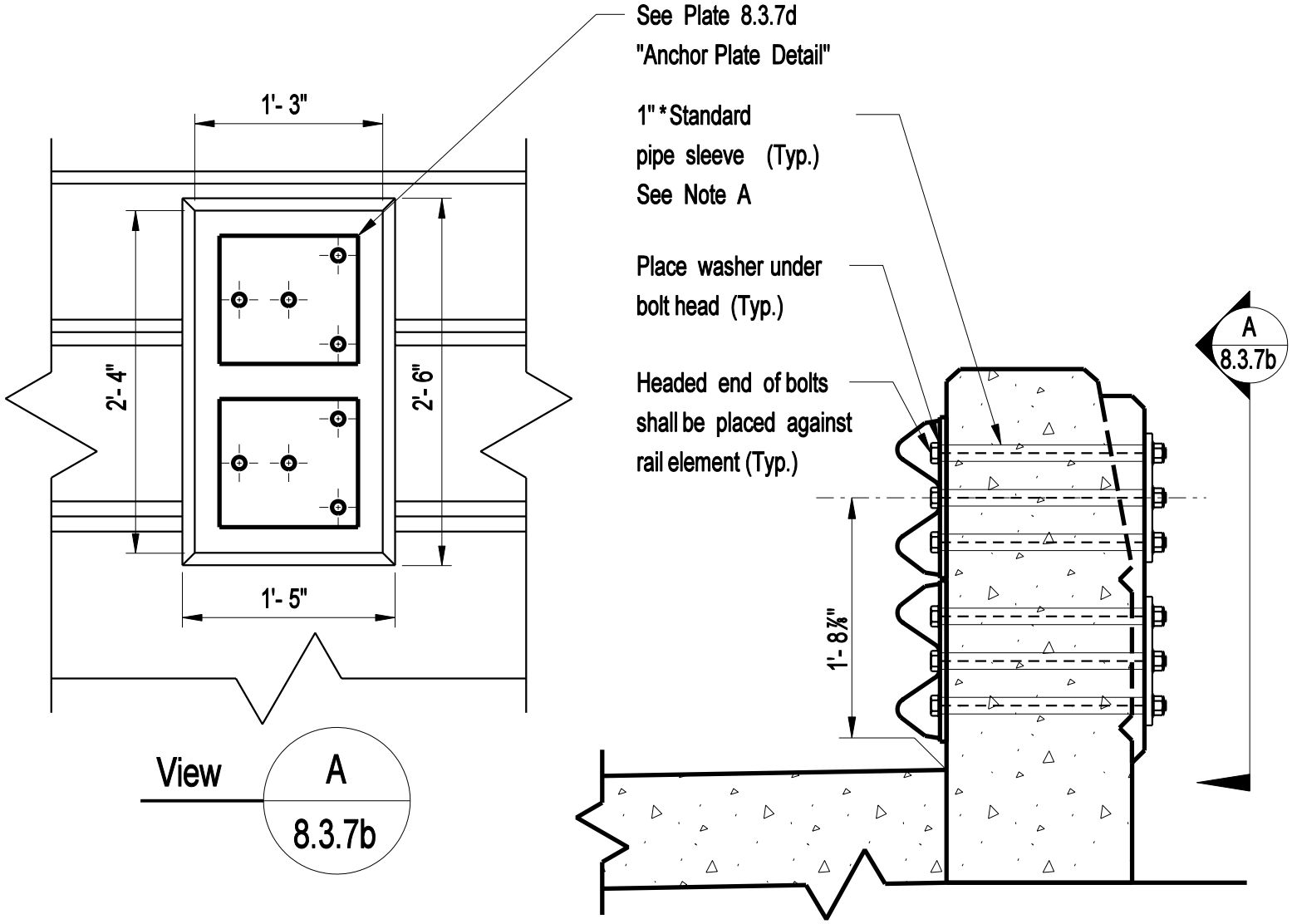

NOTE A
1" * pipe shall conform to ASTM A53 Gr. B or ASTM A501 and shall be galvanized in accordance with the requirements of ASTM A123.

DESIGN INFORMATION: ***For reinforcement not shown, see plate 8.3.7d.***
For parapet dimensions not shown, see plate 3.4.6.

LEADING END R-B 350 RAIL ATTACHMENT

CONNECTICUT BRIDGE DESIGN MANUAL

BEAM RAIL ATTACHMENT FOR VERTICAL FACE PARAPET WITH SIDEWALK 32" HIGH LEADING END

Issue Date: 10/03
Revision Date:
Plate Number: 8.3.7b

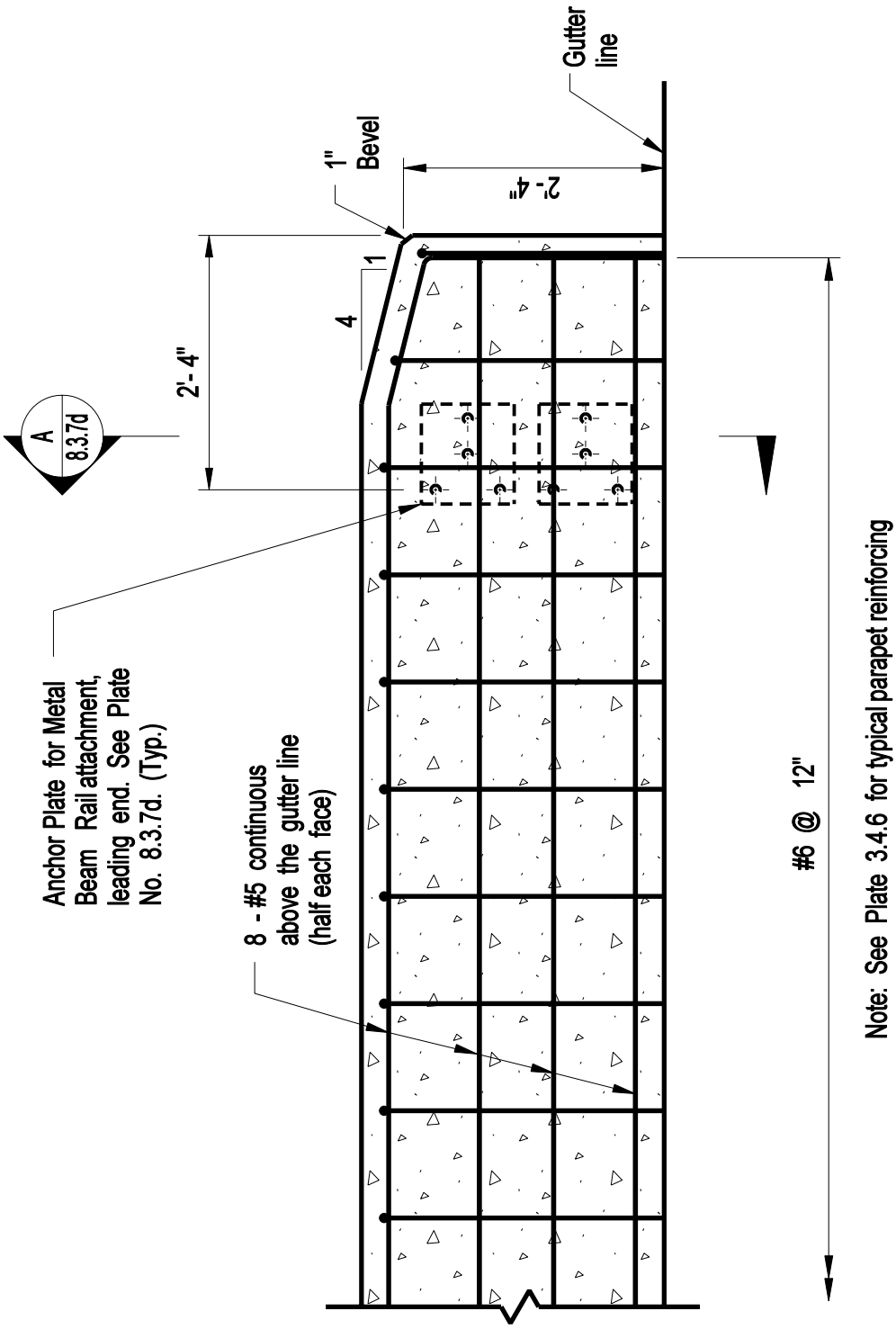

ELEVATION

PARAPET REINFORCEMENT AT LEADING END

CONNECTICUT BRIDGE DESIGN MANUAL	BEAM RAIL ATTACHMENT FOR VERTICAL FACE PARAPET WITH SIDEWALK 32" HIGH LEADING END	Issue Date: 10/03 Revision Date: Plate Number: 8.3.7c

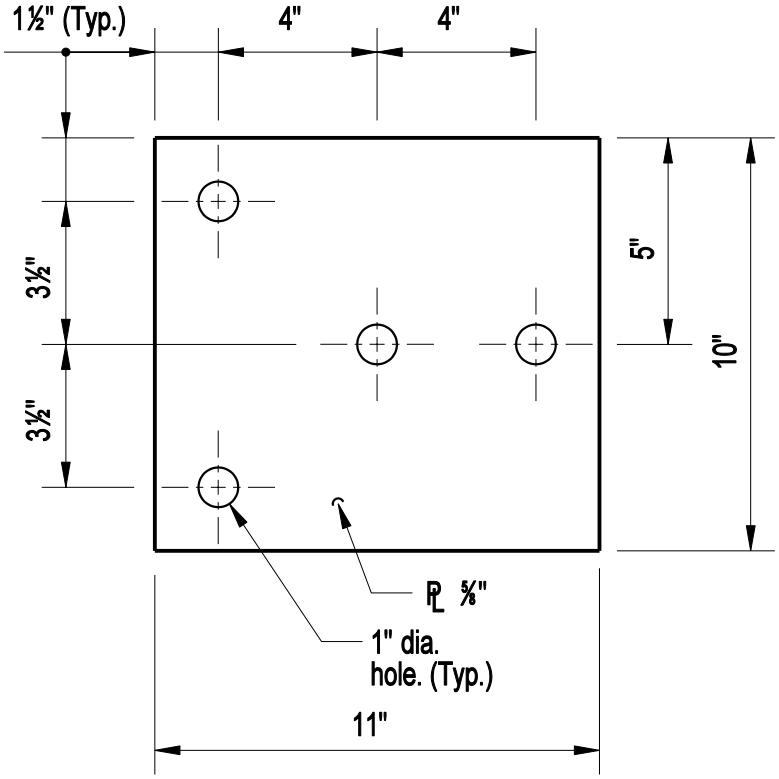

ANCHOR PLATE DETAIL

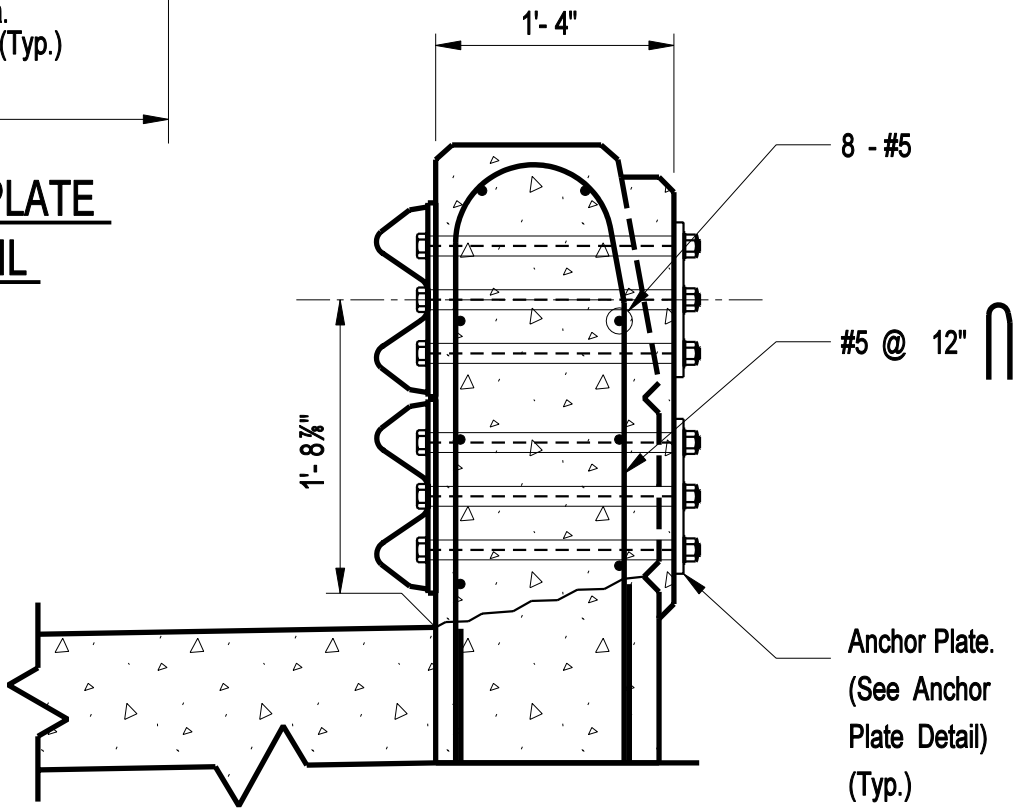

SECTION A / 8.3.7c

CONNECTICUT BRIDGE DESIGN MANUAL	BEAM RAIL ATTACHMENT FOR VERTICAL FACE PARAPET WITH SIDEWALK 32" HIGH LEADING END	Issue Date: 10/03 Revision Date: Plate Number: 8.3.7d

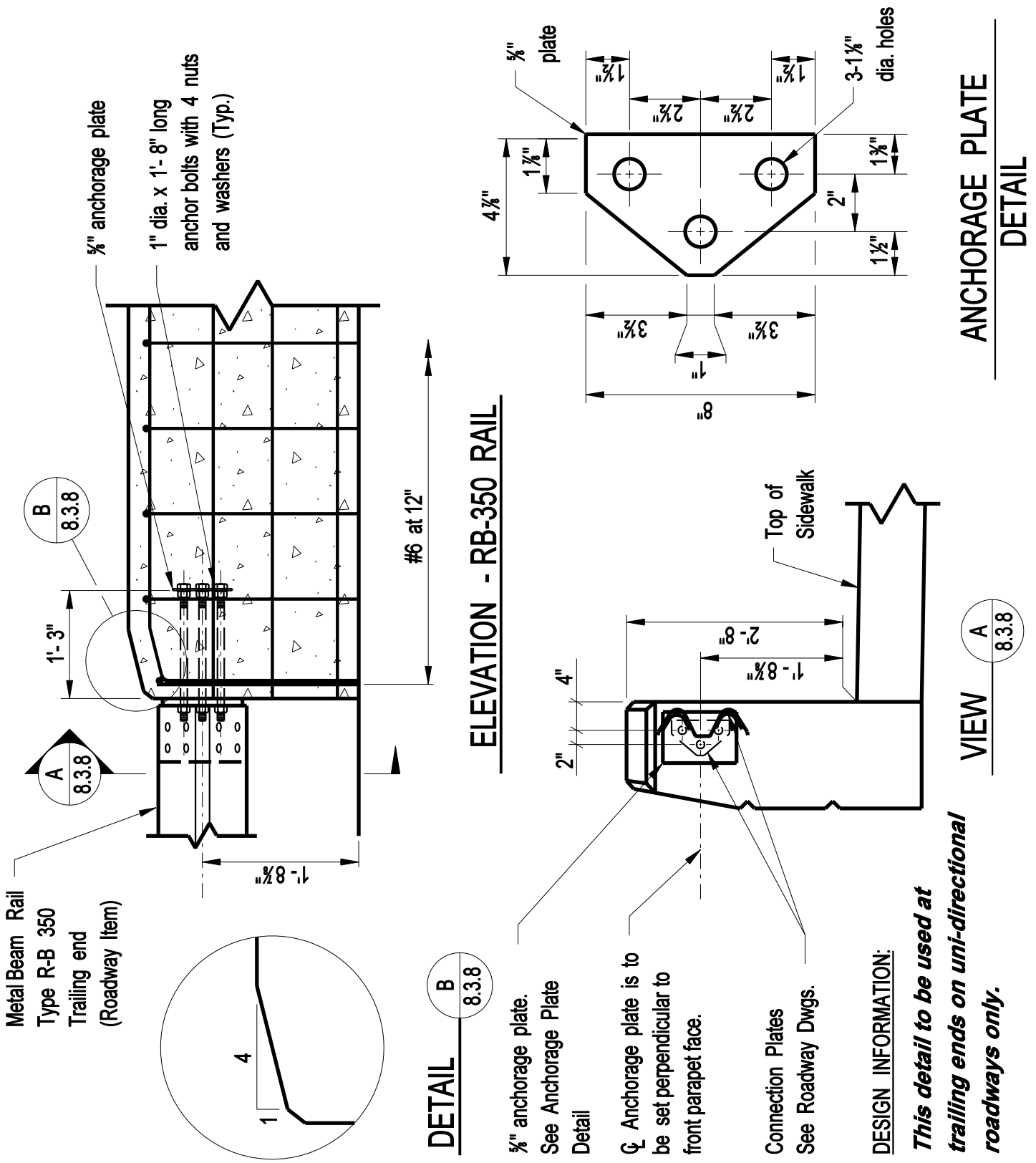

CONNECTICUT BRIDGE DESIGN MANUAL	BEAM RAIL ATTACHMENT FOR VERTICAL FACE PARAPET WITH SIDEWALK 32" HIGH TRAILING END	Issue Date: 10/03 Revision Date: Plate Number: 8.3.8

PLAN NOTES:

1. Steel plates shall conform to the requirements of ASTM A36. The steel plates shall be hot-dip galvanized in accordance with the requirements of ASTM A123.

2. Anchor bolts shall conform to the requirements of ASTM A325, mechanically galvanized.

3. 1" ø pipe shall conform to ASTM A53 Grade B or ASTM A501 and shall be galvanized in accordance with the requirements of ASTM A123.

4. Railway elements shall be paid for under the applicable Roadway items.

5. All rail anchorage material required for end attachments shall be paid for under the applicable Roadway items.

DESIGN INFORMATION

1. Beam rail notes to be included on construction plans with all beam rail attachment details.

CONNECTICUT BRIDGE DESIGN MANUAL	BEAM RAIL ATTACHMENTS BEAM RAIL NOTES	Issue Date: 10/03 Revision Date: Plate Number: 8.3.9

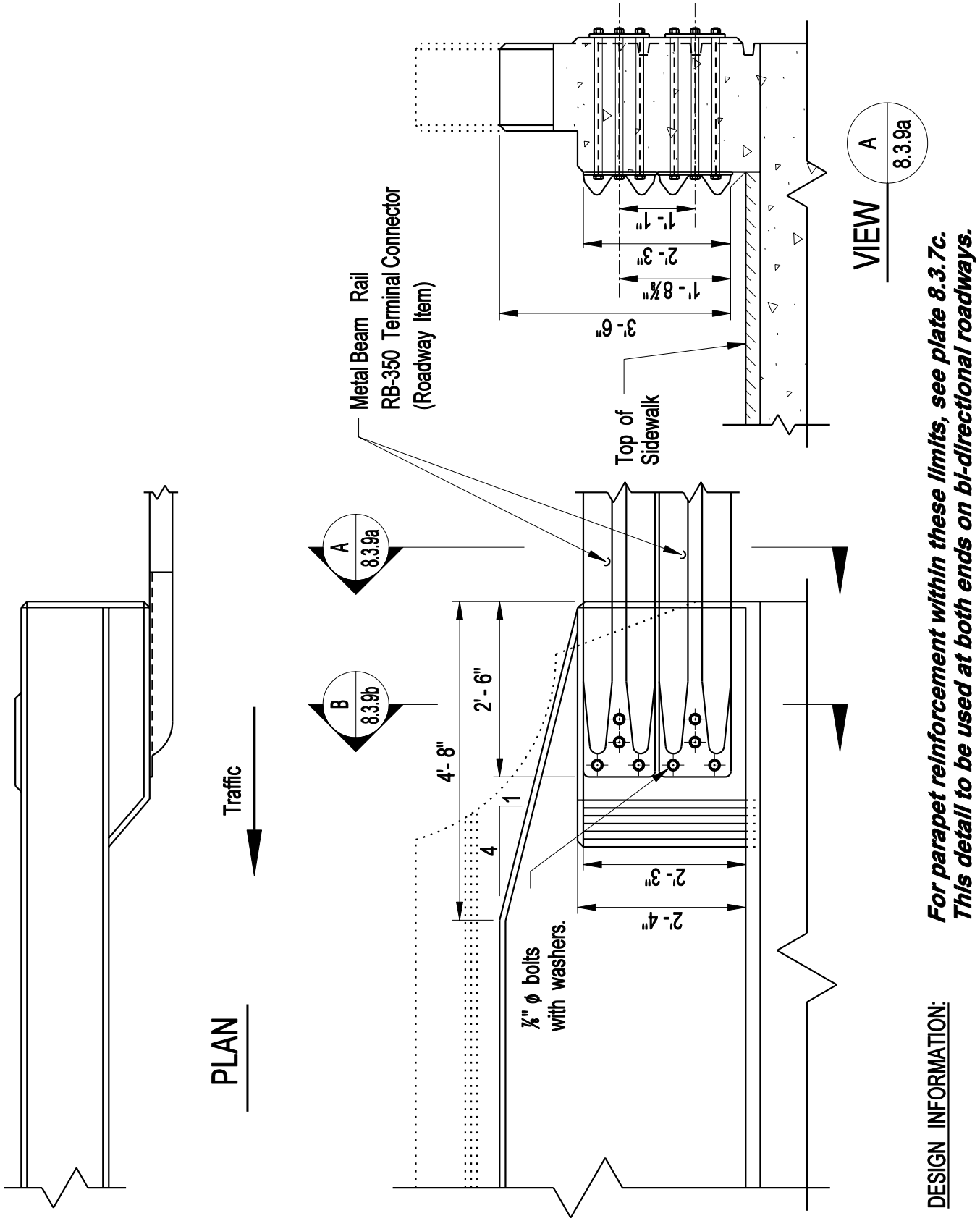

DESIGN INFORMATION:

For parapet reinforcement within these limits, see plate 8.3.7c. This detail to be used at both ends on bi-directional roadways.

LEADING END R-B 350 RAIL ATTACHMENT

CONNECTICUT BRIDGE DESIGN MANUAL	BEAM RAIL ATTACHMENT FOR RECONSTRUCTED VERTICAL FACE PARAPET WITH SIDEWALK 42" HIGH - LEADING END	Issue Date: 10/03 Revision Date: Plate Number: 8.3.9a

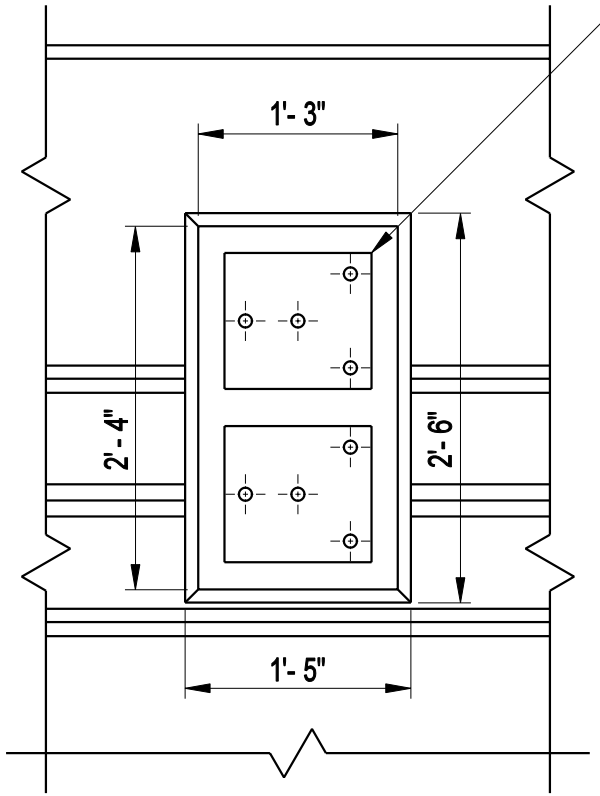

VIEW A / 8.3.9b

See Plate 8.3.9d
"Anchor Plate Detail"

1" * Standard
pipe sleeve (Typ.)
See Note A

Place washer under
bolt head (Typ.)

Headed end of bolts
shall be placed against
rail element (Typ.)

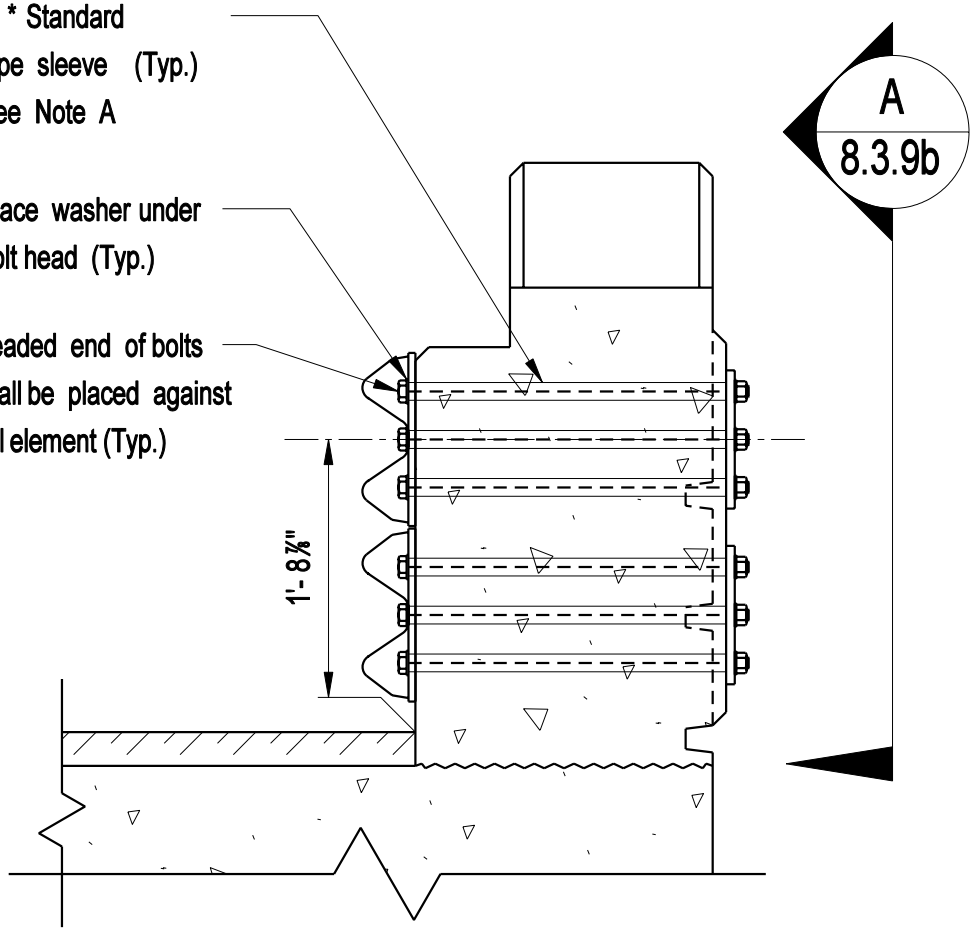

SECTION B / 8.3.9a

NOTE A
1" * pipe shall conform to ASTM A53 Gr. B or ASTM A501 and shall be galvanized in accordance with the requirements of ASTM A123.

DESIGN INFORMATION: ***For reinforcement not shown, see plate 8.3.9d.***
For parapet dimensions not shown, see plate 3.4.6.

LEADING END R-B 350 RAIL ATTACHMENT

CONNECTICUT BRIDGE DESIGN MANUAL

BEAM RAIL ATTACHMENT FOR RECONSTRUCTED VERTICAL FACE PARAPET WITH SIDEWALK 42" HIGH - LEADING END

Issue Date: 10/03
Revision Date:
Plate Number: 8.3.9b

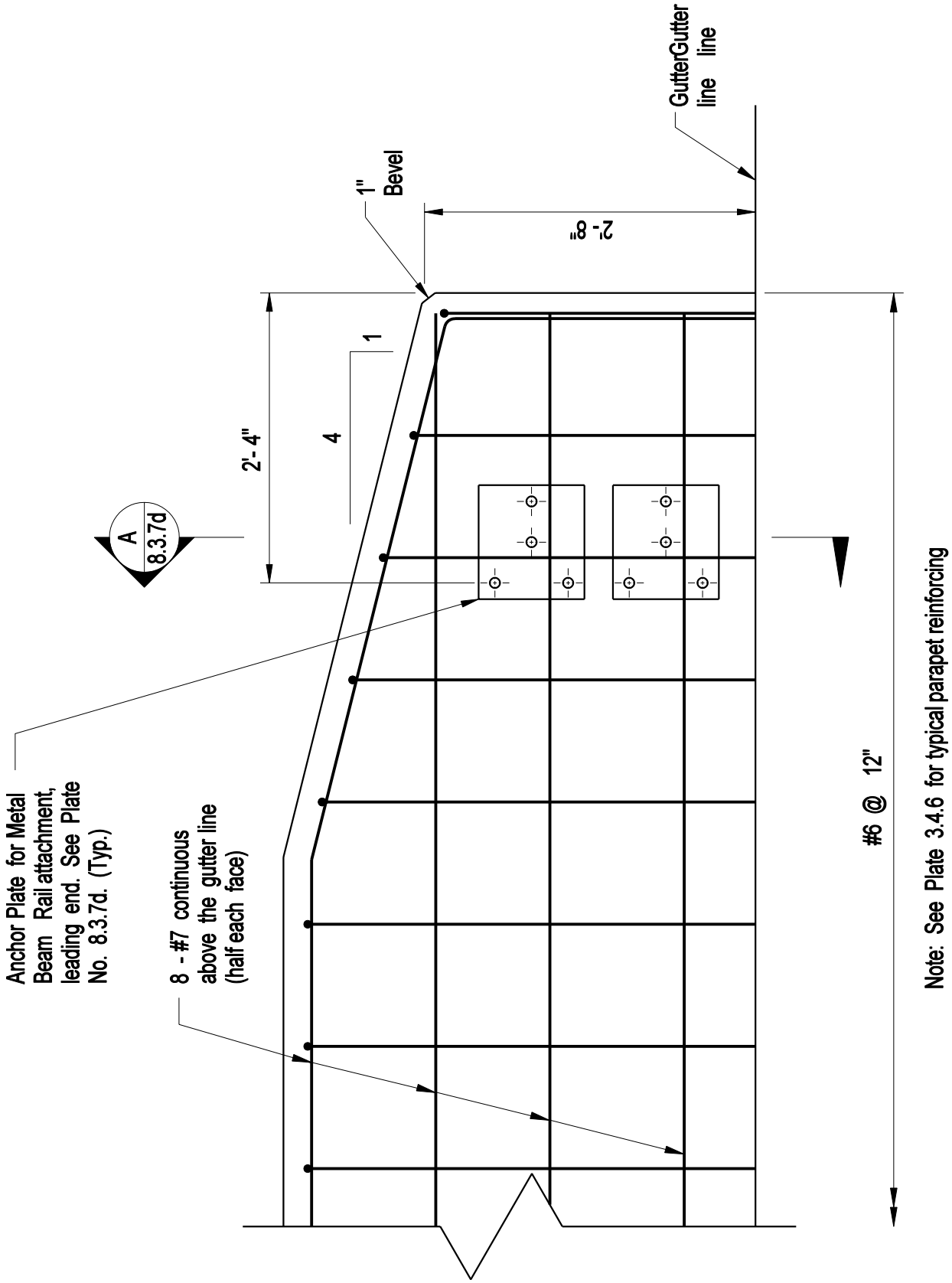

Note: See Plate 3.4.6 for typical parapet reinforcing

ELEVATION

PARAPET REINFORCEMENT AT LEADING END

CONNECTICUT BRIDGE DESIGN MANUAL	BEAM RAIL ATTACHMENT FOR RECONSTRUCTED VERTICAL FACE PARAPET WITH SIDEWALK 42" HIGH - LEADING END	Issue Date: 10/03 Revision Date: Plate Number: 8.3.9c

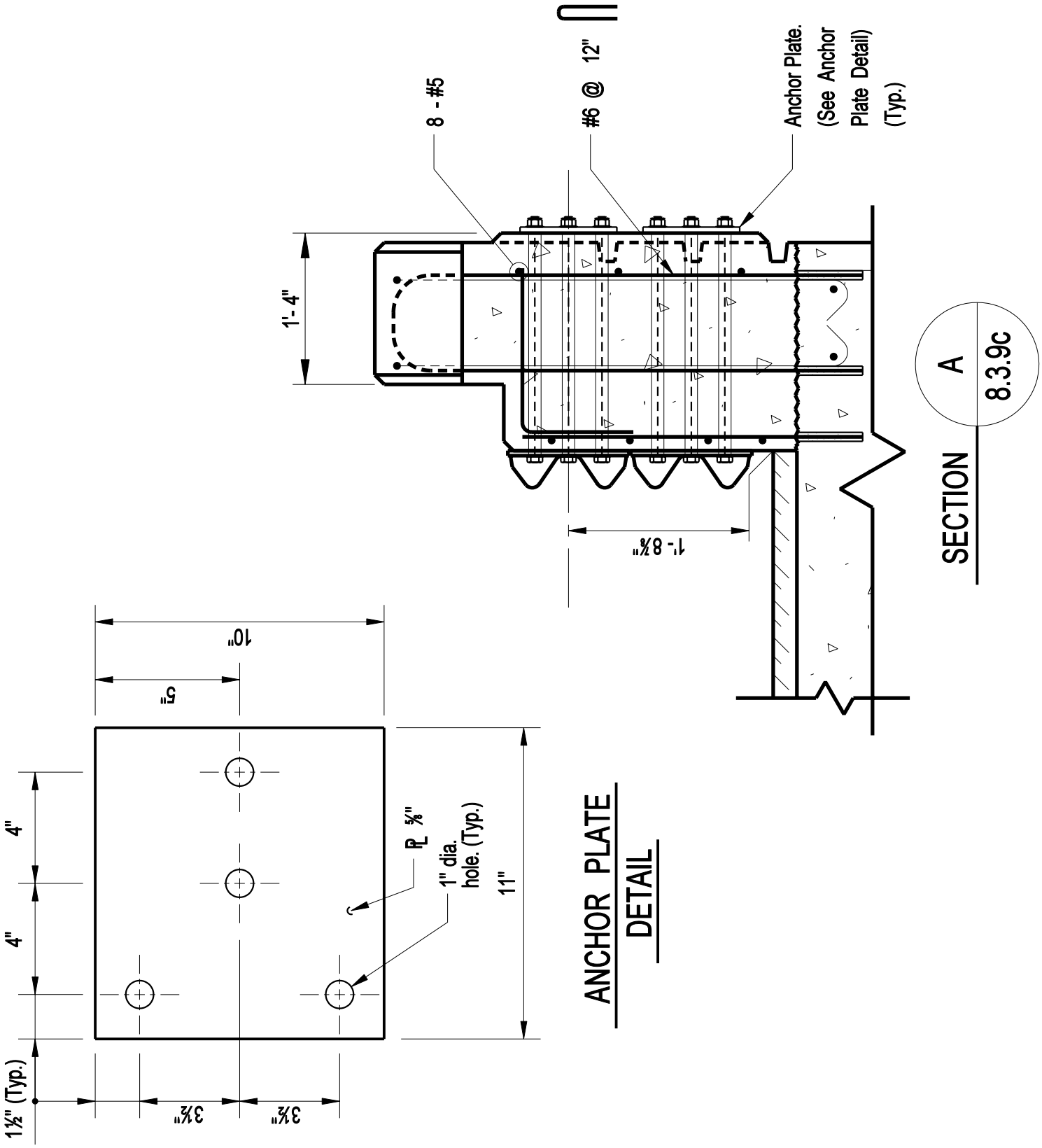

CONNECTICUT BRIDGE DESIGN MANUAL	BEAM RAIL ATTACHMENT FOR RECONSTRUCTED VERTICAL FACE PARAPET WITH SIDEWALK 42" HIGH - LEADING END	Issue Date: 10/03 Revision Date: Plate Number: 8.3.9d

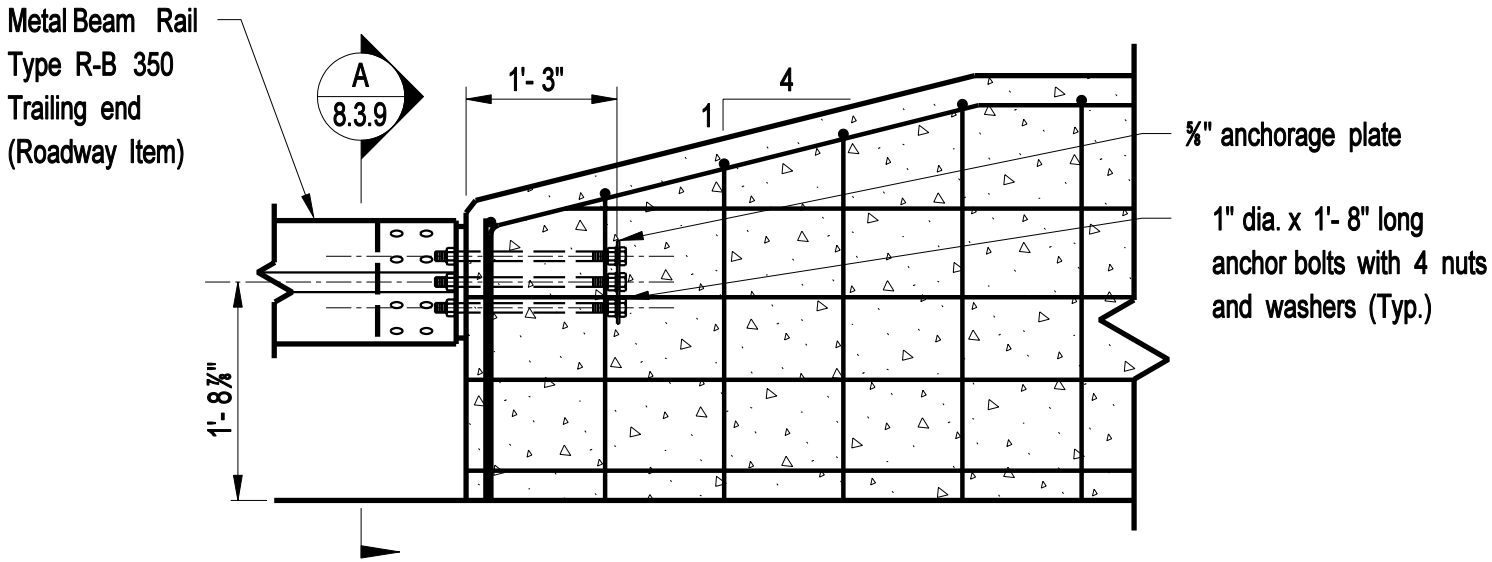

ELEVATION

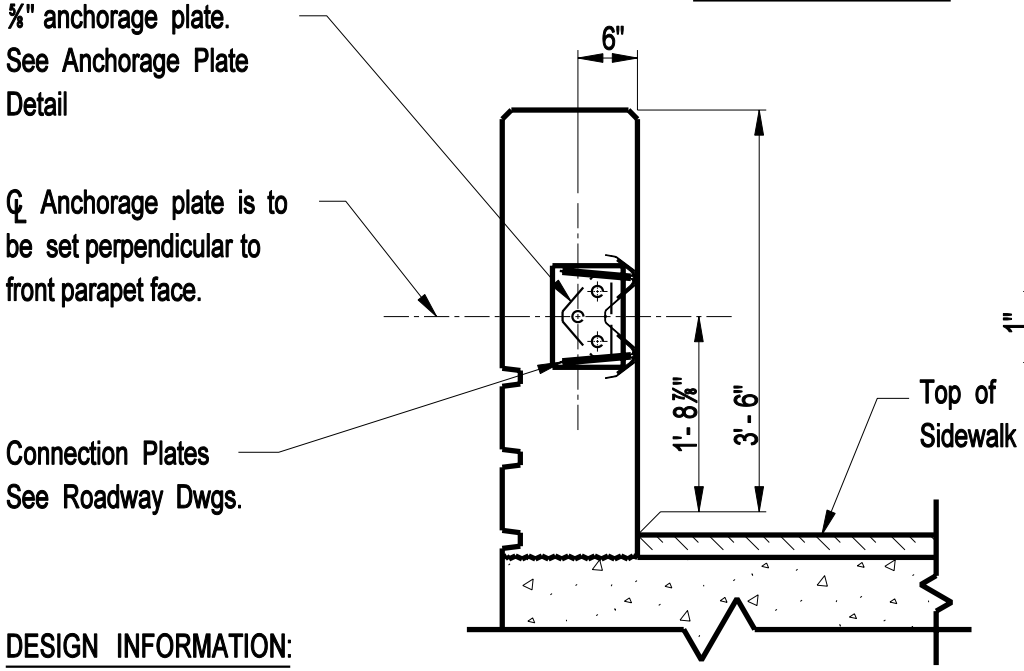

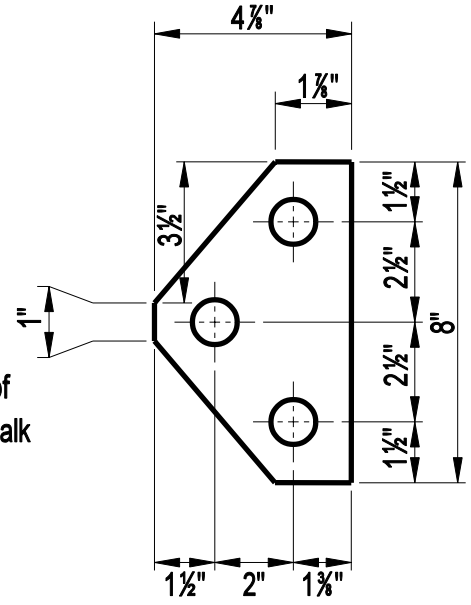

ANCHORAGE PLATE DETAIL

DESIGN INFORMATION:

This detail to be used at trailing ends on uni-directional roadways only.

SECTION B / 8.3.9a

TRAILING END R-B 350 RAIL ATTACHMENT

CONNECTICUT BRIDGE DESIGN MANUAL

BEAM RAIL ATTACHMENT FOR VERTICAL FACE PARAPET WITH SIDEWALK 32" HIGH TRAILING END

Issue Date: 10/03

Revision Date:

Plate Number: 8.3.10