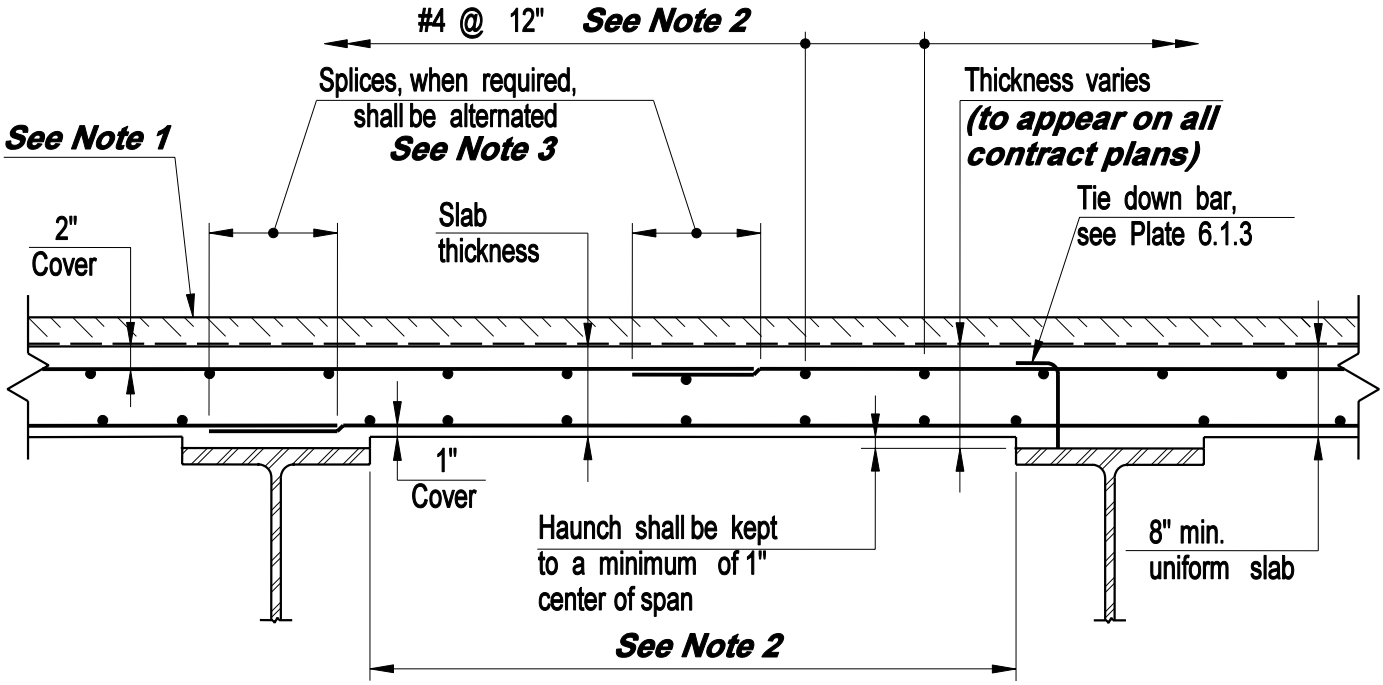

NOTES:

1. 2½" bituminous concrete overlay on membrane waterproofing

DESIGN INFORMATION:

2. Bars shall be designed in accordance with current AASHTO specifications. For additional longitudinal slab reinforcement at ends of slab, see Plate 6.1.4. For additional slab reinforcement at acute corners, (skew angle greater than 20°), see Plate 6.1.5a.

3. Splices and development lengths shall be determined by the designer in accordance with the latest AASHTO design criteria.

CONNECTICUT BRIDGE DESIGN MANUAL	TYPICAL SLAB SECTION	Issue Date: 10/03 Revision Date: Plate Number: 6.1.1

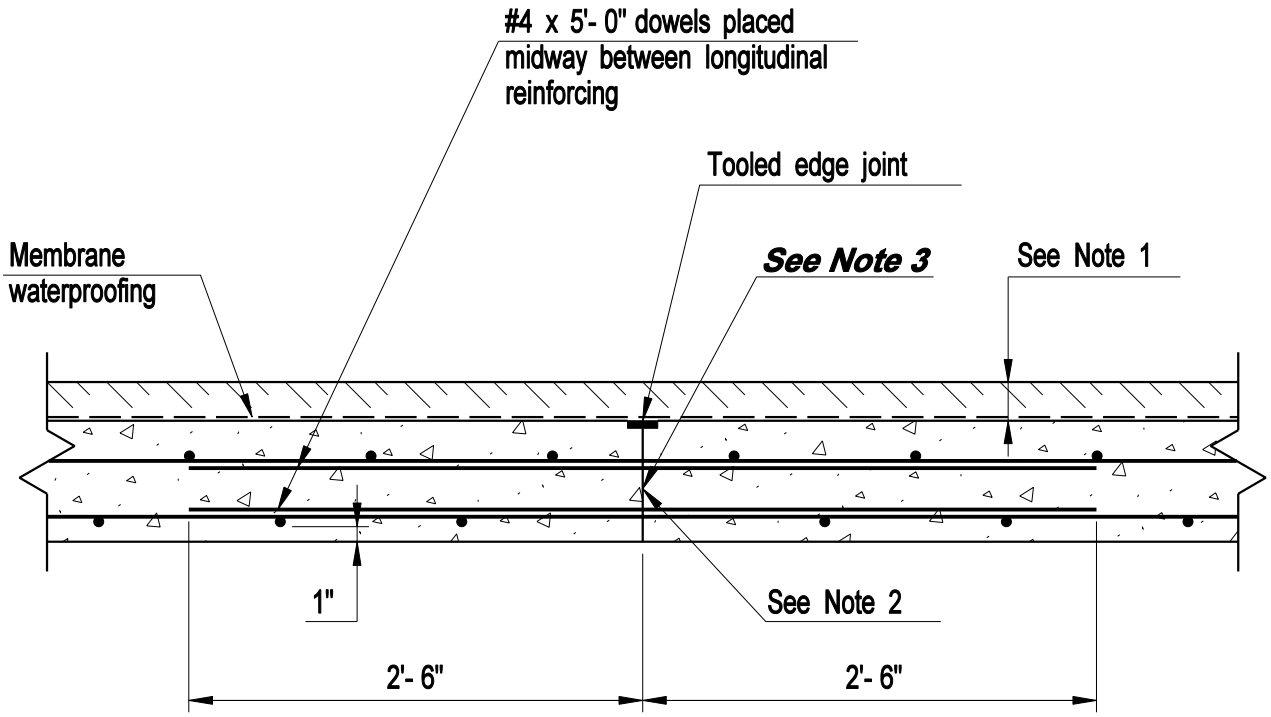

NOTES:

1. 2½" bituminous concrete overlay on membrane waterproofing

2. Roughen surface, blast clean then apply a neat cement grout or other suitable bonding material immediately prior to placing adjacent pour. ***See Note 3.***

DESIGN INFORMATION:

3. Transverse reinforcement placed on a skew to this joint shall be continuous through this joint.

4. This joint shall be allowed and shown on the plans only when sequence of pour is required.

CONNECTICUT BRIDGE DESIGN MANUAL	TYPICAL SECTION AT TRANSVERSE CONSTRUCTION JOINT IN SLAB	Issue Date: 10/03 Revision Date: Plate Number: 6.1.2

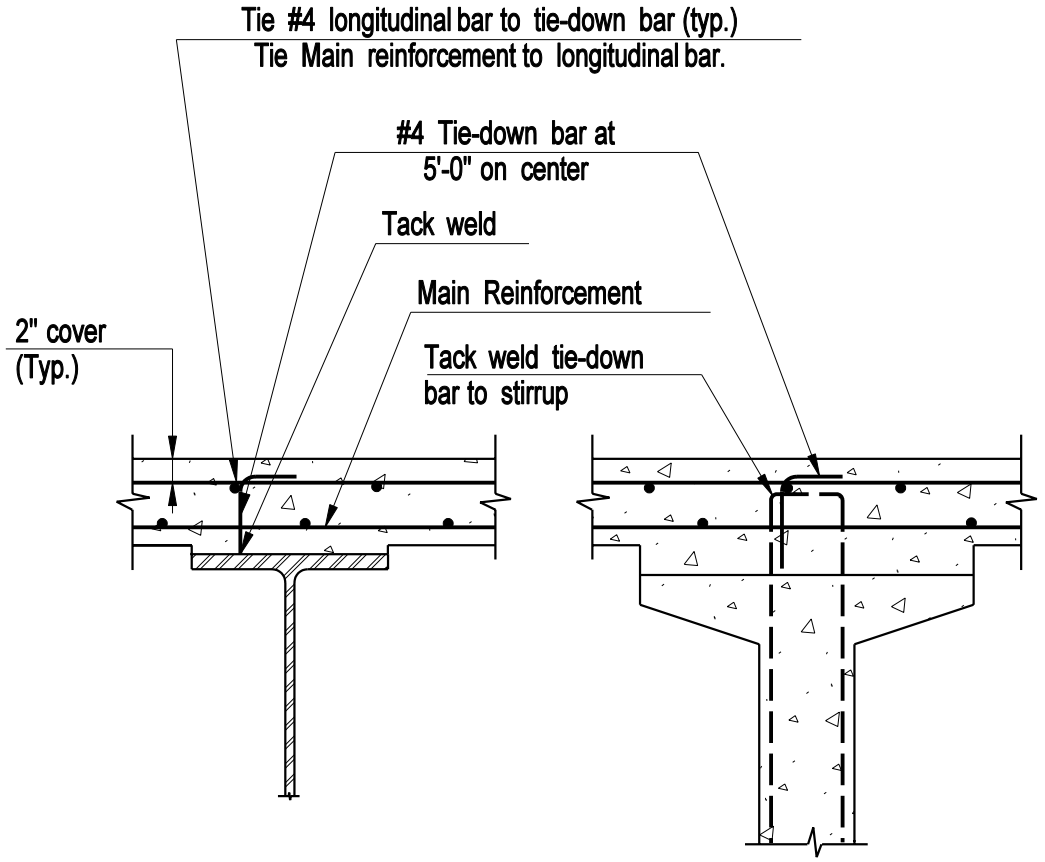

STEEL STRINGER PRESTRESSED STRINGER

PLAN NOTES

1. Tie-down bars do not exclude the use of chairs for supporting the reinforcement mat.
2. The cost of furnishing and placing tie-down bars to be included in the contract item "Deformed Steel Bars".
3. Tie-down bars and longitudinal bars shall clear shear connectors.

DESIGN INFORMATION:

Tie-downs for reinforcement shall not be welded to steel members or parts subjected to tensile stress unless the range of stress at the point of attachment does not exceed the allowable range as stated in the current AASHTO specifications. Hence the plans shall indicate the locations where this attachment shall not be tack welded to the tension flanges with the following note: "No attachment shall be fillet welded, plug welded or tack welded to the tension flange within these limits."

CONNECTICUT BRIDGE DESIGN MANUAL	TIE-DOWN FOR SLAB REINFORCEMENT	Issue Date: 10/03 Revision Date: Plate Number: 6.1.3

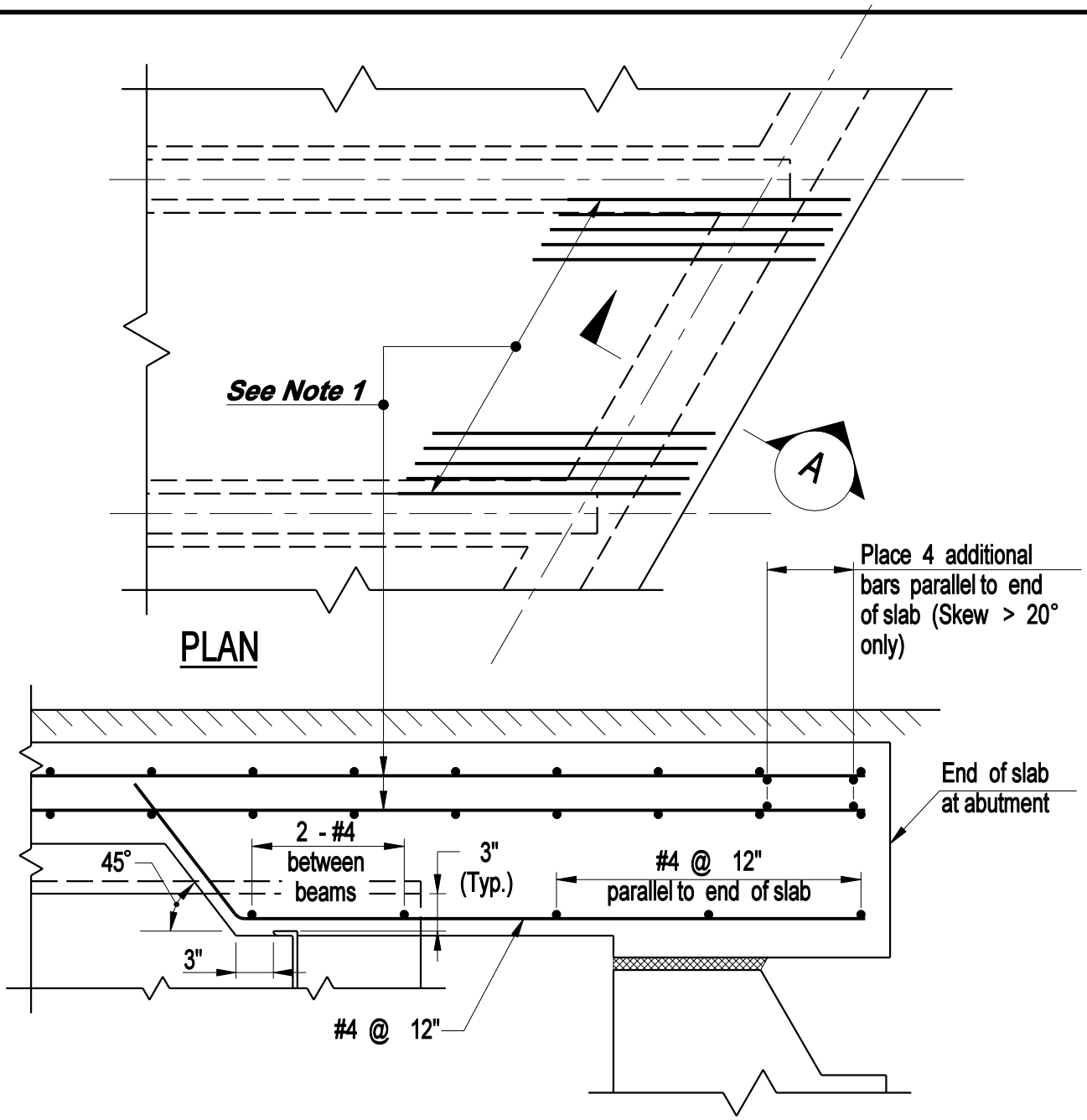

SECTION A

DESIGN INFORMATION

1. Place additional #5 bars midway between longitudinal bars on both fixed and expansion ends, at piers and abutments.

Spans < 50'- 0"	***Use #4 x 5'- 0"***
Spans > 50'- 0" to 80'- 0"	***Use #4 x 8'- 0"***
Spans > 80'- 0"	***Use #4 x 10'- 0"***

CONNECTICUT BRIDGE DESIGN MANUAL	DETAILS AT ENDS OF SLAB (STEEL STRINGERS)	Issue Date: 10/03 Revision Date: Plate Number: 6.1.4

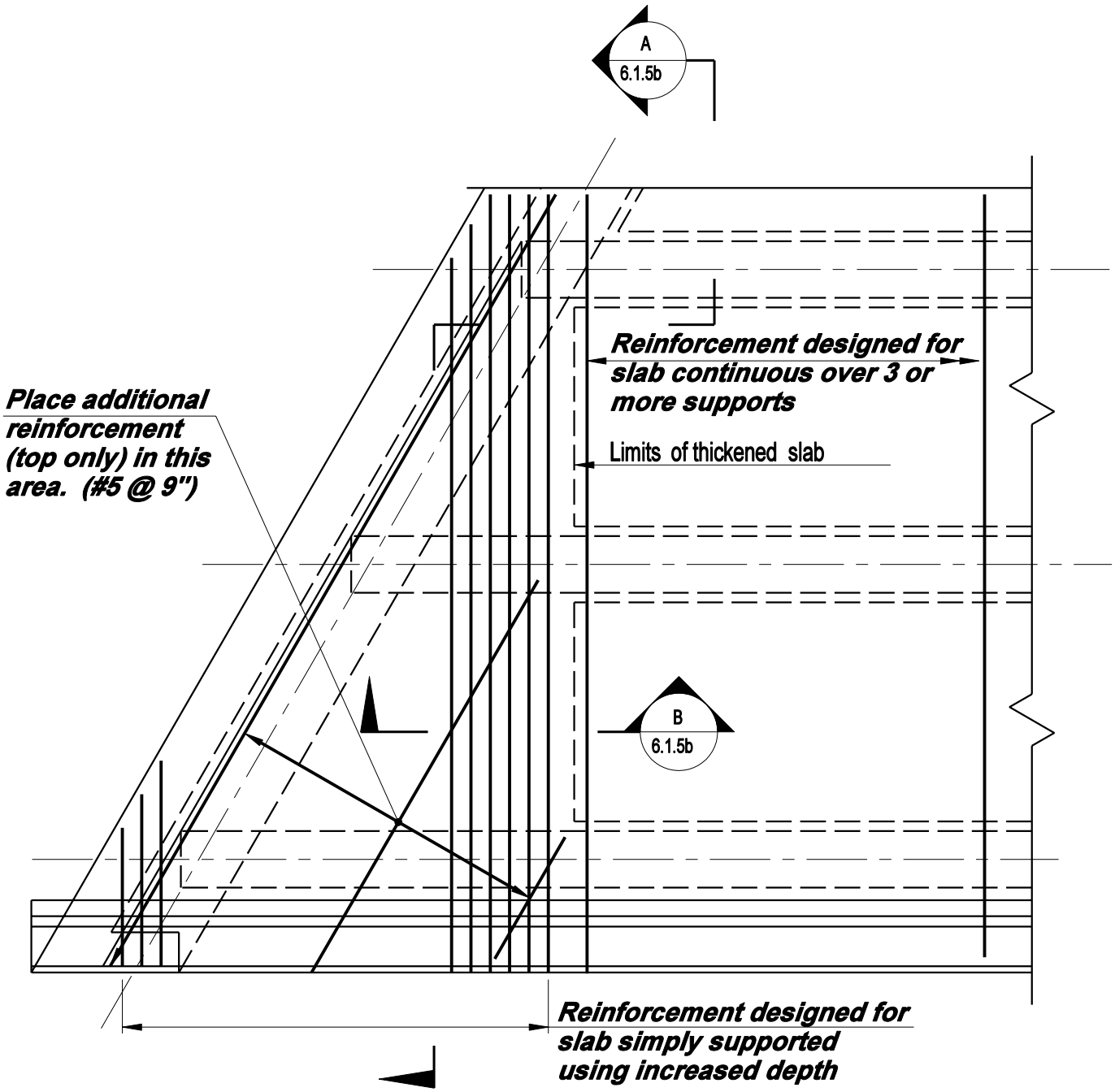

PLAN

DESIGN INFORMATION

For design information, see Plate 6.1.5b

CONNECTICUT BRIDGE DESIGN MANUAL	ADDITIONAL REINFORCEMENT AT ACUTE CORNERS (SKEW ANGLE > 20°)	Issue Date: 10/03 Revision Date: Plate Number: 6.1.5a

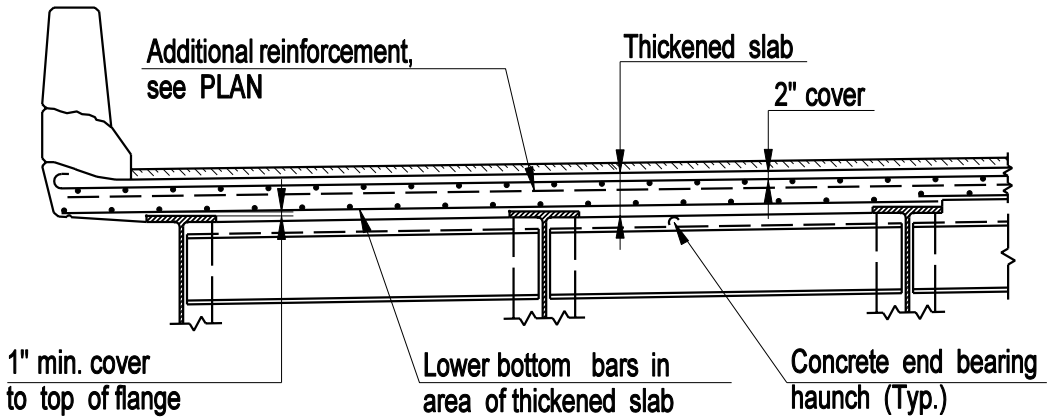

SECTION A

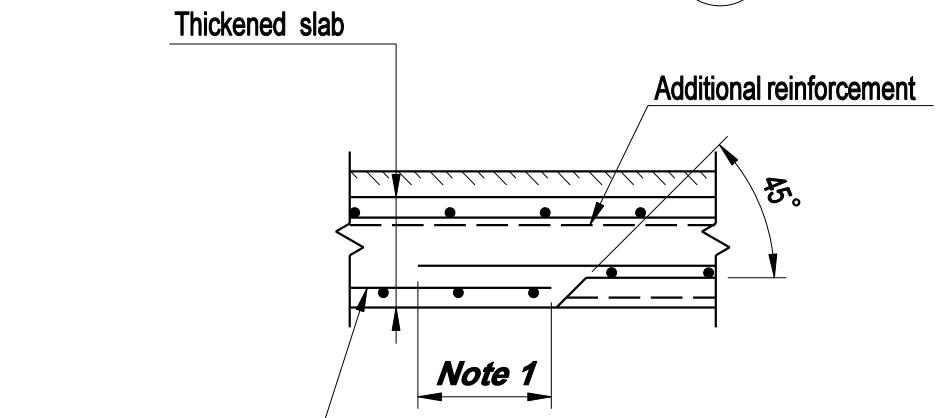

SECTION B

DESIGN INFORMATION

1. ***Splice length shall be determined by the designer in accordance with the latest AASHTO design criteria.***

2. ***Longitudinal reinforcement not indicated in "PLAN", detail shown at abutment, detail at pier similar.***

CONNECTICUT BRIDGE DESIGN MANUAL	ADDITIONAL REINFORCEMENT AT ACUTE CORNERS (SKEW ANGLE > 20°)	Issue Date: 10/03 Revision Date: Plate Number: 6.1.5b

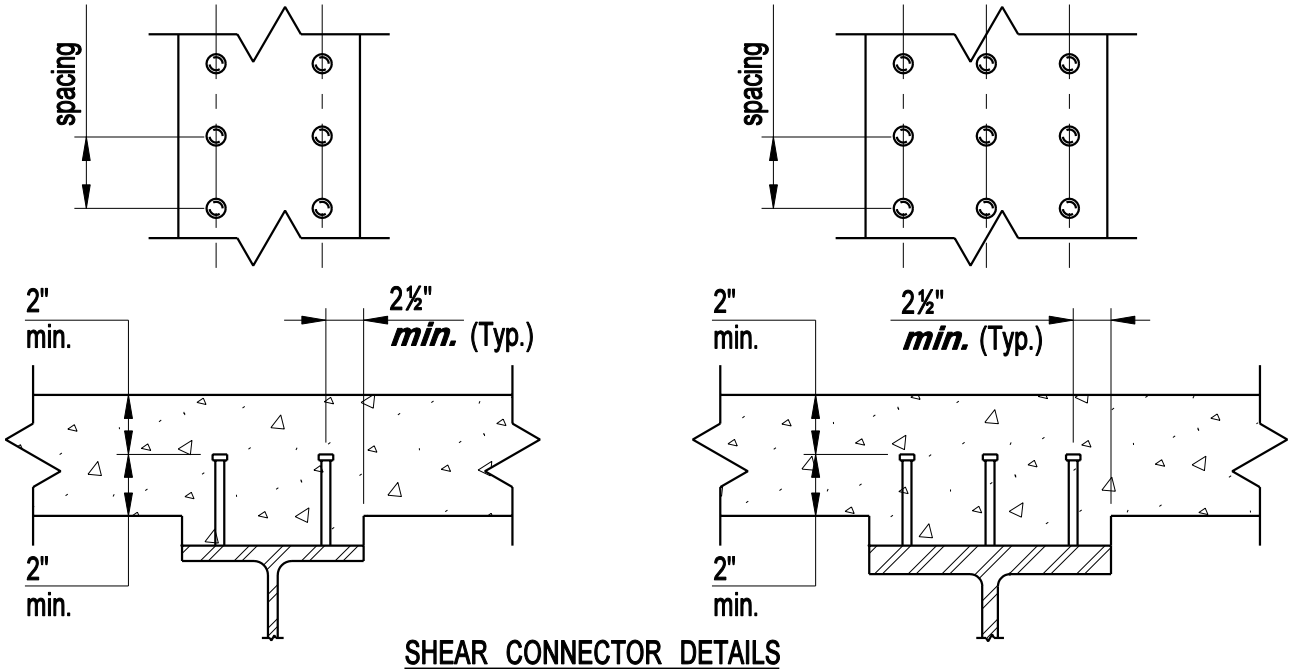

SHEAR CONNECTOR DETAILS

DESIGN INFORMATION

1. ***Preference shall be given to the use of 7/8" Ø studs. Lengths of studs shall be in increments of 1". Maximum permissible length of studs is 8". If the stud length required is in excess of 8", the required length may be obtained by stacking. Stacking of studs is provided for use in the specifications.***
2. ***Actual lengths or quantities of studs will not be given on the plans but shall be determined by the Contractor in accordance with the requirements shown in the details.***
3. ***Where the maximum depth of the haunch is excessive and studs are to be stacked, the haunch shall be reinforced as shown below.***
4. ***Haunch reinforcement shown is for haunch depth of 4" to 6". Reinforcement is not required for haunch depth less than 4". Reinforcement shall be designed for haunch depth greater than 6". If haunch depth in excess of 4" is anticipated, this detail shall be shown on the plans.***

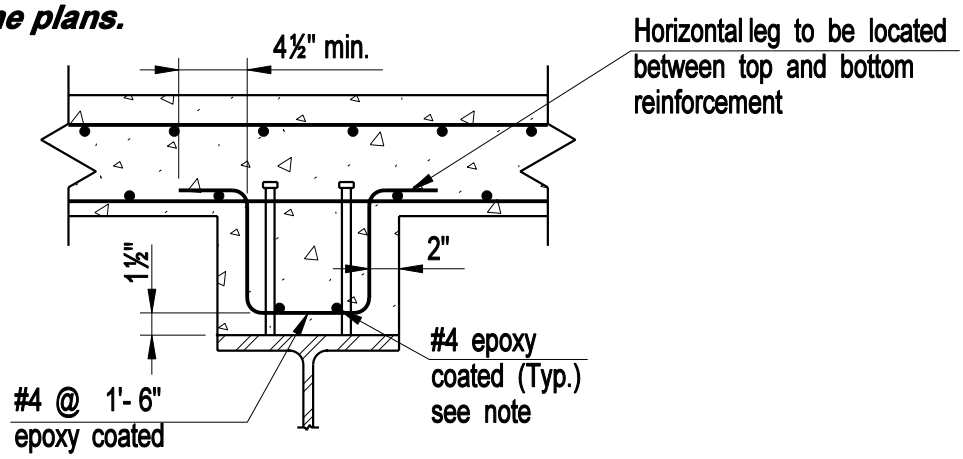

HAUNCH REINFORCEMENT DETAIL
(SEE NOTE 4)

CONNECTICUT BRIDGE DESIGN MANUAL	SHEAR CONNECTORS (WELDED STUD)	Issue Date: 10/03 Revision Date: Plate Number: 6.1.6

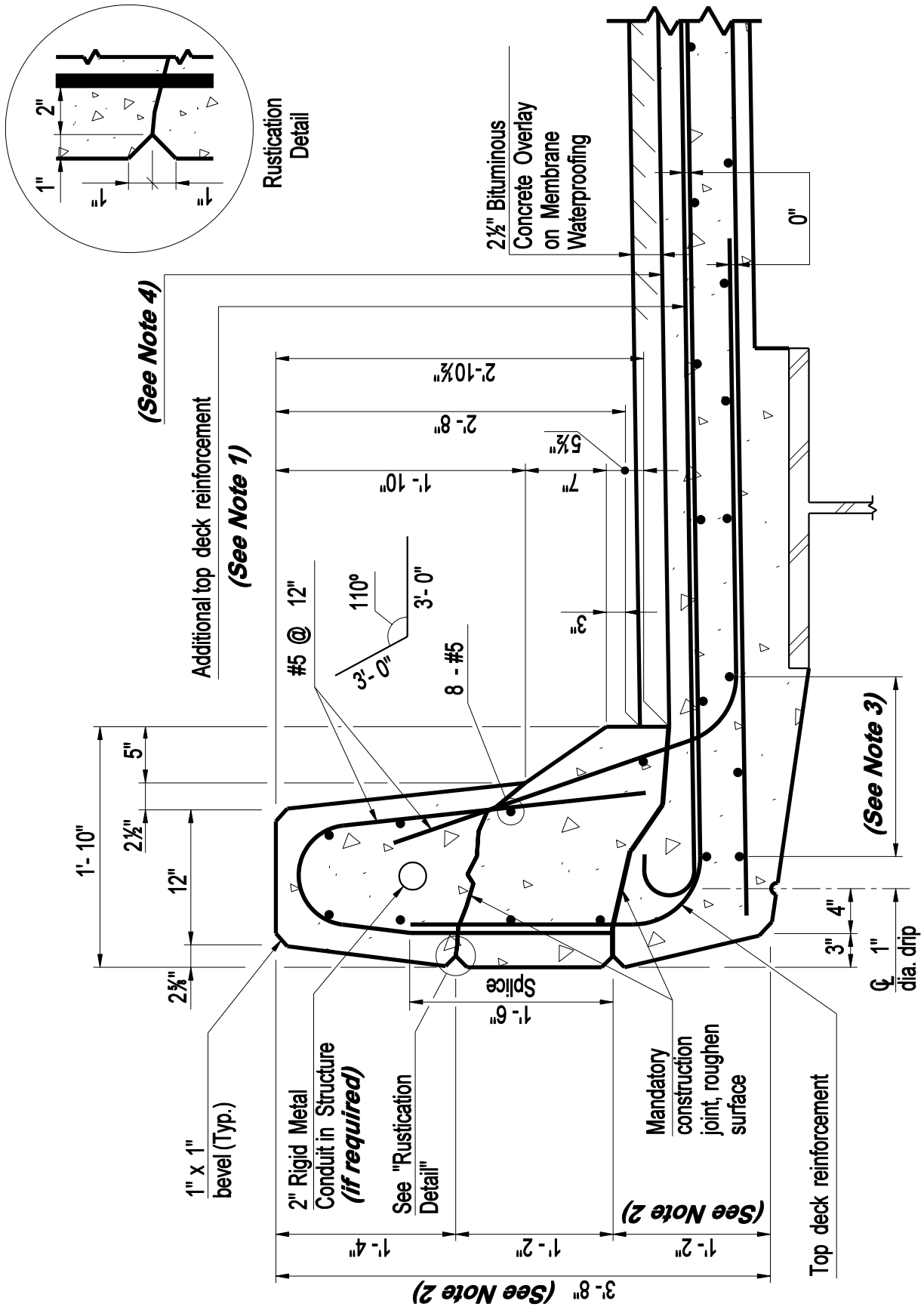

Note:
The parapet shall be cast continuous without joints. Longitudinal reinforcement shall be continuous with minimum lap splices of 3'-0".

CONNECTICUT BRIDGE DESIGN MANUAL	STANDARD PARAPET 32" HIGH	Issue Date: 10/03 Revision Date: Plate Number: 6.2.1

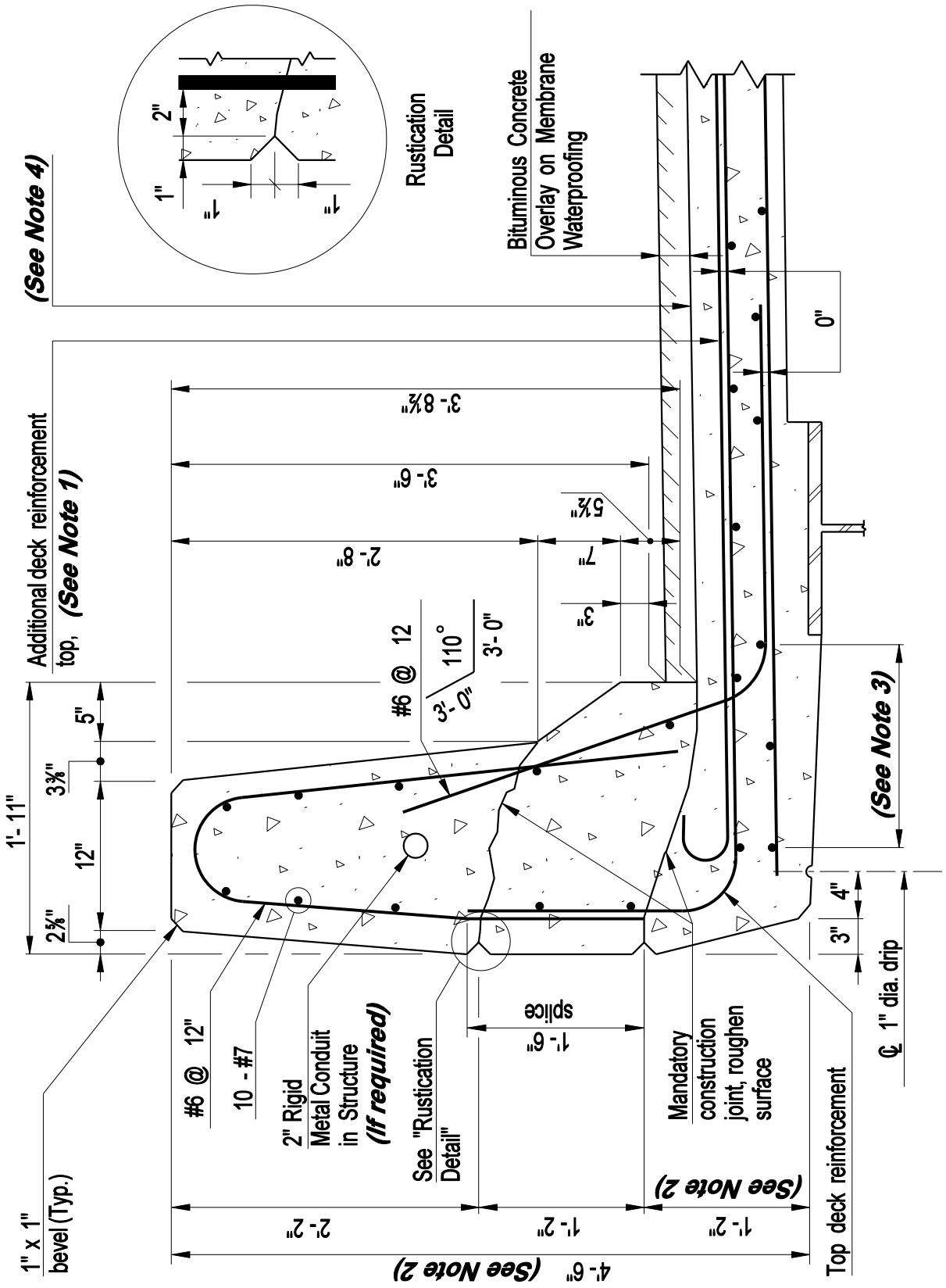

Note: For Notes 1 - 5, See Plate No. 6.2.4

CONNECTICUT BRIDGE DESIGN MANUAL	STANDARD PARAPET 42" HIGH	Issue Date: 10/03 Revision Date: Plate Number: 6.2.2

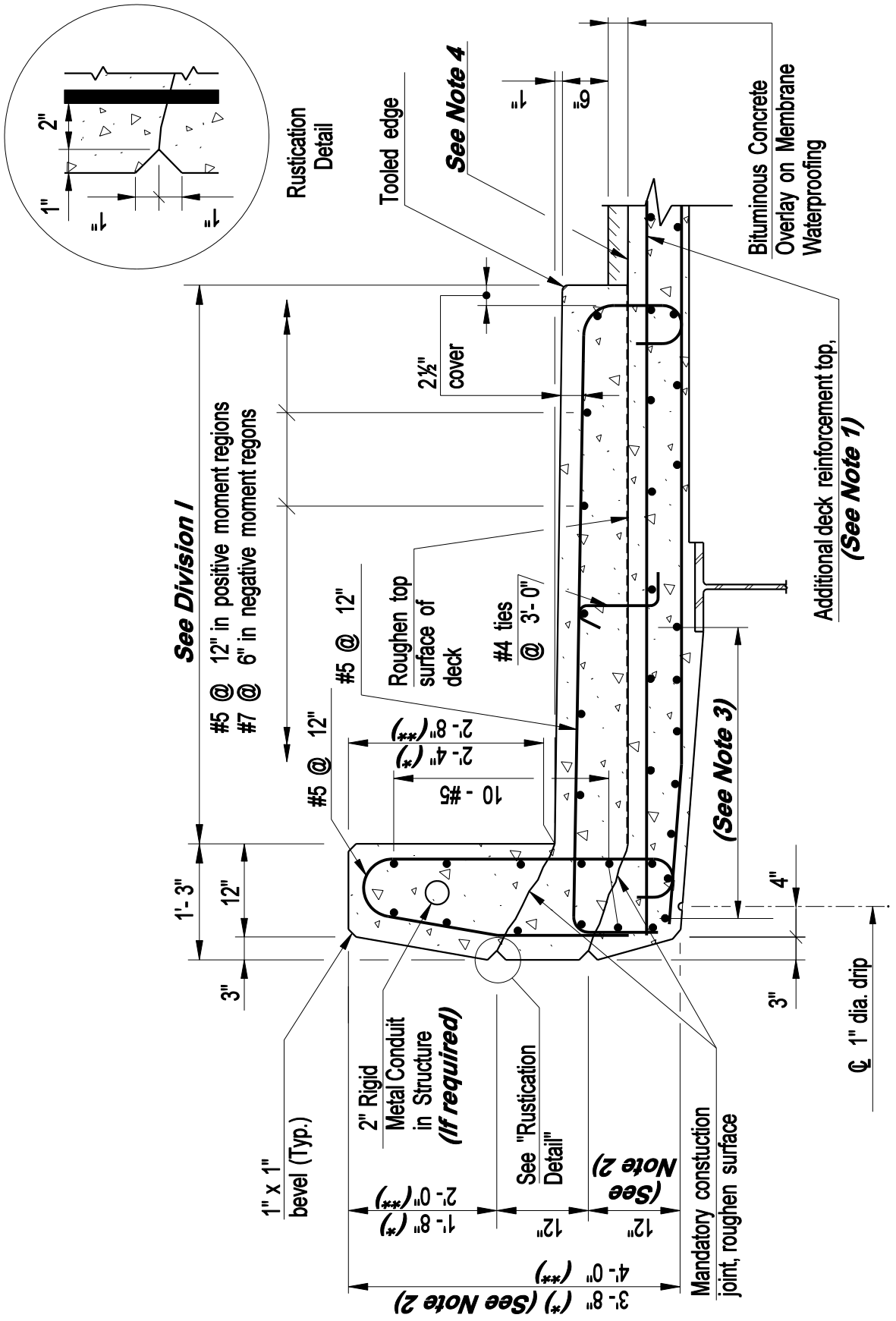

Note: For Notes 1 - 5 and additional plan notes, See Plate No. 6.2.4

DESIGN INFORMATION

* with protective fence
** with pedestrian railing

CONNECTICUT BRIDGE DESIGN MANUAL	PARAPET WITH SIDEWALK	Issue Date: 10/03 Revision Date: Plate Number: 6.2.3

DESIGN INFORMATION

Note 1: The Designer shall determine the additional deck reinforcement required to satisfy the AASHTO specifications and include this information in the note.

Note 2: This dimension may be increased by the Designer to maintain cover of the bottom deck reinforcement.

Note 3: Designer shall specify the number of bars. Number of bars to be based on #5 @ 10" (max.)

PLAN NOTES

Note 4: Concrete above this line to be poured after the concrete in the deck slab has reached a strength of f' = 3500 psi.

Note 5: The parapet shall be cast continuous without joints. Longitudinal reinforcement shall be continuous with minimum lap splices of 3'- 0".

CONNECTICUT BRIDGE DESIGN MANUAL	DESIGN INFORMATION FOR PARAPETS	Issue Date: 10/03 Revision Date: Plate Number: 6.2.4

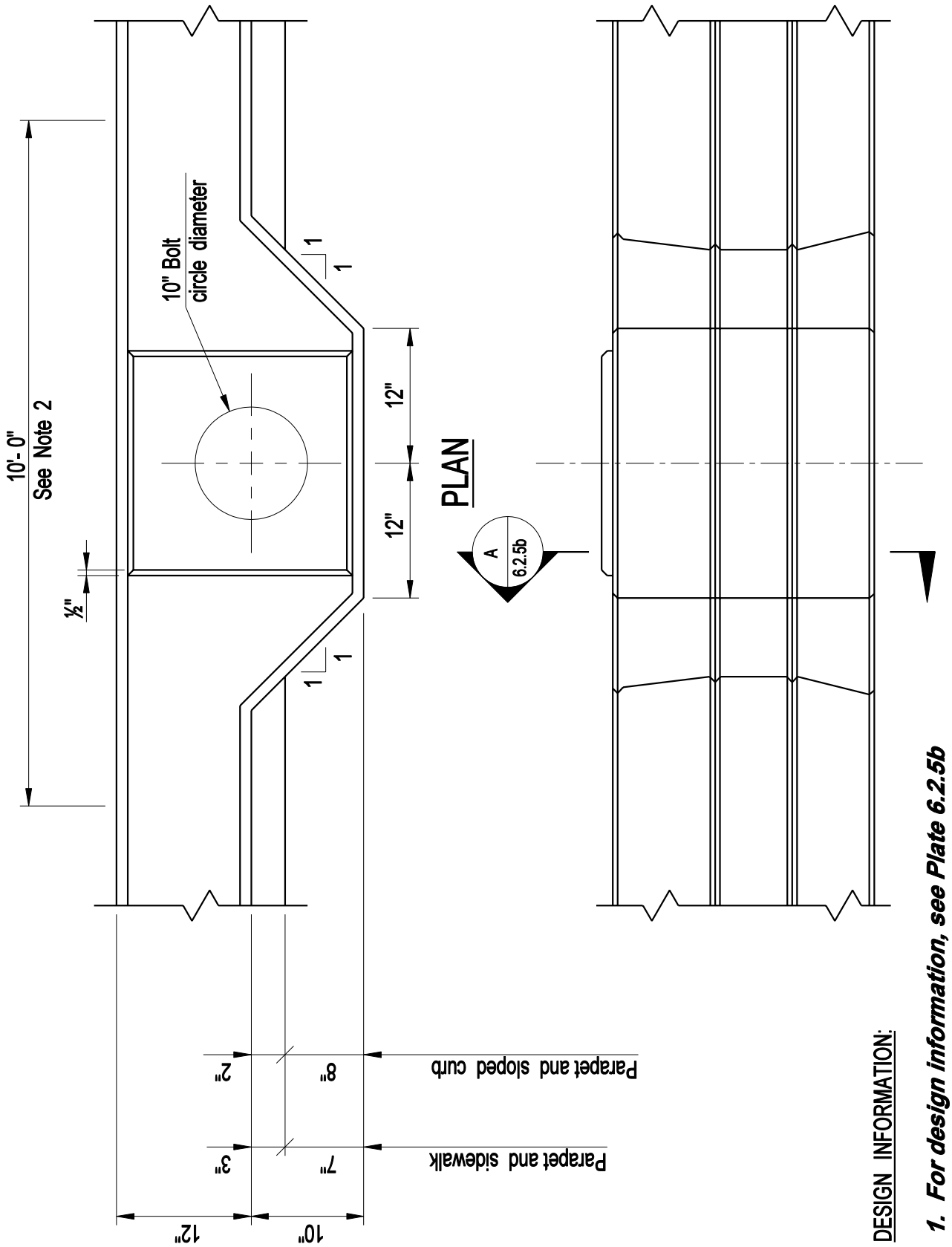

DESIGN INFORMATION:

1. *For design information, see Plate 6.2.5b*
2. *For parapet reinforcement within these limits, see Plate 6.2.7c*

CONNECTICUT BRIDGE DESIGN MANUAL	ANCHORAGE FOR REGULATORY, WARNING AND GUIDE SIGNS	Issue Date: 10/03 Revision Date: Plate Number: 6.2.5a

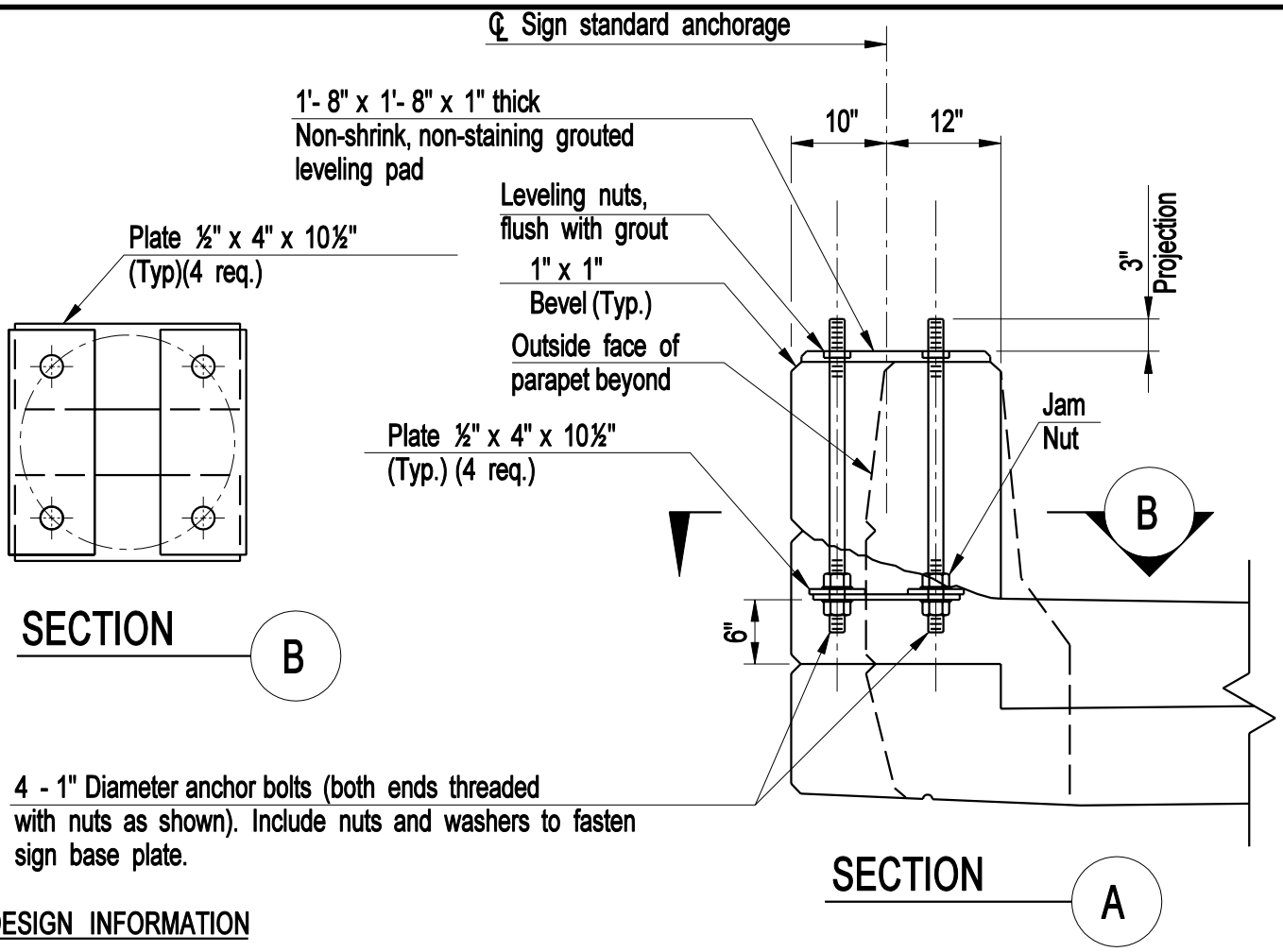

DESIGN INFORMATION

1. ***Structural design for slab and details required, including reinforcement, shall be determined by the designer.***

2. ***Maximum sign size is 4'- 0" x 8'- 6" at 8'- 2" above gutter line.***

3. ***Dimensions shown will provide for continuity of "Metal Bridge Rail (Traffic)". These dimensions shall be reviewed for other railings as required to provide for continuity of rail.***

Notes:

4. Anchor bolts and nuts shall be manufactured of steel conforming to the following requirements:
   Square leveling nuts may be low carbon steel.
   Bolts - ASTM A-449
   Hex Nuts - ASTM A-563 Grade DH
   Anchor bolts and nuts shall be galvanized in accordance with ASTM A-153.
   Structural steel plates shall conform to ASTM A-36.

5. Cost of furnishing and installing anchor bolts, nuts and steel plates to be paid for at the contract unit price per pound for "Deformed Steel Bars".

CONNECTICUT BRIDGE DESIGN MANUAL	ANCHORAGE FOR REGULATORY, WARNING AND GUIDE SIGNS	Issue Date: 10/03 Revision Date: Plate Number: 6.2.5b

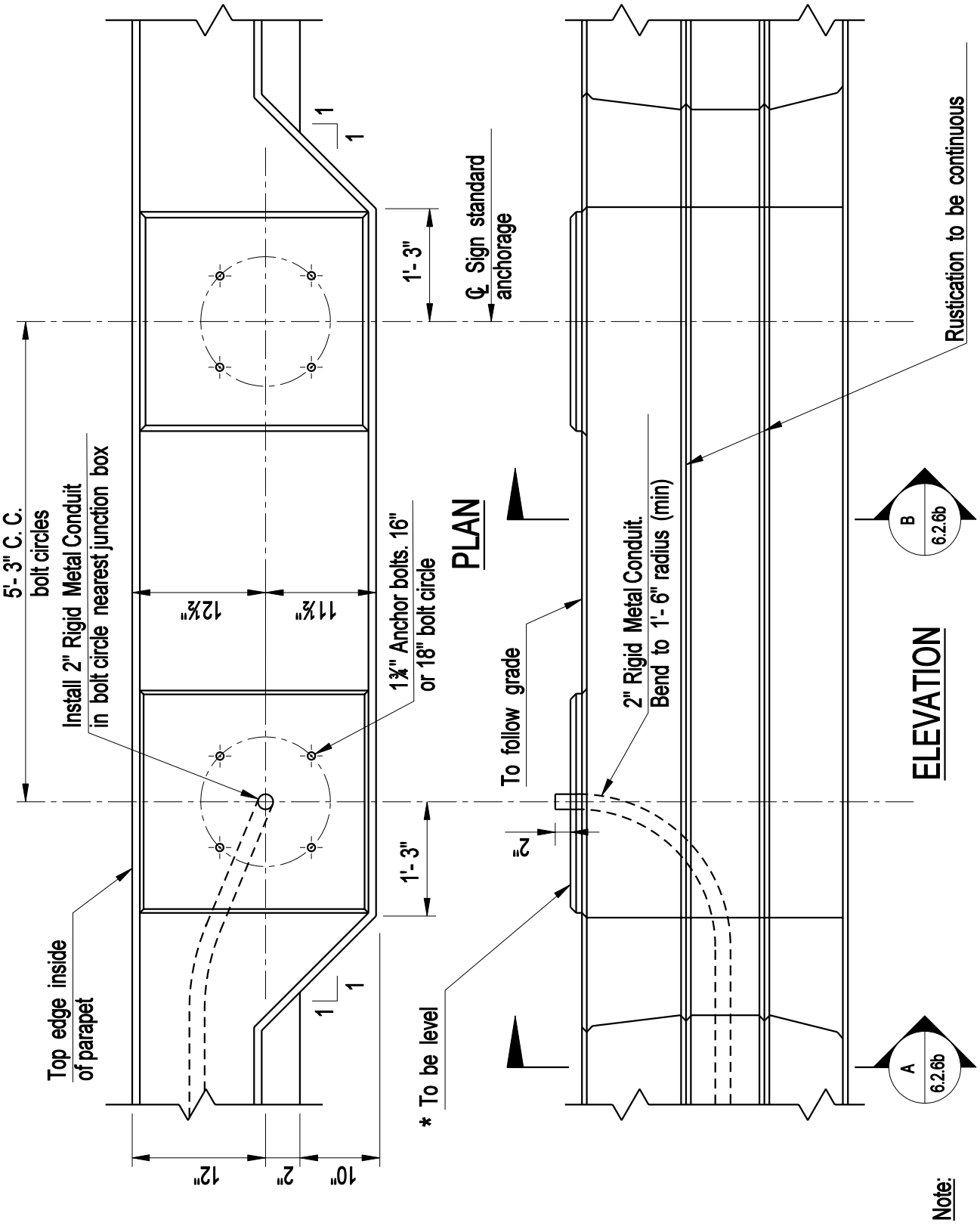

Note:

1. * Both pads to be level and at the same elevation.
2. ***For design information, see Plate 6.2.6b.***

CONNECTICUT BRIDGE DESIGN MANUAL	ANCHORAGE FOR BOX TRUSS SIGN SUPPORT	Issue Date: 10/03
		Revision Date:
		Plate Number: 6.2.6a

ANCHORAGE FOR BOX TRUSS SIGN SUPPORT

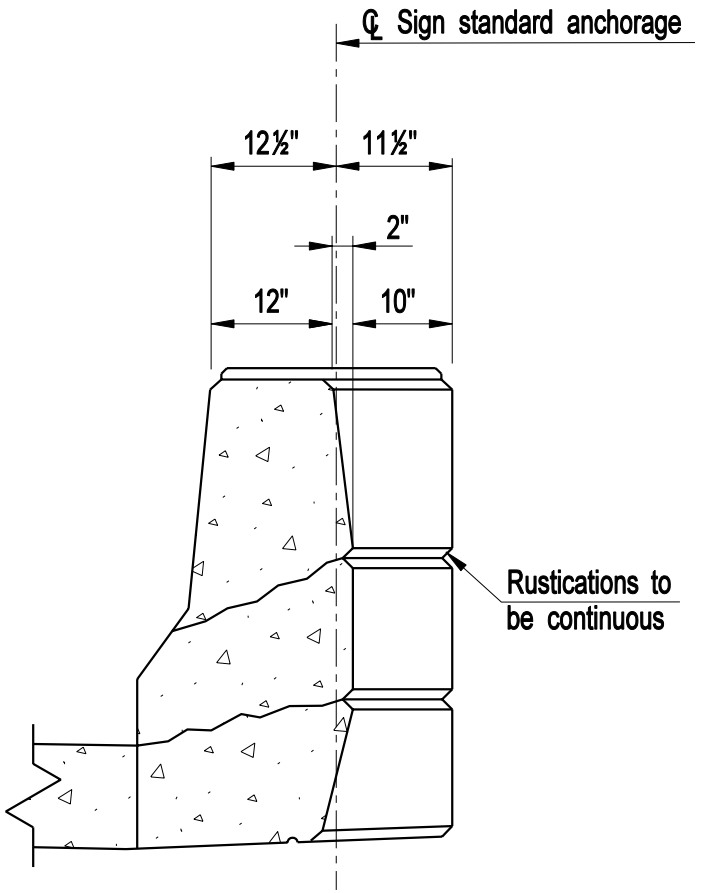

SECTION A

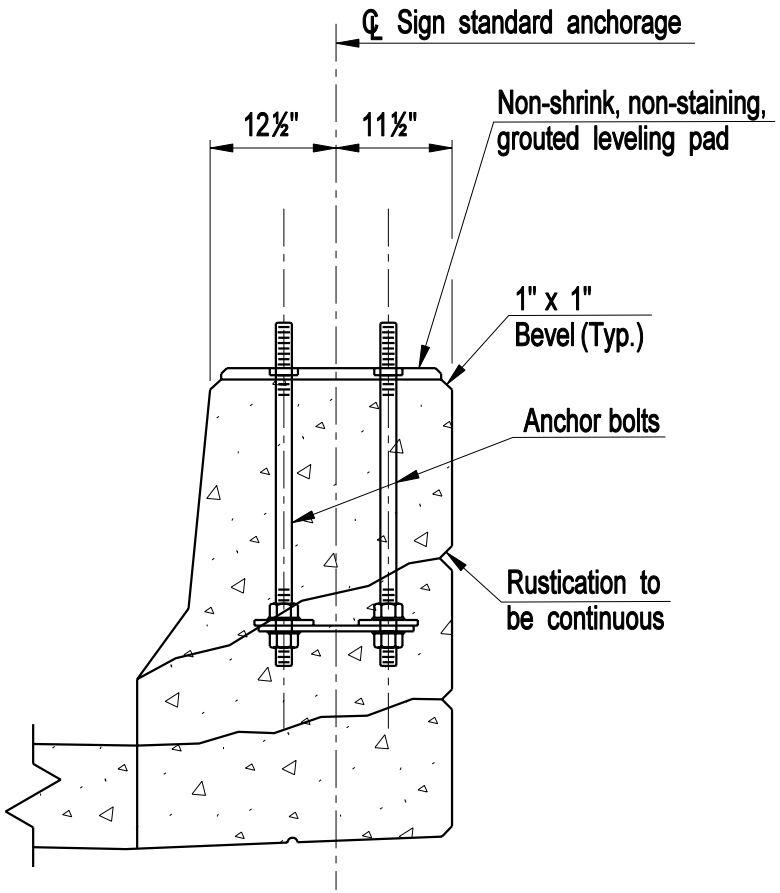

SECTION B

DESIGN INFORMATION

1. ***All structural design and details required, including reinforcement, length of anchor bolts, and supporting steel, when necessary, shall be determined by the Engineer.***
2. ***Bolt circles of each sign support foundation shall be level and at the same elevation. Elevation to be given.***
3. ***When the box truss is on a skew angle with the parapet, this angle shall be shown on the plans.***

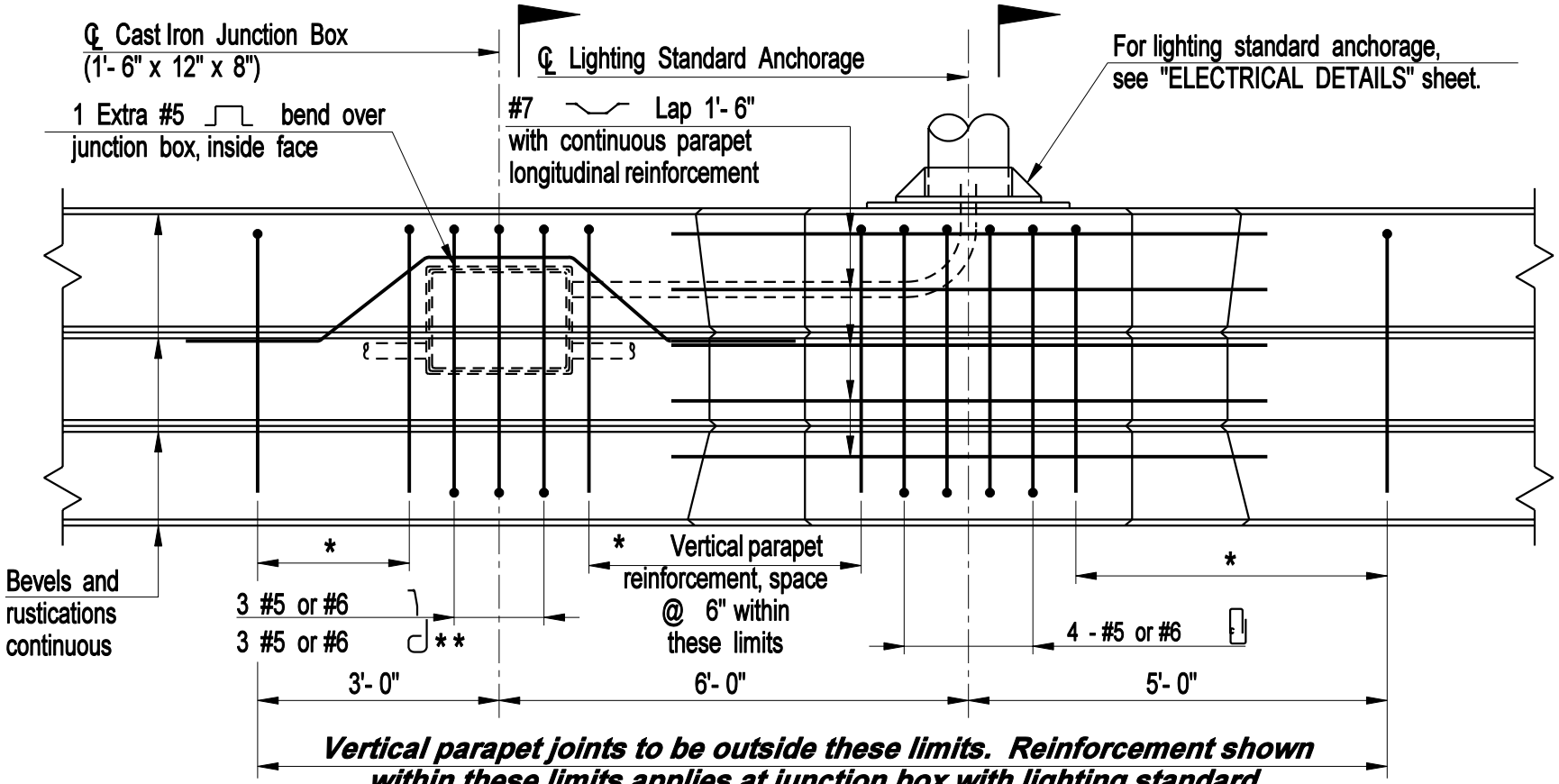

ELEVATION

A 6.2.8

B 6.2.7b

* The vertical parapet reinforcement is to be doubled (#5 @ 6") within these limits.

** At sloped curb only.

DESIGN INFORMATION

1. ***The above reinforcement details must be shown on the pertinent structure plans and not on the "ELECTRICAL DETAILS" sheet.***

2. ***Bridge rail posts shall not be located within 1'- 6" of the centerline of the junction box or lighting standard anchorage.***

3. ***3'- 6" sloped curb parapet shown, 2'- 8" sloped curb parapet and sidewalk parapet similar.***

CONNECTICUT BRIDGE DESIGN MANUAL

PARAPET REINFORCEMENT AT LIGHTING STANDARD AND JUNCTION BOX

Issue Date: 10/03

Revision Date:

Plate Number: 6.2.7a

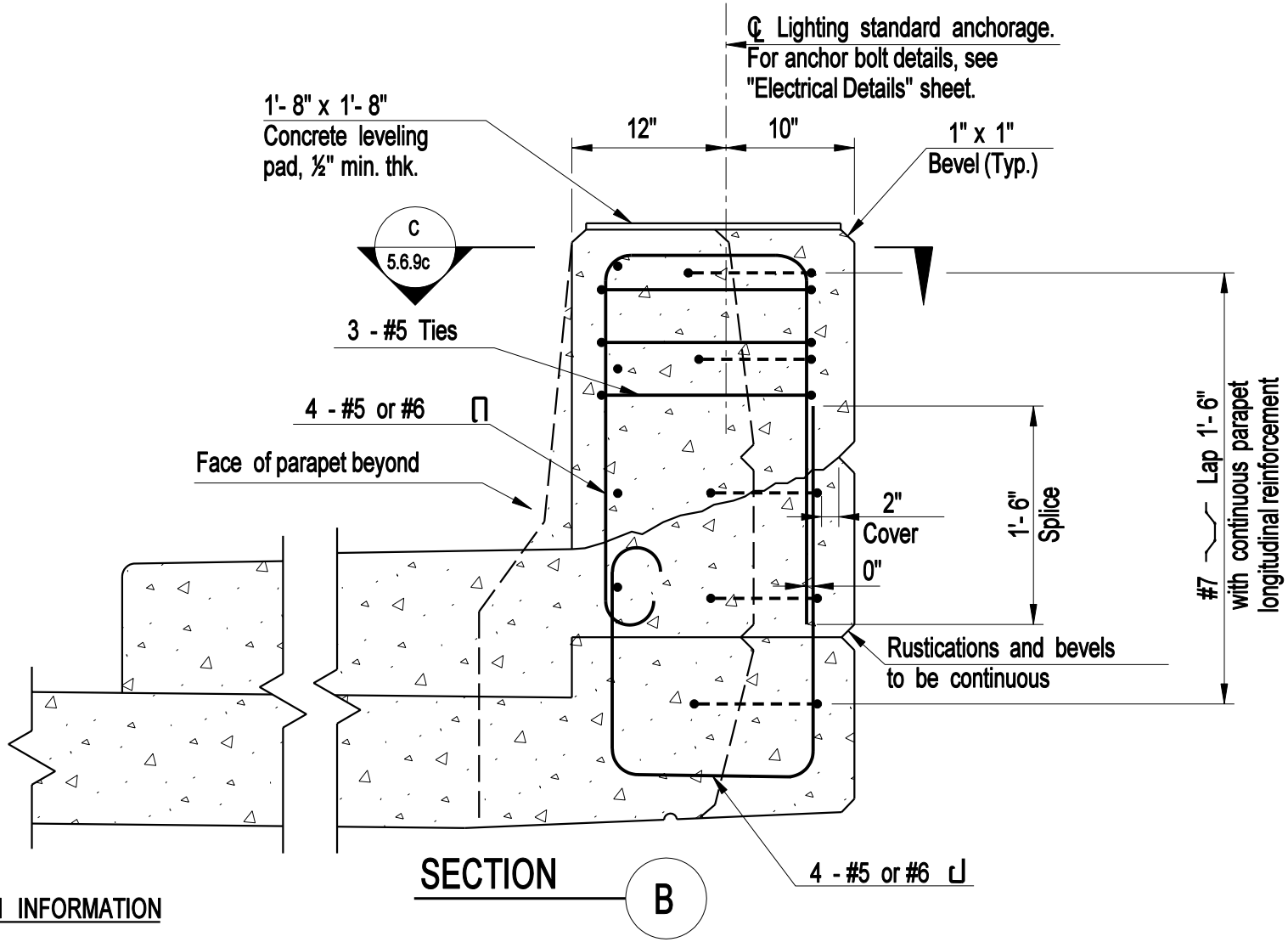

DESIGN INFORMATION

1. ***This plate to be used in conjunction with Plates 6.2.7a and 6.2.7c.***

2. ***These details are applicable to luminaire mounting heights of 30'- 0" or less (1'- 3" bolt circle diameter) and will provide continuity for "Metal Bridge Rail (Traffic)". These details shall be reviewed for mounting heights greater than 30'- 0" (bolt circle diameter greater than 1'- 3") and to provide continuity for other rails as required.***

3. ***When the lighting standard is located on the parapet of U-Wings, this detail shall be modified accordingly.***

CONNECTICUT BRIDGE DESIGN MANUAL

PARAPET REINFORCEMENT AT LIGHTING STANDARD

Issue Date: 10/03

Revision Date:

Plate Number: 6.2.7b

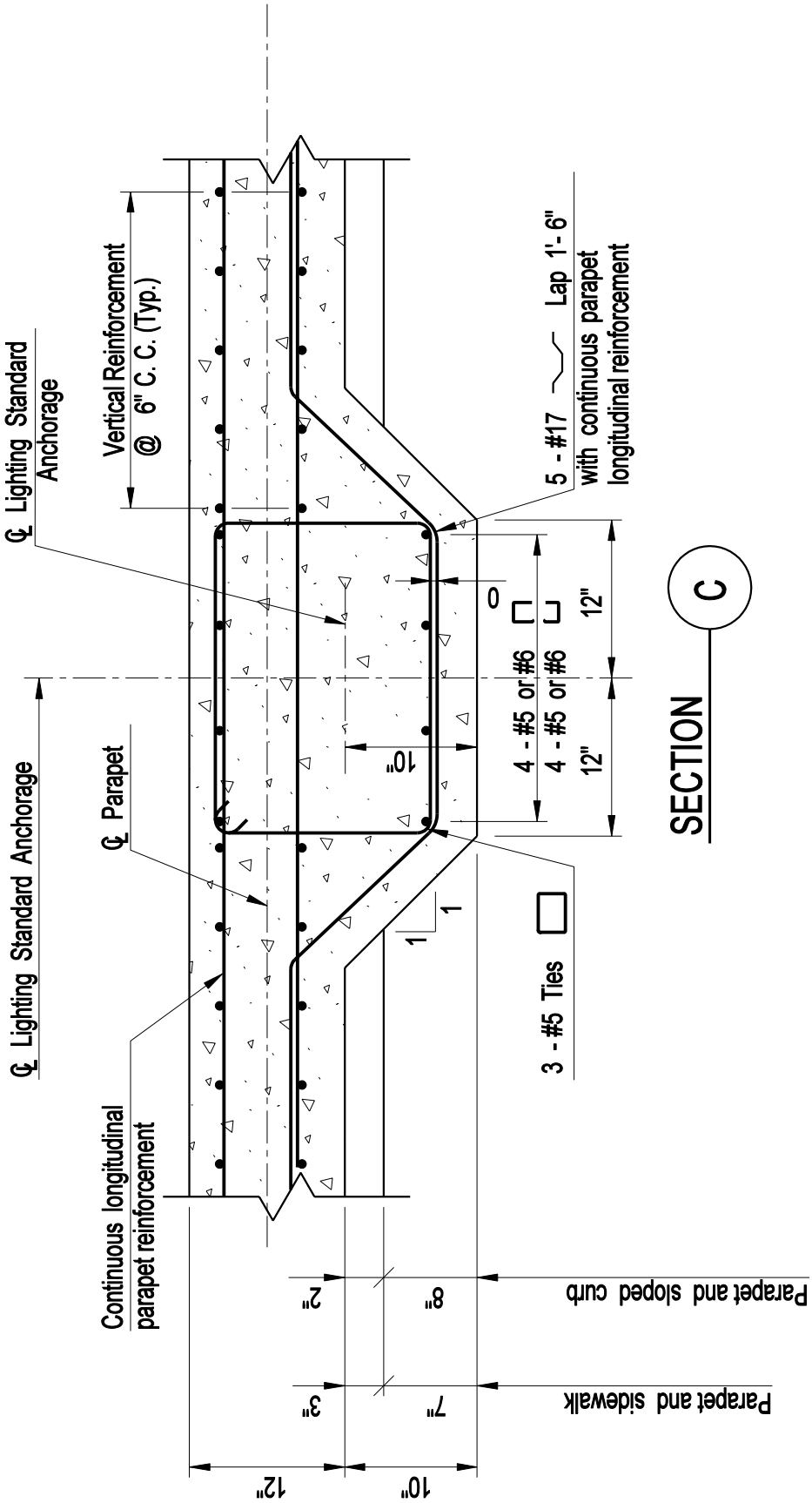

SECTION C

Note:

For design information, see Plate 6.2.7a

CONNECTICUT BRIDGE DESIGN MANUAL	PARAPET REINFORCEMENT AT LIGHTING STANDARD	Issue Date: 10/03 Revision Date: Plate Number: 6.2.7c

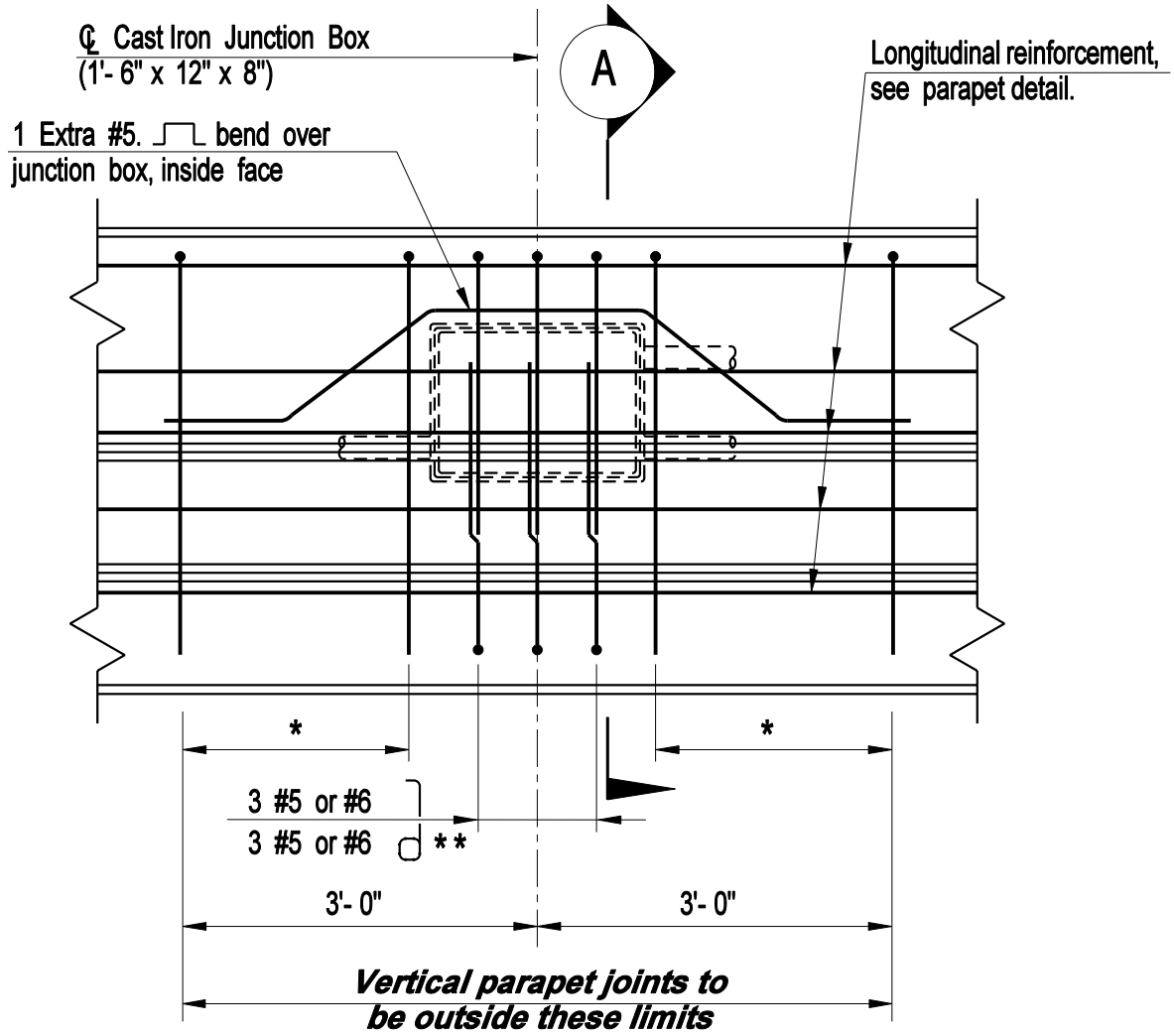

* The vertical parapet reinforcement is to be doubled (@ 6") within these limits.

** At sloped curb only.

DESIGN INFORMATION

ELEVATION

1. ***The above reinforcement details must be shown on the pertinent structure plans and not on the "ELECTRICAL DETAILS" sheet.***
2. ***Bridge rail posts shall not be located within 1'- 6" of the centerline of the junction box.***
3. ***When the junction box is located in the parapet of U-Wings, this detail shall be modified accordingly.***
4. ***For Section A, see Plates 6.2.8b and 6.2.8c***

CONNECTICUT BRIDGE DESIGN MANUAL	PARAPET REINFORCEMENT AT JUNCTION BOX	Issue Date: 10/03 Revision Date: Plate Number: 6.2.8a

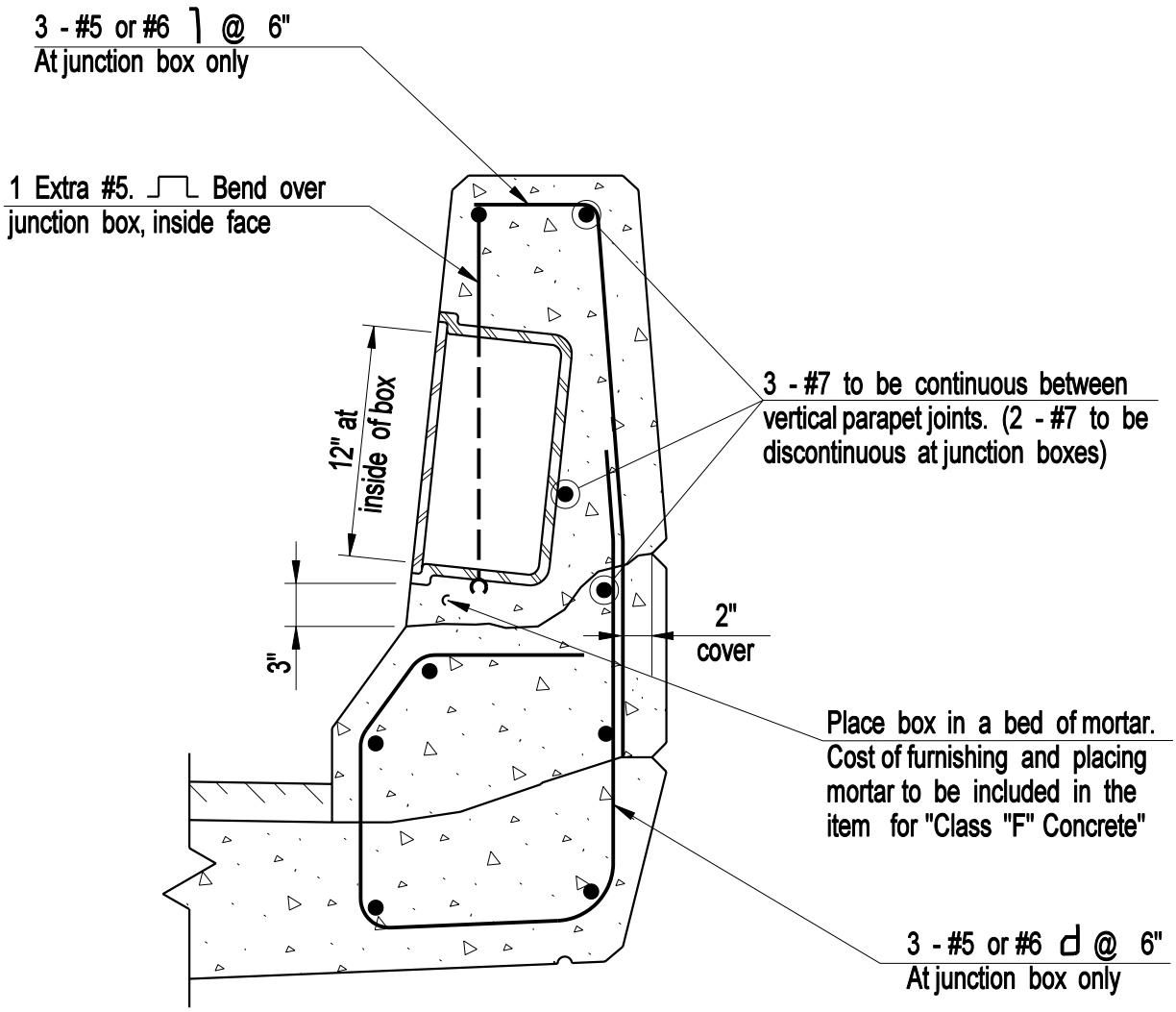

SECTION A

Note.

1. For design information, see Plate 6.2.8a.

2. 3'- 6' high parapet shown. 2'- 8" high parapet similar.

CONNECTICUT BRIDGE DESIGN MANUAL	PARAPET REINFORCEMENT AT JUNCTION BOX	Issue Date: 10/03 Revision Date: Plate Number: 6.2.8b

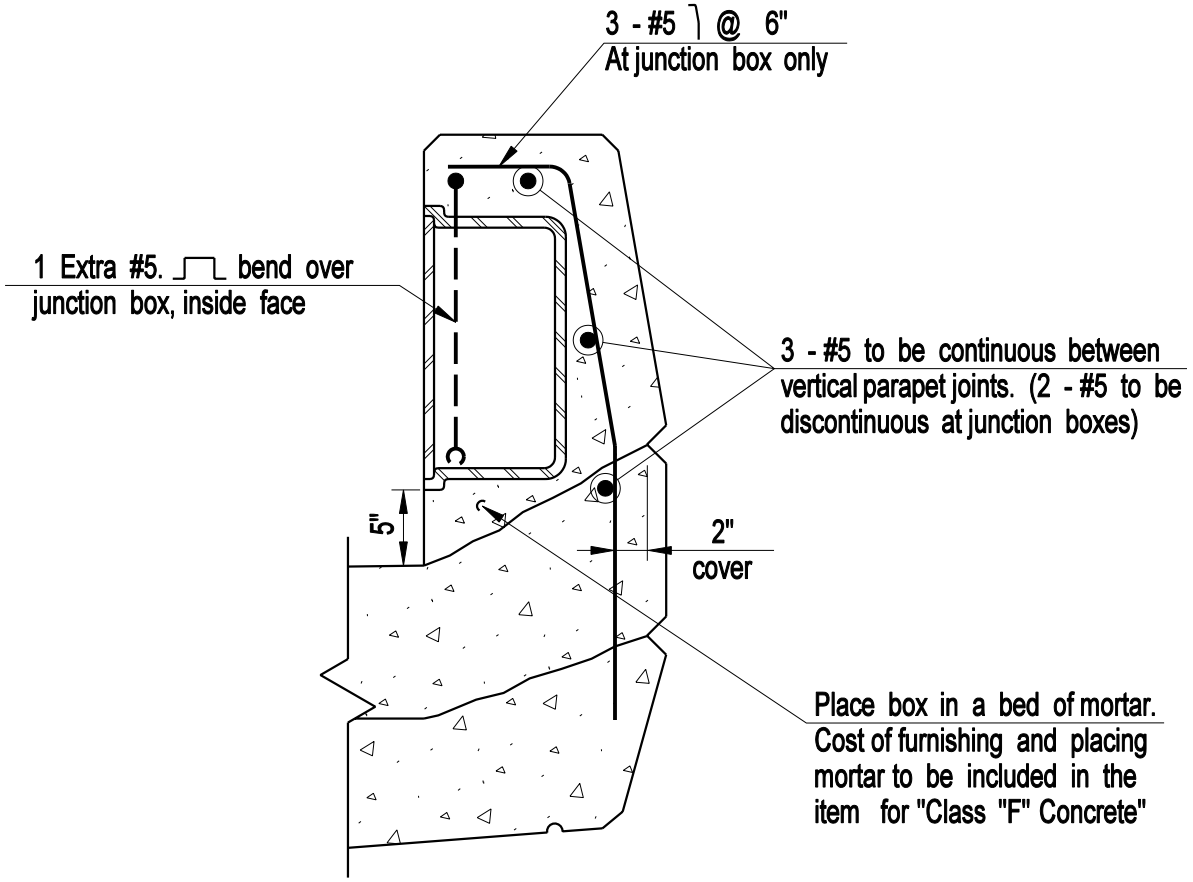

SECTION A

Note:

For design information, see Plates 6.2.8a and 6.2.8b

CONNECTICUT BRIDGE DESIGN MANUAL	PARAPET REINFORCEMENT AT JUNCTION BOX (PARAPET AND SIDEWALK)	Issue Date: 10/03 Revision Date: Plate Number: 6.2.8c

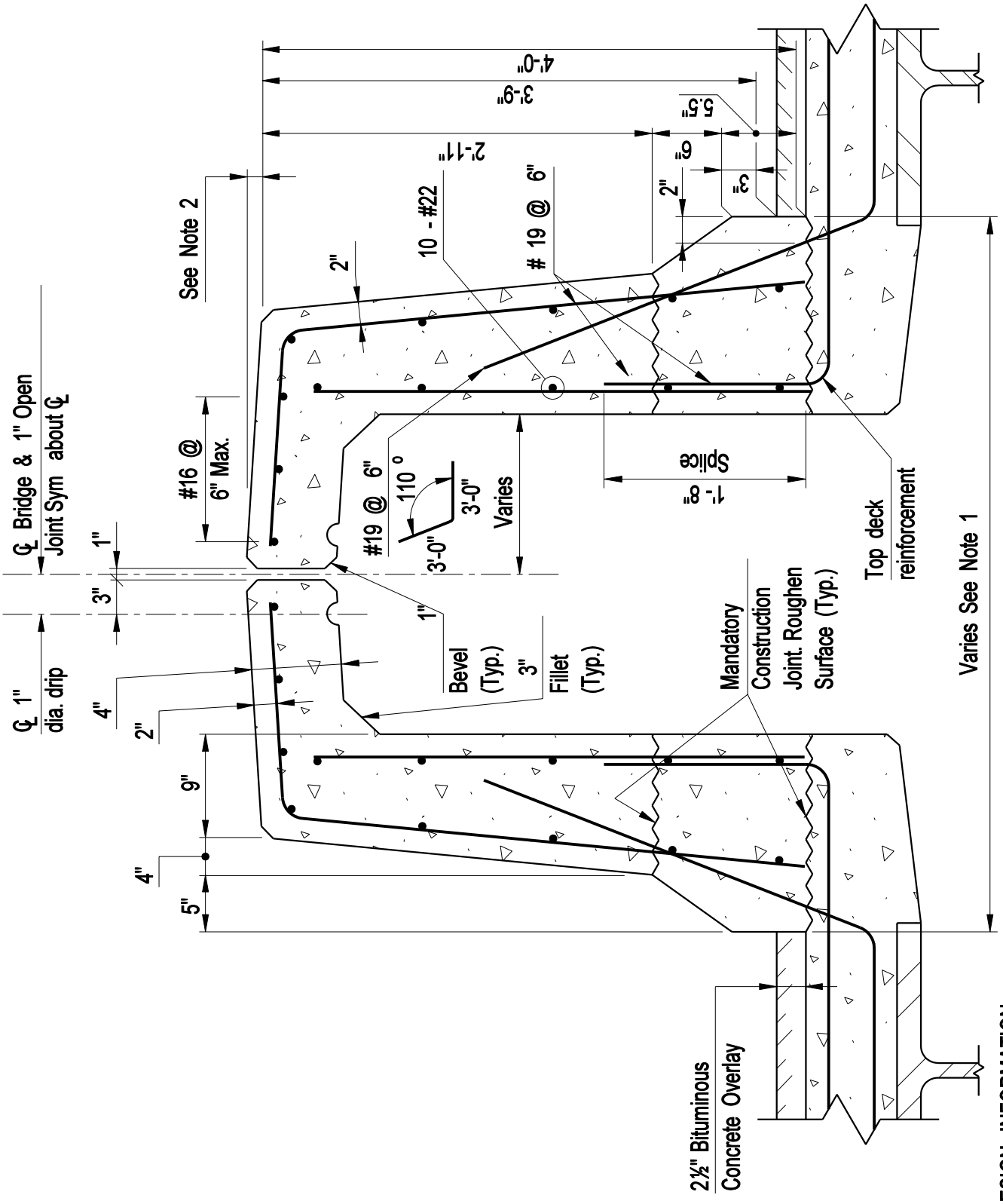

DESIGN INFORMATION

1. ***3'-0" Minimum. If this dimension exceeds 6'-0", cantilevered median cap may be eliminated.***
2. ***Slope of median cap may vary to account for differences in gutter line profiles.***
3. ***Deck reinforcement not shown for clarity.***

CONNECTICUT BRIDGE DESIGN MANUAL	4'- 9" HIGH STANDARD SPLIT MEDIAN BARRIER CURB	Issue Date: 10/03 Revision Date: Plate Number: 6.3.1

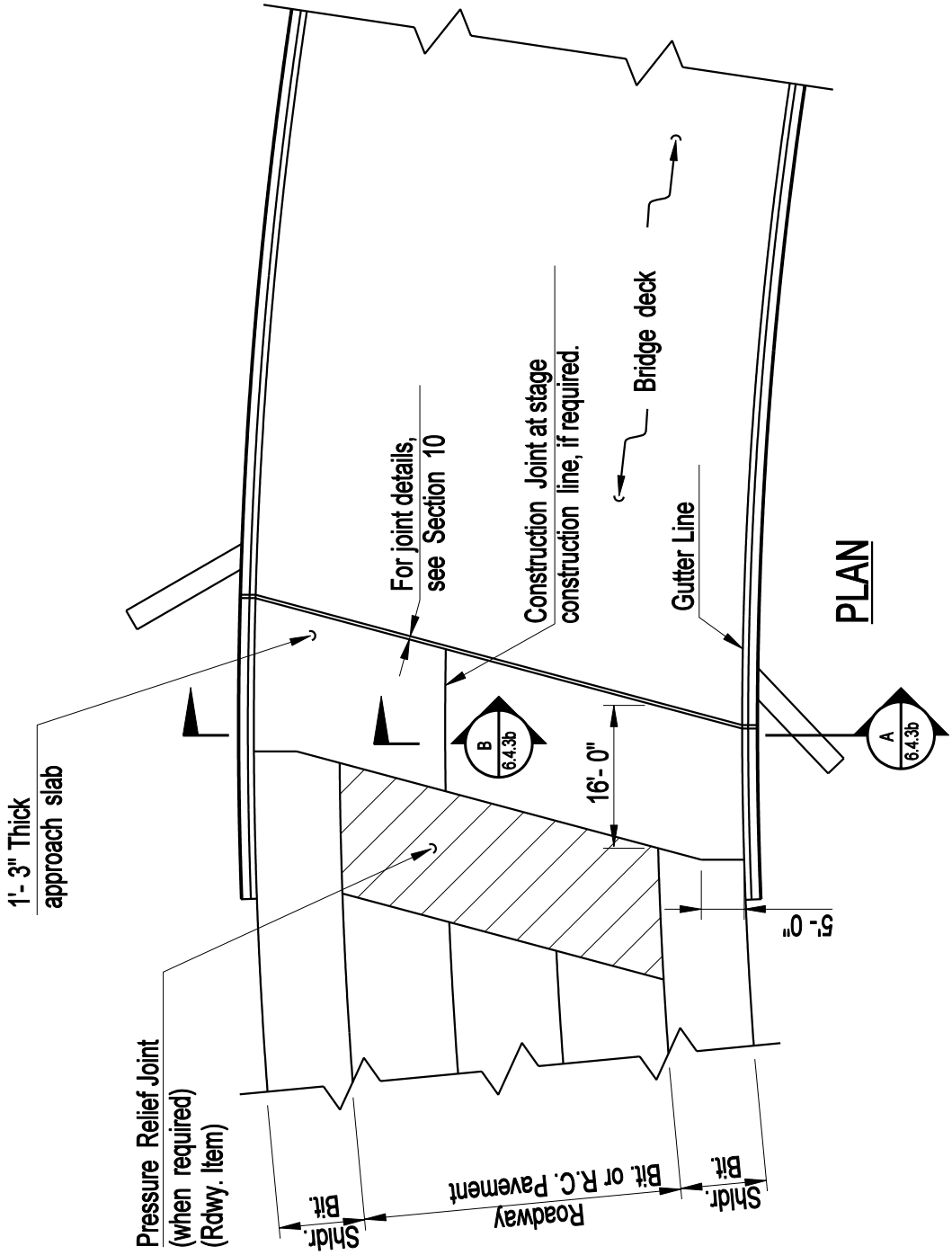

CONNECTICUT BRIDGE DESIGN MANUAL	BRIDGE APPROACH SLABS SKEW ANGLE ≤ 35°	Issue Date: 10/03 Revision Date: Plate Number: 6.4.1

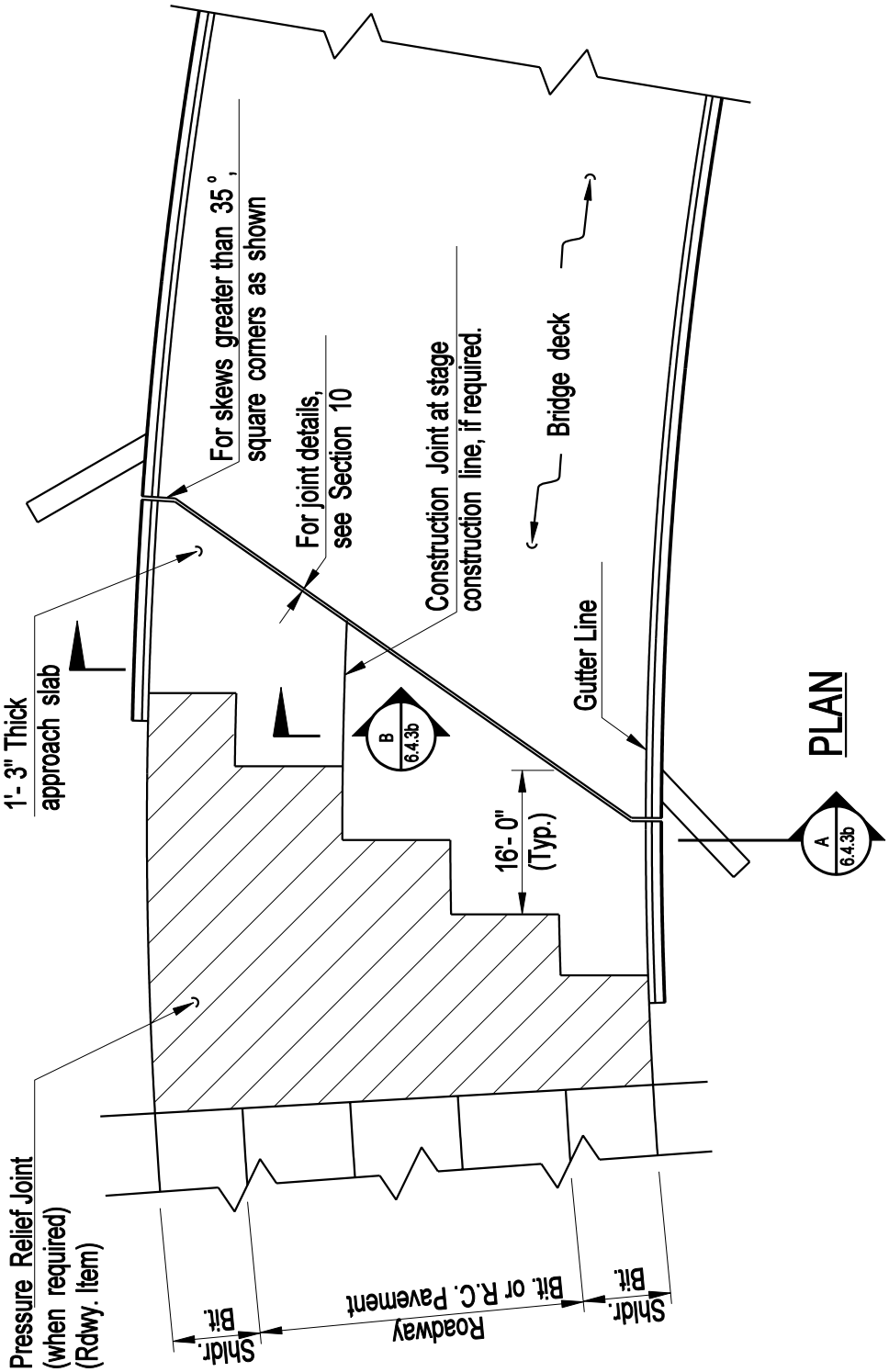

CONNECTICUT BRIDGE DESIGN MANUAL	BRIDGE APPROACH SLABS SKEW ANGLE > 35°	Issue Date: 10/03 Revision Date: Plate Number: 6.4.2

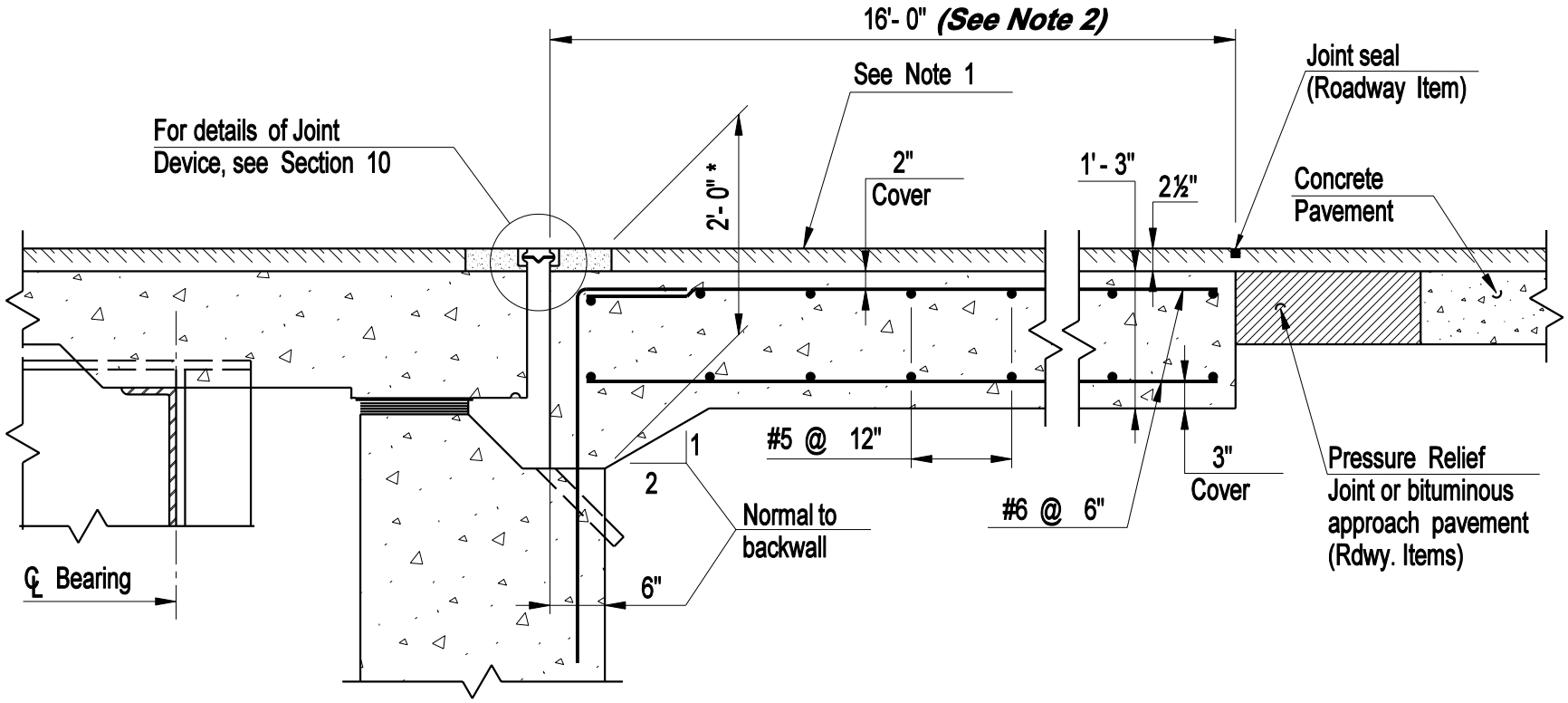

TYPICAL LONGITUDINAL SECTION

Notes:

1. 2½" bituminous concrete overlay on membrane waterproofing

DESIGN INFORMATION

2. On bridges with skew angle greater than 35°, ends of approach slabs are squared off and this dimension is the minimum length at the shortest point.

CONNECTICUT BRIDGE DESIGN MANUAL

BRIDGE APPROACH SLAB DETAILS

Issue Date: 10/03

Revision Date:

Plate Number: 6.4.3a

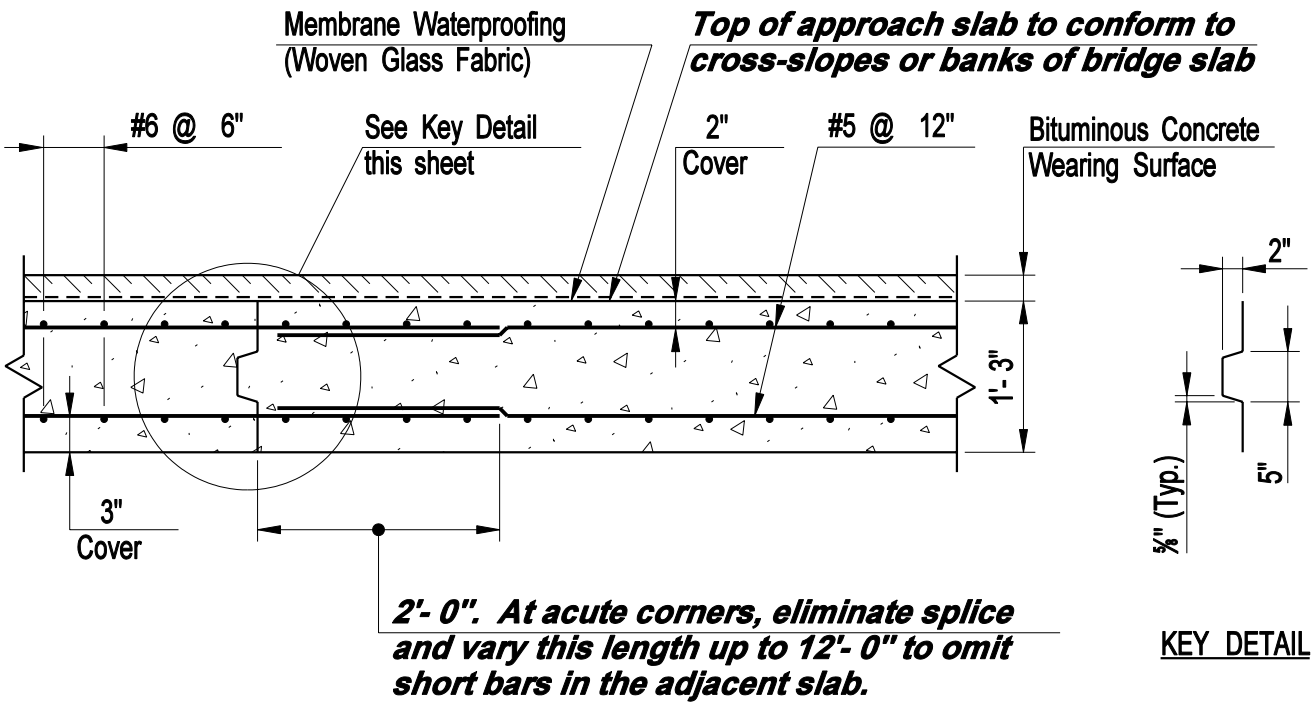

SECTION B

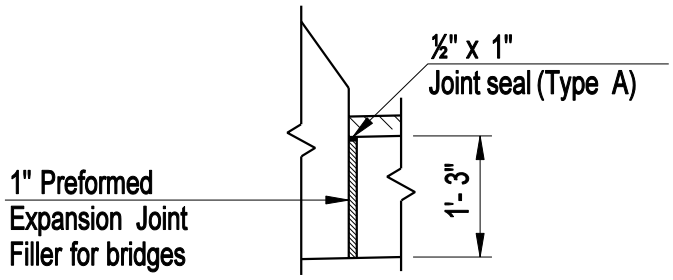

DETAIL A

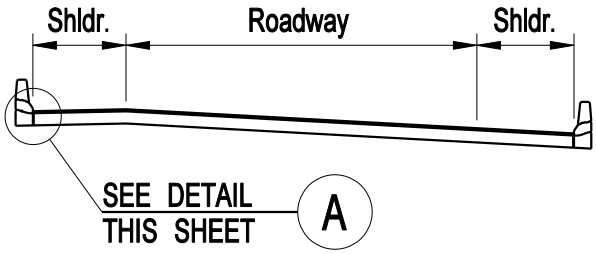

SECTION A

DESIGN INFORMATION

1. *Reinforcing steel to be included in the item "Deformed Steel Bars (Epoxy Coated)."*
2. *Concrete to be included in the item "Class "F" Concrete."*
3. *This plate shall be used in conjunction with Plates 6.4.1 and 6.4.2.*

CONNECTICUT BRIDGE DESIGN MANUAL	BRIDGE APPROACH SLAB DETAILS	Issue Date: 10/03 Revision Date: Plate Number: 6.4.3b