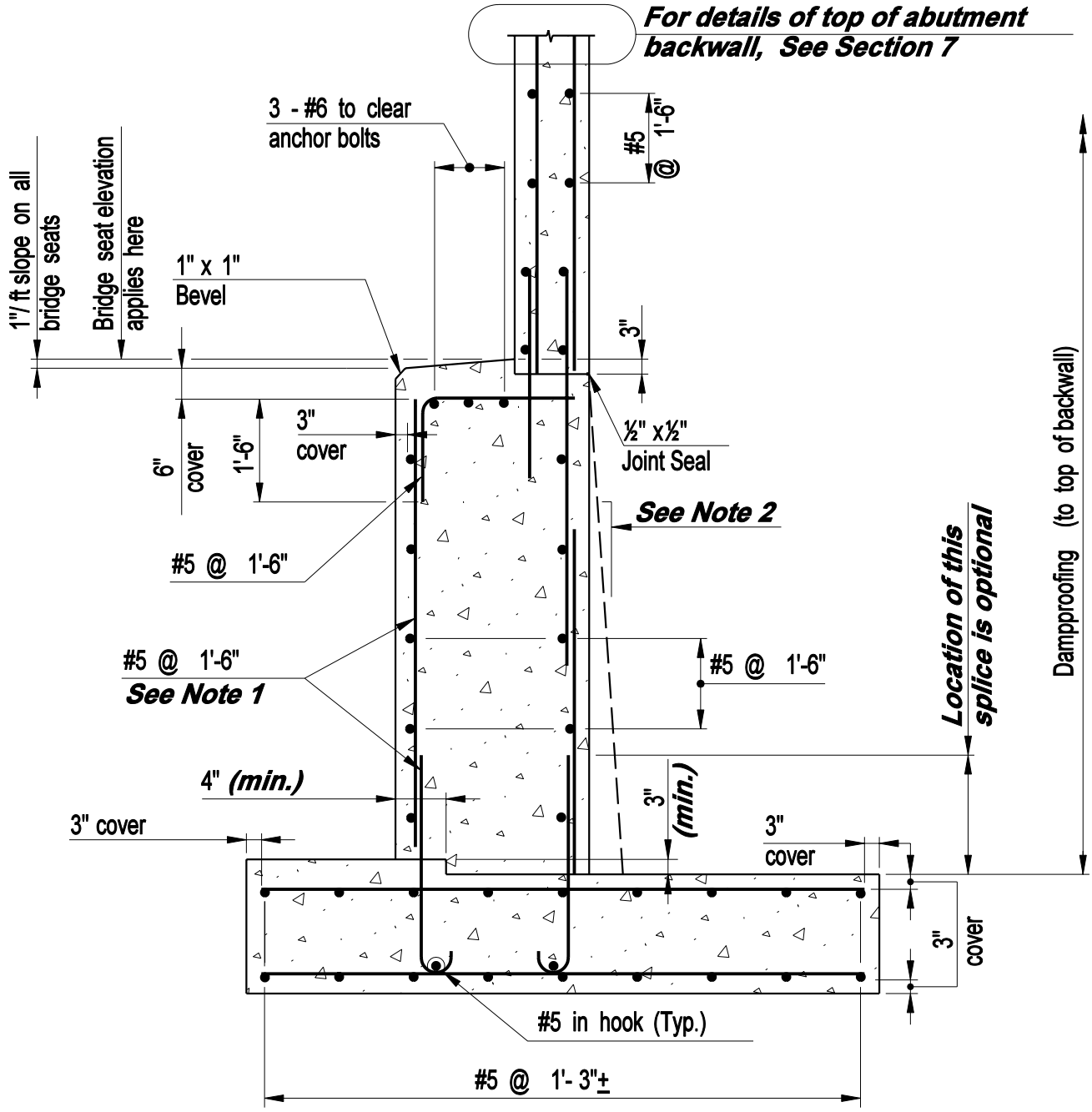

Notes

1. ***This reinforcement shall be designed for seismic forces.***

2. ***The rear face of the stem shall be battered if additional width at the base of the stem is required. The minimum batter shall be 1H:12V. Maintain a uniform top of batter elevation.***

CONNECTICUT BRIDGE DESIGN MANUAL	SEAT TYPE ABUTMENT	Issue Date: 10/03 Revision Date: Plate Number: 3.1.1

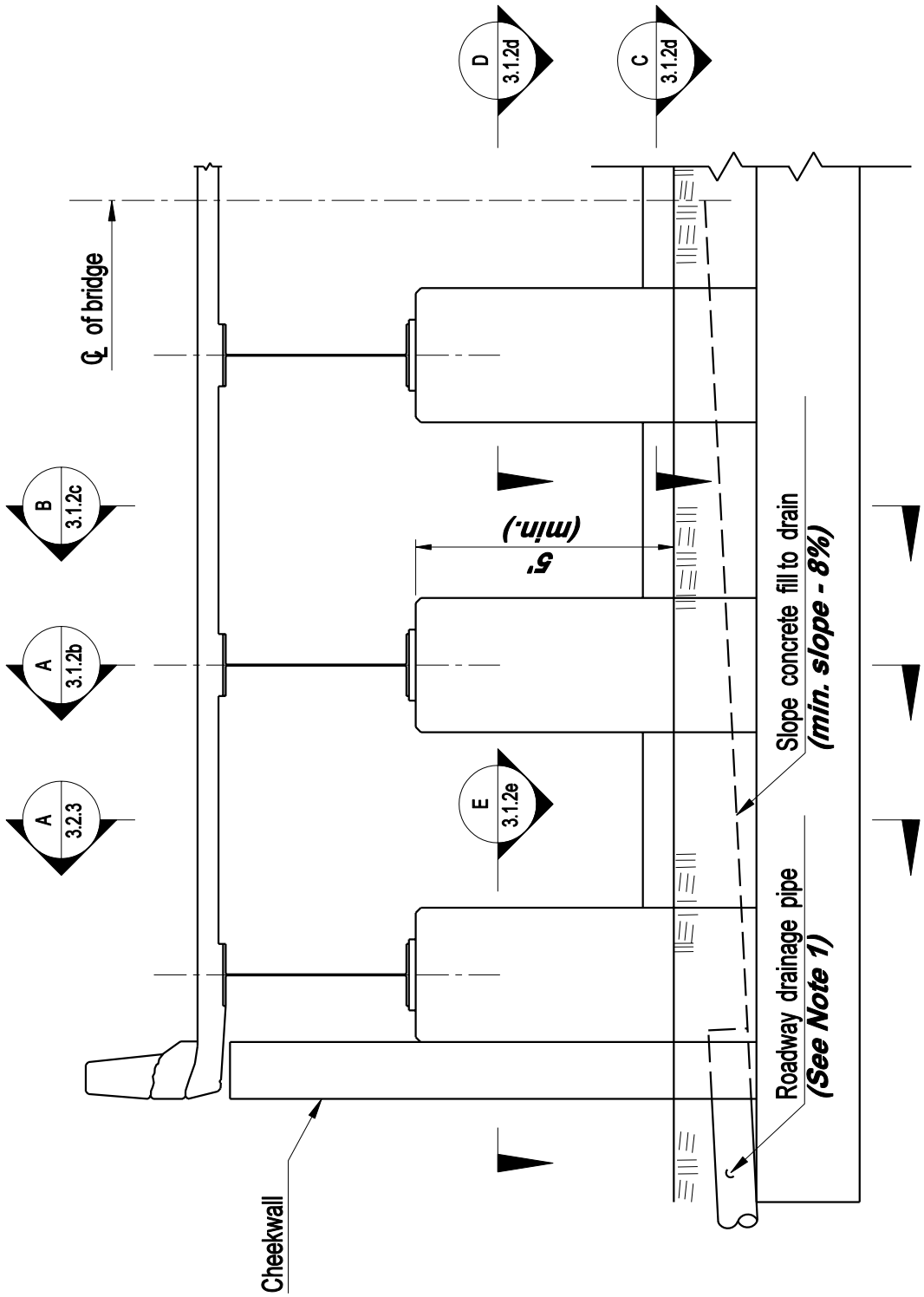

DESIGN INFORMATION

1. ***Designer shall determine the size of the outlet pipe and shall connect it to the roadway drainage system. Minimum size shall be 12".***

CONNECTICUT BRIDGE DESIGN MANUAL	PEDESTAL TYPE ABUTMENT TYPICAL ELEVATION VIEW	Issue Date: 10/03 Revision Date: Plate Number: 3.1.2a

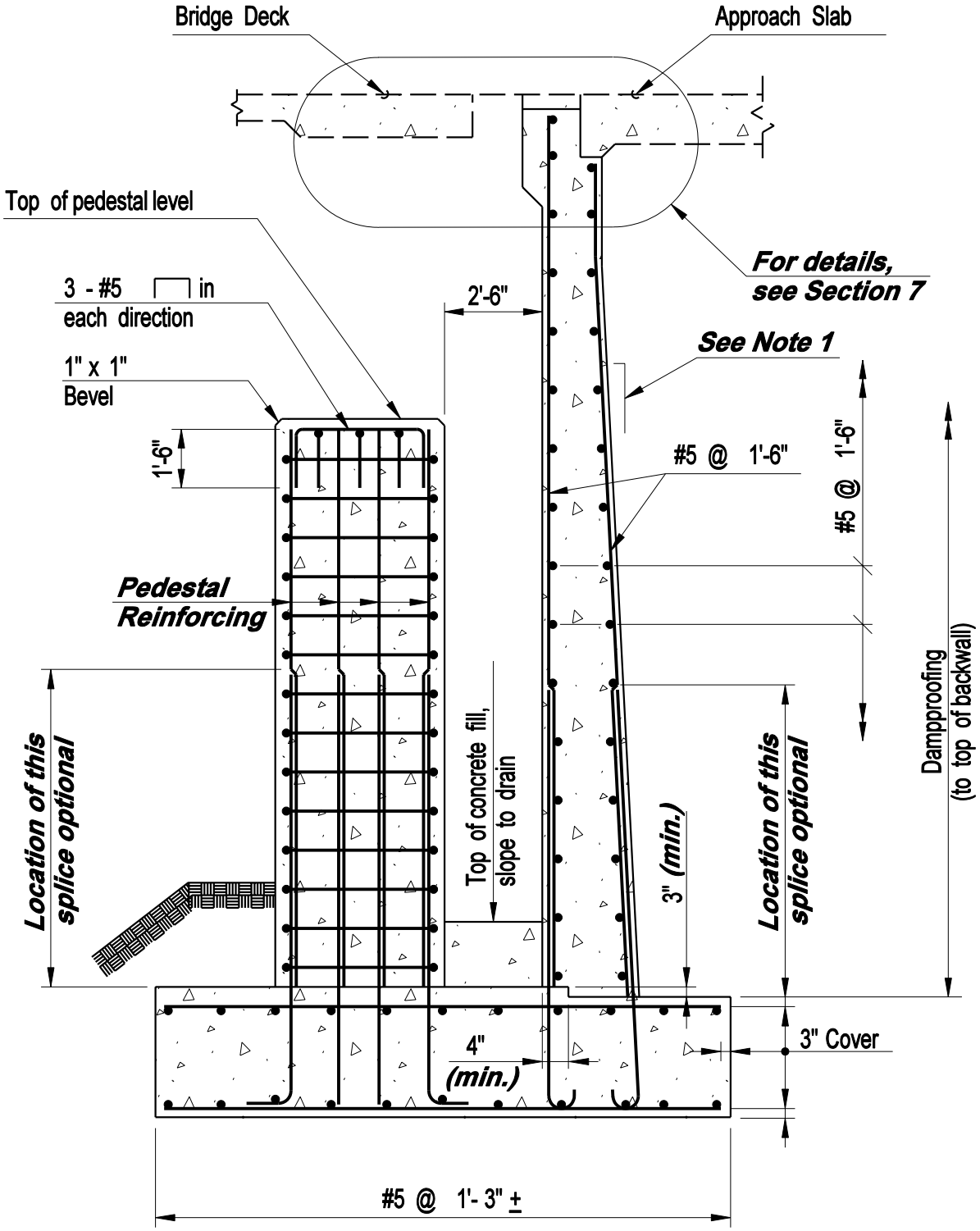

SECTION A / 3.1.2a

DESIGN INFORMATION

1. *The rear face of the stem shall be battered if additional width at the base of the stem is required. The minimum batter shall be 1H:12V. Maintain a uniform top of batter elevation.*

CONNECTICUT BRIDGE DESIGN MANUAL	PEDESTAL TYPE ABUTMENT SECTION A	Issue Date: 10/03 Revision Date: Plate Number: 3.1.2b

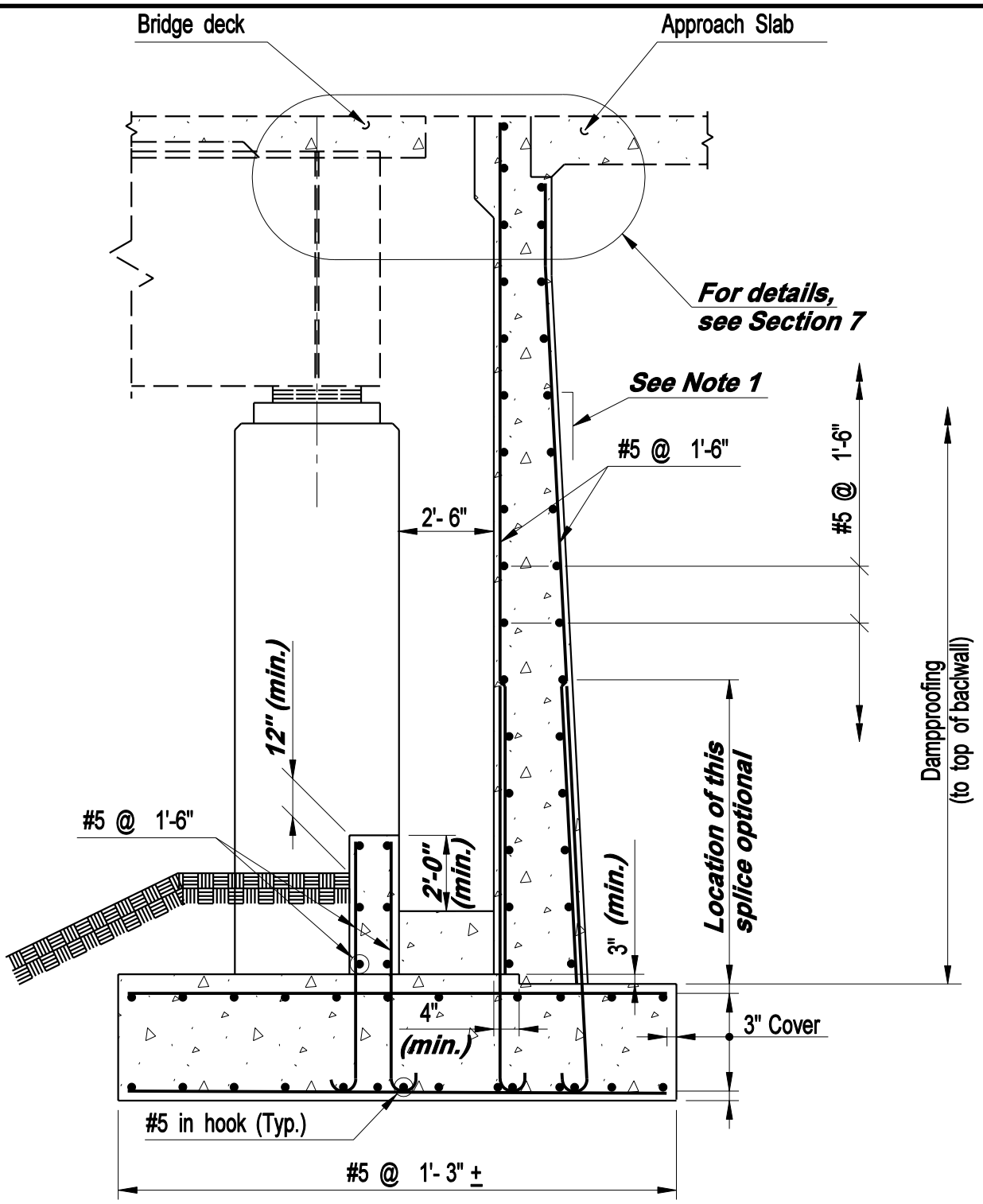

SECTION B / 3.1.2a

DESIGN INFORMATION

1. *The rear face of the stem shall be battered if additional width at the base of the stem is required. The minimum batter shall be 1H:12V. Maintain a uniform top of batter elevation.*

CONNECTICUT BRIDGE DESIGN MANUAL	PEDESTAL TYPE ABUTMENT SECTION B	Issue Date: 10/03 Revision Date: Plate Number: 3.1.2c

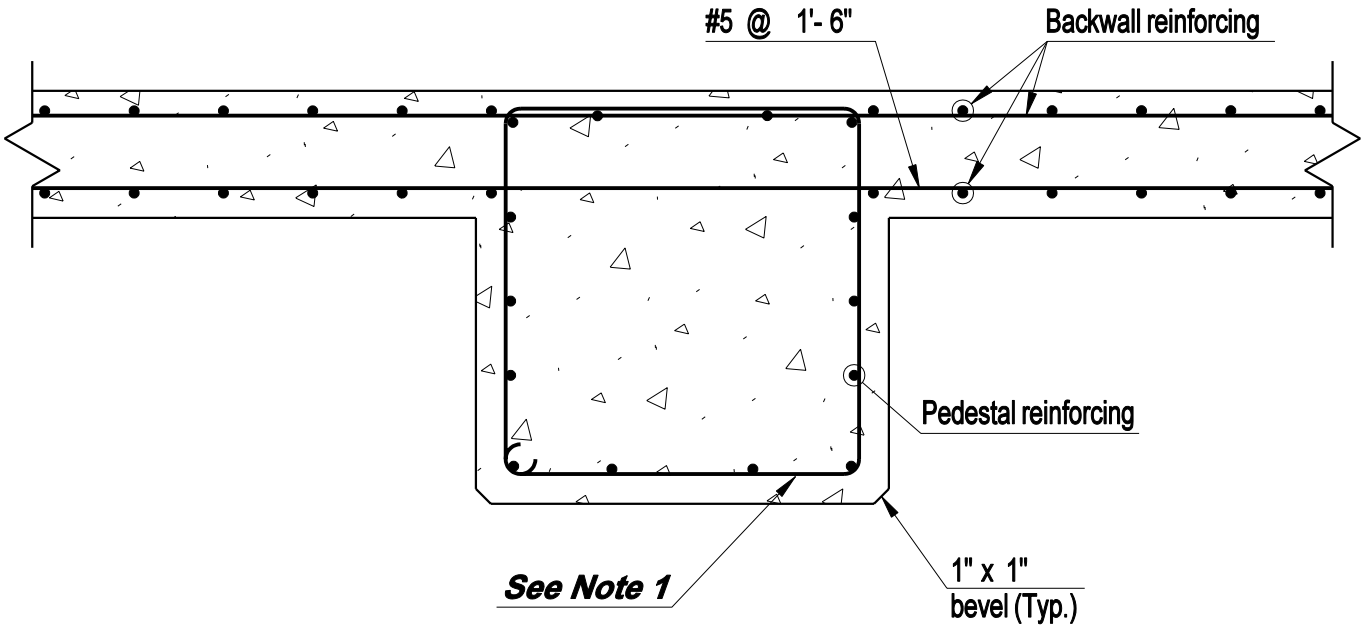

SECTION C 3.1.2a

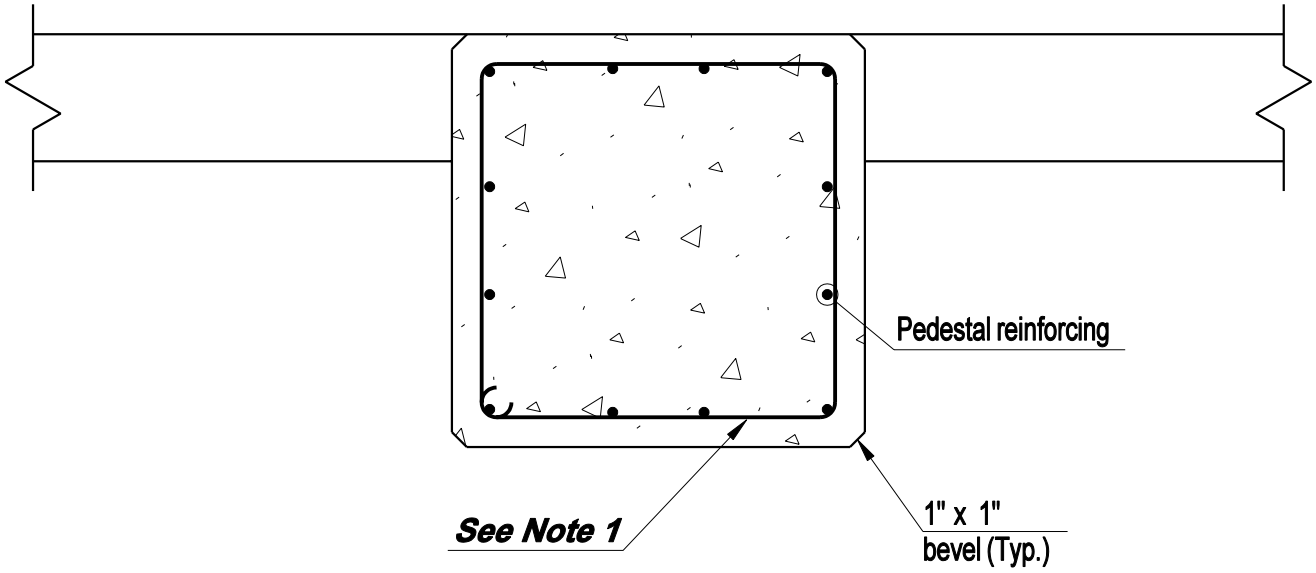

SECTION D 3.1.2a

DESIGN INFORMATION

1. Ties to be designed in accordance with AASHTO requirements.

CONNECTICUT BRIDGE DESIGN MANUAL	PEDESTAL TYPE ABUTMENT PEDESTAL REINFORCEMENT	Issue Date: 10/03 Revision Date: Plate Number: 3.1.2d

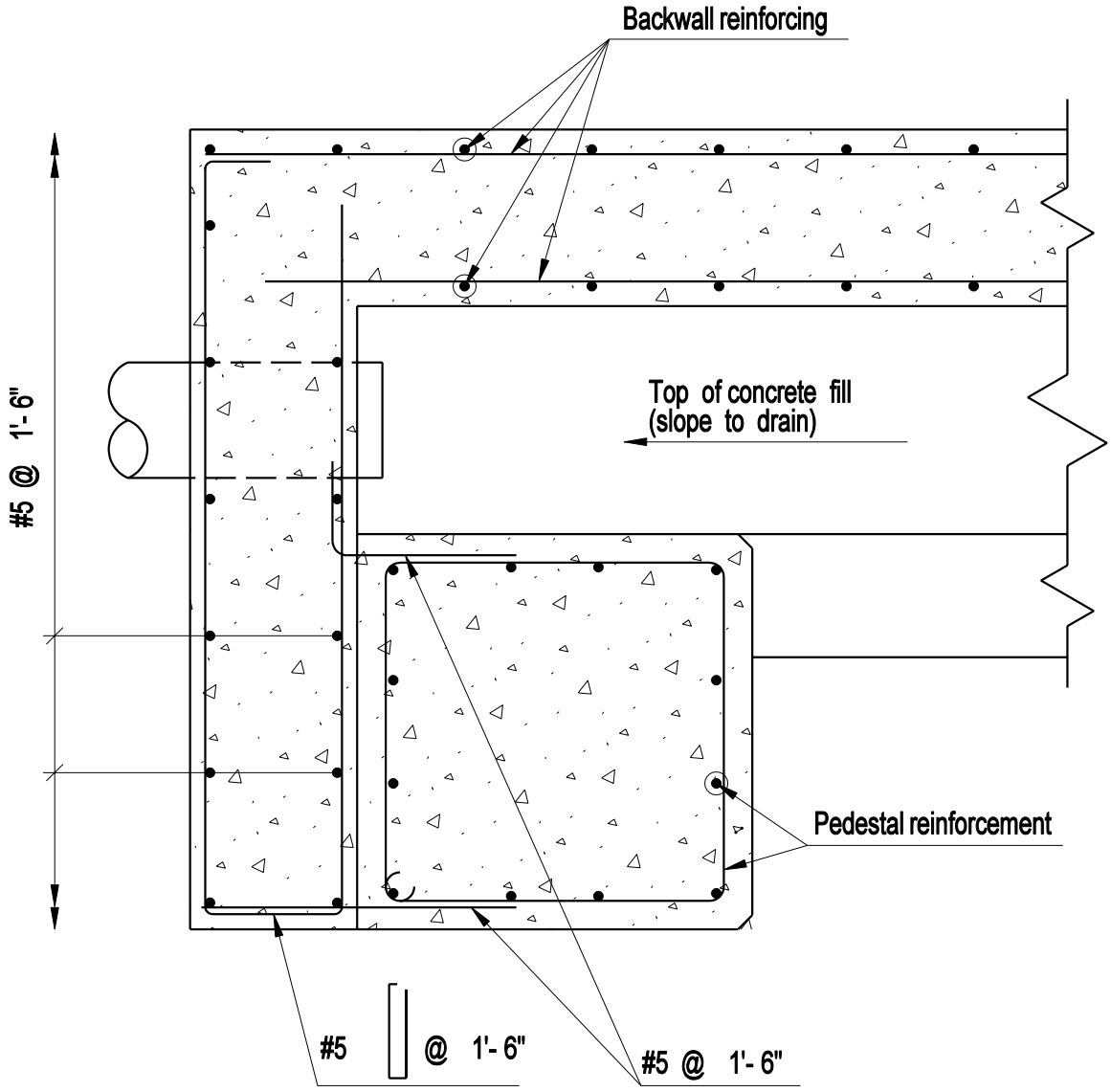

SECTION E / 3.1.2a

CONNECTICUT BRIDGE DESIGN MANUAL	PEDESTAL TYPE ABUTMENT CORNER REINFORCEMENT	Issue Date: 10/03 Revision Date: Plate Number: 3.1.2e

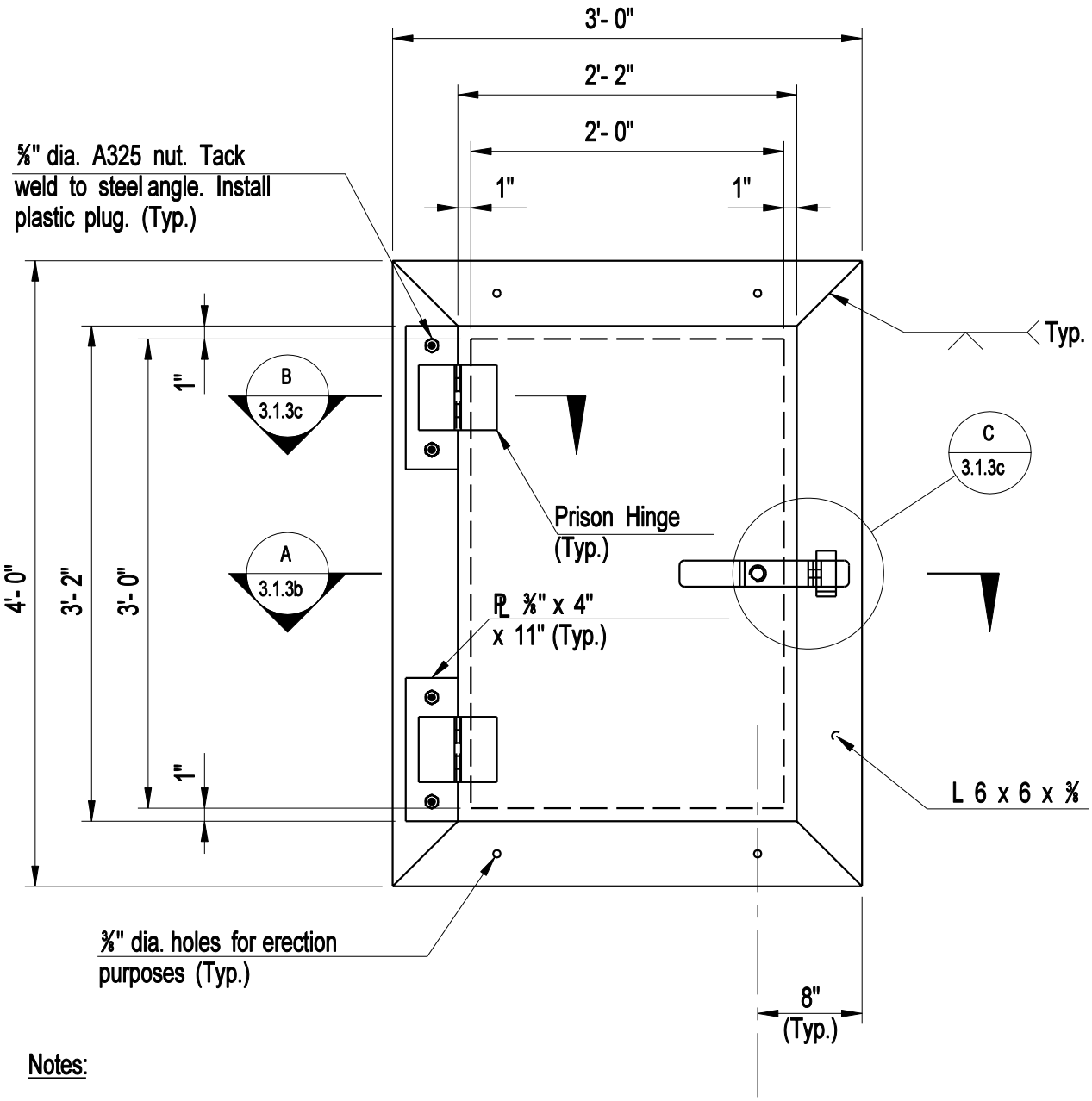

Notes:

1. Material for access door and frame shall conform to the requirements of AASHTO M270 Grade 50.

2. Frame and door assembly shall be galvanized in accordance with ASTM A123 after fabrication.

CONNECTICUT BRIDGE DESIGN MANUAL	PEDESTAL TYPE ABUTMENT ACCESS DETAILS	Issue Date: 10/03 Revision Date: Plate Number: 3.1.3a

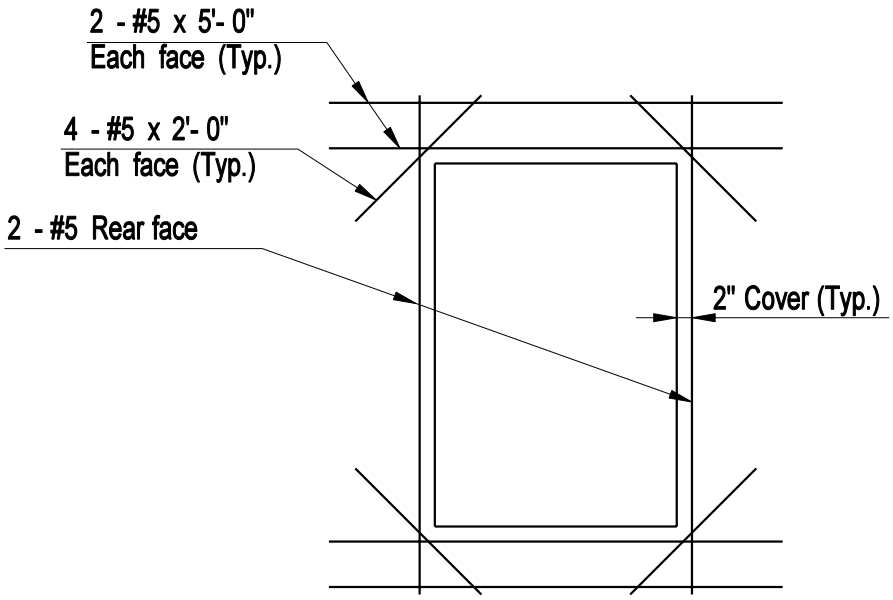

ADDITIONAL REINFORCING AT ACCESS DOOR

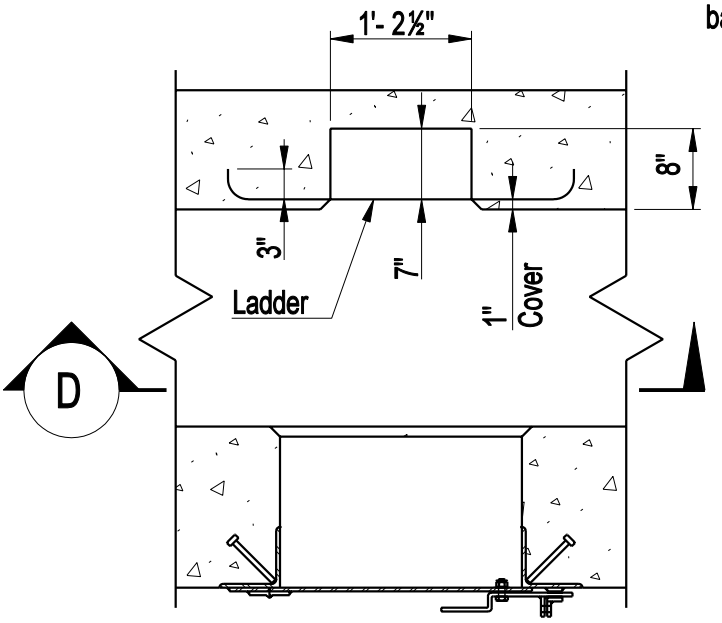

SECTION A / 3.1.3a

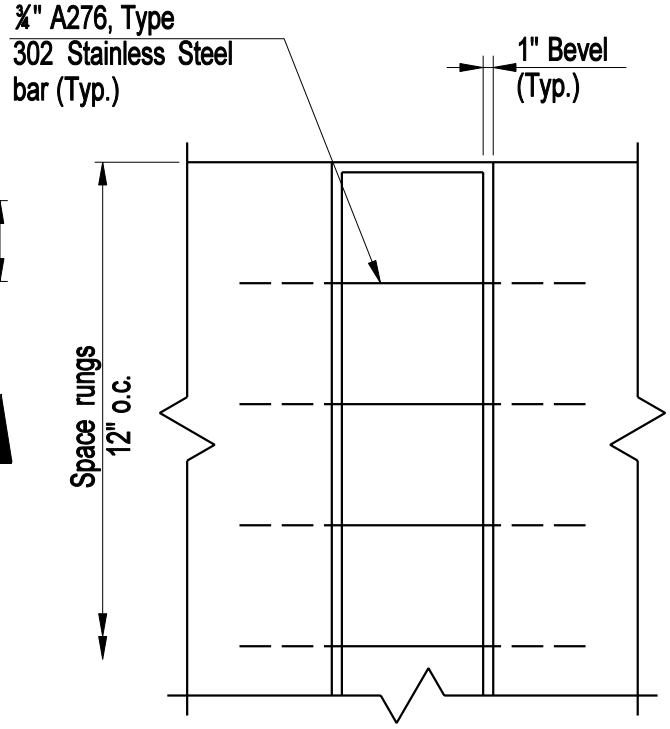

VIEW D

CONNECTICUT BRIDGE DESIGN MANUAL	PEDESTAL TYPE ABUTMENT ACCESS DETAILS	Issue Date: 10/03 Revision Date: Plate Number: 3.1.3b

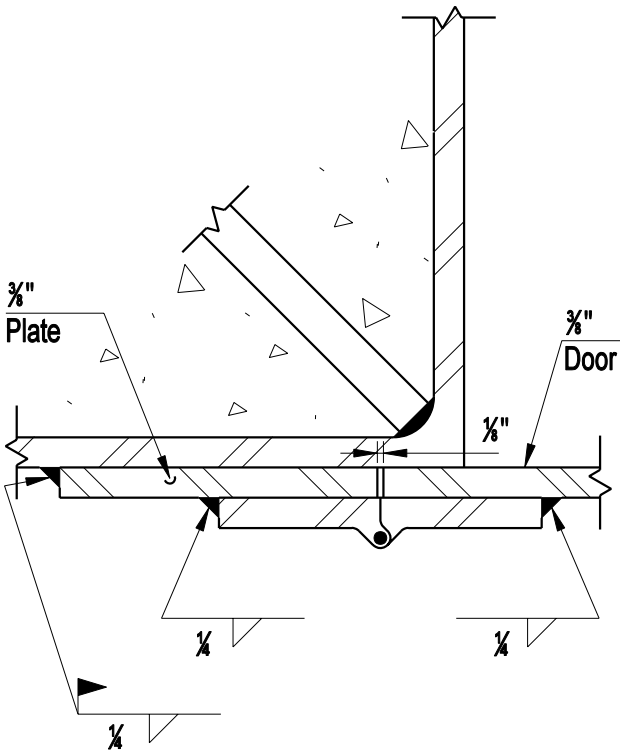

SECTION B

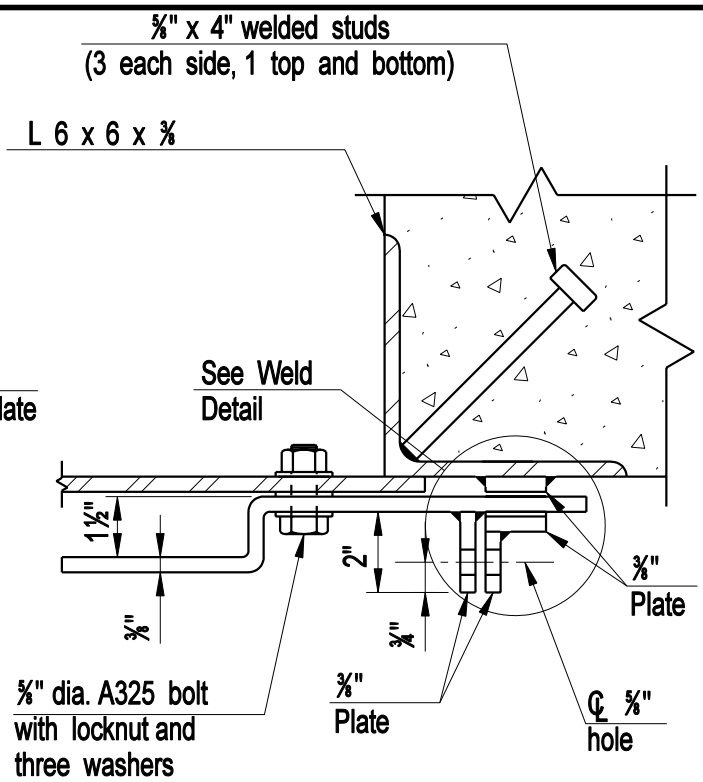

SECTION E

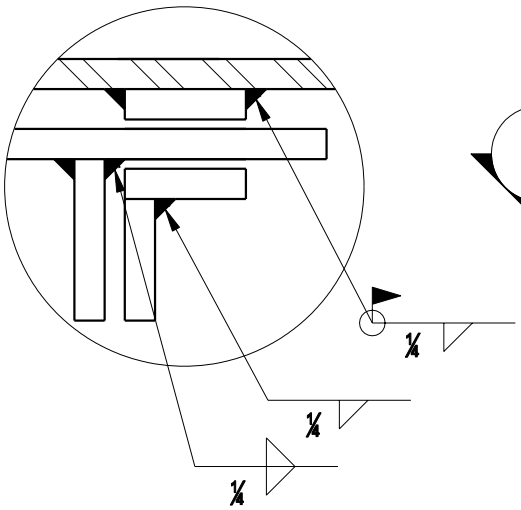

WELD DETAIL

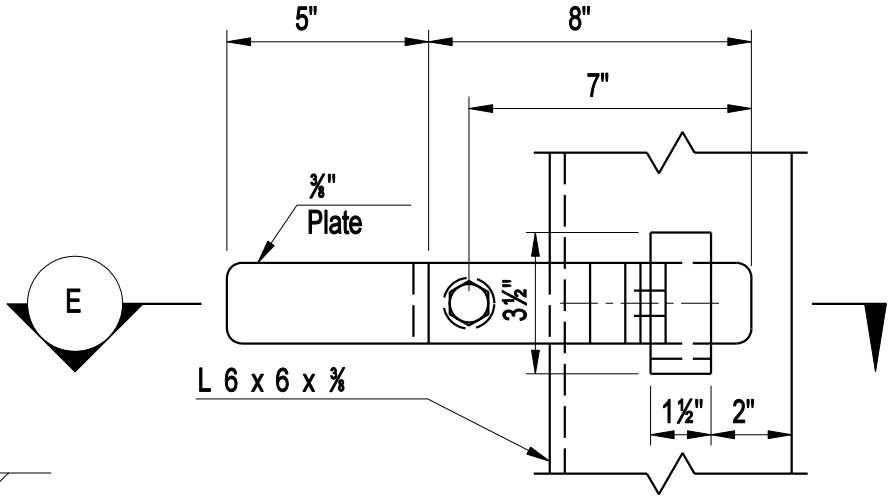

LATCH DETAIL C

CONNECTICUT BRIDGE DESIGN MANUAL	PEDESTAL TYPE ABUTMENT ACCESS DETAILS	Issue Date: 10/03 Revision Date: Plate Number: 3.1.3c

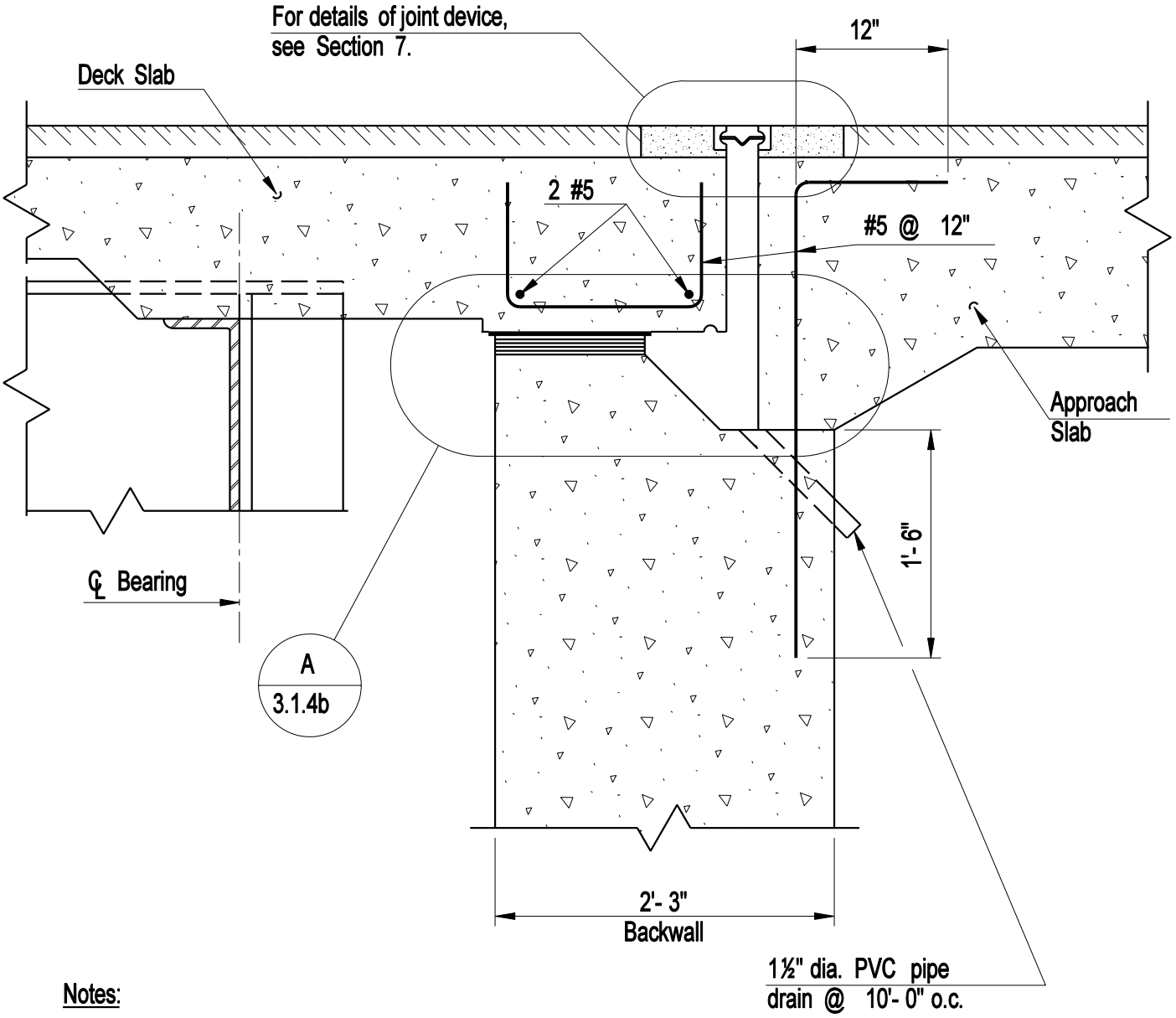

Notes:

1. For slab information not shown, see Section 6.

2. For approach slab details, see Section 6.

CONNECTICUT BRIDGE DESIGN MANUAL	EXPANSION JOINT DETAIL AT ABUTMENT	Issue Date: 10/03 Revision Date: Plate Number: 3.1.4a

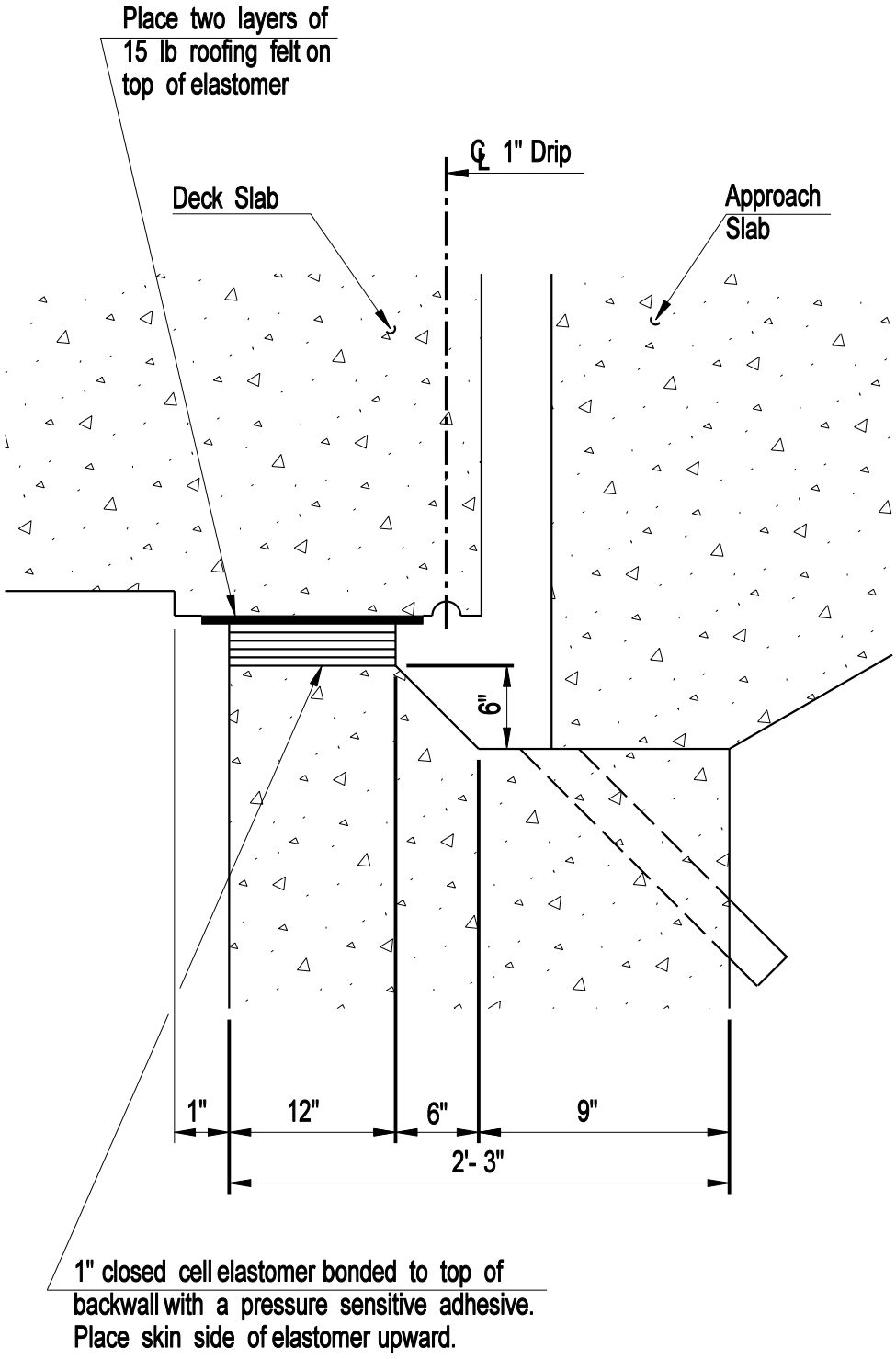

DETAIL A

CONNECTICUT BRIDGE DESIGN MANUAL	EXPANSION JOINT DETAIL AT ABUTMENT	Issue Date: 10/03 Revision Date: Plate Number: 3.1.4b

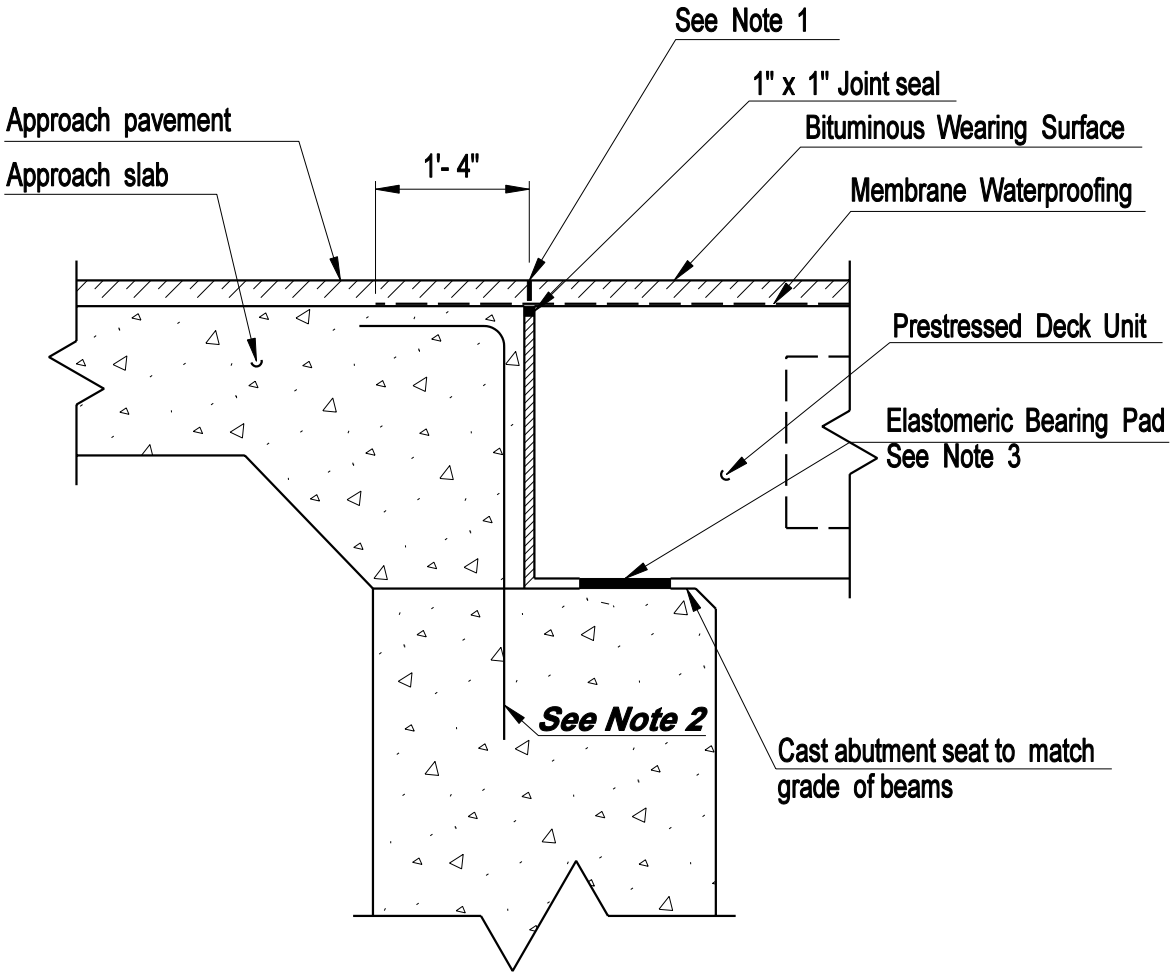

TYPICAL SECTION THROUGH ABUTMENT AT BEARING

NOTES:

1. Cut bituminous overlay with ⅜" wide by 1¾" deep kerf and fill with pourable sealant.
   To be paid for under the item "Sawing and Sealing Joints in Bituminous Pavement".

DESIGN INFORMATION:

2. ***The approach slab and cheekwall reinforcement shall be designed to resist longitudinal and transverse seismic forces.***

3. ***Elastomeric Bearing shall be designed according to Section 14 of the AASHTO specifications.***

CONNECTICUT BRIDGE DESIGN MANUAL	ABUTMENT DETAILS FOR PRECAST CONCRETE DECK UNITS WITH APPROACH SLAB	Issue Date: 10/03 Revision Date: Plate Number: 3.1.5

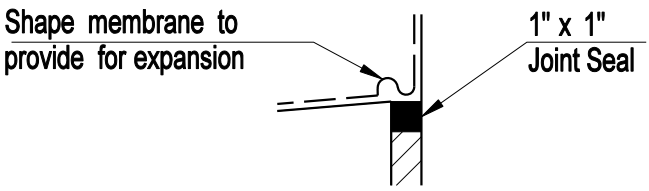

DETAIL A

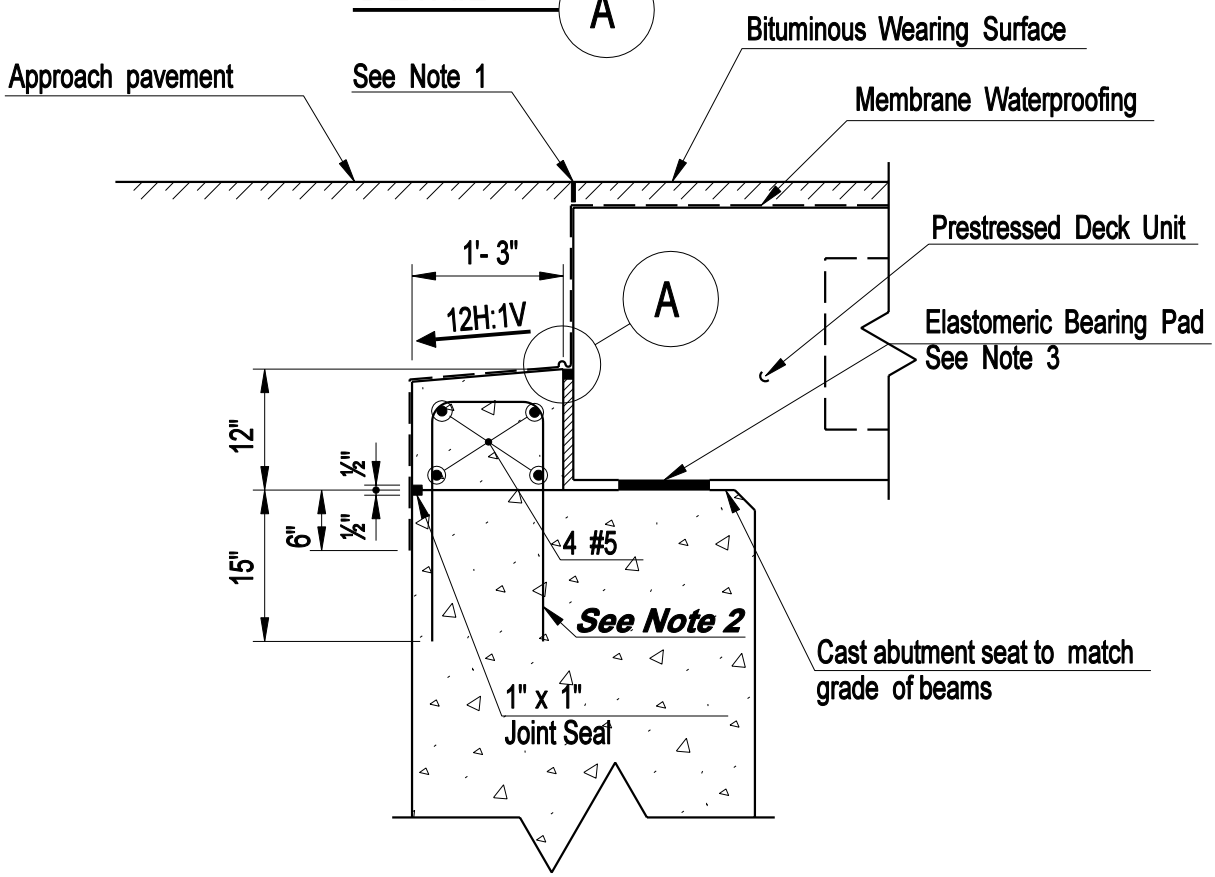

TYPICAL SECTION THROUGH ABUTMENT AT BEARING

NOTES:

1. Cut bituminous overlay with ⅜" wide by 1¾" deep kerf and fill with pourable sealant. To be paid for under the item "Sawing and Sealing Joints in Bituminous Pavement".

DESIGN INFORMATION:

2. ***The backwall and cheekwall shall be designed to resist longitudinal and transverse seismic forces.***
3. ***Elastomeric Bearing shall be designed according to Section 14 of the AASHTO specifications.***
4. ***This detail should be used only with the express permission of the Department. In most cases, approach slabs shall be used as detailed on Plate 3.1.5. See Article 5.8, Section I for warrants for use.***

CONNECTICUT BRIDGE DESIGN MANUAL	ABUTMENT DETAILS FOR PRECAST CONCRETE DECK UNITS WITHOUT APPROACH SLAB	Issue Date: 10/03 Revision Date: Plate Number: 3.1.6

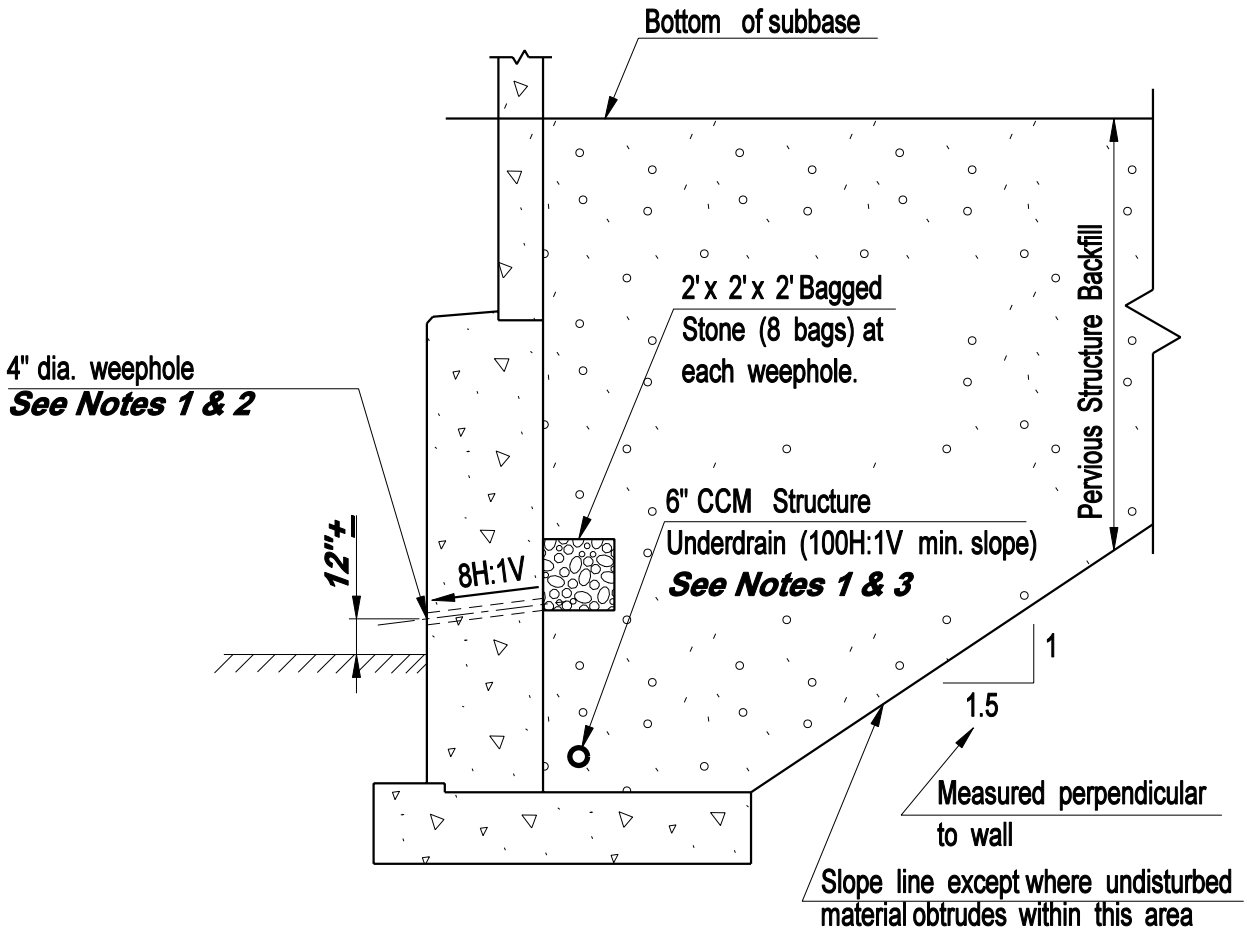

NOTES:

1. ***Plans should show either 4" weepholes or 6" structure underdrain. See Division I.***

2. ***Horizontal spacing and invert elevations of weepholes at the front face of abutment shall be shown on the abutment elevation views on the plans.***

3. ***6" CCM Structure Underdrain and 6" CCM Outlet for Underdrain shall be included as Bridge Pay Items.***

CONNECTICUT BRIDGE DESIGN MANUAL	SHOULDER ABUTMENT DRAINAGE AND BACKFILL REQUIREMENTS	Issue Date: 10/03 Revision Date: Plate Number: 3.2.1

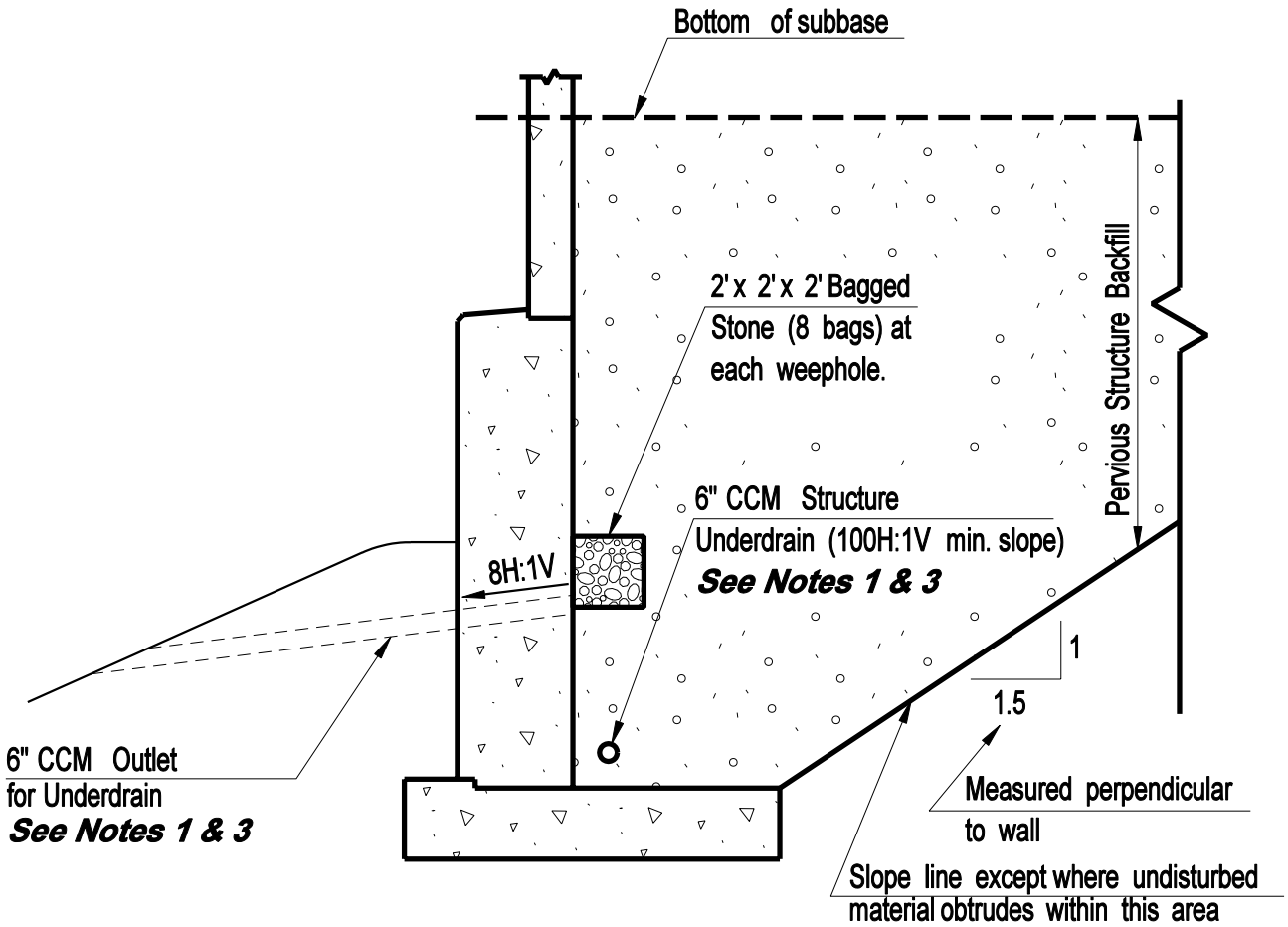

NOTES:

1. ***Plans should show either 4" weepholes or 6" structure underdrain. See Division I.***

2. ***Horizontal spacing and invert elevations of extended weepholes at the front face of abutment shall be shown on the abutment elevation views on the plans.***

3. ***6" CCM Structure Underdrain and 6" CCM Outlet for Underdrain shall be included as Bridge Pay Items.***

CONNECTICUT BRIDGE DESIGN MANUAL	EMBANKMENT ABUTMENT DRAINAGE AND BACKFILL REQUIREMENTS	Issue Date: 10/03 Revision Date: Plate Number: 3.2.2

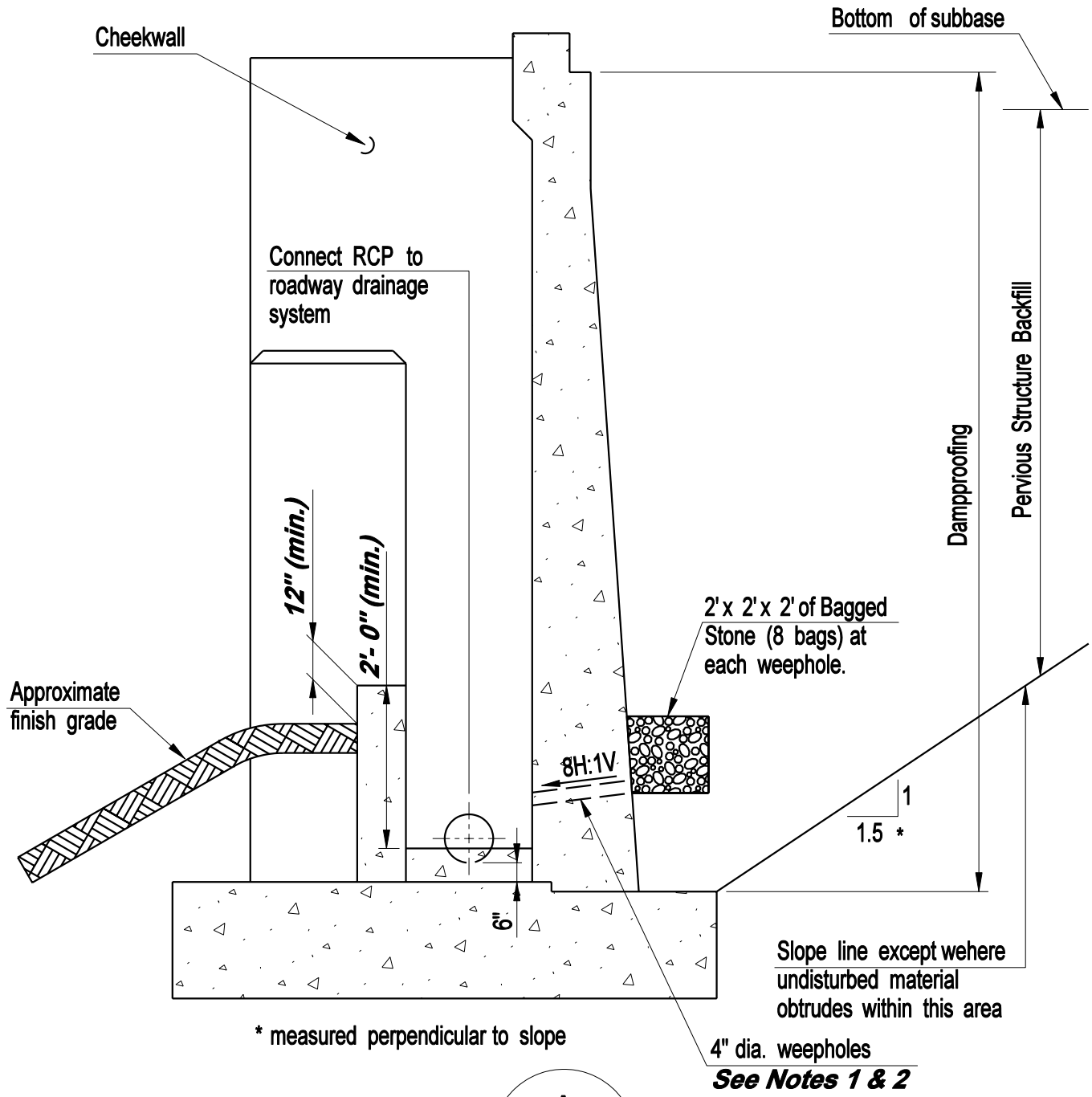

SECTION A / 3.1.2a

NOTES:

1. ***Plan should show either 4" weephole or 6" structure underdrain. See Section I.***

2. ***Horizontal spacing and invert locations of weepholes shall be shown on the abutment elevation views on the plans.***

CONNECTICUT BRIDGE DESIGN MANUAL	PEDESTAL TYPE ABUTMENT DRAINAGE AND BACKFILL REQUIREMENTS	Issue Date: 10/03 Revision Date: Plate Number: 3.2.3

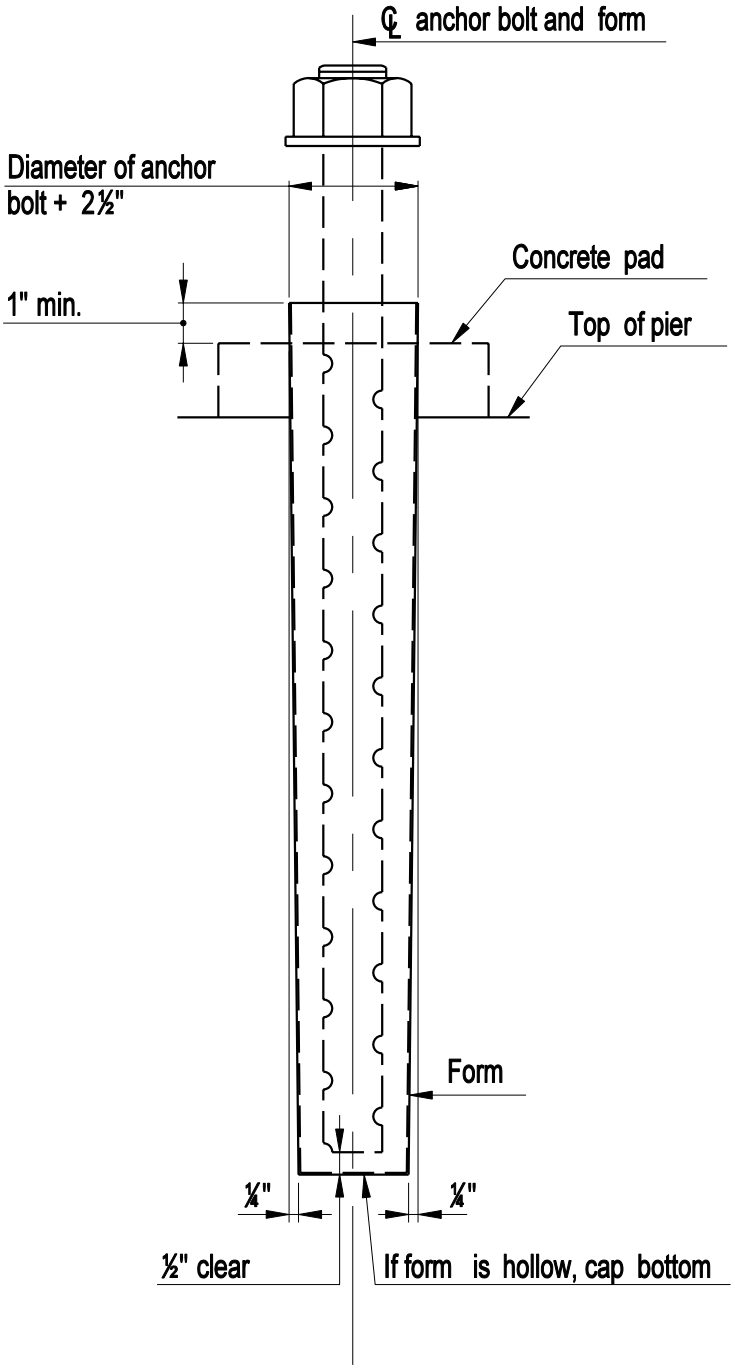

NOTES:

Forms shall be unoiled, held in place accurately by template, and removed after concrete has hardened. Anchor bolts shall be set accurately and grouted with non-shrink grout. The cost of furnishing and installing forms to be included in the item "Class F Concrete".

DESIGN INFORMATION

Designer to determine the exact location of forms in relation to reinforcement and, if necessary, respace or add extra rows of reinforcing. Forms are to be used primarily at piers but may also be used elsewhere at the discretion of the designer.

CONNECTICUT BRIDGE DESIGN MANUAL	ANCHOR BOLT FORMS AT PIERS	Issue Date: 10/03 Revision Date: Plate Number: 3.3.1

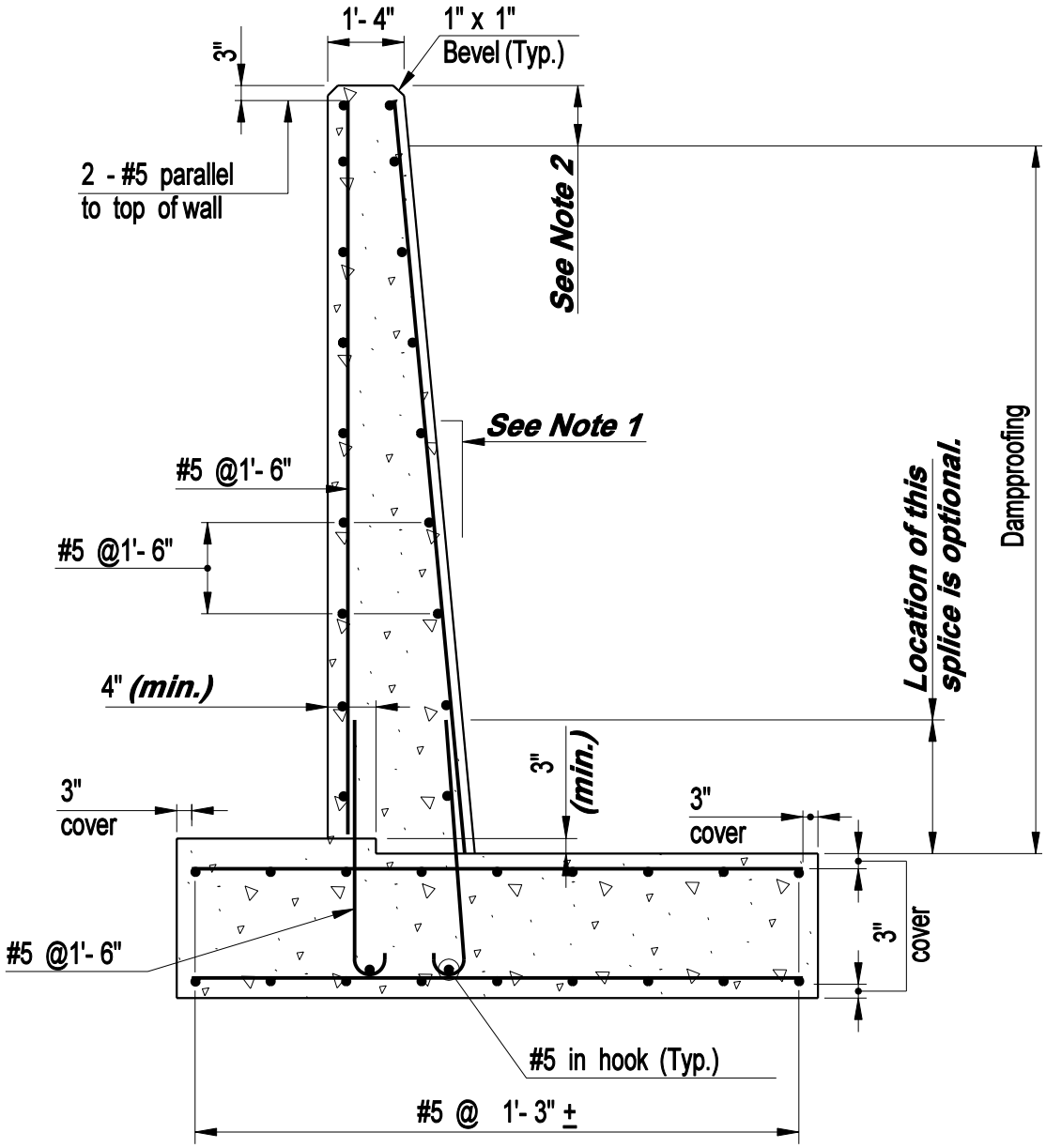

Notes

1. ***The rear face of the stem shall be battered if additional width at the base of the stem is required. The minimum batter shall be 1H:12V. Maintain a uniform top of batter elevation.***

2. ***This dimension may be increased to follow finished grade.***

CONNECTICUT BRIDGE DESIGN MANUAL	FLARED TYPE WINGWALL OR RETAINING WALL	Issue Date: 10/03 Revision Date: Plate Number: 3.4.1

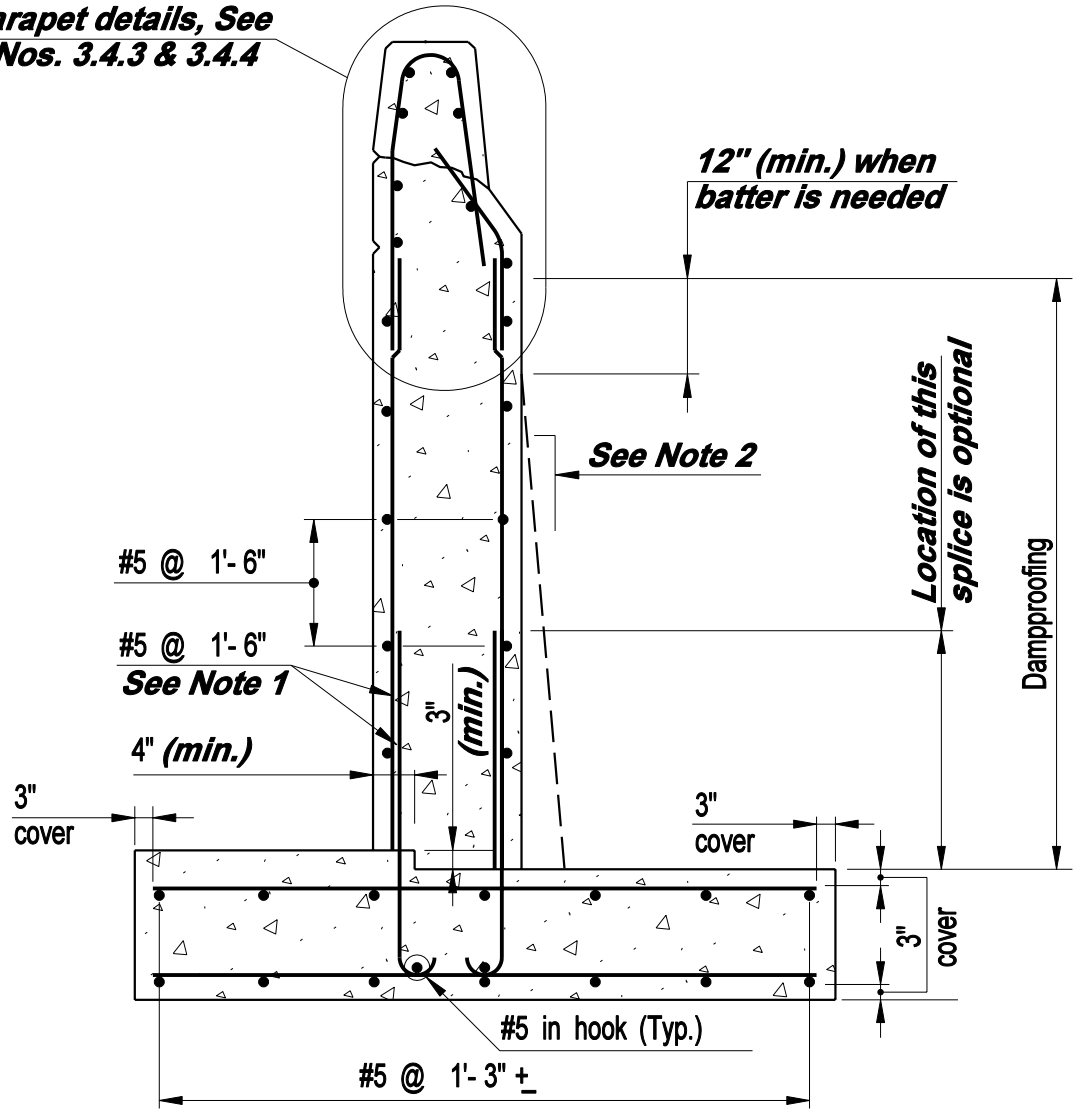

Notes

1. ***This reinforcement shall be designed for seismic forces.***

2. ***The rear face of the stem shall be battered if additional width at the base of the stem is required. The minimum batter shall be 1H:12V. Maintain a uniform top of batter elevation.***

CONNECTICUT BRIDGE DESIGN MANUAL	U - TYPE WINGWALL OR RETAINING WALL WITH SLOPED CURB	Issue Date: 10/03 Revision Date: Plate Number: 3.4.2

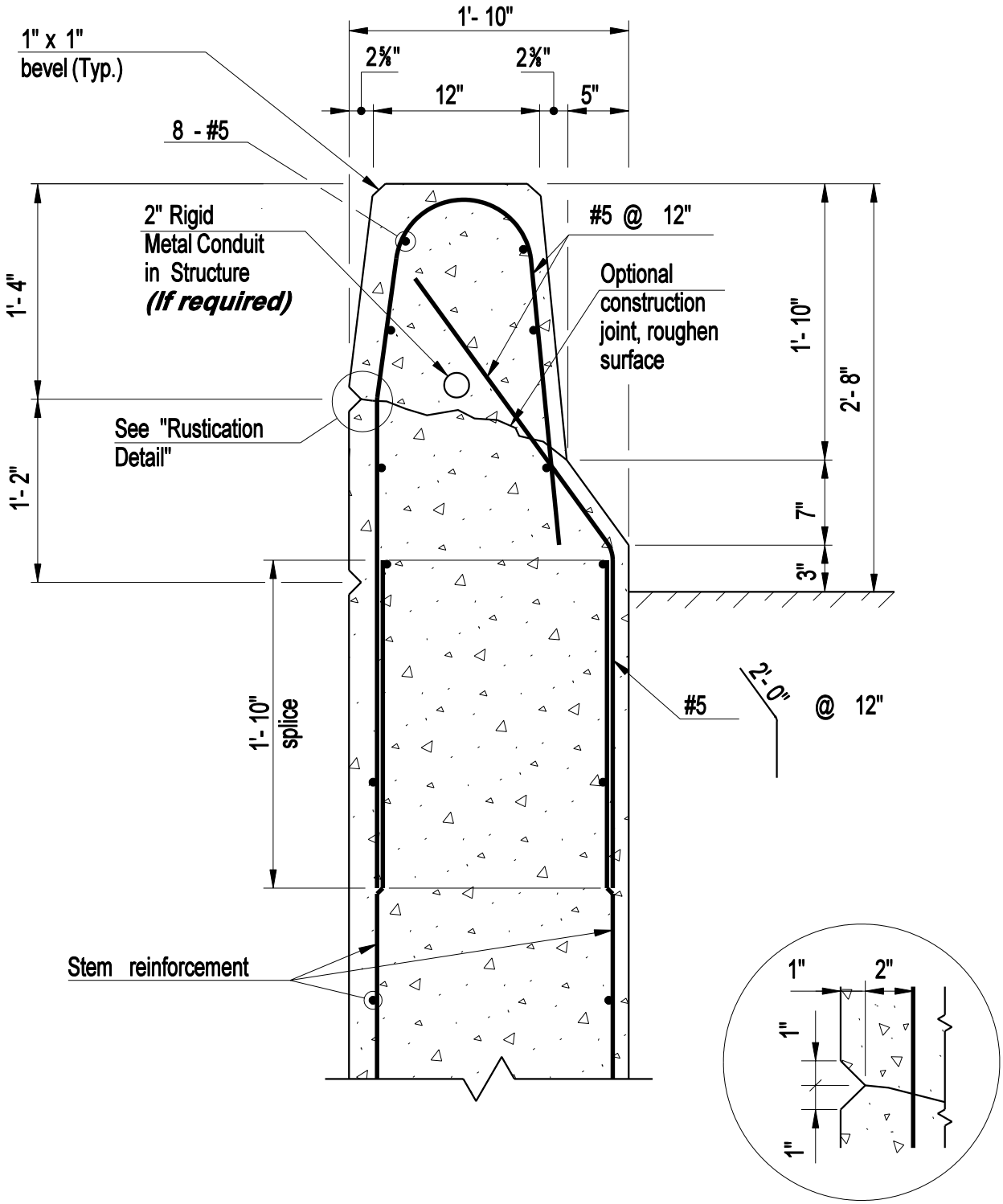

Rustication Detail

CONNECTICUT BRIDGE DESIGN MANUAL	STANDARD WINGWALL PARAPET (32" HIGH)	Issue Date: 10/03 Revision Date: Plate Number: 3.4.3

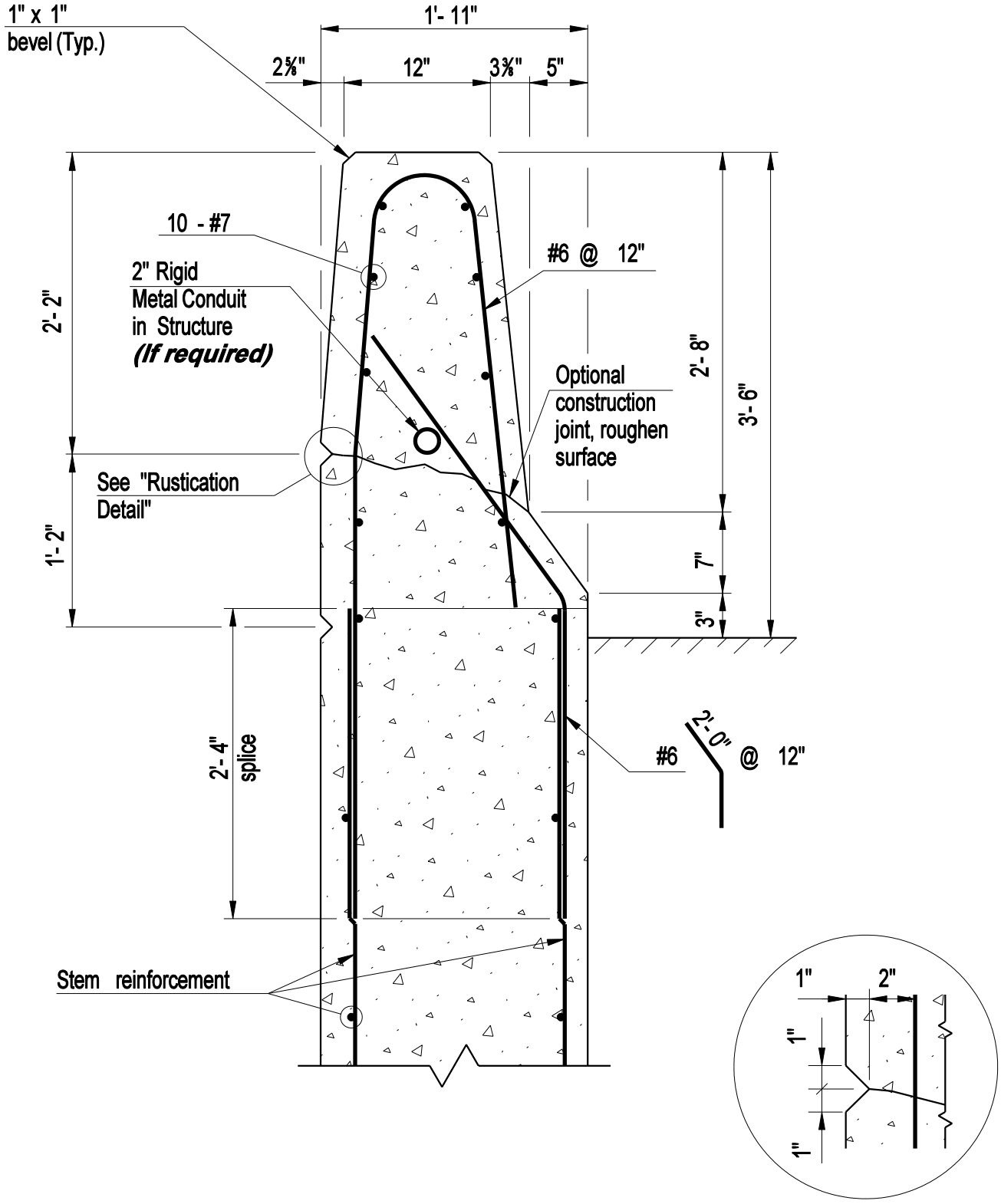

Rustication Detail

CONNECTICUT BRIDGE DESIGN MANUAL	STANDARD WINGWALL PARAPET (42" HIGH)	Issue Date: 10/03 Revision Date: Plate Number: 3.4.4

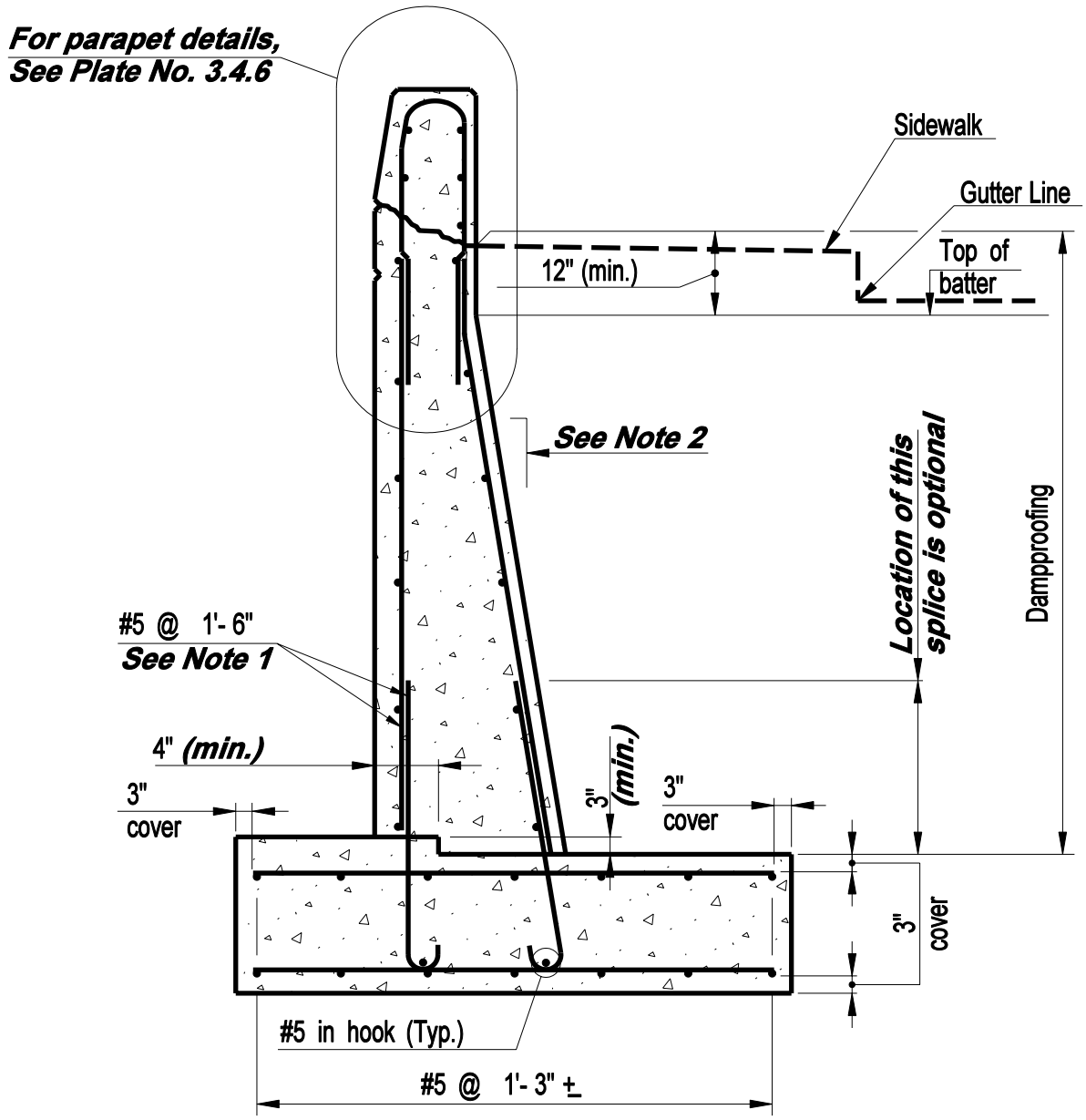

Notes

1. ***This reinforcement shall be designed for seismic forces.***

2. ***The rear face of the stem shall be battered if additional width at the base of the stem is required. The minimum batter shall be 1H:12V. Maintain a uniform top of batter elevation.***

CONNECTICUT BRIDGE DESIGN MANUAL	U-TYPE WINGWALL OR RETAINING WALL WITH SIDEWALK	Issue Date: 10/03 Revision Date: Plate Number: 3.4.5

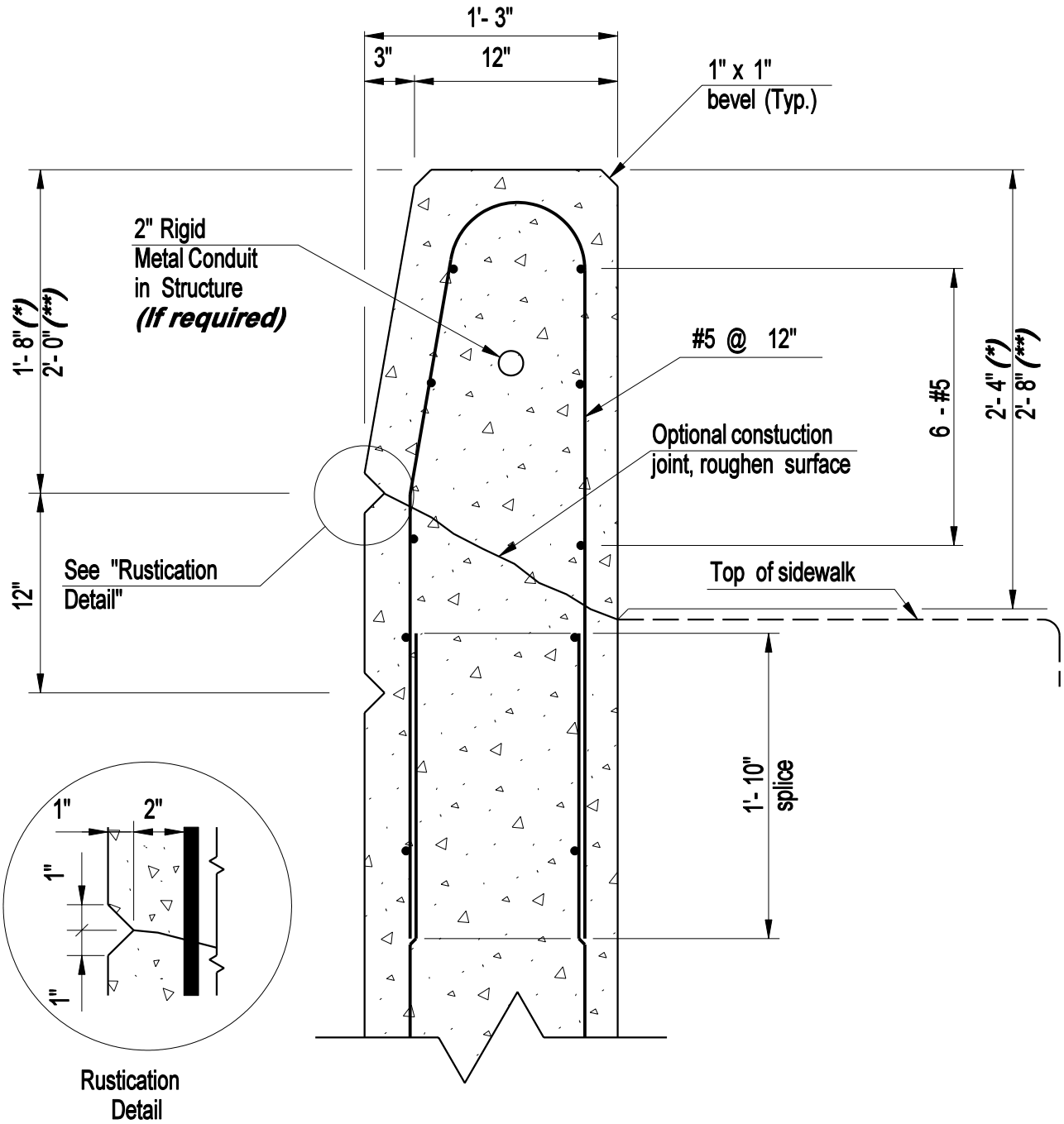

DESIGN INFORMATION

** with protective fence*
*** with pedestrian railing*

CONNECTICUT BRIDGE DESIGN MANUAL	WINGWALL PARAPET WITH SIDEWALK	Issue Date: 10/03
		Revision Date:
		Plate Number: 3.4.6

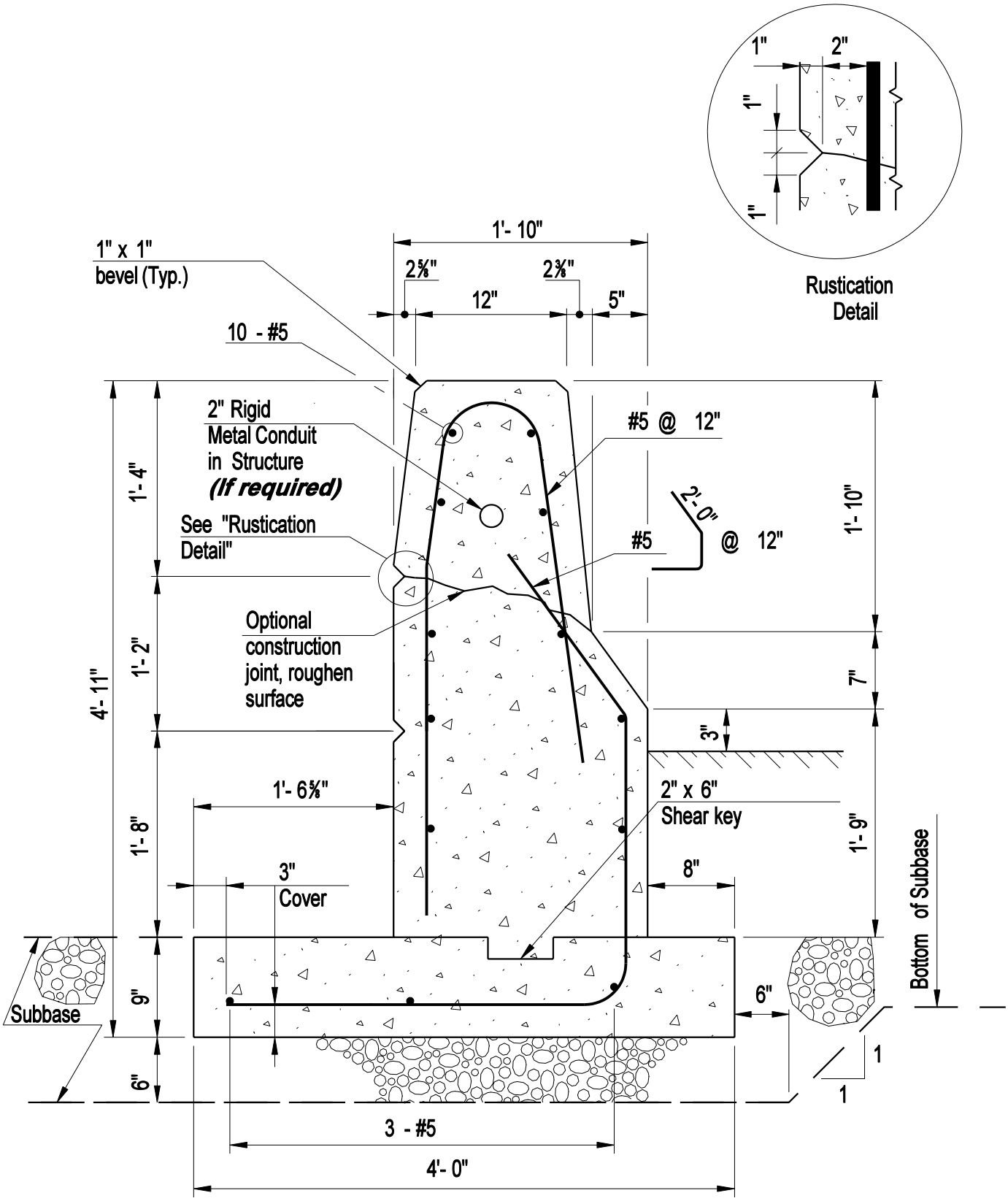

CONNECTICUT BRIDGE DESIGN MANUAL	CONCRETE BARRIER WALL (32" HIGH)	Issue Date: 10/03
		Revision Date:
		Plate Number: 3.4.7

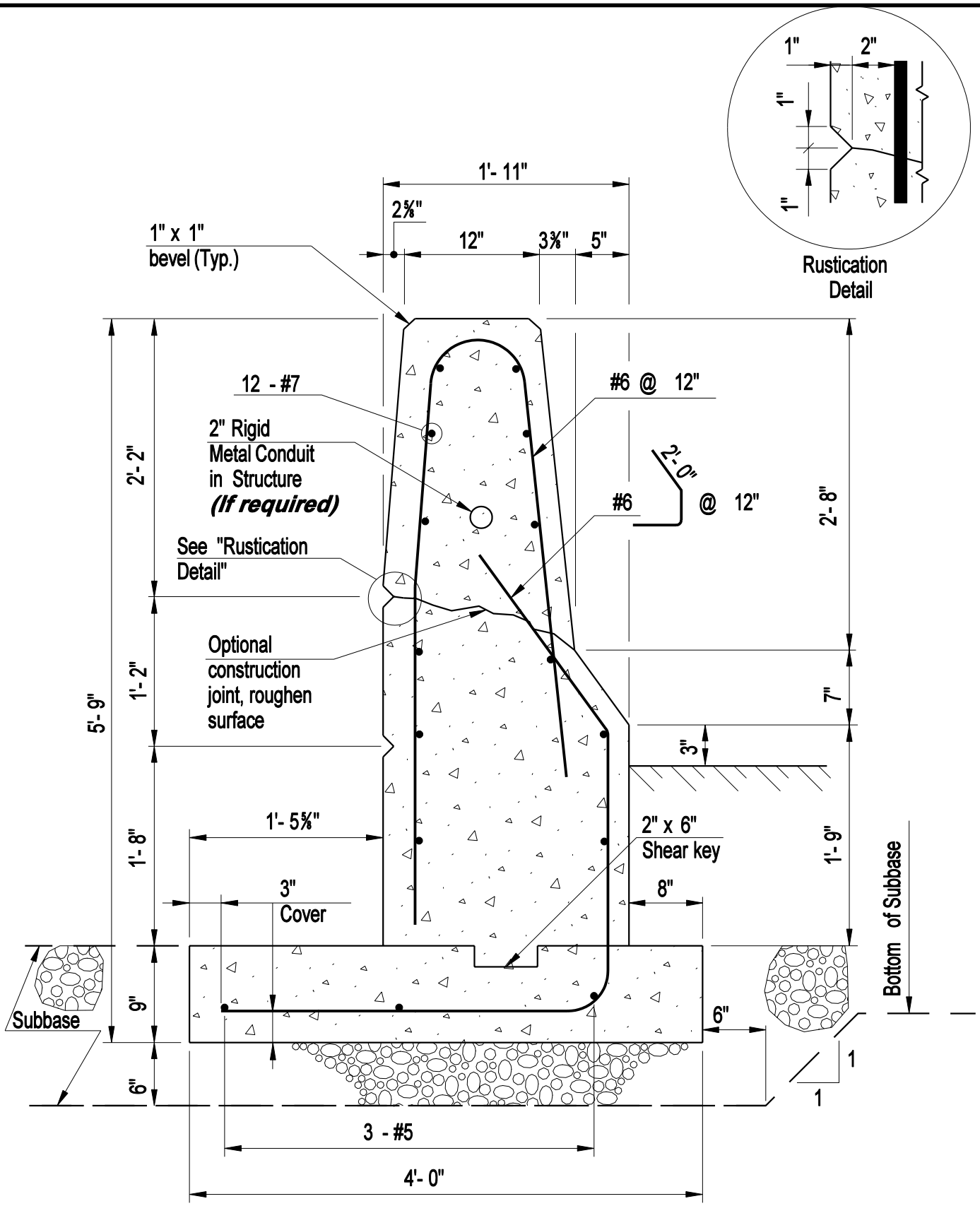

CONNECTICUT BRIDGE DESIGN MANUAL	CONCRETE BARRIER WALL (42" HIGH)	Issue Date: 10/03
		Revision Date:
		Plate Number: 3.4.8

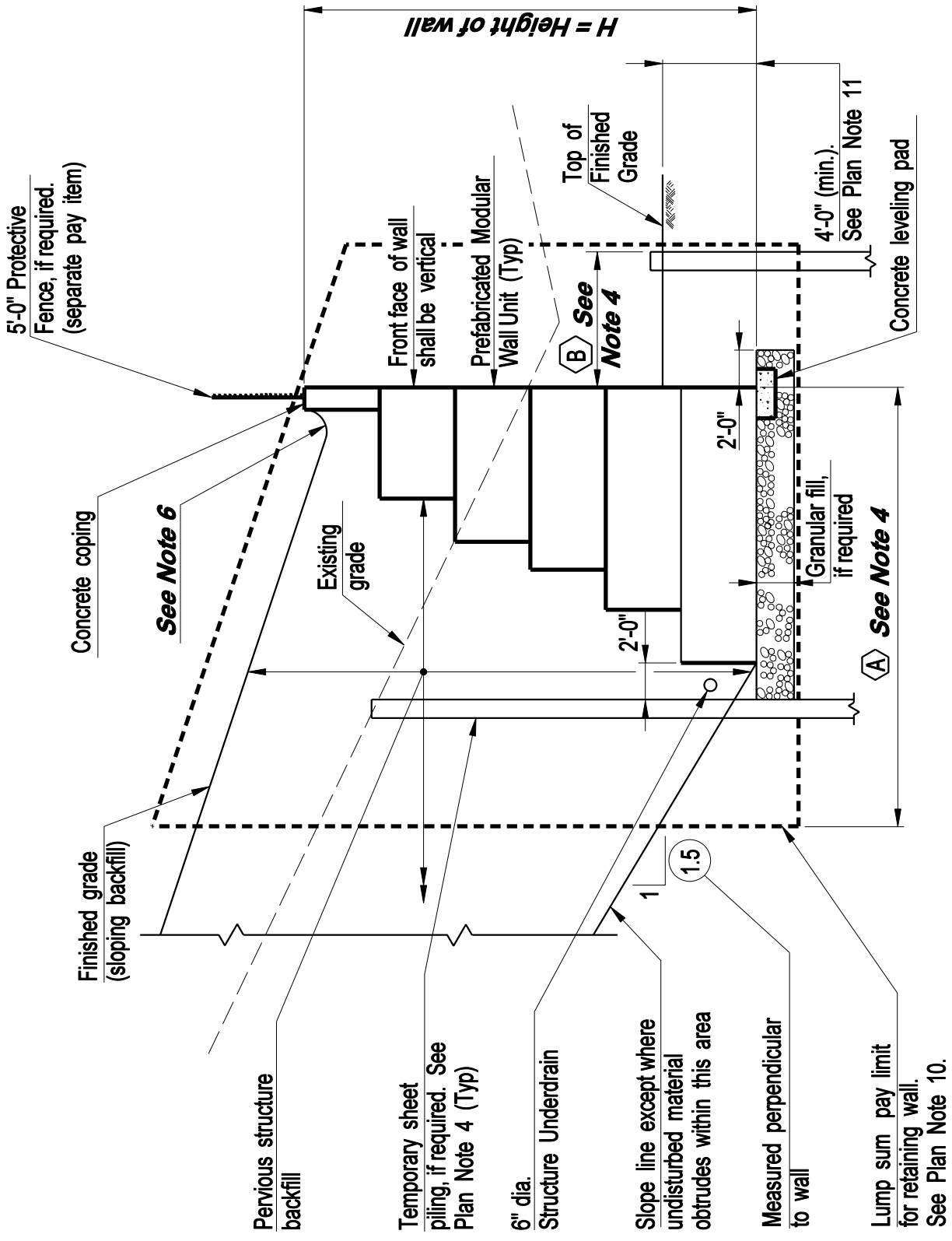

Note: For design information, see Plate 3.4.11.
For plan notes, see plate 3.4.12.

CONNECTICUT BRIDGE DESIGN MANUAL	TYPICAL SECTION PREFABRICATED MODULAR WALL (SLOPING BACKFILL)	Issue Date: 10/03 Revision Date: Plate Number: 3.4.9a

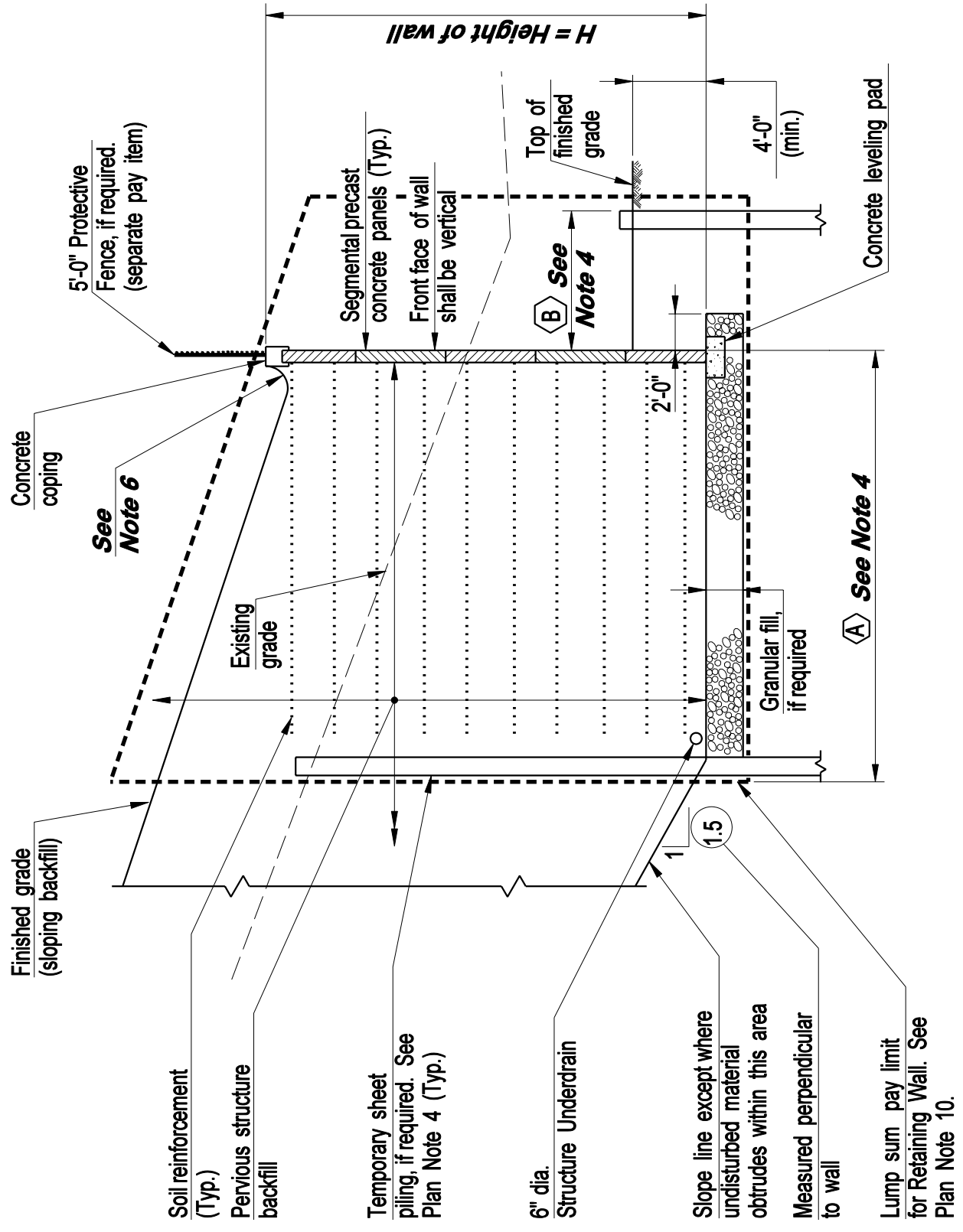

Note: For design information, see Plate 3.4.11.
For plan notes, see plate 3.4.12.

CONNECTICUT BRIDGE DESIGN MANUAL	TYPICAL SECTION MECHANICALLY STABILIZED EARTH WALL (SLOPING BACKFILL)	Issue Date: 10/03 Revision Date: Plate Number: 3.4.9b

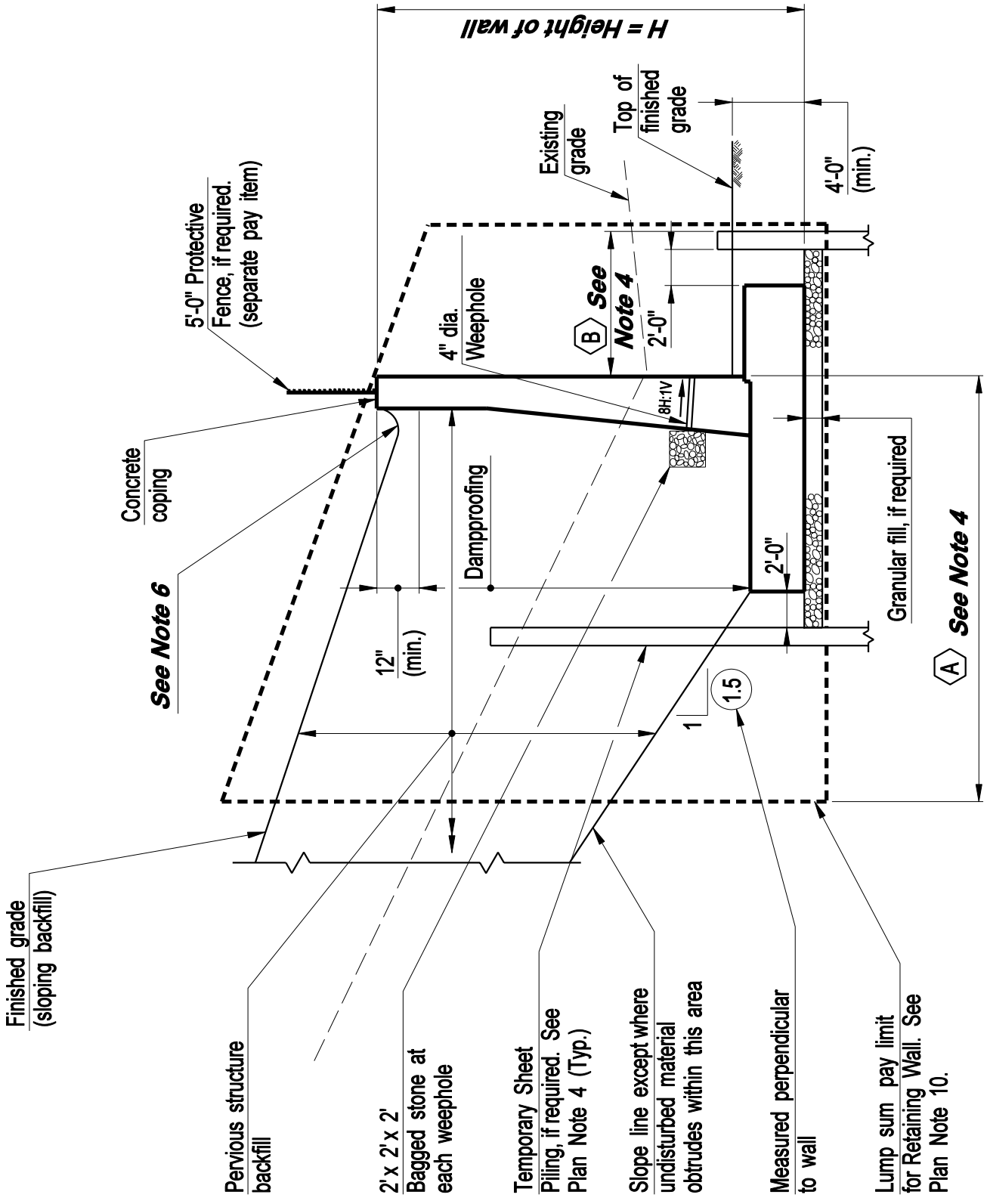

Note: For design information, see Plate 3.4.11.
For plan notes, see plate 3.4.12.

CONNECTICUT BRIDGE DESIGN MANUAL	TYPICAL SECTION CAST-IN-PLACE REINFORCED CONCRETE (SLOPING BACKFILL)	Issue Date: 10/03 Revision Date: Plate Number: 3.4.9c

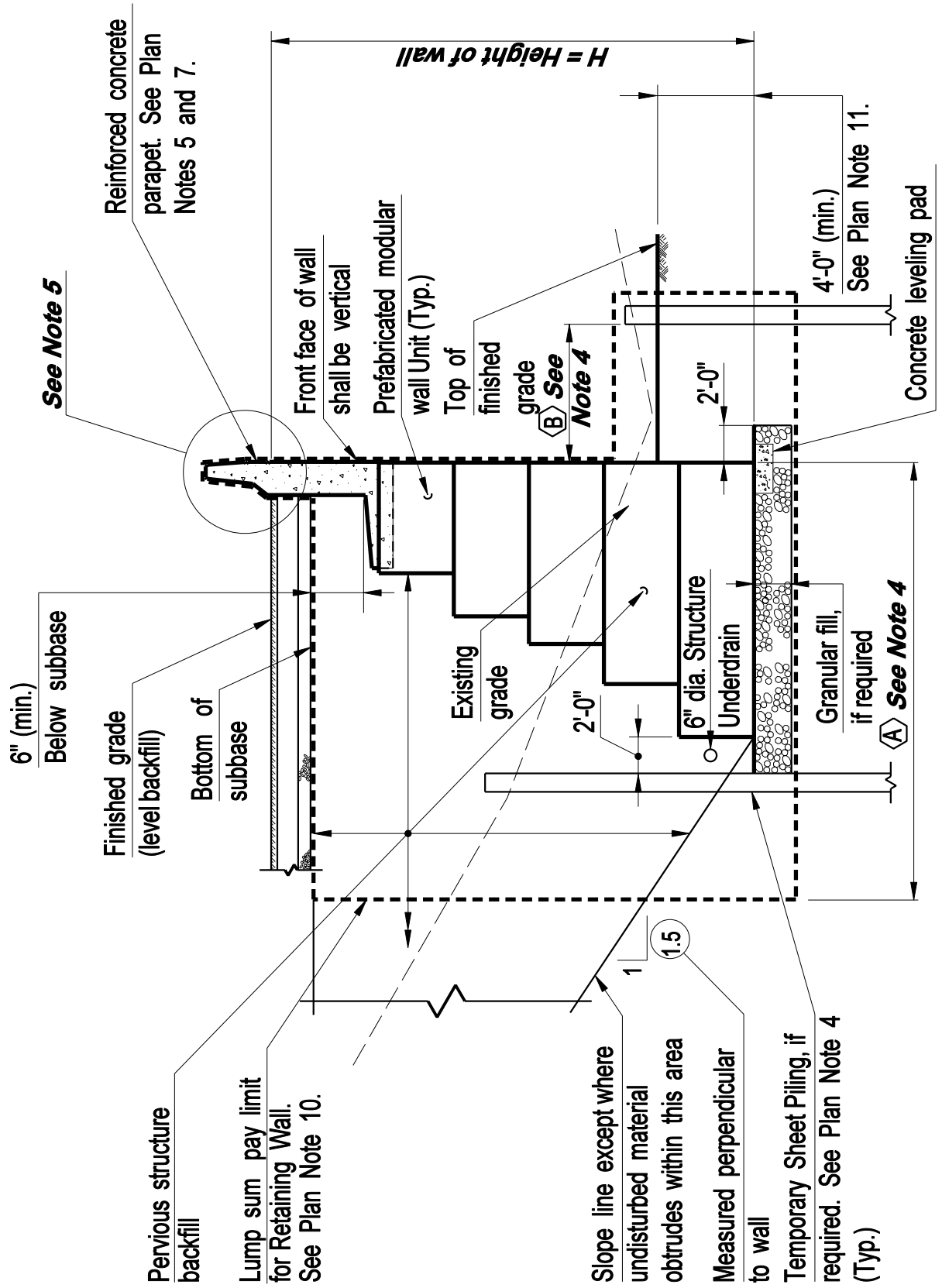

Note: For design information, see Plate 3.4.11.
For plan notes, see Plate 3.4.12.

CONNECTICUT BRIDGE DESIGN MANUAL	TYPICAL SECTION PREFABRICATED MODULAR WALL (LEVEL BACKFILL)	Issue Date: 10/03
		Revision Date:
		Plate Number: 3.4.10a

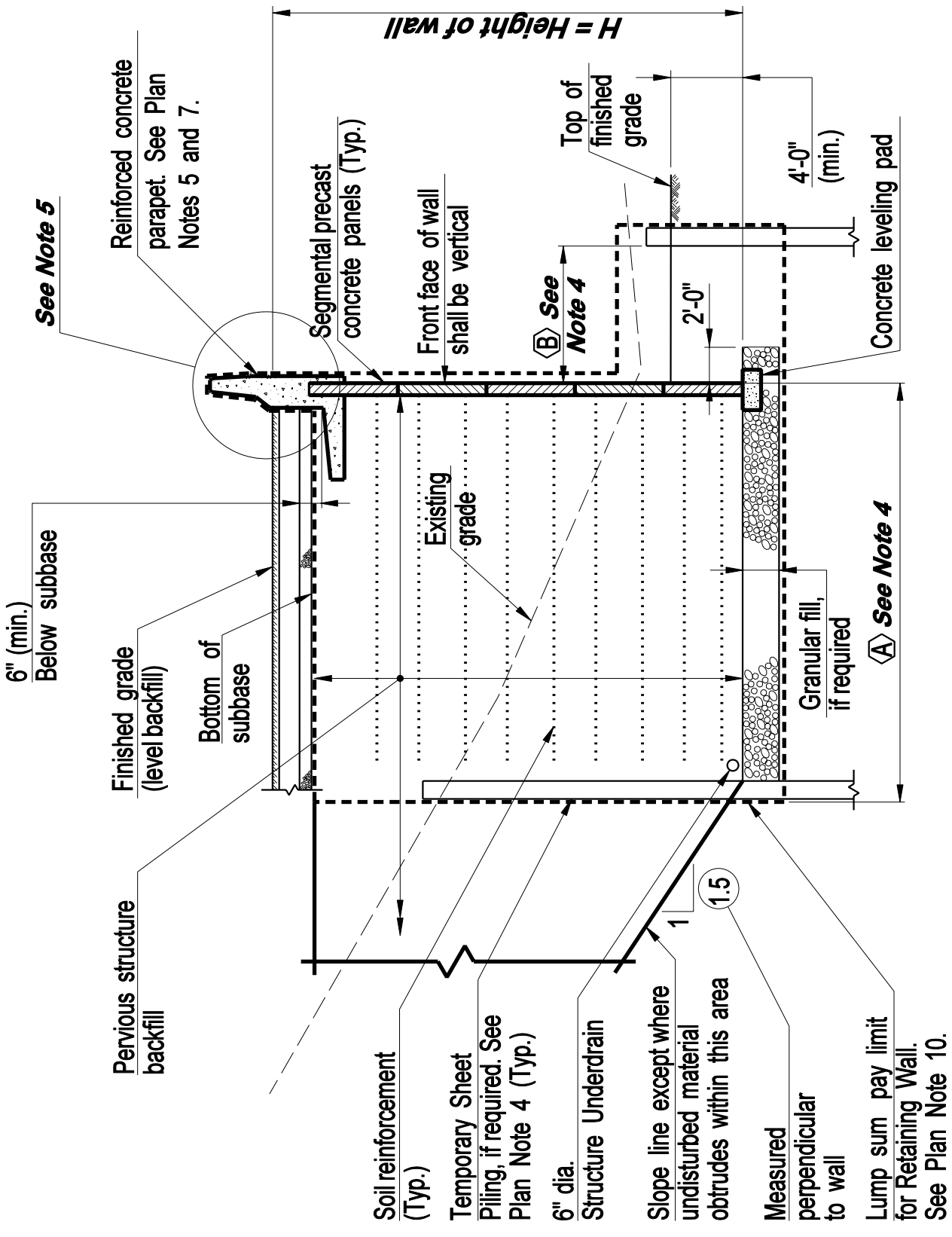

Note: For design information, see Plate 3.4.11.
For plan notes, see Plate 3.4.12.

CONNECTICUT BRIDGE DESIGN MANUAL	TYPICAL SECTION MECHANICALLY STABILIZED EARTH WALL (LEVEL BACKFILL)	Issue Date: 10/03 Revision Date: Plate Number: 3.4.10b

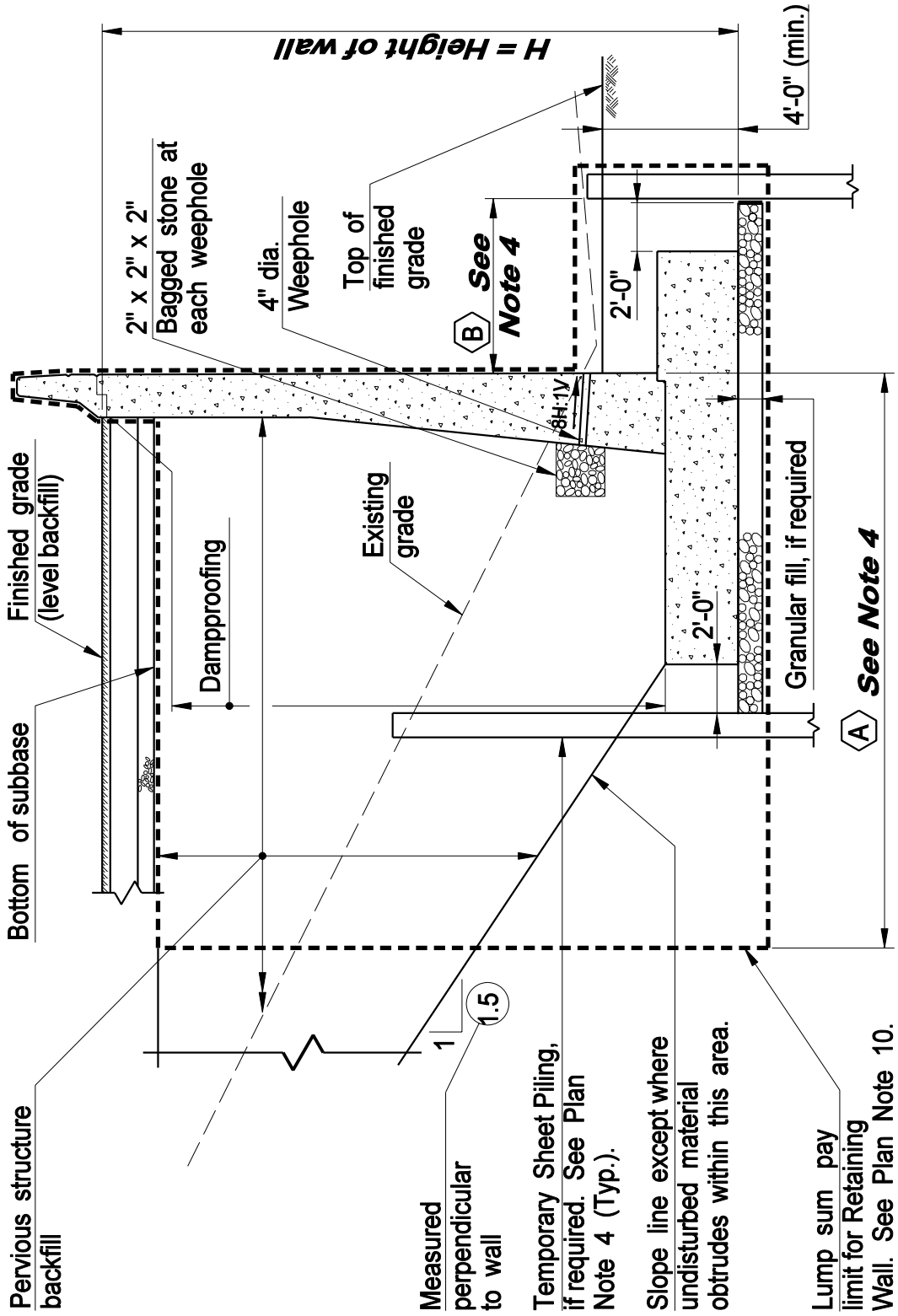

Note: For design information, see Plate 3.4.11.
For plan notes see Plate 3.4.12.

CONNECTICUT BRIDGE DESIGN MANUAL	TYPICAL SECTION CAST-IN-PLACE REINFORCED CONCRETE (LEVEL BACKFILL)	Issue Date: 10/03 Revision Date: Plate Number: 3.4.10c

DESIGN INFORMATION NOTES:

1. ***The Proprietary Walls shall be designed, detailed, and constructed in accordance with the special provision "Retaining Wall (Site No._)".***

2. ***Proprietary walls shall be designed for seismic forces only as required by Section 4 of the Bridge Manual. When a design for seismic forces is required, include Plan Note 3 (see plate 3.4.12) on the contract plans.***

3. ***Wall height (H) for Mechanically Stabilized Earth Wall and Prefabricated Modular Wall sections shall be the same as for the Cast-in-Place Reinforced Concrete Wall type sections. Wall height (H) is equal to the distance measured from the bottom footing elevation to the finished grade.***

4. ***Pay limits for Mechanically Stabilized Earth Wall and Prefabricated Modular Wall sections shall be the same as for the Cast-in-Place Reinforced Concrete Wall Type section. The Designer shall determine all dimensions associated with the pay limits and show these dimensions on the plans. All horizontal pay limits are measured from the front face of the Cast-In-Place Concrete Wall.***

   Dimension (B) shall be equal to 2'-0" plus the toe length.
   Dimension (A), as a minimum, shall be equal to (0.8)H plus 2'-0".

5. ***If a Cast-in-place Reinforced Concrete wall alternate is not provided, the Engineer shall provide detailing and reinforcement of the parapet section above the gutter lines.***

6. ***Provide for surface drainage if necessary. Extent and details of ditch to be determined by the highway Engineer.***

Plan Notes:

1. The Contractor shall select, design, (for proprietary walls only) and construct one of the following wall options in accordance with the special provision "Retaining Wall (Site No._)".

   (List of appropriate wall manufacturers)

2. The maximum allowable bearing pressure = ( )

3. Proprietary wall systems shall be designed for seismic forces in accordance with AASHTO specifications. The Acceleration Coefficient used in determining the seismic forces shall be 0.16. ***(Include this note when required - see Plate 3.4.11 Note 2.)***

4. Temporary sheet piling below pay limits and any tiebacks and bracing associated with the sheet piling shall be included in the lump sum cost of the wall.

5. Details shown on this sheet are not specific. The Contractor's Designer shall modify each section for each specific site.

6. Light standard anchorages, junction boxes, and rigid metal conduit shall be included in the lump sum pay item "Retaining Wall (Site No._)".

7. The detailing and reinforcement of the parapet section above the gutter line shall be as shown for the Cast-In-Place Reinforced Concrete Wall section or as detailed elsewhere on the plans.

8. Reinforcing to have 2" cover except where shown otherwise.

9. All dimensions are specified with the applicable units of measurement.

10. Any additional pervious structure backfill required outside this limit shall also be included in the lump sum price.

11. Where a reinforced concrete footing is provided under the front and back of the module, the embedment depth shall be measured to the bottom of the footings.

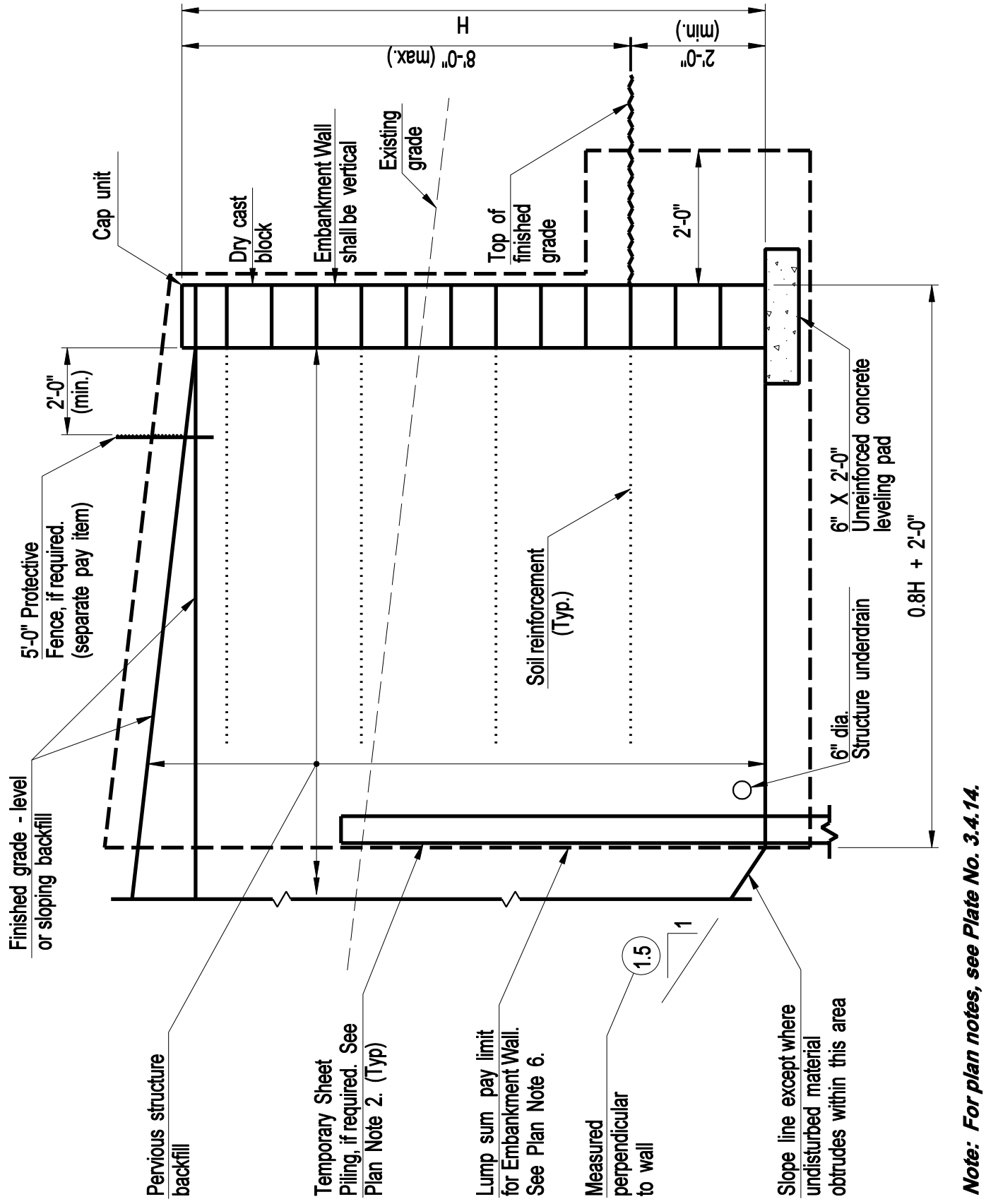

Note: For plan notes, see Plate No. 3.4.14.

CONNECTICUT BRIDGE DESIGN MANUAL	TYPICAL SECTION EMBANKMENT WALL	Issue Date: 10/03 Revision Date: Plate Number: 3.4.13

PLAN NOTES:

1. The Embankment Wall shall be designed, detailed and constructed in accordance with the special provision "Embankment Wall (Site No._)".

2. Temporary sheet piling below pay limits and any tiebacks and bracing associated with the sheet piling shall be included in the lump sum cost of the wall.

3. Details shown on this sheet are not specific. The Contractor's Designer should modify the section for each specific site.

4. The Contractor shall select, design (for proprietary walls only) and construct one of the wall options as listed in the special provision "Embankment Wall (Site No. _) ".

5. The color of the dry cast block shall be ( )

6. Any additional pervious structure backfill required outside this limit shall also be included in the lump sum price.

CONNECTICUT BRIDGE DESIGN MANUAL	PLAN NOTES FOR EMBANKMENT WALLS	Issue Date: 10/03
		Revision Date:
		Plate Number: 3.4.14

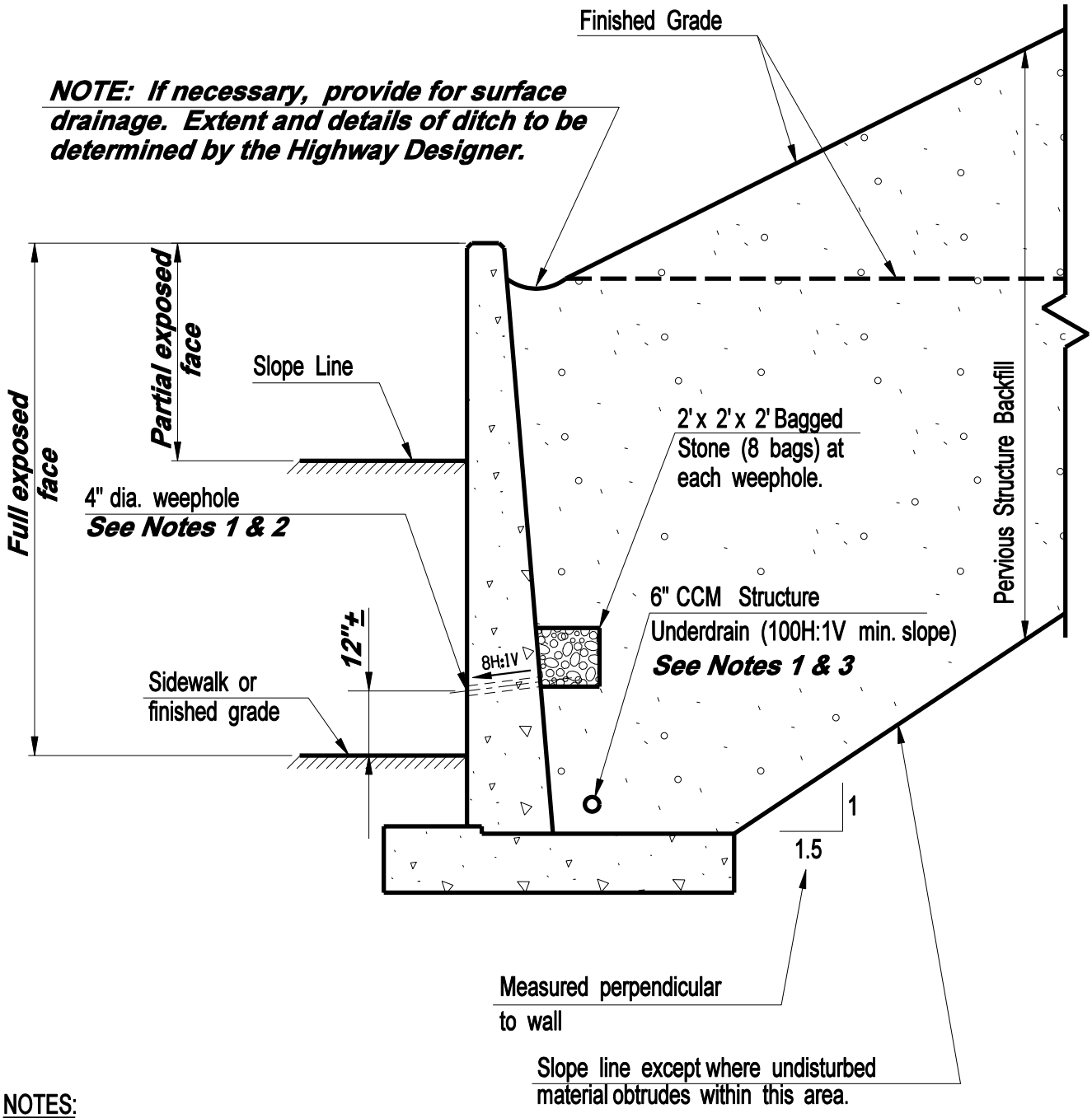

NOTES:

1. ***Plan should show either 4" weephole or 6" structure underdrain. See Division I.***

2. ***Horizontal spacing and invert locations of weepholes shall be shown on the wingwall elevation views on the plans.***

3. ***6" CCM Structure Underdrain and 6" CCM Outlet for Underdrain shall be included as Bridge Pay Items.***

CONNECTICUT BRIDGE DESIGN MANUAL	FLARED WINGWALL OR RETAINING WALL - DRAINAGE AND BACKFILL REQUIREMENTS	Issue Date: 10/03 Revision Date: Plate Number: 3.5.1

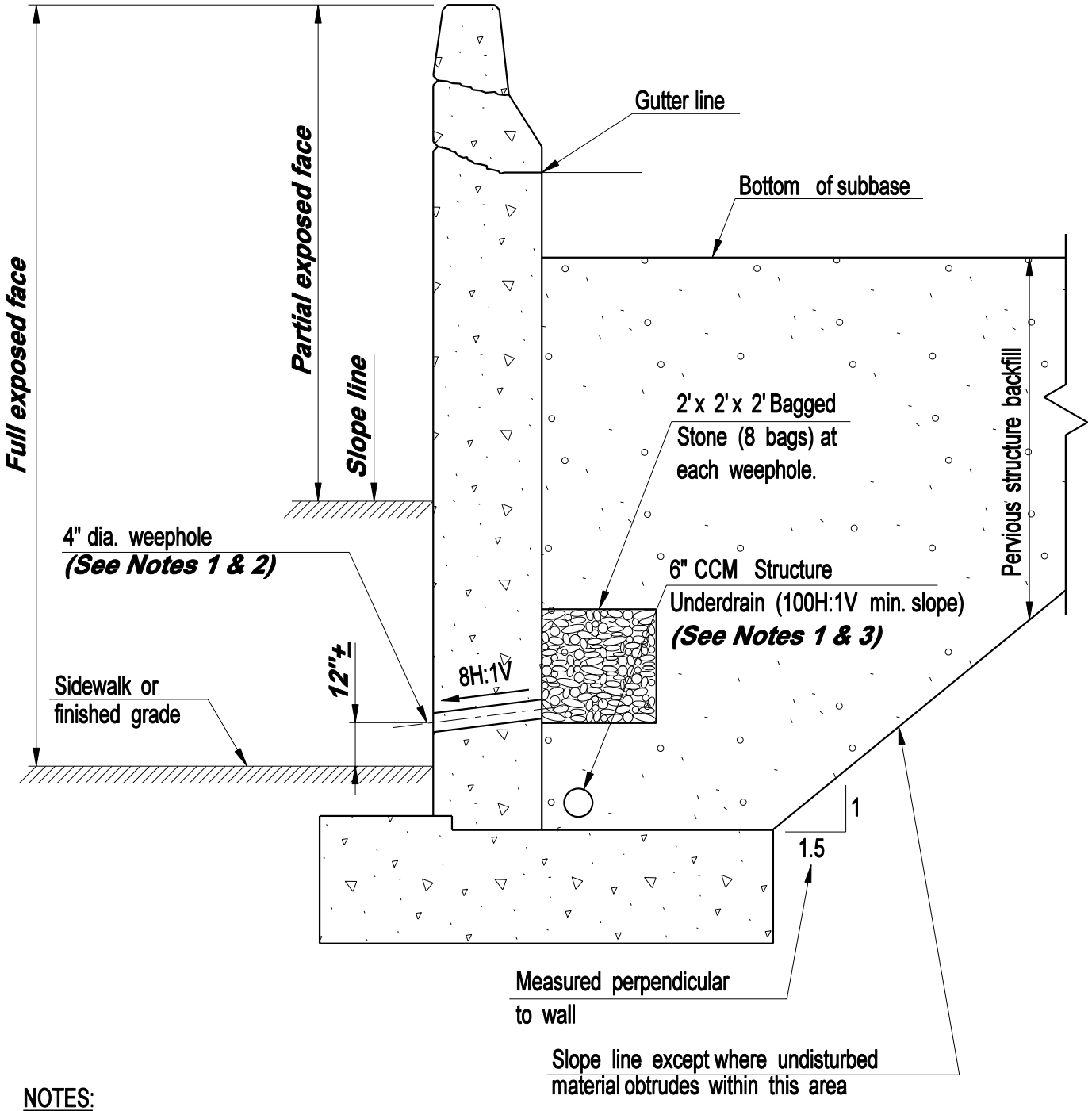

NOTES:

1. ***Plan should show either 4" weephole or 6" structure underdrain. See Division I.***

2. ***Horizontal spacing and invert locations of weepholes shall be shown on the wingwall elevation views on the plans.***

3. ***6" CCM Structure Underdrain and 6" CCM Outlet for Underdrain shall be included as Bridge Pay Items.***

CONNECTICUT BRIDGE DESIGN MANUAL	U - TYPE WINGWALL OR RETAINING WALL DRAINAGE AND BACKFILL REQUIREMENTS	Issue Date: 10/03 Revision Date: Plate Number: 3.5.2

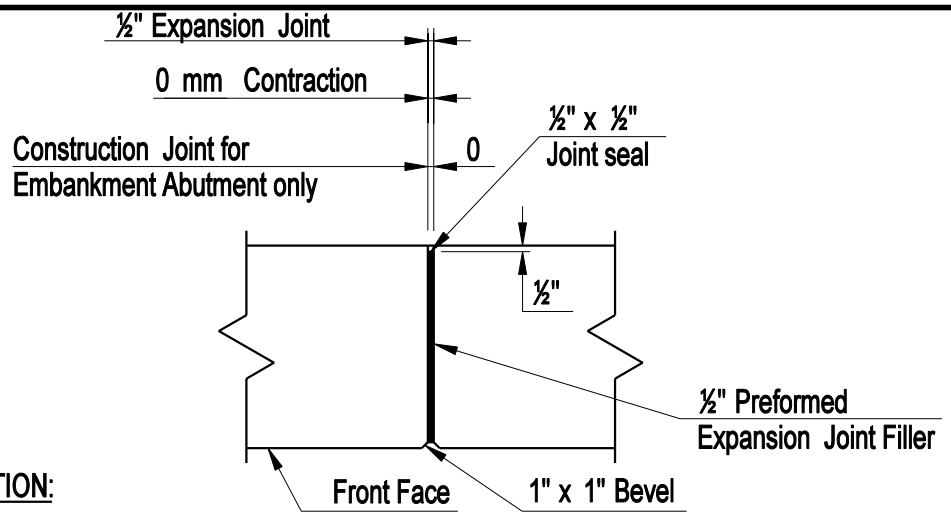

DESIGN INFORMATION:

1. ***Expansion joints shall be provided at intervals not exceeding 90'.***
2. ***Contraction joints shall be provided at intervals not exceeding 30'.***
3. ***All joints in abutments shall be located approximately midway between members.***
4. ***At embankment abutments, contraction joints shall be changed to construction joints.***

NOTES:

JOINTS: ***The Designer shall include the following notes as appropriate:***

Joint seal to extend from top of footing to top of backwall and horizontally along top of backwall. ***(Abutments)***

Joint seal to extend from top of footing to top of parapet and horizontally along this joint to outside face of parapet and horizontally along this joint to the outside face of wall. ***(U - Type wings or Retaining walls with parapets)***

Joint seal to extend from top of footing to top of wall. ***(Retaining Walls)***

Joint seal to extend from top of footing to top of wall. For the joints between the flared wings and superstructure, the joint seal shall extend from top of abutment backwall to top of wing. ***(Flared wingwall)***

REINFORCEMENT:

No reinforcement shall pass through expansion or contraction joints.

Reinforcement shall pass through construction joints.

CONNECTICUT BRIDGE DESIGN MANUAL	VERTICAL STEM JOINT DETAILS	Issue Date: 10/03 Revision Date: Plate Number: 3.6.1

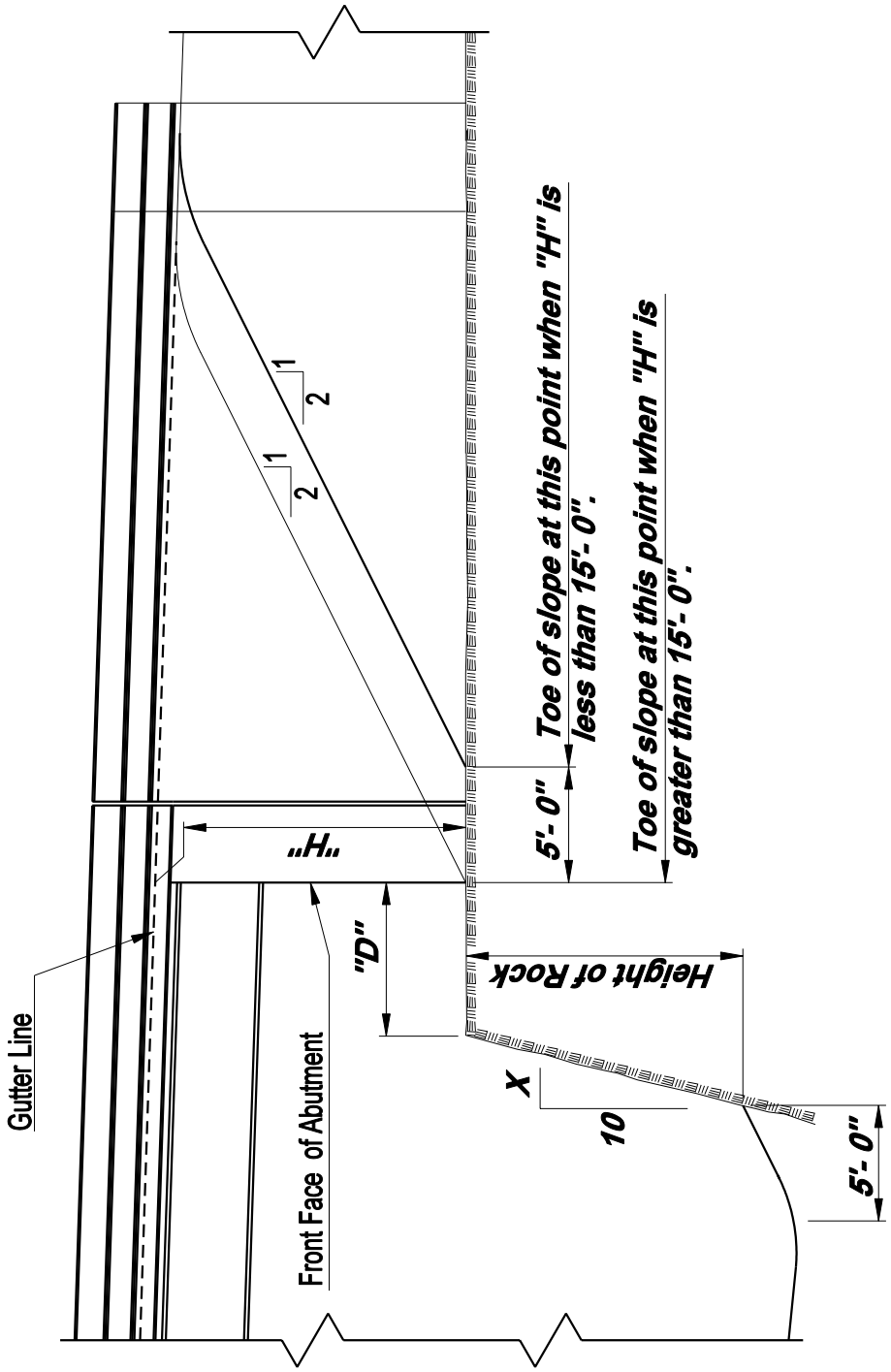

NOTE: Dimensions "D" and "X" shall depend upon the competence and the height of the rock encountered and as recommended by the Geotechnical Engineer.

CONNECTICUT BRIDGE DESIGN MANUAL	ABUTMENT AND TOE OF SLOPE LOCATIONS HEIGHT OF ROCK > 8'- 0"	Issue Date: 10/03 Revision Date: Plate Number: 3.6.2

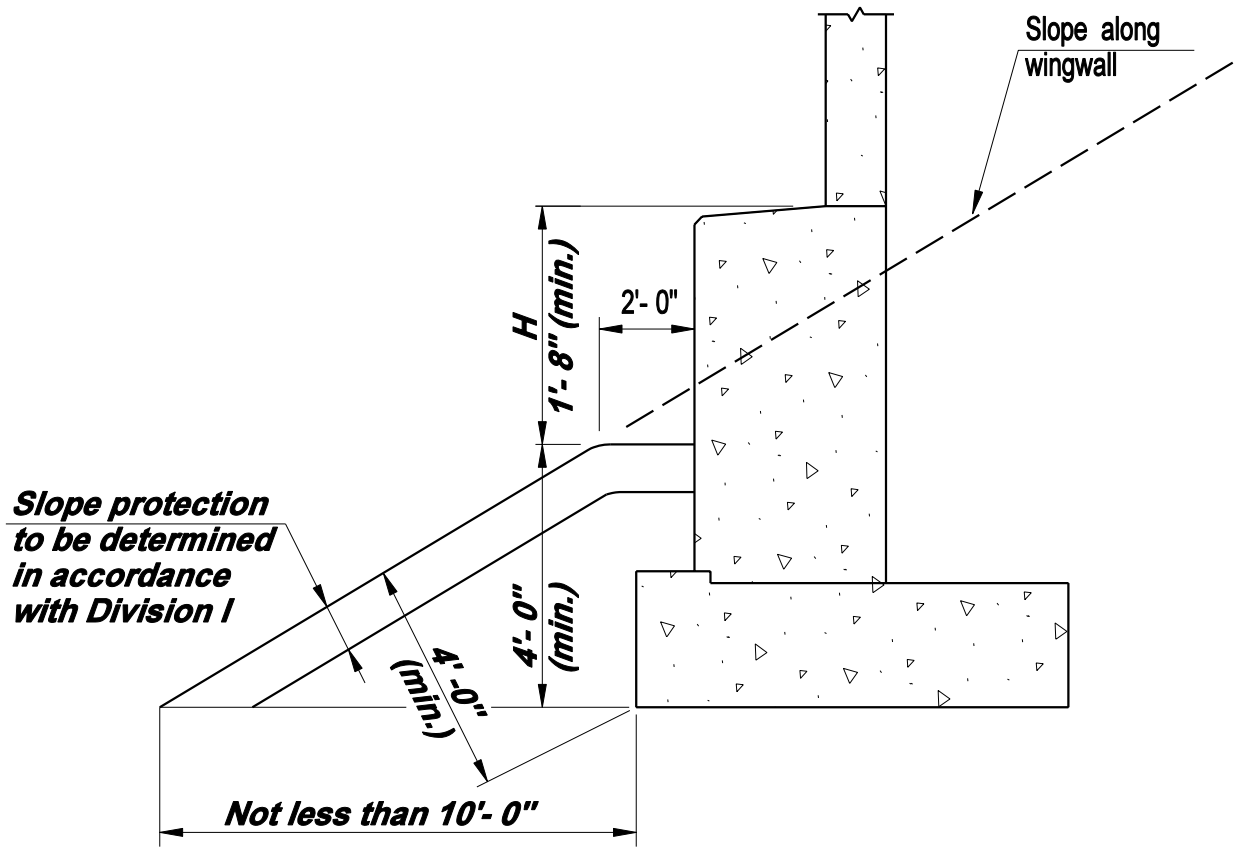

CONNECTICUT BRIDGE DESIGN MANUAL	TYPICAL EMBANKMENT ABUTMENT NORMAL SECTION (H ≤ 5'- 0")	Issue Date: 10/03 Revision Date: Plate Number: 3.6.3

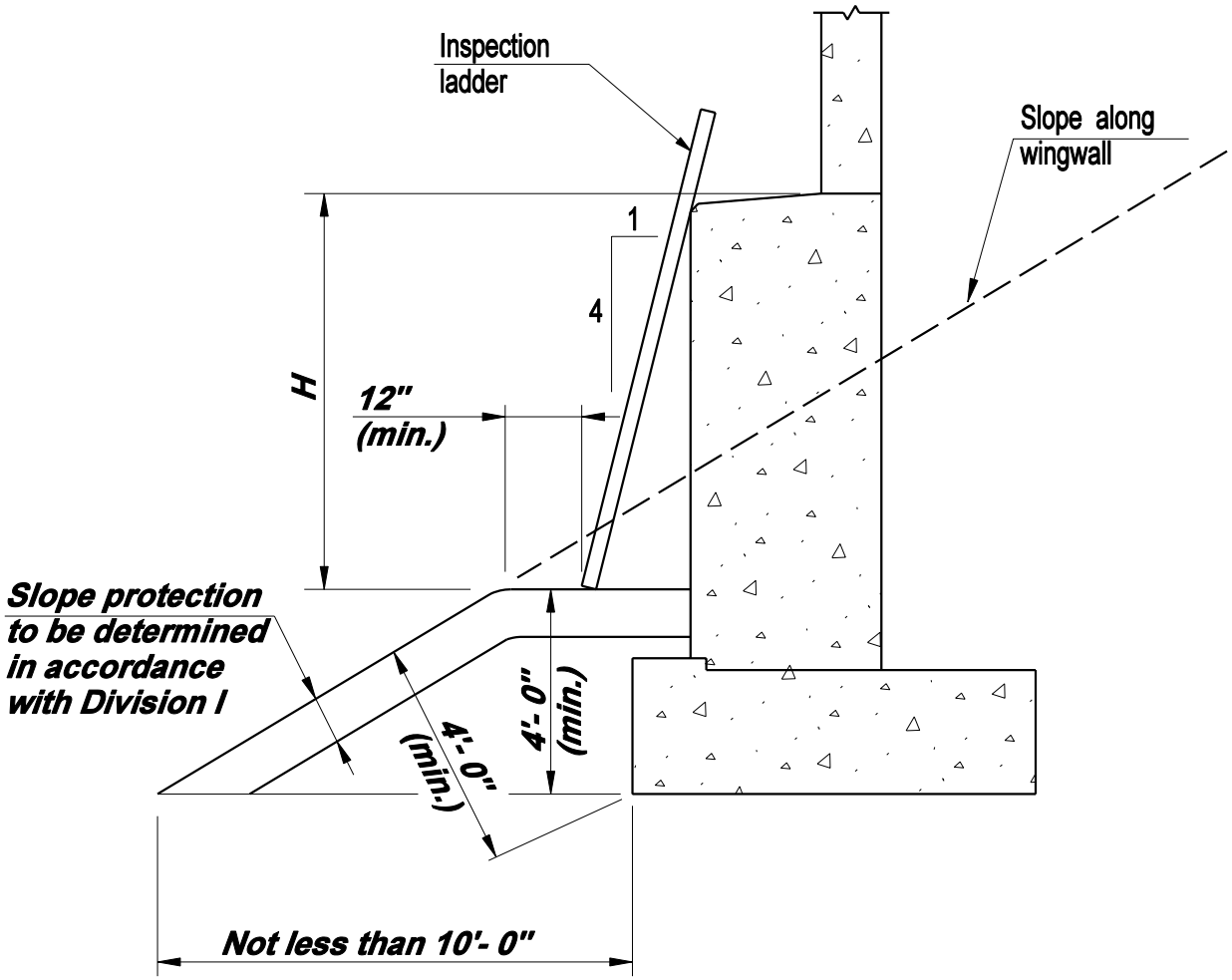

CONNECTICUT BRIDGE DESIGN MANUAL	TYPICAL EMBANKMENT ABUTMENT NORMAL SECTION (5'- 0" < H ≤ 8'- 0")	Issue Date: 10/03 Revision Date: Plate Number: 3.6.4

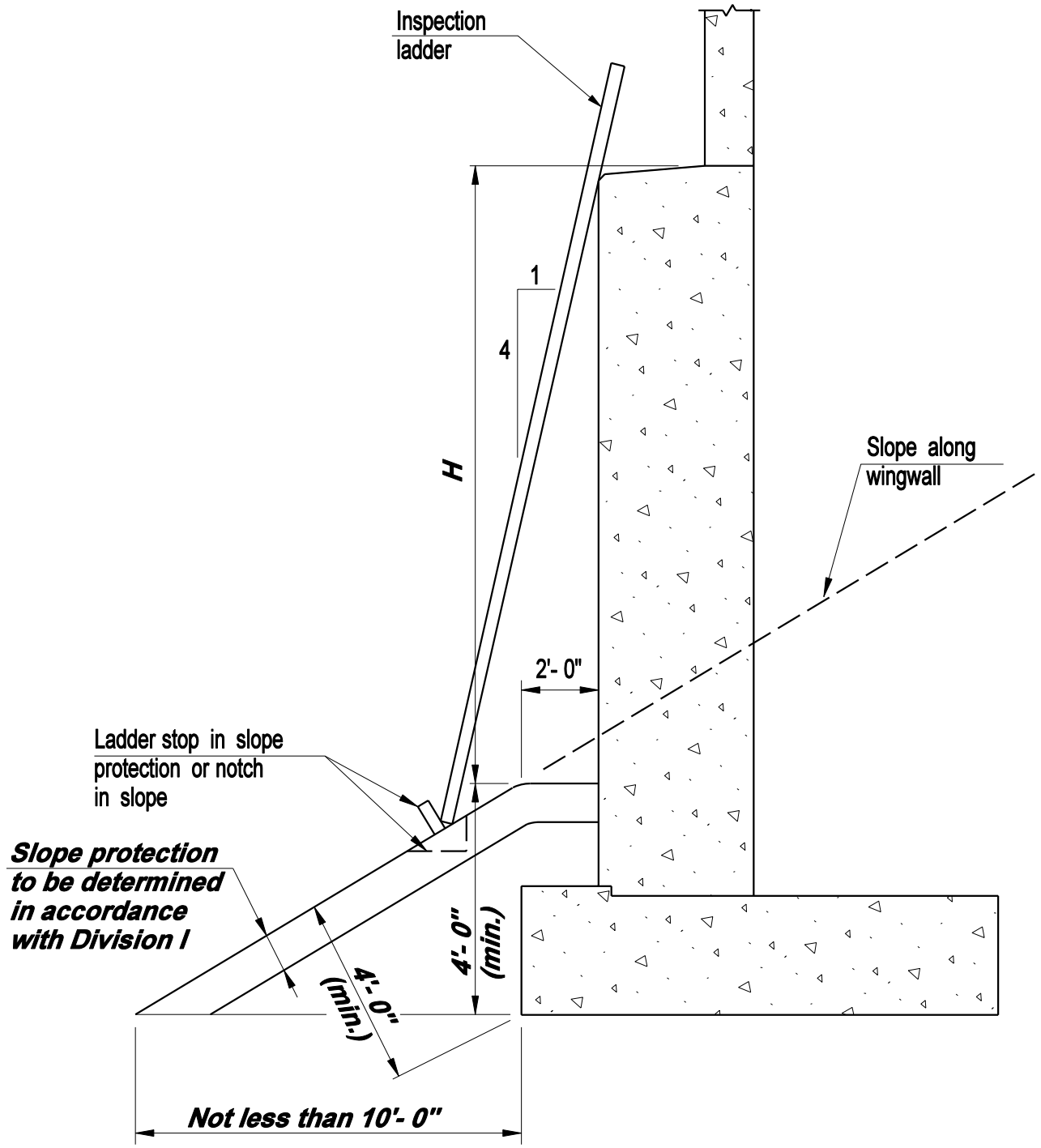

CONNECTICUT BRIDGE DESIGN MANUAL	TYPICAL EMBANKMENT ABUTMENT NORMAL SECTION (H > 8'- 0")	Issue Date: 10/03 Revision Date: Plate Number: 3.6.5

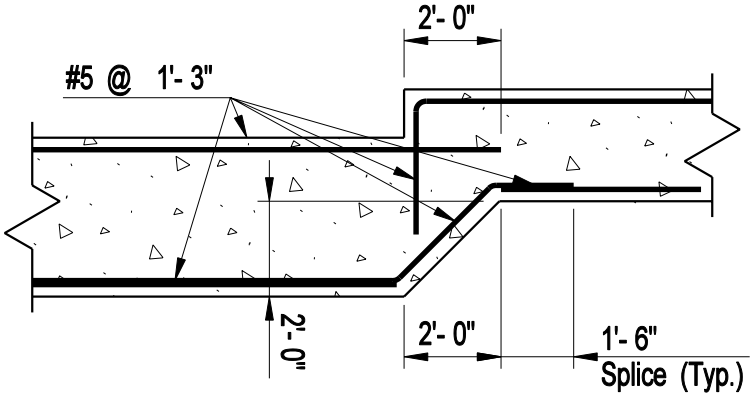

STEPPED FOOTING - 2'- 0"

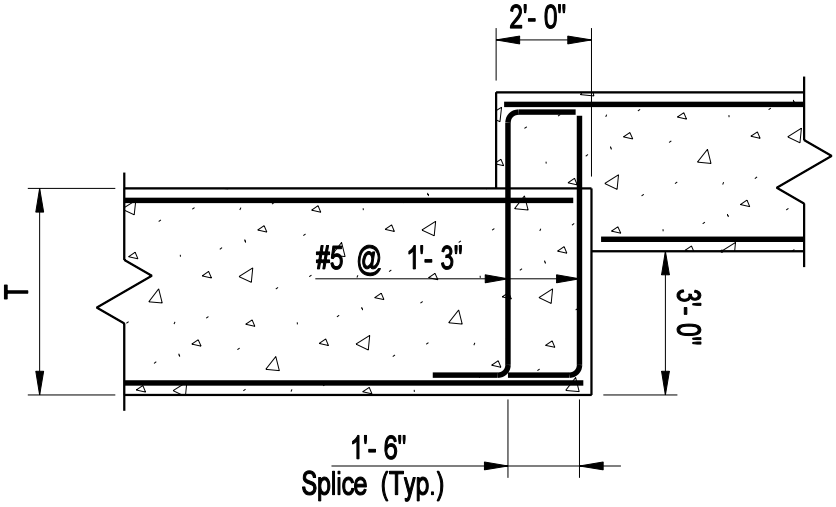

STEPPED FOOTING - 3'- 0" to (T + 6")

DESIGN INFORMATION:

1. ***The minimum step considered should be 2'- 0".***

2. ***Steps should be increased in 12" increments.***

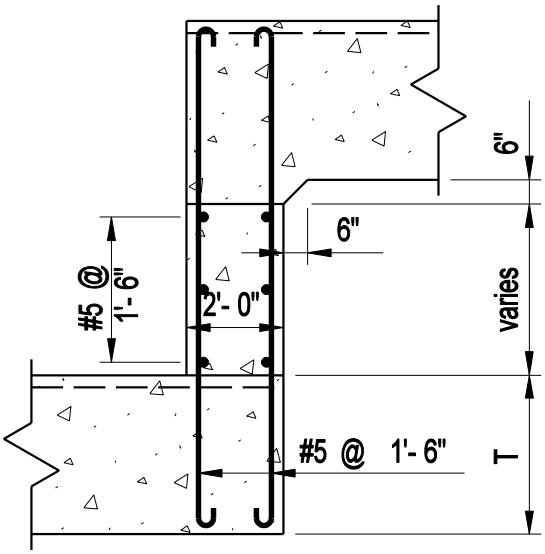

STEPPED FOOTING > (T+ 6")

CONNECTICUT BRIDGE DESIGN MANUAL	FOOTING STEP DETAILS	Issue Date: 10/03 Revision Date: Plate Number: 3.6.6