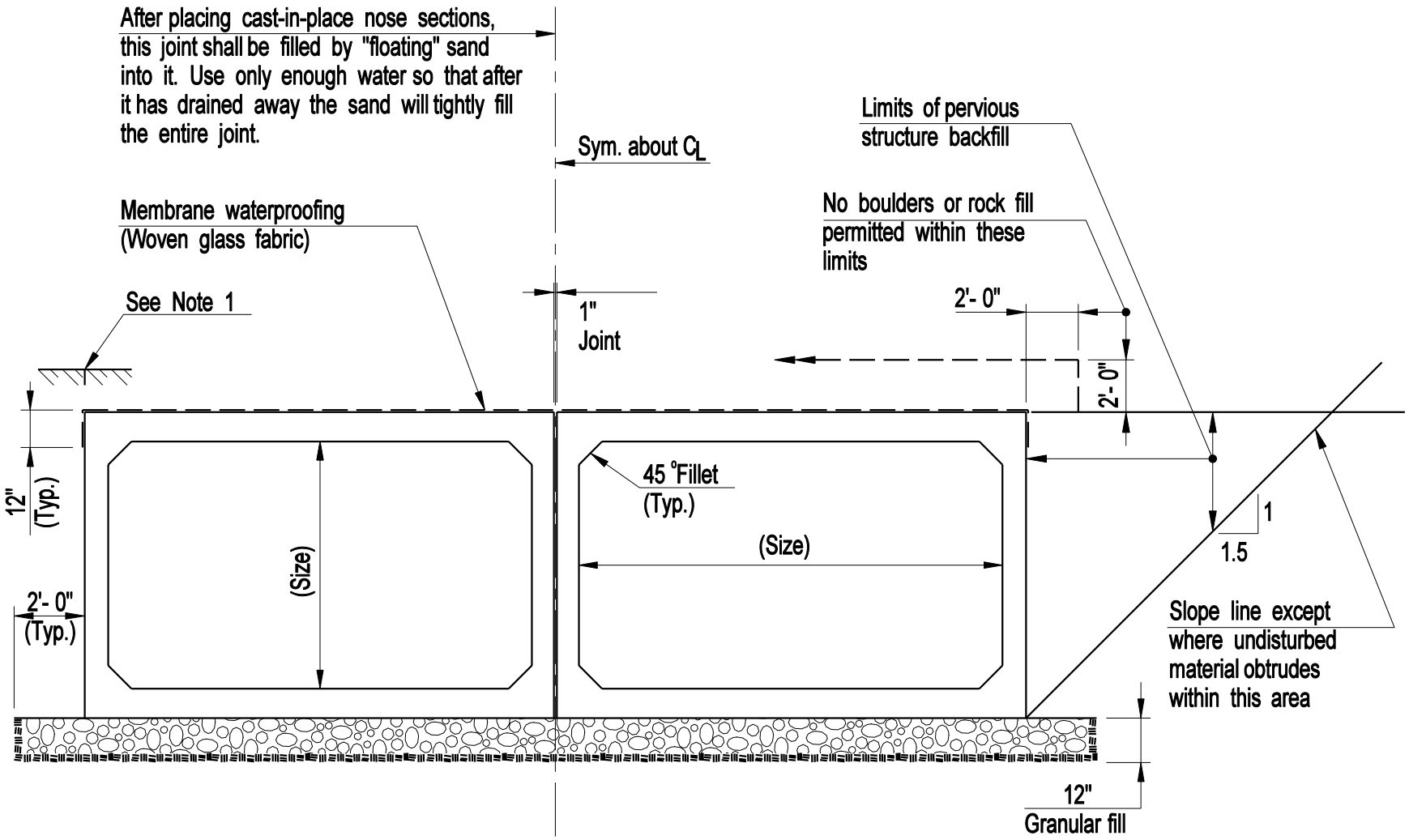

Maximum allowable design foundation pressure = ( ) psi

NOTE:

1. Cut overlay with a ⅜" x 1¾" deep kerf and fill with a pourable sealant when cover is less than 2'- 0" (from top of box to wearing surface). Cost of cutting and sealing to be paid for at the contact unit price for "Sawing and Sealing Joints".

CONNECTICUT BRIDGE DESIGN MANUAL

PRECAST BOX CULVERT TYPICAL SECTION

Issue Date: 10/03

Revision Date:

Plate Number: 10.1.2

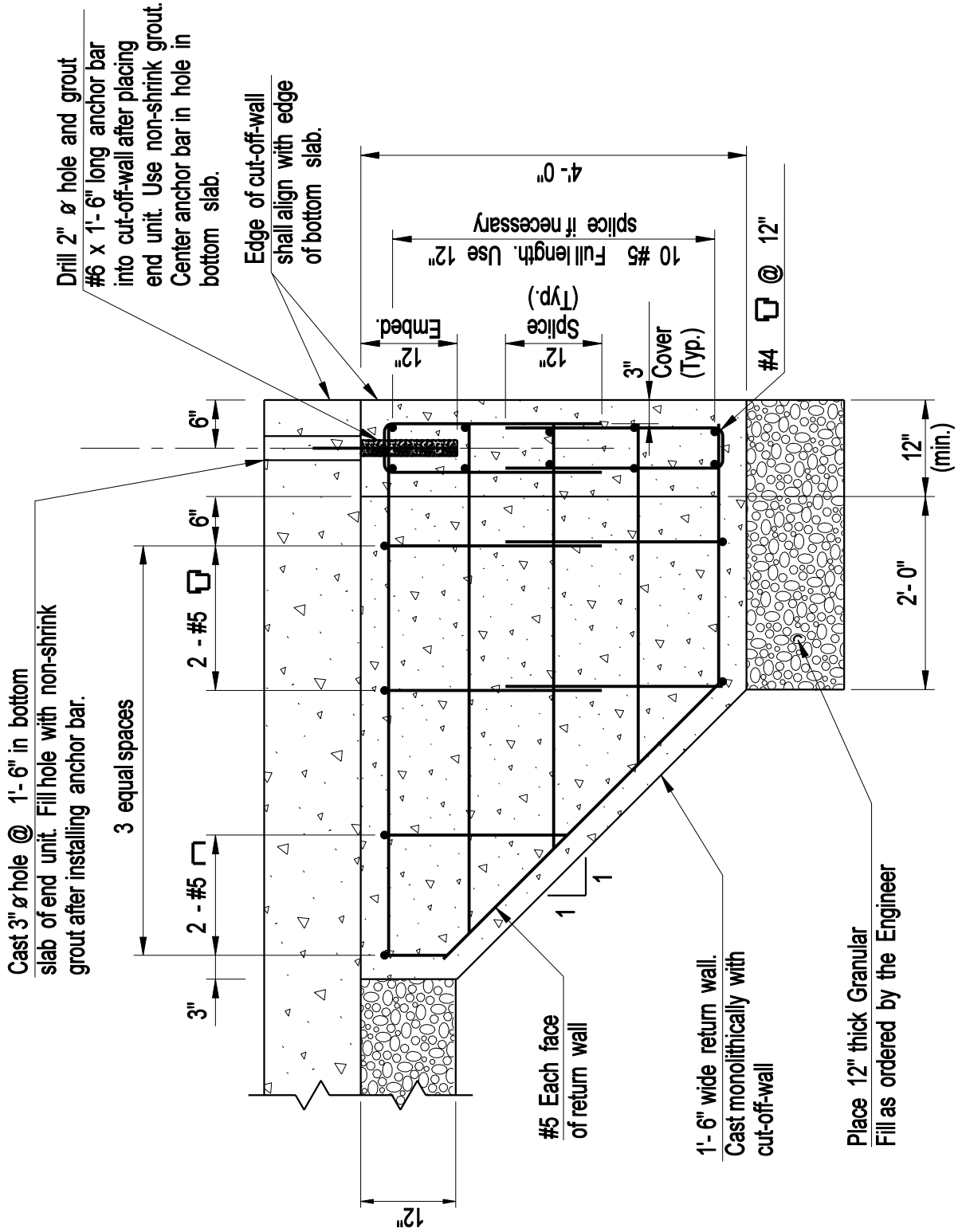

CONNECTICUT BRIDGE DESIGN MANUAL	PRECAST BOX CULVERT CAST-IN-PLACE CUTOFF AND RETURN WALL DETAIL	Issue Date: 10/03 Revision Date: Plate Number: 10.1.3

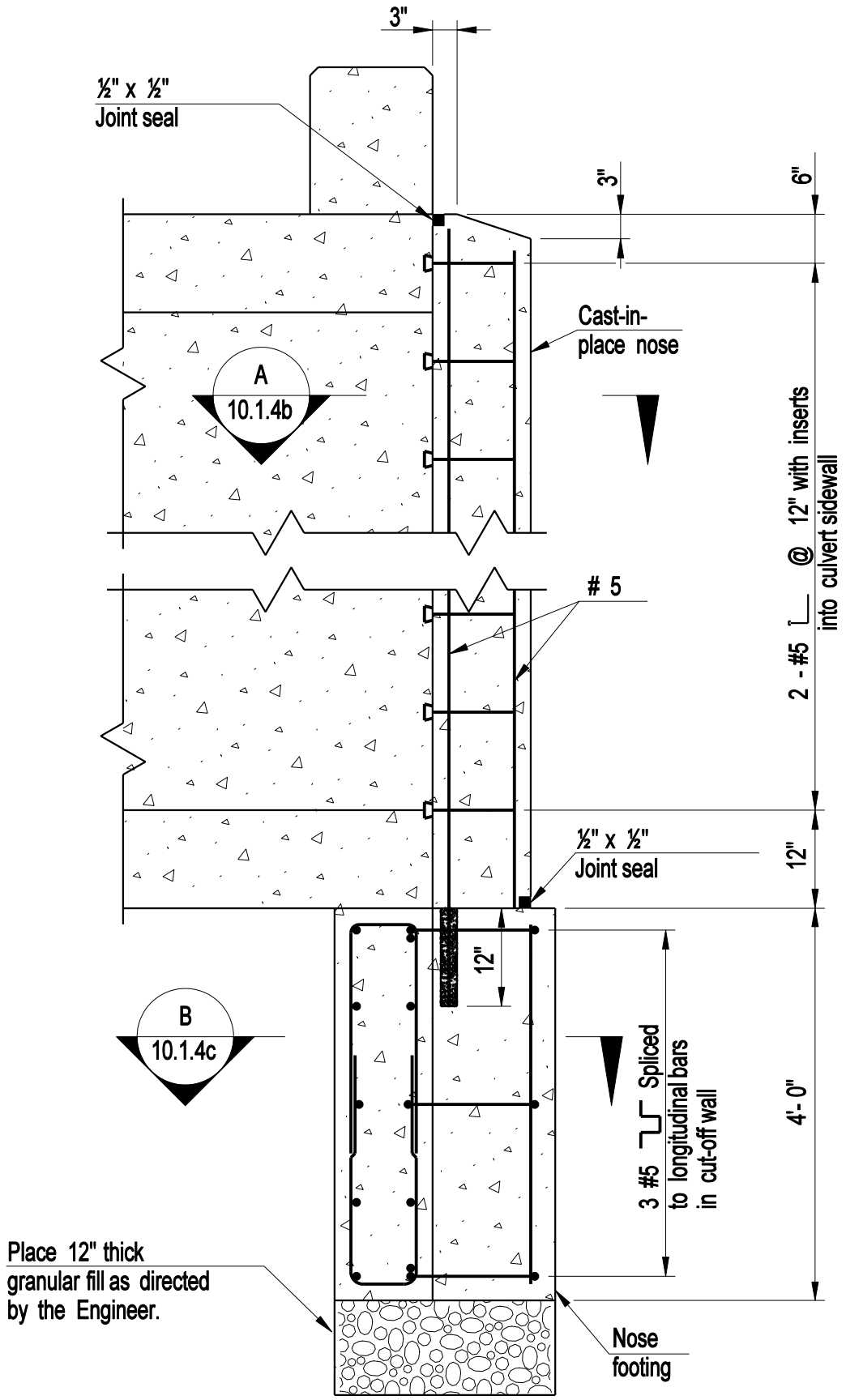

CONNECTICUT BRIDGE DESIGN MANUAL	PRECAST BOX CULVERT CAST-IN-PLACE NOSE AND FOOTING DETAIL	Issue Date: 10/03 Revision Date: Plate Number: 10.1.4a

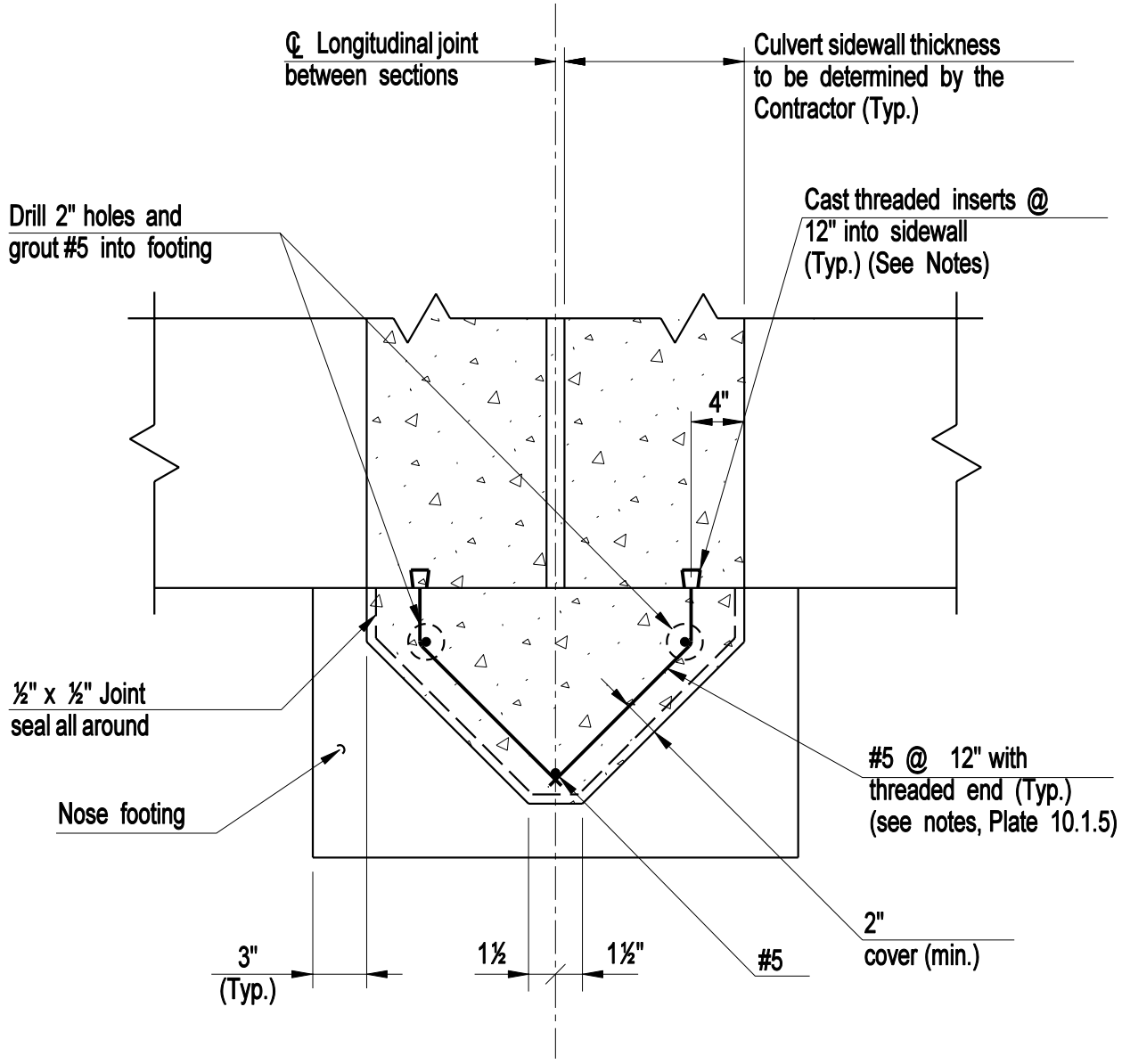

SECTION A 10.1.4a

CONNECTICUT BRIDGE DESIGN MANUAL	PRECAST BOX CULVERT CAST-IN-PLACE NOSE SECTION	Issue Date: 10/03 Revision Date: Plate Number: 10.1.4b

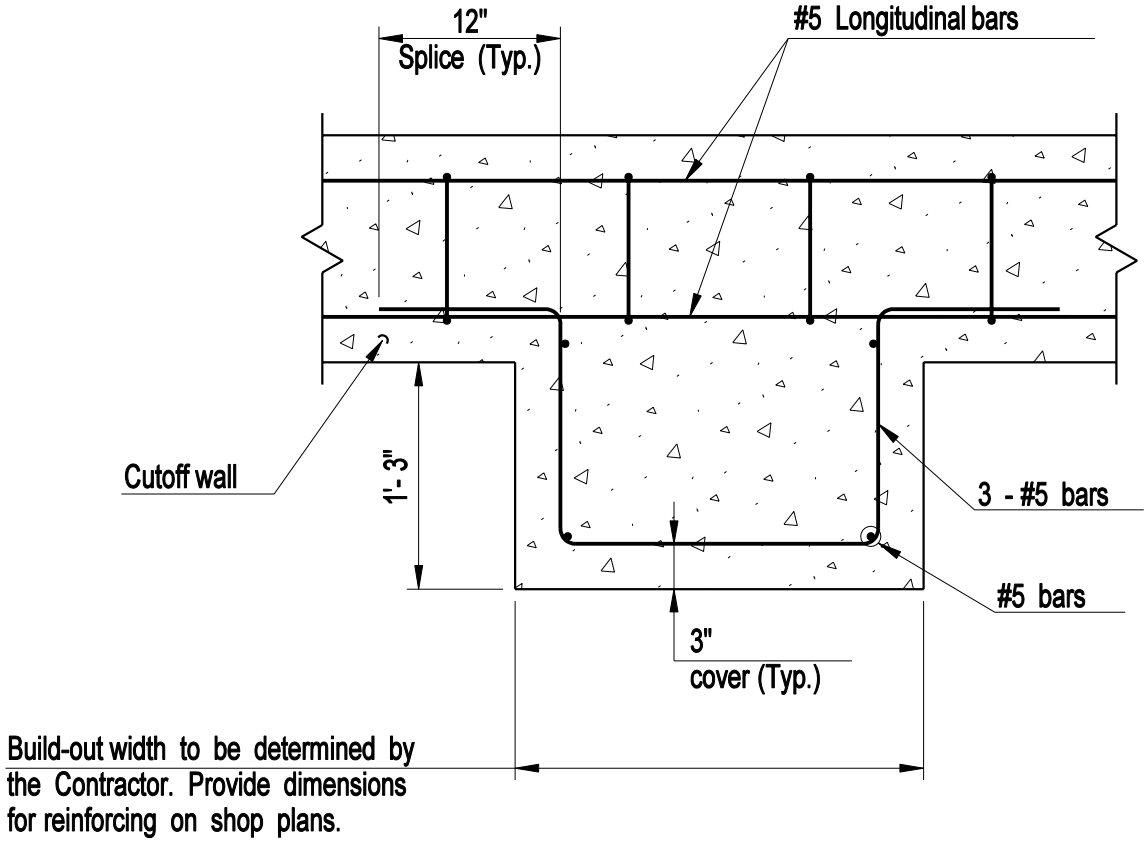

SECTION B / 10.1.4a

CONNECTICUT BRIDGE DESIGN MANUAL	PRECAST BOX CULVERT CAST-IN-PLACE NOSE FOOTING SECTION	Issue Date: 10/03 Revision Date: Plate Number: 10.1.4c

Notes:

1. The Contractor shall design, manufacture and construct Precast Box Culvert in accordance with the special provisions for "Precast Concrete Box Culvert" and the inside dimensions, length and details shown on these plans.

2. All inserts or holes cast into the culvert sections for the sole purpose of handling and setting the units shall be grouted over to a smooth finish upon completion of the work.

3. Non-shrink grout shall be used to grout the reinforcement.

4. The cost of furnishing and installing inserts shall be included in the item "11'- 0" x 9'- 0" Precast Concrete Box Culvert" and shall be one of the following:
   1. Star Expansion Industries Corp. Type P-35-T
   2. Richmond Screw Anchor Co. Type LF
   3. Dayton Superior Corp. Type F-57

   All inserts shall have a corrosive resistant coating.

5. The #5 bars with threaded end shall be compatible with the threaded inserts (see note 4). Threads shall be long enough to fully engage the inserts. The threaded bars shall conform to the requirements of ASTM A615, Grade 60.

6. All reinforcement to have 2" cover unless otherwise noted.

CONNECTICUT BRIDGE DESIGN MANUAL	PRECAST BOX CULVERT NOTES	Issue Date: 10/03 Revision Date: Plate Number: 10.1.5

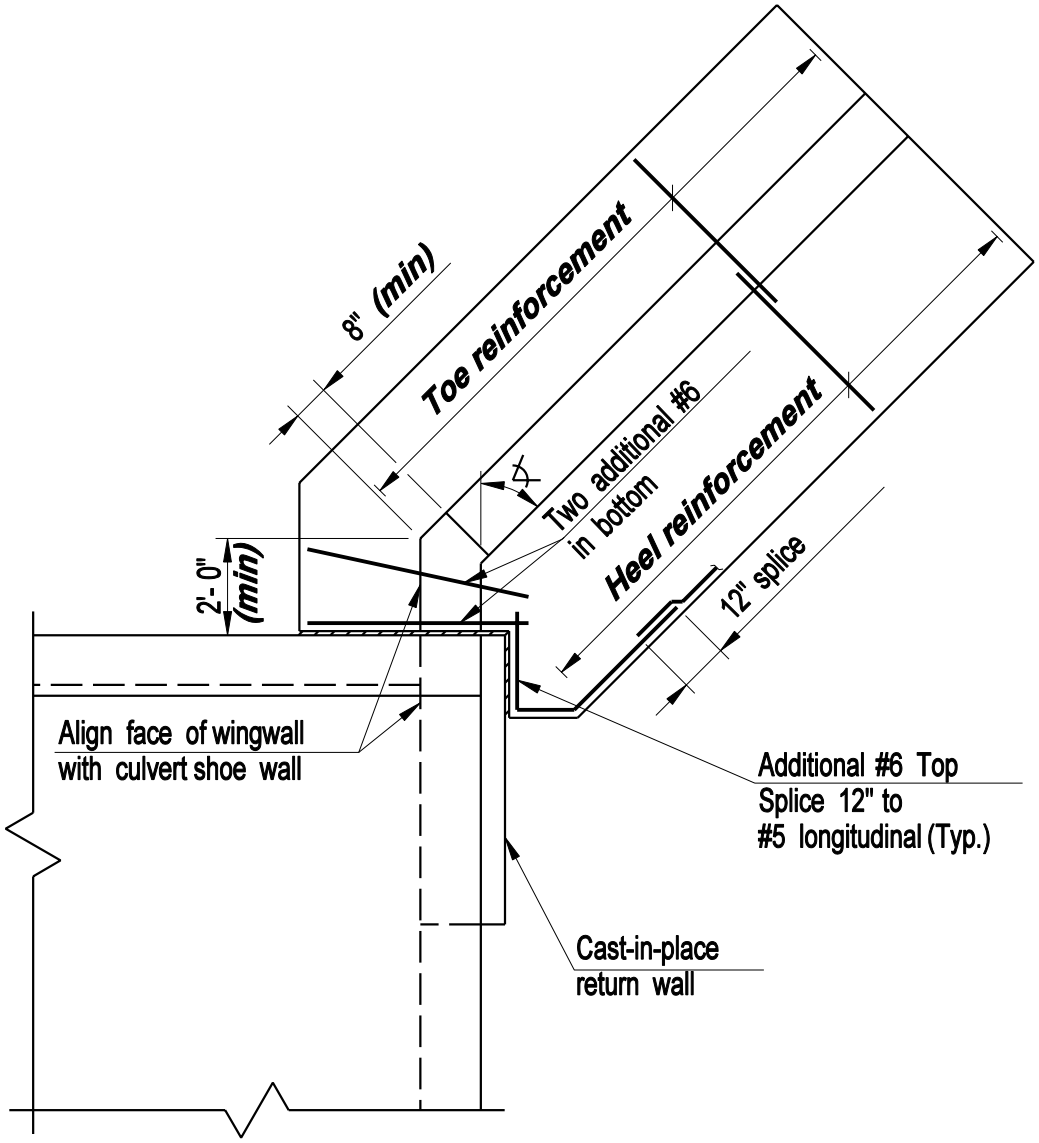

CONNECTICUT BRIDGE DESIGN MANUAL	PRECAST BOX CULVERT TYPICAL WINGWALL LAYOUT	Issue Date: 10/03 Revision Date: Plate Number: 10.1.6

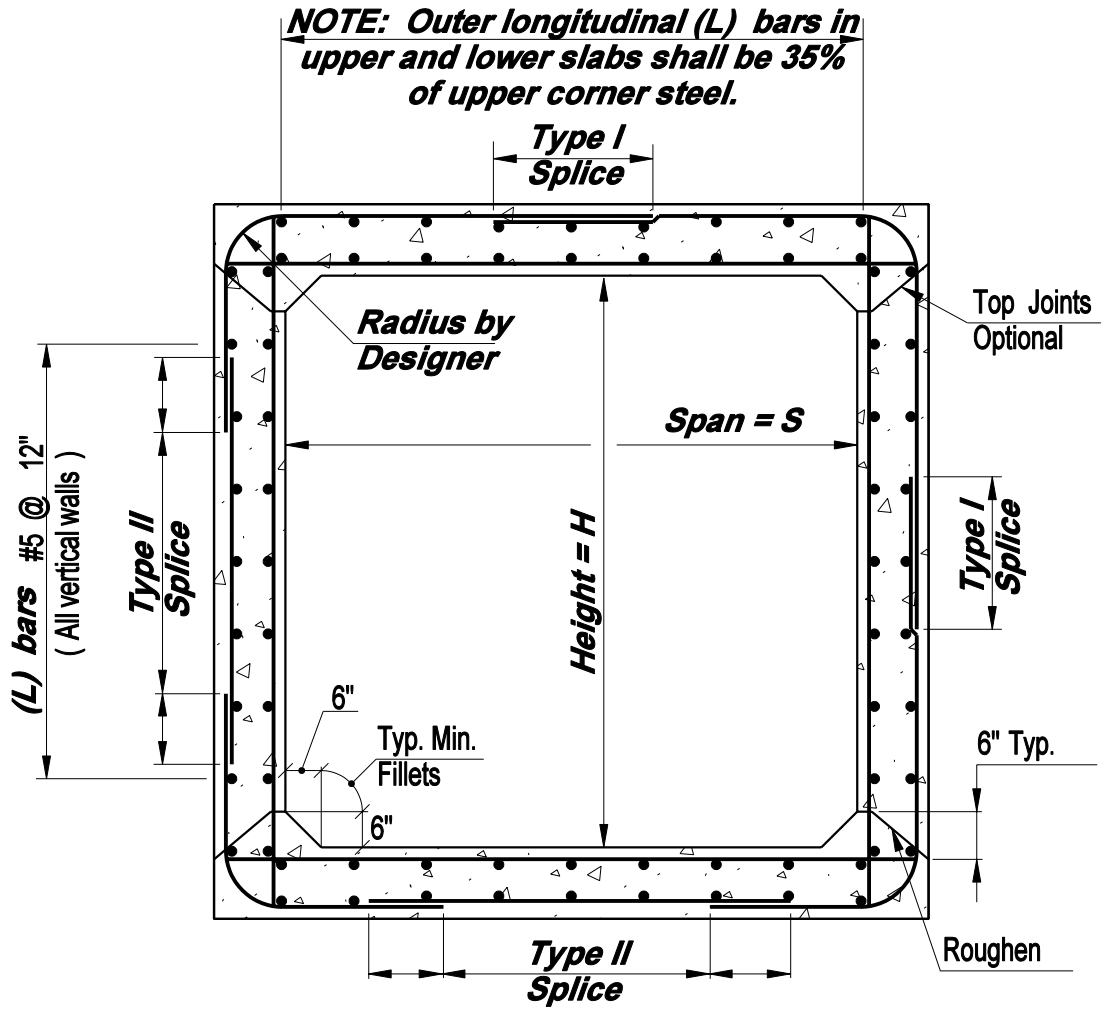

DESIGN INFORMATION:

Minimum thickness of top and bottom slab and sidewalls to be 12".

All bars shall have 2" cover except at bottom of lower slab where cover shall be 3". Where structure is exposed to the action of salt water, all cover shall be 4".

Minimum bar requirements shall be #5 at 12".

Location of lap splices shall conform to either type (Type I or Type II) shown above. Lapped splices and development lengths shall be determined by the designer in accordance with latest AASHTO design criteria.

When the fill on the box is less than 2'- 0", the longitudinal (L) bars in the lower face of the top slab shall be a percentage of the main reinforcing steel required for positive moments as given in the latest AASHTO design criteria.

Provisions for fishway may be required in bottom slab.

CONNECTICUT BRIDGE DESIGN MANUAL	CAST-IN-PLACE BOX CULVERT REINFORCEMENT DETAILS	Issue Date: 10/03 Revision Date: Plate Number: 10.2.1

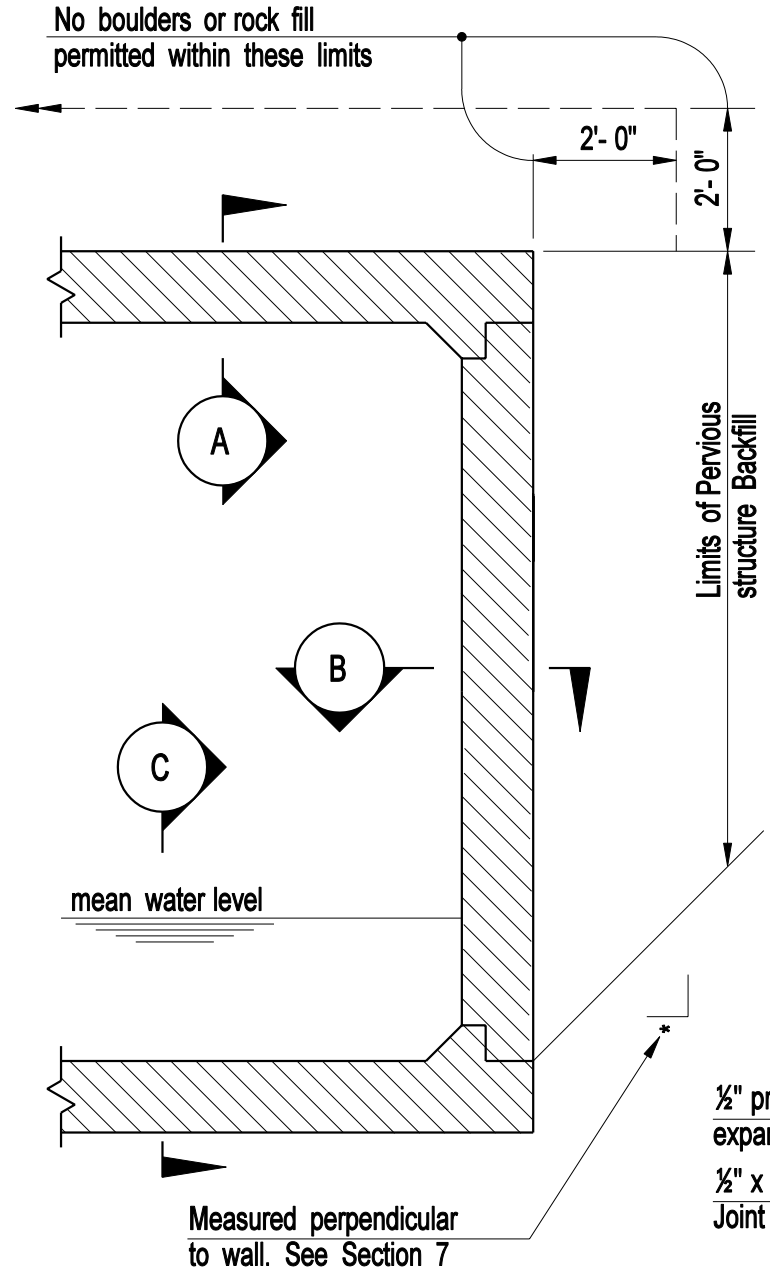

= Indicates ½" preformed expansion joint filler

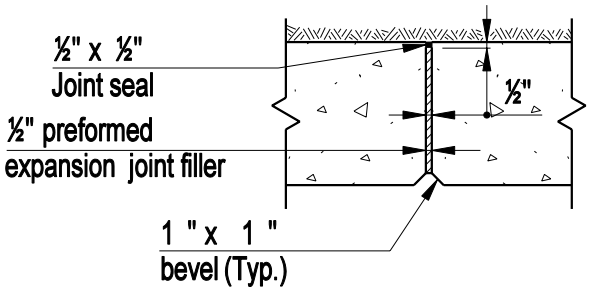

SECTION A

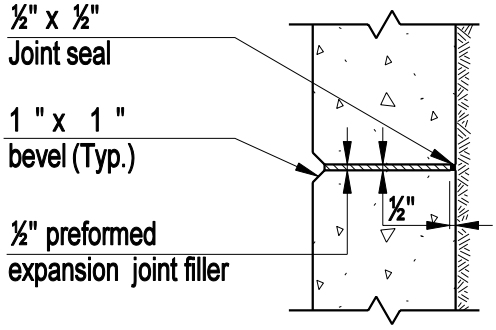

SECTION B

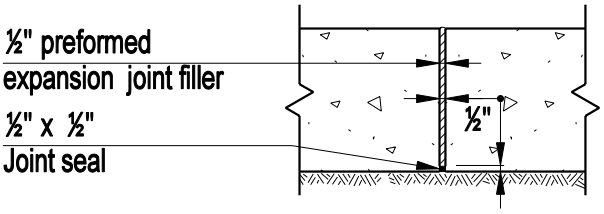

SECTION C

PARTIAL SECTION THRU CULVERT AT EXPANSION JOINT

DESIGN INFORMATION:

The spacing of expansion joints in the culvert shall not exceed 30'- 0".

CONNECTICUT BRIDGE DESIGN MANUAL	JOINT AND BACKFILL DETAILS FOR BOX CULVERTS	Issue Date: 10/03 Revision Date: Plate Number: 10.2.2