Connecticut Department of
Energy & Environmental Protection

DEPARTMENT OF ENVIRONMENTAL PROTECTION
CENTRAL PERMIT PROCESSING UNIT
MAR 03 2015
RECEIVED

CPPU USE ONLY
App #:
Doc #:
Check #:

Permit Application Transmittal Form

Please complete this transmittal form in accordance with the instructions in order to ensure the proper handling of your application(s) and the associated fee(s). Print legibly or type.

Project #12-95

Part I: Applicant Information:

- **If an applicant is a corporation, limited liability company, limited partnership, limited liability partnership, or a statutory trust, it must be registered with the Secretary of State. If applicable, applicant's name shall be stated **exactly** as it is registered with the Secretary of State.*
- *If an applicant is an individual, provide the legal name (include suffix) in the following format: First Name; Middle Initial; Last Name; Suffix (Jr, Sr., II, III, etc.).*

Applicant: **Connecticut Department of Transportation**

Mailing Address: **1107 Cromwell Avenue**

City/Town: **Rocky Hill** State: **CT** Zip Code: **06067**

Business Phone: ext.:

Contact Person: **Ravi V. Chandran** Phone: **860-258-4601** ext.

E-Mail: **ravi.chandran@ct.gov**

Applicant (check one): ☐ individual ☐ *business entity ☐ federal agency ☒ state agency ☐ municipality ☐ tribal

*If a business entity, list type (e.g., corporation, limited partnership, etc.):

☐ Check if any co-applicants. If so, attach additional sheet(s) with the required information as supplied above.

Please provide the following information to be used for *billing purposes only*, if different:

Company/Individual Name:

Mailing Address:

City/Town: State: Zip Code:

Contact Person: Phone: ext.

Part II: Project Information

Brief Description of Project: *(Example: Development of a 50 slip marina on Long Island Sound)*

Safety Improvements on Route 533 at Box Mountain Road (work includes: realignment of horizontal/vertical curves and full-depth reconstruction)

Location (City/Town): **Bolton, CT**

Other Project Related Permits (*not* included with this form):

Permit Description	Issuing Authority	Submittal Date	Issuance Date	Denial Date	Permit #

Part III: Individual Permit Application and Fee Information

New, Mod. or Renew	Individual Permit Applications	Initial Fees	No. of Permits Applied For	Total Initial Fees	Original + Required Copies
	AIR EMISSIONS				
	New Source Review ☐ Revision ☐ minor mod	$940.00			1 + 0
	Title V Operating Permits ☐ Revision ☐ minor mod ☐ non-minor mod	none			1 + 0
	Title IV	none			1 + 0
	Clean Air Interstate Rule (CAIR)	none			1 + 0
	WATER DISCHARGES				
	To Groundwater	$1300.00			1 + 1
	To Sanitary Sewer (POTW)	$1300.00			1 + 1
	To Surface Water (NPDES)	$1300.00			1 + 1
	INLAND WATER RESOURCES-				
	Dam Safety	none			1 + 2
	Flood Management Certification	none			1 + 1
	Inland Wetlands and Watercourses	none			1 + 5
	Inland 401 Water Quality Certification	none			
	FERC- Hydropower Projects- 401 Water Quality Certification	none			1 +1
	Water Diversion	★			1 + 5
	OFFICE OF LONG ISLAND SOUND PROGRAMS				
	Certificate of Permission	$375.00			1 + 2
	Coastal 401 Water Quality Certification	none			1 + 2
	Structures and Dredging/and Fill/Tidal Wetlands	$660.00			1 + 2
	WASTE MANAGEMENT				
	Aerial Pesticide Application	★			1 + 2
	Aquatic Pesticide Application	$200.00			1 + 0
	CGS Section 22a-454 Waste Facilities	★			1 + 1
	Disruption of a Solid Waste Disposal Area	$0			1 + 1
	Hazardous Waste Treatment, Storage and Disposal Facilities	★			1 + 1
	Marine Terminal License	$375.00			1 + 0
	Stewardship	$4000.00			1 + 1
	Solid Waste Facilities	★			1 + 1
	Waste Transportation	★			1 + 0
		Subtotal ➡			
	GENERAL PERMITS and AUTHORIZATIONS	Subtotals Page 3 &4 ➡	1	$3000.00	
	Enter subtotals from Part IV, pages 3 - 6 of this form	Subtotals Page 5 ➡			
		Subtotals Page 6 ➡			
		TOTAL ➡	1	$3000.00	
	☐ Indicate whether municipal discount or state waiver applies.	Less Applicable Discount ➡			
		AMOUNT REMITTED ➡		$3000.00	
Check # ➡		Check or money order should be made payable to: "Department of Energy and Environmental Protection"			

★ **See fee schedule on individual application.**

Part IV: General Permit Registrations and Requests for Other Authorizations Application and Fee Information

✓	General Permits and Other Authorizations	Initial Fees	No. of Permits Applied For	Total Initial Fees	Original + Required Copies
	AIR EMISSIONS				
☐	Limit Potential to Emit from Major Stationary Sources of Air Pollution	$2760.00			1 + 0
☐	Diagnostic and Therapeutic X-Ray Devices (Medical X-Ray) Registration	$190.00/Xray device			1 + 0
☐	Radioactive Materials and Industrial Device Registration (Ionizing Radiation)	$200.00			1 + 0
☐	Emergency/Temporary Authorization	★★			★★
☐	License Revocation Request	$0			★★
☐	Other, (please specify):				
	WATER DISCHARGES				
☐	Boiler Blowdown Wastewater	Expired- wastewater discharge authorized under MISC GP			
☐	Categorical Industry User to a POTW Discharges > 10,000 gpd Discharges < 10,0000 gpd	 $6250.00 $3125.00			1 + 0
☐	Domestic Sewage	$625.00			1 + 0
☐	Food Preparation Establishment Wastewater	No Registration			
☐	Food Processing Wastewater	$500.00			1 + 0
☐	Groundwater Remediation Wastewater to a Sanitary Sewer	$500.00			1 + 0
☐ ☐	Groundwater Remediation Wastewater to a Surface Water Registration Only Approval of Registration by DEEP	 $625.00 $1250.00			1 + 0
☐ ☐	Hydrostatic Pressure Testing Wastewater Registration Only Approval of Registration by DEEP (natural gas pipelines)	 $625.00 $1250.00			1 + 0
☐ ☐	Miscellaneous Discharges of Sewer Compatible Wastewater Registration Only Approval of Registration by DEEP	 $500.00 $1000.00			1 + 0
☐	Nitrogen Discharges	No Registration			
☐	Non-Contact Cooling and Heat Pump Water (Minor)	$625.00			1 + 0
☐	Photographic Processing Wastewater (Minor)	Expired- wastewater discharge authorized under MISC GP			
☐	Point Source Discharges from Application of Pesticides	$200.00			1 + 0
☐	Printing & Publishing Wastewater (Minor) Flow < 40 gpd	$500.00 $100.00			1 + 0
☐	Stormwater Associated with Commercial Activities	$300.00			1 + 0
☐	Stormwater Associated with Industrial Activities <50 employees–see general permit for additional requirements >50 employees–see general permit for additional requirements	 $500.00 $1000.00			1 + 0
☒	Stormwater & Dewatering Wastewaters-Construction Activities	★	1	$3000.00	1 + 0
☐	Stormwater from Small Municipal Separate Storm Sewer Systems (MS4)	$250.00			1 + 0

★ See fee schedule on registration/application.

★★ Contact the specific permit program for this information. (Contact numbers are provided in the instructions)

Part IV: General Permit Registrations and Requests for Other Authorizations (continued)

WATER DISCHARGES (continued)				
☐ Subsurface Sewage Disposal Systems Serving Existing Facilities	★ ★			1 + 0
☐ Swimming Pool Wastewater - Public Pools and Contractors	$500.00			1 + 0
☐ Tumbling or Cleaning of Parts Wastewater (Minor)	Expired- wastewater discharge authorized under MISC GP			
Vehicle Maintenance Wastewater ☐ Registration Only ☐ Approval of Registration by DEEP	 $625.00 $1250.00			1 + 0
☐ Water Treatment Wastewater	$625.00			1 + 0
☐ Emergency/Temporary Authorization - Discharge to POTW	$1500.00			1 + 0
☐ Emergency/Temporary Authorization - Discharge to Surface Water	$1500.00			1 + 0
☐ Emergency/Temporary Authorization - Discharge to Groundwater	$1500.00			1 + 0
☐ Other, (please specify):				
Note: Carry subtotals over to Part III, page 2 of this form. Subtotal ➡		1	$3000.00	

★ See fee schedule on registration/application.

★★ Contact the specific permit program for this information. (Contact numbers are provided in the instructions)

Part IV: General Permit Registrations and Requests for Other Authorizations (continued)

✓	General Permits and Other Authorizations	Initial Fees	No. of Permits Applied For	Total Initial Fee	Original + Required Copies
	AQUIFER PROTECTION PROGRAM				
☐	Registration for Regulated Activities	$625.00			1 + 0
☐	Permit Application to Add a Regulated Activity	$1250.00			1 + 0
☐	Exemption Application from Registration	$1250.00			1 + 0
	INLAND WATER RESOURCES				
☐	Diversion of Remediation Groundwater	No Registration			
☐	Diversion of Water for Consumptive Use: Reauthorization Categories	$1000.00			1 + 2
☐	Diversion of Water for Consumptive Use: Authorization Required	$2500.00			1 + 4
☐	Diversion of Water for Consumptive Use: Filing Only	$1500.00			1 + 4
☐	Programmatic General Permit	★			1 +3
☐	Water Resource Construction Activities	★			1 +0
☐	Emergency/Temporary Authorization	★★			★★
☐	Notice of High Hazard Dam or a Significant Hazard Dam	$0			1 +0
☐	Other, (please specify):				
	OFFICE OF LONG ISLAND SOUND PROGRAMS				
☐	4/40 Docks	$700.00			1 + 1
☐	Beach Grading	$100.00			1 + 1
☐	Buoys or Markers	No Registration			
☐	Coastal Remedial Activities Required by Order	$700.00			1 + 1
☐	Dock Reconstruction	$300.00			1 + 1
☐	Harbor Moorings	No Registration			
☐	Maintenance of Catch Basins and Tide Gates	No Registration			
☐	Marina and Mooring Field Reconfiguration	$700.00			1 + 1
☐	Minor Seawall Repair	No Registration			
☐	Non-harbor Moorings	$100.00			1 + 1
☐	Osprey Platforms and Perch Poles	none			1 + 1
☐	Pump-out Facilities (no fee for Clean Vessel Act grant recipients)	$100.00			1 + 1
☐	Programmatic General Permit	★			1 + 1
☐	Removal of Derelict Structures	$100.00			1 + 1
☐	Residential Flood Hazard Mitigation	$100.00			1 + 1
☐	Swim Floats	$100.00			1 + 1
☐	Emergency/Temporary Authorization	★★			★★
☐	Other, (please specify):				
	Note: Carry subtotals over to Part III, page 2 of this form. Subtotal ➡				

★ See fee schedule on registration/application.

★★ Contact the specific permit program for this information. (Contact numbers are provided in the instructions)

Part IV: General Permit Registrations and Requests for Other Authorizations (continued)

✓	General Permits and Other Authorizations	Initial Fees	No. of Permits Applied For	Total Initial Fee	Original + Required Copies
	WASTE MANAGEMENT				
☐	Addition of Grass Clippings at Registered Leaf Composting Facilities	$500.00			1 + 0
☐	Beneficial Use Determination	★			
	Certain Recycling Facilities:				
☐	Drop-site Recycling Facility	$200.00			1 + 0
☐	Limited Processing Recycling Facility	$500.00			1 + 0
☐	Recyclables Transfer Facility	$500.00			1 + 0
☐	Single Item Recycling Facility	$500.00			1 + 0
$0 ☐	Collection and Storage of Post Consumer Paint	$0			
	Contaminated Soil and/or Staging Management (Staging/Transfer)				
☐	Registration Only	$250.00			1 + 0
☐	Approval of Registration by DEEP	$1500.00			1 + 0
☐	Renewals	$750.00			
☐	Connecticut Solid Waste Demonstration Project	$1000.00			1 + 0
☐	Disassembling Used Electronics	$2000.00			1 + 0
☐	Leaf Composting Facility	none			1 + 1
☐	Municipal Transfer Station	$800.00			1 + 1
☐	One Day Collection of Certain Wastes and Household Hazardous Waste	$1000.00			1 + 0
☐	Sheet leaf Composting Notification	$0			★★
	Special Waste Authorization				1 + 0
☐	Landfill or RRF Disposal	$660.00			
☐	Asbestos Disposal	$300.00			
☐	homeowner	$0			
☐	Storage and Processing of Asphalt Roofing Shingle Waste	$2500.00			1 + 0
☐	Storage and Processing of Scrap Tires for Beneficial Use	$1250.00			1 + 0
☐	Emergency/Temporary Authorization	★★			★★
☐	Other, (please specify):				
	REMEDIATION				
☐	In Situ Groundwater Remediation: Enhance Aerobic Biodegradation	★			1 + 2
☐	In Situ Groundwater Remediation: Chemical Oxidation	$500.00			1 + 0
☐	Emergency/Temporary Authorization	★			★★
	Note: Carry subtotals over to Part III, page 2 of this form. Subtotal ➡				

★See fee schedule on registration/application. ★★Contact the specific permit program for this information.

(Contact numbers are provided in the instructions)

Affirmative Action, Equal Employment Opportunity and Americans with Disabilities

The Connecticut Department of Energy and Environmental Protection is an Affirmative Action/Equal Opportunity Employer that is committed to complying with the requirements of the Americans with Disabilities Act (ADA). Please contact us at (860) 418-5910 or deep.accommodations@ct.gov if you: have a disability and need a communication aid or service; have limited proficiency in English and may need information in another language; or if you wish to file an ADA or Title VI discrimination complaint.

Connecticut Department of
Energy & Environmental Protection
Bureau of Materials Management & Compliance Assurance
Water Permitting & Enforcement Division

General Permit Registration Form for the Discharge of Stormwater and Dewatering Wastewaters from Construction Activities, effective 10/1/13 (non-electronic form)

Prior to completing this form, you **must** read the instructions for the subject general permit available at **DEEP-WPED-INST-015**.
This form must be filled out electronically before being printed.
You must submit the registration fee along with this form.

The status of your registration can be checked on the DEEP's ezFile Portal. Please note that DEEP will no longer mail certificates of registration.

CPPU USE ONLY
App #:_____
Doc #:_____
Check #:_____
Program: Stormwater

Part I: Registration Type

Select the appropriate boxes identifying the registration type and registration deadline.

Registration Type			Registration Timeline	
☐	**Re-registration** **Existing Permit No. GSN _____**		**On or before February 1, 2014*** *Note: Failure to renew a permit by this date will require submission of new registration. Re-registrants must only complete Parts I, II, III (except Question 8), IV - Question 1, VII and submit Attachment A.	
☒	**New Registration** (Refer to Section 2 of the permit for definitions of Locally Exempt and Locally Approvable Projects)	☐ **Locally Approvable Projects** **Size of soil disturbance:**	**New registration - Sixty (60) days prior to the initiation of the construction activity for:** Sites with a total soil disturbance area of 5 or more acres	
		☒ **Locally Exempt Projects** **Size of soil disturbance:** **2.20 acres**	☒	**New registration - Sixty (60) days prior to the initiation of the construction activity for:** Sites with a total disturbance area of one (1) to twenty (20) acres except those with discharges to impaired waters or tidal wetlands
			☐	**New registration - Ninety (90) days prior to the initiation of the construction activity for:** (i) Sites with a total soil disturbance area greater than twenty (20) acres, or (ii) Sites discharging to a tidal wetland (that is not fresh-tidal and is located within 500 feet), or (iii) Sites discharging to an impaired water listed in the "Impaired Waters Table for Construction Stormwater Discharges"

Part II: Fee Information

1. New Registrations
   a. Locally approvable projects (registration only):
      ☐ $625 [#1855]
   b. Locally exempt projects (registration and Plan):
      ☒ $3,000 total soil disturbance area ≥ one (1) and < twenty (20) acres. [#1856]
      ☐ $4,000 total soil disturbance ≥ twenty (20) acres and < fifty (50) acres. [#1857]
      ☐ $5,000 total soil disturbance ≥ fifty (50) acres. [#1858]
2. Re-Registrations
   ☐ $625 (sites previously registered prior to September 1, 2012) [#1853]
   ☐ $0 (sites previously registered between September 1, 2012 and the issuance date of this permit) [#1854]

The fees for municipalities shall be half of those indicated in subsections 1.a., 1.b., and 2 above pursuant to section 22a-6(b) of the Connecticut General Statutes. State and Federal agencies shall pay the full fees specified in this subsection. The registration will not be processed without the fee. The fee shall be non-refundable and shall be paid by certified check or money order payable to the Department of Energy and Environmental Protection.

Part III: Registrant Information

- If a registrant is a corporation, limited liability company, limited partnership, limited liability partnership, or a statutory trust, it must be registered with the Secretary of the State. If applicable, the registrant's name shall be stated **exactly** as it is registered with the Secretary of the State. This information can be accessed at **CONCORD**.
- If a registrant is an individual, provide the legal name (include suffix) in the following format: First Name; Middle Initial; Last Name; Suffix (Jr, Sr., II, III, etc.).

1. Registrant /Client Name: Connecticut Department of Transportation

   State Agency ⬇

   Secretary of the State business ID #:

   Mailing Address: 1107 Cromwell Avenue

   City/Town: Rocky Hill State: CT Zip Code: 06067

   Business Phone: 860-258-4601 ext.:

   Example:(xxx) xxx-xxxx

   Contact Person: Ravi V. Chandran, P.E. Title: District Eng

   E-Mail: **ravi.chandran@ct.gov**

   Additional Phone Number (if applicable): ext.

2. List billing contact, if different than the registrant:

   Name:

   Mailing Address:

   City/Town: State: Zip Code:

   Business Phone: ext.:

   Contact Person: Title:

Part III: Registrant Information (continued)

3. List primary contact for departmental correspondence and inquiries, if different than the registrant:

Name:

Mailing Address:

City/Town: State: Zip Code:

Business Phone: ext.:

Site Phone: Emergency Phone:

Contact Person: Title:

Association (e.g. developer, general or site contractor, etc.):

4. List owner of the property on which the activity will take place, if different from registrant:

Name:

Mailing Address:

City/Town: State: Zip Code:

Business Phone: ext.:

Contact Person:

5. List developer, if different from registrant or primary contact:

Name:

Mailing Address:

City/Town: State: Zip Code:

Business Phone: ext.:

Contact Person: Title:

6. List general contractor, if different from registrant or primary contact:

Name:

Mailing Address:

City/Town: State: Zip Code:

Business Phone: ext.:

Site Phone: Off Hours Phone:

Contact Person: Title:

7. List any engineer(s) or other consultant(s) employed or retained to assist in preparing the registration and/or Stormwater Pollution Control Plan. ☐ Please select if additional sheets are necessary, and label and attach them to this sheet.

Name: Scott Bushee

Mailing Address: 2800 Berlin Turnpike

City/Town: Newington State: CT Zip Code: 06111

Business Phone: (860) 594-2079 ext.:

Contact Person: Title: Project Manager

Service Provided: **Prepared Permit Application**

8. List Reviewing Qualified Professional (for locally approvable projects only):

Name: Contact Person:

Mailing Address:

City/Town: State: Zip Code:

Business Phone: ext.:

Part IV: Site Information

1. Site Name: State Project No. 12-95: Safety Improvements on Route 533 at Box Mountain Road
   Street Address or Description of Location: Route 533 (Lake Street) Between Goodwin and Box Mountain Roads
   City/Town: Bolton State: CT Zip Code: 06043
   Brief Description of construction activity: Realignment of Horizontal/Vertical Curves; Full-Depth Reconstruction
   Project Start Date: 04 / 2016 Anticipated Completion Date: 11 / 2016
   (month/ yr) *(month/ yr)*
   Normal working hours: **8:00** to **5:00**

2. MINING: Is the activity on the site in question part of mining operations (i.e. sand and gravel)? ☐ Yes ☒ No

   If yes, mining is not authorized by this general permit. You must submit the Registration Form for the General Permit for the Discharge of Stormwater Associated with Industrial Activity.

3. COMBINED OR SANITARY SEWER: Does all of the stormwater from the proposed activity discharge to a combined or sanitary sewer (i.e. a sewage treatment plant)? ☐ Yes ☒ No

   If yes, this activity is not regulated by this permit. Contact the Water Permitting & Enforcement Division at 860-424-3018.

4. INDIAN LANDS: Is or will the facility be located on federally recognized Indian lands ☐ Yes ☒ No

5. COASTAL BOUNDARY: Is the activity which is the subject of this registration located within the coastal boundary as delineated on DEEP approved coastal boundary maps ☐ Yes ☒ No

   The coastal boundaries fall within the following towns: Branford, Bridgeport, Chester, Clinton, Darien, Deep River, East Haven, East Lyme, Essex, Fairfield, Greenwich, Groton (City and Town), Old Lyme, Guilford, Hamden, Ledyard, Lyme, Madison, Milford, Montville, New London, New Haven, North Haven, Norwalk, Norwich, Old Saybrook, Orange, Preston, Shelton, Stamford, Stonington (Borough and Town), Stratford, Waterford, West Haven, Westbrook and Westport.

   If "yes", and this registration is for a new authorization or a modification of an existing authorization where the physical footprint of the subject activity is modified, you must provide documentation the DEEP Office of Long Island Sound Programs or the local governing authority has issued a coastal site plan approval or determined the project is exempt from coastal site plan review. Provide this documentation with your registration as Attachment B. See guidance in Appendix D of the general permit. Information on the coastal boundary is available at the local town hall or at www.cteco.uconn.edu/map_catalog.asp. Additional DEEP Maps and Publications are available by contacting DEEP staff at 860-424-3555.

Part IV: Site Information (continued)

6. ENDANGERED OR THREATENED SPECIES:

In order to be eligible to register for this General Permit, each registrant must perform a self-assessment, obtain a limited one-year determination, or obtain a safe-harbor determination regarding threatened and endangered species. This may include the need to develop and implement a mitigation plan. While each alternative has different limitations, the alternatives are not mutually exclusive; a registrant may register for this General Permit using more than one alternative. See Appendix A of the General Permit. Each registrant must complete this section AND Attachment C to this Registration form and a registrant who does not or cannot do so is not eligible to register under this General Permit.

Each registrant must perform a review of the Department's Natural Diversity Database maps to determine if the site of the construction activity is located within or in proximity (within ¼ mile) to a shaded area.

a. Provide the date the NDDB maps were reviewed: 1/5/2015 (Print a copy of the NDDB map you viewed since it must be submitted with this registration as part of Attacment C.)

b. For a registrant using a limited one-year determination or safe harbor determination to register for this General Permit, provide the Department's Wildlife Divison NDDB identification number for any such determination: _____ (The number is on the determination issued by the Department's Wildlife Divison).

c. verify that I have completed Attachment C to this Registration Form. ☒ Yes

For more information on threatened and endangered species requirements, refer to Appendix A and Section 3(b)(2) of this General Permit, visit the DEEP website at www.ct.gov/deep/nddbrequest or call the NDDB at 860-424-3011.

7. WILD AND SCENIC RIVERS: Is the proposed project within the watershed of a designated Wild and Scenic River? (See Appendix H for guidance) ☐ Yes ☒ No

8. AQUIFER PROTECTION AREAS: Is the site located within a mapped aquifer protection area www.ct.gov/deep/aquiferprotection as defined in section 22a-354h of the CT General Statutes? ☐ Yes ☒ No
(For additional guidance, please refer to Appendix C of the General Permit)

9. CT GUIDELINES FOR SOIL EROSION AND SEDIMENT CONTROL: Is the activity in accordance with CT Guidelines for Erosion and Sediment Control and local erosion & sediment control ordinances, where applicable? ☒ Yes ☐ No

10. HISTORIC AND/OR ARCHAEOLOGICAL RESOURCES:
Has the site of the proposed activity been reviewed (using the process outlined in Appendix G of this permit) for historic and/or archaeological resources? ☒ Yes ☐ No

a. The review indicates the proposed site does not have the potential for historic/ archaeological resources, OR ☐ Yes ☒ No

b. The review indicated historic and/ or archaeological resource potential exists and the proposed activity is being or has been reviewed by the Offices of Culture and Tourism, OR ☒ Yes ☐ No

c. The proposed activity has been reviewed and authorized under an Army Corps of Engineers Section 404 wetland permit. ☐ Yes ☒ No

11. CONSERVATION OR PRESERVATION RESTRICTION:
Is the property subject to a conservation or preservation restriction? ☐ Yes ☒ No

If Yes, proof of written notice of this registration to the holder of such restriction or a letter from the holder of such restriction verifying that this registration is in compliance with the terms of the restriction, must be submitted as Attachment D.

Part V: Stormwater Discharge Information

Table 1

Outfall #	a) Type	b) Pipe Material	c) Pipe Size	d) Note: To find lat/long, go to: CT ECO. A decimal format is required here. Directions on how to use CT ECO to find lat./long. and conversions can be found in Part V, Section d of the DEEP-WPED-INST-015 .		e) What method was used to obtain your latitude/longitude information?
				Longitude	Latitude	
EO-1	pipe	concrete	24"	-72.4721	41.7914	CT ECO
EO-2	pipe	concrete	other - 30"	-72.4728	41.7945	CT ECO
	Select One:	Select One:	other	- .	.	Select One:
	Select One:	Select One:	Select One:	- .	.	Select One:
	Select One:	Select One:	Select One:	- .	.	Select One:

Table 2

Outfall #	a) For temporary and permanent outfalls, provide a start date. For temporary discharges, also provide a date the discharge will cease.	b) For the drainage area associated with each outfall: Effective Impervious Area Before Construction	c) For the drainage area associated with each outfall: Effective Impervious Area After Construction	d) To what system or receiving water does your stormwater runoff discharge? either "storm sewer" or "wetlands/waterbody" (If you select "storm sewer" proceed to Part VI of the form. If you select "wetlands/waterbody" proceed to next question)	e) For each outfall, does it discharge to any of the following towns: *Branford, Kent, Manchester, Meriden, North Branford, Norwalk, or Wilton?* (If no, proceed to Part VI of the form. If yes, proceed to next question.)	f) For each outfall, does it discharge to a "freshwater" or "salt water" ? (If you select "freshwater" proceed to Table 3. If you selected "salt water", proceed to Part VI of the form.)
EO-1	04/2016-mm/dd-mm/dd	17,821 sq feet	604 sq feet	wetlands/waterbody	☒ Yes ☐ No	freshwater
EO-2	04/2016-mm/dd-mm/dd	8,234 sq feet	8,120 sq feet	wetlands/waterbody	☐ Yes ☒ No	Select one:
PO-1	04/2016-mm/dd-mm/dd	sq feet	17,909 sq feet	wetlands/waterbody	☒ Yes ☐ No	freshwater
	-mm/dd-mm/dd	sq feet	sq feet	Select one:	☐ Yes ☐ No	Select one:
	-mm/dd-mm/dd	sq feet	sq feet	Select one:	☐ Yes ☐ No	Select one:
		26,055 total sq feet	**26,633 total sq feet**			

Part V: Stormwater Discharge Information (continued)

Table 3 Provide the following information about the receiving water(s)/wetland(s) that receive stormwater runoff from your site:			
Outfall #	a) What is your 305b ID # (water body ID #)? (Section 3.b, of the DEEP-WPED-INST-015, explains how to find this information)	b) Is your receiving water identified as a impaired water in the "Impaired Waters Table for Construction Stormwater Discharges"? If yes, proceed to next question. If no, proceed to Part VI: Pollution Control Plan.	c) Has any Total Maximum Daily Load (TMDL) been approved for the impaired water?
EO-1	4500-11	☐ Y ☒ N	☐ Y ☐ N
PO-1	4500-11	☐ Y ☒ N	☐ Y ☐ N
		☐ Y ☐ N	☐ Y ☐ N
		☐ Y ☐ N	☐ Y ☐ N
		☐ Y ☐ N	☐ Y ☐ N

Part V: Stormwater Discharge Information (continued)

Impaired waters: If you answered "yes" to Table 3, question b.,**verify** that the project's Pollution Control Plan (Plan) addresses the control measures below in Question 1 or 2, as appropriate.

1. **If the impaired water does not have a TMDL,** confirm compliance by selecting 1.a. or 1.b. below:
   a. No more than 3 acres is disturbed at any time; ☐ Yes

   OR

   b. Stormwater runoff from a 2 yr, 24 rain event is **retained.** ☐ Yes

2. **If the impaired water has a TMDL,** confirm compliance by selecting 2.a. and 2.b. below and either question 2.c.1. or 2.c.2. below:
   a. The Plan documents there is sufficient remaining Waste Load Allocations (WLA)in the TMDL for the proposed discharge, ☐ Yes

   AND

   b. Control measures shall be implemented to assure the WLA will not be exceeded, ☐ Yes

   AND

   c. 1. Stormwater discharges will be monitored for the indicator pollutant identified in theTMDL, ☐ Yes

   OR

   2. The Plan documents specific requirements for stormwater discharges specified in the TMDL. ☐ Yes

Part VI: Pollution Control Plan (select one of the following four categories)

☒ I am registering a Locally Exempt project and submitting the required electronic Plan (in Adobe™ PDF or similar publically available format) pursuant to Section 3(*c*)(2)(E) of this permit.

- ☒ Plan is attached to this registration form
- ☐ Plan is available at the following Internet Address (URL):

☐ I am registering a Locally Approvable project and have chosen not to submit the Plan with this registration pursuant to Section 3(*c*)(1) of this permit.

☐ I am registering a Locally Approvable project and have chosen to make my Plan electronically available pursuant to Section 4(*c*)(2)(N) of this permit.

- ☐ Plan is attached to this registration form
- ☐ Plan is available at the following Internet Address (URL):

☐ I am registering a Locally Exempt project and do not have the capability to submit the Plan electronically. Therefore, I am submitting a paper copy with this registration as Attachment E.

Part VII: Registrant Certification

The registrant *and* the individual(s) responsible for actually preparing the registration must sign this part. A registration will be considered incomplete unless all required signatures are provided.

For New Registrants:

" I hereby certify that I am making this certification in connection with a registration under such general permit,

[INSERT NAME OF REGISTRANT BELOW]

submitted to the commissioner by Ravi V. Chandran for

[INSERT ADDRESS OF PROJECT OR ACTIVITY BELOW]

an activity located at Route 533 (Lake Street) at Box Mountain Road and that all terms and conditions of the general permit are being met for all discharges which have been initiated and such activity is eligible for authorization under such permit. I further certify that a system is in place to ensure that all terms and conditions of this general permit will continue to be met for all discharges authorized by this general permit at the site. I certify that the registration filed pursuant to this general permit is on complete and accurate forms as prescribed by the commissioner without alteration of their text. I certify that I have personally examined and am familiar with the information that provides the basis for this certification, including but not limited to all information described in Section 3(*b*) (8)(A) of such general permit, and I certify, based on reasonable investigation, including my inquiry of those individuals responsible for obtaining such information, that the information upon which this certification is based is true, accurate and complete to the best of my knowledge and belief. I certify that I have made an affirmative determination in accordance with Section 3(*b*)(8)(B) of this general permit. I understand that the registration filed in connection with such general permit is submitted in accordance with and shall comply with the requirements of Section 22a-430b of Connecticut General Statutes. I also understand that knowingly making any false statement made in the submitted information and in this certification may be punishable as a criminal offense, including the possibility of fine and imprisonment, under Section 53a-157b of the Connecticut General Statutes and any other applicable law."

For Re-registrants:

" I hereby certify that I am making this certification in connection with a registration under the General Permit for the Discharge of Stormwater and Dewatering Wastewaters from Construction Activities, submitted to the commissioner

[INSERT NAME OF REGISTRANT BELOW]

by _____ for an activity located at

[INSERT ADDRESS OF PROJECT OR ACTIVITY BELOW]

_____ and that all terms and conditions of the general permit are being met for all discharges which have been initiated and such activity is eligible for authorization under such permit. I further certify that all designs and plans for such activity meet the current terms and conditions of the general permit in accordance with Section 5(b)(5)(C) of such general permit and that a system is in place to ensure that all terms and conditions of this general permit will continue to be met for all discharges authorized by this general permit at the site. I certify that the registration filed pursuant to this general permit is on complete and accurate forms as prescribed by the commissioner without alteration of their text. I certify that I have personally examined and am familiar with the information that provides the basis for this certification, including but not limited to all information described in Section 3(*b*)(8)(A) of such general permit, and I certify, based on reasonable investigation, including my inquiry of those individuals responsible for obtaining such information, that the information upon which this certification is based is true, accurate and complete to the best of my knowledge and belief. I also understand that knowingly making any false statement made in the submitted information and in this certification may be punishable as a criminal offense, including the possibility of fine and imprisonment, under Section 53a-157b of the Connecticut General Statutes and any other applicable law."

Ravi Chandran	3/2/15
Signature of Registrant	Date
Ravi V. Chandran	**District 1 Engineer**
Name of Registrant (print or type)	Title (if applicable)
	1-14-2015
Signature of Preparer (if different than above)	Date
Scott Bushee	**Project Manager**
Name of Preparer (print or type)	Title (if applicable)

Part VIII: Professional Engineer (or Landscape Architect, where appropriate) Design Certification (for publically approvable and exempt projects)

The following certification must be signed by a Professional Engineer or Landscape Architect where appropriate.

"I hereby certify that I am a professional engineer licensed in the State of Connecticut. I am making this certification in connection with a registration under such general permit, submitted to the commissioner by

[INSERT NAME OF REGISTRANT BELOW]

RAVI V. CHANDRAN for an activity located at

[INSERT ADDRESS OF PROJECT OR ACTIVITY BELOW]

Route 533 (Lake Street) at Box Mountain Road.

I certify that I have thoroughly and completely reviewed the Stormwater Pollution Control Plan for the project or activity covered by this certification. I further certify, based on such review and on the standard of care for such projects, that the Stormwater Pollution Control Plan has been prepared in accordance with the Connecticut Guidelines for Soil Erosion and Sediment Control, as amended, the Stormwater Quality Manual, as amended, and the conditions of the general permit, and that the controls required for such Plan are appropriate for the site. I further certify, based on reasonable investigation, including my inquiry of those individuals responsible for obtaining such information, that the information upon which this certification is based is true, accurate, and complete to the best of my knowledge and belief. I also understand that knowingly making any false statement in this certification may subject me to sanction by the Department and/or be punishable as a criminal offense, including the possibility of fine and imprisonment, under section 53a-157b of the Connecticut General Statutes and any other applicable law."

Signature of Design Professional	2/6/15 Date
MICHAEL G. FISHER Name of Professional (print or type)	SENIOR PROJECT MGR Title
355 RESEARCH PKWY Mailing Address	MERIDEN City/Town
MERIDEN CT 06450 State Zip Code	203-630-1406 Business Phone
STATE OF CONNECTICUT MICHAEL G. FISHER No. 21170 LICENSED PROFESSIONAL ENGINEER Affix P.E/L.A Stamp Here	21170 License #

Part IX: Reviewing Qualified Professional Certification

The following certification must be signed by a) a Conservation District reviewer OR, b) a qualified soil erosion and sediment control and/or professional engineer

☐ **Review certification by Conservation District:**

1.) District: list of districts

Date of Affirmative Determination:

" I am making this certification in connection with a registration under General Permit for the Discharge of Stormwater and Dewatering Wastewaters from Construction Activities, submitted to the commissioner

[INSERT NAME OF REGISTRANT BELOW]

by _____ for an activity located at

[INSERT ADDRESS OF PROJECT OR ACTIVITY BELOW]

_____.

I have personally examined and am familiar with the information that provides the basis for this certification, and I affirm, based on the review described in Section 3(*b*)(11)(C) of this general permit and on the standard of care for such projects, that the Stormwater Pollution Control Plan is adequate to assure that the activity authorized under this general permit will comply with the terms and conditions of such general permit and that all stormwater management systems: (i) have been designed to control pollution to the maximum extent achievable using measures that are technologically available and economically practicable and that conform to those in the Guidelines and the Stormwater Quality Manual; (ii) will function properly as designed; (iii) are adequate to ensure compliance with the terms and conditions of this general permit; and (iv) will protect the waters of the state from pollution."

_____

Signature of District Professional and Date

_____

Name of District Professional and License Number (if applicable)

Or

☐ **Review certification by Qualified Professional**

Company: _____

Name: _____

License # : _____

Level of independency of professional:

Required for all projects disturbing over 1 acre:

1. I verify I am not an employee of the registrant. ☐ Yes
2. I verify I have no ownership interest of any kind in the project for which the registration is being submitted. ☐ Yes

Required for projects with 15 or more acres of site disturbance (in addition to questions 1&2):

3. I verify I did not engage in any activities associated with the preparation, planning, designing or engineering of the soil erosion and sediment control plan or stormwater management systems plan for this registrant. ☐ Yes
4. I verify I am not under the same employ as any person associated with the preparation, planning, designing or engineering of the soil erosion and sediment control plan or stormwater management systems plan for this registrant. ☐ Yes

Part IX: Reviewing Qualified Professional Certification (continued)

"I hereby certify that I am a qualified professional engineer or qualified soil erosion and sediment control professional, or both, as defined in the General Permit for Discharge of Stormwater and Dewatering Wastewaters from Construction Activities and as further specified in Sections 3(*b*)(11)(A) and (B) of such general permit. I am making this certification in connection with a registration under such general permit,

[INSERT NAME OF REGISTRANT BELOW]

submitted to the commissioner by _____

[INSERT ADDRESS OF PROJECT OR ACTIVITY BELOW]

for an activity located at _____.

I have personally examined and am familiar with the information that provides the basis for this certification, including but not limited to all information described in Section 3(*b*)(11)(C) of such general permit, and I certify, based on reasonable investigation, including my inquiry of those individuals responsible for obtaining such information, that the information upon which this certification is based is true, accurate and complete to the best of my knowledge and belief. I further certify that I have made the affirmative determination in accordance with Sections 3(*b*)(11)(D)(i) and (ii) of this general permit. I understand that this certification is part of a registration submitted in accordance with Section 22a-430b of Connecticut General Statutes and is subject to the requirements and responsibilities for a qualified professional in such statute. I also understand that knowingly making any false statement in this certification may be punishable as a criminal offense, including the possibility of fine and imprisonment, under Section 53a-157b of the Connecticut General Statutes and any other applicable law."

_____

Signature of Reviewing Qualified Professional Date: _____

_____

Name of Reviewing Qualified Professional License No.: _____

Affix P.E./L.A. Stamp Here

Part X: Supporting Documents

Select the applicable box below for each attachment being submitted with this registration form. When submitting any supporting documents, please label the documents as indicated below (e.g., Attachment A, etc.) and be sure to include the registrant's name as indicated on this certification form.

☒ **Attachment A:** Select here as verification that an 8 ½" X 11" copy of the relevant portion of a USGS Quadrangle Map with a scale of 1:24,000, showing the exact location of the facility has been submitted with this registration. Indicate the quadrangle name on the map, and be sure to include the registrant's name. (To obtain a copy of the relevant USGS Quadrangle Map, call your town hall or DEEP Maps and Publications Sales at 860-424-3555)

☐ **Attachment B:** Documentation related to *Coastal Consistency Review,* if applicable.

☒ **Attachment C:** Threatened and Endangered Species Form and any additional information (such as a copy of a NDDB map)

☐ **Attachment D:** Conservation or Preservation Restriction Information, if applicable.

☒ **Attachment E:** Where applicable, non-electronic Pollution Control Plan.

Note: Please submit the fee along with a completed, printed and signed Registration Form and all additional supporting documents to:

CENTRAL PERMIT PROCESSING UNIT
DEPARTMENT OF ENERGY AND ENVIRONMENTAL PROTECTION
79 ELM STREET
HARTFORD, CT 06106-5127

ATTACHMENT A: 12-95 U.S.G.S. LOCATION PLAN

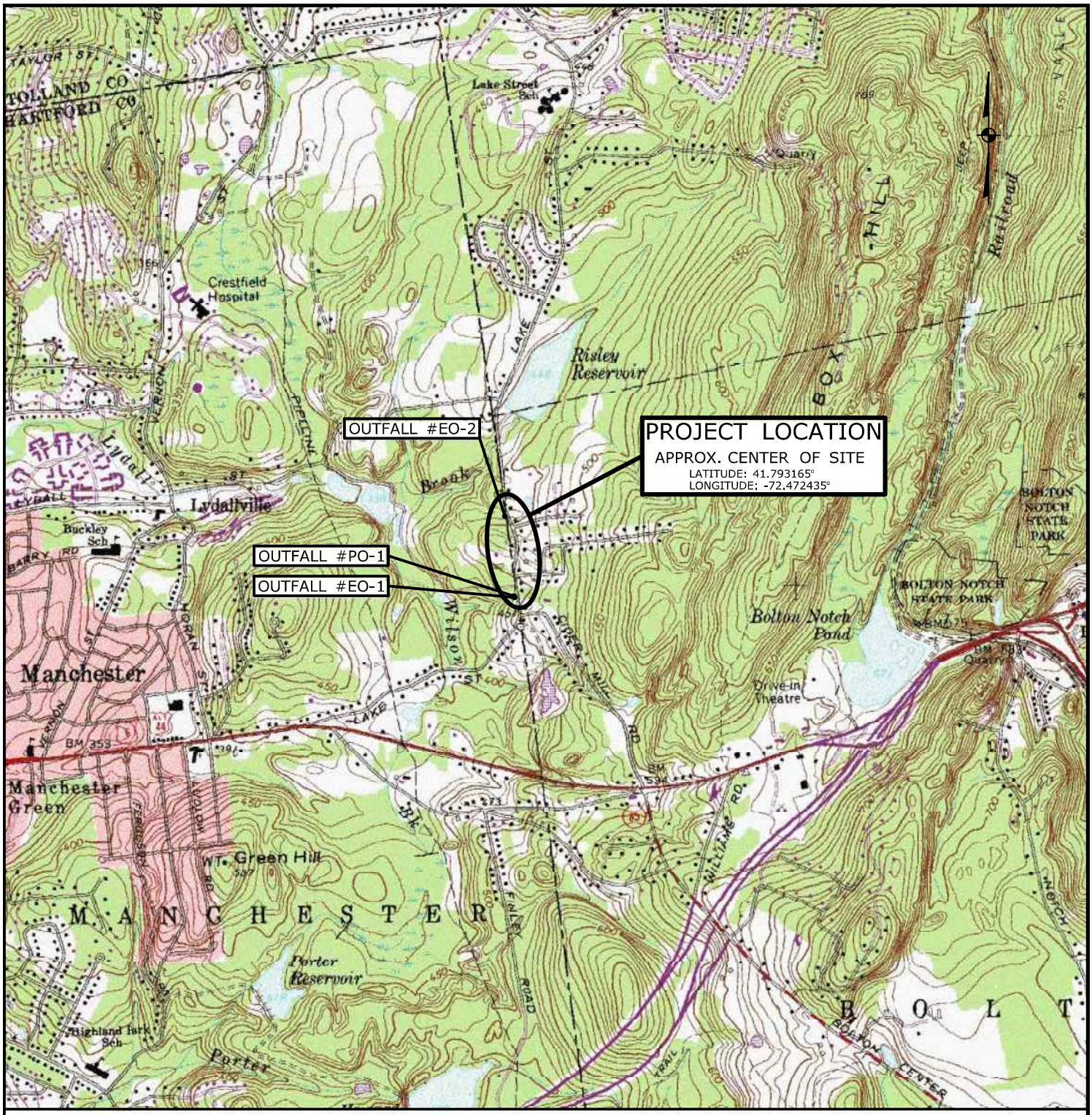

SCALE 1:24 000

1 ½ 0 1 MILE

1000 0 1000 2000 3000 4000 5000 6000 7000 FEET

1 .5 0 1 KILOMETER

CONTOUR INTERVAL 10 FEET
NATIONAL GEODETIC VERTICAL DATUM OF 1929

QUADRANGLE NO. 39		ROCKVILLE, CONN. 41072-G4-TF-024 1967 PHOTOREVISED 1984 DMA 6567 IV SW - SERIES V816

STATE PROJECT NO.: 12-95 COUNTY: TOLLAND CITY/TOWN: BOLTON	APPLICATION BY: STATE OF CONNECTICUT DEPARTMENT OF TRANSPORTATION SAFETY IMPROVEMENTS ON ROUTE 533 AT BOX MOUNTAIN ROAD	OFFICE OF ENGINEERING	DATE: JULY 2014 REGISTRANT: RAVI V. CHANDRAN, DISTRICT 1 ENGINEER

ATTACHMENT A

ATTACHMENT C: THREATENED AND ENDANGERED SPECIES

Information about compliance with the requirements of Section 3(b)(2) of this general permit, regarding threatened and endangered species, is in Appendix A of the general permit. Choose one or more (if applicable) of the following in order to be eligible to register for this General Permit. A registrant who does not or cannot do so is not eligible to register under this General Permit.

☒ Self Assessment using the NDDB maps – Select this only if:

a. The site of the construction activity is not entirely, partially or within a ¼ mile of a shaded area depicted on the Department's Natural Diversity Database maps and this determination was made not more than six months before the date of submitting this registration;

AND

b. The entity registering for this General Permit has no reasonably available verifiable scientific, or other credible information that the construction activity could reasonably be expected to have an adverse impact upon a federal or state species listed as threatened or endangered.

Attach a copy of the NDDB map used to conduct the self assessment used to register for this general permit.

Note: Both a and b as used in this section, must be true in order for a Registrant to register for this General Permit using the self-assessment option. If neither is true, a Registrant cannot use the self-assessment option to comply with Section 3(b)(2) and Appendix A of the General Permit.

☐ Limited One-Year Determination – Select this only if:

a. The entity registering for this General Permit has obtained a limited one-year determination from the Department's Wildlife Division regarding threatened and endangered species: i) within a year of the date of submitting this registration; or ii) more than 1 year before submitting this registration, but such determination has been extended by the Department within one year of the date of submitting this registration;

AND

b. The Registrant has provided to the Department's Wildlife Division any reasonably available verifiable scientific, or other credible information that the construction activity could reasonably be expected to have an adverse impact upon a federal or state species listed as threatened or endangered.

Provide the date the limited one-year determination was issued by the Department's Wildlife Division _____;

or

Provide the date that the most recent extension to a limited one year determination was issued by the Department's Wildlife Division _____.

Note: Both a and b as used in this section, must be true in order for a Registrant to register for this General Permit using the Limited One-Year Determination option. If a Limited One-Year Determination or extension to any such determination was issued by the Department's Wildlife Division more than one year before the submission of this registration, a Registrant cannot use any such determination or extension to comply with Section 3(b)(2) and Appendix A of the General Permit.

ATTACHMENT C: THREATENED AND ENDANGERED SPECIES (continued)

☐ **Select here if the Limited One-Year Determination issued by the Department includes a Mitigation Plan.**

Provide the date the Mitigation Plan was approved: _____

Governmental Entity Approving the Plan: _____

As of the date this Registration is submitted,

Has the Mitigation Plan been fully implemented? ☐ Yes ☐ No

Date commenced: _____ Date completed:_____

Is the Mitigation Plan partially implemented? ☐ Yes ☐ No

If yes, what actions have been taken?_____

And which actions are yet to be implemented and what is the timeframe for completion of such actions:_____

Is the Mitigation Plan yet to be implemented? ☐ Yes ☐ No

If yes, specify the timeframe for implementation: _____ to _____

And summarize actions to be implemented: _____

☐ Safe Harbor Determination - Select this only if:

a. The entity registering for this General Permit has obtained a Safe Harbor Determination from the Department's Wildlife Division regarding threatened and endangered species: i) within 3 years of the date of submitting this registration; or ii) more than 3 years before submitting this registration, but within one-year of a one-year extension issued by the Department's Wildlife Division to a safe harbor determination;

AND

b. The entity registering for this General Permit has provided to the Department's Wildlife Division any reasonably available verifiable scientific, or other credible information that the construction activity could reasonably be expected to have an adverse impact upon a federal or state species listed as threatened or endangered.

Provide the date the Department's Wildlife Division issued a Safe Harbor Determination: _____

If applicable, provide the date that any one-year extension to a Safe Harbor Determination was issued by the Department's Wildlife Division: _____.

Note: Both a and b as used in this section, must be true in order for a Registrant to register for this General Permit using the Safe Harbor Determination option. If a Safe Harbor Determination was issued by the Department's Wildlife Division more than three years before the submission of this registration, and has not been extended, a Registrant cannot use any such safe harbor to comply with section 3(b)(2) and Appendix A of this General Permit. If a Safe Harbor Determination was granted and extended for one-year, more than four years before the submission of this registration, a Registrant cannot use any such Safe Harbor Determination to comply with Section 3(b)(2) and Appendix A of the general permit.

ATTACHMENT C: THREATENED AND ENDANGERED SPECIES (continued)

☐ **Select here if the safe harbor noted above includes a Mitigation Plan.**

Provide the date the Mitigation Plan was approved: _____

Governmental Entity Approving the Plan: _____

As of the date this Registration is submitted,

Has the Mitigation Plan been fully implemented? ☐ Yes ☐ No

Date commenced: _____ Date completed:_____

Is the Mitigation Plan partially implemented? ☐ Yes ☐ No

If yes, what actions have been taken?_____

And which actions are yet to be implemented and what is the timeframe for completion of such actions:_____

Is the Mitigation Plan yet to be implemented? ☐ Yes ☐ No

If yes, specify the timeframe for implementation: _____ to _____

And summarize actions to be implemented: _____

Natural Diversity Data Base Areas

BOLTON, CT

December 2014

State and Federal Listed Species & Significant Natural Communities

Town Boundary

NOTE: This map shows general locations of State and Federal Listed Species and Significant Natural Communities. Information on listed species is collected and compiled by the Natural Diversity Data Base (NDDB) from a number of data sources . Exact locations of species have been buffered to produce the general locations. Exact locations of species and communities occur somewhere in the shaded areas, not necessarily in the center. A new mapping format is being employed that more accurately models important riparian and aquatic areas and eliminates the need for the upstream/downstream searches required in previous versions.

This map is intended for use as a preliminary screening tool for conducting a Natural Diversity Data Base Review Request. To use the map, locate the project boundaries and any additional affected areas. If the project is within a shaded area there may be a potential conflict with a listed species. For more information, complete a Request for Natural Diversity Data Base State Listed Species Review form (DEP-APP-007), and submit it to the NDDB along with the required maps and information. More detailed instructions are provided with the request form on our website.

www.ct.gov/deep/nddbrequest

Use the CTECO Interactive Map Viewers at www.cteco.uconn.edu to more precisely search for and locate a site and to view aerial imagery with NDDB Areas.

QUESTIONS: Department of Energy and Environmental Protection (DEEP)
79 Elm St., Hartford CT 06106
Phone (860) 424-3011

Connecticut Department of Energy & Environmental Protection
Bureau of Natural Resources
Wildlife Division

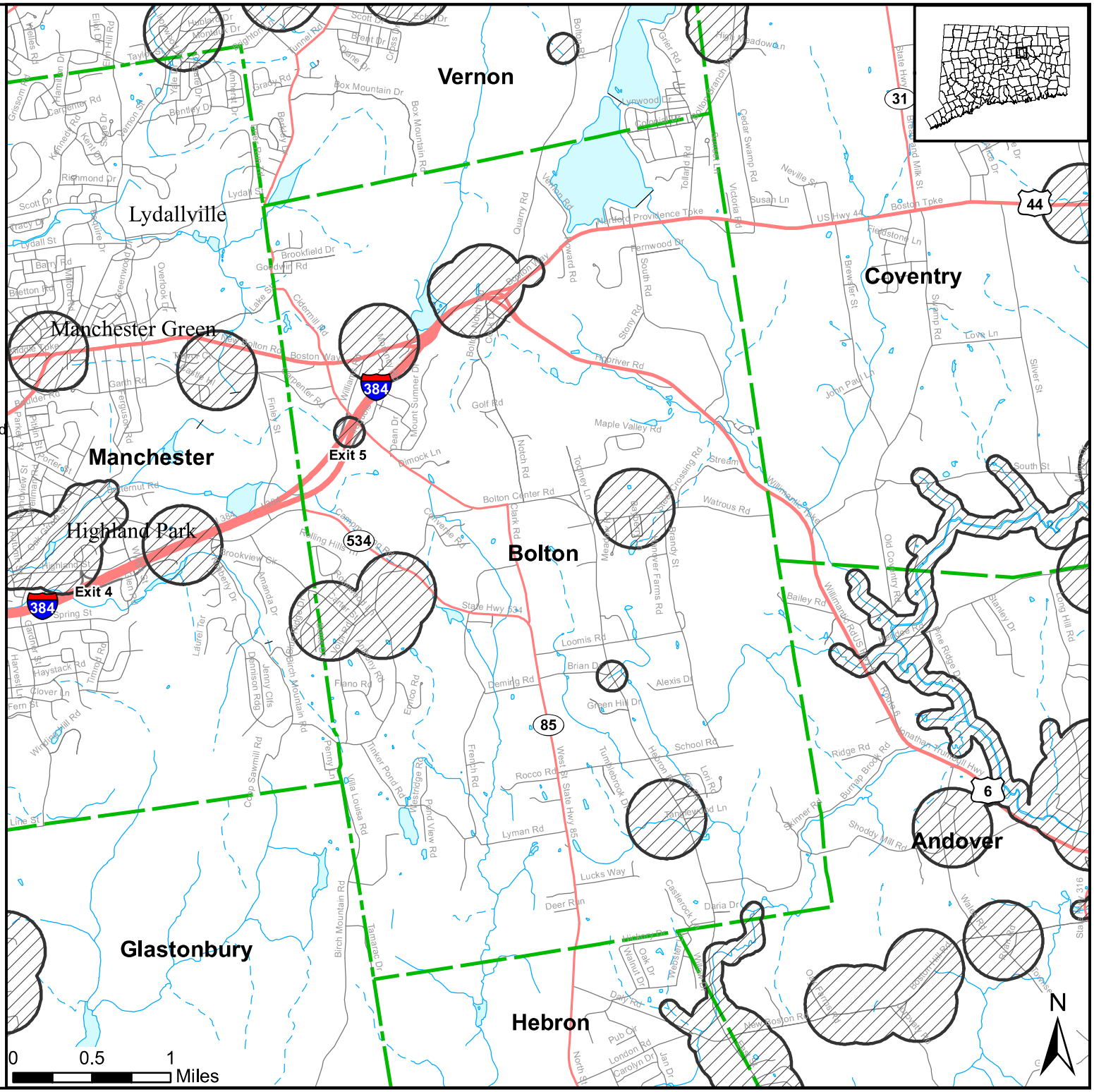

ATTACHMENT C

ATTACHMENT E: STORMWATER POLLUTION CONTROL PLAN

STORMWATER POLLUTION CONTROL PLAN

Safety Improvements on Route 533 at Box Mountain Road
Bolton, CT

State Project No.: 12-95

Connecticut Department of Transportation

January 2015

This Stormwater Pollution Control Plan (SWPCP) is prepared to comply with the requirements for the General Permit for Stormwater Discharges (GPSD) from Construction Activities. Also to be considered part of the SWPCP are the proposed construction plans, special provisions, and the Connecticut Department of Transportation's "Standard Specifications for Roads, Bridges and Incidental Construction" (Form 816), including supplements thereto, and the *2002 Connecticut Guidelines for Soil Erosion and Sediment Control* and *2004 Stormwater Quality Manual*.

Table of Contents

1. Site Description 4
Site Description 4
Estimated Disturbed Area 4
Estimated Runoff Coefficient 4
Receiving Waters 5
Extent of Wetlands on Site 5

2. Construction Sequencing 6

3. Control Measures 6
Erosion and Sedimentation (E&S) Controls 6
Temporary Stabilization Practices 7
Permanent Stabilization Practices 8
Structural Measures 8
Maintenance 9

4. Dewatering Wastewaters 10
Dewatering Guidelines 10

5. Post-Construction Stormwater Management 10
Post-Construction Guidelines 10
Post-Construction Performance Standards and Control Measures 10

6. Other Controls 12
Waste Disposal 12
Washout Areas 12
Dust Control 12
Post-Construction 13
Maintaining and Storing Vehicles and Equipment 13

7. Inspections 13
Inspection Guidelines 13

8. Keeping Plans Current **14**
Revisions to Stormwater Pollution Control Plans 14

9. Monitoring Requirements **15**

10. Contractors **15**
General 15
Certification Statement 16

List of Applicable Figures and Forms: **18**
Appendix A – Project Location 18
Appendix B – Disturbed Areas and Drainage Calculations 18
Appendix C – Plan Sheets 18
Appendix D – Stormwater Monitoring Report Form 18
Appendix E – Notice of Termination Form 18

1. Site Description

Site Description

This project consists of the reconstruction of a section of Route 533 (Lake Street), between, Goodwin and Box Mountain Roads, in the Town of Bolton. The site lies adjacent to the Manchester Town Line and approximately 1,000 feet south of the Vernon Town Line. Route 533 is classified as a two-lane minor urban arterial traveling in the north-south direction, and roadside development is primarily residential. The project is located within a public water supply watershed, for which special requirements must be followed during construction.

The purpose of this project is to improve safety on Route 533 in the vicinity of Box Mountain Road. The project was initiated to address crash history, mainly a pattern of fixed-object type crashes, at this location. The existing roadway consists of the combination of a crest vertical curve at the transition of reverse horizontal curves with limited sightline, making it difficult for some drivers to perceive oncoming horizontal geometry, particularly in the northbound direction. The existing roadway width also varies between about 23 and 26 feet.

Site work will include: realignment of both the horizontal and vertical curves on Route 533 within the project limits; minor widening of Route 533 to be more consistent with adjacent stretches of roadway; minor driveway reconstruction; minor additions and adjustments to the existing drainage systems; roadside grading; and clearing of sightline obstructions and roadside hazards as necessary. Full-depth reconstruction will be required for the entire length of project, including the entrances of the two connecting side roads.

Estimated Disturbed Area

The total area for this project site is 2.79 acres. Of this area, 2.20 acres will be disturbed by construction activities.

Estimated Runoff Coefficient

The runoff coefficient assumed for pavement is 0.9. For the pervious areas, a coefficient of 0.3 was assumed.

Table 1: Pre-Construction Drainage Conditions

Outlet ID	Drainage Area (ac.)	
	Paved	Unpaved
EO-1	0.45	78.70
EO-2	0.21	7.88
Total	0.66	86.58

Pre-Construction Composite Runoff Coefficient:

$$\frac{(0.66 \text{ ac. x } 0.9) + (86.58 \text{ ac. x } 0.3)}{(0.66 \text{ ac. } + 86.58 \text{ ac.})} \approx 0.31$$

Table 2: Post-Construction Drainage Conditions

Outlet ID	Drainage Area (ac.)	
	Paved	Unpaved
EO-1	0.08	76.08
EO-2	0.31	7.78
PO-1	0.37	2.62
Total	0.76	86.48

Post-Construction Composite Runoff Coefficient:

$$\frac{(0.76 \text{ ac. x } 0.9) + (86.48 \text{ ac. x } 0.3)}{(0.76 \text{ ac. } + 86.48 \text{ ac.})} \approx 0.31$$

Receiving Waters

The receiving waters are wetlands, which ultimately drain to Lydall Brook.

Extent of Wetlands on Site

Wetlands exist in the vicinity of two culverts located within the project limits, one near the north end and one near the south end. The wetlands will not be disturbed by the proposed construction activity.

2. Construction Sequencing

The Contractor will be given approximately one construction season for the construction of all phases of the project.

The suggested sequence of construction is as follows:

1. Conduct a preconstruction meeting.
2. Install erosion controls at the effected inlets and at limits of disturbed slopes.
3. Perform clearing and grubbing activities.
4. Complete any roadside grading on Route 533, Goodwin and Box Mountain Roads required specifically for the relocation of utilities.
5. Install new drainage systems. Set erosion controls around catch basin inlets and ensure that outlet protection is in place as shown on plans prior to the discharge of any flow through the drainage system.
6. Install pavement base and pavement structure.
7. Grade grass slopes and immediately stabilize. Establish turf, per plan, on all remaining disturbed areas.
8. Remove erosion controls once all disturbed areas have been stabilized as determined by the Engineer.
9. Clean all post-construction stormwater structures of construction sediment and remove any remaining silt fence prior to filing of the "Notice of Termination Form".
10. Perform project clean-up.

If the construction sequencing activities create an area of disturbance between two (2) acres and five (5) acres per discharge point, the Contractor must submit to the Engineer a revised SWPCP for review and approval. The SWPCP must include locations of the temporary sedimentation trap per discharge point with a capacity to contain 134 cubic yards per acre of material in accordance with the *2002 Guidelines*. The Contractor shall provide an inspection and maintenance plan for the temporary sedimentation trap as part of the amended SWPCP.

3. Control Measures

Erosion and Sedimentation (E&S) Controls

CT DOT will have construction inspection personnel assigned to the project in order to oversee the Contractor's operations to ensure compliance with the provisions of the Standard

Specifications. Further CTDOT oversight is provided by the District 1 Environmental Coordinator and the Office of Environmental Planning.

The following timelines will be followed for the proposed construction activities:

- If construction activities are complete or have been temporarily halted for more than seven (7) days, stabilization activities will be implemented within three (3) days.

- Areas that remain disturbed but inactive for at least 30 days shall receive temporary seeding or soil protection within seven (7) days.

- Disturbed areas that do not establish a vegetative cover within 30 days of seeding shall have erosion control blankets installed. Prior to the erosion control blanket installation, the soil would be prepared with the application of lime, fertilizer, and seed.

- Areas that will be disturbed past the planting season will be covered with a long-term, non-vegetative stabilization method that will provide protection through the winter.

- Stabilization practices will be implemented as quickly as possible in accordance with the Guidelines.

- The Contractor shall stabilize disturbed areas with temporary or permanent measures as quickly as possible after the land is disturbed. Requirements for soil stabilization are detailed in Form 816 Section 1.10.03, Best Management Practices.

Temporary Stabilization Practices

The following methods of temporary stabilization shall be used:

- Erosion Control Matting: On slopes steeper than 2:1, erosion control matting shall be used to stabilize the topsoil.

- Silt Fence: Silt fence shall be placed at the base of embankments.

- Dust Control: Routine sweeping and application of dust suppression agents, including water and calcium chloride, over exposed subbase shall be completed for dust control.

- Temporary Seeding: On soils to be exposed for a period greater than 1 month but less than 1 year, temporary seeding shall be used to temporarily stabilize the soil until permanent stabilization is be established.

- Catch Basin Inlet Protection: Catch basin inlet protection shall be used to reduce the amount of sediment entering the storm drainage system during construction.

Stabilization practices shall be implemented no more than three days after completion, as final grades are reached, or if work has been suspended for more than seven days.

Temporary seeding shall be spread over any disturbed areas which will remain inactive for at least 30 days. Areas to remain disturbed through winter shall be protected with non-vegetative stabilization measures. The Contractor must provide an E&S Control plan for each winter season during construction operations.

The Contractor may use other controls in the project as necessary if they conform to the *2002 Connecticut Guidelines for Erosion and Sediment Control* and are approved by the Engineer. The Contractor will be required to provide the necessary details for any erosion controls not specifically called for on the project plans.

During construction, all areas disturbed by the construction activity that have not been stabilized, structural control measures, and locations where vehicles enter or exit the site shall be inspected at least once every seven calendar days. These areas shall also be inspected within 24 hours following any storm in which 0.5 inches or greater of rain occurs.

Permanent Stabilization Practices

During construction, the following methods of permanent stabilization shall be installed:

- Permanent Seeding: Once soils have been brought to final grade, permanent seeding shall be used to stabilize the soil with a vegetative cover.

- Topsoiling: In conjunction with permanent seeding, once final grades have been established, topsoil shall be applied to provide a suitable growth medium for vegetation.

All new embankments disturbed by construction and unpaved areas that are graded or disturbed by construction will receive erosion control matting, topsoil and/or turf establishment. The Contractor may use other permanent stabilization practices approved by the Engineer and conforming to the *2002 Connecticut Guidelines for Soil Erosion and Sediment Control*.

Structural Measures

The following structural measures shall be used to divert flows, limit runoff, and minimize the discharge of pollutants:

- Minimal Curbing: Curbing shall be avoided wherever possible to maximize overland sheet flow and enhance infiltration.

- Outlet Protection: Riprap outlet protection shall be used at the proposed outlet to decrease velocity and the potential for erosion.

- Deep Sump Catch Basins: Deep sump catch basins (4-foot sump) shall be used, especially adjacent to outlets, to intercept pollutants and debris.

Maintenance

All construction activities and related activities shall conform to the requirements of Section 1.10 "Environmental Compliance" of CTDOT's Standard Specifications, Form 816. In general, all construction activities shall proceed in such a manner so as not to pollute any wetlands, watercourses, water bodies, and conduits carrying stormwater. The Contractor shall limit, in so far as possible, the surface area of earthen materials exposed by construction activity and immediately provide temporary and permanent pollution control to prevent soil erosion and contamination on the site. Water pollution control provisions and best management practices per Section 1.10.03 of the Standard Specifications shall be administered during construction. Control measures shall be inspected and maintained in accordance with the *2002 Guidelines* and as directed by the Engineer.

The Contractor will be responsible to implement, operate, monitor and perform the required maintenance of the E&S control measures described, shown and detailed on the Construction Documents. The Contractor will be familiar with all aspects of the named control measures and be responsible for the correction of any failures by repair or modifications as may be recommended by an E&S professional and in coordination with CTDOT District 1 Construction, CTDOT Office of Environmental Planning, and the Department of Energy and Environmental Protection.

The following Maintenance practices will be completed as part of this Contract:

- All E&S controls will be inspected within 24 hours of a storm event (0.1 inches) to ensure they are still properly located and anchored and in good working condition. All necessary repairs and/or replacements will be made promptly by the Contractor as needed. Sediment and debris build-up will be removed by the Contractor as required based upon the outcome of inspection.

- Perimeter sediment control systems will be inspected daily to ensure they are properly secured and functioning as designed. Cleaning will occur when accumulated sediments reach one-half of the original height of the silt or hay bale fence or as directed by the Engineer. If perimeter fencing is breached at any location, the breach will immediately be repaired by the Contractor, and the repair will be verified by the Engineer and/or the inspecting agent.

- Following the completion of construction, the Contractor will repair any eroded areas as directed by the Engineer. The Contractor will repair all eroded slopes, displaced riprap, or geotextile matting and will clean any sediment from exposed riprap surfaces.

- The Contractor will clear sediment and debris from all drainage structures and pipes as required in order to keep the system functioning properly during construction.

- Following final stabilization, the Contractor will remove all silt fencing.

4. Dewatering Wastewaters

Dewatering Guidelines

If encountered, dewatering wastewaters will be infiltrated into the ground unless otherwise directed by the Engineer. When dewatering is necessary, pumps used shall not be allowed to discharge directly into a wetland or watercourse. Prior to any dewatering, the Contractor must submit to the Engineer a written proposal for specific methods and devices to be used and obtain the Engineer's written approval of such methods and devices, including, but not limited to, the pumping of water into a temporary sedimentation basin, providing surge protection at the inlet or outlet of pumps, floating the intake of a pump, or any other method for minimizing and retaining the suspended solids. If the Engineer determines that a pumping operation is causing turbidity problems, the Contractor shall halt said operation until a means of controlling the turbidity is submitted by the Contractor in writing to the Engineer, approved in writing by the Engineer and implemented by the Contractor. No discharge of dewatering wastewater shall contain or cause a visible oil sheen, floating solids or foaming in the receiving water. If required, all activities are to be performed in compliance with CTDOT Form 816.

5. Post-Construction Stormwater Management

Post-Construction Guidelines

After the project is complete, the Department will perform the following maintenance and restorative measures:

- Litter/debris will be removed from the site regularly.
- Mowing and maintenance of the turf areas and vegetated areas will occur as needed.
- Riprap outlet protection will be inspected and repaired annually or as needed.
- Outlets will be checked for excessive scour and repaired as needed.

Post-Construction Performance Standards and Control Measures

The project site is previously developed with an effective impervious cover of approximately

38%, classifying the project as 'Other Development'. Accordingly, the full water quality volume for the site should be retained within the site limits. The following values were calculated for the post-construction site conditions:

Effective Impervious Cover:

$$\text{Effective Impervious Cover} = \frac{\text{Impervious Area of Site (acre)}}{\text{Total Area of Site (acre)}} \times 100\%$$

$$= \frac{1.14 \text{ acres}}{2.79 \text{ acres}} \times 100\%$$

$$= 40.86\%$$

Water Quality Volume:

(Full) Water Quality Volume = 0.097 ac-ft

Though the impervious area of the site will increase slightly, due to minor widening of the roadway and partial driveway reconstruction, many of the control measures to be installed are not used today and will be an improvement to existing conditions.

Right-of-way constraints and the proximity of adjacent wetlands to the project site provide limited opportunity for runoff reduction, low impact development (LID), and the use of primary stormwater treatment practices. Stormwater retention and treatment, though not at standards, will be applied to the maximum extent possible.

One technique that will be used, to minimize runoff and incorporate LID methodologies, is to apply the minimal amount of curbing required throughout the project area, thereby maximizing overland sheet flow and promoting stormwater infiltration.

A goal of 80% removal of the average annual post-construction total suspended solids load was used in designing stormwater management measures. One conventional secondary stormwater treatment practice that will be used is the installation of deep sump catch basins, the bottom 4-feet below the pipe invert, to catch excess debris and sediment.

To address stormwater velocity and discharge, a riprap apron will be established at the location of the new outfall to help dissipate the speed of the stormwater as it approaches the wetlands. Sizing calculations for the riprap apron can be found in Appendix B. Discharges for the two existing outfalls will remain approximately the same or decrease, and much of the stormwater flowing from off-site is expected to infiltrate prior to reaching the project area.

6. Other Controls

Waste Disposal

Construction site waste shall be properly managed and disposed of during the entire construction period. Additionally:

- A waste collection area will be designated. The selected area will minimize truck travel through the site and will not drain directly to the adjacent wetlands.
- Waste collection shall be scheduled regularly to prevent the containers from overfilling.
- Spills shall be cleaned up immediately.
- Defective containers that may cause leaks or spills will be identified through regular inspection. Any found to be defective will be repaired or replaced immediately.
- Any stockpiling of materials should be confined to the designated area as defined by the engineer.

Washout Areas

Washout of applicators, containers, vehicles and equipment for concrete shall be conducted in a designated washout area. No surface discharge of washout wastewaters from the area will be allowed. All concrete wastewater will be directed into a container or pit such that no overflow can occur. Washout shall be conducted in an entirely self-contained system and will be clearly designed and flagged or signed where necessary. The washout area shall be located outside of any buffers and at least 50 feet from any stream, wetland or other sensitive water or natural resources as determined or designated by CTDOT Office of Environmental Planning.

The designated area shall be designed and maintained such that no overflow can occur during rainfall or after snowmelt. Containers or pits shall be inspected at least once a week to ensure structural integrity, adequate holding capacity and will be repaired prior to future use if leaks are present. The Contractor shall remove hardened concrete waste when it accumulates to a height of ½ of the container or pit or as necessary to avoid overflow. All concrete waste shall be disposed of in a manner consistent will all applicable laws, regulations and guidelines.

Dust Control

For construction activities which cause airborne particulates, wet dust suppression shall be utilized. Construction site dust will be controlled by sprinkling the ground surface with water until it is moist on an as-needed basis. The volume of water sprayed shall be such that it suppresses dust yet also prevents the runoff of water.

Post-Construction

Upon completion of construction activities and stabilization of the site, all post-construction stormwater structures, including catch basins and the new riprap apron, shall be cleaned of construction sediment, and any remaining silt fence shall be removed prior to acceptance of the project by CTDOT. Sediment shall be properly disposed of in accordance with all applicable laws, regulations and guidelines.

Maintaining and Storing Vehicles and Equipment

The Contractor shall take measures to prevent any contamination to wetlands and watercourses while maintaining and storing construction equipment on the site. All chemical and petroleum containers stored on site shall be provided with impermeable containment which will hold at least 110% of the volume of the largest container, or 10% of the total volume of all containers in the area, whichever is larger, without overflow from the containment area. All chemicals and their containers shall be stored under a roofed area except for those stored in containers of 100 gallon capacity or more, in which case double-walled tanks will suffice.

7. Inspections

Inspection Guidelines

All construction activities shall be inspected initially for Plan implementation and then weekly for Routine Inspections.

During construction, all areas disturbed by the construction activity that have not been stabilized, all E&S control measures, all structural control measures, soil stockpile areas, washout areas and locations where vehicles enter or exit the site shall be inspected for evidence of, or the potential for, pollutants entering the drainage system and impacts to receiving waters at least once every seven calendar days and within 24 hours of the end of a storm that generates a discharge.

For storms that end on a weekend, holiday or other time in which working hours will not commence within 24 hours, an inspection is required within 24 hours only for storms that equal or exceed 0.5 inches. For lesser storms, inspection shall occur immediately upon the start of subsequent normal working hours.

Where sites have been temporarily or finally stabilized, such inspection shall be conducted at least once every month for three months.

Qualified personnel provided by the DOT District 1 Office shall conduct Inspections.

The following items shall be inspected as described below:

Item	Procedure
Silt Fence	Silt fence shall be inspected to ensure that the fence line is intact with no breaks or tears. The fence shall be firmly anchored to the ground. Areas where the fence is excessively sagging or where support posts are broken or uprooted shall be noted. Depth of sediment behind the fence shall be noted.
Catch Basin Protection	Protective measures shall be inspected to ensure that sediment is not entering the catch basins. Catch basin sumps shall be monitored for sediment deposition. Hay bales shall be inspected to ensure they have not clogged.
General	Construction areas and the perimeter of the site shall be inspected for any evidence of debris that may blow or wash off site or that has blown or washed off site. Construction areas shall be inspected for any spills or unsafe storage of materials that could pollute off site waters.

8. Keeping Plans Current

Revisions to Stormwater Pollution Control Plans

CTDOT shall amend the Plan if the actions required by the Plan fail to prevent pollution or otherwise comply with provisions of the General Permit. The Plan shall also be amended whenever there is a change in contractors or sub-contractors at the site. If the results of the inspections require modifications to the Stormwater Pollution Control Plan, the Plans shall be revised as soon as practicable after the inspection. Such modifications shall provide for a timely implementation of any changes to non-engineered controls on the site within 24 hours and implementation of any changes to the Plan within 3 (three) calendar days following the inspection. For Engineered measures, corrective actions shall be implemented on site within 7 (seven) days and incorporated into a revised Plan within 10 (ten) days of the date of inspection.

In no event shall the requirements to keep the Plan current or update the Plan relieve the permittee and their contactor(s) of the responsibility to properly implement any actions required to protect the waters of the State and to comply with all conditions of the permit.

9. Monitoring Requirements

A written report summarizing the scope of the inspection, the name(s) and qualifications of inspection personnel, the date and time of the inspection, major observations relative to the implementation of the Pollution Control Plan, and actions taken shall be completed within 24 hours of the inspection. This report shall be retained as part of the Stormwater Pollution Control Plan for at least five years after the date of the inspection.

Turbidity monitoring shall be conducted at the three outlet locations depicted on the Plan utilizing a procedure consistent with 40 CFR Part 136 (http://www.epa.gov/region9/qa/pdfs/40cfr136_03.pdf) and may be taken manually or by an in-situ turbidity probe or other automatic sampling device equipped to take individual turbidity readings. The first sample shall be taken within the first hour of stormwater discharge from the site and at least three grab samples shall be taken during a storm event and shall be representative of the flow and characteristics of the discharge. Sampling shall be conducted at least monthly when there is a discharge of stormwater from the site while construction activity is ongoing, until final stabilization of the drainage area associated with each outfall is achieved.

Samples shall be taken during normal working hours, which, for this project, shall be defined as Monday through Friday, 8 a.m. to 5 p.m. If a storm continues past working hours, sampling shall resume the following morning or the morning of the next working day following a weekend or holiday, as long as the discharge continues. Sampling may be temporarily suspended when conditions exist that may reasonably pose a threat to the safety of the person taking the sample.

Within 30 days following the end of each month, the stormwater sampling results shall be submitted on the Stormwater Monitoring Report (SMR) and in accordance with NetDMR. If there is no stormwater discharge during a month, sampling is not required, however, SMRs indicating "no discharge" shall still be submitted as required.

10. Contractors

General

This section shall identify all contractors and subcontractors who will perform on site actions which may reasonably be expected to cause or have the potential to cause pollution of the waters of the State.

Certification Statement

All contractors and subcontractors must sign the attached statement. All certification will be included in the Stormwater Pollution Control Plan.

State Project No. 12-95

Safety Improvements on Route 533 at Box Mountain Road
Bolton, CT

"I certify under penalty of law that I have read and understand the terms and conditions of the general permit for the discharge of stormwater associated with construction activity. I understand that as Contractor on the project, I am covered by this general permit, and must comply with the terms and conditions of this permit, including, but not limited to, the requirements of the Stormwater Pollution Control Plan prepared for this project."

GENERAL CONTRACTOR

Signed:_____ Date:_____

Title:_____

Firm:_____ Telephone:_____

Address:_____

_____

_____

SUBCONTRACTOR

Signed:_____ Date:_____

Title:_____

Firm:_____ Telephone:_____

Address:_____

_____

_____

List of Applicable Figures and Forms:

Appendix A – Project Location

Location Plan	Figure A-1
Aerial Photo	Figure A-2

Appendix B – Disturbed Areas and Drainage Calculations

Disturbed Area Per Outfall	Figure B-1
Outlet Protection – Outfall #PO-1	Figure B-2
Water Quality Volume Calculations	Figure B-3

Appendix C – Plan Sheets

Typical Sections	Figure C-1
Miscellaneous Details	Figure C-2
▪ Proposed Riprap Apron	
▪ E&S Protection at Culverts	
Highway Plan	Figure C-3
Drainage Plan	Figure C-4
Intersection Grading Plan	Figure C-5

Appendix D – Stormwater Monitoring Report Form

Appendix E – Notice of Termination Form

Appendix A – Project Location

Location Plan (Figure A-1)

Aerial Photo (Figure A-2)

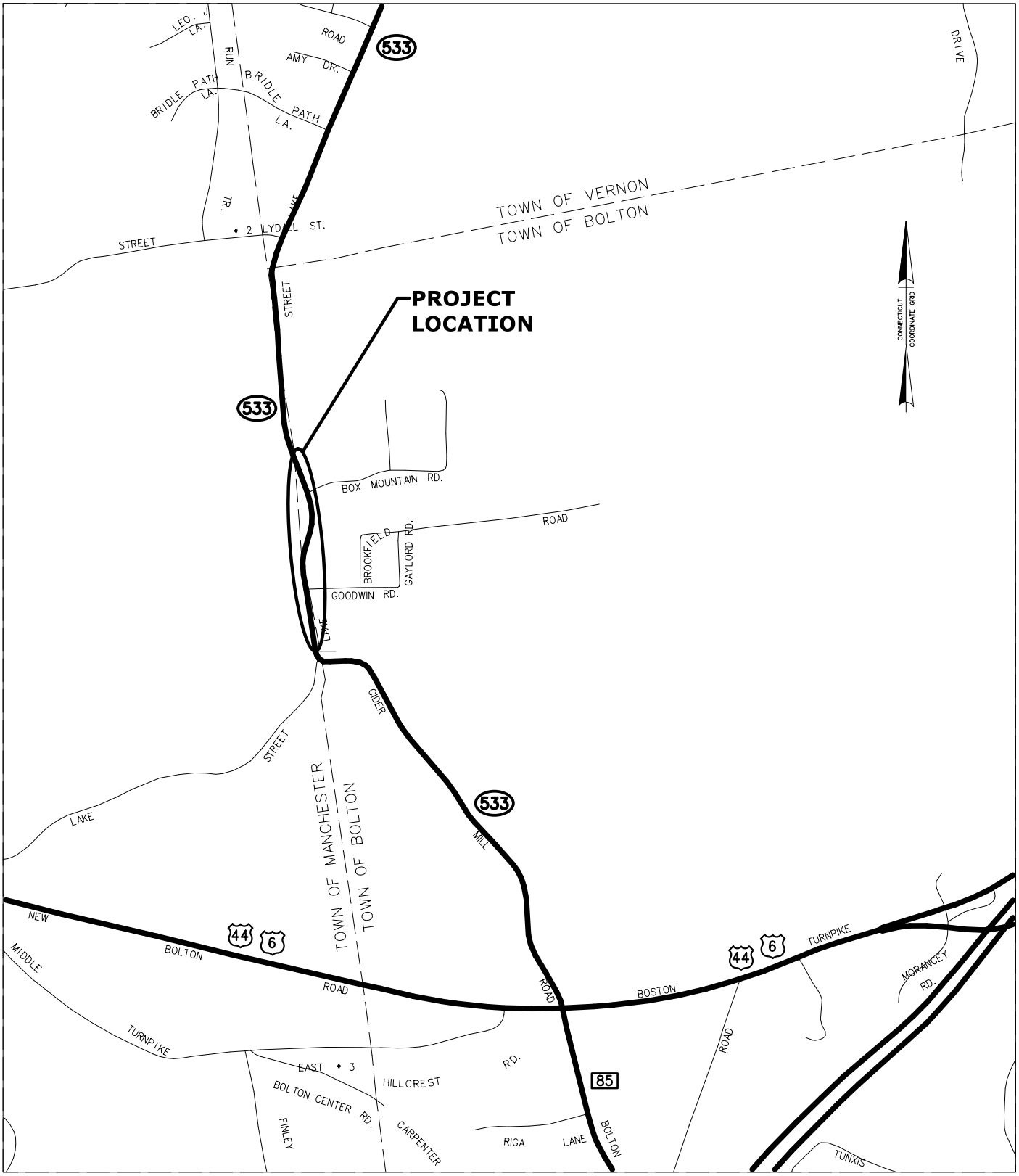

STATE PROJECT NO.: 12-95 CITY/TOWN: BOLTON	STATE OF CONNECTICUT DEPARTMENT OF TRANSPORTATION	OFFICE OF ENGINEERING	DATE: JANUARY 2015

FIGURE A-1

Detail of 2004 Aerial Photography

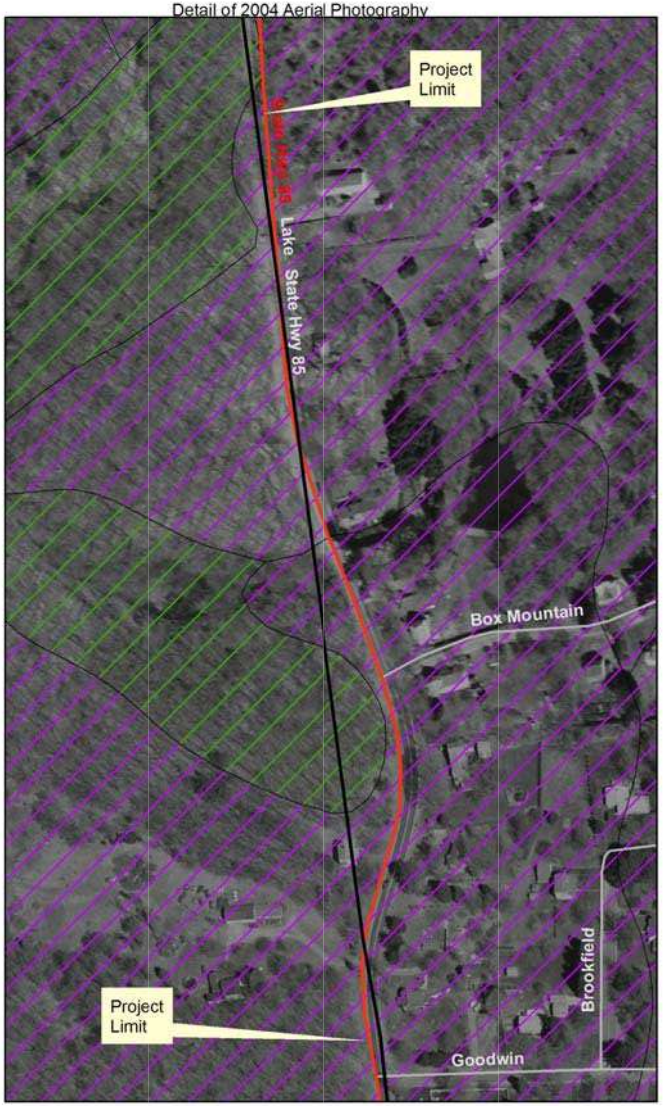

Detail of Walling 1859 Map of Middlesex County

Detail of 1811 Warrren Map of Connecticut

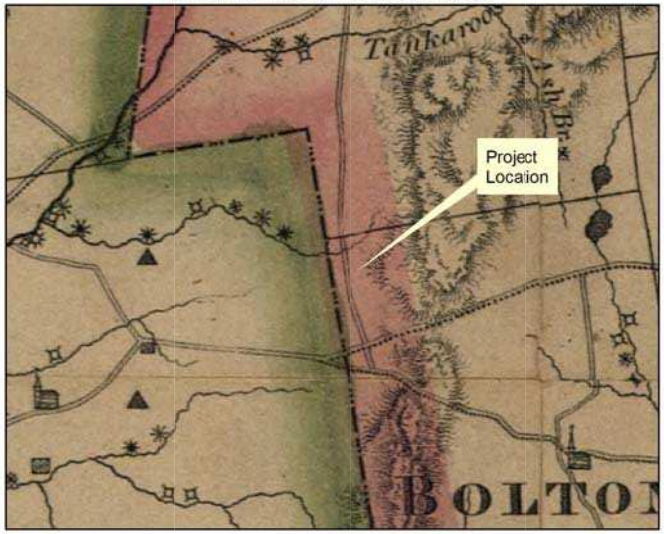

Detail of USGS Topo Map

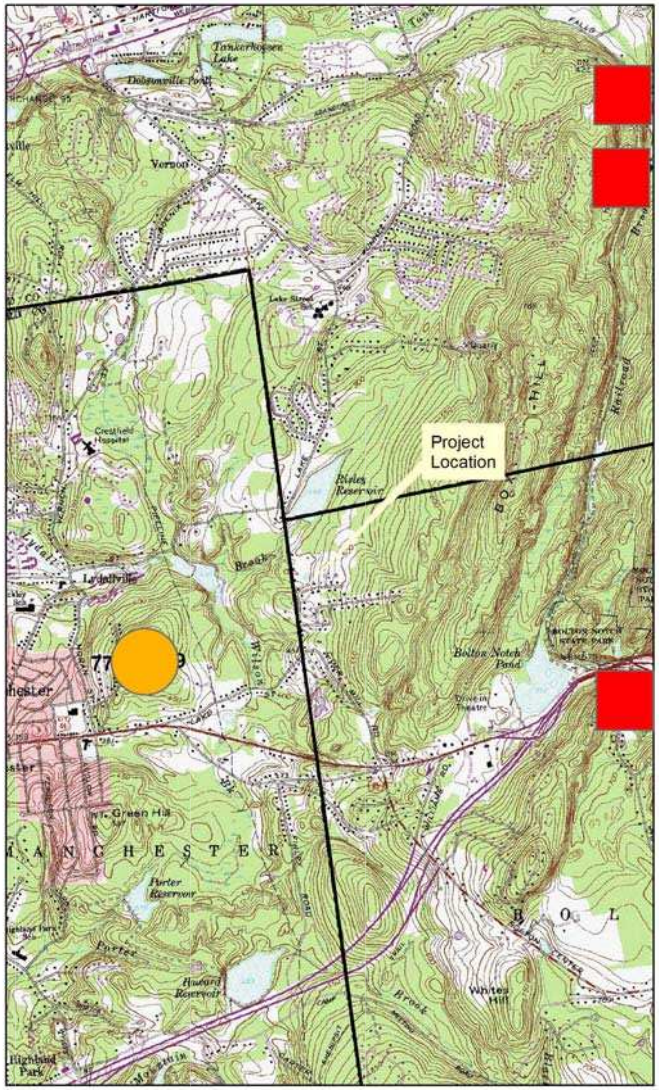

Office of Intermodal & Environmental Planning
Environmental Review - Historical and Archaeological Resources

This product was created using TeleAtlas Information
©1984-2008 Tele Atlas, Rel. 3/2008.

State Project 12-95
Safety Improvements on Rt 533
at Box Mountain Rd.
Bolton

Predicted Archaeological Soil Sensitivity

- High
- Moderate
- Variable
- Low
- Poor
- Unknown

Historic District

Cemetery/ 4(f) Resource

Approximate Location of Archaeological Site

- Historic
- Prehistoric
- Unknown

N

December 6, 2010

FIGURE A-2

Appendix B – Disturbed Areas and Drainage Calculations

Disturbed Area Per Outfall (Figure B-1)

Outlet Protection – Outfall #PO-1 (Figure B-2)

Water Quality Volume Calculations (Figure B-3)

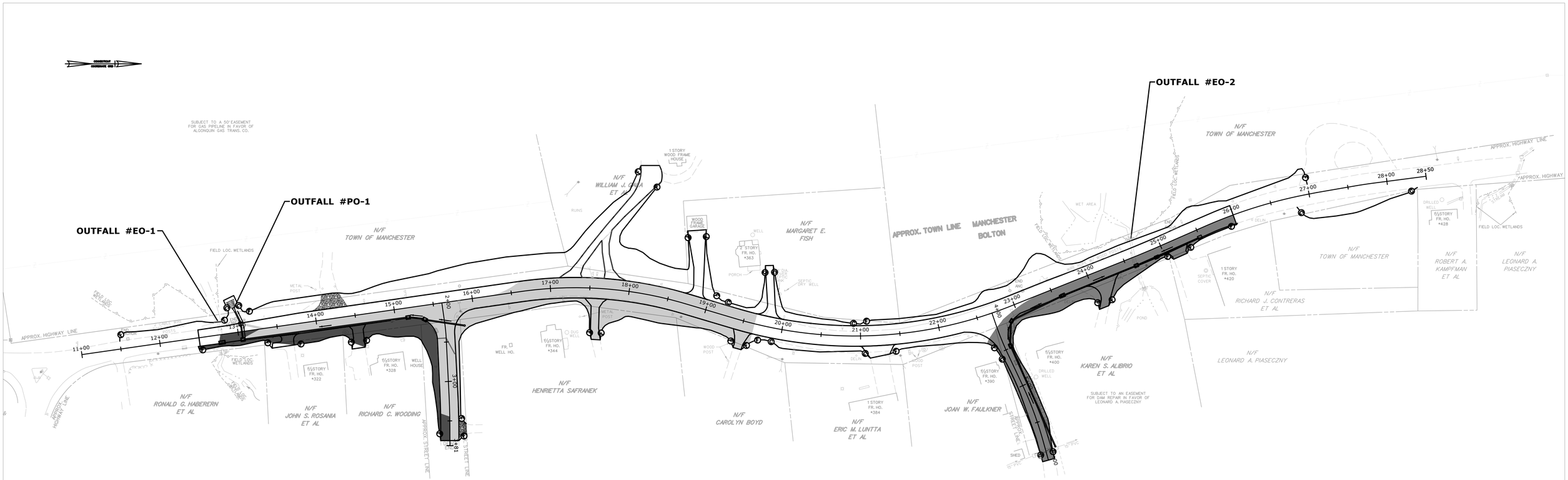

DISTURBED AREA PER OUTFALL

OUTFALL #	CONTRIBUTING DISTURBED AREA [ACRES]
EO-1	0.12
EO-2	0.54
PO-1	0.26

SCALE: 1" = 60'

120 60 0 120

FIGURE B-1

Appendix A – Outlet Protection Form

OUTLET PROTECTION

Project No.: 12-95 Designed By: J. DARLING Date: 3/17/14
Town: Bolton Checked By: _____ Date: _____
Route: 533 Station: _____

1. Assess the erosion potential at the outlet and other critical site factors

Describe the conditions at the outlet location:

Sketch

☒ No well-defined channel
☐ Well-defined channel

2. Determine the tailwater (TW) conditions at the outlet

TW depth: 0.37 ft TW elevation: 439.57 ft (Pipe inv. (439.2) + d_{TW} (0.37))
TW computational method: Storm & Sanitary
Channel bed elevation: — Estimated velocity in channel: —

3. Calculate and evaluate the outlet velocity for the design discharge

Design Discharge: 2.92 Design Frequency: 10 yr
Outlet Pipe Size: 15 in. Type: RCP
Length: 28 ft Slope: 5.56 % Outlet Invert Elevation: 439.20 ft
Outlet Velocity at design discharge: 9.57 fps
Velocity computational method: Storm & Sanitary

4. Select the type of outlet protection

☒ Riprap Apron
(See Figures 11-13 & 11-14)

Type A (A,B,C)

Riprap type: intermediate
Length (L_a): 10 ft
Width (W_1): 3.75'
Width (W_2): 10.75'
Width-Type C (W_3): —

☐ Preformed Scour Hole
(See Figure 11-15)

	Type 1	Type 2
d_{50}		
F		
C		
B		
S_p		

Proposed Type: _____
Riprap Type: _____

FIGURE B-2

DATE PREPARED 3/17/14	PREPARED BY J. DARLING	State of Connecticut Department of Transportation Bureau of Engineering & Highway Operations DES-003 REV 1-93 (302-06-0225) COMPUTATION SHEET	ORGANIZATION UNIT NO.	WORK ORDER NO. 12-95
DATE CHECKED	CHECKED BY			SHEET NO. 1 of 1

SUBJECT:

System A – Tailwater Calcs

$d_{TWE\ RAO} = 0.37' < 0.5 R_p = 0.5(15/12) = 0.625'$

&

$V = 9.57 \text{ fps} < 14 \text{ fps}$

$$\therefore L_a = \frac{3(Q-5)}{S_p^{1.5}} + 10$$

$$= \frac{3(2.92-5)}{\left(\frac{15}{12}\right)^{1.5}} + 10$$

$L_a \approx 5.5' \rightsquigarrow$ min. $\underline{\underline{10'}}$ [Drainage Manual, Table 11-12.1]

$\therefore W_1 = 3S_p$
$= 3(15/12)$

$W_1 = 3.75'$

&

$W_2 = 3S_p + 0.7 L_a$
$= 3(15/12) + 0.7(10)$

$W_2 = 10.75'$

Printed on Recycled or Recovered Paper

FIGURE B-2

Water Quality Volume (WQV) Calculations

Post-Construction Conditions

PROJECT NO.	12-95	PREPARED BY	J. Darling
DATE	July 16, 2014	CHECKED BY	J. Tanski
PROJ. DESC.	Safety Improvements on Route 533		

GIVEN : This project is classified as 'Other Development' (Site < 40% impervious); therefore, the full WQV should be retained and treated.

FIND : The Full Water Quality Volume for the Site.

ON-SITE DRAINAGE TO OUTLETS [ACRE]

Outlet ID *	Impervious Area	Grassy/Wooded Area
EO-1	0.04	0.13
EO-2	0.25	0.16
PO-1	0.41	0.23

* Refer to General Permit Attachment A (USGS Location Plan) for Corresponding Outlet Locations

TOTAL SITE COMPOSITION [ACRE]

Impervious Area	Grassy/Wooded Area
1.14	1.65

WATER QUALITY VOLUME (WQV) CALCULATION

Total Site Area, A =	2.79	acres
Design Precipitation, P =	1	inch
% Impervious Cover, I =	41	
Volumetric Runoff Coefficient, R =	0.418	

WQV =	**(P x R x A) / 12**	**ac-ft**
=	**0.097**	**ac-ft**

Appendix C – Plan Sheets

Typical Sections (Figure C-1)

Miscellaneous Details (Figure C-2)

Highway Plan (Figure C-3)

Drainage Plan (Figure C-4)

Intersection Grading Plan (Figure C-5)

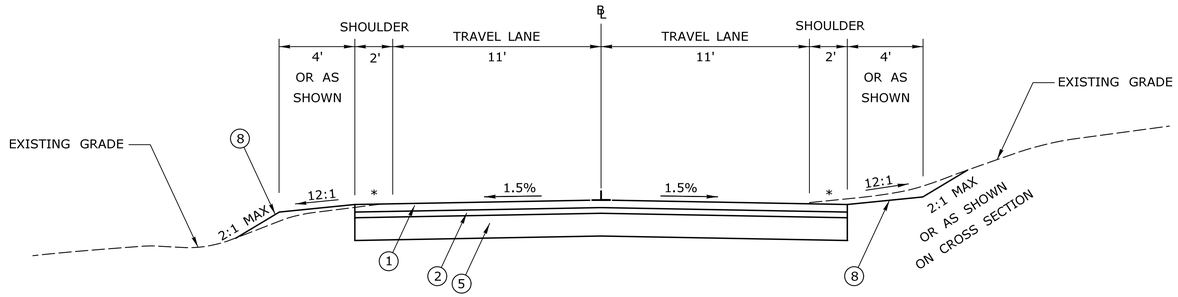

ROUTE 533 - NORMAL SECTION

STA. 12+50 TO STA. 15+91

STA. 23+64 TO STA. 26+00

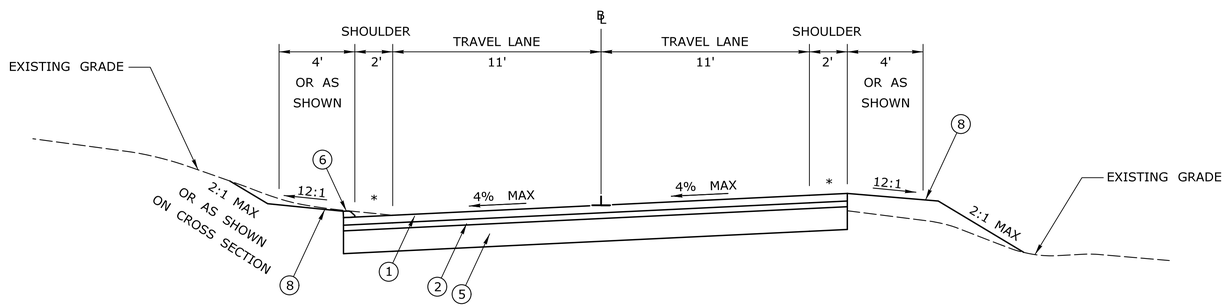

ROUTE 533 - SUPERELEVATED SECTION

STA. 15+91 TO STA. 19+07.5 [SUPERELEVATED IN OPP. DIRECTION]

STA. 19+07.5 TO STA. 23+64

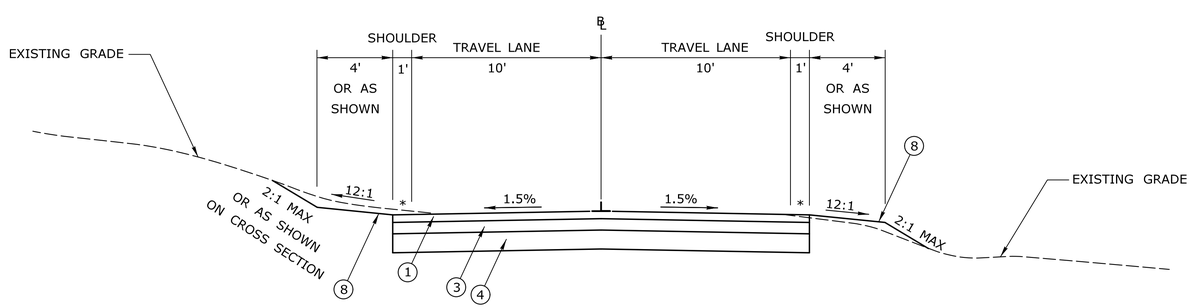

SIDE ROAD - NORMAL SECTION

GOODWIN RD: STA. 2+13 TO STA. 3+75

BOX MOUNTAIN RD: STA. 4+13 TO STA. 6+00

LEGEND

1. 4" HMA S0.5 (PLACED IN TWO EQUAL LIFTS)
2. 3" HMA S1
3. 6" PROCESSED AGGREGATE
4. 10" SUBBASE (PLACED IN TWO EQUAL LIFTS)
5. 12" PROCESSED AGGREGATE BASE
6. CURBING AS SHOWN ON PLANS
7. GUIDE RAIL AS SHOWN ON PLANS
8. 'TURF ESTABLISHMENT' OR 'TURF ESTABLISHMENT - LAWN' (AS SHOWN ON PLANS) PLACED ON 6" TOPSOIL
9. SPECIAL RIPRAP (COMPACTED - FOR SLOPE PROTECTION)

* SLOPE OF SHOULDER SAME AS ADJACENT TRAVEL LANE

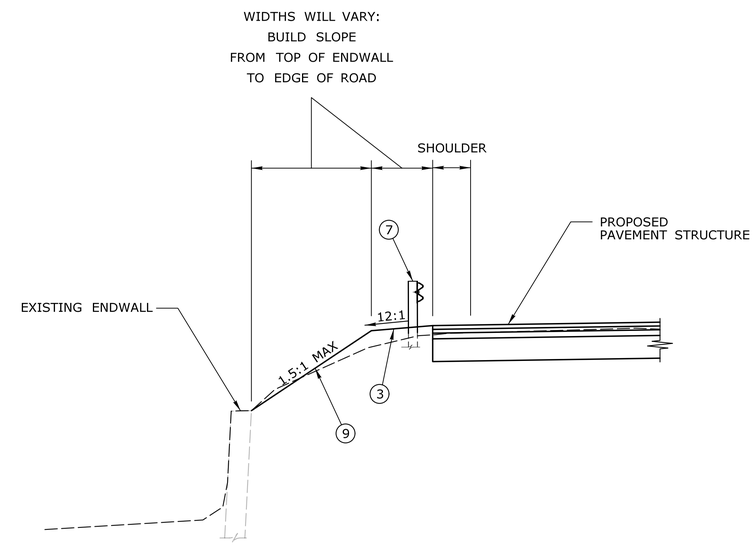

ROUTE 533 - TREATMENT AT CULVERTS

STA. 24+68 LT

STA. 12+77 LT

[NOTE: GUIDERAIL NEAR CULVERTS WILL USE DEEPER POSTS WITH MINIMIZED SPACING FOR STABLIZATION]

REV.	DATE	REVISION DESCRIPTION	SHEET NO.

THE INFORMATION, INCLUDING ESTIMATED QUANTITIES OF WORK, SHOWN ON THESE SHEETS IS BASED ON LIMITED INVESTIGATIONS BY THE STATE AND IS IN NO WAY WARRANTED TO INDICATE THE CONDITIONS OF ACTUAL QUANTITIES OF WORK WHICH WILL BE REQUIRED.

Plotted Date: 1/12/2015

DESIGNER/DRAFTER: **JED**

CHECKED BY: **BKK**

NOT TO SCALE

STATE OF CONNECTICUT
DEPARTMENT OF TRANSPORTATION

Filename: ...\HW_MSH_0012_0095_TYP-01.dgn

SIGNATURE/ BLOCK: **OFFICE OF ENGINEERING**

APPROVED BY:

PROJECT TITLE: **SAFETY IMPROVEMENTS ON ROUTE 533 AT BOX MOUNTAIN ROAD**

TOWN: **BOLTON**

DRAWING TITLE: **TYPICAL SECTIONS**

PROJECT NO. **12-95**

DRAWING NO. **TYP-01**

SHEET NO.

FIGURE C-1

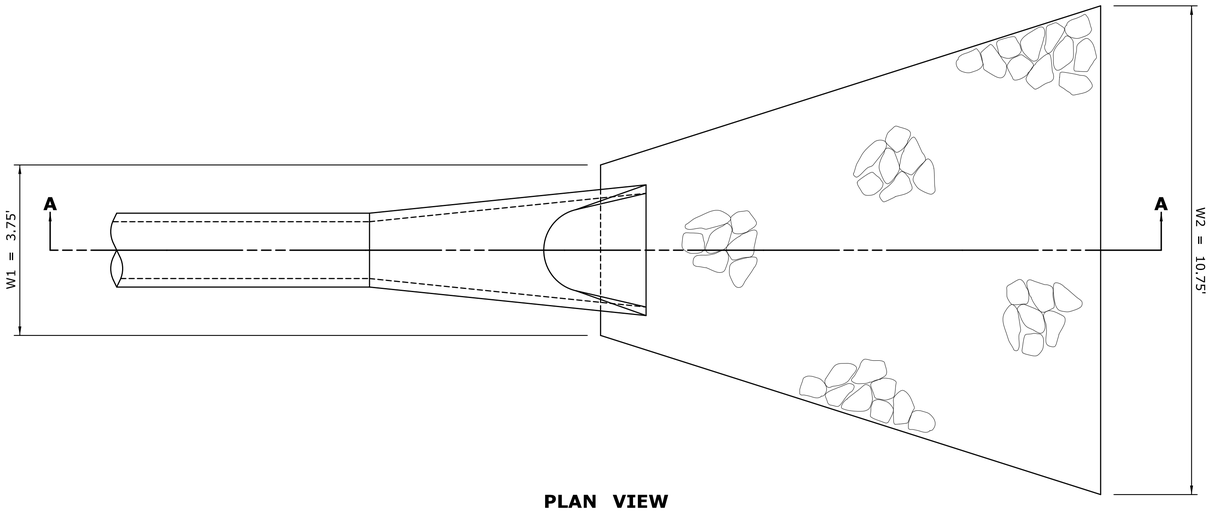

PLAN VIEW

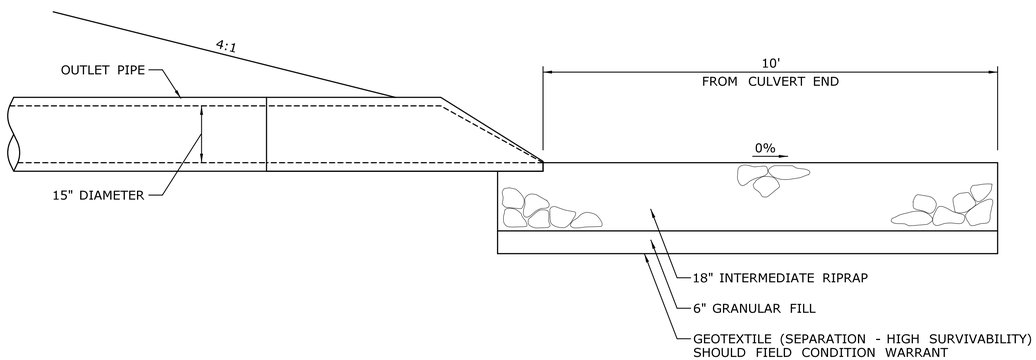

SECTION A-A

TYPE A INTERMEDIATE RIPRAP APRON WITH R.C.C.E.
ROUTE 533 - STA. 12+96 LT

NOTES:

1. INTERMEDIATE RIPRAP APRON SHALL BE MEASURED AND PAID FOR AT THE CONTRACT UNIT PRICES FOR CHANNEL EXCAVATION, INTERMEDIATE RIPRAP, AND GRANULAR FILL.

2. THERE WILL BE NO DIRECT PAYMENT FOR GEOTEXTILE (SEPARATION - HIGH SURVIVABILITY). THE COST SHALL BE CONSIDERED AS INCLUDED IN THE CONTRACT UNIT PRICE FOR INTERMEDIATE RIPRAP.

NOTES:

1.WORK AND MATERIALS WILL BE MEASURED AND PAID FOR AT THE CONTRACT UNIT PRICE FOR LAWN DRAIN.

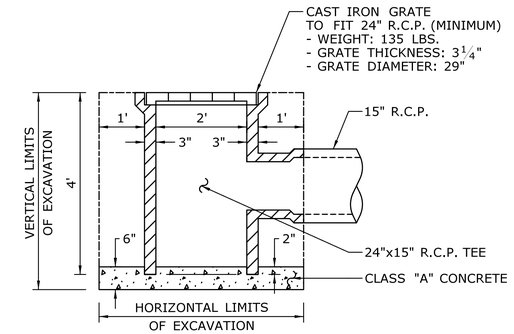

LAWN DRAIN DETAIL

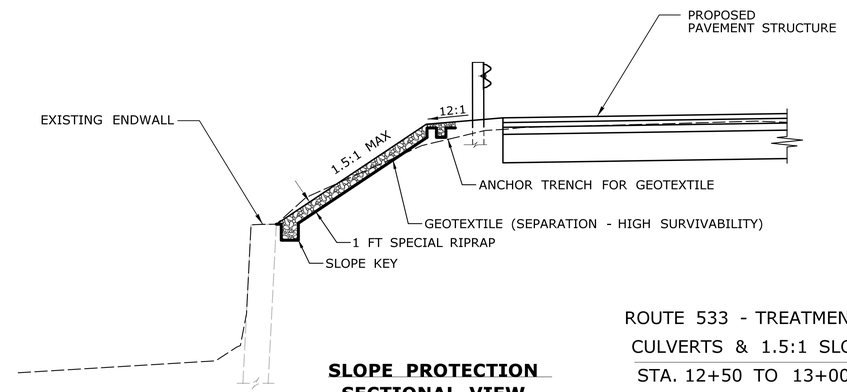

SLOPE PROTECTION SECTIONAL VIEW

ROUTE 533 - TREATMENT AT
CULVERTS & 1.5:1 SLOPES
STA. 12+50 TO 13+00 LT
STA. 24+00 TO 24+75 LT

NOTES:

1.WORK WILL BE MEASURED AND PAID FOR AT THE CONTRACT UNIT PRICE FOR THE VARIOUS ITEMS INVOLVED.

2. MATERIALS, CONSTRUCTION METHODS, AND PAYMENT SHALL CONFORM TO THE FOLLOWING; SPECIAL RIPRAP - SECTION 7.03; AND GEOTEXTILE (SEPARATION - HIGH SURVIVABILITY) - SECTION 7.55.

REV.	DATE	REVISION DESCRIPTION	SHEET NO.

THE INFORMATION, INCLUDING ESTIMATED QUANTITIES OF WORK, SHOWN ON THESE SHEETS IS BASED ON LIMITED INVESTIGATIONS BY THE STATE AND IS IN NO WAY WARRANTED TO INDICATE THE CONDITIONS OF ACTUAL QUANTITIES OF WORK WHICH WILL BE REQUIRED.

Plotted Date: 1/12/2015

DESIGNER/DRAFTER: JED/EKM
CHECKED BY: JNT
NOT TO SCALE

STATE OF CONNECTICUT
DEPARTMENT OF TRANSPORTATION

Filename: ...\HW_MSH_0012_0095_MDS-01.dgn

SIGNATURE/ BLOCK:
OFFICE OF ENGINEERING
APPROVED BY:

PROJECT TITLE:
SAFETY IMPROVEMENTS ON ROUTE 533 AT BOX MOUNTAIN ROAD

TOWN: BOLTON

DRAWING TITLE:
MISCELLANEOUS DETAILS

PROJECT NO. 12-95
DRAWING NO. MDS-01
SHEET NO.

FIGURE C-2

GENERAL NOTES:

1. EXISTING ACCESS TO ADJACENT PROPERTIES SHALL BE MAINTAINED AT ALL TIMES. MAINTAIN VEHICULAR ACCESS WITH EXISTING OR PROPOSED PAVEMENT, SUBBASE, PROCESSED AGGREGATE, GRANULAR FILL, OR OTHER SUITABLE MATERIALS AS APPROVED BY THE ENGINEER. THE COST OF FURNISHING, INSTALLING, AND REMOVING THIS MATERIAL SHALL BE PAID FOR UNDER CONTRACT ITEM NO. 0971001A - MAINTENANCE AND PROTECTION OF TRAFFIC.
2. CONSTRUCTION OF DRIVES SHALL BE COORDINATED WITH THE PROPERTY OWNERS. TEMPORARY ACCESS TO DRIVES SHALL BE MAINTAINED AT ALL TIMES UNLESS PRIOR ARRANGEMENTS ARE MADE WITH PROPERTY OWNERS.
3. ALL CATCH BASIN GRATES THROUGHOUT THE PROJECT SHALL BE TYPE "A".
4. ALL CATCH BASIN TOPS SUPPLIED BY THE CONTRACTOR SHALL MATCH ADJACENT CURBING IN ACCORDANCE WITH CTDOT STANDARD SHEET NO. HW-507_07.
5. ALL EXISTING AND PROPOSED DRAINAGE PIPES, CATCH BASINS, AND MANHOLES CARRYING DRAINAGE WITHIN THE PROJECT LIMITS SHALL BE CLEANED IN ACCORDANCE WITH CTDOT FORM 816 SECTION 6.53 UPON COMPLETION OF THE PROJECT.

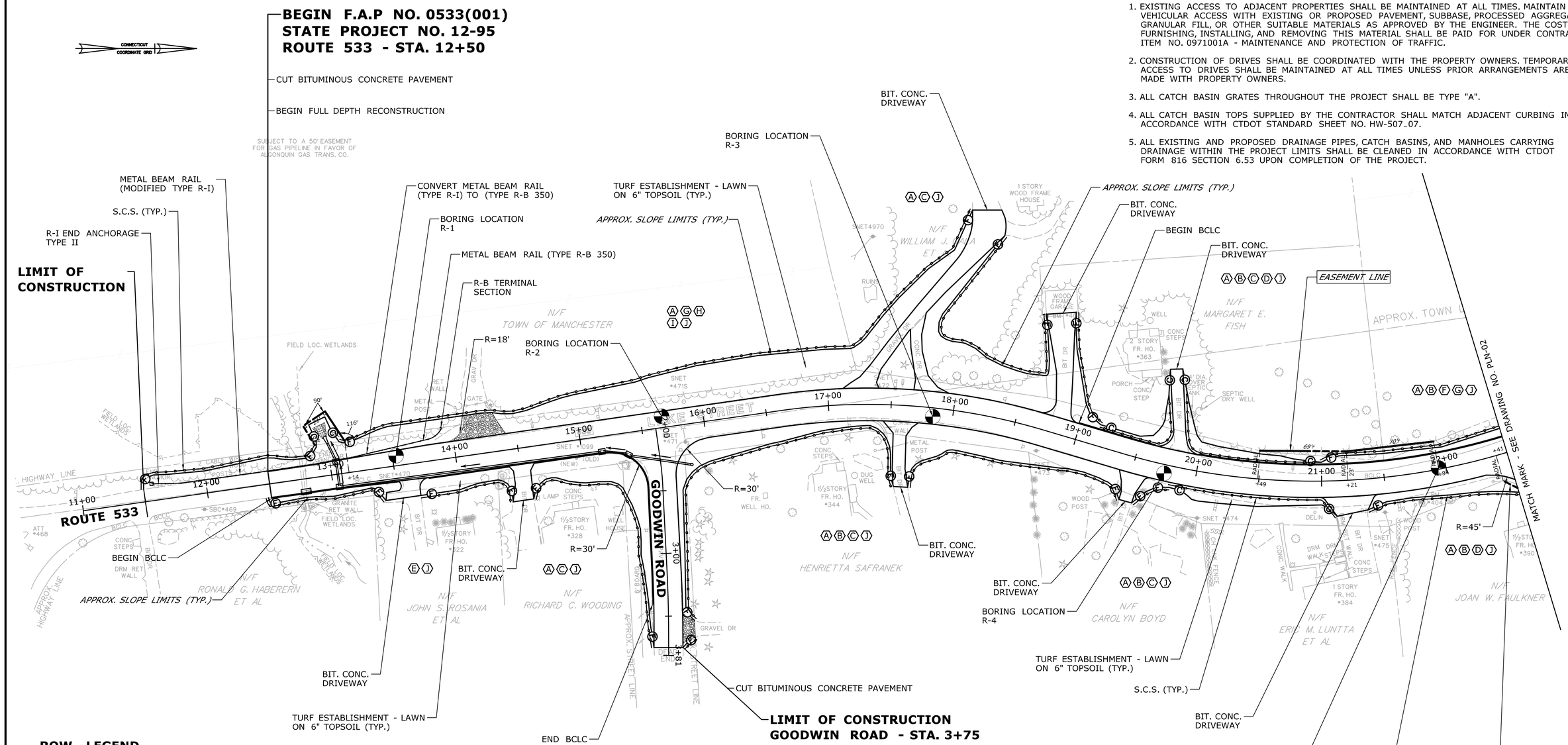

ROW LEGEND

- (A) - EASEMENT TO SLOPE FOR SUPPORT OF THE HIGHWAY REQUIRED
- (B) - EASEMENT TO SLOPE FOR SAFETY OF THE HIGHWAY AND REMOVE, USE OR RETAIN EXCAVATED MATERIAL REQUIRED
- (C) - RIGHT TO CONSTRUCT DRIVEWAY REQUIRED
- (D) - PARTIAL TAKE REQUIRED
- (E) - RIGHT TO GRADE REQUIRED
- (F) - DEFINED EASEMENT FOR HIGHWAY PURPOSES REQUIRED
- (G) - EASEMENT TO INSTALL M.B.R. AND MAINTAIN GUIDE RAILING AND END ANCHORAGE REQUIRED
- (H) - DRAINAGE RIGHT OF WAY REQUIRED
- (I) - EASEMENT TO DRAIN REQUIRED
- (J) - RIGHT TO INSTALL SEDIMENTATION CONTROL SYSTEM REQUIRED

BCLC				
ROADWAY	FROM STA.	TO STA.	RT/LT	LENGTH
ROUTE 533	12+50	15+19	RT	224'
ROUTE 533	18+99	22+79	LT	336'
GOODWIN RD	2+13	3+40	RT	142'

REV.	DATE	REVISION DESCRIPTION	SHEET NO.

THE INFORMATION, INCLUDING ESTIMATED QUANTITIES OF WORK, SHOWN ON THESE SHEETS IS BASED ON LIMITED INVESTIGATIONS BY THE STATE AND IS IN NO WAY WARRANTED TO INDICATE THE CONDITIONS OF ACTUAL QUANTITIES OF WORK WHICH WILL BE REQUIRED.

Plotted Date: 1/12/2015

DESIGNER/DRAFTER: JED
CHECKED BY: JNT
SCALE IN FEET 0 40 80
SCALE 1"=40'

STATE OF CONNECTICUT
DEPARTMENT OF TRANSPORTATION

Filename: ...\HW_MSH_0012_0095_PLN-01.dgn

SIGNATURE/BLOCK: OFFICE OF ENGINEERING
APPROVED BY:

PROJECT TITLE: SAFETY IMPROVEMENTS ON ROUTE 533 AT BOX MOUNTAIN ROAD

TOWN: BOLTON

DRAWING TITLE: HIGHWAY PLAN

PROJECT NO. 12-95
DRAWING NO. PLN-01
SHEET NO.

FIGURE C-3

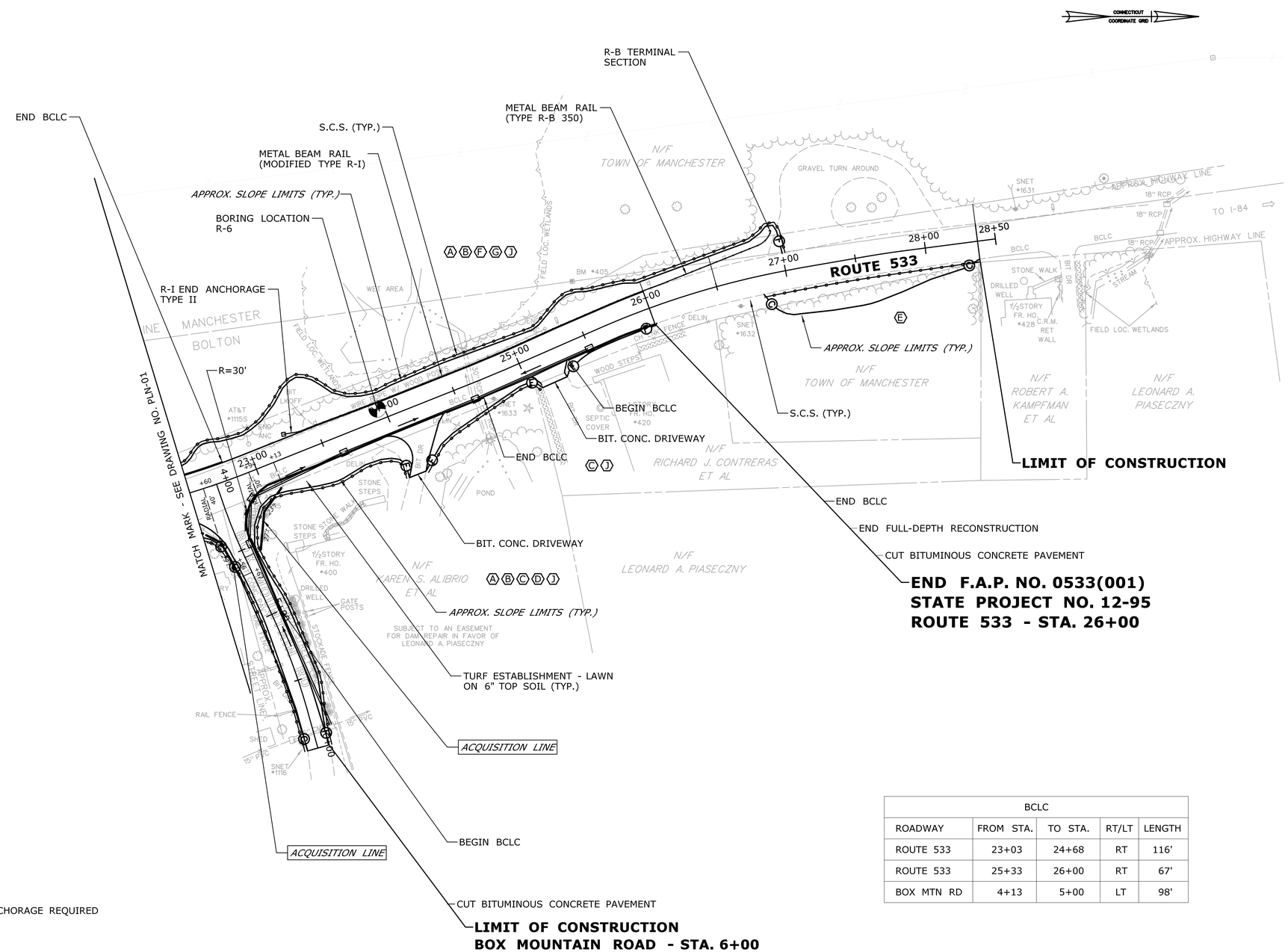

ROW LEGEND

- Ⓐ - EASEMENT TO SLOPE FOR SUPPORT OF THE HIGHWAY REQUIRED
- Ⓑ - EASEMENT TO SLOPE FOR SAFETY OF THE HIGHWAY AND REMOVE, USE OR RETAIN EXCAVATED MATERIAL REQUIRED
- Ⓒ - RIGHT TO CONSTRUCT DRIVEWAY REQUIRED
- Ⓓ - PARTIAL TAKE REQUIRED
- Ⓔ - RIGHT TO GRADE REQUIRED
- Ⓕ - DEFINED EASEMENT FOR HIGHWAY PURPOSES REQUIRED
- Ⓖ - EASEMENT TO INSTALL M.B.R. AND MAINTAIN GUIDE RAILING AND END ANCHORAGE REQUIRED
- Ⓗ - DRAINAGE RIGHT OF WAY REQUIRED
- Ⓘ - EASEMENT TO DRAIN REQUIRED
- Ⓙ - RIGHT TO INSTALL SEDIMENTATION CONTROL SYSTEM REQUIRED

BCLC				
ROADWAY	FROM STA.	TO STA.	RT/LT	LENGTH
ROUTE 533	23+03	24+68	RT	116'
ROUTE 533	25+33	26+00	RT	67'
BOX MTN RD	4+13	5+00	LT	98'

REV.	DATE	REVISION DESCRIPTION	SHEET NO.

THE INFORMATION, INCLUDING ESTIMATED QUANTITIES OF WORK, SHOWN ON THESE SHEETS IS BASED ON LIMITED INVESTIGATIONS BY THE STATE AND IS IN NO WAY WARRANTED TO INDICATE THE CONDITIONS OF ACTUAL QUANTITIES OF WORK WHICH WILL BE REQUIRED.

Plotted Date: 1/12/2015

DESIGNER/DRAFTER: JED
CHECKED BY: JNT
SCALE IN FEET 0 40 80
SCALE 1"=40'

STATE OF CONNECTICUT
DEPARTMENT OF TRANSPORTATION

Filename: ...\HW_MSH_0012_0095_PLN-02.dgn

SIGNATURE/BLOCK: OFFICE OF ENGINEERING
APPROVED BY:

PROJECT TITLE: SAFETY IMPROVEMENTS ON ROUTE 533 AT BOX MOUNTAIN ROAD

TOWN: BOLTON
DRAWING TITLE: HIGHWAY PLAN

PROJECT NO. 12-95
DRAWING NO. PLN-02
SHEET NO.

FIGURE C-3

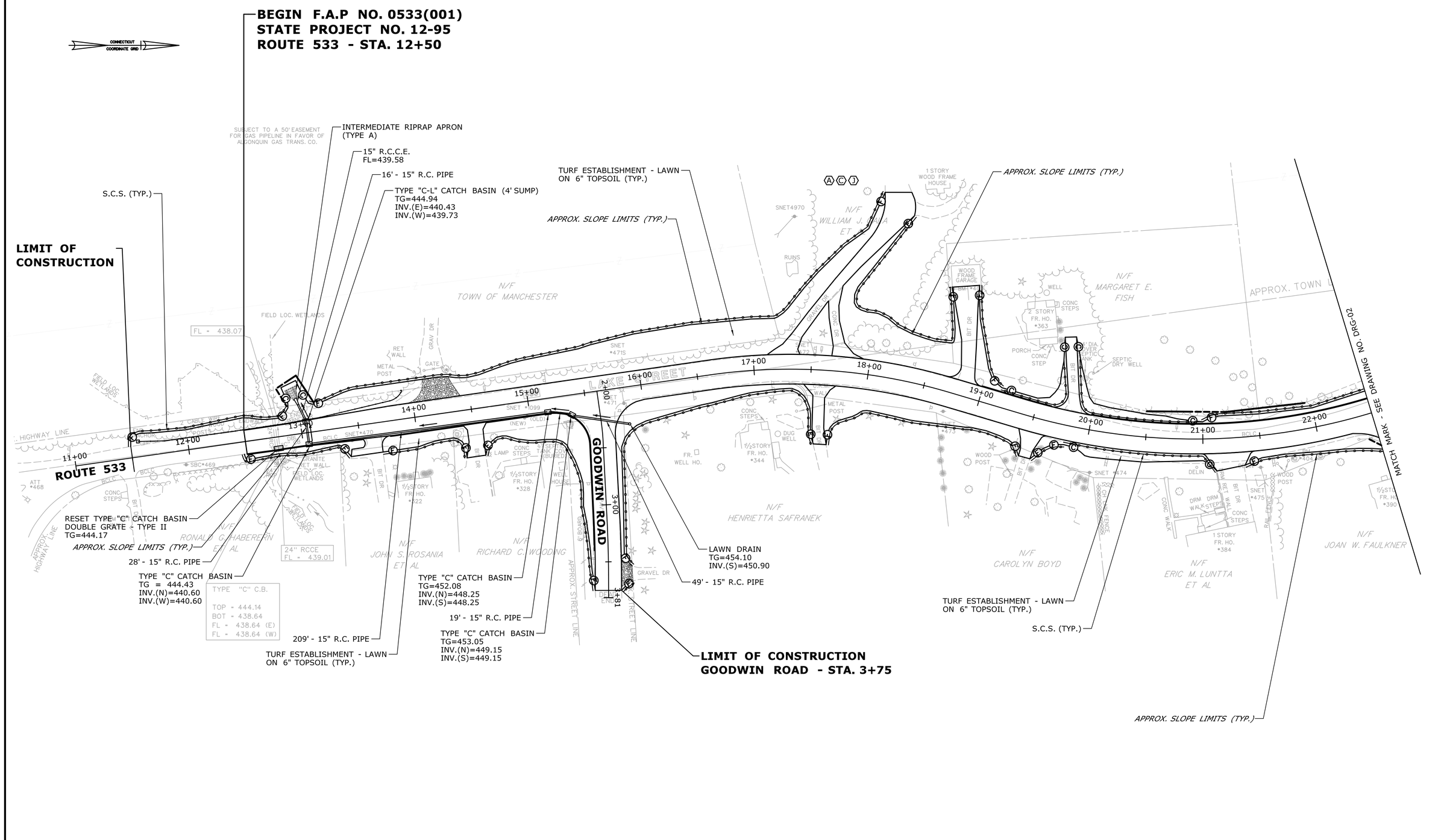

REV.	DATE	REVISION DESCRIPTION	SHEET NO.

THE INFORMATION, INCLUDING ESTIMATED QUANTITIES OF WORK, SHOWN ON THESE SHEETS IS BASED ON LIMITED INVESTIGATIONS BY THE STATE AND IS IN NO WAY WARRANTED TO INDICATE THE CONDITIONS OF ACTUAL QUANTITIES OF WORK WHICH WILL BE REQUIRED.

Plotted Date: 1/12/2015

DESIGNER/DRAFTER: **JED**

CHECKED BY: **JNT**

SCALE IN FEET 0 40 80

SCALE 1"=40'

STATE OF CONNECTICUT
DEPARTMENT OF TRANSPORTATION

Filename: ...\HW_MSH_0012_0095_DRG-01.dgn

SIGNATURE/ BLOCK:

OFFICE OF ENGINEERING

APPROVED BY:

PROJECT TITLE:

SAFETY IMPROVEMENTS ON ROUTE 533 AT BOX MOUNTAIN ROAD

TOWN: **BOLTON**

DRAWING TITLE: **DRAINAGE PLAN**

PROJECT NO. **12-95**

DRAWING NO. **DRG-01**

SHEET NO.

FIGURE C-4

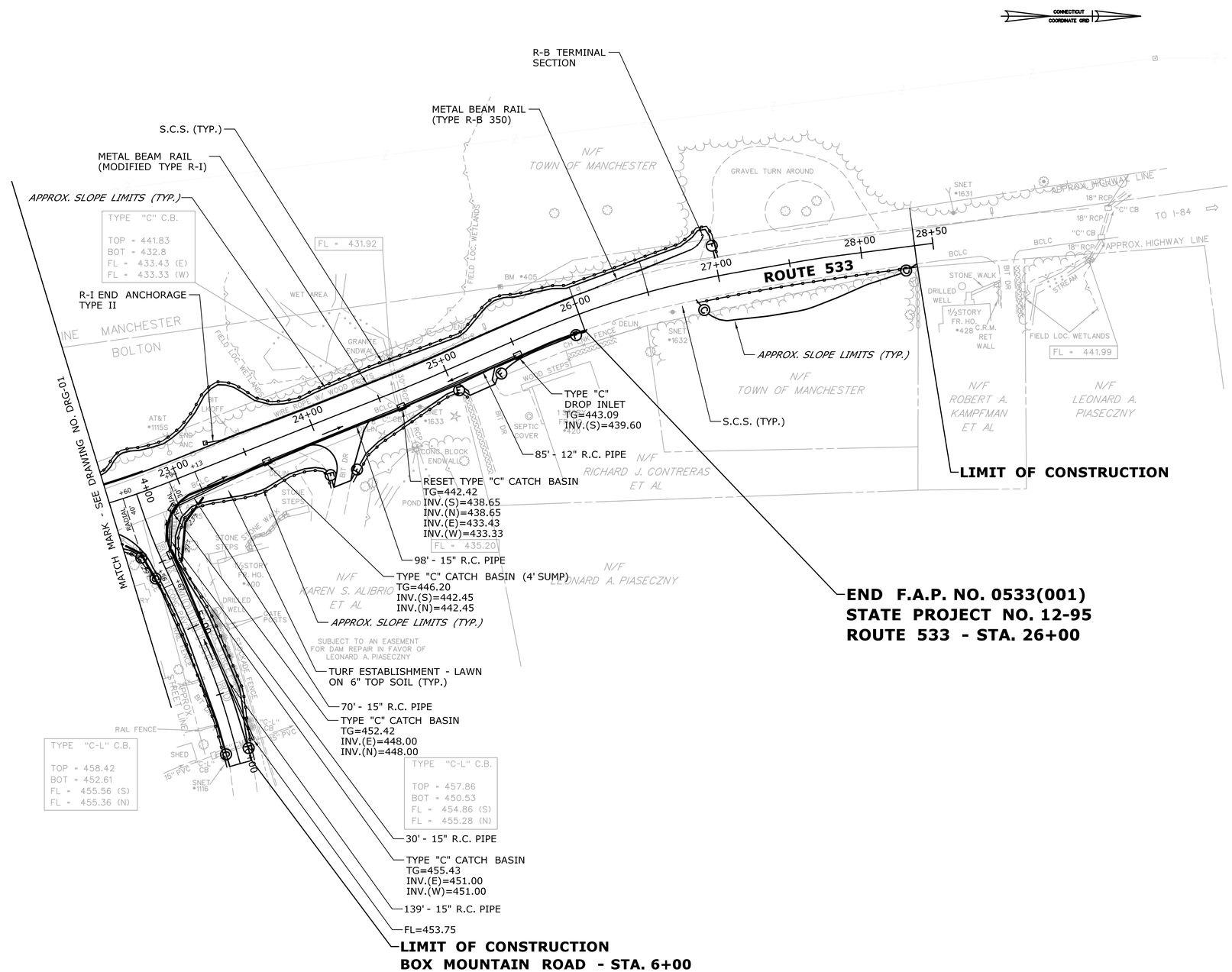

REV.	DATE	REVISION DESCRIPTION	SHEET NO.

THE INFORMATION, INCLUDING ESTIMATED QUANTITIES OF WORK, SHOWN ON THESE SHEETS IS BASED ON LIMITED INVESTIGATIONS BY THE STATE AND IS IN NO WAY WARRANTED TO INDICATE THE CONDITIONS OF ACTUAL QUANTITIES OF WORK WHICH WILL BE REQUIRED.

Plotted Date: 1/12/2015

DESIGNER/DRAFTER: **JED**

CHECKED BY: **JNT**

SCALE IN FEET 0 40 80

SCALE 1"=40'

STATE OF CONNECTICUT
DEPARTMENT OF TRANSPORTATION

Filename: ...\HW_MSH_0012_0095_DRG-02.dgn

SIGNATURE/ BLOCK: **OFFICE OF ENGINEERING**

APPROVED BY:

PROJECT TITLE: **SAFETY IMPROVEMENTS ON ROUTE 533 AT BOX MOUNTAIN ROAD**

TOWN: **BOLTON**

DRAWING TITLE: **DRAINAGE PLAN**

PROJECT NO. **12-95**

DRAWING NO. **DRG-02**

SHEET NO.

FIGURE C-4

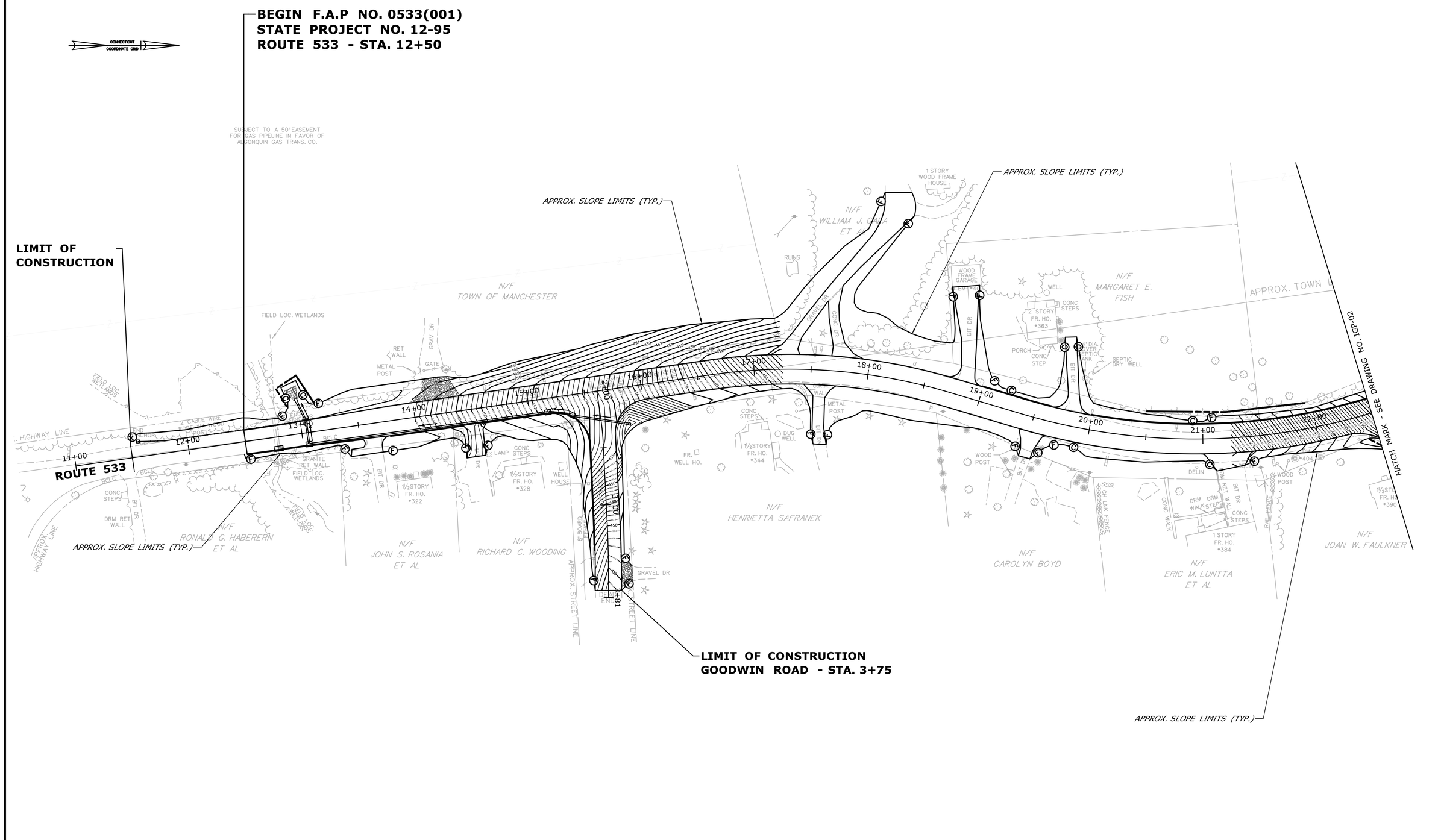

REV.	DATE	REVISION DESCRIPTION	SHEET NO.

THE INFORMATION, INCLUDING ESTIMATED QUANTITIES OF WORK, SHOWN ON THESE SHEETS IS BASED ON LIMITED INVESTIGATIONS BY THE STATE AND IS IN NO WAY WARRANTED TO INDICATE THE CONDITIONS OF ACTUAL QUANTITIES OF WORK WHICH WILL BE REQUIRED.

Plotted Date: 1/13/2015

DESIGNER/DRAFTER: JED

CHECKED BY: JNT

SCALE IN FEET 0 40 80

SCALE 1"=40'

STATE OF CONNECTICUT
DEPARTMENT OF TRANSPORTATION

Filename: ...\HW_MSH_0012_0095_IGP-01.dgn

SIGNATURE/ BLOCK:

OFFICE OF ENGINEERING

APPROVED BY:

PROJECT TITLE:

SAFETY IMPROVEMENTS ON ROUTE 533 AT BOX MOUNTAIN ROAD

TOWN: BOLTON

DRAWING TITLE: INTERSECTION GRADING PLAN

PROJECT NO. 12-95

DRAWING NO. IGP-01

SHEET NO.

FIGURE C-5

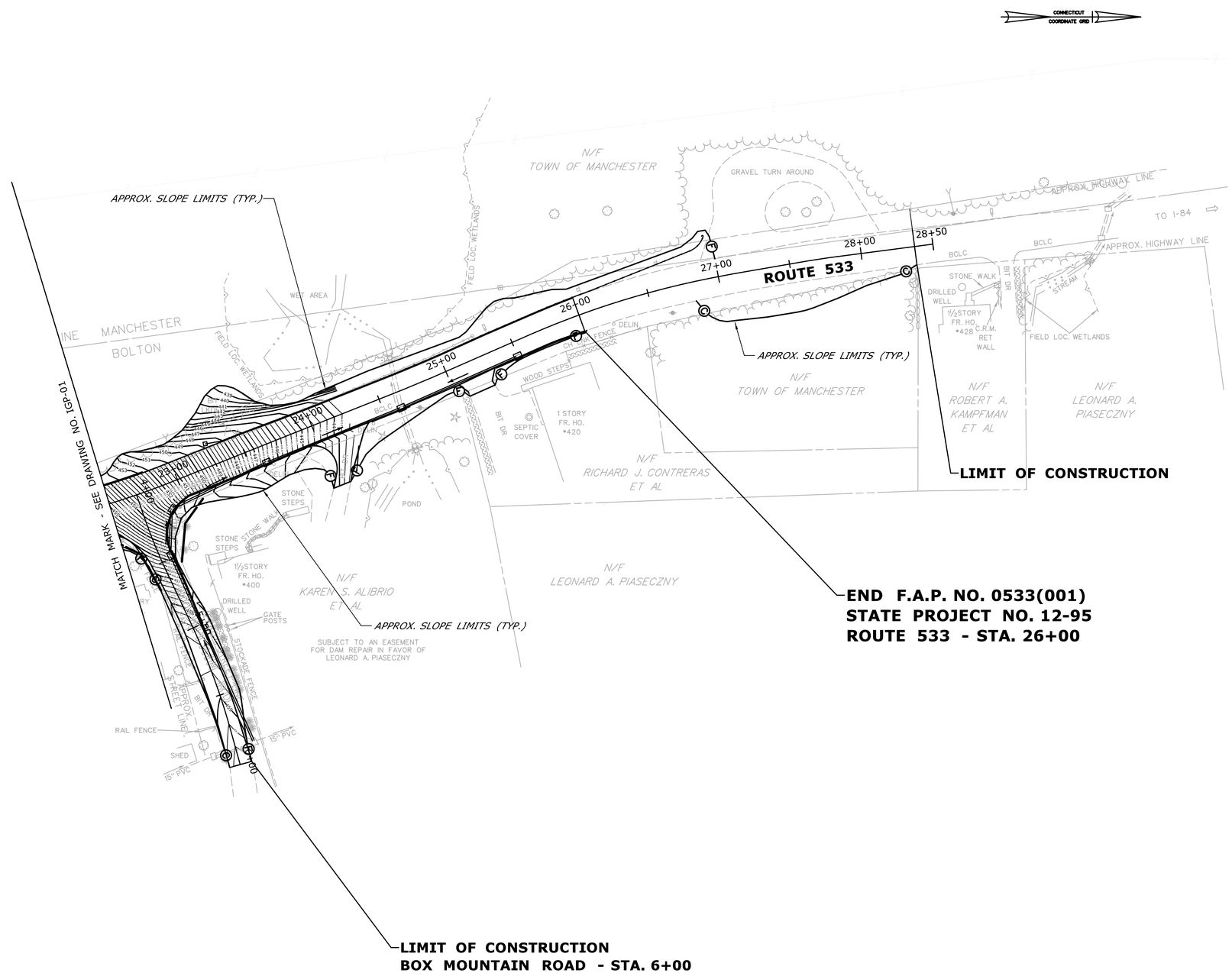

REV.	DATE	REVISION DESCRIPTION	SHEET NO.

THE INFORMATION, INCLUDING ESTIMATED QUANTITIES OF WORK, SHOWN ON THESE SHEETS IS BASED ON LIMITED INVESTIGATIONS BY THE STATE AND IS IN NO WAY WARRANTED TO INDICATE THE CONDITIONS OF ACTUAL QUANTITIES OF WORK WHICH WILL BE REQUIRED.

Plotted Date: 1/14/2015

DESIGNER/DRAFTER: **JED**

CHECKED BY: **JNT**

SCALE IN FEET 0 40 80

SCALE 1"=40'

STATE OF CONNECTICUT
DEPARTMENT OF TRANSPORTATION

Filename: ...\HW_MSH_0012_0095_IGP-02.dgn

SIGNATURE/ BLOCK: **OFFICE OF ENGINEERING**

APPROVED BY:

PROJECT TITLE: **SAFETY IMPROVEMENTS ON ROUTE 533 AT BOX MOUNTAIN ROAD**

TOWN: **BOLTON**

DRAWING TITLE: **INTERSECTION GRADING PLAN**

PROJECT NO. **12-95**

DRAWING NO. **IGP-02**

SHEET NO.

FIGURE C-5

Appendix D – Stormwater Monitoring Report Form

Connecticut Department of
Energy & Environmental Protection
Bureau of Materials Management & Compliance Assurance
Water Permitting & Enforcement Division

General Permit for the Discharge of Stormwater and Dewatering Wastewaters from Construction Activities, issued 8/21/13, effective 10/1/13
Stormwater Monitoring Report

SITE INFORMATION

Permittee: _____

Mailing Address: _____

Business Phone: _____ ext.: _____ Fax: _____

Contact Person: _____ Title: _____

Site Name: _____

Site Address: _____

Receiving Water (name, basin): _____

Stormwater Permit No. GSN _____

SAMPLING INFORMATION (Submit a separate form for each outfall)

Outfall Designation: _____ Date/Time Collected: _____

Outfall Location(s) (lat/lon or map link): _____

Person Collecting Sample: _____

Storm Magnitude (inches): _____ Storm Duration (hours): _____

Size of Disturbed Area at any time: _____

MONITORING RESULTS

Sample #	Parameter	Method	Results (units)	Laboratory (if applicable)
1	Turbidity			
2	Turbidity			
3	Turbidity			
4	Turbidity			

(provide an attachment if more than 4 samples were taken for this outfall) Avg =

STATEMENT OF ACKNOWLEDGMENT

I certify that the data reported on this document were prepared under my direction or supervision in accordance with the General Permit for the Discharge of Stormwater and Dewatering Wastewaters from Construction Activities. The information submitted is, to the best of my knowledge and belief, true, accurate and complete.

Authorized Official: _____

Signature: _____ Date: _____

Please send completed form to:

DEPARTMENT OF ENERGY & ENVIRONMENTAL PROTECTION
BUREAU OF MATERIALS MANAGEMENT AND COMPLIANCE ASSURANCE
79 ELM STREET
HARTFORD, CT 06106-5127
ATTN: NEAL WILLIAMS

Appendix E – Notice of Termination Form

General Permit for the Discharge of Stormwater and Dewatering Wastewaters from Construction Activities

Notice of Termination Form

Please complete and submit this form in accordance with the general permit (DEP-PED-GP-015) in order to ensure the proper handling of your termination. Print or type unless otherwise noted.

Note: Ensure that for commercial and industrial facilities, registrations under the *General Permit for the Discharge of Stormwater Associated with Industrial Activity* (DEP-PED-GP-014) or the *General Permit for the Discharge of Stormwater from Commercial Activities* (DEP-PED-GP-004) have been filed where applicable. For questions about the applicability of these general permits, please call the Department at 860-424-3018.

Part I: Registrant Information

1. Permit number: ***GSN***
2. Fill in the name of the registrant(s) as indicated on the registration certificate:

   Registrant:
3. Site Address:

   City/Town: State: Zip Code:
4. Date all storm drainage structures were cleaned of construction sediment:

   Date of Completion of Construction:

   Date of Last Inspection (must be at least three months after final stabilization pursuant to Section 6(b)(6)(D) of the general permit):
5. Check the post-construction activities at the site (check all that apply):

   ☐ Industrial ☐ Residential ☐ Commercial ☐ Capped Landfill

   ☐ Other (describe):

Part II: Certification

"I have personally examined and am familiar with the information submitted in this document and all attachments thereto, and I certify that, based on reasonable investigation, including my inquiry of those individuals responsible for obtaining the information, the submitted information is true, accurate and complete to the best of my knowledge and belief. I understand that a false statement made in this document or its attachments may be punishable as a criminal offense, in accordance with Section 22a-6 of the Connecticut General Statutes, pursuant to Section 53a-157b of the Connecticut General Statutes, and in accordance with any other applicable statute."

Signature of Permittee	Date
Name of Permittee (print or type)	Title (if applicable)

Note: Please submit this Notice of Termination Form to:

STORMWATER PERMIT COORDINATOR
BUREAU OF WATER MANAGEMENT
DEPARTMENT OF ENVIRONMENTAL PROTECTION
79 ELM STREET
HARTFORD, CT 06106-5127