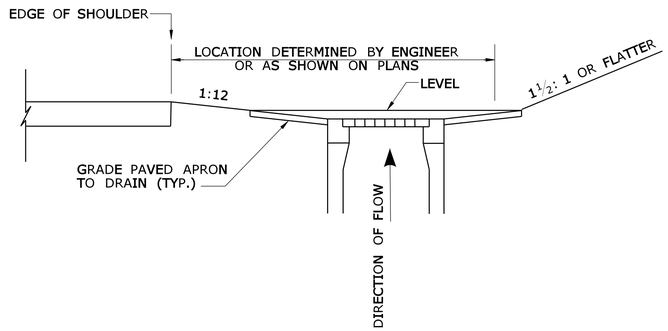

SECTION A

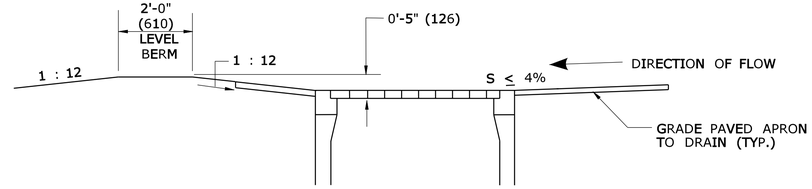

SECTION B

ON GRADES LESS THAN OR EQUAL TO 4%

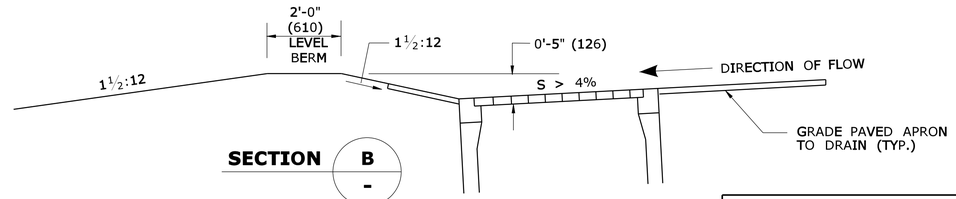

SECTION B

ON GRADES GREATER THAN 4%

GENERAL NOTES:

1. ALL CONSTRUCTION DIMENSIONS ARE NOMINAL.
2. FOR CATCH BASIN DIMENSIONS NOT SHOWN, SEE STANDARD SHEET SERIES 507.
3. PAVED APRON DIMENSIONS WILL REMAIN THE SAME FOR DOUBLE AND SINGLE GRATES.
4. BITUMINOUS CONCRETE CLASS 3 MAY BE USED FOR APRONS, AND PAVED DITCHS WITH PERMISSION OF THE ENGINEER.
5. PAVED APRON AND GRADING WORK SHALL BE INCLUDED IN THE ITEM PAVED DITCH.

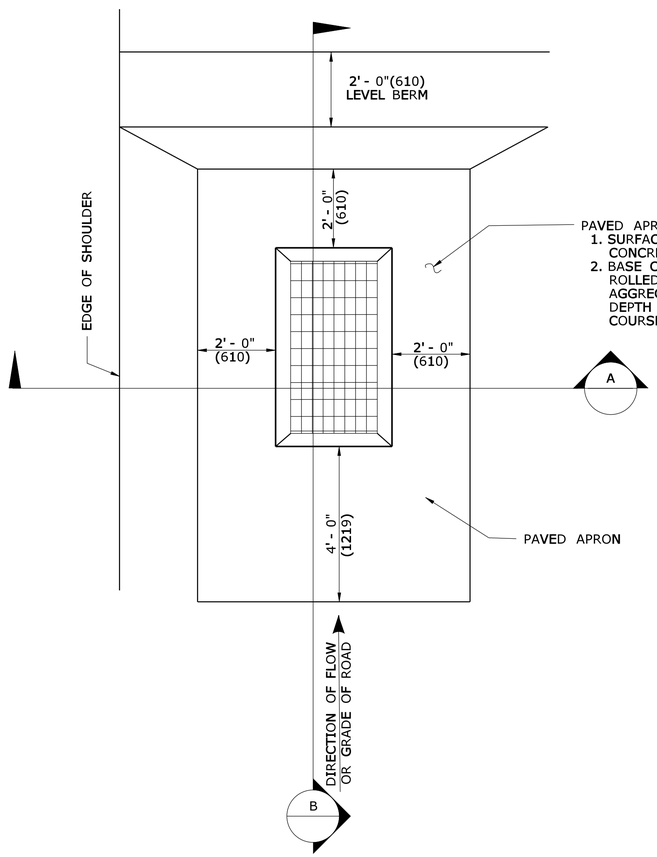

PLAN
ON GRADE CONDITION

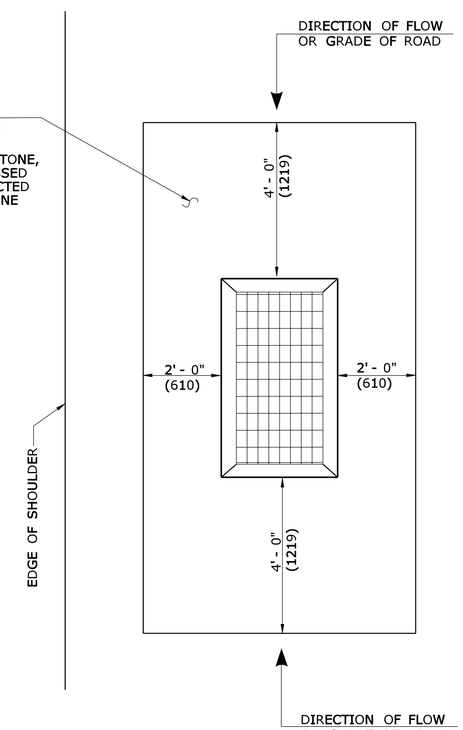

PLAN
SAG CONDITION

PAVED APRON FOR "C-L" CATCH BASIN

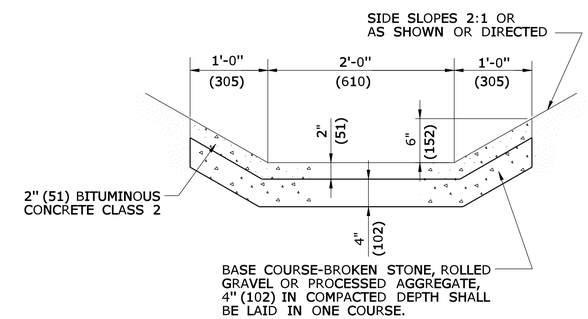

PAVED DITCH

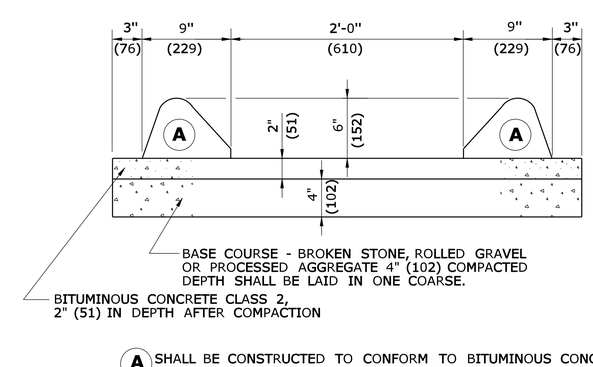

(A) SHALL BE CONSTRUCTED TO CONFORM TO BITUMINOUS CONCRETE LIP CURBING - CLASS 3 - AS SHOWN ON PLANS

ALTERNATE PAVED DITCH

ALL METRIC DIMENSIONS ARE IN MILLIMETERS (mm) UNLESS OTHERWISE NOTED

REV.	DATE	REVISION DESCRIPTION
-	-	-
-	-	-
-	-	-
-	-	-
-	-	-
-	-	-

THE INFORMATION, INCLUDING ESTIMATED QUANTITIES OF WORK, SHOWN ON THESE SHEETS IS BASED ON LIMITED INVESTIGATIONS BY THE STATE AND IS IN NO WAY WARRANTED TO INDICATE THE CONDITIONS OF ACTUAL QUANTITIES OF WORK WHICH WILL BE REQUIRED.

Plotted Date: 9/11/2009

NOT TO SCALE

STATE OF CONNECTICUT
DEPARTMENT OF TRANSPORTATION

Filename: CTDOT_HIGHWAY_STD.dgn Model: HW-803_01

SUBMITTED BY:	NAME/DATE/TIME:
	Timothy M. Wilson 2009.09.16 11:20:09 -04'00'
APPROVED BY:	NAME/DATE/TIME:
	James H. Norman 2009.09.18 14:26:36 -04'00'

CTDOT STANDARD SHEET

OFFICE OF ENGINEERING

STANDARD SHEET TITLE: PAVED DITCH AND PAVED APRON

STANDARD SHEET NO.: HW-803_01