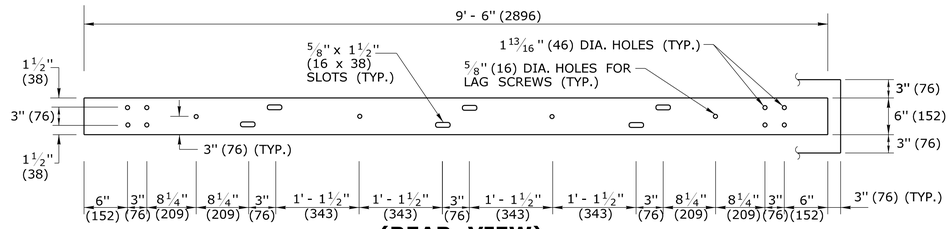

(REAR VIEW)
STANDARD STEEL RAIL DETAIL
6" x 3/8" x 9'-6"
(152x9x2896)

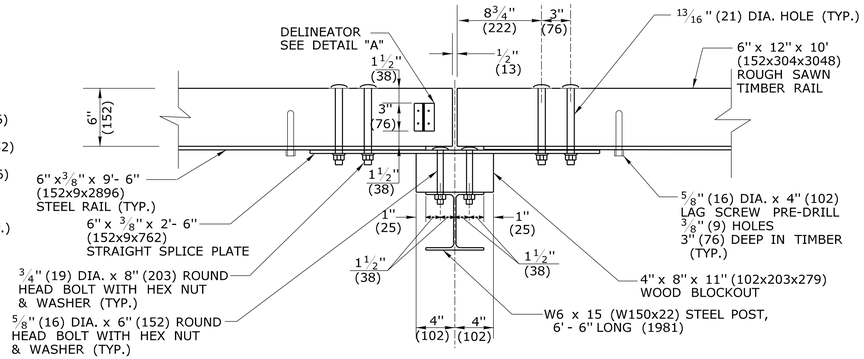

POST CONNECTION FOR STRAIGHT SECTIONS

GENERAL NOTES:

1. MATERIALS AND CONSTRUCTION OF THE MERRITT PARKWAY GUIDERAIL SHALL CONFORM TO SPECIAL PROVISION PROVIDED WITH THE PROJECT.
2. DELINEATORS SHALL BE PLASTIC INVERTED T-SECTIONS IN ACCORDANCE WITH DETAIL "A". REFLECTORS SHALL BE SPACED IN ACCORDANCE WITH TABLE 1 , AND POSITIONED PERPENDICULAR TO THE ADJACENT EDGE OF LANE. DO NOT ATTACH REFLECTORS ON FLARE OR TERMINAL SECTIONS. REFLECTIVE SHEETING SHALL BE SILVER-WHITE ON ALL RAIL SECTIONS ADJACENT TO THE RIGHT SHOULDER, AND YELLOW ON RAIL SECTIONS ADJACENT TO THE LEFT SHOULDER OF TRAVEL LANES.
3. TWO ADDITIONAL 5/8" (16) DIA. X 4"(102) LONG LAG SCREWS AND WASHERS SHALL BE INSTALLED AT ALL MID-SPAN POINTS FOR STANDARD SYSTEMS.
4. ALL CONNECTION HARDWARE SHALL BE SUFFICENTLY TIGHTENED TO ACCOMODATE FOR SHRINKAGE OF THE WOOD ELEMENTS.
5. WHEN FURNISHING THE SHOP BENT SPLICE PLATES, USE THE MINIMUM BEND ANGLE AS SHOWN IN TABLE 2.
6. FOR RAILING SET ON A CURVE WITH RADII < 70' (21.3m) SPACE POSTS AT 5' (1524).

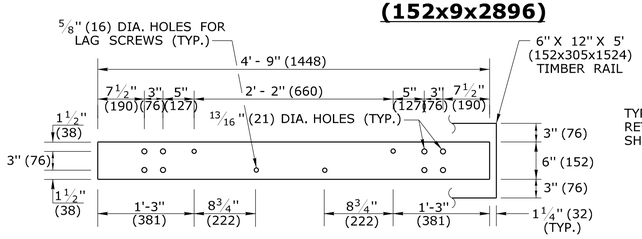

STEEL RAIL DETAIL
6' x 3/8" x 4'-9"
(1829 x 9 x 1448)
FOR CURVES WITH R < 70' (21.3m)

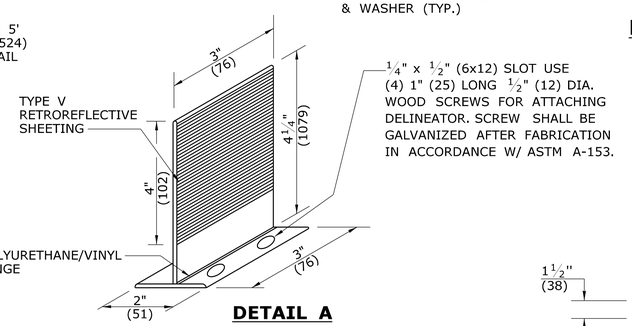

DETAIL A
DELINEATOR

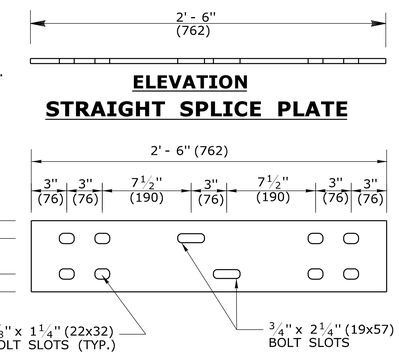

STEEL SPLICE PLATE DETAIL
6" x 3/8" x 2'- 6"
(152x9x762)

TABLE 2

Radius R (ft.)(m)	Dia. / 2 (Degrees)	d (in.)(mm)
35 (10.7)Min.	4.10	5/8(16)
40 (12.2)	3.58	9/16 (14)
45 (13.7)	3.18	1/2(13)
50 (15.2)	2.86	7/16 (11)
55 (16.8)	2.60	7/16 (11)
60 (18.3)	2.40	3/8(9)
65 (19.8)	2.20	3/8(9)
70 (21.3)	2.05	5/16 (8)
Over 70 (21.3)	Flat	0

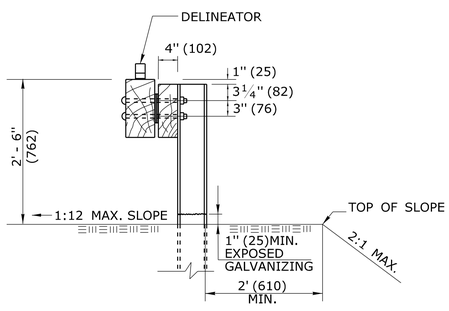

SECTION
(NO CURB)

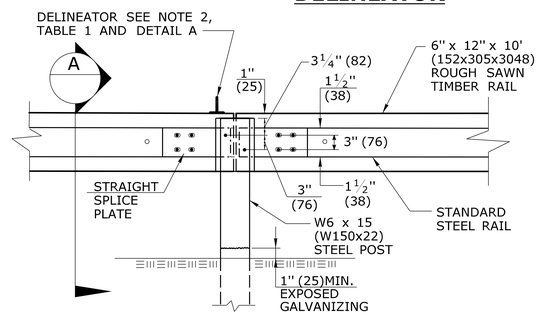

REAR VIEW ELEVATION
POST CONNECTION

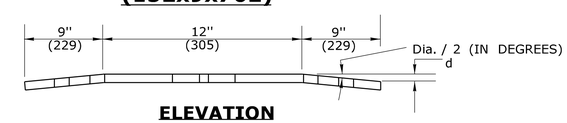

ELEVATION
BENT SPLICE PLATE

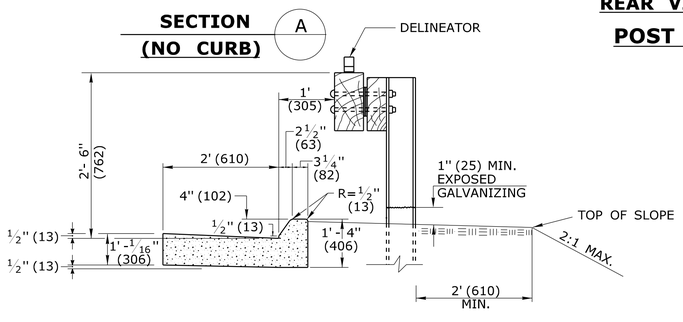

STANDARD SECTION WITH MOUNTABLE CURB

TABLE 1

DELINEATOR SPACING	
CURVE RADIUS	SPACE
< 300' (91.4m)	20' (6.10m)
≥ 300' (91.4m)	50' (15.2m)

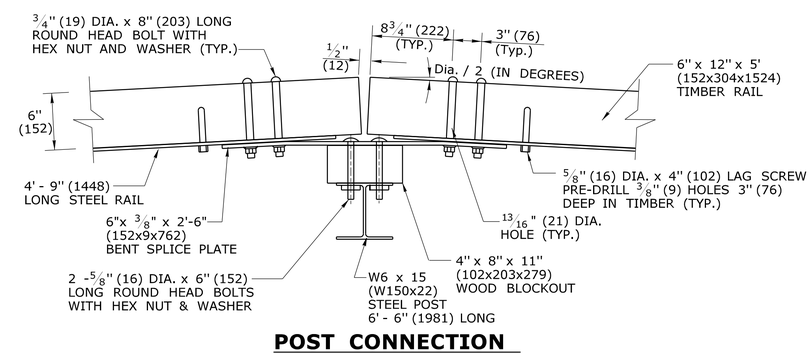

POST CONNECTION
FOR CURVES WITH R ≤ 70' (21.3m)

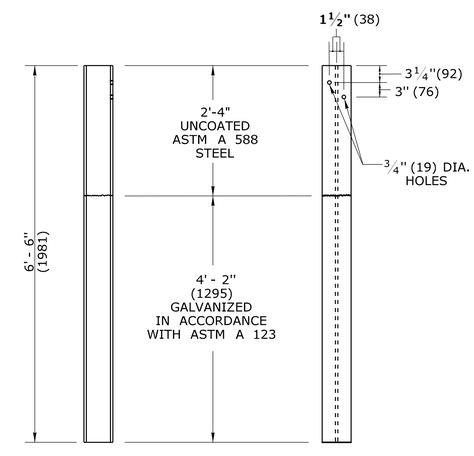

SIDE VIEW **FRONT VIEW**

POST DETAIL
W6 X 15
(W150x22)

ALL METRIC DIMENSIONS ARE IN MILLIMETERS (mm) UNLESS OTHERWISE NOTED.

REV.	DATE	REVISION DESCRIPTION
1	6/11	REVISED STEEL RAIL REAR VIEW
-	-	-
-	-	-
-	-	-
-	-	-
-	-	-
-	-	-

THE INFORMATION, INCLUDING ESTIMATED QUANTITIES OF WORK, SHOWN ON THESE SHEETS IS BASED ON LIMITED INVESTIGATIONS BY THE STATE AND IS IN NO WAY WARRANTED TO INDICATE THE CONDITIONS OF ACTUAL QUANTITIES OF WORK WHICH WILL BE REQUIRED.

Plotted Date: 5/10/2011

NOT TO SCALE

STATE OF CONNECTICUT
DEPARTMENT OF TRANSPORTATION

Filename: CTDOT_HIGHWAY_STD_JUNE2011.dgn Model: 48 - HW-910_12b

SUBMITTED BY: NAME/DATE/TIME: Digitally signed by Leo Fontaine DN: c=US, st=Connecticut, l=Newington, ou=Department of Transportation, cn=Leo.Joseph.Fontaine@ct.gov, o=State of Connecticut, title=Leo Fontaine Date: 2011.05.18 11:07:44 -04'00'

APPROVED BY: NAME/DATE/TIME: James H. Norman 2011.06.09 15:30:55 -04'00'

CTDOT
STANDARD SHEET

OFFICE OF ENGINEERING

STANDARD SHEET TITLE:
MERRITT PARKWAY GUIDERAIL

STANDARD SHEET NO.:
HW-910_12b