GENERAL NOTES:

1. LOCK DOWN DEVICES SHALL BE INSTALLED AND MAINTAINED WHEN TRAFFIC WILL BE TRAVELING OVER CATCH BASIN GRATES OR AS ORDERED.
2. BOLTS FOR LOCK DOWN DEVICES SHALL BE STAINLESS STEEL CONFORMING TO THE REQUIREMENTS OF ASTM A193, CLASS 2:B8 (TYPE 304).
3. WASHERS SHALL BE STAINLESS STEEL CONFORMING TO THE REQUIREMENTS OF A167, TYPE 302.
4. STEEL FOR THE LOCK DOWN DEVICES AND THE FRAME SHALL CONFORM TO ASTM A36 AND SHALL BE GALVANIZED AFTER FABRICATION IN ACCORDANCE WITH ASTM A123.
5. FOR ADDITIONAL DETAILS OF THE FRAME AND GRATE SEE STANDARD SHEET HW-507_08. NOTE THAT THE GRATE MUST BE MODIFIED TO FIT INSIDE THE FRAME.
6. 4" (102) BITUMINOUS CONCRETE PARK CURBING SHOWN FOR THE "C" TOP.

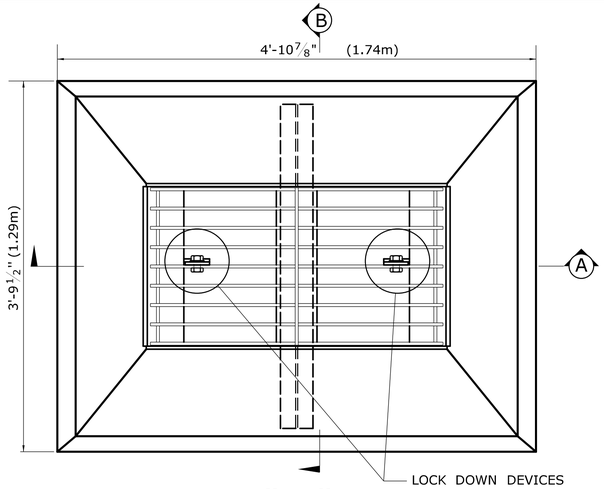

PLAN-TYPE "C-L" HEAVY DUTY CATCH BASIN TOP

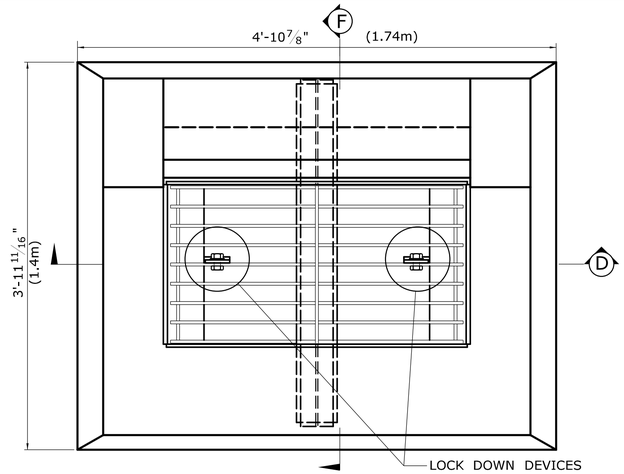

PLAN-TYPE "C" HEAVY DUTY CATCH BASIN TOP

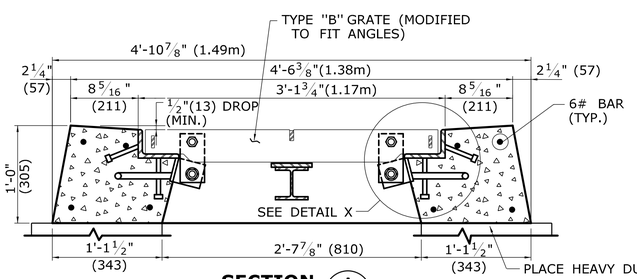

SECTION A

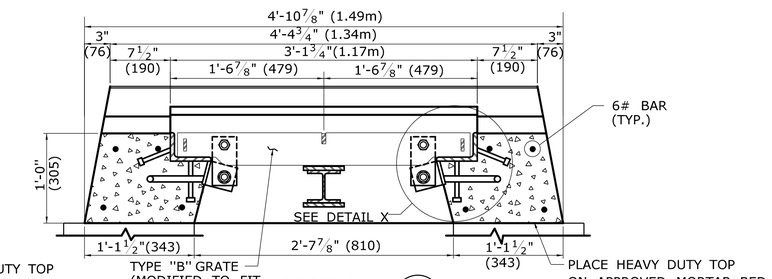

SECTION D

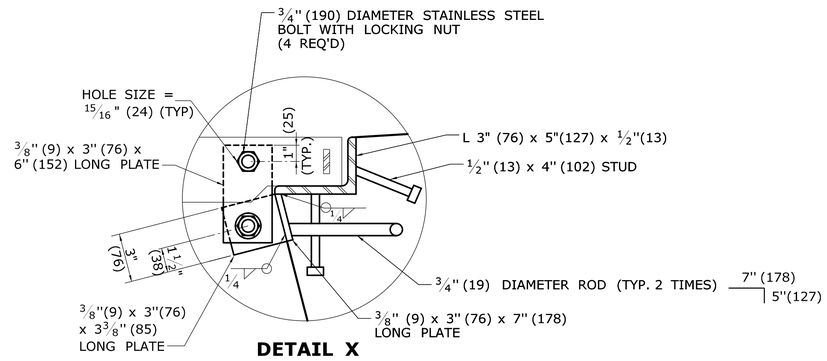

DETAIL X

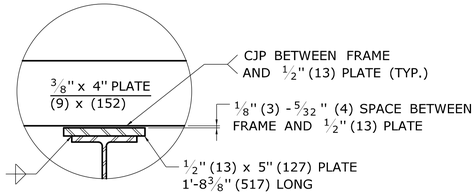

DETAIL Y

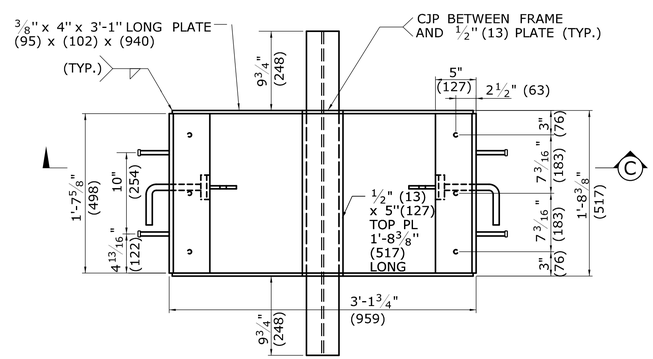

PLAN - TYPE "C-L" FRAME

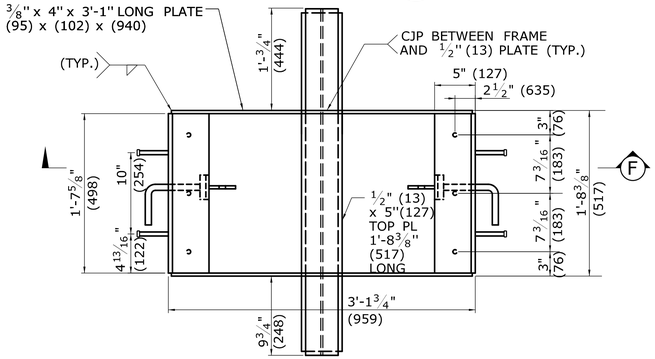

PLAN - TYPE "C" FRAME

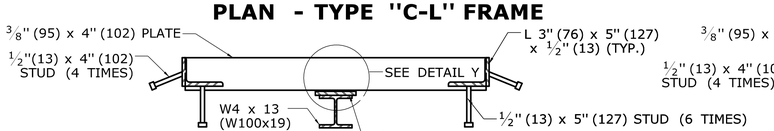

SECTION C

TYPE "C-L" HEAVY DUTY CATCH BASIN FRAME

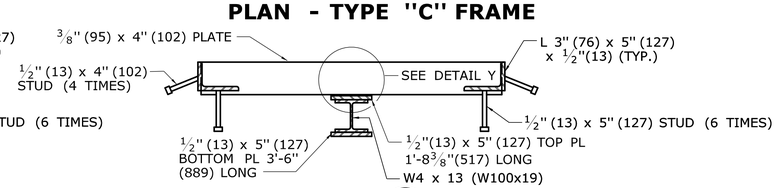

SECTION F

TYPE "C" HEAVY DUTY CATCH BASIN FRAME

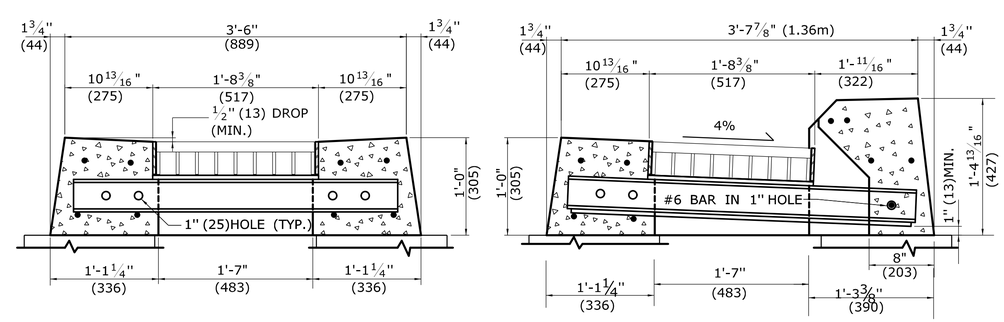

SECTION B

ALL METRIC DIMENSIONS ARE IN MILLIMETERS (mm) UNLESS OTHERWISE NOTED

REV.	DATE	REVISION DESCRIPTION
-	-	-
-	-	-
-	-	-
-	-	-
-	-	-
1	6/01/10	REVISED NOTE 5.

THE INFORMATION, INCLUDING ESTIMATED QUANTITIES OF WORK, SHOWN ON THESE SHEETS IS BASED ON LIMITED INVESTIGATIONS BY THE STATE AND IS IN NO WAY WARRANTED TO INDICATE THE CONDITIONS OF ACTUAL QUANTITIES OF WORK WHICH WILL BE REQUIRED.

Plotted Date: 5/20/2010

NOT TO SCALE

STATE OF CONNECTICUT
DEPARTMENT OF TRANSPORTATION

Filename: CTDOT_HIGHWAY_STD.dgn Model: HW-507_09

SUBMITTED BY: NAME/DATE/TIME: Leo Fontaine 2010.05.28 10:26:03 -04'00'

APPROVED BY: NAME/DATE/TIME: James H. Norman

Digitally signed by James H. Norman
DN: c=US, st=CT, l=Newington, ou=Department of Transportation, email=james.norman@ct.gov, o=State of Connecticut, cn=James H. Norman
Date: 2010.06.04 08:18:18 -04'00'

CTDOT STANDARD SHEET

OFFICE OF ENGINEERING

STANDARD SHEET TITLE: HEAVY DUTY LOCK DOWN TOPS

STANDARD SHEET NO.: HW-507_09