GENERAL NOTES:

1. MINIMUM RAIL HEIGHT OF R-B 350 GUIDERAIL FOR NEW CONSTRUCTION SHALL BE 29" (237) ± 1" (25).

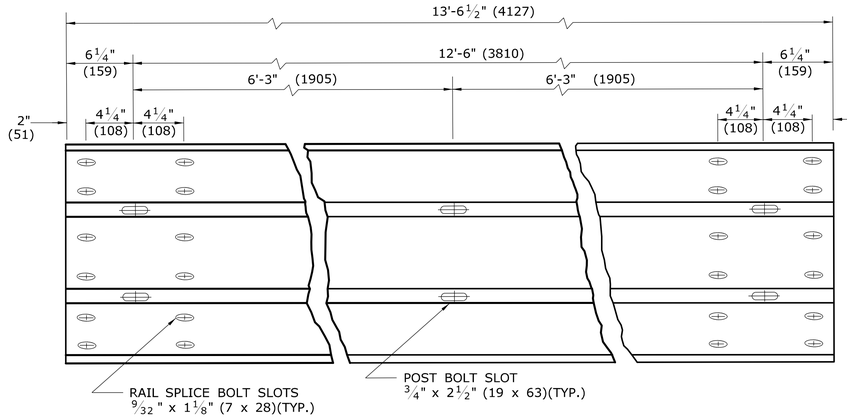

TYPICAL THRIE-BEAM RAIL ELEMENT (12 GAUGE)

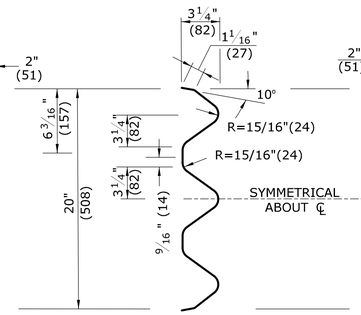

END VIEW OF TRANSITION

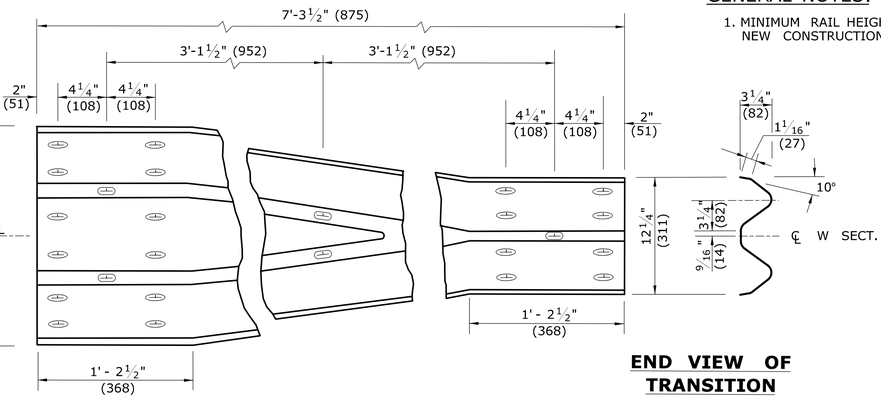

TYPICAL THRIE-BEAM TRANSITION ELEMENT (12 GAUGE)

END VIEW OF TRANSITION

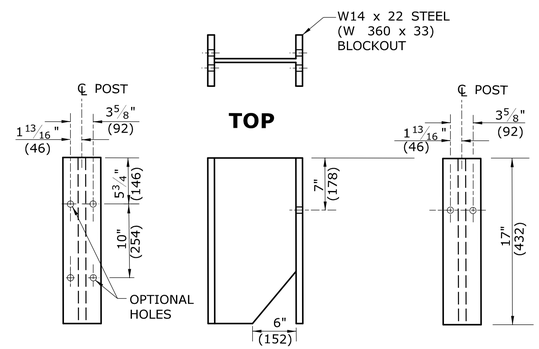

POST FACE **SIDE** **TRAFFIC FACE**

THRIE-BEAM 350 BLOCKOUT DETAIL

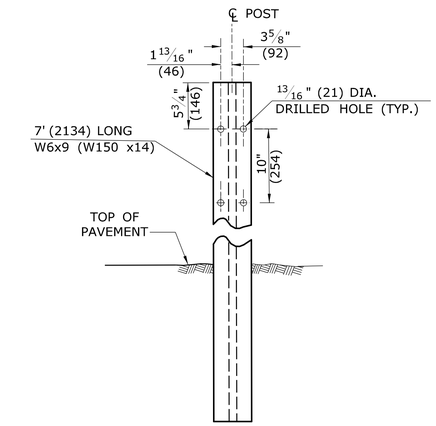

THRIE-BEAM 350 W6x9 (W150x14) FRONT POST ELEVATION

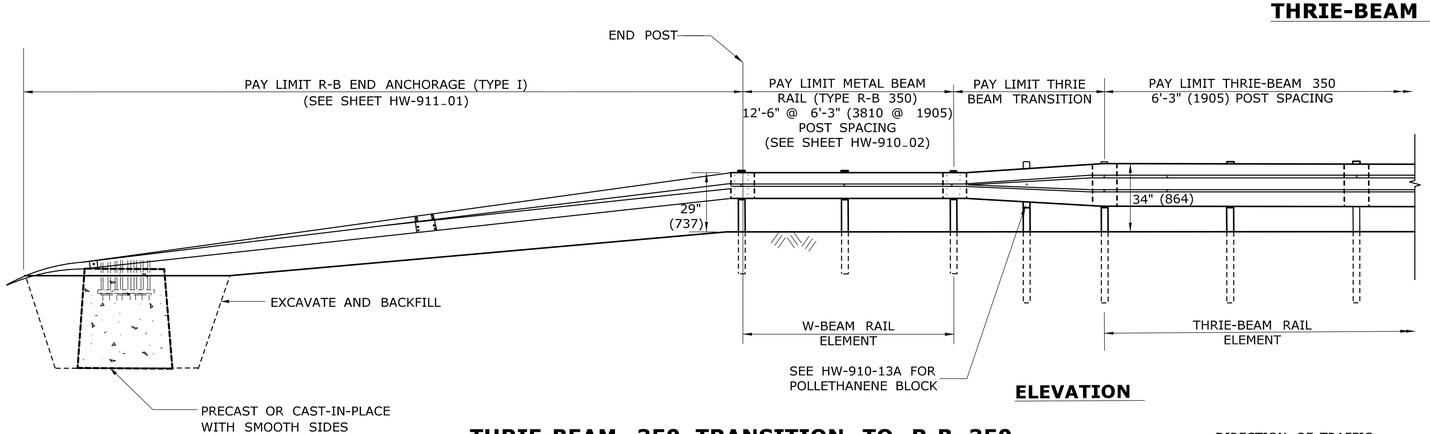

ELEVATION

THRIE-BEAM 350 TRANSITION TO R-B 350 AND R-B END ANCHORAGE TYPE I

DIRECTION OF TRAFFIC

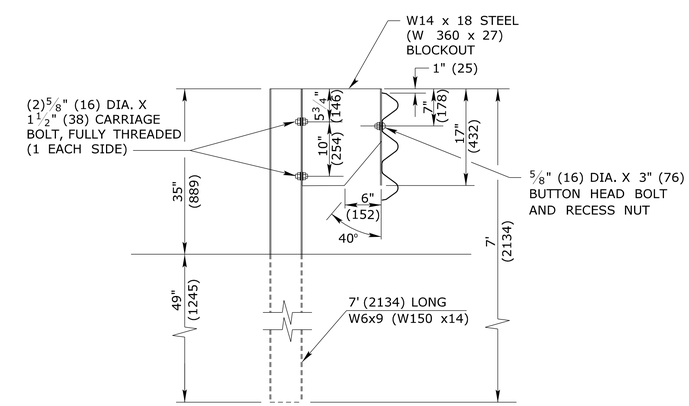

THRIE-BEAM 350 GUIDERAIL

ALL METRIC DIMENSIONS ARE IN MILLIMETERS (mm) UNLESS OTHERWISE NOTED.

REV.	DATE	REVISION DESCRIPTION
1	6/11	REVISE BLOCKOUT DESIGNATION
-	-	-
-	-	-
-	-	-
-	-	-
-	-	-

THE INFORMATION, INCLUDING ESTIMATED QUANTITIES OF WORK, SHOWN ON THESE SHEETS IS BASED ON LIMITED INVESTIGATIONS BY THE STATE AND IS IN NO WAY WARRANTED TO INDICATE THE CONDITIONS OF ACTUAL QUANTITIES OF WORK WHICH WILL BE REQUIRED.

Plotted Date: 6/1/2011

NOT TO SCALE

STATE OF CONNECTICUT
DEPARTMENT OF TRANSPORTATION

Filename: CTDOT_HIGHWAY_STD_JUNE2011.dgn Model: 55- HW-910_14b

SUBMITTED BY: NAME/DATE/TIME:
Digitally signed by Leo Fontaine
DN: c=US, st=Connecticut, l=Newington, ou=Department of Transportation, email=Leo.Fontaine@ct.gov, o=State of Connecticut, cn=Leo Fontaine
Date: 2011.06.09 10:37:02 -04'00'

APPROVED BY: NAME/DATE/TIME:
James H. Norman
2011.06.09 15:33:08 -04'00'

CTDOT STANDARD SHEET

OFFICE OF ENGINEERING

STANDARD SHEET TITLE:
THRIE-BEAM 350 GUIDERAIL TRANSITION TO R-B 350 GUIDERAIL

STANDARD SHEET NO.:
HW-910_14b