GENERAL NOTES:

1. WHERE GRANITE OR CONCRETE CURBING IS USED SLOTTED DRAIN PIPE WILL BE INSTALLED AS SHOWN FOR MEDIAN BARRIER CURB INSTALLATIONS.
2. D = DIAMETER OF PIPE.

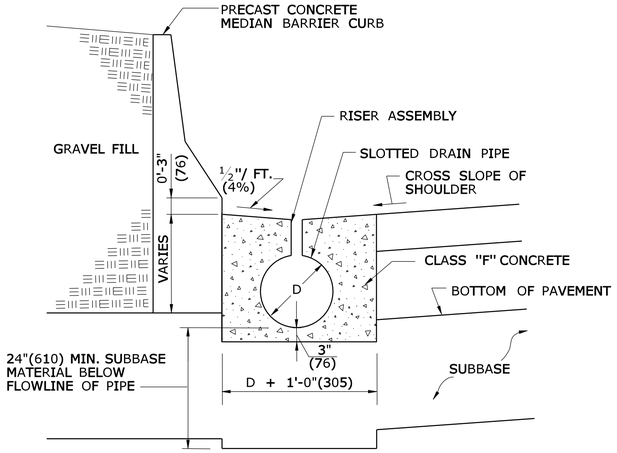

MEDIAN BARRIER CURB INSTALLATION

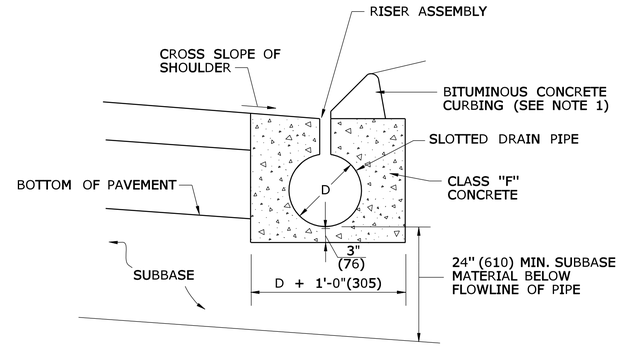

CURB INSTALLATION

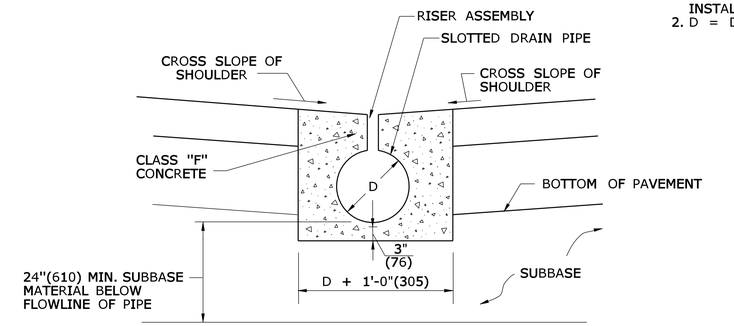

GORE OR MEDIAN INSTALLATION

TYPICAL - APPLICATIONS

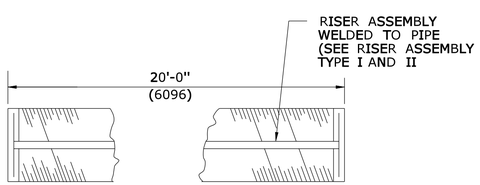

PLAN

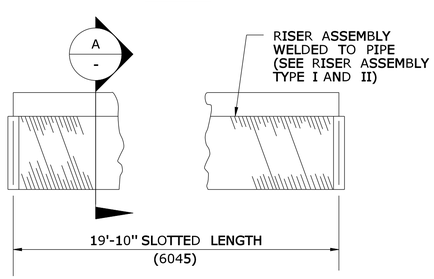

ELEVATION
TYPICAL PIPE SEGMENT

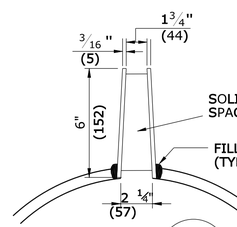

SECTION A - A

RISER ASSEMBLY TYPE I

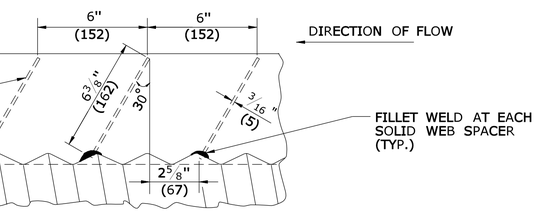

SIDE VIEW OF RISER TYPE I
(SLANTED SPACER PLATES)

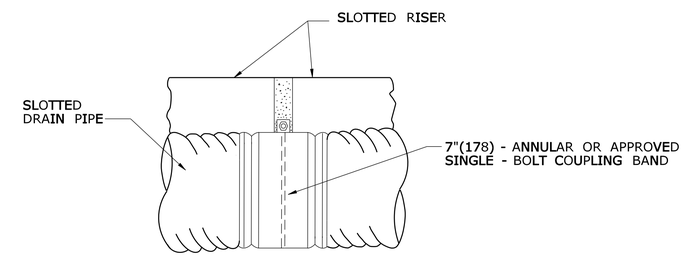

CONNECTION DETAIL

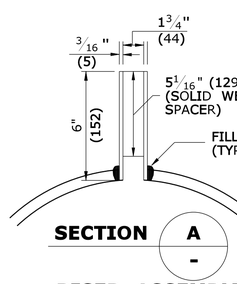

SECTION A - A

RISER ASSEMBLY TYPE II

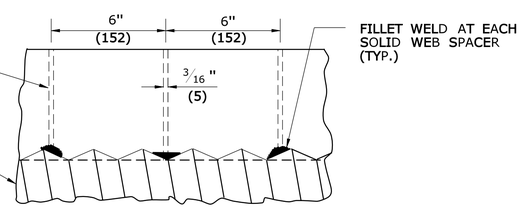

SIDE VIEW OF RISER TYPE II
(VERTICAL SPACER PLATES)

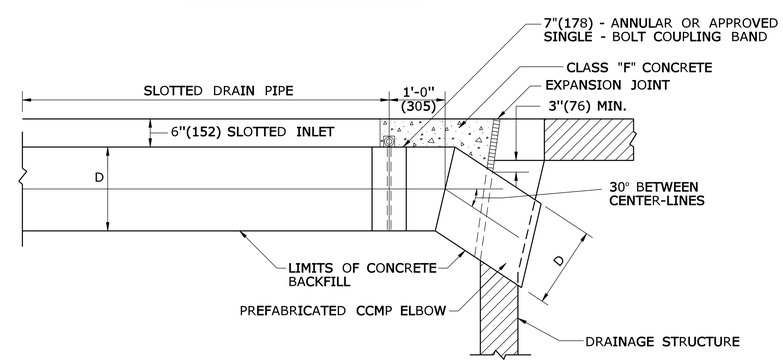

CONNECTION TO DRAINAGE STRUCTURE

NOTE: INSTALL END CAP AT UPSTREAM END

ALL METRIC DIMENSIONS ARE IN MILLIMETERS (mm) UNLESS OTHERWISE NOTED

REV.	DATE	REVISION DESCRIPTION
-	-	-
-	-	-
-	-	-
-	-	-
-	-	-
-	-	-

THE INFORMATION, INCLUDING ESTIMATED QUANTITIES OF WORK, SHOWN ON THESE SHEETS IS BASED ON LIMITED INVESTIGATIONS BY THE STATE AND IS IN NO WAY WARRANTED TO INDICATE THE CONDITIONS OF ACTUAL QUANTITIES OF WORK WHICH WILL BE REQUIRED.

Plotted Date: 9/11/2009

NOT TO SCALE

STATE OF CONNECTICUT
DEPARTMENT OF TRANSPORTATION

Filename: CTDOT_HIGHWAY_STD.dgn Model: HW-651_02

SUBMITTED BY:	NAME/DATE/TIME:
	Timothy M. Wilson 2009.09.16 11:18:54 -04'00'
APPROVED BY:	NAME/DATE/TIME:
	James H. Norman 2009.09.18 14:24:24 -04'00'

CTDOT STANDARD SHEET

OFFICE OF ENGINEERING

STANDARD SHEET TITLE:

SLOTTED DRAIN PIPE 12"-15"-18"-24"-30" (305-381-457-610-762)

STANDARD SHEET NO.:

HW-651_02