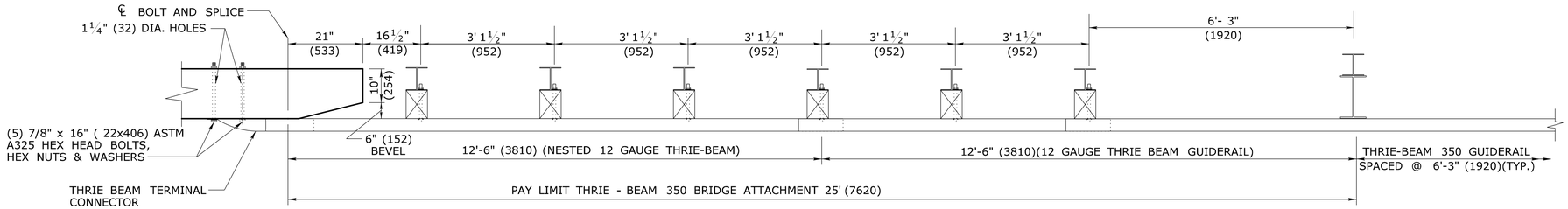

PLAN VIEW

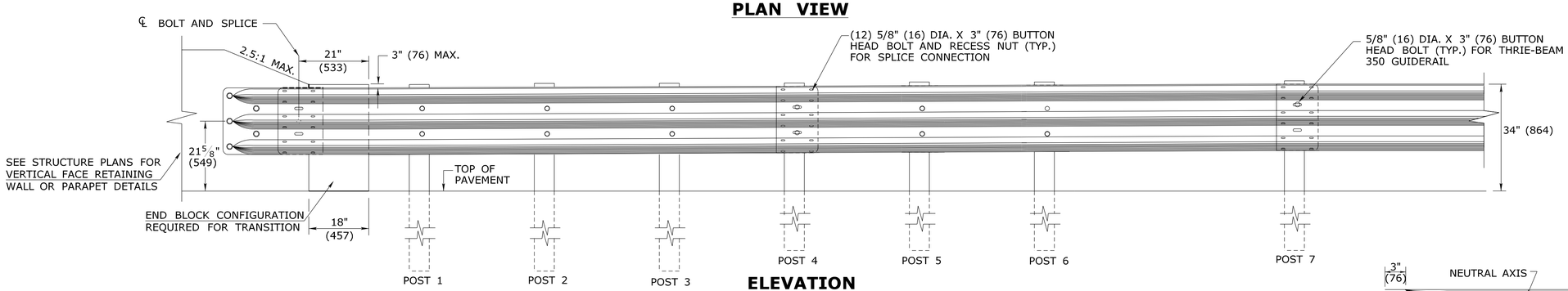

ELEVATION

GENERAL NOTES:

FOR SINGLE DIRECTION ROADWAY:

- INSTALL THRIE - BEAM TERMINAL CONNECTOR BETWEEN NESTED GUIDERAIL ELEMENTS.

FOR DUAL DIRECTION ROADWAY:

FOR APPROACHING TRAFFIC

- INSTALL THRIE-BEAM TERMINAL CONNECTOR BETWEEN NESTED GUIDERAIL ELEMENTS.

FOR TRAILING END:

- INSTALL THRIE-BEAM TERMINAL CONNECTOR OUTSIDE OF THE NESTED GUIDERAIL ELEMENTS.

LEGEND

1. W6 x 25 x 8.5' OR W8 x 21 x 8.5' POST (W150x37x259) OR (W200x31x259) POST
2. W6 x 20 x 7' OR W8 x 18 x 7' POST (W150x30x2134) OR (W200x27x2134)
3. 6" x 8" x 18" TREATED TIMBER OFFSET BLOCK (152x203x457) (OR APPROVED EQUAL)
4. W14x 22 STEEL OFFSET BLOCK (W360x33)
5. W6 x 9 x 7' POST (W152x230x2134)

DELINEATOR NOTES:

1. DELINEATORS SHALL BE FORMED OF .080 POLY-CARBONATE OR .080 SHEET ALUMINUM IN ACCORDANCE WITH M.18.13.
2. REFLECTIVE SHEETING SHALL CONFORM TO M.18.09.2.
3. DELINEATORS SHALL BE INSTALLED ON THE POST CLOSEST TO THE DESIGNATED SPACING.
4. REFLECTIVE SHEETING SHALL BE WHITE EXCEPT ON THE LEFT SIDE OF DIVIDED STREETS, HIGHWAYS, RAMPS, AND ONE WAY ROADS IN THE DIRECTION OF TRAVEL WHERE IT SHALL BE YELLOW.
5. INSTALL DELINEATORS ON RAIL THAT IS PARALLEL TO AND NOT GREATER THAN 6'(1829) FROM THE EDGE OF THE ROADWAY. A MINIMUM OF THREE DELINEATORS MUST BE INSTALLED ON ANY RUN OF RAIL.

DELINEATOR SPACING:
RADIUS ≥ 300'(91440) - SPACE EVERY 50'(15.24m)
RADIUS < 300'(91440) - SPACE EVERY 25'(7.62m)

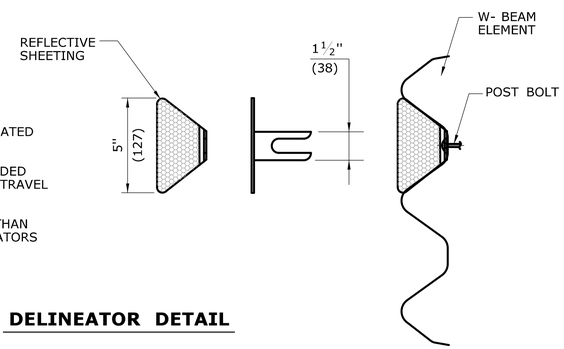

DELINEATOR DETAIL

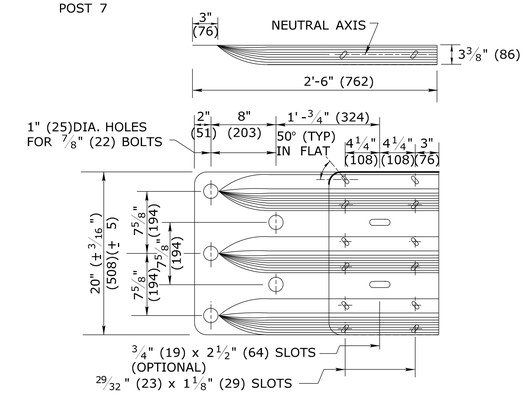

THRIE-BEAM TERMINAL CONNECTOR

(10 GAUGE)

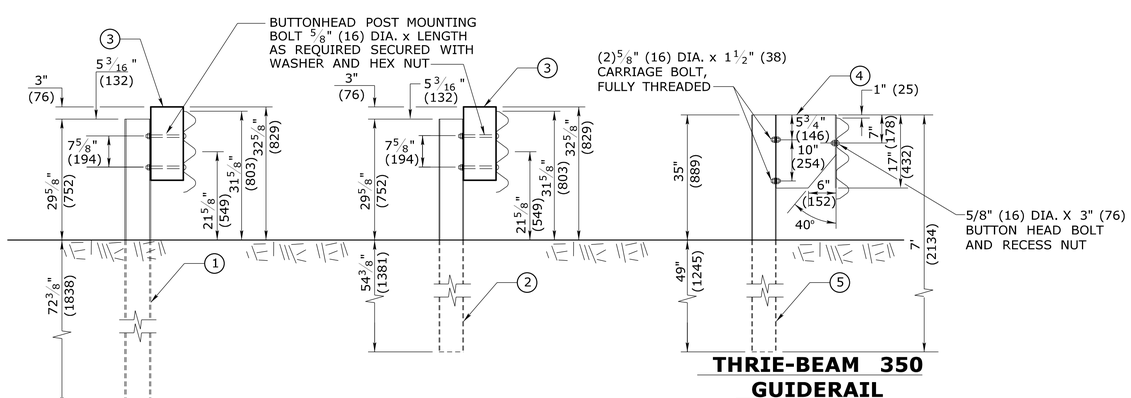

POST 1, 2 & 3

POST 4,5, & 6

THRIE-BEAM 350 GUIDERAIL

POST 7

(SEE SHEET HW-910_14b)

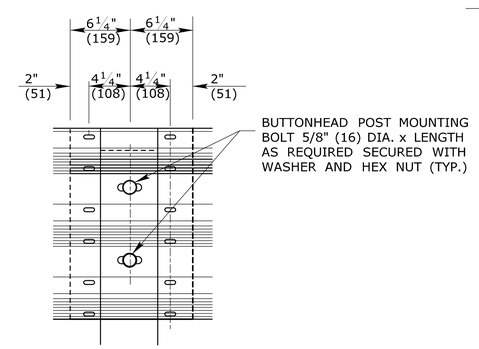

SPLICE DIAGRAM @ POST 4

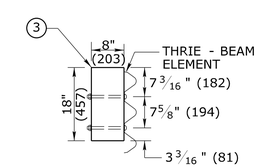

TREATED TIMBER BLOCK OUT DETAIL

POSTS 1 THRU 6

(OR APPROVED EQUAL)

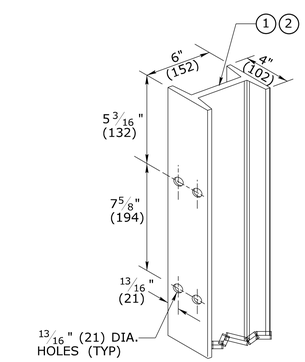

BOLT HOLE LOCATION FOR STEEL POST

POSTS 1 THRU 6

ALL METRIC DIMENSIONS ARE IN MILLIMETERS (mm) UNLESS OTHERWISE NOTED.

REV.	DATE	REVISION DESCRIPTION
1	6/11	REVISE AND ADD DIMENSIONS TO TERMINAL CONNECTOR
-	-	AND REVISE BLOCKOUT DESIGNATION -
-	-	- -
-	-	- -
-	-	- -
-	-	- -

THE INFORMATION, INCLUDING ESTIMATED QUANTITIES OF WORK, SHOWN ON THESE SHEETS IS BASED ON LIMITED INVESTIGATIONS BY THE STATE AND IS IN NO WAY WARRANTED TO INDICATE THE CONDITIONS OF ACTUAL QUANTITIES OF WORK WHICH WILL BE REQUIRED.

Plotted Date: 6/1/2011

NOT TO SCALE

STATE OF CONNECTICUT
DEPARTMENT OF TRANSPORTATION

Filename: CTDOT_HIGHWAY_STD_JUNE2011.dgn Model: 54 - HW-910_14a

SUBMITTED BY: NAME/DATE/TIME:

Digitally signed by Leo Fontaine
DN: c=US, st=Connecticut, l=Newington, ou=Department of Transportation, email=Leo.Fontaine@ct.gov, o=State of Connecticut, cn=Leo Fontaine
Date: 2011.06.09 10:36:26 -04'00'

APPROVED BY: NAME/DATE/TIME:

James H. Norman
2011.06.09 15:32:46 -04'00'

CTDOT STANDARD SHEET

OFFICE OF ENGINEERING

STANDARD SHEET TITLE:

THRIE-BEAM 350 BRIDGE ATTACHMENT

STANDARD SHEET NO.:

HW-910_14a