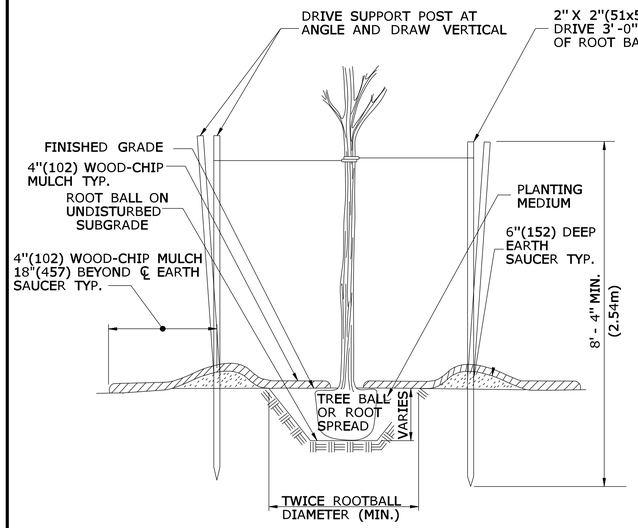

SECTION A / -

NOTE:

USE 3 POSTS FOR STAKING DECIDUOUS TREES 3"(76) CALIPER OR GREATER AND EVERGREEN TREES 8'(2.4m) HIGH OR GREATER. USE 2 POSTS FOR STAKING DECIDUOUS TREES LESS THAN 3"(76) CALIPER AND EVERGREEN TREES LESS THAN 8'(2.4m) HIGH.

GUYING PLAN

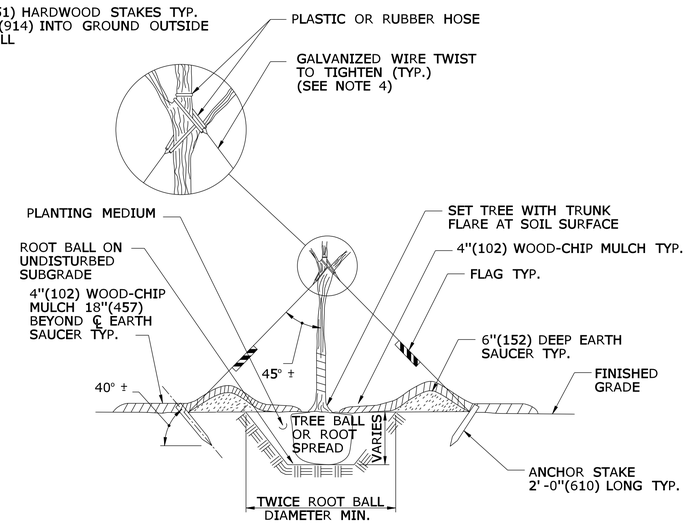

SECTION B / -

EXAMPLES OF MINIMUM SIZE OF ROOT BALL FOR NURSERY GROWN PLANTS.

CALIPER* INCHES(mm)	BALL DIAMETER INCHES(mm)	PLANTING PIT SIZE INCHES(mm)
-	8(203)	16(406)
-	10(254)	20(508)
1/2(12.5)	12(304)	24(610)
3/4(19)	14(356)	28(711)
1(25)	16(406)	32(813)
1 1/2(38)	20(508)	40(1016)
2(50)	24(610)	48(1219)
2 1/2(65)	28(711)	56(1422)
3(75)	32(813)	64(1626)
3 1/2(90)	38(965)	76(1930)
4(100)	42(1166)	84(2134)
5(125)	54(1372)	108(2743)
6(150)**	-	-

* THE CALIPER OF THE TRUNK IS MEASURED 6"(152) ABOVE THE GROUND UP TO AND INCLUDING 4"(102) SIZES AND 12"(305) ABOVE THE GROUND FOR LARGER SIZES OR AS SPECIFED IN THE MOST RECENT EDITION OF THE AMERICAN STANDARD FOR NURSERY STOCK, PUBLISHED BY THE AMERICAN ASSOCIATION OF NURSERYMEN.

** TREES GREATER THAN OR EQUAL TO 6"(152) CALIPER SHALL HAVE A ROOT BALL DIAMETER EQUAL TO 10"(254) PER INCH(25mm) OF TRUNK CALIPER (A 7"(178) CALIPER TREE SHOULD HAVE A ROOT BALL DIAMETER EQUAL TO 70"(1778)).

GENERAL NOTES:

1. THE PLANTING PIT SIZE SHALL BE TWICE THE DIAMETER OF THE ROOT BALL IN WIDTH AND 2"(51) LESS THAN THE HEIGHT OF THE ROOT BALL.
2. ALL EXTERIOR PACKAGING MATERIAL APPLIED TO PLANTS SHALL BE REMOVED AFTER THE PLANT IS LOCATED IN THE PLANTING PIT. CUT AND REMOVE TWINE, BURLAP OR WIRE BASKETS FROM THE TOP 2/3RDS OF THE ROOT BALL.
3. USE DOUBLE STRAND NO. 12 WIRE FOR DECIDUOUS TREES GREATER THAN OR EQUAL TO 3"(76) CALIPER AND USE DOUBLE STRAND NO. 10 WIRE FOR EVERGREEN TREES GREATER THAN OR EQUAL TO 8"(203) CALIPER.
4. TREE TRUNK WRAPPING MATERIAL SHALL BE USED AS DIRECTED BY THE ENGINEER.
5. PLANTING PITS FOR INDIVIDUAL SHRUBS ON SLOPES SHALL BE THREE TIMES THE DIAMETER OF THE ROOT BALL IN WIDTH.

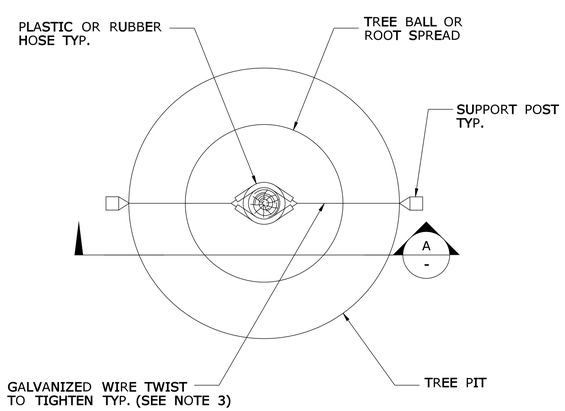

PLAN

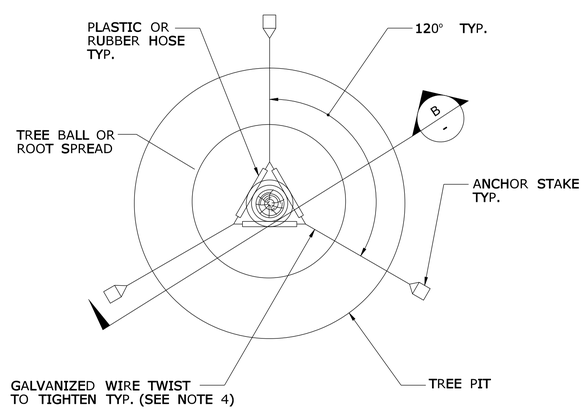

PLAN

STAKING PLAN

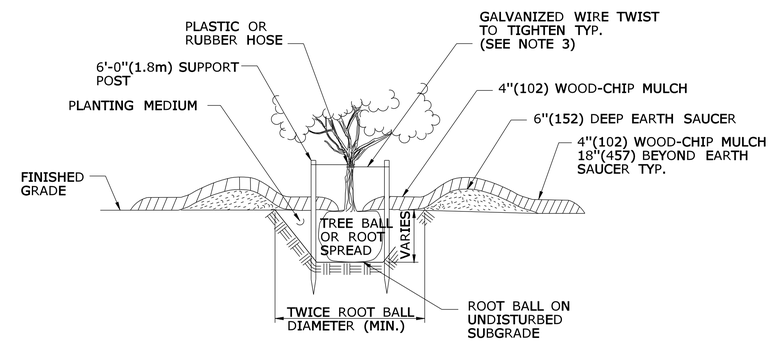

SECTION C / -

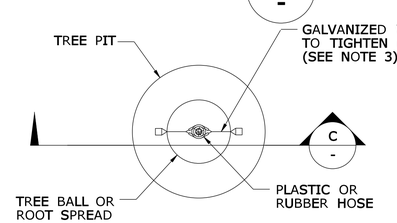

PLAN

STAKING PLAN FOR LOW BRANCHING DECIDUOUS AND EVERGREEN TREES FROM 5'(1.5m) TO 8'(2.4m) HIGH.

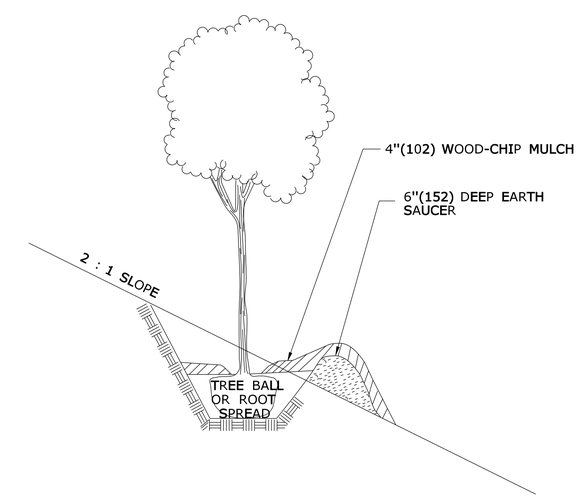

GRADING PLAN FOR TREES ON SLOPES

ALL METRIC DIMENSIONS ARE IN MILLIMETERS (mm) UNLESS OTHERWISE NOTED

REV.	DATE	REVISION DESCRIPTION
-	-	-
-	-	-
-	-	-
-	-	-
-	-	-
-	-	-

THE INFORMATION, INCLUDING ESTIMATED QUANTITIES OF WORK, SHOWN ON THESE SHEETS IS BASED ON LIMITED INVESTIGATIONS BY THE STATE AND IS IN NO WAY WARRANTED TO INDICATE THE CONDITIONS OF ACTUAL QUANTITIES OF WORK WHICH WILL BE REQUIRED.

Plotted Date: 9/11/2009

NOT TO SCALE

STATE OF CONNECTICUT
DEPARTMENT OF TRANSPORTATION

Filename: CTDOT_HIGHWAY_STD.dgn Model: HW-949_01

SUBMITTED BY:	NAME/DATE/TIME:
	Timothy M. Wilson 2009.09.16 11:25:01 -04'00'
APPROVED BY:	NAME/DATE/TIME:
	James H. Norman 2009.09.18 14:31:21 -04'00'

CTDOT STANDARD SHEET

OFFICE OF ENGINEERING

STANDARD SHEET TITLE:

PLANTING DETAILS FOR TREES

STANDARD SHEET NO.:

HW-949_01