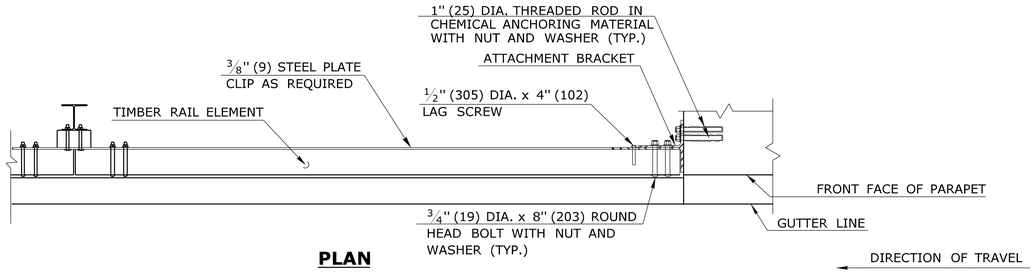

PLAN

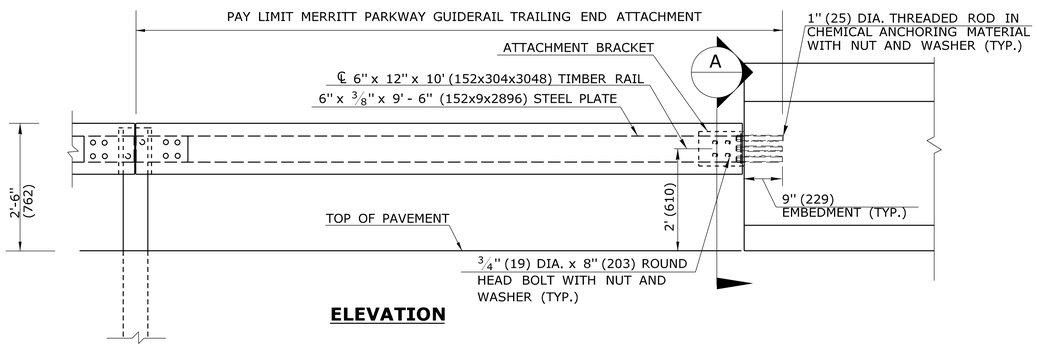

ELEVATION

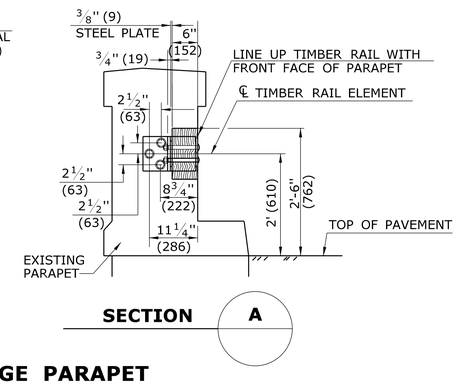

SECTION A

TRAILING END ATTACHMENT AT EXISTING BRIDGE PARAPET

GENERAL NOTES:

1. THREADED RODS SHALL CONFORM TO THE REQUIREMENTS OF ASTM A325, WITH NUTS CONFORMING TO ASTM A563, GRADE C. CIRCULAR HARDENED WASHERS SHALL CONFORM TO ASTM F436. THREADED NUTS AND WASHERS IN CONTACT WITH CONCRETE SHALL BE GALVANIZED IN ACCORDANCE WITH ASTM A153. ROUND HEAD BOLTS SHALL CONFORM TO THE SPECIAL PROVISIONS PROVIDED WITH THE PROJECT.
2. CHEMICAL ANCHORING MATERIAL SHALL CONFORM TO SECTION M.03, SUBARTICLE M.03.01-15
3. ATTACHMENT BRACKETS SHALL CONFORM TO ASTM A36 AND BE GALVANIZED IN ACCORDANCE WITH ASTM A123.
4. THE PAY LIMIT FOR TRAILING END ATTACHMENT INCLUDES ALL HARDWARE AND RAIL ELEMENTS TO AND INCLUDING THE FIRST POST.

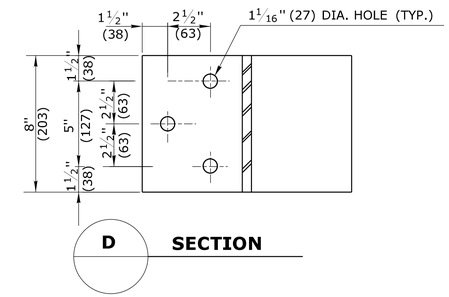

SECTION

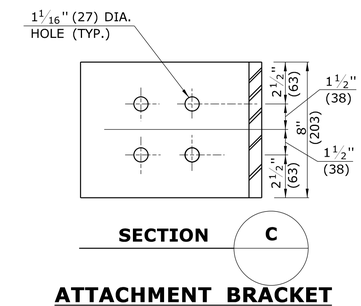

SECTION

ATTACHMENT BRACKET

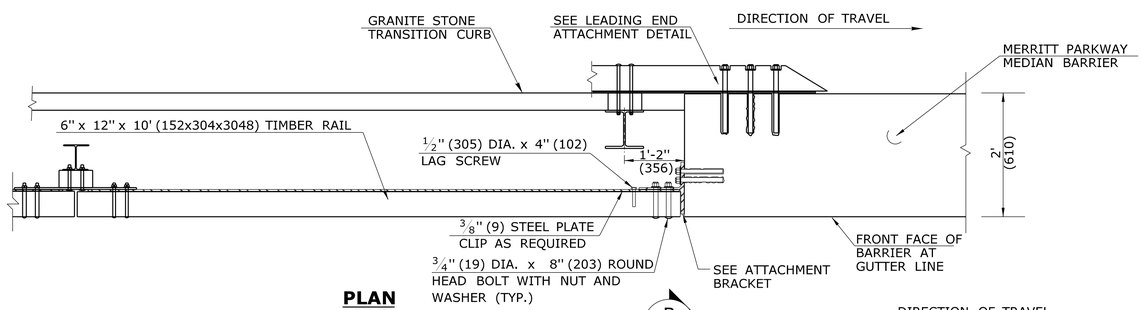

PLAN

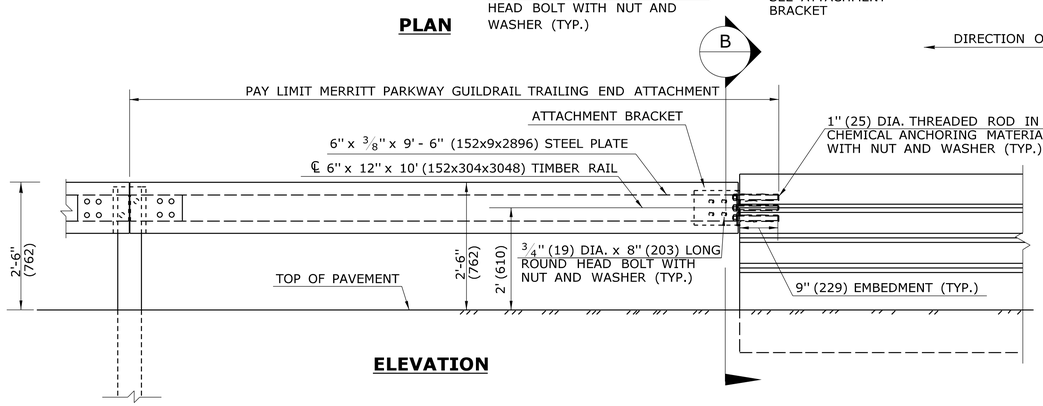

ELEVATION

TRAILING END ATTACHMENT AT MERRITT PARKWAY MEDIAN BARRIER

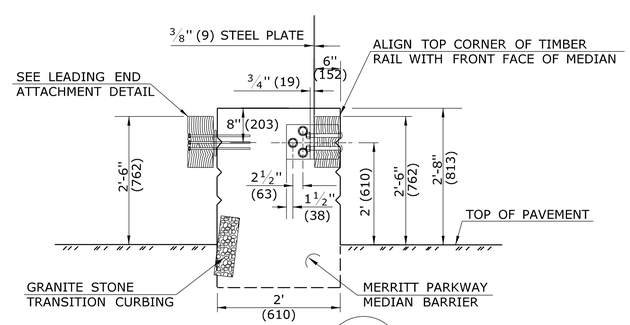

SECTION B

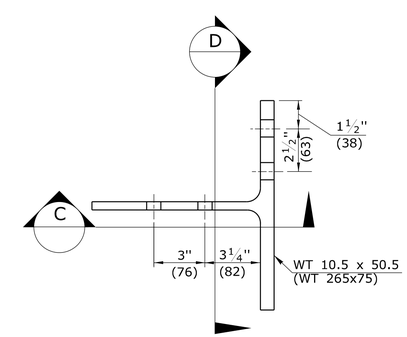

PLAN

ALL METRIC DIMENSIONS ARE IN MILLIMETERS (mm) UNLESS OTHERWISE NOTED.

REV.	DATE	REVISION DESCRIPTION
-	6/11	REVISE DETAILS TO IMPROVE CLARITY -
-	-	- -
-	-	- -
-	-	- -
-	-	- -
-	-	- -

THE INFORMATION, INCLUDING ESTIMATED QUANTITIES OF WORK, SHOWN ON THESE SHEETS IS BASED ON LIMITED INVESTIGATIONS BY THE STATE AND IS IN NO WAY WARRANTED TO INDICATE THE CONDITIONS OF ACTUAL QUANTITIES OF WORK WHICH WILL BE REQUIRED.

Plotted Date: 5/13/2011

NOT TO SCALE

STATE OF CONNECTICUT
DEPARTMENT OF TRANSPORTATION

Filename: CTDOT_HIGHWAY_STD_JUNE2011.dgn Model: 49 - HW-910_12c

SUBMITTED BY: NAME/DATE/TIME:
Digitally signed by Luis Fontaine
DN: c=US, st=Connecticut, l=Newington, ou=Department of Transportation, email=Luis.Fontaine@ct.gov, o=State of Connecticut, cn=Luis Fontaine
Date: 2011.05.18 11:58:05 -04'00'

APPROVED BY: NAME/DATE/TIME:
James H. Norman
2011.06.09 15:31:16 -04'00'

CTDOT STANDARD SHEET

OFFICE OF ENGINEERING

STANDARD SHEET TITLE:

MERRITT PARKWAY GUIDERAIL TRAILING END ATTACHMENTS

STANDARD SHEET NO.:

HW-910_12c