GENERAL NOTES:

1. ALTERNATE DESIGNS FOR UNIT END CONNECTIONS SIMILAR TO THE DESIGNS SHOWN MAY BE SUBMITTED TO THE ENGINEER FOR APPROVAL.
2. TERMINAL END TREATMENTS SHALL BE CONSTRUCTED AS SHOWN ON THE PLANS OR AS DIRECTED BY THE ENGINEER.
3. THE CONCRETE CAP JOINT SEAL, JOINT FILLER FOR BRIDGES, AND WELDED STEEL WIRE FABRIC SHALL BE PAID FOR AS PART OF CLASS "A" CONCRETE.

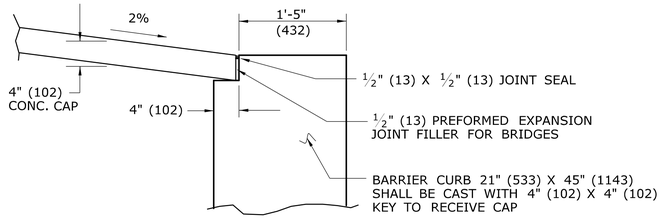

DETAIL B

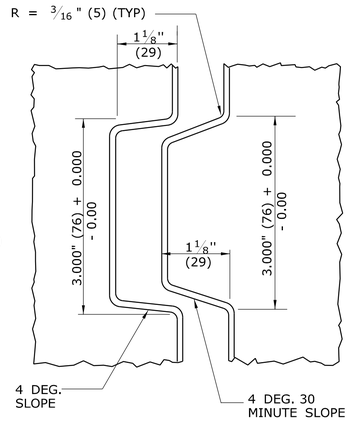

DETAIL A

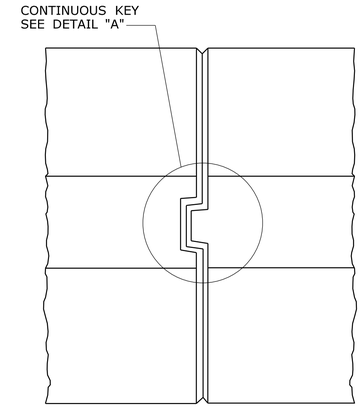

KEY CONNECTION AT ENDS PLAN

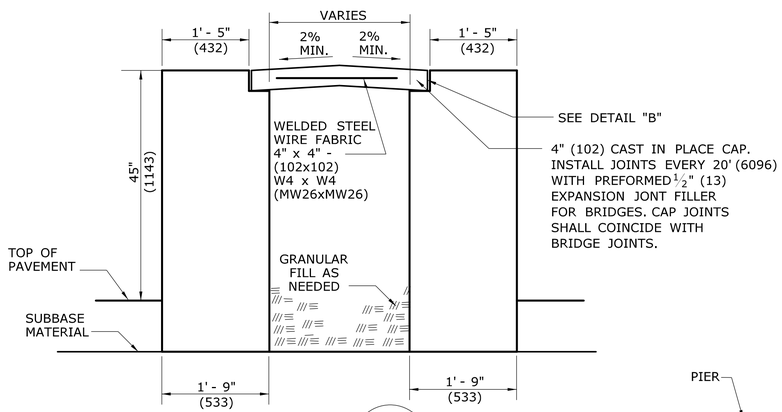

SECTION A

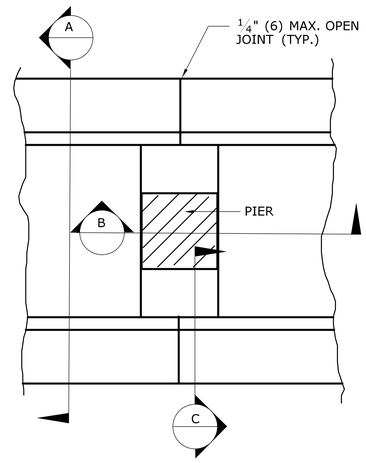

PLAN VIEW AT PIER

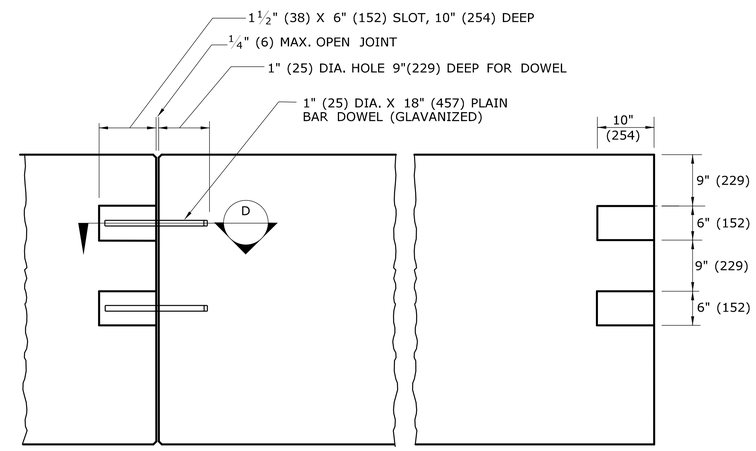

DOWEL CONNECTION AT ENDS ELEVATION VIEW

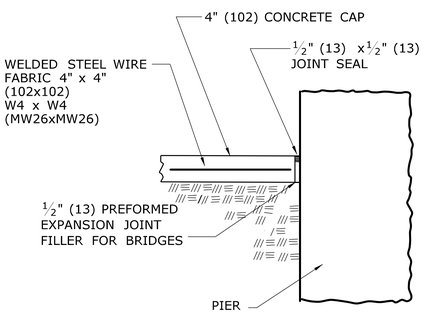

SECTION B

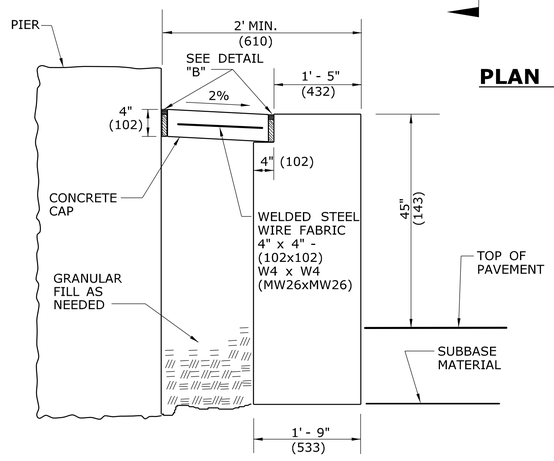

SECTION C

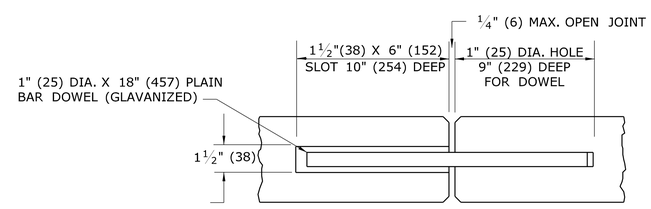

SECTION D

ALL METRIC DIMENSIONS ARE IN MILLIMETERS (mm) UNLESS OTHERWISE NOTED.

REV.	DATE	REVISION DESCRIPTION
-	-	-
-	-	-
-	-	-
-	-	-
-	-	-
-	-	-

THE INFORMATION, INCLUDING ESTIMATED QUANTITIES OF WORK, SHOWN ON THESE SHEETS IS BASED ON LIMITED INVESTIGATIONS BY THE STATE AND IS IN NO WAY WARRANTED TO INDICATE THE CONDITIONS OF ACTUAL QUANTITIES OF WORK WHICH WILL BE REQUIRED.

Plotted Date: 10/12/2010

NOT TO SCALE

STATE OF CONNECTICUT
DEPARTMENT OF TRANSPORTATION

Filename: CTDOT_HIGHWAY_STD_OCT2010.dgn Model: 26 -HW-821_01c

SUBMITTED BY: NAME/DATE/TIME:
Digitally signed by Leo Fontaine
DN: c=US, st=Connecticut, l=Newington, ou=Department of Transportation, email=Leo.Fontaine@ct.gov, o=State of Connecticut, cn=Leo Fontaine
Date: 2010.10.16 14:50:35 -04'00'

APPROVED BY: NAME/DATE/TIME:
James H. Norman
Digitally signed by James H. Norman
DN: c=US, st=CT, l=Newington, ou=Department of Transportation, email=james.norman@ct.gov, o=State of Connecticut, cn=James H. Norman
Date: 2010.10.18 08:35:29 -04'00'

CTDOT STANDARD SHEET

OFFICE OF ENGINEERING

STANDARD SHEET TITLE:
TRANSITION OF 45" (1145) F-SHAPE TO 45" (1145) VERTICAL SHAPE SHEET 3

STANDARD SHEET NO.:
HW-821_01c