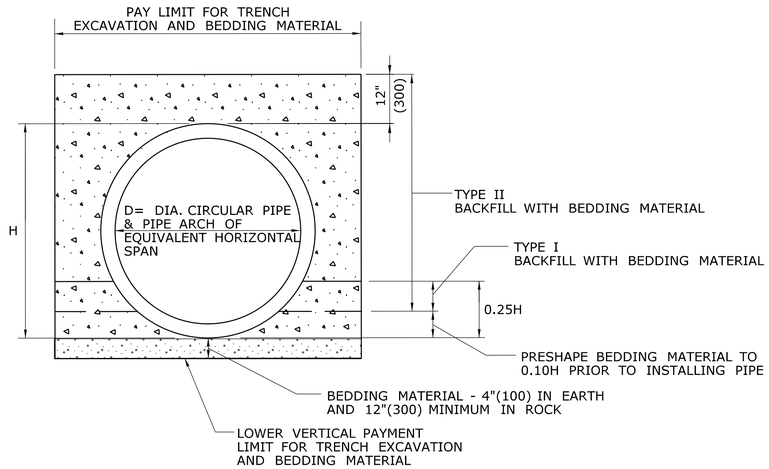

CULVERT TRENCH DETAIL

WHERE GRANULAR FILL IS NOT USED

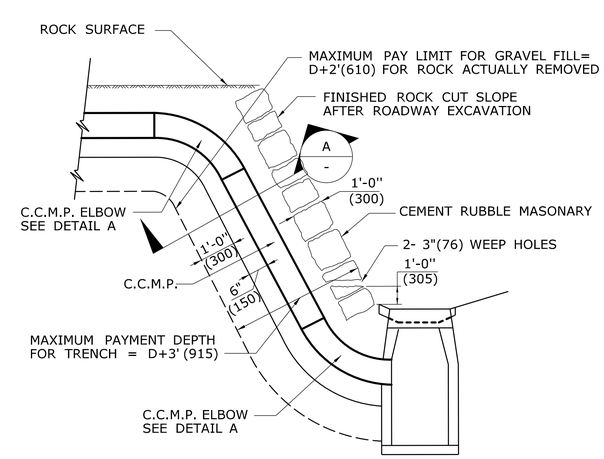

TYPICAL INSTALLATION OF C.C.M.P. IN ROCK SLOPE

GENERAL NOTES:

1. ROCK REMOVED BEYOND THE MAXIMUM PAY LIMIT SHOWN SHALL BE REPLACED WITH CEMENT RUBBLE MASONRY AND GRANULAR FILL.
2. FILL, AS REQUIRED TO CLOSE THE OPENING AS SHOWN ON THE PLANS, WILL BE AT THE CONTRACTORS EXPENSE. HOWEVER, THE PAY LIMIT LINES MAY BE MODIFIED TO COINCIDE WITH NATURAL FAULTS OR FISSURES OF ROCK AS THE ENGINEER MAY DETERMINE.

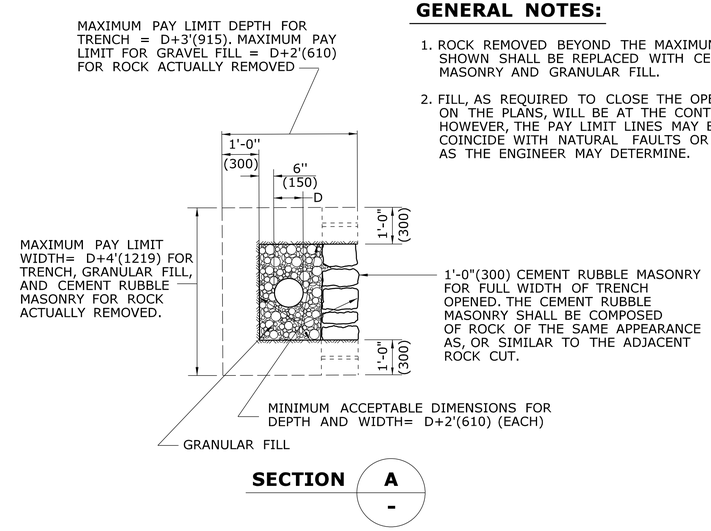

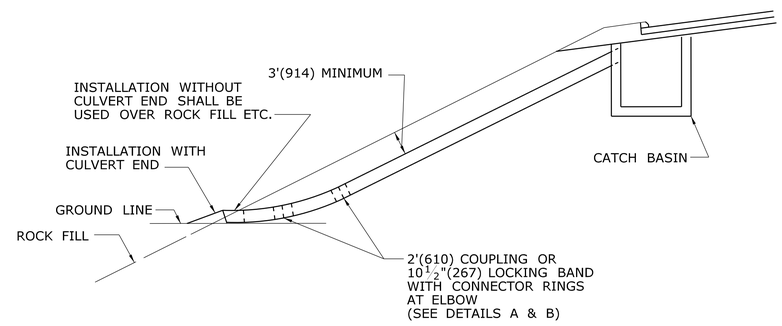

TYPICAL INSTALLATION OF C.C.M.P ELBOW IN FILL SLOPE

TABLE C
CONNECTOR RINGS

PIPE DIAMETER	LENGTH OF RING
12" (300)	52" (1321)
15" (381)	61" (1549)
18" (457)	71" (1803)
21" (533)	80" (2032)
24" (610)	90" (2286)
30" (762)	108" (2743)
36" (915)	128" (3251)
42" (1066)	147" (3734)
48" (1219)	166" (4216)

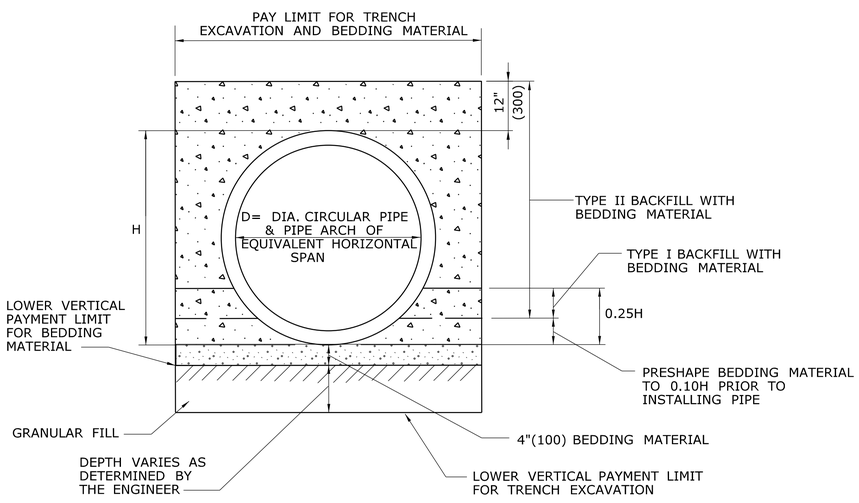

CULVERT TRENCH DETAIL
WHERE GRANULAR FILL
IS USED AS BEDDING

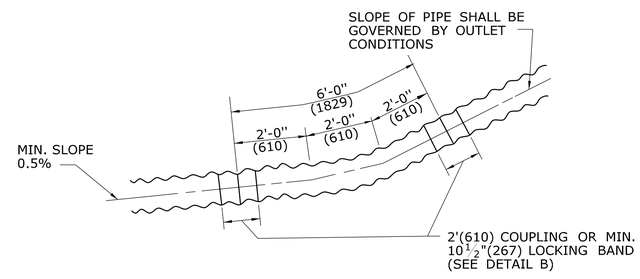

DETAIL A
C.C.M.P. ELBOW AND COUPLING

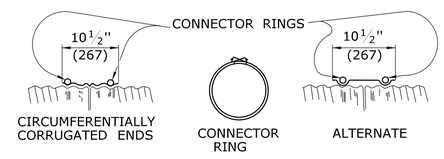

RODS: 7/16"(11) DIAMETER ELECTRO-GALVANIZED WITH 6"(152) LENGTH OF ½"(13) ROLLED THREADS EACH END, FURNISHED CURVED, TO FIT PIPE. SEE TABLE C

LUGS: DOUBLE TAKE UP, CAST IRON, ELECTRO-GALVINIZED.

NOTE: THE COUPLER FASTENING DEVICE SHALL NOT INTERFERE WITH INSTALLATION OF CONNECTOR RINGS.

DETAIL B
ELBOW DIMENSIONS

ALL METRIC DIMENSIONS ARE IN MILLIMETERS (mm) UNLESS OTHERWISE NOTED

REV.	DATE	REVISION DESCRIPTION
-	-	-
-	-	-
-	-	-
-	-	-
2	6/01/10	REVISE TITLE TO SAY TRENCH DETAIL
1	6/01/10	REMOVE GRAVEL, REPLACE W/ GRANULAR

THE INFORMATION, INCLUDING ESTIMATED QUANTITIES OF WORK, SHOWN ON THESE SHEETS IS BASED ON LIMITED INVESTIGATIONS BY THE STATE AND IS IN NO WAY WARRANTED TO INDICATE THE CONDITIONS OF ACTUAL QUANTITIES OF WORK WHICH WILL BE REQUIRED.

Plotted Date: 5/21/2010

NOT TO SCALE

STATE OF CONNECTICUT
DEPARTMENT OF TRANSPORTATION

Filename: CTDOT_HIGHWAY_STD.dgn Model: HW-651_01

SUBMITTED BY: NAME/DATE/TIME: Leo Fontaine 2010.05.28 10:27:17 -04'00'

APPROVED BY: NAME/DATE/TIME: James H. Norman — Digitally signed by James H. Norman DN: c=US, st=CT, l=Newington, ou=Department of Transportation, email=james.norman@ct.gov, o=State of Connecticut, cn=James H. Norman Date: 2010.06.04 08:19:02 -04'00'

CTDOT STANDARD SHEET

OFFICE OF ENGINEERING

STANDARD SHEET TITLE: C.C.M.PIPE INSTALLATIONS IN FILL & ROCK SLOPES & CULVERT TRENCH DETAIL

STANDARD SHEET NO.: HW-651_01