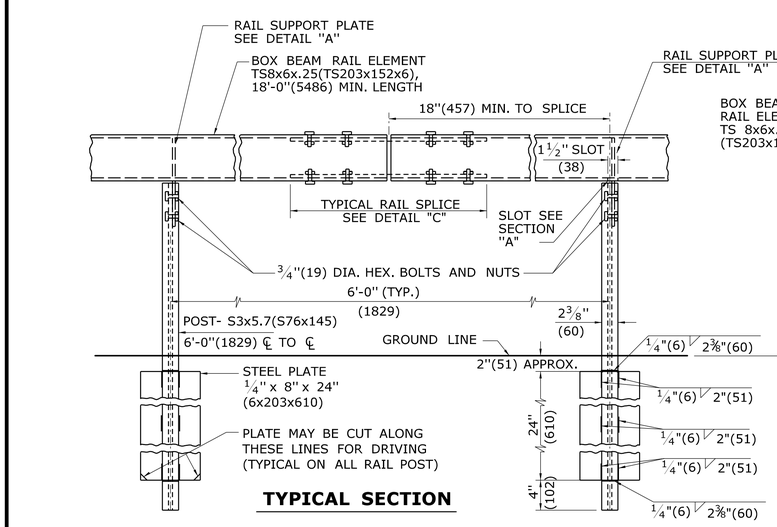

TYPICAL SECTION

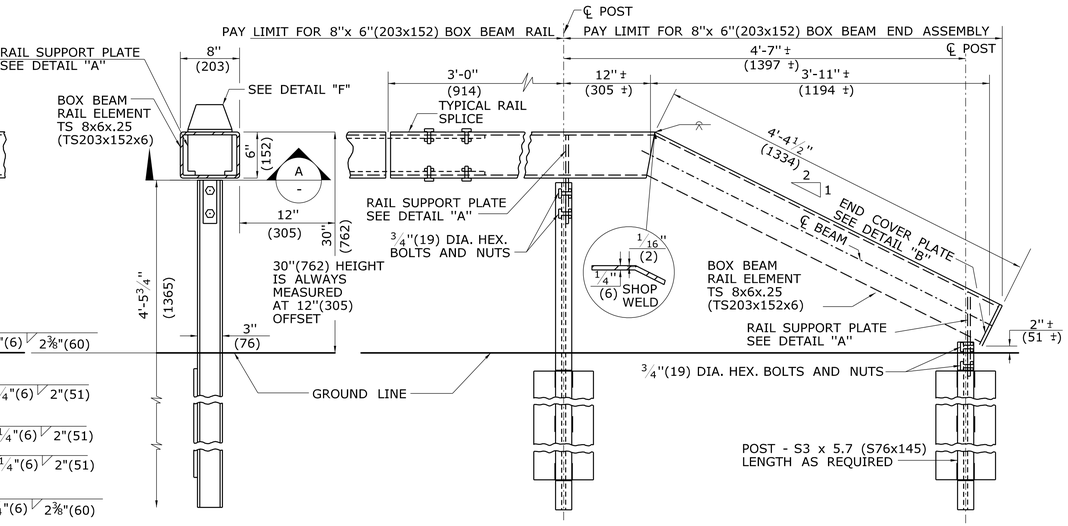

TYPICAL END ASSEMBLY

NOTE:

1.) FOR CURVES WITH R < 1525' (464.8m), 8"(203) x 6"(152) BOX BEAM ELEMENT SHALL BE SHOP FABRACATED. PAYMENT FOR SHOP FABRICATION SHALL BE INCLUDED WITH THE ITEM 8"(203) x 6"(152) BOX BEAM GUIDERAIL.

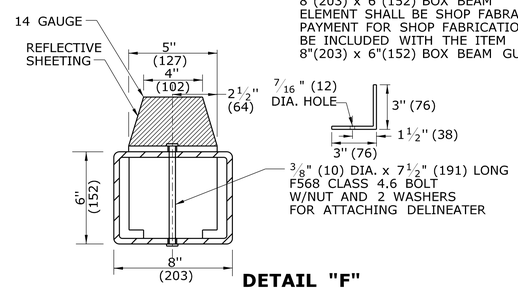

DETAIL "F"
DELINEATOR ATTACHMENT DETAIL

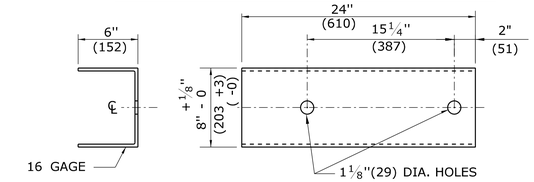

DETAIL "E"
COVER PLATE

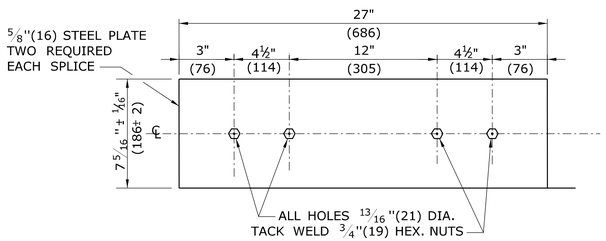

DETAIL "C"
SPLICE PLATE

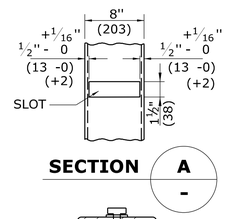

SECTION A
SECTION B

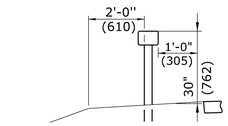

TYPICAL CROSS SECTION

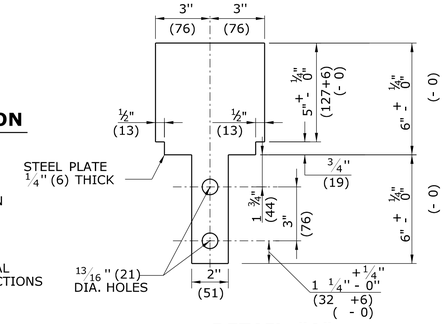

DETAIL "A"
RAIL SUPPORT PLATE

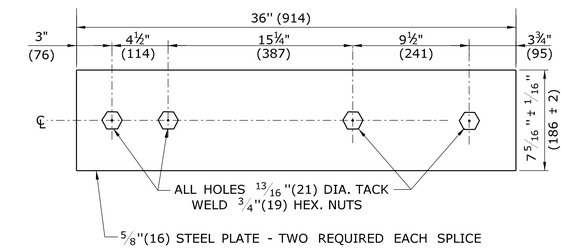

DETAIL "D"
SPLICE PLATE FOR EXPANSION JOINT

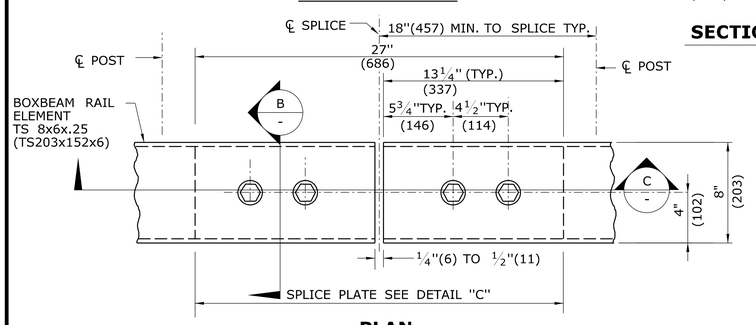

PLAN

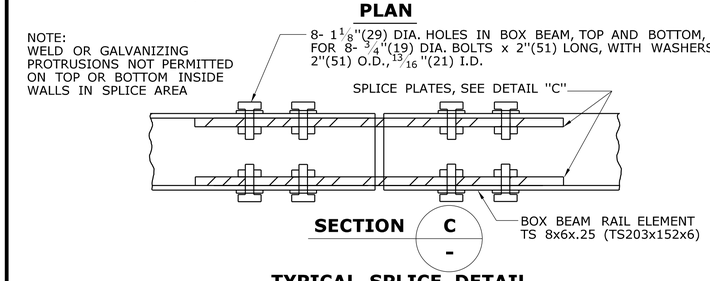

SECTION C
TYPICAL SPLICE DETAIL

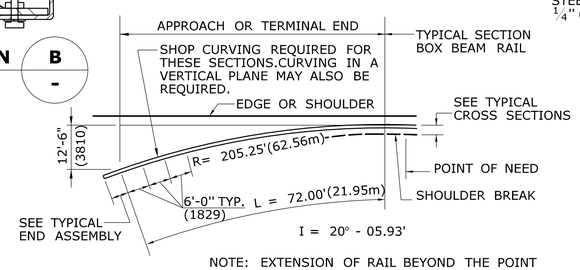

NOTE: EXTENSION OF RAIL BEYOND THE POINT OF NEED AS SHOWN ON THE PLANS. MINIMUM LENGTH 72'(21.95m)

PLAN

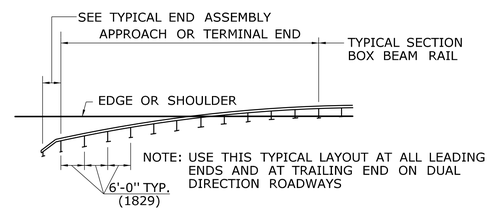

NOTE: USE THIS TYPICAL LAYOUT AT ALL LEADING ENDS AND AT TRAILING END ON DUAL DIRECTION ROADWAYS

ELEVATION
TYPICAL LAYOUT

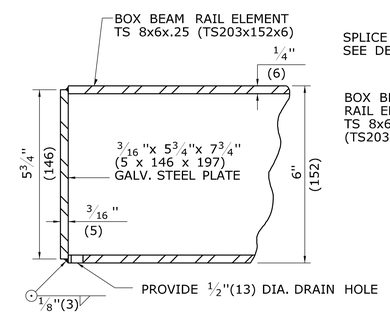

DETAIL "B"
END COVER PLATE

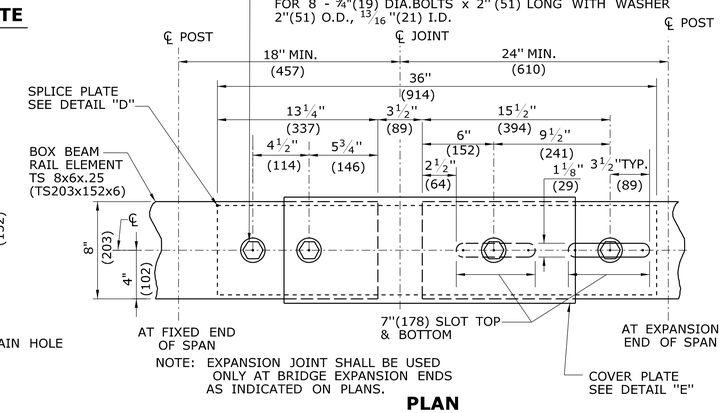

NOTE: EXPANSION JOINT SHALL BE USED ONLY AT BRIDGE EXPANSION ENDS AS INDICATED ON PLANS.

PLAN
TYPICAL EXPANSION JOINT DETAIL

ALL METRIC DIMENSIONS ARE IN MILLIMETERS (mm) UNLESS OTHERWISE NOTED

REV.	DATE	REVISION DESCRIPTION
-	-	-
-	-	-
-	-	-
-	-	-
-	-	-
-	-	-

THE INFORMATION, INCLUDING ESTIMATED QUANTITIES OF WORK, SHOWN ON THESE SHEETS IS BASED ON LIMITED INVESTIGATIONS BY THE STATE AND IS IN NO WAY WARRANTED TO INDICATE THE CONDITIONS OF ACTUAL QUANTITIES OF WORK WHICH WILL BE REQUIRED.

Plotted Date: 10/4/2010

NOT TO SCALE

STATE OF CONNECTICUT
DEPARTMENT OF TRANSPORTATION

Filename: CTDOT_HIGHWAY_STD.dgn Model: 45 - HW-910_10

SUBMITTED BY: NAME/DATE/TIME: Digitally signed by Leo Fontaine DN: c=US, st=Connecticut, l=Newington, ou=Department of Transportation, email=Leo.Fontaine@ct.gov, o=State of Connecticut, cn=Leo Fontaine Date: 2010.10.16 14:37:41 -04'00'

APPROVED BY: NAME/DATE/TIME: James H. Norman 2011.06.09 15:05:57 -04'00'

CTDOT
STANDARD SHEET

OFFICE OF ENGINEERING

STANDARD SHEET TITLE:
METAL BEAM RAIL 8" (203) X 6" (152) BOX BEAM

STANDARD SHEET NO.: HW-910_10