GENERAL NOTES:

1. PAVEMENT FOR RAILING SHALL BE USED ONLY AT THE FOLLOWING LOCATIONS:

   A) WITHIN A MAPPED AQUIFER PROTECTION AREA.

   B) AT THE APPROACHES TO BRIDGES OVER STREAMS AND RIVERS FOR A MINIMUM LENGTH OF 50'(15m).

   C) WHEN THE RIVER OR STREAM IS LESS THAN 50'(15m) FROM THE EDGE OF ROAD AND PARALLELING IT.

   D) WITHIN OR ABUTTING WATER COMPANY OWNED AREA.

2. WHEN PAVEMENT FOR RAILING IS NOT REQUIRED, PROCESSED AGGREGATE SHALL BE USED UNDER RAILING. SEE HW-910_02 AND 03.

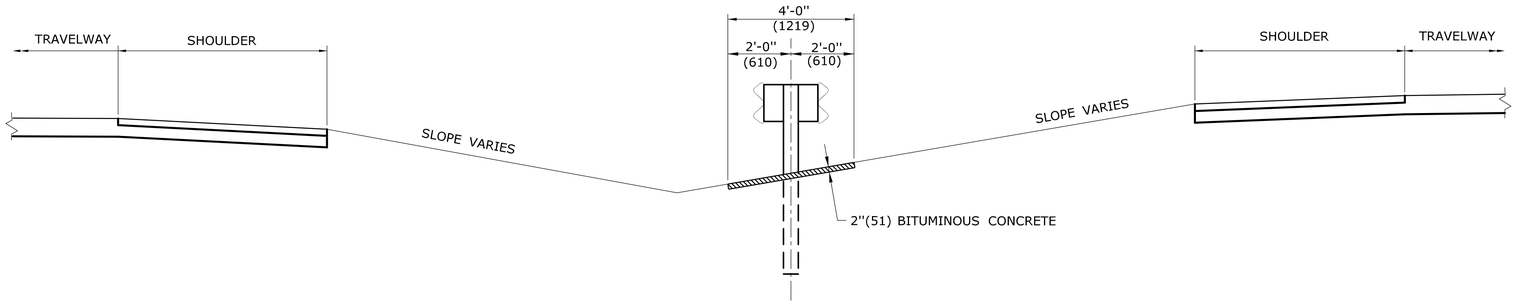

MEDIAN SECTION

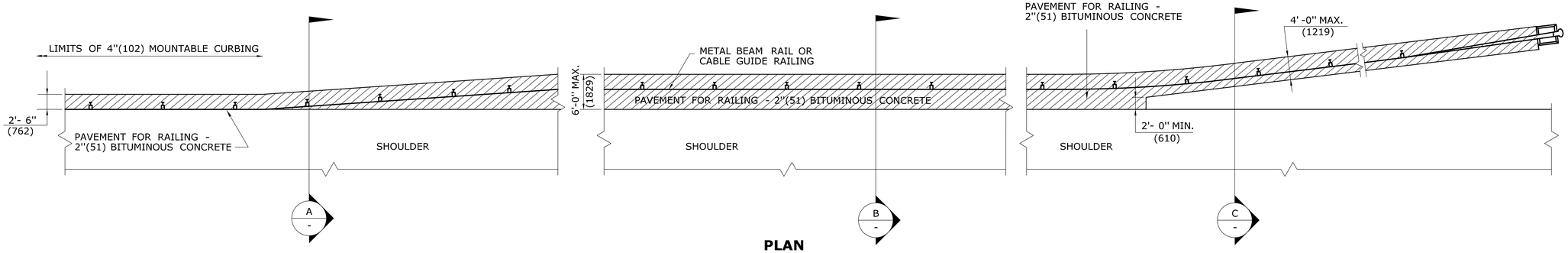

PLAN

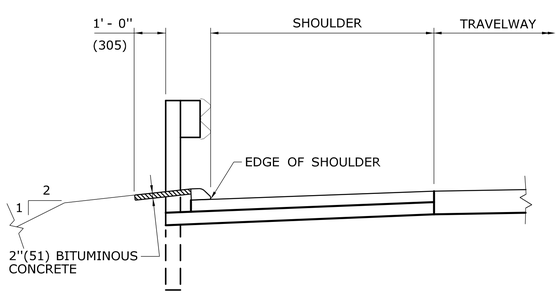

SECTION A -

RAIL WITH 4"(102) MOUNTABLE CURBING

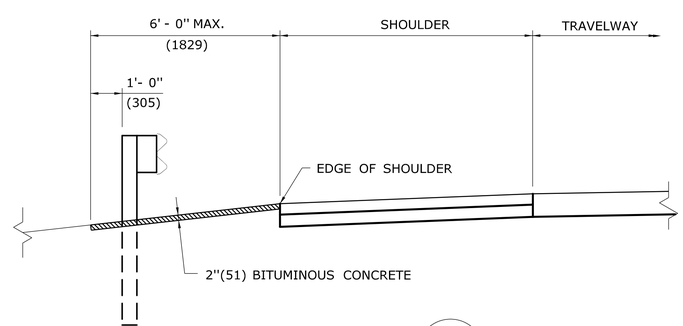

SECTION B -

RAIL WITHOUT CURBING

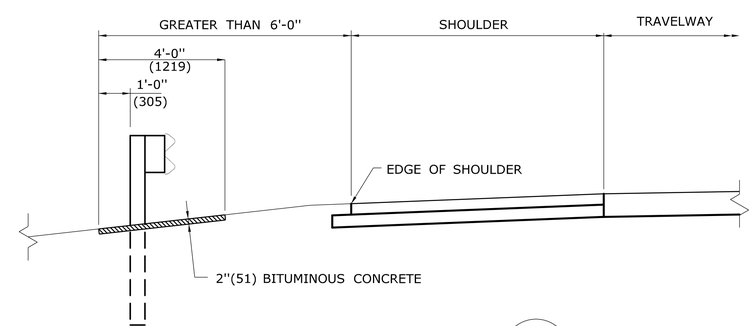

SECTION C -

TRANSITION OR OFFSET RAIL

TYPICAL CROSS SECTIONS

ALL METRIC DIMENSIONS ARE IN MILLIMETERS (mm) UNLESS OTHERWISE NOTED

REV.	DATE	REVISION DESCRIPTION
1	6/11	REVISED NOTES FOR LOCATION TO USE PAVEMENT FOR RAIL
-	-	-
-	-	-
-	-	-
-	-	-
-	-	-

THE INFORMATION, INCLUDING ESTIMATED QUANTITIES OF WORK, SHOWN ON THESE SHEETS IS BASED ON LIMITED INVESTIGATIONS BY THE STATE AND IS IN NO WAY WARRANTED TO INDICATE THE CONDITIONS OF ACTUAL QUANTITIES OF WORK WHICH WILL BE REQUIRED.

Plotted Date: 5/10/2011

NOT TO SCALE

STATE OF CONNECTICUT
DEPARTMENT OF TRANSPORTATION

Filename: CTDOT_HIGHWAY_STD_JUNE2011.dgn Model: 70 - HW-925_01

SUBMITTED BY: NAME/DATE/TIME:
Digitally signed by Leo Fontaine
DN: c=US, st=Connecticut, l=Newington, ou=Department of Transportation, email=Leo.Fontaine@ct.gov, o=State of Connecticut, cn=Leo Fontaine
Date: 2011.05.25 12:44:10 -04'00'

APPROVED BY: NAME/DATE/TIME:
James H. Norman
2011.06.09 15:37:33 -04'00'

CTDOT
STANDARD SHEET

OFFICE OF ENGINEERING

STANDARD SHEET TITLE:
PAVEMENT FOR RAILING

STANDARD SHEET NO.:
HW-925_01