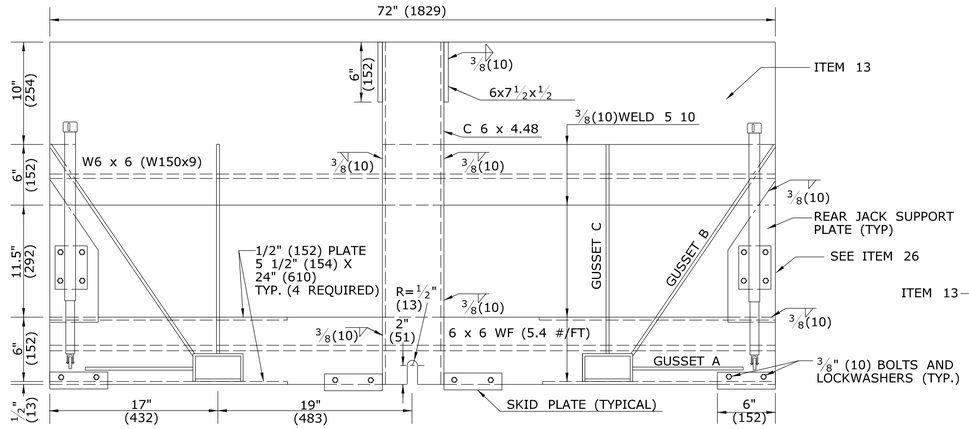

FRONT VIEW

SECTION A

ALL COMPONENTS TO BE 6061-T6 ALLUMINUM
USE COMPATIBLE ALLOY IN WELDING MATERIAL

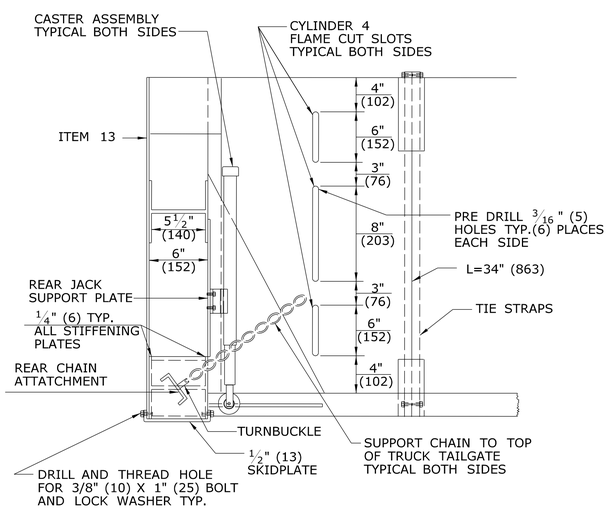

REAR ASSEMBLY SIDE VIEW

TIE STRAPS

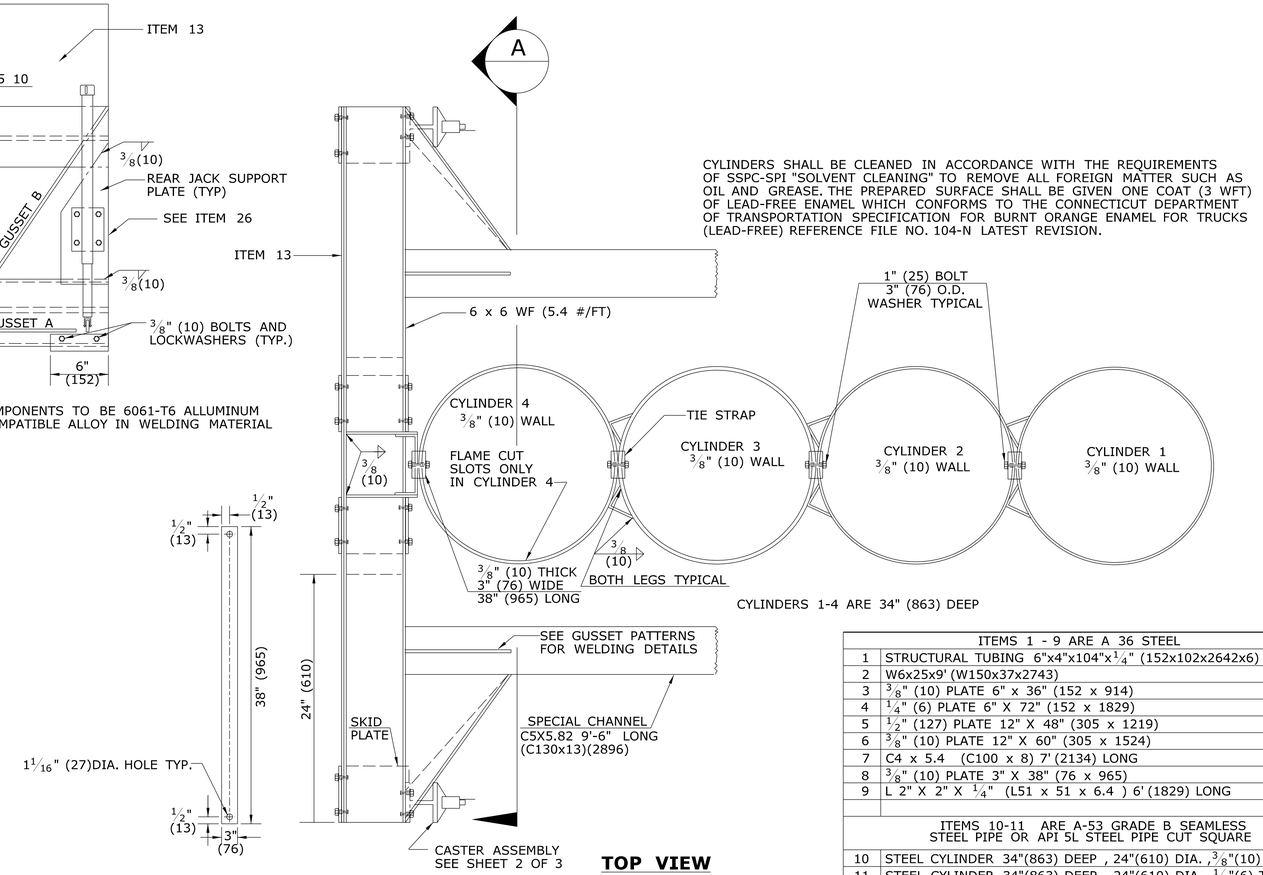

TOP VIEW

CYLINDERS SHALL BE CLEANED IN ACCORDANCE WITH THE REQUIREMENTS OF SSPC-SPI "SOLVENT CLEANING" TO REMOVE ALL FOREIGN MATTER SUCH AS OIL AND GREASE. THE PREPARED SURFACE SHALL BE GIVEN ONE COAT (3 WFT) OF LEAD-FREE ENAMEL WHICH CONFORMS TO THE CONNECTICUT DEPARTMENT OF TRANSPORTATION SPECIFICATION FOR BURNT ORANGE ENAMEL FOR TRUCKS (LEAD-FREE) REFERENCE FILE NO. 104-N LATEST REVISION.

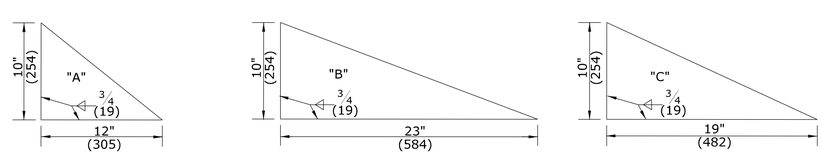

1"(25) PLATE **1/2"(13) PLATE** **1/2"(13) PLATE**

GUSSET PATTERNS

ITEMS 1 - 9 ARE A 36 STEEL		
1	STRUCTURAL TUBING 6"x4"x104"x1/4" (152x102x2642x6)	2
2	W6x25x9' (W150x37x2743)	1
3	3/8" (10) PLATE 6" x 36" (152 x 914)	1
4	1/4" (6) PLATE 6" X 72" (152 x 1829)	4
5	1/2" (127) PLATE 12" X 48" (305 x 1219)	1
6	3/8" (10) PLATE 12" X 60" (305 x 1524)	2
7	C4 x 5.4 (C100 x 8) 7' (2134) LONG	2
8	3/8" (10) PLATE 3" X 38" (76 x 965)	10
9	L 2" X 2" X 1/4" (L51 x 51 x 6.4) 6' (1829) LONG	1
ITEMS 10-11 ARE A-53 GRADE B SEAMLESS STEEL PIPE OR API 5L STEEL PIPE CUT SQUARE		
10	STEEL CYLINDER 34"(863) DEEP , 24"(610) DIA. ,3/8"(10) THICK	1
11	STEEL CYLINDER 34"(863) DEEP , 24"(610) DIA. ,1/4"(6) THICK	3
12	25' (7620) OF 1/4" (6) CHAIN	1
ITEMS 13-19 ARE 6061 T6 OR 6061-64 ALUMINUM		
13	1/4" (6) PLATE 34" (863) x 72" (1829)	1
14	6 x 6 (152x152) WF (5.4 #/FT) - 6' (1829) LONG	2
15	SPECIAL CHANNEL-DEPTH = 5" (127), WT/FT = 5.82 WIDTH = 2.875 (73), LENGTH = 9'-6" (2896)	2
16	C 6 x 4.48 (C 152 x 7) 34" (863) LONG	1
17	1/2" (13) PLATE 48" x 48" (1219 x 1219)	1
18	1/4" (6) PLATE 4" x 108" (102 x 2743)	2
19	1" (25) PLATE 10" X 12" (254 x 305)	1
20	1 X 3 A 325 STRUCTURAL BOLT WITH NUTS	12
21	HI STR. STRUCTURAL WASHERS	12
22	1 X 4 (25x102) A 325 STRUCTURAL BOLTS WITH NUTS	2
23	3/4" x 4 (20x102) A 325 STRUCTURAL BOLTS WITH NUTS	4
24	HI STR. STRUCTURAL WASHERS	4
25	LOCK WASHERS	16
26	CASTER ASSEMBLY	4

IMPACT PLATE & CYLINDER DETAILS

ALL METRIC DIMENSIONS ARE IN MILLIMETERS (mm) UNLESS OTHERWISE NOTED.

REV.	DATE	REVISION DESCRIPTION
-	-	-
-	-	-
-	-	-
-	-	-
-	-	-
-	-	-

THE INFORMATION, INCLUDING ESTIMATED QUANTITIES OF WORK, SHOWN ON THESE SHEETS IS BASED ON LIMITED INVESTIGATIONS BY THE STATE AND IS IN NO WAY WARRANTED TO INDICATE THE CONDITIONS OF ACTUAL QUANTITIES OF WORK WHICH WILL BE REQUIRED.

Plotted Date: 9/30/2010

NOT TO SCALE

STATE OF CONNECTICUT
DEPARTMENT OF TRANSPORTATION

Filename: CTDOT_HIGHWAY_STD.dgn Model: 75 - HW-1806_01a

SUBMITTED BY: NAME/DATE/TIME:
Digitally signed by Leo Fontaine
DN: c=US, st=Connecticut, l=Newington, ou=Department of Transportation, email=Leo.Fontaine@ct.gov, o=State of Connecticut, cn=Leo Fontaine
Date: 2010.10.16 15:08:03 -04'00'

APPROVED BY: NAME/DATE/TIME:
James H. Norman
Digitally signed by James H. Norman
DN: c=US, st=CT, l=Newington, ou=Department of Transportation, email=james.norman@ct.gov, o=State of Connecticut, cn=James H. Norman
Date: 2010.10.18 09:01:34 -04'00'

CTDOT STANDARD SHEET

OFFICE OF ENGINEERING

STANDARD SHEET TITLE:

CT TRUCK MOUNTED IMPACT ATTENUATOR SHEET 1

STANDARD SHEET NO.:

HW-1806_01a