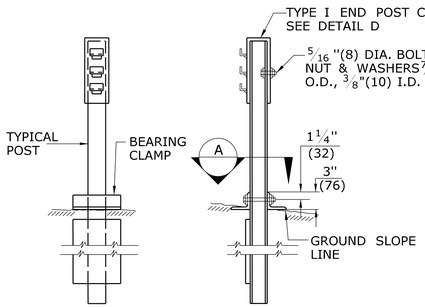

FRONT **SIDE**

DETAIL C

TYPE I END POST

NOTE: FOR END POST INSTALLATION, ROTATE POST 180 DEG. FROM NORMAL POSITION

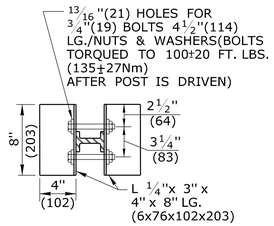

SECTION A

BEARING CLAMP

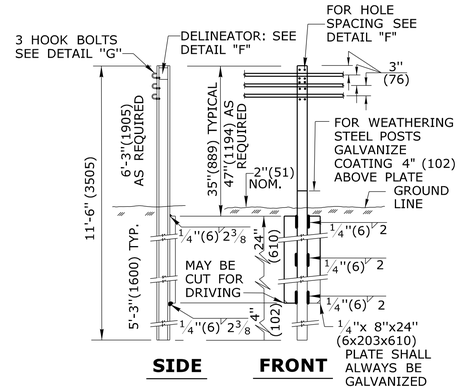

SIDE **FRONT**

DETAIL E

POST S3x5.7 (S75x8)

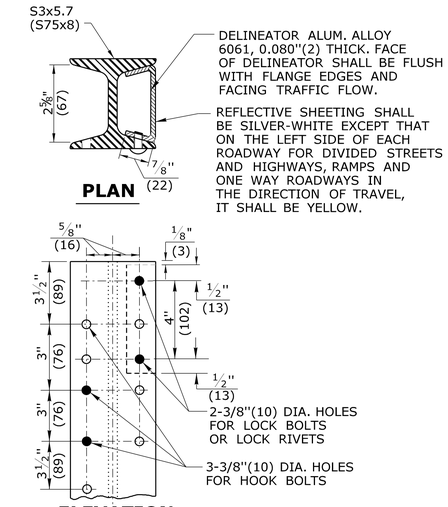

PLAN

ELEVATION

DETAIL F

BOLT HOLE SPACING

(SEE GENERAL NOTE 5)

GENERAL NOTES:

1. INSTALL DELINEATORS EVERY 32'(9.8m). SEE DETAIL "F" DO NOT INSTALL A DELINATOR ON POSTS THAT ARE GREATER THAN 12'(3.7m) FROM THE EDGE OF SHOULDER IN INSTANCES WHERE THE POST SPACING DOES NOT COINCIDE WITH THE ABOVE DIMENSION, THE DELINEATORS SHOULD BE INSTALLED ON THE NEAREST POST. THE DELINETOR SPACING SHALL REMAIN CONSISTENT THROUGHOUT THE RUN OF RAILING REGARDLESS OF CHANGES FROM ONE SYSTEM TO ANOTHER.
2. FOR ARRANGEMENT OF SPRING CABLE ASSEMBLIES (COMPENSATING DEVICES) AND TURNBUCKLE CABLE END ASSEMBLIES, THE FOLLOWING CRITERIA SHALL APPLY: LENGTH OF CABLE RUNS TO 1000'(305m) USE COMPENSATING DEVICE ALONE ON ONE END, AND TURNBUCKLE CABLE END ASSEMBLY ON THE OTHER END OF EACH INDIVIDUAL CABLE. 1000'(305m) TO 2000'(610m) USE COMPENSATING DEVICE AND TURNBUCKLE IN COMBINATION ON EACH END OF EACH INDIVIDUAL CABLE. OVER 2000'(610m) START NEW STRETCH BY INTERLACING AT LAST PARALLEL POST (SEE SKETCH OF TYPICAL LAYOUT).
3. DESIGNS FOR A COMBINATION OR SINGLE UNIT COMPENSATING DEVICE AND TURNBUCKLE ASSEMBLY MAY BE SUBMITTED FOR APPROVAL.
4. AT ALL LOCATIONS WHERE THE CABLE IS CONNECTED TO A CABLE SOCKET WITH A WEDGE TYPE CONNECTION, ONE WIRE OF THE WIRE ROPE SHALL BE CRIMPED OVER THE BASE OF THE WEDGE TO HOLD IT FIRMLY IN PLACE.
5. BOLT HOLES AS SHOWN IN DETAIL "F" ARE FOR USE AS FOLLOWS: 3-3/8" (10) DIA. HOLES FOR HOOK BOLTS AND 2-3/8" (10) DIA. DELINEATOR MOUNTING HOLES FOR EACH DIRECTION OF TRAFFIC. HOLES SHOWN SOLID ARE ONE 5/8"(16) DIA. FOR INSTALLATIONS TO THE RIGHT OF TRAFFIC FLOW (AS REQUIRED FOR METAL BEAM RAIL) IS ACCEPTABLE.
6. THE FOLLOWING PROCEDURE SHALL BE TO TIGHTEN THE TURNBUCKLES, DEPENDING ON THE TEMPERATURE AT THE TIME OF THE ADJUSTMENTS IN ACCORDANCE WITH THE FOLLOWING TABLE:

TEMPERATURE	120° TO 100°	99° TO 80°	79° TO 60°	59° TO 40°	39° TO 20°	19° TO 0°	-1° TO -20°
SPRING COMPRESSION FROM UNLOADED POSITION IN EACH SPRING = STANDARD SPRING LENGTH	1" (25)	1 1/2" (38)	2" (51)	2 1/2" (64)	3" (76)	3 1/2" (89)	4" (102)

7. THE MINIMUM LENGTH OF THREE CABLE GUIDE RAILING ON ROADS WITH DESIGN SPEEDS GREATER THAN OR EQUAL TO 45mph(72kph), AS MEASURED BETWEEN LAST END POSTS, IS 208'(63.4m). ON ROADS WITH DESIGN SPEEDS LESS THAN 45mph(72kph), THE MINIMUM LENGTH SHALL BE 152'(46.3m) AT AN 8'(2438) POST SPACING.
8. WHEN SYSTEM 2 OR 3 IS REQUIRED, EITHER THE ENTIRE RUN OF RAIL SHALL BE INSTALLED USING A SINGLE SYSTEM OR A 208'(63.4m) MINIMUM LENGTH OF THE SYSTEM SHALL BE PROVIDED. TRANSITIONS BETWEEN SYSTEMS ARE NOT RECOMMENDED.
9. STAGGER CABLE SPLICES. PROVIDE A MINIMUM OF 20'(6.1m) BETWEEN ANY PAIR. PROVIDE A MINIMUM OF 100'(30.5m) BETWEEN CABLE SPLICES ON THE SAME CABLE.

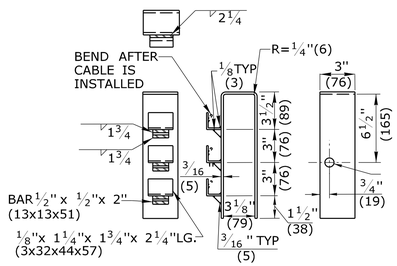

DETAIL D

TYPE I

END POST CAP

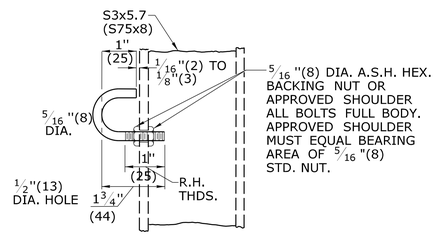

DETAIL G

HOOK BOLT

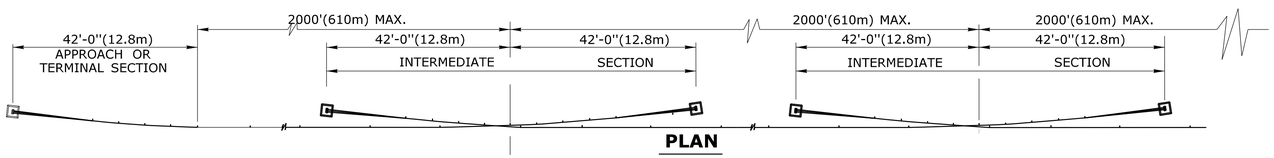

PLAN

SKETCH OF TYPICAL LAYOUT

TABLE A	
RADIUS OF CURVE	POST SPACING
R > 720' (219m)	16'(4877)
R ≤ 720' (219m) BUT ≥ 440' (134m)	12'(3658)
R < 440' (134m)	NOT RECOMMENDED

TABLE B		
TYPE OF SYSTEM	POST SPACING	DEFLECTION
STANDARD	16'(4877)	12'(3658)
SYSTEM 2	8'(2438)	8'(2438)
SYSTEM 3	4'(1219)	6'(1829)

NOTE: DEFLECTION DISTANCE IS BASED ON IMPACT SPEEDS OF 63mph(101kph). SEE NOTE 7 & 8.

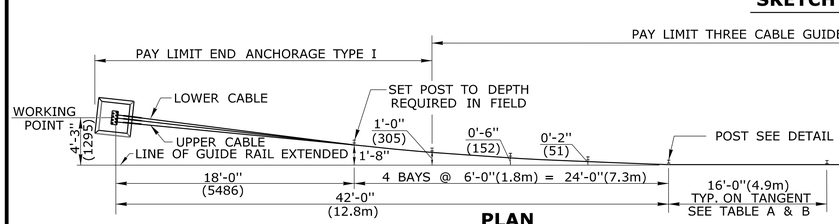

PLAN

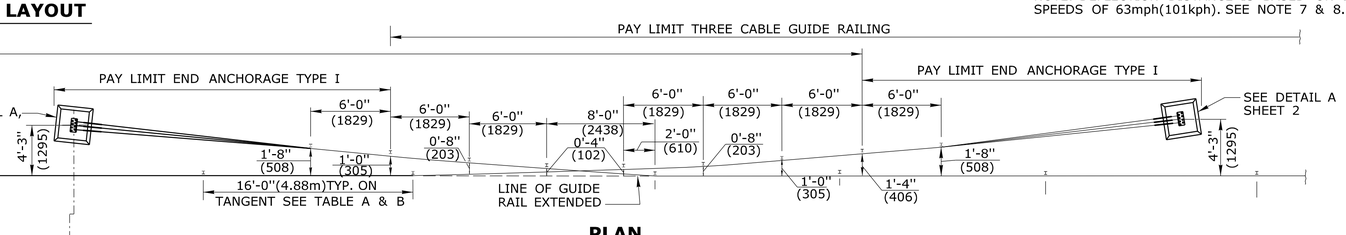

PLAN

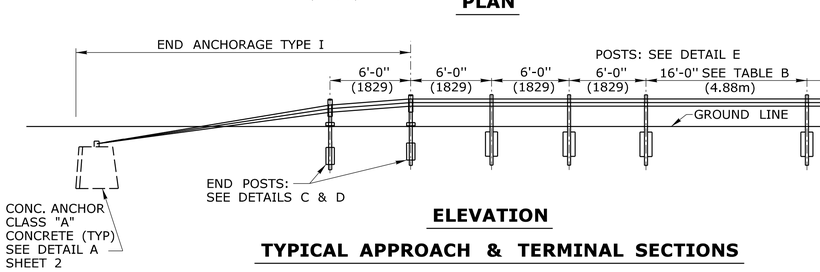

ELEVATION

TYPICAL APPROACH & TERMINAL SECTIONS

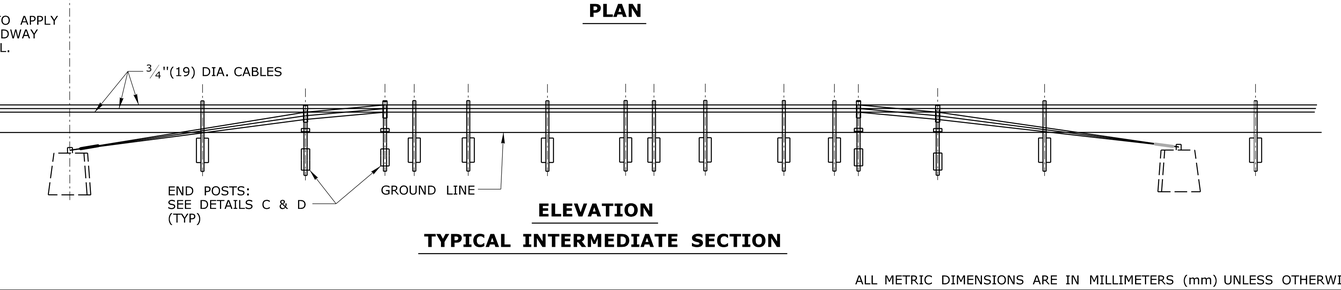

ELEVATION

TYPICAL INTERMEDIATE SECTION

ALL METRIC DIMENSIONS ARE IN MILLIMETERS (mm) UNLESS OTHERWISE NOTED.

REV.	DATE	REVISION DESCRIPTION
-	-	-
-	-	-
-	-	-
-	-	-
-	-	-
-	-	-

THE INFORMATION, INCLUDING ESTIMATED QUANTITIES OF WORK, SHOWN ON THESE SHEETS IS BASED ON LIMITED INVESTIGATIONS BY THE STATE AND IS IN NO WAY WARRANTED TO INDICATE THE CONDITIONS OF ACTUAL QUANTITIES OF WORK WHICH WILL BE REQUIRED.

Plotted Date: 9/30/2010

NOT TO SCALE

STATE OF CONNECTICUT
DEPARTMENT OF TRANSPORTATION

Filename: CTDOT_HIGHWAY_STD.dgn Model: 65 - HW-918_01a

SUBMITTED BY: NAME/DATE/TIME: Digitally signed by Leo Fontaine DN: c=US, st=Connecticut, l=Newington, ou=Department of Transportation, email=Leo.Fontaine@ct.gov, o=State of Connecticut, cn=Leo Fontaine Date: 2010.10.14 10:05:34 -04'00'

APPROVED BY: NAME/DATE/TIME: James H. Norman Digitally signed by James H. Norman DN: c=US, st=CT, l=Newington, ou=Department of Transportation, email=james.norman@ct.gov, o=State of Connecticut, cn=James H. Norman Date: 2010.10.18 08:57:47 -04'00'

CTDOT
STANDARD SHEET

OFFICE OF ENGINEERING

STANDARD SHEET TITLE:

THREE CABLE GUIDERAIL (I-BEAM POSTS) SHEET 1

STANDARD SHEET NO.:

HW-918_01a