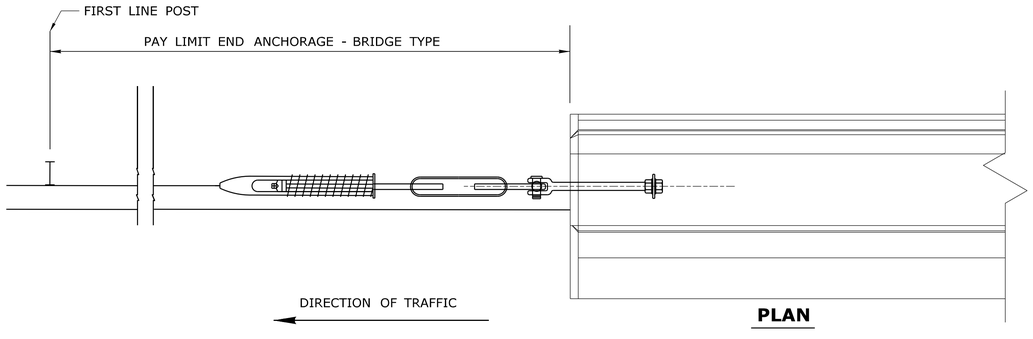

PLAN

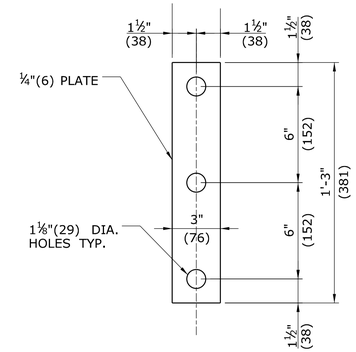

ANCHORAGE PLATE

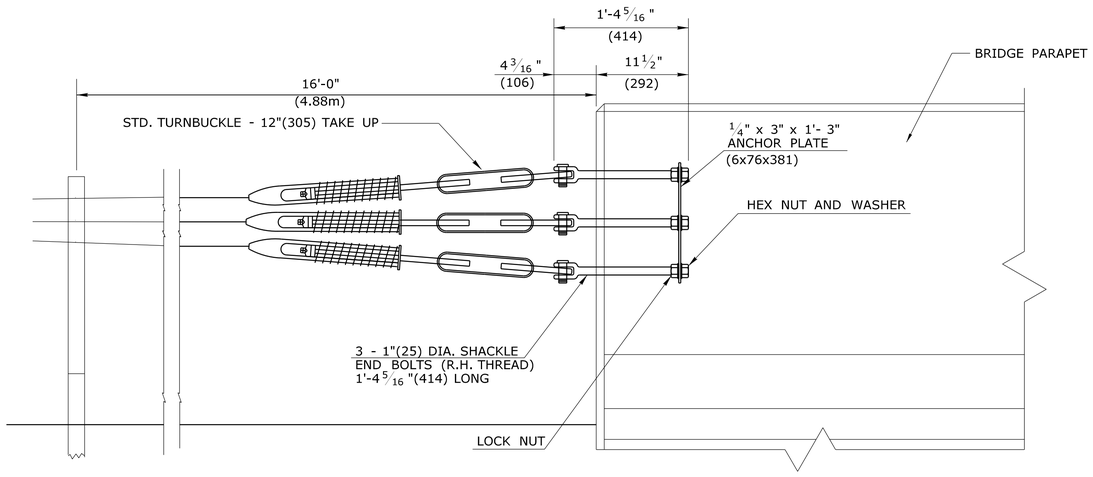

ELEVATION

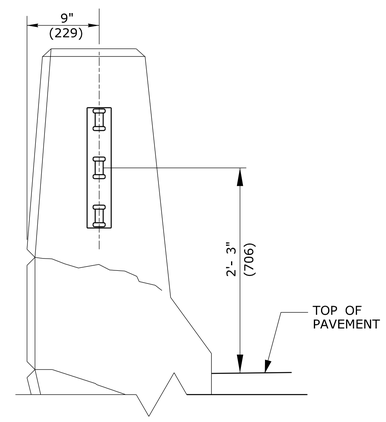

END VIEW

GENERAL NOTES:

1. THE SHACKLE END BOLTS SHALL CONFORM TO THE REQUIREMENTS OF ASTM A668 CLASS E OR AISI 1035 FORGED STEEL GALVANIZED IN ACCCORDANCE WITH THE REQUIREMENTS OF ASTM A153.
2. THE STANDARD HEX NUTS, ANCHOR PLATES AND LOCK NUTS SHALL CONFORM TO THE REQUIREMENTS OF ASTM A-36.
3. LONGITUDINAL REINFORCEMENT IN THE PARAPET SHALL CLEAR ANCHOR PLATE.
4. ALL ANCHORAGE MATERIAL SHALL BE PAID FOR AS PART OF THE PAY ITEM "END ANCHORAGE - BRIDGE TYPE" (ROADWAY ITEM).
5. THIS DETAIL SHALL BE USED TO ANCHOR THREE-CABLE GUIDE RAILING AT THE TRAILING END OF 3'-6"(1067) HIGH PARAPETS ON ONE-WAY ROADS ONLY. PARAPET HEIGHTS LOWER THAN THIS SHALL BE REFERED TO STRUCTURE DESIGN UNIT.

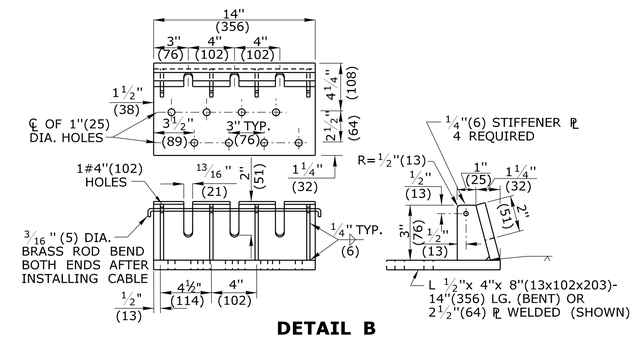

DETAIL B

BREAKAWAY ANCHIOR ANGLE

NOTE: DESIGNS FOR SIMILAR BREAKWAY ANCHOR ANGLES MAY BE SUBMITTED FOR APPROVAL.

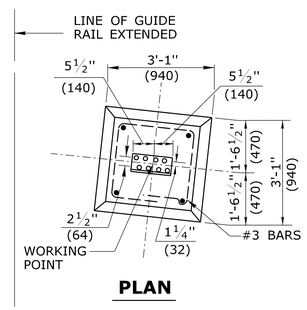

PLAN

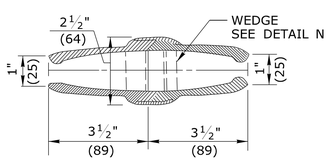

DETAIL M

CABLE SPLICE

USE WITH WEDGE AS SHOWN IN DETAIL N ON THIS SHEET.

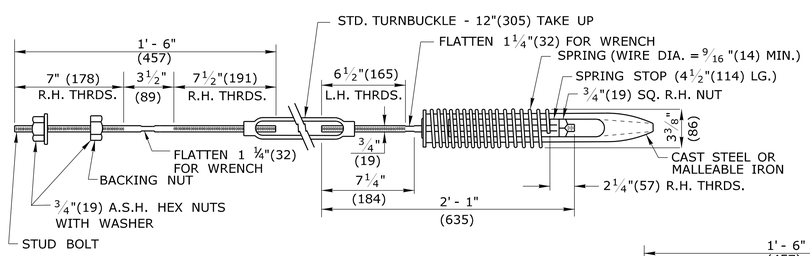

DETAIL I

SPRING CABLE END ASSEMBLY (COMPENSATING DEVICE)

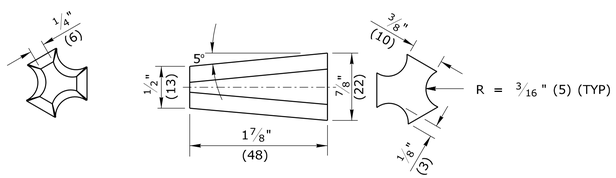

DETAIL N

TYPICAL WEDGE FOR ALL CABLE SPLICES AND CABLE ENDS

(DO NOT GALVANIZE)

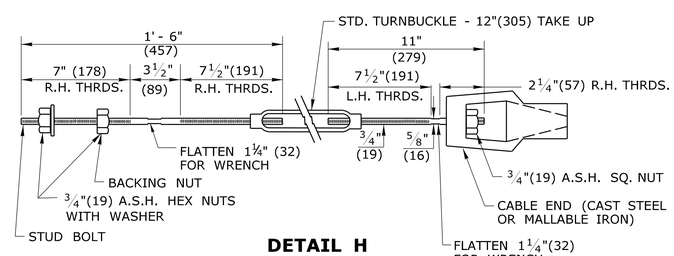

DETAIL H

STEEL TURNBUCKLE CABLE END ASSEMBLY

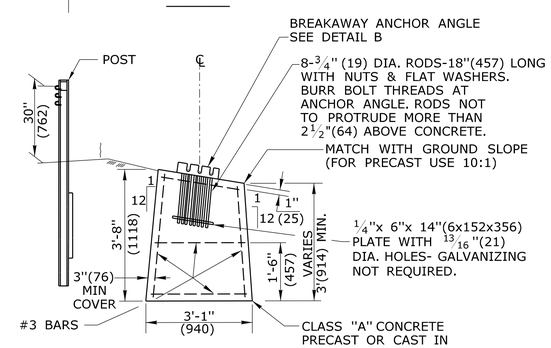

ELEVATION

DETAIL A

CONCRETE ANCHOR END ANCHOR TYPE I

ALL METRIC DIMENSIONS ARE IN MILLIMETERS (mm) UNLESS OTHERWISE NOTED.

REV.	DATE	REVISION DESCRIPTION
-	-	-
-	-	-
-	-	-
-	-	-
-	-	-
-	-	-

THE INFORMATION, INCLUDING ESTIMATED QUANTITIES OF WORK, SHOWN ON THESE SHEETS IS BASED ON LIMITED INVESTIGATIONS BY THE STATE AND IS IN NO WAY WARRANTED TO INDICATE THE CONDITIONS OF ACTUAL QUANTITIES OF WORK WHICH WILL BE REQUIRED.

Plotted Date: 9/30/2010

NOT TO SCALE

STATE OF CONNECTICUT
DEPARTMENT OF TRANSPORTATION

Filename: CTDOT_HIGHWAY_STD.dgn Model: 66 - HW-918_01b

SUBMITTED BY: NAME/DATE/TIME: Digitally signed by Leo Fontaine DN: c=US, st=Connecticut, l=Newington, ou=Department of Transportation, email=Leo.Fontaine@ct.gov, o=State of Connecticut, cn=Leo Fontaine Date: 2010.10.16 15:06:02 -04'00'

APPROVED BY: NAME/DATE/TIME: James H. Norman Digitally signed by James H. Norman DN: c=US, st=CT, l=Newington, ou=Department of Transportation, email=james.norman@ct.gov, o=State of Connecticut, cn=James H. Norman Date: 2010.10.18 08:58:27 -04'00'

CTDOT
STANDARD SHEET

OFFICE OF ENGINEERING

STANDARD SHEET TITLE:

THREE CABLE GUIDERAIL (I -BEAM POSTS) SHEET 2

STANDARD SHEET NO.:

HW-918_01b