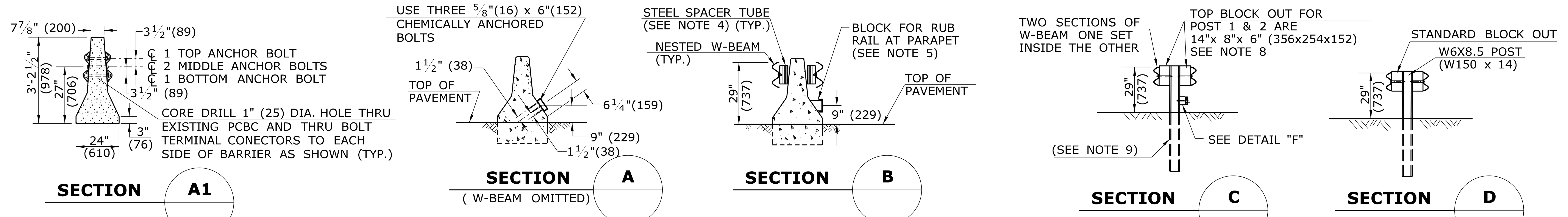

SECTION A1 | **SECTION A** (W-BEAM OMITTED) | **SECTION B** | **SECTION C** | **SECTION D**

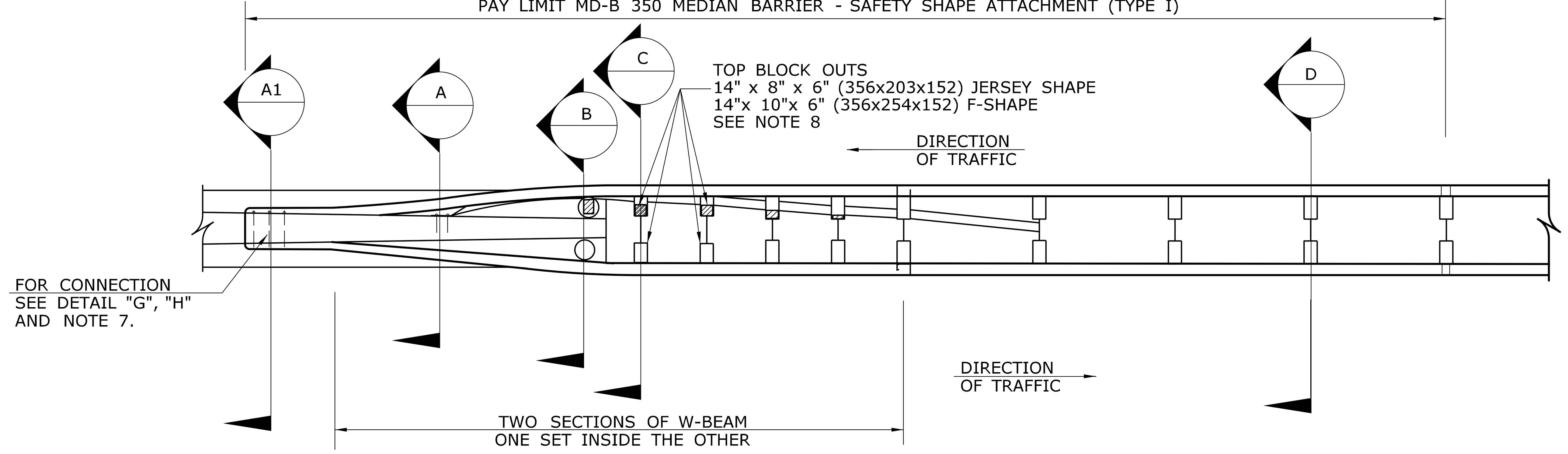

PLAN

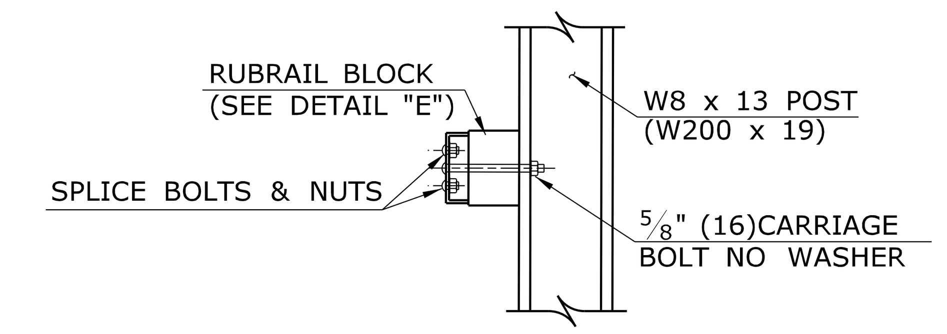

DETAIL "F"
RUBRAIL LAP AT POST 1

GENERAL NOTES:

1. THIS MD-B 350 MEDIAN BARRIER - SAFETY SHAPE ATTACHMENT IS APPROPRIATE FOR CONNECTION AT THE FOLLOWING LOCATION:
   a) JERSEY SHAPED OR F-SHAPED BARRIER WITH NO ELECTRICAL JUNCTION BOX WITHIN THE LIMITS OF THE ATTACHMENT (APPROXIMATELY 8' (2438)).SEE NOTE 8.
2. POSTS 1-5 REQUIRE AN ADDITIONAL HOLE TO ATTACH LOWER BLOCKS AND/OR RUBRAIL.
3. RUBRAIL BLOCKS LOCATED ON POSTS 1-4 ARE OFFSET, DRILLED AND SECURED WITH 5/8" (16) CARRIAGE BOLTS (SEE CHART FOR BOLT LENGTHS). SECURE BLOCKS ONLY TO POSTS 2 AND 4. SECURE RUBRAIL WITH 5/8" (16) x 4 1/2" (114) LONG BUTTON HEAD BOLT. FLARE RUBRAIL TO THE WEB OF POST 6.
4. STEEL SPACER TUBE IS A SCHEDULE 40 GALVANIZED PIPE 6" (152) INSIDE DIAMETER x 9" (229) LONG. ATTACH TUBE TO RAIL ELEMENT ONLY WITH A 5/8" (16) x 1 1/4" (32) LONG BUTTON HEAD BOLT AND RECTANGULAR PLATE WASHER. TUBE IS NOT ATTACHED TO BARRIER.
5. SEE DETAIL "C" FOR SLOPED RUBRAIL BLOCK AT BARRIER. BLOCK IS ATTACHED TO RAIL ELEMENT ONLY. USE A 3/8" (10) x 3" (76) LAG BOLT WITH FLAT WASHER.
6. SHOP FABRICATE THE C6x8.2 (C150x12) RUBRAIL END TO BE CONSISTENT WITH THE SLOPE OF THE SAFETY SHAPE AND ATTACH FLUSH WITH SLOPED TOE OF THE BARRIER. RUBRAIL SHALL BE ANCHORED USING THREE 5/8" (16) x 6" (152) CHEMICALLY ANCHORED BOLTS. RUBRAIL MUST BE TWISTED 35° BETWEEN SECTION A AND B. RIGHT AND LEFT HAND TWISTS WILL BE REQUIRED.
7. THE W-BEAM TERMINAL CONNECTOR SHALL BE ANCHORED USING FOUR (4) 7/8" (22) DIA. ANCHOR BOLTS AND BEVELED WASHERS. MAXIMUM PROJECTION OF BOLTS SHALL BE 1/2" (13).
8. THIS DETAIL AS SHOWN, IS FOR ATTACHMENT TO JERSEY SHAPE PCBC WITH 24" (610) BASE. WHEN ATTACHING TO AN F-SHAPE PCBC WITH 30" BASE, TOP BLOCK OUTS FOR FIRST TWO POSTS SHALL BE 14" x 10" x 6" (356x254x152).
9. POSTS 1 & 2 ARE W8 x 13 (W200 x 19). ALL OTHERS ARE W6 x 8.5 (W150 x 14).
10. FOR SINGLE DIRECTION ROADWAY:
    INSTALL W-BEAM TERMINAL CONNECTOR BETWEEN NESTED GUIDERAIL ELEMENTS.
    FOR DUAL DIRECTION ROADWAY FOR APPROACHING TRAFFIC:
    INSTALL W-BEAM TERMINAL CONNECTOR BETWEEN NESTED GUIDERAIL ELEMENTS.
    FOR TRAILING END:
    INSTALL W-BEAM TERMINAL CONNECTOR OUTSIDE OF THE NESTED GUIDERAIL ELEMENTS.
11. MINIMUM RAIL HEIGHT FOR NEW CONSTRUCTION SHALL BE 29" (237) ± 1' (25).

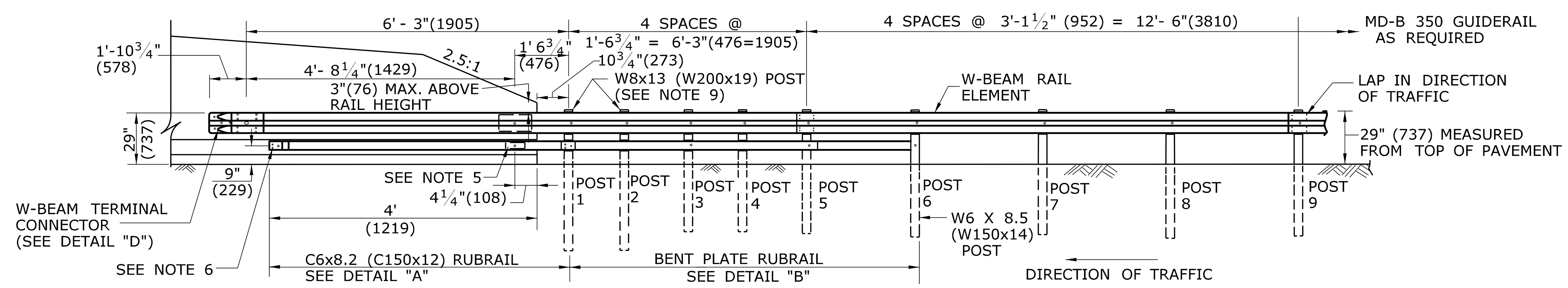

LEADING END ELEVATION

(OMIT RUBRAIL FOR TRAILING END)

RUBRAIL BLOCKS 7"(178) HIGH x 4"(102)WIDE		
POST	THICKNESS	BOLT LENGTH
1	4 1/4"(108)	9"(229)
2	3 1/4"(83)	5"(127)*
3	2"(51)	6"(152)
4	1"(25)	3"(76)*

* BOLTS FOR POSTS 2 AND 4 ARE USED TO ATTACH BLOCK TO POST. RUBRAIL NOT ATTACHED TO BLOCK.

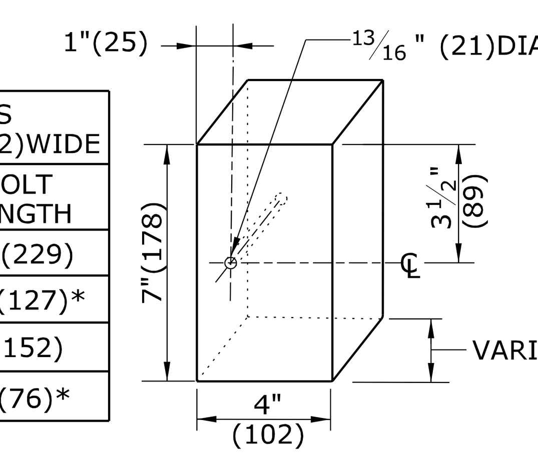

DETAIL "E"
RUBRAIL BLOCK

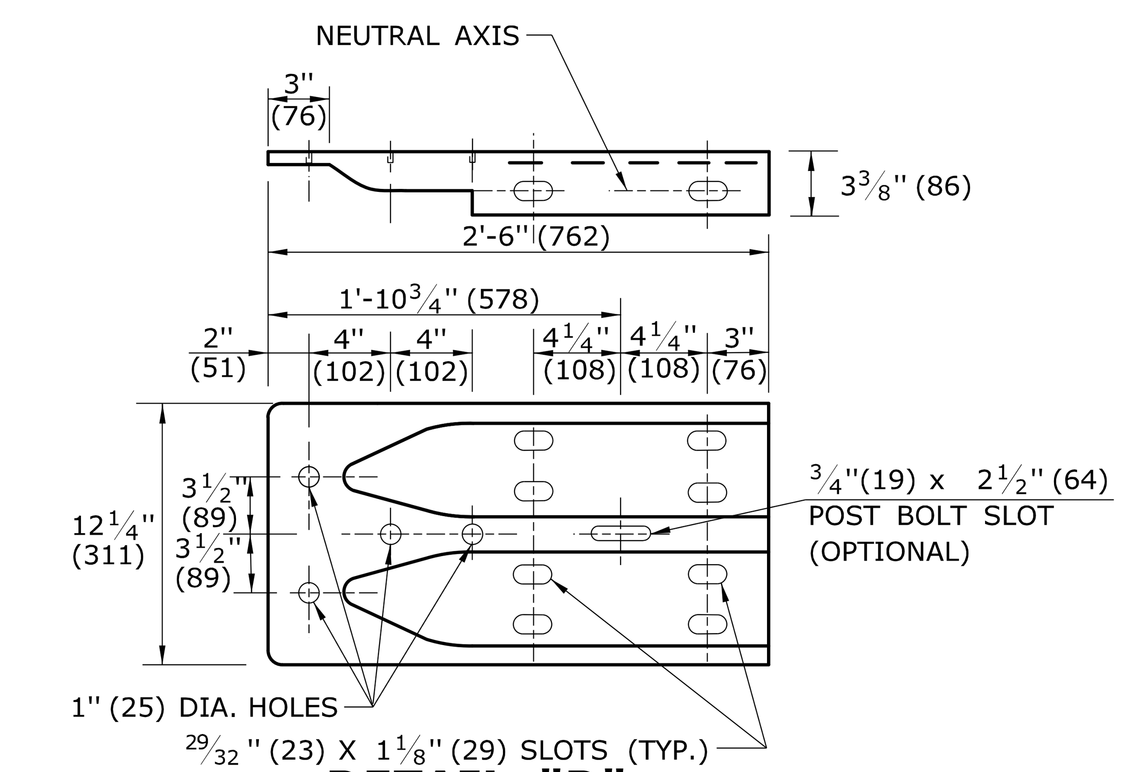

DETAIL "D"
W-BEAM TERMINAL CONNECTOR (10 GA.)

SEE NOTE 10

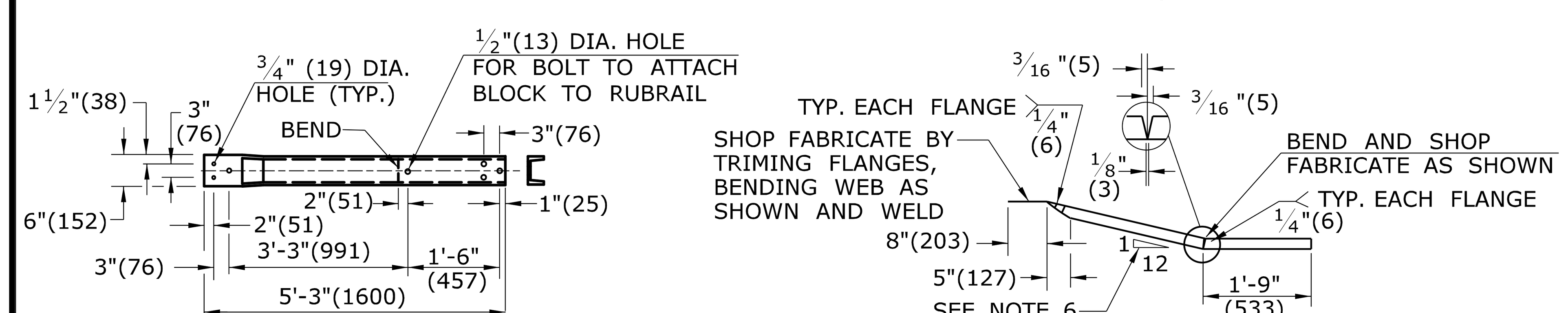

ELEVATION **DETAIL "A"** **PLAN**

C6x8.2 (150 x 12) RUBRAIL

(SEE NOTE 6)

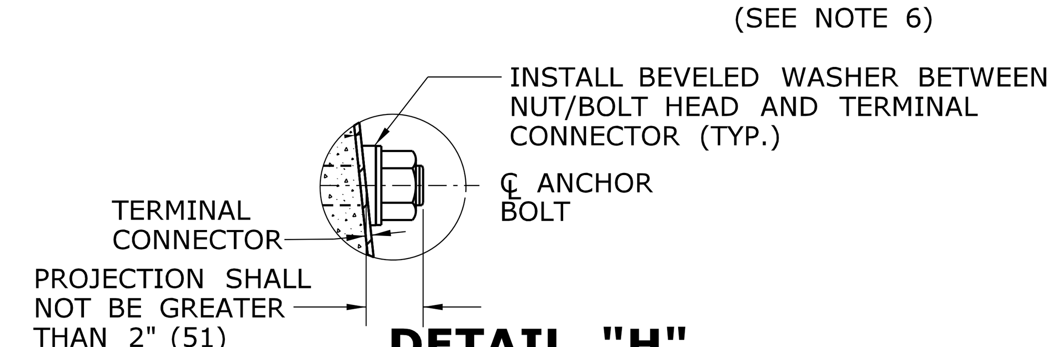

DETAIL "H"
TYPICAL CONNECTION

ANCHOR BOLT	DIMENSION "A"
TOP	11 1/2" (292)
MIDDLE	1'-1/4"(311)
BOTTOM	1'- 1"(330)

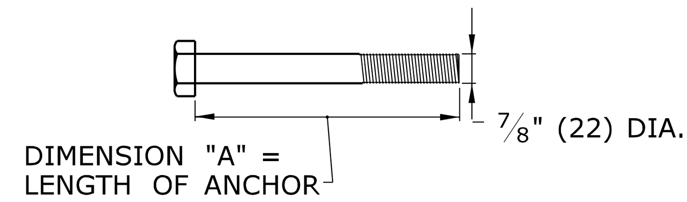

DETAIL "G"
ANCHOR BOLT

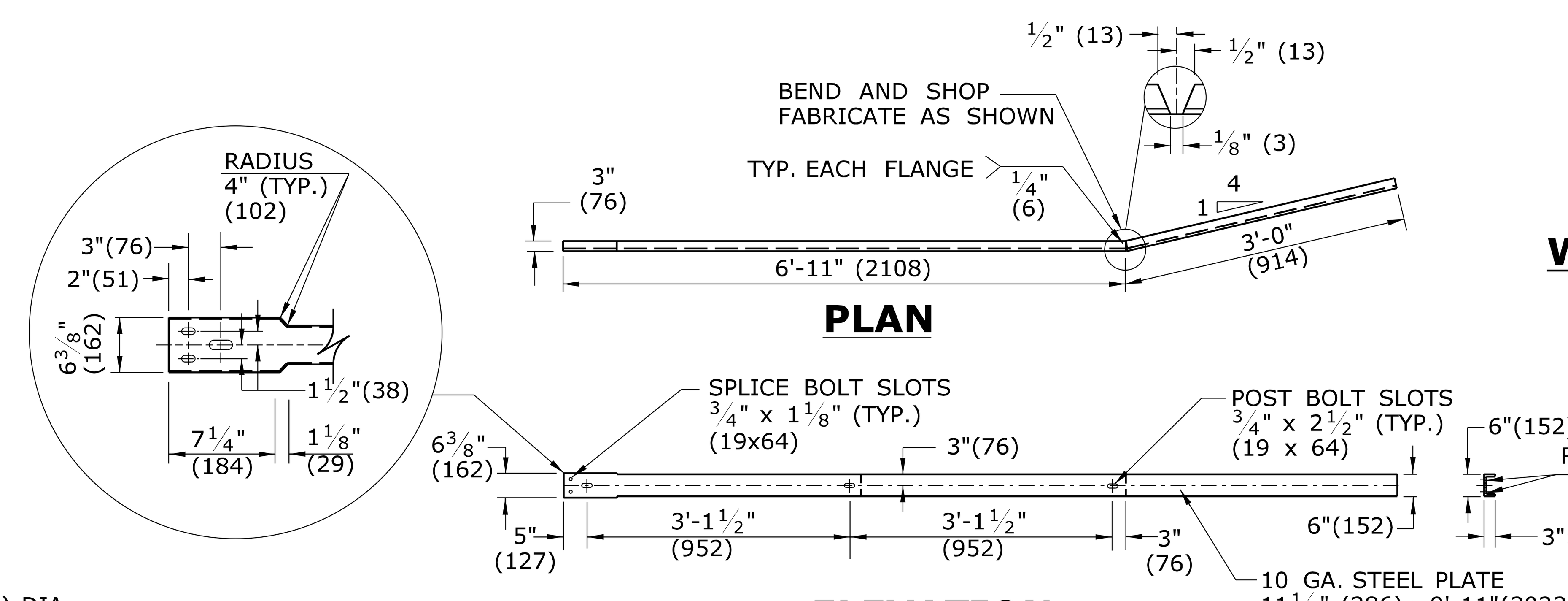

PLAN

ELEVATION
DETAIL "B"
BENT PLATE RUBRAIL

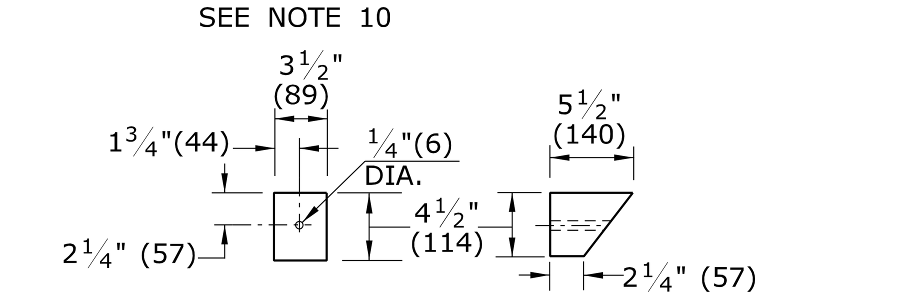

FRONT **SIDE**

DETAIL "C"
SLOPED BLOCK FOR C6x8.2 (C150X12)
RUBRAIL AT PARAPET

ALL METRIC DIMENSIONS ARE IN MILLIMETERS (mm) UNLESS OTHERWISE NOTED.

REV.	DATE	REVISION DESCRIPTION	
1	6/11	CHANGE NAME	-
-	-		-
-	-	-	-
-	-	-	-
-	-	-	-
-	-	-	-

THE INFORMATION, INCLUDING ESTIMATED QUANTITIES OF WORK, SHOWN ON THESE SHEETS IS BASED ON LIMITED INVESTIGATIONS BY THE STATE AND IS IN NO WAY WARRANTED TO INDICATE THE CONDITIONS OF ACTUAL QUANTITIES OF WORK WHICH WILL BE REQUIRED.

Plotted Date: 5/10/2011

NOT TO SCALE

STATE OF CONNECTICUT
DEPARTMENT OF TRANSPORTATION

Filename: CTDOT_HIGHWAY_STD_JUNE2011.dgn Model: 56- HW-910_15

SUBMITTED BY: NAME/DATE/TIME:
Digitally signed by Leo Fontaine DN: c=US, st=Connecticut, l=Newington, ou=Department of Transportation, email=Leo.Fontaine@ct.gov, o=State of Connecticut, cn=Leo Fontaine Date: 2011.05.25 12:39:46 -04'00'

APPROVED BY: NAME/DATE/TIME:
James H. Norman
2011.06.09 15:33:49 -04'00'

CTDOT STANDARD SHEET
OFFICE OF ENGINEERING

STANDARD SHEET TITLE:
MD-B 350 MEDIAN BARRIER SAFETY SHAPE ATTACHMENT TYPE I

STANDARD SHEET NO.:
HW-910_15