GENERAL NOTE :

1. MINIMUM SPLICE LENGTH FOR ALL BARS IS 1'-9" (534).

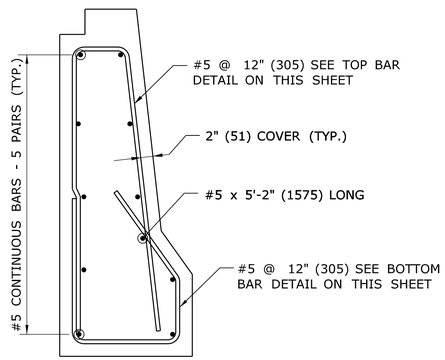

SECTION - BAR 1 (1 / S-2)

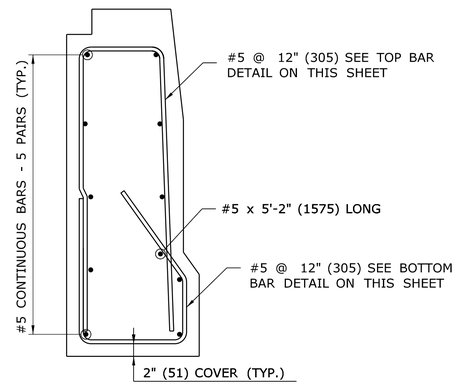

SECTION - BAR 6 (2 / S-2)

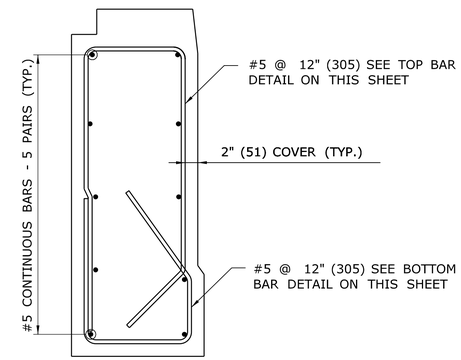

SECTION - BAR 9 (3 / S-2)

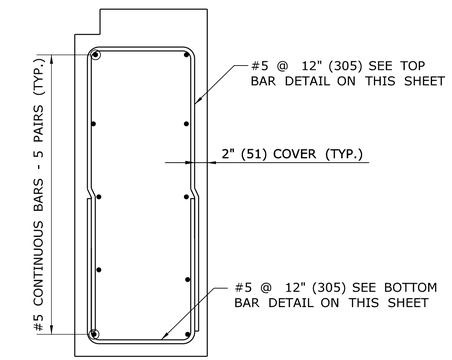

SECTION - BAR 11 (4 / S-2)

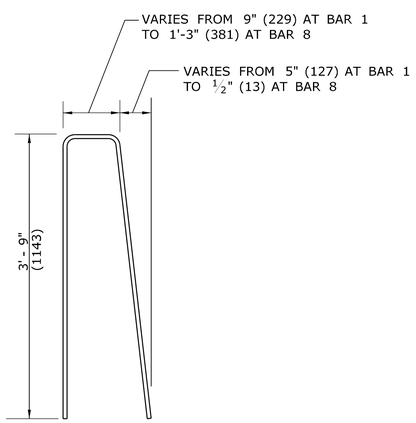

TOP BARS
BARS 1 TO 8

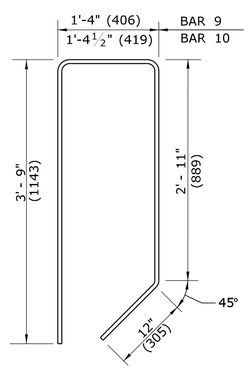

TOP BARS
BARS 9 AND 10

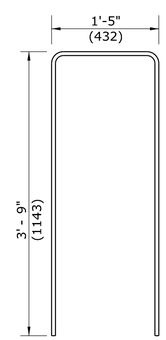

TOP BARS
BARS 11 TO 21

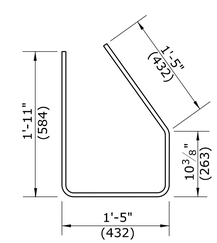

BOTTOM BARS
BARS 1 TO 10

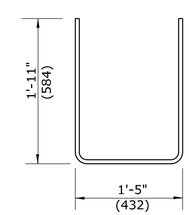

BOTTOM BARS
BARS 11 TO 21

ALL METRIC DIMENSIONS ARE IN MILLIMETERS (mm) UNLESS OTHERWISE NOTED.

REV.	DATE	REVISION DESCRIPTION
-	-	-
-	-	-
-	-	-
-	-	-
-	-	-
-	-	-

THE INFORMATION, INCLUDING ESTIMATED QUANTITIES OF WORK, SHOWN ON THESE SHEETS IS BASED ON LIMITED INVESTIGATIONS BY THE STATE AND IS IN NO WAY WARRANTED TO INDICATE THE CONDITIONS OF ACTUAL QUANTITIES OF WORK WHICH WILL BE REQUIRED.

Plotted Date: 10/12/2010

NOT TO SCALE

STATE OF CONNECTICUT
DEPARTMENT OF TRANSPORTATION

Filename: CTDOT_HIGHWAY_STD_OCT2010.dgn Model: 25-HW-821_01b

SUBMITTED BY: NAME/DATE/TIME: Digitally signed by Leo Fontaine DN: c=US, st=Connecticut, l=Newington, ou=Department of Transportation, email=Leo.Fontaine@ct.gov, o=State of Connecticut, cn=Leo Fontaine Date: 2010.10.16 14:49:57 -04'00'

APPROVED BY: NAME/DATE/TIME: James H. Norman Digitally signed by James H. Norman DN: c=US, o=CT, l=Newington, ou=Department of Transportation, email=james.norman@ct.gov, o=State of Connecticut, cn=James H. Norman Date: 2010.10.18 08:13:51 -04'00'

CTDOT
STANDARD SHEET

OFFICE OF ENGINEERING

STANDARD SHEET TITLE:
TRANSITIION 45" (1145) F-SHAPE TO 45" (1145) VERTICAL SHAPE SHEET 2

STANDARD SHEET NO.:
HW-821_01b