GENERAL NOTES:

1. SEE SHEET HW-910_01 FOR HARDWARE AND DELINEATOR DETAILS.
2. IF PROPOSED R-B 350 GUIDERAIL IS BEING ATTACHED TO A PARAPET USING EXISTING ANCHOR BOLTS FROM R-I GUIDERAIL INSTALLED AT A 33" (838) RAIL HEIGHT, A 4" (102) HEIGHT TRANSITION OVER 25' (7.62m) SHALL BE PROVIDED.
3. FOR EXISTING PARAPETS, USE THREE 1" (25) DIA. x 14" (356) LONG, FULLY THREADED, CHEMICALLY ANCHORED BOLTS AND WASHERS WITH 12" (305) EMBEDMENT DEPTH OR AS RECOMMENDED BY MANUFACTURER OF BONDING MATERIAL TO OBTAIN FULL STRENGTH OF ANCHOR BOLTS. FOR ANCHORAGE IN NEW PARAPETS, SEE STRUCTURE SHEETS.
4. USE CLASS B TYPE II (10 GAUGE) W-BEAM RAIL ELEMENT FOR INSTALLATIONS ON EXPRESSWAYS AND RAMPS.
5. TRAILING END ATTACHMENT MAY ALSO BE INSTALLED AT A VERTICAL FACE PARAPET OR RETAINING WALL ON ONE-WAY ROADWAYS ONLY.
6. MINIMUM RAIL HEIGHT FOR NEW CONSTRUCTION SHALL BE 29" (737) ± 1" (25).

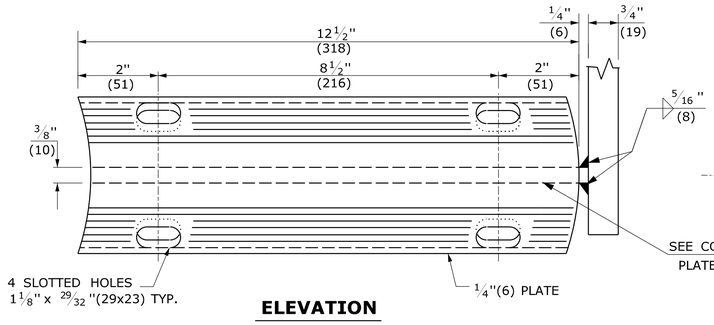

ELEVATION

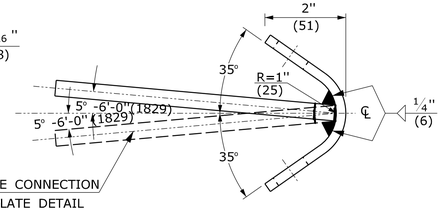

SIDE

BENT PLATE

(2 REQUIRED)

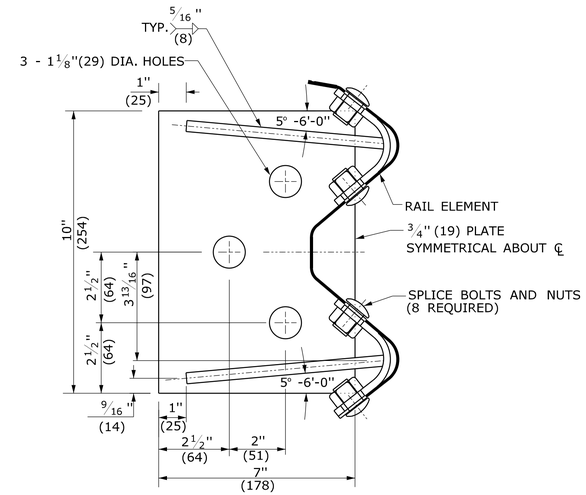

BASE PLATE AND ASSEMBLY

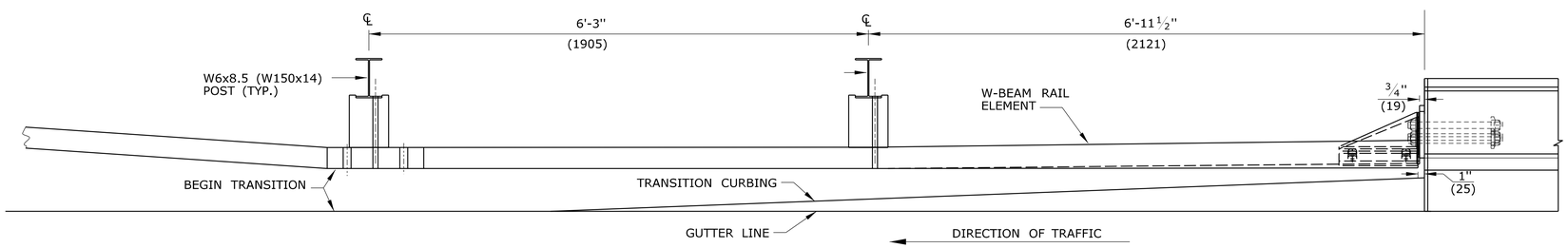

PLAN

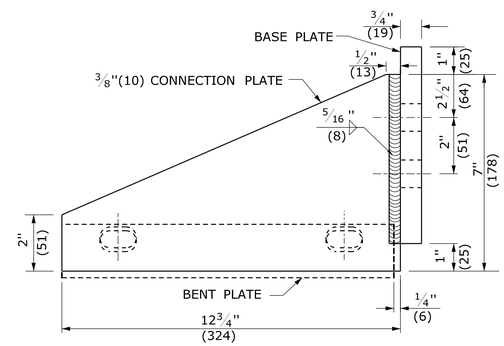

PLAN

CONNECTION PLATE DETAIL

(2 REQUIRED)

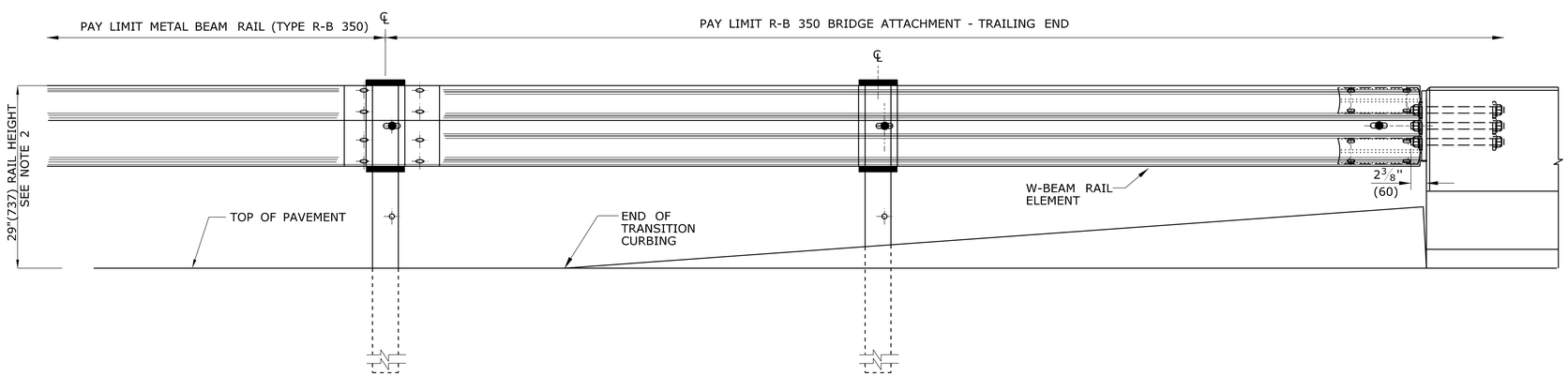

ELEVATION

ATTACHMENT AT TRAILING END OF BRIDGE PARAPET

(ONE-WAY ROADWAY ONLY)

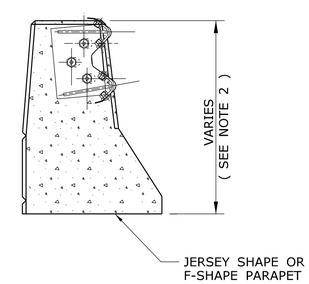

BASE PLATE AND ASSEMBLY ATTACHMENT

TO TRAILING END OF CONCRETE BARRIER

OR BRIDGE PARAPET (SEE NOTE 5)

ALL METRIC DIMENSIONS ARE IN MILLIMETERS (mm) UNLESS OTHERWISE NOTED.

REV.	DATE	REVISION DESCRIPTION	
1	6/11	REVISED NOTE 3 FOR USE OF CHEMICAL ANCHORS	-
-	-	-	-
-	-	-	-
-	-	-	-
-	-	-	-
-	-	-	-

THE INFORMATION, INCLUDING ESTIMATED QUANTITIES OF WORK, SHOWN ON THESE SHEETS IS BASED ON LIMITED INVESTIGATIONS BY THE STATE AND IS IN NO WAY WARRANTED TO INDICATE THE CONDITIONS OF ACTUAL QUANTITIES OF WORK WHICH WILL BE REQUIRED.

Plotted Date: 5/10/2011

NOT TO SCALE

STATE OF CONNECTICUT
DEPARTMENT OF TRANSPORTATION

Filename: CTDOT_HIGHWAY_STD_JUNE2011.dgn Model: 43 - HW-910_08

SUBMITTED BY: NAME/DATE/TIME:
Digitally signed by Leo Fontaine
DN: c=US, st=Connecticut, l=Newington, ou=Department of Transportation, email=Leo.Fontaine@ct.gov, o=State of Connecticut, cn=Leo Fontaine
Date: 2011.05.18 11:56:30 -04'00'

APPROVED BY: NAME/DATE/TIME:
James H. Norman
2011.06.09 15:15:09 -04'00'

CTDOT STANDARD SHEET

OFFICE OF ENGINEERING

STANDARD SHEET TITLE:

R-B 350 BRIDGE ATTACHMENT TRAILING END

STANDARD SHEET NO.:

HW-910_08