GENERAL NOTES:

1. DRIVEWAY ENTRANCE SHALL BE A MINIMUM OF 12' (3658) WIDE, EXCLUDING CURBING WHEN PRESENT.
2. SIDEWALK RAMPS SHALL BE A MINIMUM OF 36" (914) TO 40" (1016) MAXIMUM, WITH A MAXIMUM SLOPE OF 12:1. THERE SHALL BE NO LIP AT THE DRIVEWAY SIDEWALK INTERFACE.
3. WELDED WIRE FABRIC MATS WITH REINFORCING AT CLOSER SPACING MAY BE USED.

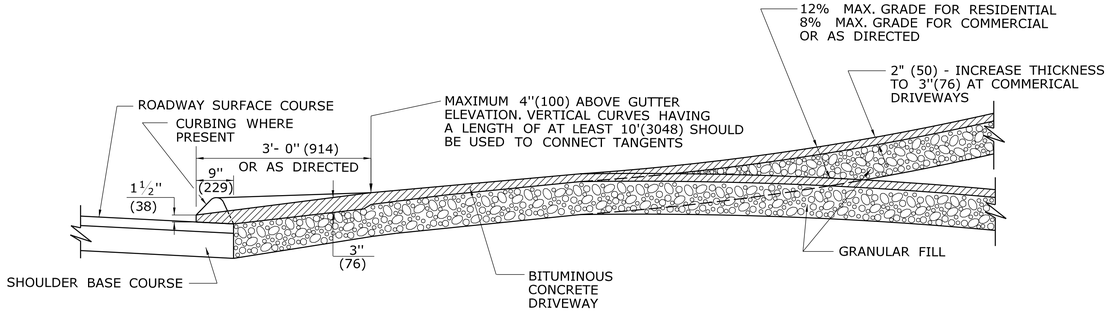

SECTION A

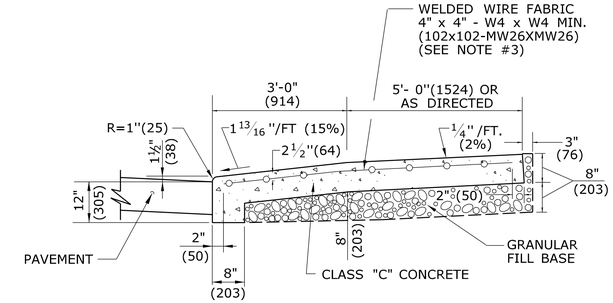

SECTION C

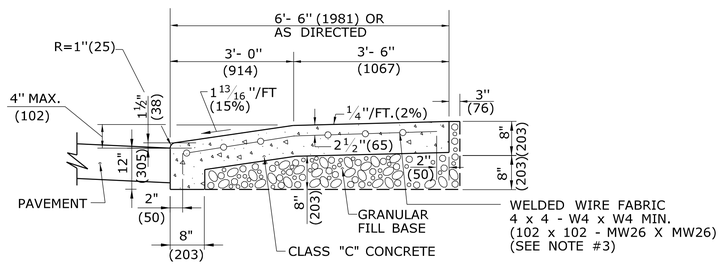

SECTION B

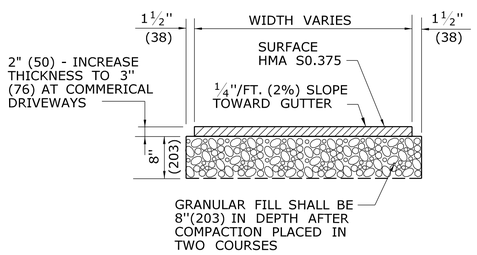

TYPICAL SECTION
BITUMINOUS CONCRETE SIDEWALK AND DRIVE

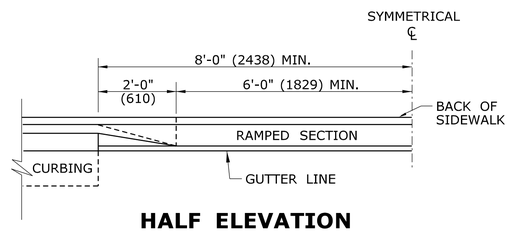

HALF ELEVATION

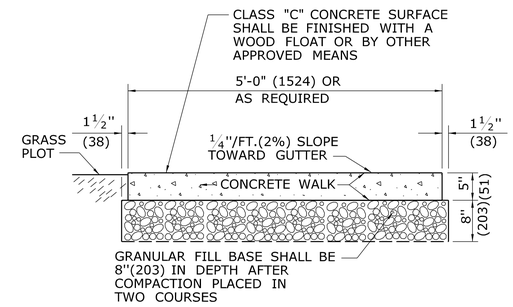

SECTION D

5' (1524) WIDE CONCRETE SIDEWALK WITH GRASS PLOT

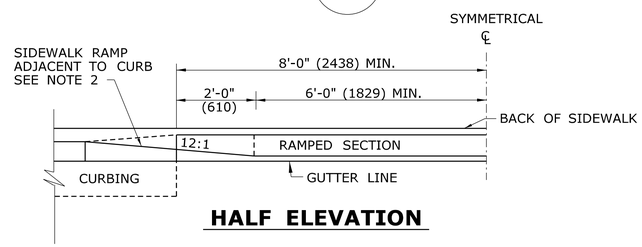

HALF ELEVATION

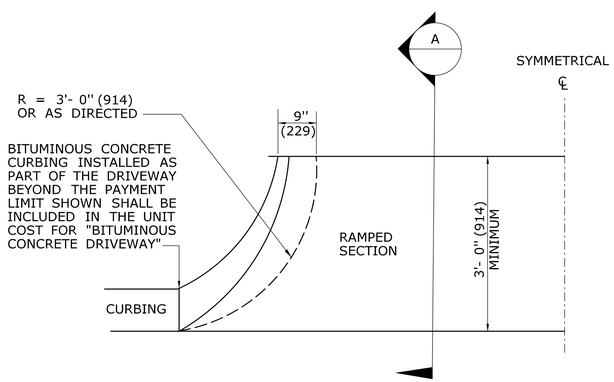

HALF BITUMINOUS CONCRETE DRIVEWAY PLAN

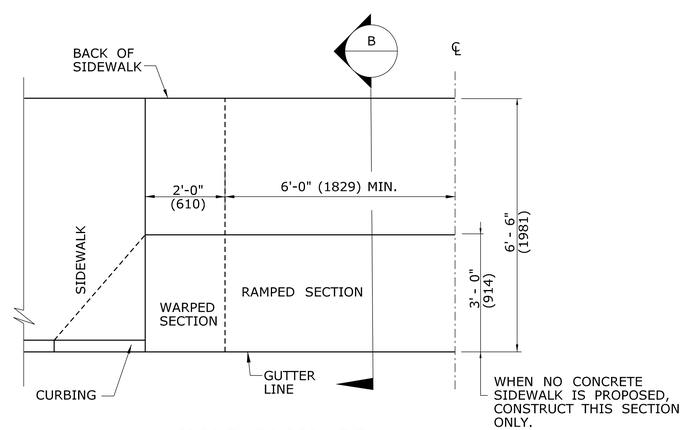

HALF PLAN OF CONCRETE DRIVEWAY RAMP WHERE SIDEWALK ADJOINS CURBING

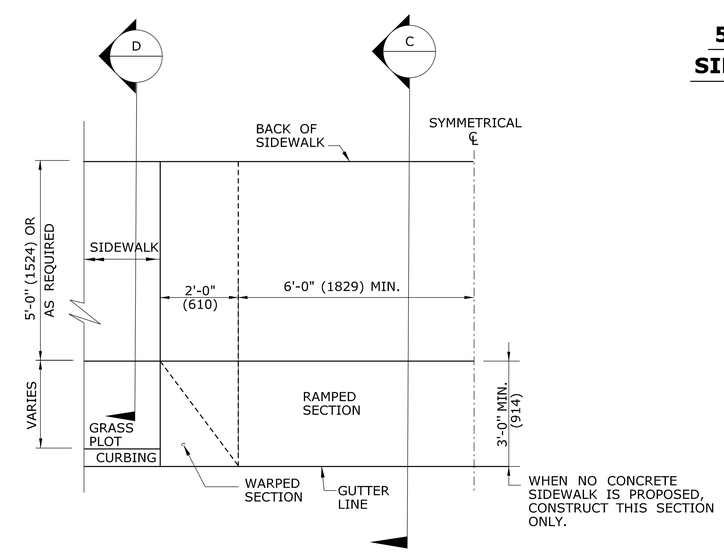

HALF PLAN OF CONCRETE DRIVEWAY RAMP WHERE CURB IS SEPARATED FROM SIDEWALK BY GRASS PLOT

ALL METRIC DIMENSIONS ARE IN MILLIMETERS (mm) UNLESS OTHERWISE NOTED

REV.	DATE	REVISION DESCRIPTION
1	6/01/10	REVISED BORDER TITLE
2	6/01/10	REVISED HALF ELEVATION DETAILS
-	-	-
-	-	-
-	-	-
-	-	-

THE INFORMATION, INCLUDING ESTIMATED QUANTITIES OF WORK, SHOWN ON THESE SHEETS IS BASED ON LIMITED INVESTIGATIONS BY THE STATE AND IS IN NO WAY WARRANTED TO INDICATE THE CONDITIONS OF ACTUAL QUANTITIES OF WORK WHICH WILL BE REQUIRED.

Plotted Date: 5/21/2010

NOT TO SCALE

STATE OF CONNECTICUT
DEPARTMENT OF TRANSPORTATION

Filename: CTDOT_HIGHWAY_STD.dgn Model: HW-921_01

SUBMITTED BY: NAME/DATE/TIME: Leo Fontaine 2010.05.28 10:29:33 -04'00'

APPROVED BY: NAME/DATE/TIME: James H. Norman — Digitally signed by James H. Norman DN: c=US, st=CT, l=Newington, ou=Department of Transportation, email=james.norman@ct.gov, o=State of Connecticut, cn=James H. Norman Date: 2010.06.04 08:22:04 -04'00'

CTDOT STANDARD SHEET
OFFICE OF ENGINEERING

STANDARD SHEET TITLE: DRIVEWAY RAMPS AND SIDEWALKS

STANDARD SHEET NO.: HW-921_01