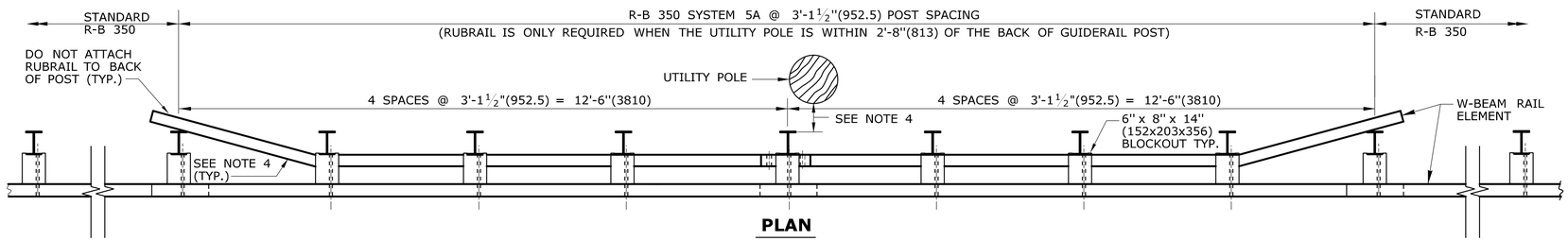

PLAN

TREATMENT OF METAL BEAM RAIL R-B 350 AT UTILITY POLES ON UNDIVIDED BI-DIRECTIONAL ROADWAYS

GENERAL NOTES:

1. SEE SHEET HW-910_01 FOR HARDWARE AND DELINEATOR DETAILS.
2. RAIL HEIGHT WITH CURBING SHALL BE MEASURED FROM THE TOP OF PAVEMENT. ON HIGH SPEED ROADWAYS (≥ 45 mph(72.4kph)), 4"(102) CURBING SHALL BE USED IN-CONJUNCTION WITH GUIDERAIL AND THE RAIL FACE SHALL BE INSTALLED FLUSH WITH THE FACE OF CURBING. ON LOW SPEED ROADWAYS (< 45 mph(72.4kph)), 6"(152) CURBING MAY BE USED IN-CONJUNCTION WITH GUIDERAIL AND THE RAIL FACE SHALL BE INSTALLED A MAX. OF 9"(229) BEHIND THE FACE OF CURBING. W-BEAM GUIDERAIL MAY ONLY BE INSTALLED ON SLOPES FLATTER THAN 10:1.
3. ALL R-B 350 GUIDERAIL TYPES INSTALLED ON LIMITED ACCESS HIGHWAYS AND RAMPS SHALL USE CLASS B TYPE - II (10 GAUGE) W-BEAM RAIL ELEMENTS.
4. WHEN A WARRANT EXISTS FOR RAILING AND THERE IS A UTILITY POLE THAT CAN NOT BE RELOCATED AND IT IS WITHIN THE DEFLECTION DISTANCE FOR STANDARD R-B 350 GUIDE-RAIL, R-B 350 SYSTEM 5 IS REQUIRED. THE LENGTH OF R-B 350 SYSTEM 5 SHALL BE 25'(7620) CENTERED ON THE UTILITY POLE. WHEN THE UTILITY POLE IS WITHIN 2'-8"(813) OF THE BACK OF THE POST, A 25'(7620) W-BEAM RUBRAIL CENTERED ON THE UTILITY POLE SHALL BE ADDED AND PAID FOR UNDER THE CONTRACT UNIT PRICE FOR R-B 350 SYSTEM 5A. THE RUBRAIL FLARED SECTION SHALL BE SHOP BENT AND GALVANIZED AFTER FABRICATION.
5. IF CURBING IS USED IN CONJUNCTION WITH R-B 350 SYSTEM 6 THE RAIL HEIGHT SHALL BE 29" (737) PLUS THE CURB HEIGHT. A 25' (7620) LONG HEIGHT TRANSITION PRIOR TO THE CURBING FROM 29" (737) TO THE NEW HEIGHT INCLUDING CURB HEIGHT IS REQUIRED.
6. MINIMUM RAIL HEIGHT FOR NEW CONSTRUCTION SHALL BE 29"(737) ± 1" (25).

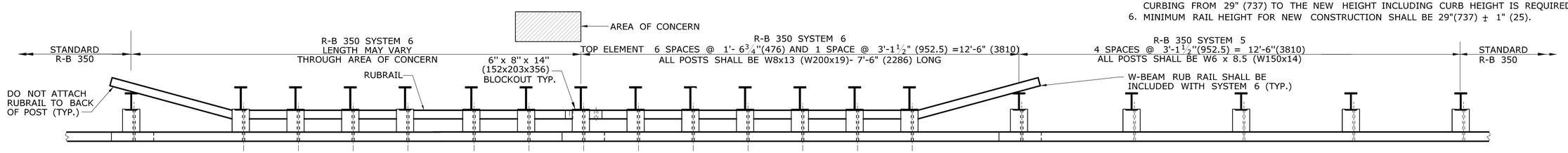

PLAN

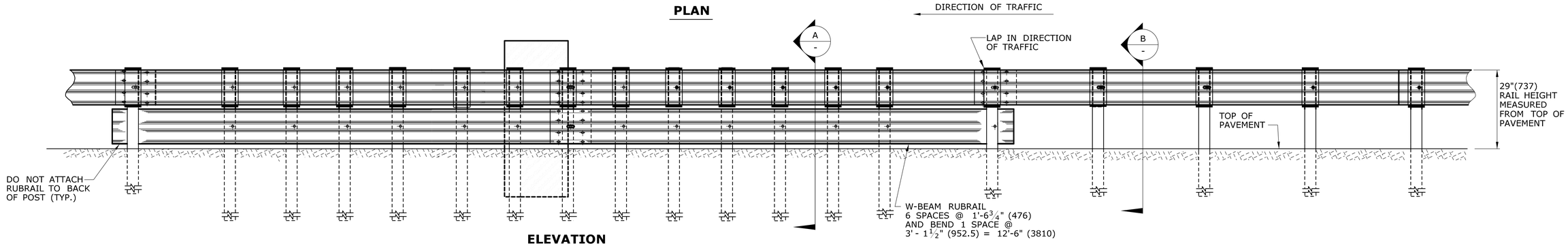

ELEVATION

TREATMENT OF METAL BEAM RAIL R-B 350 SYSTEM 6 AT FIXED OBJECTS ON UNDIVIDED BI-DIRECTIONAL ROADWAYS

(FOR ADDITIONAL INFORMATION SEE TABLE 1)

TABLE 1
STRENGTH TRANSITION FOR METAL BEAM RAIL (TYPE R-B 350) AT FIXED OBJECTS, BRIDGE PIERS, NON-BREAKAWAY STRUCTURES, AND ABUTMENTS ON THE ROADSIDE OR MEDIAN.

"D"	"X"	R-B 350 SYSTEM 6	R-B 350 SYSTEM 5	STANDARD R-B 350	"L"
MAXIMUM DESIGN DEFLECTION	AREA OF CONCERN PLUS TWO POSTS FOR:	W8x13(W200x19) POSTS SPACED AT 1'-6¾" (476) WITH RUBRAIL	W6x8.5 (W150x14) POSTS SPACED AT 3'-1½"(952.5)	W6x8.5 (W150x14) POSTS SPACED AT 6'-3"(1905)	MINIMUM LENGTH NEEDED
1'-10"(559)	SYSTEM 6	12'-6"(3810)	12'-6"(3810)	LON	25'(7620)
2'-8"(813)	SYSTEM 5	→	25'(7620)	LON	25'(7620)
4'-3"(1295)	R-B 350	→	→	LON	LON

L = MINIMUM LENGTH OF GUIDE RAIL STRENGTH TRANSITION NEEDED IN FEET PRIOR TO THE AREA OF CONCERN. NOTE: WHEN DESIGNING STRENGTH TRANSITIONS ON EXPRESSWAYS AND RAMPS FOR ZONE OF INTRUSION 100'(30.5m) PRIOR TO THE AREA OF CONCERN SHALL BE PROVIDED.

X = MINIMUM LENGTH THROUGH AREA OF CONCERN PLUS TWO POST SPACES FOR A SINGLE DIRECTION ROADWAY. "X" WILL VARY DEPENDING ON LENGTH OF AREA OF CONCERN.

D = MAXIMUM DESIGN DEFLECTION MEASURED FROM THE BACK OF POST TO THE FACE OF AREA OF CONCERN.

LON = LENGTH OF NEED FOR EACH SITE SHALL BE BASED ON CTDOT HIGHWAY DESIGN MANUAL AND AS SHOWN ON THE PLANS.

A = IF AREA OF CONCERN IS PROTECTED WITH SYSTEM 5 OR 6 ON A SINGLE DIRECTION ROADWAY, CONTINUE WITH STANDARD R-B 350 GUIDERAIL.

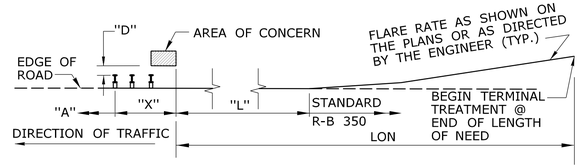

LENGTH OF NEED DIAGRAM (LON)

(SEE TABLE 1 FOR LEGEND)

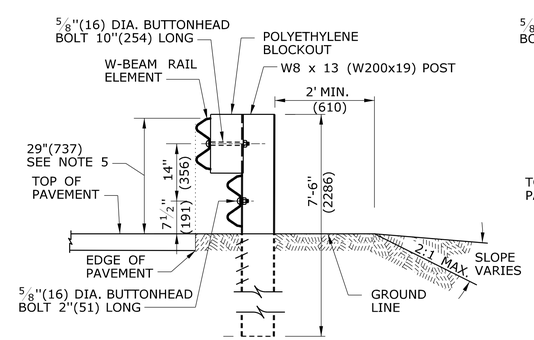

SECTION A -

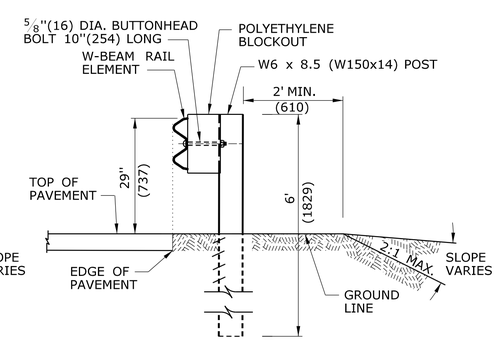

SECTION B -

ALL METRIC DIMENSIONS ARE IN MILLIMETERS (mm) UNLESS OTHERWISE NOTED.

REV.	DATE	REVISION DESCRIPTION	
1	6/11	REVISED NOTE 4. ERRATA	-
-	-	-	-
-	-	-	-
-	-	-	-
-	-	-	-
-	-	-	-

THE INFORMATION, INCLUDING ESTIMATED QUANTITIES OF WORK, SHOWN ON THESE SHEETS IS BASED ON LIMITED INVESTIGATIONS BY THE STATE AND IS IN NO WAY WARRANTED TO INDICATE THE CONDITIONS OF ACTUAL QUANTITIES OF WORK WHICH WILL BE REQUIRED.

Plotted Date: 6/9/2011

NOT TO SCALE

STATE OF CONNECTICUT
DEPARTMENT OF TRANSPORTATION

Filename: CTDOT_HIGHWAY_STD_JUNE2011.dgn Model: 39- HW-910_04

SUBMITTED BY: NAME/DATE/TIME: Digitally signed by Leo Fontaine DN: c=US, st=Connecticut, l=Newington, ou=Department of Transportation, email=Leo.Fontaine@ct.gov, o=State of Connecticut, cn=Leo Fontaine Date: 2011.06.09 11:25:30 -04'00'

APPROVED BY: NAME/DATE/TIME: James H. Norman 2011.06.09 15:13:36 -04'00'

CTDOT
STANDARD SHEET

OFFICE OF ENGINEERING

STANDARD SHEET TITLE:

METAL BEAM RAIL TYPE R-B 350 SYSTEMS 5, 5A, & 6

STANDARD SHEET NO.:

HW-910_04