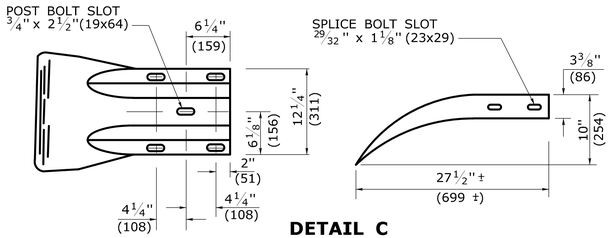

DETAIL C

W-BEAM TERMINAL ELEMENT

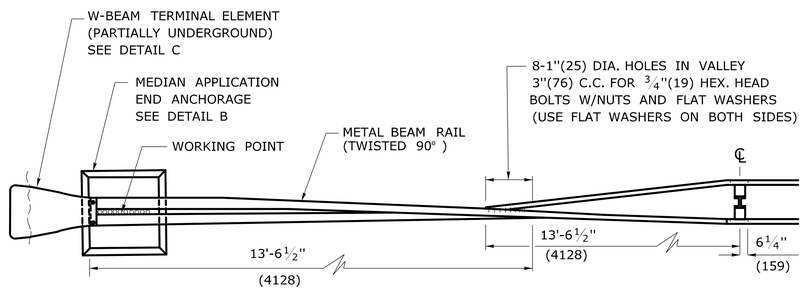

PLAN

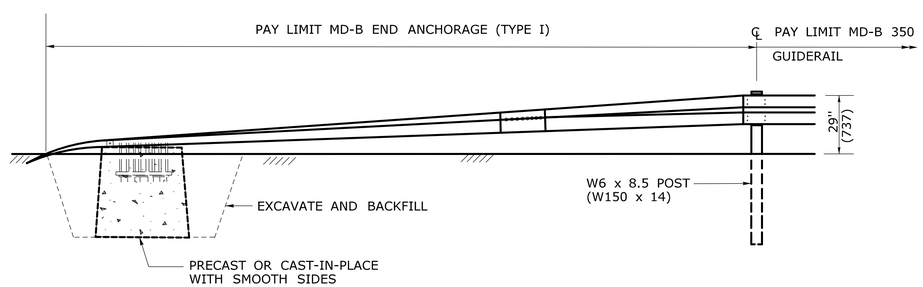

ELEVATION

MD-B END ANCHORAGE TYPE I (MEDIAN APPLICATION)

GENERAL NOTES:

1. J-HOOK BOLTS MAY BE SUBSTITUTED FOR BOTTOM PLATE ANCHORAGE IN CONCRETE END ANCHORS OUSING THE SAME SIZE, STRENGTH, AND LENGTH AS NOTED ON THE PLANS.
2. MINIMUM RAIL HEIGHT FOR NEW CONSTRUCTION SHALL BE 29" (737) ± 1" (25).

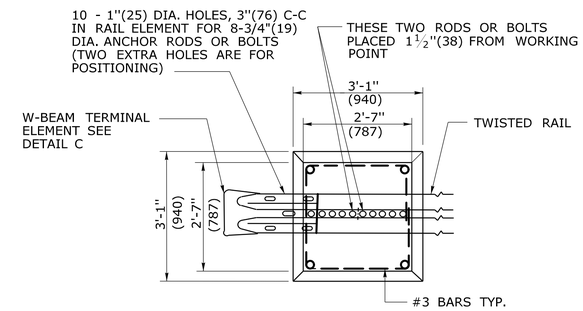

PLAN

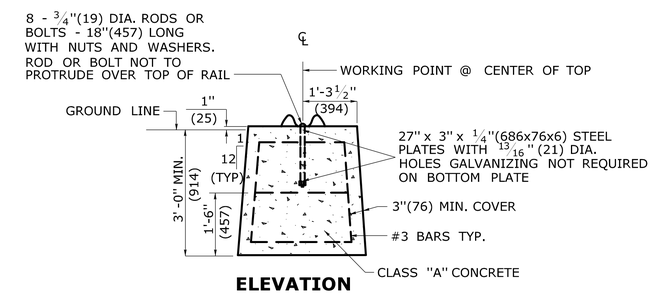

ELEVATION
DETAIL B

CONCRETE END ANCHOR FOR MEDIAN RAIL

ALL METRIC DIMENSIONS ARE IN MILLIMETERS (mm) UNLESS OTHERWISE NOTED.

REV.	DATE	REVISION DESCRIPTION
-	-	-
-	-	-
-	-	-
-	-	-
-	-	-
-	-	-

THE INFORMATION, INCLUDING ESTIMATED QUANTITIES OF WORK, SHOWN ON THESE SHEETS IS BASED ON LIMITED INVESTIGATIONS BY THE STATE AND IS IN NO WAY WARRANTED TO INDICATE THE CONDITIONS OF ACTUAL QUANTITIES OF WORK WHICH WILL BE REQUIRED.

Plotted Date: 9/30/2010

NOT TO SCALE

STATE OF CONNECTICUT
DEPARTMENT OF TRANSPORTATION

Filename: CTDOT_HIGHWAY_STD.dgn Model: 60 - HW-911_02

SUBMITTED BY: NAME/DATE/TIME: Digitally signed by Leo Fontaine DN: c=US, st=Connecticut, l=Newington, ou=Department of Transportation, email=Leo.Fontaine@ct.gov, o=State of Connecticut, cn=Leo Fontaine Date: 2010.10.16 15:03:59 -04'00'

APPROVED BY: NAME/DATE/TIME: James H. Norman Digitally signed by James H. Norman DN: c=US, st=CT, l=Newington, ou=Department of Transportation, email=james.norman@ct.gov, o=State of Connecticut, cn=James H. Norman Date: 2010.10.18 08:55:14 -04'00'

CTDOT STANDARD SHEET

OFFICE OF ENGINEERING

STANDARD SHEET TITLE: MD-B END ANCHORAGE TYPE I

STANDARD SHEET NO.: HW-911_02