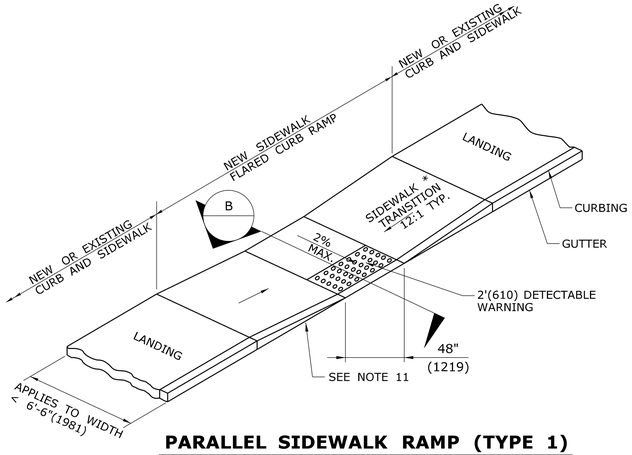

PARALLEL SIDEWALK RAMP (TYPE 1)

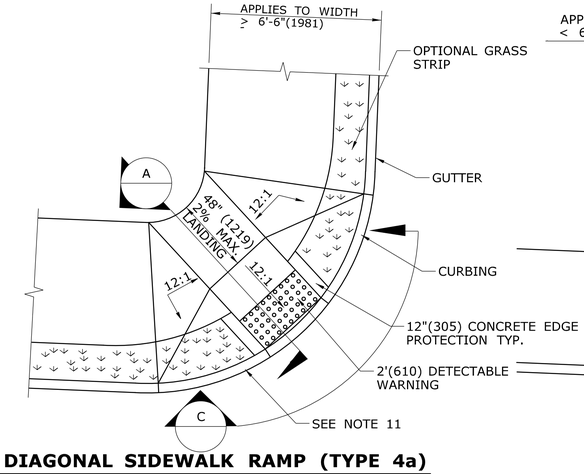

DIAGONAL SIDEWALK RAMP (TYPE 4a)

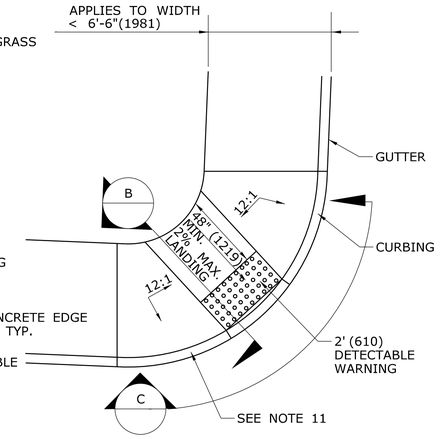

DIAGONAL/PARALLEL SIDEWALK RAMP (TYPE 4b)

GENERAL NOTES:

1. MAXIMUM SLOPES OF ADJOINING GUTTERS AND ROAD SURFACES IMMEDIATELY ADJACENT TO THE SIDEWALK RAMP OR ACCESSIBLE ROUTE SHOULD NOT EXCEED 20:1.
2. CARE SHALL BE TAKEN TO ASSURE UNIFORM GRADE ON THE RAMP, FREE OF SAGS AND ABRUPT GRADE CHANGES.
3. ALL RAMPS SHALL BE CONSTRUCTED OF CLASS "C" CONCRETE IN ACCORDANCE WITH CONNECTICUT STANDARD SPECIFICATIONS ARTICLE M.03.01.
4. SIDEWALK RAMPS SHALL HAVE A COARSE BROOM FINISH TRANSVERSE TO THE SLOPE OF THE RAMP.
5. DIAGONAL SIDEWALK RAMPS AT MARKED CROSSINGS SHALL BE WHOLLY CONTAINED WITHIN THE MARKINGS, EXCLUDING ANY FLARED SIDES.
6. REMOVAL OF EXISTING SIDEWALK FOR NEW RAMP INSTALLATIONS SHALL BE TO THE NEAREST EXPANSION / CONTRACTION JOINT OR DUMMY JOINT. 12:1 MAY NOT BE ACHIEVABLE DUE TO SIDEWALK GRADE. IN RECOGNITION OF THIS, A MINIMUM LIMIT OF 15' (4.57m) FOR A PARALLEL RAMP SHALL BE USED. REMOVAL SHALL NOT BE FURTHER THAN 2' (610) FROM THE PROPOSED RAMP UNLESS DIRECTED BY THE ENGINEER. SAW CUT REQUIRED FOR DUMMY JOINTS SHALL BE INCLUDED IN THE COST OF "CONCRETE SIDEWALK".
7. EXPANSION JOINTS IN CONCRETE SHALL MATCH THOSE IN ADJACENT SIDEWALKS BUT IN NO CASE SHALL THE SPACING BETWEEN EXPANSION JOINTS EXCEED 12' (3.66m) UNLESS OTHERWISE NOTED.
8. RAISED MEDIAN ISLANDS IN MARKED CROSSINGS SHALL HAVE SIDEWALK RAMPS AT BOTH SIDES AND A LEVEL AREA AT LEAST 4' (1219) LONG BETWEEN THE RAMPS. IF THIS CAN NOT BE ACHIEVED, THE RAISED ISLAND SHALL BE CUT THROUGH LEVEL WITH THE ROADWAY AS SHOWN ON THE PLANS OR AS DIRECTED BY THE ENGINEER.
9. SIDEWALK RAMPS, WHEN CONSTRUCTED IN CONJUNCTION WITH SIDEWALK, SHALL BE PAID FOR UNDER THE ITEM "CONCRETE SIDEWALK", INCLUDING CURBING WITHIN THE LIMITS OF THE NEW SIDEWALK RAMP AND DETECTABLE WARNING STRIPS.WHEN JUST A SIDEWALK RAMP IS CONSTRUCTED, IT SHALL BE PAID FOR UNDER THE ITEM "SIDEWALK RAMP" INCLUDING CURBING WITHIN THE LIMITS OF THE NEW SIDEWALK AND DETECTABLE WARNING STRIP.
10. CURBING WITHIN THE LIMITS OF THE NEW SIDEWALK RAMP SHALL BE CONSTRUCTED IN CONFORMANCE WITH THE REQUIREMENTS OF FORM 816 SECTIONS 8.11 AND 8.13.
11. TRANSITION TO FULL HEIGHT CURB. INSTALL STONE CURBING IF ADJACENT CURBING IS STONE. INSTALL CONCRETE CURBING IF ADJACENT CURBING IS CONCRETE OR BITUMINOUS.
12. INSTALL THE EDGE OF THE DETECTABLE WARNING STRIP 6" (152) FROM THE EDGE OF ROAD.
13. TO PERMIT WHEELCHAIR WHEELS TO ROLL BETWEEN DOMES, ALIGN DOMES ON A SQUARE GRID IN THE DIRECTION OF PEDESTRIAN TRAVEL.

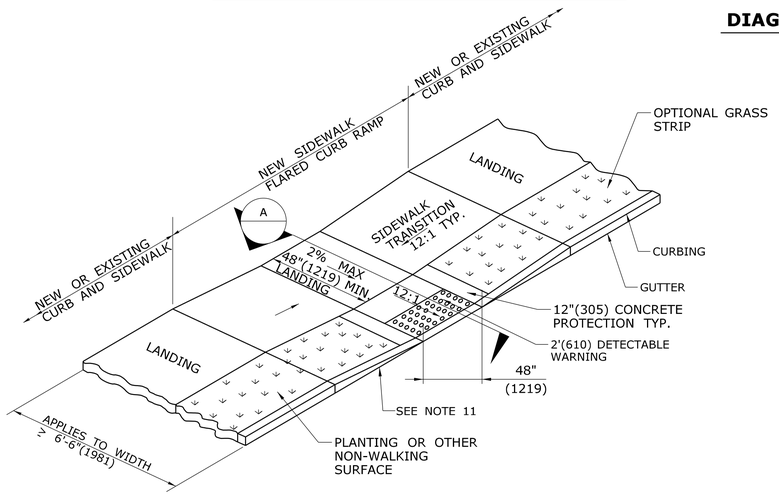

PERPENDICULAR SIDEWALK RAMP (TYPE 2)

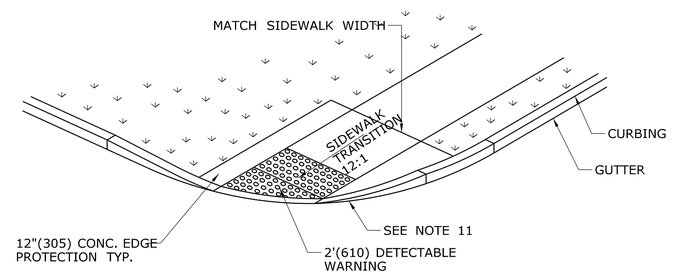

DIAGONAL SIDEWALK RAMP (TYPE 4c)

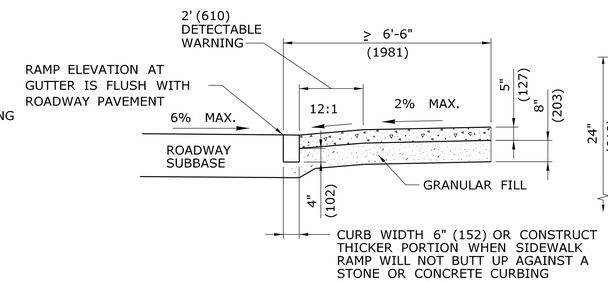

SECTION A

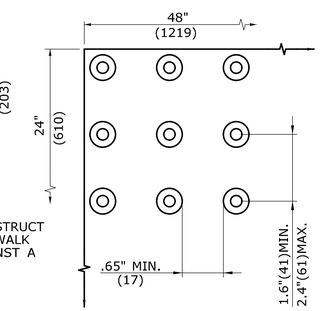

DOME SPACING

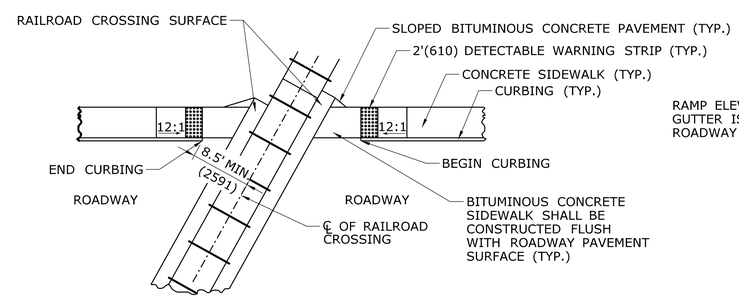

PLAN VIEW

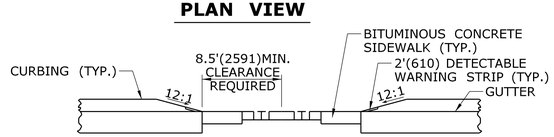

ELEVATION VIEW

DETECTABLE WARNINGS AT RAILROAD CROSSING

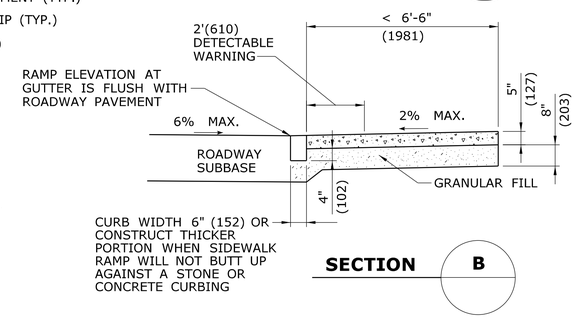

SECTION B

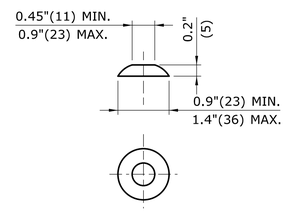

DOME SECTION

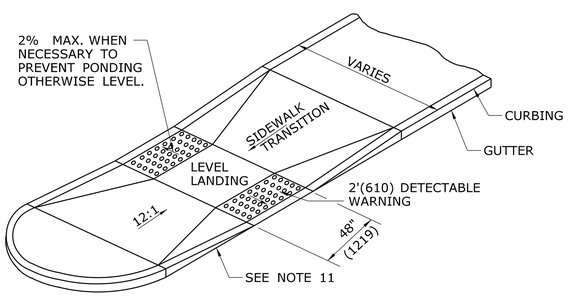

DETECTABLE WARNINGS AT MEDIAN ISLAND

SEE NOTE 8

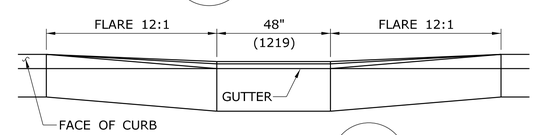

SECTION C

ALL METRIC DIMENSIONS ARE IN MILLIMETERS (mm) UNLESS OTHERWISE NOTED

REV.	DATE	REVISION DESCRIPTION
-	-	-
-	-	-
-	-	-
-	-	-
2	6/11	REVISE MAX GRADE CALL-OUTS TO SAY 2%
1	10/10	Revised Note 4 and removed note 11

THE INFORMATION, INCLUDING ESTIMATED QUANTITIES OF WORK, SHOWN ON THESE SHEETS IS BASED ON LIMITED INVESTIGATIONS BY THE STATE AND IS IN NO WAY WARRANTED TO INDICATE THE CONDITIONS OF ACTUAL QUANTITIES OF WORK WHICH WILL BE REQUIRED.

Plotted Date: 5/10/2011

NOT TO SCALE

STATE OF CONNECTICUT
DEPARTMENT OF TRANSPORTATION

Filename: CTDOT_HIGHWAY_STD_JUNE2011.dgn Model: 69 - HW-921_02

SUBMITTED BY: NAME/DATE/TIME:
Digitally signed by Leo Fontaine
DN: c=US, st=Connecticut, l=Newington, ou=Department of Transportation, email=Leo.Fontaine@ct.gov, o=State of Connecticut, cn=Leo Fontaine
Date: 2011.06.04 10:23:52 -04'00'

APPROVED BY: NAME/DATE/TIME:
James H. Norman
2011.06.09 15:37:11 -04'00'

CTDOT STANDARD SHEET

OFFICE OF ENGINEERING

STANDARD SHEET TITLE:
SIDEWALK RAMPS

STANDARD SHEET NO.:
HW-921_02