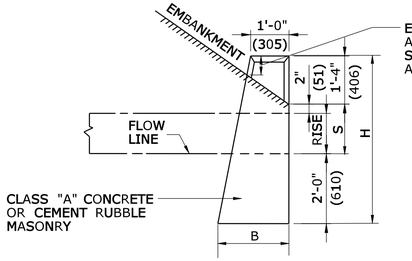

WALL AT FOOT OF SLOPE

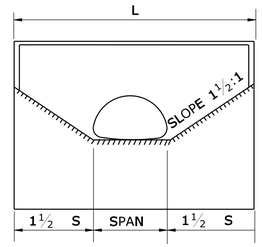

FRONT ELEVATION

DIMENSIONS AND QUANTITIES FOR ONE ENDWALL BASED ON S = RISE + 2"(51)							
SPAN	RISE	S	H	L	BATTER	B	VOL.
INS.(mm)	INS.(mm)	FT.& INS.(mm)	FT.& INS.(mm)	FT.& INS.(mm)	FT.& INS.(mm)	FT.& INS.(mm)	C.Y.(m^3)
18(457)	11(340)	1'-1"(390)	4'-5"(1390)	4'-9(1450)	2½"5:1)	1'-11"(580)	1.13(.9)
22(559)	13(380)	1'-3"(430)	4'-7"(1430)	5'-7"(1700)	2½"(5:1)	1'-11½"(590)	1.40(1.1)
25(560)	16(420)	1'-6"(470)	4'-10"(1470)	6'-7"(2000)	2½"(5:1)	2'-0¼"(600)	1.78(1.3)
29(680)	18(500)	1'-8"(550)	5'-0"(1550)	7'-5"(2260)	2½"(5:1)	2'-0½"(610)	2.12(1.6)
36(800)	22(580)	2'-0"(630)	5'-4"(1630)	9'-0"(2750)	2½"(5:1)	2'-1⅜"(630)	2.77(2.1)
43(910)	27(660)	2'-5"(710)	5'-9"(1710)	10'-10"(3300)	2½"(5:1)	2'-2⅜"(640)	3.68(2.7)
50(1030)	31(740)	2'-9"(790)	6'-1"(1790)	12'-5"(3780)	2½"(5:1)	2'-3¼"(660)	4.57(3.2)
58(1150)	36(820)	3'-2"(870)	6'-6"(1870)	14'-4"(4370)	3"(4:1)	2'-7½"(770)	5.17(4.0)*
65(1390)	40(970)	3'-6"(1020)	6'-10"(2020)	15'-11"(4850)	3"(4:1)	2'-8½"(810)	6.52(5.0)*
72(1630)	44(1120)	3'-10"(1170)	7'-2"(2170)	17'-6"(5330)	3"(4:1)	2'-9½"(840)	7.61(5.8)*
* VOLUME BASED ON AREA OF PIPE. ARCH AND WALL THICKNESS HAS BEEN DEDUCTED.							
A TOLERANCE OF PLUS OR MINUS 1 INCH (25) WILL BE PERMITTED IN DIMENSIONS FOR SPAN, RISE, H, L AND B.							

STANDARD ENDWALL FOR PIPE-ARCH

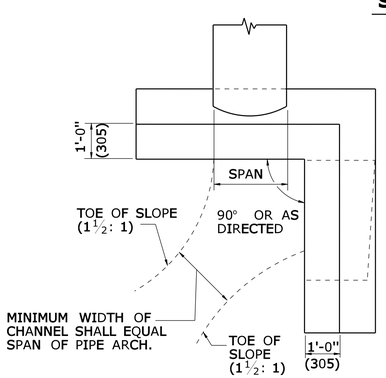

PLAN

TYPE "L" ENDWALL DIMENSIONS					
SPAN	RISE	H	½L	BATTER	B
INS.(mm)	INS.(mm)	FT.&INS.(mm)	FT.&INS.(mm)	INS/FT.(mm/mm)	FT.&INS.(mm)
18(450)	11(340)	4'-5"(1390)	2'-4½"(725)	2½"(5:1)	1'-11"(580)
22(510)	13(380)	4'-7"(1430)	2'-9½"(850)	2½"(5:1)	1'-11½"(590)
25(560)	16(420)	4'-10"(1470)	3'-3½"(1000)	2½"(5:1)	2'-0¼"(600)
29(680)	18(500)	5'-0"(1550)	3'-8½"(1130)	2½"(5:1)	2'-0½"(610)
36(800)	22(580)	5'-4"(1630)	4'-6"(1375)	2½"(5:1)	2'-1⅜"(630)
43(910)	27(660)	5'-9"(1710)	5'-5"(1650)	2½"(5:1)	2'-2⅜"(640)
50(1030)	31(740)	6'-1"(1790)	6'-2½"(1890)	2½"(5:1)	2'-3¼"(660)
58(1150)	36(820)	6'-6"(1870)	7'-2"(2185)	3"(4:1)	2'-7½"(770)
65(1390)	40(970)	6'-10"(2020)	7'- 11½"(2425)	3"(4:1)	2'-8½"(810)
72(1630)	44(1120)	7'-2"(2170)	8'-9"(2665)	3"(4:1)	2'-9½"(840)
A TOLERANCE OF PLUS OR MINUS 1" (25) WILL BE PERMITTED FOR SPAN, RISE, ½L AND B DIMENSIONS.					

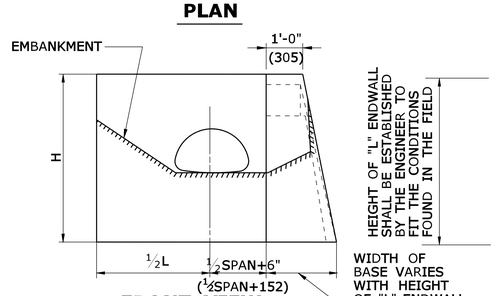

FRONT VIEW

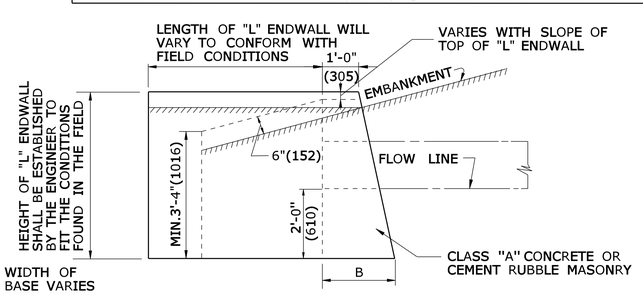

SIDE VIEW

TYPE "L" ENDWALL FOR PIPE-ARCH

LEGEND

H = TOTAL HEIGHT OF ENDWALL

B = BASE

S = MINIMUM HEIGHT OF SLOPE ABOVE FLOW LINE AT FACE OF WALL = RISE + 2"(51)

L = LENGTH OF WALL = 3S + SPAN

ALL EDGES OF EXPOSED SURFACES SHALL BE CHAMFERED APPROXIMATELY 1"(25).

GENERAL NOTES:

1. ALL CONSTRUCTION DIMENSIONS ARE NOMINAL.
2. THESE ENDWALLS SHALL ONLY BE USED AT LOCATIONS WHERE THEY ARE OUTSIDE THE DESIGN CLEAR ZONE.
3. THE COST OF REINFORCING BARS SHALL BE INCLUDED IN THE CONTRACT UNIT PRICE FOR CLASS "A" CONCRETE.
4. ALL REINFORCING BARS SHALL HAVE A 3"(76) MIN. COVER.

DIMENSIONS AND QUANTITIES FOR ONE WING TYPE ENDWALL								
SPAN	RISE	H	K	L	P	R	W	VOL.
INS. (mm)	INS. (mm)	FT. & INS. (mm)	FT. & INS. (mm)	FT. & INS. (mm)	FT. & INS. (mm)	FT. & INS. (mm)	FT. & INS. (mm)	C.Y.(m^3)
58 (1473)	36 (914)	6'-8" (2032)	10'-11½" (3340)	9'-1 ¾" (2788)	1'-4 ⅞" (429)	3'-4 ⅞" (1038)	5'-5 ¾" (1670)	6.00 (4.6)
65 (1651)	40 (1016)	7'-0" (2134)	11'-9" (3581)	9'-8 ¾" (2965)	1'-5 ⅞" (454)	3'-8 ⅞" (1140)	6'-3" (1905)	7.00 (5.4)
72 (1829)	44 (1118)	7'-4" (2235)	12'-6 ½" (3823)	10'-3 ¾" (3143)	1'-6 ⅞" (479)	4'-0 ⅞" (1241)	7'-0 ¼" (2140)	8.50 (6.5)

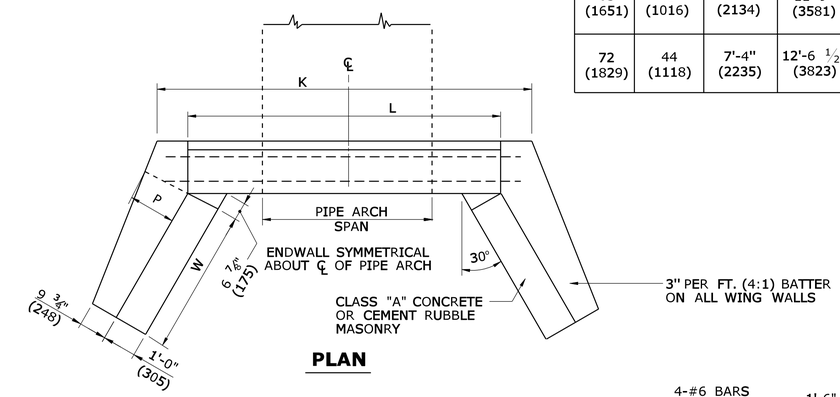

PLAN

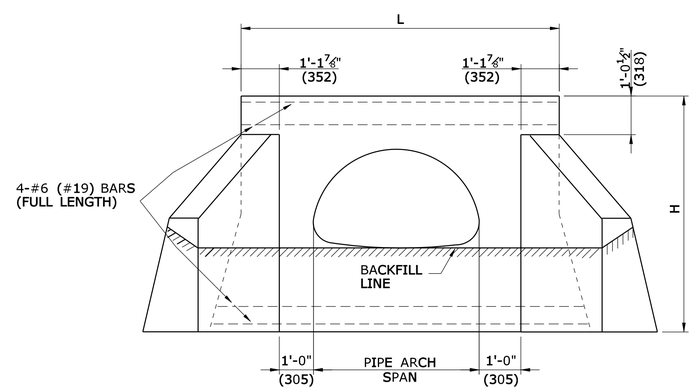

ELEVATION

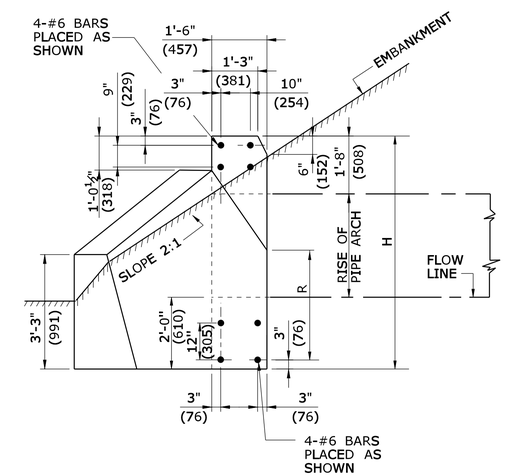

SIDE VIEW ELEVATION

STANDARD WING TYPE ENDWALL FOR PIPE-ARCH

ALL METRIC DIMENSIONS ARE IN MILLIMETERS (mm) UNLESS OTHERWISE NOTED

REV.	DATE	REVISION DESCRIPTION
-	-	-
-	-	-
-	-	-
-	-	-
-	-	-
-	-	-

THE INFORMATION, INCLUDING ESTIMATED QUANTITIES OF WORK, SHOWN ON THESE SHEETS IS BASED ON LIMITED INVESTIGATIONS BY THE STATE AND IS IN NO WAY WARRANTED TO INDICATE THE CONDITIONS OF ACTUAL QUANTITIES OF WORK WHICH WILL BE REQUIRED.

Plotted Date: 9/11/2009

NOT TO SCALE

STATE OF CONNECTICUT
DEPARTMENT OF TRANSPORTATION

Filename: CTDOT_HIGHWAY_STD.dgn Model: HW-506_03

SUBMITTED BY: NAME/DATE/TIME: Timothy M. Wilson 2009.09.16 11:09:20 -04'00'

APPROVED BY: NAME/DATE/TIME: James H. Norman 2009.09.18 14:19:12 -04'00'

CTDOT STANDARD SHEET

OFFICE OF ENGINEERING

STANDARD SHEET TITLE: ENDWALLS FOR PIPE-ARCH

STANDARD SHEET NO.: HW-506_03