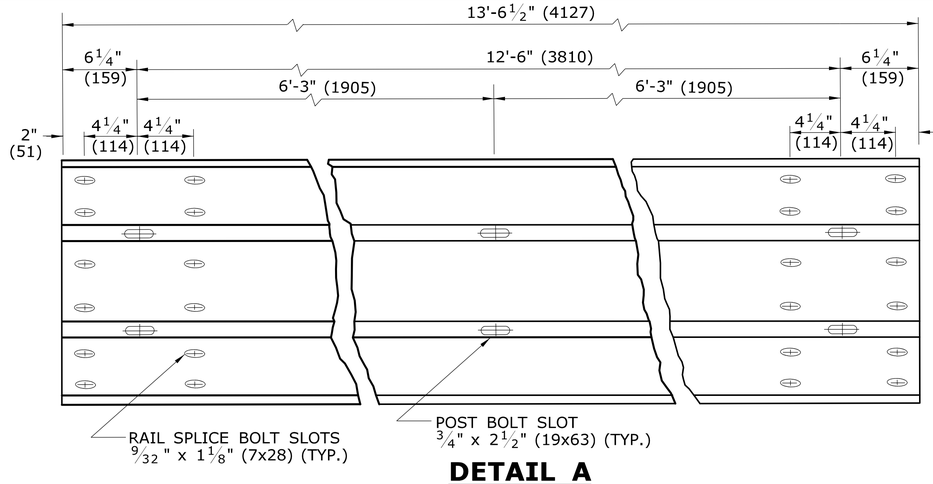

DETAIL A
THRIE-BEAM RAIL ELEMENT
(10 GAUGE)

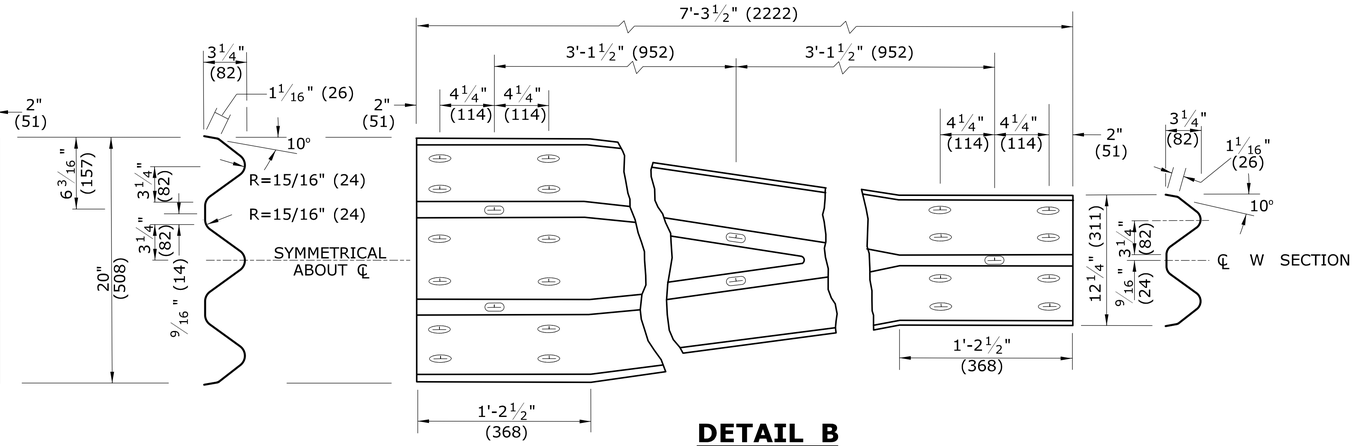

DETAIL B
THRIE-BEAM RAIL ELEMENT
(10 GAUGE)

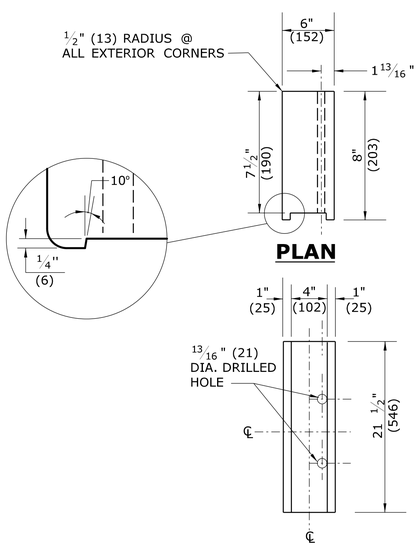

PLAN

ELEVATION
DETAIL C
THRIE-BEAM
POLYETHYENE BLOCKOUT

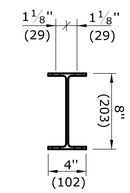

PLAN

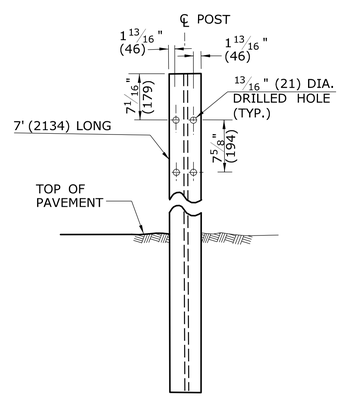

ELEVATION
DETAIL D
THRIE-BEAM POST DETAIL
W8x13 (W200x19)
BOLT HOLE LOCATION

DELINEATOR NOTES:

1. DELINEATORS SHALL BE FORMED OF .080 POLY-CARBONATE OR .080 SHEET ALUMINUM IN ACCORDANCE WITH M.18.13.
2. REFLECTIVE SHEETING SHALL CONFORM TO M.18.09.2.
3. DELINEATORS SHALL BE INSTALLED ON THE POST CLOSEST TO THE DESIGNATED SPACING.
4. REFLECTIVE SHEETING SHALL BE WHITE EXCEPT ON THE LEFT SIDE OF DIVIDED STREETS, HIGHWAYS, RAMPS, AND ONE WAY ROADS IN THE DIRECTION OF TRAVEL WHERE IT SHALL BE YELLOW.
5. INSTALL DELINEATORS ON RAIL THAT IS PARALLEL TO AND NOT GREATER THAN 6'(1829) FROM THE EDGE OF THE ROADWAY. A MINIMUM OF THREE DELINEATORS MUST BE INSTALLED ON ANY RUN OF RAIL.

DELINEATOR SPACING:
RADIUS ≥ 300'(91440) - SPACE EVERY 50'(15.24m)
RADIUS < 300'(91440) - SPACE EVERY 25'(7.62m)

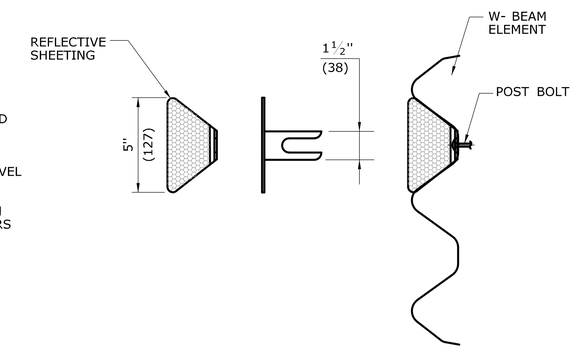

DELINEATOR DETAIL

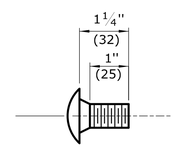

SPLICE BOLT DETAIL

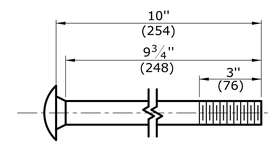

POST BOLT DETAIL

(UNTHREADED PORTION NOT TO EXCEED 6¾"(171))

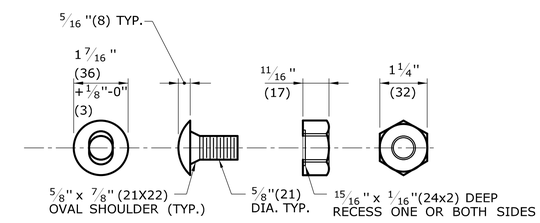

BUTTONHEAD BOLT

HEX NUT

NOTE: AFTER GALVANIZING, THE NUT SHALL BE FREE RUNNING ON THE BOLT. DIAMETER SHOWN IS TYPICAL FOR ALL GUIDERAIL BOLTS. SEE DETAILS ABOVE FOR SPECIFIC LENGTHS.

ALL METRIC DIMENSIONS ARE IN MILLIMETERS (mm) UNLESS OTHERWISE NOTED.

REV.	DATE	REVISION DESCRIPTION
1	6/11	CREATED THRIE BEAM HARDWARE SHEET
-	-	-
-	-	-
-	-	-
-	-	-
-	-	-
-	-	-

THE INFORMATION, INCLUDING ESTIMATED QUANTITIES OF WORK, SHOWN ON THESE SHEETS IS BASED ON LIMITED INVESTIGATIONS BY THE STATE AND IS IN NO WAY WARRANTED TO INDICATE THE CONDITIONS OF ACTUAL QUANTITIES OF WORK WHICH WILL BE REQUIRED.

Plotted Date: 5/11/2011

NOT TO SCALE

STATE OF CONNECTICUT
DEPARTMENT OF TRANSPORTATION

Filename: CTDOT_HIGHWAY_STD_JUNE2011.dgn Model: 51 - HW-910_13a

SUBMITTED BY: NAME/DATE/TIME: Digitally signed by Leo Fontaine DN: c=US, st=Connecticut, l=Newington, ou=Department of Transportation, email=Leo.Fontaine@ct.gov, o=State of Connecticut, cn=Leo Fontaine Date: 2011.05.25 12:37:54 -04'00'

APPROVED BY: NAME/DATE/TIME: James H. Norman 2011.06.09 15:31:59 -04'00'

CTDOT STANDARD SHEET

OFFICE OF ENGINEERING

STANDARD SHEET TITLE:

THRIE BEAM METAL BEAM RAIL HARDWARE

STANDARD SHEET NO.: HW-910_13a