GENERAL NOTES:

1. THE OUTLET ENDWALL CAN BE EITHER PRECAST OR CAST IN PLACE. CONCRETE SHALL BE CLASS "C" CONCRETE.
2. IF PRECAST CONCRETE ENDWALL IS USED, THE OUTLET SHALL BE GROUTED AND SEALED TO ENDWALL OPENING WITH NON-SHRINK GROUT.

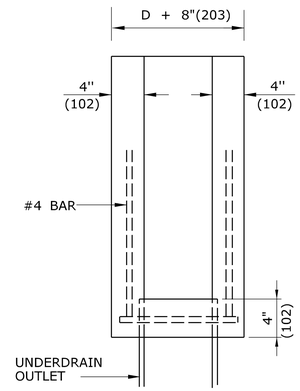

PLAN VIEW

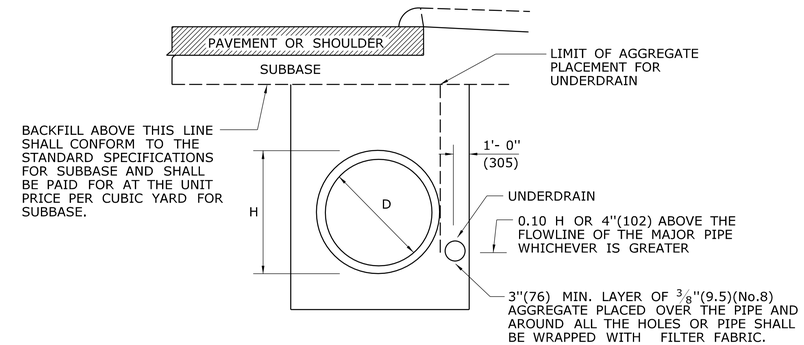

NOTE:
PAY LIMIT FOR TRENCH EXCAVATION AND BEDDING SHALL BE THE SAME AS FOR THE CULVERT ALONE. MATERIAL ABOVE THE BEDDING SHALL BE SUITABLE MATERIAL OR GRANULAR FILL.

CULVERT AND UNDERDRAIN IN THE SAME TRENCH

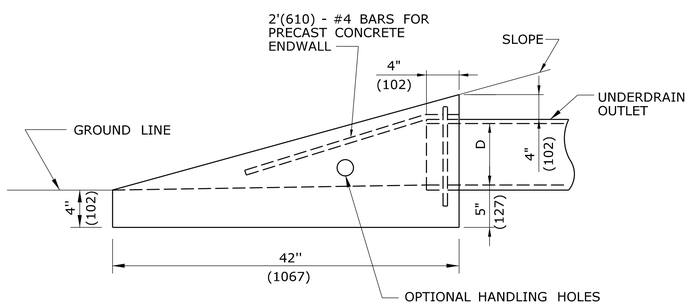

ENDWALL

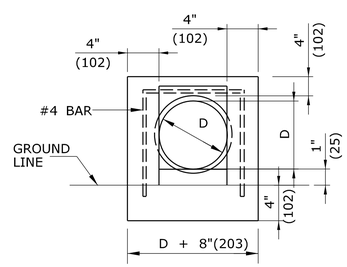

ELEVATION

UNDERDRAIN OUTLET DETAILS

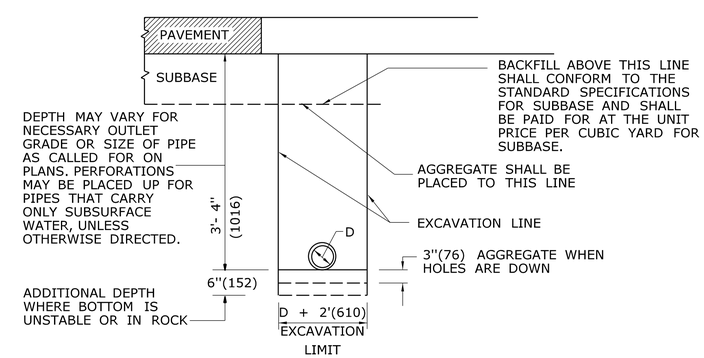

UNDERDRAIN

ALL METRIC DIMENSIONS ARE IN MILLIMETERS (mm) UNLESS OTHERWISE NOTED

REV.	DATE	REVISION DESCRIPTION
1	6/01/10	REMOVED RODENT SCREEN DETAILS AND REVISED TITLES
-	-	-
-	-	-
-	-	-
-	-	-
-	-	-

THE INFORMATION, INCLUDING ESTIMATED QUANTITIES OF WORK, SHOWN ON THESE SHEETS IS BASED ON LIMITED INVESTIGATIONS BY THE STATE AND IS IN NO WAY WARRANTED TO INDICATE THE CONDITIONS OF ACTUAL QUANTITIES OF WORK WHICH WILL BE REQUIRED.

Plotted Date: 5/21/2010

NOT TO SCALE

STATE OF CONNECTICUT
DEPARTMENT OF TRANSPORTATION

Filename: CTDOT_HIGHWAY_STD.dgn Model: HW-751_01

SUBMITTED BY: NAME/DATE/TIME: Leo Fontaine 2010.05.28 10:27:49 -04'00'

APPROVED BY: NAME/DATE/TIME: James H. Norman — Digitally signed by James H. Norman DN: c=US, st=CT, l=Newington, ou=Department of Transportation, email=james.norman@ct.gov, o=State of Connecticut, cn=James H. Norman Date: 2010.06.04 08:19:46 -04'00'

CTDOT STANDARD SHEET

OFFICE OF ENGINEERING

STANDARD SHEET TITLE: **UNDERDRAINS AND UNDERDRAIN OUTLETS**

STANDARD SHEET NO.: **HW-751_01**