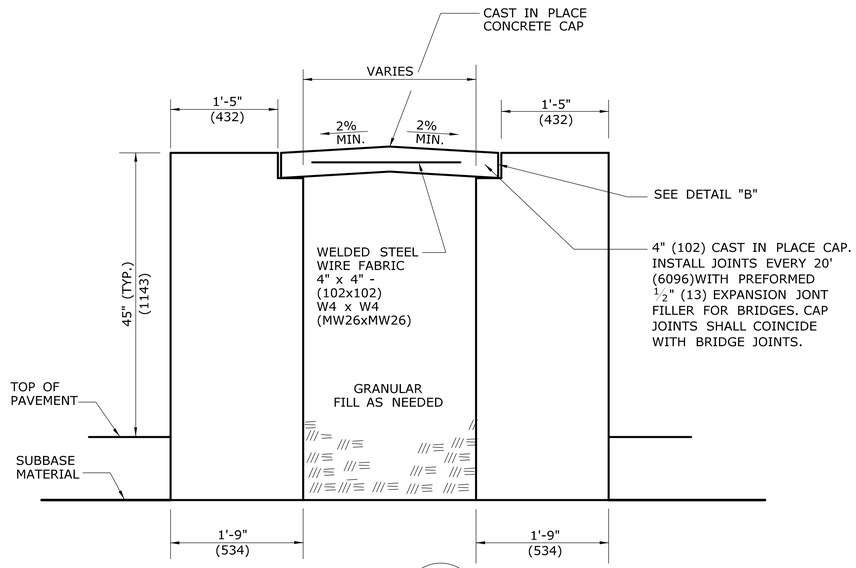

SECTION A

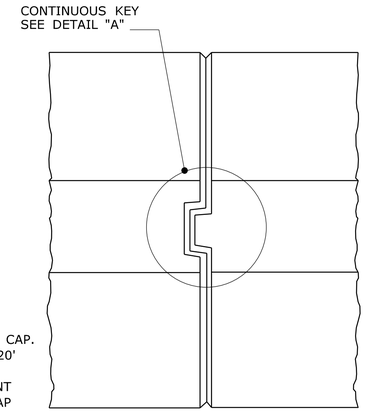

KEY CONNECTION AT ENDS PLAN VIEW

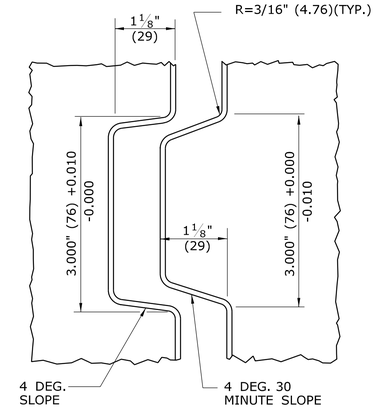

DETAIL A

GENERAL NOTES:

1. ALTERNATE DESIGNS FOR UNIT END CONNECTIONS SIMILAR TO THE DESIGNS SHOWN MAY BE SUBMITTED TO THE ENGINEER FOR APPROVAL.
2. TERMINAL END TREATMENTS SHALL BE CONSTRUCTED AS SHOWN ON THE PLANS OR AS DIRECTED BY THE ENGINEER.
3. THE CONCRETE CAP, JOINT SEAL, JOINT FILLER FOR BRIDGES, AND WELDED STEEL WIRE FABRIC SHALL BE PAID FOR AS PART OF CLASS "A" CONCRETE.

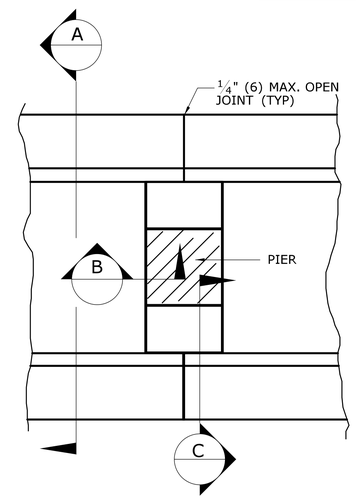

PLAN VIEW AT PIER

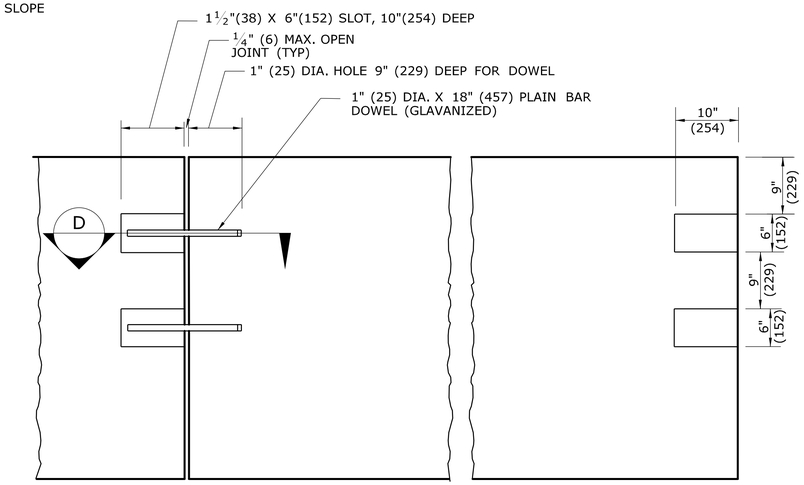

DOWEL CONNECTION AT ENDS ELEVATION VIEW

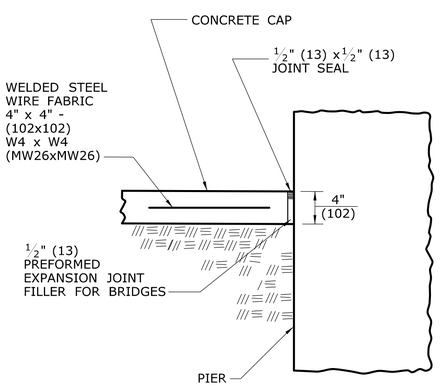

SECTION B

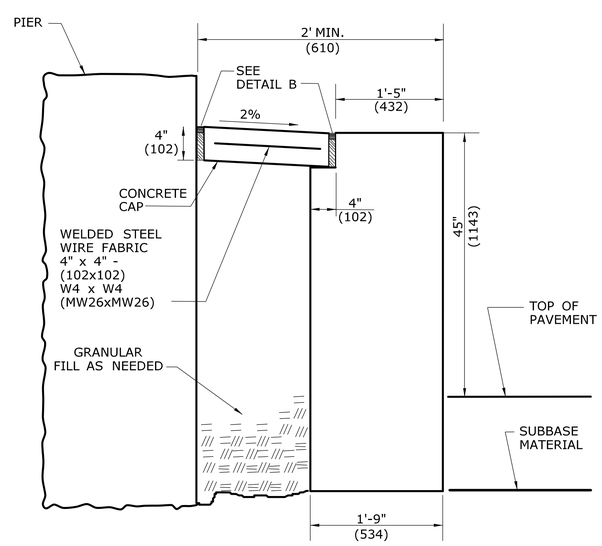

SECTION C

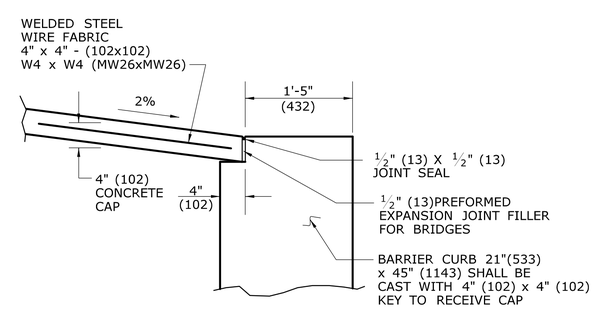

DETAIL B

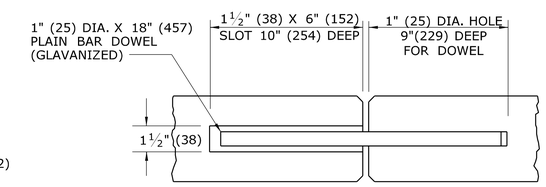

SECTION D

ALL METRIC DIMENSIONS ARE IN MILLIMETERS (mm) UNLESS OTHERWISE NOTED.

REV.	DATE	REVISION DESCRIPTION
-	-	-
-	-	-
-	-	-
-	-	-
-	-	-
-	-	-

THE INFORMATION, INCLUDING ESTIMATED QUANTITIES OF WORK, SHOWN ON THESE SHEETS IS BASED ON LIMITED INVESTIGATIONS BY THE STATE AND IS IN NO WAY WARRANTED TO INDICATE THE CONDITIONS OF ACTUAL QUANTITIES OF WORK WHICH WILL BE REQUIRED.

Plotted Date: 10/12/2010

NOT TO SCALE

STATE OF CONNECTICUT
DEPARTMENT OF TRANSPORTATION

Filename: CTDOT_HIGHWAY_STD_OCT2010.dgn Model: 31 - HW-821_03d

SUBMITTED BY: NAME/DATE/TIME: Digitally signed by Leo Fontaine DN: c=US, st=Connecticut, l=Newington, ou=Department of Transportation, email=Leo.Fontaine@ct.gov, o=State of Connecticut, cn=Leo Fontaine Date: 2010.10.16 14:52:27 -04'00'

APPROVED BY: NAME/DATE/TIME: James H. Norman Digitally signed by James H. Norman DN: c=US, st=CT, l=Newington, ou=Department of Transportation, email=James.Norman@ct.gov, o=State of Connecticut, cn=James H. Norman Date: 2010.10.18 08:35:53 -04'00'

CTDOT STANDARD SHEET

OFFICE OF ENGINEERING

STANDARD SHEET TITLE:

TRANSITION - 32" (813) JERSEY SHAPE TO 45" (1145) VERTICAL SHAPE SHEET 4

STANDARD SHEET NO.: **HW-821_03d**