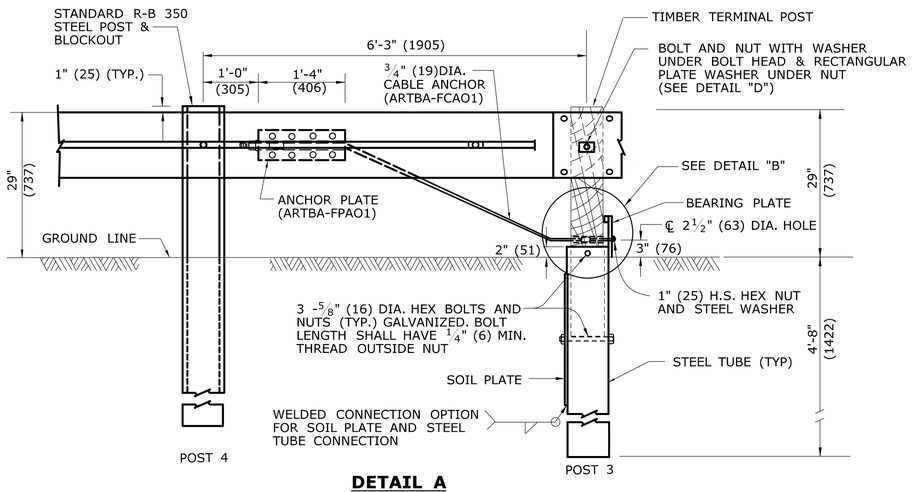

DETAIL A

CABLE ANCHORAGE ASSEMBLY

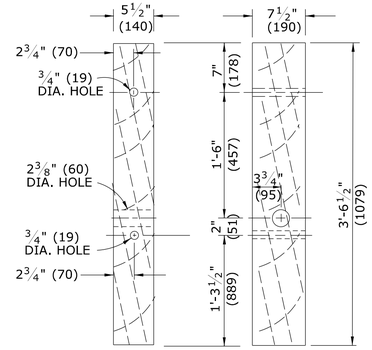

DETAIL C

TIMBER TERMINAL POST

(ARTBA-PDFO1)

(SEE NOTE 2)

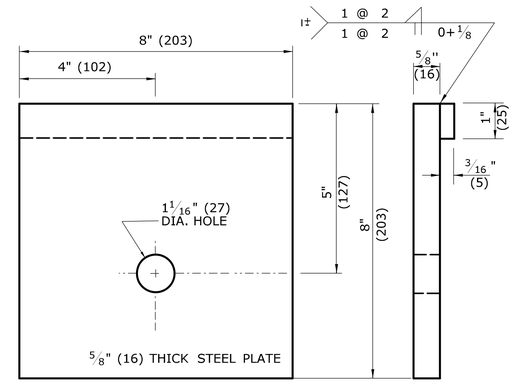

BEARING PLATE

(ARTBA-FPBO1)

GENERAL NOTES:

1. APPROACH END R-B TERMINAL SECTION SHALL ONLY BE USED ON LOW SPEED (<45 MPH) ROADWAYS.
2. POSTS 1, 2 AND 3 ARE TIMBER TERMINAL POSTS (DETAIL "C") WITH STEEL TUBES. POSTS 4 AND 5 ARE STANDARD R-B 350 STEEL POSTS WITH BLOCKOUTS.
3. REFER TO CTDOT STANDARD SPECIFICATIONS FOR MATERIAL AND GENERAL CONSTRUCTION METHODS.
4. MINIMUM RAIL HEIGHT FOR NEW CONSTRUCTION SHALL BE 29" (737) + 1" (25).

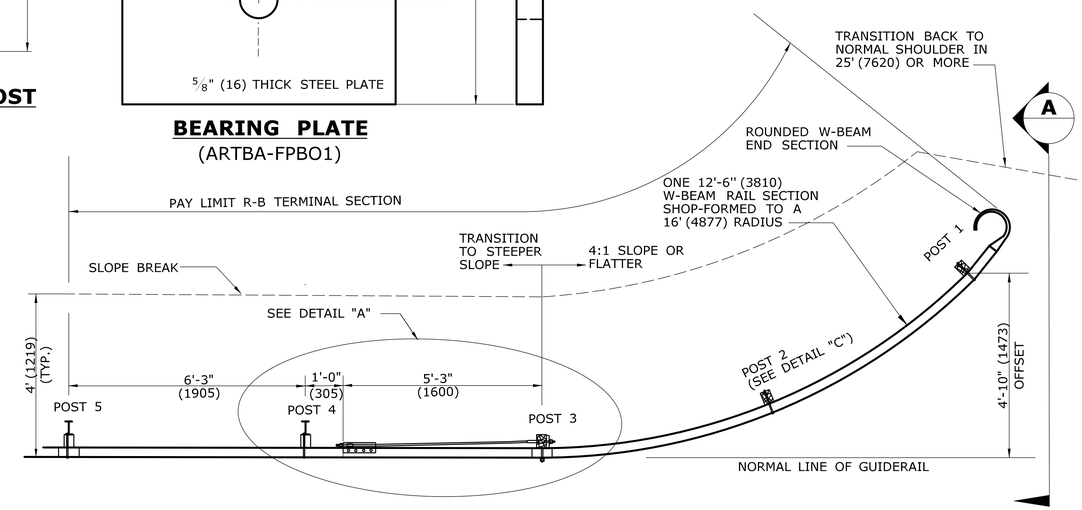

APPROACH END

(TRAILING END NOT SHOWN)

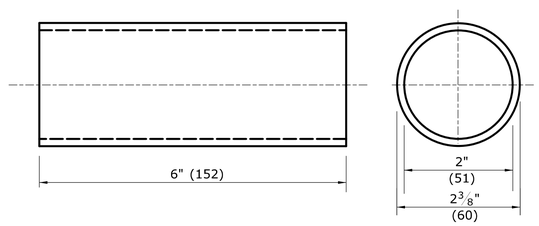

BREAKAWAY TERMINAL POST SLEEVE

(ARTBA-FMMO2)

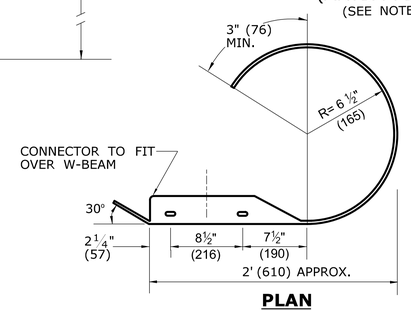

PLAN

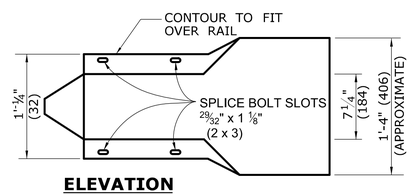

ELEVATION

ROUNDED W-BEAM END SECTION

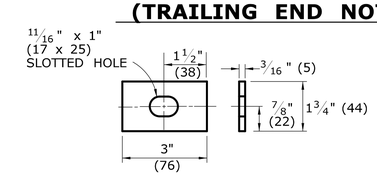

DETAIL D

RECTANGULAR PLATE WASHER

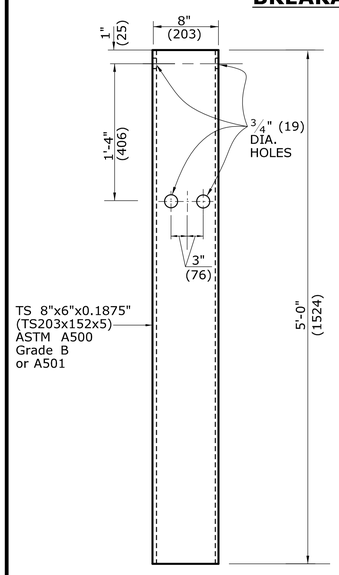

STEEL TUBE

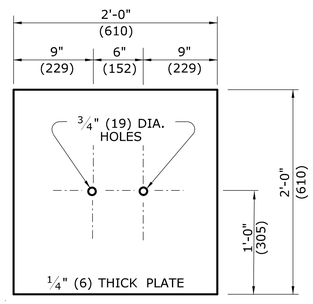

SOIL PLATE (2 Req'd)

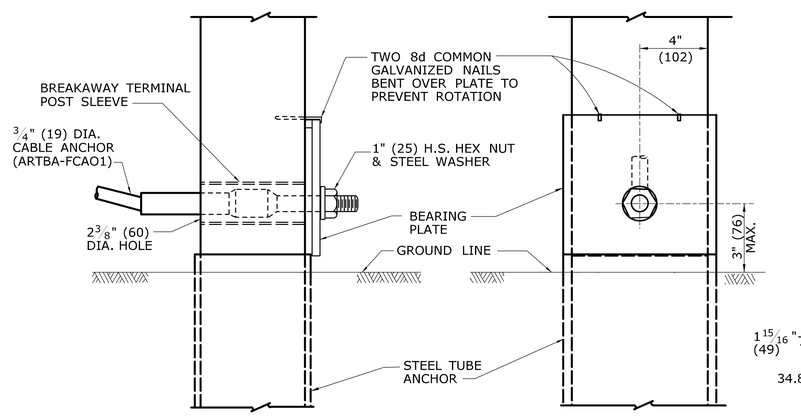

DETAIL B

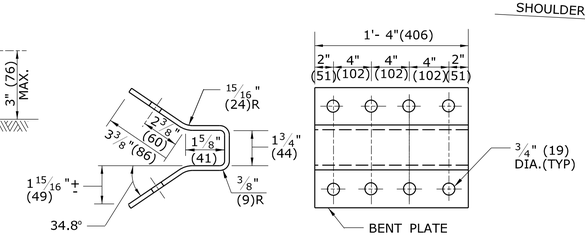

ANCHOR PLATE

(ARTBA-FPAO1)

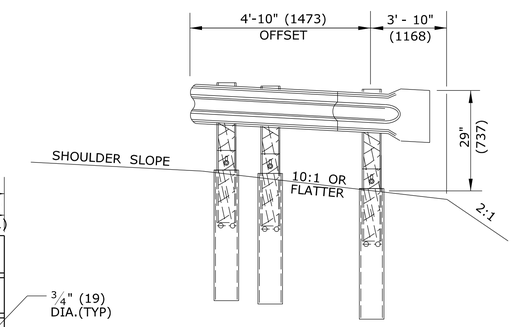

SECTION A

ALL METRIC DIMENSIONS ARE IN MILLIMETERS (mm) UNLESS OTHERWISE NOTED.

REV.	DATE	REVISION DESCRIPTION
1	6/11	REVISE NOTE 1
-	-	-
-	-	-
-	-	-
-	-	-
-	-	-
-	-	-

THE INFORMATION, INCLUDING ESTIMATED QUANTITIES OF WORK, SHOWN ON THESE SHEETS IS BASED ON LIMITED INVESTIGATIONS BY THE STATE AND IS IN NO WAY WARRANTED TO INDICATE THE CONDITIONS OF ACTUAL QUANTITIES OF WORK WHICH WILL BE REQUIRED.

Plotted Date: 6/4/2011

NOT TO SCALE

STATE OF CONNECTICUT
DEPARTMENT OF TRANSPORTATION

Filename: CTDOT_HIGHWAY_STD_JUNE2011.dgn Model: 58 - HW-910_17

SUBMITTED BY: NAME/DATE/TIME: Digitally signed by Leo Fontaine DN: c=US, st=Connecticut, l=Newington, ou=Department of Transportation, email=Leo.Fontaine@ct.gov, o=State of Connecticut, cn=Leo Fontaine Date: 2011.06.04 10:32:05 -04'00'

APPROVED BY: NAME/DATE/TIME: James H. Norman 2011.06.09 15:34:38 -04'00'

CTDOT STANDARD SHEET

OFFICE OF ENGINEERING

STANDARD SHEET TITLE: R-B TERMINAL SECTION

STANDARD SHEET NO.: HW-910_17