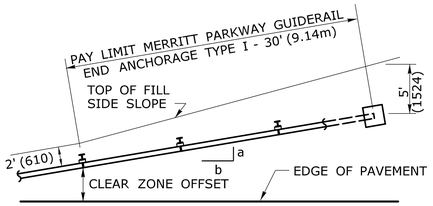

PLAN

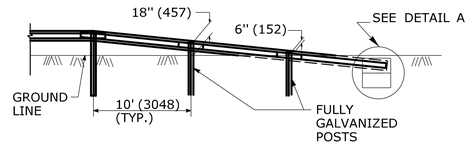

ELEVATION

MERRITT PARKWAY GUIDERAIL END ANCHORAGE TYPE I (BURIED ANCHOR)

NOTE: SEE MISCELLANEOUS DETAILS FOR FLARE RATE a:b.

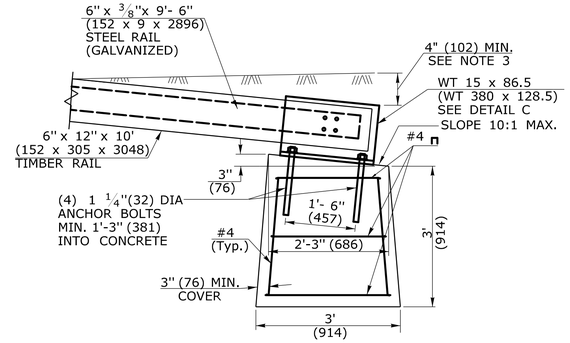

ELEVATION DETAIL A

GENERAL NOTES:

1. MATERIALS AND CONSTRUCTION OF THE MERRITT PARKWAY GUIDERAIL END ANCHORS SHALL CONFORM TO THE SPECIAL PROVISIONS PROVIDED WITH THE PROJECT. ALL HARDWARE IN CONTACT WITH THE GROUND SHALL BE GALVANIZED IN ACCORDANCE WITH THE SPECIAL PROVISION.
2. FOR THE END ANCHOR TYPE II, EXTEND THE FLARE INTO THE CUT SLOPE UNTIL A MINIMUM 12" (305) OF COVER IS OBTAINED OVER THE GUIDERAIL ELEMENT.
3. FOR THE END ANCHOR TYPE I, EXTEND THE FLARE OUTSIDE THE CLEAR ZONE AND BURY THE GUIDERAIL ANCHOR AND ELEMENT TO OBTAIN A MINIMUM COVER OF 4" (102). SEE DETAIL A.
4. BEGIN THE FLARE AT THE NEAREST POST TO A TRANSITION POINT BETWEEN FILL AND CUT AS DIRECTED BY THE ENGINEER.
5. THE GUIDERAIL FLARE SHOWN ON THE MISCELLANEOUS DETAILS IS THE MINIMUM LENGTH AND RATE REQUIRED AS DIRECTED BY THE ENGINEER. FLARE THE GUIDERAIL SO THAT THE TERMINAL SECTION IS OUTSIDE THE CLEAR ZONE.

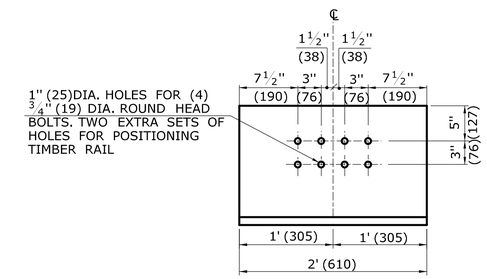

ELEVATION

DETAIL C
WT 15 x 86.5 (GALVANIZED) (WT 380 X 128.5)

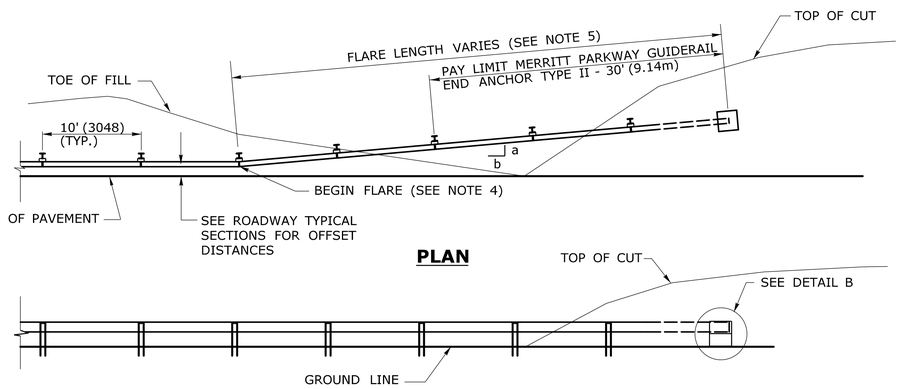

PLAN

ELEVATION

MERRITT PARKWAY GUIDERAIL END ANCHORAGE TYPE II (EARTH CUT SLOPE ANCHOR)

NOTE: SEE MISCELLANEOUS DETAILS FOR FLARE RATE a:b.

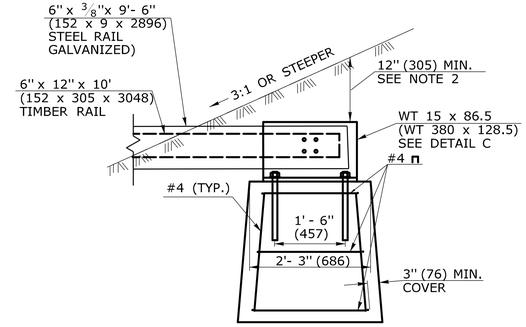

ELEVATION DETAIL B

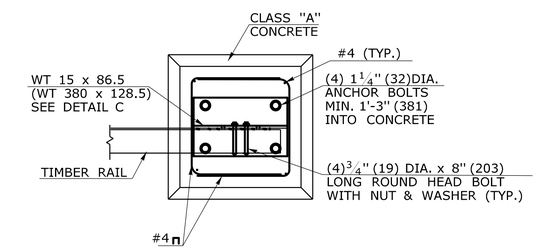

PLAN DETAIL D

PLAN VIEW FOR TYPE I & II ANCHOR

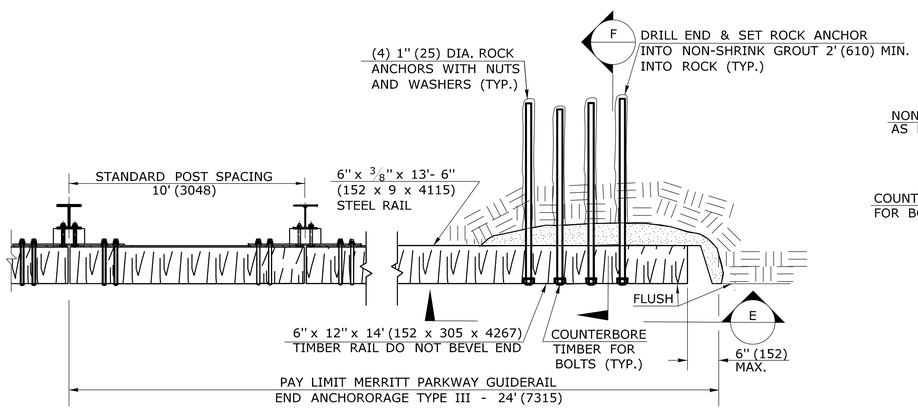

PLAN

MERRITT PARKWAY GUIDERAIL END ANCHORAGE TYPE III (ROCK CUT ANCHOR)

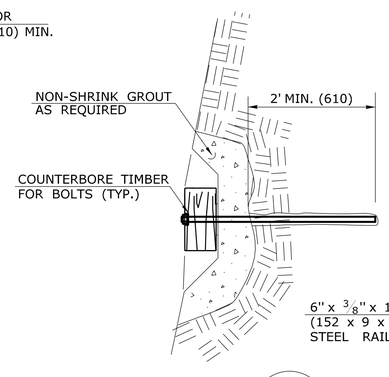

SECTION F

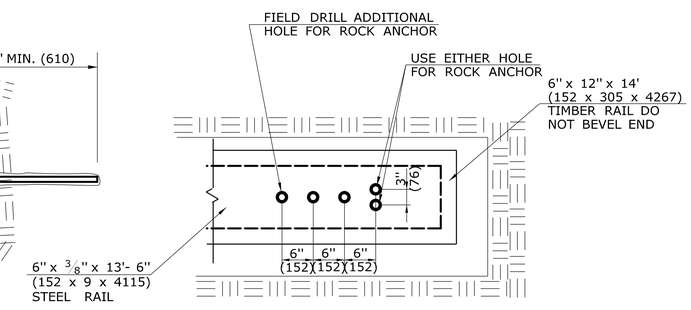

SECTION E

ALL METRIC DIMENSIONS ARE IN MILLIMETERS (mm) UNLESS OTHERWISE NOTED.

REV.	DATE	REVISION DESCRIPTION
-	-	-
-	-	-
-	-	-
-	-	-
-	-	-
-	-	-
-	-	-

THE INFORMATION, INCLUDING ESTIMATED QUANTITIES OF WORK, SHOWN ON THESE SHEETS IS BASED ON LIMITED INVESTIGATIONS BY THE STATE AND IS IN NO WAY WARRANTED TO INDICATE THE CONDITIONS OF ACTUAL QUANTITIES OF WORK WHICH WILL BE REQUIRED.

Plotted Date: 9/30/2010

NOT TO SCALE

STATE OF CONNECTICUT
DEPARTMENT OF TRANSPORTATION

Filename: CTDOT_HIGHWAY_STD.dgn Model: 63 - HW-911_05

SUBMITTED BY: NAME/DATE/TIME: Digitally signed by Leo Fontaine DN: c=US, st=Connecticut, l=Newington, ou=Department of Transportation, email=Leo.Fontaine@ct.gov, cn=State of Connecticut, cn=Leo Fontaine Date: 2010.10.16 15:05:02 -04'00'

APPROVED BY: NAME/DATE/TIME: James H. Norman — Digitally signed by James H. Norman DN: c=US, st=CT, l=Newington, ou=Department of Transportation, email=james.norman@ct.gov, cn=State of Connecticut, cn=James H. Norman Date: 2010.10.18 08:57:00 -04'00'

CTDOT STANDARD SHEET

OFFICE OF ENGINEERING

STANDARD SHEET TITLE: MERRITT PARKWAY GUIDERAIL END ANCHORS

STANDARD SHEET NO.: HW-911_05