GENERAL NOTES:

1. ALTERNATE DESIGNS FOR THE FOLLOWING ITEMS MAY BE SUBSTITUTED TO THE ENGINEER FOR APPROVAL :
   A) UNIT END CONNECTIONS SIMILAR TO DESIGNS SHOWN.
   B) LIFTING KEYS OR OTHER HANDLING DEVICES.
2. TERMINAL END TREATMENTS SHALL BE CONSTRUCTED AS SHOWN ON THE PLANS OR AS DIRECTED BY THE ENGINEER.

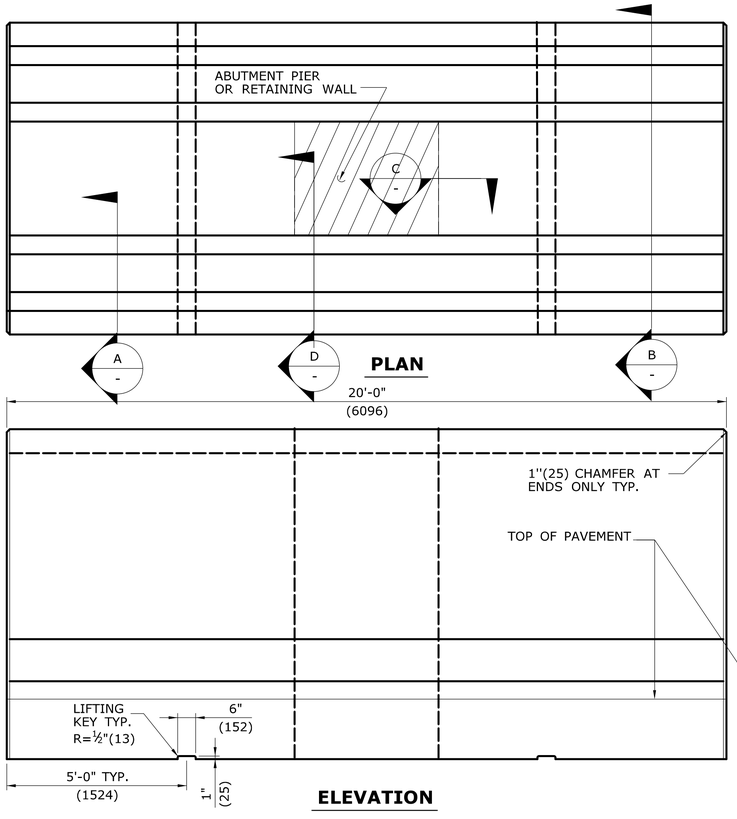

21" x 45"(530x1145) PRECAST CONCRETE BARRIER CURB UNIT

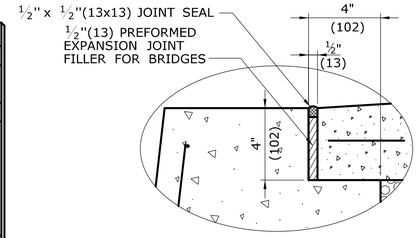

DETAIL A

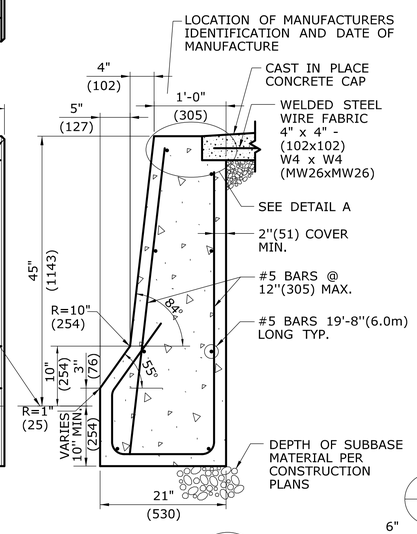

SECTION A

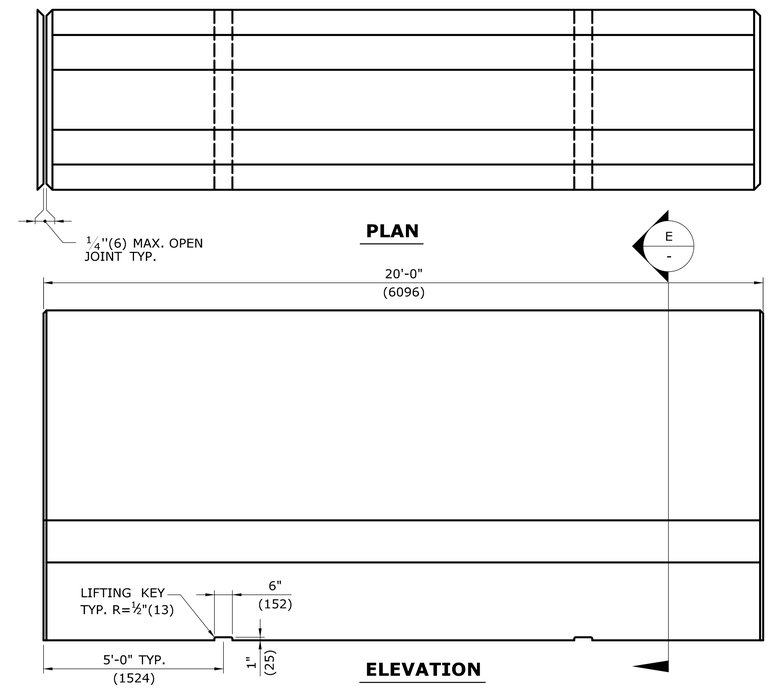

30" x 45"(755 x1145) PRECAST CONCRETE BARRIER CURB UNIT

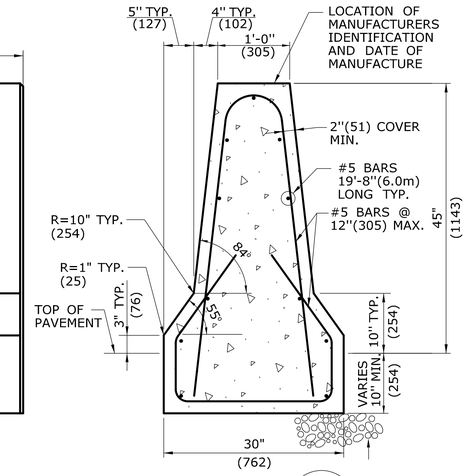

SECTION E

21" x 45"(530x1145) PRECAST CONCRETE BARRIER CURB UNIT

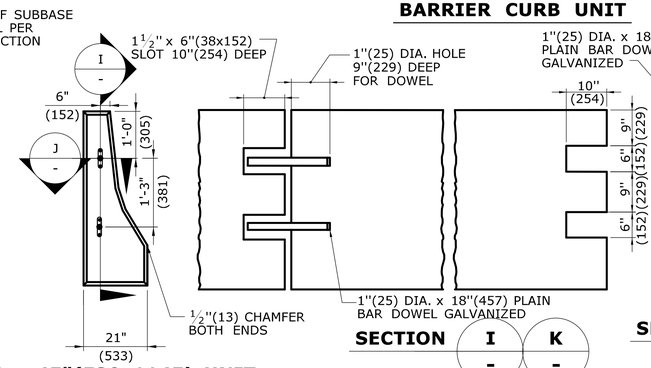

21" x 45"(530x1145) UNIT

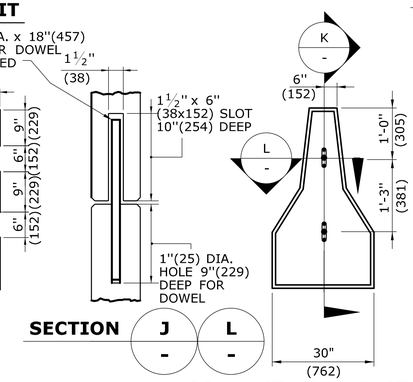

30" x 45"(755x1145) UNIT

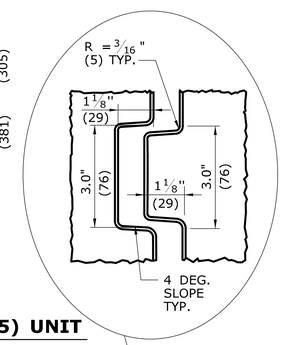

PLAN VIEW 30" x 45" (755x1145) UNIT ALTERNATE CONNECTION AT ENDS

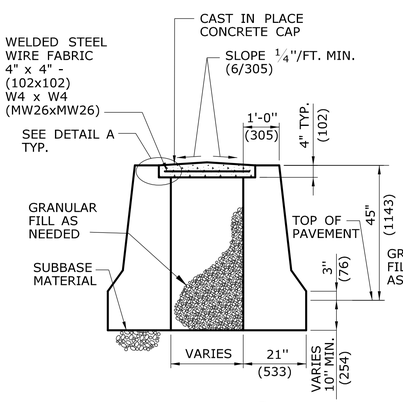

SECTION B

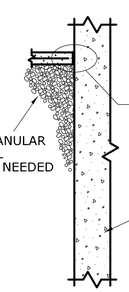

SECTION C

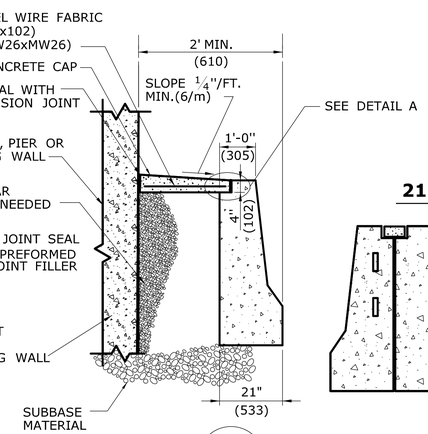

SECTION D

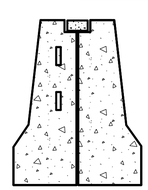

SECTION F

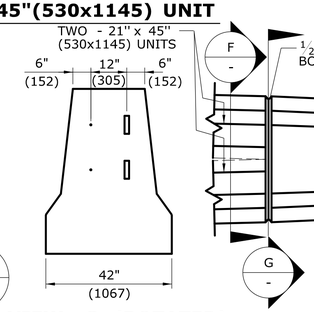

VIEW G (ROTATED)

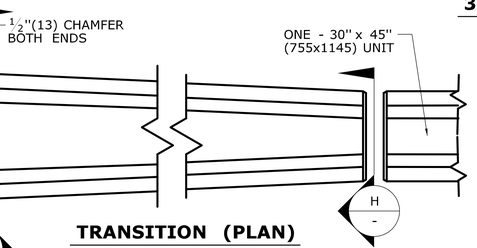

TRANSITION (PLAN)

THIS TRANSITION UNIT SHALL BE USED TO TRANSITION FROM TWO 21" x 45"(530x1145) UNITS TO ONE 30" x 45"(755x1145) UNIT. IT SHALL BE PAID FOR AS A 30" x 45"(755x1145) UNIT IN ITS ENTIRETY. REINFORCING THROUGHOUT SHALL CONFORM TO THAT OF A 30" x 45"(755x1145) UNIT.

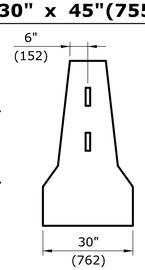

VIEW H (ROTATED)

ALL METRIC DIMENSIONS ARE IN MILLIMETERS (mm) UNLESS OTHERWISE NOTED

REV.	DATE	REVISION DESCRIPTION
1	10/10	REVISE DISTANCE TO PIER
-	-	-
-	-	-
-	-	-
-	-	-
-	-	-

THE INFORMATION, INCLUDING ESTIMATED QUANTITIES OF WORK, SHOWN ON THESE SHEETS IS BASED ON LIMITED INVESTIGATIONS BY THE STATE AND IS IN NO WAY WARRANTED TO INDICATE THE CONDITIONS OF ACTUAL QUANTITIES OF WORK WHICH WILL BE REQUIRED.

Plotted Date: 10/12/2010

NOT TO SCALE

STATE OF CONNECTICUT
DEPARTMENT OF TRANSPORTATION

Filename: CTDOT_HIGHWAY_STD_OCT2010.dgn Model: 27 - HW-821_02

SUBMITTED BY: NAME/DATE/TIME: Digitally signed by Leo Fontaine DN: c=US, st=Connecticut, l=Newington, ou=Department of Transportation, email=Leo.Fontaine@ct.gov, o=State of Connecticut, cn=Leo Fontaine Date: 2010.10.16 14:50:56 -04'00'

APPROVED BY: NAME/DATE/TIME: James H. Norman — Digitally signed by James H. Norman DN: c=US, st=CT, l=Newington, ou=Department of Transportation, email=james.norman@ct.gov, o=State of Connecticut, cn=James H. Norman Date: 2010.10.18 09:05:14 -04'00'

CTDOT
STANDARD SHEET

OFFICE OF ENGINEERING

STANDARD SHEET TITLE:

45" (1145) F- SHAPE PRECAST CONCRETE BARRIER CURB

STANDARD SHEET NO.:

HW-821_02