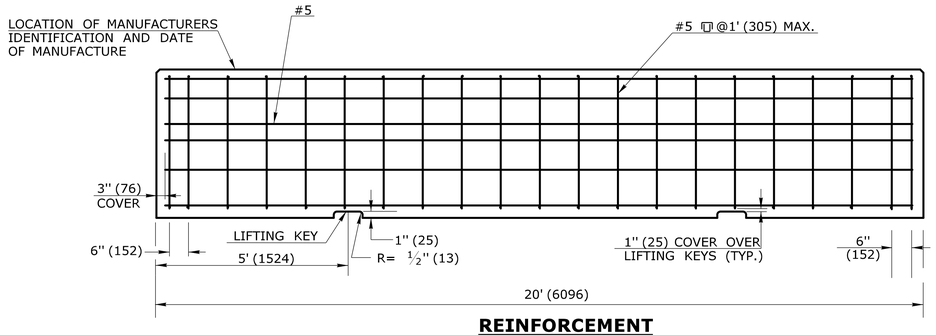

REINFORCEMENT ELEVATION

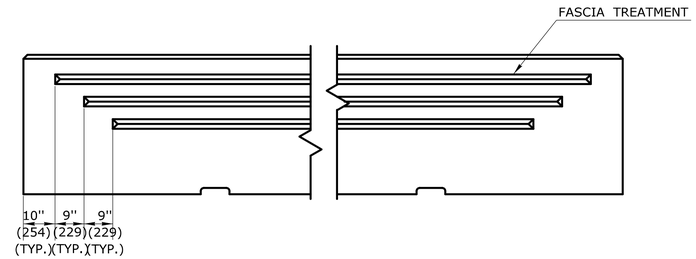

PARTIAL ELEVATION FASCIA TREATMENT

GENERAL NOTES:

1. ALTERNATE DESIGN FOR THE FOLLOWING MAY BE SUBMITTED TO THE ENGINEER FOR APPROVAL:
   a. UNIT END CONNECTIONS SIMILAR TO THE DESIGN SHOWN.
   b. LIFTING HOLES, KEYS OR OTHER HANDLING DEVICES.
2. PRECAST UNITS SHALL BE COATED WITH A PENETRATING SEALER.
3. REINFORCING SHALL BE UNCOATED AND CONFORM TO ASTM A615, GRADE 60.(420)
4. CONCRETE SHALL HAVE A MINIMUM 28 DAY STRENGTH (f'c) = 4,000 PSI. (28 MPa)
5. DOWELS SHALL CONFORM TO ASTM A36 AND BE GALVANIZED IN ACCORDANCE WITH ASTM A123.
6. THE FIRST AND LAST SECTIONS IN A RUN OF MERRITT PARKWAY BARRIER SHALL NOT HAVE EXPOSED PROTRUDING DOWELS.
7. TERMINAL END TREATMENTS SHALL BE CONSTRUCTED AS SHOWN ON THE PLANS OR AS DIRECTED BY THE ENGINEER.

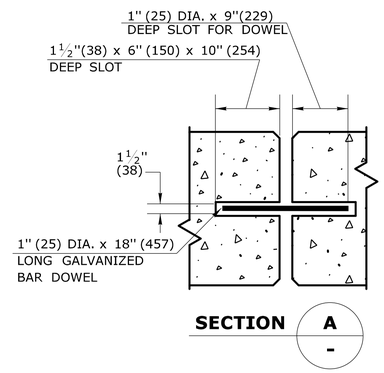

SECTION A -

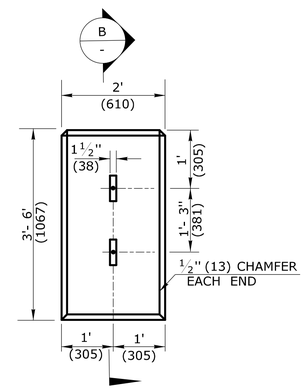

END VIEW

MERRITT PARKWAY MEDIAN BARRIER

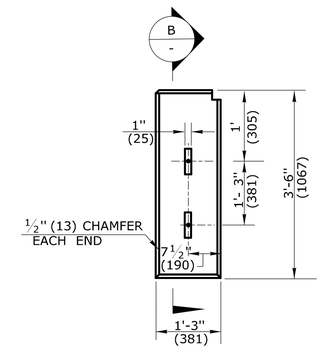

END VIEW

MERRITT PARKWAY ROADSIDE BARRIER

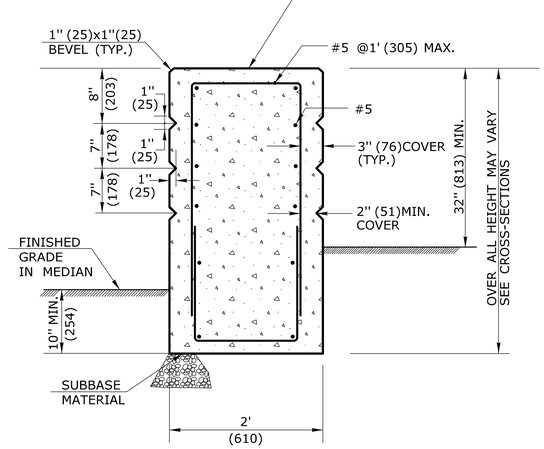

MERRITT PARKWAY MEDIAN BARRIER

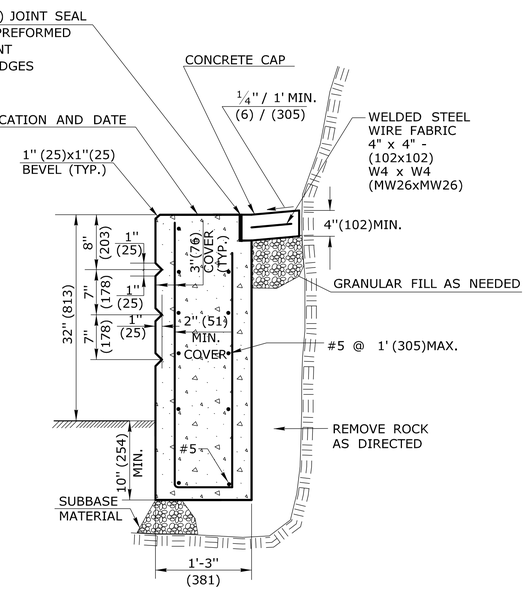

MERRITT PARKWAY ROADSIDE BARRIER

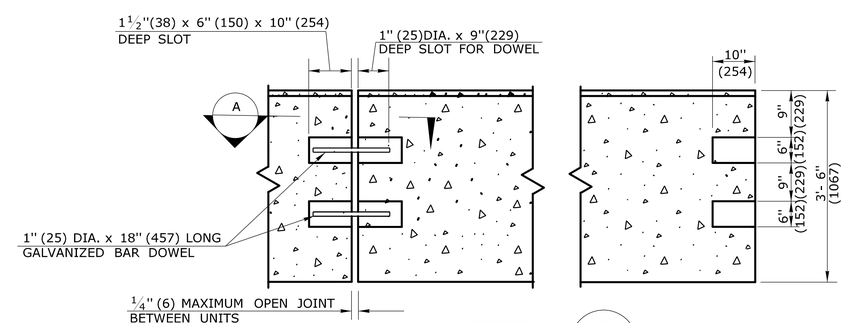

SECTION B -

DOWEL DETAILS AT END OF BARRIER

ALL METRIC DIMENSIONS ARE IN MILLIMETERS (mm) UNLESS OTHERWISE NOTED.

REV.	DATE	REVISION DESCRIPTION
1	6/11	REVISED EMBEDMENT DEPTH
-	-	-
-	-	-
-	-	-
-	-	-
-	-	-

THE INFORMATION, INCLUDING ESTIMATED QUANTITIES OF WORK, SHOWN ON THESE SHEETS IS BASED ON LIMITED INVESTIGATIONS BY THE STATE AND IS IN NO WAY WARRANTED TO INDICATE THE CONDITIONS OF ACTUAL QUANTITIES OF WORK WHICH WILL BE REQUIRED.

Plotted Date: 5/10/2011

NOT TO SCALE

STATE OF CONNECTICUT
DEPARTMENT OF TRANSPORTATION

Filename: CTDOT_HIGHWAY_STD_JUNE2011.dgn Model: 33 - HW-821_04b

SUBMITTED BY: NAME/DATE/TIME:
Digitally signed by Leo Fontaine
DN: c=US, st=Connecticut, l=Newington, ou=Department of Transportation, email=Leo.Fontaine@ct.gov, o=State of Connecticut, cn=Leo Fontaine
Date: 2011.05.18 15:15:51 -04'00'

APPROVED BY: NAME/DATE/TIME:
James H. Norman
2011.06.09 15:10:38 -04'00'

CTDOT STANDARD SHEET

OFFICE OF ENGINEERING

STANDARD SHEET TITLE:
MERRITT PARKWAY 2' (610) WIDE MEDIAN BARRIER AND ROADSIDE BARRIER

STANDARD SHEET NO.:
HW-821_04b