GENERAL NOTES:

1. THIS GRADING PLAN APPLIES TO THE LATEST VERSION OF DEPARTMENT APPROVED PROPRIETARY IMPACT ATTENUATION SYSTEM FLARED TYPES CHOSEN FROM THE DEPARTMENT'S QUALIFIED PRODUCTS LIST.
2. A MINIMUM AREA OF 75' (22.9m) LONG BY THE DESIGNATED CLEAR ZONE WIDTH IMMEDIATELY BEHIND AND BEYOND THE TERMINAL SHOULD BE FREE OF FIXED OBJECTS.
3. SEE CONSTRUCTION PLANS FOR APPROPRIATE OFFSET FOR NOSE OF SYSTEM. THE FLARE IS BASED ON THE OFFSET DESIGNATED ON THE PLANS.
4. WHEN A DRIVEWAY OR INTERSECTING ROAD IS WITHIN 5' OF THE SYSTEM, AND CURB EXISTS REMOVE CURBING UP TO POST 3. REDIRECTION BEGINS AT POST 3.
5. IF A UTILITY POLE OR FIXED OBJECT EXISTS NEAR END OF SYSTEM, THE SYSTEM SHALL BE INSTALLED SUCH THAT THE POINT OF REDIRECTION OCCURS PRIOR TO UTILITY POLE OR OBJECT. IN ADDITION, THE DEFLECTION DISTANCE NOTED IS 4'-3" FOR STANDARD W-BEAM STRONG POST GUIDERAIL INSTALLED @ A 6'-3" POST SPACING AND SHALL BE MAINTAINED. A CLEAR RUN-OUT LENGTH BEHIND THE SYSTEM FREE OF FIXED OBJECTS IS ESSENTIAL TO PROPER FUNCTIONING OF A PROPRIETARY GATING IMPACT ATTENUATION SYSTEM AND SHOULD BE STRIVED FOR.

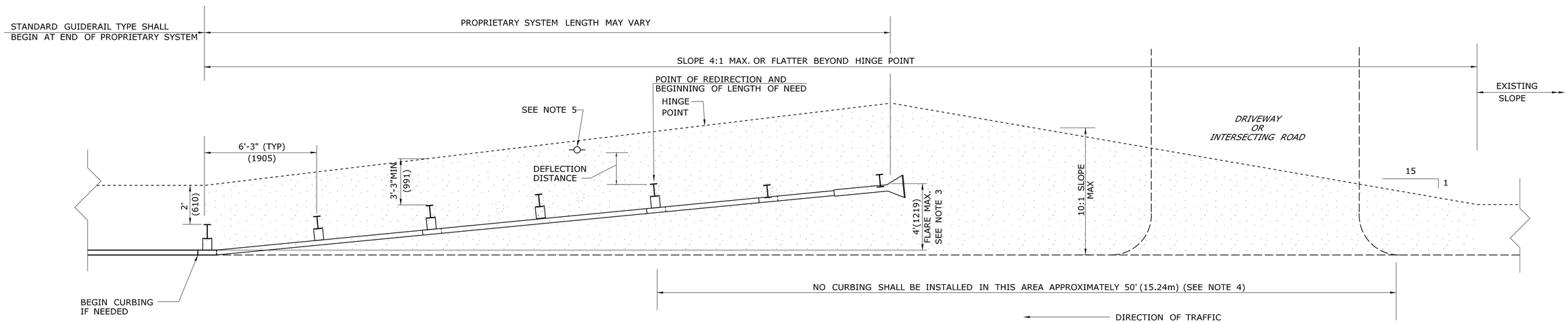

PLAN VIEW FLARE

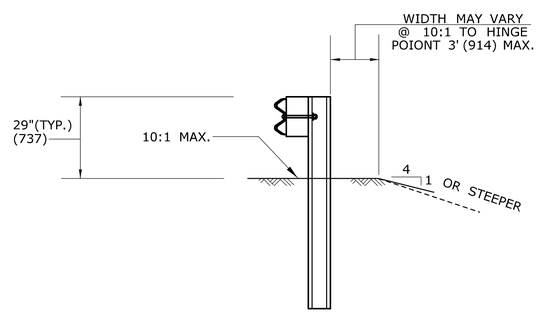

TYPICAL SECTION

ALL METRIC DIMENSIONS ARE IN MILLIMETERS (mm) UNLESS OTHERWISE NOTED.

REV.	DATE	REVISION DESCRIPTION
1	6/11	REVISED LAYOUT W/LENGTH OF NEED
-	-	REVISE NOTE 2 AND ADD NOTE 5. -
-	-	- -
-	-	- -
-	-	- -
-	-	- -

THE INFORMATION, INCLUDING ESTIMATED QUANTITIES OF WORK, SHOWN ON THESE SHEETS IS BASED ON LIMITED INVESTIGATIONS BY THE STATE AND IS IN NO WAY WARRANTED TO INDICATE THE CONDITIONS OF ACTUAL QUANTITIES OF WORK WHICH WILL BE REQUIRED.

Plotted Date: 6/20/2011

NOT TO SCALE

STATE OF CONNECTICUT
DEPARTMENT OF TRANSPORTATION

Filename: CTDOT_HIGHWAY_STD_JUNE2011.dgn Model: 73 - HW-1800_01

SUBMITTED BY: NAME/DATE/TIME:
Digitally signed by Leo Fontaine
DN: c=US, st=Connecticut, l=Newington, ou=Department of Transportation, email=Leo.Fontaine@ct.gov, o=State of Connecticut, cn=Leo Fontaine
Date: 2011.06.20 14:53:15 -04'00'

APPROVED BY: NAME/DATE/TIME:
James H. Norman
2011.06.20 14:40:45 -04'00'

CTDOT
STANDARD SHEET

OFFICE OF ENGINEERING

STANDARD SHEET TITLE:
GRADING PLAN FOR TYPE B IMPACT ATTENUATION SYSTEM (FLARED)

STANDARD SHEET NO.:
HW-1800_01