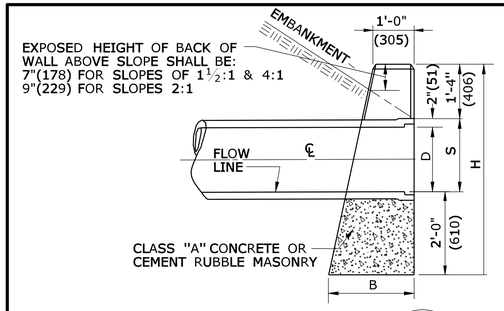

SECTION A

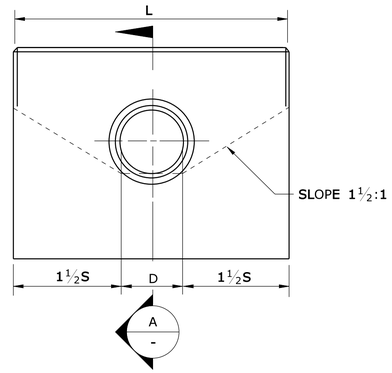

FRONT ELEVATION

H = TOTAL HEIGHT OF ENDWALL

B = BASE

D = INSIDE DIAMETER OF PIPE

S = HEIGHT OF SLOPE ABOVE FLOW LINE AT FACE OF WALL = D+2"(51) MIN.

L = LENGTH OF WALL = 3S+D

ALL EDGES OF EXPOSED SURFACES SHALL BE CHAMFERED APPROXIMATELY ONE INCH (25mm).

DIMENSIONS AND QUANTITIES FOR ONE ENDWALL BASED ON S = D + 2" (51 mm)						
D	S	H	L	BATTER	B	VOL.
IN.(mm)	FT.& IN.(mm)	FT.& IN.(mm)	FT.& IN.(mm)	FT.& IN.(mm)	FT.& IN.(mm)	CU.YD.(m^3)
12"(305)	1'-2"(356)	4'-6"(1372)	4'-6"(1372)	2½"(5:1)	1'-11¼"(590)	1.10(.8)
15"(381)	1'-5"(432)	4'-9"(1448)	5'-6"(1676)	2½"(5:1)	1'-11⅞"(606)	1.45(1.0)
18"(457)	1'-8"(508)	5'-0"(1524)	6'-6"(1981)	2½"(5:1)	2'-0½"(622)	1.83(1.4)
24"(610)	2'-2"(660)	5'-6"(1676)	8'-6"(2591)	2½"(5:1)	2'-1¾"(654)	2.72(2.1)
30"(762)	2'-8"(813)	6'-0"(1829)	10'-6"(3200)	2½"(5:1)	2'-3"(686)	3.79(2.7)
36"(914)	3'-2"(965)	6'-6"(1981)	12'-6"(3810)	3"(4:1)	2'-7½"(790)	5.45(4.2)
42"(1067)	3'-8"(1118)	7'-0"(2134)	14'-6"(4420)	3"(4:1)	2'-9"(838)	6.40(4.9)*
48"(1219)	4'-2"(1270)	7'-6"(2286)	16'-6"(5029)	3"(4:1)	2'-10½"(876)	8.00(6.1)*

* VOLUME IS BASED ON D MINUS WALL THICKNESS AT ℄ OF PIPE

STANDARD ENDWALL

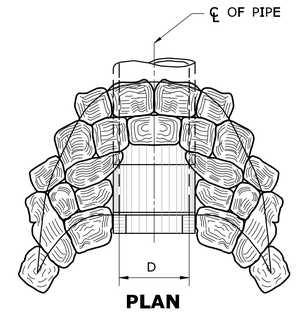

PLAN

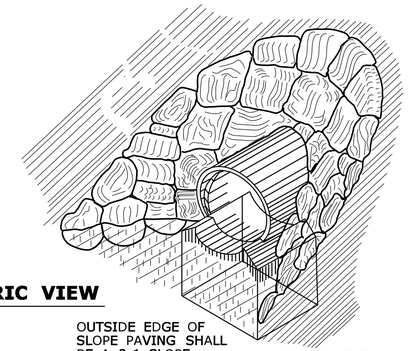

ISOMETRIC VIEW

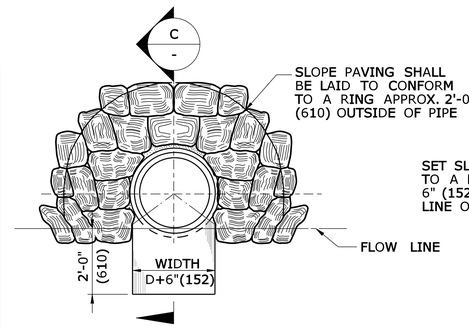

FRONT ELEVATION

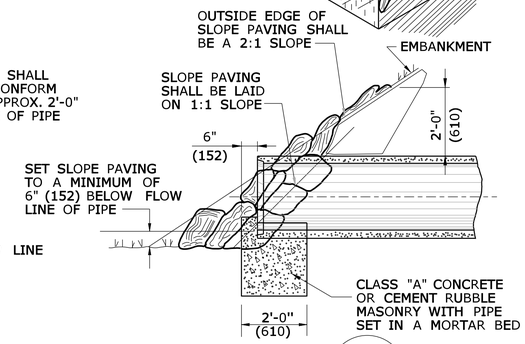

SECTION C

FOOTING & SLOPE PAVING FOR PIPES 15"(381) TO 30"(762) DIAMETER

GENERAL NOTES:

1. ALL CONSTRUCTION DIMENSIONS ARE NOMINAL. WHEN ONE ENDWALL IS USED FOR TWO PIPES, THE DIMENSIONS OF THE ENDWALL SHALL CONFORM TO THAT WHICH IS REQUIRED FOR THE LARGER PIPE, EXCEPT THE DIMENSION "L" SHALL BE INCREASED BY THE OUTSIDE DIAMETER OF THE SMALLER PIPE PLUS ONE FOOT.
2. THESE ENDWALLS SHALL ONLY BE USED AT LOCATIONS WHERE THEY ARE OUTSIDE THE DESIGN CLEAR ZONE.
3. COST OF REINFORCING BARS SHALL BE INCLUDED IN THE CONTRACT UNIT PRICE FOR CLASS "A" CONCRETE.
4. ALL REINFORCING BARS SHALL HAVE 3" (76) COVER MIN.

TABLE WITH QUANTITIES		
D	VOLUME OF FOOTING	SLOPE * PAVING
INS(mm)	C.Y.(m^3)	S.Y.(m^2)
15"(375-400)	0.26(0.20)	3.2(2.7)
18"(457)	0.30(0.23)	3.5(2.9)
24"(610)	0.37(0.28)	4.0(3.3)
30"(750-800)	0.37(0.34)	4.6(3.8)

* APPROXIMATE QUANTITY FOR MINIMUM CONDITION

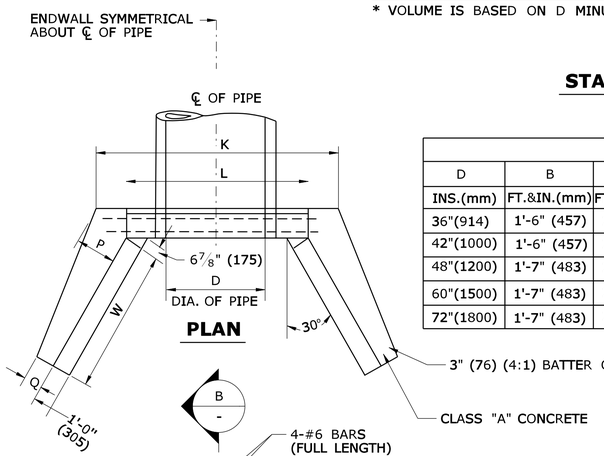

PLAN

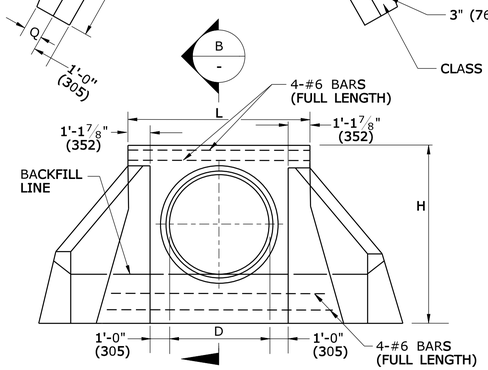

FRONT ELEVATION

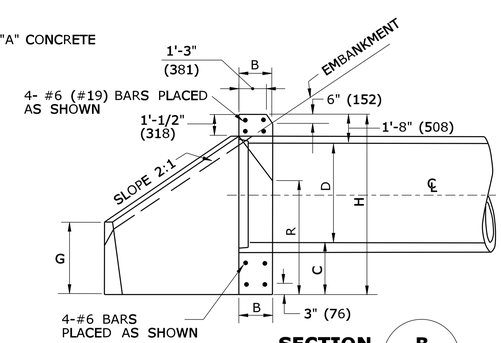

SECTION B

STANDARD WING TYPE ENDWALL

REINFORCEMENT SHALL BE USED FOR 48" (1219) DIA. PIPE AND UP

DIMENSIONS AND QUANTITIES FOR ONE WING TYPE ENDWALL											
D	B	C	G	H	K	L	P	Q	R	W	VOL
INS.(mm)	FT.&IN.(mm)	FT.&IN.(mm)	FT.&IN.(mm)	FT.&IN.(mm)	FT.&IN.(mm)	FT.&IN.(mm)	FT.&IN.(mm)	FT.&IN.(mm)	FT.&IN.(mm)	FT.&IN.(mm)	CU.YD.(m^3)
36"(914)	1'-6" (457)	2'-0"(610)	3'-3"(991)	6'-8"(2032)	9'-1½"(2781)	7'-3¾"(2229)	1'-4⅞"(430)	0'-9¾"(248)	3'-4⅞"(1038)	5'-5¾"(1670)	5.87(4.5)
42"(1000)	1'-6" (457)	2'-0"(610)	3'-3"(991)	7'-2"(2184)	9'-10½"(3010)	7'-9¾"(2381)	1'-6⅜"(470)	0'-9¾"(248)	3'-10½"(1181)	6'-7¾"(2026)	6.67(5.1)
48"(1200)	1'-7" (483)	2'-6"(762)	3'-9"(1143)	8'-2"(2489)	10'-10"(3302)	8'-3¾"(2534)	1'-9⅜"(540)	0'-11¼"(286)	4'-9"(1448)	7'-9½"(2375)	9.11(7.0)
60"(1500)	1'-7" (483)	2'-6"(762)	3'-9"(1143)	9'-2"(2794)	12'-4½"(3772)	9'-3¾"(2838)	2'-0⅜"(620)	0'-11¼"(286)	5'-9"(1753)	10'-1¼"(3080)	12.43(9.5)
72"(1800)	1'-7" (483)	2'-6"(762)	3'-9"(1143)	10'-2"(3099)	13'-10¾"(4235)	10'-3¾(3143)	2'-3⅜"(690)	0'-11¼"(286)	6'-9"(2057)	12'-5"(3785)	16.30(12.5)

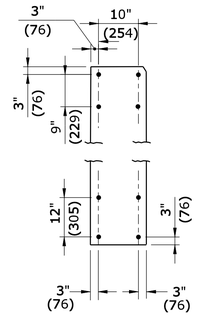

BAR SPACING DETAIL

TABLE WITH QUANTITIES		
D	VOLUME OF FOOTING	SLOPE * PAVING
INS(mm)	C.Y.(m^3)	S.Y.(m^2)
36"(914)	1.55(1.2)	4.7(3.9)
42"(1000-1050)	1.69(1.3)	5.4(4.5)
48"(1200)	1.82(1.4)	6.1(5.1)
60"(1500-1600)	2.08(1.6)	7.6(6.4)
72"(1829)	2.34(1.8)	9.3(7.8)

* APPROXIMATE QUANTITY FOR MINIMUM CONDITION

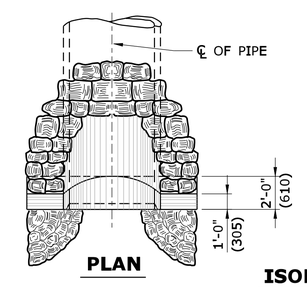

PLAN

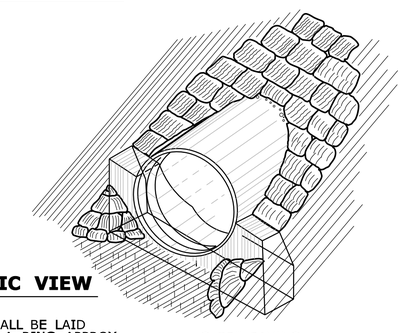

ISOMETRIC VIEW

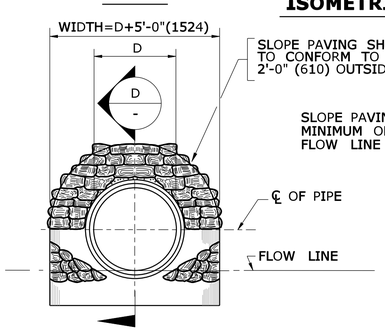

FRONT ELEVATION

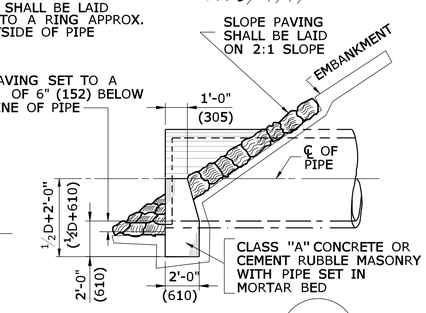

SECTION D

FOOTING & SLOPE PAVING FOR PIPES 36"(914) TO 72"(1829) DIAMETER

ALL METRIC DIMENSIONS ARE IN MILLIMETERS (mm) UNLESS OTHERWISE NOTED

REV.	DATE	REVISION DESCRIPTION
-	-	-
-	-	-
-	-	-
-	-	-
-	-	-
-	-	-

THE INFORMATION, INCLUDING ESTIMATED QUANTITIES OF WORK, SHOWN ON THESE SHEETS IS BASED ON LIMITED INVESTIGATIONS BY THE STATE AND IS IN NO WAY WARRANTED TO INDICATE THE CONDITIONS OF ACTUAL QUANTITIES OF WORK WHICH WILL BE REQUIRED.

Plotted Date: 9/11/2009

NOT TO SCALE

STATE OF CONNECTICUT
DEPARTMENT OF TRANSPORTATION

Filename: CTDOT_HIGHWAY_STD.dgn Model: HW-506_01

SUBMITTED BY: NAME/DATE/TIME: Timothy M. Wilson 2009.09.16 11:07:05 -04'00'

APPROVED BY: NAME/DATE/TIME: James H. Norman 2009.09.18 14:15:37 -04'00'

CTDOT STANDARD SHEET

OFFICE OF ENGINEERING

STANDARD SHEET TITLE:

ENDWALLS, SLOPE PAVED INLETS AND OUTLETS

STANDARD SHEET NO.:

HW-506_01