TYPE "L" ENDWALL DIMENSIONS				
D INS. / (mm)	H INS. / (mm)	½L INS. / (mm)	BATTER INS / FT	B INS. / (mm)
12" (305)	4'-6"(1372)	2'-3"(686)	2½"(5:1)	1'-11¼"(590)
15"(375-400)	4'-9"(1448)	2'-9"(838)	2½"(5:1)	1'-11⅞"(606)
18"(457)	5'-0"(1524)	3'-3"(991)	2½"(5:1)	2'-0½"(622)
24"(610)	5'-6"(1676)	4'-3"(1295)	2½"(5:1)	2'-1¾"(654)
30"(750-800)	6'-0"(1829)	5'-3"(1600)	2½"(5:1)	2'-3"(686)
36"(914)	6'-6"(1981)	6'-3"(1905)	3"(4:1)	2'-7½"(800)
42"(1067)	7'-0"(2134)	7'-3"(2210)	3"(4:1)	2'-9"(838)
48"(1219)	7'-6"(2286)	8'-3"(2515)	3"(4:1)	2'-10½"(876)

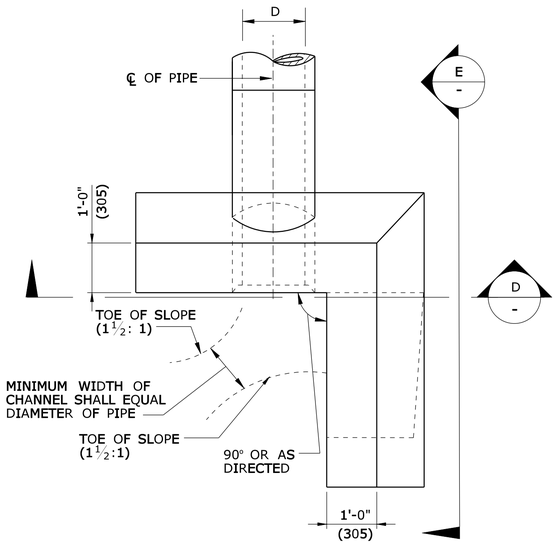

PLAN

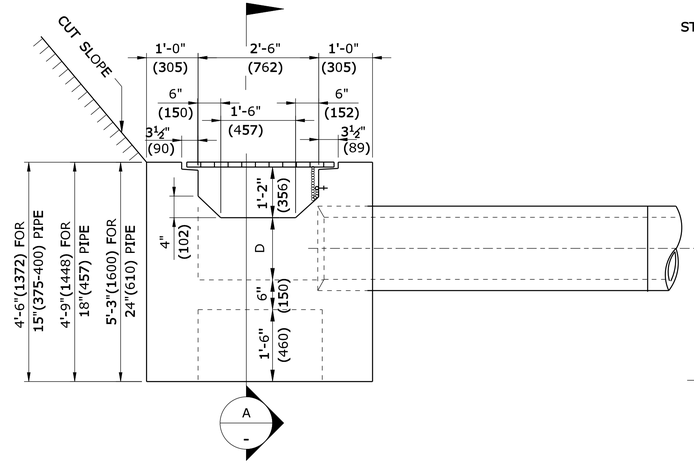

SIDE ELEVATION

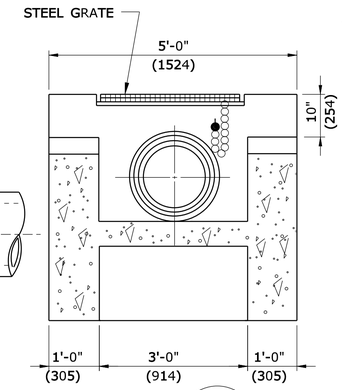

SECTION A

GENERAL NOTES:

1. THESE ENDWALLS SHALL ONLY BE USED AT LOCATIONS WHERE THEY ARE OUTSIDE THE DESIGN CLEAR ZONE.
2. FOR ALL TYPE "D-G" & "L" ENDWALLS, ALL EDGES OF EXPOSED SURFACES SHALL BE CHAMFERED APPROXIMATELY 1" (25).
3. ALL CONSTRUCTION DIMENSIONS ARE NOMINAL.
4. WHEN CONSTRUCTING TYPE "D-G" ENDWALLS, CARE MUST BE TAKEN TO HAVE THE SHORT AXIS OF THE WELL OPENING PARALLEL TO THE LONG AXIS OF THE GRATE IN ORDER TO ALLOW THE BEARING BARS TO PERFORM THEIR FUNCTION PROPERLY.
5. TYPE "D-G" AND "L" ENDWALLS SHALL BE CONSTRUCTED OF CLASS "A" CONCRETE OR CEMENT RUBBLE MASONRY.
6. STEEL GRATING SHALL BE MECHANICALLY LOCKED UNDER HYDRAULIC PRESSURE, WELDED, OR ELECTROFORGED. APPROXIMATE WEIGHT = 45 LBS. (20kg) THE GRATE SHALL BE GALVANIZED IN ACCORDANCE WITH M.06.03. ALL WELDING SHALL BE PERFORMED IN ACCORDANCE WITH AWS D1.1 - STRUCTURAL WELDING CODE.
7. ALL REINFORCING BARS SHALL HAVE A 3" (76) MIN. COVER.
8. STEEL GRATE SHALL CONFORM TO ASTM A-36 STEEL.
9. D = INSIDE DIAMETER OF PIPE.

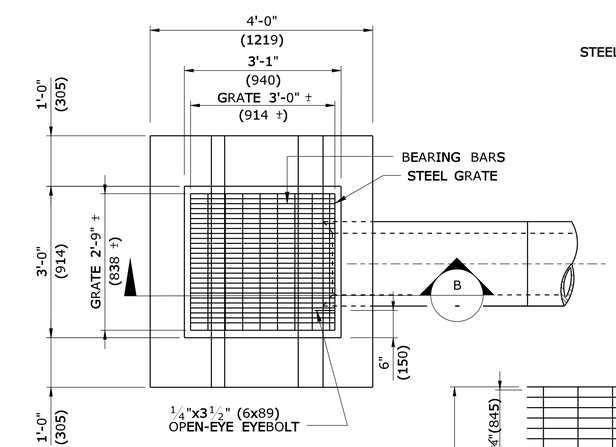

PLAN

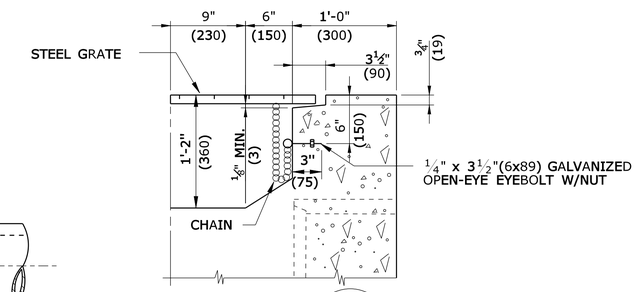

SECTION B

HALF SECTION SHOWING LOCATION OF CHAIN & EYEBOLT

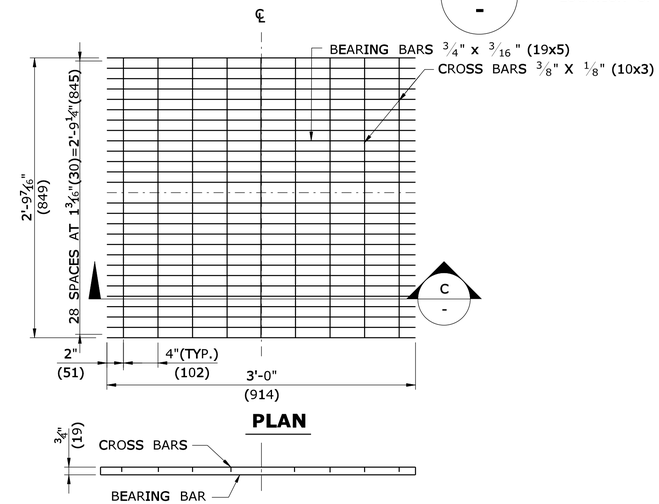

PLAN

SECTION C
STEEL GRATE

TYPE "D-G" ENDWALL DIMENSIONS	
PIPE DIAMETER IN. (mm)	CLASS "A" CONCRETE VOLUME CY(m^3)
15"(375-400)	2.44(1.9)
18"(457)	2.57(2.0)
24"(610)	2.85(2.2)

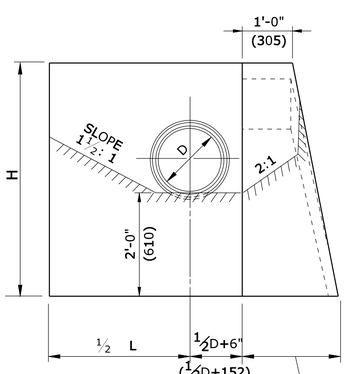

SECTION D

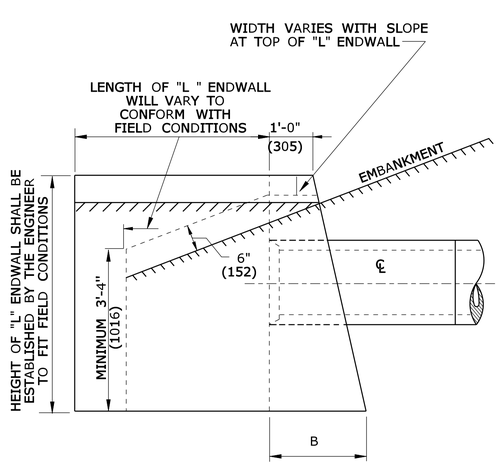

SECTION E

TYPE "L" ENDWALL

TYPE "D-G" ENDWALL

ALL METRIC DIMENSIONS ARE IN MILLIMETERS (mm) UNLESS OTHERWISE NOTED

REV.	DATE	REVISION DESCRIPTION
-	-	-
-	-	-
-	-	-
-	-	-
-	-	-
-	-	-

THE INFORMATION, INCLUDING ESTIMATED QUANTITIES OF WORK, SHOWN ON THESE SHEETS IS BASED ON LIMITED INVESTIGATIONS BY THE STATE AND IS IN NO WAY WARRANTED TO INDICATE THE CONDITIONS OF ACTUAL QUANTITIES OF WORK WHICH WILL BE REQUIRED.

Plotted Date: 9/11/2009

NOT TO SCALE

STATE OF CONNECTICUT
DEPARTMENT OF TRANSPORTATION

Filename: CTDOT_HIGHWAY_STD.dgn Model: HW-506_02

SUBMITTED BY: NAME/DATE/TIME: Timothy M. Wilson 2009.09.16 11:08:30 -04'00'

APPROVED BY: NAME/DATE/TIME: James H. Norman 2009.09.18 14:18:28 -04'00'

CTDOT STANDARD SHEET

OFFICE OF ENGINEERING

STANDARD SHEET TITLE: TYPE "D-G" & "L" ENDWALLS

STANDARD SHEET NO.: HW-506_02