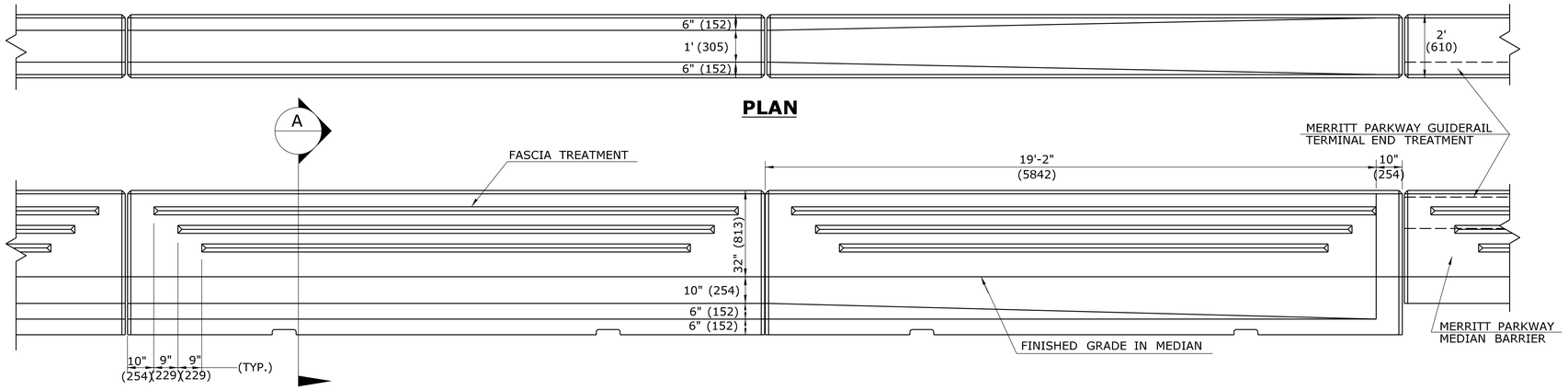

PLAN

MERRITT PARKWAY MEDIAN BARRIER 1' (0.3 m) WIDE

MERRITT PARKWAY MEDIAN BARRIER TRANSITION SECTION**

** MERRITT PARKWAY MEDIAN BARRIER TRANSITION SECTION SHALL BE PAID FOR UNDER THE ITEM "MERRITT PARKWAY MEDIAN BARRIER"

GENERAL NOTES:

1. ALTERNATE DESIGNS FOR THE FOLLOWING MAY BE SUBMITTED TO THE ENGINEER FOR APPROVAL :
   1. UNIT END CONNECTIONS SIMILAR TO THE DESIGN SHOWN.
   2. LIFTING HOLES, KEYS OR OTHER HANDLING DEVICES.
2. TERMINAL END TREATMENTS SHALL BE CONSTRUCTED AS SHOWN ON THE PLANS OR AS DIRECTED BY THE ENGINEER.
3. PRECAST UNITS SHALL BE COATED WITH A PENETRATING SEALER.
4. REINFORCING SHALL BE UNCOATED AND CONFORM TO ASTM A615M, GRADE 60 (420).
5. CONCRETE SHALL HAVE A MINIMUM 28 DAY STRENGTH (f'c = 4,000psi (28 MPa).
6. DOWELS SHALL CONFORM TO ASTM A36 AND BE GALVANIZED IN ACCCORDANCE WITH ASTM A123. THE FIRST AND LAST SECTIONS IN A RUN OF MERRITT PARKWAY BARRIER SHALL NOT HAVE EXPOSED PROTRUDING DOWELS.

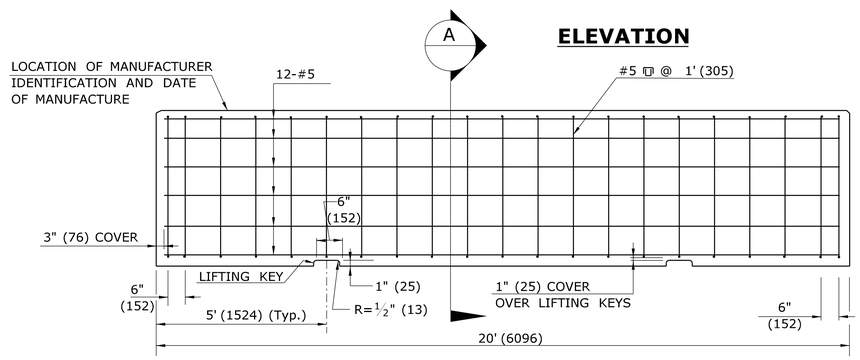

ELEVATION

REINFORCEMENT ELEVATION

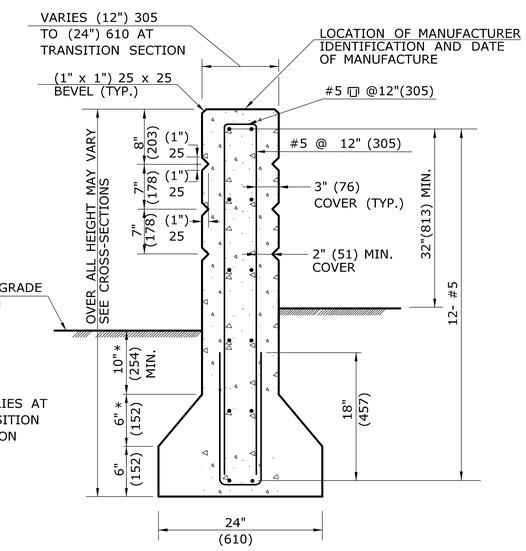

REINFORCEMENT

SECTION A

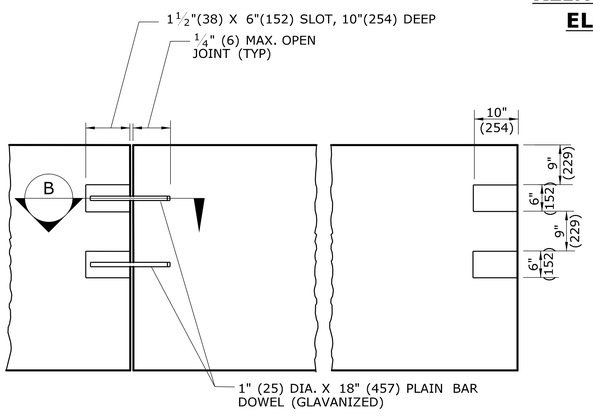

SECTION C

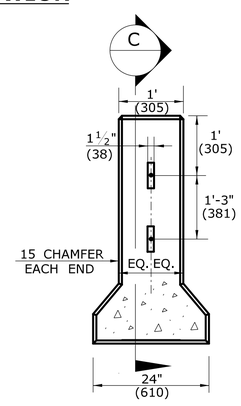

END

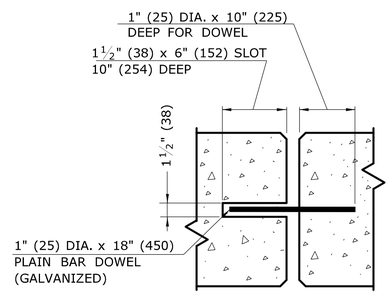

SECTION B

DOWEL DETAILS AT END OF BARRIER

ALL METRIC DIMENSIONS ARE IN MILLIMETERS (mm) UNLESS OTHERWISE NOTED.

REV.	DATE	REVISION DESCRIPTION
1	6/11	REVISED EMBEDMENT DEPTH
-	-	-
-	-	-
-	-	-
-	-	-
-	-	-
-	-	-

THE INFORMATION, INCLUDING ESTIMATED QUANTITIES OF WORK, SHOWN ON THESE SHEETS IS BASED ON LIMITED INVESTIGATIONS BY THE STATE AND IS IN NO WAY WARRANTED TO INDICATE THE CONDITIONS OF ACTUAL QUANTITIES OF WORK WHICH WILL BE REQUIRED.

Plotted Date: 5/10/2011

NOT TO SCALE

STATE OF CONNECTICUT
DEPARTMENT OF TRANSPORTATION

Filename: CTDOT_HIGHWAY_STD_JUNE2011.dgn Model: 32 - HW-821_04a

SUBMITTED BY: NAME/DATE/TIME: Digitally signed by Leo Fontaine DN: c=US, st=Connecticut, l=Newington, ou=Department of Transportation, email=Leo.Fontaine@ct.gov, o=State of Connecticut, cn=Leo Fontaine Date: 2011.05.18 11:50:42 -04'00'

APPROVED BY: NAME/DATE/TIME: James H. Norman 2011.06.09 15:10:15 -04'00'

CTDOT
STANDARD SHEET

OFFICE OF ENGINEERING

STANDARD SHEET TITLE:

MERRITT PARKWAY NARROW MEDIAN BARRIER

STANDARD SHEET NO.:

HW-821_04a