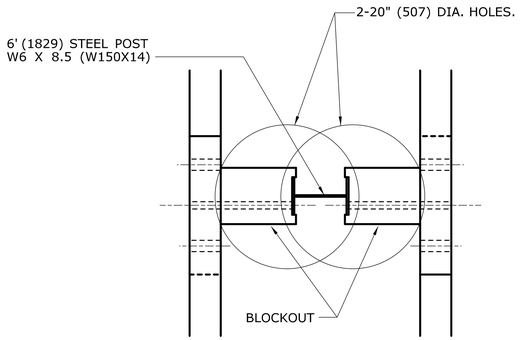

PLAN
CONDITION 1
(SEE NOTE 6)

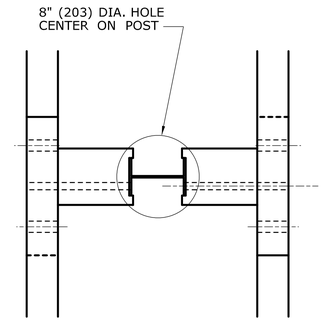

PLAN
CONDITION 2
(SEE NOTE 6)

DRILLING IN ROCK FOR GUIDERAIL POSTS

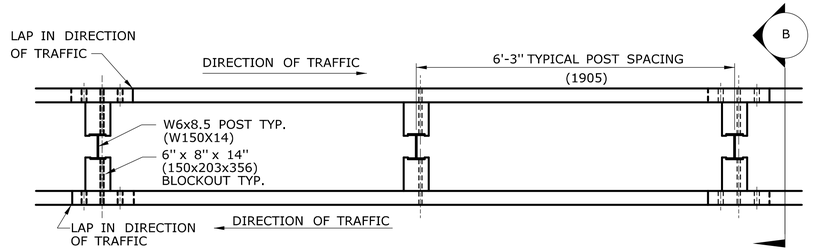

PLAN

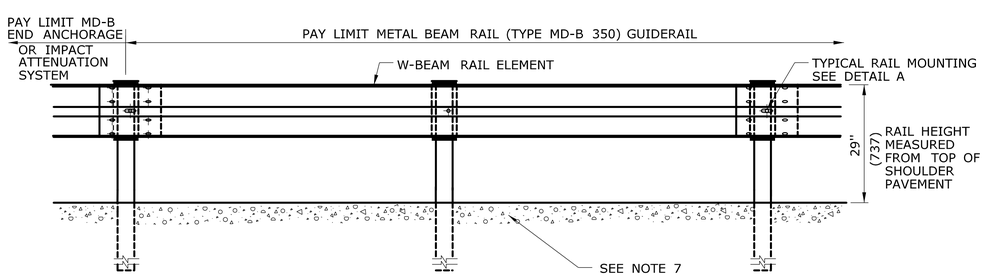

ELEVATION
METAL BEAM RAIL (TYPE MD-B 350)

GENERAL NOTES:

1. SEE SHEET HW-910_01 FOR HARDWARE AND DELINEATOR DETAILS.
2. MAXIMUM DESIGN DEFLECTION FOR MD-B 350 GUIDERAIL AT THE STANDARD POST SPACING OF 6'-3"(1905) IS 2' (610). DEFLECTION REQUIREMENT IS MEASURED FROM THE BACK OF POST TO THE FACE OF OBJECT.
3. FOR CURVES WITH RADII OF 150'(45.7m) OR LESS, ALL RAIL ELEMENTS SHALL BE SHOP FABRICATED TO THE PROPER RADIUS AND GALVANIZED AFTER FABRICATION. RADIUS RAIL WHEN REQUIRED AND NOTED ON THE PLANS, IS INCLUDED IN THE PAY ITEM FOR GUIDERAIL.
4. W-BEAM GUIDERAIL MAY BE PLACED 1' (305) OR MORE FROM THE EDGE OF PAVEMENT ONLY ON SLOPES 10:1 OR FLATTER AND WITHOUT CURBING. IF THE RAIL IS INSTALLED WITHIN 2'(610) OF THE EDGE OF PAVEMENT, THE RAIL HEIGHT IS MEASURED FROM THE SHOULDER SLOPE EXTENDED TO THE RAIL. IF THE RAIL IS INSTALLED BEYOND 2' (610) FROM THE EDGE OF PAVEMENT, THE RAIL HEIGHT IS MEASURED FROM THE GROUND DIRECTLY BELOW THE RAIL.
5. MD-B 350 DOES NOT REQUIRE 10 GAUGE RAIL ELEMENTS.
6. 2-20" (507) DIA. EXCAVATED HOLES SHALL BE BACK FILLED WITH SUITABLE MATERIAL, OR GRANULAR FILL COMPACTED IN 6" (150) LIFTS BEFORE DRIVING POST OR POSTS MAY BE SET IN EXCAVATED HOLE AND BACK FILLED WITH CONTROLLED LOW STRENGTH MATERIAL (CLSM). 8" (203) DIA. HOLE SHALL BE BACK FILLED WITH SUITABLE MATERIAL.
7. AS DIRECTED BY THE ENGINEER AND WHERE PAVEMENT FOR RAILING IS NOT BEING INSTALLED, A 6" MIN. DEPTH OF PROCESSED AGGREGATE SHALL BE INSTALLED A MINIMUM OF 2' (610) WIDE UNDER GUIDERAIL CENTERED ON THE POST AND COMPACTED IN 6" (150) LIFTS.
8. MINIMUM RAIL HEIGHT FOR NEW CONSTRUCTION SHALL BE 29" (737) ± 1" (25).

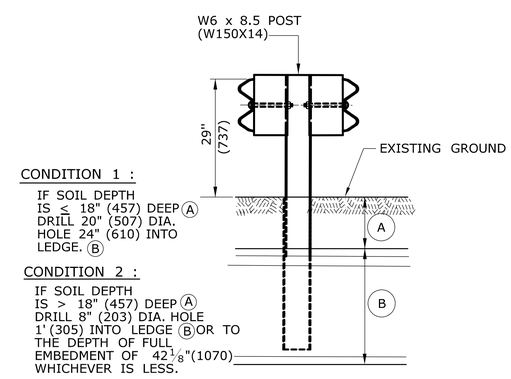

CONDITION 1 :
IF SOIL DEPTH IS ≤ 18" (457) DEEP (A) DRILL 20" (507) DIA. HOLE 24" (610) INTO LEDGE. (B)

CONDITION 2 :
IF SOIL DEPTH IS > 18" (457) DEEP (A) DRILL 8" (203) DIA. HOLE 1' (305) INTO LEDGE (B) OR TO THE DEPTH OF FULL EMBEDMENT OF $42\frac{1}{8}$"(1070) WHICHEVER IS LESS.

SECTION B / -

NOTE: REFER TO DESIGN PLANS FOR LOCATION OF GUIDERAIL IN THE MEDIAN WITH OR WITHOUT CURBING.

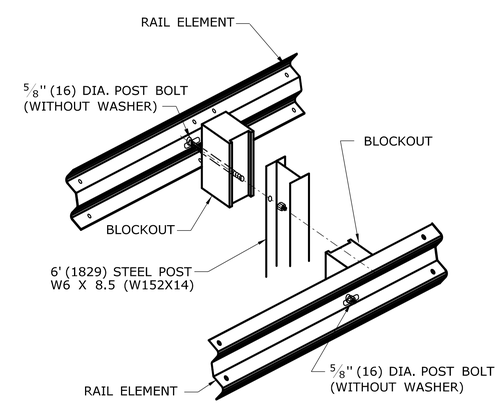

DETAIL A
RAIL MOUNTING

ALL METRIC DIMENSIONS ARE IN MILLIMETERS (mm) UNLESS OTHERWISE NOTED.

REV.	DATE	REVISION DESCRIPTION
1	6/11	REVISED NOTE 7 FOR USE OF PROCESSED AGGREGATE -
-	-	AND REMOVED NOTE 4 USE OF WEATHERING STEEL -
-	-	- -
-	-	- -
-	-	- -
-	-	- -

THE INFORMATION, INCLUDING ESTIMATED QUANTITIES OF WORK, SHOWN ON THESE SHEETS IS BASED ON LIMITED INVESTIGATIONS BY THE STATE AND IS IN NO WAY WARRANTED TO INDICATE THE CONDITIONS OF ACTUAL QUANTITIES OF WORK WHICH WILL BE REQUIRED.

Plotted Date: 5/10/2011

NOT TO SCALE

STATE OF CONNECTICUT
DEPARTMENT OF TRANSPORTATION

Filename: CTDOT_HIGHWAY_STD_JUNE2011.dgn Model: 38- HW-910_03

SUBMITTED BY: NAME/DATE/TIME:
Digitally signed by Leo Fontaine
DN: c=US, o=Connecticut, l=Newington, ou=Department of Transportation, email=Leo.Fontaine@ct.gov, cn=State of Connecticut, cn=Leo Fontaine
Date: 2011.06.09 15:25:02 -04'00'

APPROVED BY: NAME/DATE/TIME:
James H. Norman
2011.06.09 15:13:11 -04'00'

CTDOT
STANDARD SHEET

OFFICE OF ENGINEERING

STANDARD SHEET TITLE:
METAL BEAM RAIL (TYPE MD-B 350)

STANDARD SHEET NO.:
HW-910_03