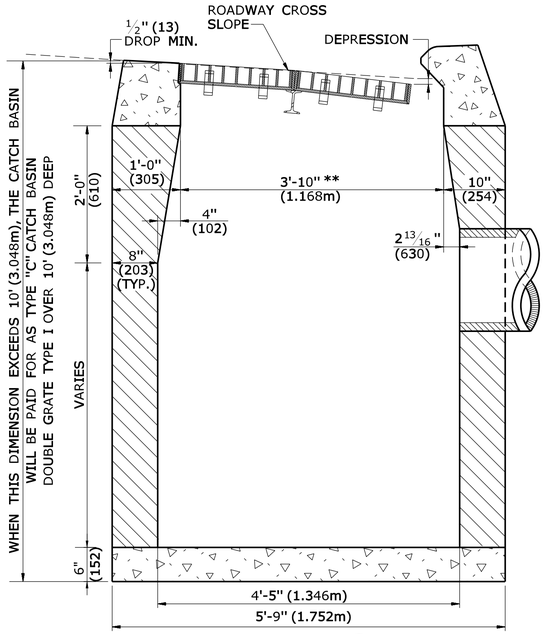

SECTION B

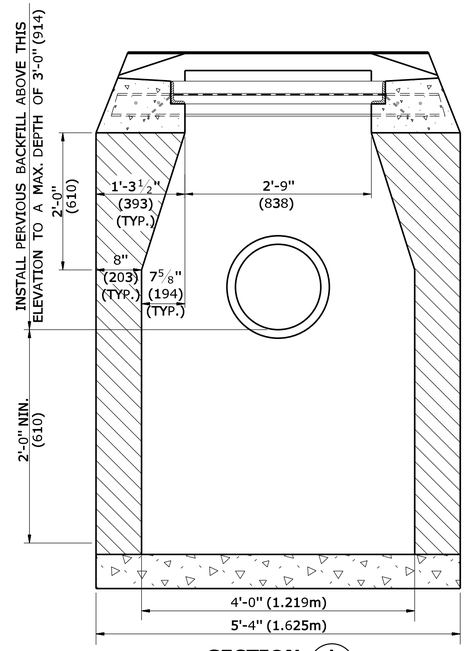

SECTION A

TYPE "C" CATCH BASIN DOUBLE GRATE - TYPE I

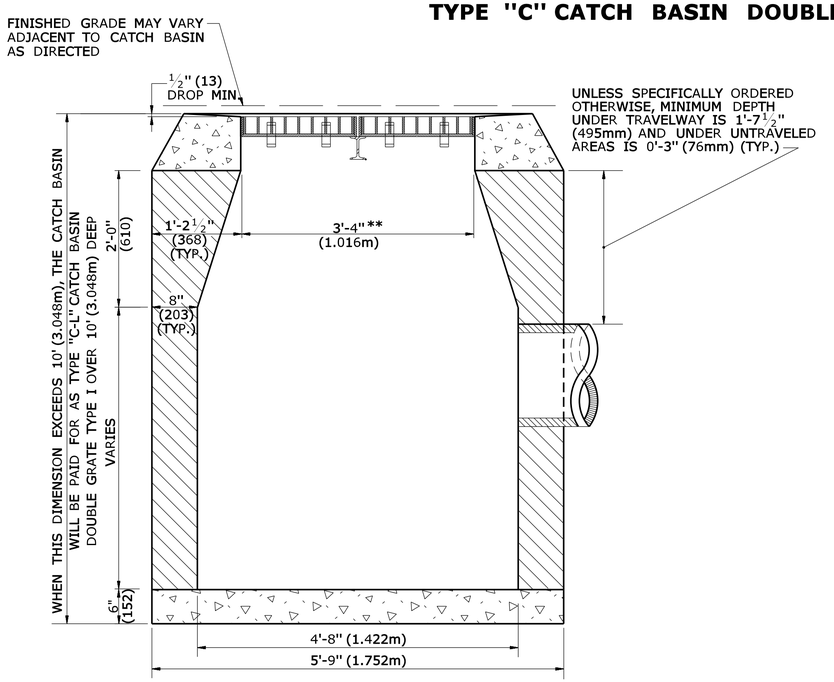

SECTION B

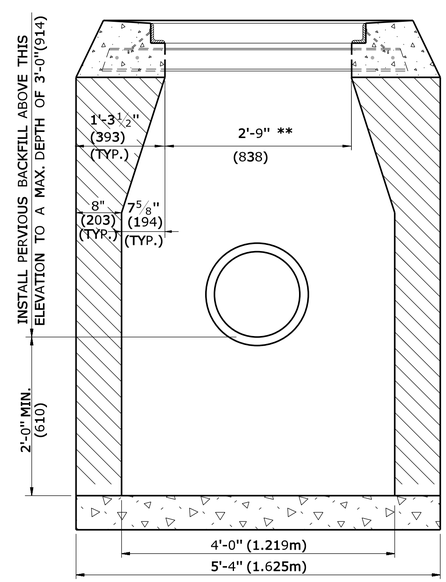

SECTION A

TYPE "C-L" CATCH BASIN DOUBLE GRATE - TYPE I

GENERAL NOTES:

1. FOR DETAILS OF FRAME AND GRATE SEE STANDARD SHEET HW-507_08.
2. USE APPROPRIATE CONCRETE TOP FOR CURBING SHOWN ON PLANS. IF CURBING IS NOT SPECIFIED ON THE PLANS, IT SHALL BE CONSTRUCTED AS DIRECTED BY THE ENGINEER.
3. ALL FACES OF STRUCTURES IN CONTACT WITH CONCRETE PAVEMENT SHALL BE COVERED WITH A LAYER OF TAR PAPER OR APPROVED EQUAL. THE COST FOR THE PAPER SHALL BE INCLUDED IN THE BID PRICE FOR THE TYPE OF CATCH BASIN INSTALLED.
4. USE 6'-0" (1.830m) ON UPGRADE SIDE OF CONTINUOUS GRADE AND 1'-0" (305) ON DOWNGRADE SIDE OF CONTINUOUS GRADE OR AS DIRECTED.
5. IF MASONRY UNITS ARE REQUIRED, THE BASIN SHALL BE CONSTRUCTED IN CONFORMANCE WITH THE OVER ALL DIMENSIONS SHOWN HERE AND SECTION 5.07 OF THE STATE OF CONNECTICUT'S STANDARD SPECIFICATIONS. CORBELLING SHALL BE PERMITTED TO A MAXIMUM OF 3" (75mm) . NO PROJECTION SHALL EXTEND INSIDE THE LIMITS NOTED BY **.
6. WALL THICKNESS OF ALL CB'S OVER 10' (3.048m) DEEP SHALL BE INCREASED TO 12" (305mm) THICK. INSIDE DIMENSION SHALL REMAIN THE SAME. (12" (305) THICKNESS WILL START AFTER THE FIRST 10' (3.048m)).
7. TO CONVEY SUBSURFACE DRAINAGE, OPENINGS SHALL BE FORMED IN THE FOUR WALLS AT OR IMMEDIATELY ABOVE THE BOTTOM OF THE PERVIOUS BACKFILL.
8. MINIMUM CONCRETE COMPRESSIVE STRENGTH OF F'c = 4000 PSI (27,580 kPa) SHALL BE OBTAINED PRIOR TO SHIPPING.
9. LATEST STATE OF CONNECTICUT'S STANDARD SPECIFICATIONS AND SUPPLEMENTALS SHALL GOVERN.

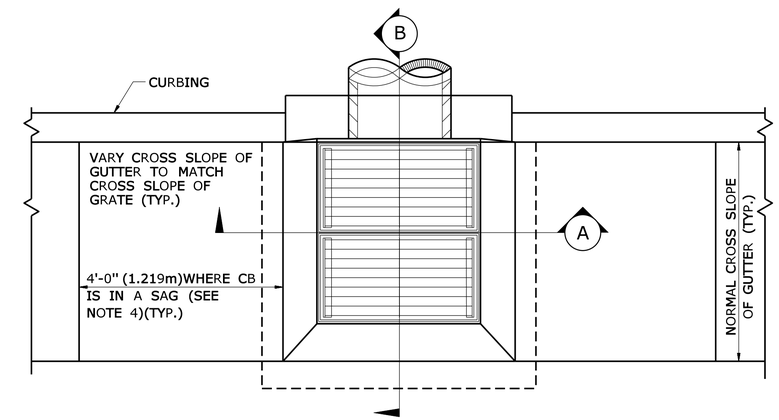

PLAN

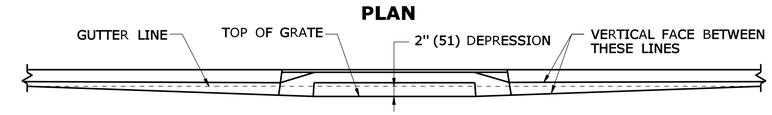

FOR CATCH BASINS IN A LINE OF 4" (102) (CONCRETE PARK CURBING OR 4" (102) BITUMINOUS CONCRETE PARK CURBING

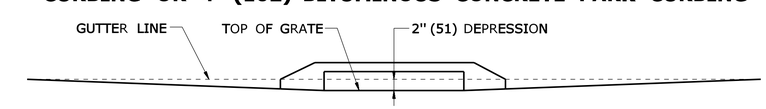

FOR CATCH BASINS WHERE NO CURBING OF ANY TYPE EXISTS OR IS PROPOSED

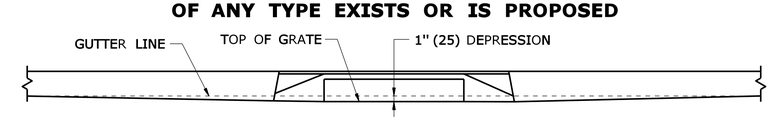

FOR CATCH BASINS IN A LINE OF 6"(152) CONCRETE CURBING OR 6"(152) STONE CURBING

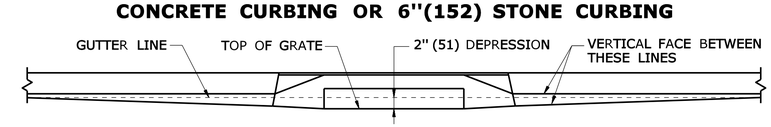

FOR CATCH BASINS IN A LINE OF 6" (152) BITUMINOUS CONCRETE LIP CURBING (MACHINE FORMED)

DETAILS OF DEPRESSED GUTTER STRIP FOR TYPE "C" CATCH BASIN

ALL METRIC DIMENSIONS ARE IN MILLIMETERS (mm) UNLESS OTHERWISE NOTED

REV.	DATE	REVISION DESCRIPTION
-	-	-
-	-	-
-	-	-
-	-	-
-	-	-
-	-	-

THE INFORMATION, INCLUDING ESTIMATED QUANTITIES OF WORK, SHOWN ON THESE SHEETS IS BASED ON LIMITED INVESTIGATIONS BY THE STATE AND IS IN NO WAY WARRANTED TO INDICATE THE CONDITIONS OF ACTUAL QUANTITIES OF WORK WHICH WILL BE REQUIRED.

Plotted Date: 9/11/2009

NOT TO SCALE

STATE OF CONNECTICUT
DEPARTMENT OF TRANSPORTATION

Filename: CTDOT_HIGHWAY_STD.dgn Model: HW-507_02

SUBMITTED BY: NAME/DATE/TIME: Timothy M. Wilson 2009.09.16 11:13:32 -04'00'

APPROVED BY: NAME/DATE/TIME: James H. Norman 2009.09.18 14:20:04 -04'00'

CTDOT STANDARD SHEET

OFFICE OF ENGINEERING

STANDARD SHEET TITLE: TYPE "C" , "C-L" & DOUBLE GRATE TYPE - I

STANDARD SHEET NO.: HW-507_02