GENERAL NOTES :

FRONT AND REAR CASTER / JACK ASSEMBLY NOTES:

1. JACK SHALL BE SIDEWIND TYPE HAVING A LIFTING CAPACITY OF 1000LBS AND THROW DISTANCE OF 18" (457)
2. SWIVEL CASTER SHALL BE STEEL
3. THE LOCATION OF THE JACK MOUNT IN RELATION TO THE GROUND SHALL BE DETERMINED BY THE JACK SIZE AND MANUFACTURER'S SPECIFICATIONS.

NOTE: POSITION AND ATTACH SHOES TO CHASSIS AS REQUIRED TO ACCEPT FORWARD END OF 6" x 4" (152x102) BOX BEAMS

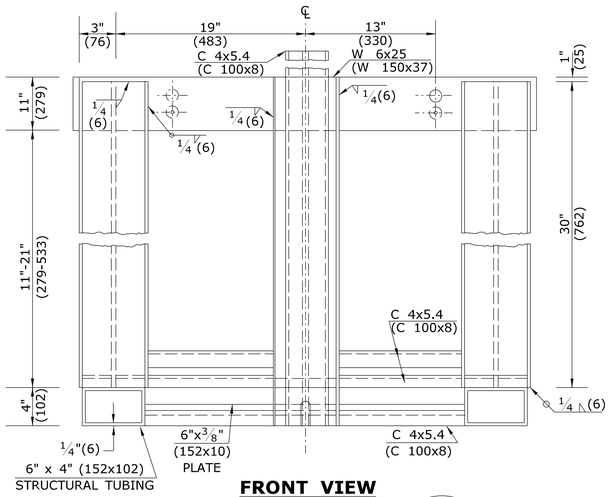

FRONT VIEW

SECTION B

CYLINDER 1 NOT SHOWN

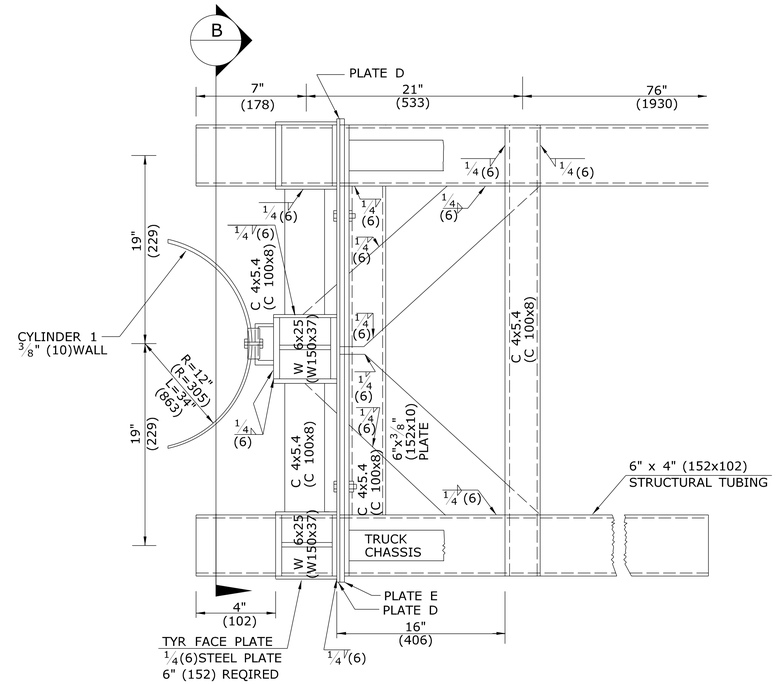

TOP VIEW

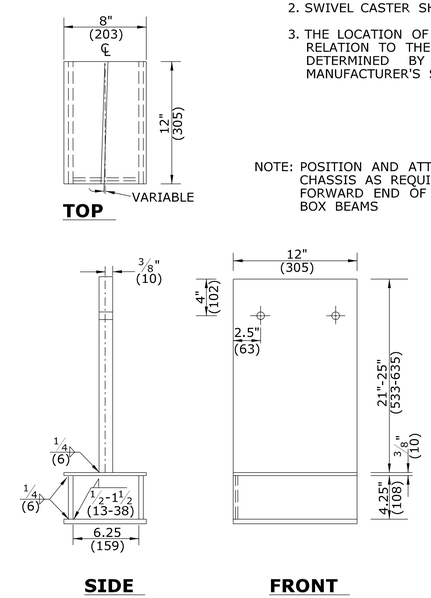

SUPPORT SHOE (2 REQUIRED)
A36 STEEL 3/8" (10)

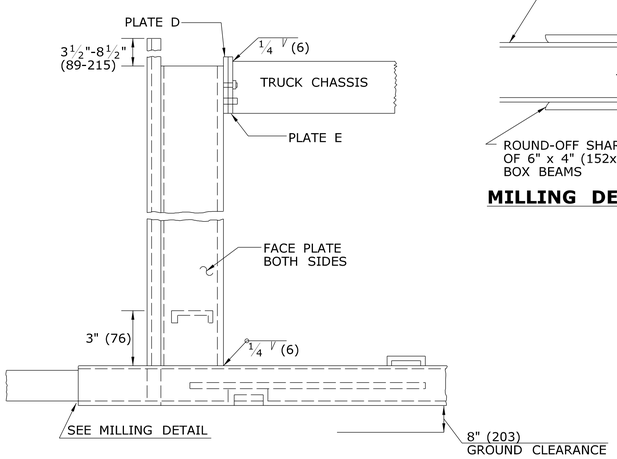

SIDE VIEW

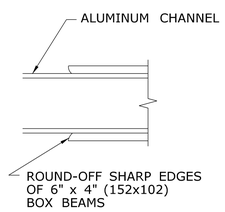

MILLING DETAIL

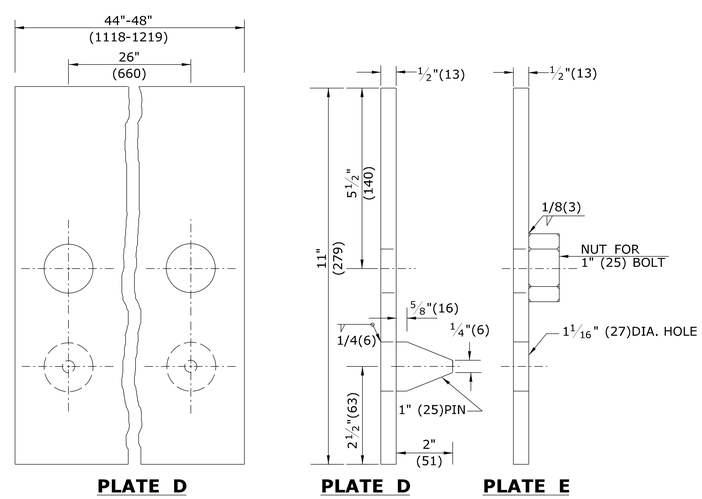

ATTACHMENT TO TRUCK
ALIGNMENT PIN DETAIL

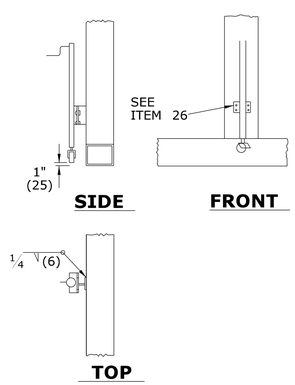

CASTER DETAIL

STEEL GUIDE FRAME DETAILS

ALL METRIC DIMENSIONS ARE IN MILLIMETERS (mm) UNLESS OTHERWISE NOTED.

REV.	DATE	REVISION DESCRIPTION
-	-	-
-	-	-
-	-	-
-	-	-
-	-	-
-	-	-

THE INFORMATION, INCLUDING ESTIMATED QUANTITIES OF WORK, SHOWN ON THESE SHEETS IS BASED ON LIMITED INVESTIGATIONS BY THE STATE AND IS IN NO WAY WARRANTED TO INDICATE THE CONDITIONS OF ACTUAL QUANTITIES OF WORK WHICH WILL BE REQUIRED.

Plotted Date: 9/30/2010

NOT TO SCALE

STATE OF CONNECTICUT
DEPARTMENT OF TRANSPORTATION

Filename: CTDOT_HIGHWAY_STD.dgn Model: 76 - HW-1806_01b

SUBMITTED BY: NAME/DATE/TIME:
Digitally signed by Leo Fontaine
DN: c=US, st=Connecticut, l=Newington, ou=Department of Transportation, email=Leo.Fontaine@ct.gov, o=State of Connecticut, cn=Leo Fontaine
Date: 2010.10.16 15:08:27 -04'00'

APPROVED BY: NAME/DATE/TIME:
James H. Norman
Digitally signed by James H. Norman
DN: c=US, st=CT, l=Newington, ou=Department of Transportation, email=james.norman@ct.gov, o=State of Connecticut, cn=James H. Norman
Date: 2010.10.18 10:09:31 -04'00'

CTDOT
STANDARD SHEET

OFFICE OF ENGINEERING

STANDARD SHEET TITLE:
CT TRUCK MOUNTED IMPACT ATTENUATOR SHEET 2

STANDARD SHEET NO.:
HW-1806_01b