GENERAL NOTES:

1. EIGHT (8) ADDITIONAL 3/8"(10) DIA. HOLES (AS REQUIRED FOR 3 CABLE GUIDERAIL) ARE ACCEPTABLE IN POSTS.
2. J-HOOK BOLTS MAY BE SUBSTITUTED FOR BOTTOM PLATE ANCHORAGE IN CONCRETE END ANCHORS OF THE SAME SIZE STRENGTH AND LENGTH AS NOTED ON THE PLANS.
3. SEE SHEET HW-910_01 FOR HARDWARE AND DELINEATOR DETAILS.

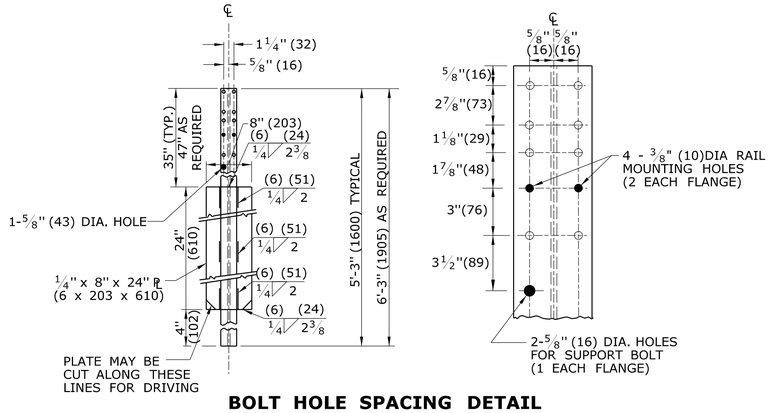

BOLT HOLE SPACING DETAIL
FRONT ELEVATION
S3 x 5.7 POST
(SEE NOTE 1)

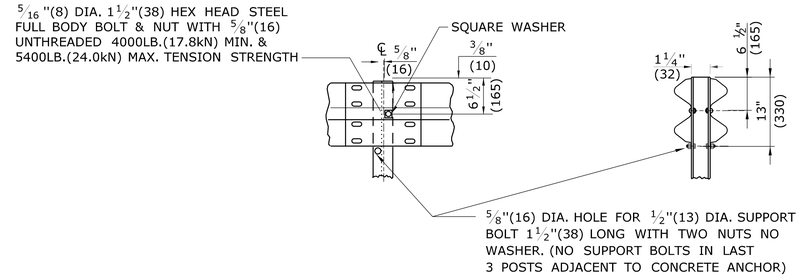

TYPICAL RAIL MOUNTING & SUPPORT BOLT FOR MD-I RAIL

TABLE "A"	
CURVATURE (DEGREE OR RADIUS)	POST SPACING
LESS THAN 26° (220'(67m) RAD OR MORE)	12' - 6"(3810)
219'(67m) TO 111'(34m)	6' - 3"(1905)
110'(34m) TO 76'(23m)	4' - 2"(1270)
75'(23m) TO 50'(15m)	3' - 1 1/2"(952.5)
LESS THAN 50'(15m)	USE NOT RECOMMENDED

FOR CURVES WITH RADII OF 150'(45m) OR LESS ALL RAIL ELEMENTS SHALL BE SHOP FABRICATED TO THE PROPER RADIUS.

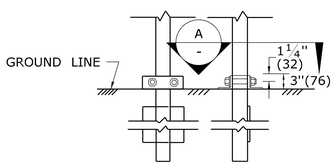

BEARING CLAMP

NOTE: BEARING CLAMP SHALL BE INSTALLED ONLY ON POST NEAREST END ANCHOR

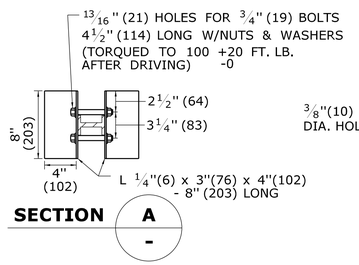

SECTION A

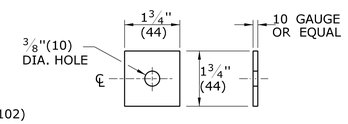

PLACE WASHER IN VALLEY OF RAIL ELEMENT FOR MOUNTING TO POST

SQUARE WASHER

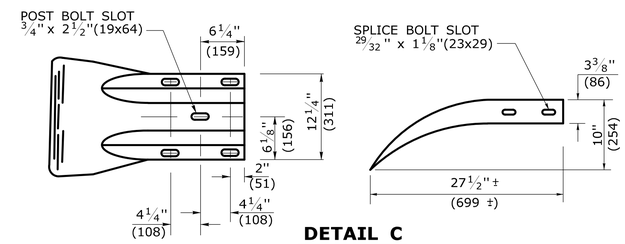

DETAIL C

W-BEAM TERMINAL ELEMENT

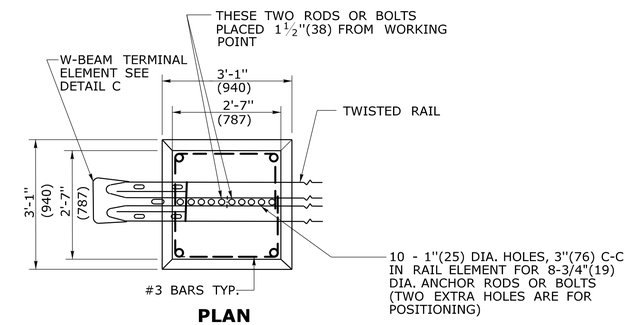

PLAN

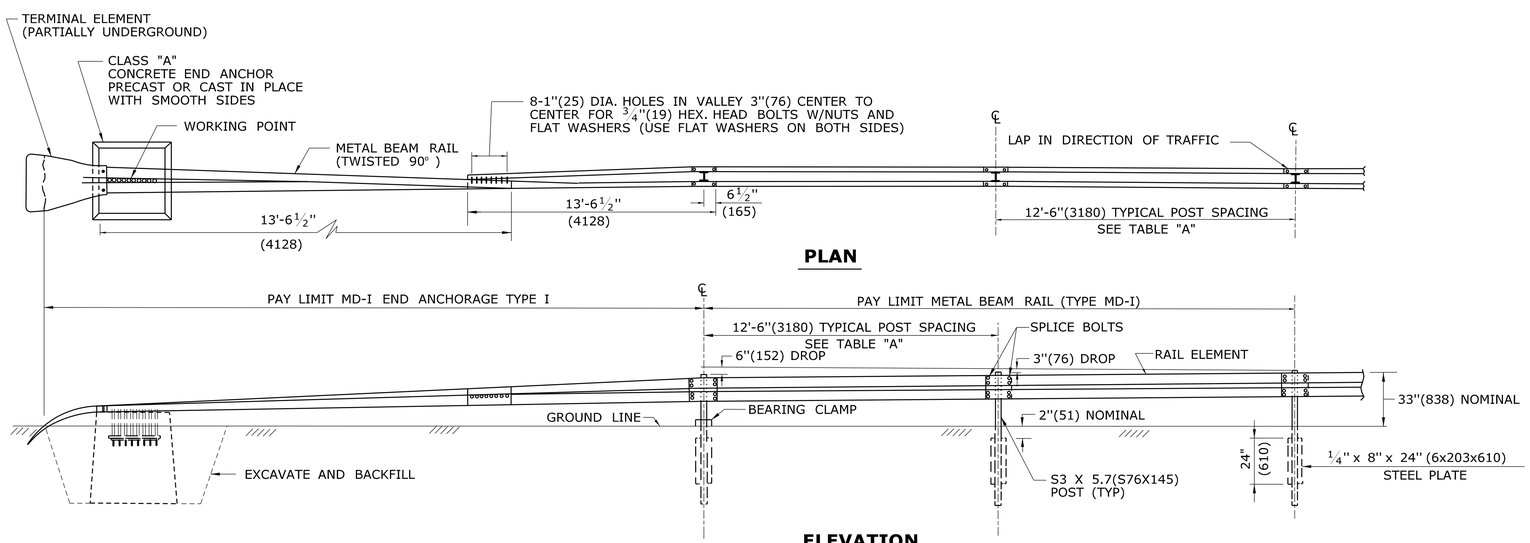

MD-I END ANCHORAGE TYPE I

ELEVATION

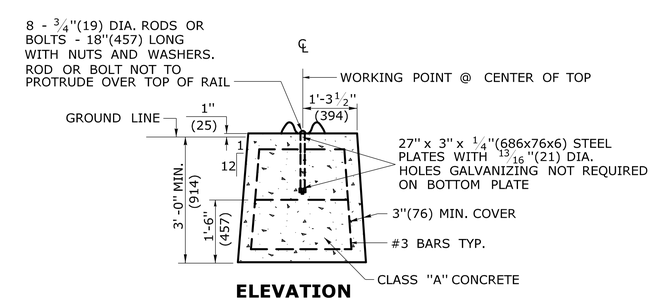

ELEVATION
DETAIL B

CONCRETE END ANCHOR FOR MEDIAN

ALL METRIC DIMENSIONS ARE IN MILLIMETERS (mm) UNLESS OTHERWISE NOTED.

REV.	DATE	REVISION DESCRIPTION
-	-	-
-	-	-
-	-	-
-	-	-
-	-	-
-	-	-

THE INFORMATION, INCLUDING ESTIMATED QUANTITIES OF WORK, SHOWN ON THESE SHEETS IS BASED ON LIMITED INVESTIGATIONS BY THE STATE AND IS IN NO WAY WARRANTED TO INDICATE THE CONDITIONS OF ACTUAL QUANTITIES OF WORK WHICH WILL BE REQUIRED.

Plotted Date: 9/30/2010

NOT TO SCALE

STATE OF CONNECTICUT
DEPARTMENT OF TRANSPORTATION

Filename: CTDOT_HIGHWAY_STD.dgn Model: 58 - HW-910_18

SUBMITTED BY: NAME/DATE/TIME:
Digitally signed by Leo Fontaine
DN: c=US, st=CT, l=Newington, ou=Department of Transportation, email=Leo.Fontaine@ct.gov, o=State of Connecticut, cn=Leo Fontaine
Date: 2010.10.14 15:03:15 -04'00'

APPROVED BY: NAME/DATE/TIME:
James H. Norman
Digitally signed by James H. Norman
DN: c=US, st=CT, l=Newington, ou=Department of Transportation, email=James.Norman@ct.gov, o=State of Connecticut, cn=James H. Norman
Date: 2010.10.18 08:54:03 -04'00'

CTDOT STANDARD SHEET
OFFICE OF ENGINEERING

STANDARD SHEET TITLE:
METAL BEAM RAIL (TYPE MD-I)

STANDARD SHEET NO.:
HW-910_18