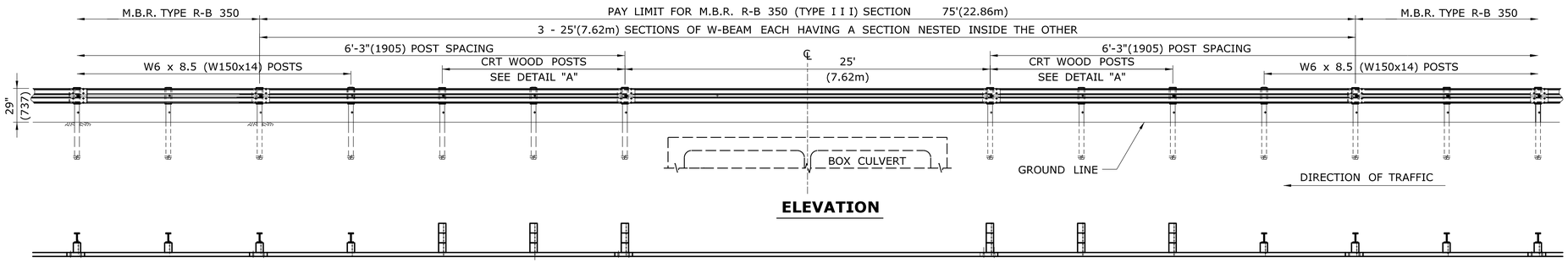

M.B.R. R-B 350 (TYPE III) SECTION

GENERAL NOTES:

1. THE CENTER OF THE TYPE III SECTION SHALL BE LOCATED AT THE CENTER OF THE BOX CULVERT.
2. SEE SHEET HW-910_01 FOR HARDWARE AND DELINEATOR DETAILS.
3. SECTIONS I AND II HAVE A MAXIMUM DEFLECTION OF 4'(1219). SECTION III HAS A MAXIMUM DEFLECTION OF 5'(1524). ALL THREE OF THESE SYSTEMS MAY ONLY BE USED WHERE THE DISTANCE FROM THE BACK OF THE POST TO THE HEADWALL OF THE BOX CULVERT IS A MINIMUM OF 6'(1829).
4. DO NOT INSTALL CURBING IN CONJUCTION WITH ANY OF THESE SYSTEMS.
5. THE FULL LENGTH OF EACH SYSTEM SHALL BE INSTALLED PARALLEL TO THE ROAD. DO NOT RADIUS THE RAIL WITH-IN THE LIMITS OF THE SYSTEM.
6. USE CLASS B TYPE II 10 GAUGE W-BEAM RAIL ELEMENTS FOR INSTALLATIONS ON LIMITED ACCESS HIGHWAYS AND RAMPS.
7. MINIMUM RAIL HEIGHT FOR NEW CONSTRUCTION SHALL BE 29" (737) ± 1" (25).

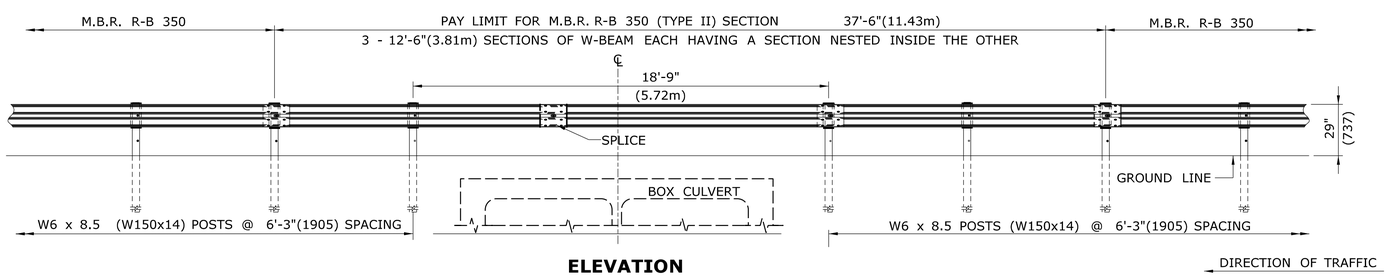

ELEVATION
M.B.R. R-B 350 (TYPE II) SECTION

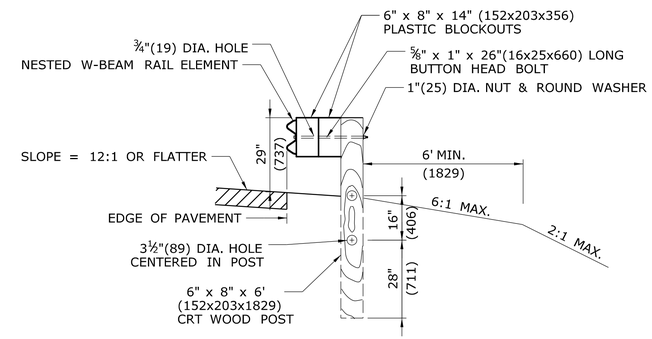

DETAIL "A"
CRT WOOD POST

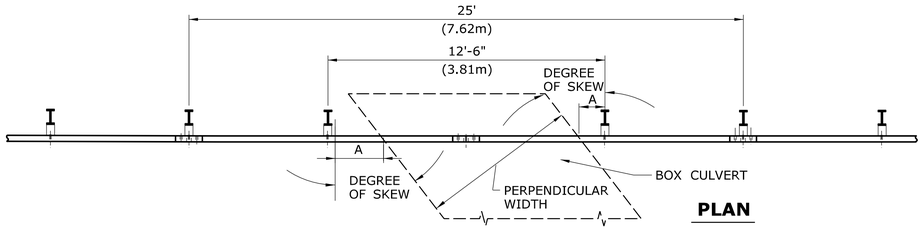

PLAN

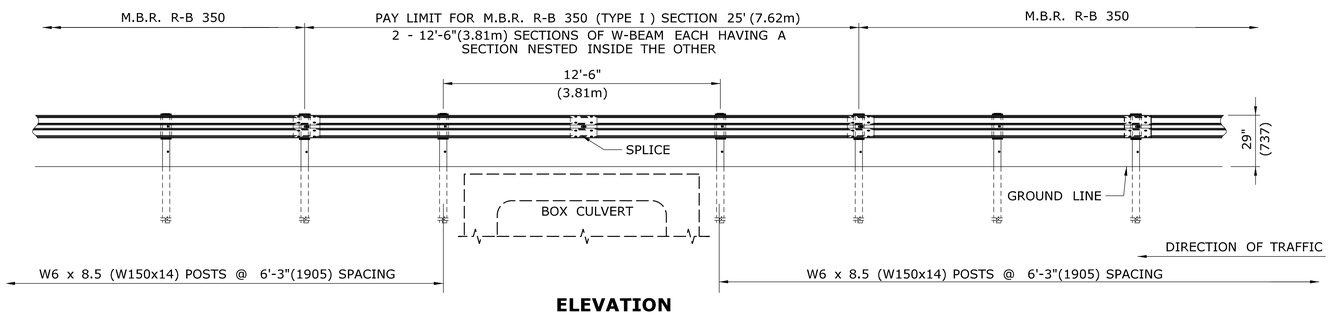

ELEVATION
M.B.R. R-B 350 (TYPE I) SECTION

MAXIMUM ALLOWABLE PERPENDICULAR WIDTH FT- IN (mm)			
SKEW	A* INS. (mm)	TYPE I ONE POST OMITTED	TYPE I I TWO POSTS OMITTED
0°	1"(25)	10'-6"(3200)	16'-9"(5105)
5°	1"(25)	10'-6"(3200)	16'-9"(5105)
10°	1"(25)	10'-0"(3048)	16'-5"(5004)
15°	1"(25)	9'-10"(2997)	16'-0"(4877)
20°	1"(25)	9'-6"(2896)	15'-5"(4699)
25°	1"(25)	9'-0"(2743)	14'-9"(4496)
30°	1"(25)	8'-10"(2692)	14'-0"(4267)
35°	1"(25)	8'-0"(2438)	13'-0"(3962)
40°	1"(25)	7'-10"(2388)	12'-6"(3810)
45°	1"(25)	6'-10"(2083)	11'-6"(3505)
*A = MINIMUM ALLOWABLE DISTANCE BETWEEN CLOSEST POINT OF POST TO STRUCTURE			

ALL METRIC DIMENSIONS ARE IN MILLIMETERS (mm) UNLESS OTHERWISE NOTED.

REV.	DATE	REVISION DESCRIPTION
-	-	-
-	-	-
-	-	-
-	-	-
-	-	-
-	-	-

THE INFORMATION, INCLUDING ESTIMATED QUANTITIES OF WORK, SHOWN ON THESE SHEETS IS BASED ON LIMITED INVESTIGATIONS BY THE STATE AND IS IN NO WAY WARRANTED TO INDICATE THE CONDITIONS OF ACTUAL QUANTITIES OF WORK WHICH WILL BE REQUIRED.

Plotted Date: 9/30/2010

NOT TO SCALE

STATE OF CONNECTICUT
DEPARTMENT OF TRANSPORTATION

Filename: CTDOT_HIGHWAY_STD.dgn Model: 40 - HW-910_05

SUBMITTED BY: NAME/DATE/TIME:
Digitally signed by Leo Fontaine
DN: c=US, st=Connecticut, l=Newington, ou=Department of Transportation, email=Leo.Fontaine@ct.gov, o=State of Connecticut, cn=Leo Fontaine
Date: 2010.10.18 14:55:57 -04'00'

APPROVED BY: NAME/DATE/TIME:
James H. Norman
Digitally signed by James H. Norman
DN: c=US, o=CT, l=Newington, ou=Department of Transportation, email=james.norman@ct.gov, o=State of Connecticut, cn=James H. Norman
Date: 2010.10.18 08:41:29 -04'00'

CTDOT
STANDARD SHEET

OFFICE OF ENGINEERING

STANDARD SHEET TITLE:
MBR R-B 350 SPAN TYPE
I, II, III SECTIONS

STANDARD SHEET NO.:
HW-910_05