DELINEATORS SHALL BE PLASTIC INVERTED T-SECTIONS IN ACCORDANCE WITH DETAIL "A". REFLECTORS SHALL BE SPACED IN ACCORDANCE WITH TABLE 1, AND POSITIONED PERPENDICULAR TO ADJACENT EDGE OF LANE. DO NOT ATTACH REFLECTORS ON FLARE OR TERMINAL SECTIONS. REFLECTIVE SHEETING SHALL BE SILVER-WHITE ON ALL RAIL SECTIONS ADJACENT TO THE RIGHT SHOULDER, AND YELLOW ON RAIL SECTIONS ADJACENT TO LEFT SHOULDER OF TRAVEL LANES.

TABLE 1

DELINEATOR SPACING	
CURVE RADIUS	SPACE
< 300' (91.4m)	20' (6.10m)
≥ 300' (91.4m)	50' (15.2m)

GENERAL NOTES:

1. SEE HW-910_12a THRU 12c FOR STANDARD GUIDERAIL PARTS.
2. IF RAIL IS PLACED GREATER THAN 2' (610) FROM EDGE OF ROAD, RAIL HEIGHT IS MEASURED FROM GROUND BENEATH RAIL.
3. IF RAIL IS PLACED GREATER THAN 2'(610) FROM EDGE OF ROAD, RAIL HEIGHT IS MEASURED FROM GROUND BENEATH RAIL.

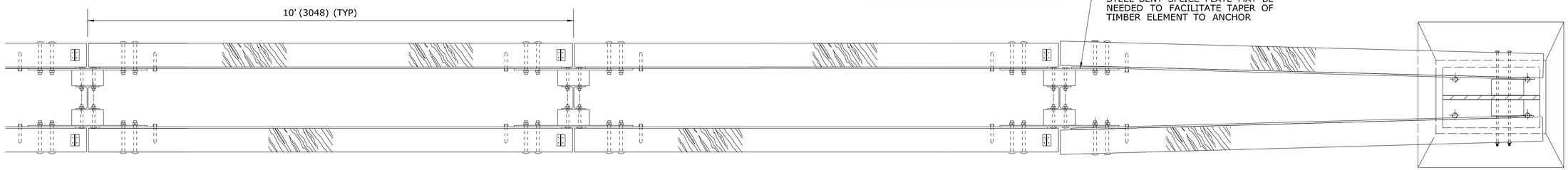

PLAN

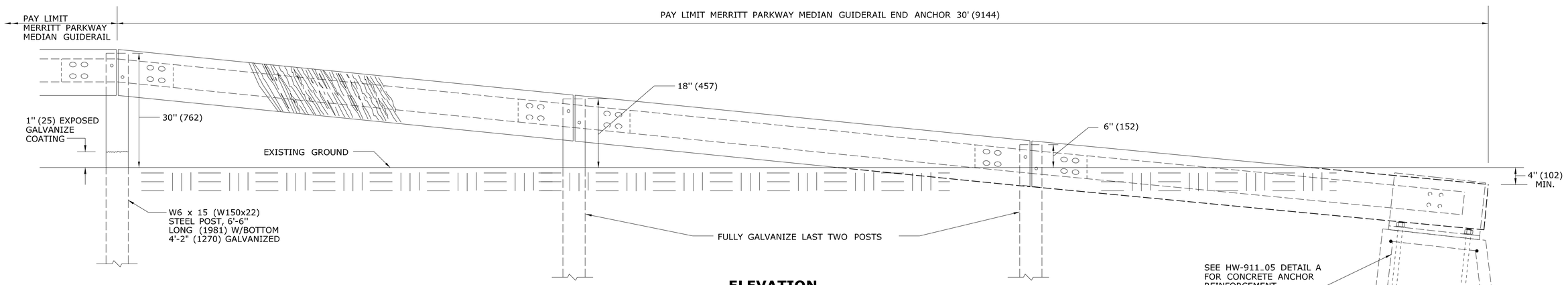

ELEVATION

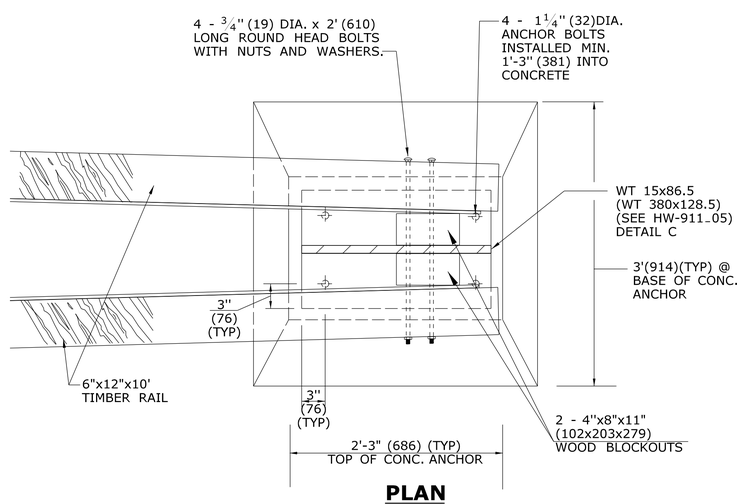

PLAN
MERRITT PARKWAY MEDIAN GUIDERAIL END ANCHOR DETAIL A

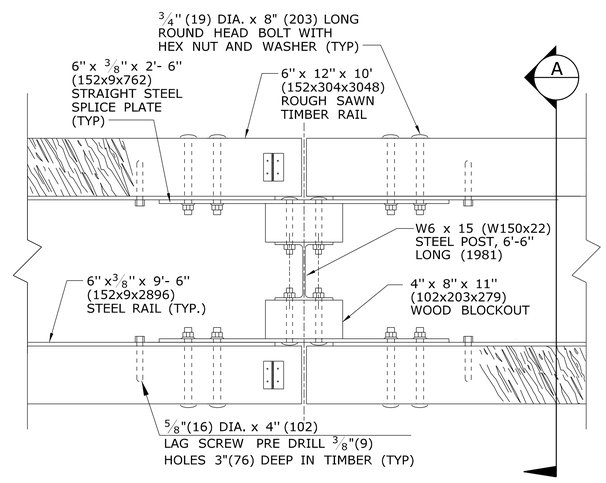

PLAN
MERRITT PARKWAY MEDIAN GUIDERAIL

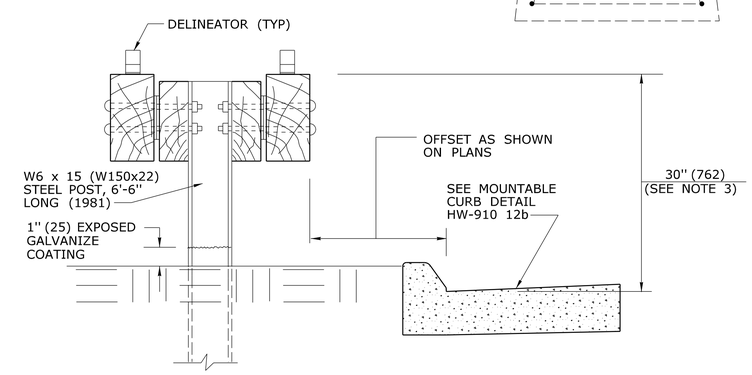

SECTION A / -

ALL METRIC DIMENSIONS ARE IN MILLIMETERS (mm) UNLESS OTHERWISE NOTED

REV.	DATE	REVISION DESCRIPTION
-	6/11	ADDED NEW SHEET FOR MEDIAN RAIL -
-	-	- -
-	-	- -
-	-	- -
-	-	- -
-	-	- -

THE INFORMATION, INCLUDING ESTIMATED QUANTITIES OF WORK, SHOWN ON THESE SHEETS IS BASED ON LIMITED INVESTIGATIONS BY THE STATE AND IS IN NO WAY WARRANTED TO INDICATE THE CONDITIONS OF ACTUAL QUANTITIES OF WORK WHICH WILL BE REQUIRED.

Plotted Date: 5/13/2011

NOT TO SCALE

STATE OF CONNECTICUT
DEPARTMENT OF TRANSPORTATION

Filename: CTDOT_HIGHWAY_STD_JUNE2011.dgn Model: 50 - HW-910_12d

SUBMITTED BY: NAME/DATE/TIME: Digitally signed by Leo Fontaine DN: c=US, st=Connecticut, l=Newington, ou=Department of Transportation, email=Leo.Fontaine@ct.gov, o=State of Connecticut, cn=Leo Fontaine Date: 2011.05.18 11:58:26 -04'00'

APPROVED BY: NAME/DATE/TIME: James H. Norman 2011.06.09 15:31:37 -04'00'

CTDOT STANDARD SHEET

OFFICE OF ENGINEERING

STANDARD SHEET TITLE:

MERRITT PARKWAY MEDIAN GUIDERAIL AND END ANCHOR

STANDARD SHEET NO.: HW-910_12d