# RAILROAD BRIDGE INSPECTION
## STATE PROJECT NO. 300-097

WSP-SELLS

STATE OF CONNECTICUT
BRUCE WOODEN
No. 17786
LICENSED
PROFESSIONAL ENGINEER

VERIFICATION INSPECTION
07/12/2013

**CONNDOT BRIDGE NO. 08080R**
**(METRO-NORTH BRIDGE M.P. 60.42)**

**METRO-NORTH RAILROAD (Main Line)**
**OVER**
**HOUSATONIC RIVER**
**STRATFORD, CONNECTICUT**

## BASCULE

**VOLUME V – FIELD NOTES FOR SPAN No. 7,**
**SUBSTRUCTURE UNITS AND OPERATOR'S HOUSE**

**ROUTINE INSPECTION**

**November 27, 2012**

Prepared By:
WSP ▪ SELLS
Transportation & Infrastructure
Danbury, Connecticut

WSP ▪ SELLS

STATE OF CONNECTICUT
DEPARTMENT OF TRANSPORTATION
BUREAU OF HIGHWAYS

INSPECTION REPORT TRANSMITTAL FORM
FORM BRI-27, REV. 9/97

1

WSP-SELLS VERIFICATION INSPECTION
07/12/2013

Structure No: 08080R Town: Stratford

1

Inspectors: Michael Lee, Mohamad Al-Ramahi Date: 11/27/2012
Inspectors: Paul Amidon, Manjil Devkota

**REPORT TABLE OF CONTENTS**

---


| | |
|---|---|
| **VOLUME I** | **SUMMARY REPORT** |
| **VOLUME II** | **FIELD NOTE SHEETS FOR SPAN Nos. 1, 2, 3 & 4** |
| **VOLUME III** | **FIELD NOTE SHEETS FOR SPAN No. 5** |
| **VOLUME IV** | **FIELD NOTE SHEETS FOR SPAN No. 6** |
| **VOLUME V** | **FIELD NOTE SHEETS FOR SPAN No. 7, SUBSTRUCTURE UNITS AND OPERATOR'S HOUSE** |

STATE OF CONNECTICUT
DEPARTMENT OF TRANSPORTATION
BUREAU OF HIGHWAYS

INSPECTION REPORT TRANSMITTAL FORM
FORM BRI-27, REV. 9/97

1 WSP-SELLS VERIFICATION INSPECTION
07/12/2013

Structure No: 08080R Town: Stratford

Inspectors: Michael Lee, Mohamad Al-Ramahi Date: 11/27/2012

1 Inspectors: Paul Amidon, Manjil Devkota

## TABLE OF CONTENTS


**List of Abbreviations** ..... 4

**Trusses** ..... 5

Truss No. 1 ..... 6

Lower Chord Pins ..... 8

Mid-Point Pins ..... 18

Upper Chord and Upper Chord Pins ..... 26

Truss No. 2 ..... 34

Lower Chord Pins ..... 36

Mid-Point Pins ..... 46

Upper Chord and Upper Chord Pins ..... 54

Truss No. 3 ..... 62

Lower Chord Pins ..... 64

Mid-Point Pins ..... 74

Upper Chord and Upper Chord Pins ..... 82

Truss No. 4 ..... 90

Lower Chord Pins ..... 92

Mid-Point Pins ..... 102

Upper Chord and Upper Chord Pins ..... 110

**Bearings** ..... 118

**Floor System (From Top of Deck)** ..... 128

**Floor System (From Beneath)** ..... 132

Floor Beams ..... 133

Stringers ..... 165

Laterals ..... 279

**Top Laterals and Portals** ..... 283

**Substructure Units** ..... 294

**Operator's House** ..... 312

32A

WSP-SELLS
VERIFICATION INSPECTION
07/12/2013

# Span No. 7

| NO. | DATE | DESCRIPTION |
|---|---|---|
| 1 | 11/27/12 | WSP-SELLS ML,MA |

REVISIONS

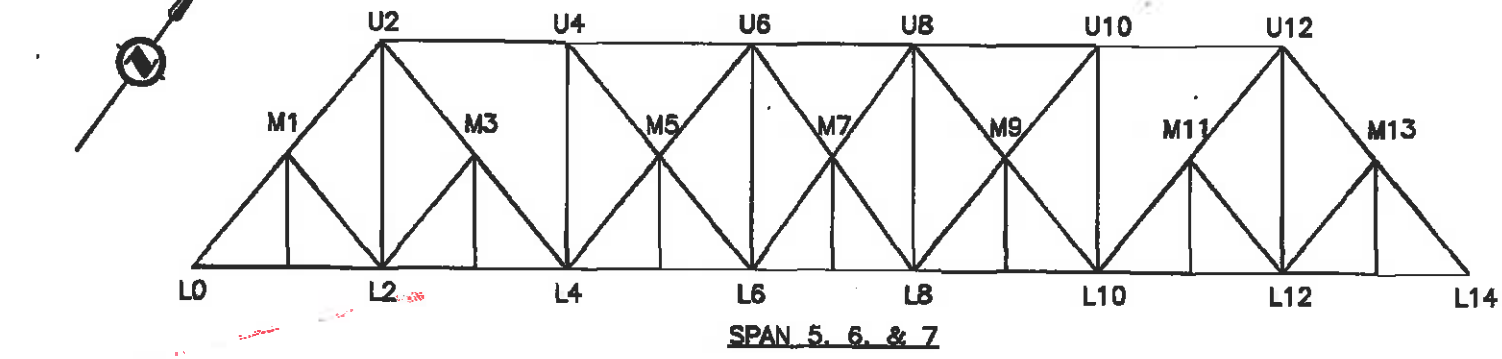


SPAN 5, 6, & 7

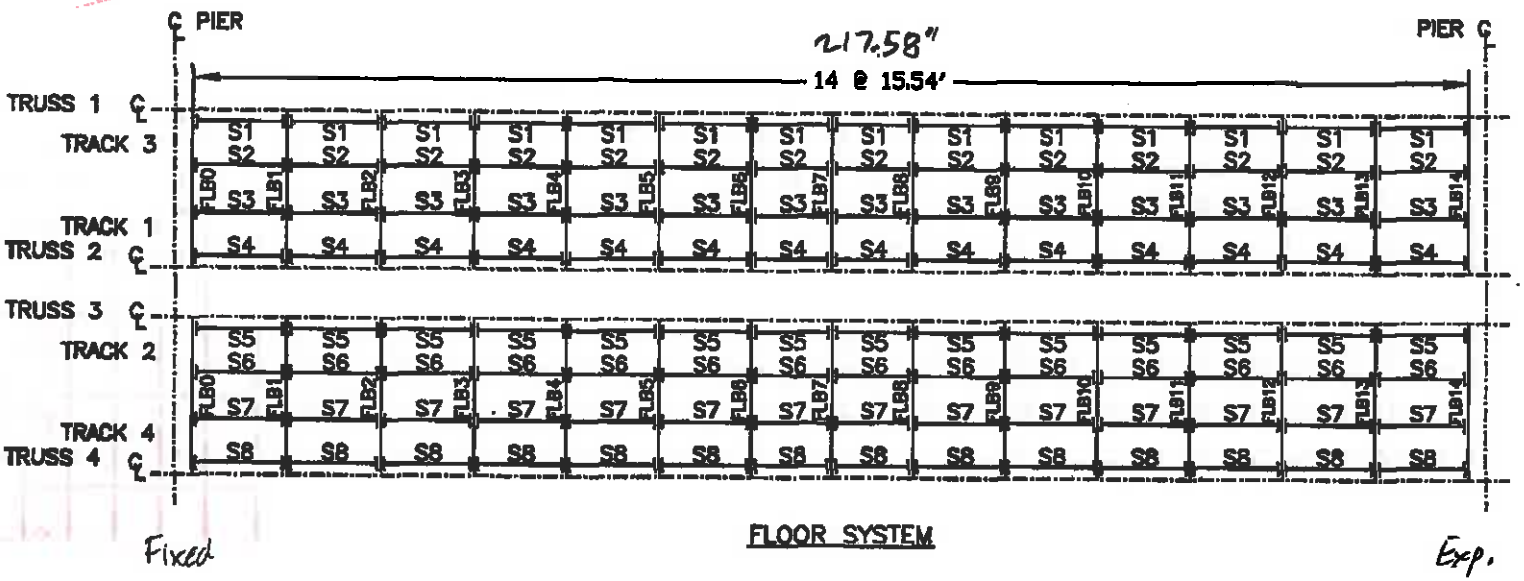


FLOOR SYSTEM

FIGURE No 5

Stantec

Stantec Consulting Services Inc.

| | |
|---|---|
| Bridge No.: 08080R | |
| Project No.: 301-0089 | |
| Name: C. Yorlano | |
| Date: 7/10/09 | Sheet No.: 4 3 |

WSP-SELLS VERIFICATION INSPECTION
07/12/2013 NO REVISION

WSP-SELLS VERIFICATION INSPECTION
07/12/2013 NO REVISION

# FIELD NOTES

Stantec Consulting Services Inc.

Bridge No.: 08080R
Project No.: 301-0099
Crew: C. Yorlando
Date: 5/4/09
Sheet No.: 84 △1

## LIST OF ABBREVIATIONS:

PLOS = PITTING LOSS OF SECTION
TF = TOP FLANGE
BF = BOTTOM FLANGE
WB = WEB
∠ = ANGLE
GPL ∠ = CONNECTION ∠ TO GUSSET PLATE
HL = HORIZONTAL LEG
VL = VERTICAL LEG
CR = CROTCH
IR = IMPACTED RUST
SL = SECTION LOSS
RVT = RIVET HEAD
BR = BLEEDING RUST
DP = DEEP
LTD = LACE TYPE DETERIORATION
UNO = UNLESS NOTED OTHERWISE

| NO. | DATE | DESCRIPTION |
|---|---|---|
| △1 | 11/27/12 | WSP-SELLS MLMA |

REVISIONS

| NO. | DATE | DESCRIPTION |
|---|---|---|
| | | |

5

WSP-SELLS
VERIFICATION INSPECTION
07/12/2013

# Trusses

WSP-SELLS
VERIFICATION INSPECTION
07/12/2013

# Truss No. 1

# FIELD NOTES

Stantec Consulting Services Inc.

Bridge No.: 08080R
Project No.: 301-0099
Crew: EH TB
Date: 5/11/09
Sheet No.: 7

(1) Typical I.R. to lacing bars at random locations – General note for truss
(2) Typical surface rust at random locations - General note for truss
(3) 1/8" x 2" x 10" LOS to top plate
(4) Minor deformation in bottom flange
(5) 1/8" x 1 1/2" x 12" LOS to vertical at T.O. F.B.
(6) For bottom chord, lower, mid & upper pins, see other sheets

THERE ARE MINOR DENTS ON TOP CHORD BOTTOM FLANGE. 2

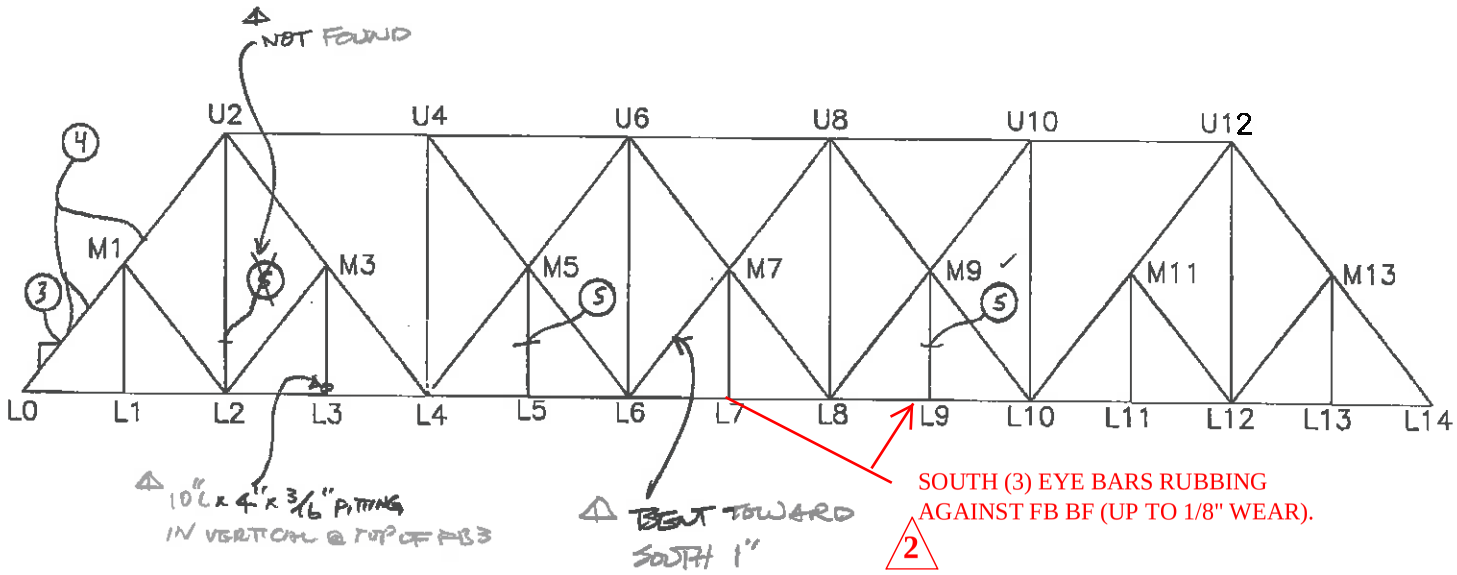


SOUTH (3) EYE BARS RUBBING AGAINST FB BF (UP TO 1/8" WEAR). 2

SPAN 7 TRUSS 1

| NO. | DATE | DESCRIPTION |
|---|---|---|
| 2 | 5/30/13 | WSP-SELLS; PA,MD |
| 1 | 9/25/12 | WSP-SELLS ML,MA |

REVISIONS

2 WSP-SELLS VERIFICATION INSPECTION 07/12/2013

WSP-SELLS
VERIFICATION INSPECTION
07/12/2013

# Lower Chord Pins

WSP-SELLS VERIFICATION INSPECTION
07/12/2013 NO REVISION

# FIELD NOTES

Stantec Consulting Services Inc.

| | |
|---|---|
| Bridge No.: | 08080R |
| Project No.: | 301-0099 |
| Crew: | LM AF |
| Date: 5/4/09 | Sheet No.: 9 |

## LIST OF ABBREVIATION FOR PINS:

PLOS = PITTING LOSS OF SECTION
IR = IMPACTED RUST
BR = BLEEDING RUST
PBT (TPD) = PASSING BY TRAIN
T – TIGHT
M OR ML = MODERATE LOOSE
L = LOOSE
VL = VERY LOOSE
LMEB = LATERAL MOVEMENT OF EYEBAR

## LEGEND:

1 = IMPACTED RUST

2 = PLOS

3 = NO GAP AND FILL WITH ABRASION RUST

WSP-SELLS VERIFICATION INSPECTION
07/12/2013 NO REVISION

# FIELD NOTES

Stantec Consulting Services Inc.

Bridge No.: 08080R
Project No.: 301-0099
Crew: LM & AF
Date: 5/4/09
Sheet No.: 10

| NO. | DATE | DESCRIPTION |
|---|---|---|
| 1 | 9/25/12 | WSP-SELLS ML, MA |

REVISIONS

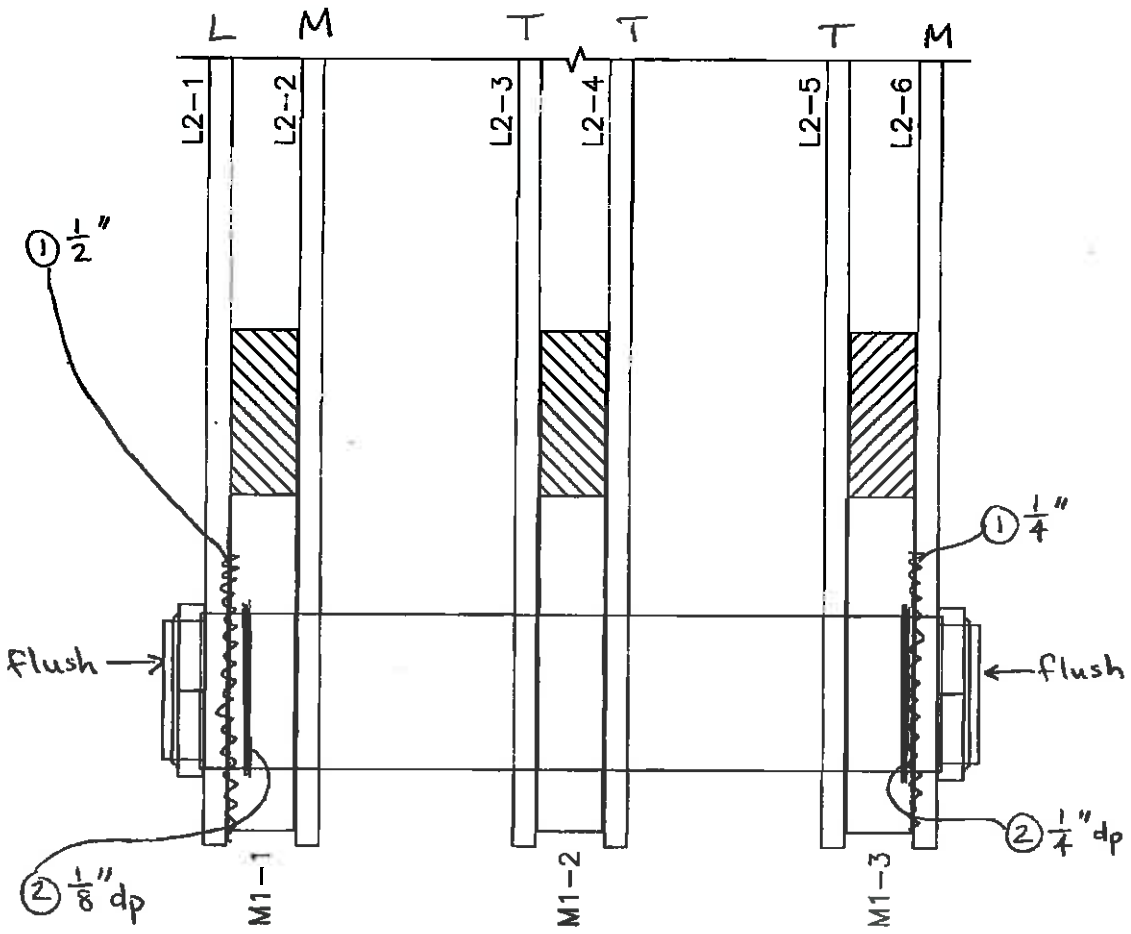


L-0

SPAN 7 TRUSS I

WSP-SELLS VERIFICATION INSPECTION
07/12/2013 NO REVISION

# FIELD NOTES

Stantec Consulting Services Inc.

| | |
|---|---|
| Bridge No.: | 08080R |
| Project No.: | 301-0099 |
| Crew: | LM & AF |
| Date: 5/4/09 | Sheet No.: 11 |

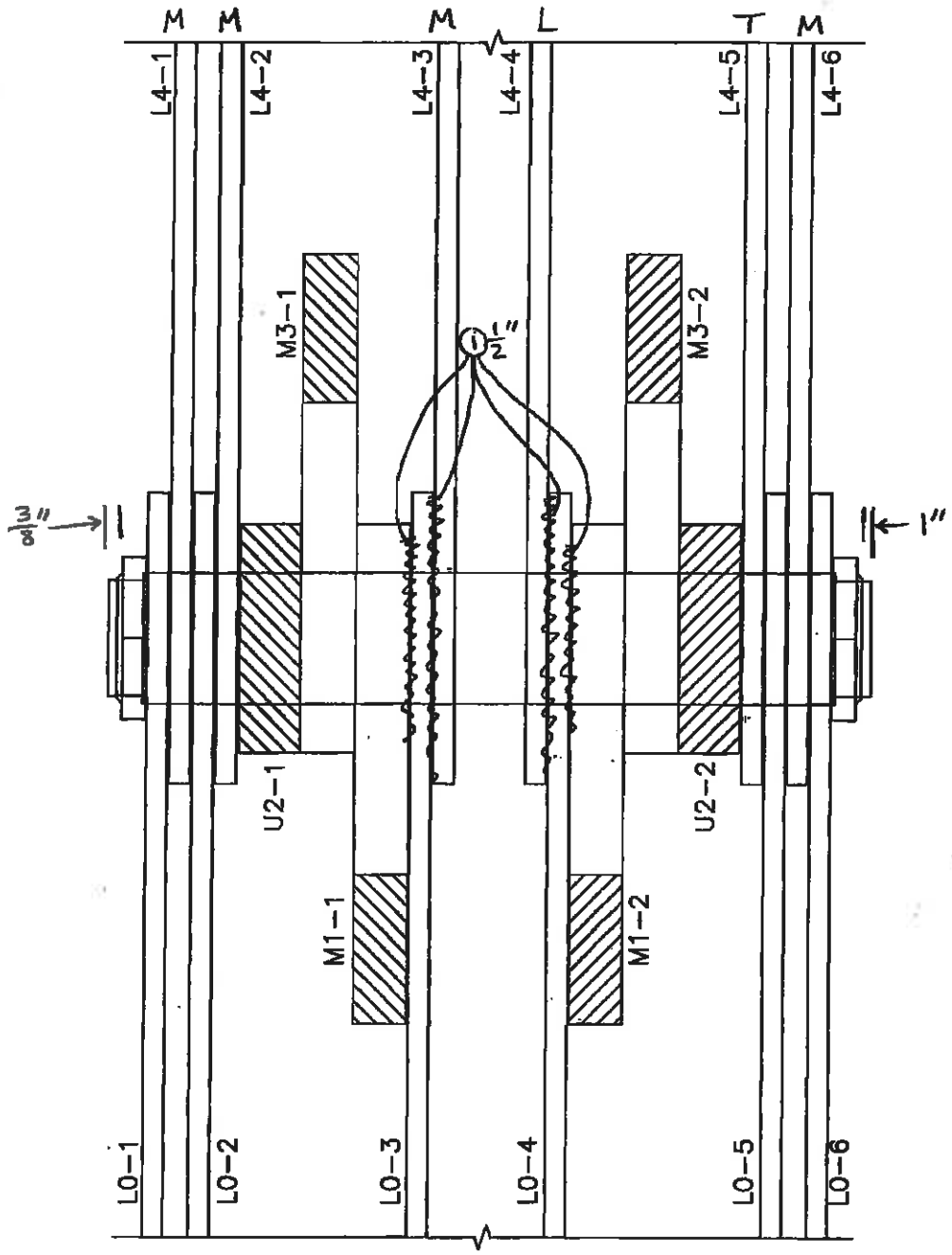


L-2

SPAN 7 TRUSS 1

| NO. | DATE | DESCRIPTION |
|---|---|---|
| 1 | 9/25/12 | WSP_SELLS ML/MA |

REVISIONS

WSP-SELLS VERIFICATION INSPECTION
07/12/2013 NO REVISION

# FIELD NOTES

Stantec Consulting Services Inc.

| | |
|---|---|
| Bridge No.: | 08080R |
| Project No.: | 301-0099 |
| Crew: | LM & AF |
| Date: 5/4/09 | Sheet No.: 12 |

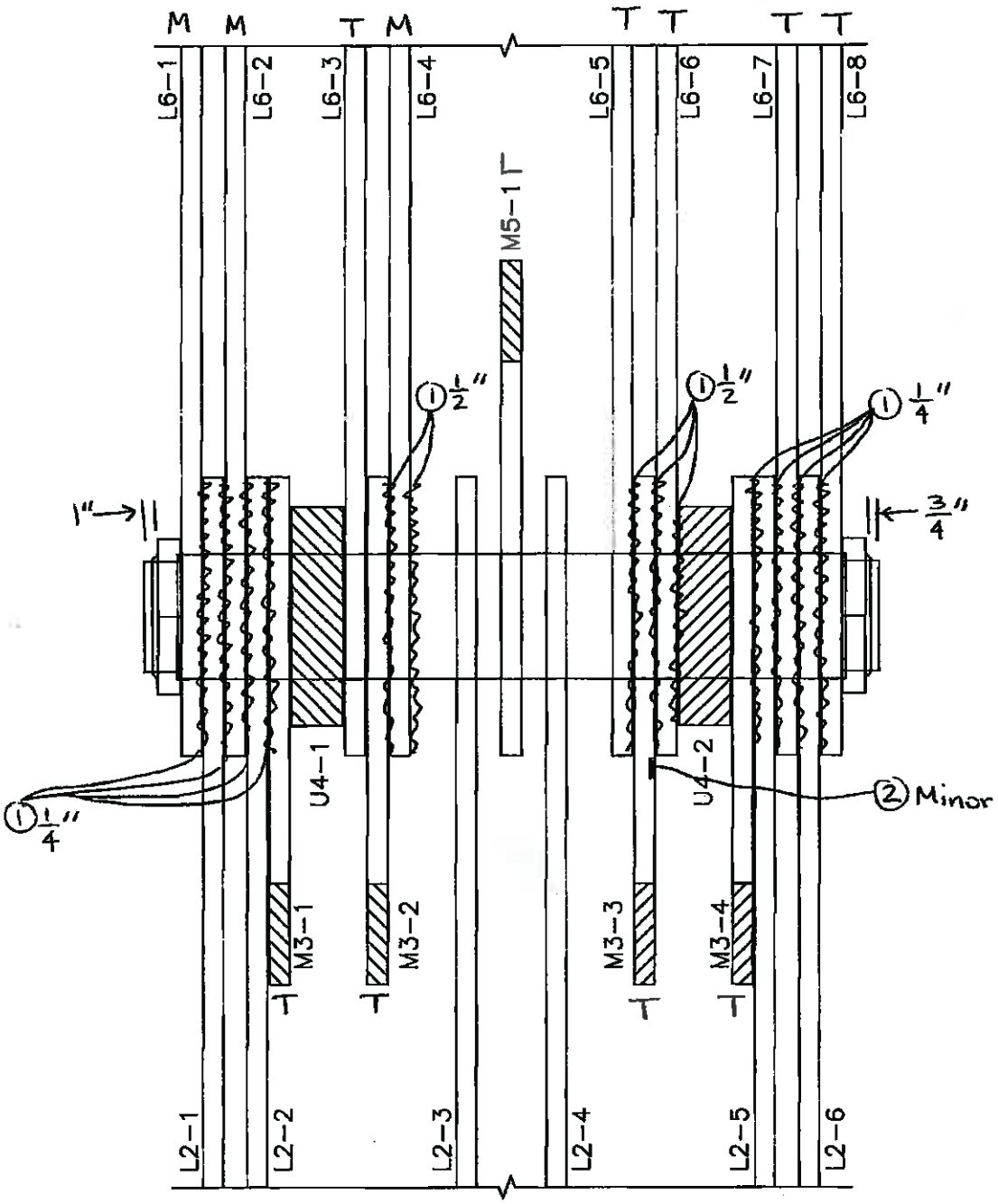


L-4

SPAN 7 TRUSS 1

| NO. | DATE | DESCRIPTION |
|---|---|---|
| 1 | 9/25/12 | WSP-SELLS MLMA |

REVISIONS

WSP-SELLS VERIFICATION INSPECTION
07/12/2013 NO REVISION

# FIELD NOTES

Stantec Consulting Services Inc.

| | |
|---|---|
| Bridge No.: | 08080R |
| Project No.: | 301-0099 |
| Crew: | LM & AF |
| Date: 5/4/09 | Sheet No.: 13 |

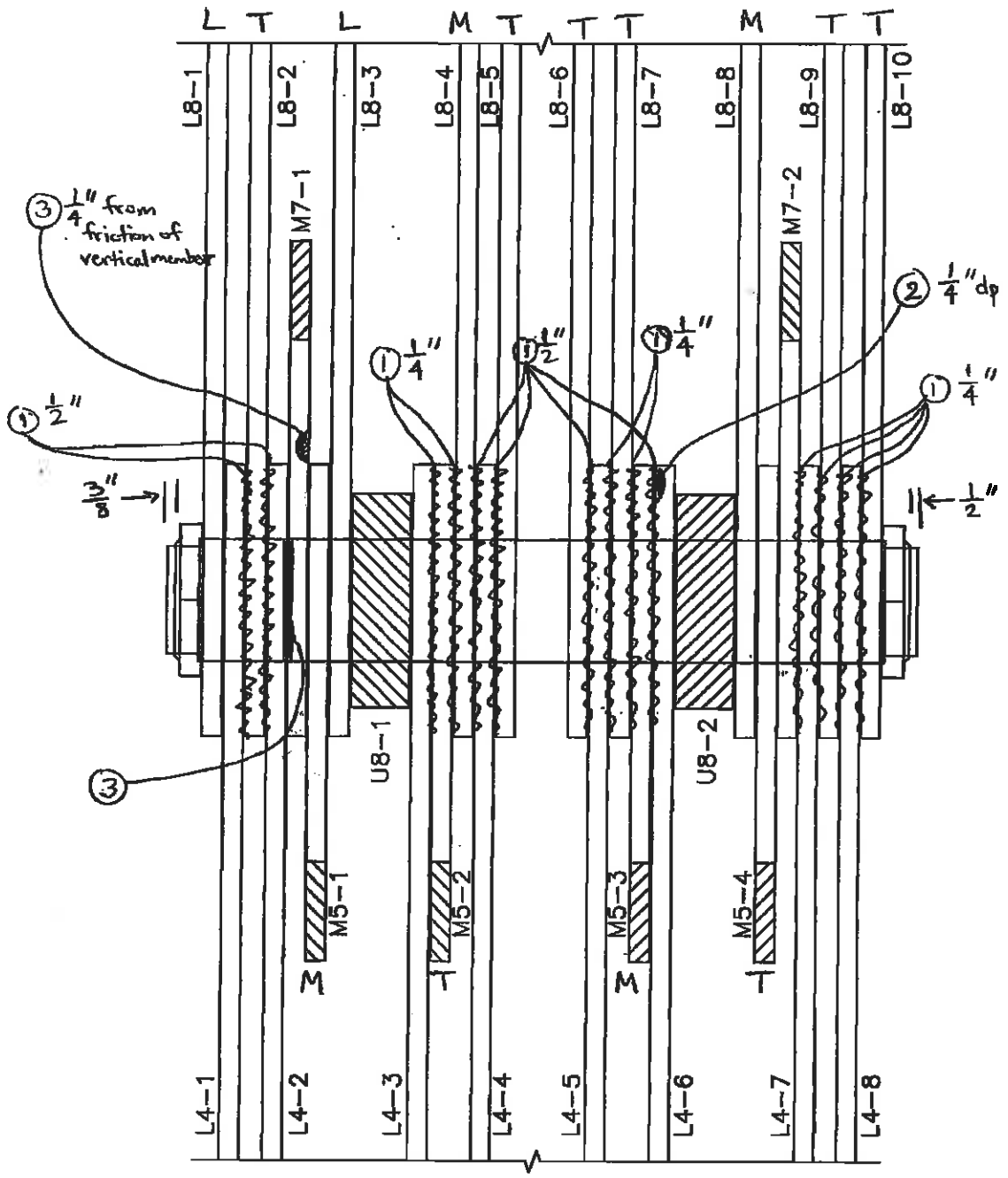


L-6

SPAN 7 TRUSS 1

| NO. | DATE | DESCRIPTION |
|---|---|---|
| 1 | 9/25/12 | WSP-SELLS MLMA |

REVISIONS

WSP-SELLS VERIFICATION INSPECTION
07/12/2013 NO REVISION

# FIELD NOTES

Stantec Consulting Services Inc.

| | |
|---|---|
| Bridge No.: | 08080R |
| Project No.: | 301-0099 |
| Crew: | LM & AF |
| Date: 5/4/09 | Sheet No.: 14 |

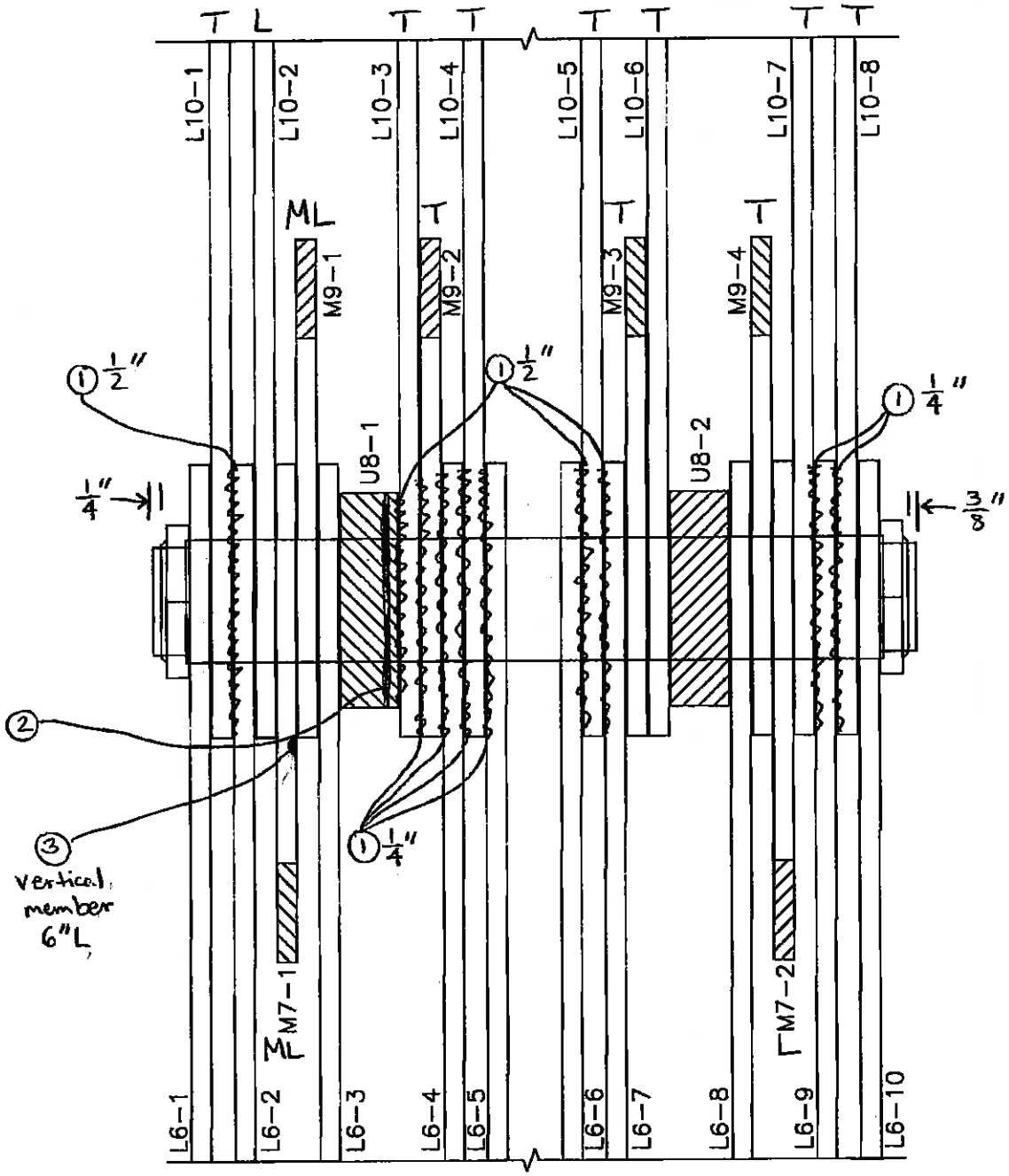


L-8

SPAN 7 TRUSS 1

| NO. | DATE | DESCRIPTION |
|---|---|---|
| 1 | 9/25/12 | WSP-SELLS ML,MA |

REVISIONS

WSP-SELLS VERIFICATION INSPECTION
07/12/2013 NO REVISION

# FIELD NOTES

Stantec Consulting Services Inc.

| | |
|---|---|
| Bridge No.: | 08080R |
| Project No.: | 301-0099 |
| Crew: | LM & AF |
| Date: 5/4/09 | Sheet No.: 15 |

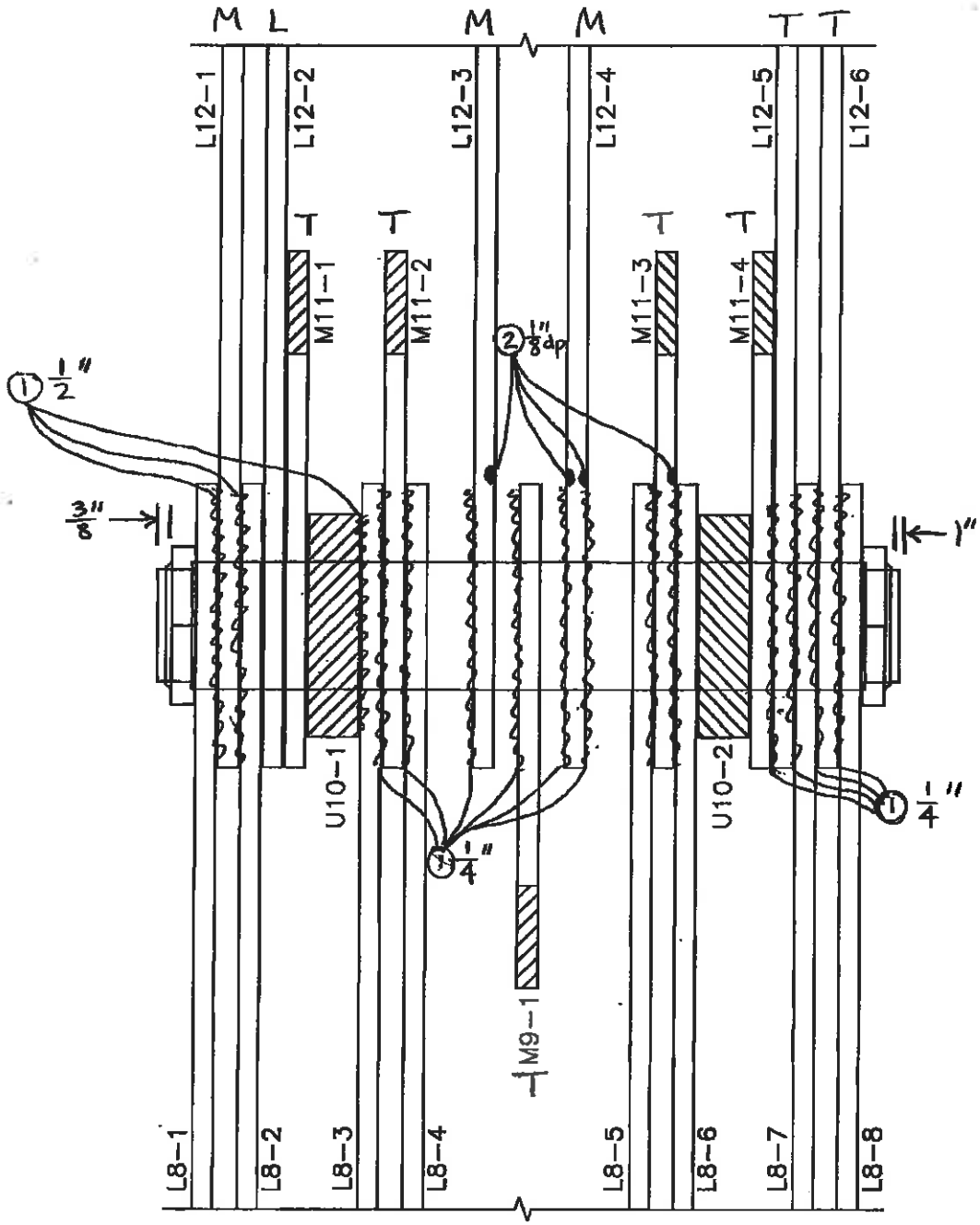


L-10

SPAN 7 TRUSS 1

| NO. | DATE | DESCRIPTION |
|---|---|---|
| 1 | 9/25/12 | WSP-SELLS ML/MA |

REVISIONS

WSP-SELLS VERIFICATION INSPECTION
07/12/2013 NO REVISION

# FIELD NOTES

Stantec Consulting Services Inc.

| | |
|---|---|
| Bridge No.: | 08080R |
| Project No.: | 301-0099 |
| Crew: | LM & AF |
| Date: | 5/4/09 |
| Sheet No.: | 16 |

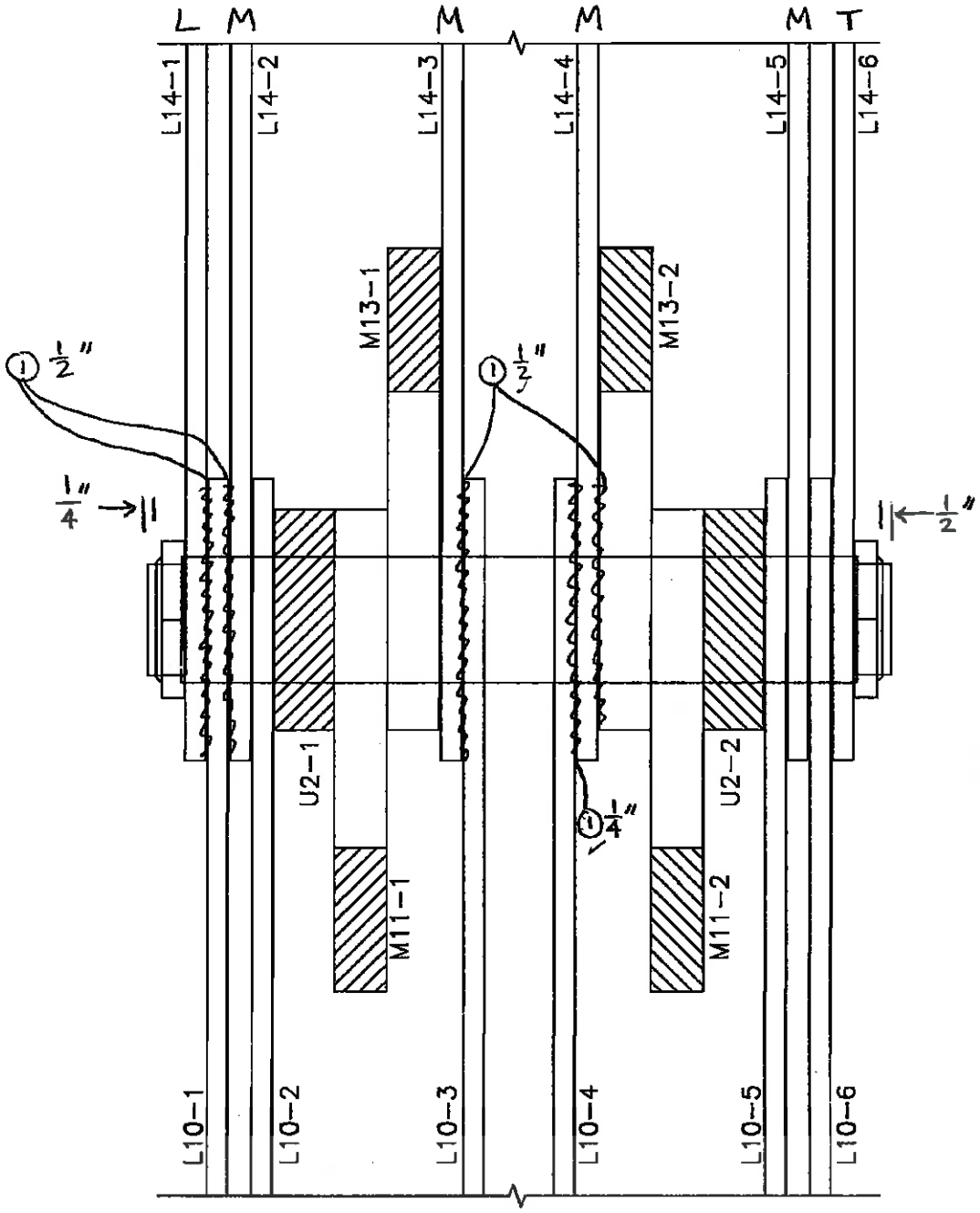


L-12

SPAN 7 TRUSS 1

| NO. | DATE | DESCRIPTION |
|---|---|---|
| 1 | 9/25/12 | WSP-SELLS ML MA |

REVISIONS

WSP-SELLS VERIFICATION INSPECTION
07/12/2013 NO REVISION

# FIELD NOTES

| | |
|---|---|
| Bridge No.: 08080R | |
| Project No.: 301-0099 | |
| Crew: LM & AF | |
| Date: 5/4/09 | Sheet No.: 17 |

Stantec Consulting Services Inc.

* $\frac{3}{8}$"IR Eastside b/w nut & EB L12-6
* $\frac{3}{4}$"IR w/ $\frac{1}{8}$" loss b/w M13-3 and EB L12-6
* Spacer plates exhibit light surface rust
* Abrasion dust b/w M13-1 rivet heads & EB L12-2
* Up to $\frac{1}{4}$" IR b/w N. nut & EB L12-1

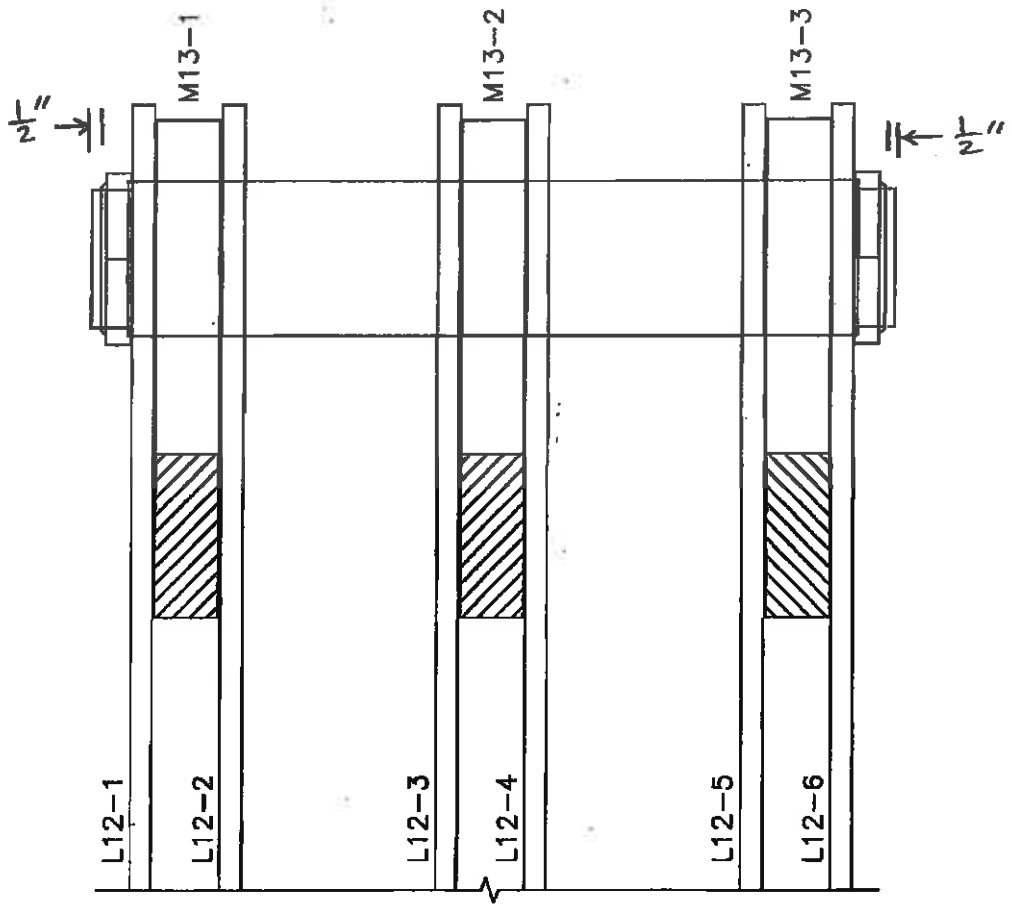


* Condition of pin is obstructed from view
* Up to $\frac{3}{4}$"IR btwn L12-1 & M13-1 w/ up to $\frac{1}{4}$" PLOS

L-14

SPAN 7 TRUSS 1

| NO. | DATE | DESCRIPTION |
|---|---|---|
| | | |
| | | |
| | | |
| 1 | 9/25/12 | WSP-SELLS MLMA |

REVISIONS

18

WSP-SELLS
VERIFICATION INSPECTION
07/12/2013

# Mid-Point Pins

WSP-SELLS VERIFICATION INSPECTION
07/12/2013 NO REVISION

# FIELD NOTES

Stantec Consulting Services Inc.

| | |
|---|---|
| Bridge No.: | 08080R |
| Project No.: | 301-0099 |
| Crew: | EH TB |
| Date: | 5/11/09 |
| Sheet No.: | 19 |

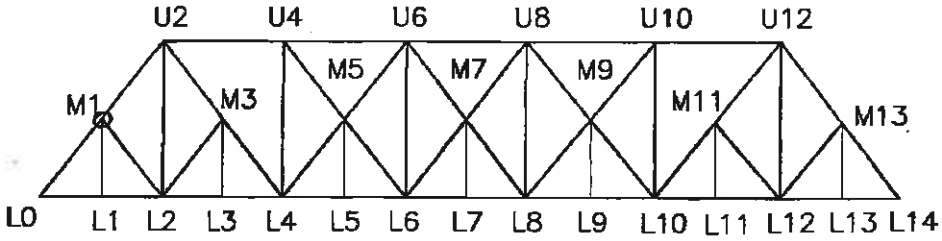


① Slight dusting rust

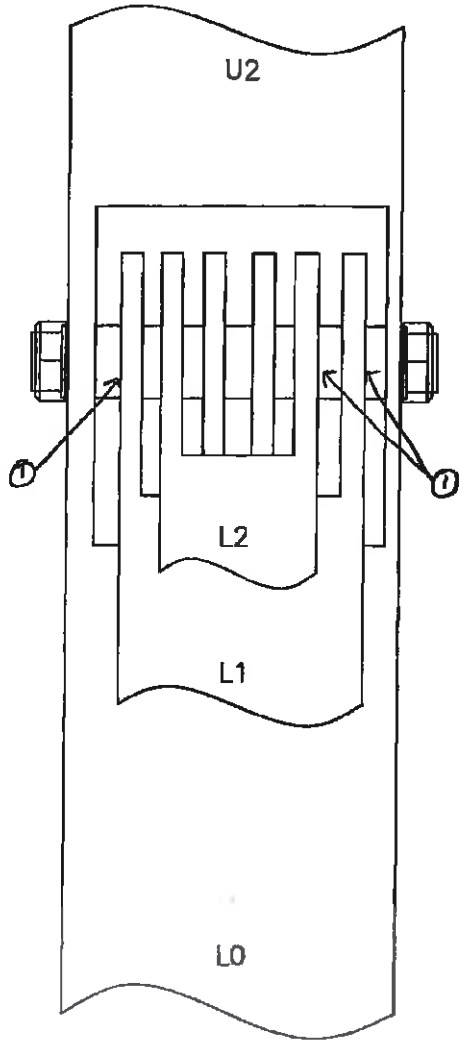


M1

SPAN 7 TRUSS 1
SOUTH ELEVATION MID-POINT PIN

| NO. | DATE | DESCRIPTION |
|---|---|---|
| 1 | 6/25/12 | WSP-SELLS MLMA |

REVISIONS

WSP-SELLS VERIFICATION INSPECTION
07/12/2013 NO REVISION

# FIELD NOTES

Stantec Consulting Services Inc.

| | |
|---|---|
| Bridge No.: | 08080R |
| Project No.: | 301-0099 |
| Crew: | EH TB |
| Date: 5/11/09 | Sheet No.: 20 |

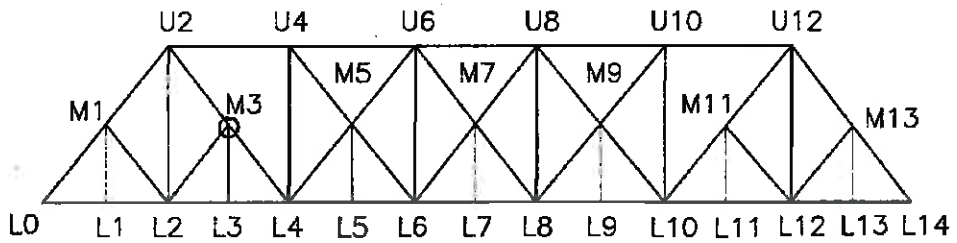


- Heavy rust bleed throughout

① 3/8" impacted rust
② 1/4" impacted rust
③ 5/8" impacted rust
④ 1/4" groove section loss to eyebar
⑤ 1/16" groove section loss to eyebar
⑥ 1/16" wear to eyebar at vertical web plate
⑦ Moderate pitting to pin up to 1/8" dp.
⑧ 3/16" groove section loss to eyebar

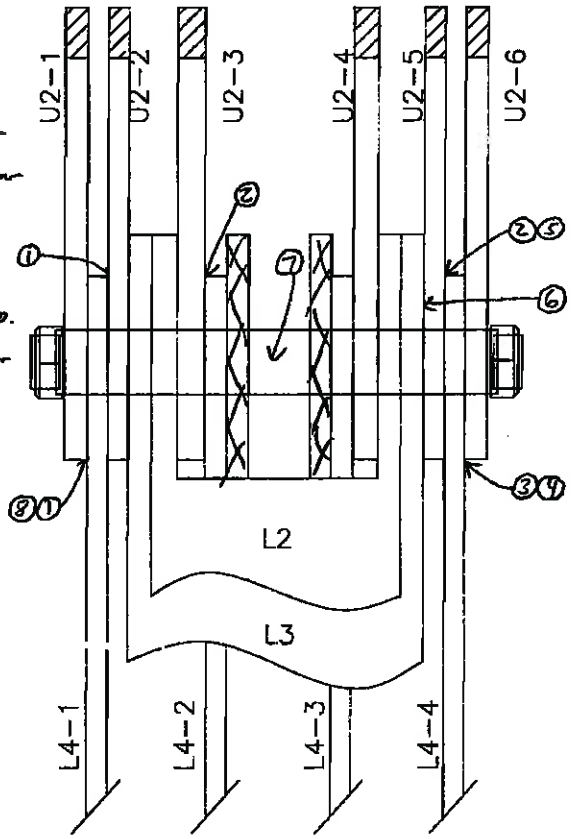


M-3

SPAN 7 TRUSS 1
SOUTH ELEVATION MID-POINT PIN

| NO. | DATE | DESCRIPTION |
|---|---|---|
| 1 | 6/25/12 | WSP-SELLS MLMA |

REVISIONS

WSP-SELLS VERIFICATION INSPECTION
07/12/2013 NO REVISION

# FIELD NOTES

Stantec Consulting Services Inc.

| | |
|---|---|
| Bridge No.: | 08080R |
| Project No.: | 301-0099 |
| Crew: | EH TB |
| Date: 5/11/09 | Sheet No.: 21 |

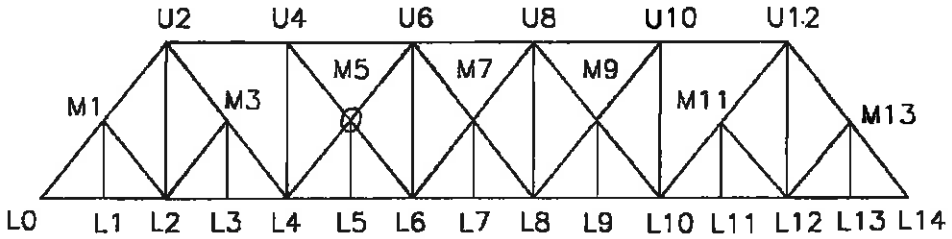


- New hanger + rubber sleeve
- Heavy rust bleed throughout

① 1/4" impacted rust
② 1/8" gap
③ 1/16" wear to eyebar at vertical web plate

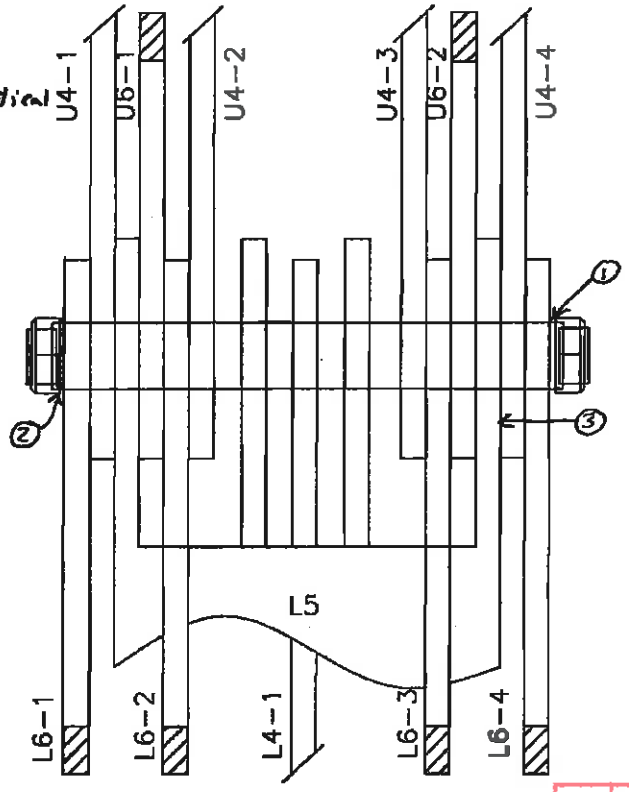


M-5

SPAN 7 TRUSS 1
SOUTH ELEVATION MID-POINT PIN

| NO. | DATE | DESCRIPTION |
|---|---|---|
| 1 | 6/25/12 | WSP-SELLS ML,MA |

REVISIONS

WSP-SELLS VERIFICATION INSPECTION
07/12/2013 NO REVISION

# FIELD NOTES

Stantec Consulting Services Inc.

| | |
|---|---|
| Bridge No.: | 08080R |
| Project No.: | 301-0099 |
| Crew: | EH TB |
| Date: 5/4/09 | Sheet No.: 22 |

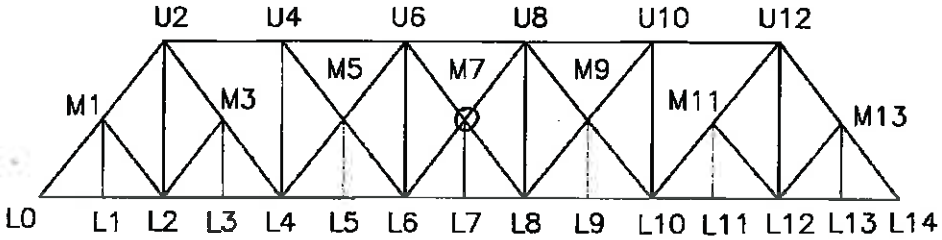


- New hanger + rubber sleeve
- Heavy rust bleed throughout

① 1/16" wear circle to eyebar at nut & 1/2" oversized eyelet
② 3/8" wear circle to eyebar at nut
③ 1/4" pin wear

- L6-1 is twisted

④ 1/16" wear to eyebar

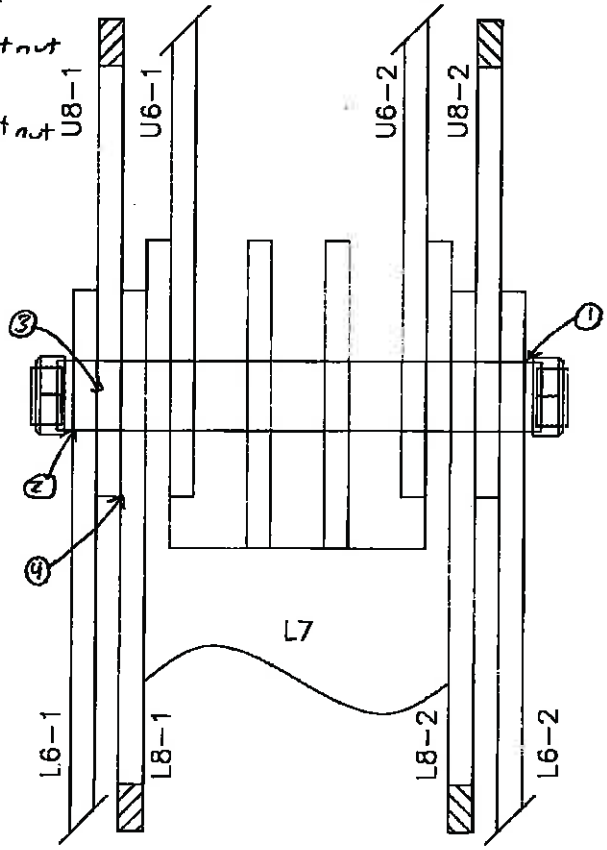


M-7

SPAN 7 TRUSS J
SOUTH ELEVATION MID-POINT PIN

| NO. | DATE | DESCRIPTION |
|---|---|---|
| | | |
| | | |
| | | |
| 1 | 6/25/12 | WSP-SELLS ML/MA |

REVISIONS

WSP-SELLS VERIFICATION INSPECTION
07/12/2013 NO REVISION

# FIELD NOTES

Stantec Consulting Services Inc.

| | |
|---|---|
| Bridge No.: | 08080R |
| Project No.: | 301-0099 |
| Crew: | EH TB |
| Date: 5/11/09 | Sheet No.: 23 |

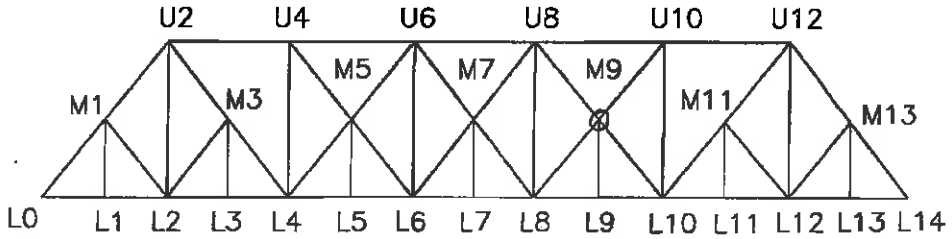


-New hanger & rubber sleeve
① 3/8" impacted rust
② 1/8" wear to eyebar at vertical webplate
③ Moderate pitting on pin
④ Slight wear to pin
⑤ 1/8" pin wear
⑥ 3/16" groove section loss to eyebar

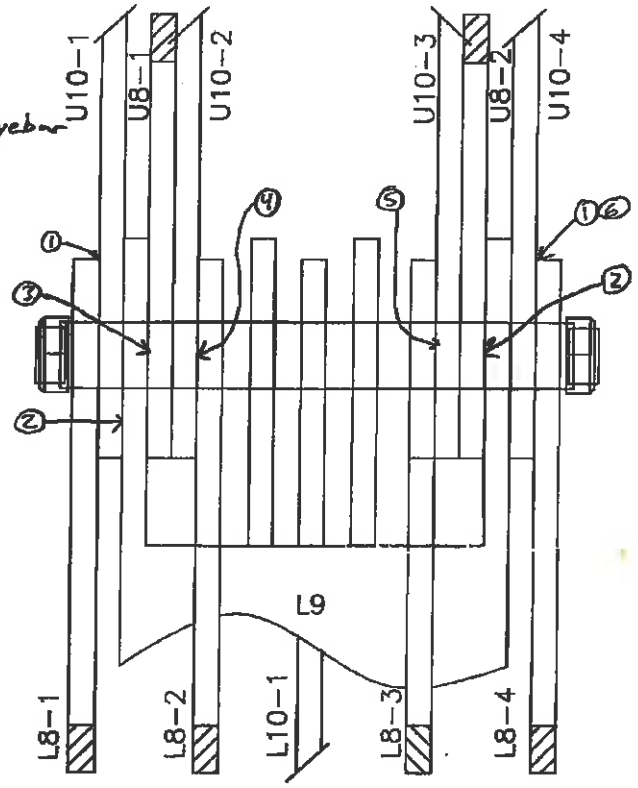


M-9

SPAN 7 TRUSS 1
SOUTH ELEVATION MID-POINT PIN

| NO. | DATE | DESCRIPTION |
|---|---|---|
| 1 | 6/25/12 | WSP-SELLS MLMA |

REVISIONS

WSP-SELLS VERIFICATION INSPECTION
07/12/2013 NO REVISION

# FIELD NOTES

Stantec Consulting Services Inc.

Bridge No.: 08080R
Project No.: 301-0099
Crew: EH TB
Date: 5/11/09 Sheet No.: 24

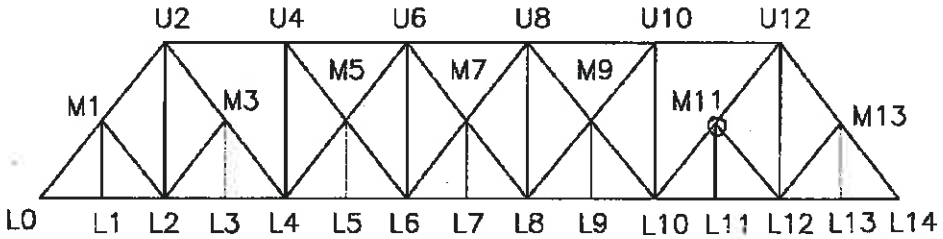


- New hanger + rubber sleeve
- Heavy rust bleed throughout

1. 1/8" impacted rust
2. 3/8" impacted rust
3. 1/4" groove section loss to eyebar
4. 1/8" wear to eyebar at vertical web plate
5. 3/16" groove section loss to eyebar
6. 1/16" wear to diagonal + vertical
7. Moderate wear to eyebars

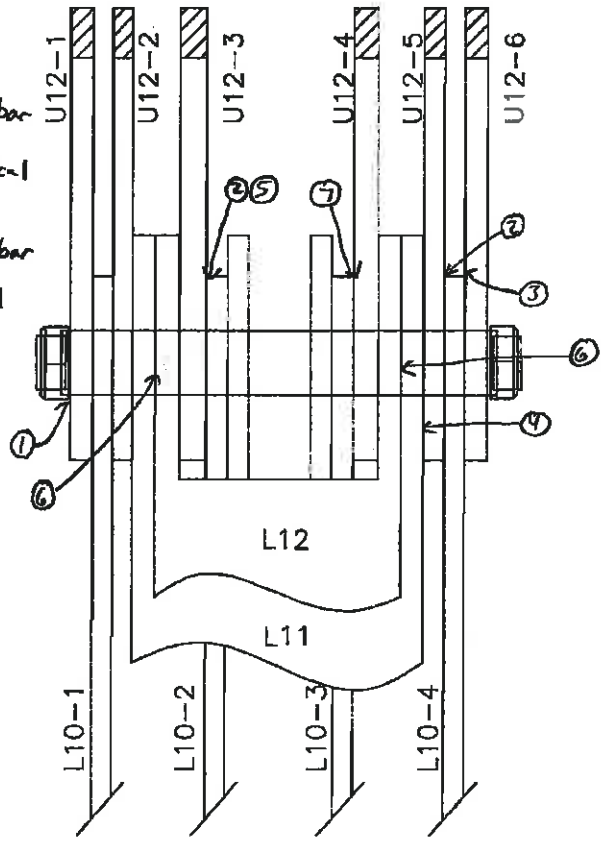


M-11

SPAN 7 TRUSS 1
SOUTH ELEVATION MID-POINT PIN

| NO. | DATE | DESCRIPTION |
|---|---|---|
| | | |
| | | |
| | | |
| 1 | 6/25/12 | WSP-SELLS MLMA |

REVISIONS

WSP-SELLS VERIFICATION INSPECTION
07/12/2013 NO REVISION

# FIELD NOTES

Stantec Consulting Services Inc.

| | |
|---|---|
| Bridge No.: | 08080R |
| Project No.: | 301-0099 |
| Crew: | EH TB |
| Date: 5/11/09 | Sheet No.: 25 |

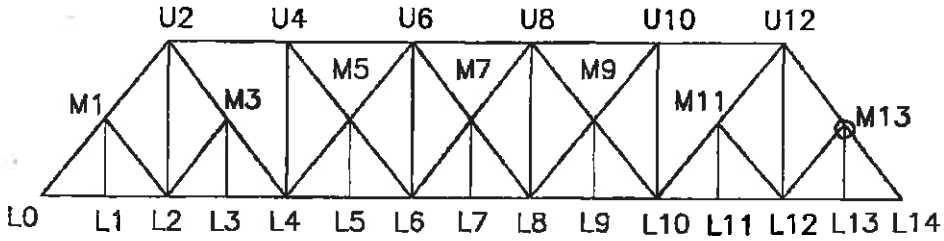


① 1/8" pin wear

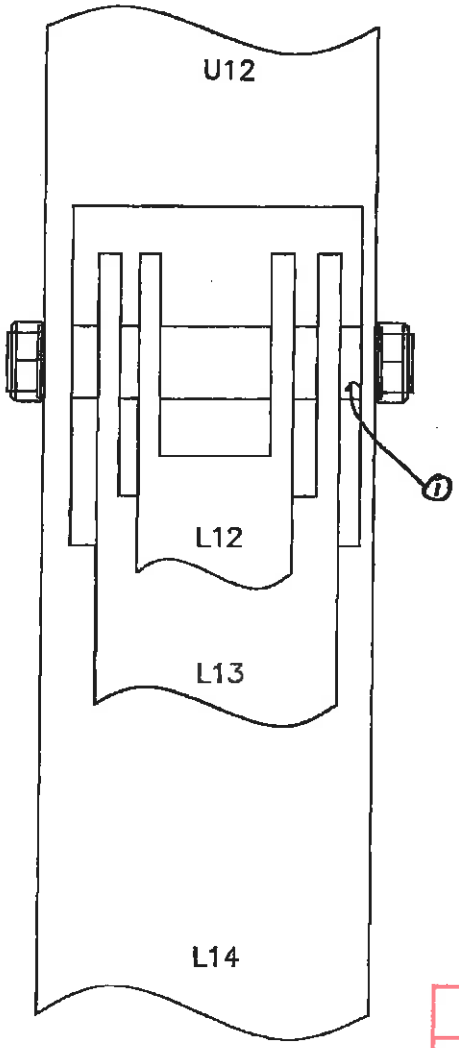


M13

SPAN 7 TRUSS 1
SOUTH ELEVATION MID-POINT PIN

| NO. | DATE | DESCRIPTION |
|---|---|---|
| | | |
| | | |
| | | |
| 1 | 6/25/12 | WSP-SELLS MMA |

REVISIONS

26

WSP-SELLS
VERIFICATION INSPECTION
07/12/2013

# Upper Chord and Upper Chord Pins

WSP-SELLS VERIFICATION INSPECTION
07/12/2013 NO REVISION

# FIELD NOTES

Stantec Consulting Services Inc.

| | |
|---|---|
| Bridge No.: | 08080R |
| Project No.: | .301-0099 |
| Crew: | ELH TB |
| Date: 5/11/09 | Sheet No.: 27 |

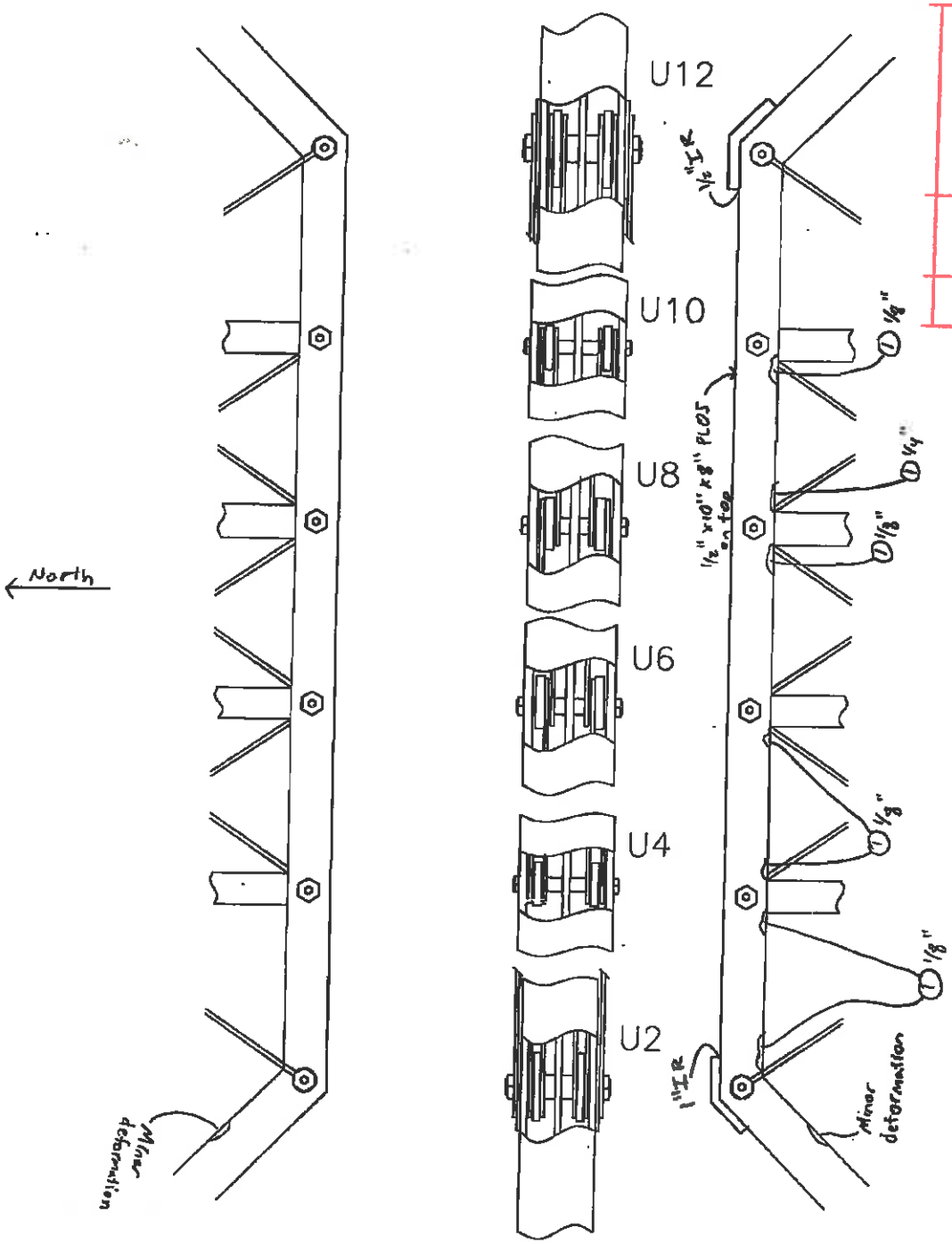


SPAN 7 TRUSS 1
UPPER CHORD PIN

| NO. | DATE | DESCRIPTION |
|---|---|---|
| 1 | 6/25/12 | WSP-SELLS ML,MA |

REVISIONS

WSP-SELLS VERIFICATION INSPECTION
07/12/2013 NO REVISION

# FIELD NOTES

Stantec Consulting Services Inc.

| | |
|---|---|
| Bridge No.: | 08080R |
| Project No.: | 301-0099 |
| Crew: | EH TB |
| Date: 5/11/09 | Sheet No.: 28 |

① Impact rust
② Loss of section

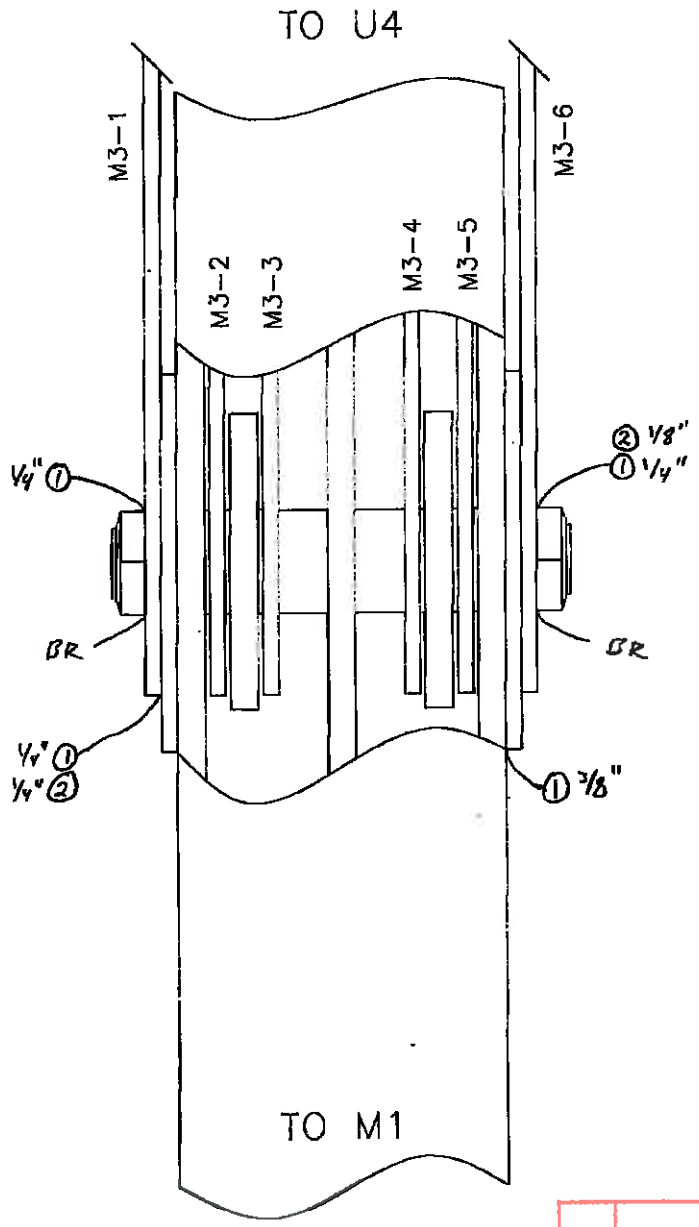


U2

SPAN 7 TRUSS 1
UPPER CHORD PIN

| NO. | DATE | DESCRIPTION |
|---|---|---|
| 1 | 6/25/12 | WSP-SELLS MLMA |

REVISIONS

WSP-SELLS VERIFICATION INSPECTION
07/12/2013 NO REVISION

# FIELD NOTES

Stantec Consulting Services Inc.

| | |
|---|---|
| Bridge No.: | 08080R |
| Project No.: | 301-0099 |
| Crew: | EH TB |
| Date: 5/11/09 | Sheet No.: 29 |

– No deterioration

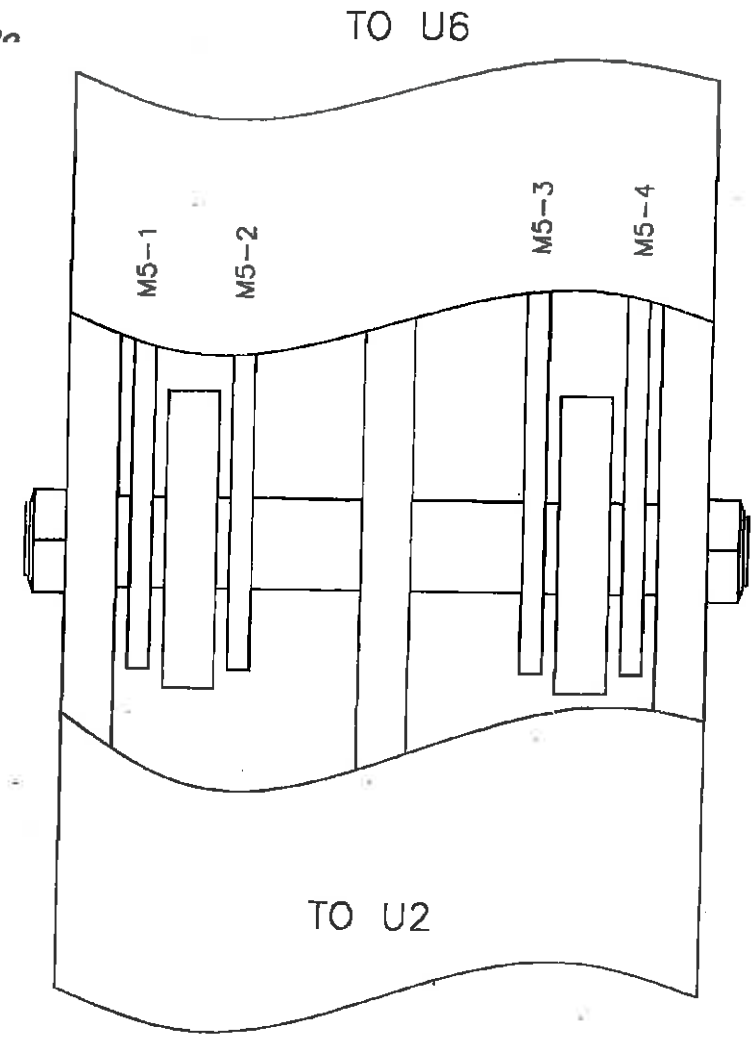


U4

SPAN 7 TRUSS 1
UPPER CHORD PIN

| NO. | DATE | DESCRIPTION |
|---|---|---|
| 1 | 6/25/12 | WSP-SELLS ML,MA |

REVISIONS

WSP-SELLS VERIFICATION INSPECTION
07/12/2013 NO REVISION

# FIELD NOTES

Stantec Consulting Services Inc.

| | |
|---|---|
| Bridge No.: | 08080R |
| Project No.: | 301-0099 |
| Crew: | EH TB |
| Date: 5/11/09 | Sheet No.: 30 |

① 1/8" pin wear

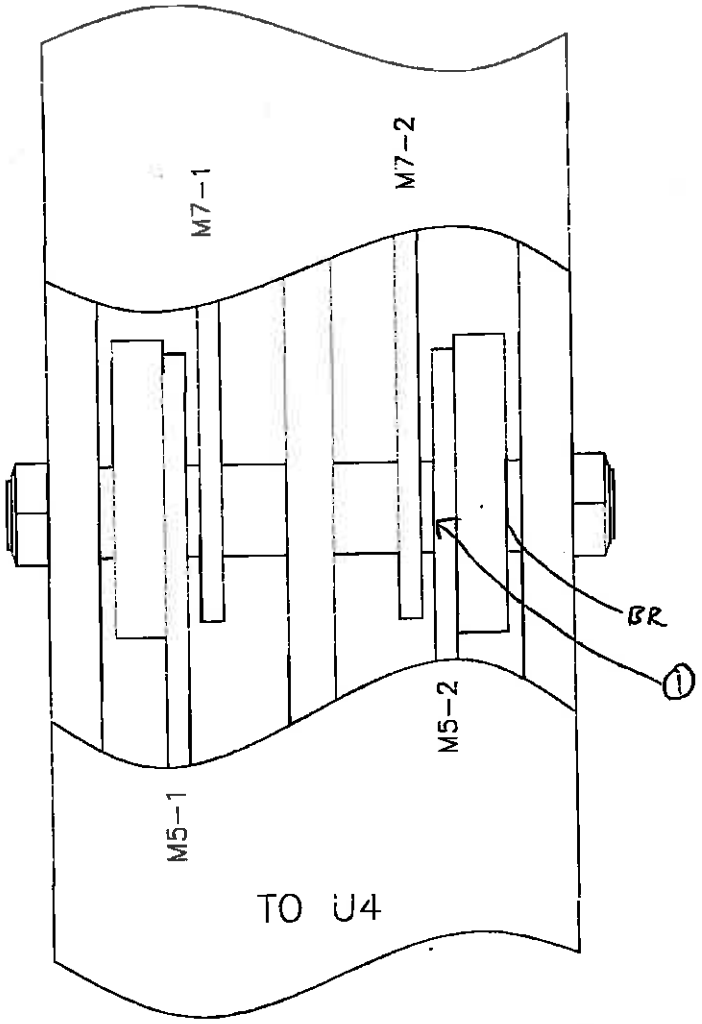


U6a

SPAN 7 TRUSS 1
UPPER CHORD PIN

| NO. | DATE | DESCRIPTION |
|---|---|---|
| 1 | 6/25/12 | WSP-SELLS MLMA |

REVISIONS

WSP-SELLS VERIFICATION INSPECTION
07/12/2013

2

# FIELD NOTES

Stantec Consulting Services Inc.

| | |
|---|---|
| Bridge No.: | 08080R |
| Project No.: | 301-0099 |
| Crew: | EH TB |
| Date: 5/4/09 | Sheet No.: 31 |

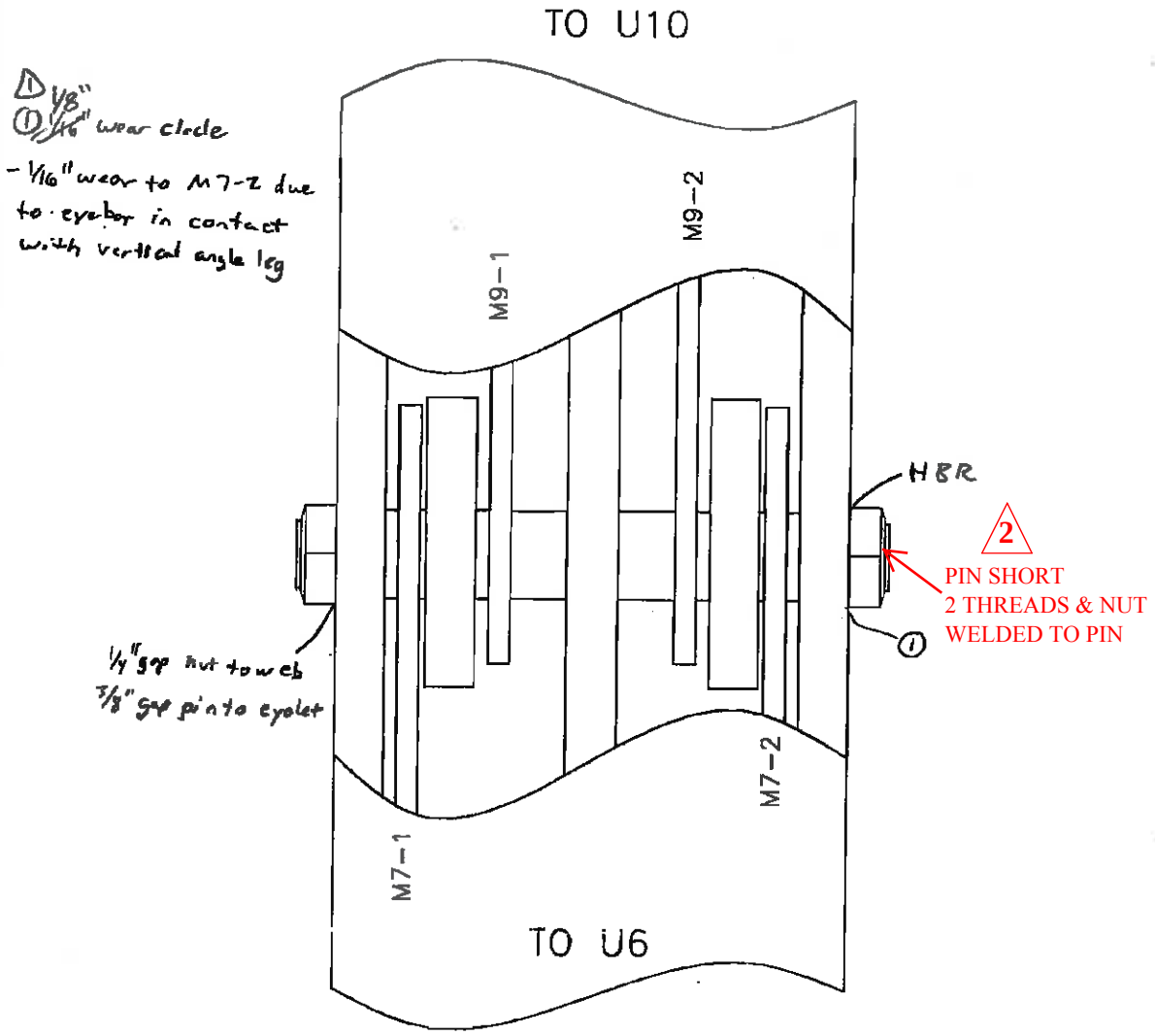


U8

SPAN 7 TRUSS 1
UPPER CHORD PIN

| NO. | DATE | DESCRIPTION |
|---|---|---|
| 2 | 6/3/13 | WSP-SELLS; PA, MD |
| 1 | 6/25/12 | WSP-SELLS MG MA |

REVISIONS

WSP-SELLS VERIFICATION INSPECTION
07/12/2013 NO REVISION

# FIELD NOTES

Stantec Consulting Services Inc.

| | |
|---|---|
| Bridge No.: | 08080R |
| Project No.: | 301-0099 |
| Crew: | EH TB |
| Date: 5/11/09 | Sheet No.: 32 |

-1/8" wear to M9-3 due to eyebar in contact with top chord center girder

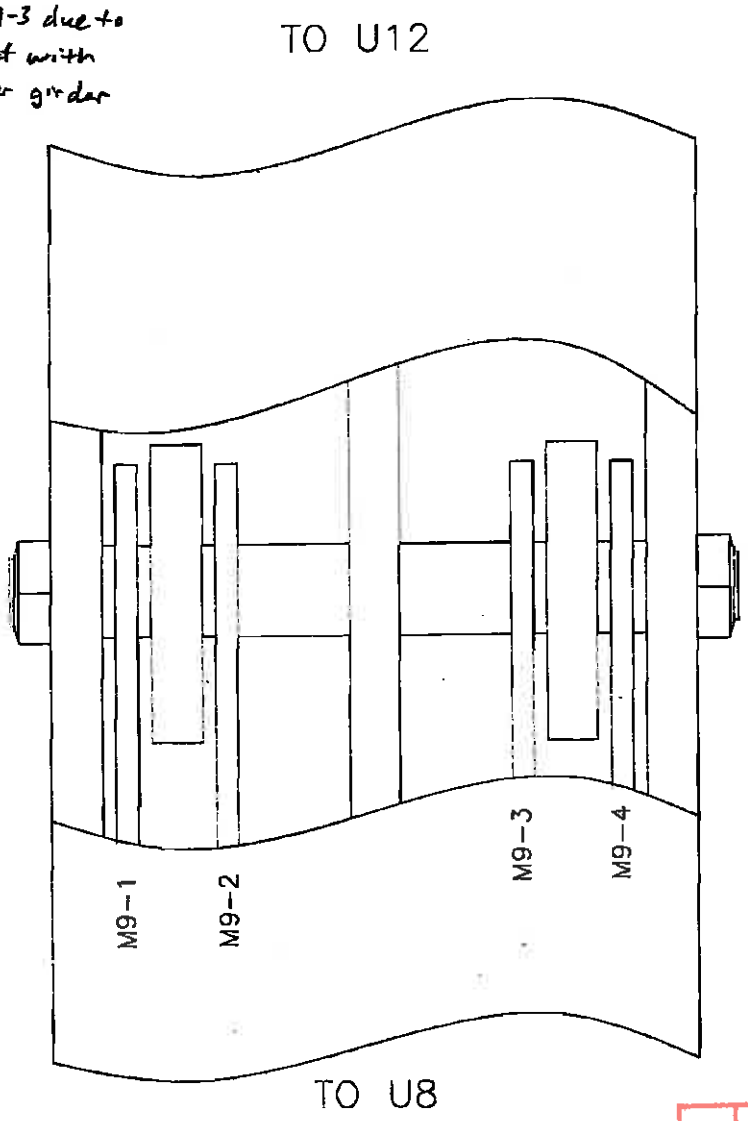


U10

SPAN 7 TRUSS 1
UPPER CHORD PIN

| NO. | DATE | DESCRIPTION |
|---|---|---|
| 1 | 6/25/12 | WSP-SELLS MLMA |

REVISIONS

WSP-SELLS VERIFICATION INSPECTION
07/12/2013 NO REVISION

# FIELD NOTES

| | |
|---|---|
| Bridge No.: | 08080R |
| Project No.: | 301-0099 |
| Crew: | EH TB |
| Date: | 5/11/09 |
| Sheet No.: | 33 |

Stantec Consulting Services Inc.

① Impact rust
② Loss of section

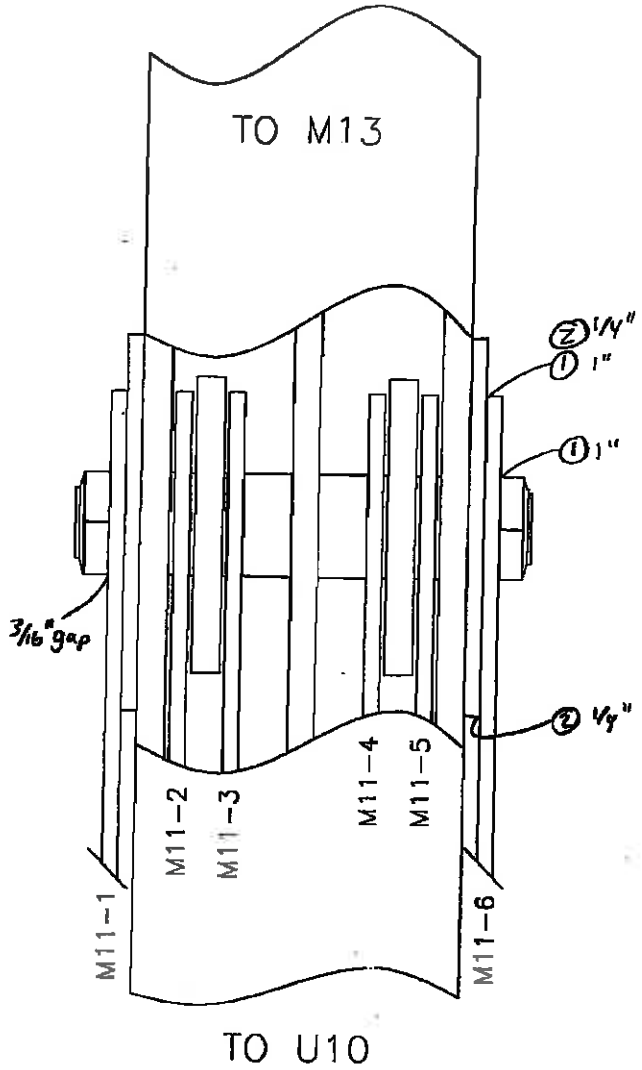


U12

SPAN 7 TRUSS 1
UPPER CHORD PIN

| NO. | DATE | DESCRIPTION |
|---|---|---|
| 1 | 6/25/12 | WSP-SELLS MLMA |

REVISIONS

34

WSP-SELLS
VERIFICATION INSPECTION
07/12/2013

# Truss No. 2

WSP-SELLS VERIFICATION INSPECTION
07/12/2013 NO REVISION

# FIELD NOTES

Stantec Consulting Services Inc.

Bridge No.: 08080R
Project No.: 301-0099
Crew: EH TB
Date: 5/11/09
Sheet No.: 35

① Typical I.R. to lacing bars at random locations - General note for truss
② Typical surface rust at random locations - General note for truss
③ 1/4" x 2" x 10" LOS in top plate
④ 1/4" x 2" x 12" LOS to vertical at T.O. F.B.
⑤ 1/4" x 1" x 10" LOS to vertical at T.O. F.B.
⑥ 1/8" x 1" x 12" LOS to vertical at T.O. F.B.
⑦ 1/2" I.R. to upper plates at mid pin
⑧ For bottom chord, lower, mid, + upper pins, see other sheets

? 5TH M11 - U12
EYE BAR WORK INTO
VETICAL

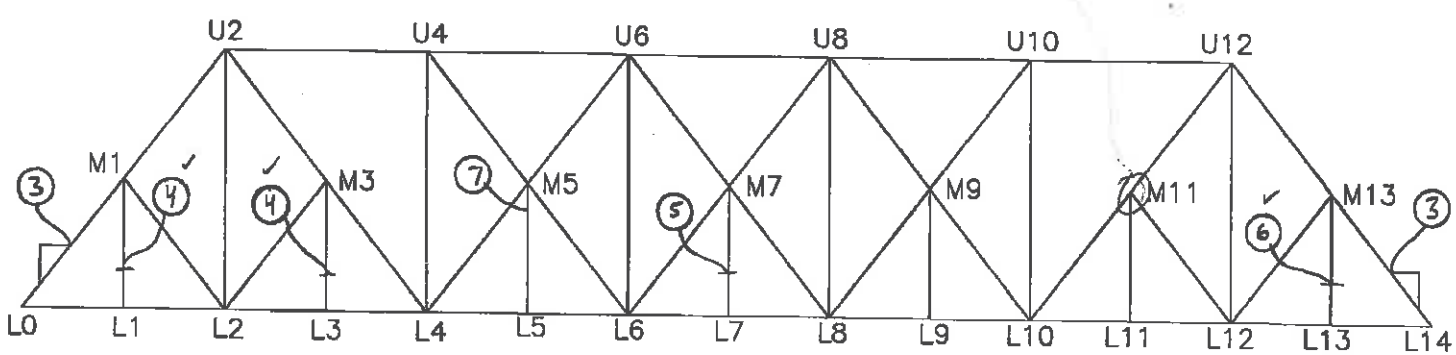


SPAN 7 TRUSS 2

| NO. | DATE | DESCRIPTION |
|---|---|---|
| 1 | 9/25/12 | WSP-SELLS ML/MA |

REVISIONS

36

WSP-SELLS
VERIFICATION INSPECTION
07/12/2013

# Lower Chord Pins

WSP-SELLS VERIFICATION INSPECTION
07/12/2013 NO REVISION

# FIELD NOTES

Stantec Consulting Services Inc.

| | |
|---|---|
| Bridge No.: | 08080R |
| Project No.: | 301-0099 |
| Crew: | LM AF |
| Date: 5/4/09 | Sheet No.: 37 |

## LIST OF ABBREVIATION FOR PINS:

PLOS = PITTING LOSS OF SECTION
IR = IMPACTED RUST
BR = BLEEDING RUST
PBT (TPD) = PASSING BY TRAIN
T – TIGHT
M OR ML = MODERATE LOOSE
L = LOOSE
VL = VERY LOOSE
LMEB = LATERAL MOVEMENT OF EYEBAR

## LEGEND:

1 = IMPACTED RUST

2 = PLOS

3 = NO GAP AND FILL WITH ABRASION RUST

WSP-SELLS VERIFICATION INSPECTION
07/12/2013 NO REVISION

# FIELD NOTES

Stantec Consulting Services Inc.

| | |
|---|---|
| Bridge No.: | 08080R |
| Project No.: | 301-0099 |
| Crew: | LM & AF |
| Date: 5/4/09 | Sheet No.: 38 |

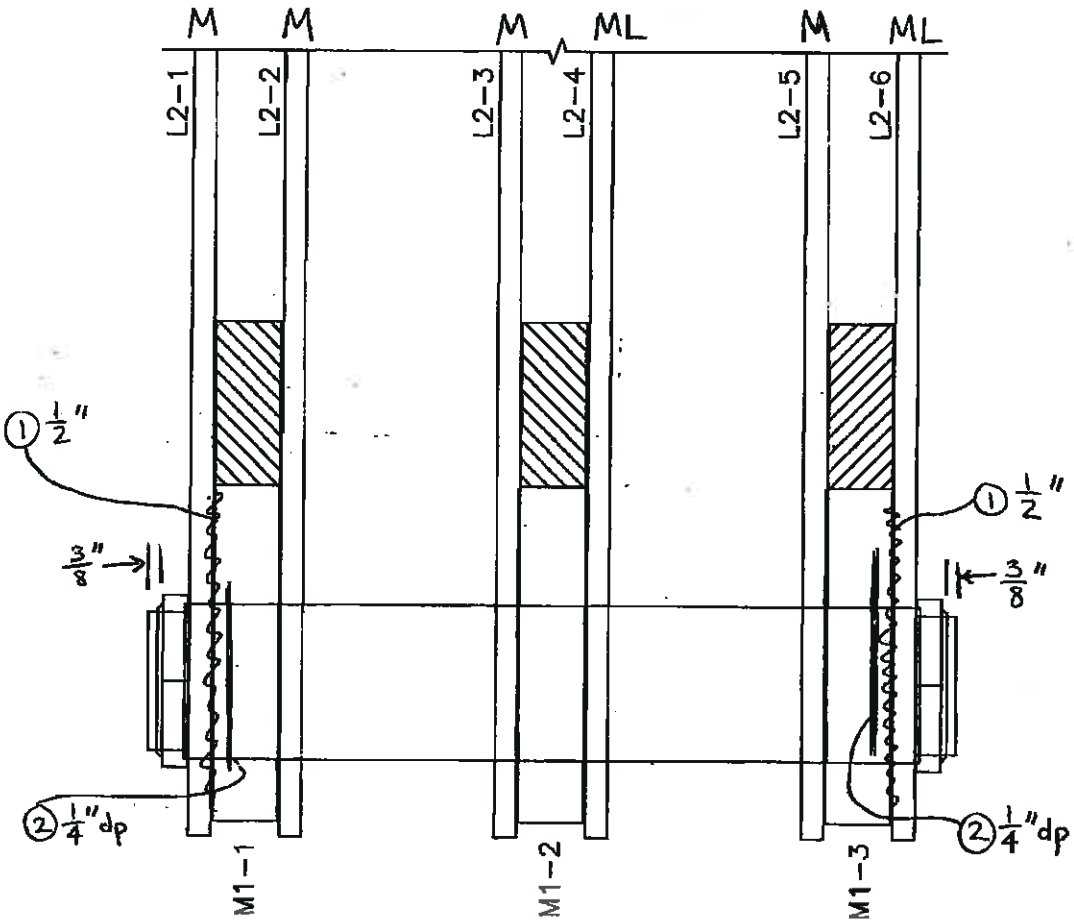


L-0

SPAN 7 TRUSS 2

| NO. | DATE | DESCRIPTION |
|---|---|---|
| 1 | 9/25/12 | WSP-SELLS MLMA |

REVISIONS

WSP-SELLS VERIFICATION INSPECTION
07/12/2013 NO REVISION

# FIELD NOTES

Stantec Consulting Services Inc.

| | |
|---|---|
| Bridge No.: | 08080R |
| Project No.: | 301-0099 |
| Crew: | LM & AF |
| Date: 5/4/09 | Sheet No.: 39 |

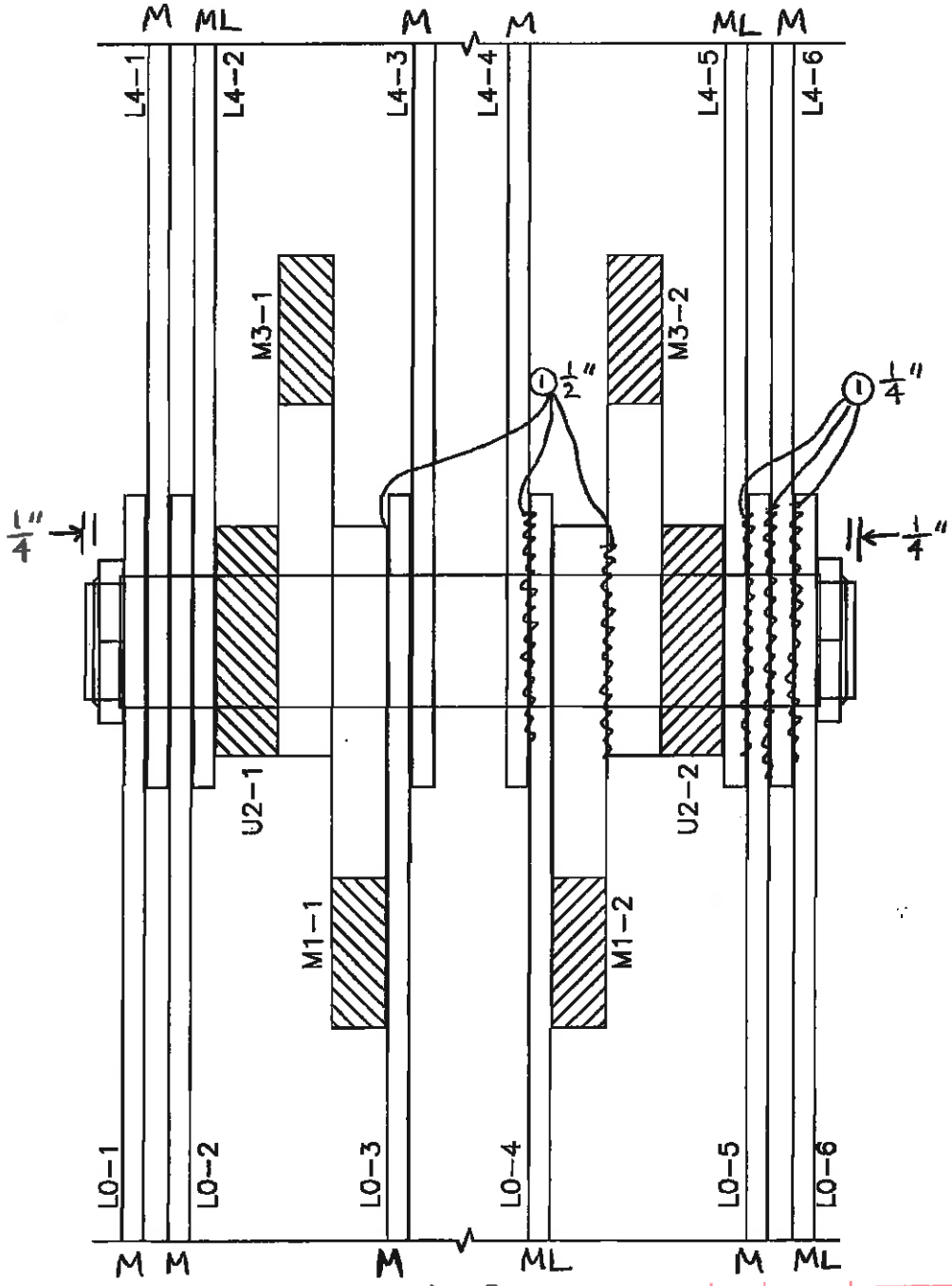


L-2

SPAN 7 TRUSS 2

| NO. | DATE | DESCRIPTION |
|---|---|---|
| 1 | 9/25/12 | WSP-SELLS ML MA |

REVISIONS

WSP-SELLS VERIFICATION INSPECTION
07/12/2013 NO REVISION

# FIELD NOTES

Stantec Consulting Services Inc.

| | |
|---|---|
| Bridge No.: | 08080R |
| Project No.: | 301-0099 |
| Crew: | LM & AF |
| Date: 5/4/09 | Sheet No.: 40 |

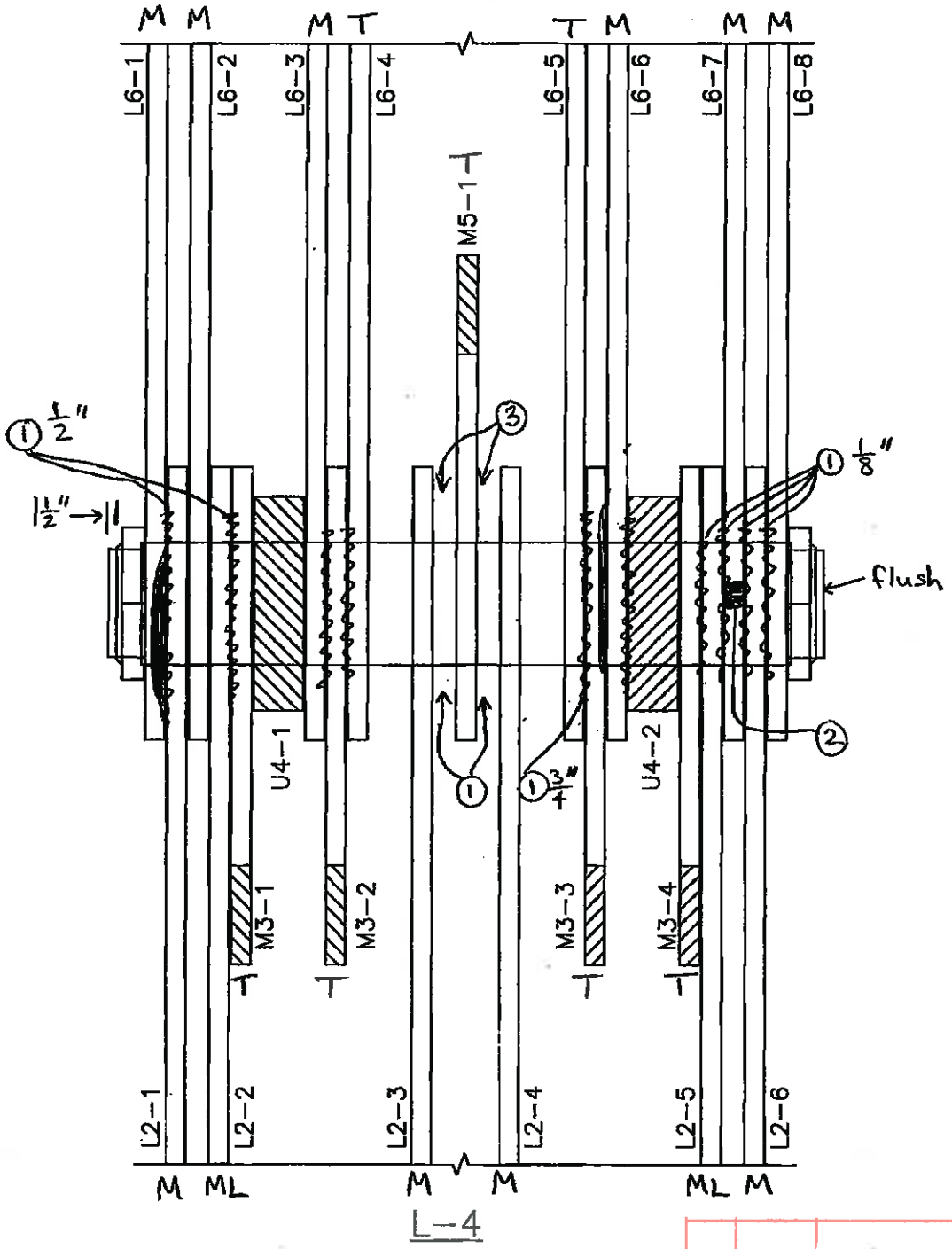


SPAN 7 TRUSS 2

| NO. | DATE | DESCRIPTION |
|---|---|---|
| 1 | 9/25/12 | WSP-SELLS MLMA |

REVISIONS

WSP-SELLS VERIFICATION INSPECTION
07/12/2013 NO REVISION

# FIELD NOTES

Stantec Consulting Services Inc.

| | |
|---|---|
| Bridge No.: | 08080R |
| Project No.: | 301-0099 |
| Crew: | LM & AF |
| Date: 5/4/09 | Sheet No.: 41 |

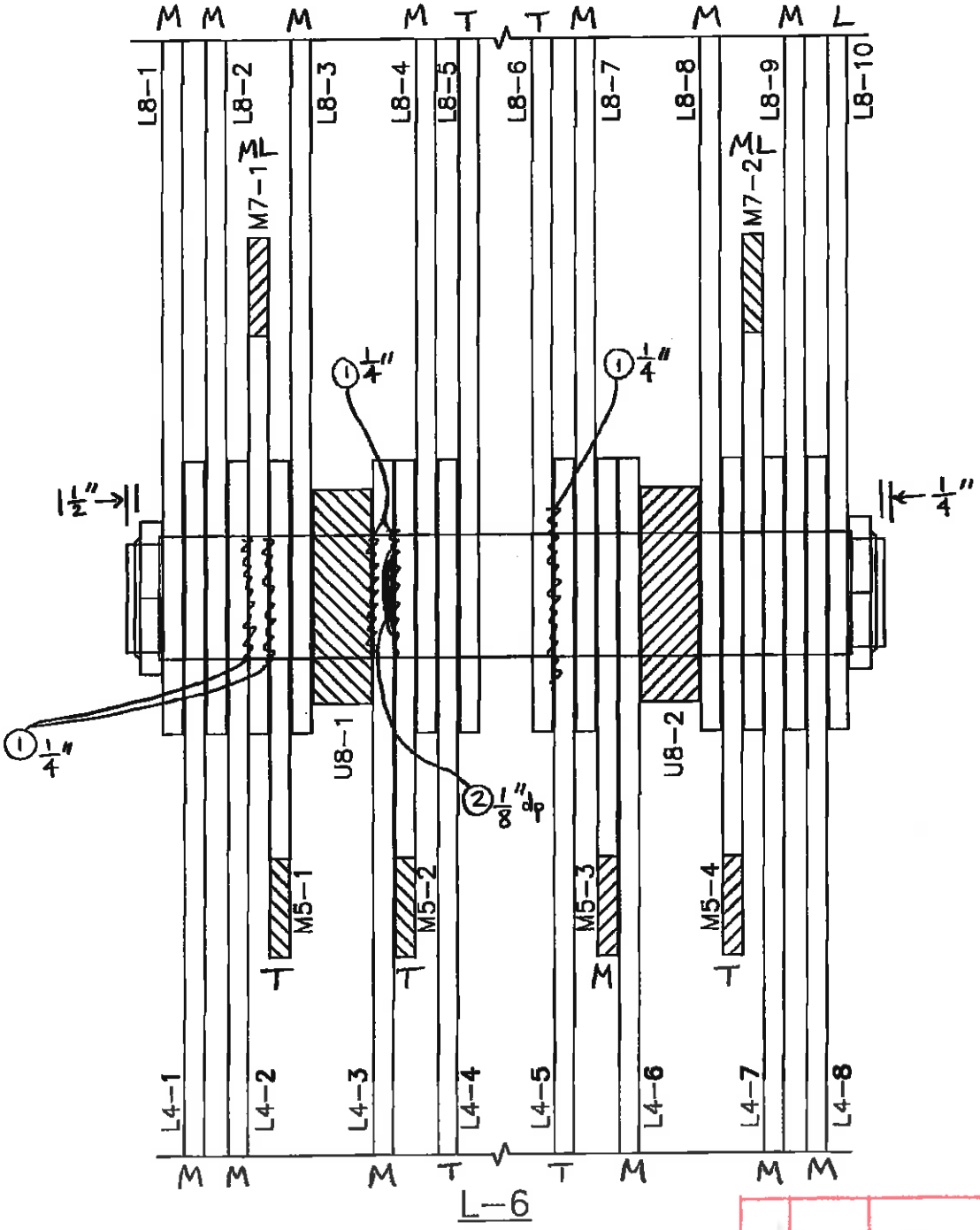


SPAN 7 TRUSS 2

| NO | DATE | DESCRIPTION |
|---|---|---|
| 1 | 9/25/12 | WSP-SELLS ML,MA |

REVISIONS

WSP-SELLS VERIFICATION INSPECTION
07/12/2013 NO REVISION

# FIELD NOTES

Stantec Consulting Services Inc.

| | |
|---|---|
| Bridge No.: | 08080R |
| Project No.: | 301-0099 |
| Crew: | LM & AF |
| Date: 5/4/09 | Sheet No.: 42 |

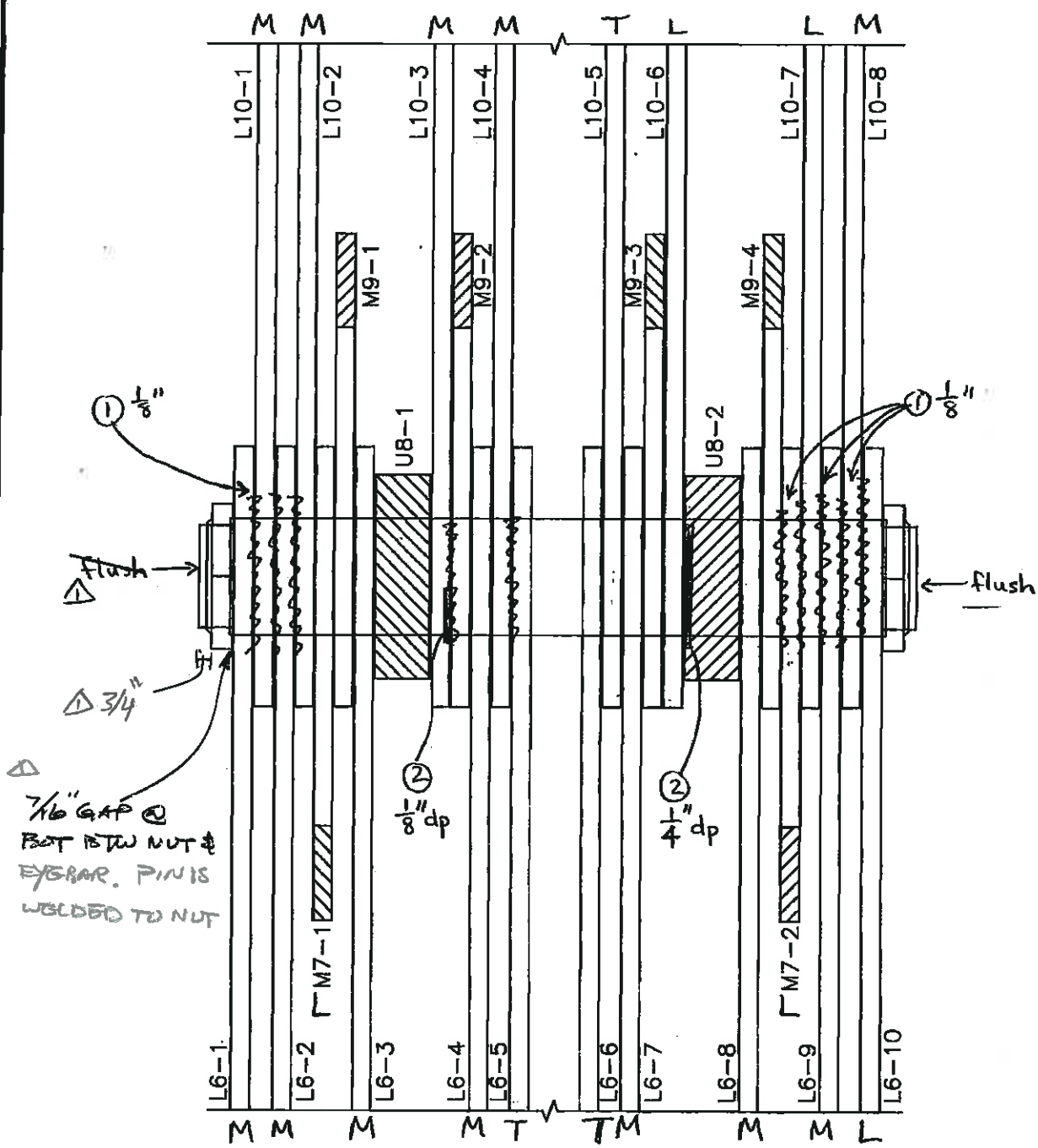


L-8

SPAN 7 TRUSS 2

| NO. | DATE | DESCRIPTION |
|---|---|---|
| △ | 9/25/12 | WSP-SELLS MLMA |

REVISIONS

WSP-SELLS VERIFICATION INSPECTION
07/12/2013 NO REVISION

# FIELD NOTES

Stantec Consulting Services Inc.

| | |
|---|---|
| Bridge No.: | 08080R |
| Project No.: | 301-0099 |
| Crew: | LM & AF |
| Date: 5/4/09 | Sheet No.: 43 |

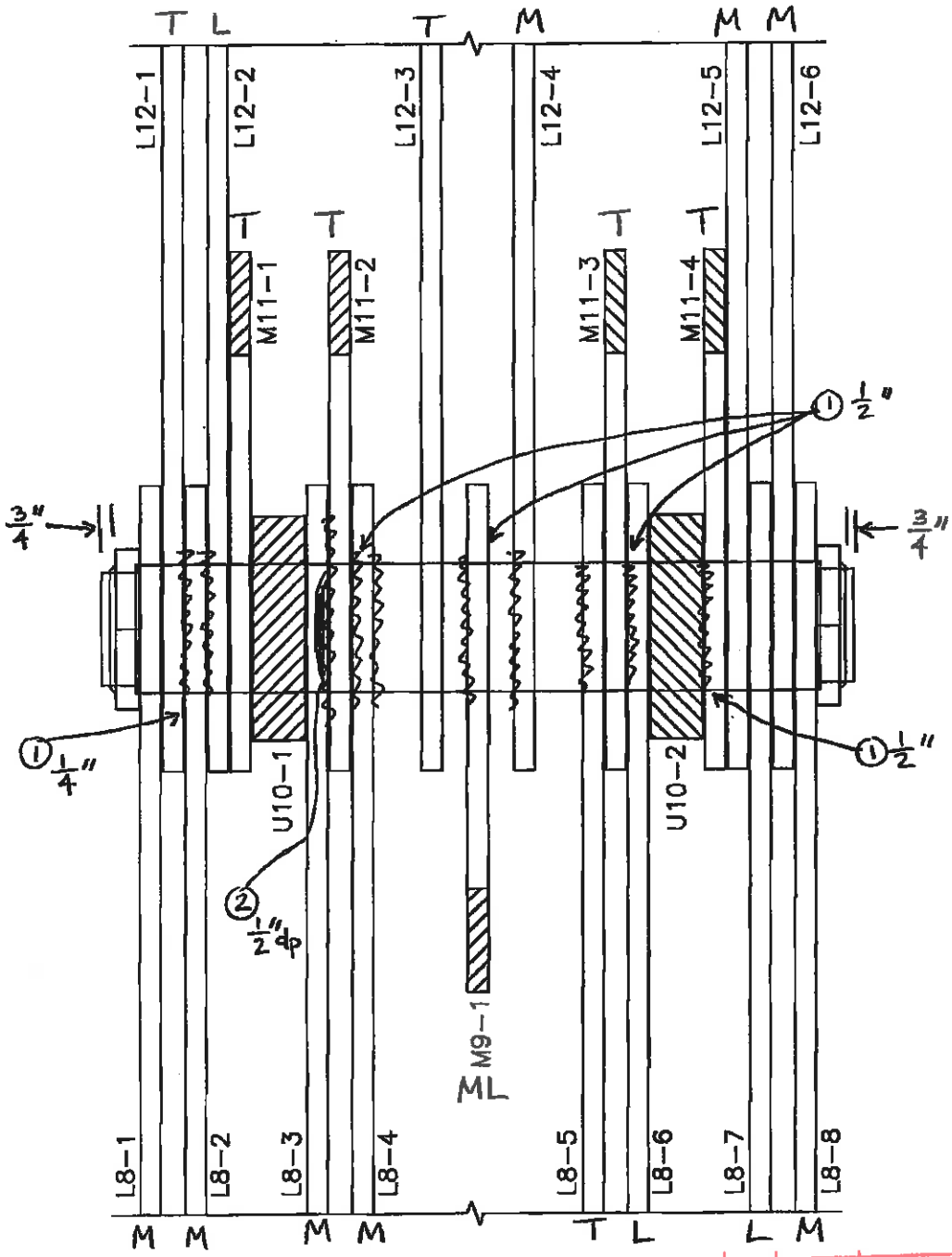


L-10

SPAN 7 TRUSS 2

| NO. | DATE | DESCRIPTION |
|---|---|---|
| 1 | 9/25/12 | WSP-SELLS ML, MA |

REVISIONS

WSP-SELLS VERIFICATION INSPECTION
07/12/2013 NO REVISION

# FIELD NOTES

Stantec Consulting Services Inc.

| | |
|---|---|
| Bridge No.: | 08080R |
| Project No.: | 301-0099 |
| Crew: | LM & AF |
| Date: 5/4/09 | Sheet No.: 44 |

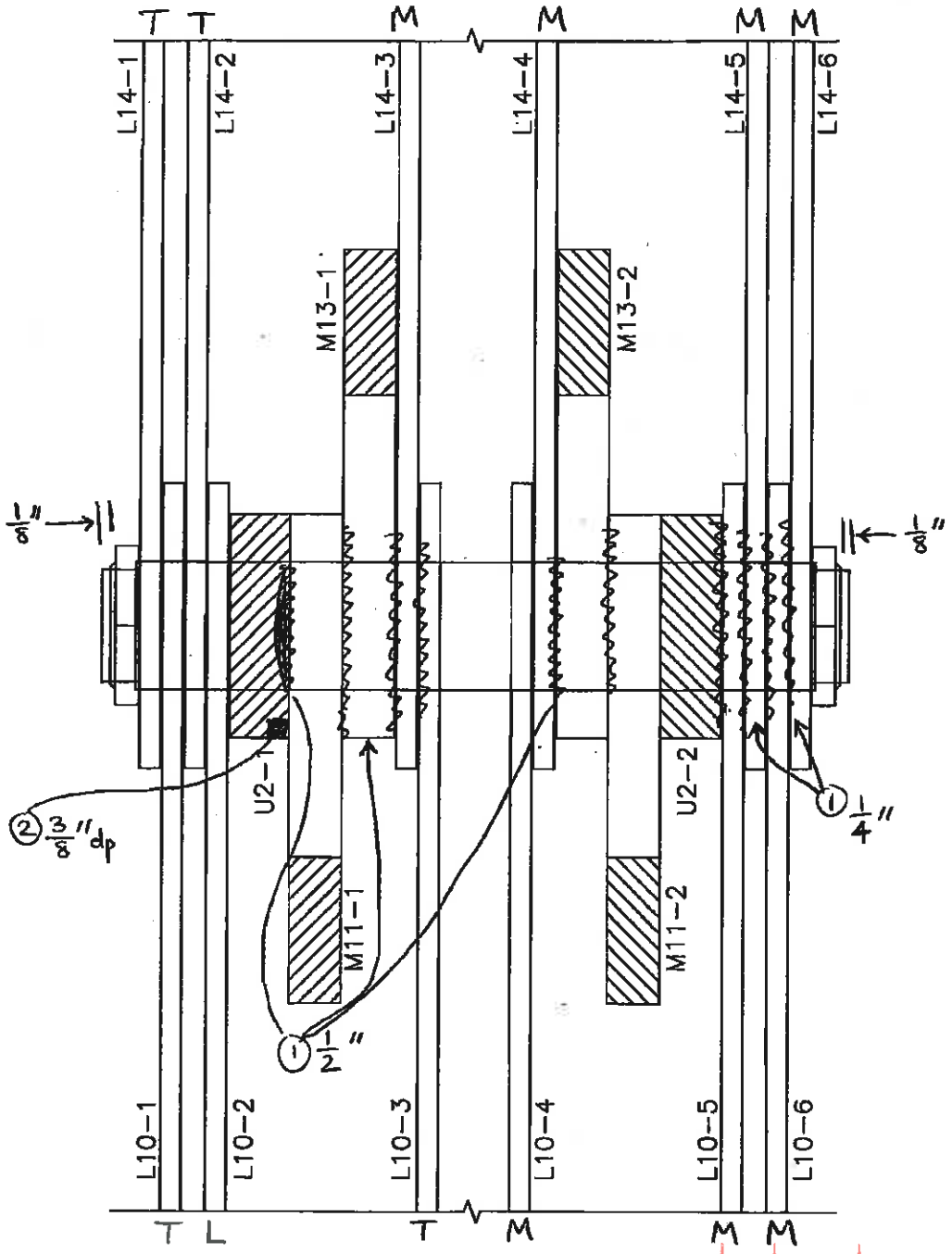


SPAN 7 TRUSS 2

| NO. | DATE | DESCRIPTION |
|---|---|---|
| 1 | 9/25/12 | WSP-SELLS MLMA |

REVISIONS

WSP-SELLS VERIFICATION INSPECTION
07/12/2013 NO REVISION

# FIELD NOTES

Stantec Consulting Services Inc.

| | |
|---|---|
| Bridge No.: | 08080R |
| Project No.: | 301-0099 |
| Crew: | LM & AF |
| Date: 5/4/09 | Sheet No.: 45 |

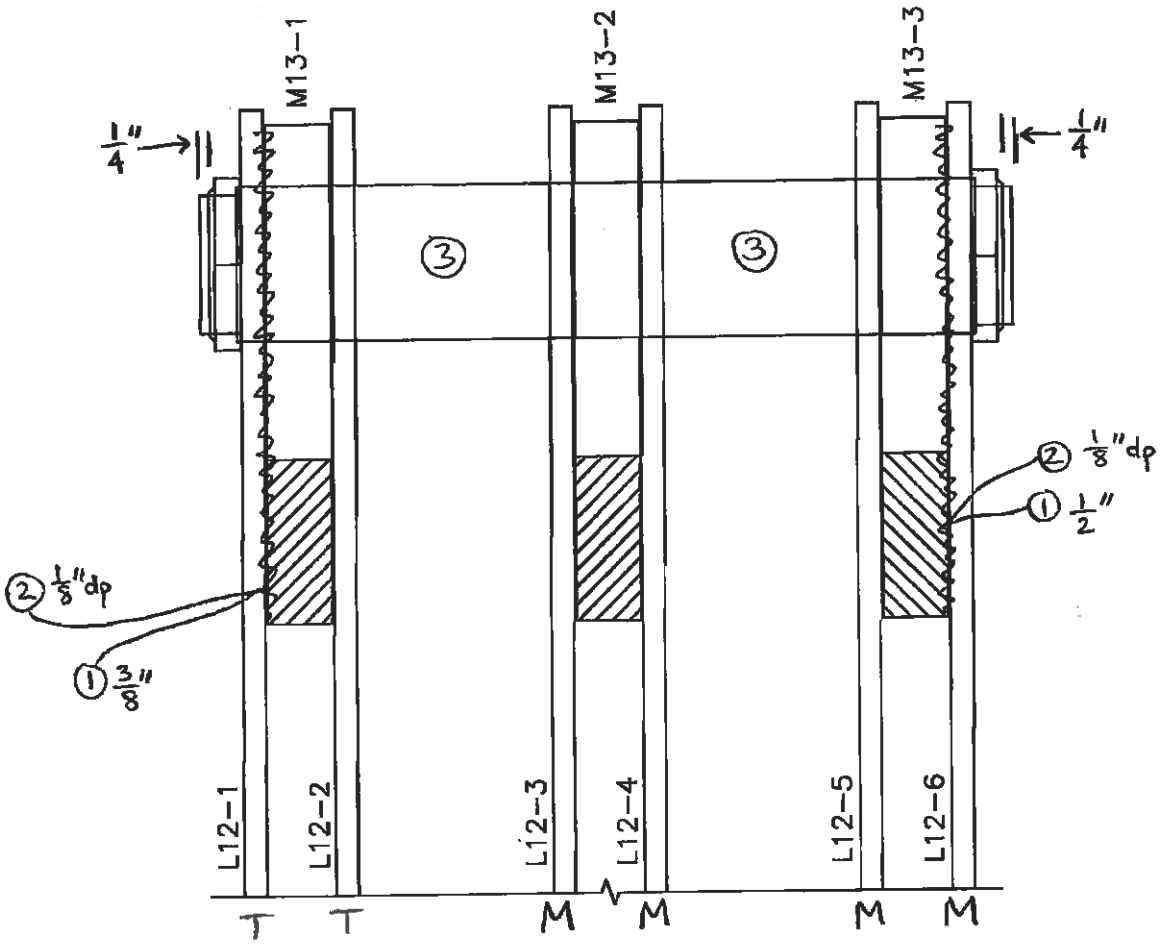


L-14

SPAN 7 TRUSS 2

| NO. | DATE | DESCRIPTION |
|---|---|---|
| 1 | 9/25/12 | WSP-SELLS ML/MA |

REVISIONS

WSP-SELLS
VERIFICATION INSPECTION
07/12/2013

# Mid-Point Pins

WSP-SELLS VERIFICATION INSPECTION
07/12/2013 NO REVISION

# FIELD NOTES

Stantec Consulting Services Inc.

| | |
|---|---|
| Bridge No.: | 08080R |
| Project No.: | 301-0099 |
| Crew: | EH TB |
| Date: | 5/11/09 |
| Sheet No.: | 47 |

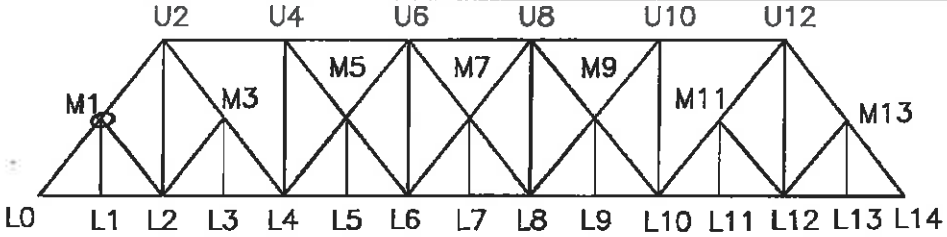


- Rotation of pin + nut is evident from wearmarks in L0-U2 outer web. 1/8" gap between nut + web.
- L2 has slide south by 1/4" causing 1/16" wear to diagonal + vertical members.
- Rust bleed is evident at both nuts.

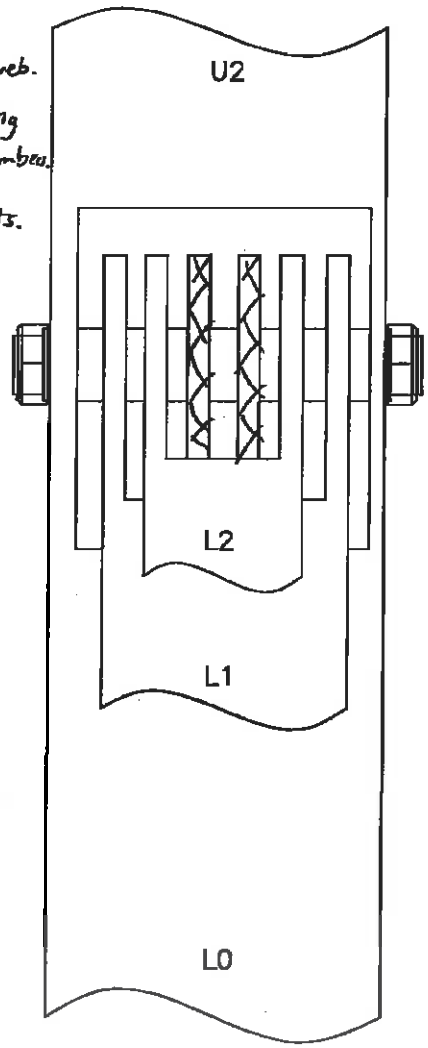


M1

SPAN 7 TRUSS 2
SOUTH ELEVATION MID-POINT PIN

| NO. | DATE | DESCRIPTION |
|---|---|---|
| | | |
| | | |
| | | |
| 1 | 6/25/12 | WSP-SELLS MLMA |

REVISIONS

WSP-SELLS VERIFICATION INSPECTION
07/12/2013 NO REVISION

# FIELD NOTES

Stantec Consulting Services Inc.

| | |
|---|---|
| Bridge No.: | 08080R |
| Project No.: | 301-0099 |
| Crew: | EH TB |
| Date: 5/11/09 | Sheet No.: 48 |

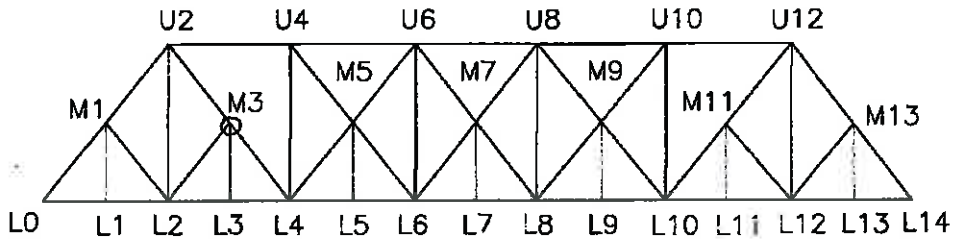


-New hanger & rubber sleeve

① 1/2" impacted rust

② 1/4" section loss to eyebar at pin nut

③ 5/16" groove section loss to eyebar

④ 1/16" wear to eyebar at vertical webplate

⑤ 1/8" groove section loss to eyebar

⑥ 3/16" groove section loss to eyebar

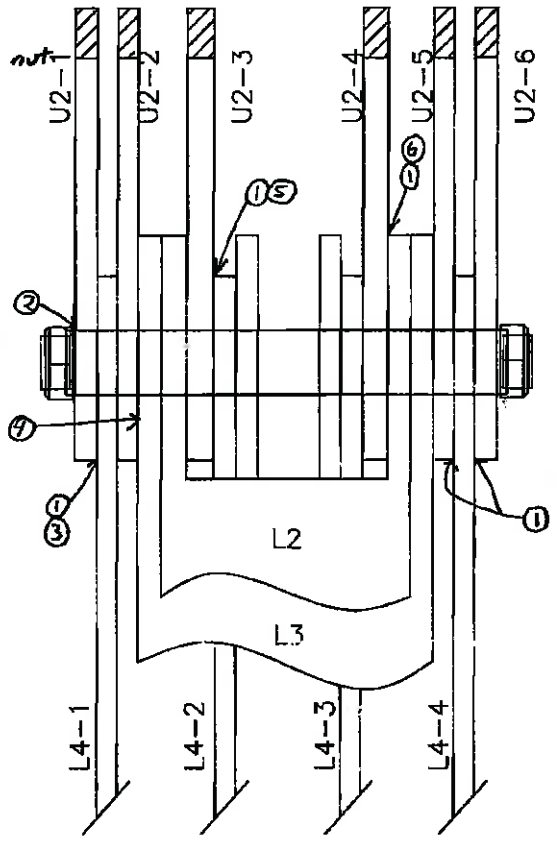


M-3

SPAN 7 TRUSS 2
SOUTH ELEVATION MID-POINT PIN

| NO. | DATE | DESCRIPTION |
|---|---|---|
| 1 | 6/25/12 | WSP-SELLS MLMA |

REVISIONS

WSP-SELLS VERIFICATION INSPECTION
07/12/2013 NO REVISION

# FIELD NOTES

Stantec Consulting Services Inc.

| | |
|---|---|
| Bridge No.: | 08080R |
| Project No.: | 301-0099 |
| Crew: | EH TB |
| Date: 5/11/09 | Sheet No.: 49 |

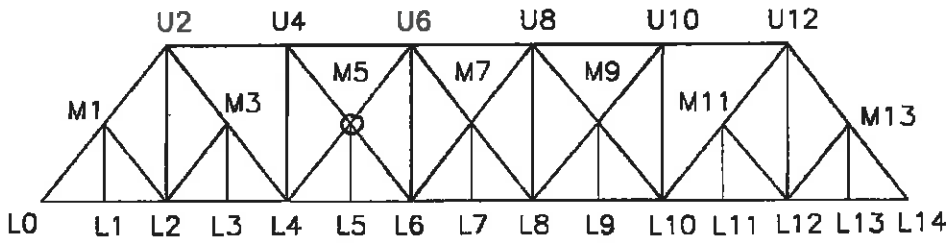


- New hanger + rubber sleeve

① 1/16" wear to eyebar at vertical web plate
② 3/16" groove section loss to eyebar
③ 1/4" groove section loss to eyebar
④ 3/4" impacted rust
⑤ 1/2" to 3/4" impacted rust
⑥ 1/4" impacted rust
⑦ 1/2" gap + 1/4" pin wear

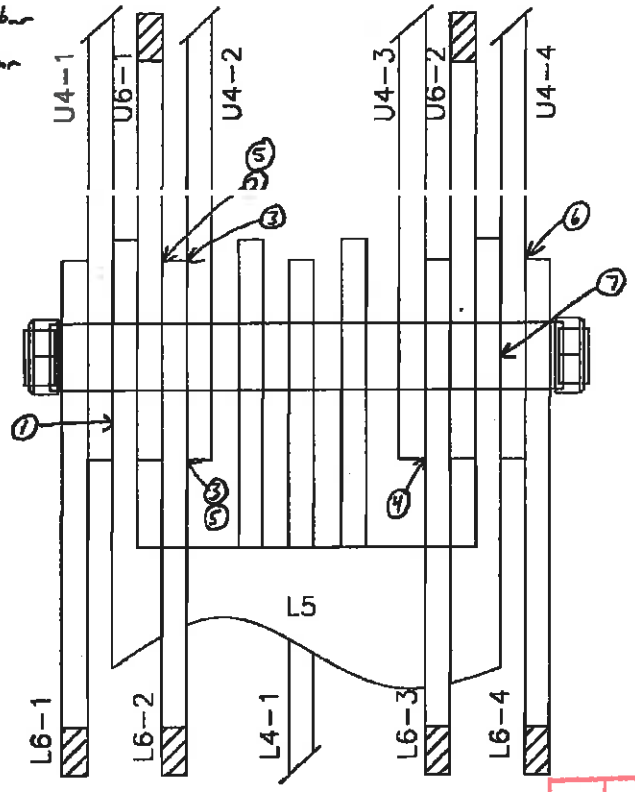


M-5

SPAN 7 TRUSS 2
SOUTH ELEVATION MID-POINT PIN

| NO. | DATE | DESCRIPTION |
|---|---|---|
| 1 | 6/25/12 | WSP-SELLS MLMA |

REVISIONS

WSP-SELLS VERIFICATION INSPECTION
07/12/2013 NO REVISION

# FIELD NOTES

Stantec Consulting Services Inc.

| | |
|---|---|
| Bridge No.: | 08080R |
| Project No.: | 301-0099 |
| Crew: | EH TB |
| Date: 5/11/09 | Sheet No.: 50 |

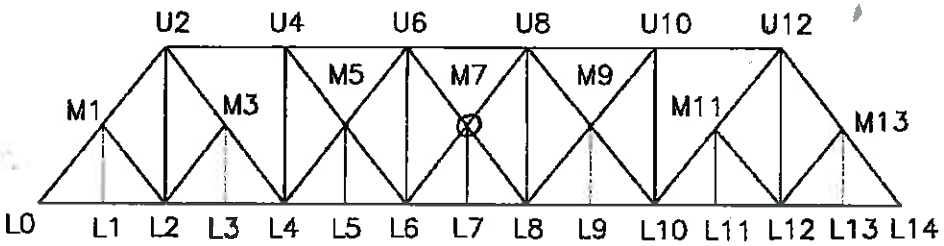


- New hanger + rubber sleeve
- Heavy rust bleed throughout
- ① 1/2" gap between pin nut + eyebar
- ② 1/2" gap to pin + 1/16" pin wear
- L6-1, U8-1, L8-1 are slightly misaligned
- L6-1+2, L8-1+2 are loose

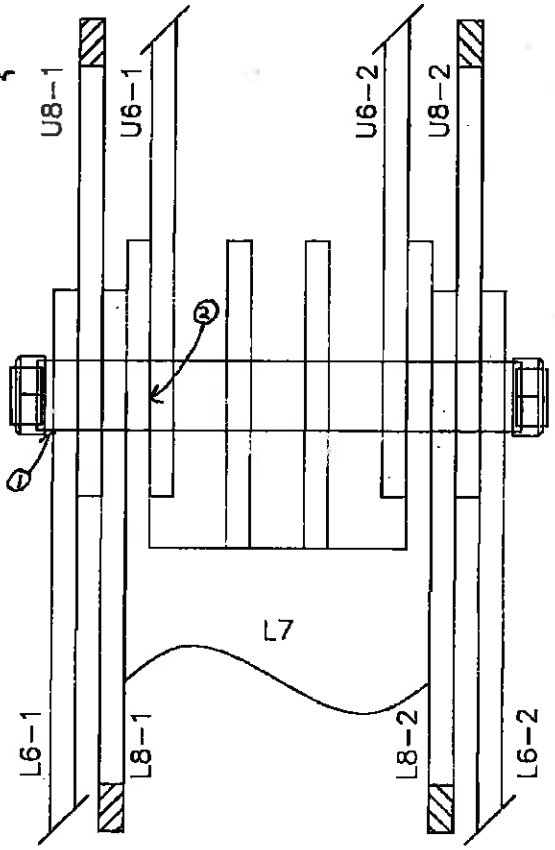


M-7

SPAN 7 TRUSS 2
SOUTH ELEVATION MID-POINT PIN

| NO. | DATE | DESCRIPTION |
|---|---|---|
| 1 | 6/25/12 | WSP-SELLS MLMA |

REVISIONS

WSP-SELLS VERIFICATION INSPECTION
07/12/2013 NO REVISION

# FIELD NOTES

Stantec Consulting Services Inc.

Bridge No.: 08080R
Project No.: 301-0099
Crew: EH TB
Date: 5/11/09 Sheet No.: 51

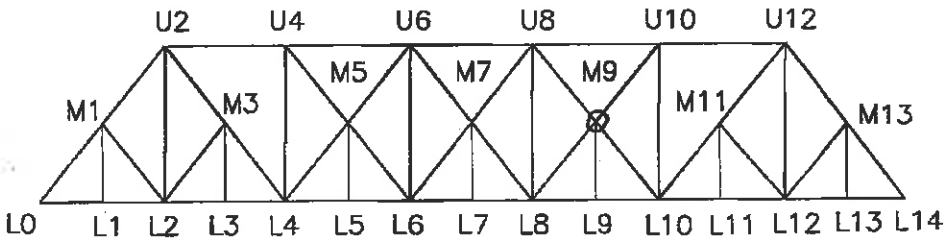


- New hanger & rubber sleeve
- M9-U8 is loose
- M9-L10 is loose
- L8-1,2,&4 are loose
- L10-1 is moderately loose
- L8-1 & L10-1 are slightly misaligned.

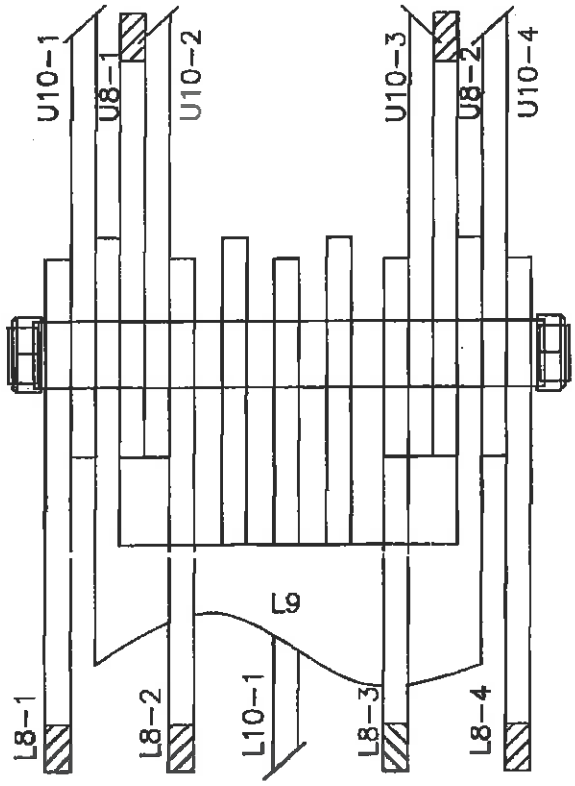


M-9

SPAN 7 TRUSS 2
SOUTH ELEVATION MID-POINT PIN

| NO. | DATE | DESCRIPTION |
|---|---|---|
| 1 | 6/25/12 | WSP-SELLS MLIMA |

REVISIONS

WSP-SELLS VERIFICATION INSPECTION
07/12/2013 NO REVISION

# FIELD NOTES

Stantec Consulting Services Inc.

| | |
|---|---|
| Bridge No.: | 08080R |
| Project No.: | 301-0099 |
| Crew: | EH TB |
| Date: 5/11/09 | Sheet No.: 52 |

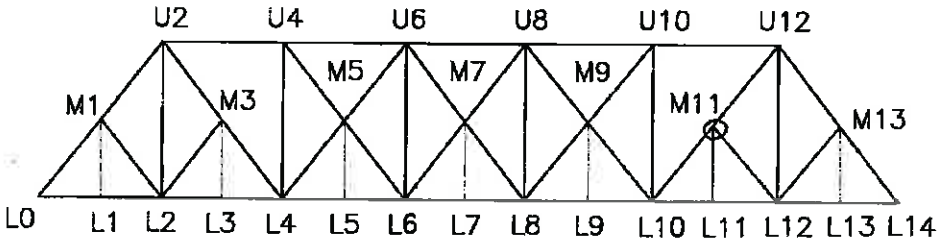


– New hanger + rubber sleeve

① 1/2" impacted rust

② 1/4" groove section loss to eyebar

③ 3/16" groove section loss to eyebar

④ 5/16" groove section loss to eyebar

⑤ 3/16" wear to eyebar at vertical web plate

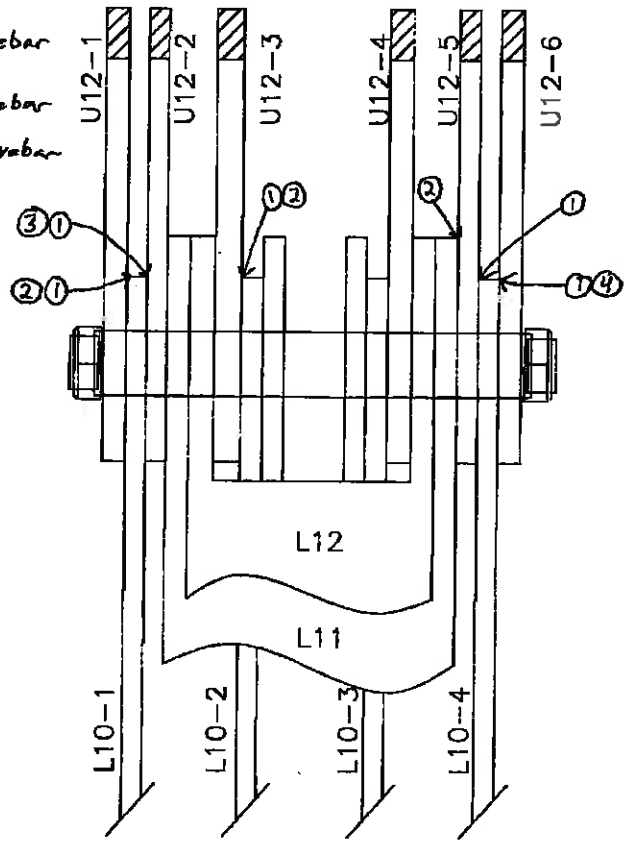


M–11

SPAN 7 TRUSS 2
SOUTH ELEVATION MID–POINT PIN

| NO. | DATE | DESCRIPTION |
|---|---|---|
| 1 | 6/25/12 | WSP-SELLS ML,MA |

REVISIONS

WSP-SELLS VERIFICATION INSPECTION
07/12/2013 NO REVISION

# FIELD NOTES

Stantec Consulting Services Inc.

| | |
|---|---|
| Bridge No.: | 08080R |
| Project No.: | 301-0099 |
| Crew: | EH TB |
| Date: 5/11/09 | Sheet No.: 53 |

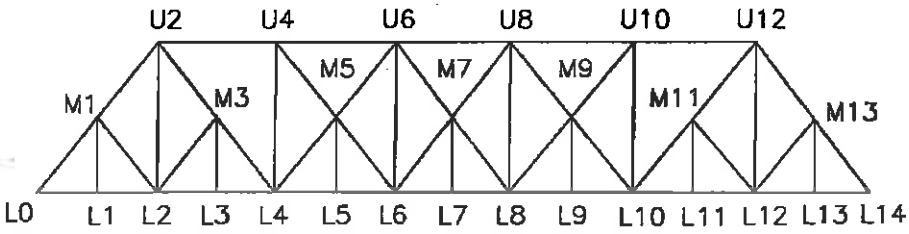


① Minor rust bleed

② Light abrasion dust

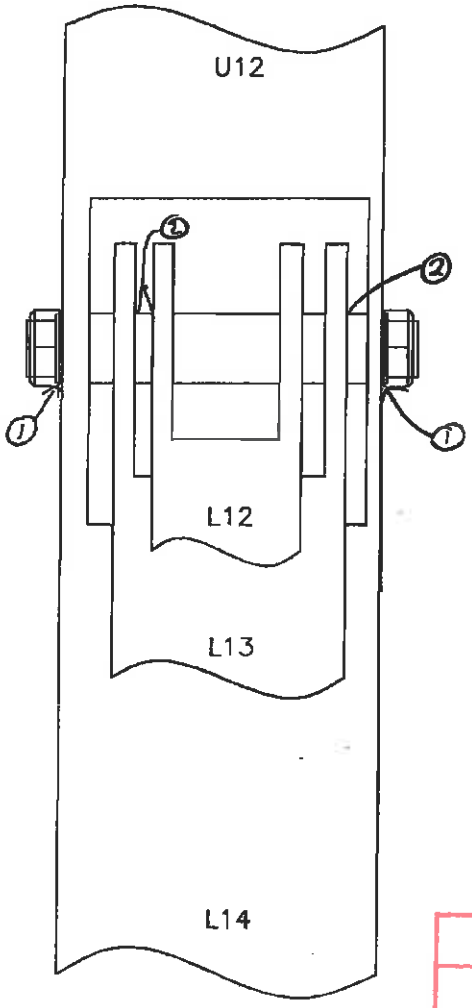


M13

SPAN 7 TRUSS 2
SOUTH ELEVATION MID-POINT PIN

| NO. | DATE | DESCRIPTION |
|---|---|---|
| | | |
| | | |
| | | |
| 1 | 6/25/12 | WSP-SELLS MLMA |

REVISIONS

WSP-SELLS
VERIFICATION INSPECTION
07/12/2013

# Upper Chord and Upper Chord Pins

WSP-SELLS VERIFICATION INSPECTION
07/12/2013 NO REVISION

| FIELD NOTES | Bridge No.: 08080R |
|---|---|
| | Project No.: 301-0099 |
| Stantec Consulting Services Inc. | Crew: EH TB |
| | Date: 5/11/09 Sheet No.: 55 |

| NO. | DATE | DESCRIPTION |
|---|---|---|
| 1 | 6/25/12 | WSP-SELLS ML, MA |

REVISIONS

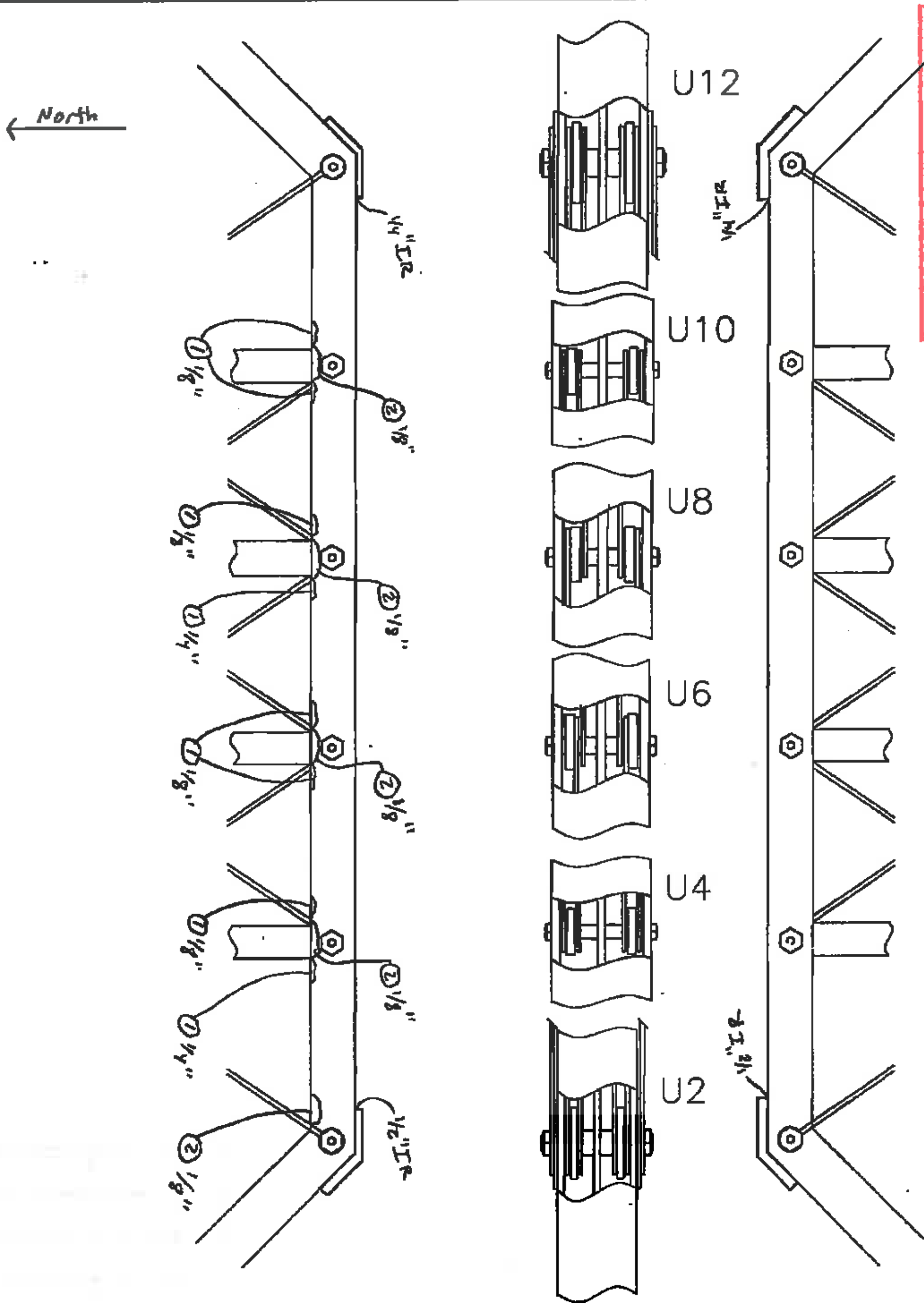


SPAN 7 TRUSS 2
UPPER CHORD PIN

WSP-SELLS VERIFICATION INSPECTION
07/12/2013 NO REVISION

# FIELD NOTES

Stantec Consulting Services Inc.

| | |
|---|---|
| Bridge No.: | 08080R |
| Project No.: | 301-0099 |
| Crew: | EH TB |
| Date: 5/11/09 | Sheet No.: 56 |

① Impact rust
② Loss of section

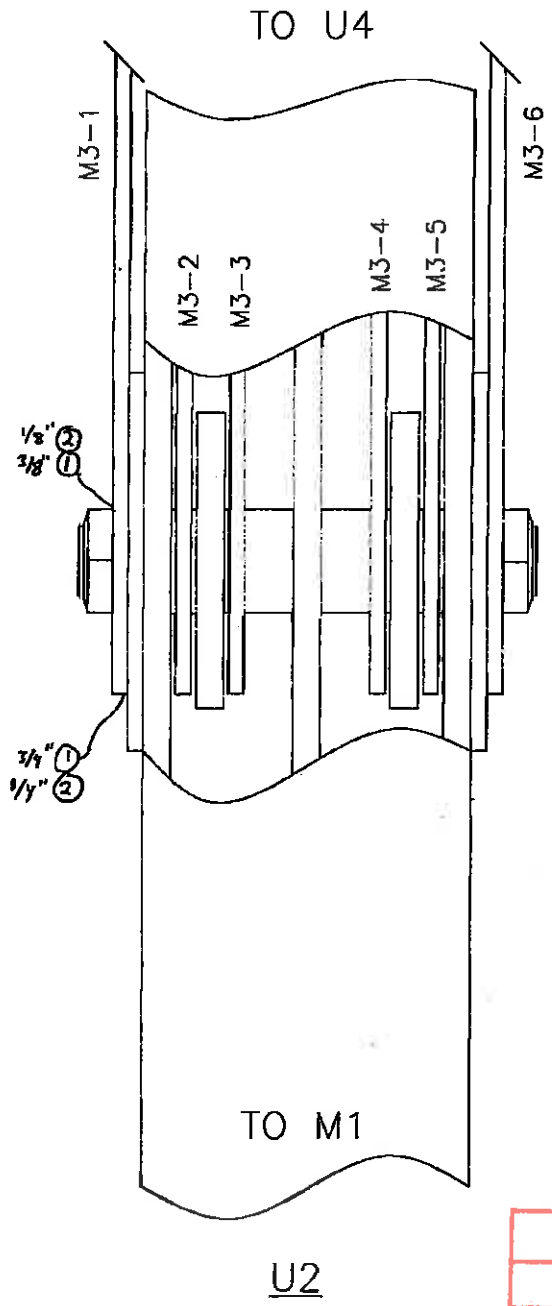


U2

SPAN 7 TRUSS 2
UPPER CHORD PIN

| NO. | DATE | DESCRIPTION |
|---|---|---|
| 1 | 6/25/12 | WSP-SELLS ML/MA |

REVISIONS

WSP-SELLS VERIFICATION INSPECTION
07/12/2013 NO REVISION

# FIELD NOTES

Stantec Consulting Services Inc.

| | |
|---|---|
| Bridge No.: | 08080R |
| Project No.: | 301-0099 |
| Crew: | EH TB |
| Date: 5/11/09 | Sheet No.: 57 |

① Impact rust

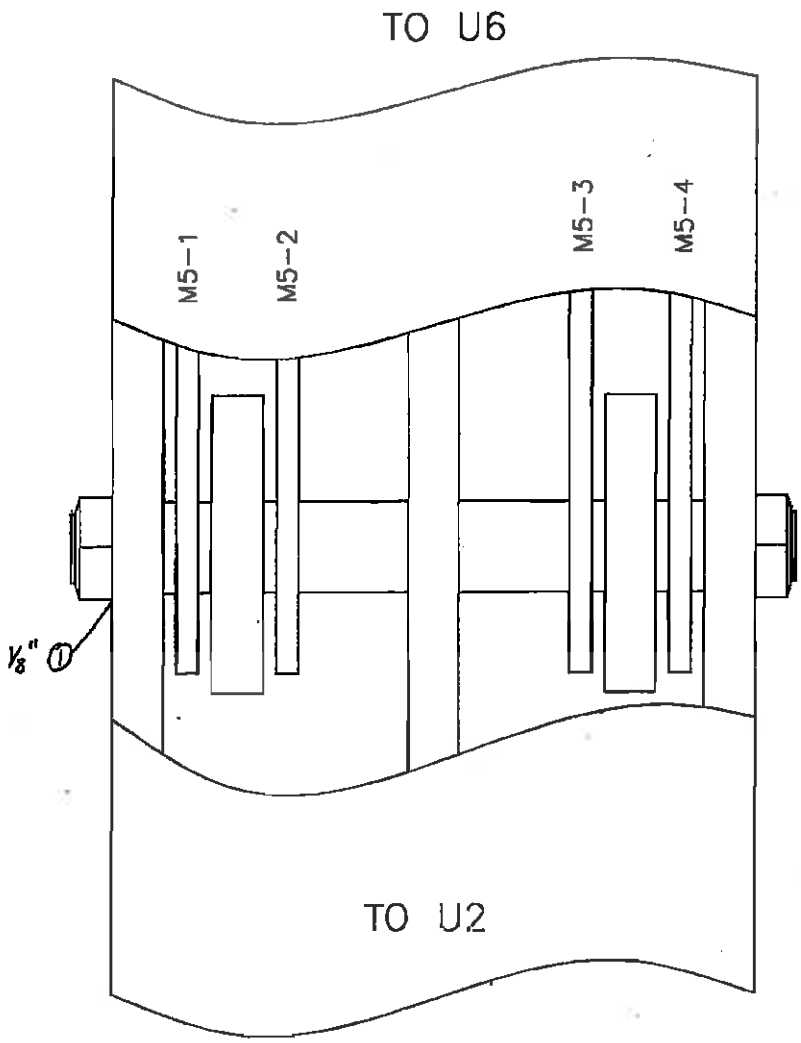


U4

SPAN 7 TRUSS 2
UPPER CHORD PIN

| NO. | DATE | DESCRIPTION |
|---|---|---|
| 1 | 6/25/12 | WSP-SELLS MLMA |

REVISIONS

WSP-SELLS VERIFICATION INSPECTION
07/12/2013 NO REVISION

# FIELD NOTES

Stantec Consulting Services Inc.

| | |
|---|---|
| Bridge No.: | 08080R |
| Project No.: | 301-0099 |
| Crew: | EH TB |
| Date: 5/11/09 | Sheet No.: 58 |

① Impact rust
- 1/8" wear to M5-1 & M5-2 due to eyebar in contact with top chord center girder

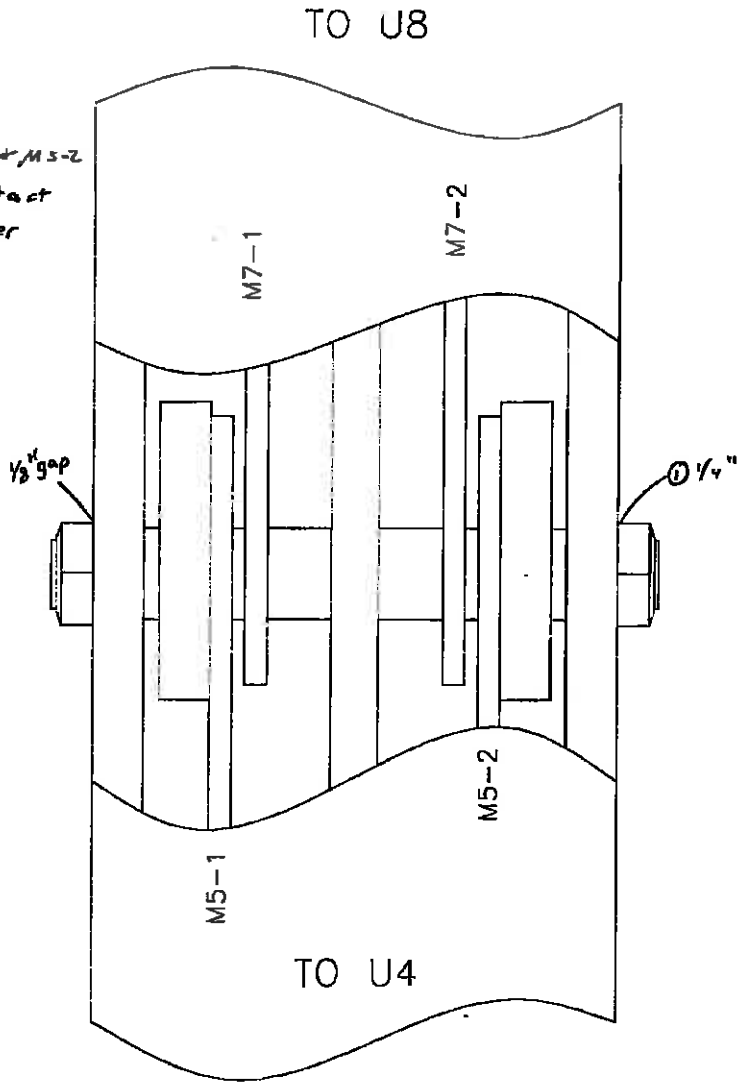


U6a

SPAN 7 TRUSS 2
UPPER CHORD PIN

| NO. | DATE | DESCRIPTION |
|---|---|---|
| 1 | 6/25/12 | WSP-SELLS ML,MA |

REVISIONS

WSP-SELLS VERIFICATION INSPECTION
07/12/2013 NO REVISION

# FIELD NOTES

Stantec Consulting Services Inc.

| | |
|---|---|
| Bridge No.: | 08080R |
| Project No.: | 301-0099 |
| Crew: | EH TB |
| Date: 5/11/09 | Sheet No.: 59 |

- Rust bleed throughout
① 1/16" wear circle
② 1/8" pin wear
- 1/16" wear to M7-1 + M7-2 due to eyebar in contact with vertical web plates.
- M7-1 + M7-2 are loose
③ 1/4" gap - hole to pin
④ 1/8" wear circle

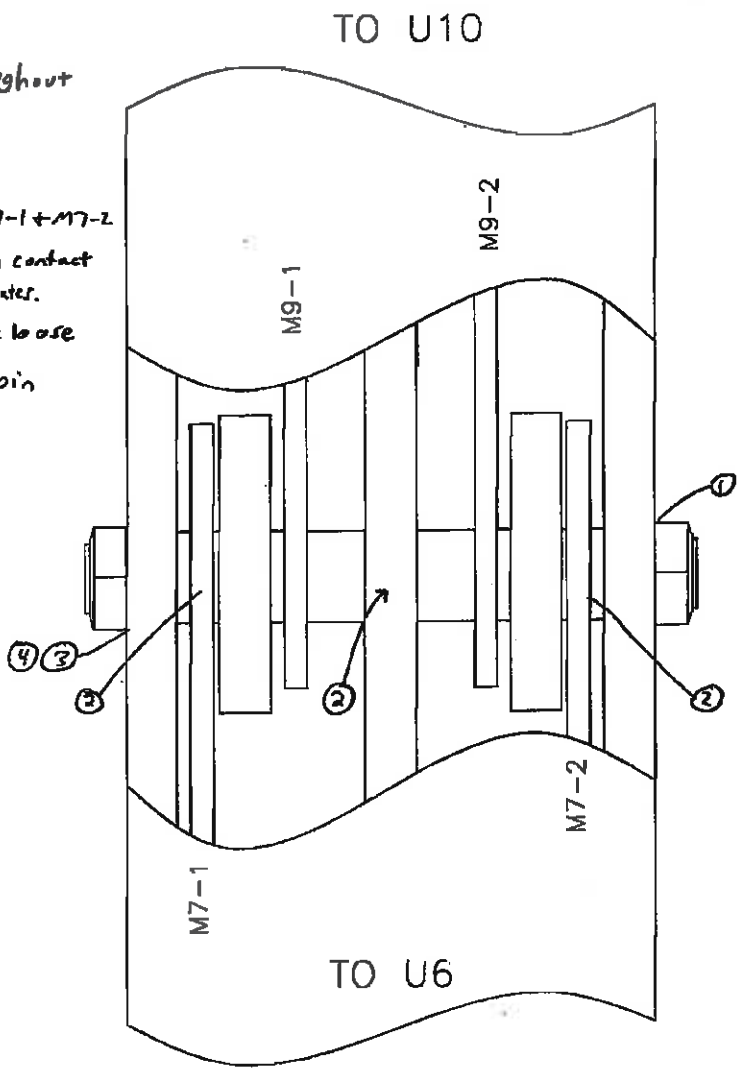


U8

SPAN 7 TRUSS 2
UPPER CHORD PIN

| NO. | DATE | DESCRIPTION |
|---|---|---|
| 1 | 6/25/12 | WSP-SELLS MGMA |

REVISIONS

WSP-SELLS VERIFICATION INSPECTION
07/12/2013 NO REVISION

# FIELD NOTES

Stantec Consulting Services Inc.

| | |
|---|---|
| Bridge No.: | 08080R |
| Project No.: | 301-0099 |
| Crew: | EH TB |
| Date: 5/11/09 | Sheet No.: 60 |

- 1/16" wear to M9-1 due to eyebar in contact with vertical angle leg.
- 1/16" wear to M9-2 due to eyebar in contact with top chord center girder

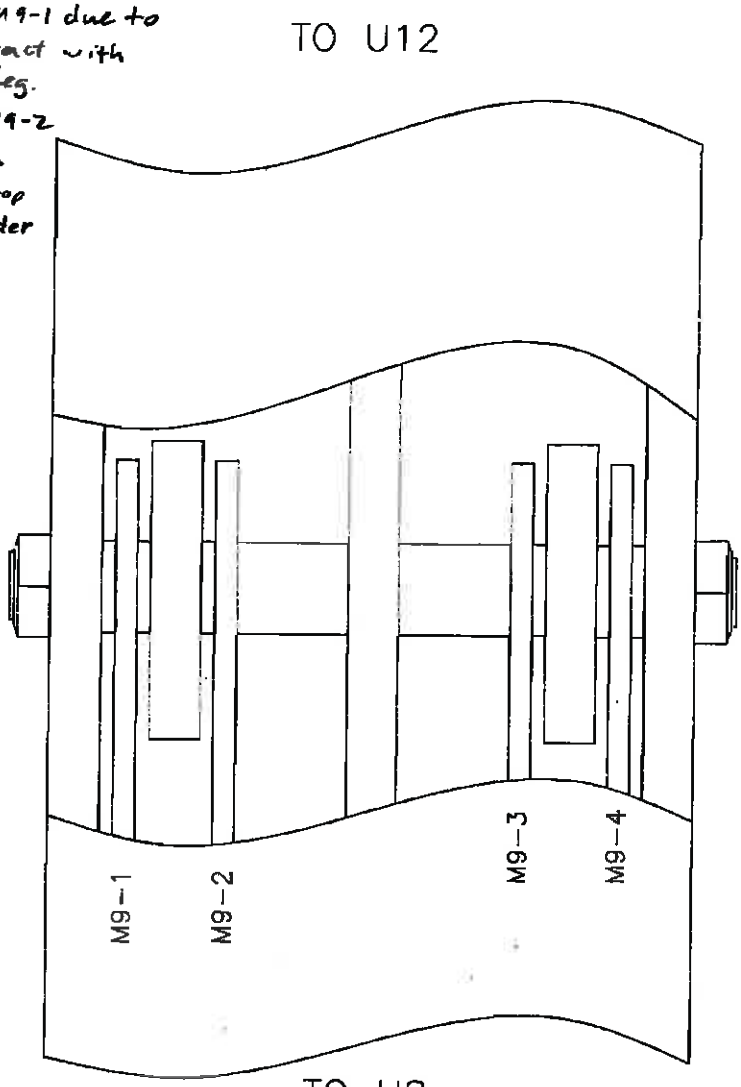


U10

SPAN 7 TRUSS 2
UPPER CHORD PIN

| NO. | DATE | DESCRIPTION |
|---|---|---|
| 1 | 6/25/12 | WSP-SELLS ML, MA |

REVISIONS

WSP-SELLS VERIFICATION INSPECTION
07/12/2013

2

# FIELD NOTES

Stantec Consulting Services Inc.

| | |
|---|---|
| Bridge No.: | 08080R |
| Project No.: | 301-0099 |
| Crew: | EGH TB |
| Date: 5/11/09 | Sheet No.: 61 |

① Impact rust
② Loss of section

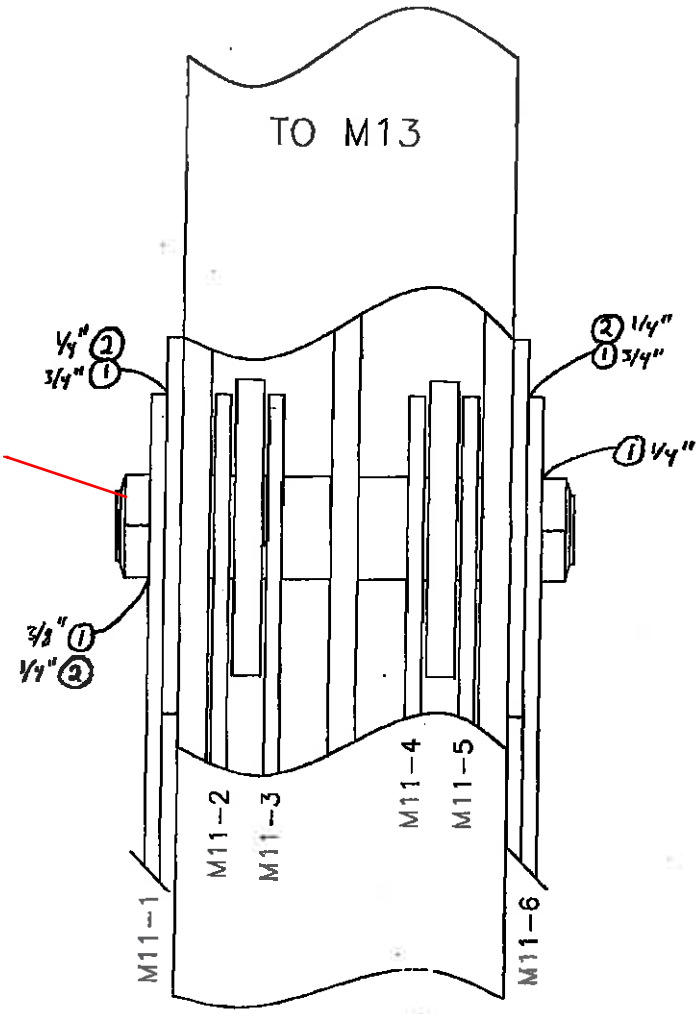


2 M11-2, M11-3 & M11-4 ARE LOOSE.

U12

SPAN 7 TRUSS 2
UPPER CHORD PIN

| NO. | DATE | DESCRIPTION |
|---|---|---|
| 2 | 7/11/13 | WSP-SELLS; PA, MD |
| 1 | 6/25/12 | WSP-SELLS NJ, MA |

REVISIONS

62

WSP-SELLS
VERIFICATION INSPECTION
07/12/2013

# Truss No. 3

WSP-SELLS VERIFICATION INSPECTION
07/12/2013

2

# FIELD NOTES

Stantec Consulting Services Inc.

Bridge No.: 08080R
Project No.: 301-0099
Crew: EH TB
Date: 5/11/09
Sheet No.: 63

1. Typical I.R. to lacing bars at random locations - General note for truss
2. Typical surface rust at random locations - General note for truss
3. 1/4" x 1 1/2" x 18" LOS to top plate
   △ 1/4" DP x 1" H x 12" L
4. ~~1/2" x 1/2" x 12"~~ LOS to vertical at T.O. F.B.
5. Minor flange deformation
6. For bottom chord, lower, mid, + upper pins, see other sheets

△. END VERTICAL ⊥ @ TOP DIAGONAL BRACE W/SL & PERF @ BOT, @ U4, U6, U8 & U10

SPAN 7 TRUSS 3

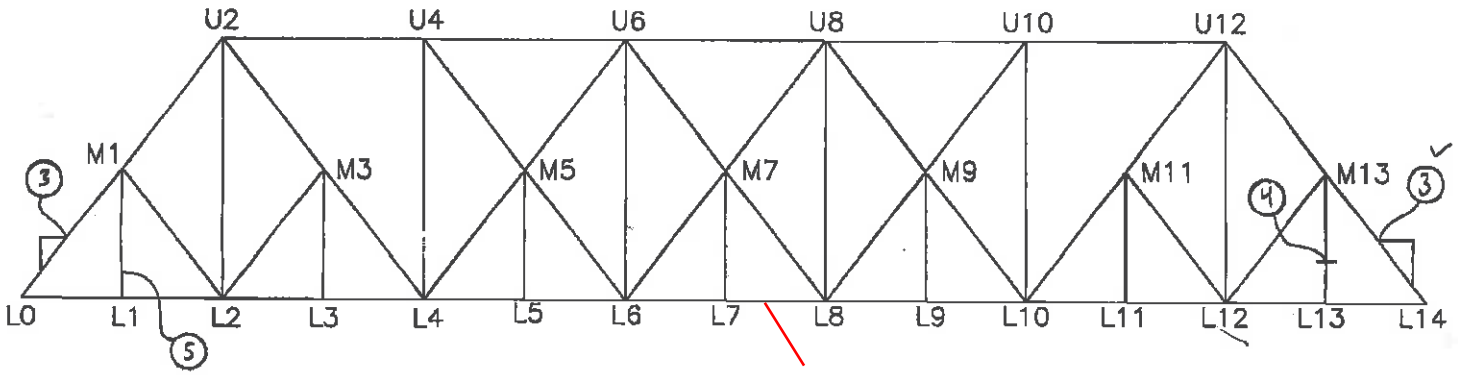


2 EYE BARS L6-8 CONTAIN UP TO 1/8"
PITTING ON OUTWARD FACE & 2'L x 1"H x 1/4"DP
PITTING ON THE BOTTOM

| NO. | DATE | DESCRIPTION |
|---|---|---|
| 2 | 5/31/13 | WSP-SELLS; PA, MD |
| 1 | 11/14/13 | WSP-SELLS MLMA |

REVISIONS

64

WSP-SELLS
VERIFICATION INSPECTION
07/12/2013

# Lower Chord Pins

WSP-SELLS VERIFICATION INSPECTION
07/12/2013 NO REVISION

| FIELD NOTES | Bridge No.: 08080R | |
|---|---|---|
| | Project No.: 301-0099 | |
| Stantec Consulting Services Inc. | Crew: LM AE | |
| | Date: 5/4/09 | Sheet No.: 65 |

LIST OF ABBREVIATION FOR PINS:

PLOS = PITTING LOSS OF SECTION
IR = IMPACTED RUST
BR = BLEEDING RUST
PBT (TPD) = PASSING BY TRAIN
T – TIGHT
M OR ML = MODERATE LOOSE
L = LOOSE
VL = VERY LOOSE
LMEB = LATERAL MOVEMENT OF EYEBAR

LEGEND:

1 = IMPACTED RUST

2 = PLOS

3 = NO GAP AND FILL WITH ABRASION RUST

WSP-SELLS VERIFICATION INSPECTION
07/12/2013 NO REVISION

# FIELD NOTES

Stantec Consulting Services Inc.

| | |
|---|---|
| Bridge No.: | 08080R |
| Project No.: | 301-0099 |
| Crew: | LM & AF |
| Date: 5/4/09 | Sheet No.: 66 |

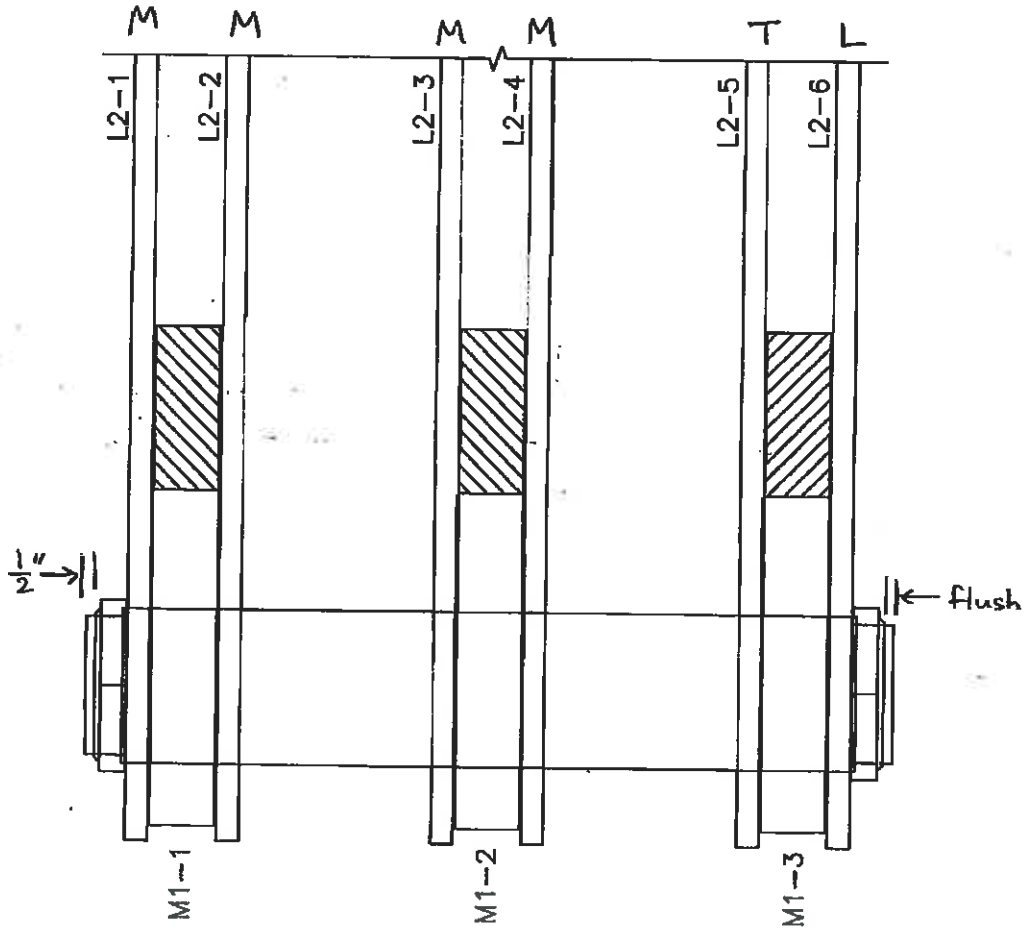


L-0

SPAN 7 TRUSS 3

| NO. | DATE | DESCRIPTION |
|---|---|---|
| 1 | 9/25/12 | WSP-SELLS ML/MA |

REVISIONS

WSP-SELLS VERIFICATION INSPECTION
07/12/2013 NO REVISION

# FIELD NOTES

Stantec Consulting Services Inc.

| | |
|---|---|
| Bridge No.: | 08080R |
| Project No.: | 301-0099 |
| Crew: | LM & AF |
| Date: 5/4/09 | Sheet No.: 67 |

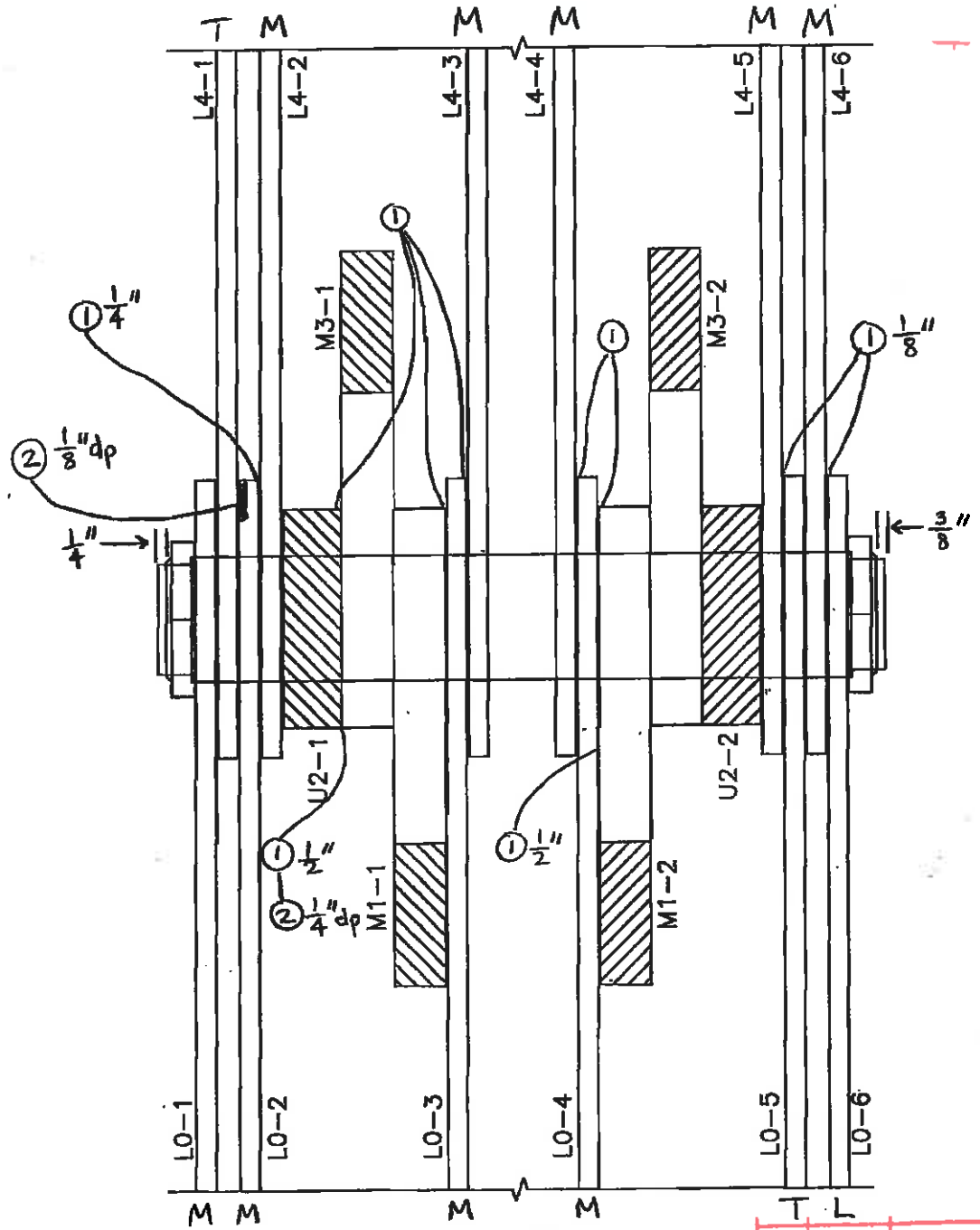


L-2

SPAN 7 TRUSS 3

| NO. | DATE | DESCRIPTION |
|---|---|---|
| △ | 9/25/12 | WSP-SELLS ML, MA |

REVISIONS

WSP-SELLS VERIFICATION INSPECTION
07/12/2013 NO REVISION

# FIELD NOTES

Stantec Consulting Services Inc.

| | |
|---|---|
| Bridge No.: | 08080R |
| Project No.: | 301-0099 |
| Crew: | LM & AF |
| Date: 5/4/09 | Sheet No.: 68 |

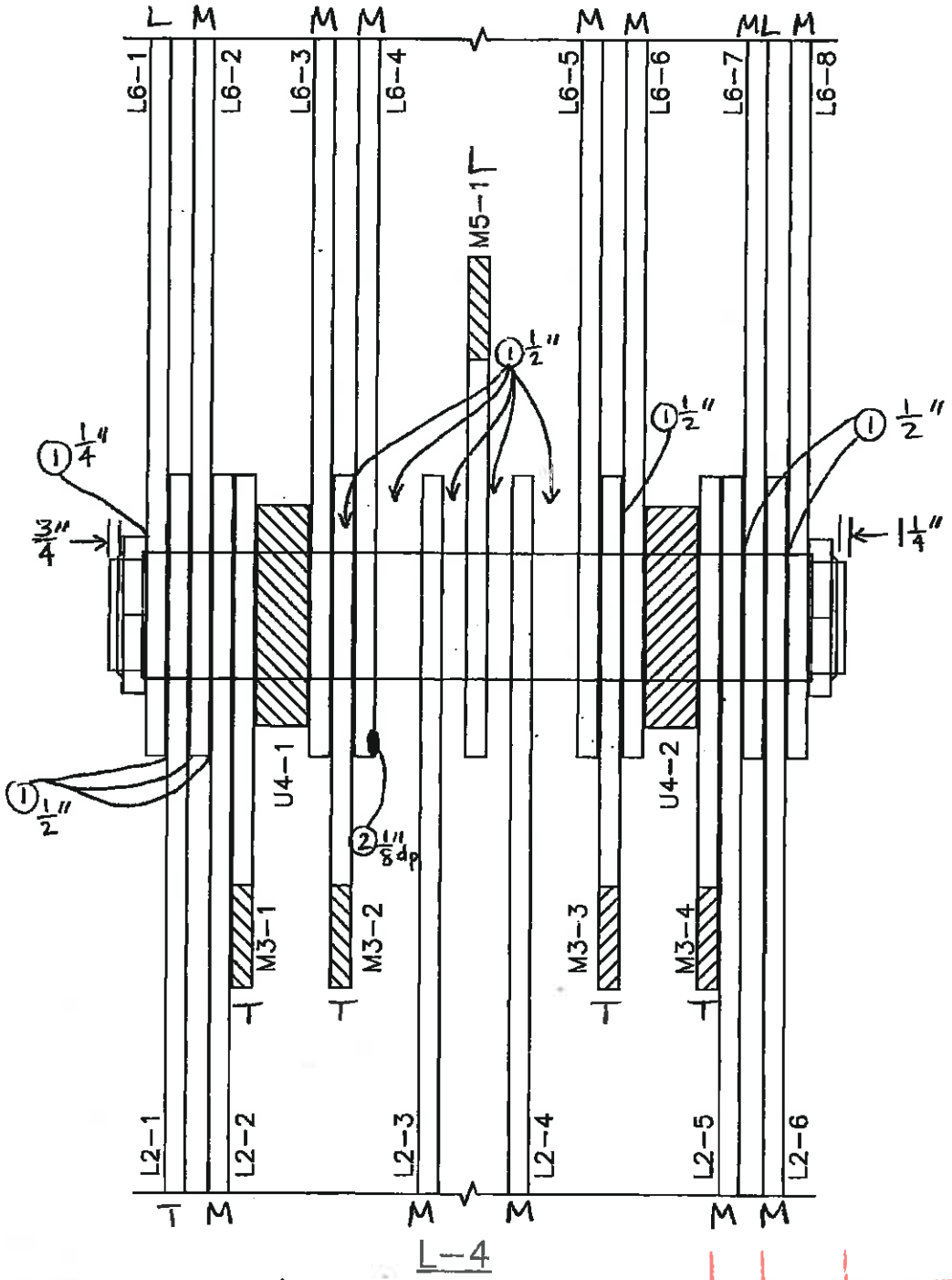


SPAN 7 TRUSS 3

| NO. | DATE | DESCRIPTION |
|---|---|---|
| 1 | 9/25/12 | WSP-SELLS ML MA |

REVISIONS

WSP-SELLS VERIFICATION INSPECTION
07/12/2013 NO REVISION

# FIELD NOTES

Stantec Consulting Services Inc.

| | |
|---|---|
| Bridge No.: | 08080R |
| Project No.: | 301-0099 |
| Crew: | LM & AF |
| Date: 5/4/09 | Sheet No.: 69 |

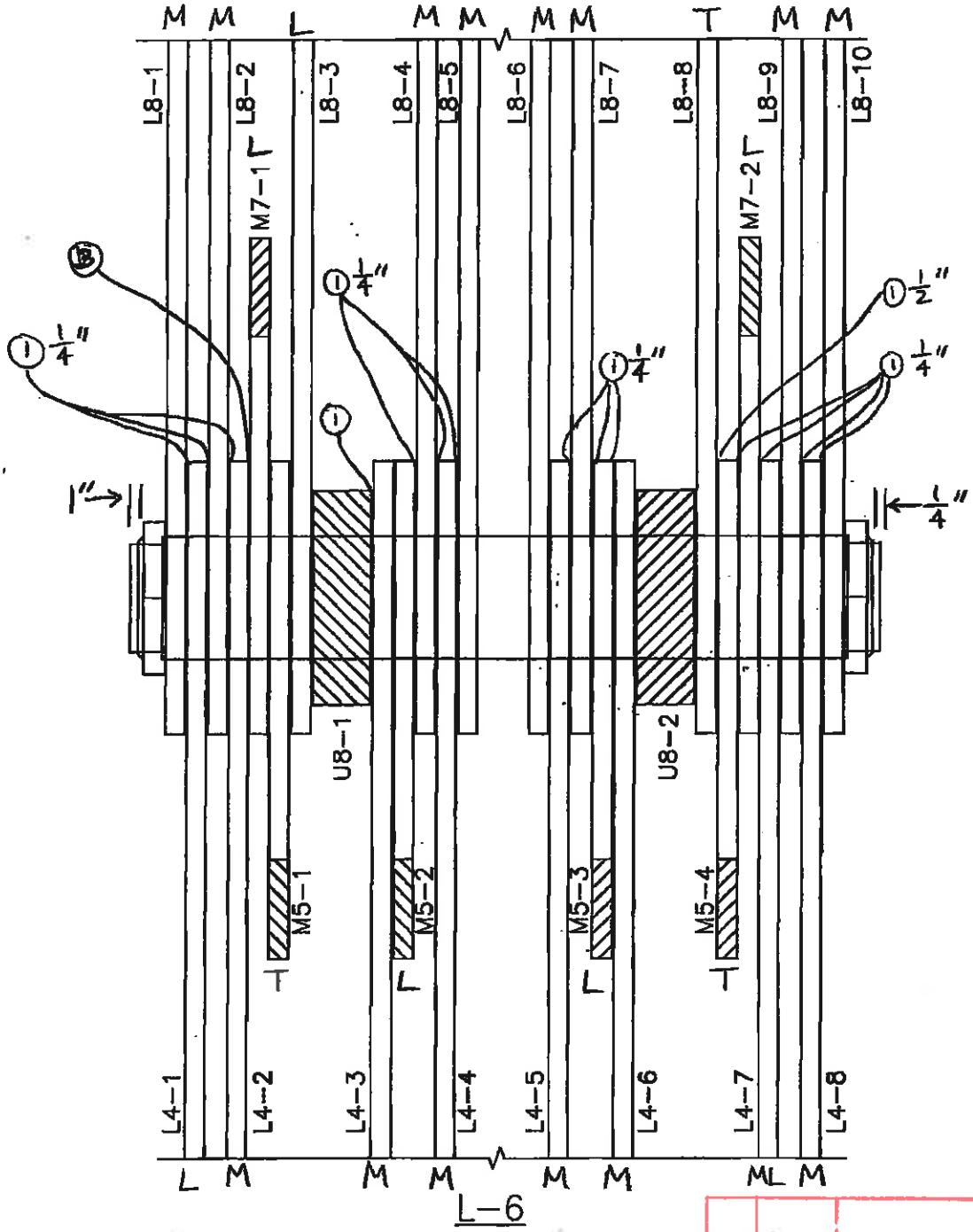


SPAN 7 TRUSS 3

| NO. | DATE | DESCRIPTION |
|---|---|---|
| 1 | 9/25/12 | WSP-SELLS ML MA |

REVISIONS

2 WSP-SELLS VERIFICATION INSPECTION 07/12/2013

# FIELD NOTES

Stantec Consulting Services Inc.

| | |
|---|---|
| Bridge No.: | 08080R |
| Project No.: | 301-0099 |
| Crew: | LM & AF |
| Date: 5/4/09 | Sheet No.: 70 |

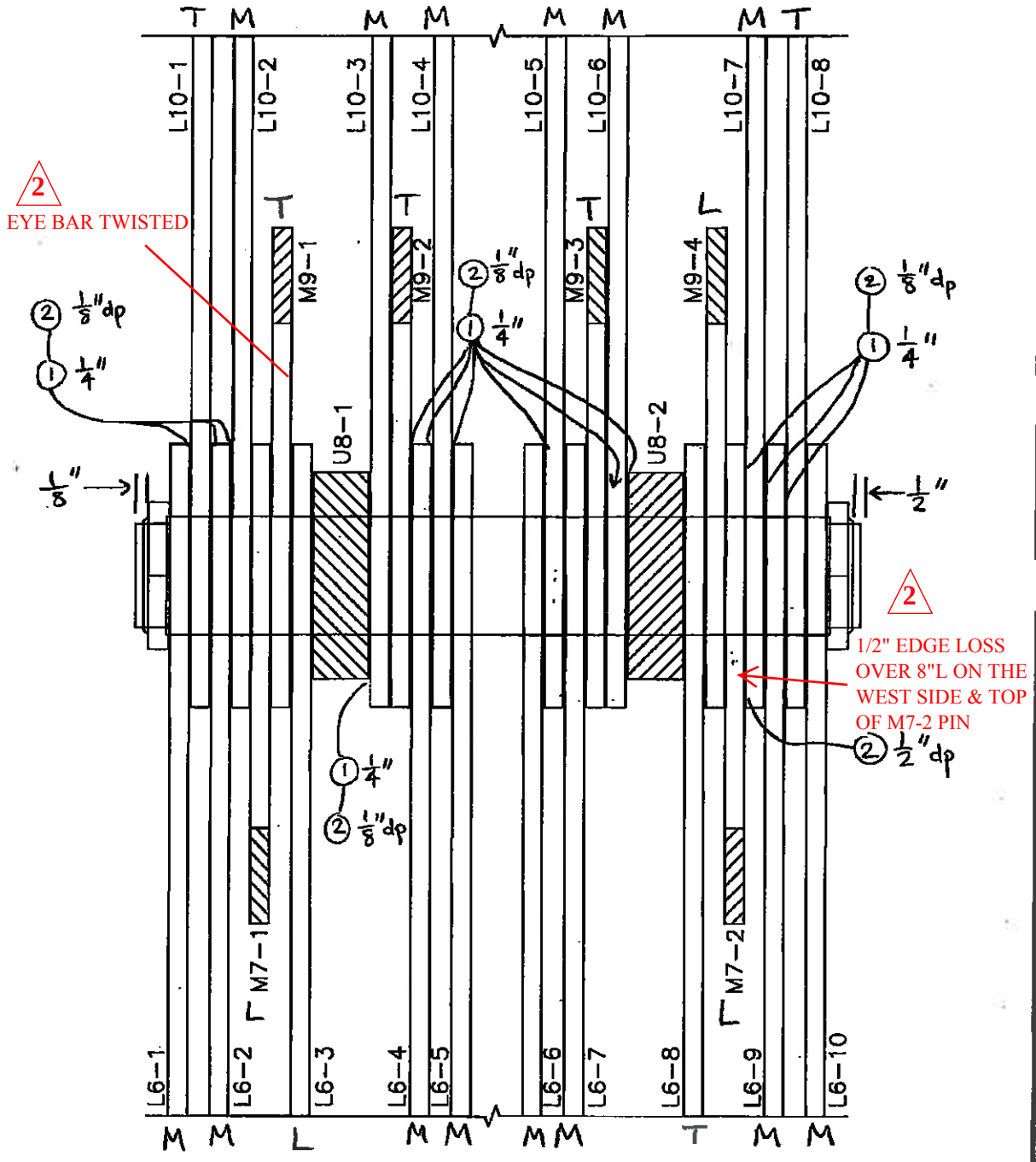


SPAN 7 TRUSS 3

| NO. | DATE | DESCRIPTION |
|---|---|---|
| 2 | 7/11/13 | WSP-SELLS; PA, MD |
| 1 | 9/25/12 | WSP-SELLS MC, MA |

REVISIONS

WSP-SELLS VERIFICATION INSPECTION
07/12/2013 NO REVISION

# FIELD NOTES

Stantec Consulting Services Inc.

| | |
|---|---|
| Bridge No.: | 08080R |
| Project No.: | 301-0099 |
| Crew: | LM & AF |
| Date: 5/4/09 | Sheet No.: 7( |

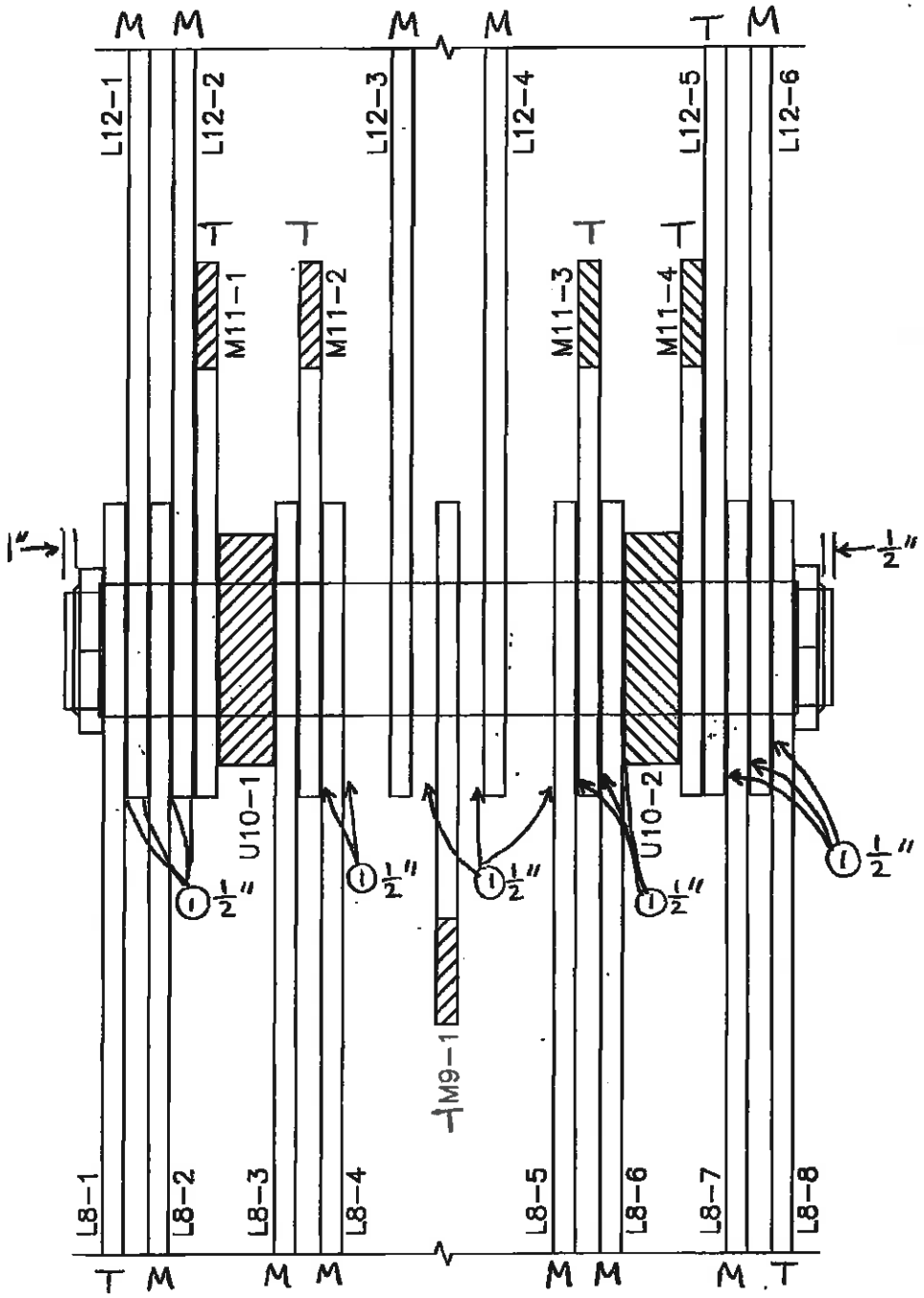


L-10

SPAN 7 TRUSS 3

| NO | DATE | DESCRIPTION |
|---|---|---|
| 1 | 9/25/12 | WSP-SELLS MU MA |

REVISIONS

2 WSP-SELLS VERIFICATION INSPECTION
07/12/2013

# FIELD NOTES

Stantec Consulting Services Inc.

| | |
|---|---|
| Bridge No.: | 08080R |
| Project No.: | 301-0099 |
| Crew: | LM & AF |
| Date: 5/4/09 | Sheet No.: 72 |

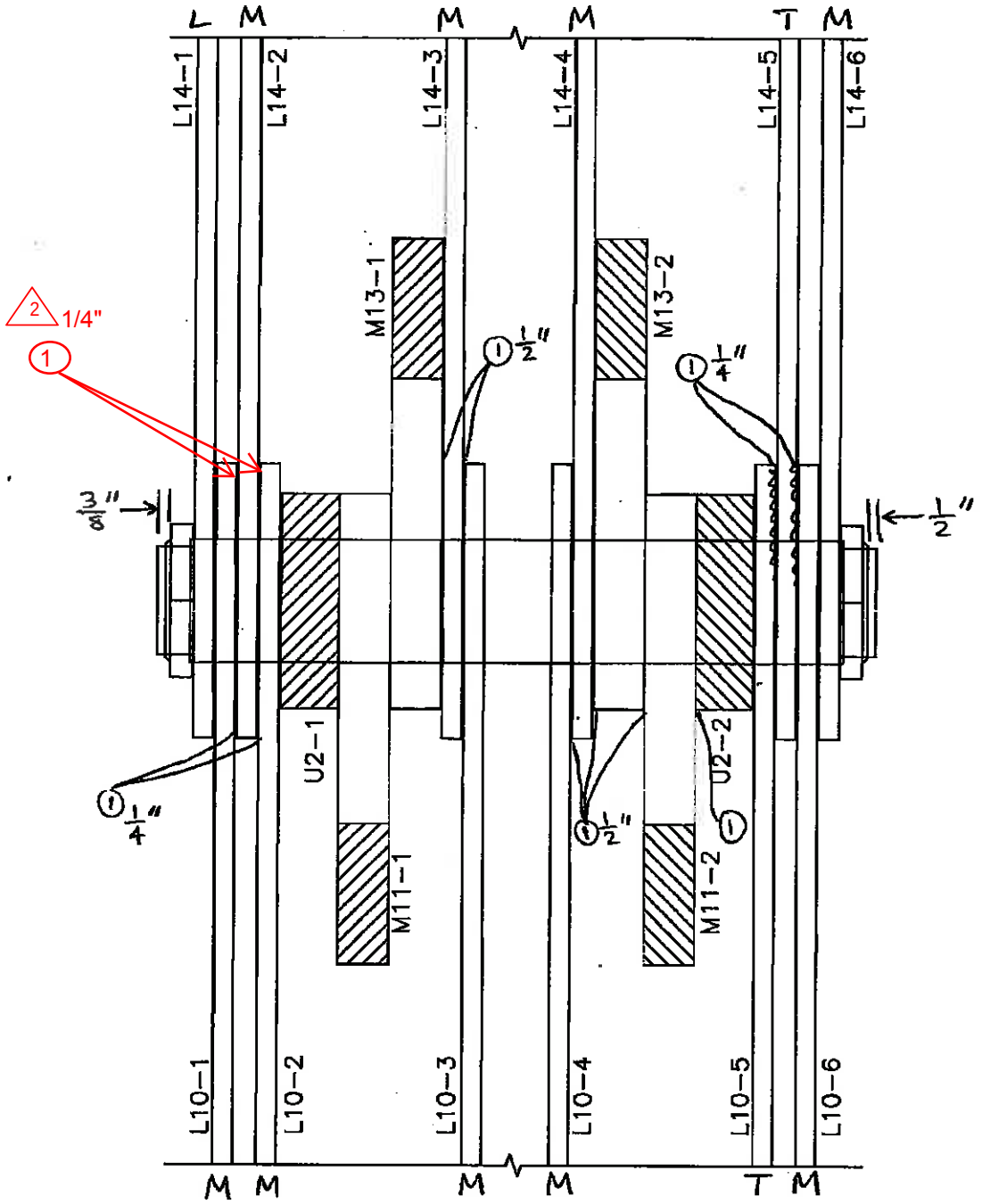


SPAN 7 TRUSS 3

| NO. | DATE | DESCRIPTION |
|---|---|---|
| 2 | 7/11/13 | WSP-SELLS; PA, MD |
| 1 | 9/25/12 | WSP-SELLS ML MA |

REVISIONS

WSP-SELLS VERIFICATION INSPECTION
07/12/2013 NO REVISION

# FIELD NOTES

Stantec Consulting Services Inc.

| | |
|---|---|
| Bridge No.: 08080R | |
| Project No.: 301-0099 | |
| Crew: LM & AF | |
| Date: 5/4/09 | Sheet No.: 73 |

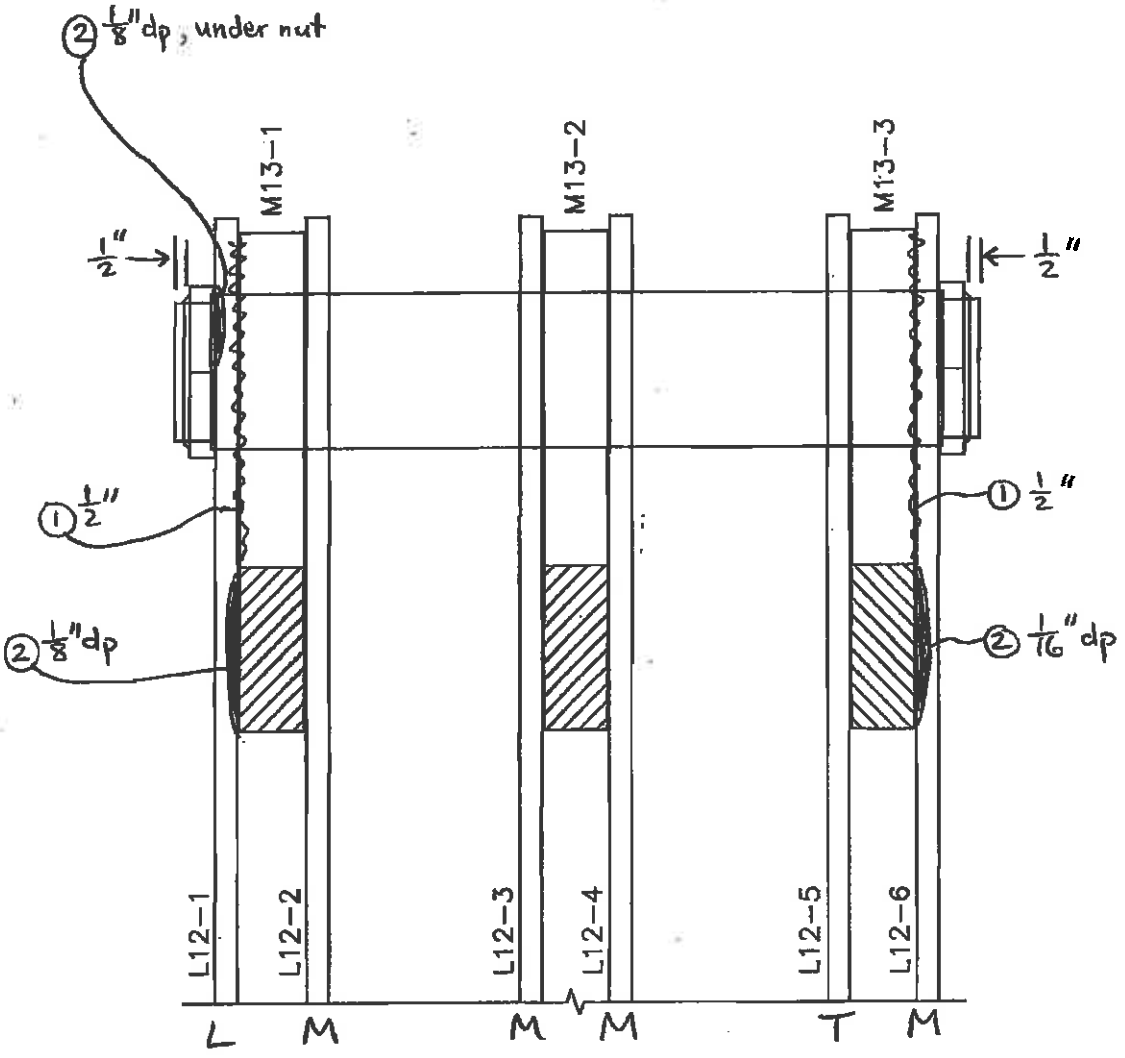


L-14

SPAN 7 TRUSS 3

| NO. | DATE | DESCRIPTION |
|---|---|---|
| | | |
| | | |
| | | |
| 1 | 9/25/12 | WSP-SELLS MLMA |

REVISIONS

WSP-SELLS
VERIFICATION INSPECTION
07/12/2013

# Mid-Point Pins

WSP-SELLS VERIFICATION INSPECTION
07/12/2013 NO REVISION

# FIELD NOTES

Stantec Consulting Services Inc.

| | |
|---|---|
| Bridge No.: | 08080R |
| Project No.: | 301-0099 |
| Crew: | EH TB |
| Date: 5/11/09 | Sheet No.: 75 |

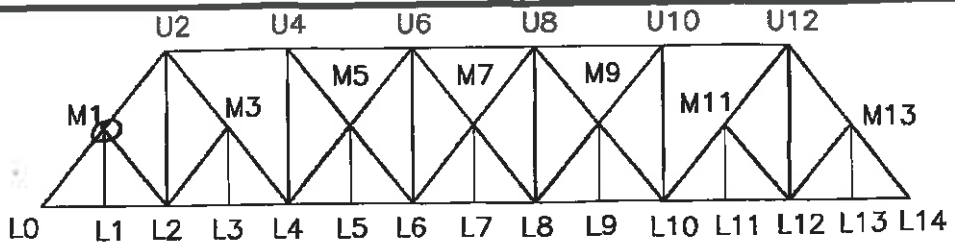


① up to 1/8" wear into pin
- L1 moves laterally ~ 1/4"
- No visible vertical movement

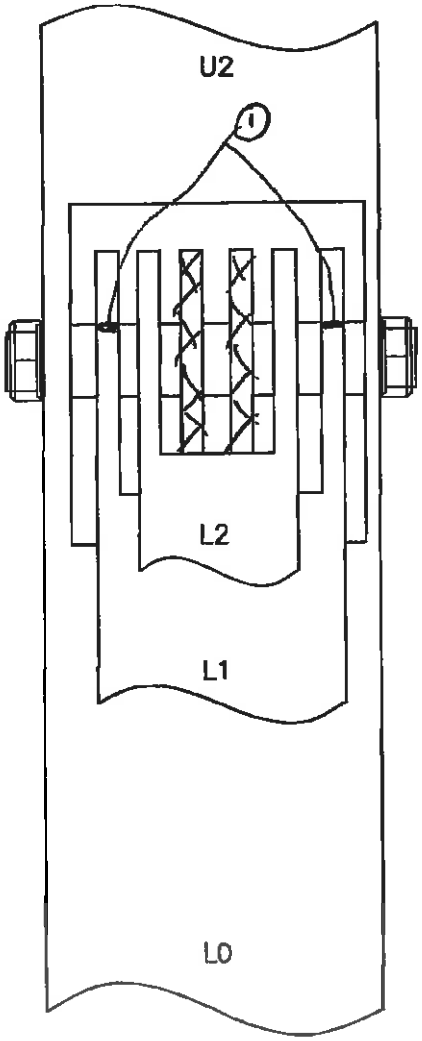


M1

SPAN 7 TRUSS 3
SOUTH ELEVATION MID-POINT PIN

| NO. | DATE | DESCRIPTION |
|---|---|---|
| | | |
| | | |
| | | |
| 1 | 1/14/13 | WSP-SELLS ML/MA |

REVISIONS

WSP-SELLS VERIFICATION INSPECTION
07/12/2013 NO REVISION

# FIELD NOTES

Stantec Consulting Services Inc.

| | |
|---|---|
| Bridge No.: | 08080R |
| Project No.: | 301-0099 |
| Crew: | EH TB |
| Date: 5/11/09 | Sheet No.: 76 |

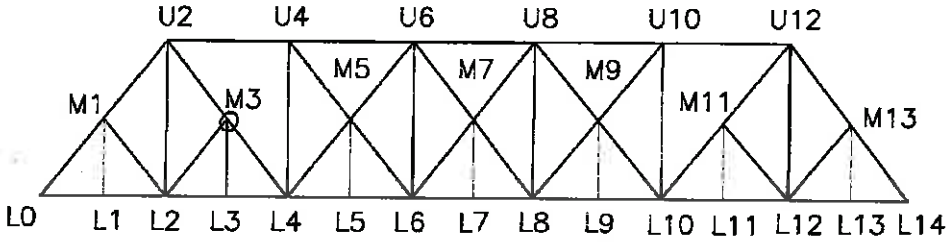


① 1/2" impacted rust
② 3/16" impacted rust
③ 1/4" groove section loss to eyebar
④ 1/16" groove section loss to eyebar
⑤ 1/2" groove section loss to eyebar
⑥ 1/2" edge section loss to U2-6

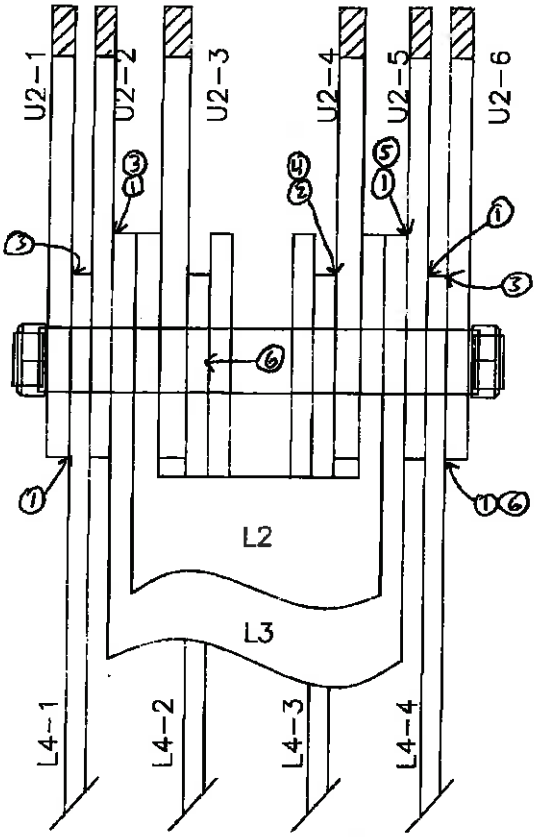


M-3

SPAN 7 TRUSS 3
SOUTH ELEVATION MID-POINT PIN

| NO. | DATE | DESCRIPTION |
|---|---|---|
| 1 | 1/14/13 | WSP-SELLS ML, MA |

REVISIONS

WSP-SELLS VERIFICATION INSPECTION
07/12/2013 NO REVISION

# FIELD NOTES

Stantec Consulting Services Inc.

| | |
|---|---|
| Bridge No.: | 08080R |
| Project No.: | 301-0099 |
| Crew: | EH TB |
| Date: 5/11/09 | Sheet No.: 77 |

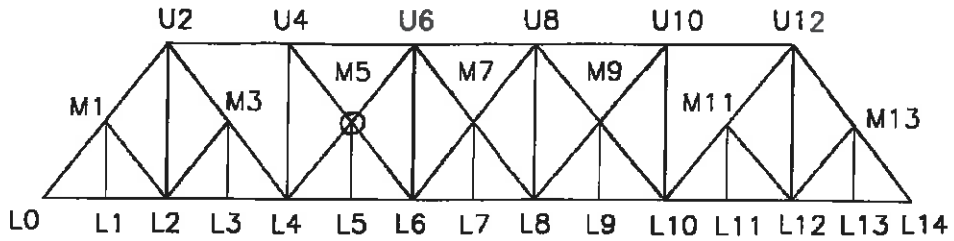


① 1/16" wear to eyebar at vertical webplate
② 1/16" impacted rust
③ 1/16" pin wear
-U4-2 is loose

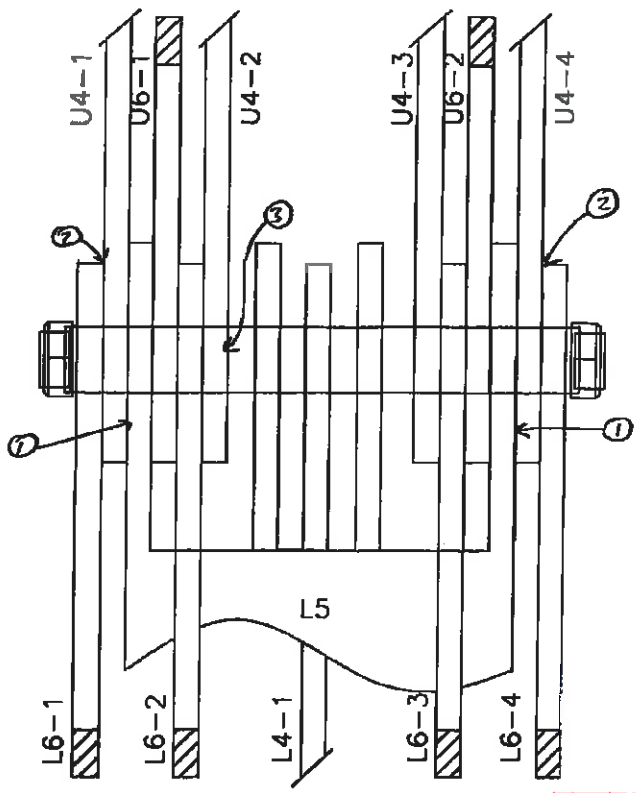


M-5

SPAN 7 TRUSS 3
SOUTH ELEVATION MID-POINT PIN

| NO. | DATE | DESCRIPTION |
|---|---|---|
| 1 | 1/14/13 | WSP-SELLS ML, MA |

REVISIONS

WSP-SELLS VERIFICATION INSPECTION
07/12/2013 NO REVISION

# FIELD NOTES

Stantec Consulting Services Inc.

Bridge No.: 08080R
Project No.: 301-0099
Crew: EH TB
Date: 5/11/09
Sheet No.: 78

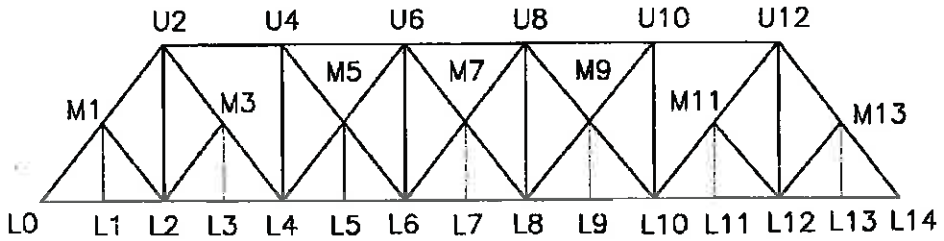


- New hanger + rubber sleeve
- L8-1 is loose + moves laterally

① No pin cap, plate welded
② Light wear to eyebar at vertical web plate.
③ Eyebar is slightly misaligned to pin cap.

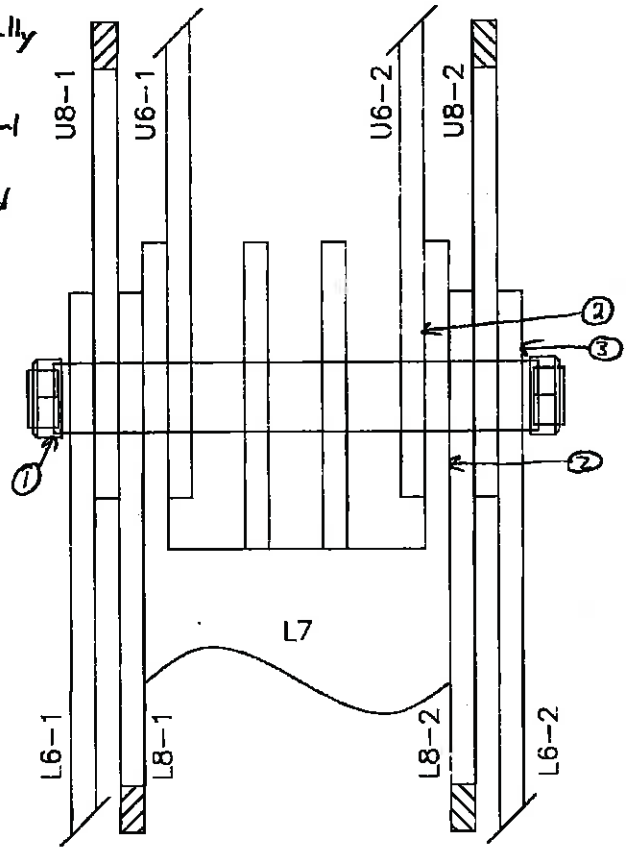


M-7

SPAN 7 TRUSS 3
SOUTH ELEVATION MID-POINT PIN

| NO. | DATE | DESCRIPTION |
|---|---|---|
| 1 | 1/14/13 | WSP-SELLS ML MA |

REVISIONS

WSP-SELLS VERIFICATION INSPECTION
07/12/2013 NO REVISION

# FIELD NOTES

Stantec Consulting Services Inc.

| | |
|---|---|
| Bridge No.: | 08080R |
| Project No.: | 301-0099 |
| Crew: | EH TB |
| Date: 5/11/09 | Sheet No.: 79 |

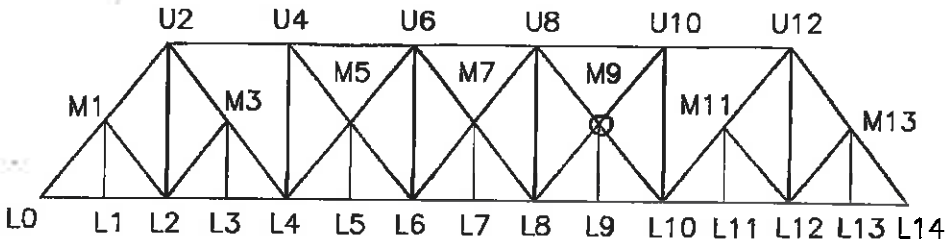


- New hanger + rubber sleeve

1. 1/8" wear to eyebar at vertical web plate
2. 1/16" wear to eyebar at vertical web plate
3. 1/2" impacted rust
4. 1/8" groove section loss to eyebar
5. 7/16" groove section loss to eyebar
6. 3/16" groove section loss to eyebar
7. 1/4" impacted rust
8. 1" impacted rust below pin at L9-M9

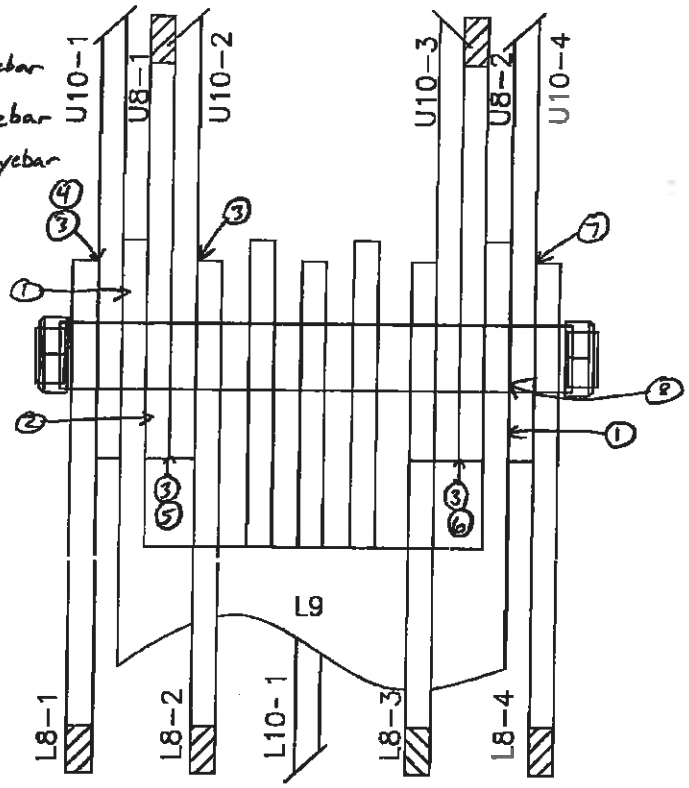


M-9

SPAN 7 TRUSS 3
SOUTH ELEVATION MID-POINT PIN

| NO. | DATE | DESCRIPTION |
|---|---|---|
| 1 | 1/14/13 | WSP-SELLS ML/MA |

REVISIONS

WSP-SELLS VERIFICATION INSPECTION
07/12/2013 NO REVISION

# FIELD NOTES

Stantec Consulting Services Inc.

| | |
|---|---|
| Bridge No.: | 08080R |
| Project No.: | 301-0099 |
| Crew: | EH TB |
| Date: 5/11/09 | Sheet No.: 80 |

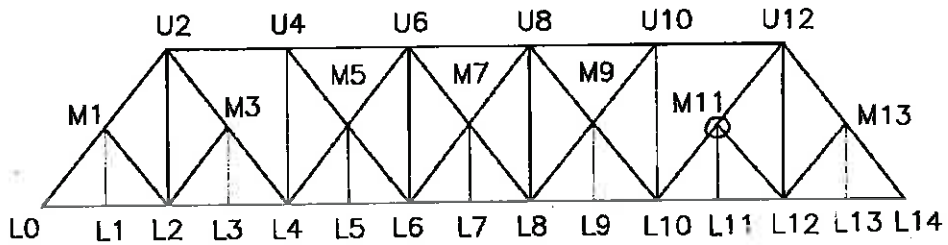


① 1/8" groove section loss to eyebar

② 1/4" groove section loss to eyebar

③ 3/16" groove section loss to eyebar

④ 1/4" wear to eyebar from vertical web plates

⑤ 1/8" to 1/4" impacted rust

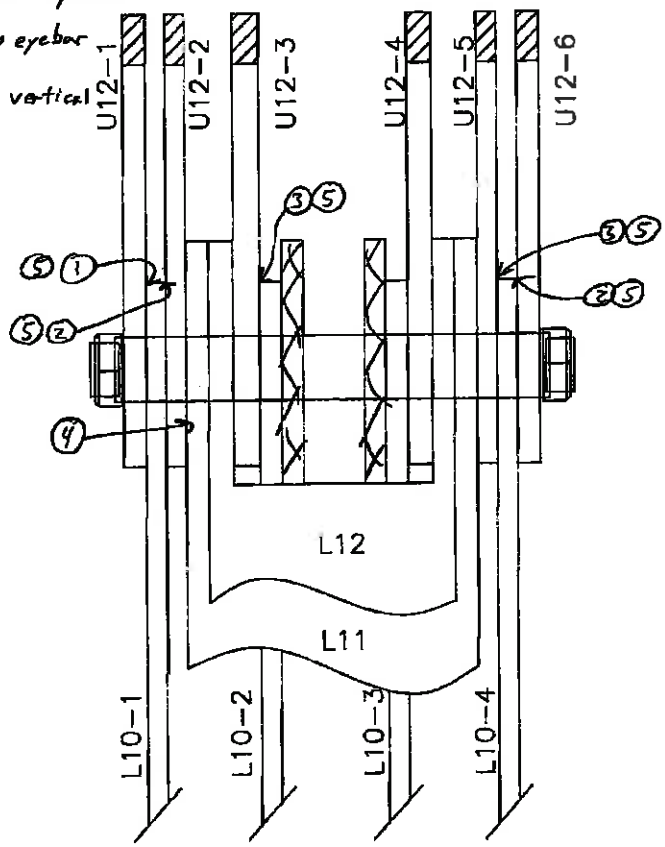


M-11

SPAN 7 TRUSS 3
SOUTH ELEVATION MID-POINT PIN

| NO. | DATE | DESCRIPTION |
|---|---|---|
| 1 | 1/14/13 | WSP-SELLS MLMA |

REVISIONS

WSP-SELLS VERIFICATION INSPECTION
07/12/2013 NO REVISION

# FIELD NOTES

Stantec Consulting Services Inc.

| | |
|---|---|
| Bridge No.: | 08080R |
| Project No.: | 301-0099 |
| Crew: | EH TB |
| Date: | 5/11/09 |
| Sheet No.: | 81 |

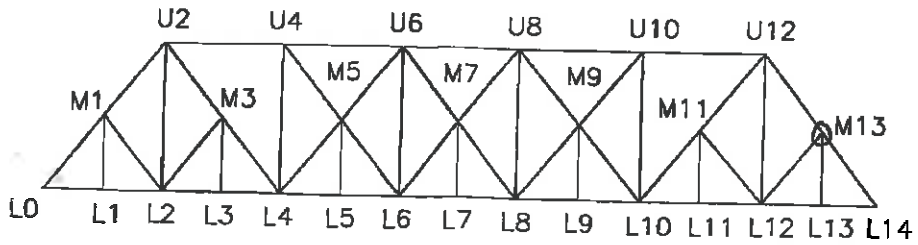


- New hanger
- 1/8" wear to pin
- ① Dusting rust

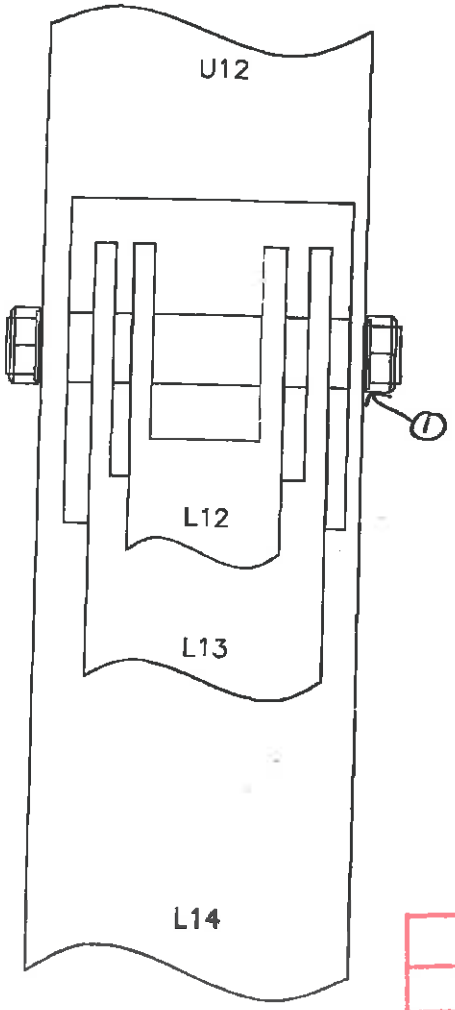


M13

SPAN 7 TRUSS 3
SOUTH ELEVATION MID-POINT PIN

| NO. | DATE | DESCRIPTION |
|---|---|---|
| 1 | 1/14/13 | WSP-SELLS ML/MA |

REVISIONS

82

WSP-SELLS
VERIFICATION INSPECTION
07/12/2013

# Upper Chord and Upper Chord Pins

WSP-SELLS VERIFICATION INSPECTION
07/12/2013 NO REVISION

# FIELD NOTES

Stantec Consulting Services Inc.

| | |
|---|---|
| Bridge No.: | 08080R |
| Project No.: | 301-0099 |
| Crew: | EH TB |
| Date: 5/11/09 | Sheet No.: 83 |

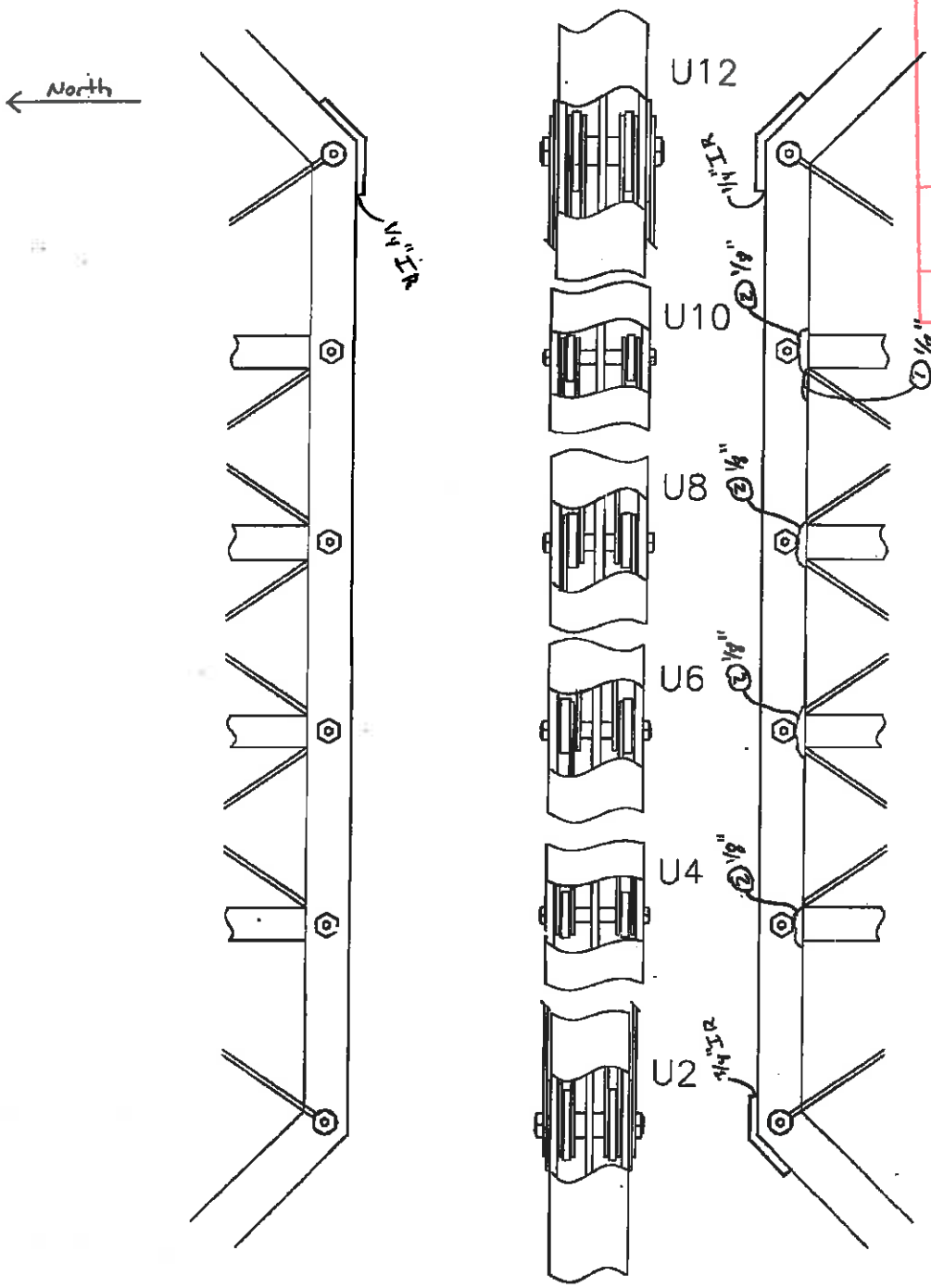


SPAN 7 TRUSS 3
UPPER CHORD PIN

| NO. | DATE | DESCRIPTION |
|---|---|---|
| 1 | 1/14/13 | WSP-SELLS MLMA |

REVISIONS

WSP-SELLS VERIFICATION INSPECTION
07/12/2013 NO REVISION

# FIELD NOTES

Stantec Consulting Services Inc.

| | |
|---|---|
| Bridge No.: | 08080R |
| Project No.: | 301-0099 |
| Crew: | EH TB |
| Date: 5/11/09 | Sheet No.: 34 |

① Impact rust
② PLOS

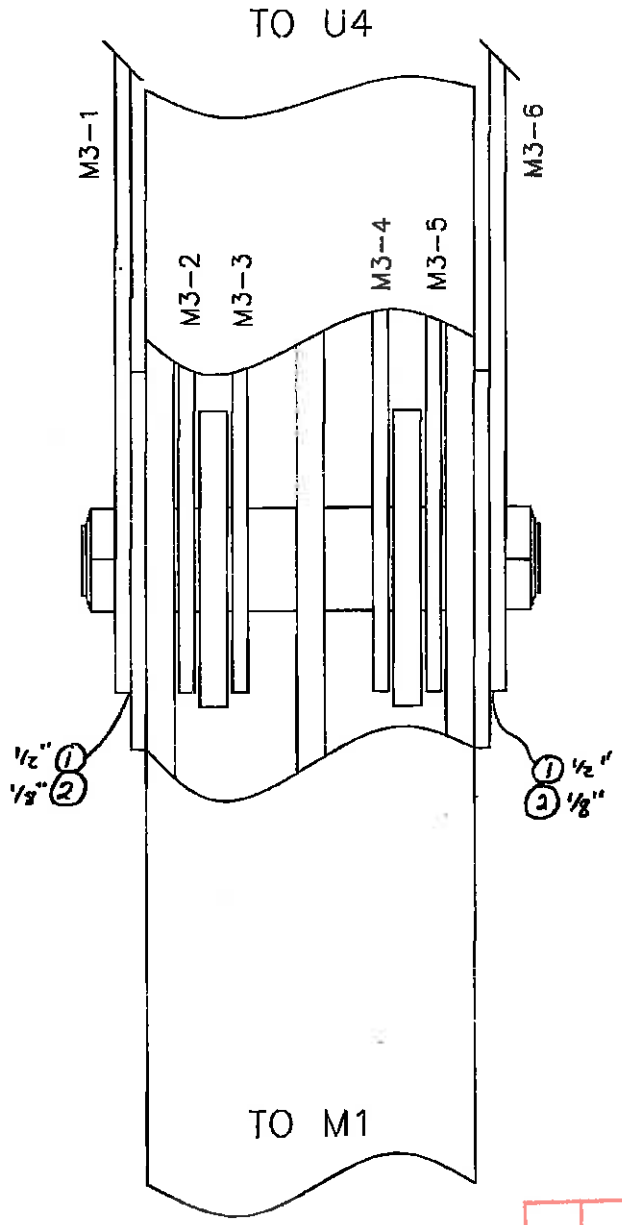


U2

SPAN 7 TRUSS 3
UPPER CHORD PIN

| NO. | DATE | DESCRIPTION |
|---|---|---|
| 1 | 1/14/13 | WSP-SELLS ML, MA |

REVISIONS

WSP-SELLS VERIFICATION INSPECTION
07/12/2013 NO REVISION

# FIELD NOTES

Stantec Consulting Services Inc.

| | |
|---|---|
| Bridge No.: 08080R | |
| Project No.: 301-0099 | |
| Crew: EH TB | |
| Date: 5/11/09 | Sheet No.: 85 |

- 1/8" wear to M5-3 due to eyebar in contact with center girder

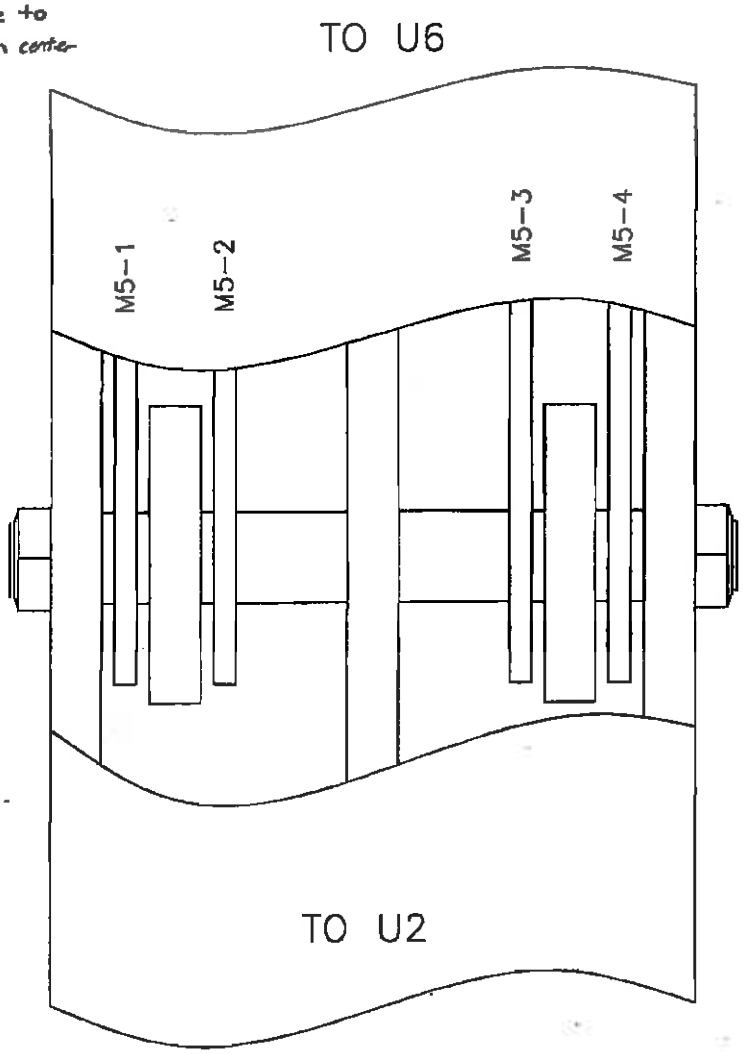


U4

SPAN 7 TRUSS 3
UPPER CHORD PIN

| NO. | DATE | DESCRIPTION |
|---|---|---|
| 1 | 1/14/13 | WSP-SELLS ML, MA |

REVISIONS

WSP-SELLS VERIFICATION INSPECTION
07/12/2013 NO REVISION

# FIELD NOTES

Stantec Consulting Services Inc.

| | |
|---|---|
| Bridge No.: | 08080R |
| Project No.: | 301-0099 |
| Crew: | EH TB |
| Date: 5/11/09 | Sheet No.: 86 |

- Moderate rust bleed throughout
- 1/4" wear in M5-1 & M5-2 due to eyebar being in contact with center top chord girder

① 1/8" deep wear marks to web indicating pin & nut rotation

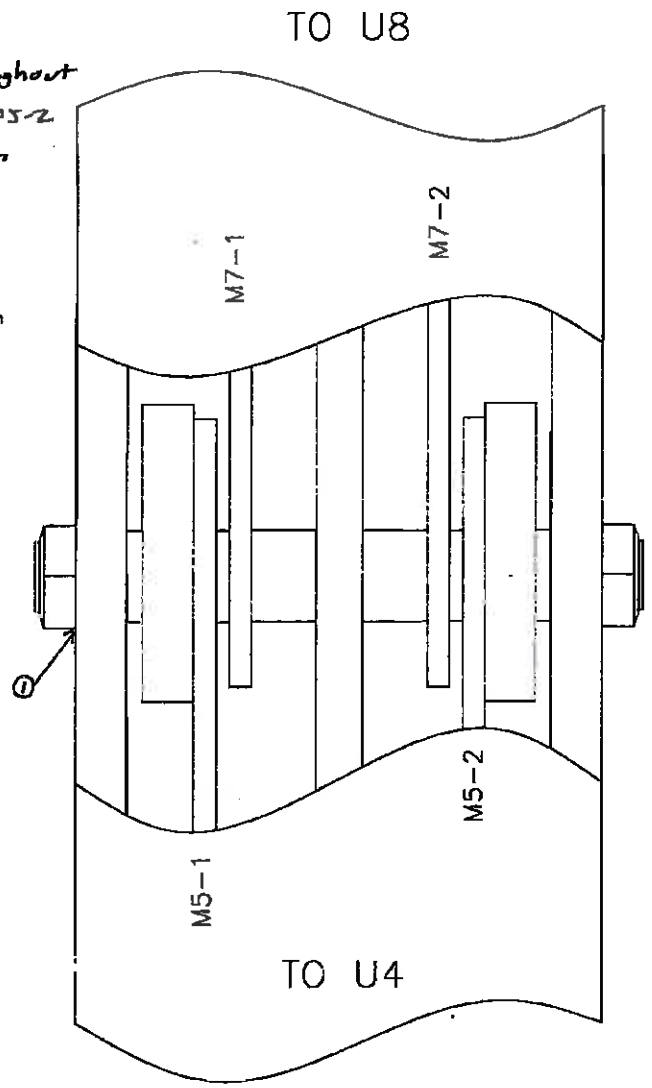


U6a

SPAN 7 TRUSS 3
UPPER CHORD PIN

| NO. | DATE | DESCRIPTION |
|---|---|---|
| 1 | 1/14/13 | WSP-SELLS ML, MA |

REVISIONS

WSP-SELLS VERIFICATION INSPECTION
07/12/2013 NO REVISION

# FIELD NOTES

Stantec Consulting Services Inc.

| | |
|---|---|
| Bridge No.: | 08080R |
| Project No.: | 301-0099 |
| Crew: | EH TB |
| Date: 5/11/09 | Sheet No.: 87 |

-M7-2 is in contact with right side vertical angle leg causing 1/8" wear to eyebar
-M7-1 is in contact with left side vertical angle leg causing 1/8" wear to eyebar

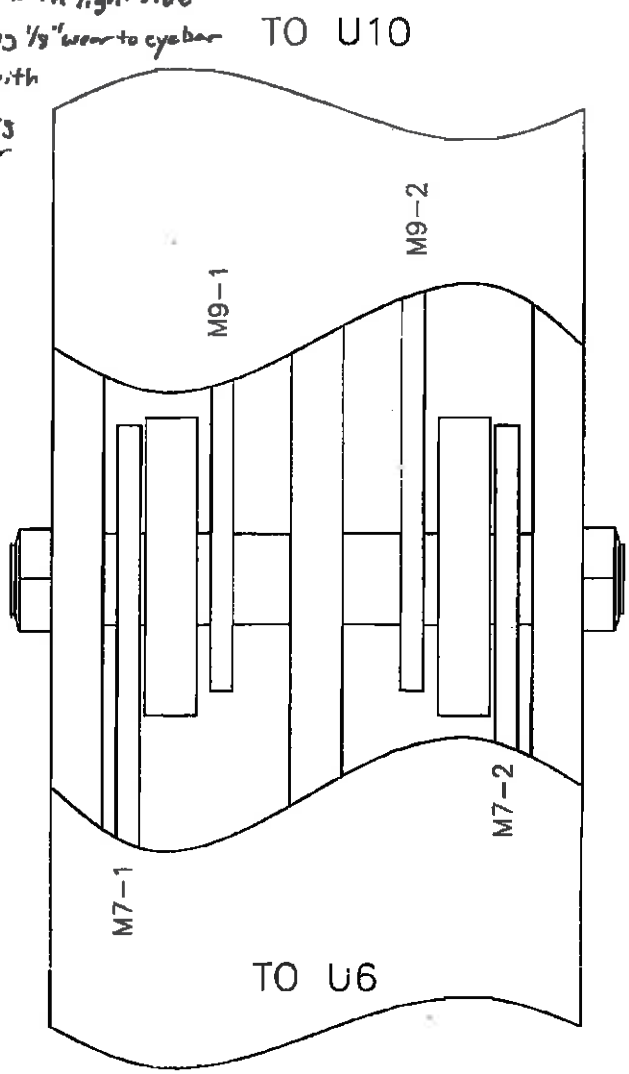


U8

SPAN 7 TRUSS 3
UPPER CHORD PIN

| NO. | DATE | DESCRIPTION |
|---|---|---|
| 1 | 1/14/13 | WSP-SELLS MLMA |

REVISIONS

WSP-SELLS VERIFICATION INSPECTION
07/12/2013 NO REVISION

# FIELD NOTES

Stantec Consulting Services Inc.

| | |
|---|---|
| Bridge No.: | 08080R |
| Project No.: | 301-0099 |
| Crew: | EH TB |
| Date: 5/11/09 | Sheet No.: 88 |

- M9-3 is in contact with bottom flange of interior top chord causing 1/8" wear to bottom flange

TO U12

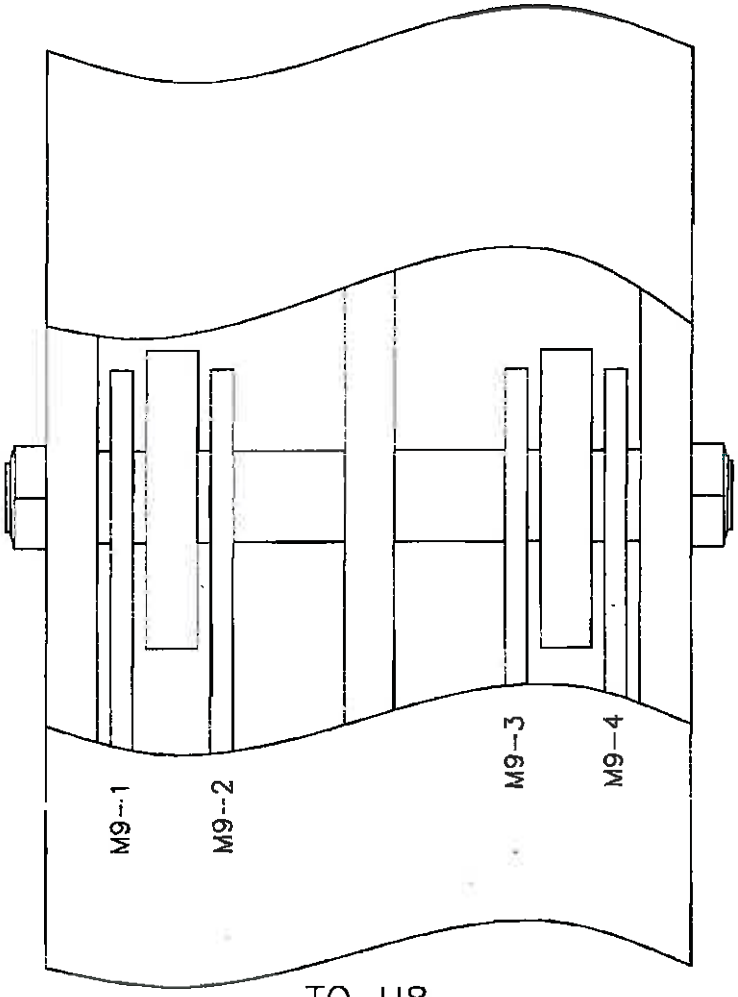


TO U8

U10

SPAN 7 TRUSS 3
UPPER CHORD PIN

| NO. | DATE | DESCRIPTION |
|---|---|---|
| 1 | 1/14/13 | WSP-SELLS ML, MA |

REVISIONS

WSP-SELLS VERIFICATION INSPECTION
07/12/2013 NO REVISION

# FIELD NOTES

Stantec Consulting Services Inc.

| | |
|---|---|
| Bridge No.: | 08080R |
| Project No.: | 301-0099 |
| Crew: | EH TB |
| Date: 5/11/09 | Sheet No.: 89 |

- At the right side, the left plate of member U12-M13 shows twist at the pin.

① Impact rust

② Loss of section

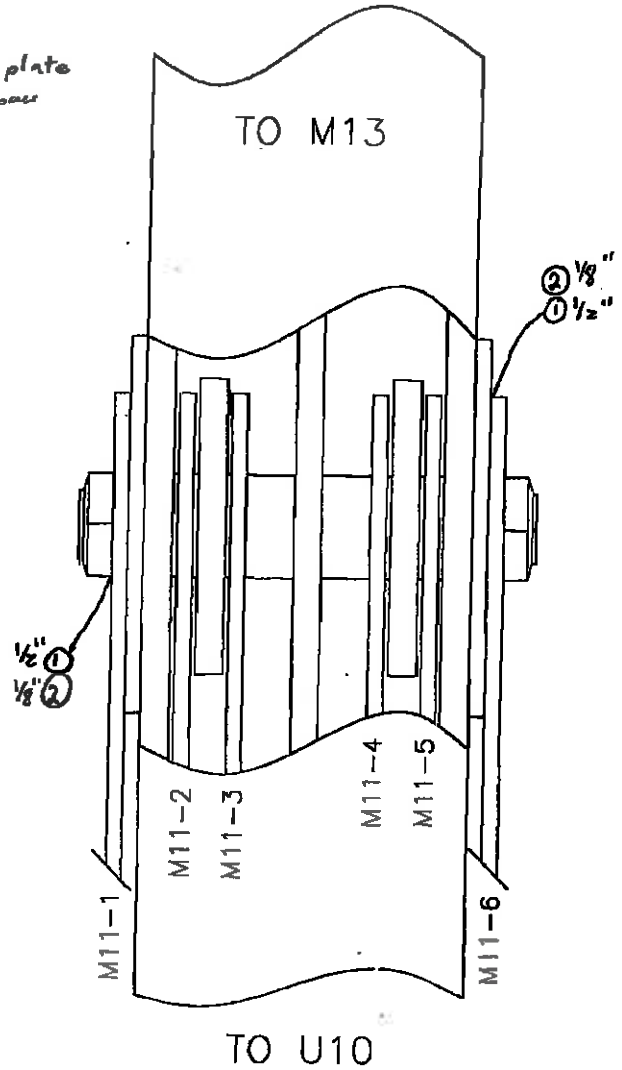


U12

SPAN 7 TRUSS 3
UPPER CHORD PIN

| NO. | DATE | DESCRIPTION |
|---|---|---|
| 1 | 1/14/13 | WSP-SELLS ML, MA |

REVISIONS

90

WSP-SELLS
VERIFICATION INSPECTION
07/12/2013

# Truss No. 4

WSP-SELLS VERIFICATION INSPECTION
07/12/2013

# FIELD NOTES

Stantec Consulting Services Inc.

Bridge No.: 08080R
Project No.: 301-0099
Crew: EH TB
Date: 5/11/09
Sheet No.: 91

1. Typical I.R. to lacing bars at random locations - General note for truss
2. Typical surface rust at random locations - General note for truss
3. Minor deformation to the bottom flange, 1/2" BENT UP OVER 1'L
4. Member is twisted slightly
5. 1/4" x 1" x 8" LOS to vertical at T.O. F.B.
6. ~~1/8" x 3" LOS possibly from torch cutting~~ 18"W x 3'L x 1/8" PITTING
7. Deformation to top flange. 2'L x 4"W x 1/2" BENT DOWN @ NORTH EDGE
8. ~~1/2" x 3" x 18" LOS to top plate~~ 18"L x 5"H x 3/8" DP SECTION LOSS w/ 3" x 1/2" PERF @ TOP COVER PL
9. For bottom chord, lower, mid, + upper pins, see other sheets

NORTH BF ANGLE VERTICAL LEG
4'L x FH x 1/4" PITTING

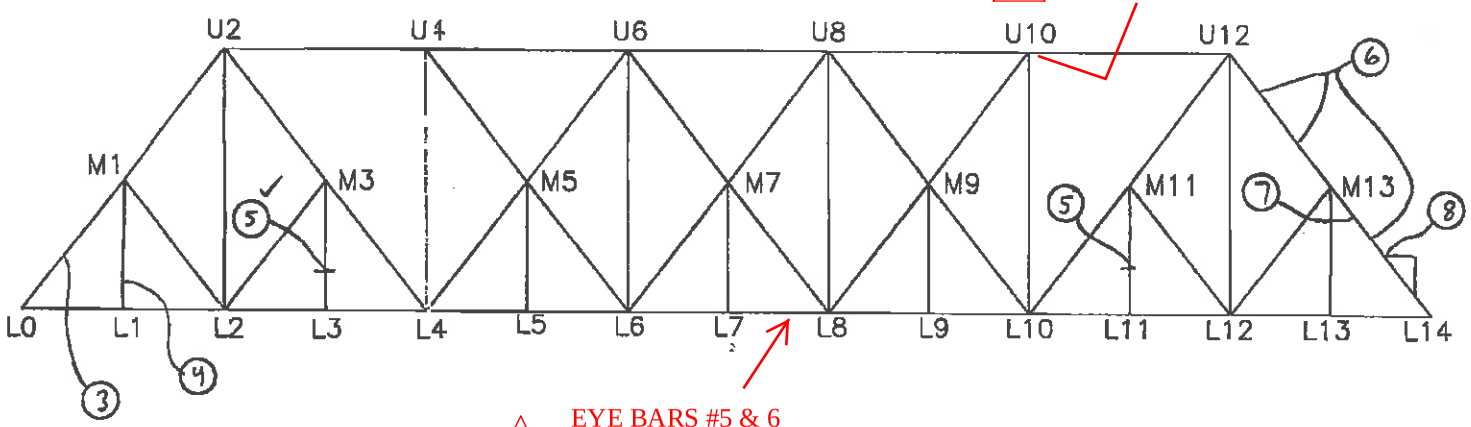


EYE BARS #5 & 6
ARE CONTACT

SPAN 7 TRUSS 4

| NO. | DATE | DESCRIPTION |
|---|---|---|
| 2 | 7/9/13 | WSP-SELLS; PA, MD |
| 1 | 1/14/13 | WSP-SELLS MLMA |

REVISIONS

92

WSP-SELLS
VERIFICATION INSPECTION
07/12/2013

# Lower Chord Pins

WSP-SELLS VERIFICATION INSPECTION
07/12/2013 NO REVISION

# FIELD NOTES

Stantec Consulting Services Inc.

| | |
|---|---|
| Bridge No.: | 08080R |
| Project No.: | 301-0099 |
| Crew: | LM AF |
| Date: | 5/4/09 |
| Sheet No.: | 93 |

## LIST OF ABBREVIATION FOR PINS:

PLOS = PITTING LOSS OF SECTION
IR = IMPACTED RUST
BR = BLEEDING RUST
PBT (TPD) = PASSING BY TRAIN
T – TIGHT
M OR ML = MODERATE LOOSE
L = LOOSE
VL = VERY LOOSE
LMEB = LATERAL MOVEMENT OF EYEBAR

## LEGEND:

1 = IMPACTED RUST

2 = PLOS

3 = NO GAP AND FILL WITH ABRASION RUST

WSP-SELLS VERIFICATION INSPECTION
07/12/2013 NO REVISION

# FIELD NOTES

Stantec Consulting Services Inc.

| | |
|---|---|
| Bridge No.: 08080R | |
| Project No.: 301-0099 | |
| Crew: LM & AF | |
| Date: 5/4/09 | Sheet No.: 94 |

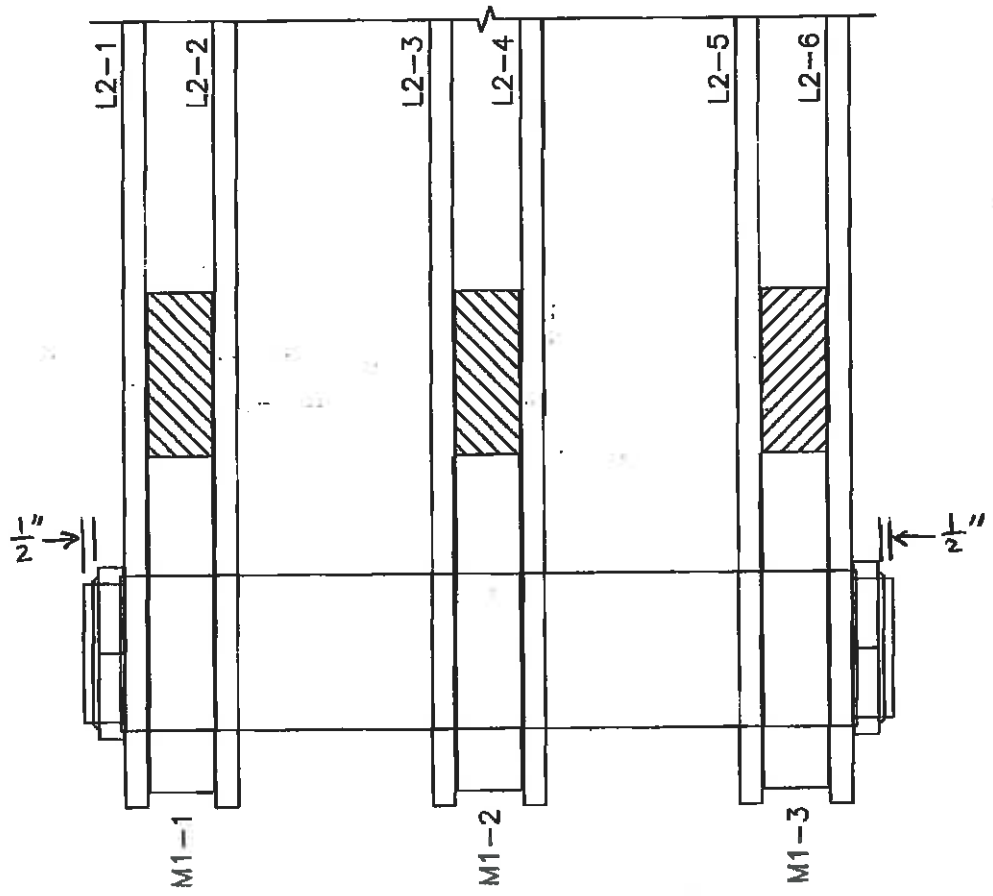


L-0

SPAN 7 TRUSS 4

| NO. | DATE | DESCRIPTION |
|---|---|---|
| 1 | 9/25/12 | WSP-SELLS ML,MA |

REVISIONS

WSP-SELLS VERIFICATION INSPECTION
07/12/2013 NO REVISION

# FIELD NOTES

Stantec Consulting Services Inc.

| | |
|---|---|
| Bridge No.: | 08080R |
| Project No.: | 301-0099 |
| Crew: | LM & AF |
| Date: 5/4/09 | Sheet No.: 95 |

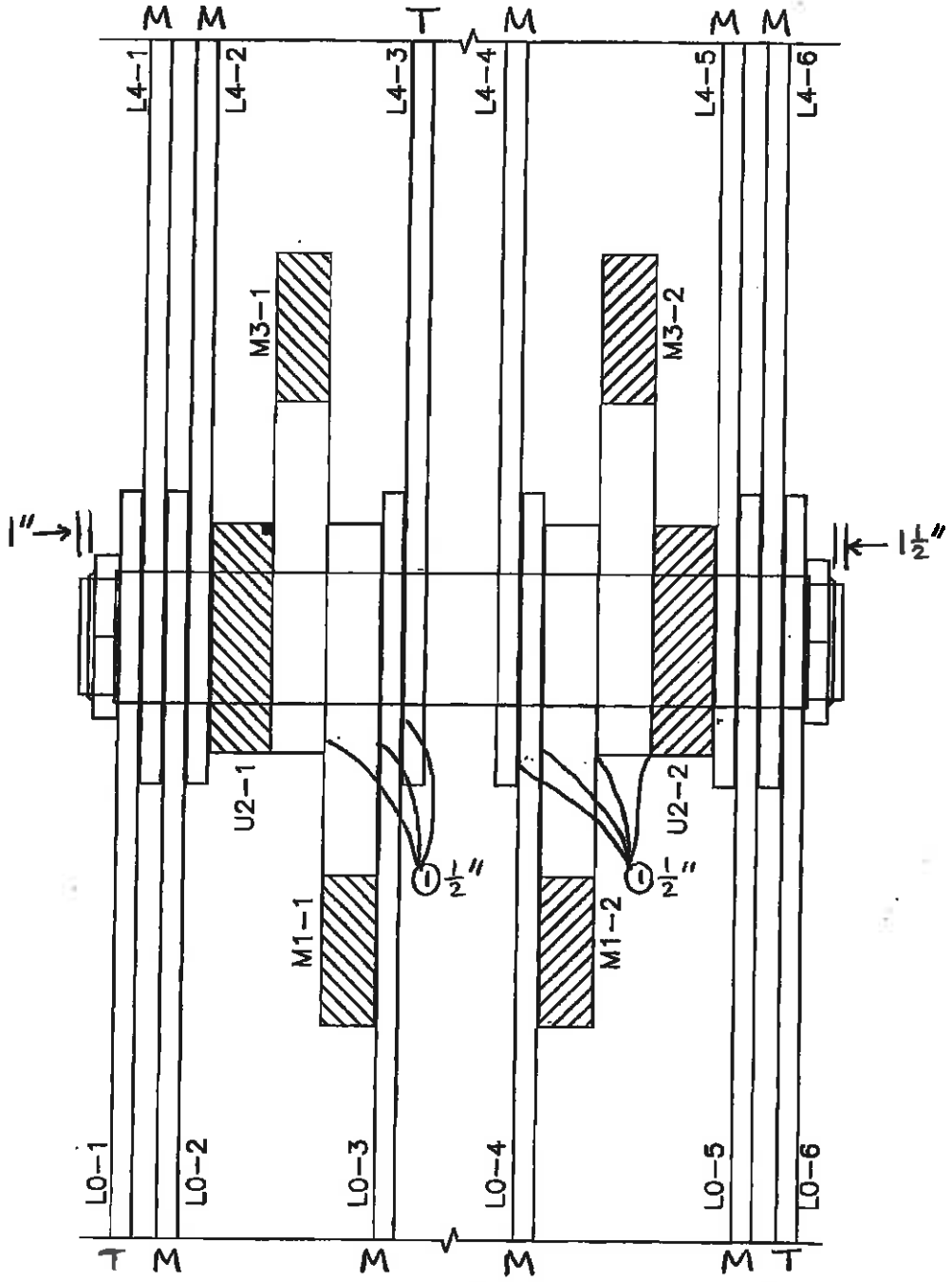


L-2

SPAN 7 TRUSS 4

| NO. | DATE | DESCRIPTION |
|---|---|---|
| 1 | 9/25/12 | WSP-SELLS ML/MA |

REVISIONS

WSP-SELLS VERIFICATION INSPECTION
07/12/2013 NO REVISION

# FIELD NOTES

Stantec Consulting Services Inc.

| | |
|---|---|
| Bridge No.: | 08080R |
| Project No.: | 301-0099 |
| Crew: | LM & AF |
| Date: 5/4/09 | Sheet No.: 96 |

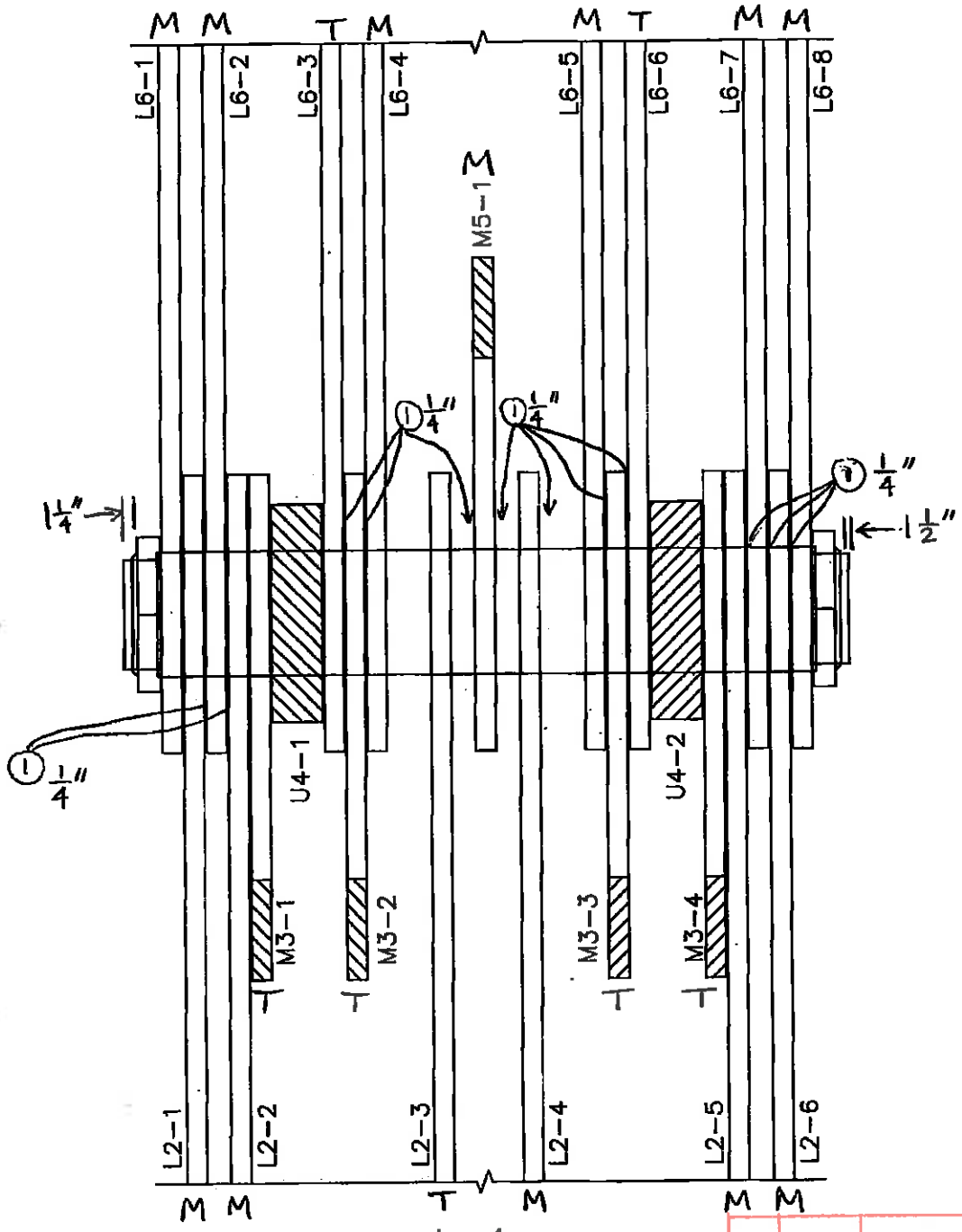


SPAN 7 TRUSS 4

| NO. | DATE | DESCRIPTION |
|---|---|---|
| 1 | 9/25/12 | WSP-SELLS ML/MA |

REVISIONS

WSP-SELLS VERIFICATION INSPECTION
07/12/2013 NO REVISION

# FIELD NOTES

Stantec Consulting Services Inc.

| | |
|---|---|
| Bridge No.: | 08080R |
| Project No.: | 301-0099 |
| Crew: | LM & AF |
| Date: 5/4/09 | Sheet No.: 97 |

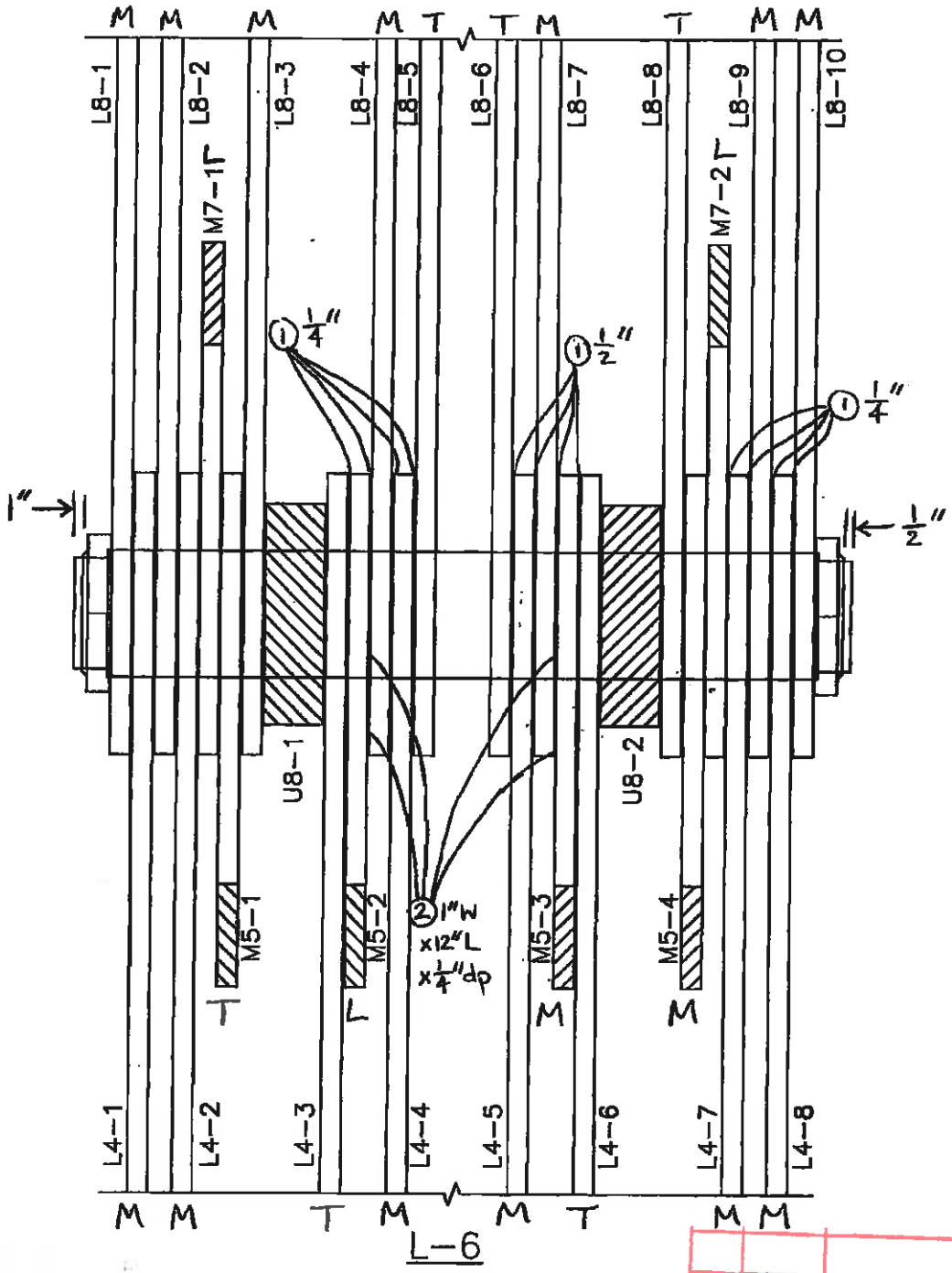


SPAN 7 TRUSS 4

| NO. | DATE | DESCRIPTION |
|---|---|---|
| 1 | 9/25/12 | WSP-SELLS ML, MA |

REVISIONS

WSP-SELLS VERIFICATION INSPECTION
07/12/2013 NO REVISION

# FIELD NOTES

Stantec Consulting Services Inc.

| | |
|---|---|
| Bridge No.: | 08080R |
| Project No.: | 301-0099 |
| Crew: | LM & AF |
| Date: 5/4/09 | Sheet No.: 98 |

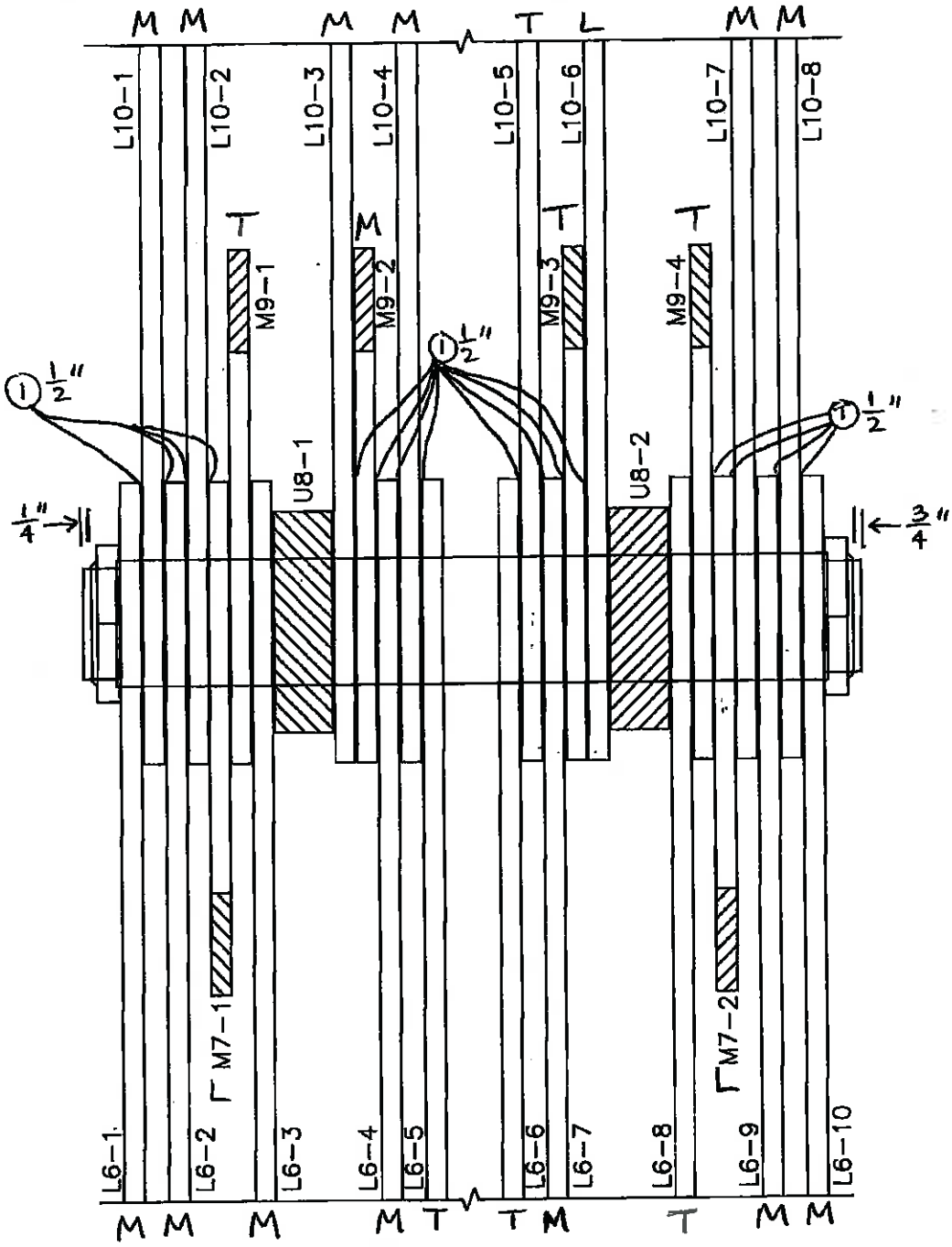


L-8

SPAN 7 TRUSS 4

| NO. | DATE | DESCRIPTION |
|---|---|---|
| 1 | 9/25/12 | WSP-SELLS ML/MA |

REVISIONS

2 WSP-SELLS VERIFICATION INSPECTION
07/12/2013

# FIELD NOTES

Stantec Consulting Services Inc.

| | |
|---|---|
| Bridge No.: | 08080R |
| Project No.: | 301-0099 |
| Crew: | LM & AF |
| Date: 5/4/09 | Sheet No.: 99 |

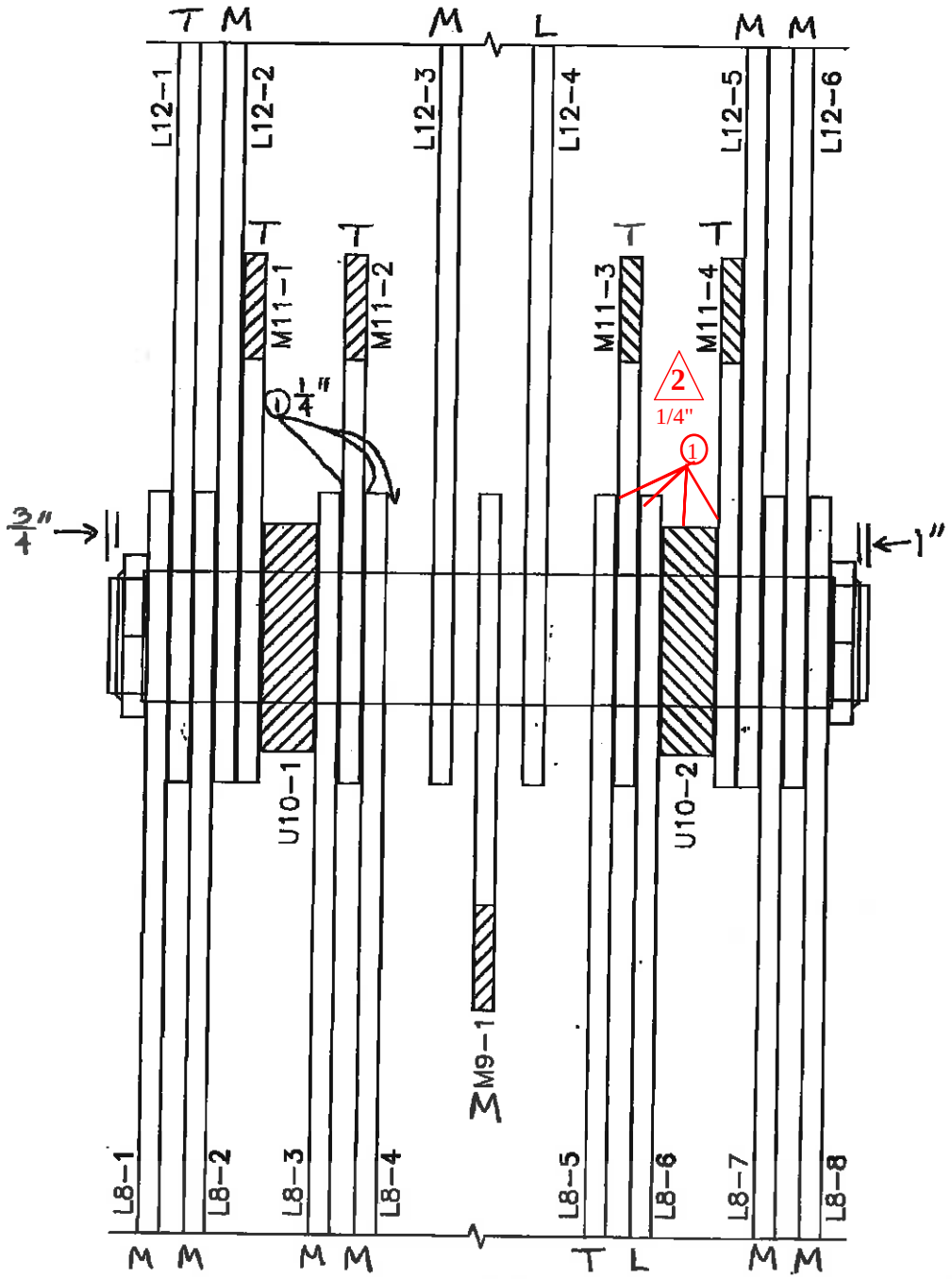


L-10

SPAN 7 TRUSS 4

| NO. | DATE | DESCRIPTION |
|---|---|---|
| 2 | 5/30/13 | WSP-SELLS; PA, MD |
| 1 | 9/25/12 | WSP-SELLS MLMA |

REVISIONS

WSP-SELLS VERIFICATION INSPECTION
07/12/2013 NO REVISION

# FIELD NOTES

Stantec Consulting Services Inc.

| | |
|---|---|
| Bridge No.: | 08080R |
| Project No.: | 301-0099 |
| Crew: | LM & AF |
| Date: 5/4/09 | Sheet No.: 100 |

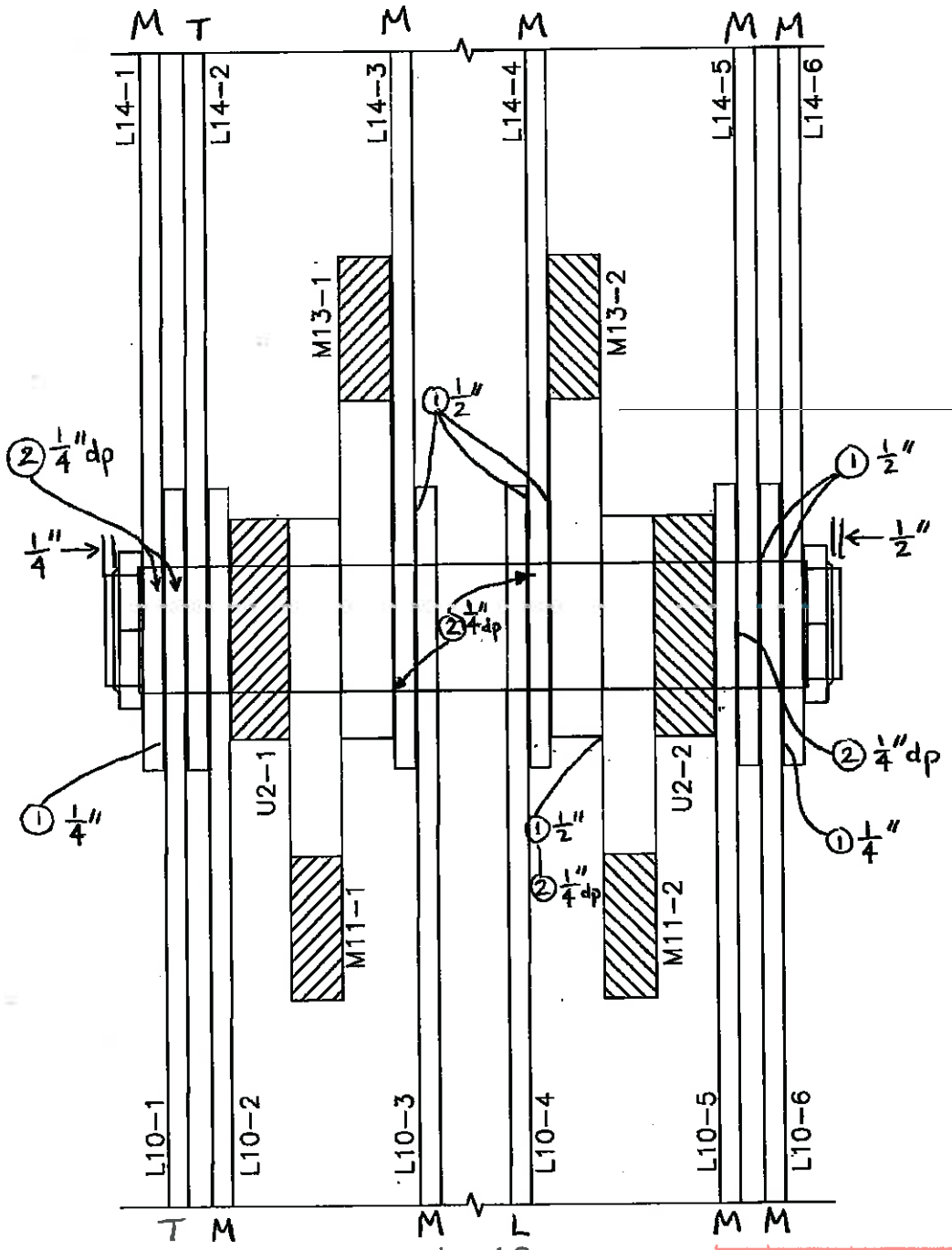


L-12

SPAN 7 TRUSS 4

| NO. | DATE | DESCRIPTION |
|---|---|---|
| 1 | 9/25/12 | WSP-SELLS MLMA |

REVISIONS

WSP-SELLS VERIFICATION INSPECTION
07/12/2013 NO REVISION

# FIELD NOTES

Stantec Consulting Services Inc.

| | |
|---|---|
| Bridge No.: | 08080R |
| Project No.: | 301-0099 |
| Crew: | LM & AF |
| Date: 5/4/09 | Sheet No.: 101 |

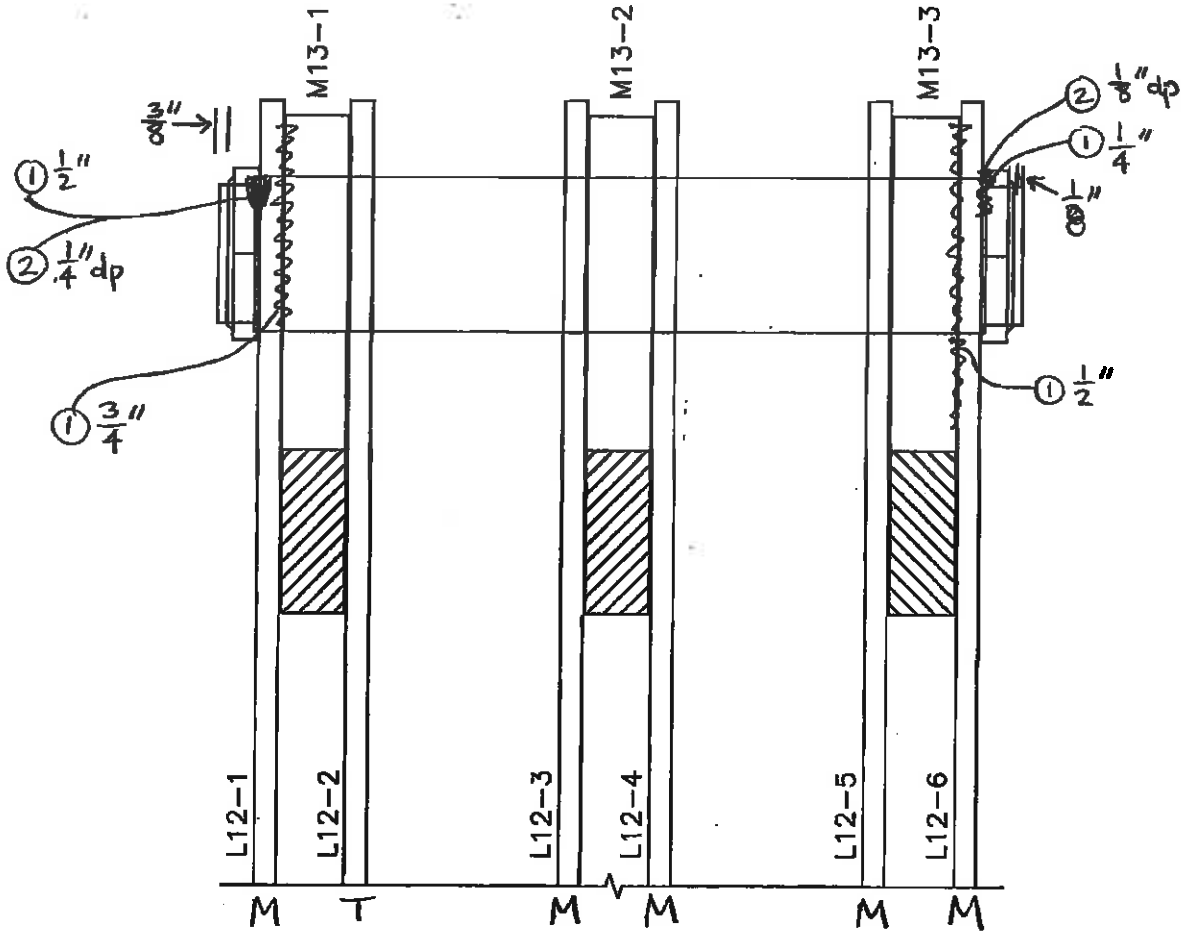


L-14

SPAN 7 TRUSS 4

| NO. | DATE | DESCRIPTION |
|---|---|---|
| 1 | 9/25/12 | WSP-SELLS ML,MA |

REVISIONS

102

WSP-SELLS
VERIFICATION INSPECTION
07/12/2013

# Mid-Point Pins

WSP-SELLS VERIFICATION INSPECTION
07/12/2013 NO REVISION

# FIELD NOTES

Stantec Consulting Services Inc.

| | |
|---|---|
| Bridge No.: | 08080R |
| Project No.: | 301-0099 |
| Crew: | TB EH |
| Date: 5/11/09 | Sheet No.: 103 |

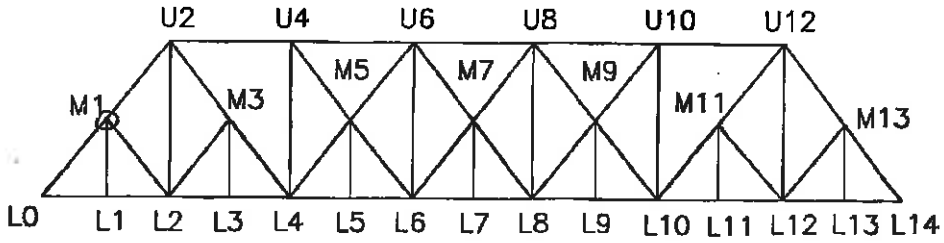


① South nut missing
② stopper plate in place
③ 1/8" wear to pin
④ L1 moves under live load

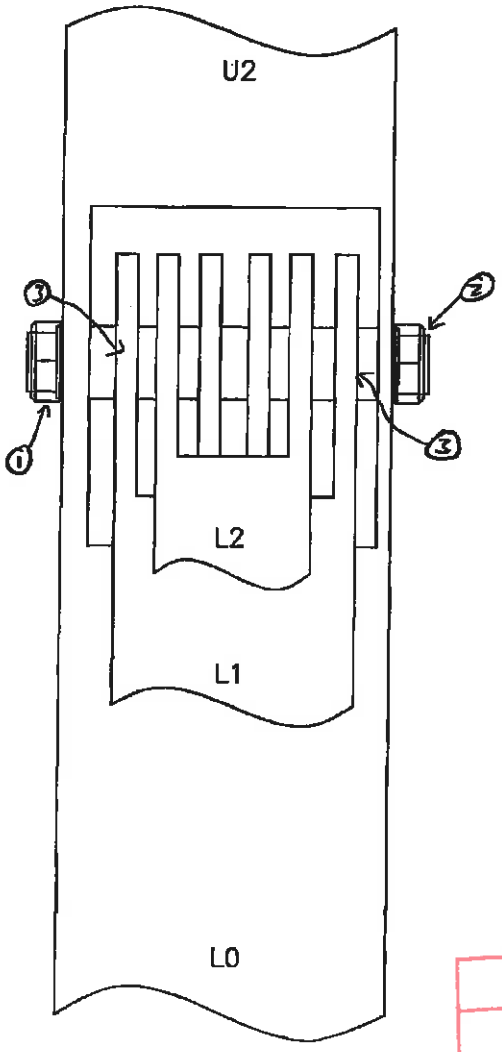


M1

SPAN 7 TRUSS 4
SOUTH ELEVATION MID-POINT PIN

| NO. | DATE | DESCRIPTION |
|---|---|---|
| | | |
| | | |
| | | |
| 1 | 1/14/13 | WSP-SELLS ML/MA |

REVISIONS

WSP-SELLS VERIFICATION INSPECTION
07/12/2013 NO REVISION

# FIELD NOTES

Stantec Consulting Services Inc.

| | |
|---|---|
| Bridge No.: | 08080R |
| Project No.: | 301-0099 |
| Crew: | EH TB |
| Date: 5/4/09 | Sheet No.: 109 |

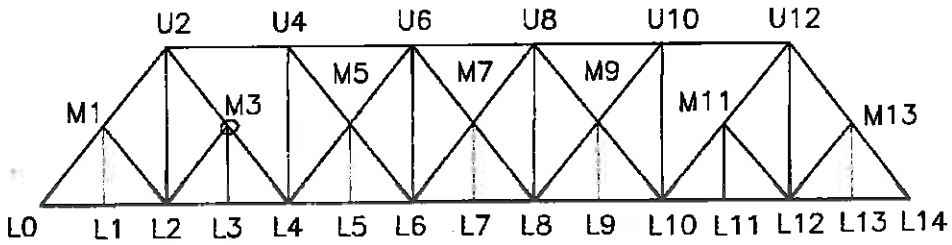


-New hanger & rubber sleeve
① 1/4" impacted rust
② 1/2" impacted rust
③ 1/4" groove section loss to eyebar
④ 1/8" groove section loss to eyebar
⑤ 5/16" groove section loss to eyebar

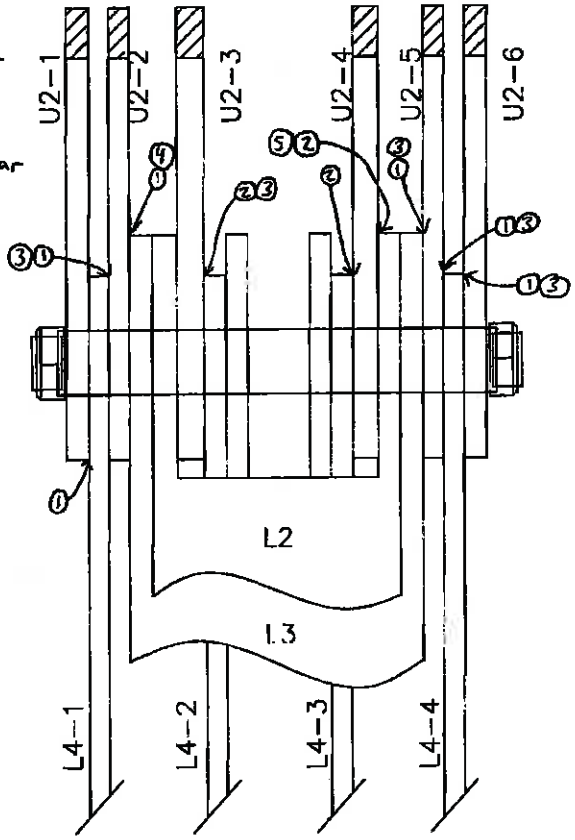


M-3

SPAN 7 TRUSS 4
SOUTH ELEVATION MID-POINT PIN

| NO. | DATE | DESCRIPTION |
|---|---|---|
| 1 | 1/14/13 | WSP-SELLS MLMA |

REVISIONS

WSP-SELLS VERIFICATION INSPECTION
07/12/2013 NO REVISION

# FIELD NOTES

Stantec Consulting Services Inc.

| | |
|---|---|
| Bridge No.: | 08080R |
| Project No.: | 301-0099 |
| Crew: | EH TB |
| Date: 5/11/09 | Sheet No.: 105 |

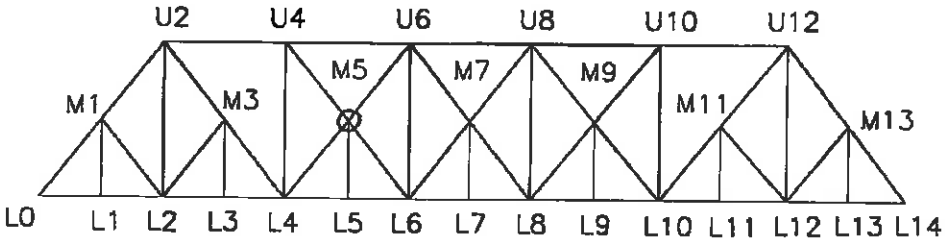


-New hanger + rubber sleeve

① 1/8" groove section loss to eyebar

② 3/16" groove section loss to eyebar

③ 1/2" impacted rust

④ 1/8" pin wear

⑤ 1/4" wear to eyebar at vertical web plate

⑥ 1/8" wear to eyebar from adjacent eyebar

⑦ 1/16" wear to eyebar from adjacent eyebar

-L6-2+3 are moderately loose

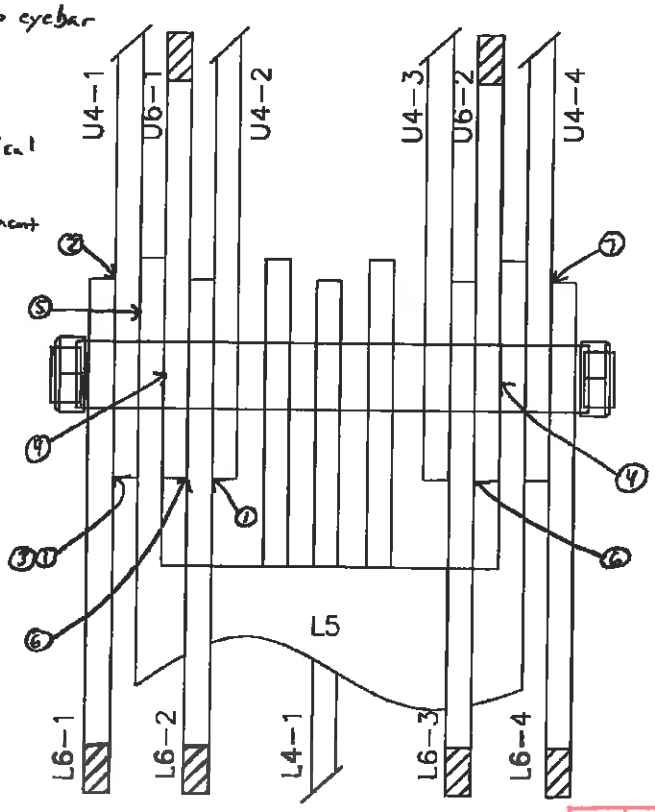


M-5

SPAN 7 TRUSS 4
SOUTH ELEVATION MID-POINT PIN

| NO. | DATE | DESCRIPTION |
|---|---|---|
| 1 | 1/14/13 | WSP-SELLS MUMA |

REVISIONS

WSP-SELLS VERIFICATION INSPECTION
07/12/2013 NO REVISION

# FIELD NOTES

Stantec Consulting Services Inc.

| | |
|---|---|
| Bridge No.: | 08080R |
| Project No.: | 301-0099 |
| Crew: | EH TB |
| Date: 5/4/09 | Sheet No.: 106 |

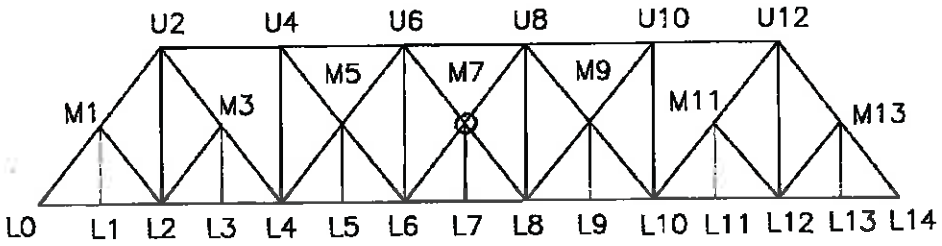


-New hangers + rubber sleeve

① 1/8" wear circle to eyebar + nut is loose

② 1/4" pin wear

-L6-2 is twisted + loose

-L6-1, L8-1+2 are loose

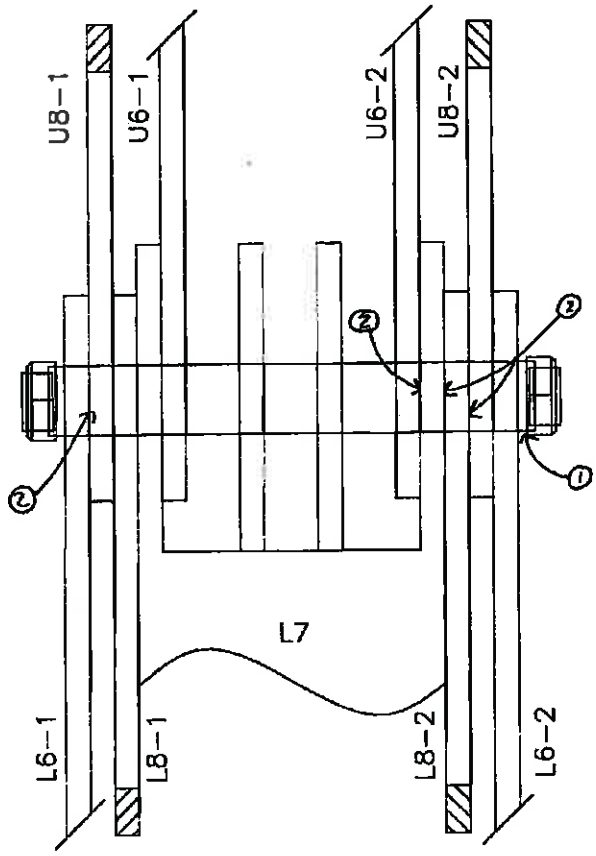


M-7

SPAN 7 TRUSS 4
SOUTH ELEVATION MID-POINT PIN

| NO. | DATE | DESCRIPTION |
|---|---|---|
| 1 | 1/4/13 | WSP-SELLS MLMA |

REVISIONS

WSP-SELLS VERIFICATION INSPECTION
07/12/2013 NO REVISION

# FIELD NOTES

Stantec Consulting Services Inc.

| | |
|---|---|
| Bridge No.: | 08080R |
| Project No.: | 301-0099 |
| Crew: | EH TB |
| Date: 5/4/09 | Sheet No.: 107 |

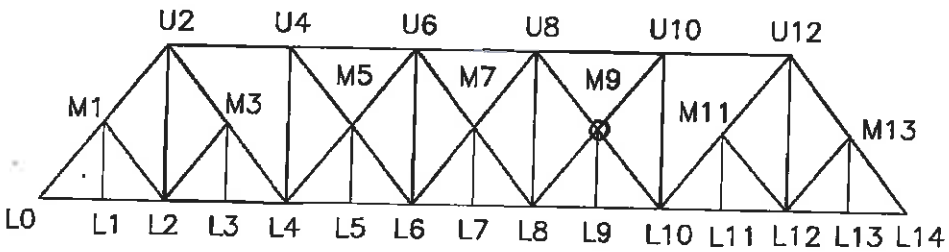


-New hanger + rubber sleeve

① 3/8" impacted rust

② 1/4" wear to eyebar at vertical web plate

③ 1/8" wear to eyebar at vertical web plate

④ 3/16" wear to eyebar at vertical web plate

⑤ 3/16" groove section loss to eyebar

⑥ 1/8" groove section loss to eyebar

-L8-2, L10-1 are moderately loose

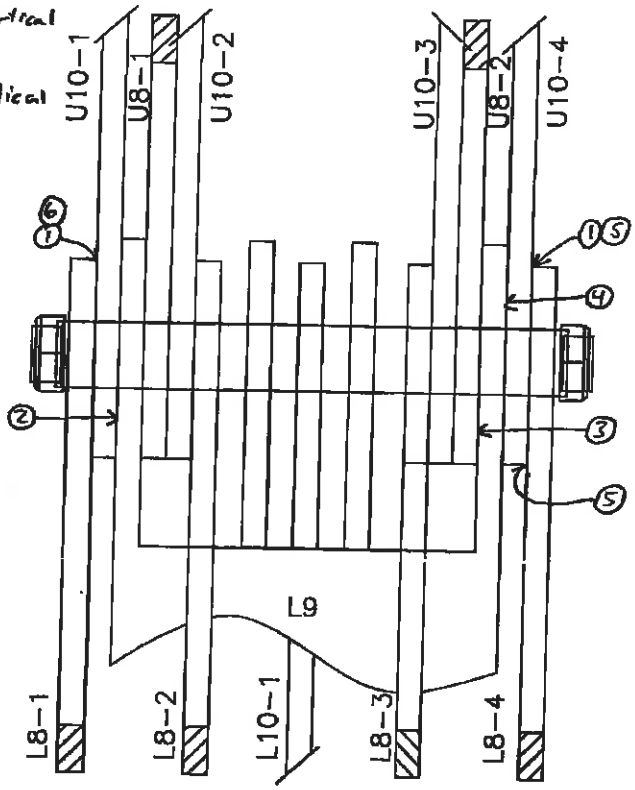


M-9

SPAN 7 TRUSS 4
SOUTH ELEVATION MID-POINT PIN

| NO. | DATE | DESCRIPTION |
|---|---|---|
| 1 | 1/14/13 | WSP-SELLS ML/MA |

REVISIONS

WSP-SELLS VERIFICATION INSPECTION
07/12/2013 NO REVISION

# FIELD NOTES

Stantec Consulting Services Inc.

| | |
|---|---|
| Bridge No.: | 08080R |
| Project No.: | 301-0099 |
| Crew: | EH TB |
| Date: 5/4/09 | Sheet No.: 108 |

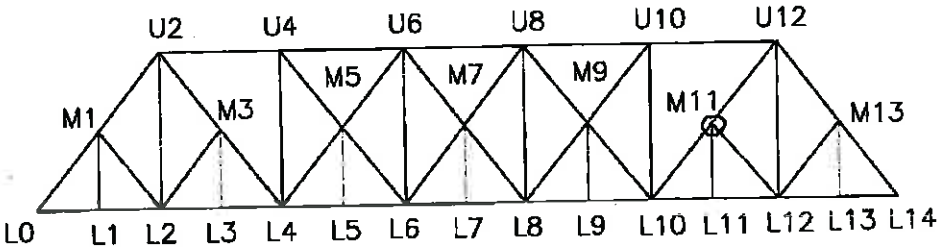


-New hanger + rubber sleeve

① 1/8" wear to eyebar around nut

② 1/2" impacted rust

③ 3/16" groove section loss to eyebar

④ 1/4" groove section loss to eyebar

⑤ 1/8" groove section loss to eyebar

⑥ 1/8" wear to eyebar at vertical web plate

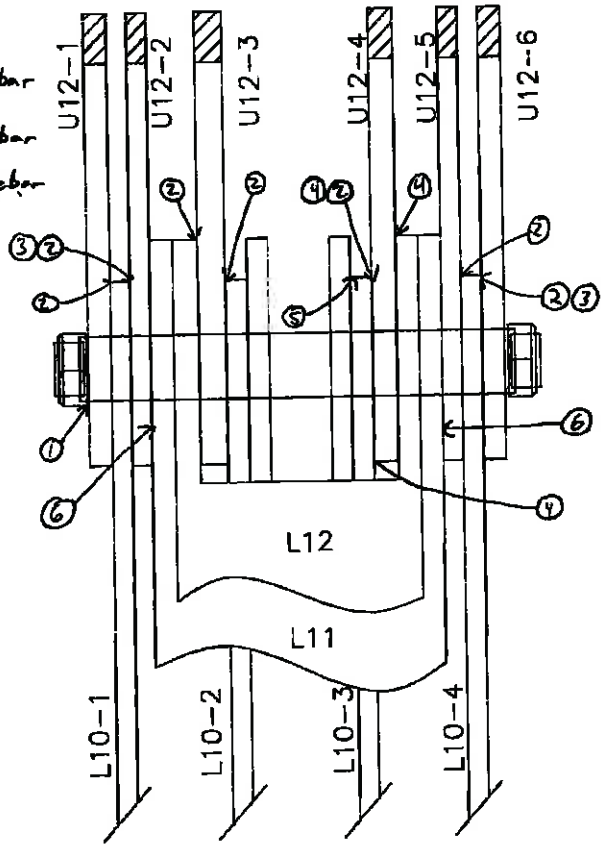


M-11

SPAN 7 TRUSS 4
SOUTH ELEVATION MID-POINT PIN

| NO. | DATE | DESCRIPTION |
|---|---|---|
| 1 | 1/14/13 | WSP-SELLS MLMA |

REVISIONS

WSP-SELLS VERIFICATION INSPECTION
07/12/2013 NO REVISION

# FIELD NOTES

Stantec Consulting Services Inc.

| | |
|---|---|
| Bridge No.: | 08080R |
| Project No.: | 301-0099 |
| Crew: | EH TB |
| Date: 5/11/09 | Sheet No.: 109 |

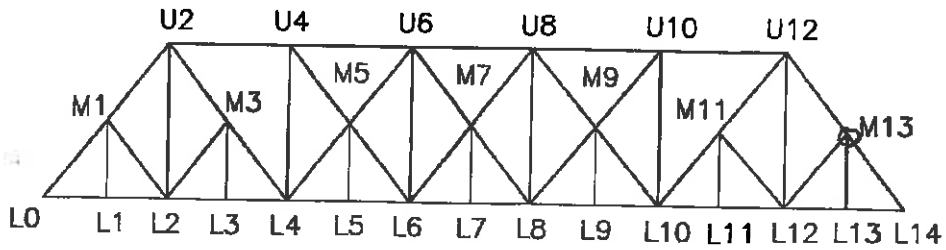


① 1/4" pin wear

② 1/8" gap between nut + web

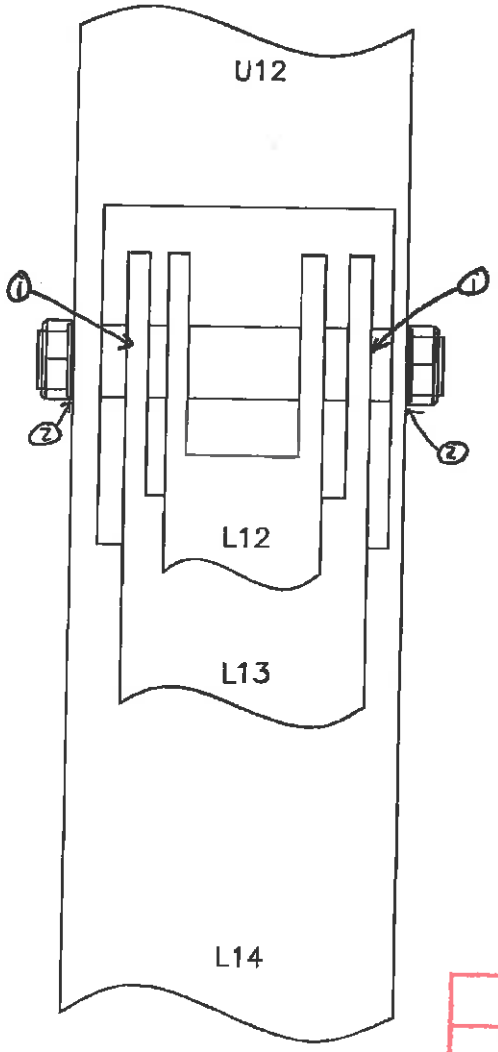


M13

SPAN TRUSS
SOUTH ELEVATION MID-POINT PIN

| NO. | DATE | DESCRIPTION |
|---|---|---|
| 1 | 1/14/13 | WSP-SELLS MLMA |

REVISIONS

110

WSP-SELLS
VERIFICATION INSPECTION
07/12/2013

# Upper Chord and Upper Chord Pins

WSP-SELLS VERIFICATION INSPECTION
07/12/2013 NO REVISION

# FIELD NOTES

Stantec Consulting Services Inc.

| | |
|---|---|
| Bridge No.: | 08080R |
| Project No.: | 301-0099 |
| Crew: | EH TB |
| Date: 5/11/09 | Sheet No.: 111 |

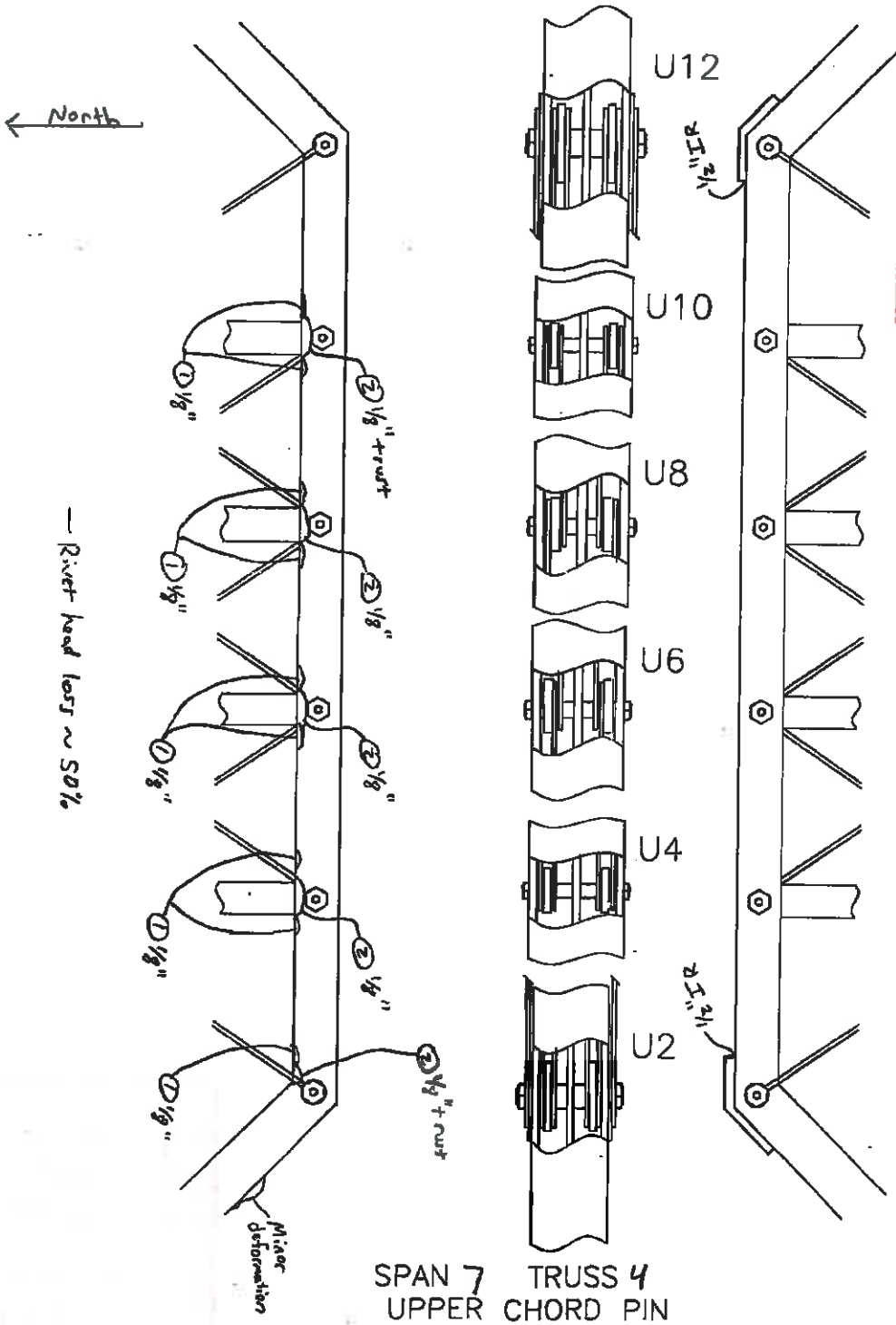


| NO. | DATE | DESCRIPTION |
|---|---|---|
| 1 | 1/14/13 | WSP-SELLS MLMA |

REVISIONS

WSP-SELLS VERIFICATION INSPECTION
07/12/2013 NO REVISION

# FIELD NOTES

Stantec Consulting Services Inc.

| | |
|---|---|
| Bridge No.: | 08080R |
| Project No.: | 301-0099 |
| Crew: | EH TB |
| Date: | 5/11/09 |
| Sheet No.: | 1/2 |

① Impact rust
- Moderate wear to M3-2 due to eyebar in contact with top chord

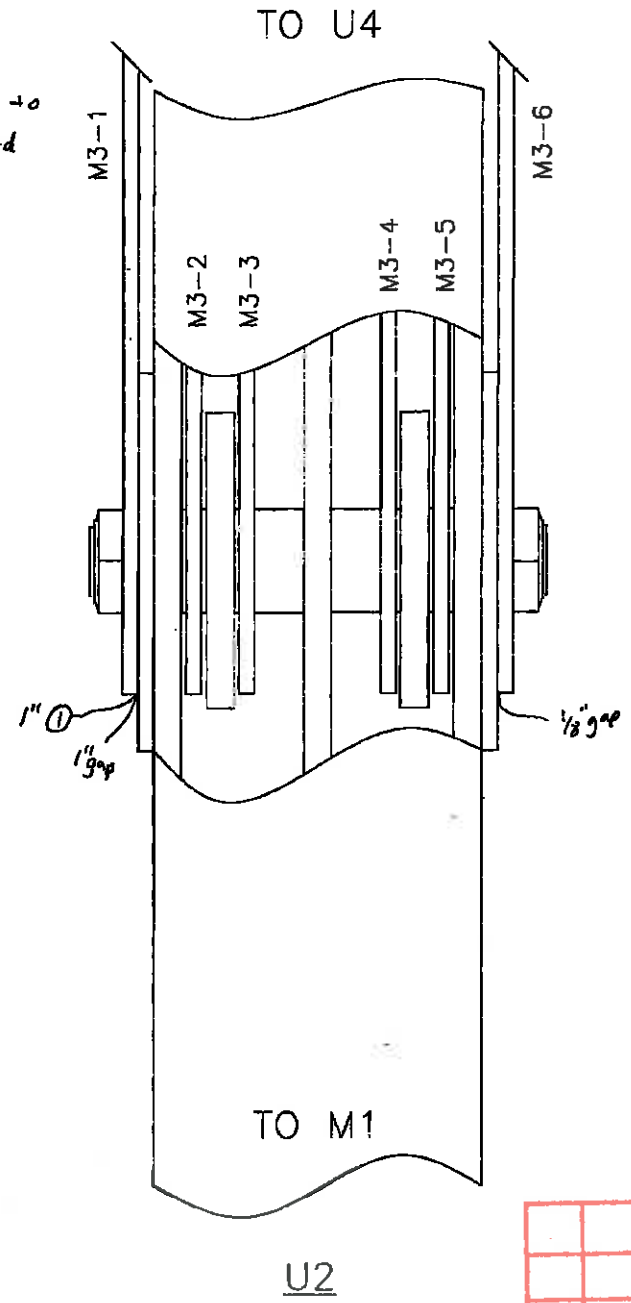


SPAN 7 TRUSS 4
UPPER CHORD PIN

| NO. | DATE | DESCRIPTION |
|---|---|---|
| 1 | 1/14/13 | WSP_SELLS ML,MA |

REVISIONS

WSP-SELLS VERIFICATION INSPECTION
07/12/2013 NO REVISION

# FIELD NOTES

Stantec Consulting Services Inc.

| | |
|---|---|
| Bridge No.: | 08080R |
| Project No.: | 301-0099 |
| Crew: | EH TB |
| Date: 5/4/09 | Sheet No.: 113 |

① Impact rust

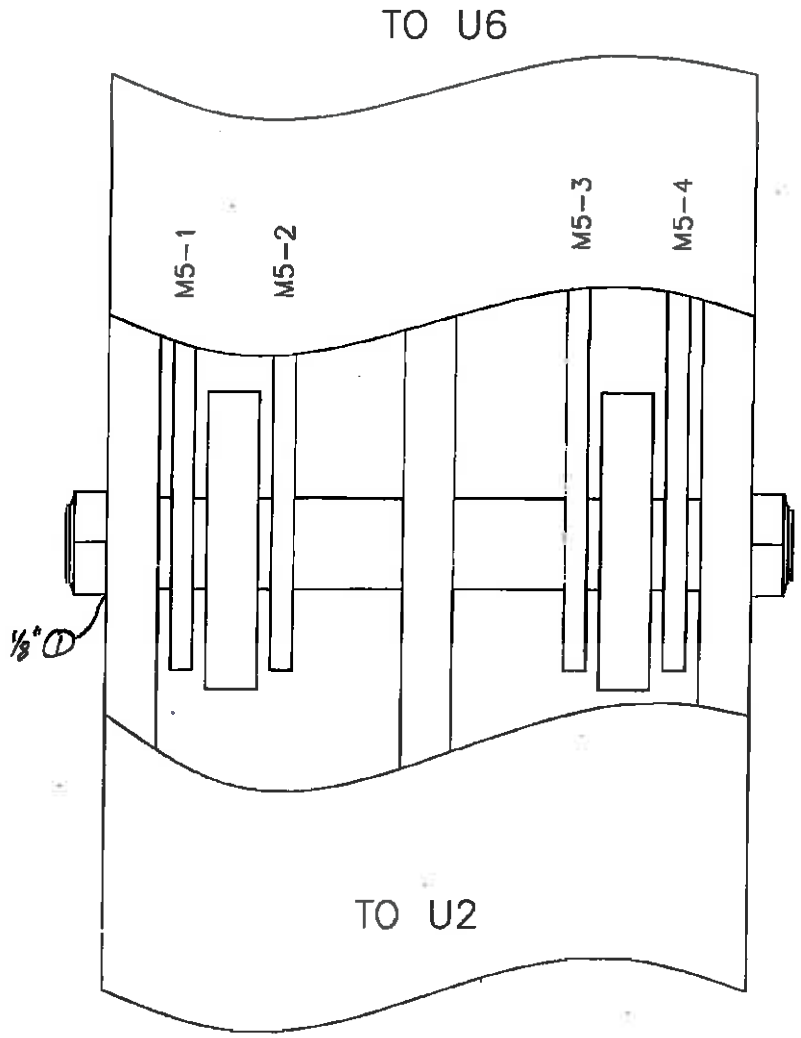


U4

SPAN 7 TRUSS 4
UPPER CHORD PIN

| NO. | DATE | DESCRIPTION |
|---|---|---|
| 1 | 1/14/13 | WSP-SELLS ML, MA |

REVISIONS

WSP-SELLS VERIFICATION INSPECTION
07/12/2013 NO REVISION

# FIELD NOTES

Stantec Consulting Services Inc.

| | |
|---|---|
| Bridge No.: | 08080R |
| Project No.: | 301-0099 |
| Crew: | EH TB |
| Date: 5/11/09 | Sheet No.: 119 |

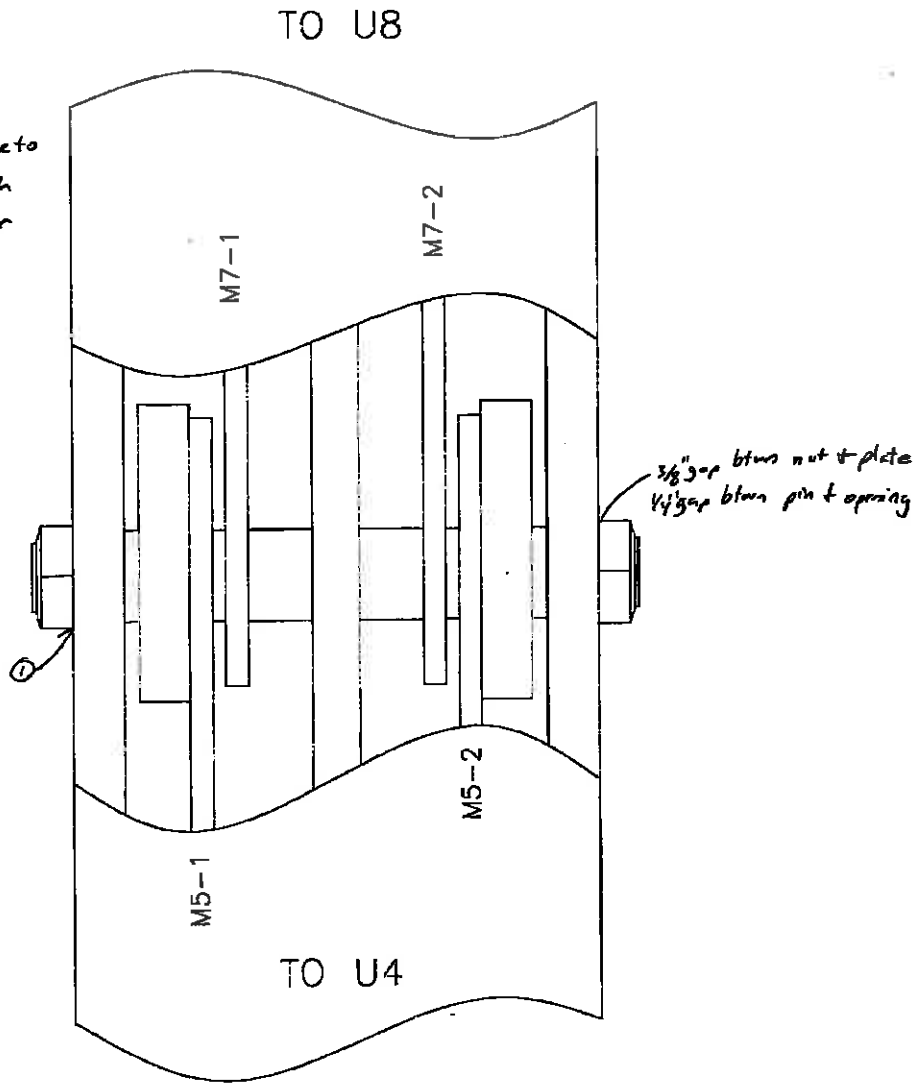


U6a

SPAN 7 TRUSS 4
UPPER CHORD PIN

| NO. | DATE | DESCRIPTION |
|---|---|---|
| 1 | 1/14/13 | WSP-SELLS ML/MA |

REVISIONS

WSP-SELLS VERIFICATION INSPECTION
07/12/2013 NO REVISION

# FIELD NOTES

Stantec Consulting Services Inc.

| | |
|---|---|
| Bridge No.: | 08080R |
| Project No.: | 301-0099 |
| Crew: | EH TB |
| Date: 5/11/09 | Sheet No.: 115 |

-No deterioration

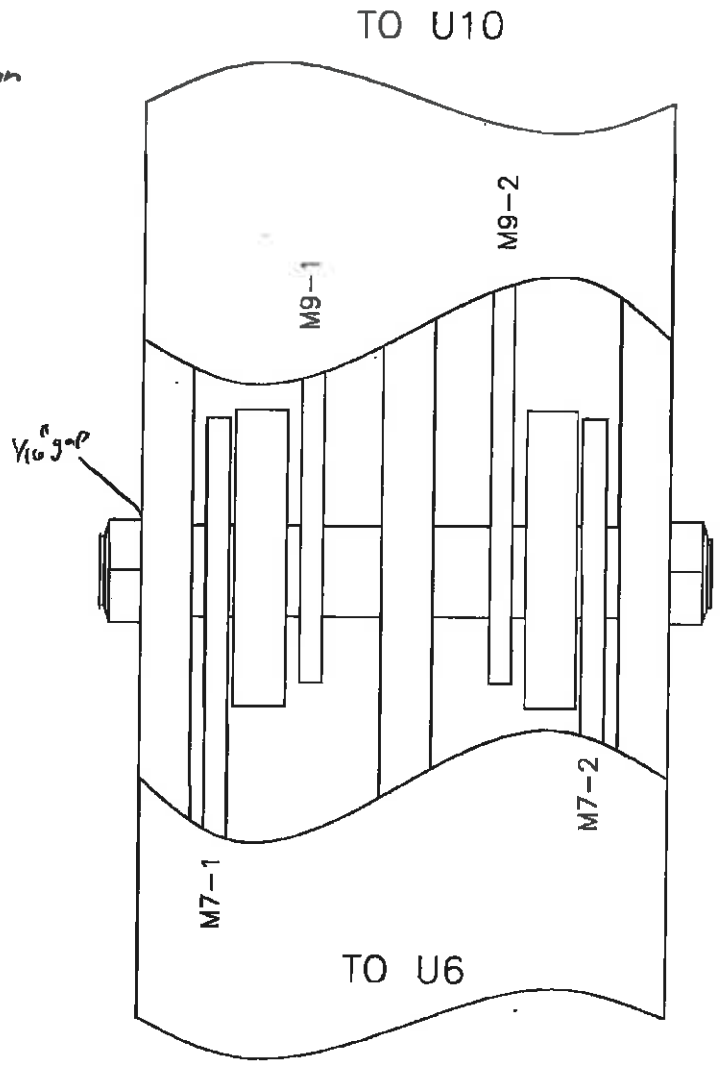


U8

SPAN 7 TRUSS 4
UPPER CHORD PIN

| NO. | DATE | DESCRIPTION |
|---|---|---|
| 1 | 4/14/13 | WSP-SELLS ML/MA |

REVISIONS

WSP-SELLS VERIFICATION INSPECTION
07/12/2013 NO REVISION

# FIELD NOTES

Stantec Consulting Services Inc.

| | |
|---|---|
| Bridge No.: | 08080R |
| Project No.: | 301-0099 |
| Crew: | EGH TB |
| Date: 5/11/09 | Sheet No.: 116 |

- 1/8" wear to corner of M9-1 due to eyebar in contact with vertical

TO U12

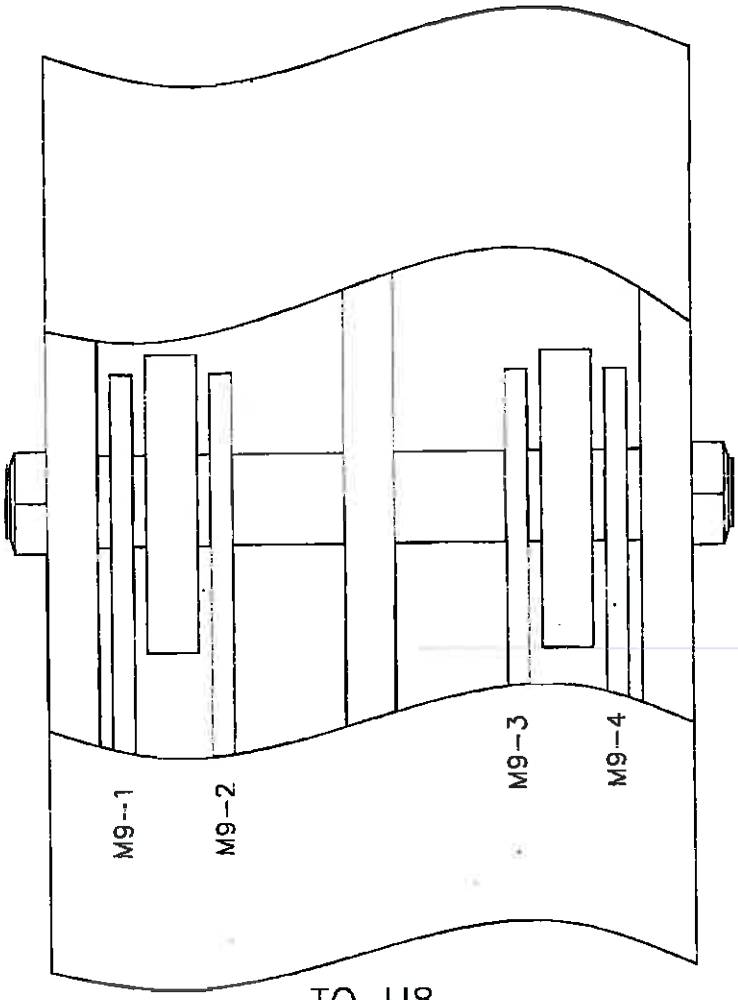


TO U8

U10

SPAN 7 TRUSS 4
UPPER CHORD PIN

| NO. | DATE | DESCRIPTION |
|---|---|---|
| Δ | 1/14/13 | WSP-SELLS ML, MA |

REVISIONS

WSP-SELLS VERIFICATION INSPECTION
07/12/2013 NO REVISION

# FIELD NOTES

Stantec Consulting Services Inc.

| | |
|---|---|
| Bridge No.: | 08080R |
| Project No.: | 301-0099 |
| Crew: | ELH TB |
| Date: 5/11/09 | Sheet No.: 117 |

① Impact rust
② Loss of section

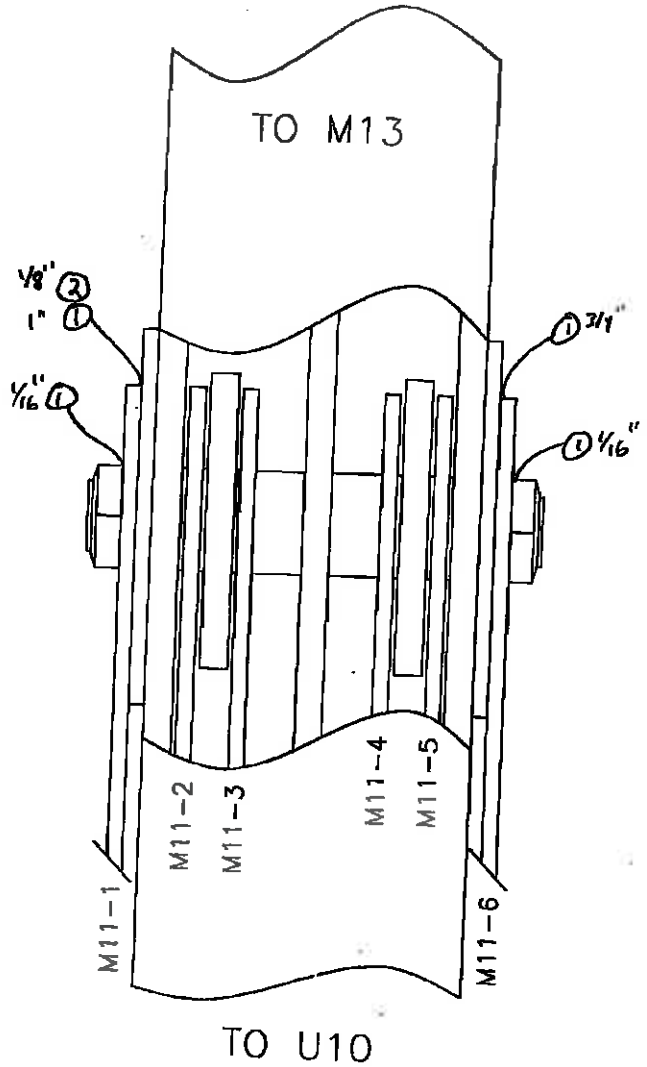


U12

SPAN 7 TRUSS 4
UPPER CHORD PIN

| NO. | DATE | DESCRIPTION |
|---|---|---|
| 1 | 1/14/13 | WSP-SELLS MLMA |

REVISIONS

118

WSP-SELLS
VERIFICATION INSPECTION
07/12/2013

# Bearings

WSP-SELLS VERIFICATION INSPECTION
07/12/2013 NO REVISION

# FIELD NOTES

Stantec Consulting Services Inc.

| | |
|---|---|
| Bridge No.: | 08080R |
| Project No.: | 301-0099 |
| Crew: | LM AF |
| Date: | 5/4/09 |
| Sheet No.: | 119 |

BEARING LEGEND:

(1) = IMPACTED RUST WITH PITTING LOSS OF SECTION

(2) = EDGE LOSS OF SECTION OR LACING TYPE DETERIORATION (LTD)

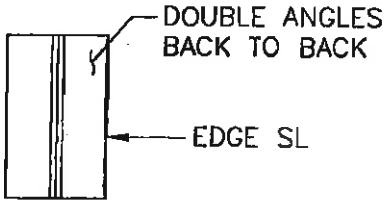


(3) = HEAVY DEBRIS ACCUMULATIONS

(4) = PLOS

(5) = RIVET HEAD SECTION LOSS

WSP-SELLS VERIFICATION INSPECTION
07/12/2013 NO REVISION

# FIELD NOTES

Stantec Consulting Services Inc.

| | |
|---|---|
| Bridge No.: | 08080R |
| Project No.: | 301-0099 |
| Crew: | LM & AF |
| Date: 5/4/09 | Sheet No.: 120 |

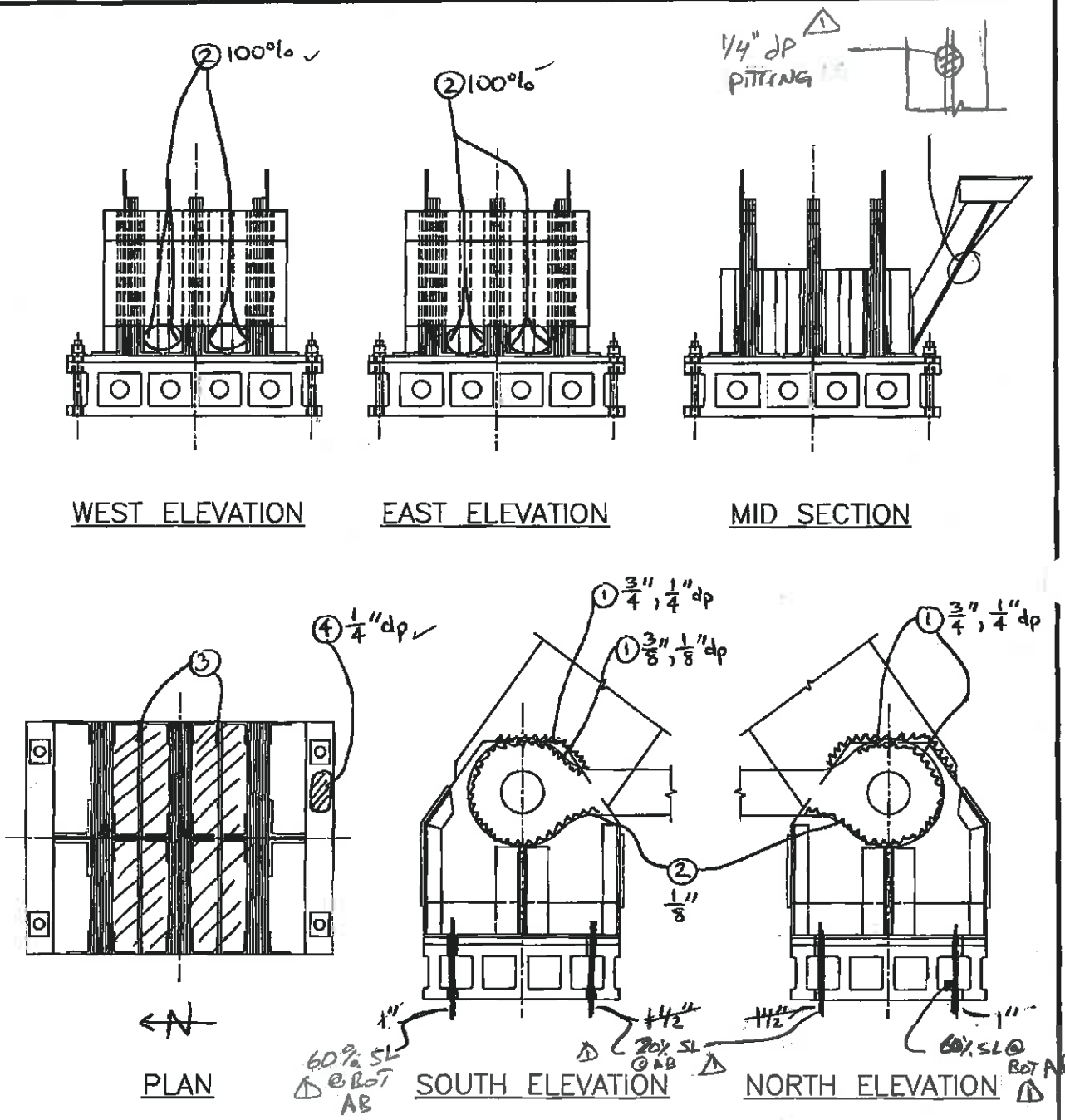


FIXED BEARING

SPAN 7 TRUSS 1 L 0

| NO. | DATE | DESCRIPTION |
|---|---|---|
| 1 | 9/25/14 | WSP-SELLS ML MA |

REVISIONS

2 WSP-SELLS VERIFICATION INSPECTION 07/12/2013

# FIELD NOTES

Stantec Consulting Services Inc.

| | |
|---|---|
| Bridge No.: | 08080R |
| Project No.: | 301-0099 |
| Crew: | LM & AF |
| Date: 5/4/09 | Sheet No.: 121 |

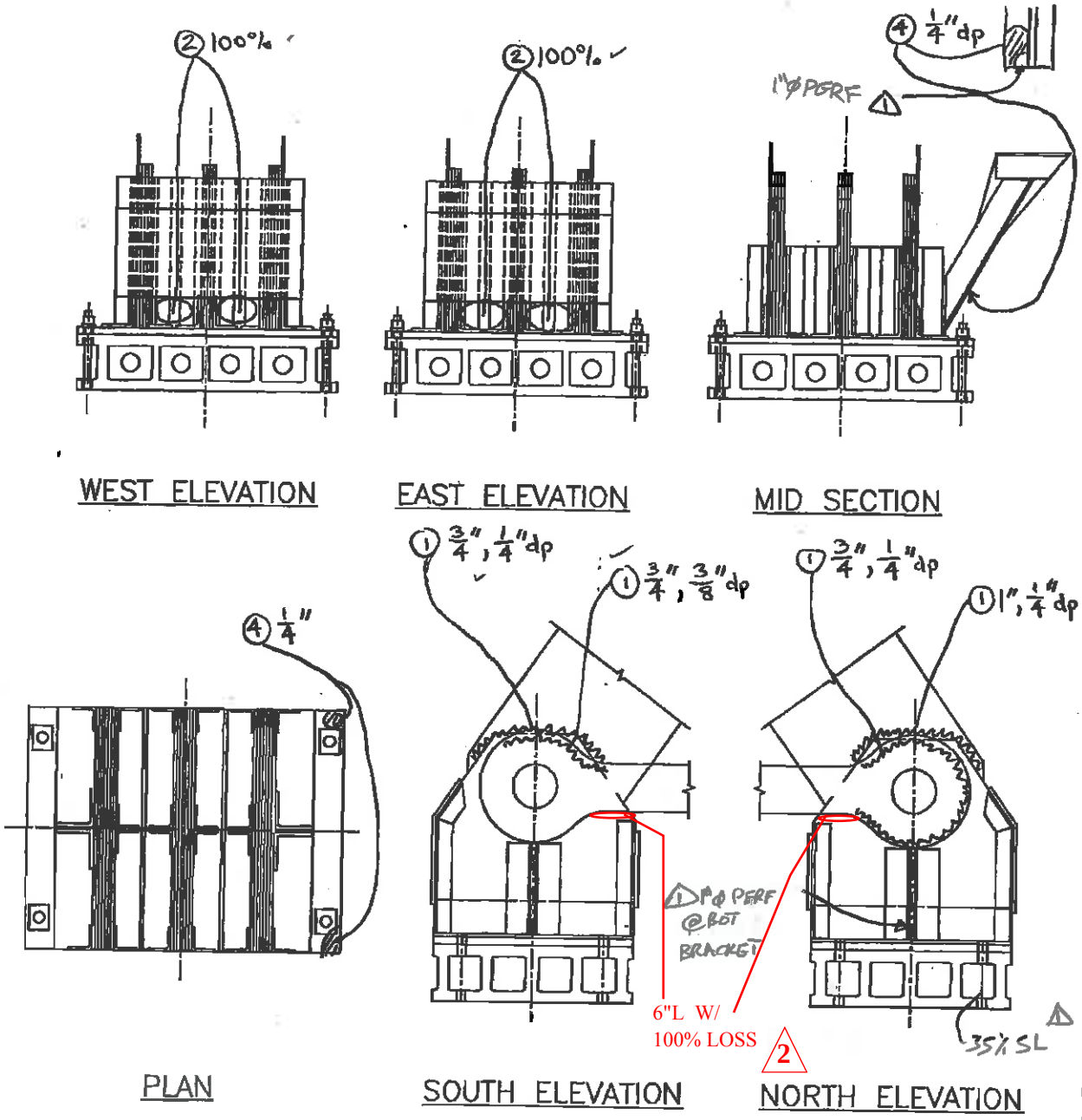


FIXED BEARING

SPAN 7 TRUSS 2 LO

| NO. | DATE | DESCRIPTION |
|---|---|---|
| 2 | 5/30/13 | WSP-SELLS; PA,MD |
| 1 | 9/25/12 | WSP-SELLS ML,MA |

REVISIONS

WSP-SELLS VERIFICATION INSPECTION
07/12/2013 NO REVISION

# FIELD NOTES

Stantec Consulting Services Inc.

| | |
|---|---|
| Bridge No.: | 08080R |
| Project No.: | 301-0099 |
| Crew: | LM & AF |
| Date: 5/4/09 | Sheet No.: 122 |

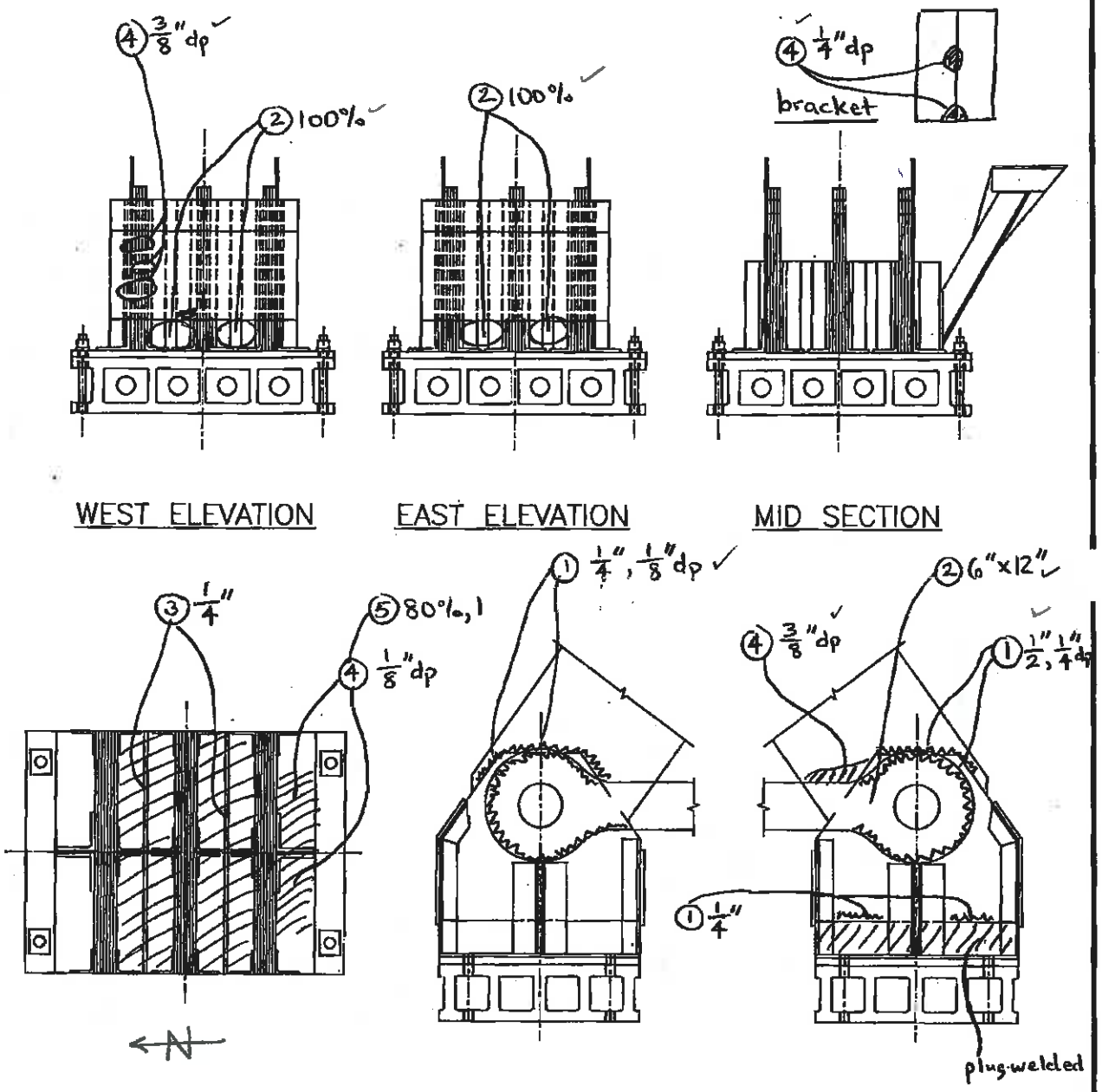


*Only 1 nut used old nut as washer; 2 nuts / no thread
*New nut damaged, thread does not go thru
NE NUT △

FIXED BEARING

SPAN 7 TRUSS 3 L O

| NO. | DATE | DESCRIPTION |
|---|---|---|
| 1 | 9/25/12 | WSP-SELLS MLMA |

REVISIONS

WSP-SELLS VERIFICATION INSPECTION
07/12/2013 NO REVISION

# FIELD NOTES

Stantec Consulting Services Inc.

| | |
|---|---|
| Bridge No.: | 08080R |
| Project No.: | 301-0099 |
| Crew: | LM & AF |
| Date: 5/4/09 | Sheet No.: 123 |

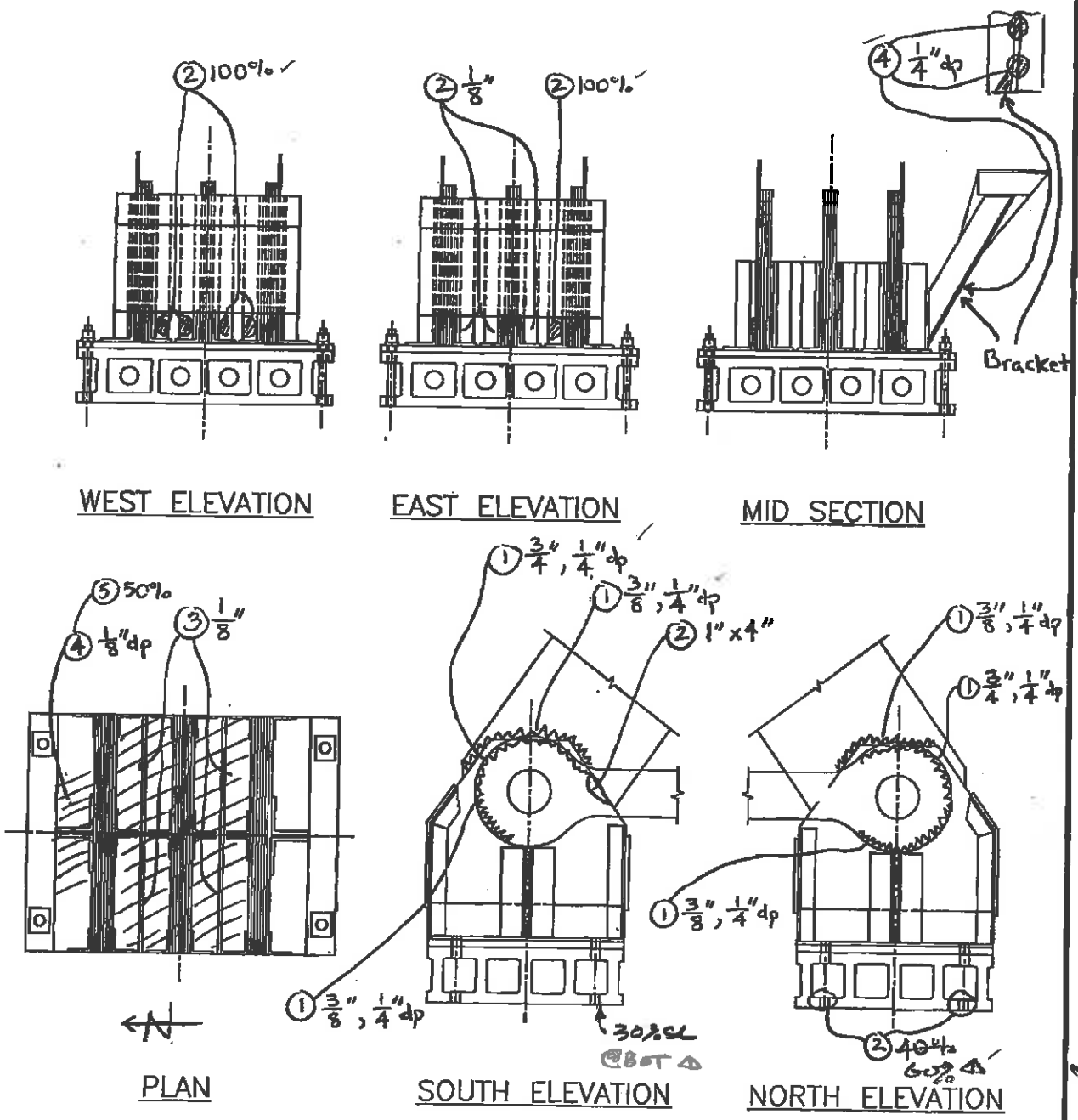


FIXED BEARING
SPAN 7 TRUSS 4 L O

| NO. | DATE | DESCRIPTION |
|---|---|---|
| △1 | 9/25/12 | WSP-SELLS MLMA |

REVISIONS

2035 7627

WSP-SELLS VERIFICATION INSPECTION
07/12/2013 NO REVISION

# FIELD NOTES

Stantec Consulting Services Inc.

| | |
|---|---|
| Bridge No.: | 08080R |
| Project No.: | 301-0099 |
| Crew: | LM & AF |
| Date: 5/4/09 | Sheet No.: 124 |

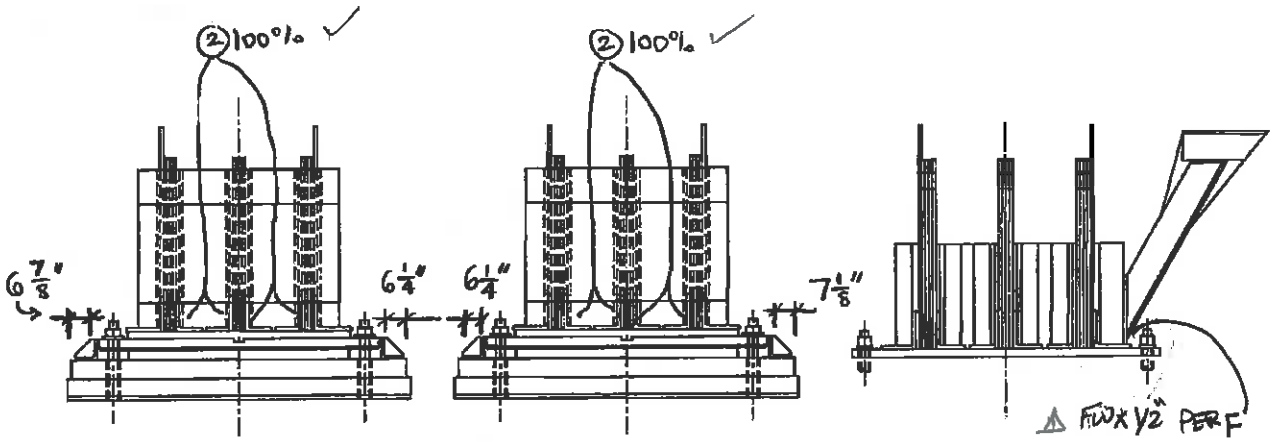


EAST ELEVATION WEST ELEVATION MID SECTION

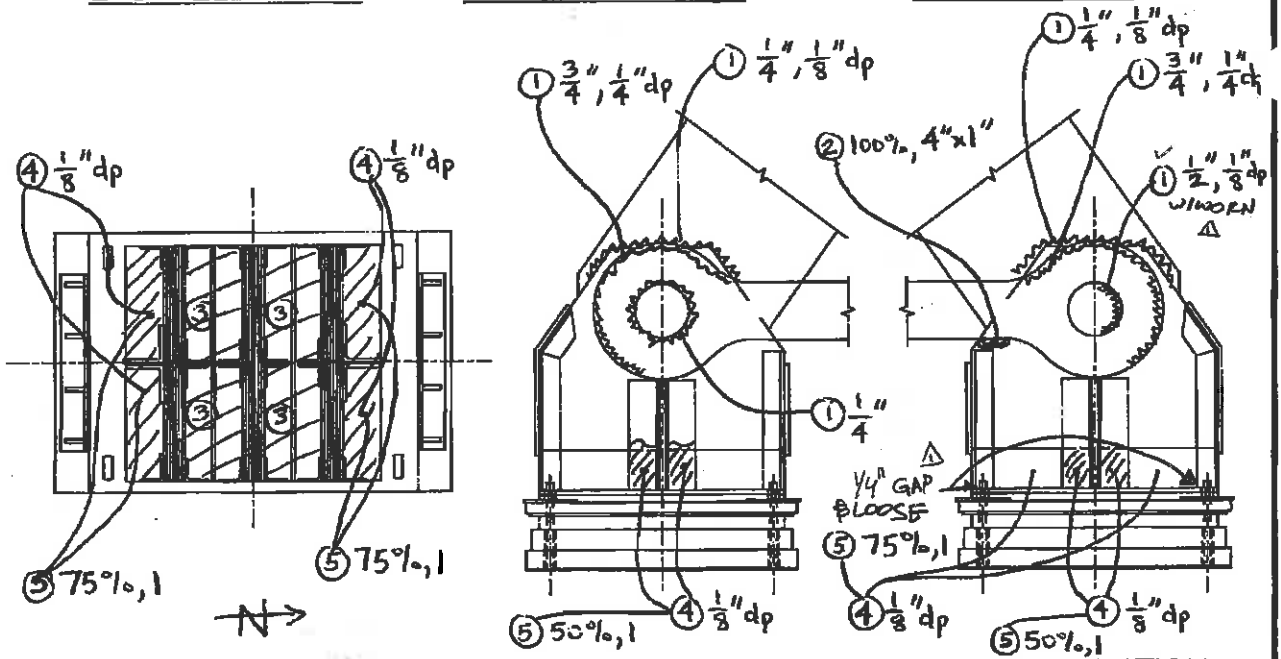


PLAN NORTH ELEVATION SOUTH ELEVATION

EXPANSION BEARING

SPAN 7 TRUSS 1 L 14

| NO. | DATE | DESCRIPTION |
|---|---|---|
| △ | 9/25/12 | WSP-SELLS MLMA |

REVISIONS

WSP-SELLS VERIFICATION INSPECTION
07/12/2013 NO REVISION

# FIELD NOTES

Stantec Consulting Services Inc.

| | |
|---|---|
| Bridge No.: | 08080R |
| Project No.: | 301-0099 |
| Crew: | LM & AF |
| Date: 5/4/09 | Sheet No.: 125 |

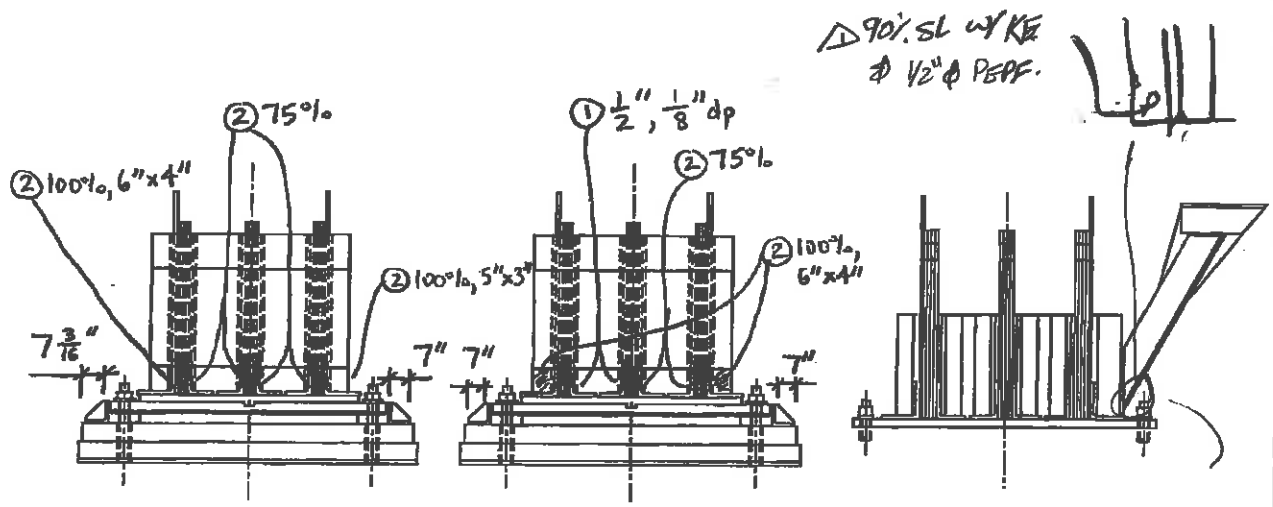


EAST ELEVATION

WEST ELEVATION

MID SECTION

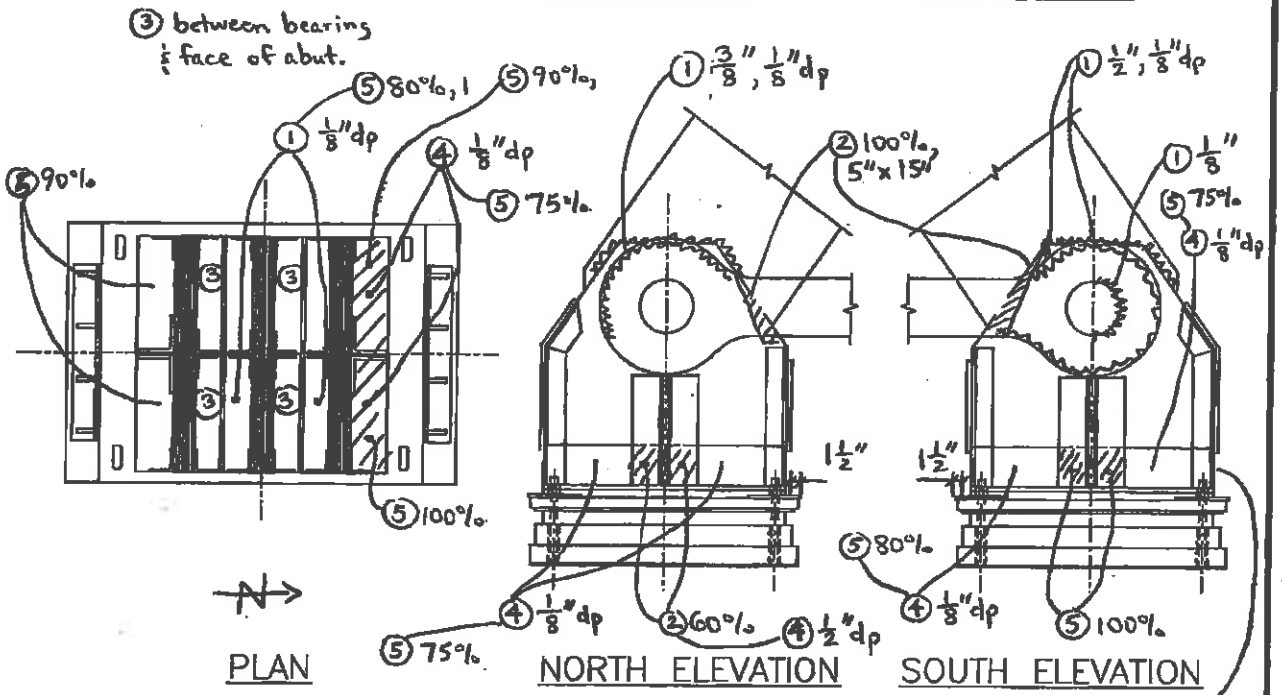


PLAN

NORTH ELEVATION

SOUTH ELEVATION

EXPANSION BEARING

SPAN 7 TRUSS 2 L 14

| NO. | DATE | DESCRIPTION |
|---|---|---|
| 1 | 9/25/12 | WSP-SELLS ML, MA |

REVISIONS

WSP-SELLS VERIFICATION INSPECTION
07/12/2013 NO REVISION

# FIELD NOTES

Stantec Consulting Services Inc.

| | |
|---|---|
| Bridge No.: | 08080R |
| Project No.: | 301-0099 |
| Crew: | LM & AF |
| Date: 5/4/09 | Sheet No.: 126 |

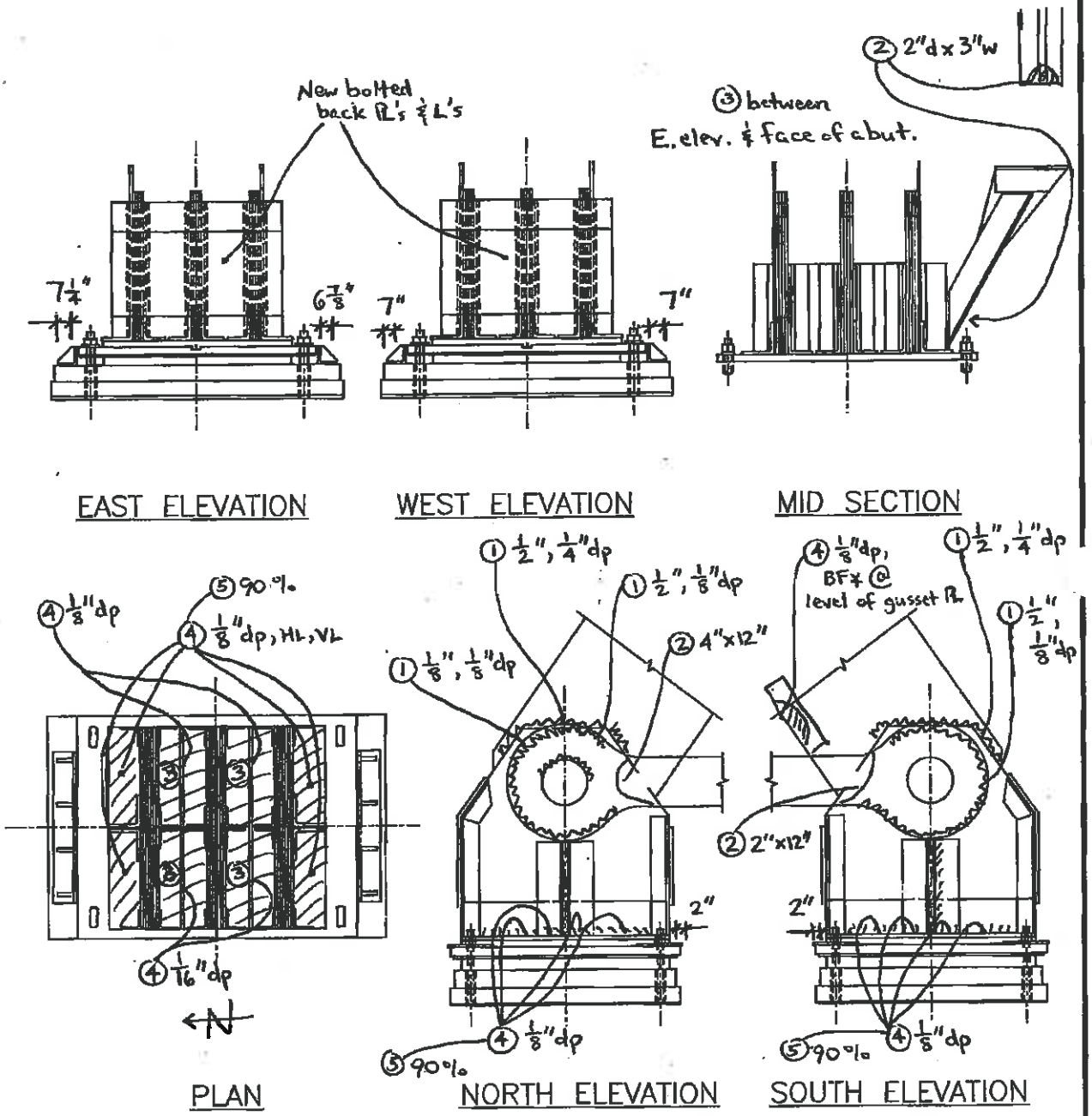


EXPANSION BEARING

SPAN 7 TRUSS 3 L 14

| NO. | DATE | DESCRIPTION |
|---|---|---|
| 1 | 9/25/13 | WSP-SELLS ML, MA |

REVISIONS

2 WSP-SELLS VERIFICATION INSPECTION
07/12/2013

# FIELD NOTES

Stantec Consulting Services Inc.

| | |
|---|---|
| Bridge No.: | 08060R |
| Project No.: | 301-0099 |
| Crew: | LM & AF |
| Date: 5/4/09 | Sheet No.: (27) |

2 5/31/13 WSP-SELLS; PA,MD

| | | |
|---|---|---|
| 1 | 9/25/13 | WSP-SELLS MLMA |

③ between east elev. & face of abutment

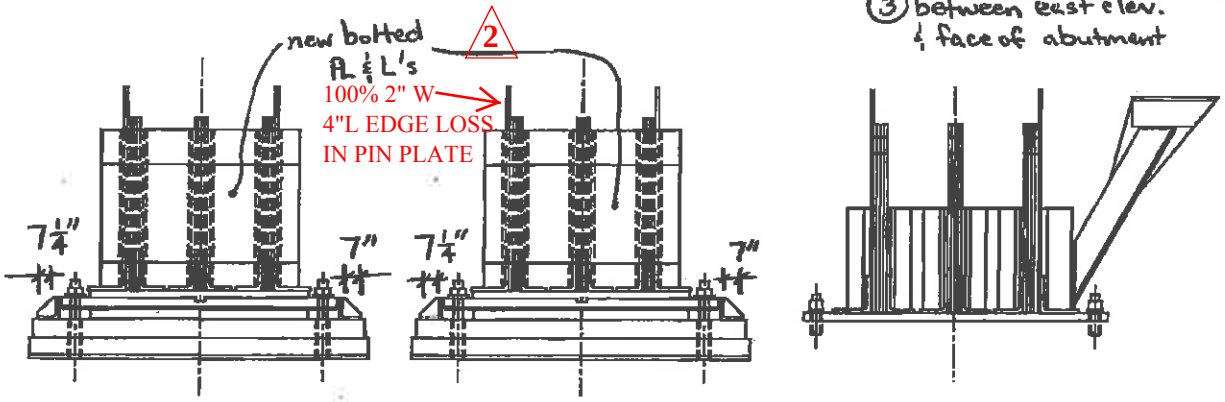


EAST ELEVATION WEST ELEVATION MID SECTION

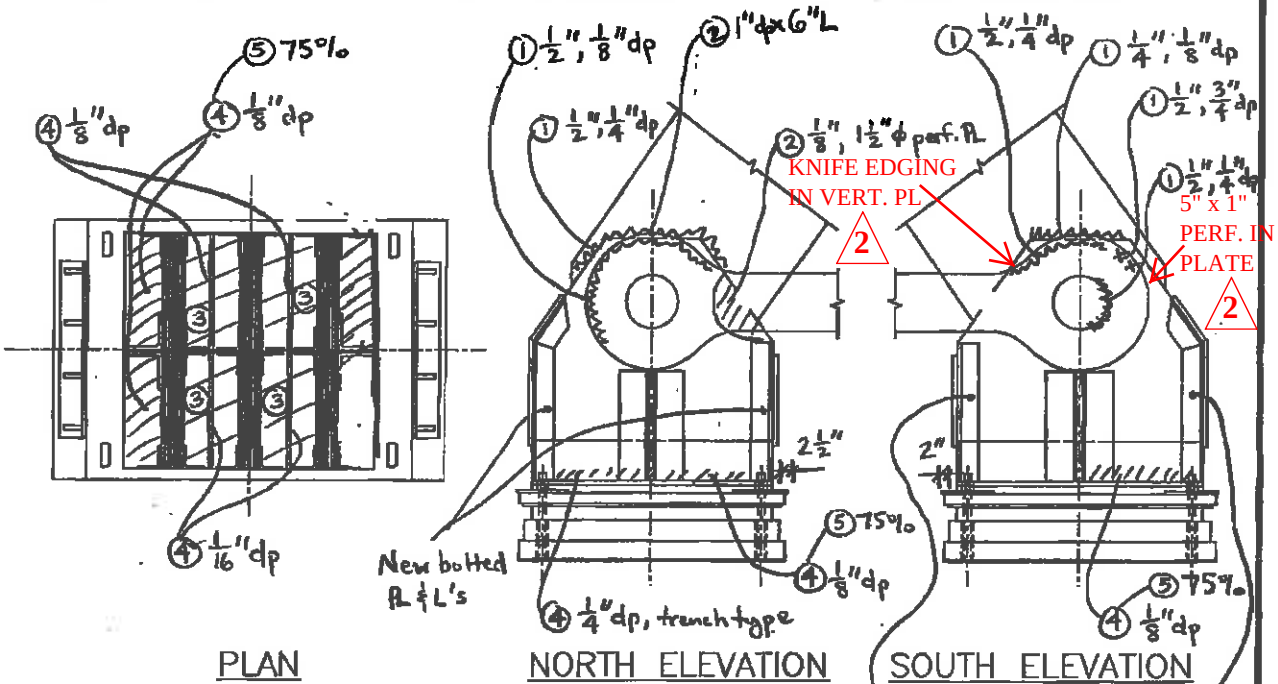


PLAN NORTH ELEVATION SOUTH ELEVATION

EXPANSION BEARING

SPAN 7 TRUSS 4 L 14

128

WSP-SELLS
VERIFICATION INSPECTION
07/12/2013

# Floor System
# (From Top of Deck)

WSP-SELLS VERIFICATION INSPECTION
07/12/2013 NO REVISION

# FIELD NOTES

Stantec Consulting Services Inc.

| | |
|---|---|
| Bridge No.: | 08080R |
| Project No.: | 301-0099 |
| Crew: | EH TB |
| Date: 5/11/09 | Sheet No.: 129 |

## TOP OF DECK FLOOR SYSTEM DETERIORATION LEGEND

TOP OF FLOORBEAMS:

X X X
- EDGE WIDTH LOSS (0–4)
- DEPTH LOSS (1–4)
- TYPE OF DETERIORATION (A–C)

TYPES OF DETERIORATION:

TYPE A – SECTION LOSS WITH CRATER WIDTH NO MORE THAN 50% OF TOP FLANGE WIDTH

TYPE B – SECTION LOSS WITH CRATER WIDTH UP TO 100% OF TOP FLANGE WIDTH

TYPE C – STEADY SECTION LOSS ACROSS ENTIRE TOP FLANGE

DETERIORATION DEPTH RATES

1. 1/8" DEEP
2. 1/4" DEEP
3. 3/8" DEEP
4. 1/2" DEEP

EDGE LOSS RATES RATES

0. NO LOSS
1. 1/4" WIDE
2. 1/2" WIDE
3. 3/4" WIDE
4. 1" WIDE

WSP-SELLS VERIFICATION INSPECTION
07/12/2013 NO REVISION

# FIELD NOTES

Stantec Consulting Services Inc.

| | |
|---|---|
| Bridge No.: | 08080R |
| Project No.: | 301-0099 |
| Crew: | EH TB |
| Date: 5/4/09 | Sheet No.: 130 |

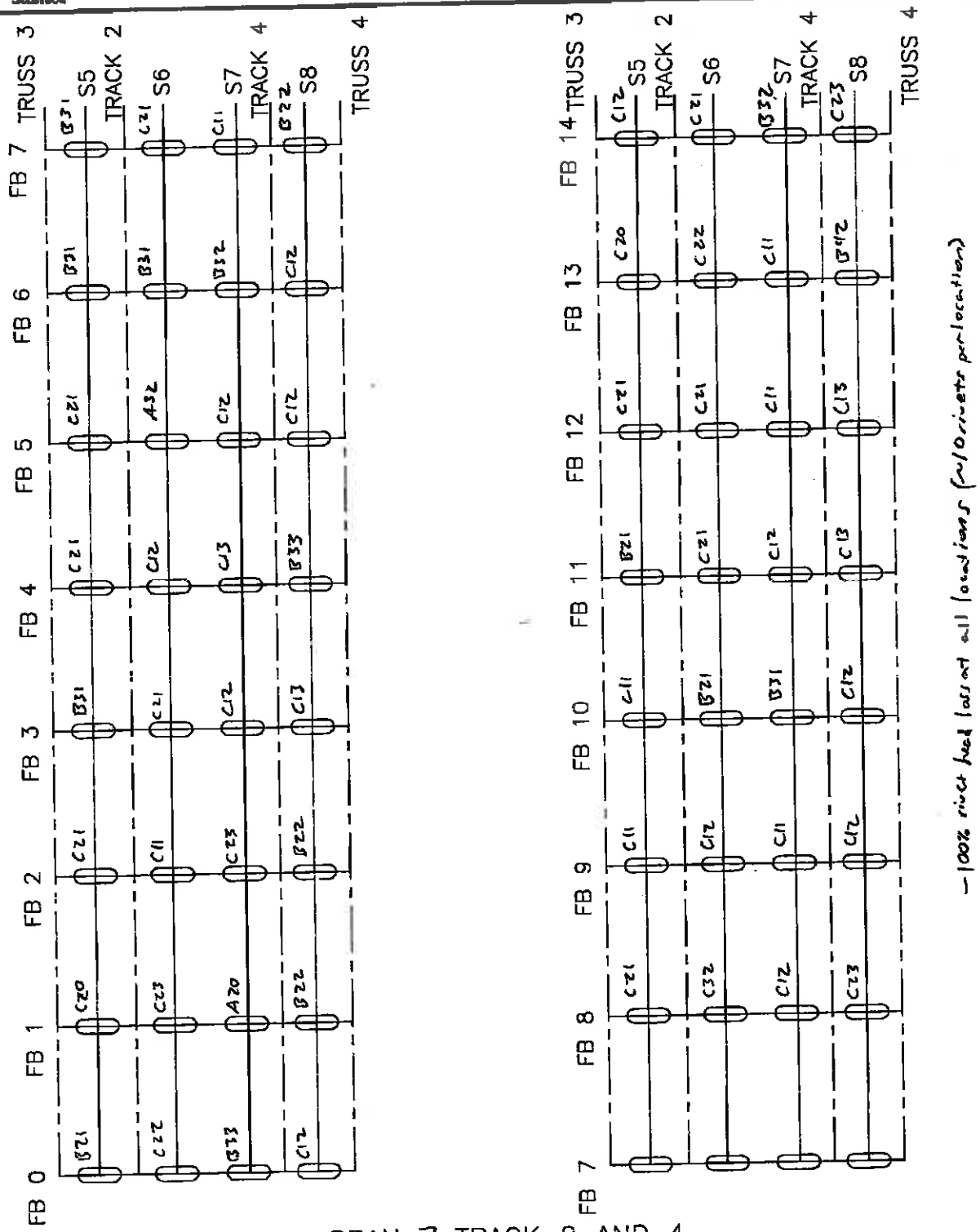


SPAN 7 TRACK 2 AND 4
FLOOR SYSTEM (TOP OF DECK) | 6/18/12 | WSP-SELLS MYMA

WSP-SELLS VERIFICATION INSPECTION
07/12/2013 NO REVISION

# FIELD NOTES

Stantec Consulting Services Inc.

| | |
|---|---|
| Bridge No.: | 08080R |
| Project No.: | 301-0099 |
| Crew: | EH TB |
| Date: | 5/11/09 |
| Sheet No.: | 131 |

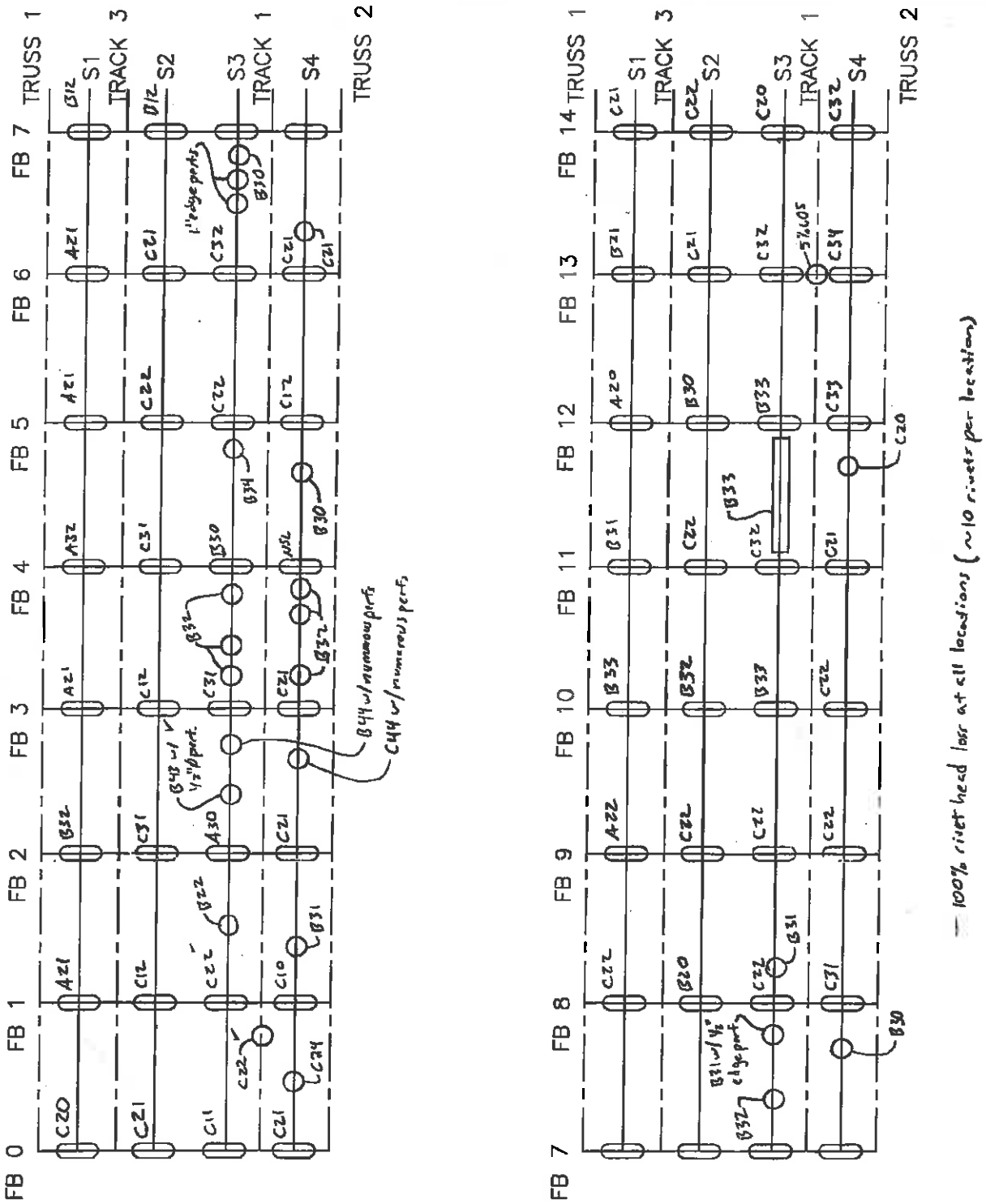


SPAN 7 TRACK 1 AND 3
FLOOR SYSTEM (TOP OF DECK)

| | | |
|---|---|---|
| 1 | 6/18/12 | WSP-SELLS MLMA |

WSP-SELLS
VERIFICATION INSPECTION
07/12/2013

# Floor System
# (From Beneath)

WSP-SELLS
VERIFICATION INSPECTION
07/12/2013

# Floor Beams

WSP-SELLS VERIFICATION INSPECTION
07/12/2013 NO REVISION

# FIELD NOTES

Stantec Consulting Services Inc.

| | |
|---|---|
| Bridge No.: | 08080R |
| Project No.: | 301-0099 |
| Crew: | LM AF |
| Date: | 5/4/09 |
| Sheet No.: | 134 |

FLOORBEAM LEGEND:

(1) = PLOS, X"H x Y"L x Z" DEEP

(2) = IMPACTED RUST AND PLOS IN STRINGER SEAT ∠

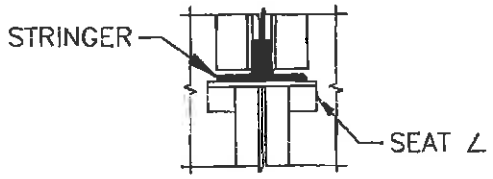


(3) = LAMINAR RUST IN BEAM CORNER

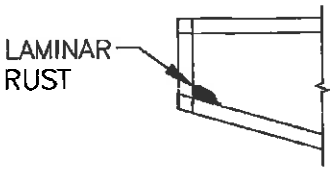


(4) = IMPACTED RUST BETWEEN WEB PLATES, ∠ LEGS OR COVER PLATES WHICH FORCING THE PLATES APART

(5) = EDGE LOSS OF SECTION OR STEEL THINNING

(6) = RIVET HEAD SECTION LOSS

(7) = MISSING BOLT/NUT

(8) = LAMINAR RUST (HEAVY, MODERATE OR LIGHT)

▨ = REPAIRED SECTION UNLESS NOTED OTHERWISE

WSP-SELLS VERIFICATION INSPECTION
07/12/2013 NO REVISION

# FIELD NOTES

Stantec Consulting Services Inc.

| | |
|---|---|
| Bridge No.: | 08080R |
| Project No.: | 301-0099 |
| Crew: | LM & AF |
| Date: 5/4/09 | Sheet No.: 135 |

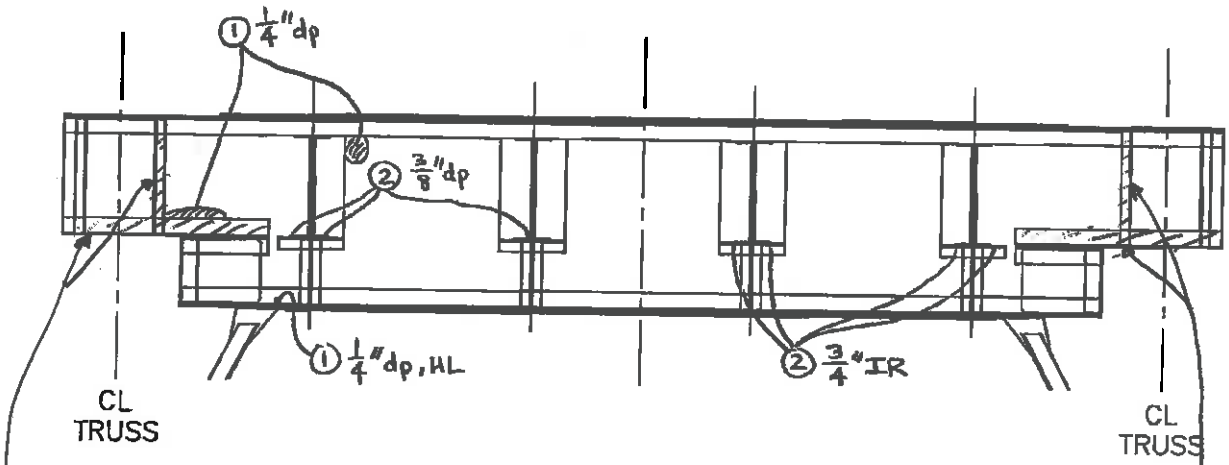


EAST ELEVATION

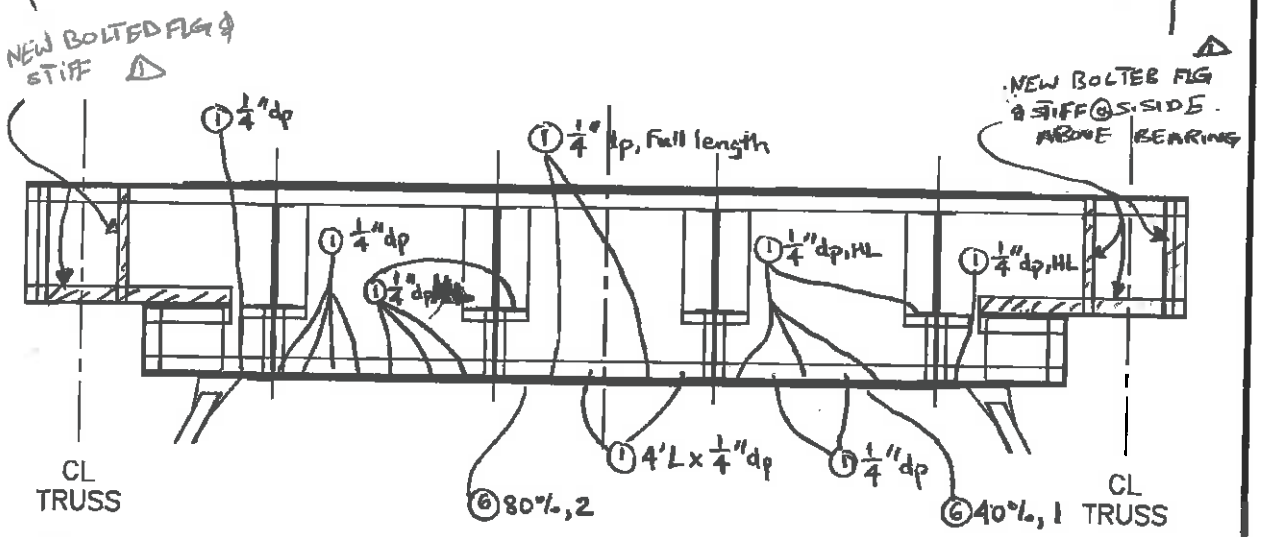


WEST ELEVATION

SPAN 7 TRACK 1 & 3 FB O

| NO. | DATE | DESCRIPTION |
|---|---|---|
| △1 | 9/25/12 | WSP-SELLS MLMA |

REVISIONS

WSP-SELLS VERIFICATION INSPECTION
07/12/2013 NO REVISION

# FIELD NOTES

Stantec Consulting Services Inc.

| | |
|---|---|
| Bridge No.: | 08080R |
| Project No.: | 301-0099 |
| Crew: | LM & AF |
| Date: 5/4/09 | Sheet No.: 136 |

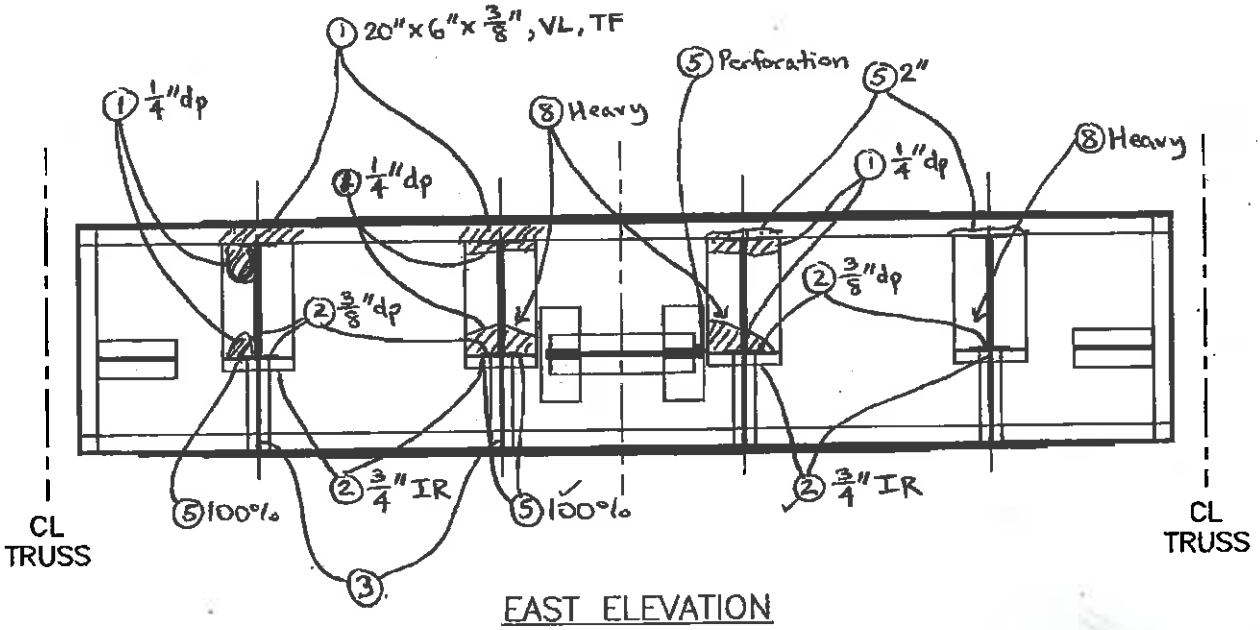


EAST ELEVATION

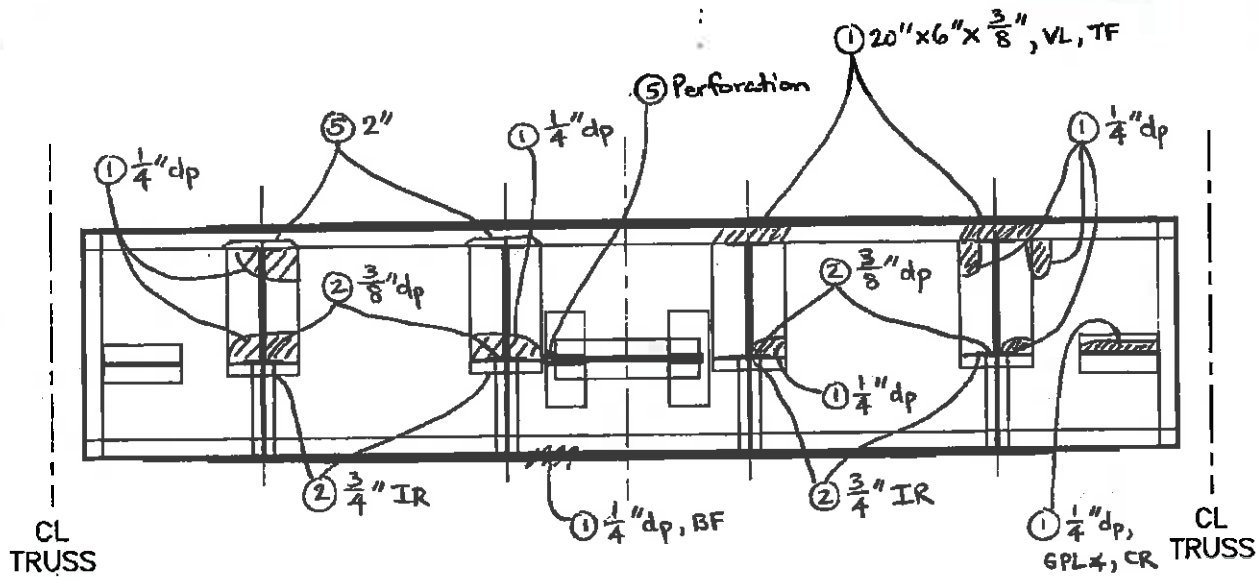


WEST ELEVATION

SPAN 7 TRACK 1 & 3 FB 1

| NO. | DATE | DESCRIPTION |
|---|---|---|
| 1 | 9/25/12 | WSP-SELLS MLMA |

REVISIONS

WSP-SELLS VERIFICATION INSPECTION
07/12/2013 NO REVISION

# FIELD NOTES

Stantec Consulting Services Inc.

| | |
|---|---|
| Bridge No.: | 08080R |
| Project No.: | 301-0099 |
| Crew: | LM & AF |
| Date: 5/4/09 | Sheet No.: 137 |

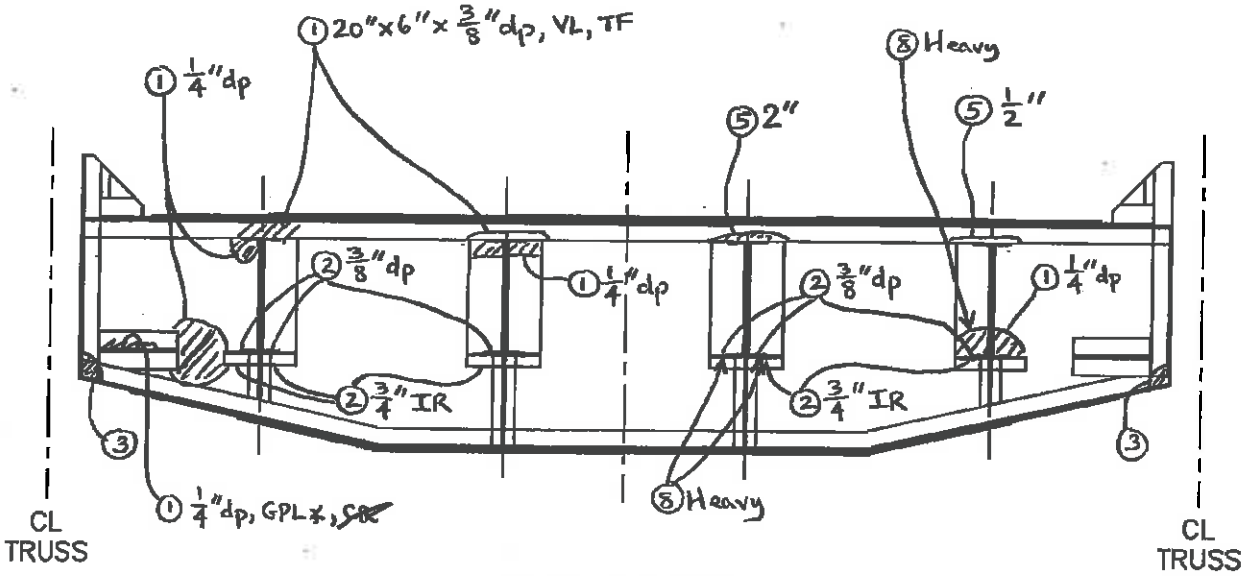


EAST ELEVATION

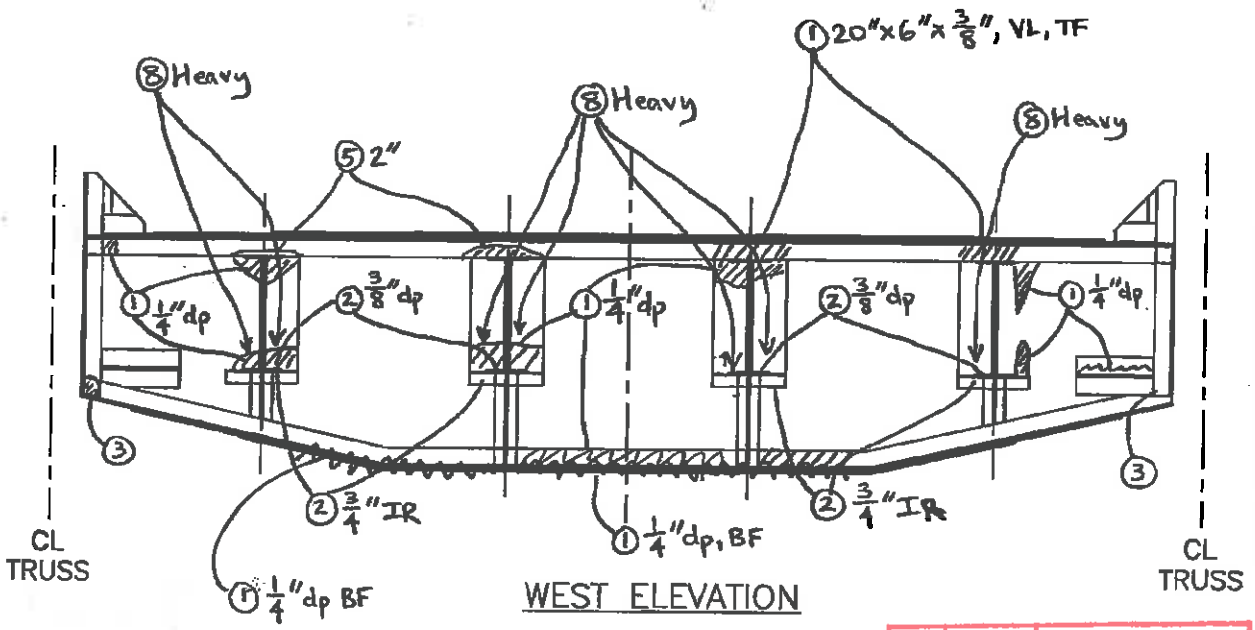


WEST ELEVATION

SPAN 7 TRACK 1 & 3 FB 2

| NO. | DATE | DESCRIPTION |
|---|---|---|
| 1 | 9/25/12 | WSP-SELLS ML MA |

REVISIONS

WSP-SELLS VERIFICATION INSPECTION
07/12/2013 NO REVISION

# FIELD NOTES

Stantec Consulting Services Inc.

| | |
|---|---|
| Bridge No.: | 08080R |
| Project No.: | 301-0099 |
| Crew: | LM & AF |
| Date: 5/4/09 | Sheet No.: 138 |

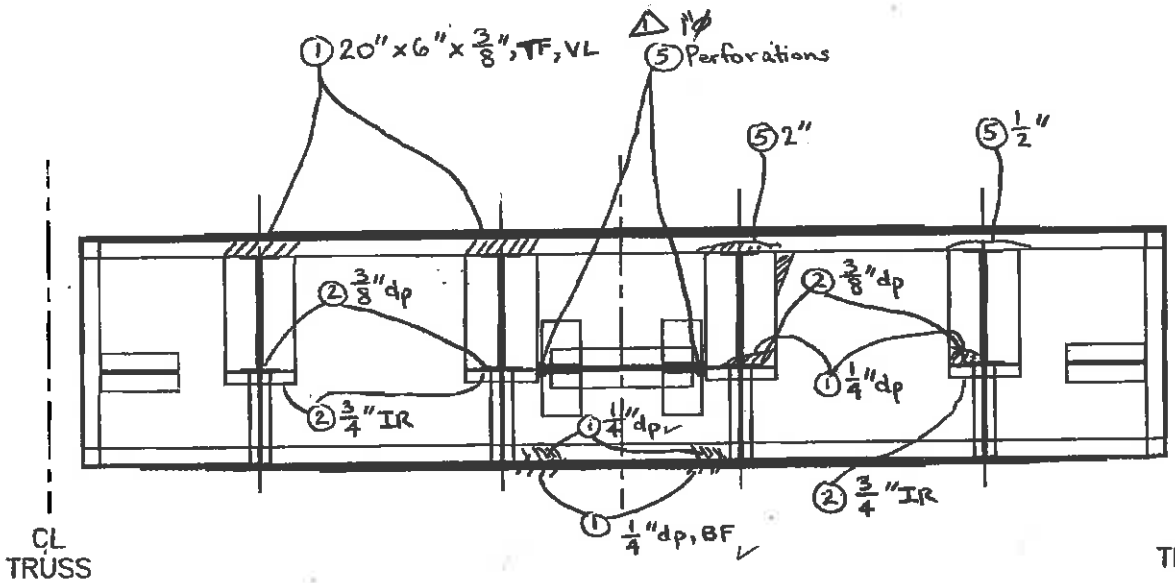


EAST ELEVATION

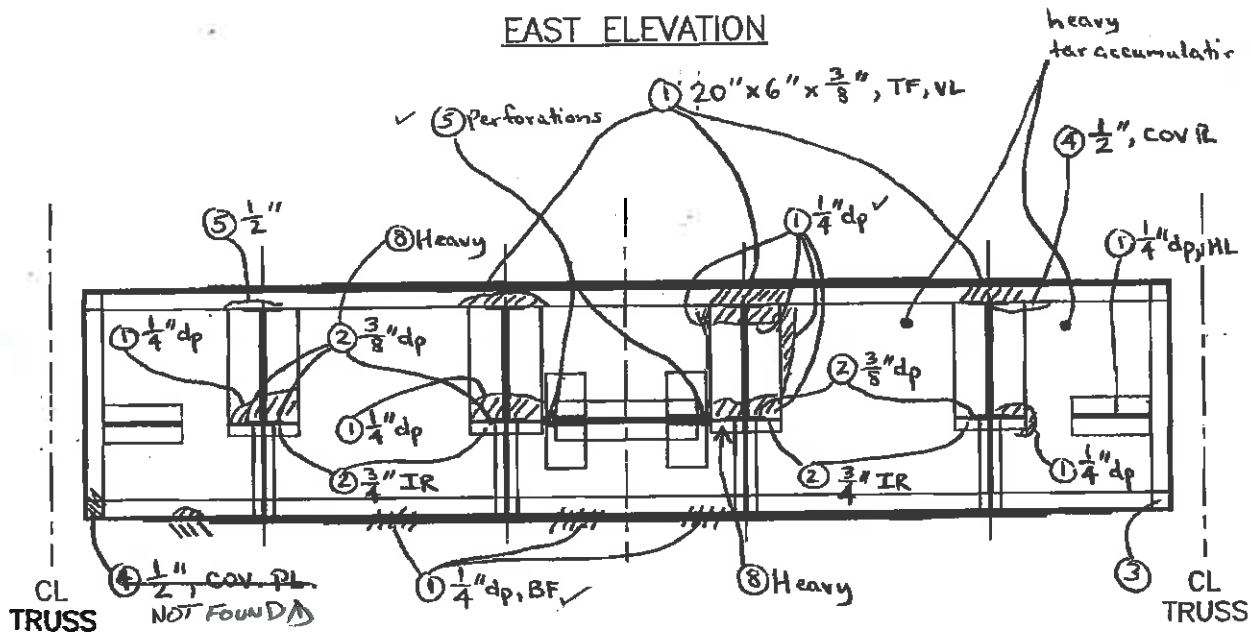


WEST ELEVATION

SPAN 7 TRACK 1 & 3 FB 3

| NO. | DATE | DESCRIPTION |
|---|---|---|
| ⚠ | 9/25/12 | WSP-SELLS MYMA |

REVISIONS

WSP-SELLS VERIFICATION INSPECTION
07/12/2013 NO REVISION

# FIELD NOTES

Stantec Consulting Services Inc.

| | |
|---|---|
| Bridge No.: | 08080R |
| Project No.: | 301-0099 |
| Crew: | LM & AF |
| Date: 5/4/09 | Sheet No.: 13T |

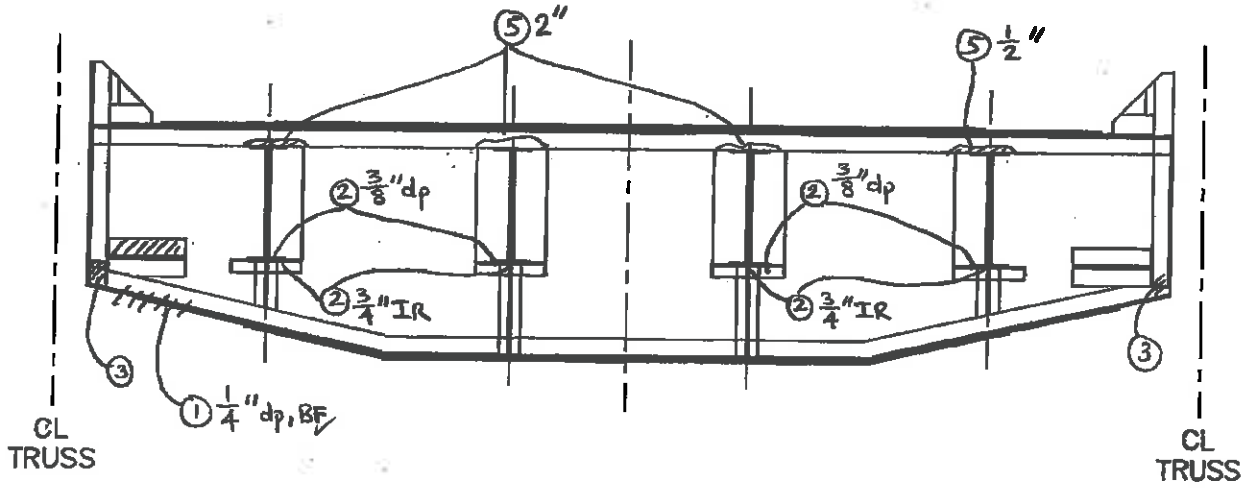


EAST ELEVATION

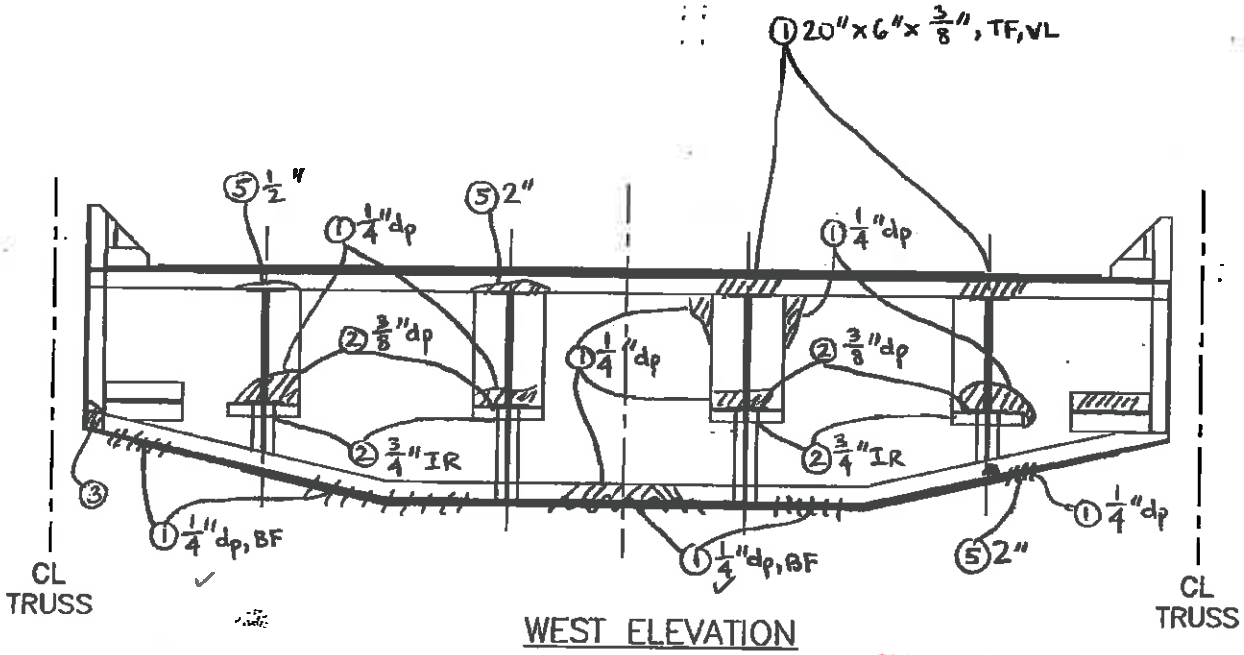


WEST ELEVATION

SPAN 7 TRACK 1 & 3 FB 4

| NO. | DATE | DESCRIPTION |
|---|---|---|
| 1 | 9/25/12 | WSP-SELLS MLMA |

REVISIONS

WSP-SELLS VERIFICATION INSPECTION
07/12/2013 NO REVISION

# FIELD NOTES

Stantec Consulting Services Inc.

Bridge No.: 08080R
Project No.: 301-0099
Crew: LM & AF
Date: 5/4/09 Sheet No.: 140

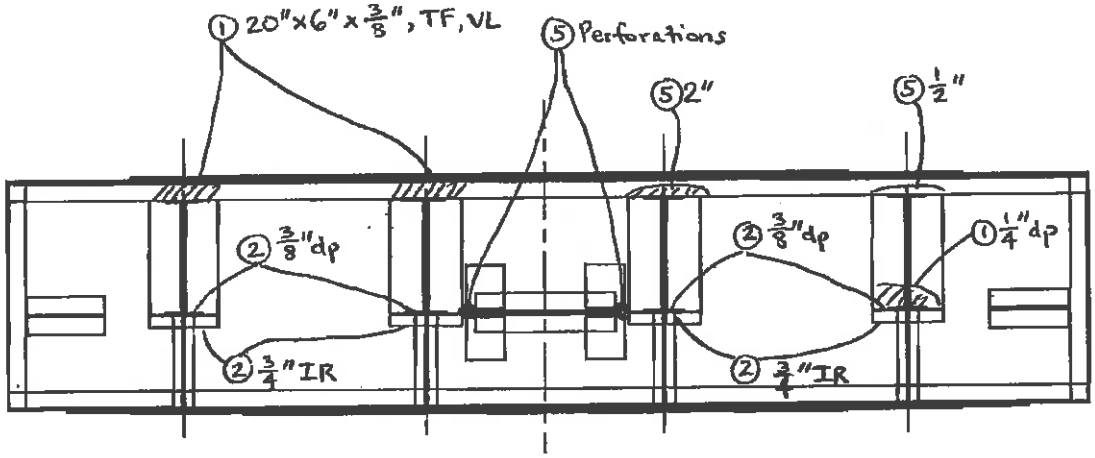


CL TRUSS

CL TRUSS

EAST ELEVATION

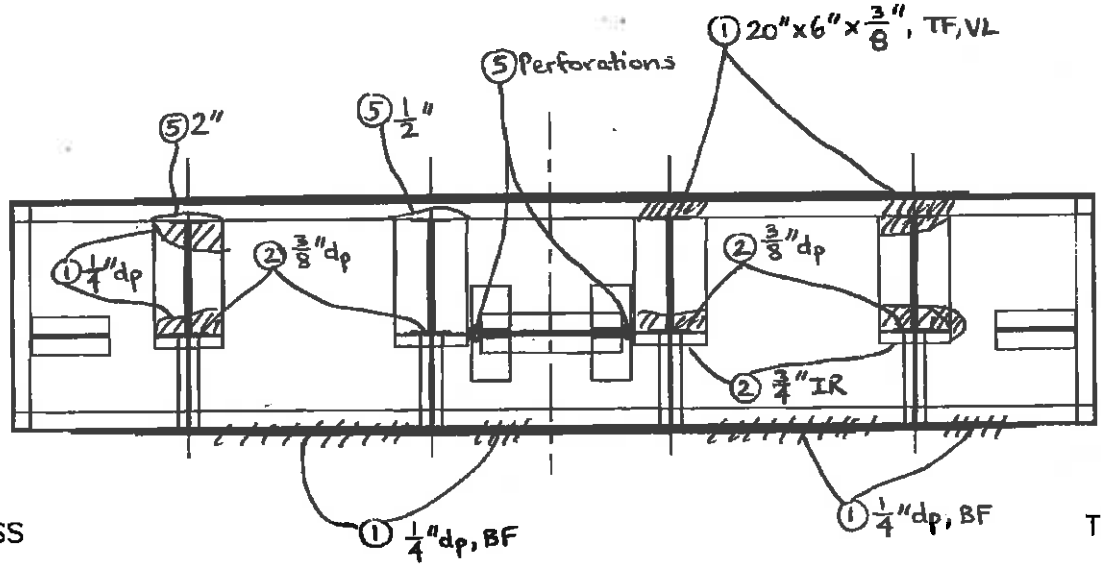


CL TRUSS

CL TRUSS

WEST ELEVATION

SPAN 7 TRACK 1 & 3 FB 5

| NO. | DATE | DESCRIPTION |
|---|---|---|
| 1 | 9/25/12 | WSP-SELLS MLMA |

REVISIONS

WSP-SELLS VERIFICATION INSPECTION
07/12/2013 NO REVISION

# FIELD NOTES

Stantec Consulting Services Inc.

| | |
|---|---|
| Bridge No.: | 08080R |
| Project No.: | 301-0099 |
| Crew: | LM & AF |
| Date: 5/4/09 | Sheet No.: 141 |

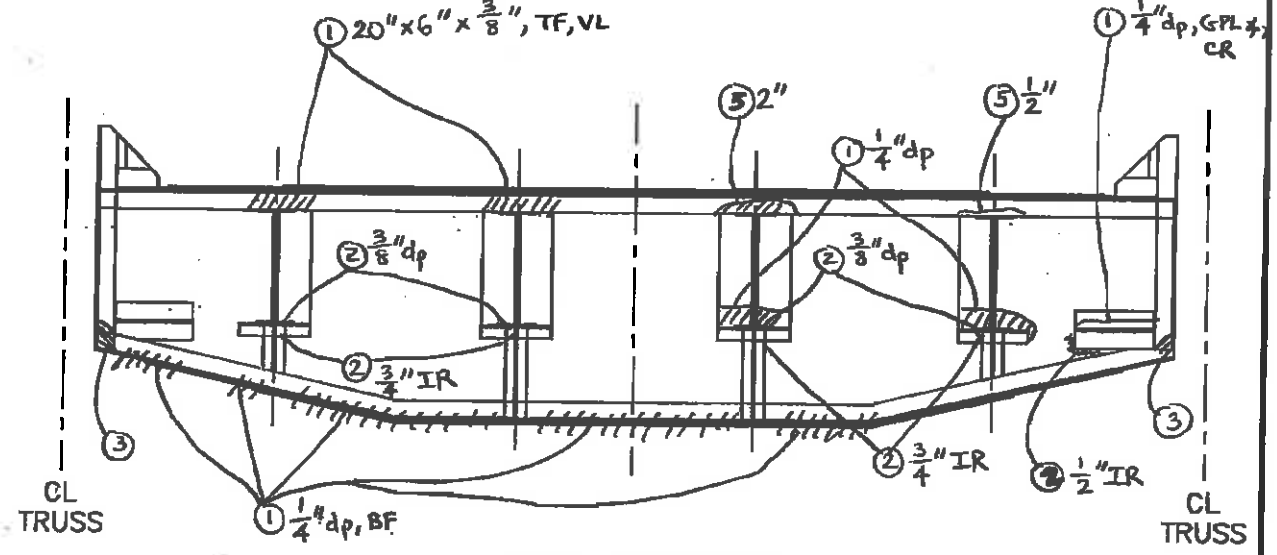


EAST ELEVATION

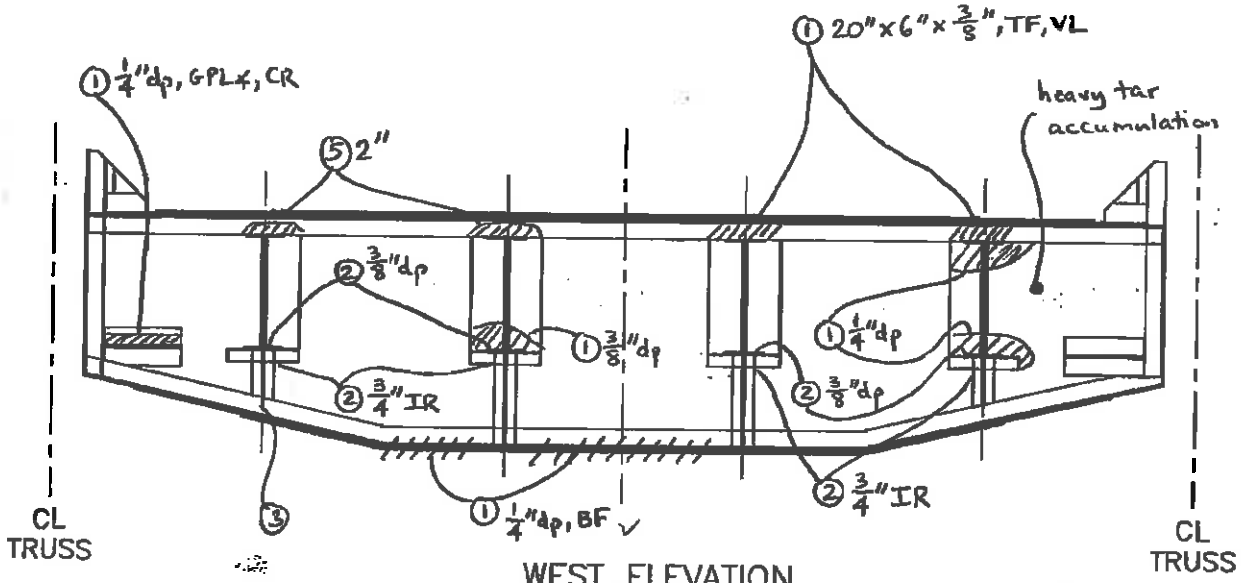


WEST ELEVATION

SPAN 7 TRACK 1 & 3 FB 6

| NO. | DATE | DESCRIPTION |
|---|---|---|
| 1 | 9/25/12 | WSP-SELLS MY MA |

REVISIONS

WSP-SELLS VERIFICATION INSPECTION
07/12/2013 NO REVISION

# FIELD NOTES

Stantec Consulting Services Inc.

| | |
|---|---|
| Bridge No.: | 08080R |
| Project No.: | 301-0099 |
| Crew: | LM & AF |
| Date: 5/4/09 | Sheet No.: 142 |

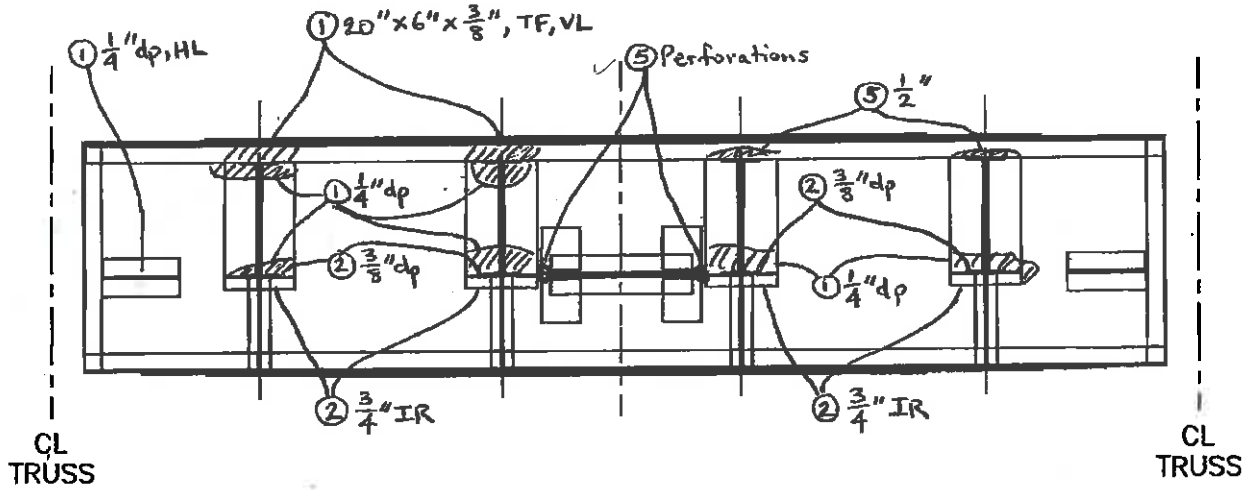


EAST ELEVATION

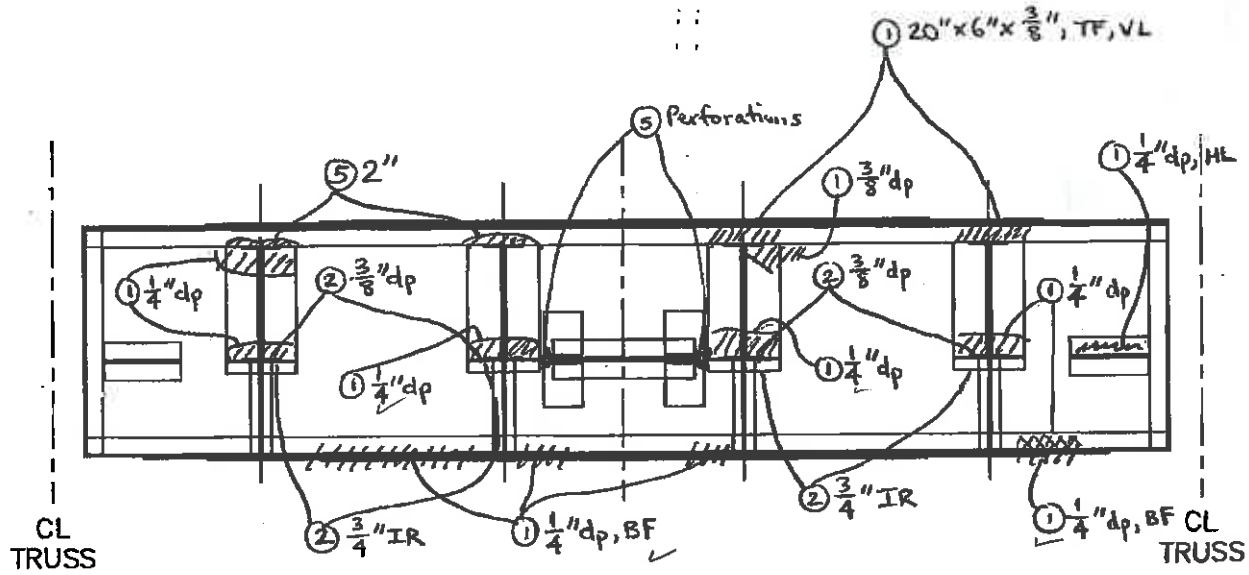


WEST ELEVATION

| NO. | DATE | DESCRIPTION |
|---|---|---|
| | | |
| | | |
| | | |
| 1 | 9/25/12 | WSP-SELLS MVMA |

REVISIONS

SPAN 7 TRACK 1 & 3 FB 7

WSP-SELLS VERIFICATION INSPECTION
07/12/2013 NO REVISION

# FIELD NOTES

Stantec Consulting Services Inc.

| | |
|---|---|
| Bridge No.: 08080R | |
| Project No.: 301-0099 | |
| Crew: LM & AF | |
| Date: 5/4/09 | Sheet No.: 143 |

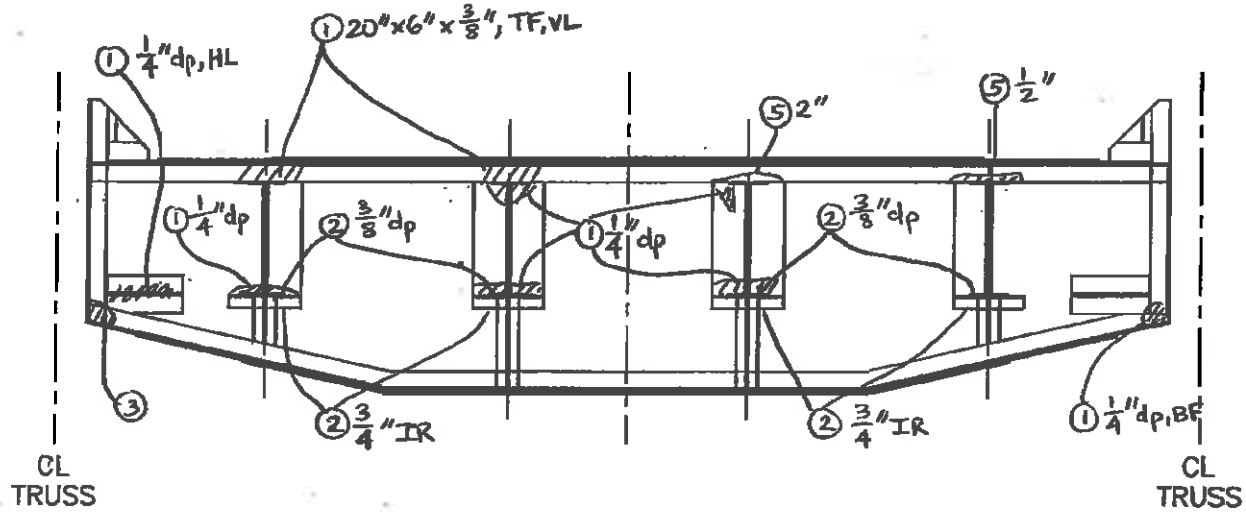


EAST ELEVATION

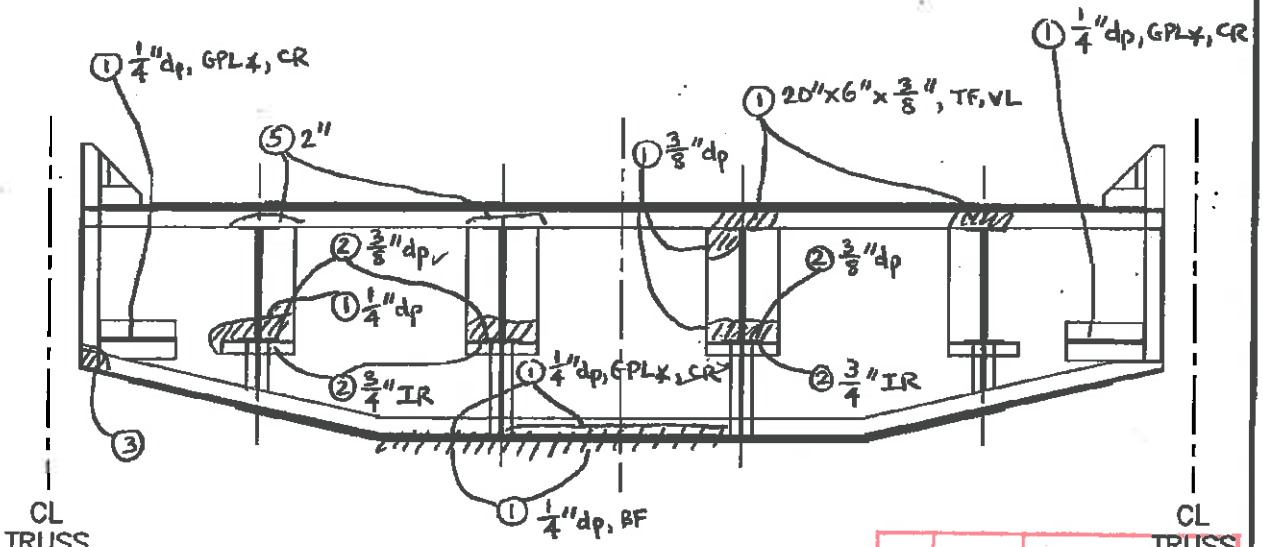


WEST ELEVATION

SPAN 7 TRACK 1 & 3 FB 8

| NO. | DATE | DESCRIPTION |
|---|---|---|
| 1 | 9/25/12 | WSP-SELLS MGMA |

REVISIONS

WSP-SELLS VERIFICATION INSPECTION
07/12/2013 NO REVISION

# FIELD NOTES

Stantec Consulting Services Inc.

| | |
|---|---|
| Bridge No.: | 08080R |
| Project No.: | 301-0099 |
| Crew: | LM & AF |
| Date: 5/4/09 | Sheet No.: 144 |

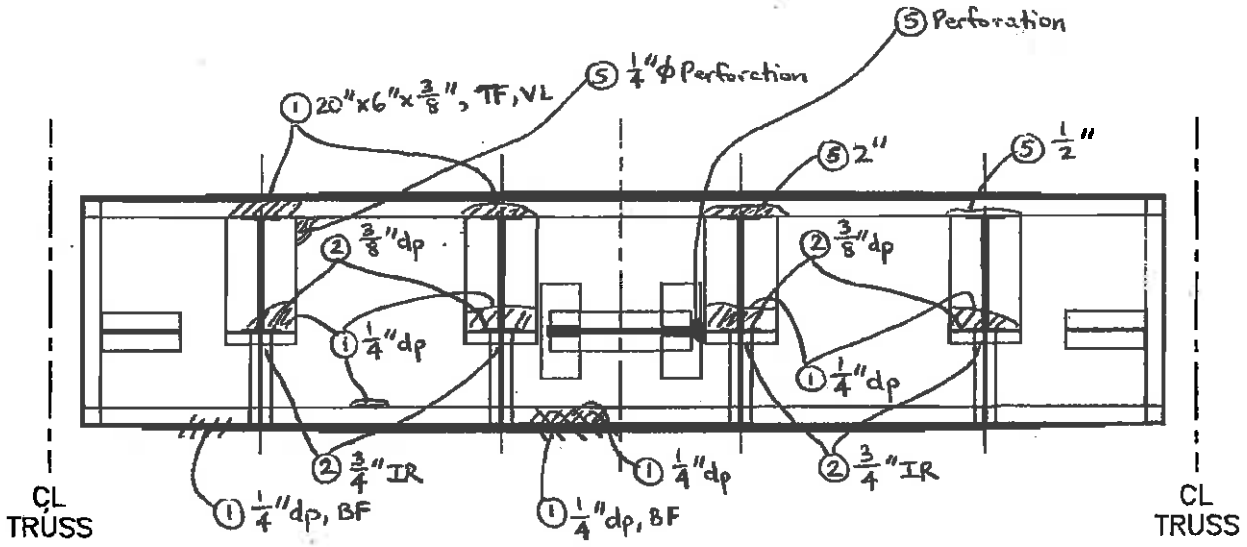


EAST ELEVATION

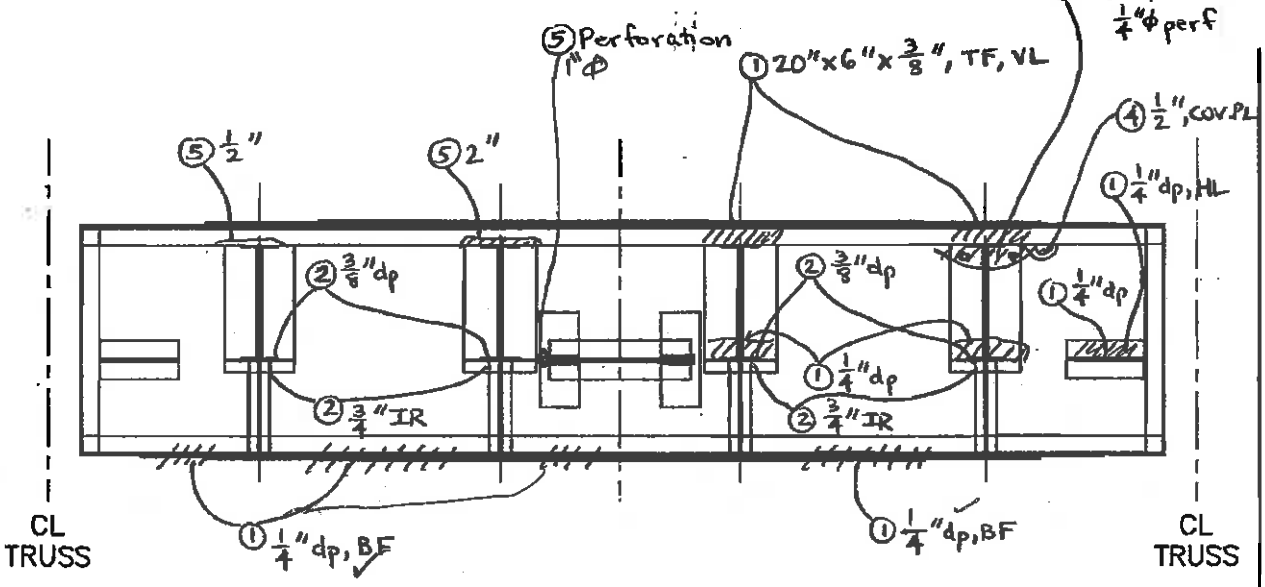


WEST ELEVATION

| NO. | DATE | DESCRIPTION |
|---|---|---|
| 1 | 9/25/12 | WSP-SELLS MG MA |

REVISIONS

SPAN 7 TRACK 1 & 3 FB 9

WSP-SELLS VERIFICATION INSPECTION
07/12/2013 NO REVISION

# FIELD NOTES

Stantec Consulting Services Inc.

| | |
|---|---|
| Bridge No.: | 08080R |
| Project No.: | 301-0099 |
| Crew: | LM & AF |
| Date: 5/4/09 | Sheet No.: 145 |

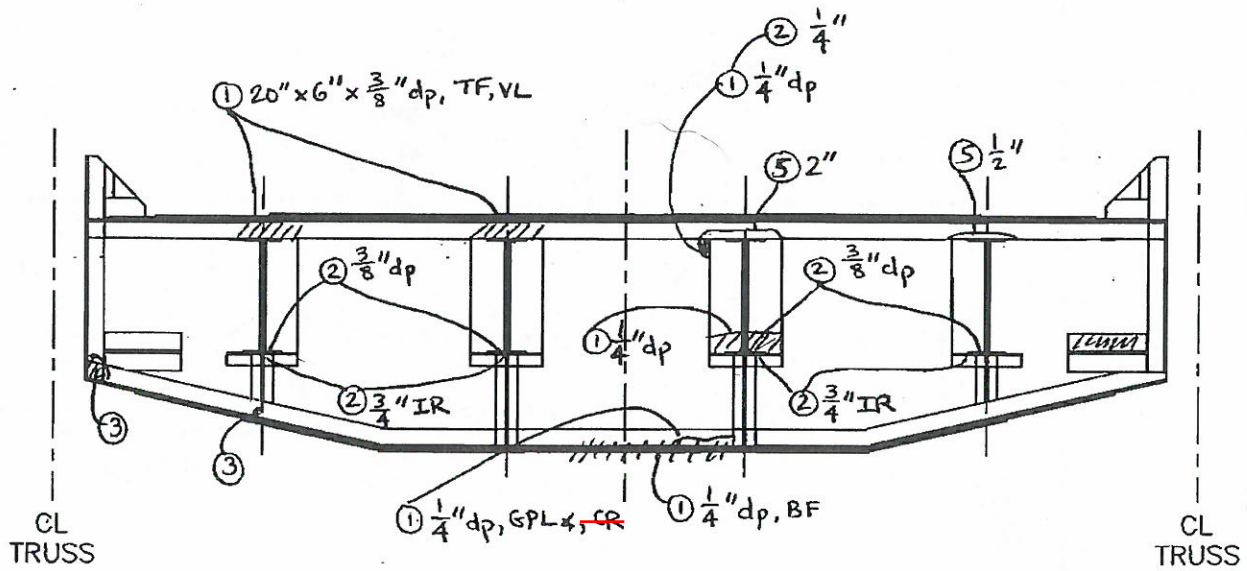


EAST ELEVATION

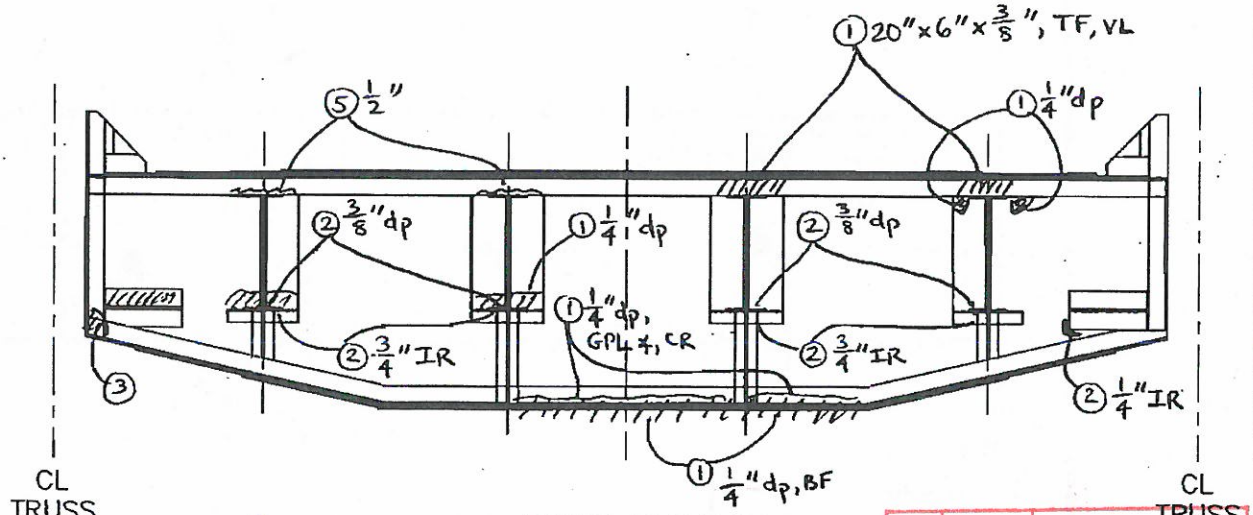


WEST ELEVATION

SPAN 7 TRACK 1 & 3 FB 10

| NO. | DATE | DESCRIPTION |
|---|---|---|
| 1 | 9/25/12 | WSP-SELLS ML, MA |

REVISIONS

WSP-SELLS VERIFICATION INSPECTION
07/12/2013 NO REVISION

# FIELD NOTES

Stantec Consulting Services Inc.

| | |
|---|---|
| Bridge No.: | 08080R |
| Project No.: | 301-0099 |
| Crew: | LM & AF |
| Date: 5/4/09 | Sheet No.: 146 |

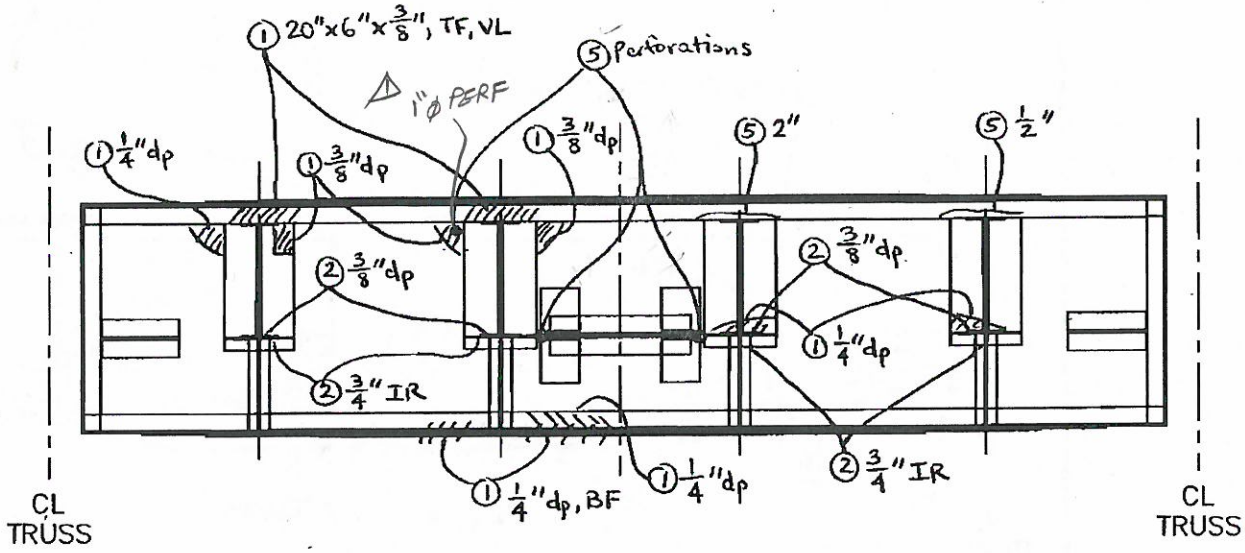


EAST ELEVATION

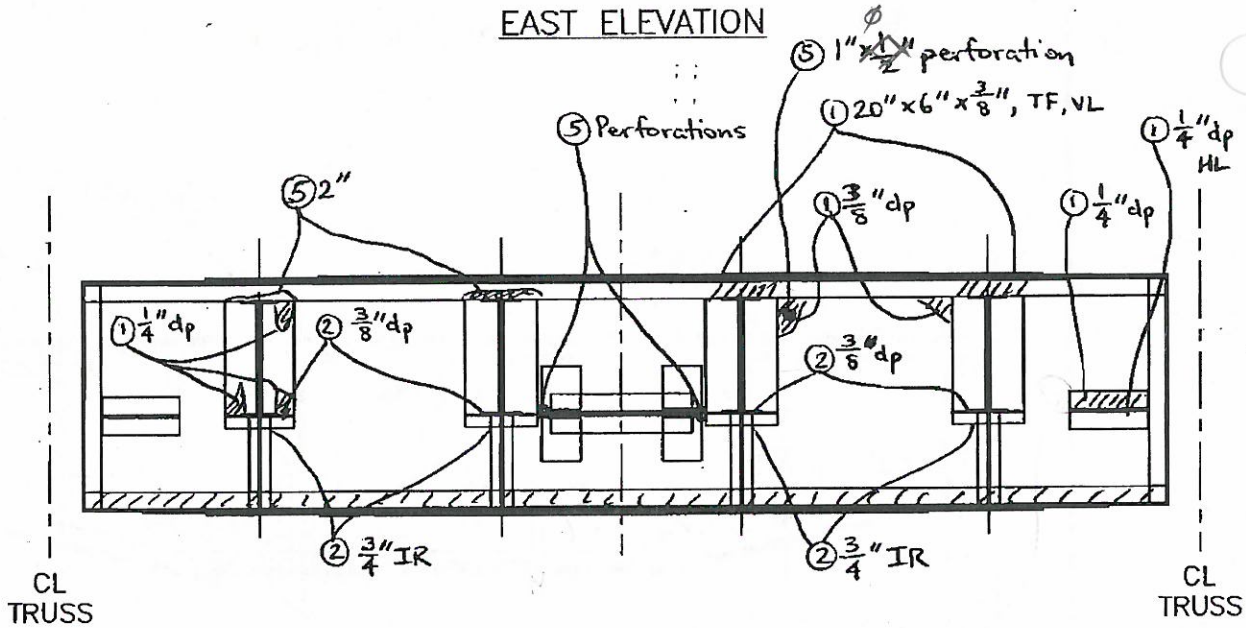


WEST ELEVATION

| NO. | DATE | DESCRIPTION |
|---|---|---|
| △1 | 9/25/12 | WSP-SELLS MYMA |

REVISIONS

SPAN 7 TRACK 1 & 3 FB 11

WSP-SELLS VERIFICATION INSPECTION
07/12/2013 NO REVISION

# FIELD NOTES

Stantec Consulting Services Inc.

| | |
|---|---|
| Bridge No.: | 08080R |
| Project No.: | 301-0099 |
| Crew: | LM & AF |
| Date: 5/4/09 | Sheet No.: 147 |

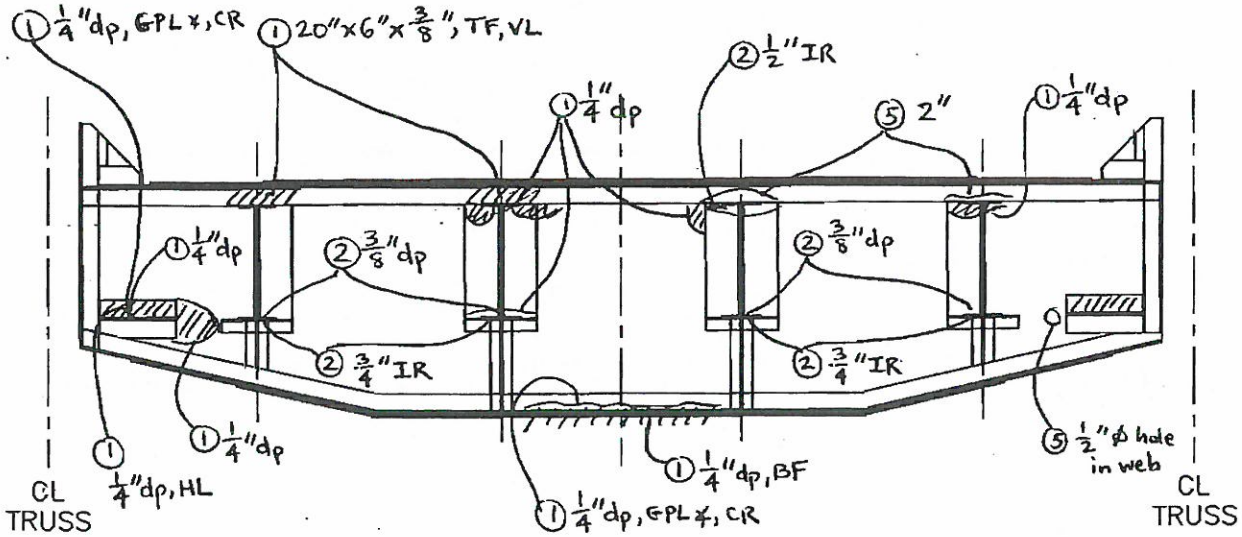


EAST ELEVATION

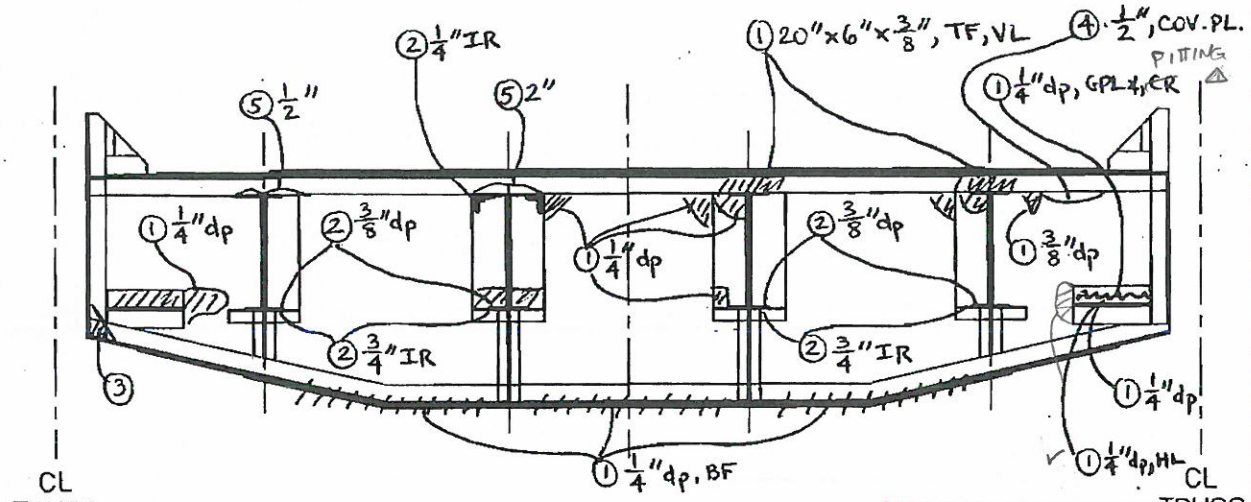


WEST ELEVATION

SPAN 7 TRACK 1 & 3 FB 12

| NO. | DATE | DESCRIPTION |
|---|---|---|
| 2 | 9/25/12 | WSP-SELLS ML, MA |

REVISIONS

WSP-SELLS VERIFICATION INSPECTION
07/12/2013 NO REVISION

# FIELD NOTES

Stantec Consulting Services Inc.

| | |
|---|---|
| Bridge No.: | 08080R |
| Project No.: | 301-0099 |
| Crew: | LM & AF |
| Date: 5/4/09 | Sheet No.: 148 |

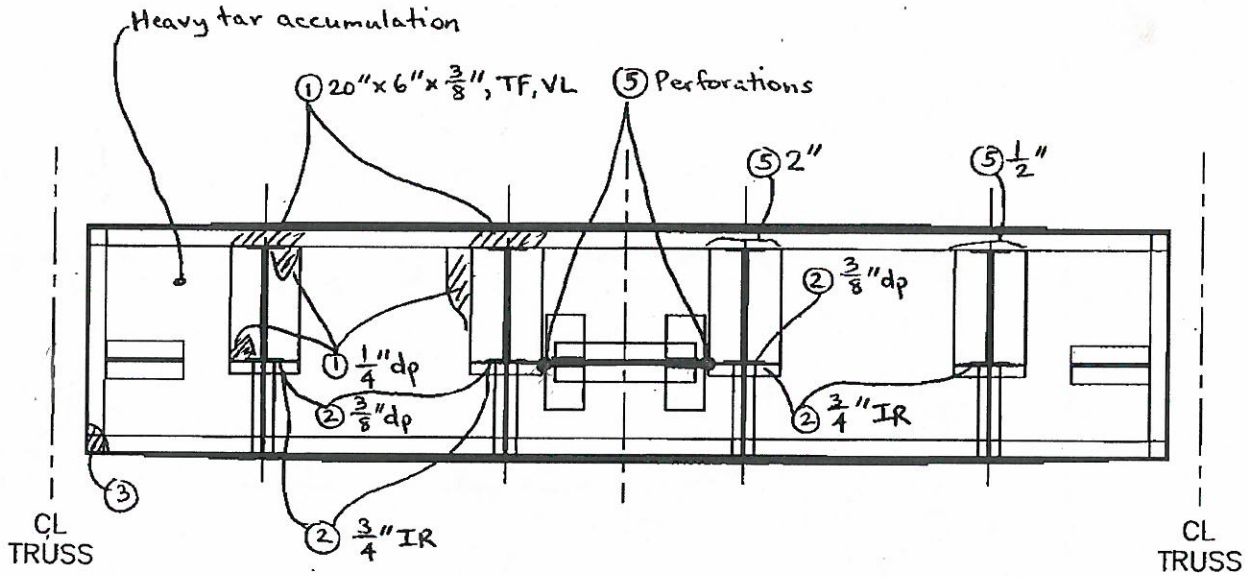


EAST ELEVATION

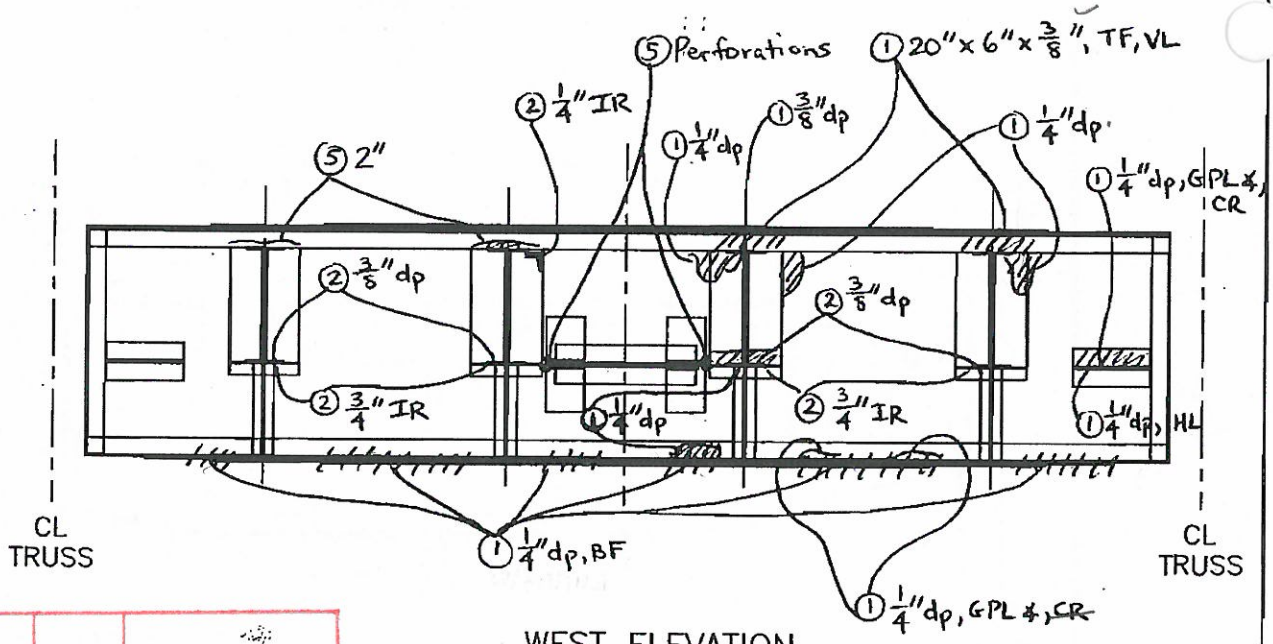


WEST ELEVATION

| NO. | DATE | DESCRIPTION |
|---|---|---|
| 1 | 9/25/12 | WSP-SELLS MGMA |

REVISIONS

SPAN 7 TRACK 1 & 3 FB 13

WSP-SELLS VERIFICATION INSPECTION
07/12/2013 NO REVISION

# FIELD NOTES

Stantec Consulting Services Inc.

| | |
|---|---|
| Bridge No.: | 08080R |
| Project No.: | 301-0099 |
| Crew: | LM & AF |
| Date: 5/4/09 | Sheet No.: 149 |

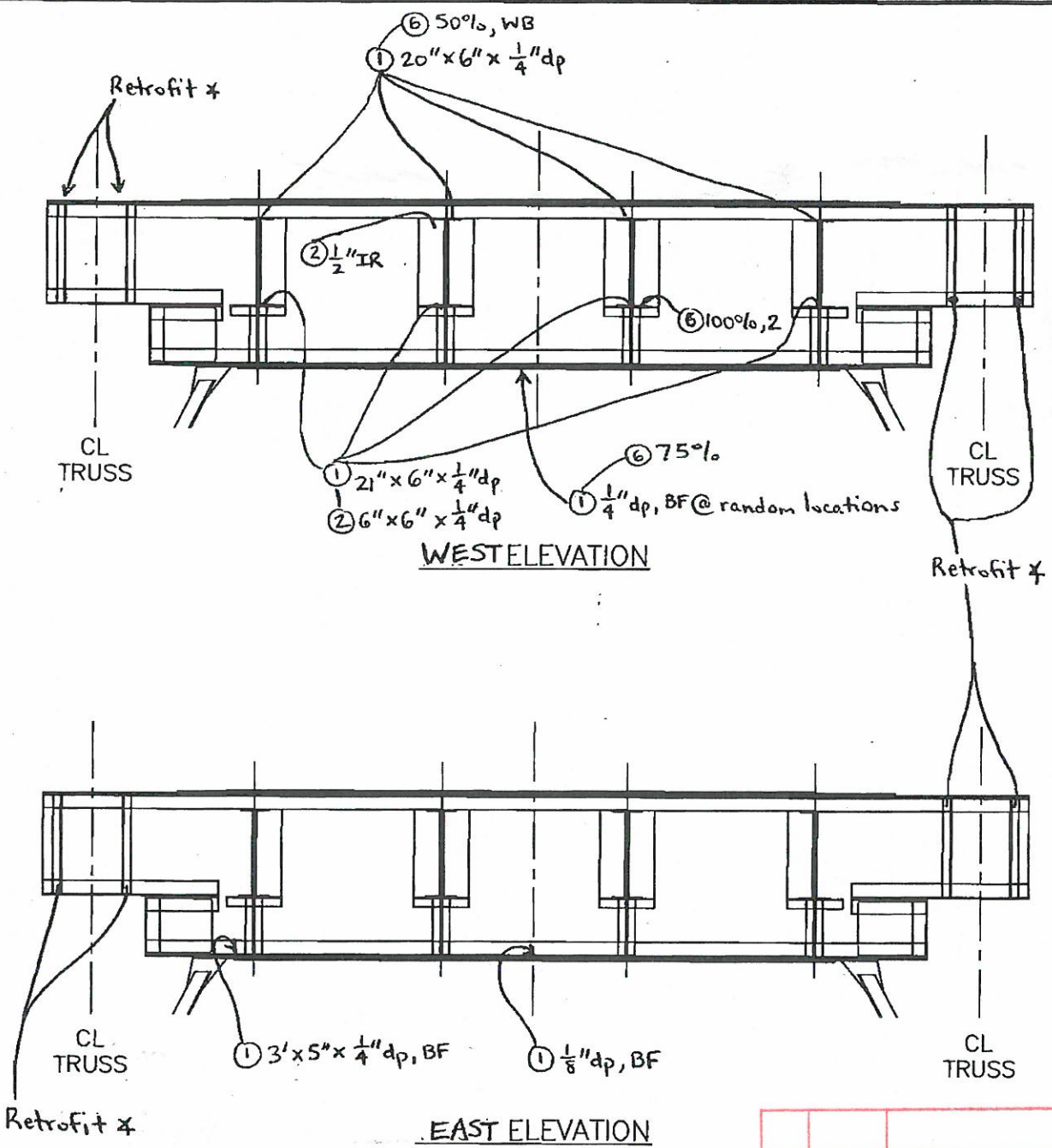


SPAN 7 TRACK 1 & 3 FB 14

| NO. | DATE | DESCRIPTION |
|---|---|---|
| | | |
| | | |
| | | |
| △ | 9/25/12 | WSP-SELLS ML/MA |

REVISIONS

WSP-SELLS VERIFICATION INSPECTION
07/12/2013 NO REVISION

# FIELD NOTES

Stantec Consulting Services Inc.

| | |
|---|---|
| Bridge No.: | 08080R |
| Project No.: | 301-0099 |
| Crew: | LM & AF |
| Date: 5/4/09 | Sheet No.: 150 |

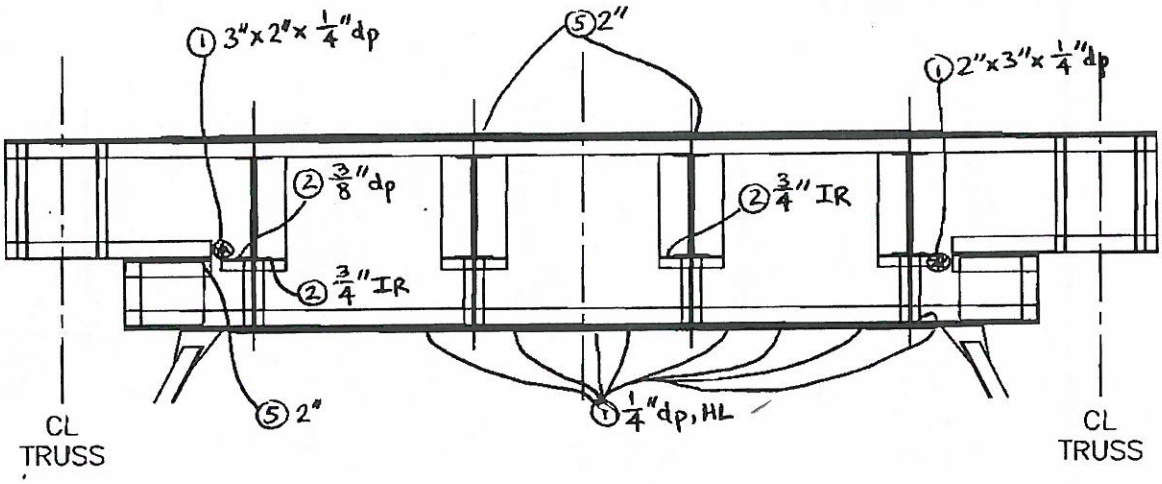


EAST ELEVATION

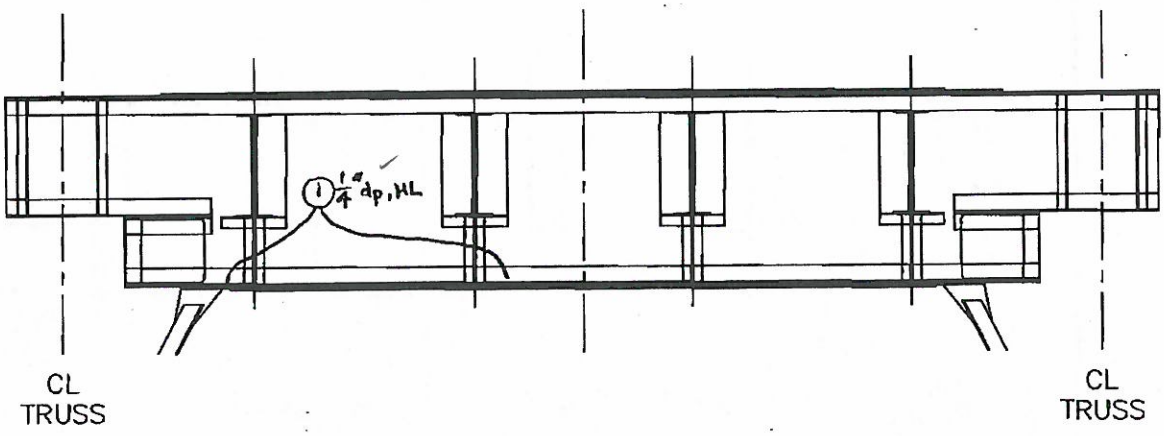


WEST ELEVATION

| NO. | DATE | DESCRIPTION |
|---|---|---|
| | | |
| | | |
| | | |
| Δ | 9/25/12 | WSP-SELLS MLMA |

REVISIONS

SPAN 7 TRACK 2 & 4 FB 0

WSP-SELLS VERIFICATION INSPECTION
07/12/2013 NO REVISION

# FIELD NOTES

Stantec Consulting Services Inc.

| | |
|---|---|
| Bridge No.: | 08080R |
| Project No.: | 301-0099 |
| Crew: | LM & AF |
| Date: 5/4/09 | Sheet No.: 151 |

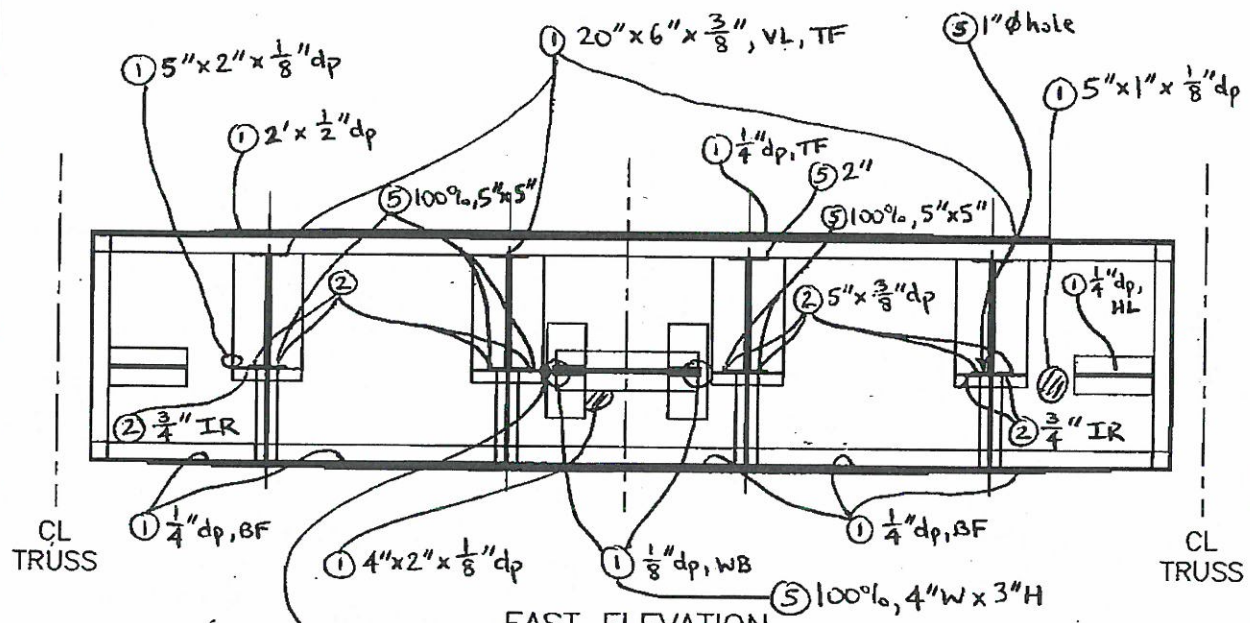


EAST ELEVATION

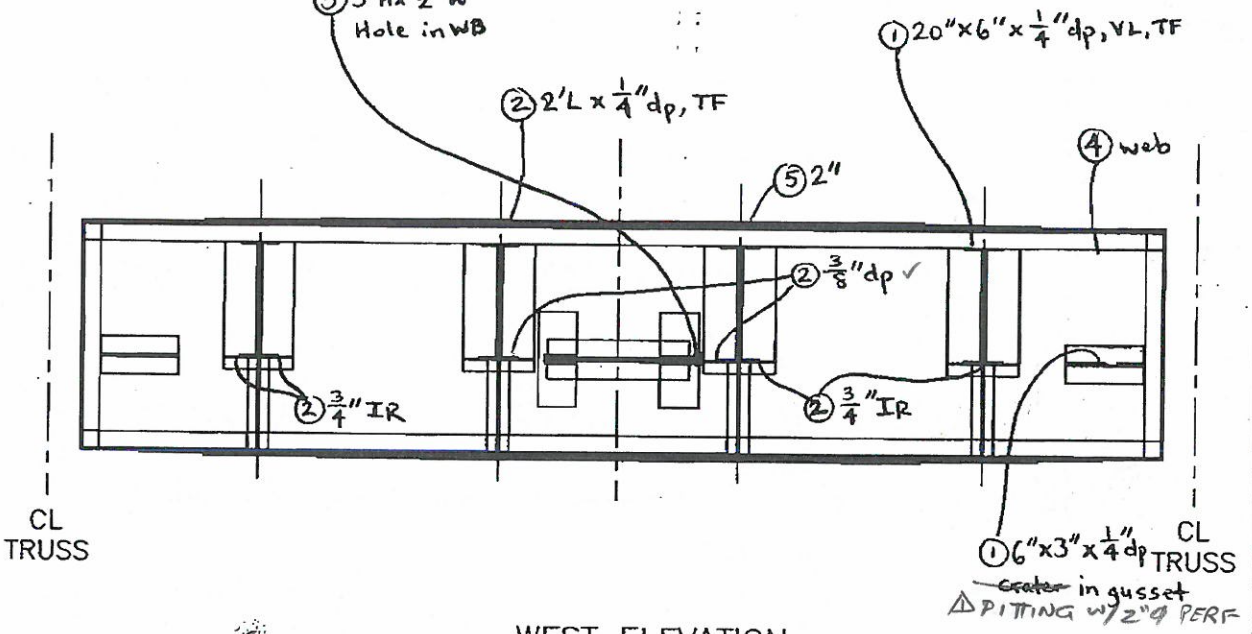


WEST ELEVATION

SPAN 7 TRACK 2 & 4 FB 1

| NO. | DATE | DESCRIPTION |
|---|---|---|
| △1 | 9/25/12 | WSP-SELLS ML, MA |

REVISIONS

WSP-SELLS VERIFICATION INSPECTION
07/12/2013 NO REVISION

# FIELD NOTES

Stantec Consulting Services Inc.

| | |
|---|---|
| Bridge No.: | 08080R |
| Project No.: | 301-0099 |
| Crew: | LM & AF |
| Date: 5/4/09 | Sheet No.: 152 |

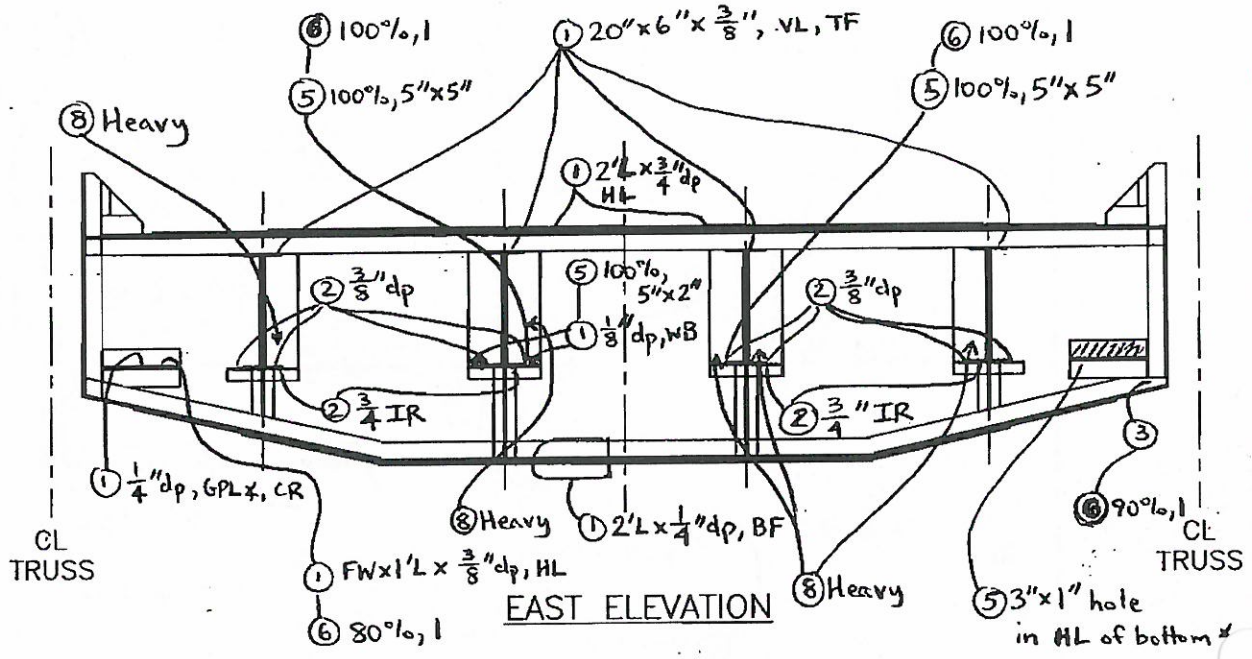


EAST ELEVATION

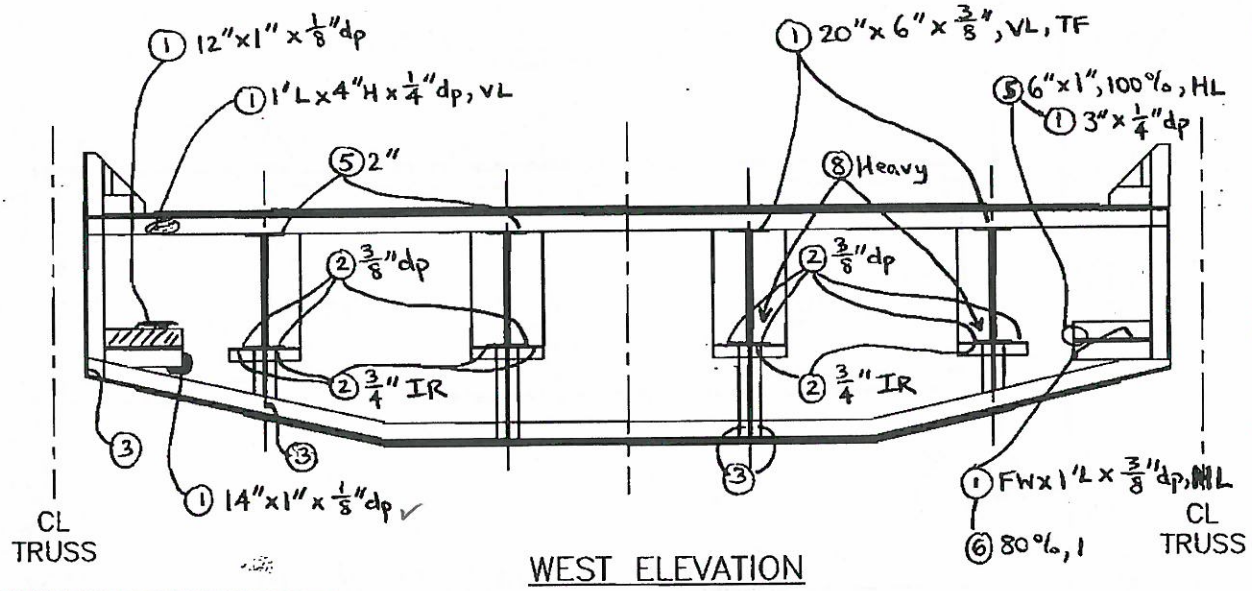


WEST ELEVATION

| NO. | DATE | DESCRIPTION |
|---|---|---|
| | | |
| | | |
| | | |
| 1 | 9/25/12 | WSP-SELLS ML MA |

REVISIONS

SPAN 7 TRACK 2 & 4 FB 2

WSP-SELLS VERIFICATION INSPECTION
07/12/2013 NO REVISION

# FIELD NOTES

Stantec Consulting Services Inc.

| | |
|---|---|
| Bridge No.: | 08080R |
| Project No.: | 301-0099 |
| Crew: | LM & AF |
| Date: 5/4/09 | Sheet No.: 153 |

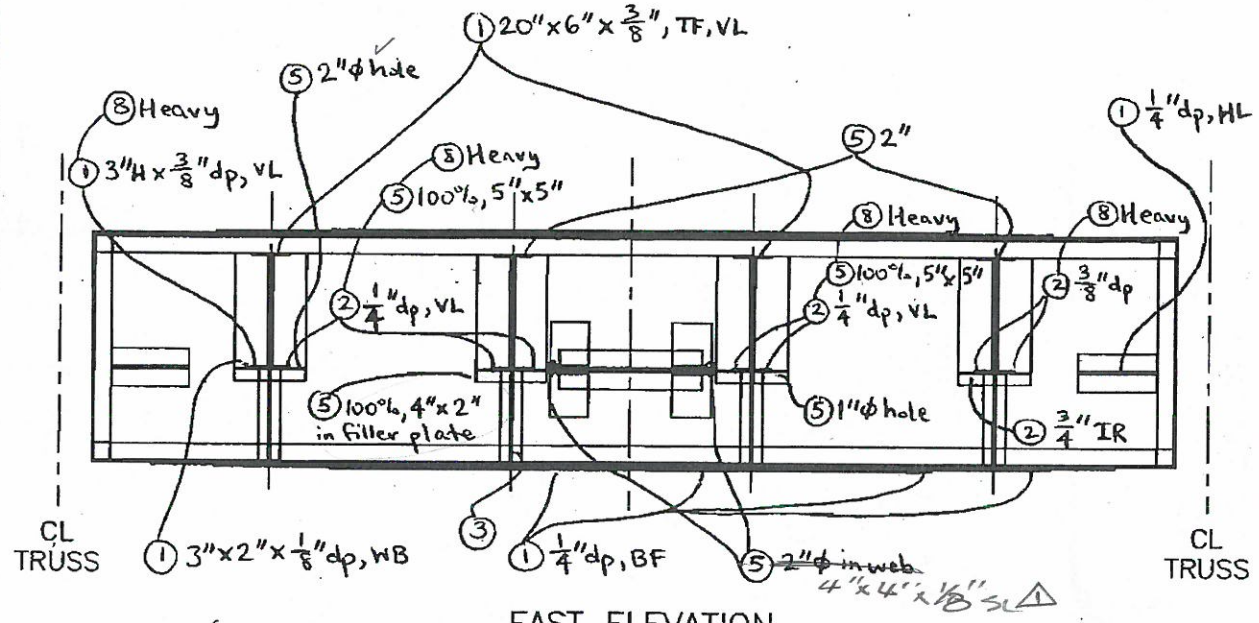


EAST ELEVATION

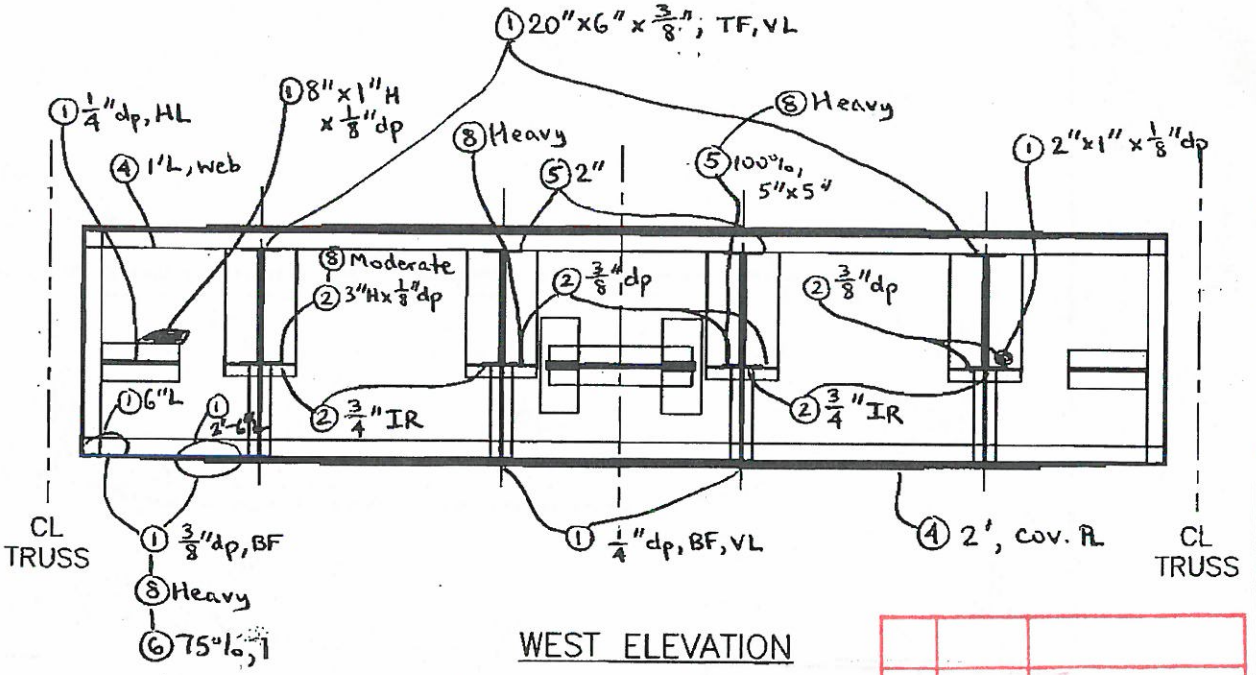


WEST ELEVATION

SPAN 7 TRACK 2 & 4 FB 3

| NO. | DATE | DESCRIPTION |
|---|---|---|
| △ | 9/25/13 | WSP-SELLS MLMA |

REVISIONS

WSP-SELLS VERIFICATION INSPECTION
07/12/2013 NO REVISION

# FIELD NOTES

Stantec Consulting Services Inc.

| | |
|---|---|
| Bridge No.: | 08080R |
| Project No.: | 301-0099 |
| Crew: | LM & AF |
| Date: 5/4/09 | Sheet No.: 154 |

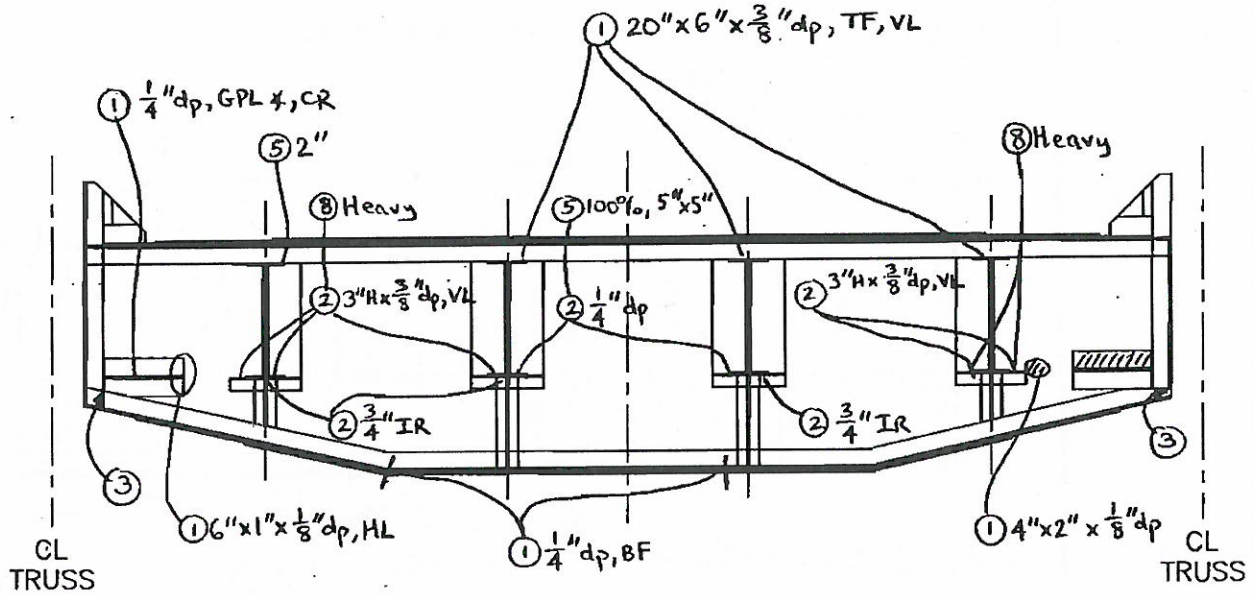


EAST ELEVATION

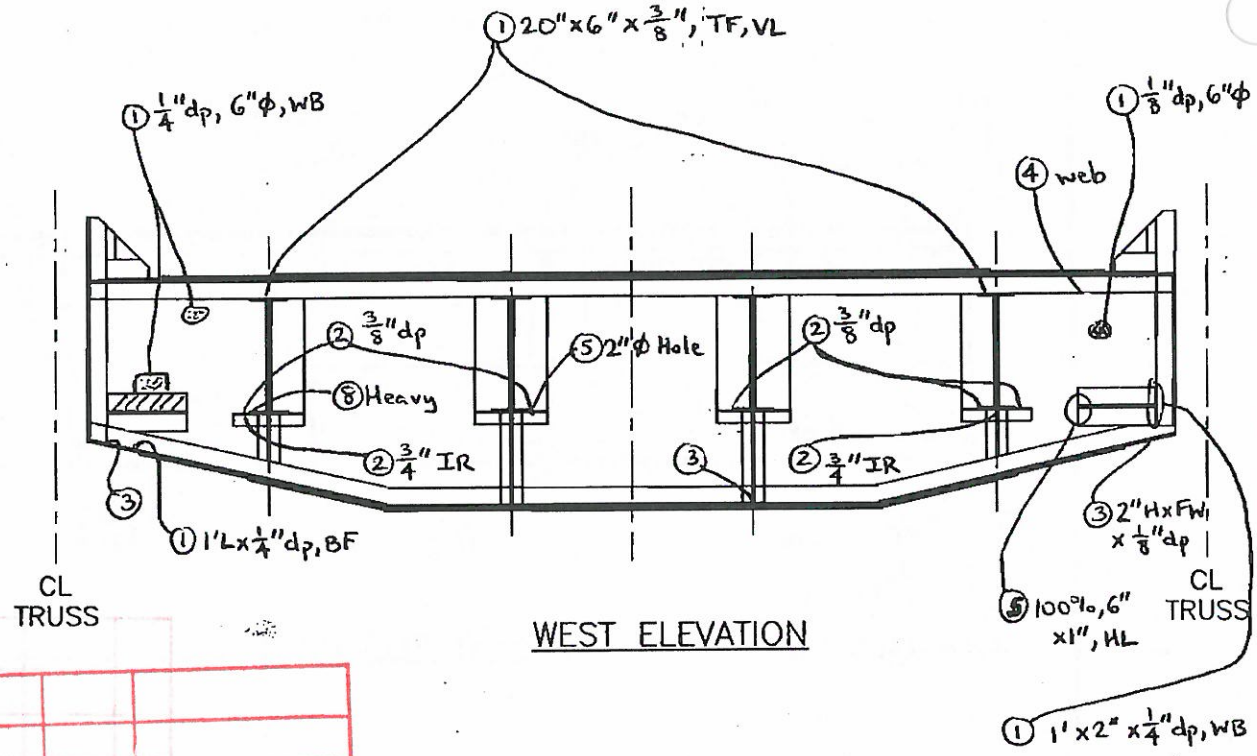


WEST ELEVATION

SPAN 7 TRACK 2 & 4 FB 4

| NO. | DATE | DESCRIPTION |
|---|---|---|
| 1 | 9/25/13 | WSP-SELLS ML/MA |

REVISIONS

WSP-SELLS VERIFICATION INSPECTION
07/12/2013 NO REVISION

# FIELD NOTES

Stantec Consulting Services Inc.

| | |
|---|---|
| Bridge No.: | 08080R |
| Project No.: | 301-0099 |
| Crew: | LM & AF |
| Date: 5/4/09 | Sheet No.: 155 |

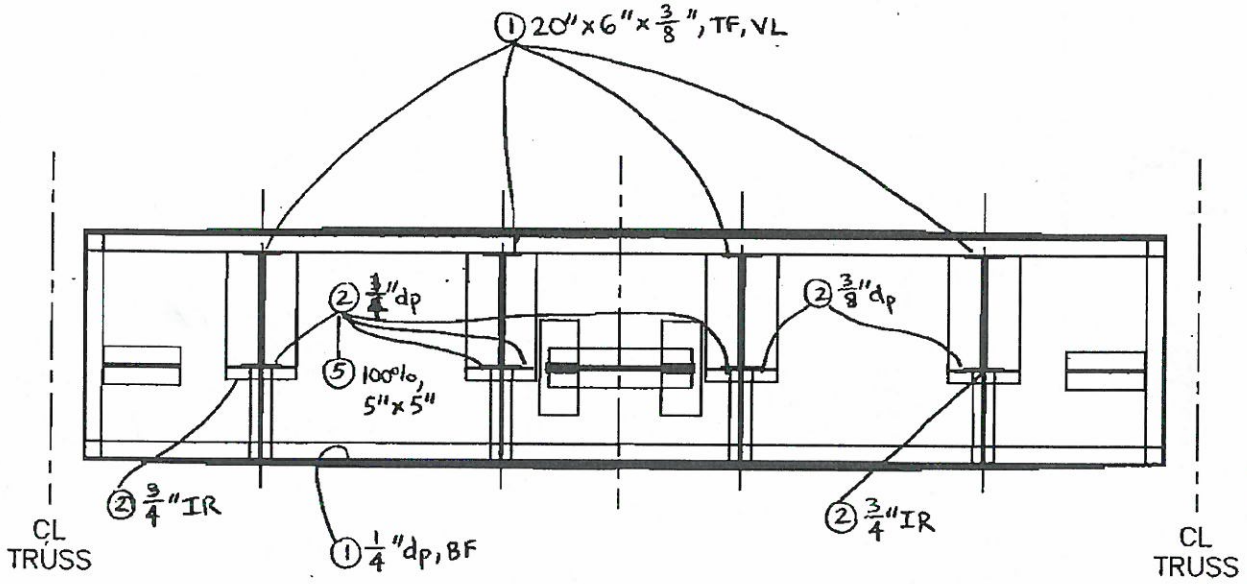


EAST ELEVATION

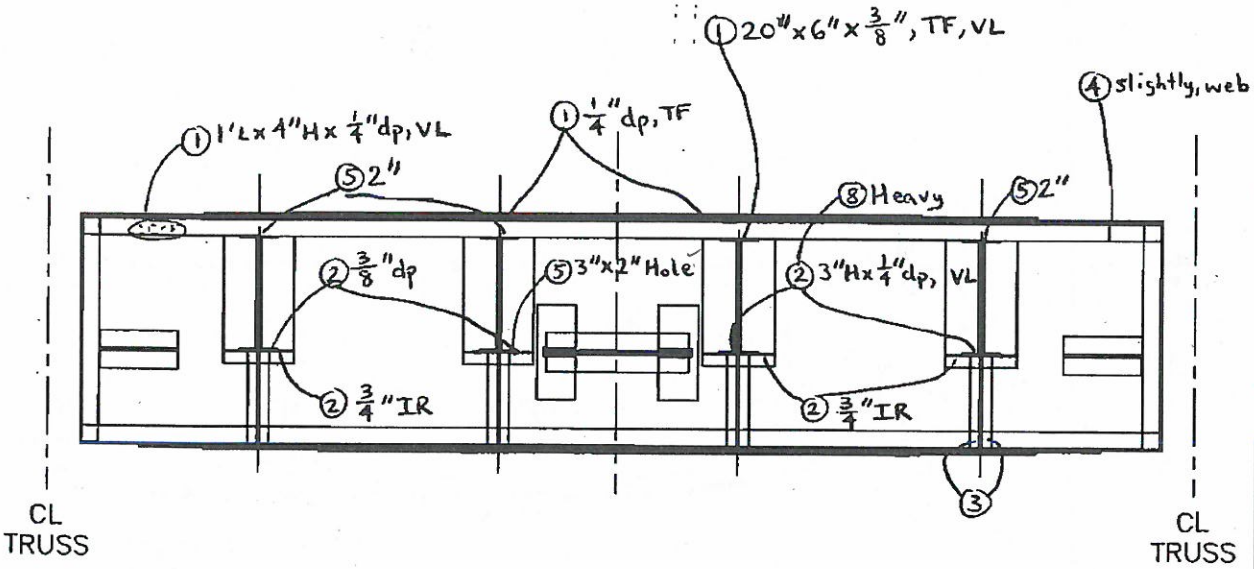


WEST ELEVATION

SPAN 7 TRACK 2 & 4 FB 5

| NO. | DATE | DESCRIPTION |
|---|---|---|
| 1 | 9/25/13 | WSP-SELLS ML/MA |

REVISIONS

2

WSP-SELLS VERIFICATION INSPECTION
07/12/2013

# FIELD NOTES

Stantec Consulting Services Inc.

| | |
|---|---|
| Bridge No.: | 08080R |
| Project No.: | 301-0099 |
| Crew: | LM & AF |
| Date: 5/4/09 | Sheet No.: 156 |

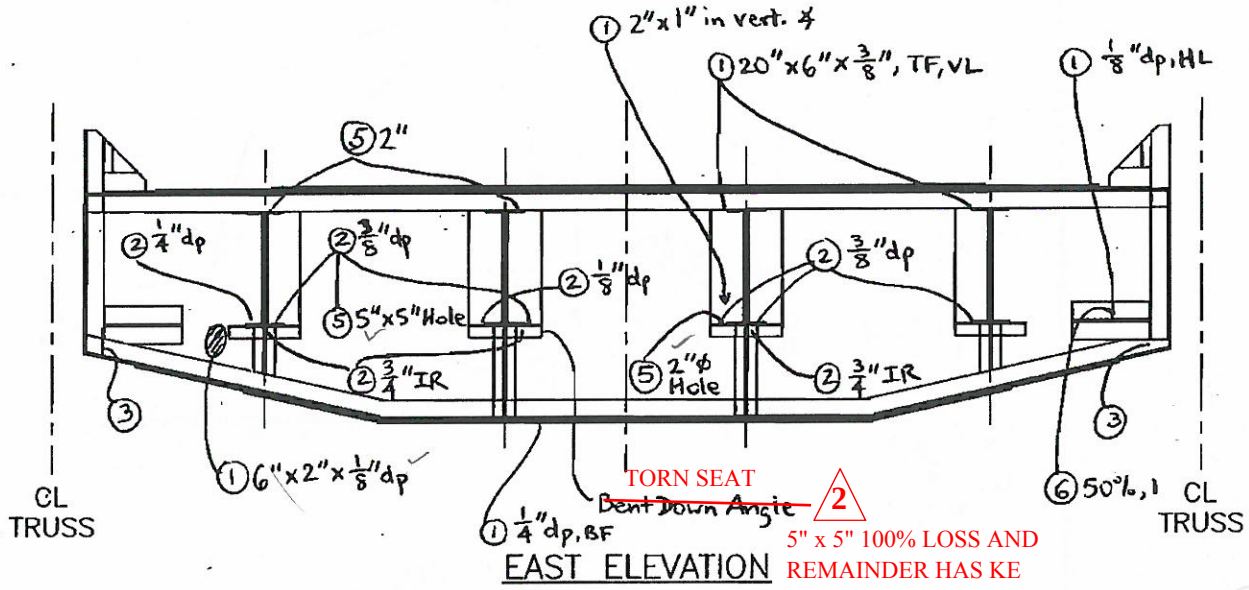


EAST ELEVATION

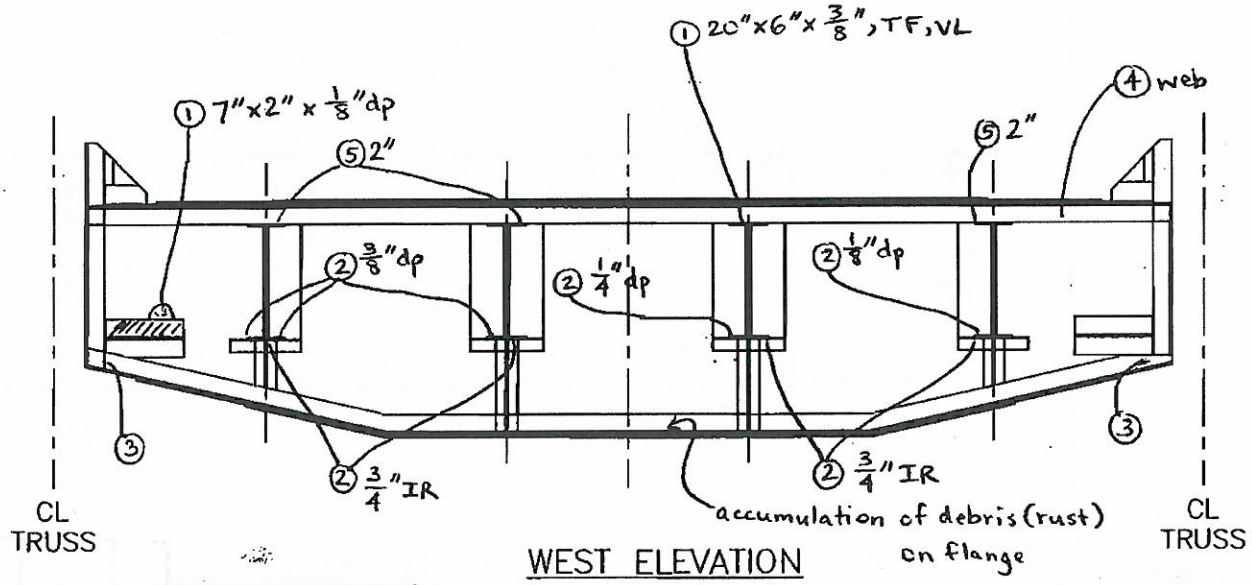


WEST ELEVATION

SPAN 7 TRACK 2 & 4 FB 6

| NO. | DATE | DESCRIPTION |
|---|---|---|
| 2 | 5/31/13 | WSP-SELLS; PA, MD |
| 1 | 9/25/12 | WSP-SELLS ML, MA |

REVISIONS

2 WSP-SELLS VERIFICATION INSPECTION 07/12/2013

# FIELD NOTES

Stantec Consulting Services Inc.

| | |
|---|---|
| Bridge No.: | 08080R |
| Project No.: | 301-0099 |
| Crew: | LM & AF |
| Date: 5/4/09 | Sheet No.: 157 |

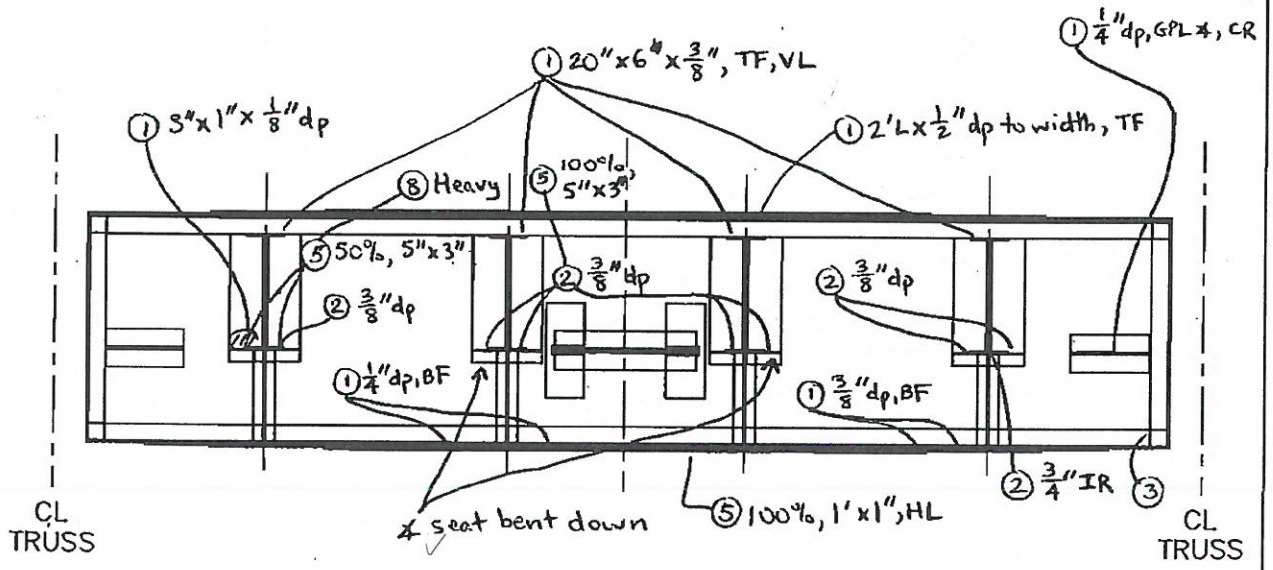


EAST ELEVATION

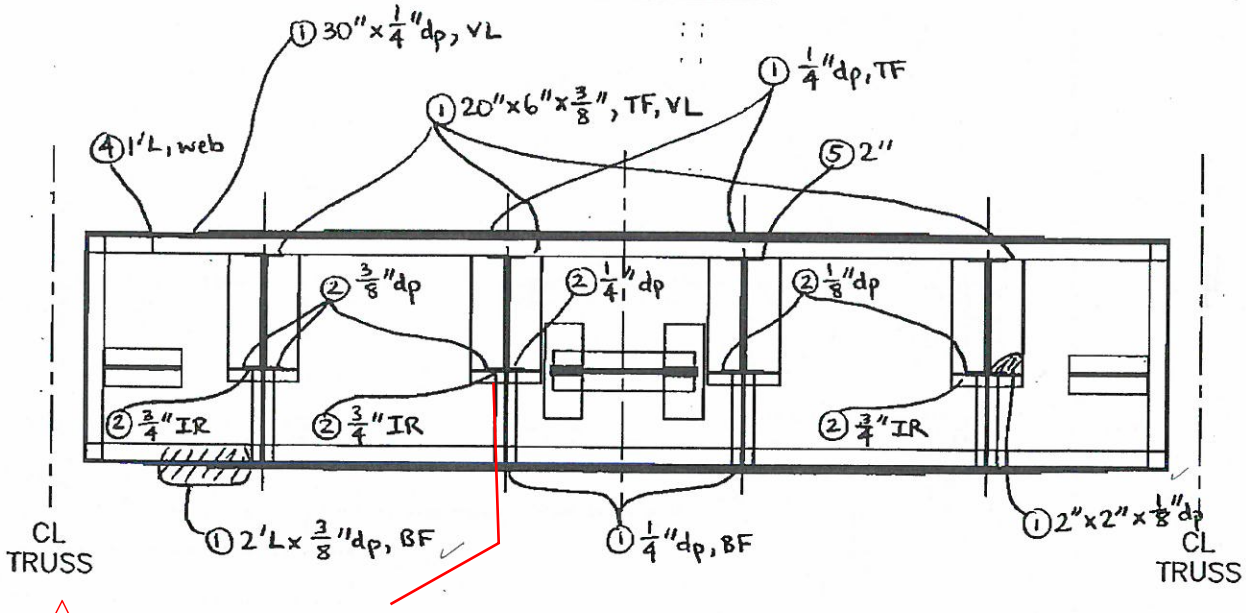


2 SEAT ANGLE BENT DOWN 5" X 3" W

WEST ELEVATION

SPAN 7 TRACK 2 & 4 FB 7

| NO. | DATE | DESCRIPTION |
|---|---|---|
| 2 | 5/31/13 | WSP-SELLS; PA,MD |
| 1 | 9/25/12 | WSP-SELLS MLMA |

REVISIONS

2 WSP-SELLS VERIFICATION INSPECTION 07/12/2013

# FIELD NOTES

Stantec Consulting Services Inc.

| | |
|---|---|
| Bridge No.: | 08080R |
| Project No.: | 301-0099 |
| Crew: | LM & AF |
| Date: 5/4/09 | Sheet No.: 158 |

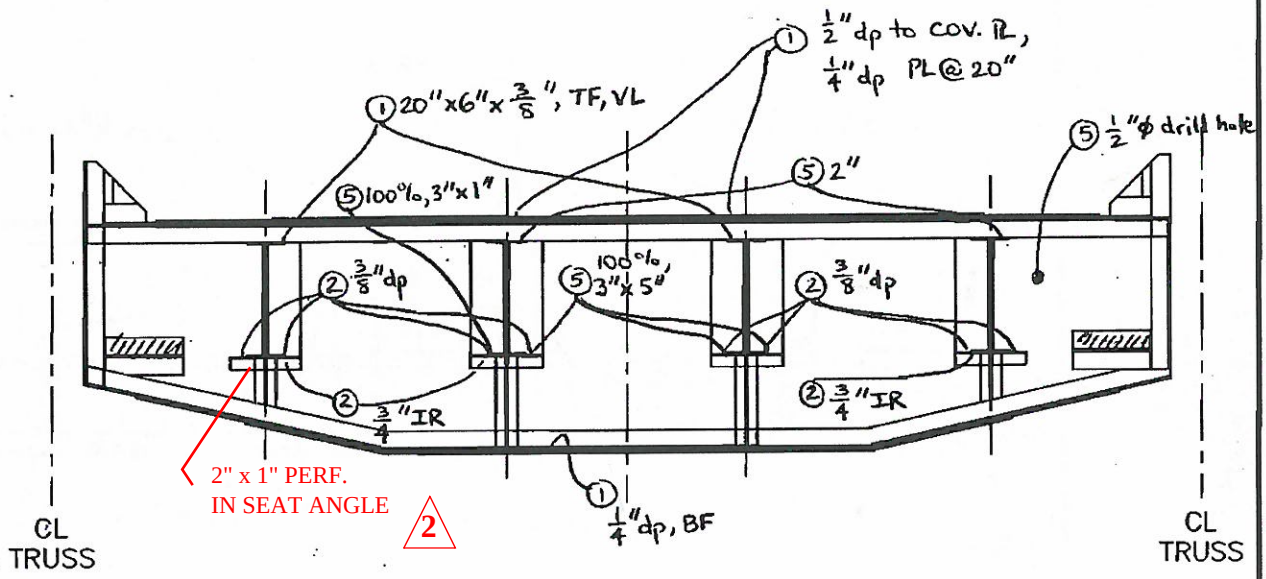


EAST ELEVATION

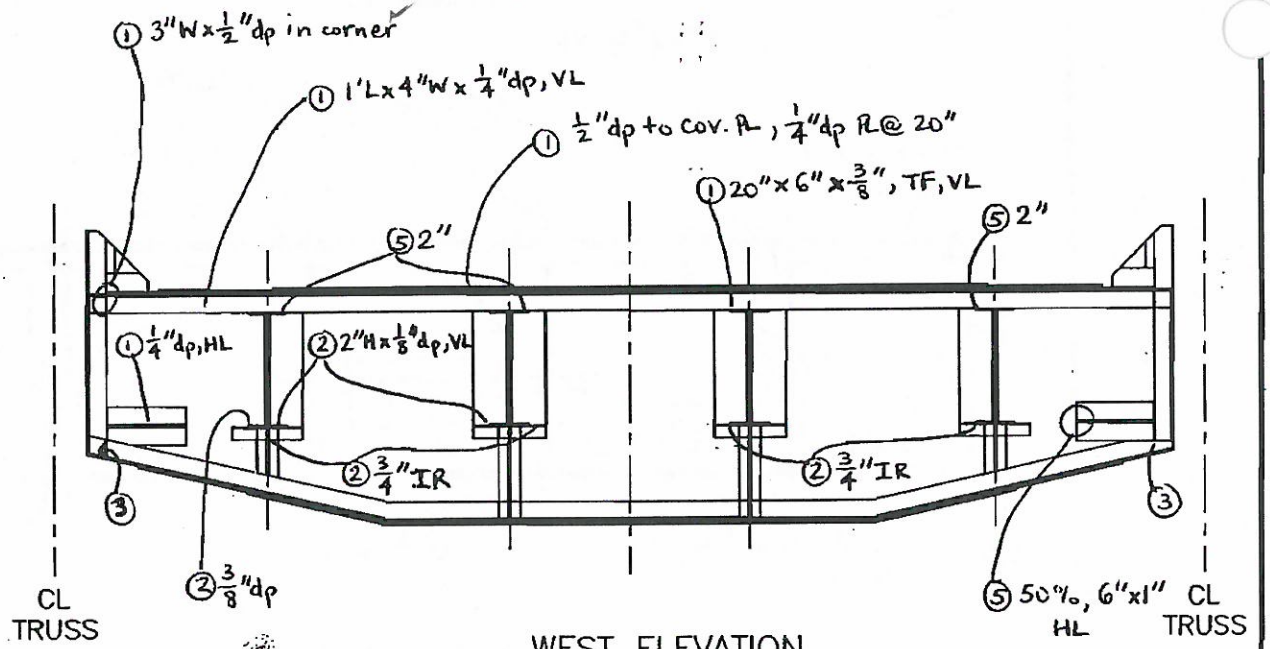


WEST ELEVATION

SPAN 7 TRACK 2 & 4 FB 8

| NO. | DATE | DESCRIPTION |
|---|---|---|
| 2 | 5/31/13 | WSP-SELLS; PA, MD |
| 1 | 9/25/12 | WSP-SELLS MLMA |

REVISIONS

WSP-SELLS VERIFICATION INSPECTION
07/12/2013

2

# FIELD NOTES

Stantec Consulting Services Inc.

| | |
|---|---|
| Bridge No.: | 08080R |
| Project No.: | 301-0099 |
| Crew: | LM & AF |
| Date: 5/4/09 | Sheet No.: 159 |

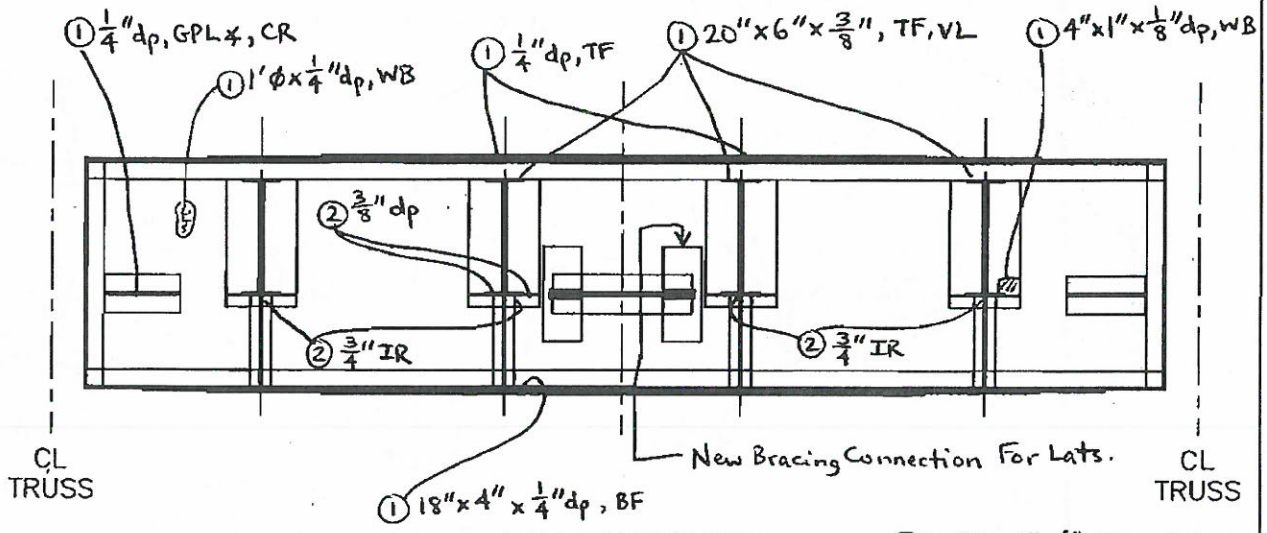


WEST ELEVATION

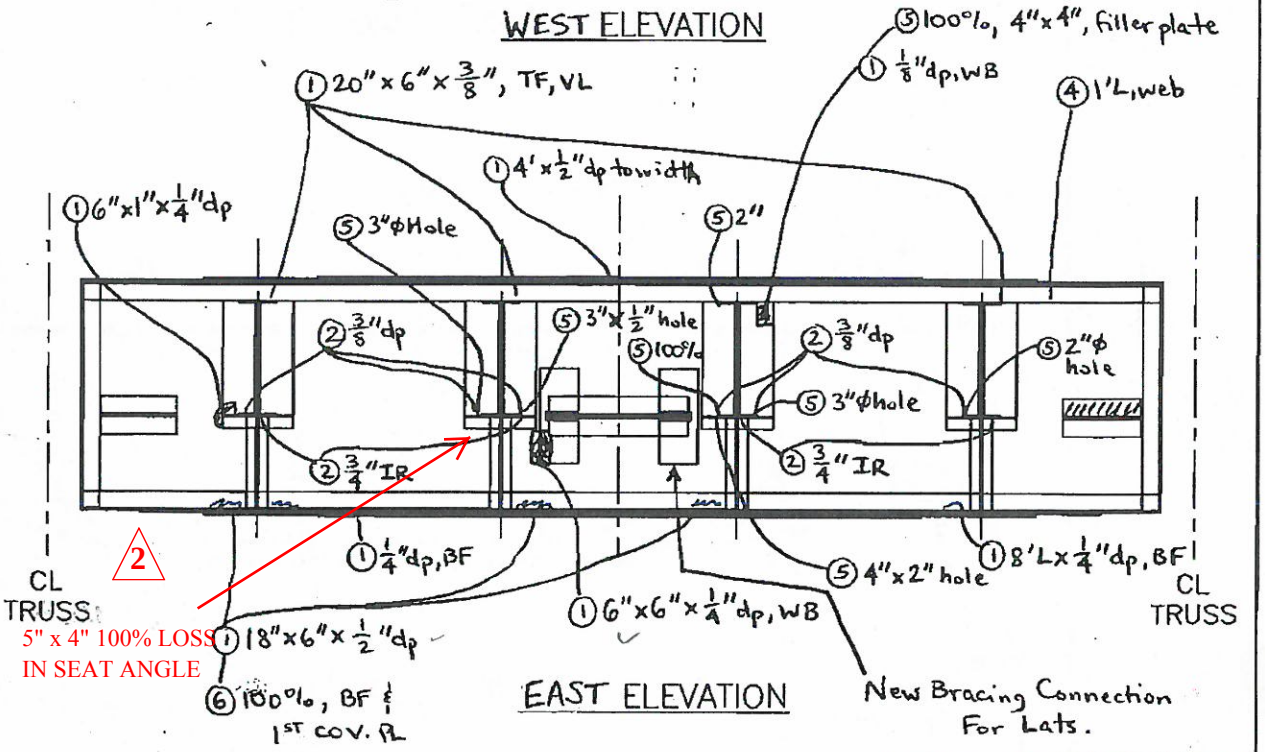


EAST ELEVATION

SPAN 7 TRACK 2 & 4 FB 9

| NO. | DATE | DESCRIPTION |
|---|---|---|
| 2 | 5/31/13 | WSP-SELLS; PA, MD |
| 1 | 9/25/13 | WSP-SELLS MG, MA |

REVISIONS

2 WSP-SELLS VERIFICATION INSPECTION
07/12/2013

# FIELD NOTES

Stantec Consulting Services Inc.

| | |
|---|---|
| Bridge No.: | 08080R |
| Project No.: | 301-0099 |
| Crew: | LM & AF |
| Date: 5/4/09 | Sheet No.: 160 |

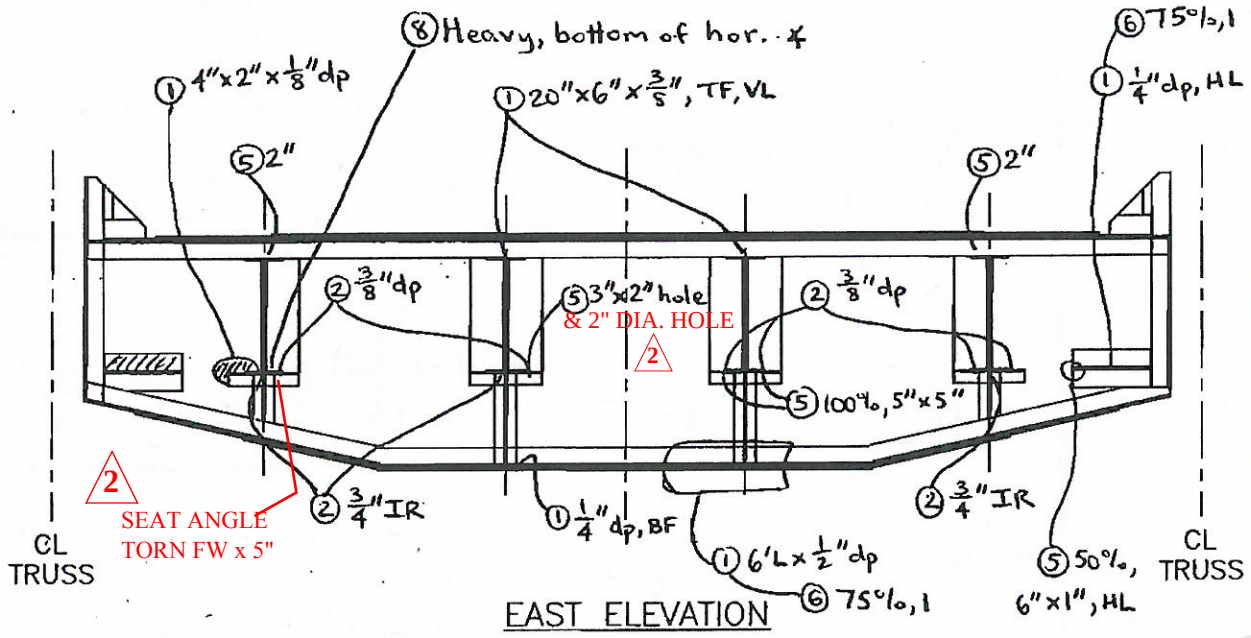


EAST ELEVATION

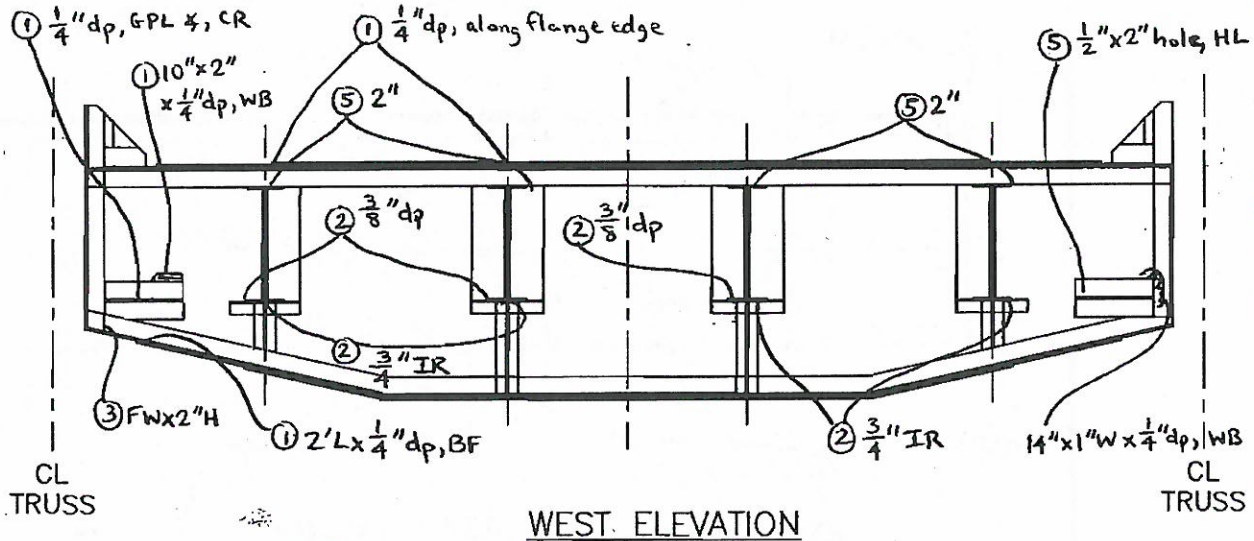


WEST ELEVATION

| NO. | DATE | DESCRIPTION |
|---|---|---|
| 2 | 5/31/13 | WSP-SELLS; PA, MD |
| 1 | 9/25/12 | WSP-SELLS ML, MA |

REVISIONS

SPAN 7 TRACK 2 & 4 FB 10

2 WSP-SELLS VERIFICATION INSPECTION
07/12/2013

# FIELD NOTES

Stantec Consulting Services Inc.

| | |
|---|---|
| Bridge No.: | 08080R |
| Project No.: | 301-0099 |
| Crew: | LM & AF |
| Date: 5/4/09 | Sheet No.: 161 |

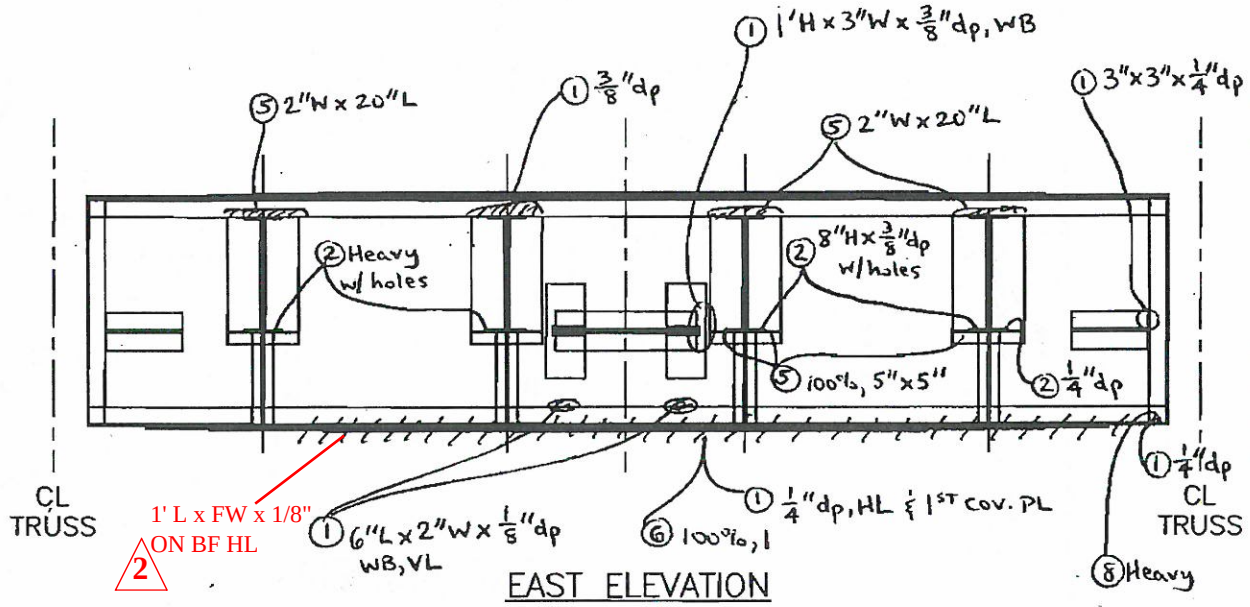


EAST ELEVATION

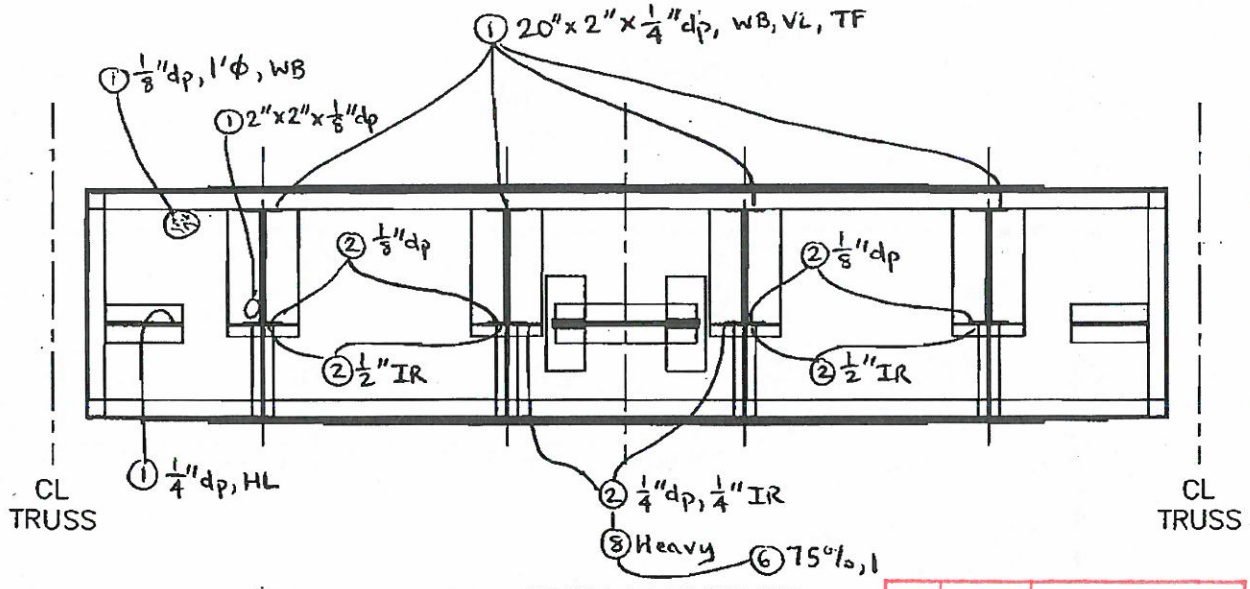


WEST ELEVATION

SPAN 7 TRACK 2 & 4 FB 11

| NO. | DATE | DESCRIPTION |
|---|---|---|
| 2 | 5/31/13 | WSP-SELLS; PA, MD |
| 1 | 9/25/12 | WSP-SELLS ML, MA |

REVISIONS

WSP-SELLS VERIFICATION INSPECTION
07/12/2013 NO REVISION

# FIELD NOTES

Stantec Consulting Services Inc.

| | |
|---|---|
| Bridge No.: | 08080R |
| Project No.: | 301-0099 |
| Crew: | LM & AF |
| Date: 5/4/09 | Sheet No.: 162 |

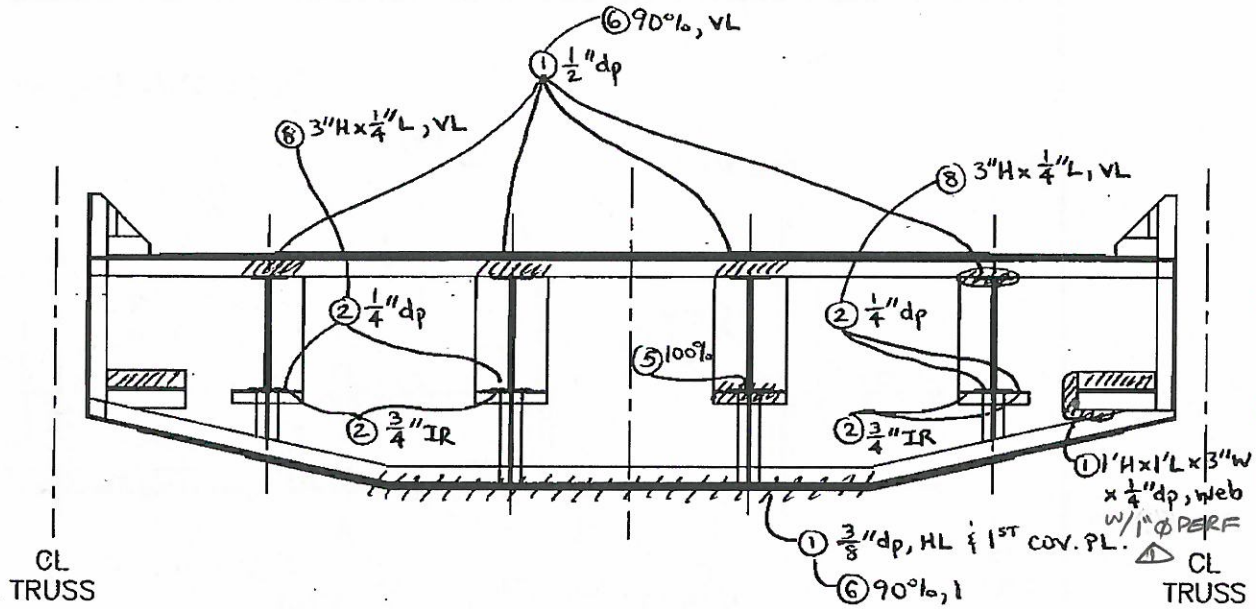


EAST ELEVATION

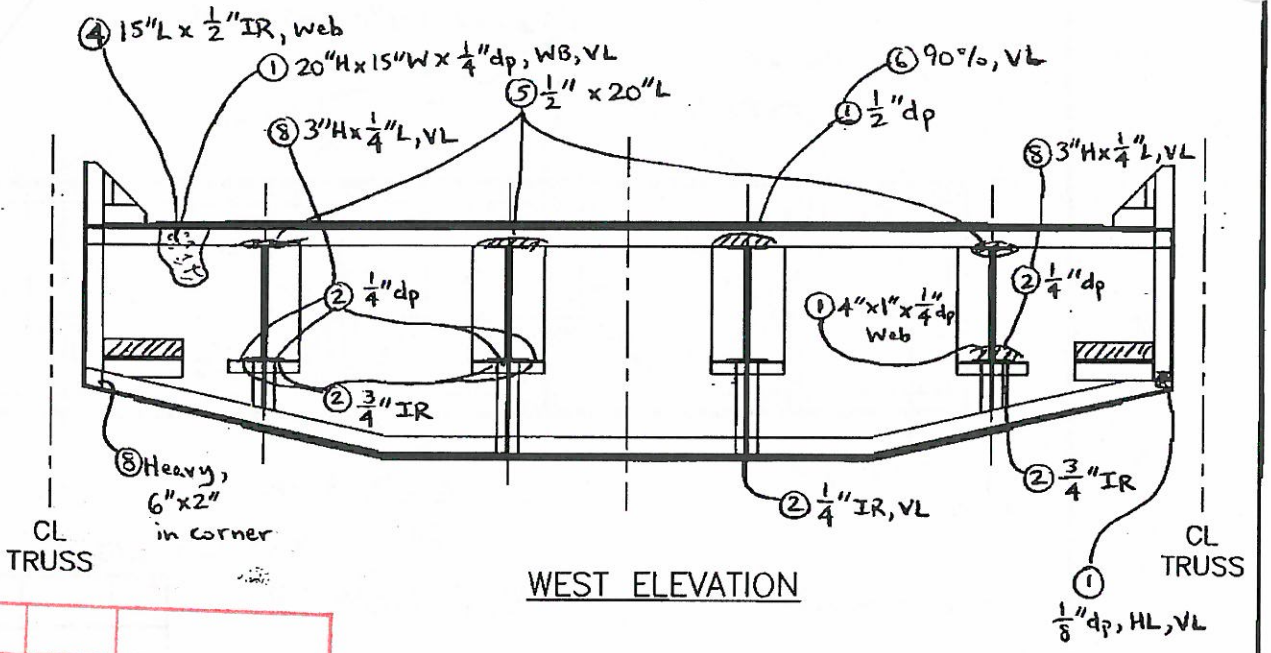


WEST ELEVATION

SPAN 7 TRACK 2 & 4 FB 12

| NO. | DATE | DESCRIPTION |
|---|---|---|
| 1 | 9/25/12 | WSP-SELLS ML, MA |

REVISIONS

2 WSP-SELLS VERIFICATION INSPECTION
07/12/2013

# FIELD NOTES

Stantec Consulting Services Inc.

| | |
|---|---|
| Bridge No.: | 08080R |
| Project No.: | 301-0099 |
| Crew: | LM & AF |
| Date: 5/4/09 | Sheet No.: 163 |

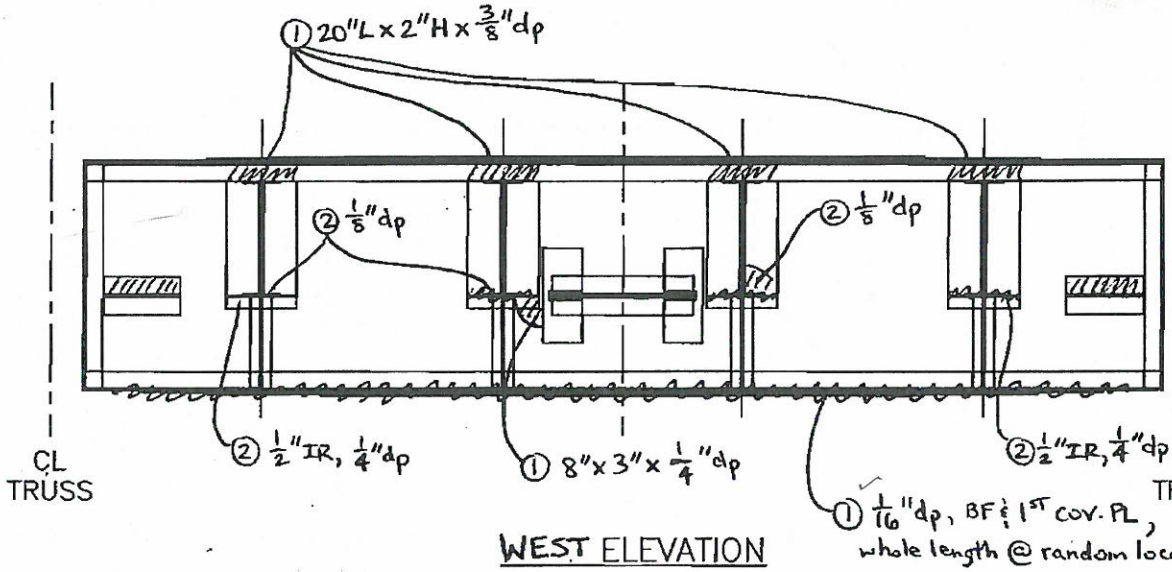


WEST ELEVATION

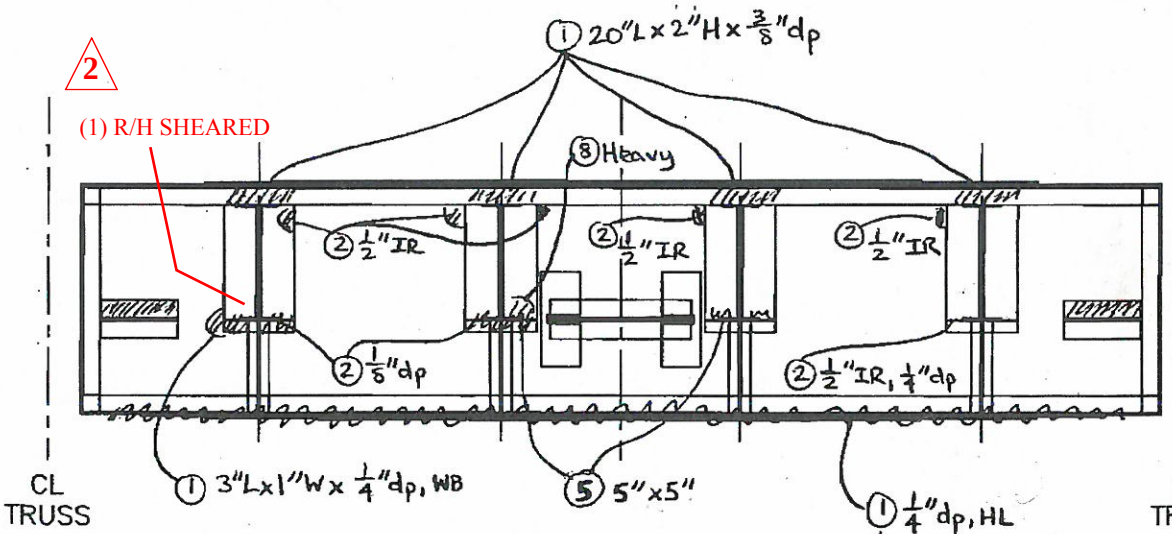


EAST ELEVATION

SPAN 7 TRACK 2 & 4 FB 13

| NO. | DATE | DESCRIPTION |
|---|---|---|
| 2 | 5/31/13 | WSP-SELLS; PA, MD |
| 1 | 9/25/12 | WSP-SELLS ML/MA |

REVISIONS

WSP-SELLS VERIFICATION INSPECTION
07/12/2013 NO REVISION

# FIELD NOTES

Stantec Consulting Services Inc.

| | |
|---|---|
| Bridge No.: | 08080R |
| Project No.: | 301-0099 |
| Crew: | LM & AF |
| Date: 5/4/09 | Sheet No.: 164 |

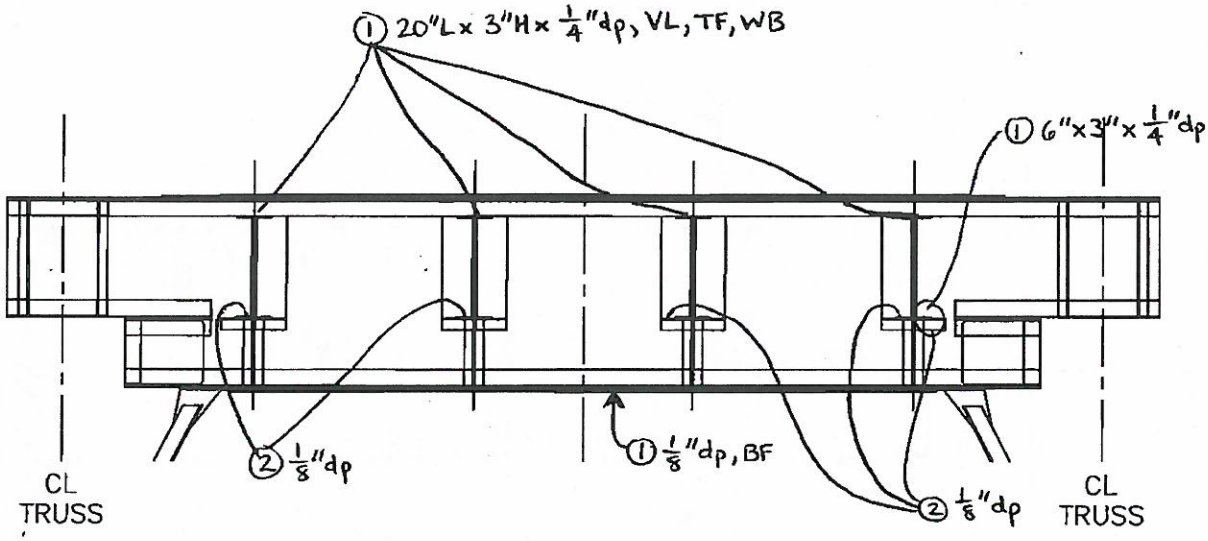


*80% of surface is covered w/ tar, both sides

WEST ELEVATION

*Exposed surfaces exhibit light surface rust

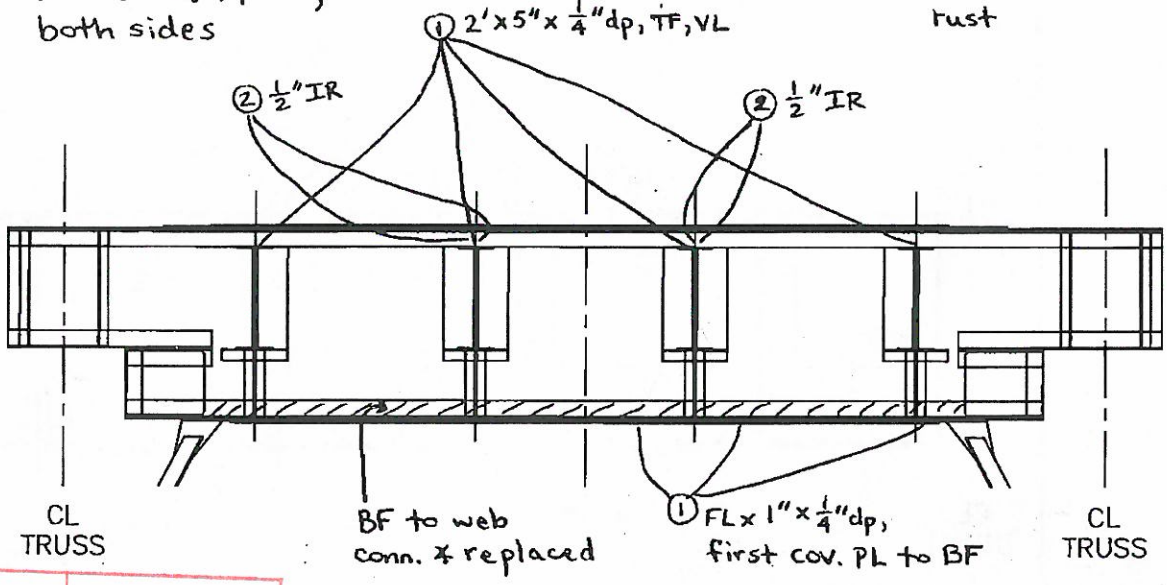


EAST ELEVATION

| NO. | DATE | DESCRIPTION |
|---|---|---|
| 1 | 9/25/12 | WSP-SELLS ML MA |

REVISIONS

SPAN 7 TRACK 2 & 4 FB 14

165

WSP-SELLS
VERIFICATION INSPECTION
07/12/2013

# Stringers

WSP-SELLS VERIFICATION INSPECTION
07/12/2013 NO REVISION

| FIELD NOTES | Bridge No.: 08080R | |
|---|---|---|
| | Project No.: 301-0099 | |
| Stantec Consulting Services Inc. | Crew: | |
| | Date: | Sheet No.: 166 |

STRINGER LEGEND:

(1) = 2 ADDITIONAL PLATES AT TOP/BOTTOM FLANGE (IF CONDITION EXISTS IN TOP FLANGE, TOP FLANGE IS CUT 6" SHORT.)

(2) = PLOS IN VERTICAL CONNECTION ∠ OF STRINGER TO FLOORBEAM

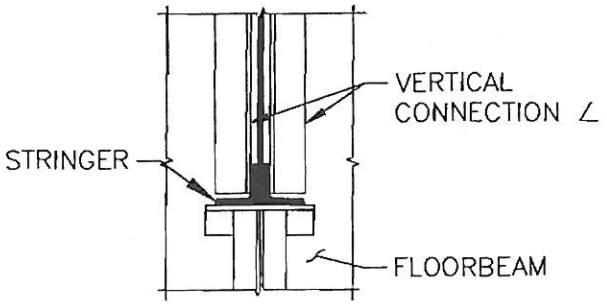


(3) = PLOS, X"H x Y"L x Z" DEEP

(4) = PLOS IN BOTTOM FLANGE AT SEAT CONNECTION ∠

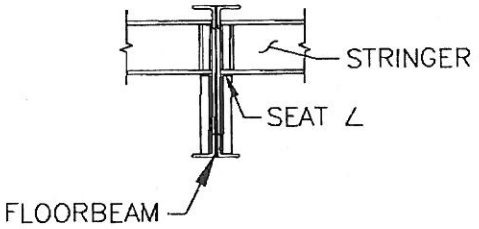


(5) = REPAIR ∠ BOLTED TO WEB FOR FULL LENGTH OF STRINGER

(6) = REPAIR ∠ ON TOP OF EXISTING FLANGE ANGLE FOR APPROX. 6'-9" LONG (IT'S MOSTLY LOCATED AT THE CROSSING WITH THE LATERAL BRACING)

(7) = LAMINAR RUST AT BOTTOM OF STRINGER TO FLOORBEAM CONNECTION

(8) = EDGE LOSS OF SECTION OR STEEL THINNING

(9) = RIVET HEAD SECTION LOSS

WSP-SELLS VERIFICATION INSPECTION
07/12/2013 NO REVISION

# FIELD NOTES

Stantec Consulting Services Inc.

| | |
|---|---|
| Bridge No.: 08080R | |
| Project No.: 301-0099 | |
| Crew: LM & AF | |
| Date: 5/4/09 | Sheet No.: 167 |

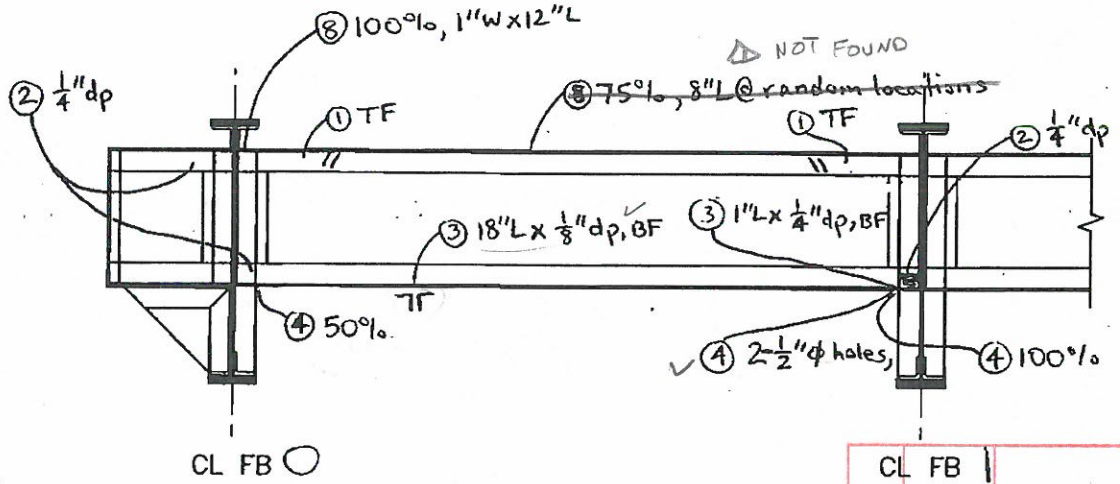


SOUTH ELEVATION

| NO. | DATE | DESCRIPTION |
|---|---|---|
| | | |
| | | |
| | | |
| 1 | 9/25/12 | WSP-SELLS ML, MA |

REVISIONS

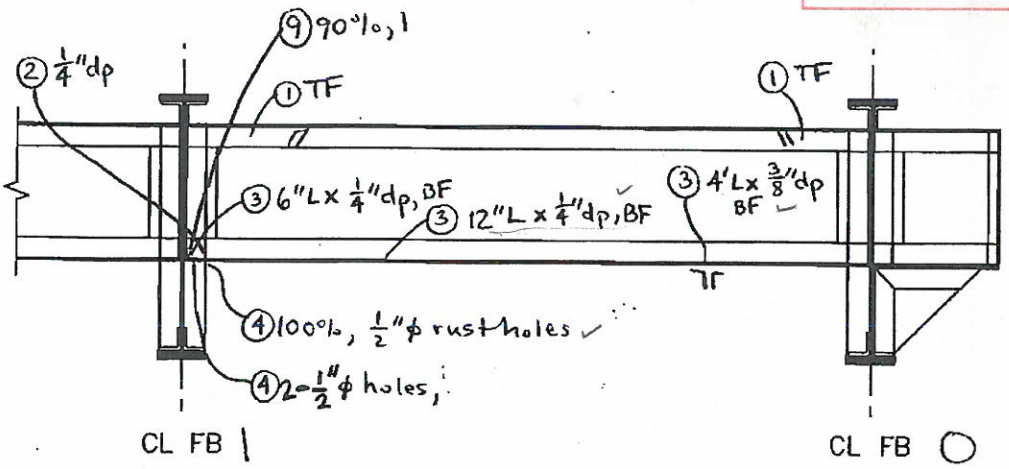


NORTH ELEVATION

SPAN 7 TRACK 1 & 3 STRINGER 1 (FB ○ TO FB | )

WSP-SELLS VERIFICATION INSPECTION
07/12/2013 NO REVISION

# FIELD NOTES

Stantec Consulting Services Inc.

| | |
|---|---|
| Bridge No.: | 08080R |
| Project No.: | 301-0099 |
| Crew: | LM & AF |
| Date: 5/4/09 | Sheet No.: 168 |

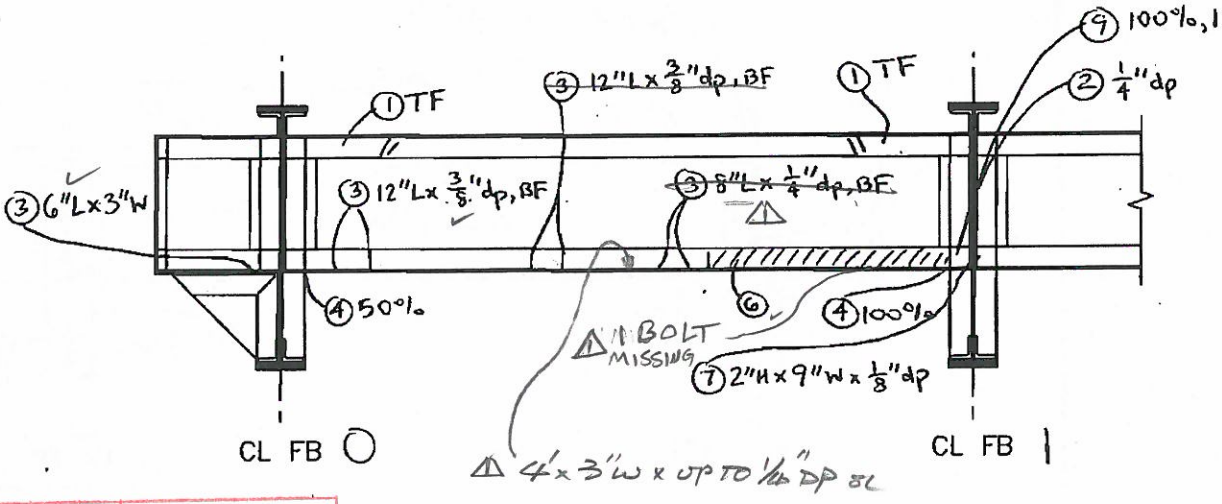


SOUTH ELEVATION

| NO. | DATE | DESCRIPTION |
|---|---|---|
| | | |
| | | |
| 1 | 9/25/12 | WSP-SELLS ML/MA |

REVISIONS

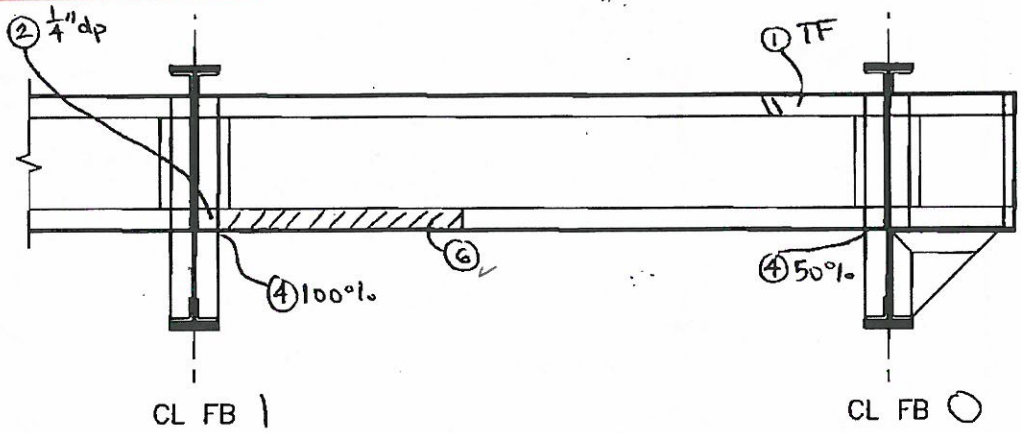


NORTH ELEVATION

SPAN 7 TRACK 1 & 3 STRINGER 2 (FB 0 TO FB 1)

WSP-SELLS VERIFICATION INSPECTION
07/12/2013

2

# FIELD NOTES

Stantec Consulting Services Inc.

| | |
|---|---|
| Bridge No.: | 08080R |
| Project No.: | 301-0099 |
| Crew: | LM & AF |
| Date: 5/4/09 | Sheet No.: 169 |

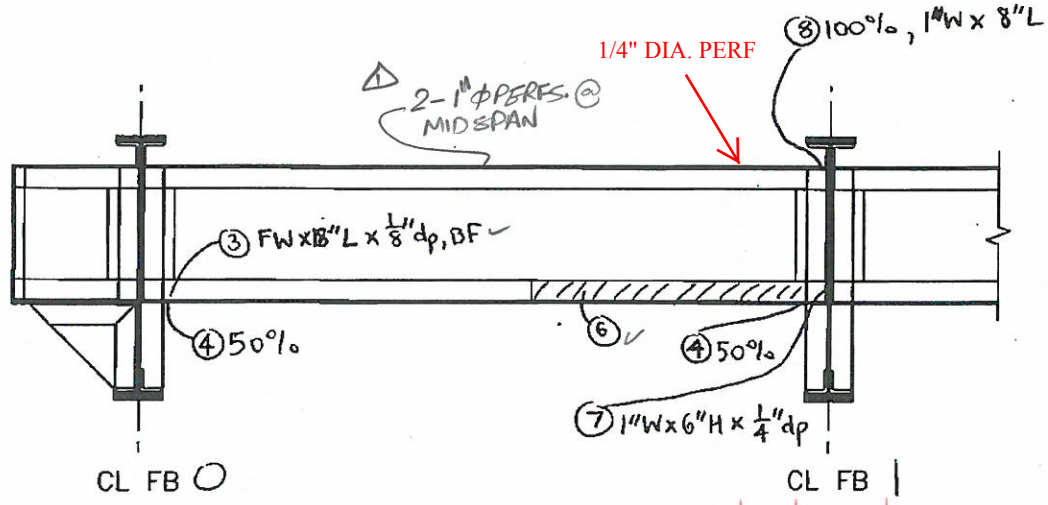


SOUTH ELEVATION

| NO. | DATE | DESCRIPTION |
|---|---|---|
| 2 | 5/30/13 | WSP-SELLS; PA, MD |
| 1 | 9/25/12 | WSP-SELLS MG, MA |

REVISIONS

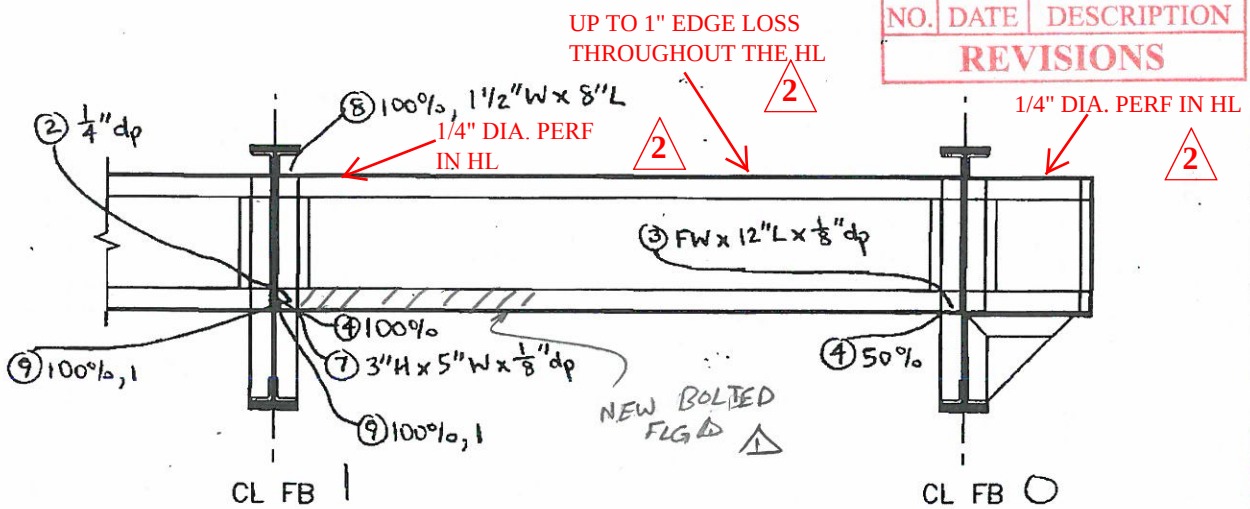


NORTH ELEVATION

SPAN 7 TRACK 1 & 3 STRINGER 3 (FB 0 TO FB 1)

2 WSP-SELLS VERIFICATION INSPECTION
07/12/2013

# FIELD NOTES

Stantec Consulting Services Inc.

Bridge No.: 08080R
Project No.: 301-0099
Crew: LM & AF
Date: 5/4/09 Sheet No.: 170

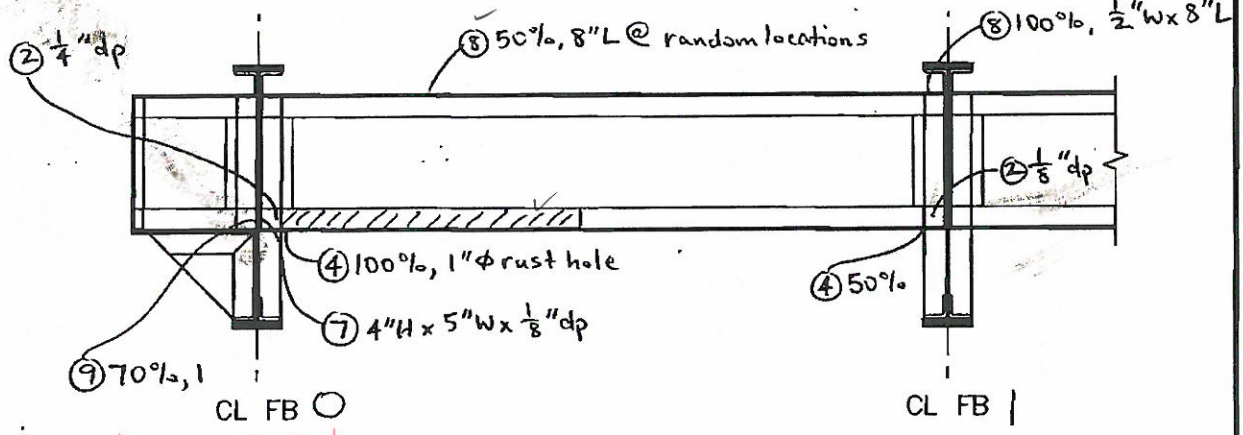


SOUTH ELEVATION

| NO. | DATE | DESCRIPTION |
|---|---|---|
| 2 | 5/30/13 | WSP-SELLS; PA, MD |
| 1 | 9/25/12 | WSP-SELLS MLMA |

REVISIONS

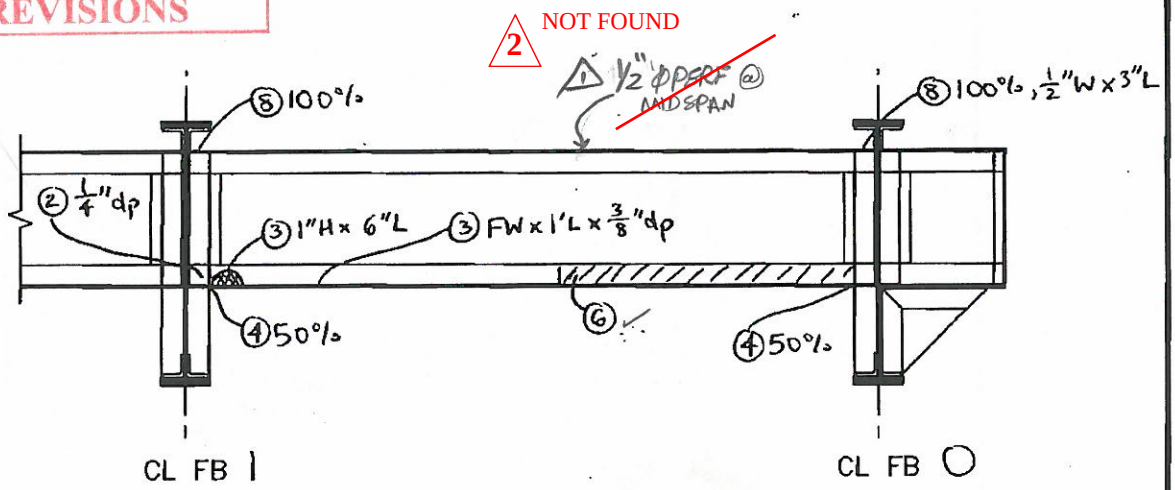


NORTH ELEVATION

SPAN 7 TRACK 1 & 3 STRINGER 4 (FB 0 TO FB 1)

WSP-SELLS VERIFICATION INSPECTION
07/12/2013 NO REVISION

# FIELD NOTES

Stantec Consulting Services Inc.

| | |
|---|---|
| Bridge No.: | 08080R |
| Project No.: | 301-0099 |
| Crew: | LM & AF |
| Date: 5/4/09 | Sheet No.: 171 |

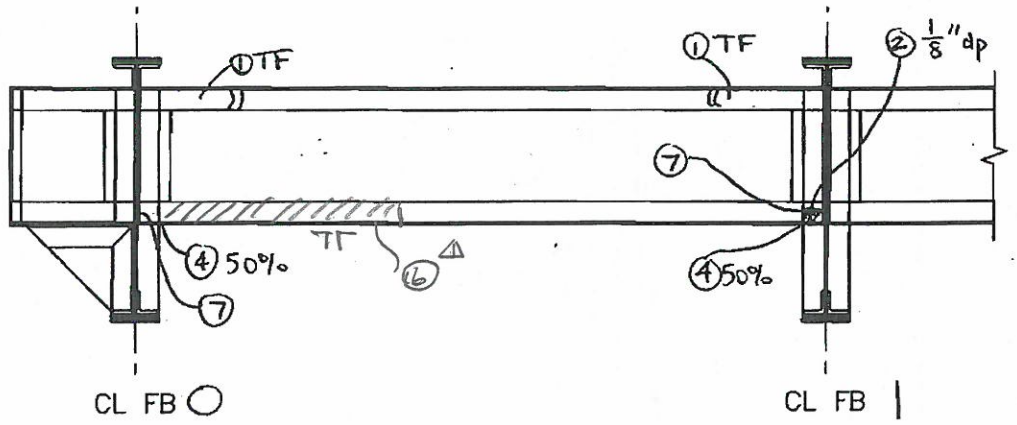


SOUTH ELEVATION

| NO. | DATE | DESCRIPTION |
|---|---|---|
| △ | 9/25/12 | WSP-SELLS MLMA |

REVISIONS

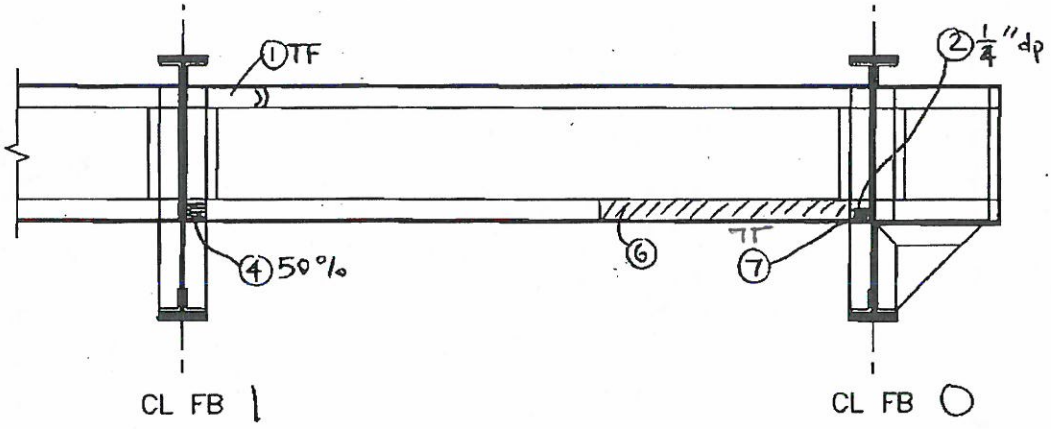


NORTH ELEVATION

SPAN 7 TRACK 2 & 4 STRINGER 5 (FB ○ TO FB | )

WSP-SELLS VERIFICATION INSPECTION
07/12/2013 NO REVISION

# FIELD NOTES

Stantec Consulting Services Inc.

| | |
|---|---|
| Bridge No.: | 08080R |
| Project No.: | 301-0099 |
| Crew: | LM & AF |
| Date: 5/4/09 | Sheet No.: 172 |

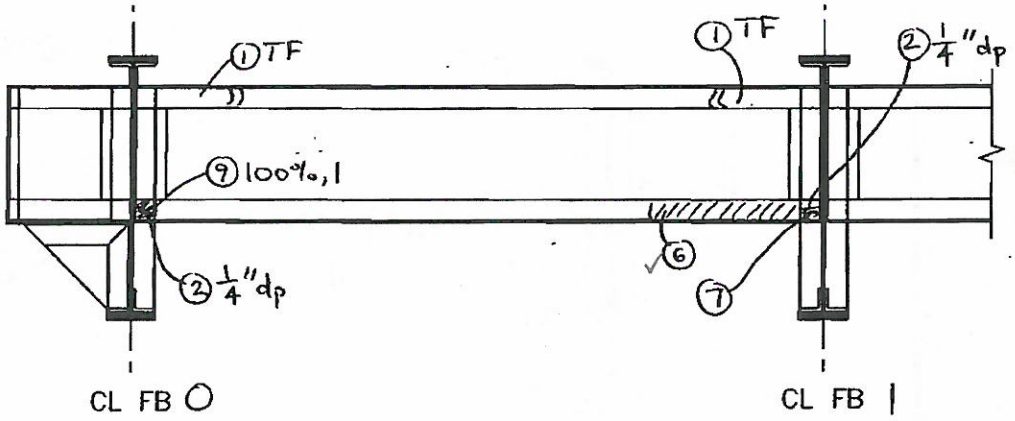


SOUTH ELEVATION

| NO. | DATE | DESCRIPTION |
|---|---|---|
| | | |
| | | |
| 1 | 9/25/12 | WSP-SELLS MLMA |

REVISIONS

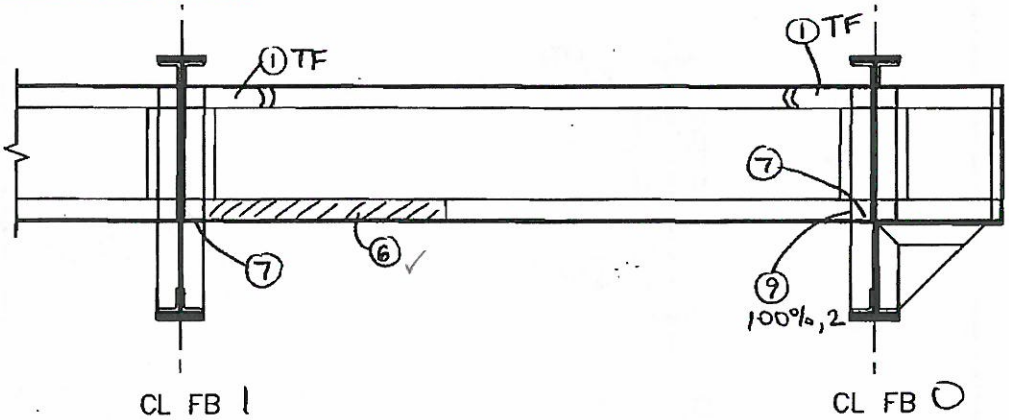


NORTH ELEVATION

SPAN 7 TRACK 2 & 4 STRINGER 6 (FB 0 TO FB 1)

WSP-SELLS VERIFICATION INSPECTION
07/12/2013 NO REVISION

# FIELD NOTES

Stantec Consulting Services Inc.

| | |
|---|---|
| Bridge No.: | 08080R |
| Project No.: | 301-0099 |
| Crew: | LM & AF |
| Date: 5/4/09 | Sheet No.: 173 |

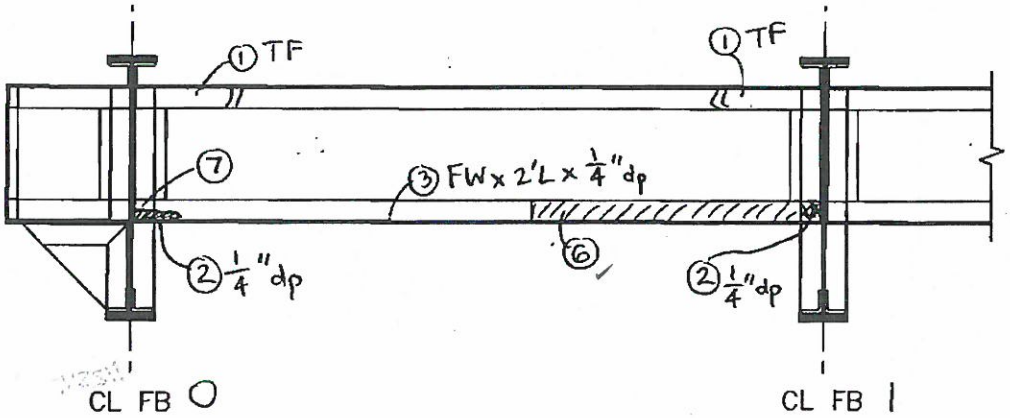


SOUTH ELEVATION

| NO. | DATE | DESCRIPTION |
|---|---|---|
| 1 | 9/25/12 | WSP-SELLS ML/MA |

REVISIONS

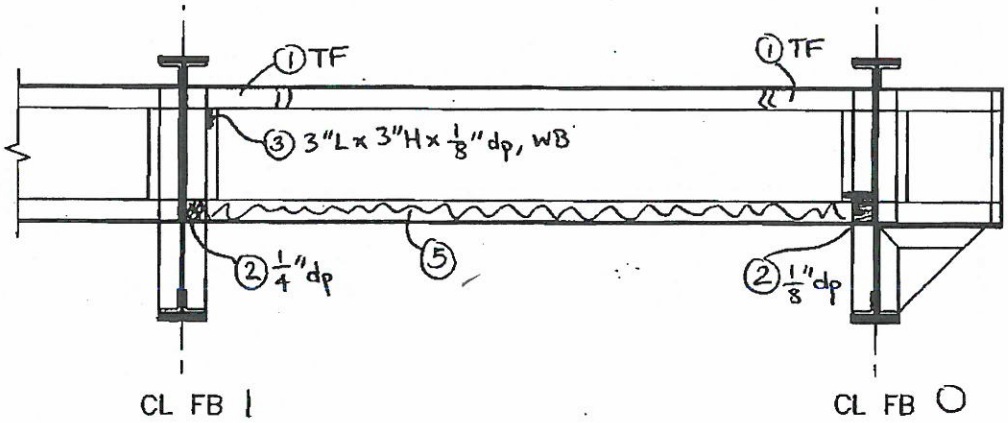


NORTH ELEVATION

SPAN 7 TRACK 2 & 4 STRINGER 7 (FB O TO FB I )

WSP-SELLS VERIFICATION INSPECTION
07/12/2013 NO REVISION

# FIELD NOTES

Stantec Consulting Services Inc.

| | |
|---|---|
| Bridge No.: | 08080R |
| Project No.: | 301-0099 |
| Crew: | LM & AF |
| Date: 5/4/09 | Sheet No.: 174 |

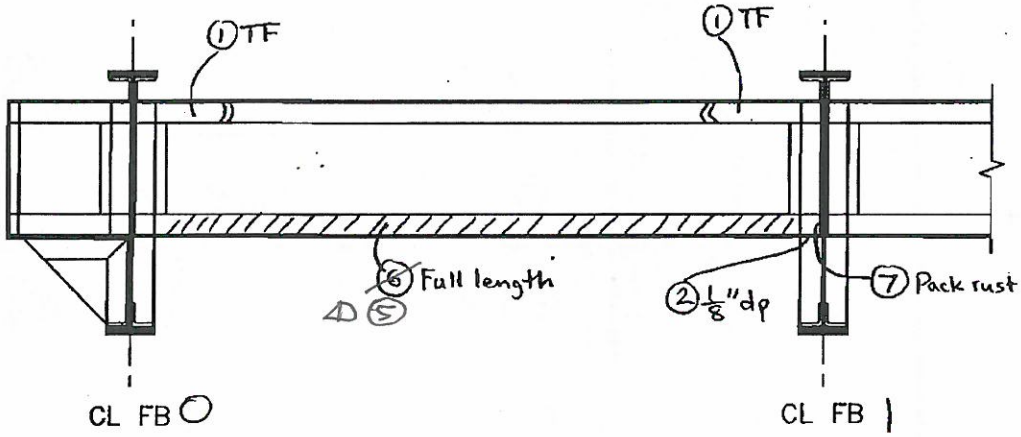


SOUTH ELEVATION

| NO. | DATE | DESCRIPTION |
|---|---|---|
| | | |
| | | |
| △ | 9/25/12 | WSP-SELLS MG MA |

REVISIONS

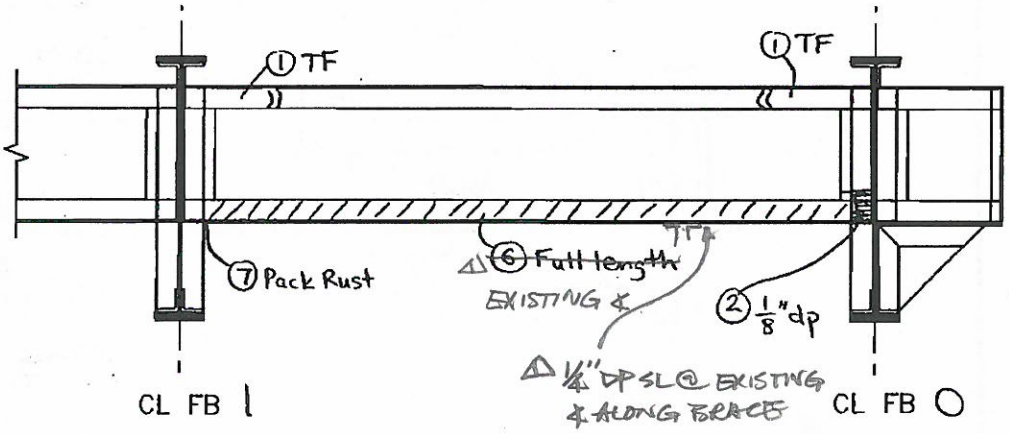


NORTH ELEVATION

SPAN 7 TRACK 2 & 4 STRINGER 8 (FB 0 TO FB 1)

WSP-SELLS VERIFICATION INSPECTION
07/12/2013 NO REVISION

# FIELD NOTES

Stantec Consulting Services Inc.

| | |
|---|---|
| Bridge No.: 08080R | |
| Project No.: 301-0099 | |
| Crew: LM & AF | |
| Date: 5/4/09 | Sheet No.: 175 |

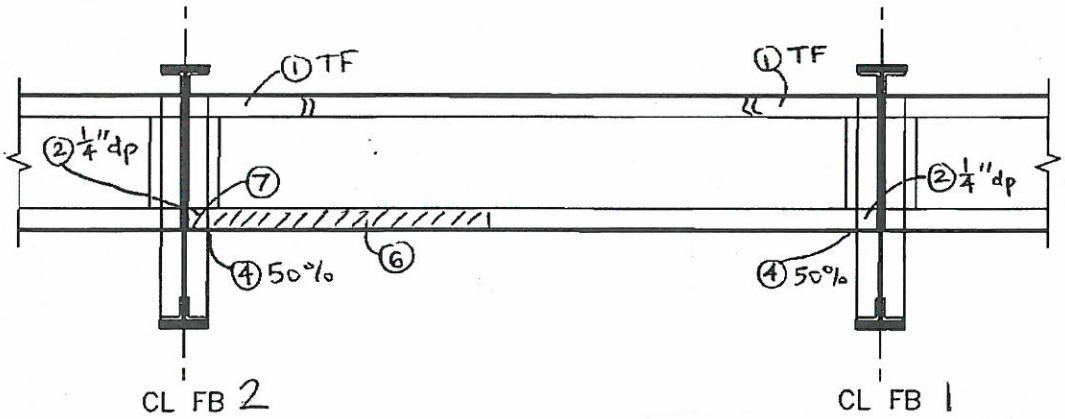


NORTH ELEVATION

| NO. | DATE | DESCRIPTION |
|---|---|---|
| 1 | 9/25/12 | WSP-SELLS ML, MA |

REVISIONS

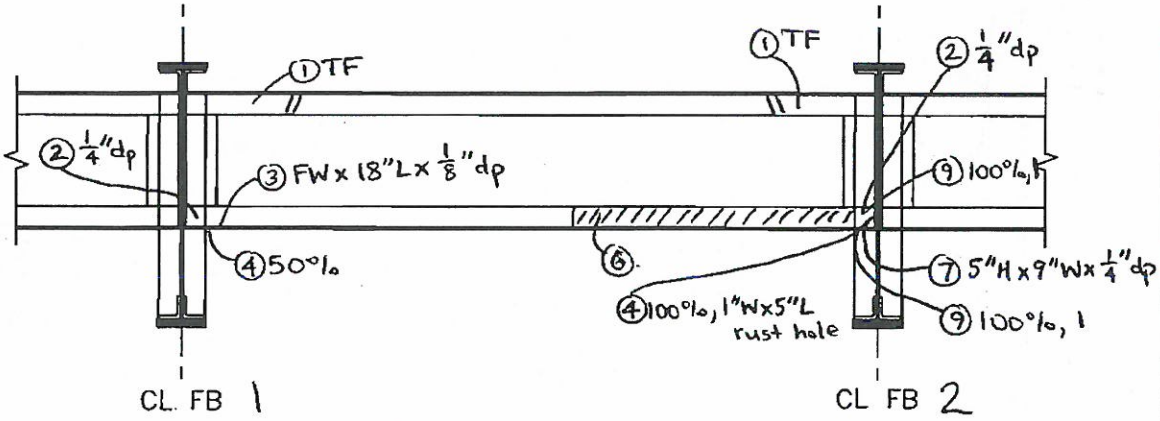


SOUTH ELEVATION

SPAN 7 TRACK 1 & 3 STRINGER 1 (FB 1 TO FB 2)

WSP-SELLS VERIFICATION INSPECTION
07/12/2013 NO REVISION

# FIELD NOTES

Stantec Consulting Services Inc.

| | |
|---|---|
| Bridge No.: | 08080R |
| Project No.: | 301-0099 |
| Crew: | LM & AF |
| Date: 5/4/09 | Sheet No.: 176 |

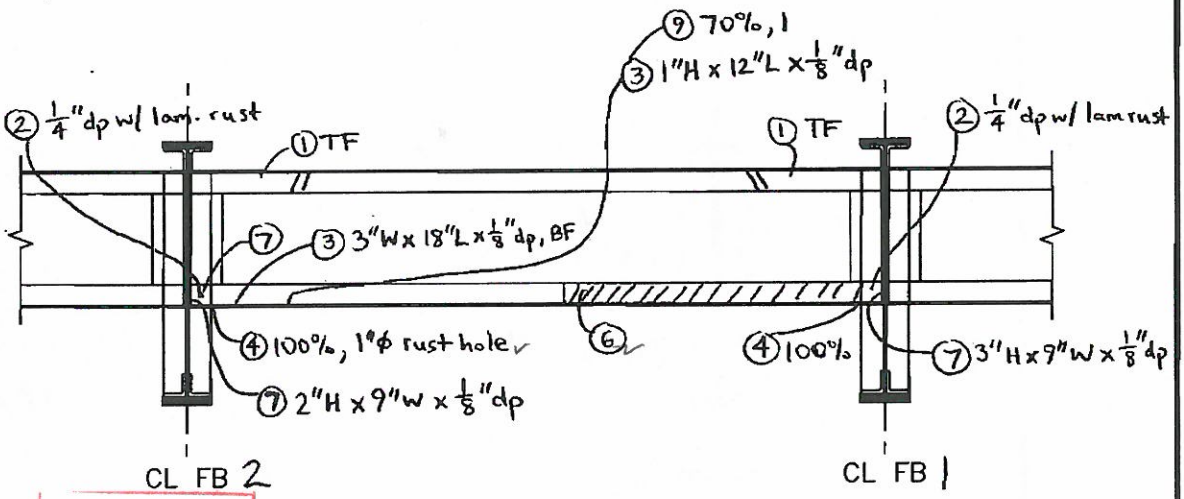


NORTH ELEVATION

| NO. | DATE | DESCRIPTION |
|---|---|---|
| 1 | 9/25/12 | WSP-SELLS ML MA |

REVISIONS

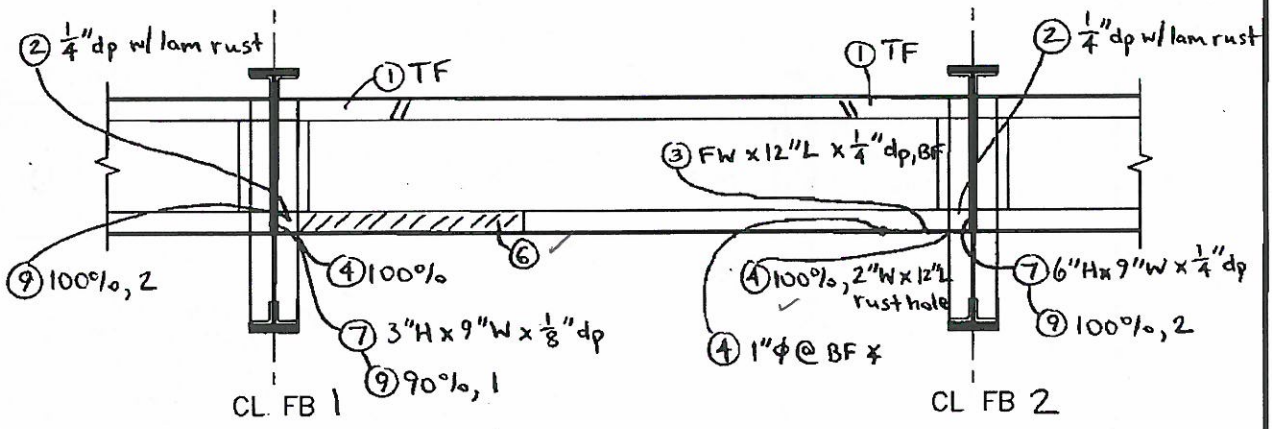


SOUTH ELEVATION

SPAN 7 TRACK 1 & 3 STRINGER 2 (FB 1 TO FB 2 )

WSP-SELLS VERIFICATION INSPECTION
07/12/2013 NO REVISION

# FIELD NOTES

Stantec Consulting Services Inc.

| | |
|---|---|
| Bridge No.: | 08080R |
| Project No.: | 301-0099 |
| Crew: | LM & AF |
| Date: 5/4/09 | Sheet No.: (77) |

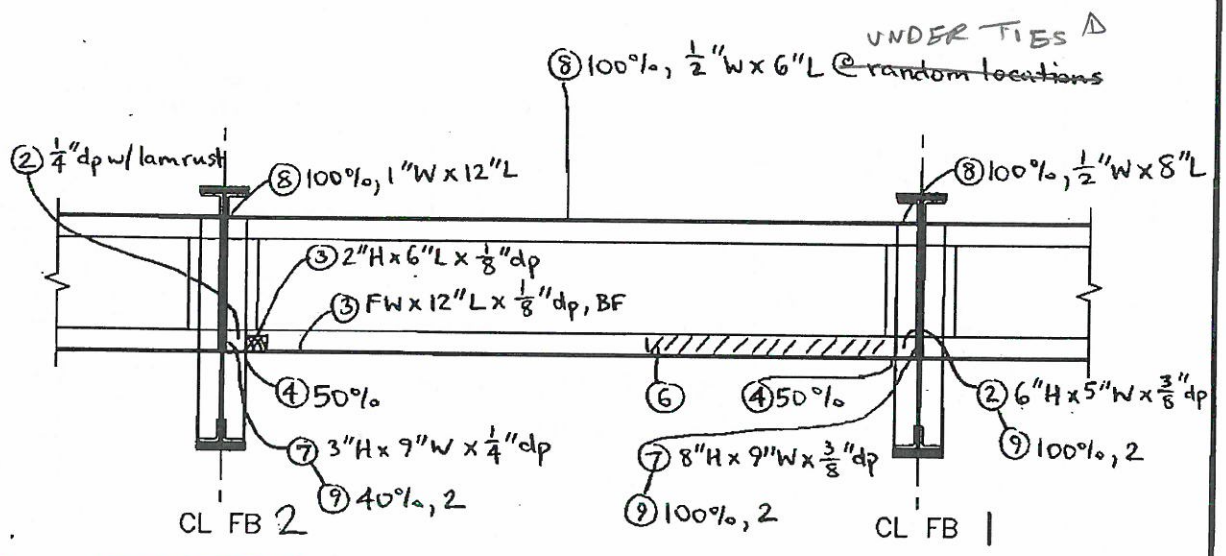


NORTH ELEVATION

| NO. | DATE | DESCRIPTION |
|---|---|---|
| | | |
| | | |
| △ | 9/25/12 | WSP-SELLS ML, MA |

REVISIONS

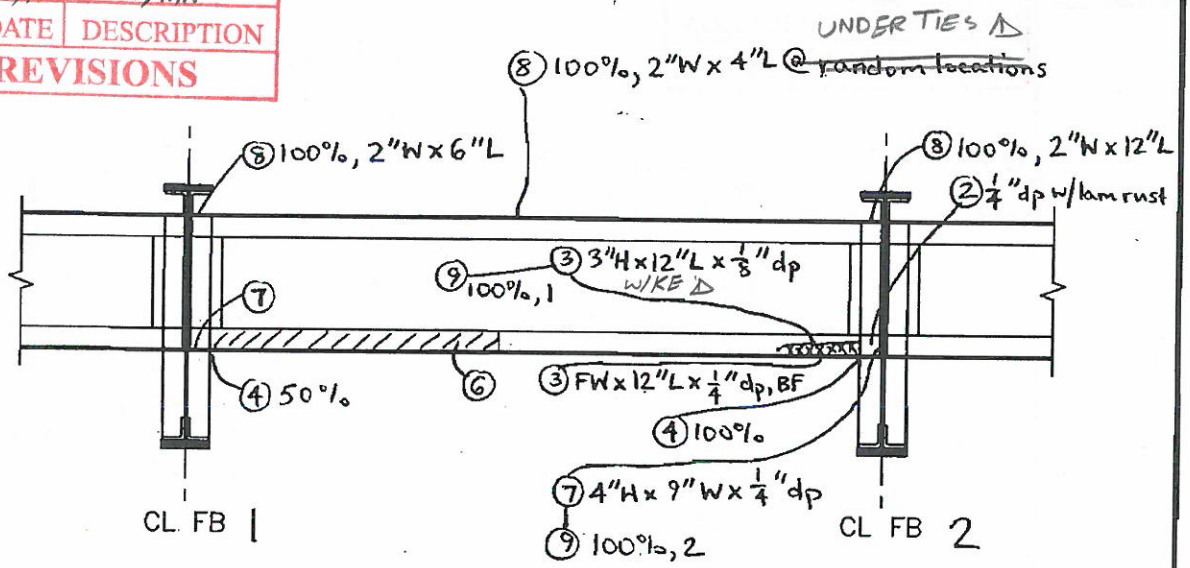


SOUTH ELEVATION

SPAN 7 TRACK 1 & 3 STRINGER 3 (FB 1 TO FB 2)

WSP-SELLS VERIFICATION INSPECTION
07/12/2013 NO REVISION

# FIELD NOTES

Stantec Consulting Services Inc.

| | |
|---|---|
| Bridge No.: | 08080R |
| Project No.: | 301-0099 |
| Crew: | LM & AF |
| Date: 5/4/09 | Sheet No.: 178 |

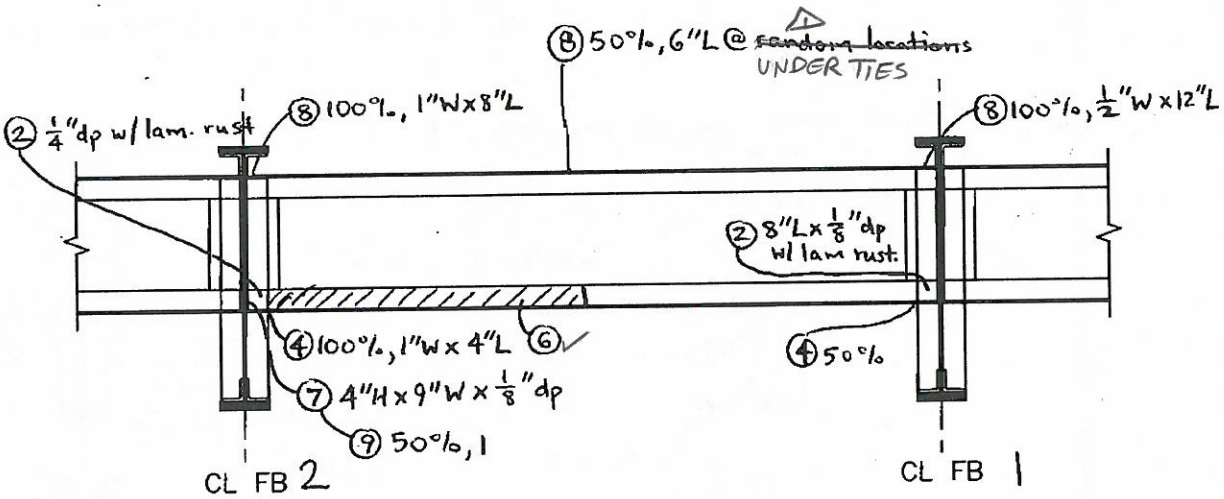


NORTH ELEVATION

| NO. | DATE | DESCRIPTION |
|---|---|---|
| | | |
| | | |
| △1 | 9/25/12 | WSP-SELLS MY MA |

REVISIONS

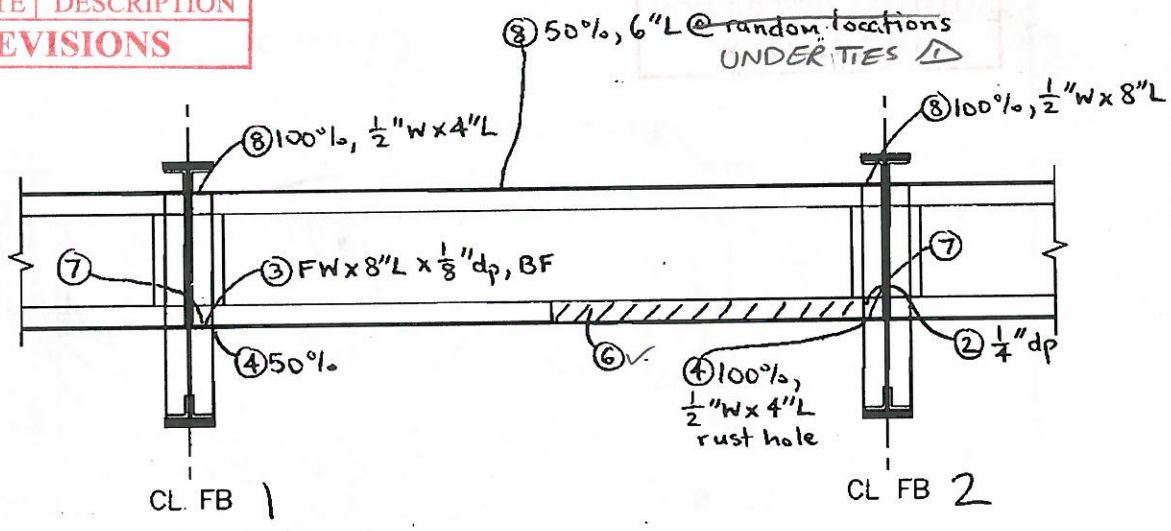


SOUTH ELEVATION

SPAN 7 TRACK 1 & 3 STRINGER 4 (FB 1 TO FB 2)

WSP-SELLS VERIFICATION INSPECTION
07/12/2013 NO REVISION

# FIELD NOTES

Stantec Consulting Services Inc.

| | |
|---|---|
| Bridge No.: | 08080R |
| Project No.: | 301-0099 |
| Crew: | LM & AF |
| Date: 5/4/09 | Sheet No.: 179 |

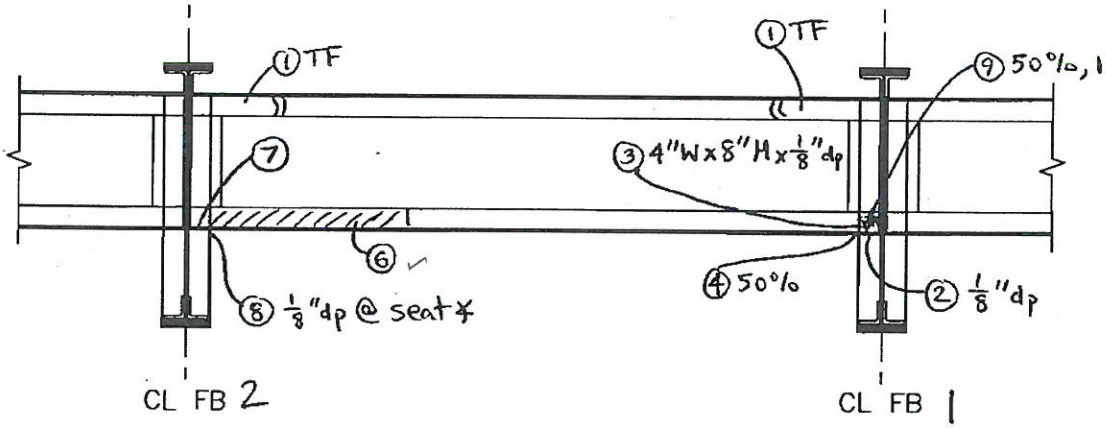


NORTH ELEVATION

| NO. | DATE | DESCRIPTION |
|---|---|---|
| 1 | 9/25/12 | WSP-SELLS ML/MA |

REVISIONS

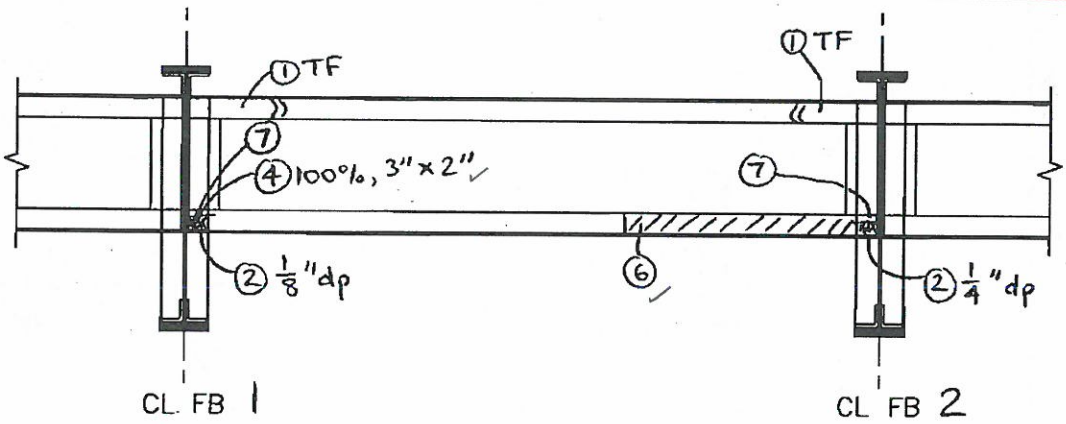


SOUTH ELEVATION

SPAN 7 TRACK 2 & 4 STRINGER 5 (FB 1 TO FB 2 )

WSP-SELLS VERIFICATION INSPECTION
07/12/2013 NO REVISION

# FIELD NOTES

Stantec Consulting Services Inc.

| | |
|---|---|
| Bridge No.: | 08080R |
| Project No.: | 301-0099 |
| Crew: | LM & AF |
| Date: 5/4/09 | Sheet No.: 180 |

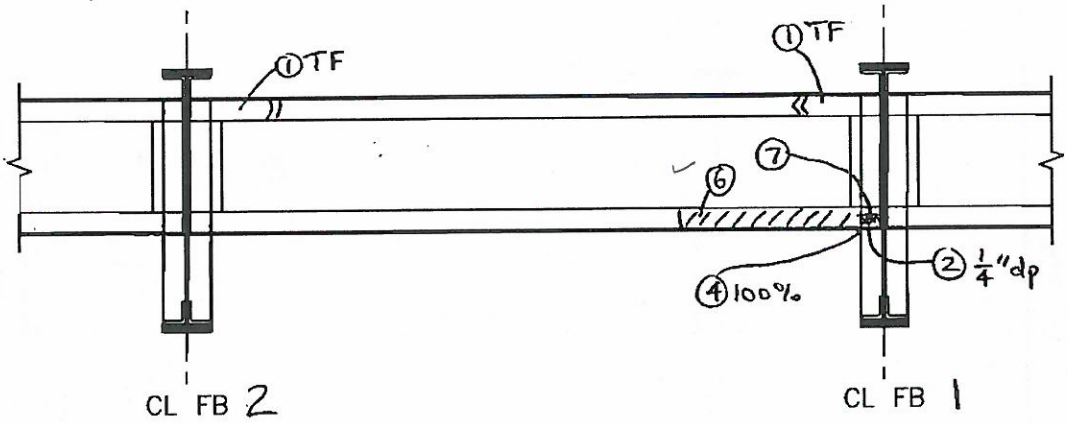


NORTH ELEVATION

| NO. | DATE | DESCRIPTION |
|---|---|---|
| 1 | 9/25/12 | WSP-SELLS MLMA |

REVISIONS

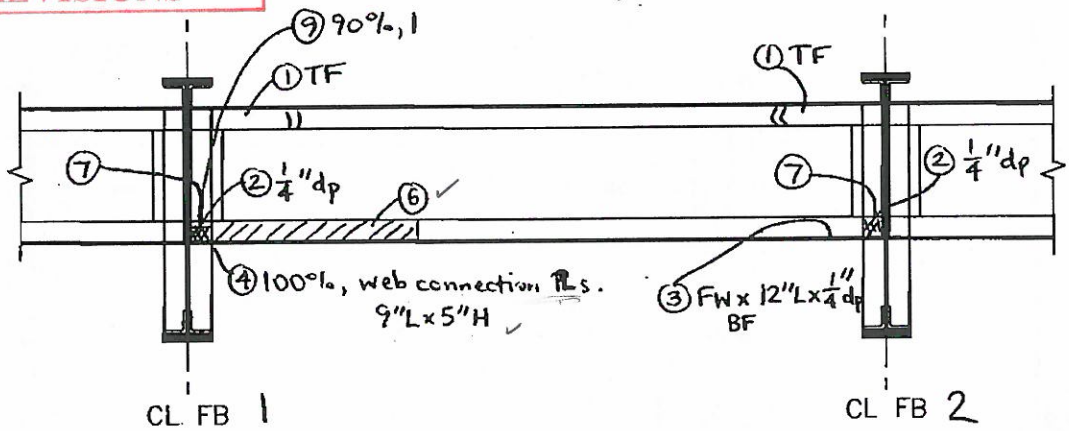


SOUTH ELEVATION

SPAN 7 TRACK 2 & 4 STRINGER 6 (FB 1 TO FB 2)

WSP-SELLS VERIFICATION INSPECTION
07/12/2013 NO REVISION

# FIELD NOTES

Stantec Consulting Services Inc.

| | |
|---|---|
| Bridge No.: | 08080R |
| Project No.: | 301-0099 |
| Crew: | LM & AF |
| Date: 5/4/09 | Sheet No.: 181 |

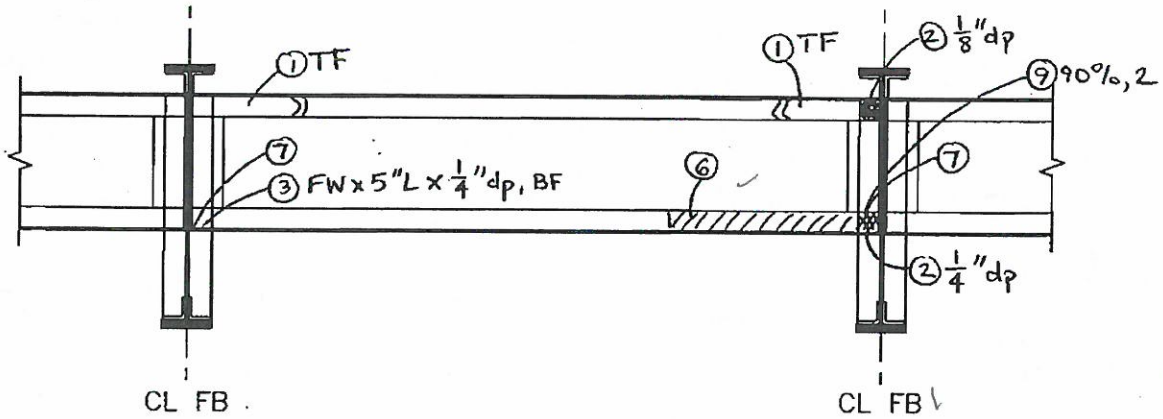


NORTH ELEVATION

| NO. | DATE | DESCRIPTION |
|---|---|---|
| 1 | 9/25/12 | WSP-SELLS MYMA |

REVISIONS

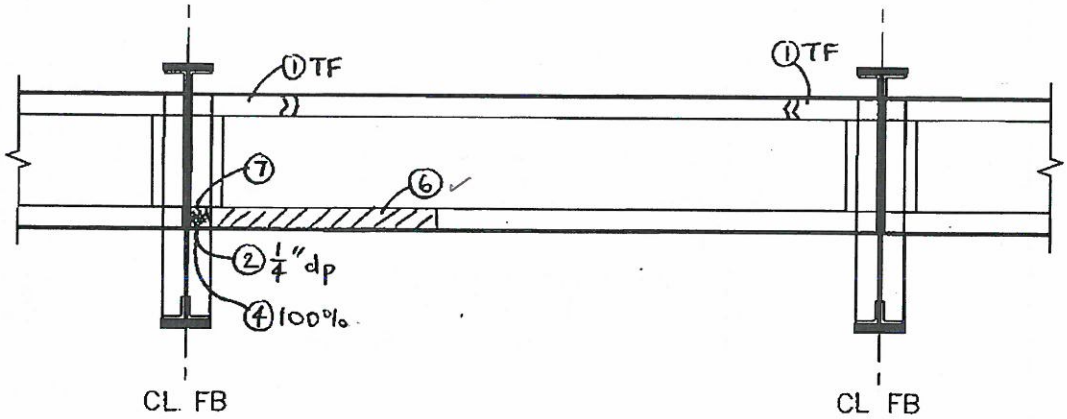


SOUTH ELEVATION

SPAN 7 TRACK 2 & 4 STRINGER 7 (FB 1 TO FB 2 )

WSP-SELLS VERIFICATION INSPECTION
07/12/2013 NO REVISION

# FIELD NOTES

Stantec Consulting Services Inc.

| | |
|---|---|
| Bridge No.: | 08080R |
| Project No.: | 301-0099 |
| Crew: | LM & AF |
| Date: 5/4/09 | Sheet No.: 182 |

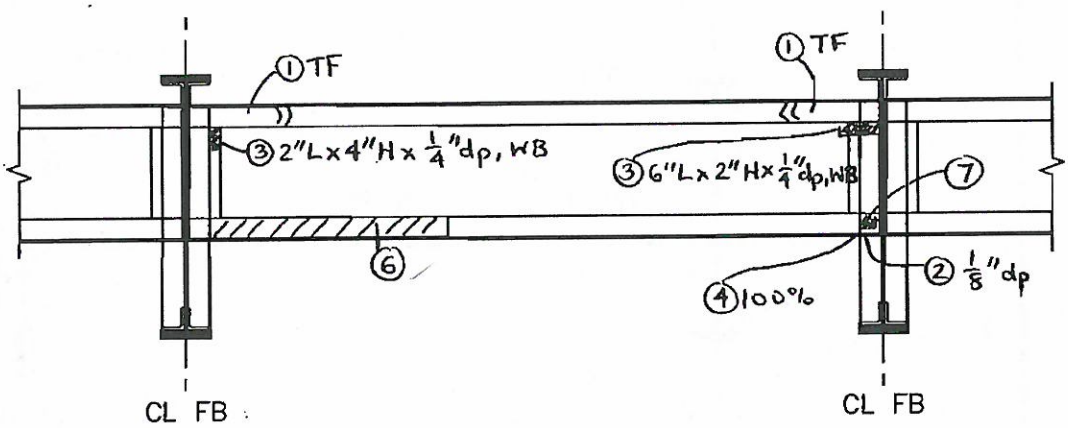


NORTH ELEVATION

| NO. | DATE | DESCRIPTION |
|---|---|---|
| 1 | 9/25/12 | WSP-SELLS ML, MA |

REVISIONS

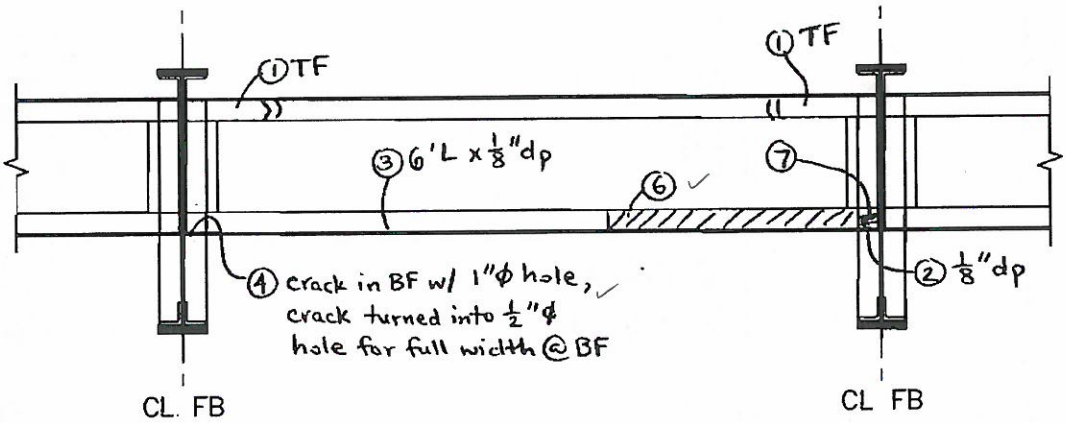


SOUTH ELEVATION

SPAN 7 TRACK 2 & 4 STRINGER 8 (FB 1 TO FB 2)

WSP-SELLS VERIFICATION INSPECTION
07/12/2013

2

# FIELD NOTES

Stantec Consulting Services Inc.

| | |
|---|---|
| Bridge No.: | 08080R |
| Project No.: | 301-0099 |
| Crew: | LM & AF |
| Date: 5/4/09 | Sheet No.: 183 |

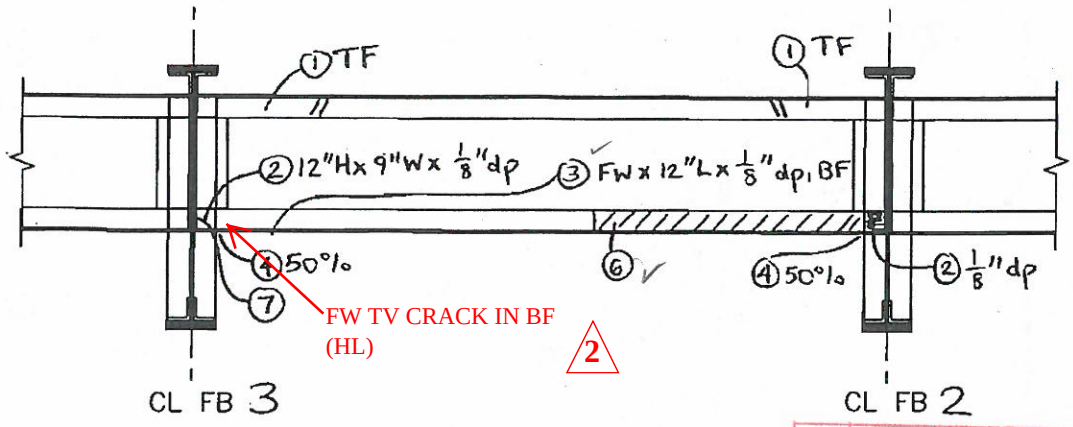


NORTH ELEVATION

| NO. | DATE | DESCRIPTION |
|---|---|---|
| 2 | 5/30/13 | WSP-SELLS; PA, MD |
| 1 | 9/25/12 | WSP-SELLS ML, MA |

REVISIONS

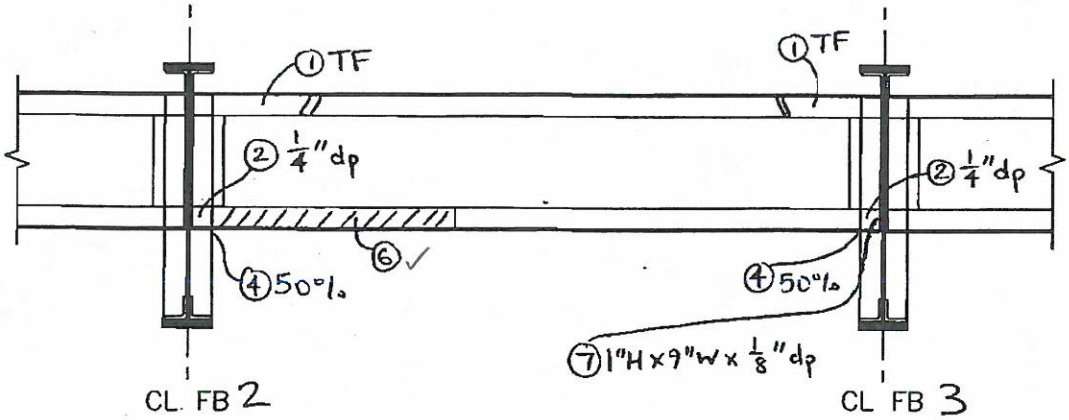


SOUTH ELEVATION

SPAN 7 TRACK 1 & 3 STRINGER 1 (FB 2 TO FB 3 )

WSP-SELLS VERIFICATION INSPECTION
07/12/2013 NO REVISION

# FIELD NOTES

Stantec Consulting Services Inc.

| | |
|---|---|
| Bridge No.: | 08080R |
| Project No.: | 301-0099 |
| Crew: | LM & AF |
| Date: 5/4/09 | Sheet No.: 184 |

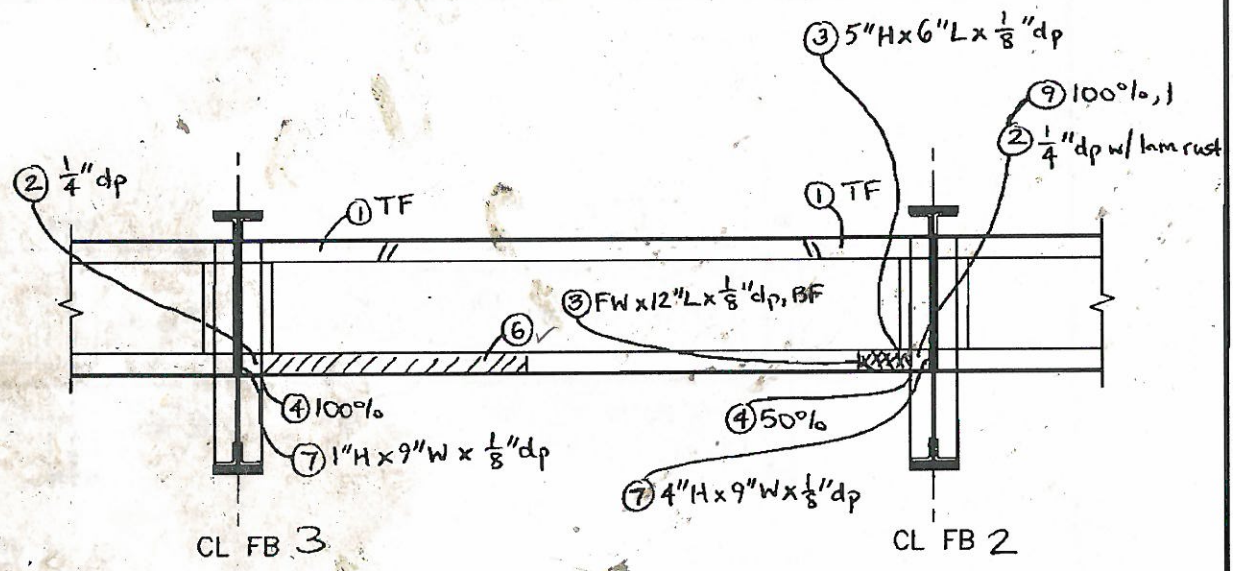


NORTH ELEVATION

| NO. | DATE | DESCRIPTION |
|---|---|---|
| | | |
| | | |
| △ | 9/25/12 | WSP-SELLS ML, MA |

REVISIONS

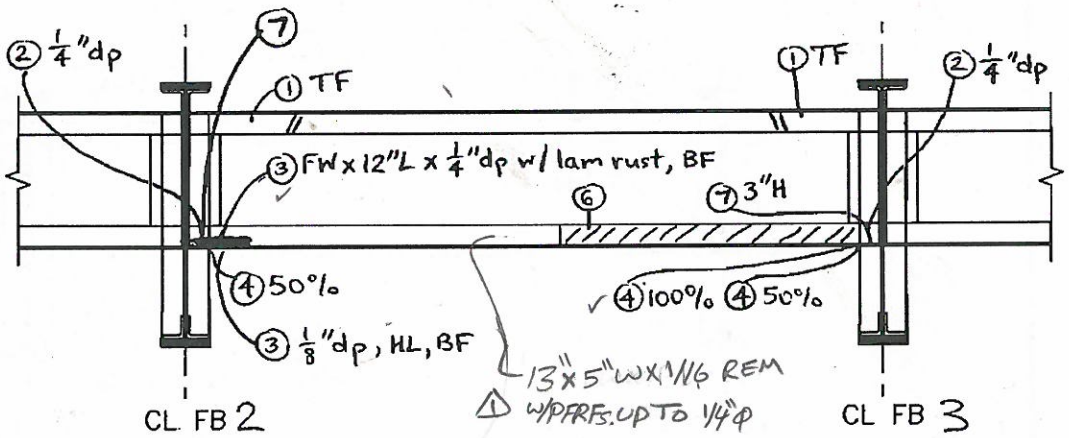


SOUTH ELEVATION

SPAN 7 TRACK 1 & 3 STRINGER 2 (FB 2 TO FB 3 )

2 WSP-SELLS VERIFICATION INSPECTION
07/12/2013

# FIELD NOTES

Stantec Consulting Services Inc.

| | |
|---|---|
| Bridge No.: | 08080R |
| Project No.: | 301-0099 |
| Crew: | LM & AF |
| Date: 5/4/09 | Sheet No.: 185 |

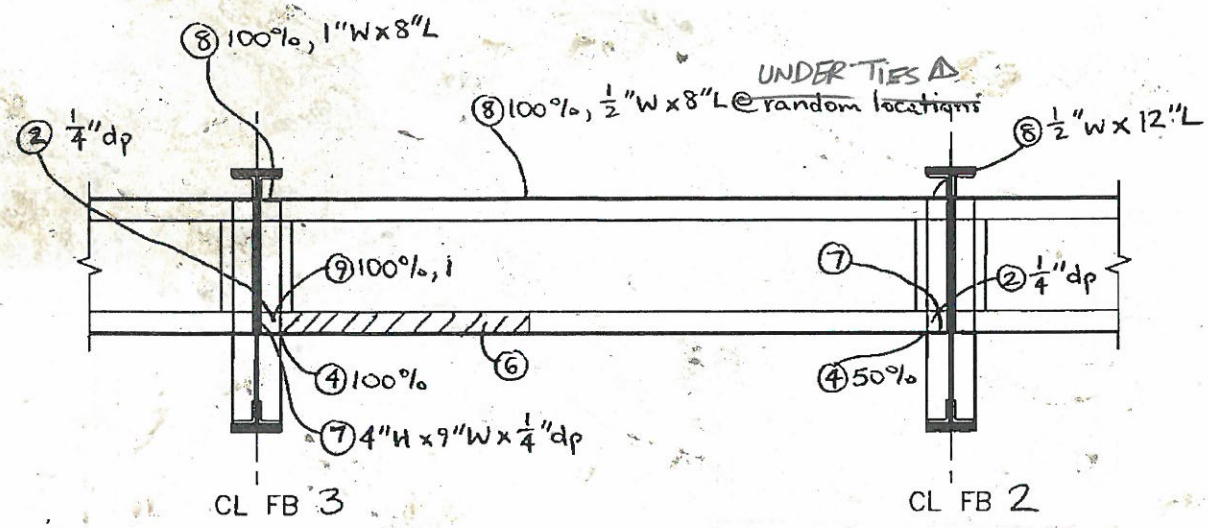


NORTH ELEVATION

| NO. | DATE | DESCRIPTION |
|---|---|---|
| 2 | 5/30/13 | WSP-SELLS; PA, MD |
| 1 | 9/25/12 | WSP-SELLS ML, MA |

REVISIONS

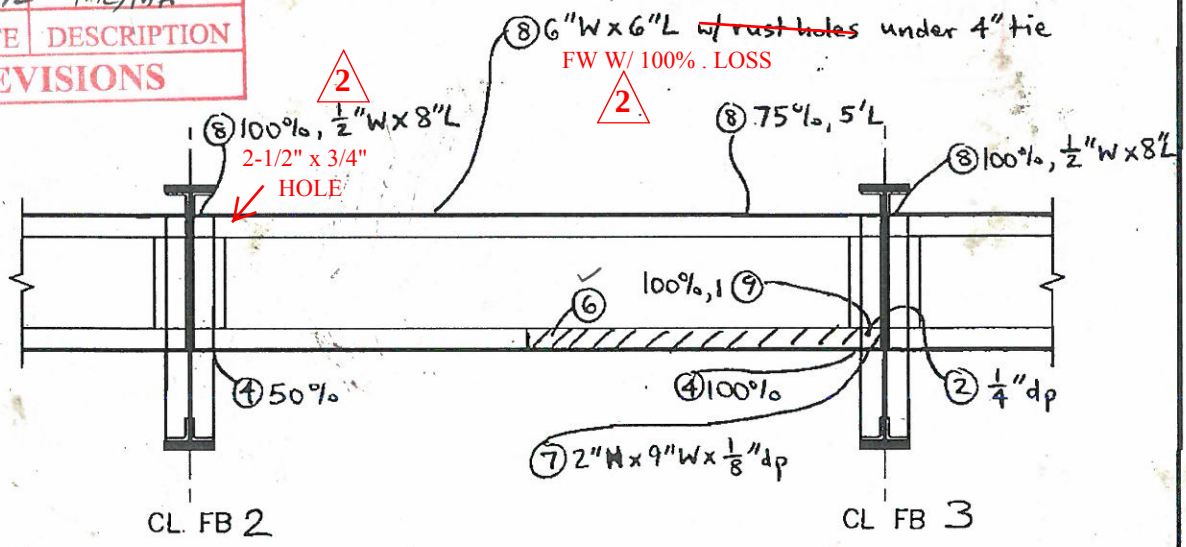


SOUTH ELEVATION

SPAN 7 TRACK 1 & 3 STRINGER 3 (FB 2 TO FB 3 )

WSP-SELLS VERIFICATION INSPECTION
07/12/2013 NO REVISION

# FIELD NOTES

Stantec Consulting Services Inc.

| | |
|---|---|
| Bridge No.: | 08080R |
| Project No.: | 301-0099 |
| Crew: | LM & AF |
| Date: 5/4/09 | Sheet No.: 186 |

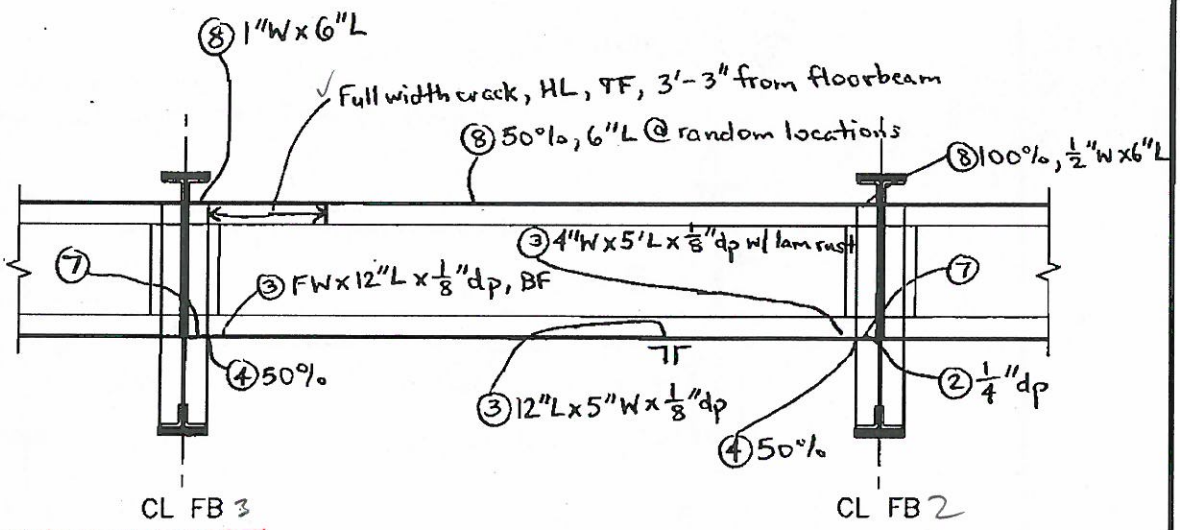


NORTH ELEVATION

| NO. | DATE | DESCRIPTION |
|---|---|---|
| 1 | 9/25/12 | WSP-SELLS MLMA |

REVISIONS

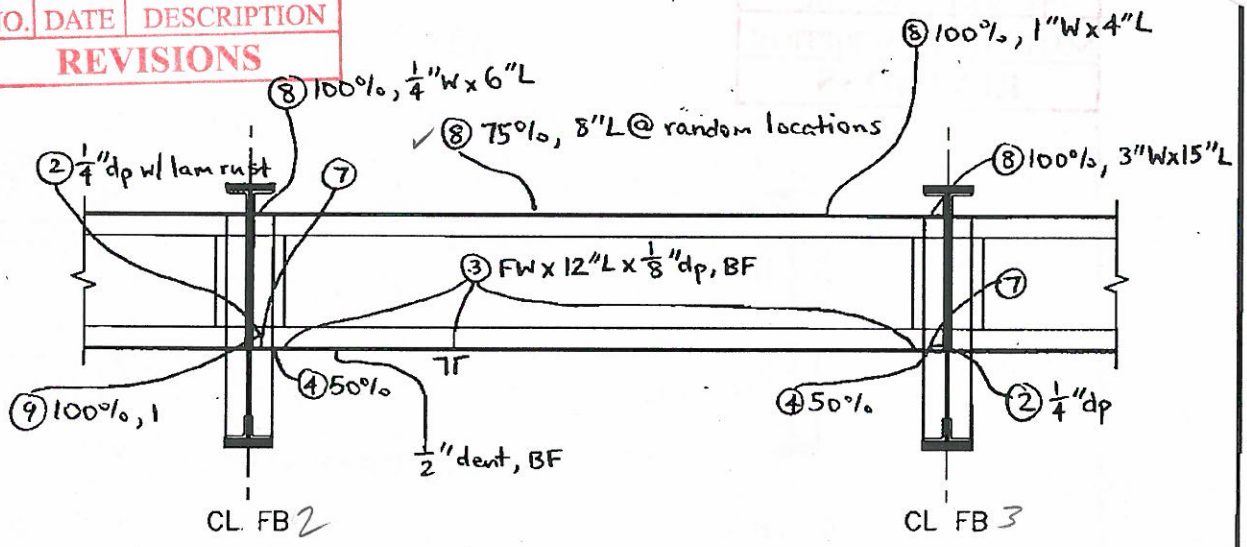


SOUTH ELEVATION

SPAN 7 TRACK 1 & 3 STRINGER 4 (FB 2 TO FB 3)

2 WSP-SELLS VERIFICATION INSPECTION
07/12/2013

# FIELD NOTES

Stantec Consulting Services Inc.

| | |
|---|---|
| Bridge No.: | 08080R |
| Project No.: | 301-0099 |
| Crew: | LM & AF |
| Date: 5/4/09 | Sheet No.: 187 |

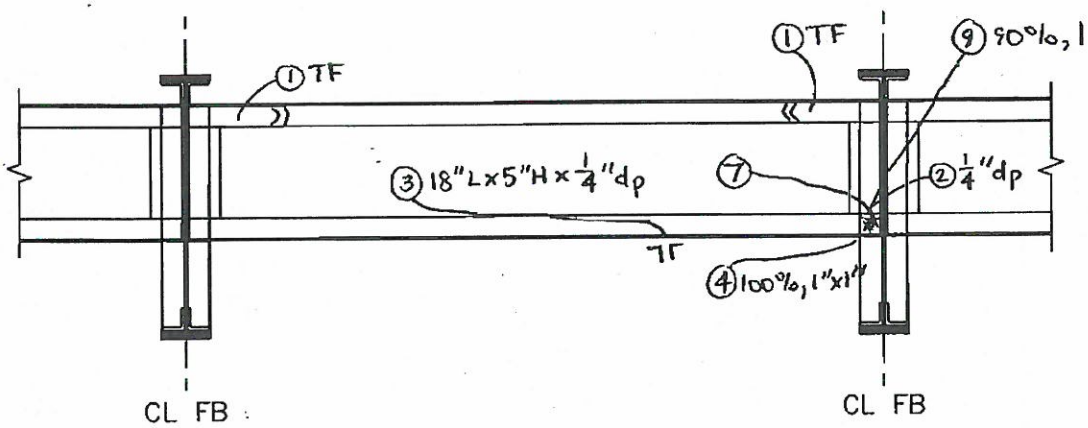


NORTH ELEVATION

| NO. | DATE | DESCRIPTION |
|---|---|---|
| 2 | 5/30/12 | WSP-SELLS; PA,MD |
| 1 | 9/25/13 | WSP-SELLS MLMA |

REVISIONS

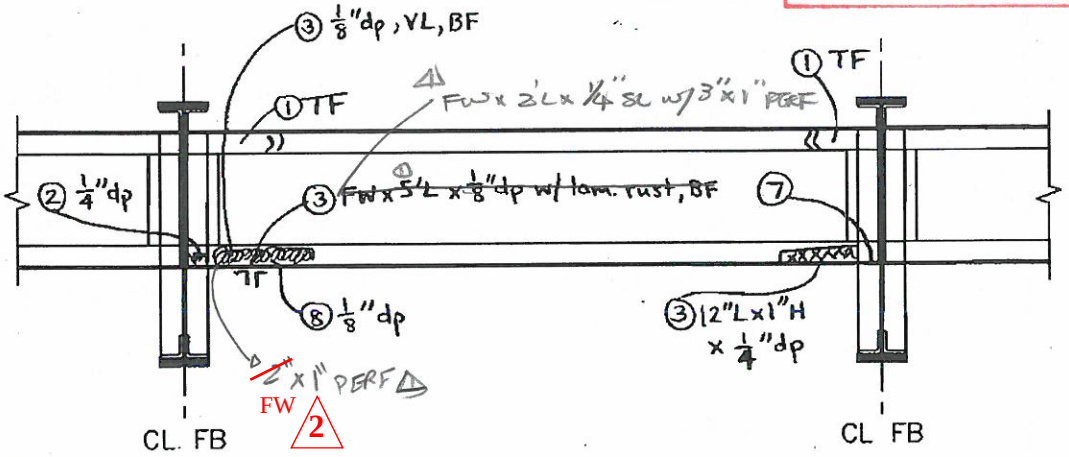


SOUTH ELEVATION

SPAN 7 TRACK 2 & 4 STRINGER 5 (FB 2 TO FB 3)

WSP-SELLS VERIFICATION INSPECTION
07/12/2013 NO REVISION

# FIELD NOTES

Stantec Consulting Services Inc.

| | |
|---|---|
| Bridge No.: | 08080R |
| Project No.: | 301-0099 |
| Crew: | LM & AF |
| Date: 5/4/09 | Sheet No.: 188 |

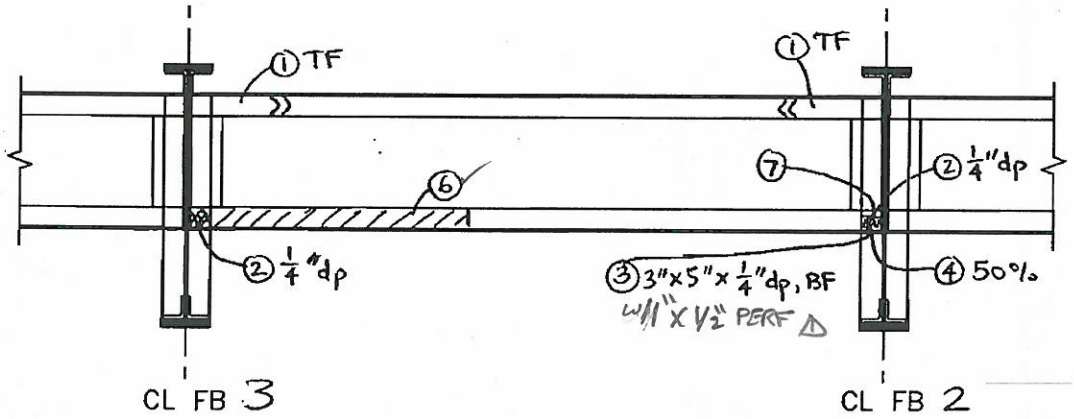


NORTH ELEVATION

| NO. | DATE | DESCRIPTION |
|---|---|---|
| | | |
| | | |
| 1 | 9/25/12 | WSP-SELLS ML MA |

REVISIONS

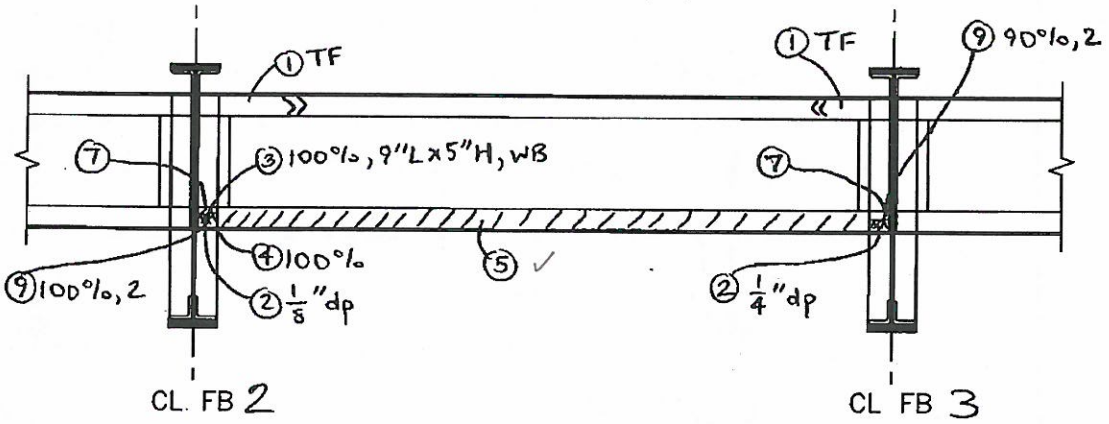


SOUTH ELEVATION

SPAN 7 TRACK 2 & 4 STRINGER 6 (FB 2 TO FB 3 )

WSP-SELLS VERIFICATION INSPECTION
07/12/2013 NO REVISION

# FIELD NOTES

Stantec Consulting Services Inc.

| | |
|---|---|
| Bridge No.: | 08080R |
| Project No.: | 301-0099 |
| Crew: | LM & AF |
| Date: 5/4/09 | Sheet No.: 189 |

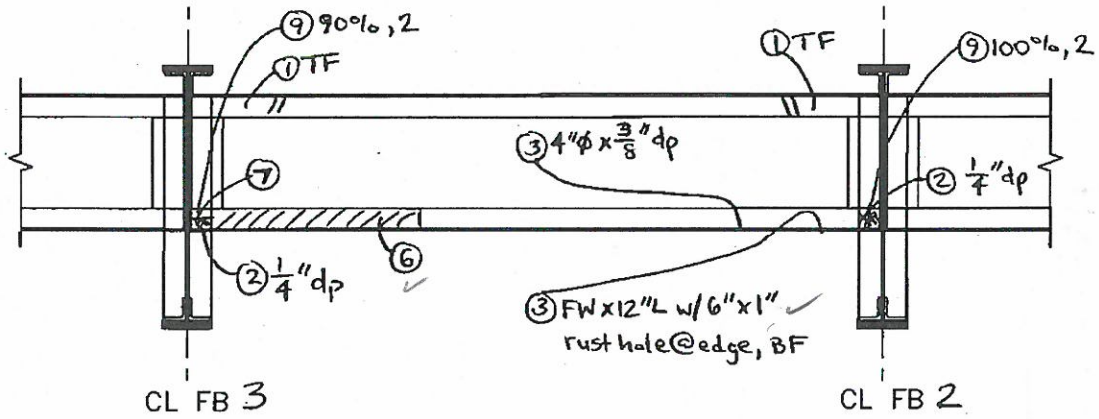


NORTH ELEVATION

| NO. | DATE | DESCRIPTION |
|---|---|---|
| 1 | 9/25/12 | WSP-SELLS MLMA |

REVISIONS

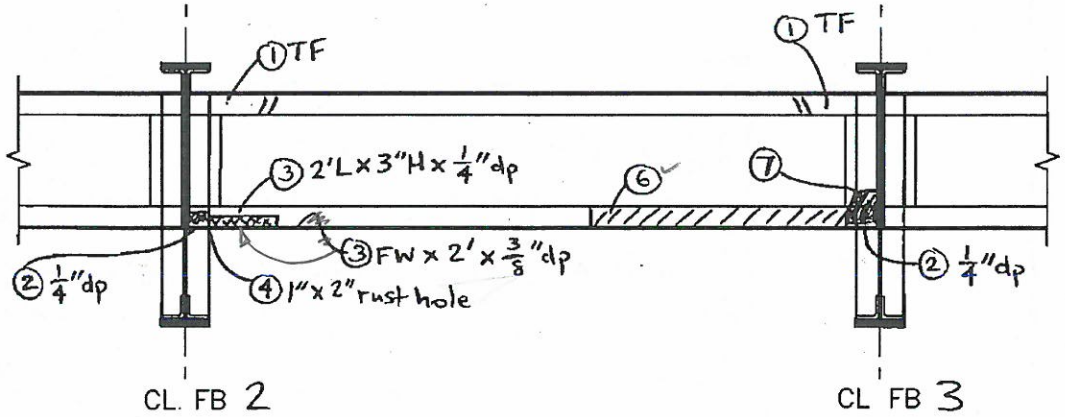


SOUTH ELEVATION

SPAN 7 TRACK 2 & 4 STRINGER 7 (FB 2 TO FB 3 )

WSP-SELLS VERIFICATION INSPECTION
07/12/2013 NO REVISION

# FIELD NOTES

| | |
|---|---|
| Bridge No.: | 08080R |
| Project No.: | 301-0099 |
| Crew: | LM & AF |
| Date: 5/4/09 | Sheet No.: 190 |

Stantec Consulting Services Inc.

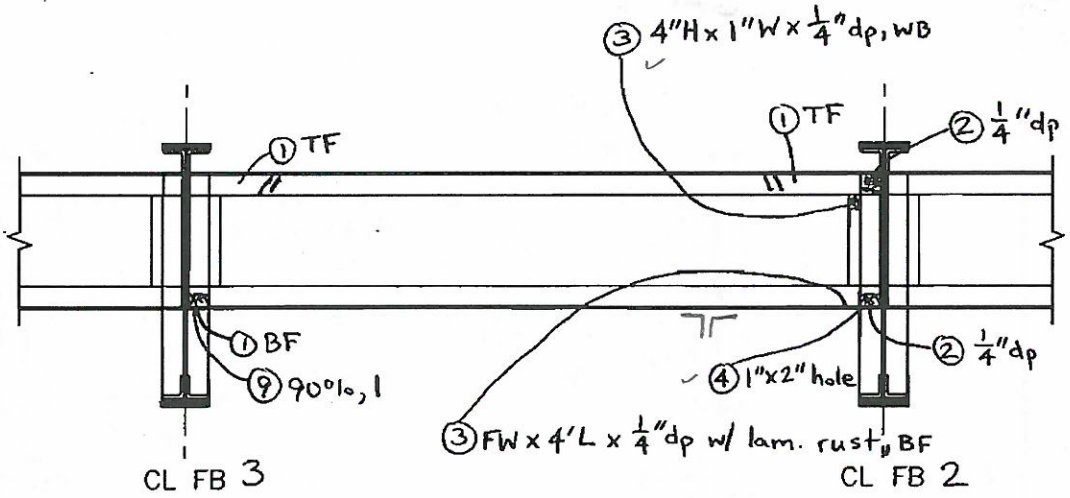


NORTH ELEVATION

| NO. | DATE | DESCRIPTION |
|---|---|---|
| 1 | 9/25/12 | WSP-SELLS MLMA |

REVISIONS

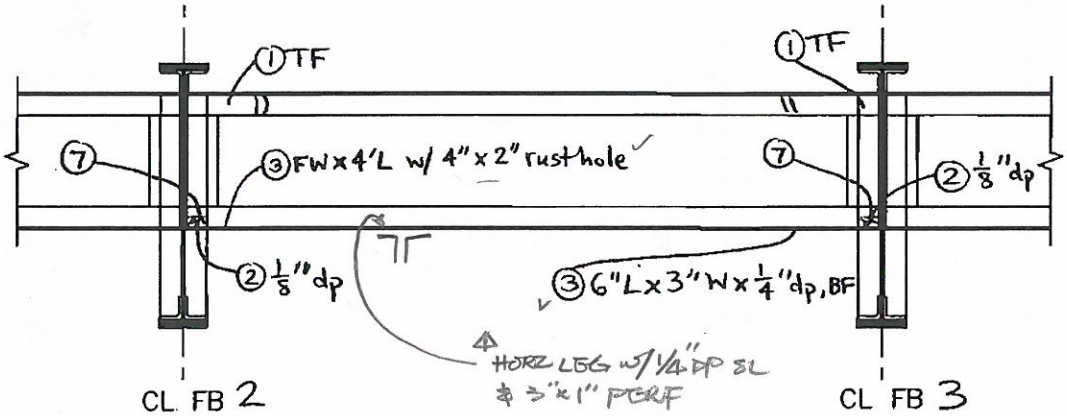


SOUTH ELEVATION

SPAN 7 TRACK 2 & 4 STRINGER 8 (FB 2 TO FB 3 )

WSP-SELLS VERIFICATION INSPECTION
07/12/2013 NO REVISION

# FIELD NOTES

Stantec Consulting Services Inc.

| | |
|---|---|
| Bridge No.: | 08080R |
| Project No.: | 301-0099 |
| Crew: | LM & AF |
| Date: 5/4/09 | Sheet No.: 19 |

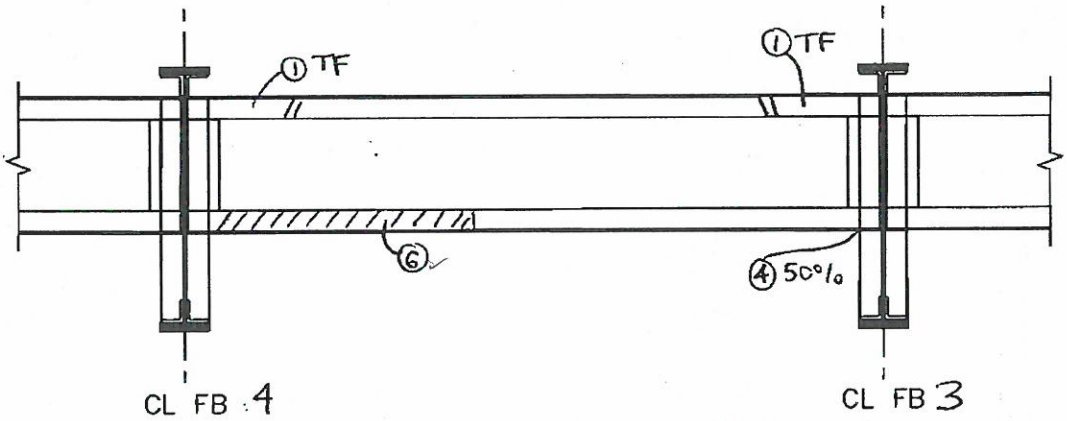


NORTH ELEVATION

| NO. | DATE | DESCRIPTION |
|---|---|---|
| 1 | 9/25/12 | WSP-SELLS ML, MA |

REVISIONS

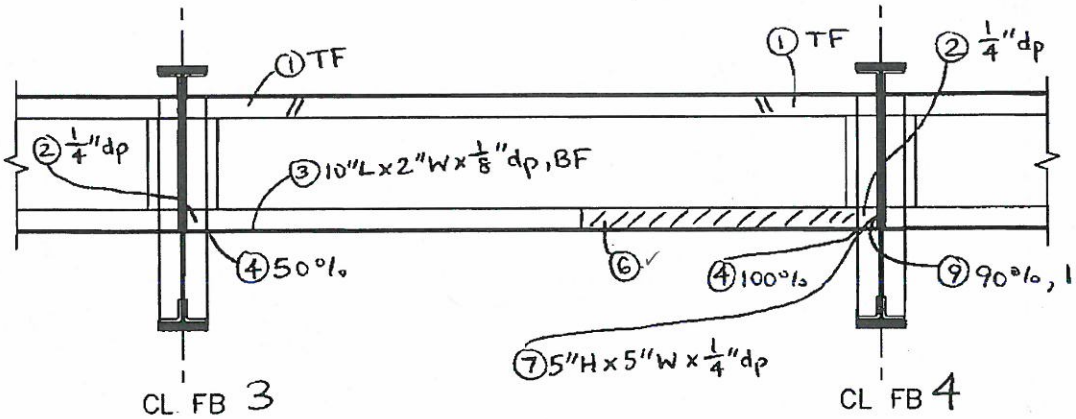


SOUTH ELEVATION

SPAN 7 TRACK 1 & 3 STRINGER 1 (FB 3 TO FB 4 )

2 WSP-SELLS VERIFICATION INSPECTION
07/12/2013

# FIELD NOTES

Stantec Consulting Services Inc.

| | |
|---|---|
| Bridge No.: | 08080R |
| Project No.: | 301-0099 |
| Crew: | LM & AF |
| Date: 5/4/09 | Sheet No.: 192 |

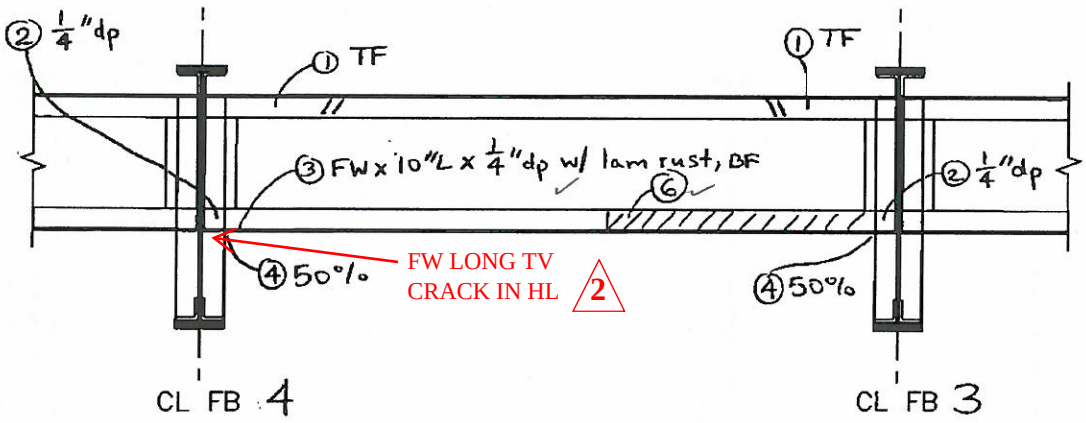


NORTH ELEVATION

| NO. | DATE | DESCRIPTION |
|---|---|---|
| 2 | 5/30/13 | WSP-SELLS; PA, MD |
| 1 | 9/25/12 | WSP-SELLS ML, MA |

REVISIONS

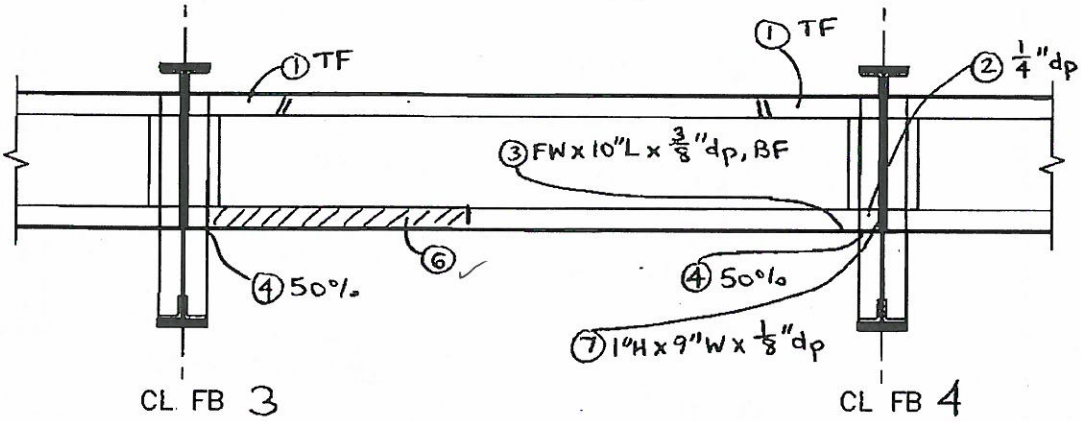


SOUTH ELEVATION

SPAN 7 TRACK 1 & 3 STRINGER 2 (FB 3 TO FB 4)

WSP-SELLS VERIFICATION INSPECTION
07/12/2013 NO REVISION

# FIELD NOTES

Stantec Consulting Services Inc.

| | |
|---|---|
| Bridge No.: | 08080R |
| Project No.: | 301-0099 |
| Crew: | LM & AF |
| Date: 5/4/09 | Sheet No.: 193 |

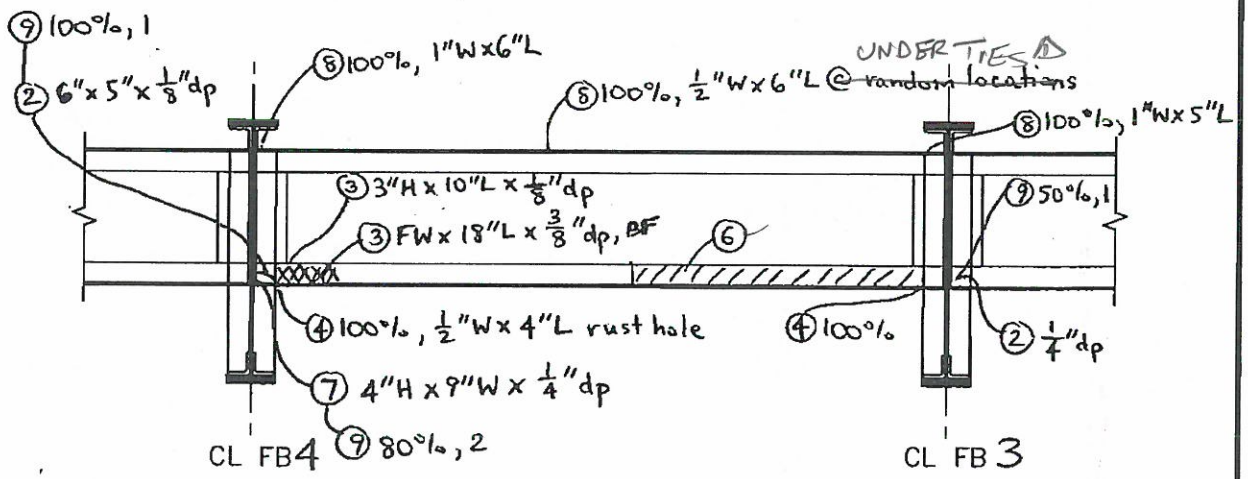


NORTH ELEVATION

| NO. | DATE | DESCRIPTION |
|---|---|---|
| | | |
| | | |
| △1 | 9/25/12 | WSP-SELLS MLMA |

REVISIONS

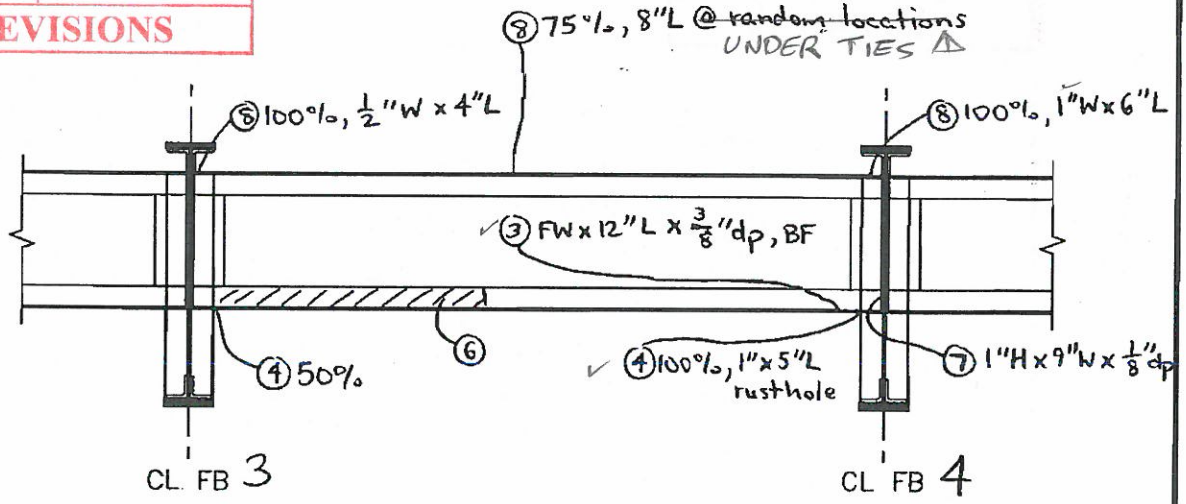


SOUTH ELEVATION

SPAN 7 TRACK 1 & 3 STRINGER 3 (FB 3 TO FB 4 )

WSP-SELLS VERIFICATION INSPECTION
07/12/2013

2

# FIELD NOTES

Stantec Consulting Services Inc.

| | |
|---|---|
| Bridge No.: | 08080R |
| Project No.: | 301-0099 |
| Crew: | LM & AF |
| Date: 5/4/09 | Sheet No.: 194 |

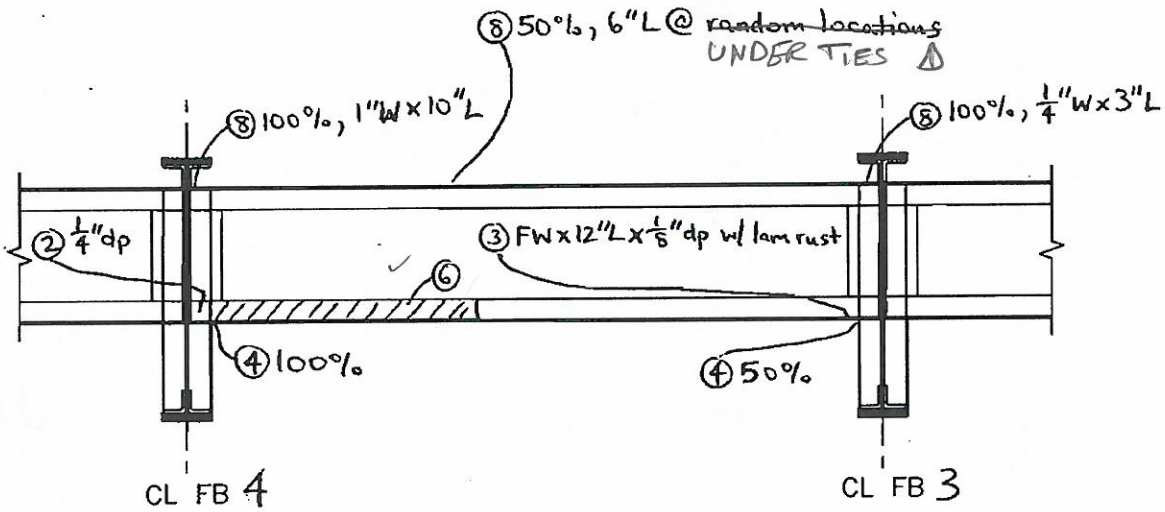


NORTH ELEVATION

| NO. | DATE | DESCRIPTION |
|---|---|---|
| 2 | 5/30/13 | WSP-SELLS; PA, MD |
| 1 | 9/25/12 | WSP-SELLS MLMA |

REVISIONS

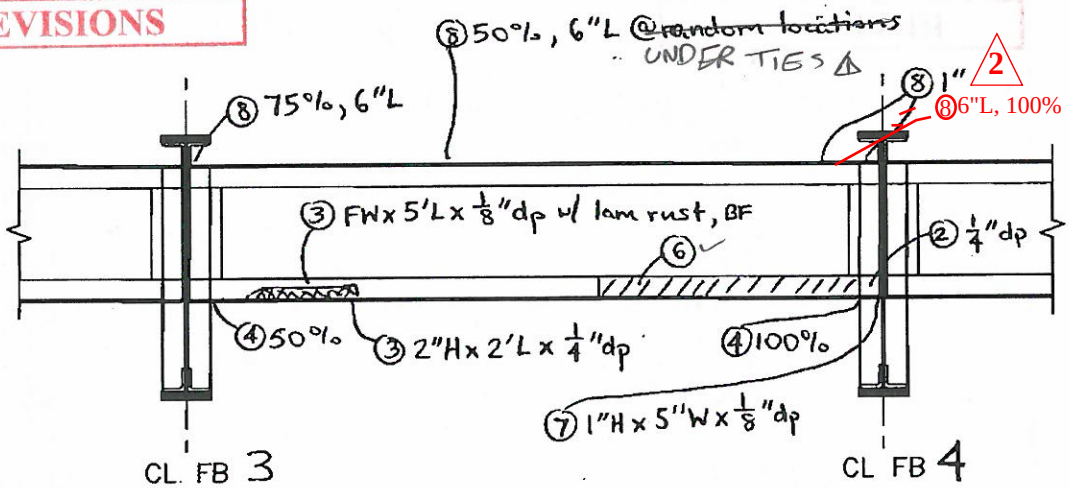


SOUTH ELEVATION

SPAN 7 TRACK 1 & 3 STRINGER 4 (FB 3 TO FB 4 )

WSP-SELLS VERIFICATION INSPECTION
07/12/2013 NO REVISION

# FIELD NOTES

Stantec Consulting Services Inc.

| | |
|---|---|
| Bridge No.: | 08080R |
| Project No.: | 301-0099 |
| Crew: | LM & AF |
| Date: 5/4/09 | Sheet No.: 195 |

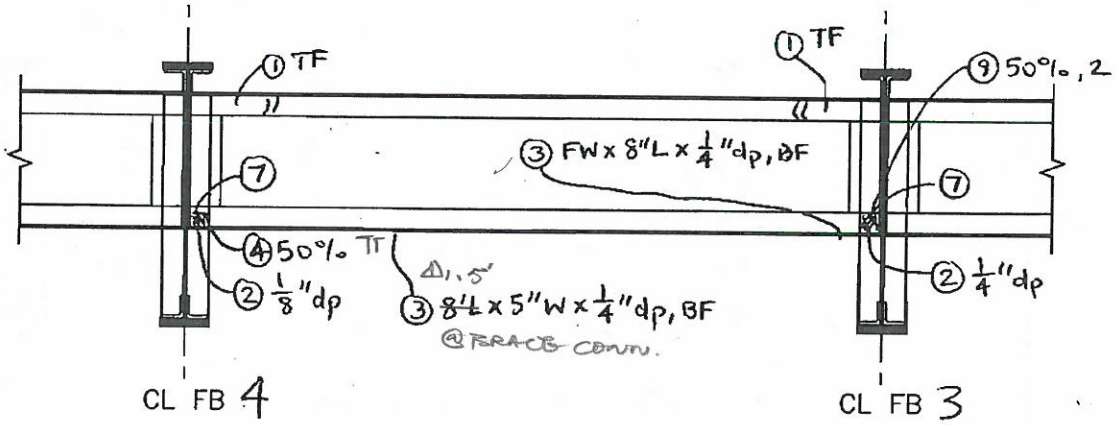


NORTH ELEVATION

| NO. | DATE | DESCRIPTION |
|---|---|---|
| | | |
| | | |
| 1 | 9/25/12 | WSP-SELLS MYMA |

REVISIONS

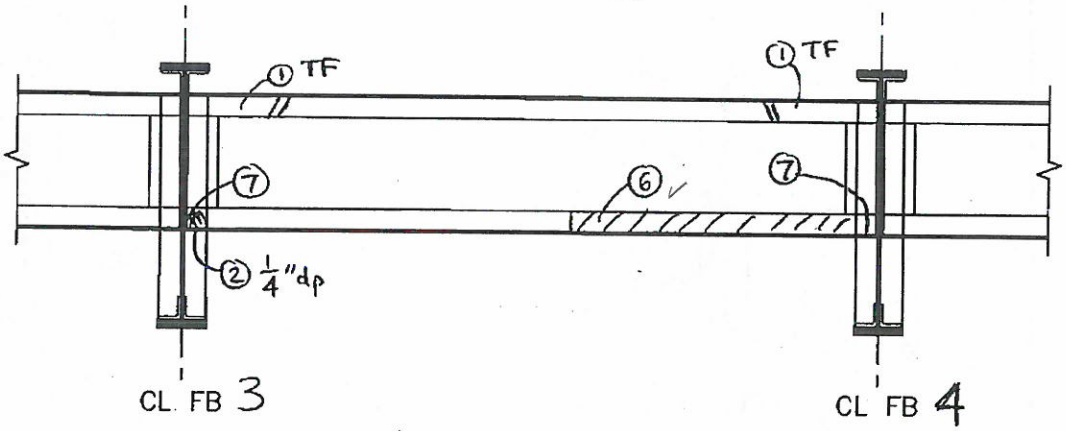


SOUTH ELEVATION

SPAN 7 TRACK 2 & 4 STRINGER 5 (FB 3 TO FB 4 )

WSP-SELLS VERIFICATION INSPECTION
07/12/2013 NO REVISION

# FIELD NOTES

Stantec Consulting Services Inc.

| | |
|---|---|
| Bridge No.: | 08080R |
| Project No.: | 301-0099 |
| Crew: | LM & AF |
| Date: 5/4/09 | Sheet No.: 196 |

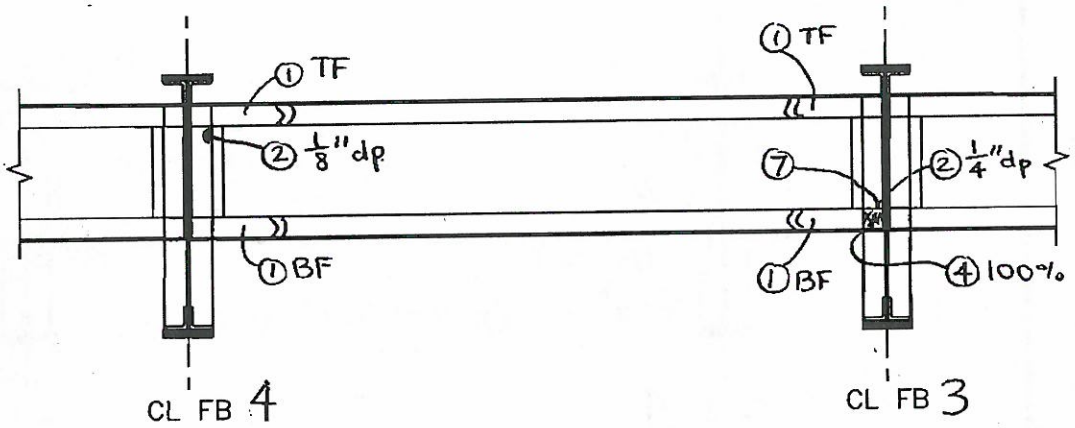


NORTH ELEVATION

| NO. | DATE | DESCRIPTION |
|---|---|---|
| | | |
| | | |
| 1 | 9/25/12 | WSP-SELLS MLMA |

REVISIONS

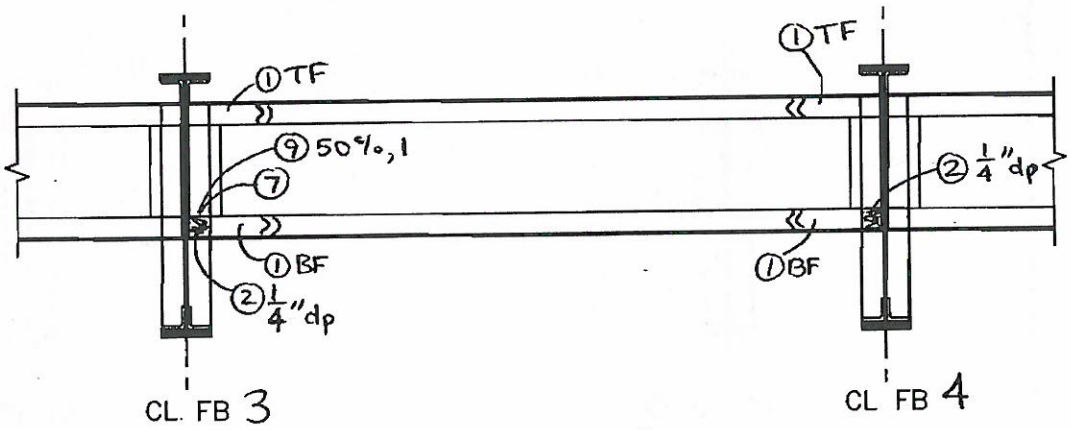


SOUTH ELEVATION

SPAN 7 TRACK 2 & 4 STRINGER 6 (FB 3 TO FB 4 )

WSP-SELLS VERIFICATION INSPECTION
07/12/2013 NO REVISION

# FIELD NOTES

Stantec Consulting Services Inc.

| | |
|---|---|
| Bridge No.: | 08080R |
| Project No.: | 301-0099 |
| Crew: | LM & AF |
| Date: 5/4/09 | Sheet No.: 197 |

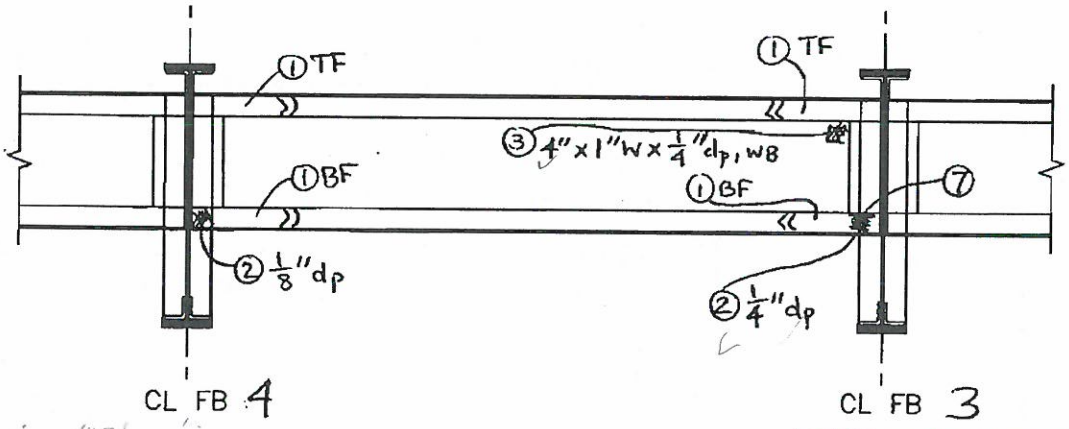


NORTH ELEVATION

| NO. | DATE | DESCRIPTION |
|---|---|---|
| | | |
| | | |
| 1 | 9/25/12 | WSP-SELLS MLMA |

REVISIONS

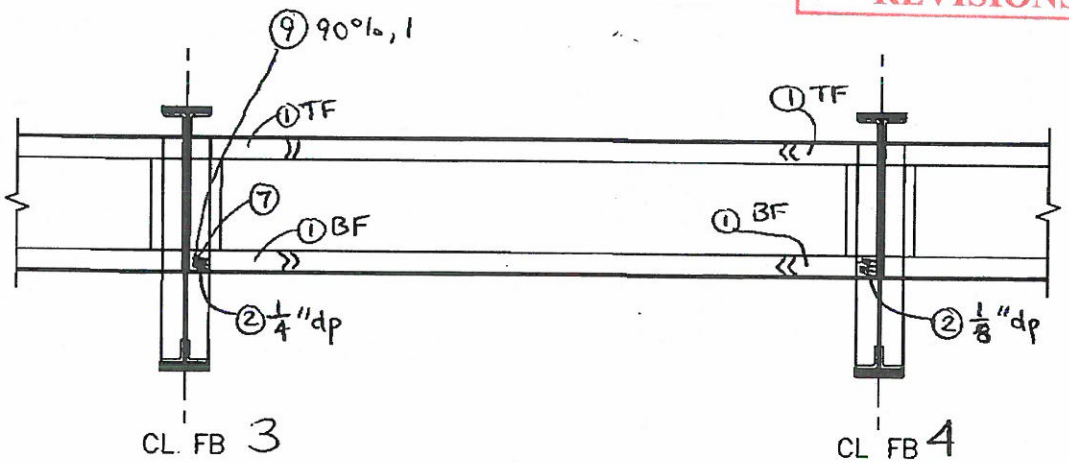


SOUTH ELEVATION

SPAN 7 TRACK 2 & 4 STRINGER 7 (FB 3 TO FB 4 )

WSP-SELLS VERIFICATION INSPECTION
07/12/2013 NO REVISION

# FIELD NOTES

Stantec Consulting Services Inc.

Bridge No.: 08080R
Project No.: 301-0099
Crew: LM & AF
Date: 5/4/09 Sheet No.: 198

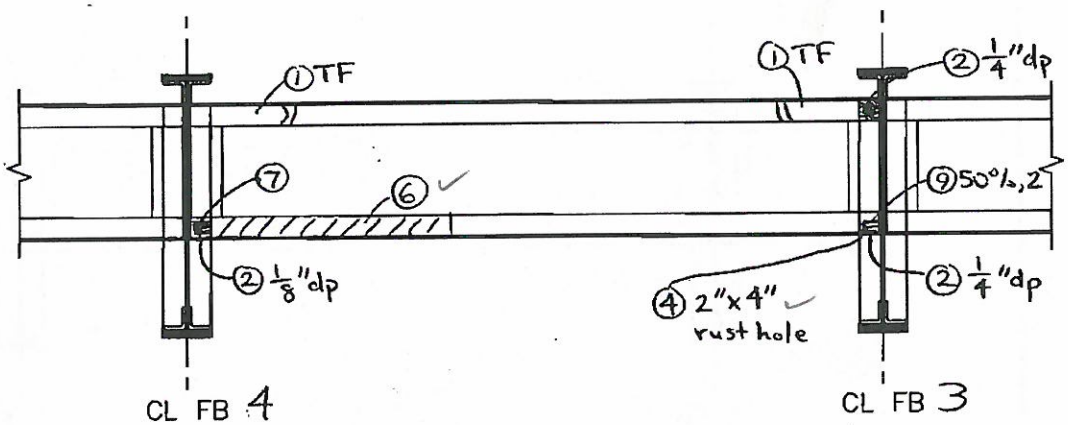


NORTH ELEVATION

| NO. | DATE | DESCRIPTION |
|---|---|---|
| | | |
| | | |
| 1 | 9/25/12 | WSP-SELLS MLO MA |

REVISIONS

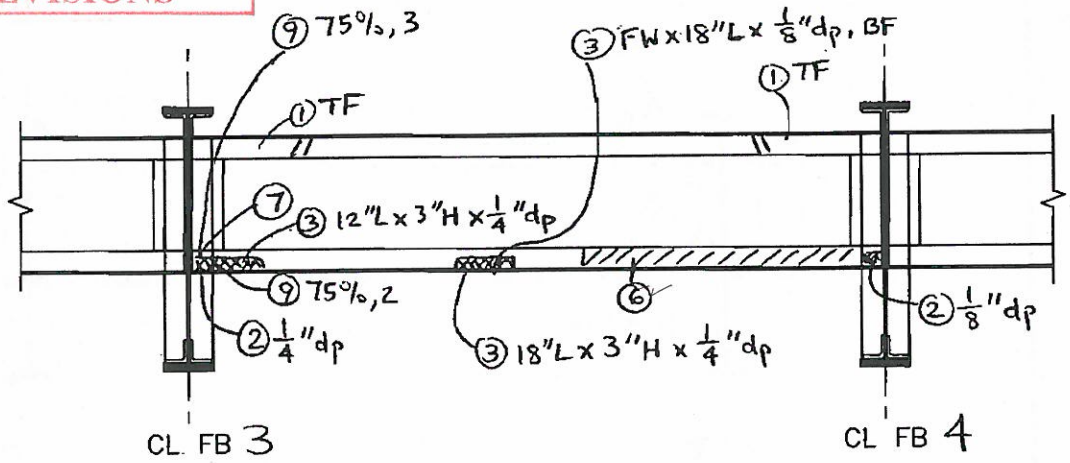


SOUTH ELEVATION

SPAN 7 TRACK 2 & 4 STRINGER 8 (FB 3 TO FB 4 )

WSP-SELLS VERIFICATION INSPECTION
07/12/2013 NO REVISION

# FIELD NOTES

Stantec Consulting Services Inc.

| | |
|---|---|
| Bridge No.: | 08080R |
| Project No.: | 301-0099 |
| Crew: | LM & AF |
| Date: 5/4/09 | Sheet No.: 199 |

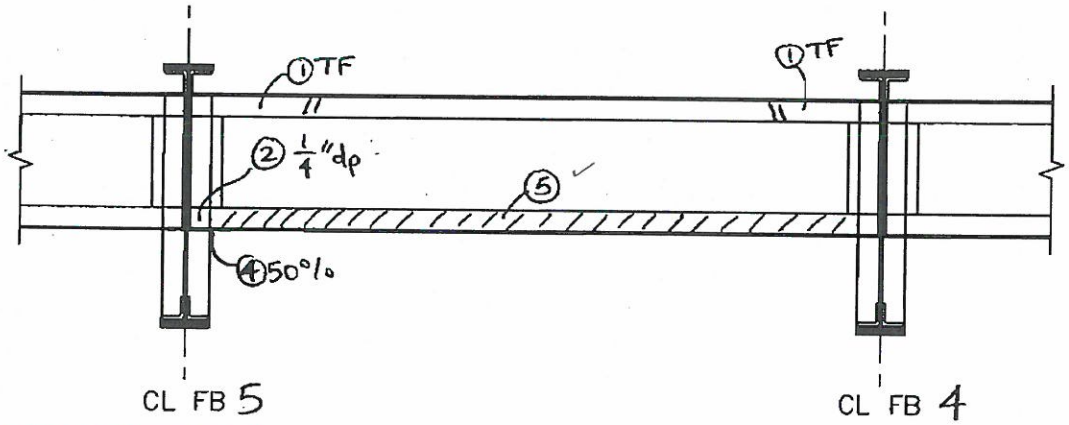


NORTH ELEVATION

| NO. | DATE | DESCRIPTION |
|---|---|---|
| | | |
| | | |
| 1 | 9/25/12 | WSP-SELLS ML/MA |

REVISIONS

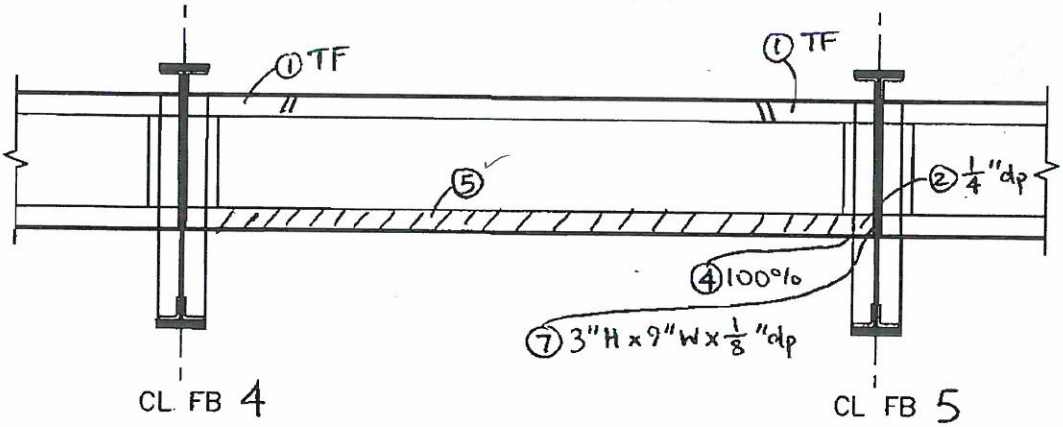


SOUTH ELEVATION

SPAN 7 TRACK 1 & 3 STRINGER 1 (FB4 TO FB5 )

2

WSP-SELLS VERIFICATION INSPECTION
07/12/2013

# FIELD NOTES

Stantec Consulting Services Inc.

| | |
|---|---|
| Bridge No.: | 08080R |
| Project No.: | 301-0099 |
| Crew: | LM & AF |
| Date: 5/4/09 | Sheet No.: 200 |

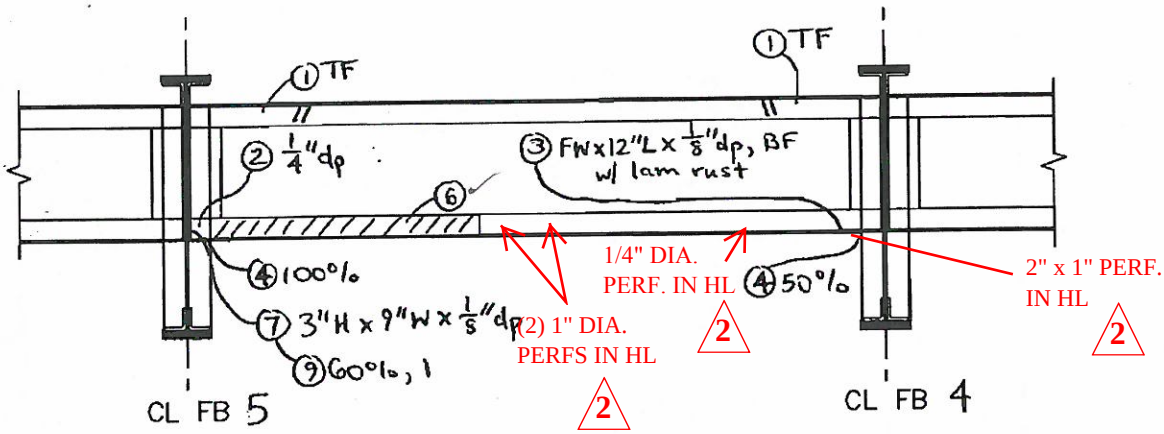


NORTH ELEVATION

| NO. | DATE | DESCRIPTION |
|---|---|---|
| 2 | 5/30/13 | WSP-SELLS; PA, MD |
| 1 | 9/25/12 | WSP-SELLS MI, MA |

REVISIONS

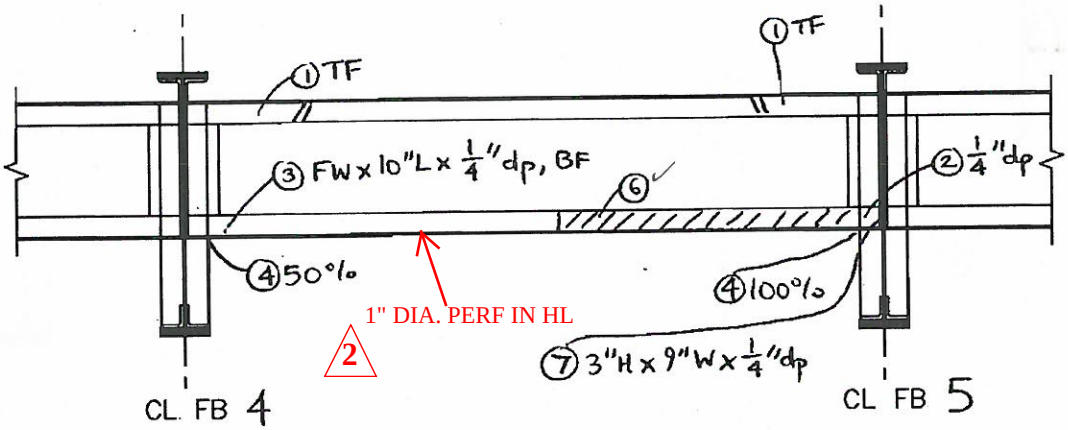


SOUTH ELEVATION

SPAN 7 TRACK 1 & 3 STRINGER 2 (FB4 TO FB5 )

WSP-SELLS VERIFICATION INSPECTION
07/12/2013 NO REVISION

# FIELD NOTES

Stantec Consulting Services Inc.

| | |
|---|---|
| Bridge No.: | 08080R |
| Project No.: | 301-0099 |
| Crew: | LM & AF |
| Date: 5/4/09 | Sheet No.: 201 |

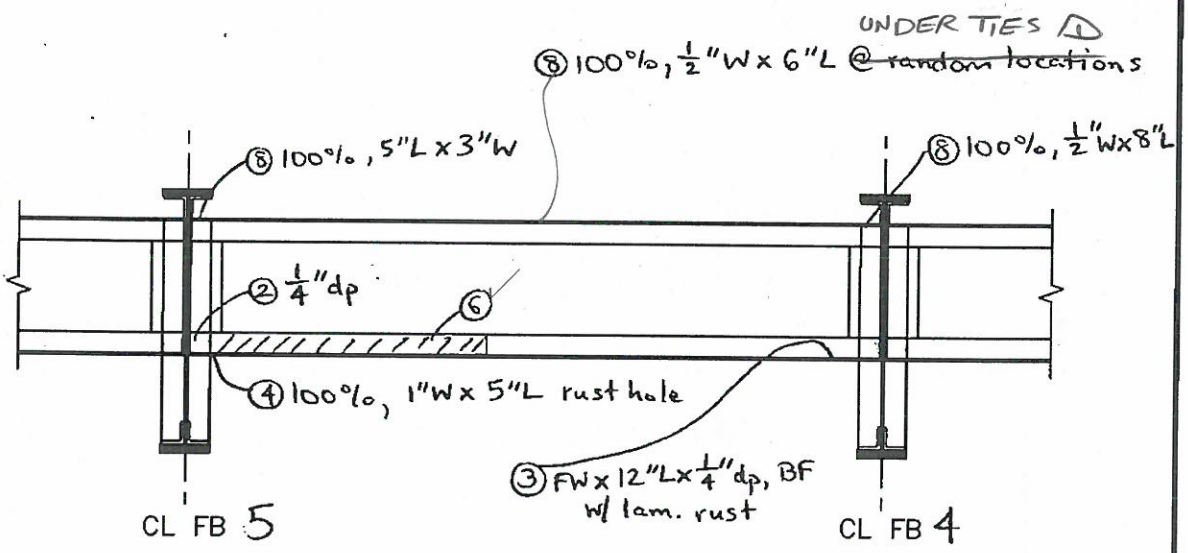


NORTH ELEVATION

| NO. | DATE | DESCRIPTION |
|---|---|---|
| 1 | 9/25/12 | WSP-SELLS MLY MA |

REVISIONS

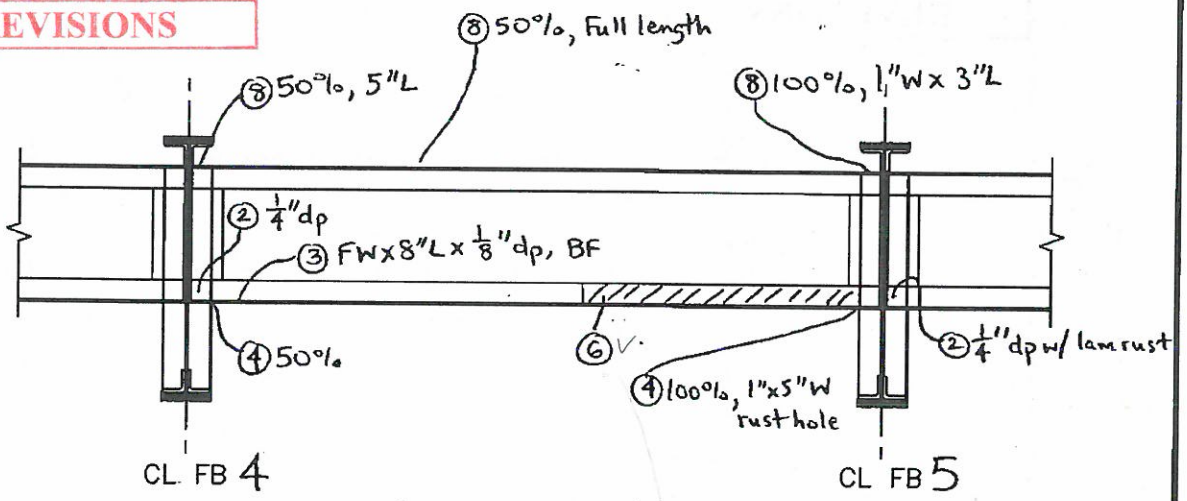


SOUTH ELEVATION

SPAN 7 TRACK 1 & 3 STRINGER 3 (FB 4 TO FB 5 )

WSP-SELLS VERIFICATION INSPECTION
07/12/2013 NO REVISION

# FIELD NOTES

Stantec Consulting Services Inc.

| | |
|---|---|
| Bridge No.: | 08080R |
| Project No.: | 301-0099 |
| Crew: | LM & AF |
| Date: 5/4/09 | Sheet No.: 202 |

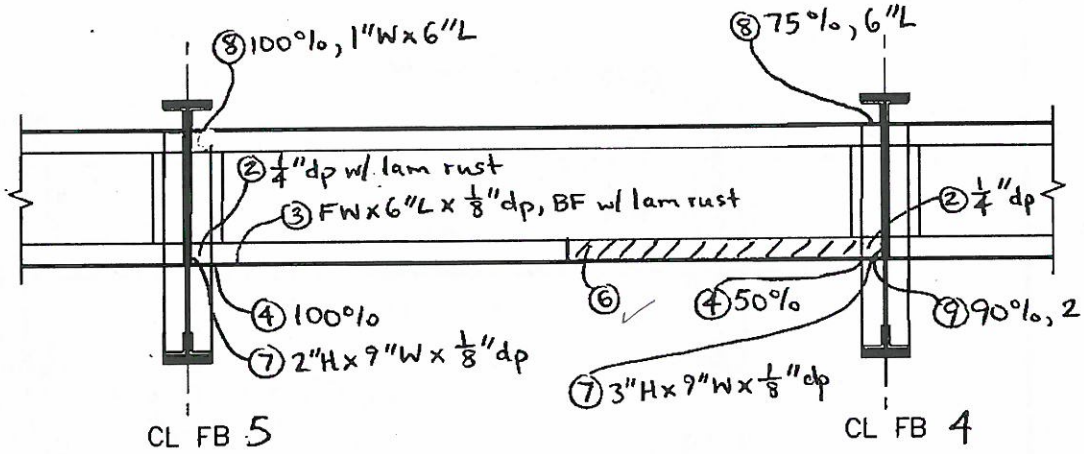


NORTH ELEVATION

| NO. | DATE | DESCRIPTION |
|---|---|---|
| 1 | 9/25/12 | WSP-SELLS MG, MA |

REVISIONS

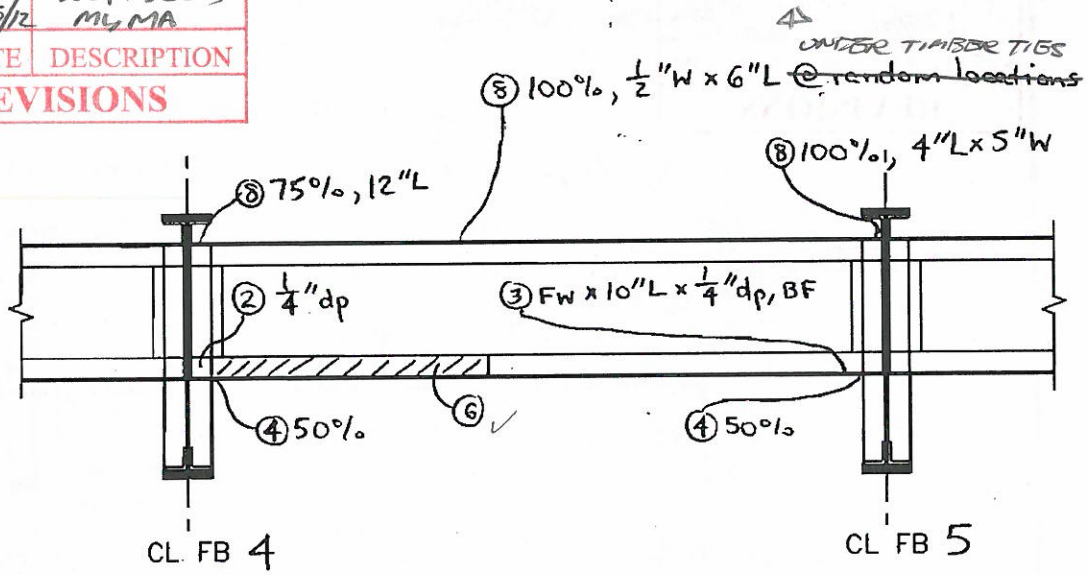


SOUTH ELEVATION

SPAN 7 TRACK 1 & 3 STRINGER 4 (FB 4 TO FB 5 )

2 WSP-SELLS VERIFICATION INSPECTION
07/12/2013

# FIELD NOTES

Stantec Consulting Services Inc.

| | |
|---|---|
| Bridge No.: | 08080R |
| Project No.: | 301-0099 |
| Crew: | LM & AF |
| Date: 5/4/09 | Sheet No.: 203 |

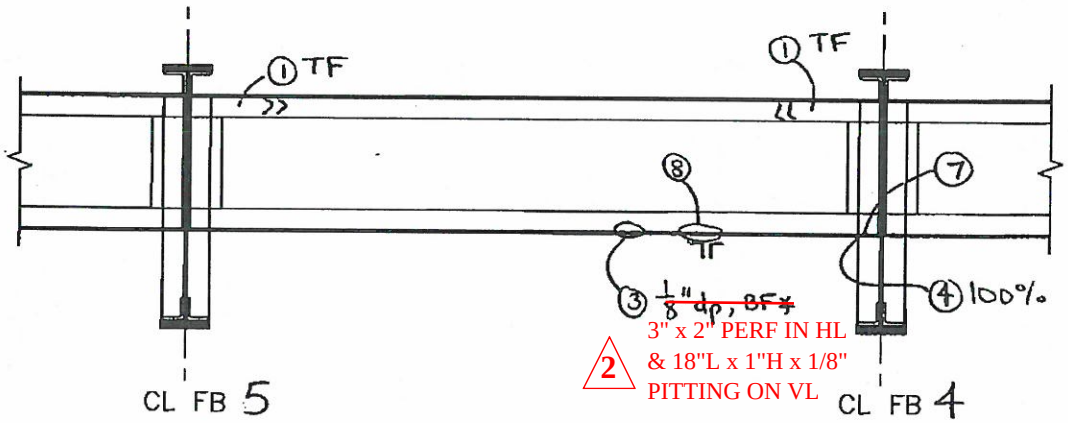


NORTH ELEVATION

| NO. | DATE | DESCRIPTION |
|---|---|---|
| 2 | 5/30/13 | WSP-SELLS; PA, MD |
| 1 | 9/25/12 | WSP-SELLS ML,MA |

REVISIONS

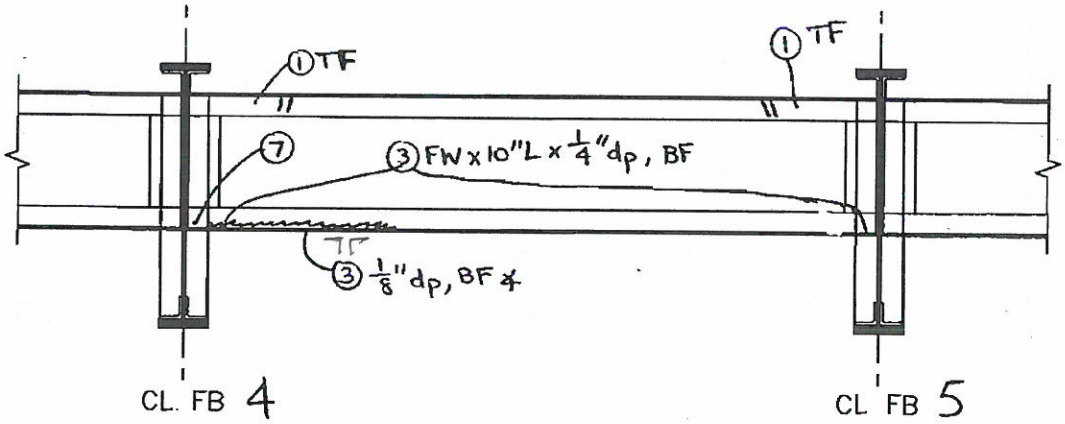


SOUTH ELEVATION

SPAN 7 TRACK 2 & 4 STRINGER 5 (FB 4 TO FB 5 )

WSP-SELLS VERIFICATION INSPECTION
07/12/2013 NO REVISION

# FIELD NOTES

Stantec Consulting Services Inc.

| | |
|---|---|
| Bridge No.: | 08080R |
| Project No.: | 301-0099 |
| Crew: | LM & AF |
| Date: 5/4/09 | Sheet No.: 204 |

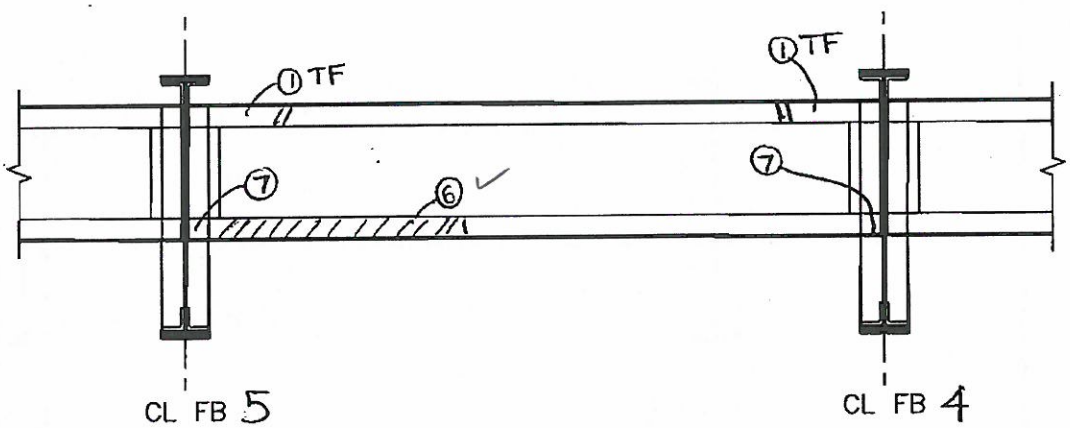


NORTH ELEVATION

| NO. | DATE | DESCRIPTION |
|---|---|---|
| 1 | 9/25/12 | WSP-SELLS ML, MA |

REVISIONS

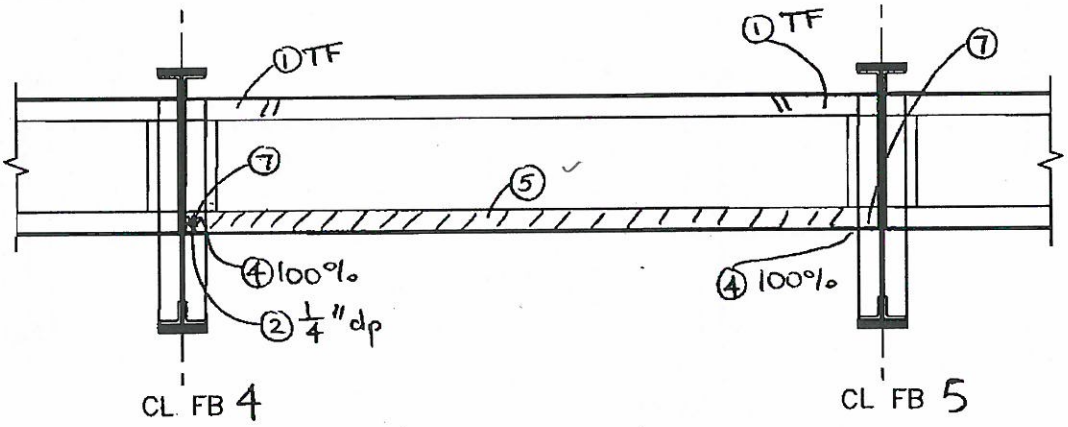


SOUTH ELEVATION

SPAN 7 TRACK 2 & 4 STRINGER 6 (FB 4 TO FB 5 )

WSP-SELLS VERIFICATION INSPECTION
07/12/2013 NO REVISION

# FIELD NOTES

Stantec Consulting Services Inc.

| | |
|---|---|
| Bridge No.: | 08080R |
| Project No.: | 301-0099 |
| Crew: | LM & AF |
| Date: 5/4/09 | Sheet No.: 205 |

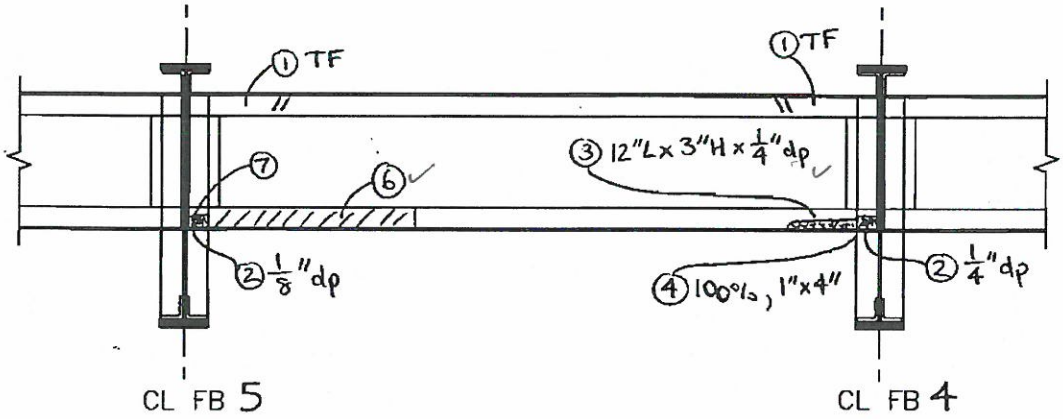


NORTH ELEVATION

| NO. | DATE | DESCRIPTION |
|---|---|---|
| | | |
| | | |
| 1 | 9/25/12 | WSP-SELLS MY, MA |

REVISIONS

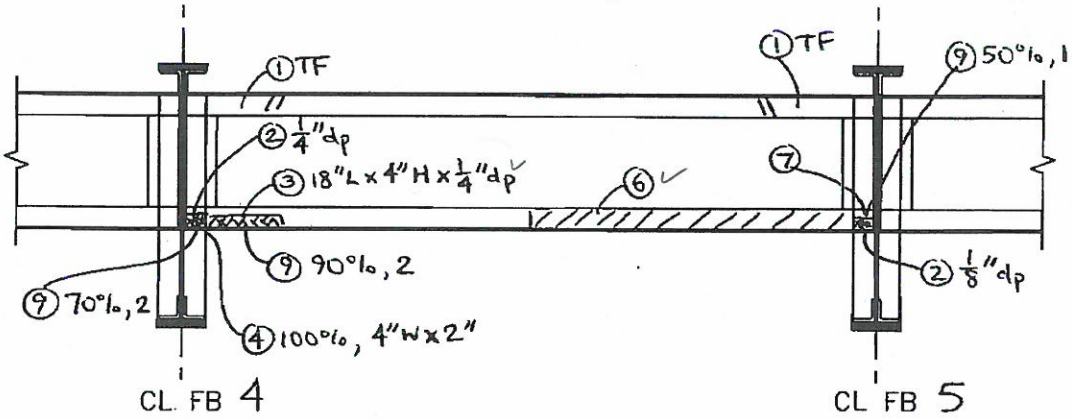


SOUTH ELEVATION

SPAN 7 TRACK 2 & 4 STRINGER 7 (FB4 TO FB5 )

WSP-SELLS VERIFICATION INSPECTION
07/12/2013 NO REVISION

# FIELD NOTES

Stantec Consulting Services Inc.

| | |
|---|---|
| Bridge No.: | 08080R |
| Project No.: | 301-0099 |
| Crew: | LM & AF |
| Date: 5/4/09 | Sheet No.: 206 |

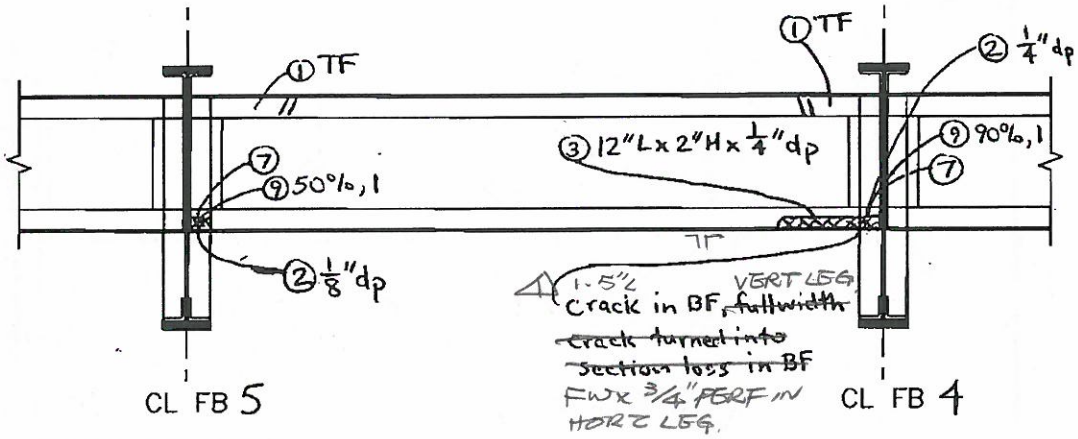


NORTH ELEVATION

| NO. | DATE | DESCRIPTION |
|---|---|---|
| 1 | 9/25/12 | WSP-SELLS MYMA |

REVISIONS

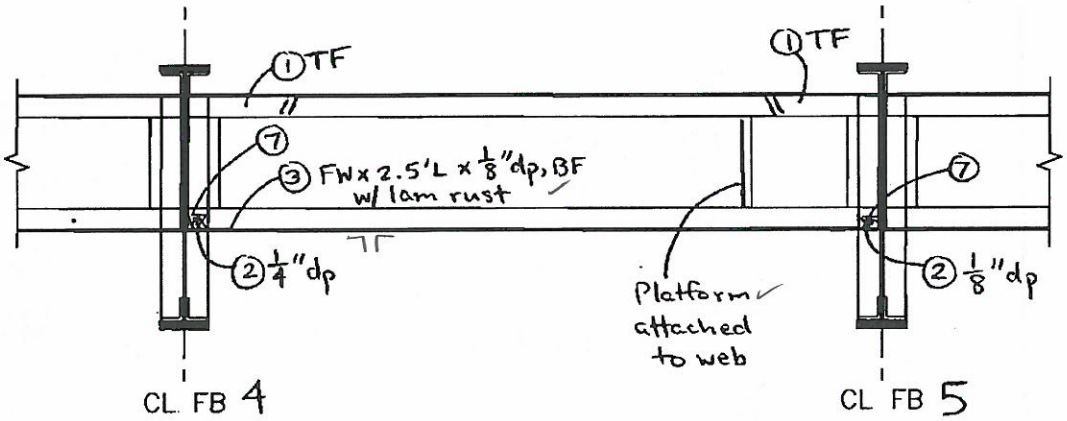


SOUTH ELEVATION

SPAN 7 TRACK 2 & 4 STRINGER 8 (FB 4 TO FB 5 )

2 WSP-SELLS VERIFICATION INSPECTION
07/12/2013

# FIELD NOTES

Stantec Consulting Services Inc.

| | |
|---|---|
| Bridge No.: | 08080R |
| Project No.: | 301-0099 |
| Crew: | LM & AF |
| Date: 5/4/09 | Sheet No.: 207 |

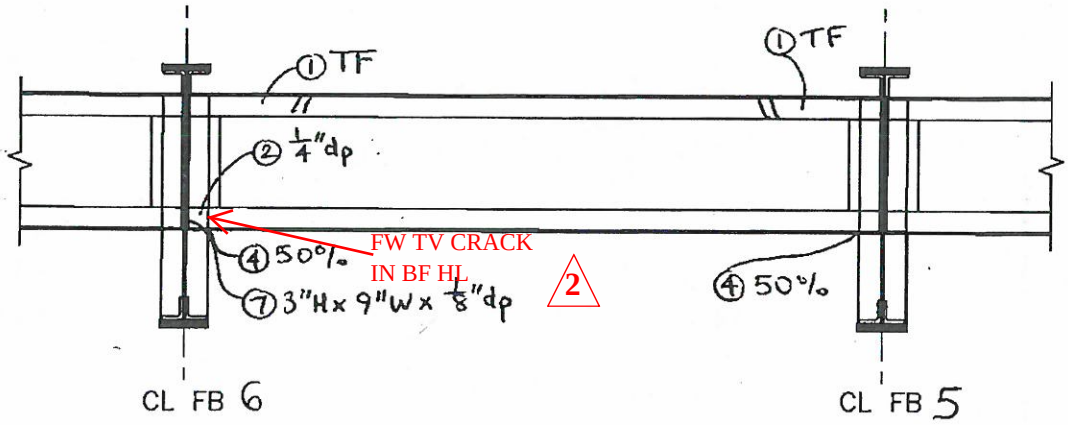


NORTH ELEVATION

| NO. | DATE | DESCRIPTION |
|---|---|---|
| 2 | 5/31/13 | WSP-SELLS; PA,MD |
| 1 | 9/25/12 | WSP-SELLS MY,MA |

REVISIONS

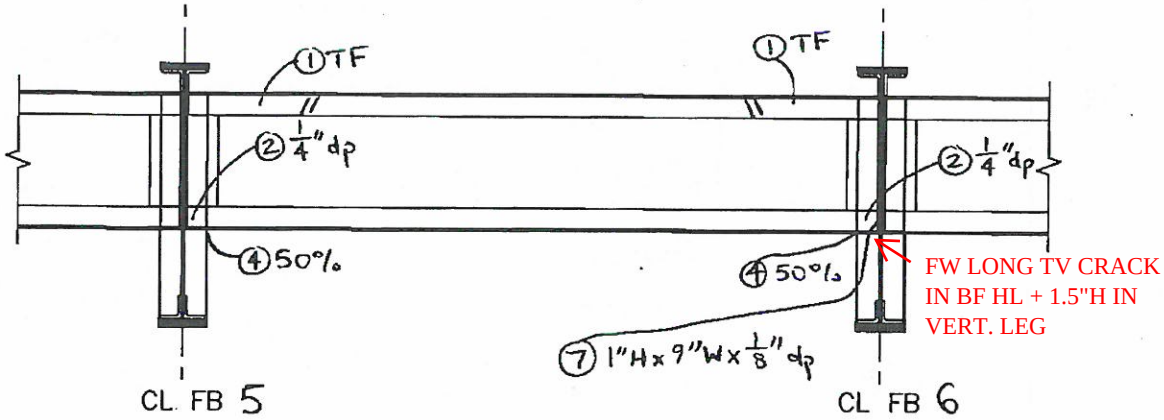


SOUTH ELEVATION

SPAN 7 TRACK 1 & 3 STRINGER 1 (FB 5 TO FB 6)

2

WSP-SELLS VERIFICATION INSPECTION
07/12/2013

# FIELD NOTES

Stantec Consulting Services Inc.

| | |
|---|---|
| Bridge No.: | 08080R |
| Project No.: | 301-0099 |
| Crew: | LM & AF |
| Date: 5/4/09 | Sheet No.: 208 |

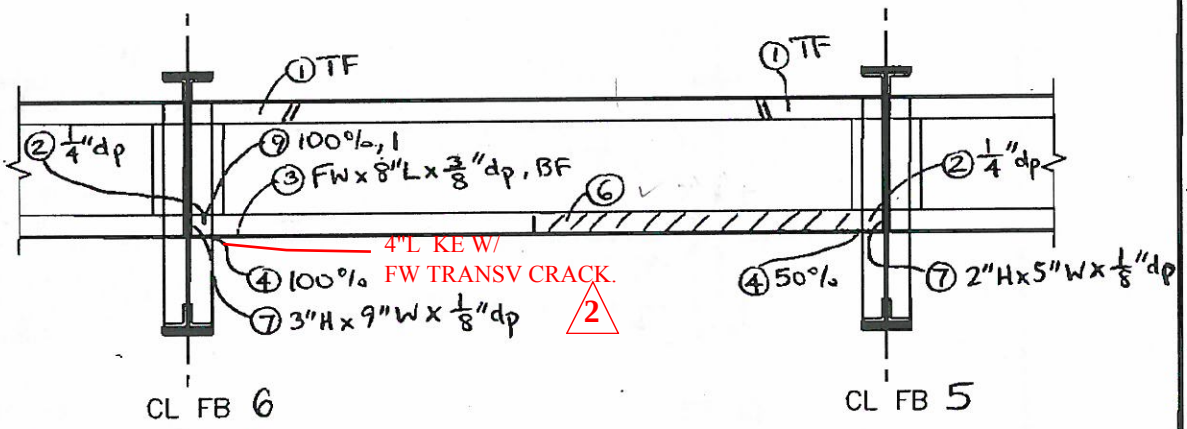


NORTH ELEVATION

| NO. | DATE | DESCRIPTION |
|---|---|---|
| 2 | 5/31/13 | WSP-SELLS; PA,MD |
| 1 | 9/25/12 | WSP-SELLS MY MA |

REVISIONS

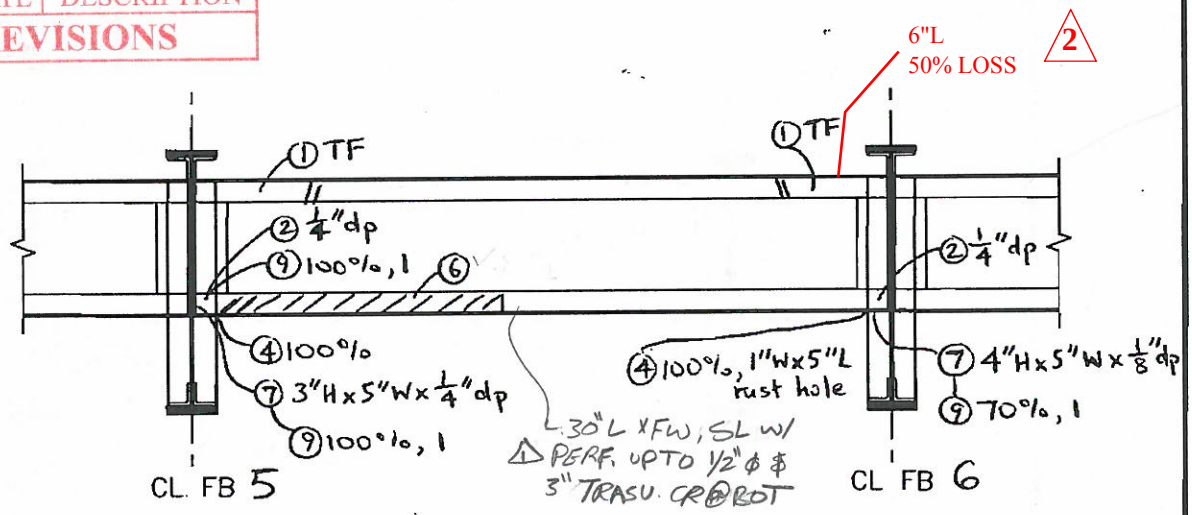


SOUTH ELEVATION

SPAN 7 TRACK 1 & 3 STRINGER 2 (FB5 TO FB6 )

2 WSP-SELLS VERIFICATION INSPECTION 07/12/2013

# FIELD NOTES

Stantec Consulting Services Inc.

| | |
|---|---|
| Bridge No.: 08080R | |
| Project No.: 301-0099 | |
| Crew: LM & AF | |
| Date: 5/4/09 | Sheet No.: 209 |

2

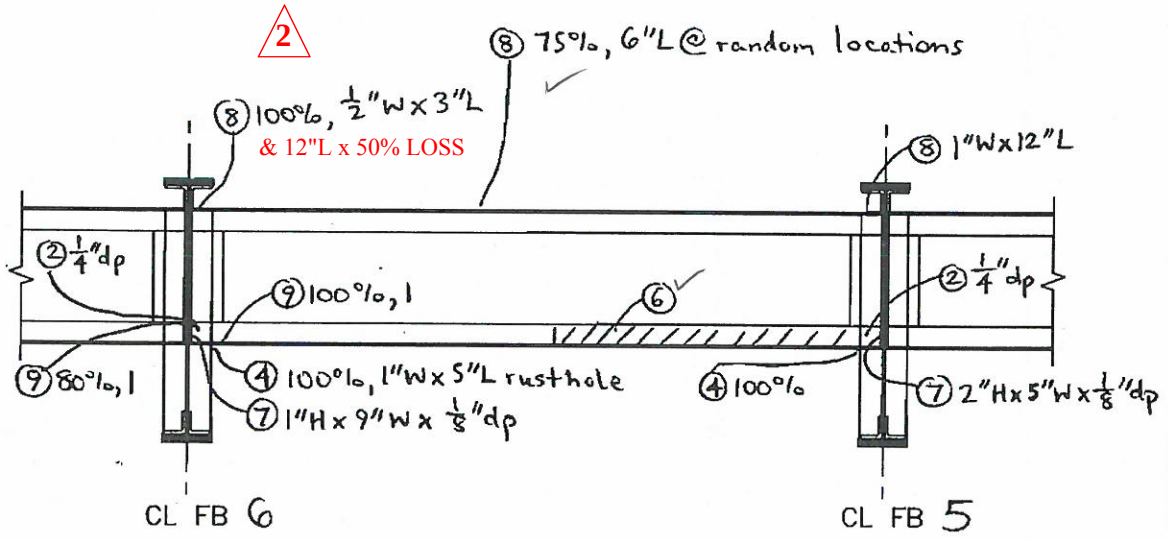


NORTH ELEVATION

| NO. | DATE | DESCRIPTION |
|---|---|---|
| 2 | 5/31/13 | WSP-SELLS; PA,MD |
| 1 | 9/25/12 | WSP-SELLS MI, MA |

REVISIONS

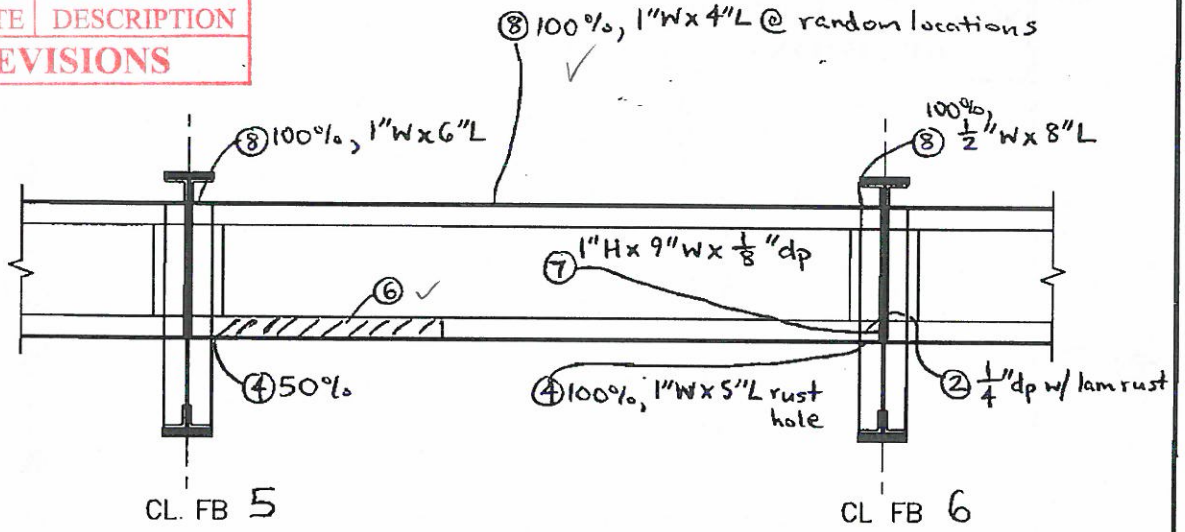


SOUTH ELEVATION

SPAN 7 TRACK 1 & 3 STRINGER 3 (FB 5 TO FB 6 )

2 WSP-SELLS VERIFICATION INSPECTION
07/12/2013

# FIELD NOTES

Stantec Consulting Services Inc.

| | |
|---|---|
| Bridge No.: | 08080R |
| Project No.: | 301-0099 |
| Crew: | LM & AF |
| Date: 5/4/09 | Sheet No.: 210 |

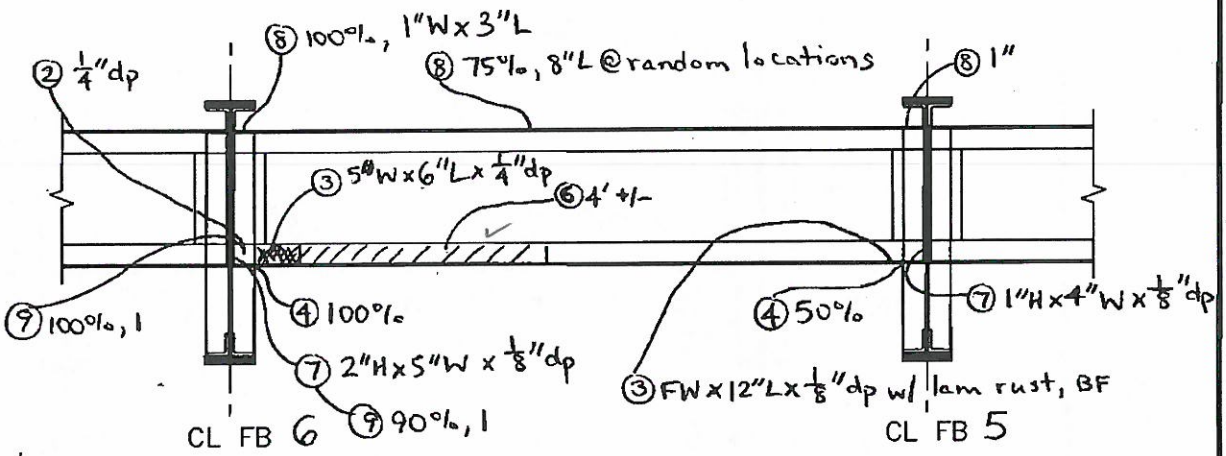


NORTH ELEVATION

| NO. | DATE | DESCRIPTION |
|---|---|---|
| 2 | 5/31/13 | WSP-SELLS; PA,MD |
| 1 | 9/25/12 | WSP-SELLS ML, MA |

REVISIONS

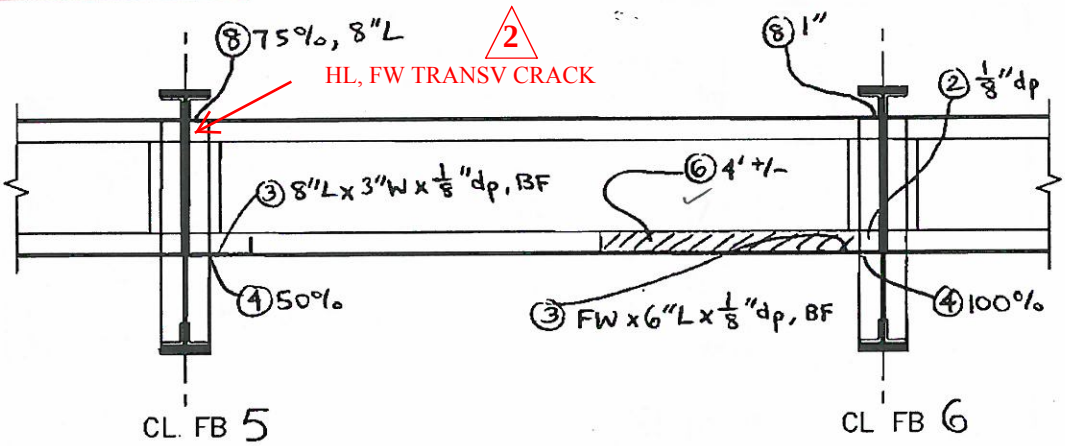


SOUTH ELEVATION

SPAN 7 TRACK 1 & 3 STRINGER 4 (FB 5 TO FB 6 )

2 WSP-SELLS VERIFICATION INSPECTION
07/12/2013

# FIELD NOTES

Stantec Consulting Services Inc.

| | |
|---|---|
| Bridge No.: 08080R | |
| Project No.: 301-0099 | |
| Crew: LM & AF | |
| Date: 5/4/09 | Sheet No.: 24 |

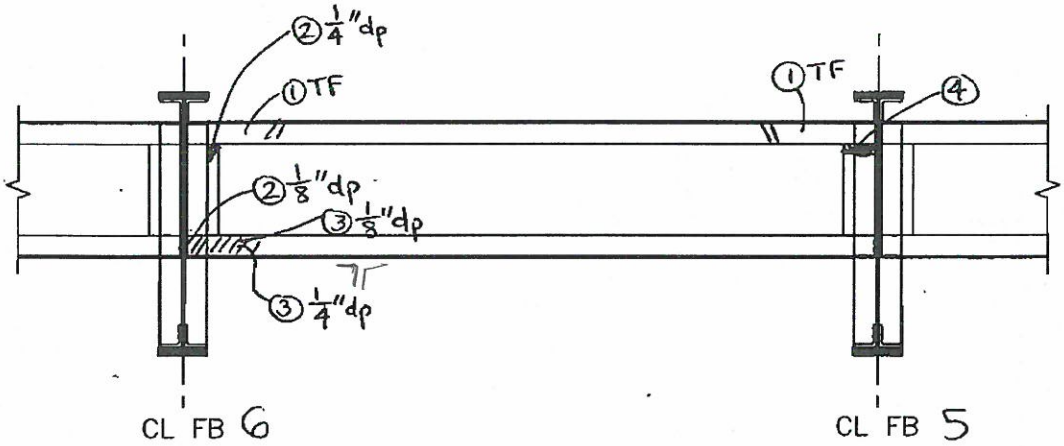


NORTH ELEVATION

| NO. | DATE | DESCRIPTION |
|---|---|---|
| 2 | 5/31/13 | WSP-SELLS; PA,MD |
| 1 | 9/25/12 | WSP-SELLS ML, MA |

REVISIONS

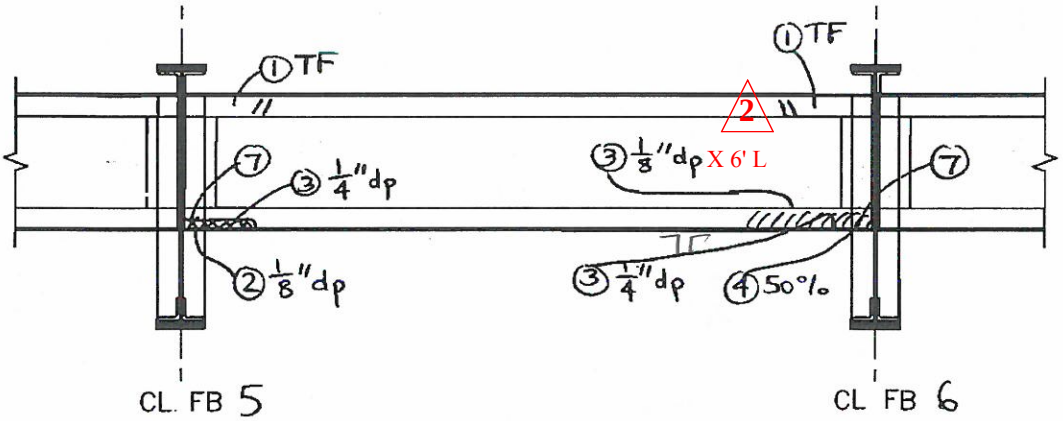


SOUTH ELEVATION

SPAN 7 TRACK 2 & 4 STRINGER 5 (FB5 TO FB6 )

WSP-SELLS VERIFICATION INSPECTION
07/12/2013 NO REVISION

# FIELD NOTES

Stantec Consulting Services Inc.

| | |
|---|---|
| Bridge No.: | 08080R |
| Project No.: | 301-0099 |
| Crew: | LM & AF |
| Date: 5/4/09 | Sheet No.: 212 |

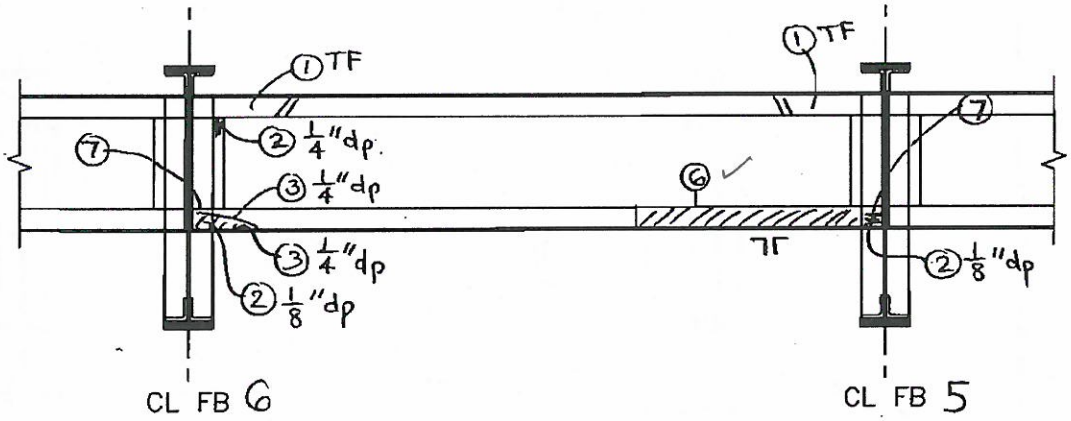


NORTH ELEVATION

| NO. | DATE | DESCRIPTION |
|---|---|---|
| 1 | 9/25/12 | WSP-SELLS MJ MA |

REVISIONS

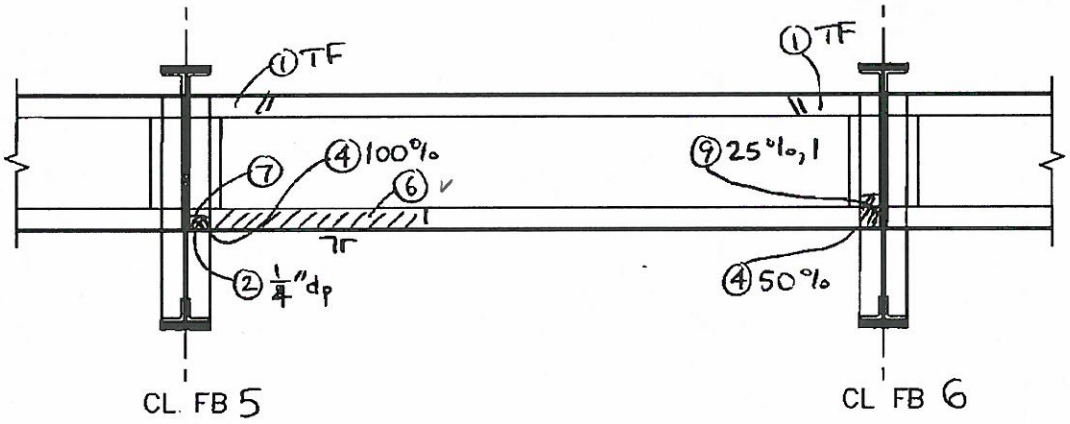


SOUTH ELEVATION

SPAN 7 TRACK 2 & 4 STRINGER 6 (FB 5 TO FB 6 )

WSP-SELLS VERIFICATION INSPECTION
07/12/2013 NO REVISION

# FIELD NOTES

Stantec Consulting Services Inc.

| | |
|---|---|
| Bridge No.: | 08080R |
| Project No.: | 301-0099 |
| Crew: | LM & AF |
| Date: 5/4/09 | Sheet No.: 213 |

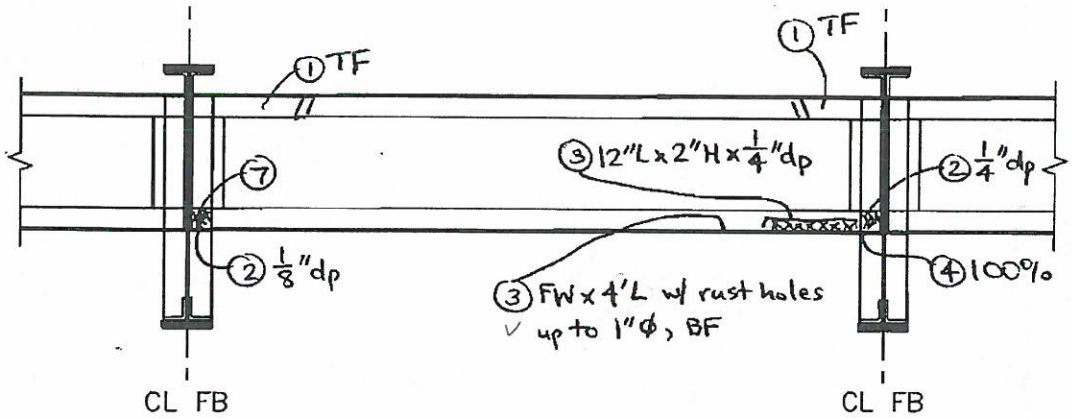


NORTH ELEVATION

| NO. | DATE | DESCRIPTION |
|---|---|---|
| 1 | 9/25/12 | WSP-SELLS ML MA |

REVISIONS

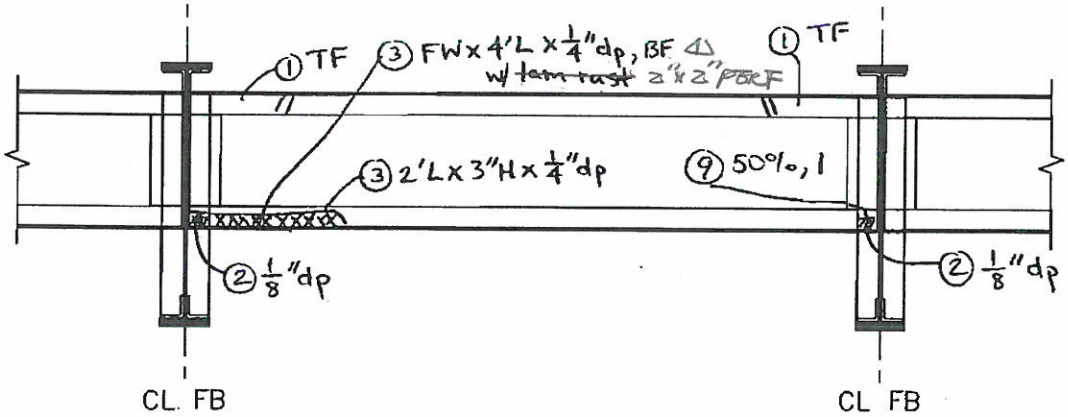


SOUTH ELEVATION

SPAN 7 TRACK 2 & 4 STRINGER 7 (FB 5 TO FB 6 )

WSP-SELLS VERIFICATION INSPECTION
07/12/2013 NO REVISION

# FIELD NOTES

Stantec Consulting Services Inc.

| | |
|---|---|
| Bridge No.: | 08080R |
| Project No.: | 301-0099 |
| Crew: | LM & AF |
| Date: 5/4/09 | Sheet No.: 214 |

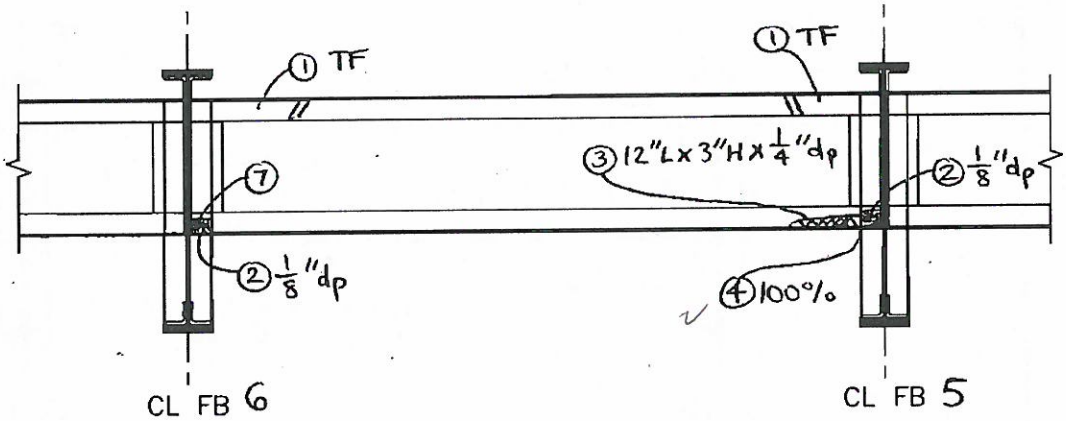


NORTH ELEVATION

| NO. | DATE | DESCRIPTION |
|---|---|---|
| 1 | 9/25/12 | WSP-SELLS ML/MA |

REVISIONS

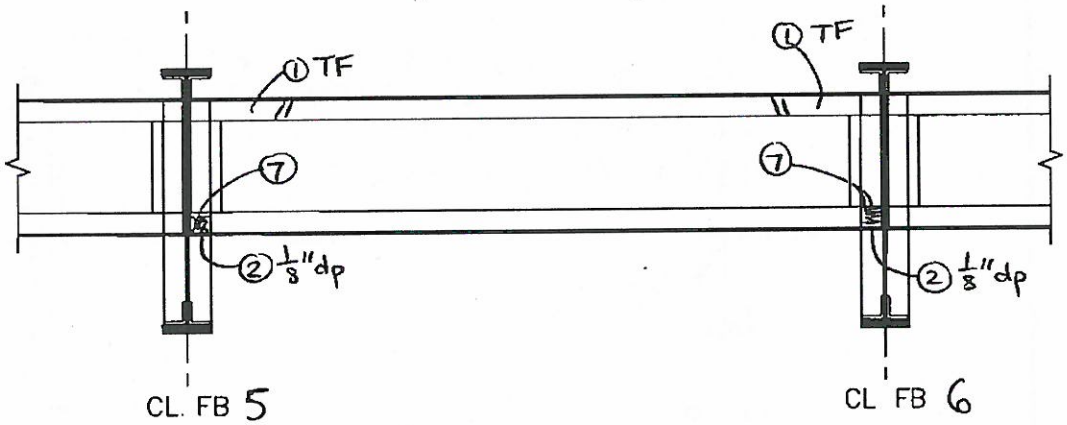


SOUTH ELEVATION

SPAN 7 TRACK 2 & 4 STRINGER 8 (FB 5 TO FB 6 )

2 WSP-SELLS VERIFICATION INSPECTION 07/12/2013

# FIELD NOTES

Stantec Consulting Services Inc.

| | |
|---|---|
| Bridge No.: | 08080R |
| Project No.: | 301-0099 |
| Crew: | LM & AF |
| Date: 5/4/09 | Sheet No.: 215 |

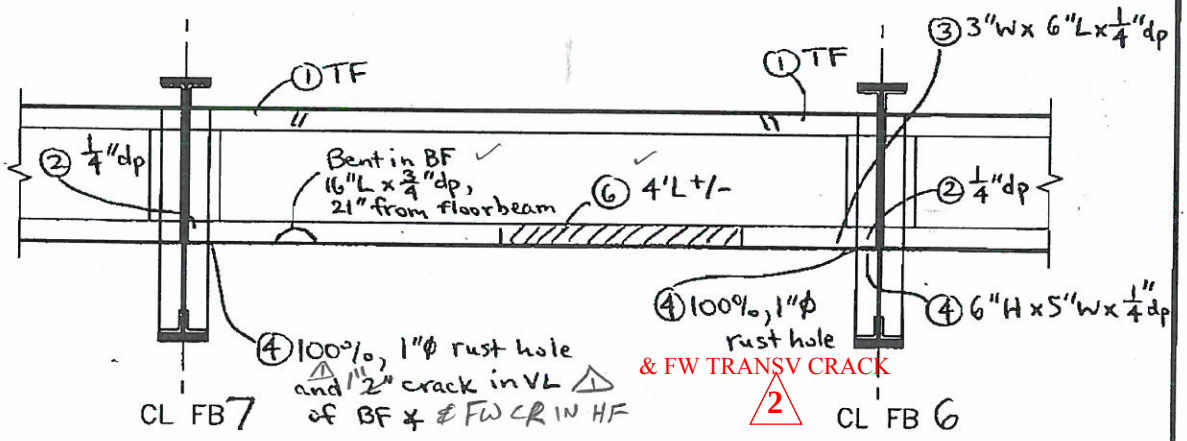


2 & FW TRANSV CRACK

NORTH ELEVATION

| NO. | DATE | DESCRIPTION |
|---|---|---|
| 2 | 5/31/13 | WSP-SELLS; PA,MD |
| 1 | 9/25/12 | WSP-SELLS ML, MA |

REVISIONS

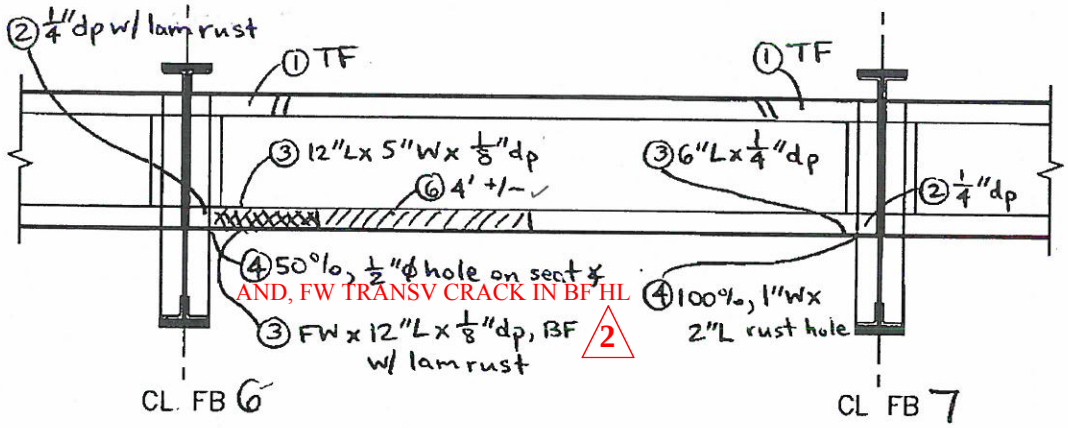


2

SOUTH ELEVATION

SPAN 7 TRACK 1 & 3 STRINGER 1 (FB6 TO FB7 )

2

WSP-SELLS VERIFICATION INSPECTION
07/12/2013

# FIELD NOTES

Stantec Consulting Services Inc.

| | |
|---|---|
| Bridge No.: | 08080R |
| Project No.: | 301-0099 |
| Crew: | LM & AF |
| Date: 5/4/09 | Sheet No.: 26 |

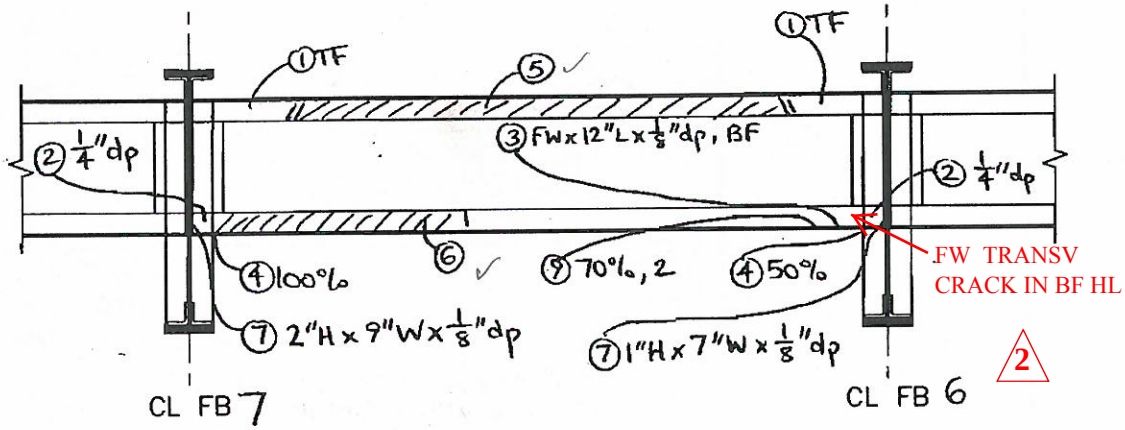


NORTH ELEVATION

| NO. | DATE | DESCRIPTION |
|---|---|---|
| 2 | 5/31/13 | WSP-SELLS; PA,MD |
| 1 | 9/25/12 | WSP-SELLS ML,MA |

REVISIONS

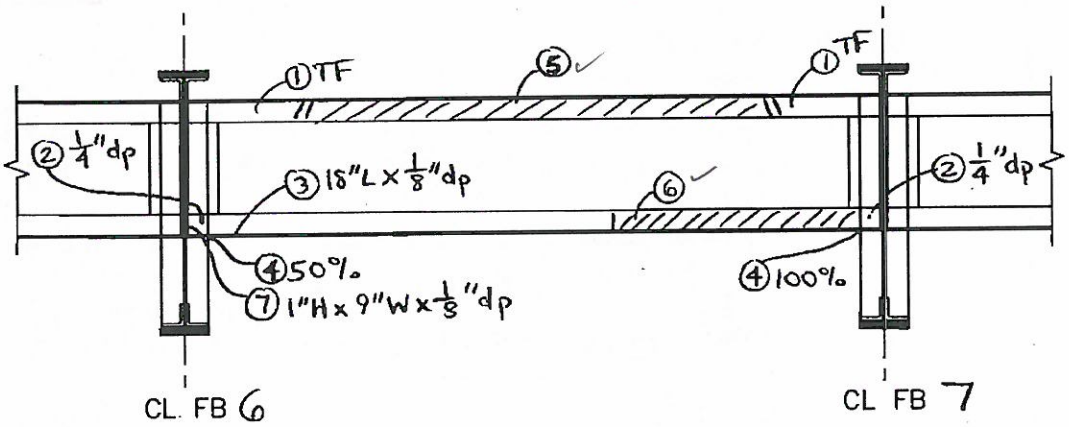


SOUTH ELEVATION

SPAN 7 TRACK 1 & 3 STRINGER 2 (FB 6 TO FB 7)

WSP-SELLS VERIFICATION INSPECTION
07/12/2013 NO REVISION

# FIELD NOTES

Stantec Consulting Services Inc.

| | |
|---|---|
| Bridge No.: | 08080R |
| Project No.: | 301-0099 |
| Crew: | LM & AF |
| Date: 5/4/09 | Sheet No.: 27 |

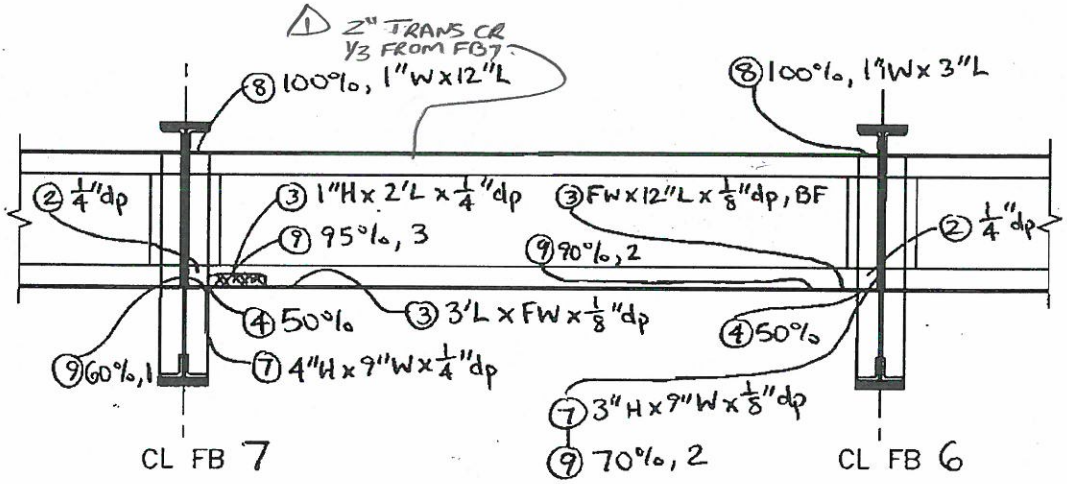


NORTH ELEVATION

| NO. | DATE | DESCRIPTION |
|---|---|---|
| | | |
| | | |
| 1 | 9/25/12 | WSP-SELLS MLMA |

REVISIONS

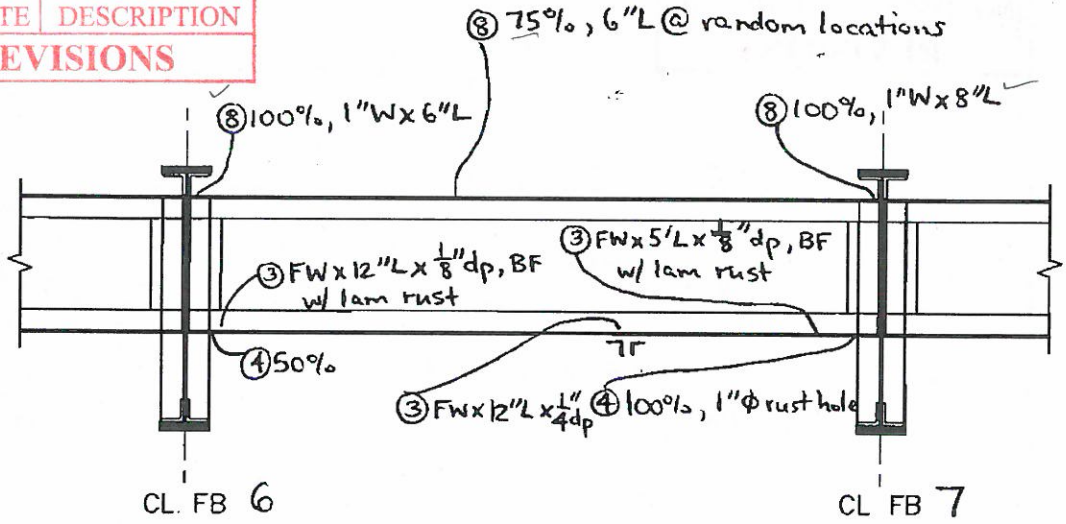


SOUTH ELEVATION

SPAN 7 TRACK 1 & 3 STRINGER 3 (FB 6 TO FB 7)

WSP-SELLS VERIFICATION INSPECTION
07/12/2013

2

# FIELD NOTES

Stantec Consulting Services Inc.

| | |
|---|---|
| Bridge No.: | 08080R |
| Project No.: | 301-0099 |
| Crew: | LM & AF |
| Date: 5/4/09 | Sheet No.: 718 |

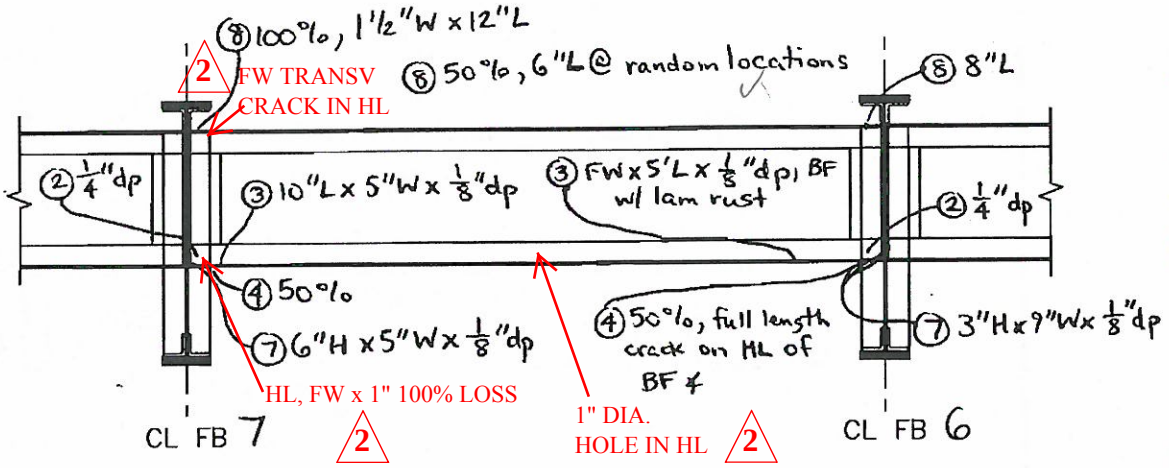


NORTH ELEVATION

| NO. | DATE | DESCRIPTION |
|---|---|---|
| 2 | 5/31/13 | WSP-SELLS; PA,MD |
| 1 | 9/25/12 | WSP-SELLS ML, MA |

REVISIONS

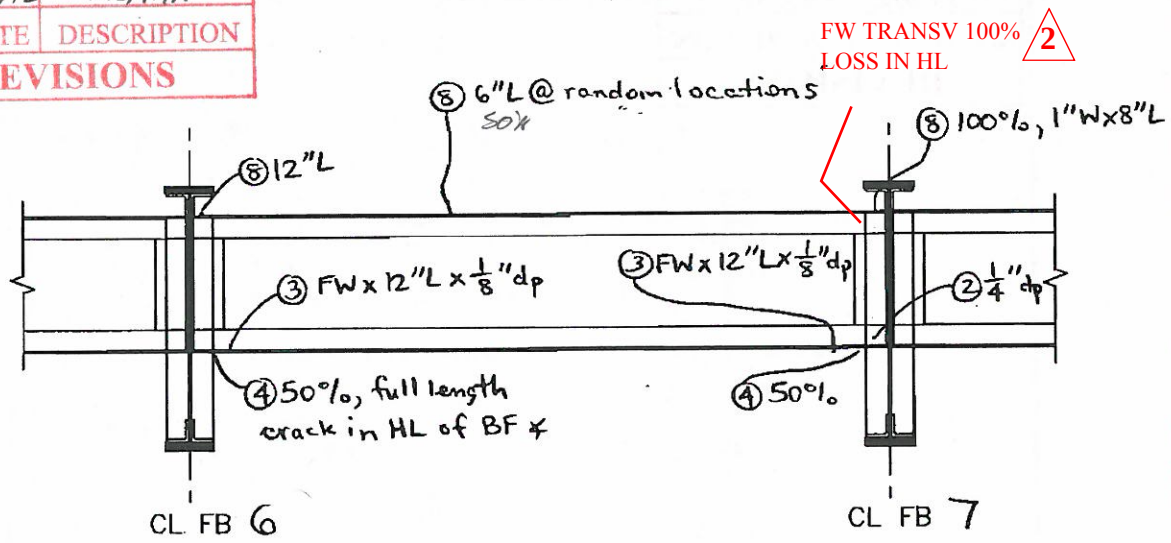


SOUTH ELEVATION

SPAN 7 TRACK 1 & 3 STRINGER 4 (FB6 TO FB 7 )

WSP-SELLS VERIFICATION INSPECTION
07/12/2013 NO REVISION

# FIELD NOTES

Stantec Consulting Services Inc.

| | |
|---|---|
| Bridge No.: | 08080R |
| Project No.: | 301-0099 |
| Crew: | LM & AF |
| Date: 5/4/09 | Sheet No.: 29 |

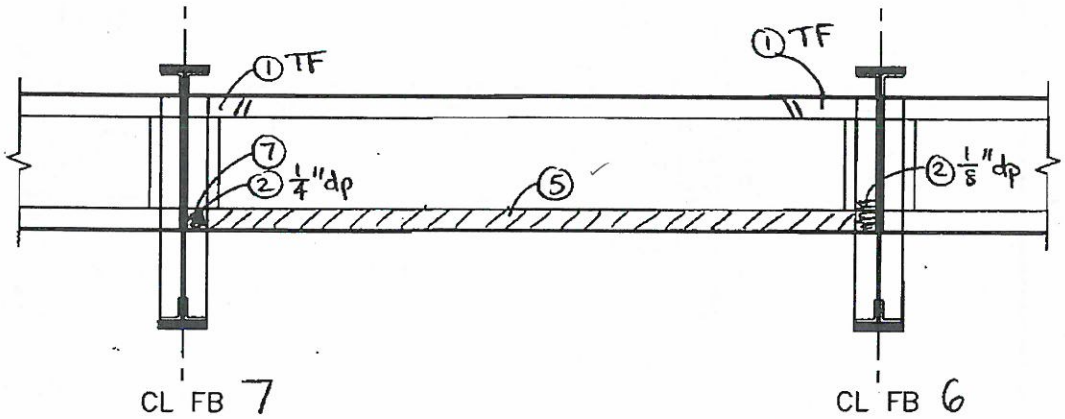


NORTH ELEVATION

| NO. | DATE | DESCRIPTION |
|---|---|---|
| | | |
| | | |
| 1 | 9/25/12 | WSP-SELLS MLMA |

REVISIONS

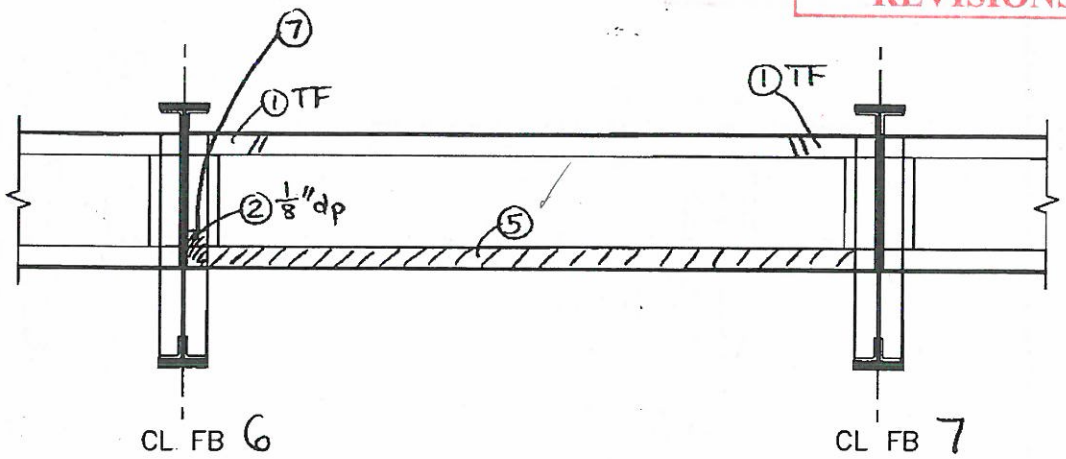


SOUTH ELEVATION

SPAN 7 TRACK 2 & 4 STRINGER 5 (FB6 TO FB7 )

2

**WSP-SELLS VERIFICATION INSPECTION**
**07/12/2013**

# FIELD NOTES

Stantec Consulting Services Inc.

| | |
|---|---|
| Bridge No.: | 08080R |
| Project No.: | 301-0099 |
| Crew: | LM & AF |
| Date: 5/4/09 | Sheet No.: 220 |

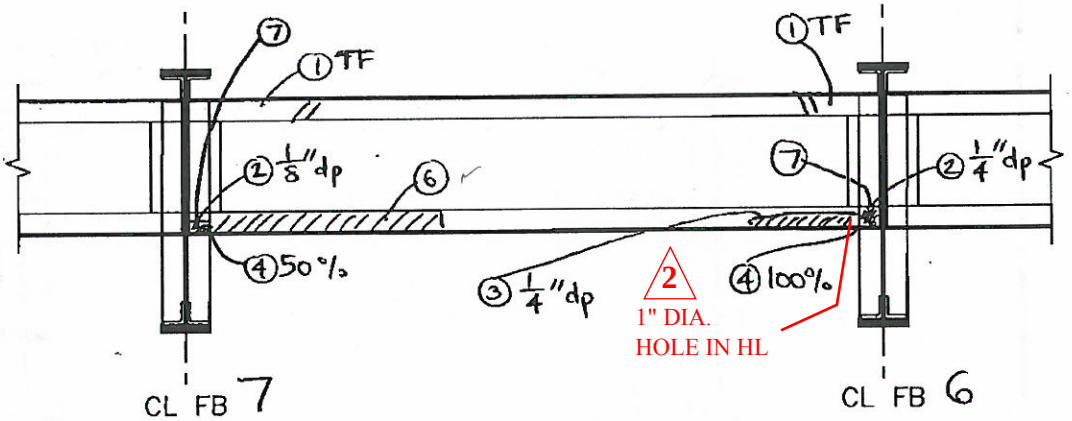


NORTH ELEVATION

| NO. | DATE | DESCRIPTION |
|---|---|---|
| 2 | 5/31/13 | WSP-SELLS; PA,MD |
| 1 | 9/25/12 | WSP-SELLS ML,MA |

REVISIONS

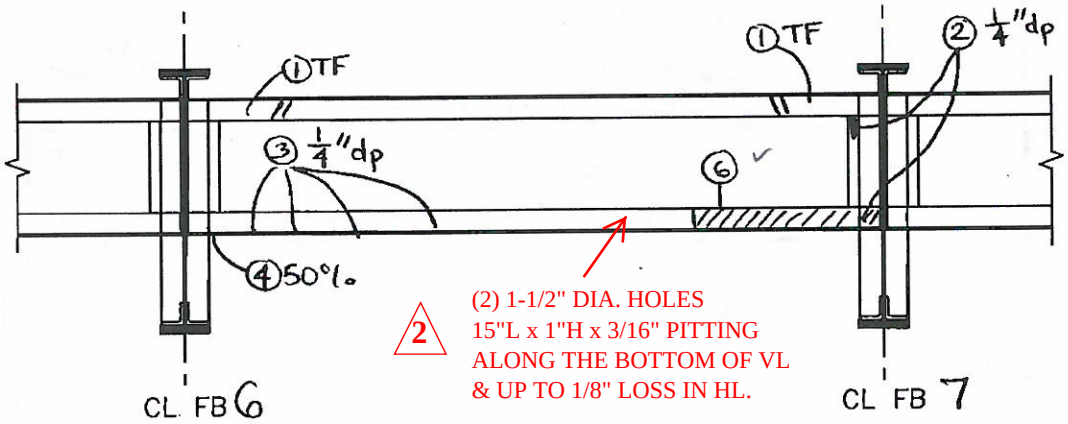


SOUTH ELEVATION

SPAN 7 TRACK 2 & 4 STRINGER 6 (FB 6 TO FB 7)

2 WSP-SELLS VERIFICATION INSPECTION
07/12/2013

# FIELD NOTES

Stantec Consulting Services Inc.

| | |
|---|---|
| Bridge No.: | 08080R |
| Project No.: | 301-0099 |
| Crew: | LM & AF |
| Date: 5/4/09 | Sheet No.: 221 |

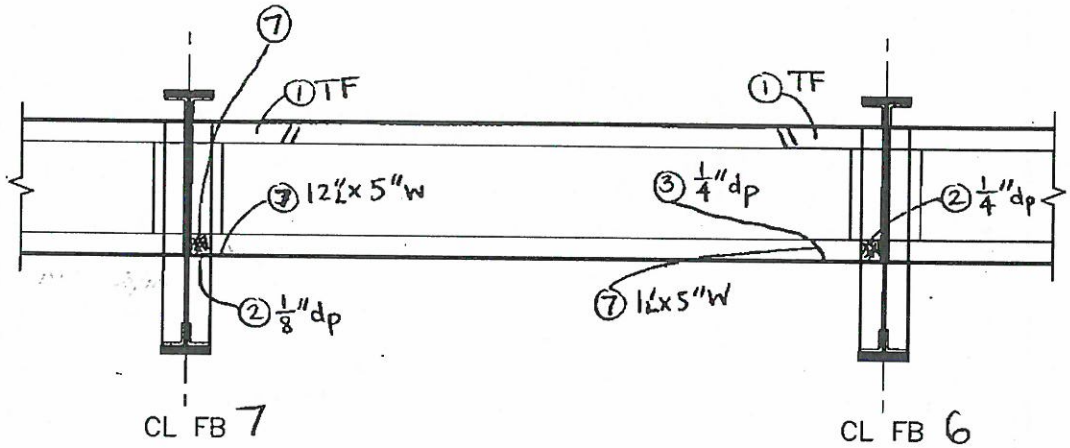


NORTH ELEVATION

| NO. | DATE | DESCRIPTION |
|---|---|---|
| 2 | 5/31/13 | WSP-SELLS; PA,MD |
| 1 | 9/25/12 | WSP-SELLS ML,MA |

REVISIONS

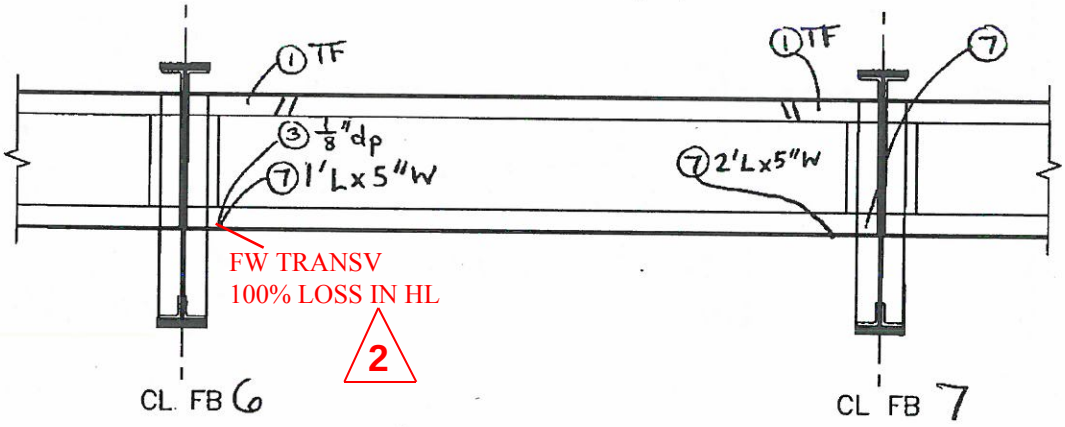


SOUTH ELEVATION

SPAN 7 TRACK 2 & 4 STRINGER 7 (FB 6 TO FB 7)

WSP-SELLS VERIFICATION INSPECTION
07/12/2013

# FIELD NOTES

Stantec Consulting Services Inc.

| | |
|---|---|
| Bridge No.: | 08080R |
| Project No.: | 301-0099 |
| Crew: | LM & AF |
| Date: 5/4/09 | Sheet No.: 222 |

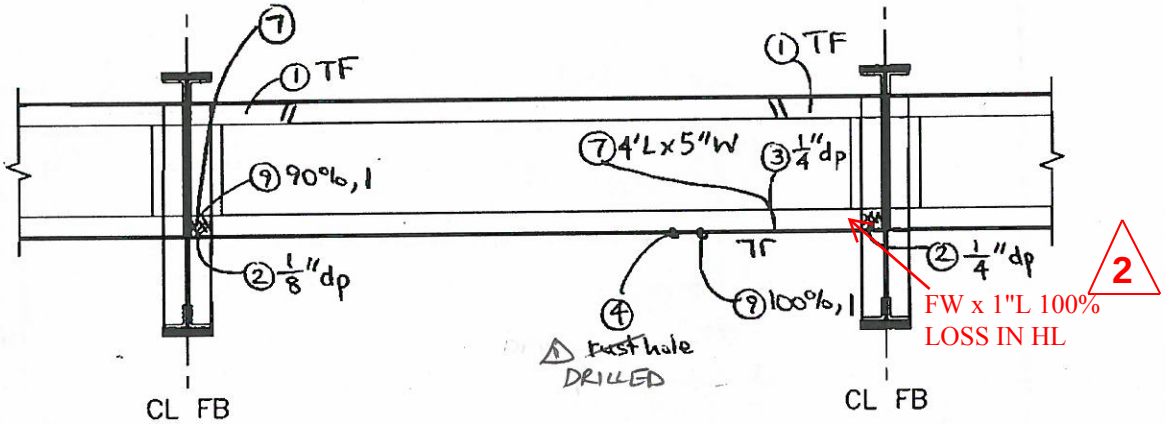


NORTH ELEVATION

| NO. | DATE | DESCRIPTION |
|---|---|---|
| 2 | 5/30/12 | WSP-SELLS; PA, MD |
| 1 | 9/25/12 | WSP-SELLS MLMA |

REVISIONS

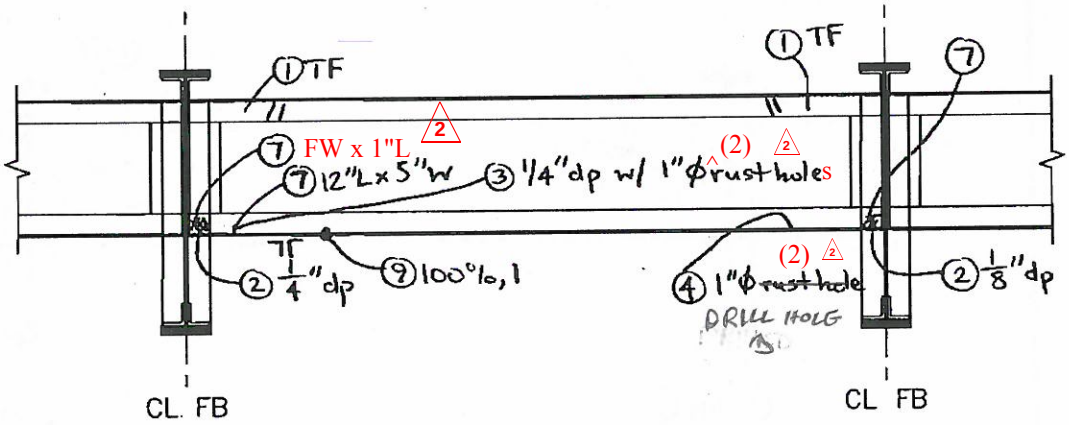


SOUTH ELEVATION

SPAN 7 TRACK 2 & 4 STRINGER 8 (FB 6 TO FB 7)

2 WSP-SELLS VERIFICATION INSPECTION
07/12/2013

# FIELD NOTES

Stantec Consulting Services Inc.

| | |
|---|---|
| Bridge No.: | 08080R |
| Project No.: | 301-0099 |
| Crew: | LM & AF |
| Date: 5/4/09 | Sheet No.: 223 |

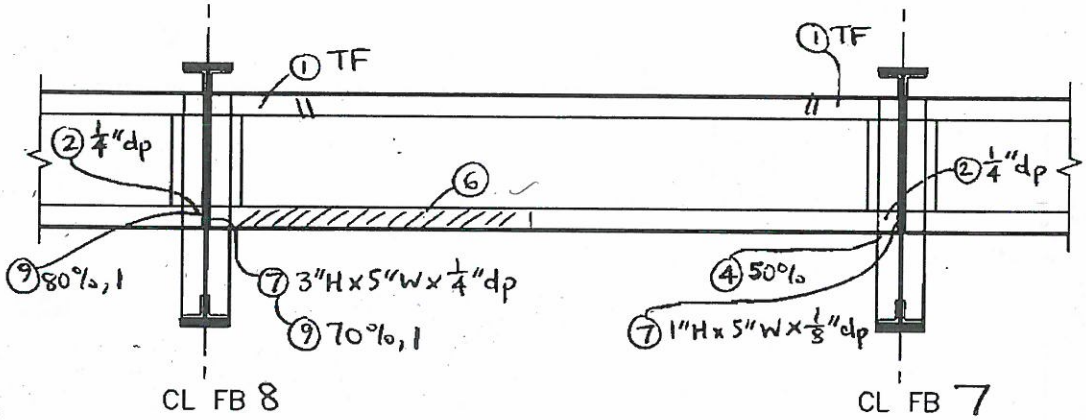


NORTH ELEVATION

| NO. | DATE | DESCRIPTION |
|---|---|---|
| 2 | 5/31/13 | WSP-SELLS; PA,MD |
| 1 | 9/25/12 | WSP-SELLS MC,MA |

REVISIONS

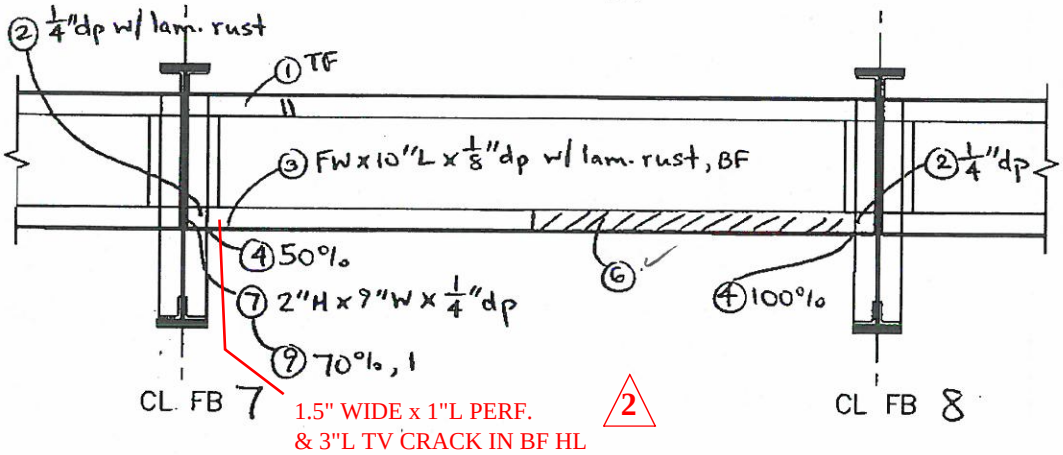


1.5" WIDE x 1"L PERF.
& 3"L TV CRACK IN BF HL

2

SOUTH ELEVATION

SPAN 7 TRACK 1 & 3 STRINGER 1 (FB 7 TO FB 8)

WSP-SELLS VERIFICATION INSPECTION
07/12/2013

2

# FIELD NOTES

Stantec Consulting Services Inc.

| | |
|---|---|
| Bridge No.: | 08080R |
| Project No.: | 301-0099 |
| Crew: | LM & AF |
| Date: 5/4/09 | Sheet No.: 224 |

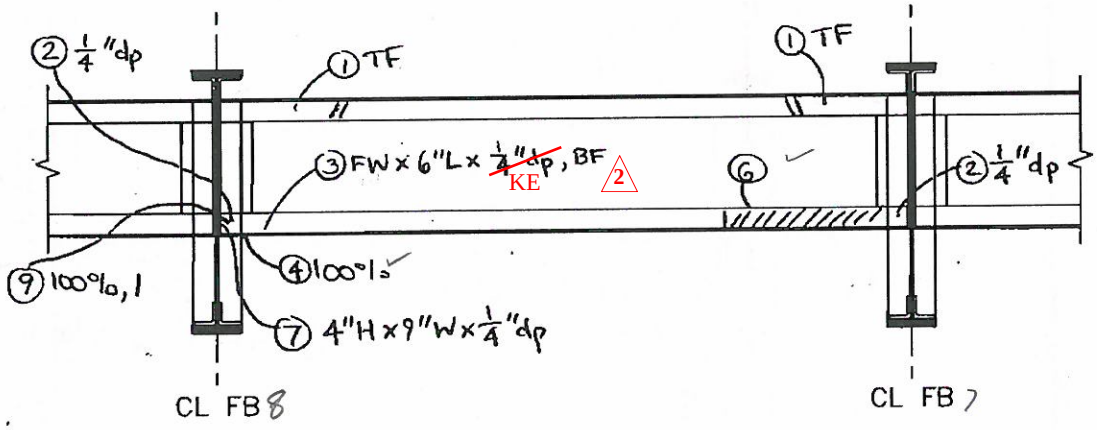


NORTH ELEVATION

| NO. | DATE | DESCRIPTION |
|---|---|---|
| 2 | 5/31/13 | WSP-SELLS; PA,MD |
| 1 | 9/25/12 | WSP-SELLS MI, MA |

REVISIONS

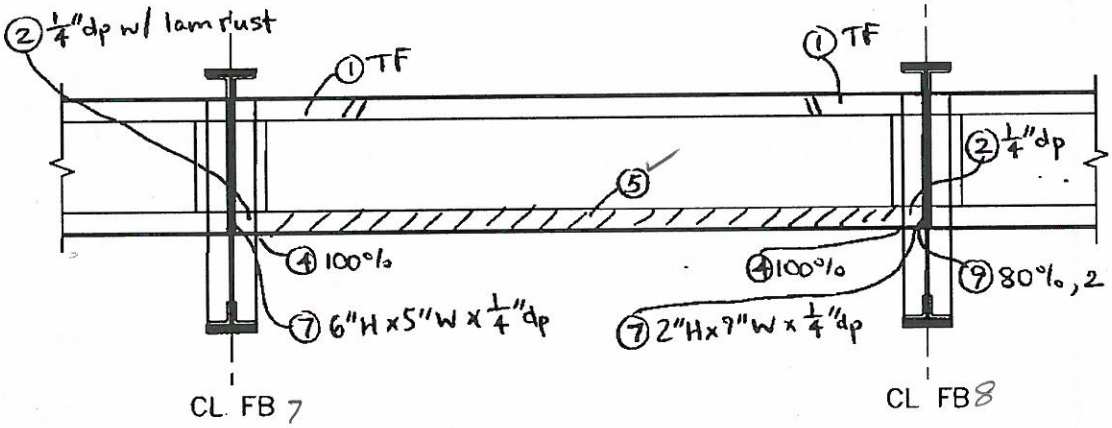


SOUTH ELEVATION

SPAN 7 TRACK 1 & 3 STRINGER 2 (FB 7 TO FB 8 )

WSP-SELLS VERIFICATION INSPECTION
07/12/2013 NO REVISION

# FIELD NOTES

Stantec Consulting Services Inc.

| | |
|---|---|
| Bridge No.: | 08080R |
| Project No.: | 301-0099 |
| Crew: | LM & AF |
| Date: 5/4/09 | Sheet No.: 225 |

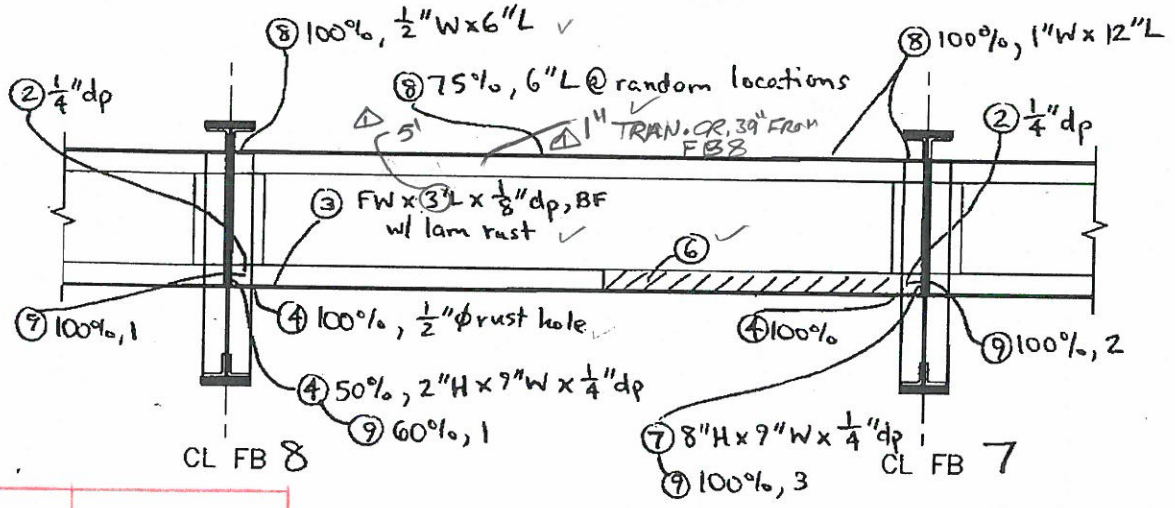


NORTH ELEVATION

| NO. | DATE | DESCRIPTION |
|---|---|---|
| 1 | 9/25/12 | WSP-SELLS ML, MA |

REVISIONS

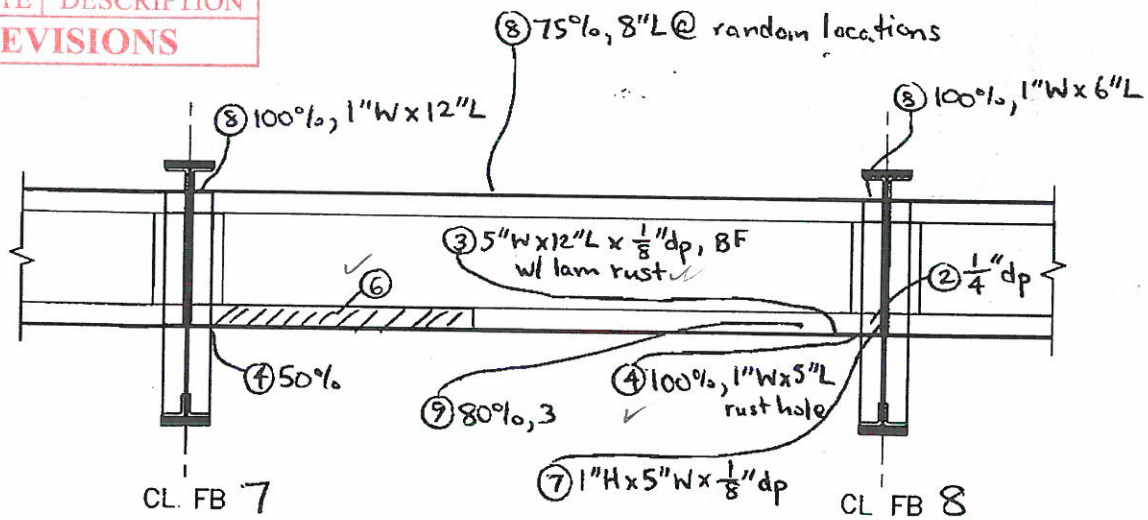


SOUTH ELEVATION

SPAN 7 TRACK 1 & 3 STRINGER 3 (FB 7 TO FB 8 )

WSP-SELLS VERIFICATION INSPECTION
07/12/2013

2

# FIELD NOTES

Stantec Consulting Services Inc.

| | |
|---|---|
| Bridge No.: | 08080R |
| Project No.: | 301-0099 |
| Crew: | LM & AF |
| Date: 5/4/09 | Sheet No.: 226 |

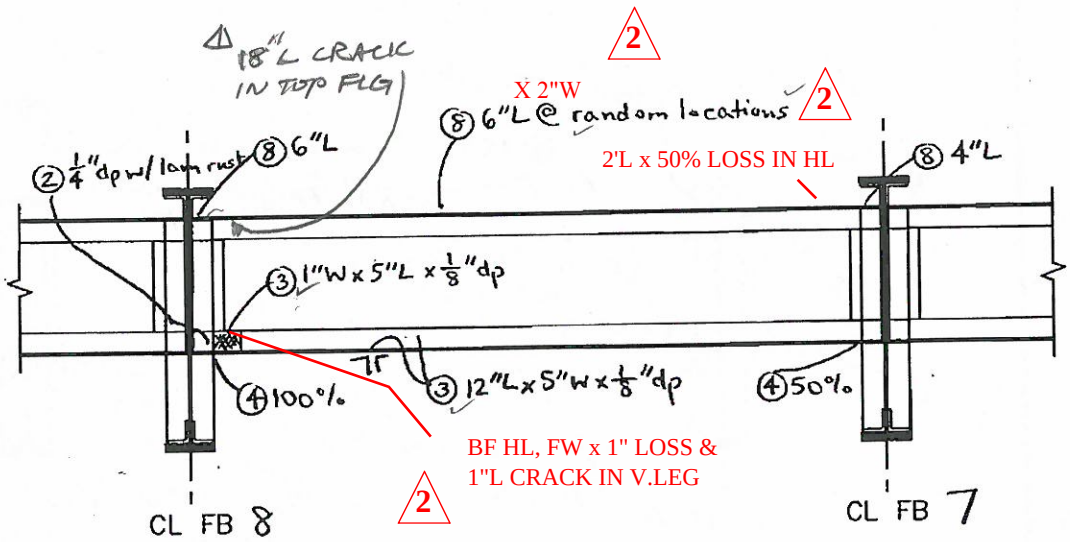


NORTH ELEVATION

| NO. | DATE | DESCRIPTION |
|---|---|---|
| 2 | 5/31/13 | WSP-SELLS; PA,MD |
| 1 | 9/25/12 | WSP-SELLS MLMA |

REVISIONS

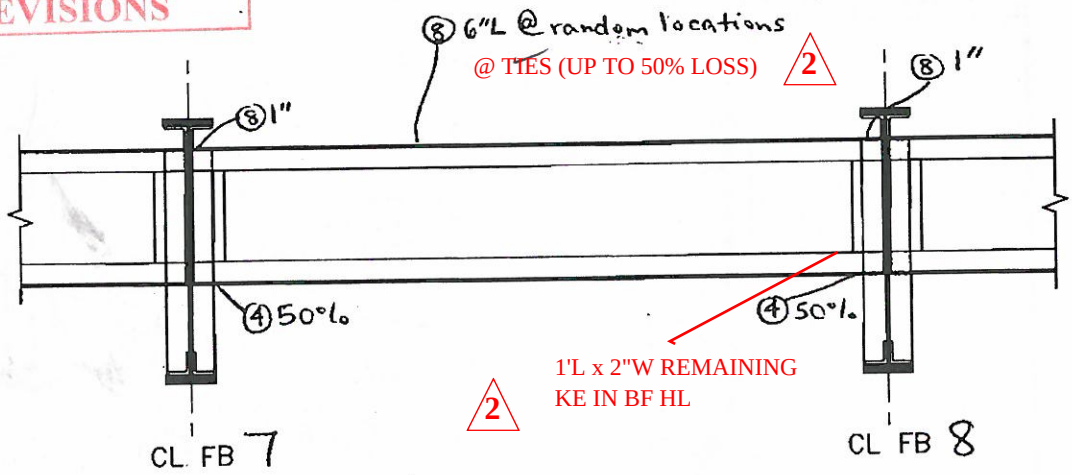


SOUTH ELEVATION

SPAN 7 TRACK 1 & 3 STRINGER 4 (FB 7 TO FB 8)

WSP-SELLS VERIFICATION INSPECTION
07/12/2013 NO REVISION

# FIELD NOTES

Stantec Consulting Services Inc.

| | |
|---|---|
| Bridge No.: | 08080R |
| Project No.: | 301-0099 |
| Crew: | LM & AF |
| Date: 5/4/09 | Sheet No.: 227 |

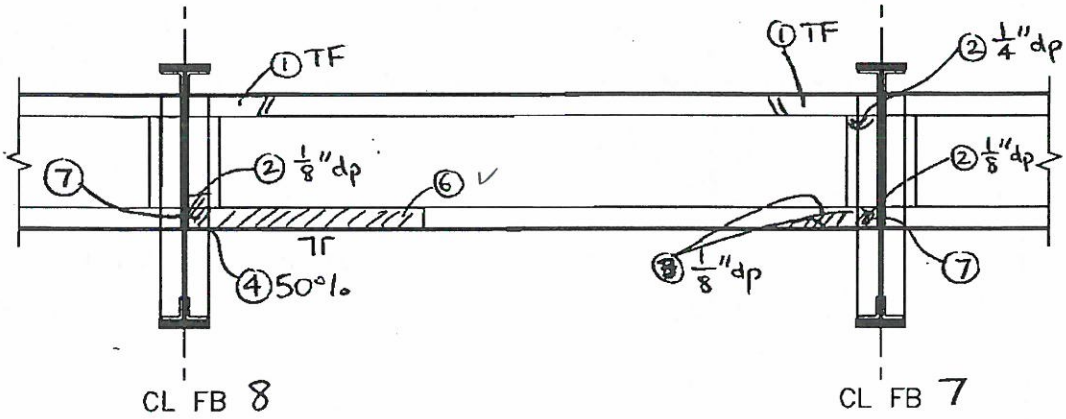


NORTH ELEVATION

| NO. | DATE | DESCRIPTION |
|---|---|---|
| 1 | 9/25/12 | WSP-SELLS MLMA |

REVISIONS

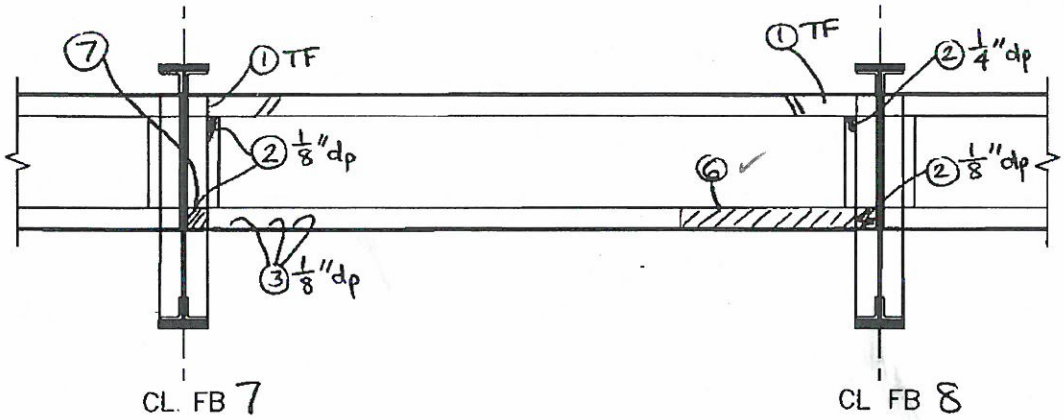


SOUTH ELEVATION

SPAN 7 TRACK 2 & 4 STRINGER 5 (FB 7 TO FB 8 )

WSP-SELLS VERIFICATION INSPECTION
07/12/2013 NO REVISION

# FIELD NOTES

Stantec Consulting Services Inc.

| | |
|---|---|
| Bridge No.: | 08080R |
| Project No.: | 301-0099 |
| Crew: | LM & AF |
| Date: 5/4/09 | Sheet No.: 228 |

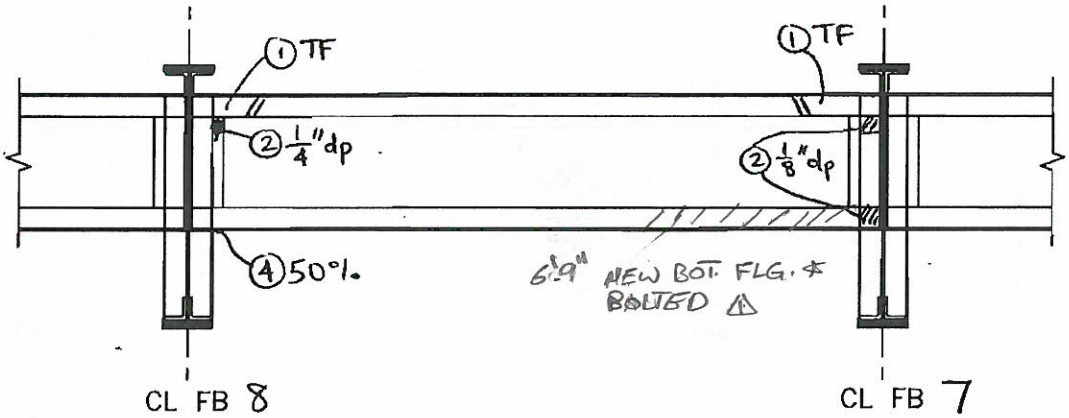


NORTH ELEVATION

| NO. | DATE | DESCRIPTION |
|---|---|---|
| △1 | 9/25/12 | WSP-SELLS MG MA |

REVISIONS

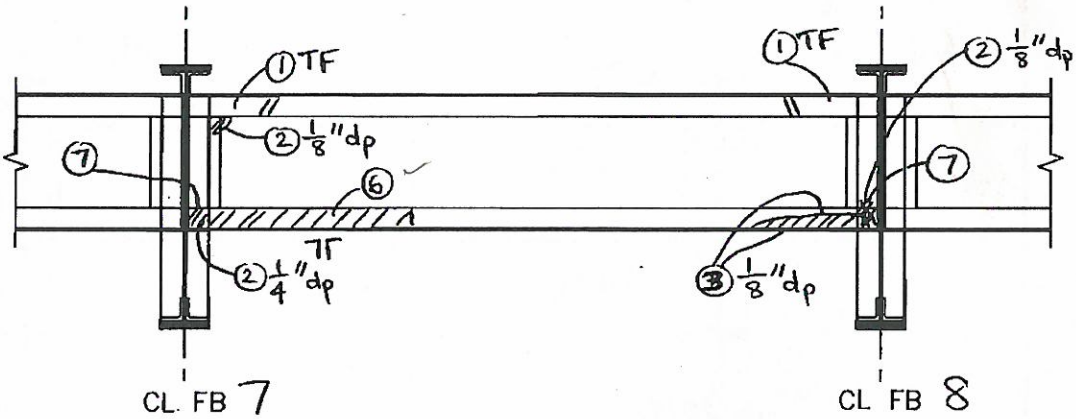


SOUTH ELEVATION

SPAN 7 TRACK 2 & 4 STRINGER 6 (FB7 TO FB 8 )

WSP-SELLS VERIFICATION INSPECTION
07/12/2013 NO REVISION

# FIELD NOTES

Stantec Consulting Services Inc.

| | |
|---|---|
| Bridge No.: | 08080R |
| Project No.: | 301-0099 |
| Crew: | LM & AF |
| Date: 5/4/09 | Sheet No.: 229 |

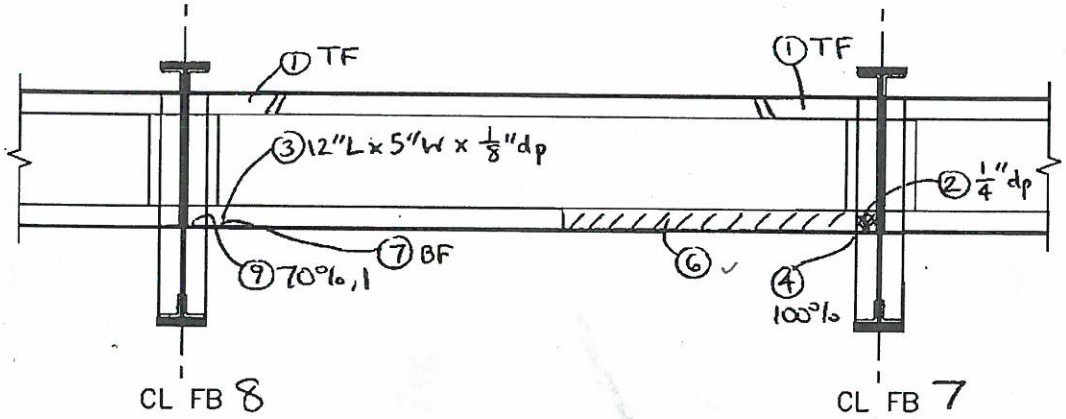


NORTH ELEVATION

| NO. | DATE | DESCRIPTION |
|---|---|---|
| | | |
| | | |
| 1 | 9/25/12 | WSP-SELLS MLMA |

REVISIONS

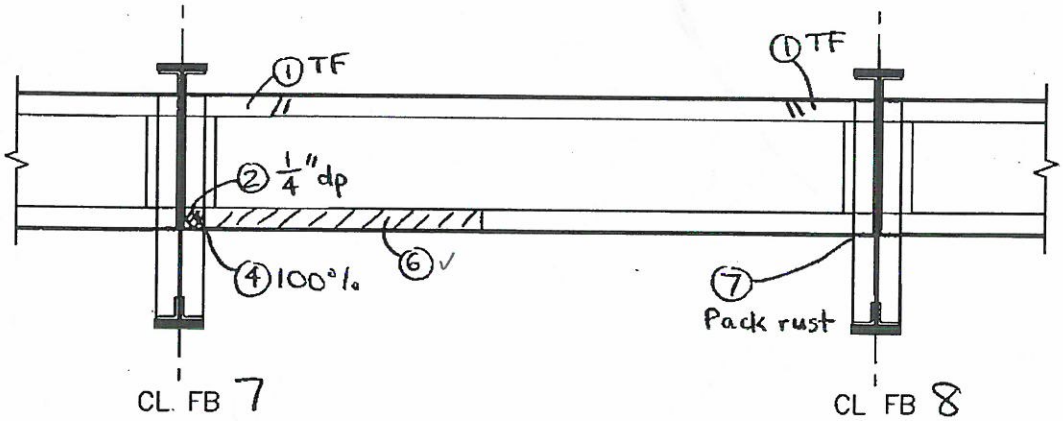


SOUTH ELEVATION

SPAN 7 TRACK 2 & 4 STRINGER 7 (FB 7 TO FB 8 )

WSP-SELLS VERIFICATION INSPECTION
07/12/2013

2

# FIELD NOTES

Stantec Consulting Services Inc.

| | |
|---|---|
| Bridge No.: | 08080R |
| Project No.: | 301-0099 |
| Crew: | LM & AF |
| Date: 5/4/09 | Sheet No.: 230 |

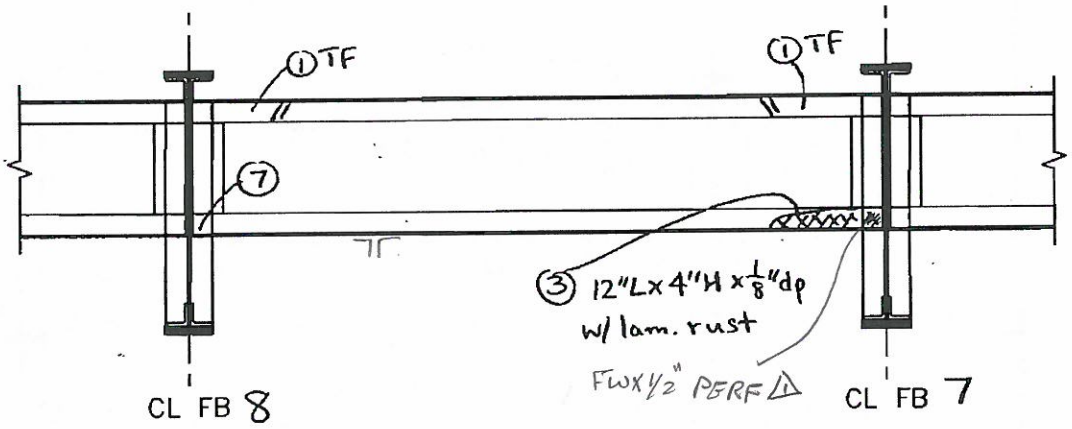


NORTH ELEVATION

| NO. | DATE | DESCRIPTION |
|---|---|---|
| 2 | 5/31/13 | WSP-SELLS; PA,MD |
| 1 | 9/25/12 | WSP-SELLS ML,MA |

REVISIONS

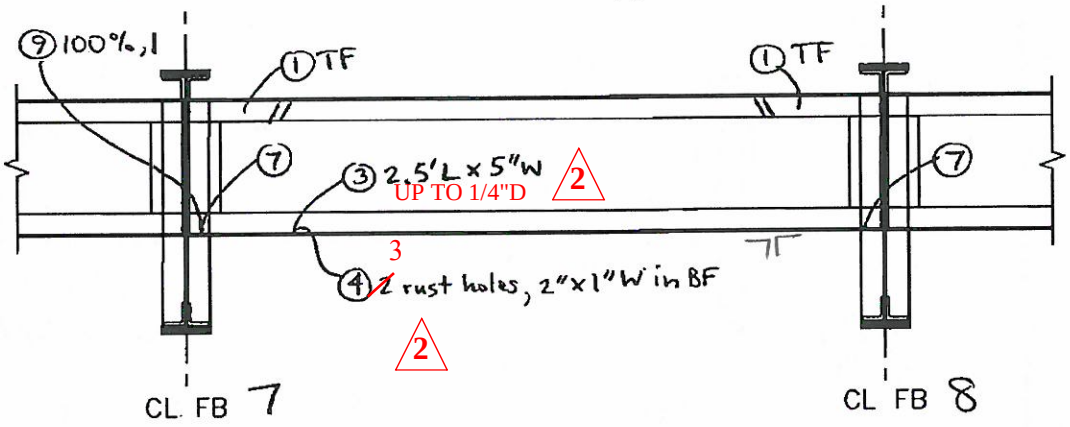


SOUTH ELEVATION

SPAN 7 TRACK 2 & 4 STRINGER 8 (FB 7 TO FB 8)

WSP-SELLS VERIFICATION INSPECTION
07/12/2013 NO REVISION

# FIELD NOTES

Stantec Consulting Services Inc.

| | |
|---|---|
| Bridge No.: | 08080R |
| Project No.: | 301-0099 |
| Crew: | LM & AF |
| Date: 5/4/09 | Sheet No.: 231 |

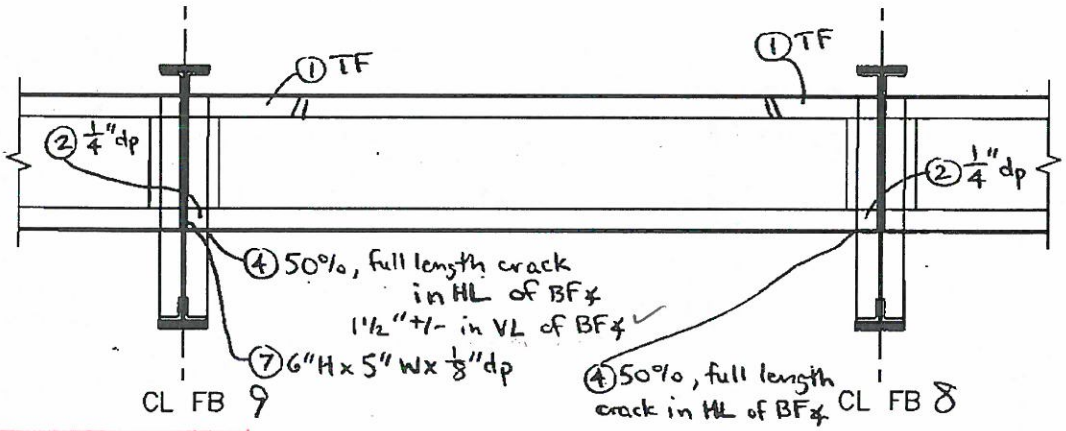


NORTH ELEVATION

| NO. | DATE | DESCRIPTION |
|---|---|---|
| 1 | 9/25/12 | WSP-SELLS ML, MA |

REVISIONS

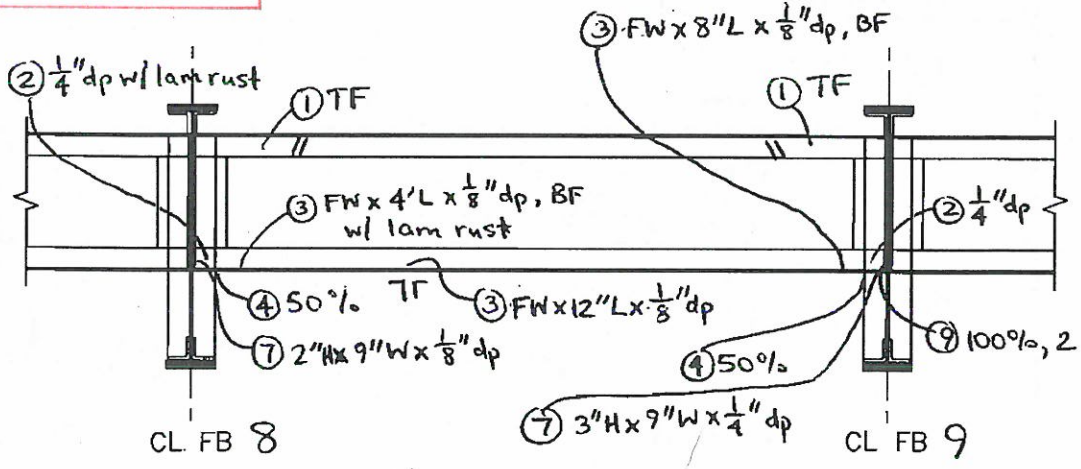


SOUTH ELEVATION

SPAN 7 TRACK 1 & 3 STRINGER 1 (FB 8 TO FB 9 )

2 WSP-SELLS VERIFICATION INSPECTION
07/12/2013

# FIELD NOTES

Stantec Consulting Services Inc.

| | |
|---|---|
| Bridge No.: | 08080R |
| Project No.: | 301-0099 |
| Crew: | LM & AF |
| Date: 5/4/09 | Sheet No.: 232 |

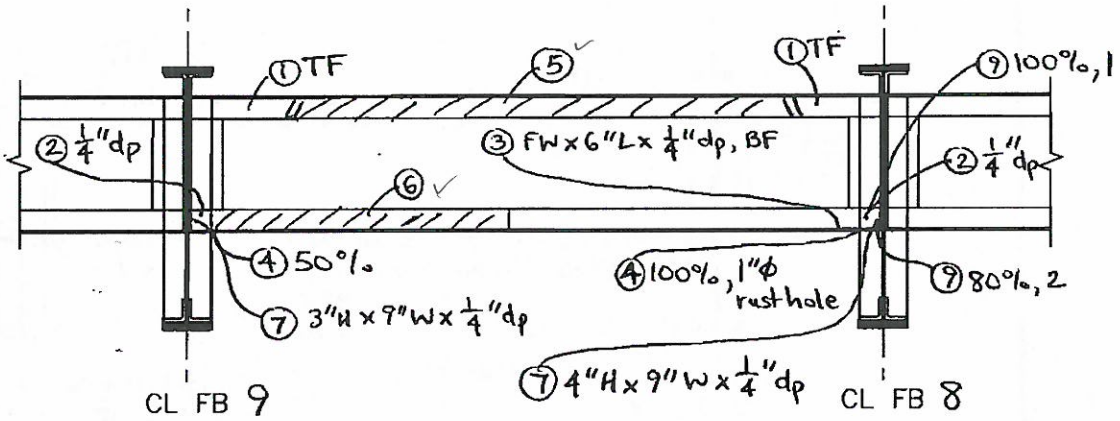


NORTH ELEVATION

| NO. | DATE | DESCRIPTION |
|---|---|---|
| 2 | 5/30/13 | WSP-SELLS; PA,MD |
| 1 | 9/25/12 | WSP-SELLS MYMA |

REVISIONS

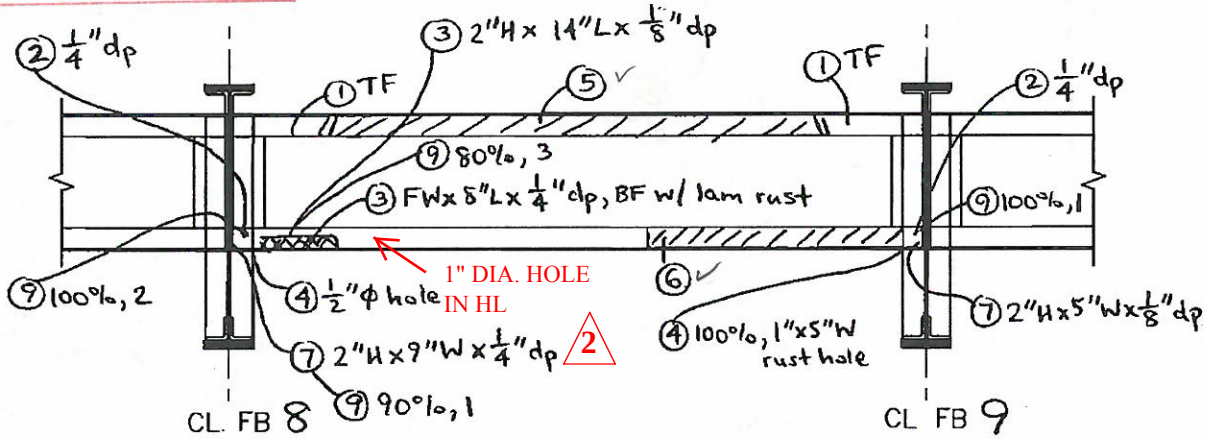


SOUTH ELEVATION

SPAN 7 TRACK 1 & 3 STRINGER 2 (FB 8 TO FB 9)

WSP-SELLS VERIFICATION INSPECTION
07/12/2013

2

# FIELD NOTES

Stantec Consulting Services Inc.

| | |
|---|---|
| Bridge No.: | 08080R |
| Project No.: | 301-0099 |
| Crew: | LM & AF |
| Date: 5/4/09 | Sheet No.: 233 |

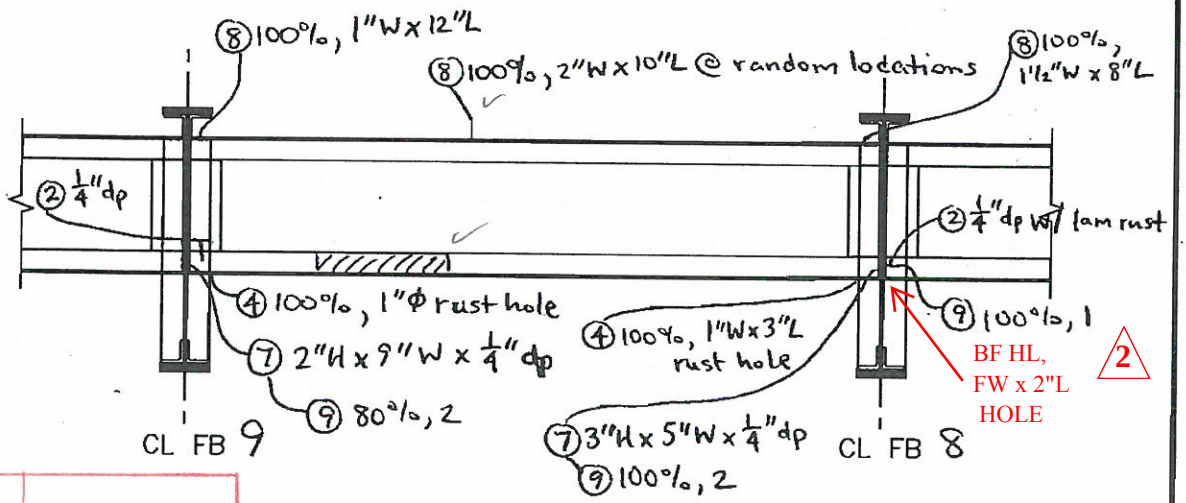


NORTH ELEVATION

| NO. | DATE | DESCRIPTION |
|---|---|---|
| 2 | 5/31/13 | WSP-SELLS; PA,MD |
| 1 | 9/25/12 | WSP-SELLS MYMA |

REVISIONS

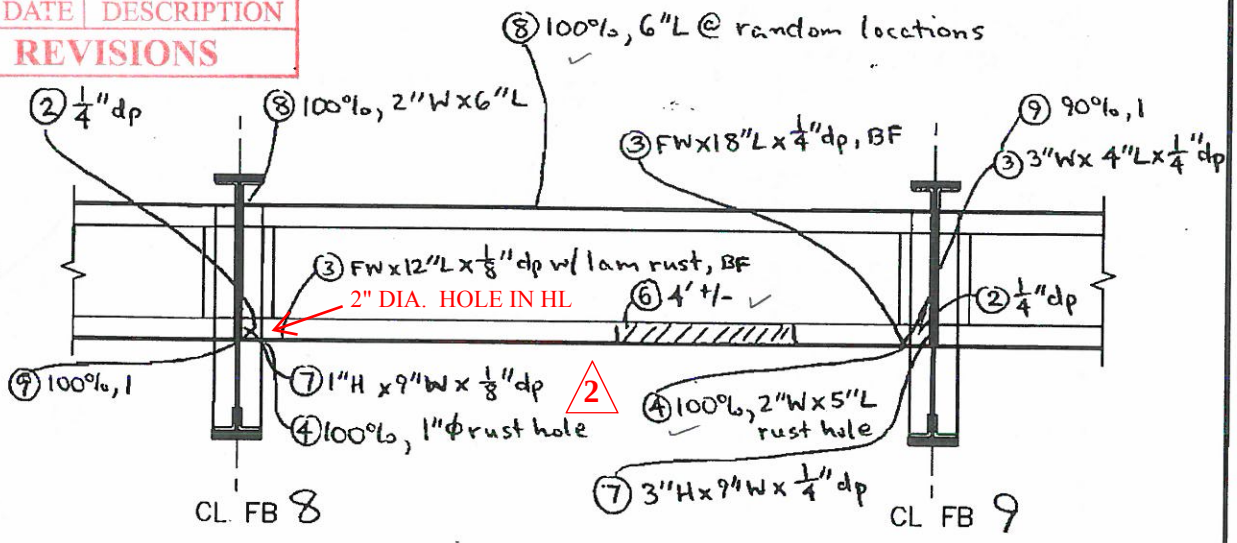


SOUTH ELEVATION

SPAN 7 TRACK 1 & 3 STRINGER 3 (FB 8 TO FB 9 )

2

WSP-SELLS VERIFICATION INSPECTION
07/12/2013

# FIELD NOTES

Stantec Consulting Services Inc.

| | |
|---|---|
| Bridge No.: | 08080R |
| Project No.: | 301-0099 |
| Crew: | LM & AF |
| Date: 5/4/09 | Sheet No.: 239 |

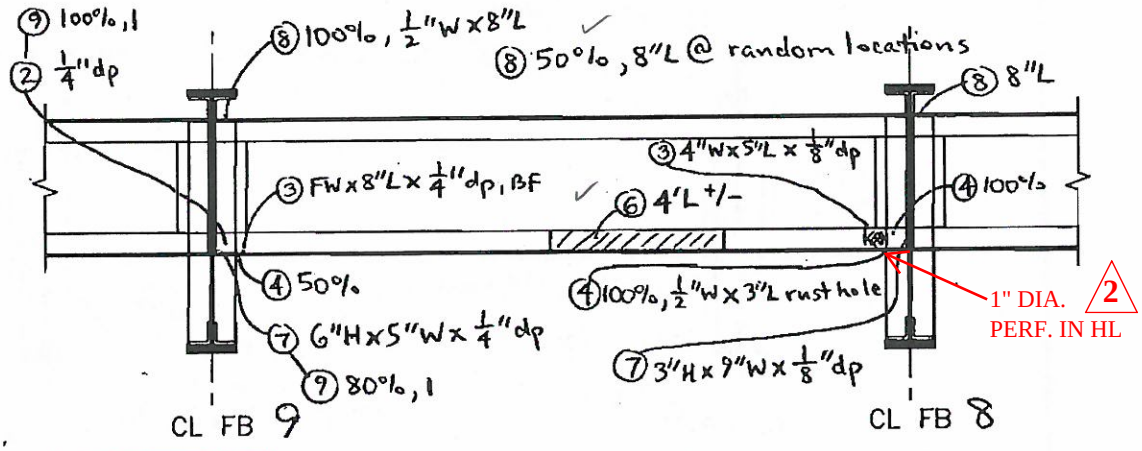


NORTH ELEVATION

| NO. | DATE | DESCRIPTION |
|---|---|---|
| 2 | 5/31/13 | WSP-SELLS; PA,MD |
| 1 | 9/25/12 | WSP-SELLS MN, MA |

REVISIONS

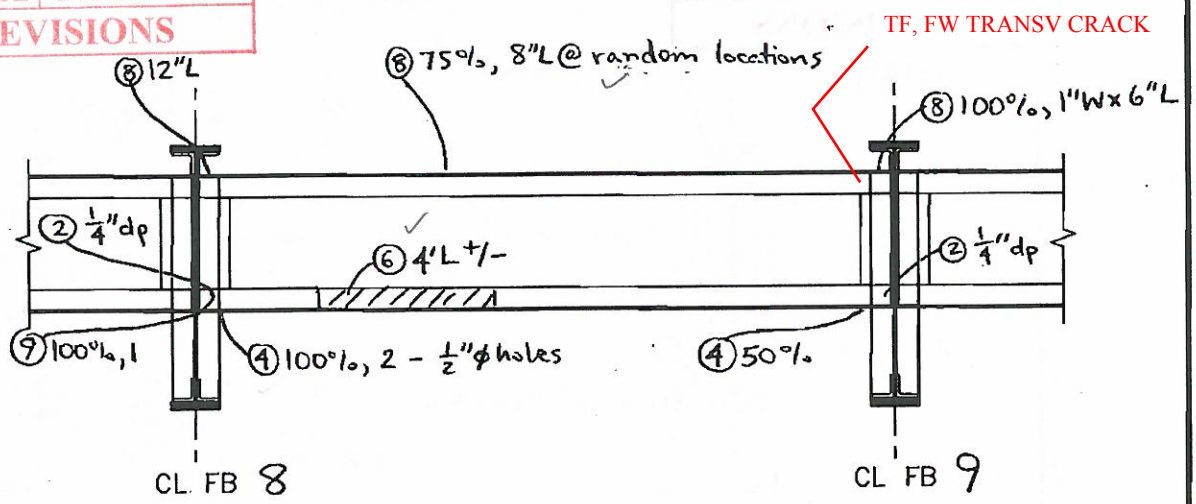


SOUTH ELEVATION

SPAN 7 TRACK 1 & 3 STRINGER 4 (FB 8 TO FB 9 )

2 WSP-SELLS VERIFICATION INSPECTION 07/12/2013

# FIELD NOTES

Stantec Consulting Services Inc.

| | |
|---|---|
| Bridge No.: 08080R | |
| Project No.: 301-0099 | |
| Crew: LM & AF | |
| Date: 5/4/09 | Sheet No.: 235 |

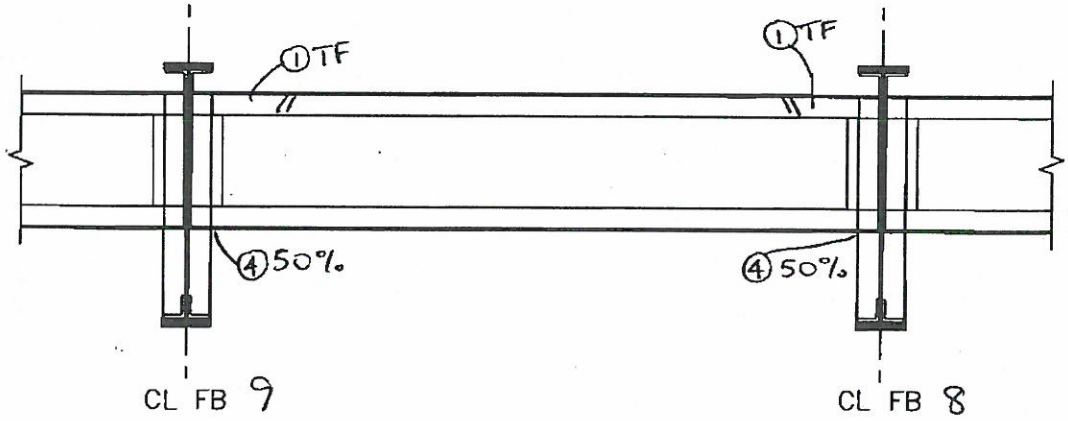


NORTH ELEVATION

| NO. | DATE | DESCRIPTION |
|---|---|---|
| 2 | 5/30/13 | WSP-SELLS; PA,MD |
| 1 | 9/25/12 | WSP-SELLS MLMA |

REVISIONS

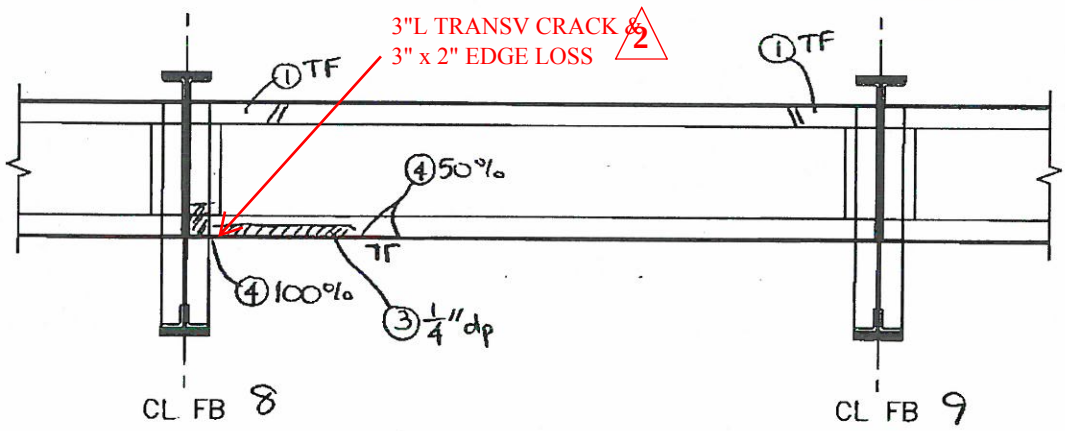


SOUTH ELEVATION

SPAN 7 TRACK 2 & 4 STRINGER 5 (FB8 TO FB9 )

WSP-SELLS VERIFICATION INSPECTION
07/12/2013 NO REVISION

# FIELD NOTES

Stantec Consulting Services Inc.

| | |
|---|---|
| Bridge No.: | 08080R |
| Project No.: | 301-0099 |
| Crew: | LM & AF |
| Date: 5/4/09 | Sheet No.: 236 |

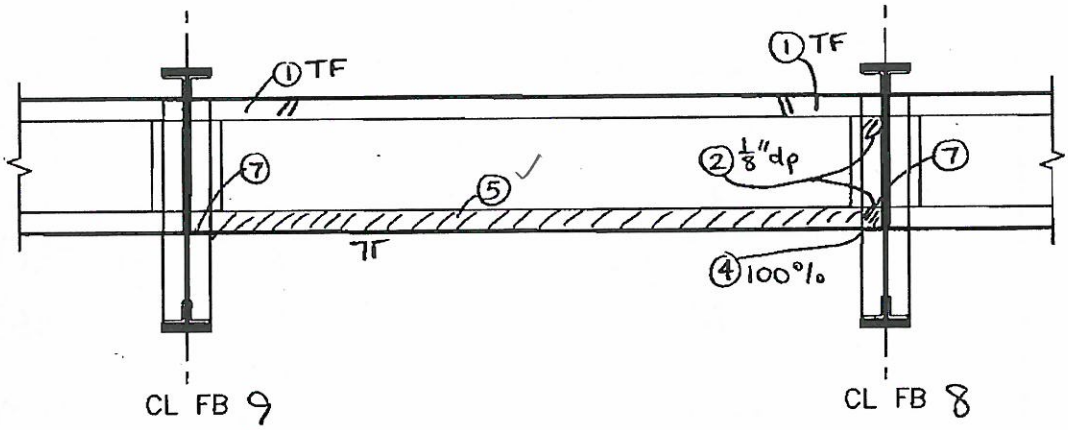


NORTH ELEVATION

| NO. | DATE | DESCRIPTION |
|---|---|---|
| | | |
| | | |
| 1 | 9/29/12 | WSP-SELLS ML,MA |

REVISIONS

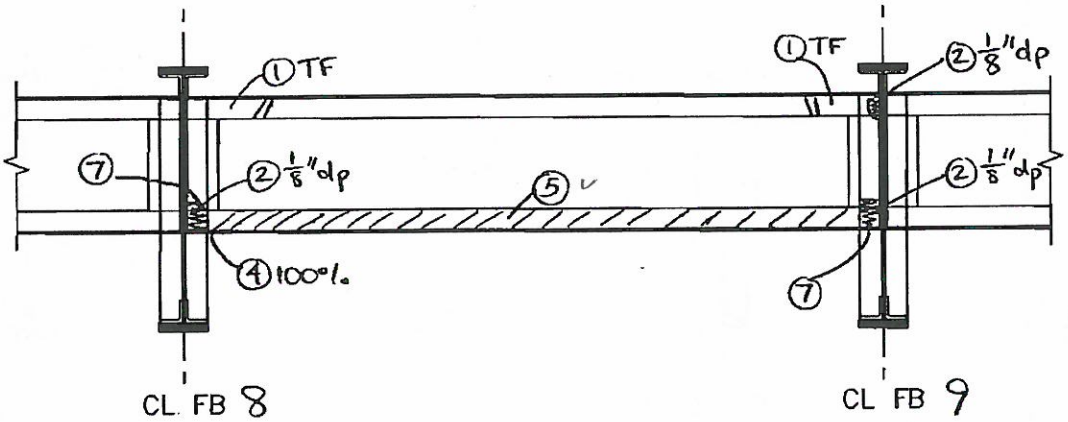


SOUTH ELEVATION

SPAN 7 TRACK 2 & 4 STRINGER 6 (FB 8 TO FB 9 )

2

**WSP-SELLS VERIFICATION INSPECTION**
**07/12/2013**

# FIELD NOTES

Stantec Consulting Services Inc.

| | |
|---|---|
| Bridge No.: | 08080R |
| Project No.: | 301-0099 |
| Crew: | LM & AF |
| Date: 5/4/09 | Sheet No.: 237 |

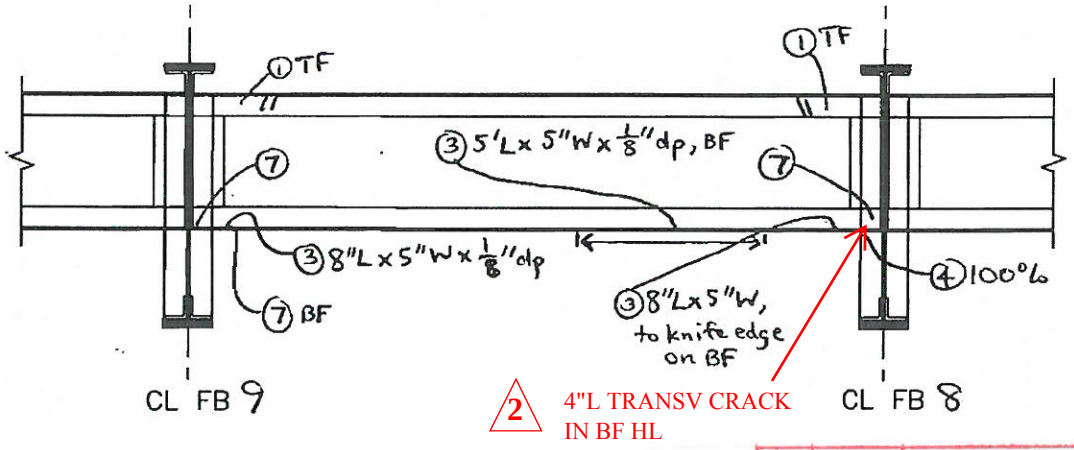


2 4"L TRANSV CRACK IN BF HL

NORTH ELEVATION

| NO. | DATE | DESCRIPTION |
|---|---|---|
| 2 | 5/31/13 | WSP-SELLS; PA,MD |
| 1 | 9/25/12 | WSP-SELLS ML, MA |

REVISIONS

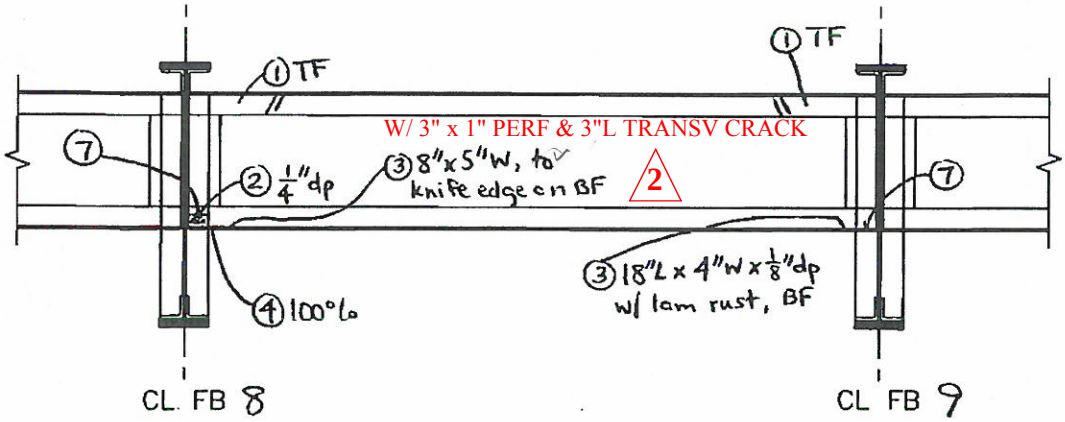


SOUTH ELEVATION

SPAN 7 TRACK 2 & 4 STRINGER 7 (FB 8 TO FB 9 )

WSP-SELLS VERIFICATION INSPECTION
07/12/2013

2

# FIELD NOTES

Stantec Consulting Services Inc.

| | |
|---|---|
| Bridge No.: | 08080R |
| Project No.: | 301-0099 |
| Crew: | LM & AF |
| Date: 5/4/09 | Sheet No.: 238 |

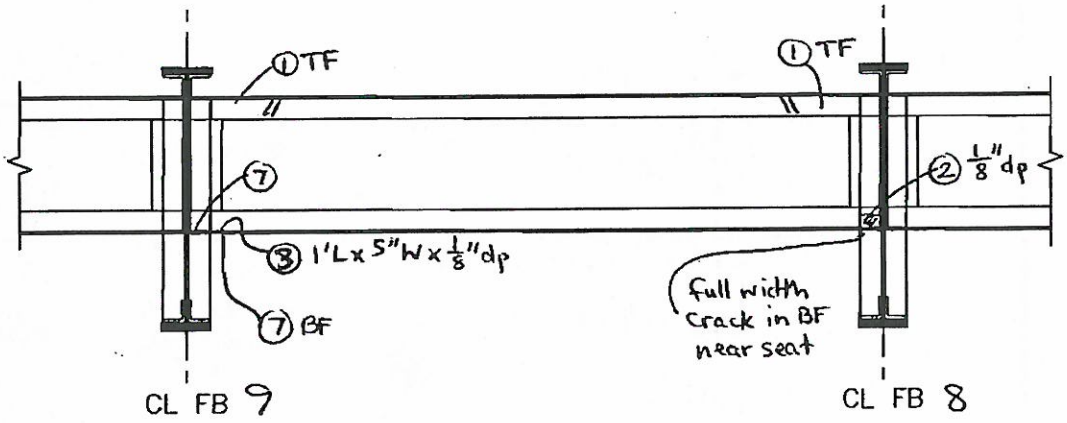


NORTH ELEVATION

| NO. | DATE | DESCRIPTION |
|---|---|---|
| 2 | 5/30/13 | WSP-SELLS; PA,MD |
| 1 | 9/25/12 | WSP-SELLS ML,MA |

REVISIONS

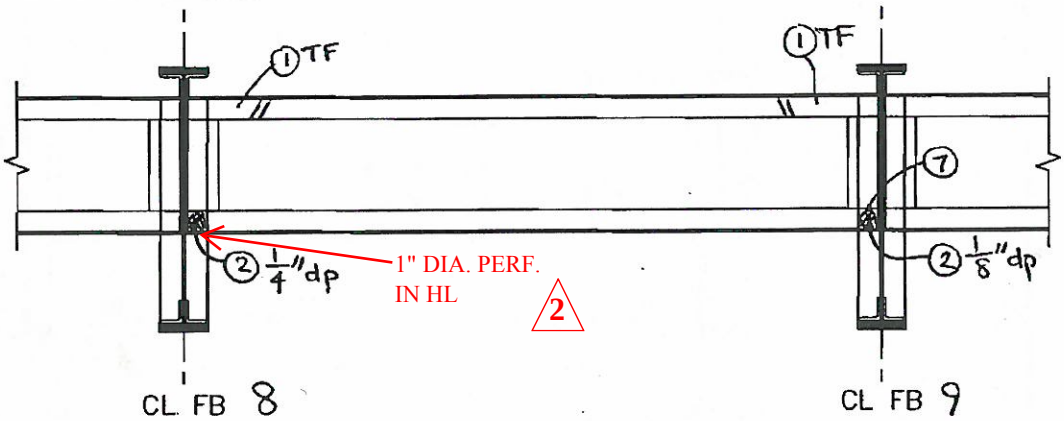


SOUTH ELEVATION

SPAN 7 TRACK 2 & 4 STRINGER 8 (FB 8 TO FB 9 )

2

**WSP-SELLS VERIFICATION INSPECTION**
**07/12/2013**

# FIELD NOTES

Stantec Consulting Services Inc.

| | |
|---|---|
| Bridge No.: | 08080R |
| Project No.: | 301-0099 |
| Crew: | LM & AF |
| Date: 5/4/09 | Sheet No.: 239 |

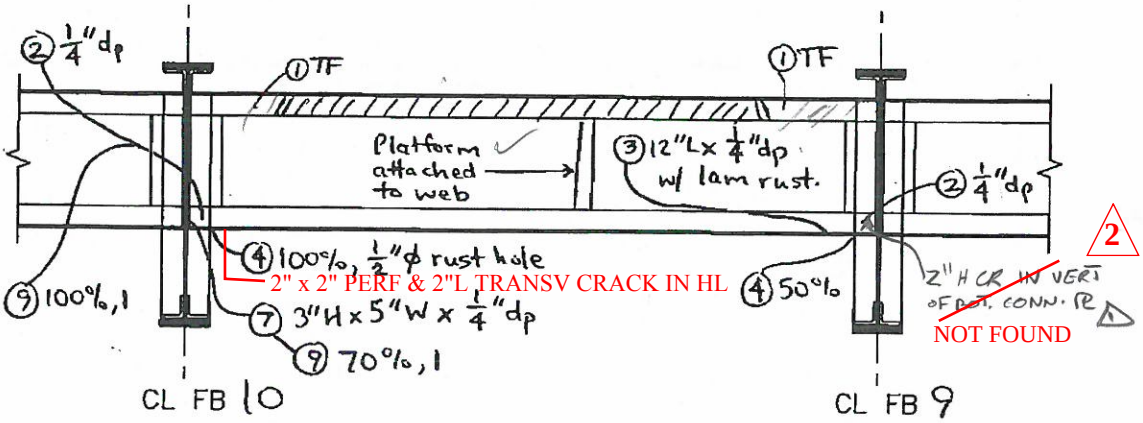


NORTH ELEVATION

| NO. | DATE | DESCRIPTION |
|---|---|---|
| 2 | 5/31/13 | WSP-SELLS; PA,MD |
| 1 | 9/25/12 | WSP-SELLS ML,MA |

REVISIONS

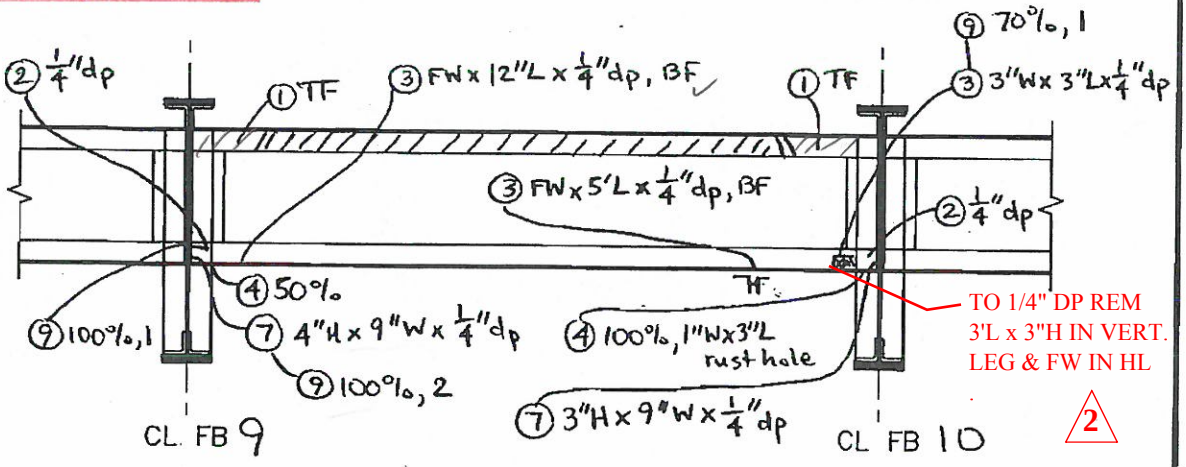


SOUTH ELEVATION

SPAN 7 TRACK 1 & 3 STRINGER 1 (FB 9 TO FB 10)

2 WSP-SELLS VERIFICATION INSPECTION 07/12/2013

# FIELD NOTES

Stantec Consulting Services Inc.

| | |
|---|---|
| Bridge No.: | 08080R |
| Project No.: | 301-0099 |
| Crew: | LM & AF |
| Date: 5/4/09 | Sheet No.: 240 |

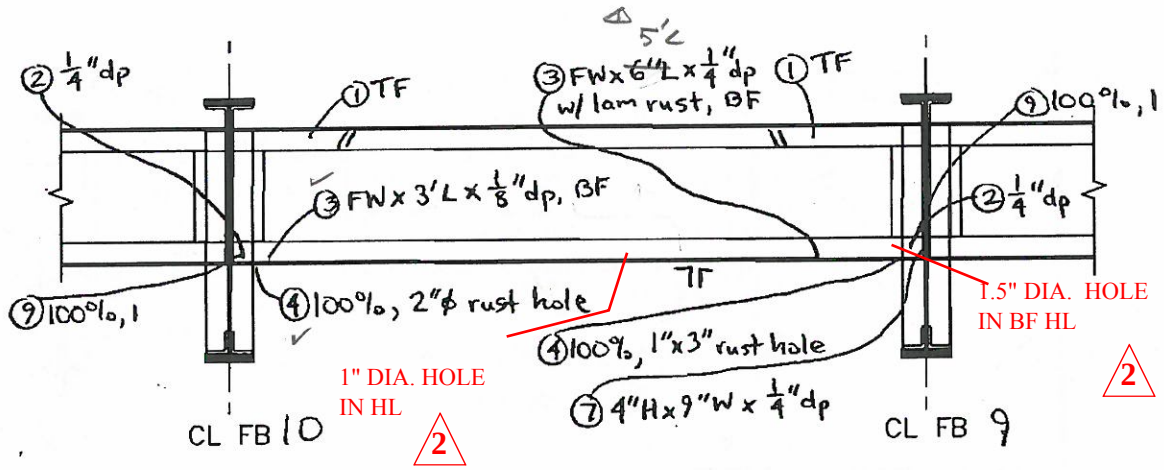


NORTH ELEVATION

| NO. | DATE | DESCRIPTION |
|---|---|---|
| 2 | 5/31/13 | WSP-SELLS; PA,MD |
| 1 | 9/25/12 | WSP-SELLS MLMA |

REVISIONS

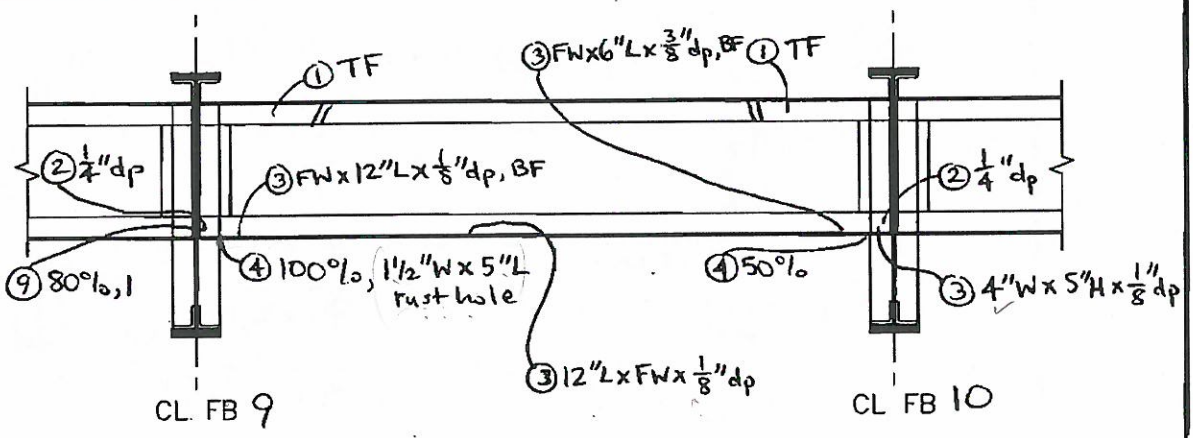


SOUTH ELEVATION

SPAN 7 TRACK 1 & 3 STRINGER 2 (FB 9 TO FB 10)

2 WSP-SELLS VERIFICATION INSPECTION
07/12/2013

# FIELD NOTES

Stantec Consulting Services Inc.

| | |
|---|---|
| Bridge No.: | 08080R |
| Project No.: | 301-0099 |
| Crew: | LM & AF |
| Date: 5/4/09 | Sheet No.: 241 |

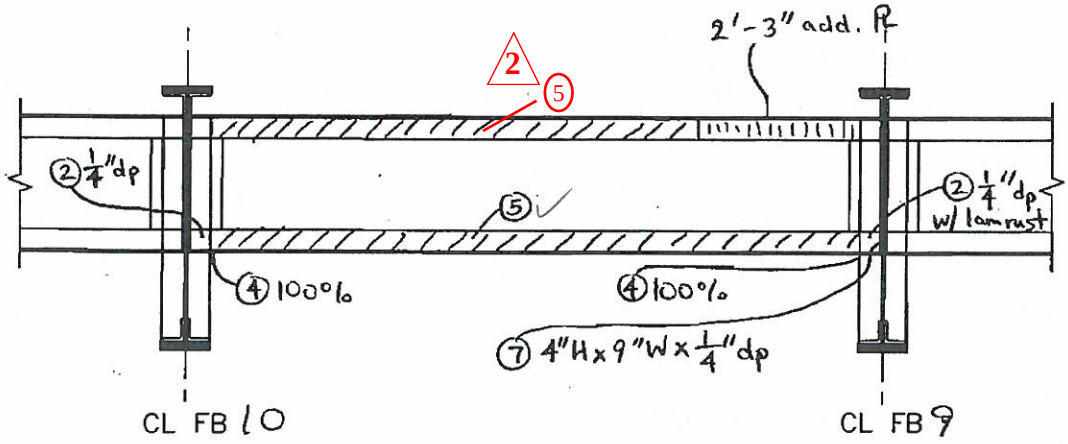


NORTH ELEVATION

| NO. | DATE | DESCRIPTION |
|---|---|---|
| 2 | 5/31/13 | WSP-SELLS; PA,MD |
| 1 | 9/25/12 | WSP-SELLS MY MA |

REVISIONS

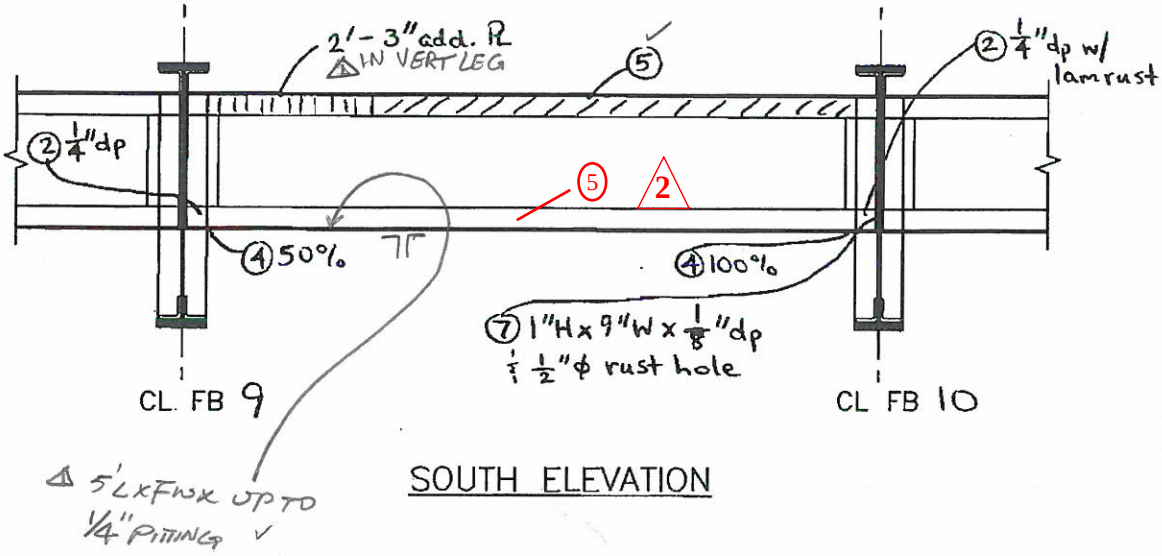


SOUTH ELEVATION

SPAN 7 TRACK 1 & 3 STRINGER 3 (FB 9 TO FB 10 )

2

WSP-SELLS VERIFICATION INSPECTION
07/12/2013

# FIELD NOTES

Stantec Consulting Services Inc.

| | |
|---|---|
| Bridge No.: | 08080R |
| Project No.: | 301-0099 |
| Crew: | LM & AF |
| Date: 5/4/09 | Sheet No.: 242 |

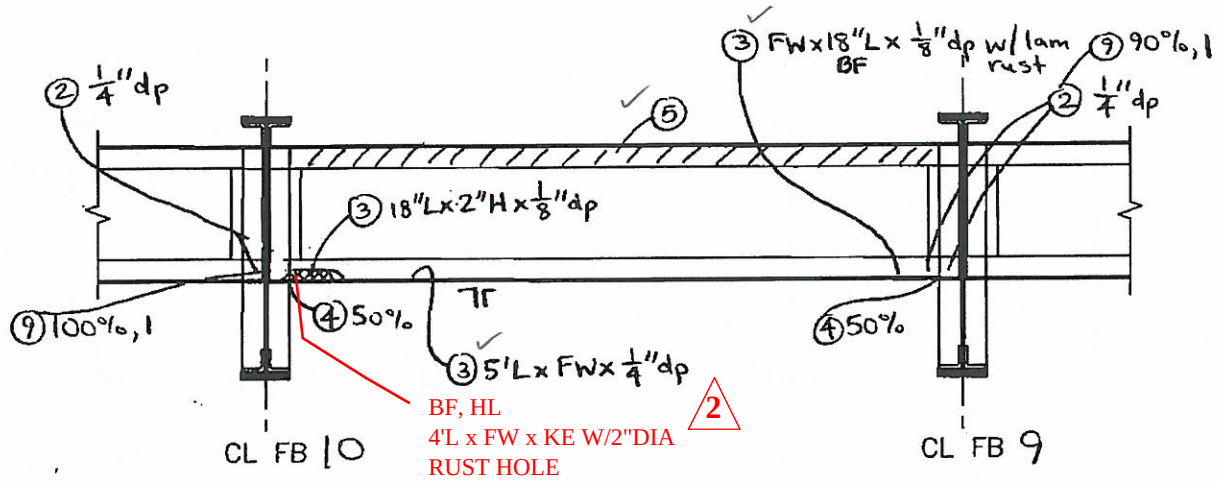


NORTH ELEVATION

| NO. | DATE | DESCRIPTION |
|---|---|---|
| 2 | 5/31/13 | WSP-SELLS; PA,MD |
| 1 | 9/25/12 | WSP-SELLS MLMA |

REVISIONS

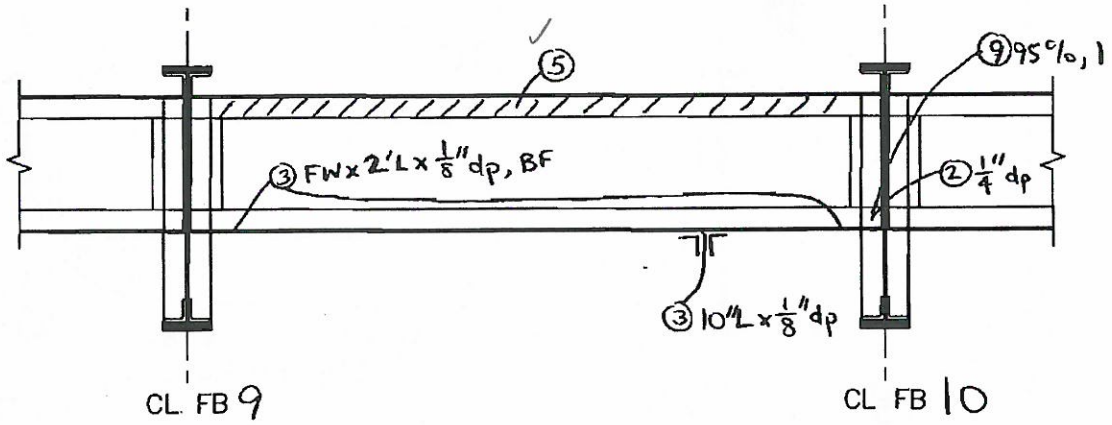


SOUTH ELEVATION

SPAN 7 TRACK 1 & 3 STRINGER 4 (FB 9 TO FB 10)

WSP-SELLS VERIFICATION INSPECTION
07/12/2013 NO REVISIONS

# FIELD NOTES

Stantec Consulting Services Inc.

| | |
|---|---|
| Bridge No.: | 08080R |
| Project No.: | 301-0099 |
| Crew: | LM & AF |
| Date: 5/4/09 | Sheet No.: 243 |

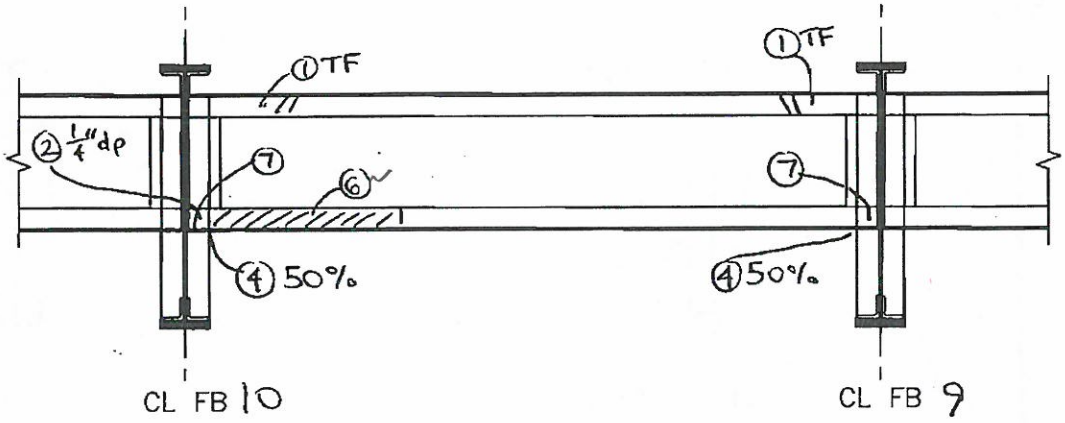


NORTH ELEVATION

| NO. | DATE | DESCRIPTION |
|---|---|---|
| 1 | 9/25/12 | WSP-SELLS ML MA |

REVISIONS

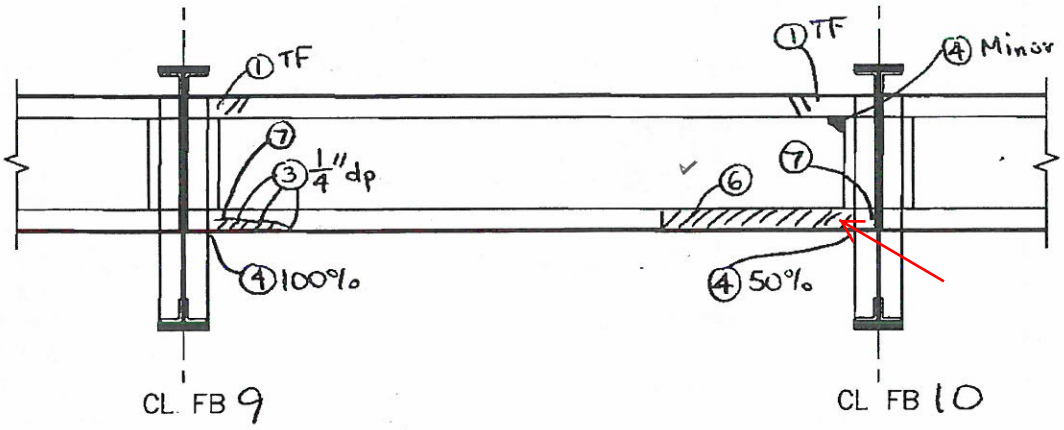


SOUTH ELEVATION

SPAN 7 TRACK 2 & 4 STRINGER 5 (FB 9 TO FB 10)

WSP-SELLS VERIFICATION INSPECTION
07/12/2013 NO REVISION

# FIELD NOTES

Stantec Consulting Services Inc.

| | |
|---|---|
| Bridge No.: | 08080R |
| Project No.: | 301-0099 |
| Crew: | LM & AF |
| Date: 5/4/09 | Sheet No.: 244 |

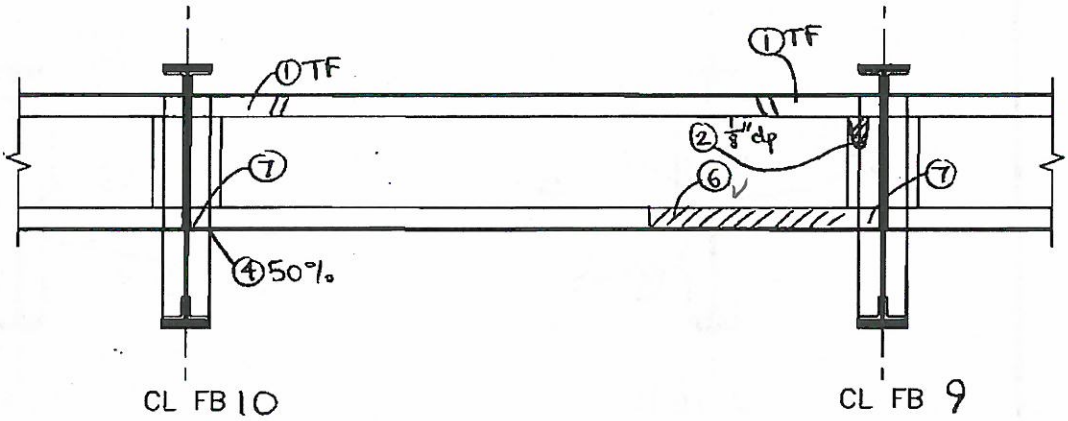


NORTH ELEVATION

| NO. | DATE | DESCRIPTION |
|---|---|---|
| | | |
| | | |
| 1 | 9/25/12 | WSP-SELLS MLMA |

REVISIONS

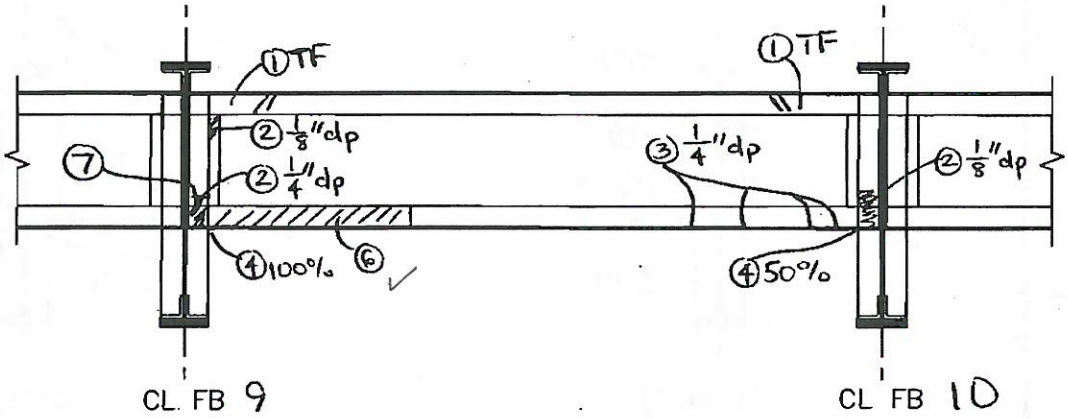


SOUTH ELEVATION

SPAN 7 TRACK 2 & 4 STRINGER 6 (FB 9 TO FB 10)

WSP-SELLS VERIFICATION INSPECTION
07/12/2013 NO REVISION

# FIELD NOTES

Stantec Consulting Services Inc.

| | |
|---|---|
| Bridge No.: 08080R | |
| Project No.: 301-0099 | |
| Crew: LM & AF | |
| Date: 5/4/09 | Sheet No.: 245 |

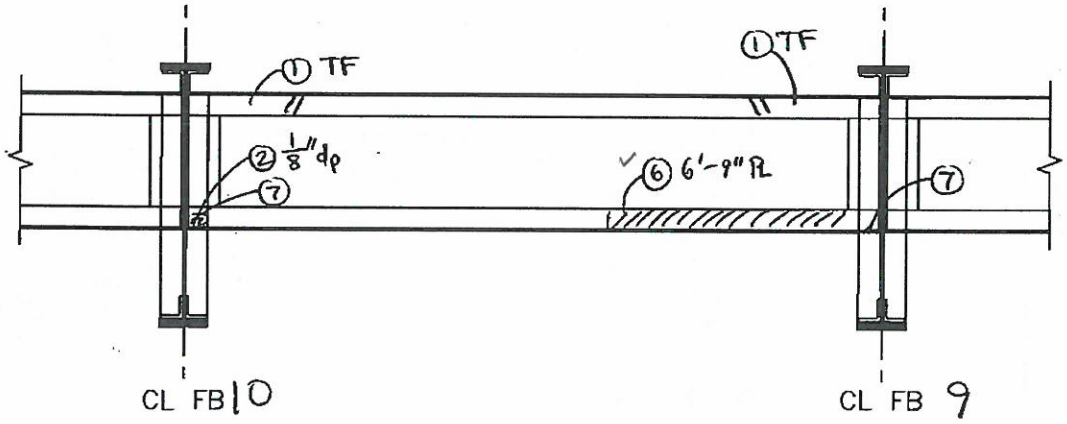


NORTH ELEVATION

| NO. | DATE | DESCRIPTION |
|---|---|---|
| 1 | 9/25/12 | WSP-SELLS MLMA |

REVISIONS

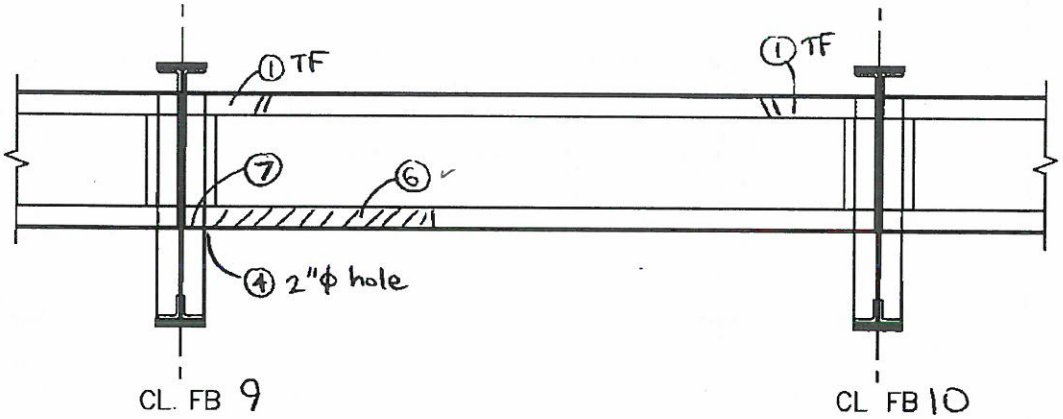


SOUTH ELEVATION

SPAN 7 TRACK 2 & 4 STRINGER 7 (FB 9 TO FB 10)

WSP-SELLS VERIFICATION INSPECTION
07/12/2013 NO REVISION

# FIELD NOTES

Stantec Consulting Services Inc.

| | |
|---|---|
| Bridge No.: | 08080R |
| Project No.: | 301-0099 |
| Crew: | LM & AF |
| Date: 5/4/09 | Sheet No.: 246 |

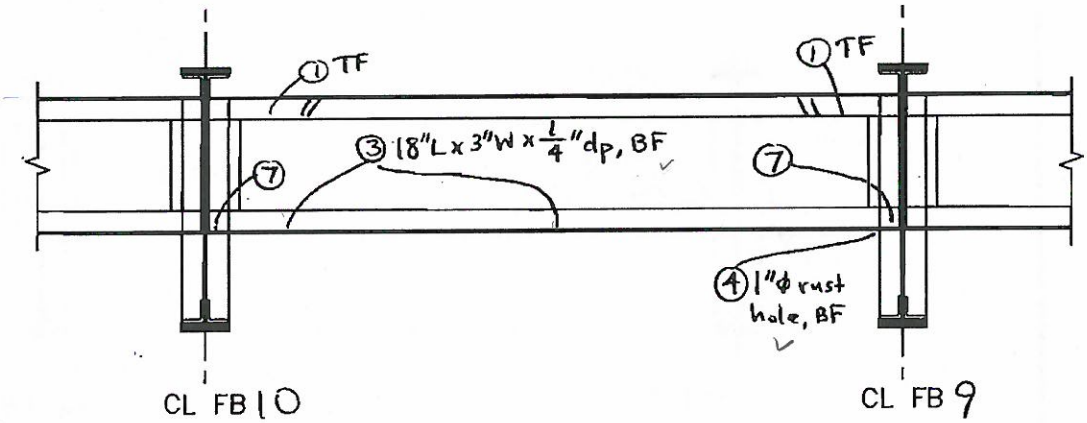


NORTH ELEVATION

| NO. | DATE | DESCRIPTION |
|---|---|---|
| | | |
| | | |
| 1 | 9/25/12 | WSP-SELLS MYMA |

REVISIONS

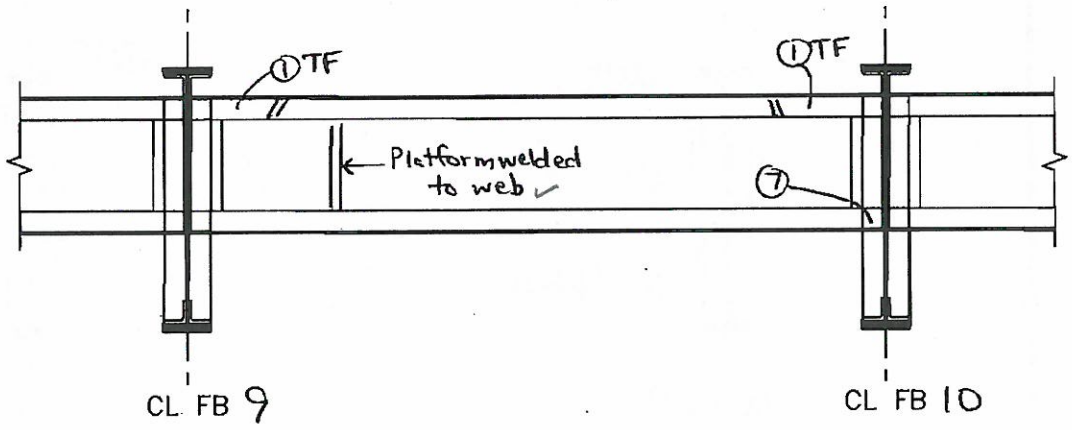


SOUTH ELEVATION

SPAN 7 TRACK 2 & 4 STRINGER 8 (FB 9 TO FB 10 )

WSP-SELLS VERIFICATION INSPECTION
07/12/2013 NO REVISION

# FIELD NOTES

Stantec Consulting Services Inc.

| | |
|---|---|
| Bridge No.: 08080R | |
| Project No.: 301-0099 | |
| Crew: LM & AF | |
| Date: 5/4/09 | Sheet No.: 247 |

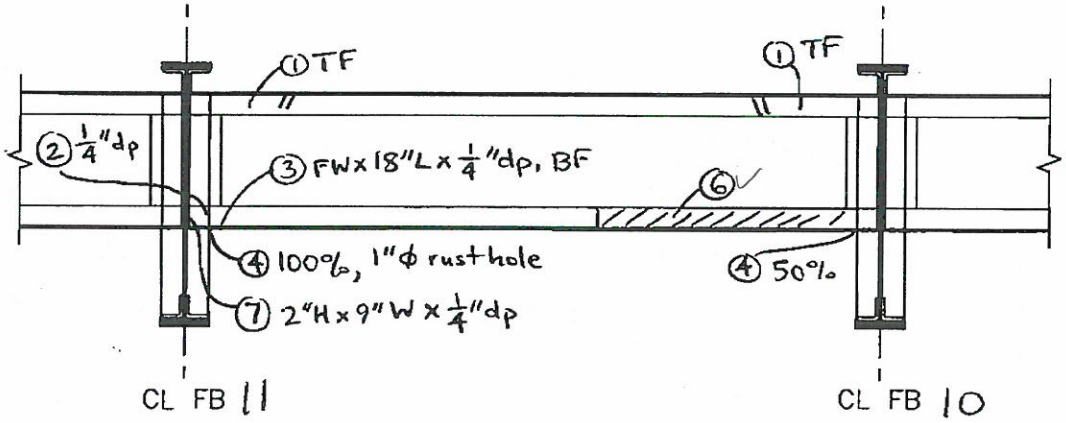


NORTH ELEVATION

| NO. | DATE | DESCRIPTION |
|---|---|---|
| | | |
| | | |
| 1 | 9/25/12 | WSP-SELLS MLMA |

REVISIONS

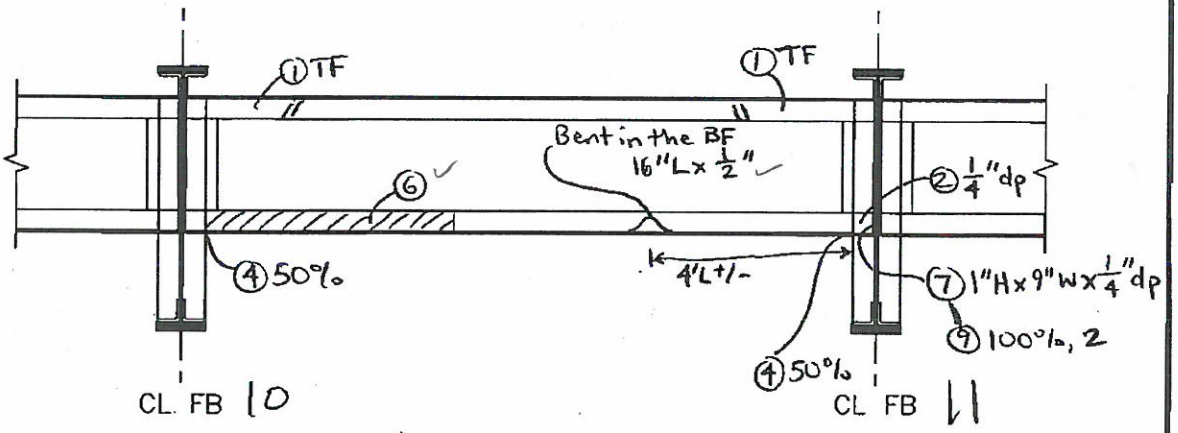


SOUTH ELEVATION

SPAN 7 TRACK 1 & 3 STRINGER 1 (FB 10 TO FB 11)

WSP-SELLS VERIFICATION INSPECTION
07/12/2013 NO REVISION

# FIELD NOTES

Stantec Consulting Services Inc.

| | |
|---|---|
| Bridge No.: | 08080R |
| Project No.: | 301-0099 |
| Crew: | LM & AF |
| Date: 5/4/09 | Sheet No.: 248 |

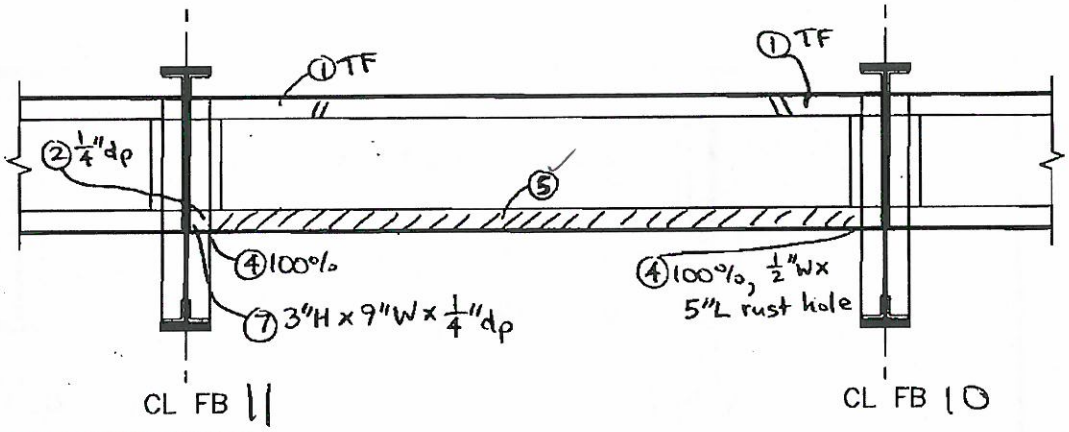


NORTH ELEVATION

| NO. | DATE | DESCRIPTION |
|---|---|---|
| 1 | 9/25/12 | WSP-SELLS MLMA |

REVISIONS

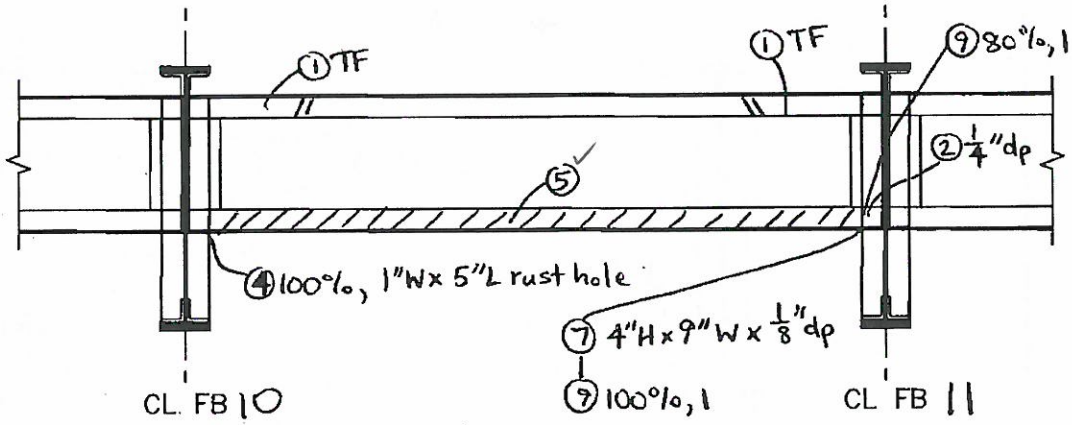


SOUTH ELEVATION

SPAN 7 TRACK 1 & 3 STRINGER 2 (FB 10 TO FB 11)

WSP-SELLS VERIFICATION INSPECTION
07/12/2013 NO REVISION

# FIELD NOTES

Stantec Consulting Services Inc.

| | |
|---|---|
| Bridge No.: | 08080R |
| Project No.: | 301-0099 |
| Crew: | LM & AF |
| Date: 5/4/09 | Sheet No.: 249 |

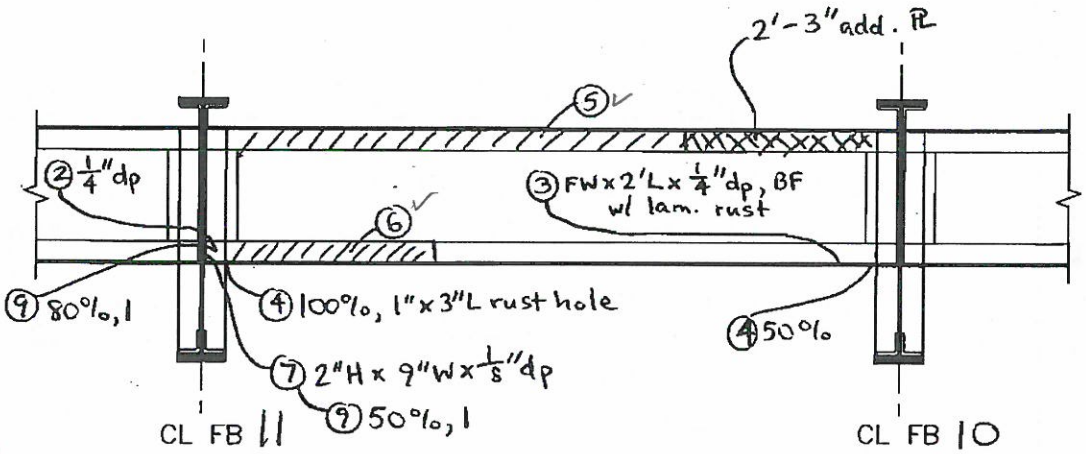


NORTH ELEVATION

| NO. | DATE | DESCRIPTION |
|---|---|---|
| 1 | 9/25/12 | WSP-SELLS ML, MA |

REVISIONS

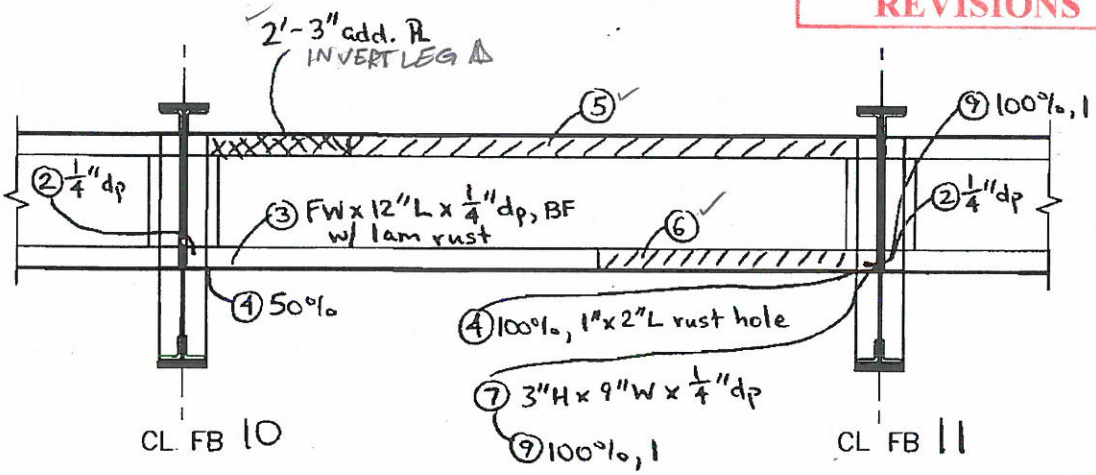


SOUTH ELEVATION

SPAN 7 TRACK 1 & 3 STRINGER 3 (FB10 TO FB 11)

WSP-SELLS VERIFICATION INSPECTION
07/12/2013 NO REVISION

# FIELD NOTES

Stantec Consulting Services Inc.

| | |
|---|---|
| Bridge No.: | 08080R |
| Project No.: | 301-0099 |
| Crew: | LM & AF |
| Date: 5/4/09 | Sheet No.: 250 |

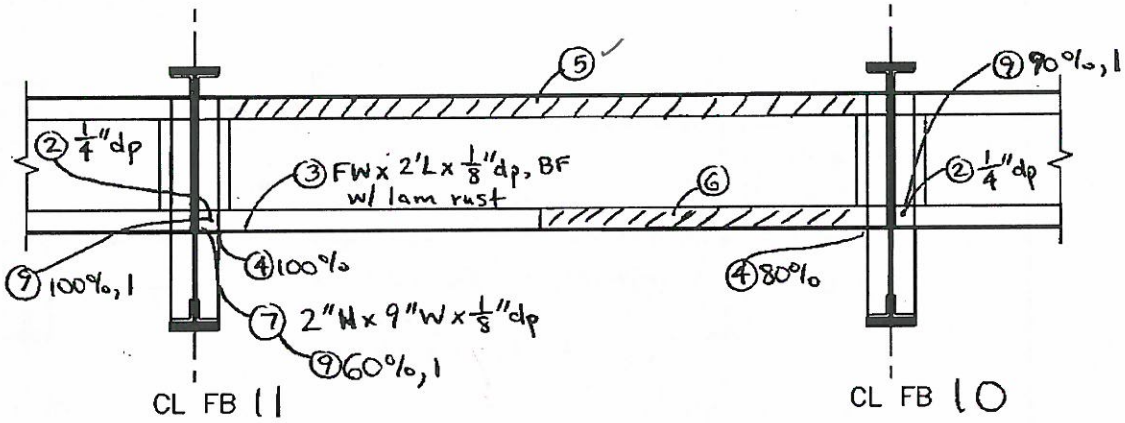


NORTH ELEVATION

| NO. | DATE | DESCRIPTION |
|---|---|---|
| 1 | 9/25/12 | WSP-SELLS MLMA |

REVISIONS

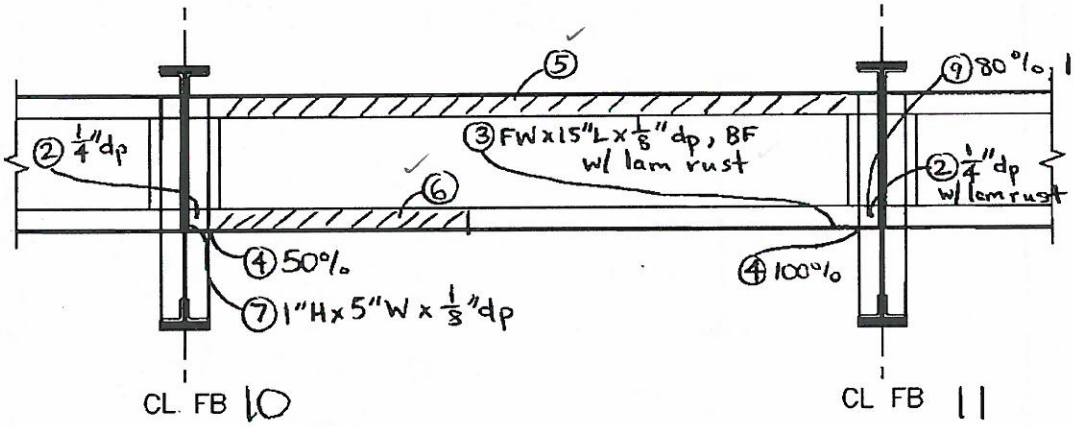


SOUTH ELEVATION

SPAN 7 TRACK 1 & 3 STRINGER 4 (FB10 TO FB11)

WSP-SELLS VERIFICATION INSPECTION
07/12/2013 NO REVISION

# FIELD NOTES

Stantec Consulting Services Inc.

| | |
|---|---|
| Bridge No.: 08080R | |
| Project No.: 301-0099 | |
| Crew: LM & AF | |
| Date: 5/4/09 | Sheet No.: 251 |

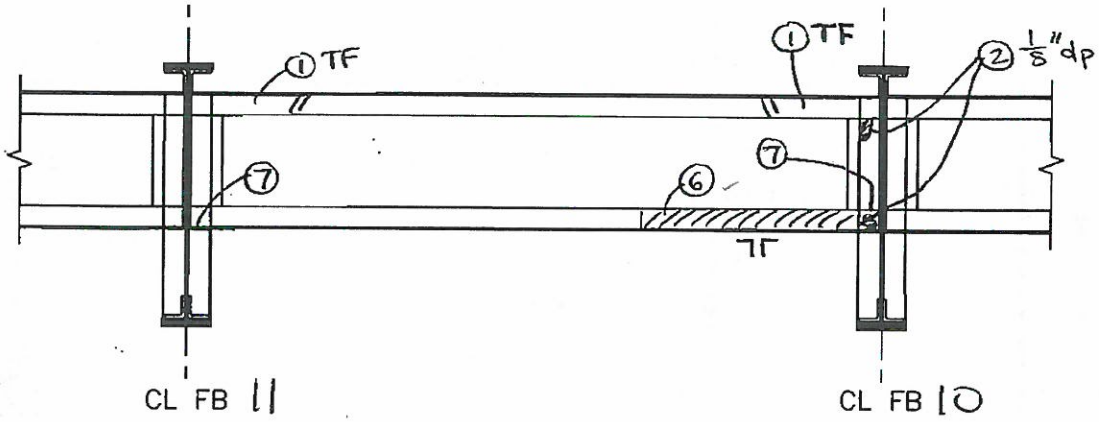


NORTH ELEVATION

| NO. | DATE | DESCRIPTION |
|---|---|---|
| 1 | 9/25/12 | WSP-SELLS MLMA |

REVISIONS

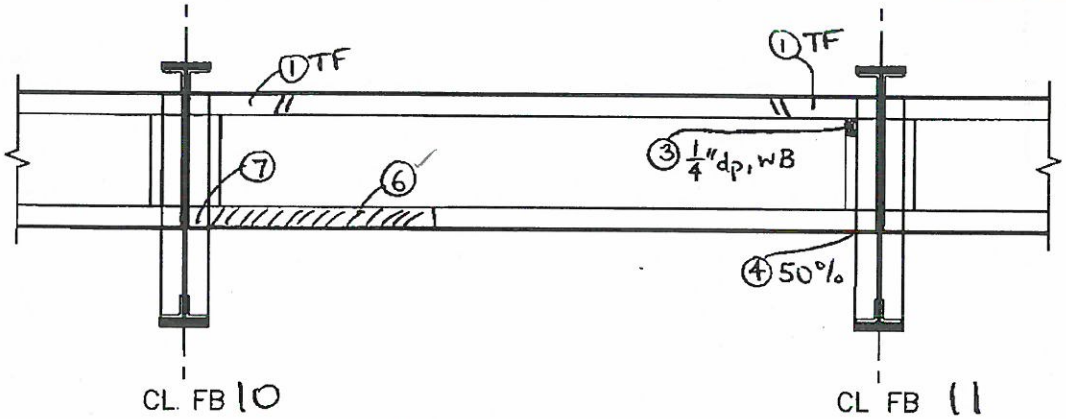


SOUTH ELEVATION

SPAN 7 TRACK 2 & 4 STRINGER 5 (FB 10 TO FB 11)

2 WSP-SELLS VERIFICATION INSPECTION 07/12/2013

# FIELD NOTES

Stantec Consulting Services Inc.

| | |
|---|---|
| Bridge No.: | 08080R |
| Project No.: | 301-0099 |
| Crew: | LM & AF |
| Date: 5/4/09 | Sheet No.: 252 |

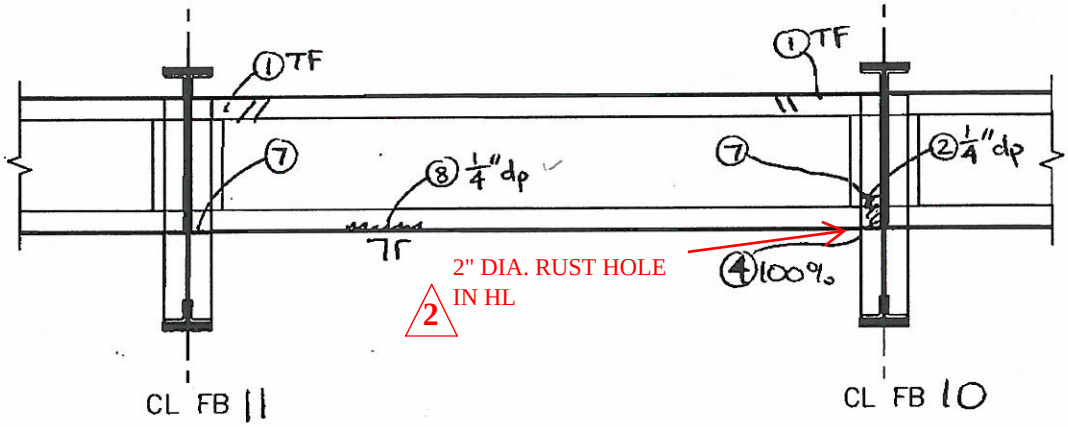


NORTH ELEVATION

| NO. | DATE | DESCRIPTION |
|---|---|---|
| 2 | 5/30/13 | WSP-SELLS; PA,MD |
| 1 | 9/25/12 | WSP-SELLS MLMA |

REVISIONS

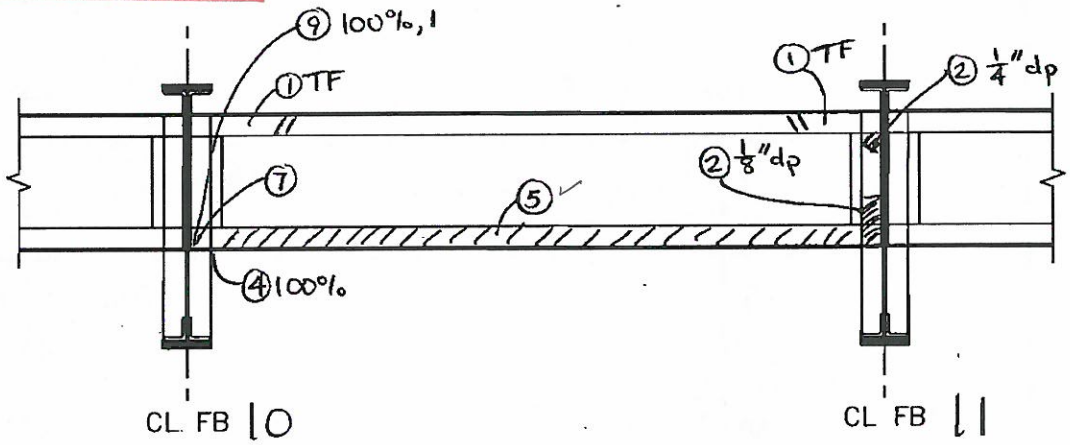


SOUTH ELEVATION

SPAN 7 TRACK 2 & 4 STRINGER 6 (FB10 TO FB 11)

WSP-SELLS VERIFICATION INSPECTION
07/12/2013

2

# FIELD NOTES

Stantec Consulting Services Inc.

| | |
|---|---|
| Bridge No.: | 08080R |
| Project No.: | 301-0099 |
| Crew: | LM & AF |
| Date: 5/4/09 | Sheet No.: 253 |

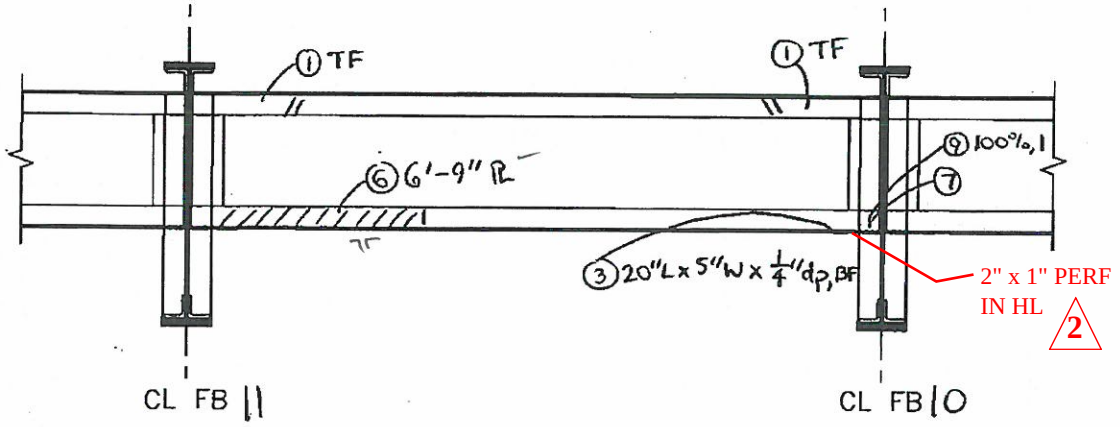


NORTH ELEVATION

| NO. | DATE | DESCRIPTION |
|---|---|---|
| 2 | 5/31/13 | WSP-SELLS; PA,MD |
| 1 | 9/25/12 | WSP-SELLS ML,MA |

REVISIONS

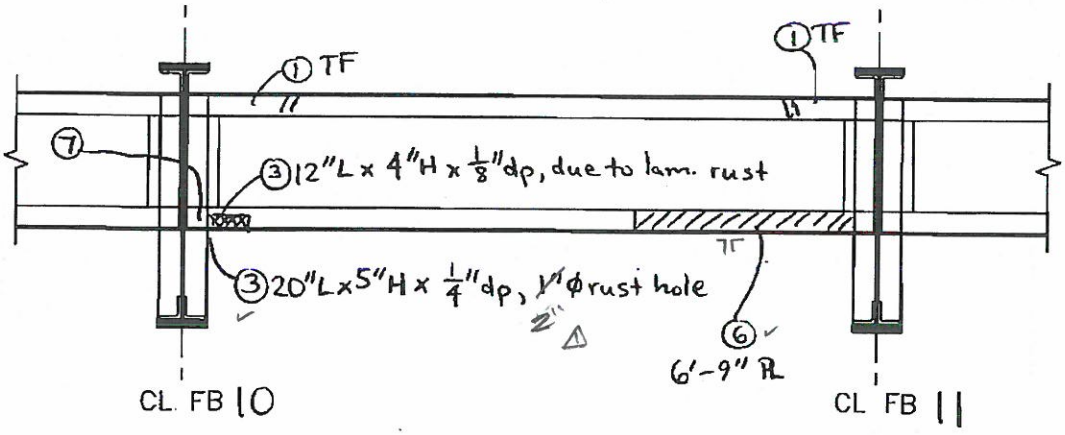


SOUTH ELEVATION

SPAN 7 TRACK 2 & 4 STRINGER 7 (FB10 TO FB 11 )

WSP-SELLS VERIFICATION INSPECTION
07/12/2013 NO REVISION

# FIELD NOTES

Stantec Consulting Services Inc.

| | |
|---|---|
| Bridge No.: | 08080R |
| Project No.: | 301-0099 |
| Crew: | LM & AF |
| Date: 5/4/09 | Sheet No.: 254 |

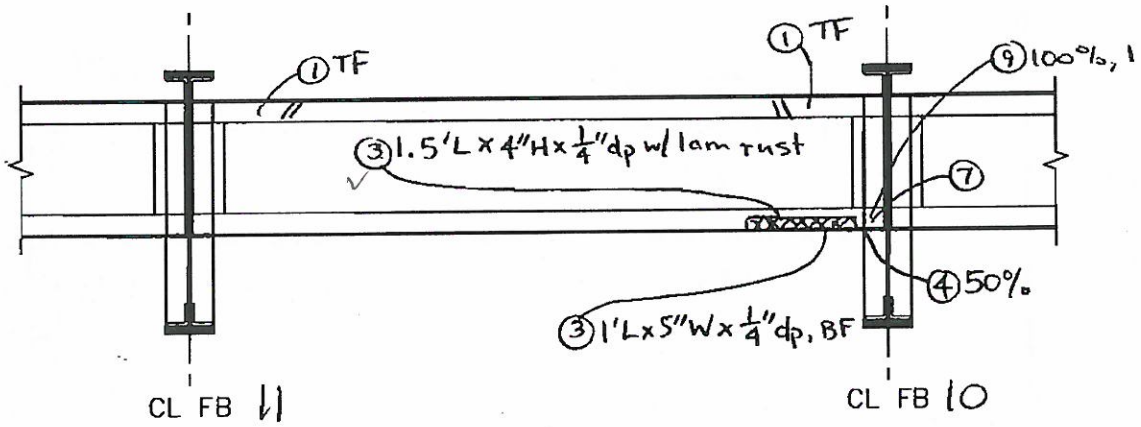


NORTH ELEVATION

| NO. | DATE | DESCRIPTION |
|---|---|---|
| | | |
| | | |
| 1 | 9/25/12 | WSP-SELLS MJ, MA |

REVISIONS

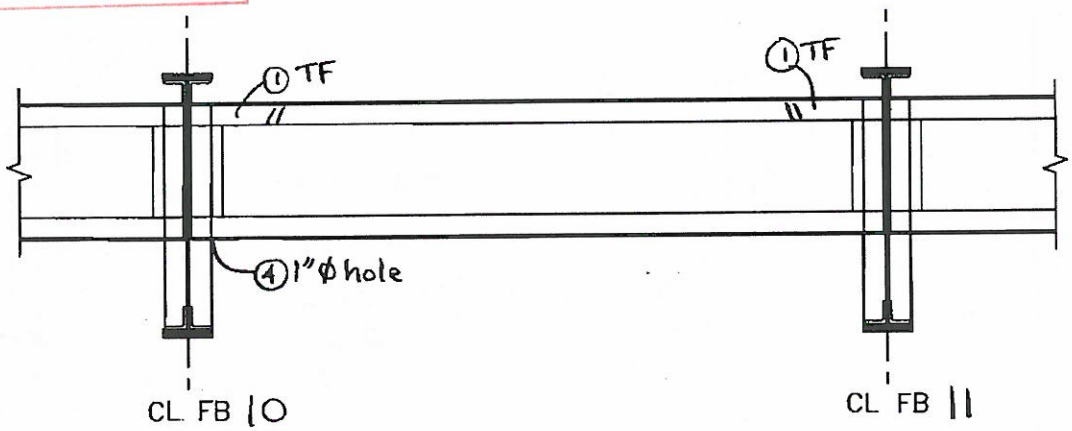


SOUTH ELEVATION

SPAN 7 TRACK 2 & 4 STRINGER 8 (FB 10 TO FB 11)

2

WSP-SELLS VERIFICATION INSPECTION
07/12/2013

# FIELD NOTES

Stantec Consulting Services Inc.

| | |
|---|---|
| Bridge No.: | 08080R |
| Project No.: | 301-0099 |
| Crew: | LM & AF |
| Date: 5/4/09 | Sheet No.: 255 |

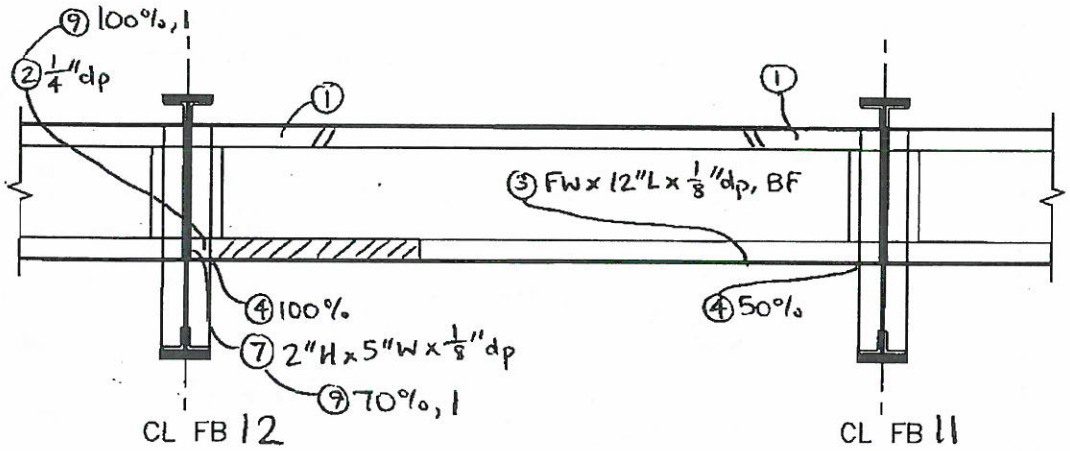


NORTH ELEVATION

| NO. | DATE | DESCRIPTION |
|---|---|---|
| 2 | 5/31/13 | WSP-SELLS; PA,MD |
| 1 | 9/25/12 | WSP-SELLS MI,MA |

REVISIONS

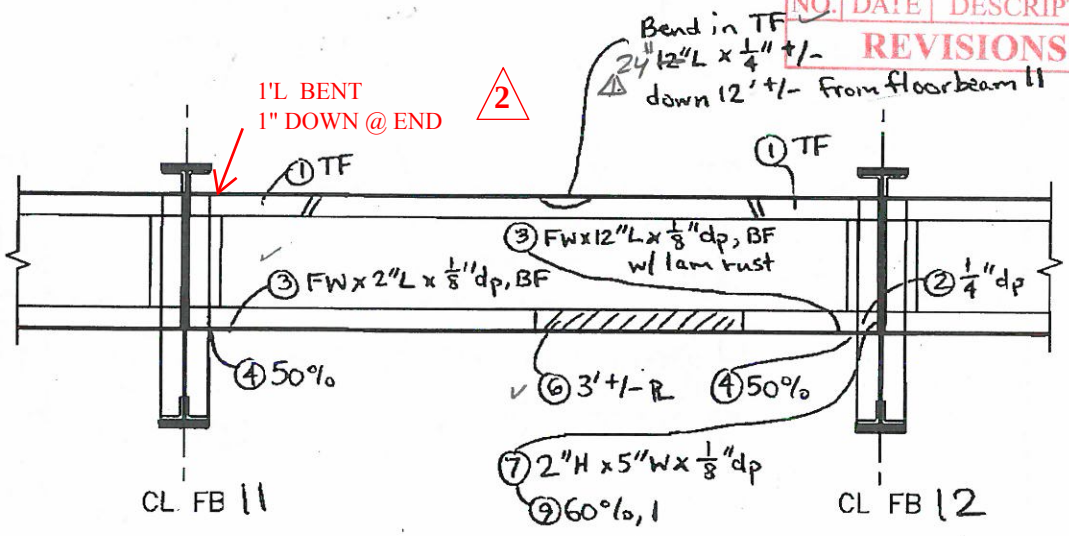


SOUTH ELEVATION

SPAN 7 TRACK 1 & 3 STRINGER 1 (FB 11 TO FB 12)

2 WSP-SELLS VERIFICATION INSPECTION 07/12/2013

# FIELD NOTES

Stantec Consulting Services Inc.

| | |
|---|---|
| Bridge No.: | 08080R |
| Project No.: | 301-0099 |
| Crew: | LM & AF |
| Date: 5/4/09 | Sheet No.: 256 |

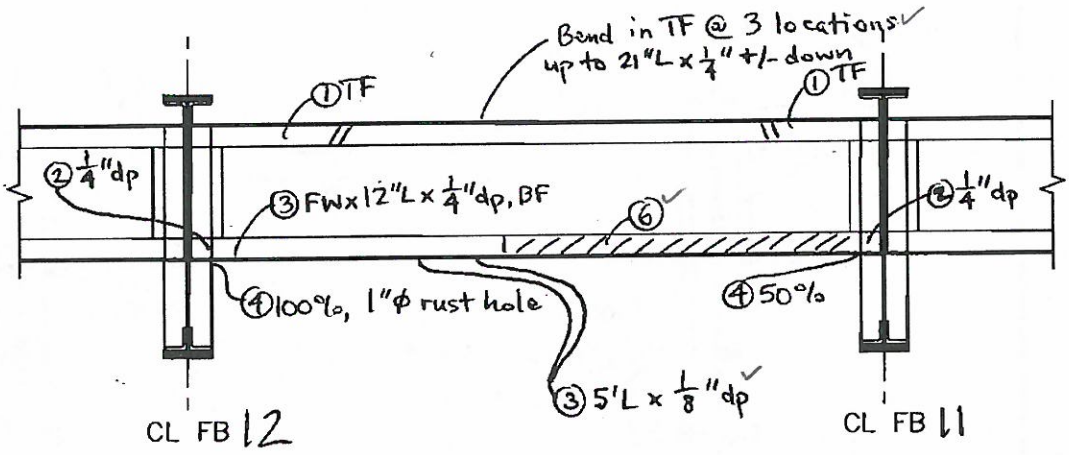


NORTH ELEVATION

| NO. | DATE | DESCRIPTION |
|---|---|---|
| 2 | 5/31/13 | WSP-SELLS; PA,MD |
| 1 | 9/25/12 | WSP-SELLS MLMA |

REVISIONS

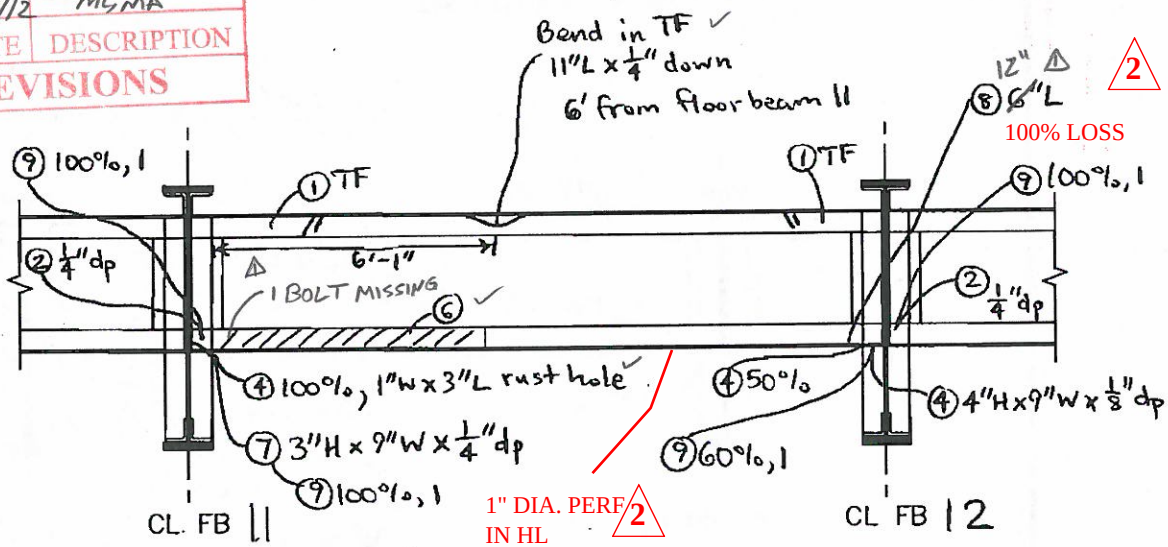


SOUTH ELEVATION

SPAN 7 TRACK 1 & 3 STRINGER 2 (FB 11 TO FB 12)

WSP-SELLS VERIFICATION INSPECTION
07/12/2013 NO REVISION

# FIELD NOTES

Stantec Consulting Services Inc.

Bridge No.: 08080R
Project No.: 301-0099
Crew: LM & AF
Date: 5/4/09 Sheet No.: 257

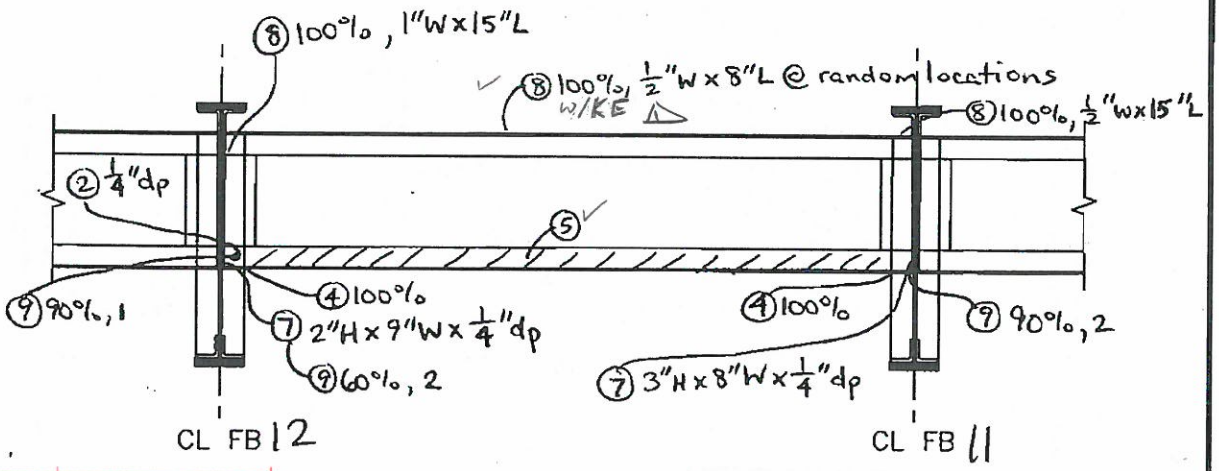


NORTH ELEVATION

| NO. | DATE | DESCRIPTION |
|---|---|---|
| | | |
| | | |
| △ | 9/25/12 | WSP-SELLS MLMA |

REVISIONS

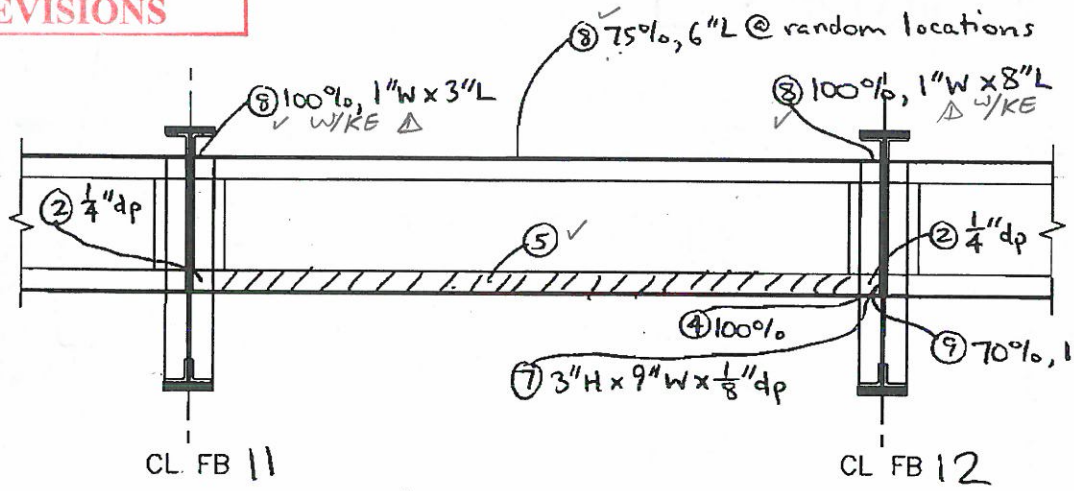


SOUTH ELEVATION

SPAN 7 TRACK 1 & 3 STRINGER 3 (FB11 TO FB12)

2 WSP-SELLS VERIFICATION INSPECTION
07/12/2013

# FIELD NOTES

Stantec Consulting Services Inc.

| | |
|---|---|
| Bridge No.: | 08080R |
| Project No.: | 301-0099 |
| Crew: | LM & AF |
| Date: 5/4/09 | Sheet No.: 258 |

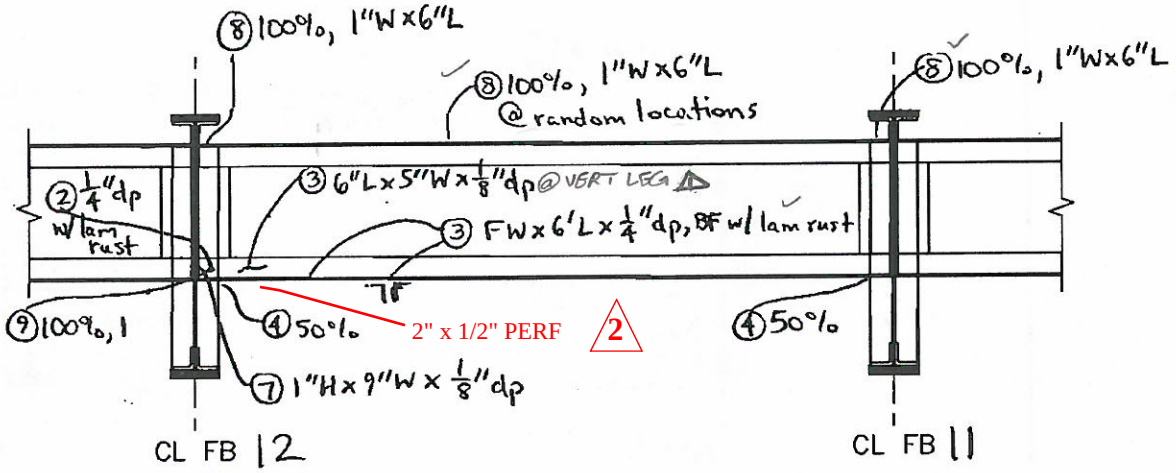


NORTH ELEVATION

| NO. | DATE | DESCRIPTION |
|---|---|---|
| 2 | 5/31/13 | WSP-SELLS; PA,MD |
| 1 | 9/25/12 | WSP-SELLS ML,MA |

REVISIONS

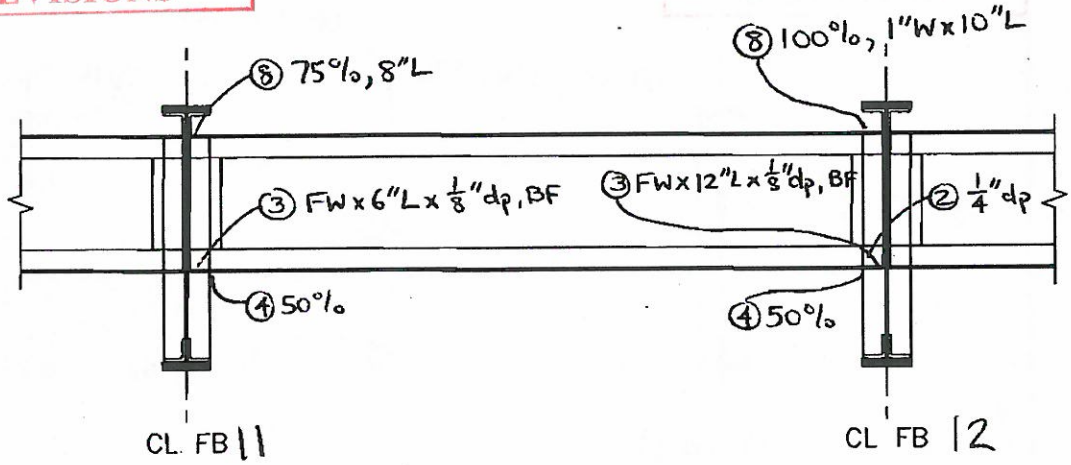


SOUTH ELEVATION

SPAN 7 TRACK 1 & 3 STRINGER 4 (FB11 TO FB12)

2

WSP-SELLS VERIFICATION INSPECTION
07/12/2013

# FIELD NOTES

Stantec Consulting Services Inc.

| | |
|---|---|
| Bridge No.: | 08080R |
| Project No.: | 301-0099 |
| Crew: | LM & AF |
| Date: 5/4/09 | Sheet No.: 259 |

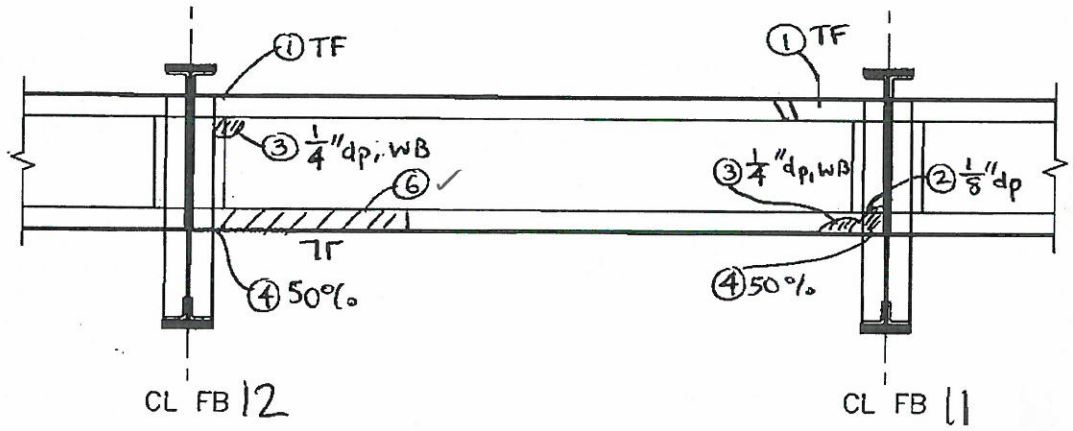


NORTH ELEVATION

| NO. | DATE | DESCRIPTION |
|---|---|---|
| 2 | 5/30/13 | WSP-SELLS; PA,MD |
| 1 | 9/25/12 | WSP-SELLS ML,MA |

REVISIONS

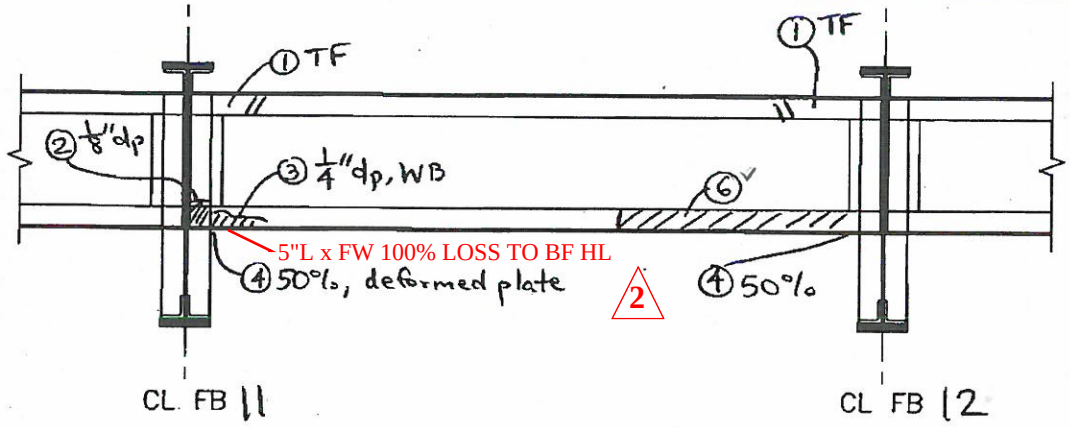


SOUTH ELEVATION

SPAN 7 TRACK 2 & 4 STRINGER 5 (FB 11 TO FB 12)

WSP-SELLS VERIFICATION INSPECTION
07/12/2013 NO REVISION

# FIELD NOTES

Stantec Consulting Services Inc.

| | |
|---|---|
| Bridge No.: | 08080R |
| Project No.: | 301-0099 |
| Crew: | LM & AF |
| Date: 5/4/09 | Sheet No.: 260 |

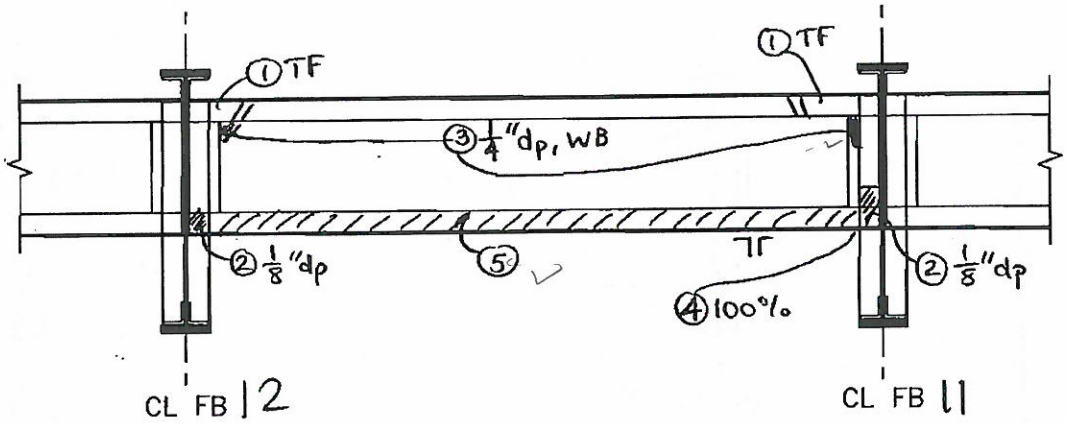


NORTH ELEVATION

| NO. | DATE | DESCRIPTION |
|---|---|---|
| | | |
| | | |
| 1 | 9/25/12 | WSP-SELLS ML, MA |

REVISIONS

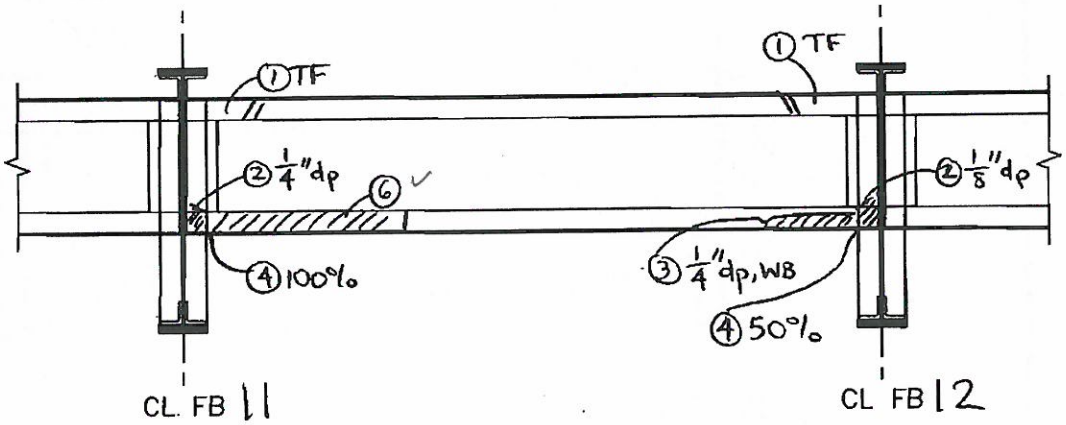


SOUTH ELEVATION

SPAN 7 TRACK 2 & 4 STRINGER 6 (FB 11 TO FB 12)

WSP-SELLS VERIFICATION INSPECTION
07/12/2013 NO REVISION

# FIELD NOTES

Stantec Consulting Services Inc.

| | |
|---|---|
| Bridge No.: | 08080R |
| Project No.: | 301-0099 |
| Crew: | LM & AF |
| Date: 5/4/09 | Sheet No.: 261 |

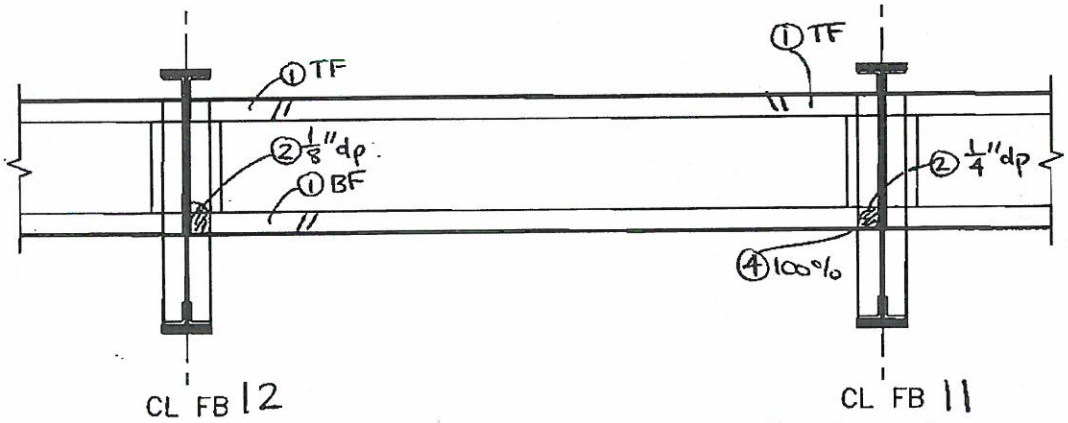


NORTH ELEVATION

| NO. | DATE | DESCRIPTION |
|---|---|---|
| 1 | 9/25/12 | WSP-SELLS ML, MA |

REVISIONS

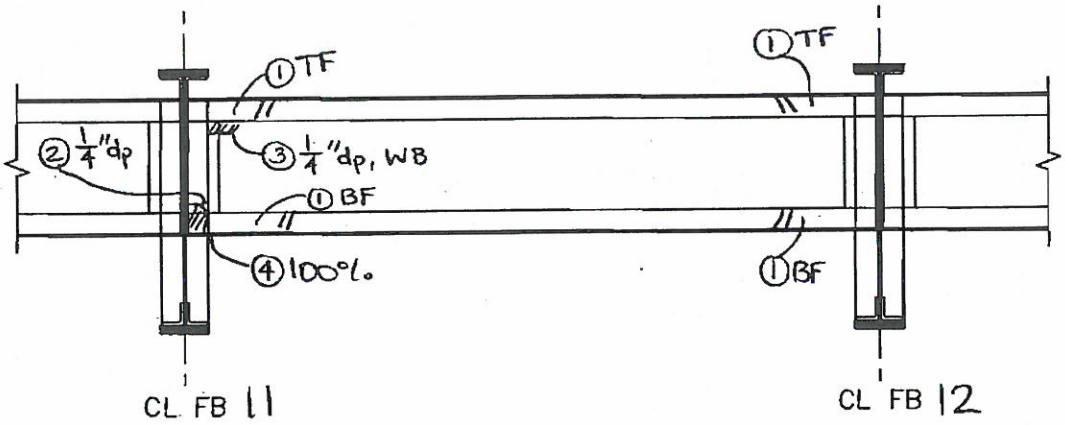


SOUTH ELEVATION

SPAN 7 TRACK 2 & 4 STRINGER 7 (FB 11 TO FB 12)

WSP-SELLS VERIFICATION INSPECTION
07/12/2013 NO REVISION

# FIELD NOTES

Stantec Consulting Services Inc.

| | |
|---|---|
| Bridge No.: | 08080R |
| Project No.: | 301-0099 |
| Crew: | LM & AF |
| Date: 5/4/09 | Sheet No.: 262 |

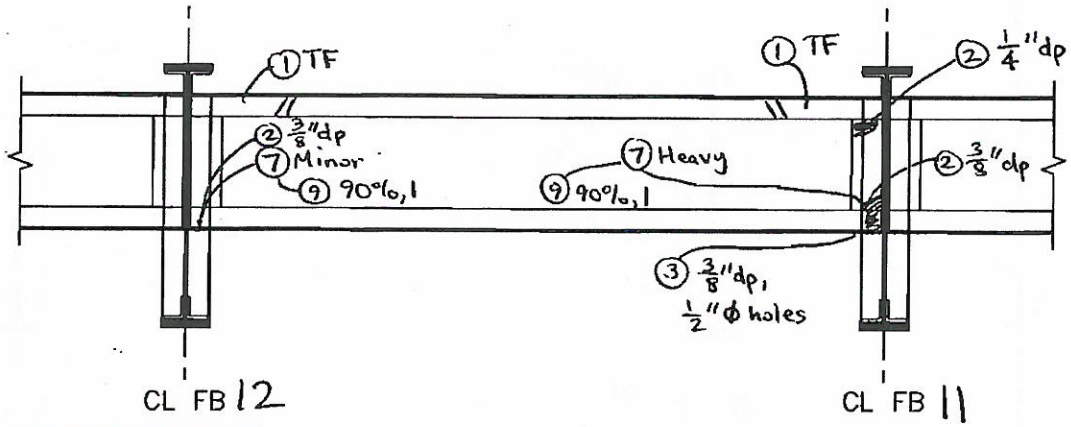


NORTH ELEVATION

| NO. | DATE | DESCRIPTION |
|---|---|---|
| 1 | 9/25/12 | WSP-SELLS ML, MA |

REVISIONS

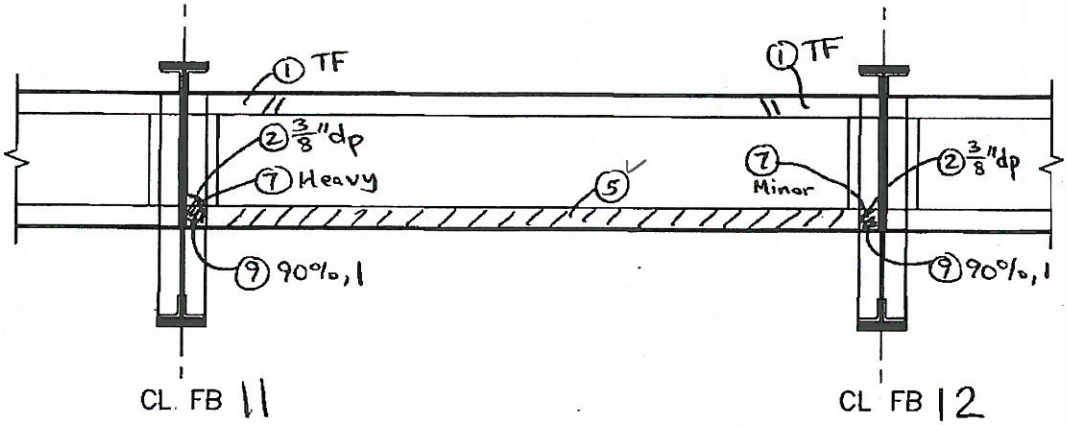


SOUTH ELEVATION

SPAN 7 TRACK 2 & 4 STRINGER 8 (FB 11 TO FB 12)

WSP-SELLS VERIFICATION INSPECTION
07/12/2013 NO REVISION

# FIELD NOTES

Stantec Consulting Services Inc.

| | |
|---|---|
| Bridge No.: | 08080R |
| Project No.: | 301-0099 |
| Crew: | LM & AF |
| Date: 5/4/09 | Sheet No.: 263 |

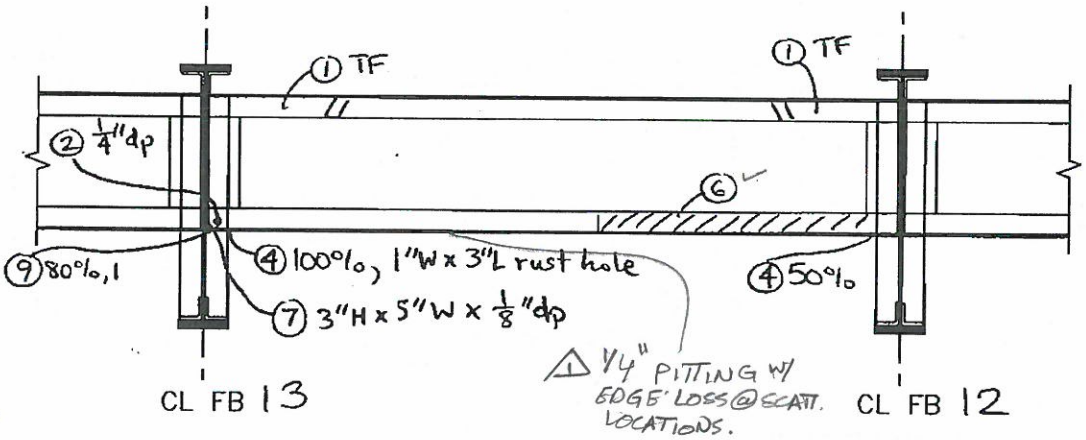


NORTH ELEVATION

| NO. | DATE | DESCRIPTION |
|---|---|---|
| | | |
| | | |
| △1 | 9/25/12 | WSP_SELLS ML, MA |

REVISIONS

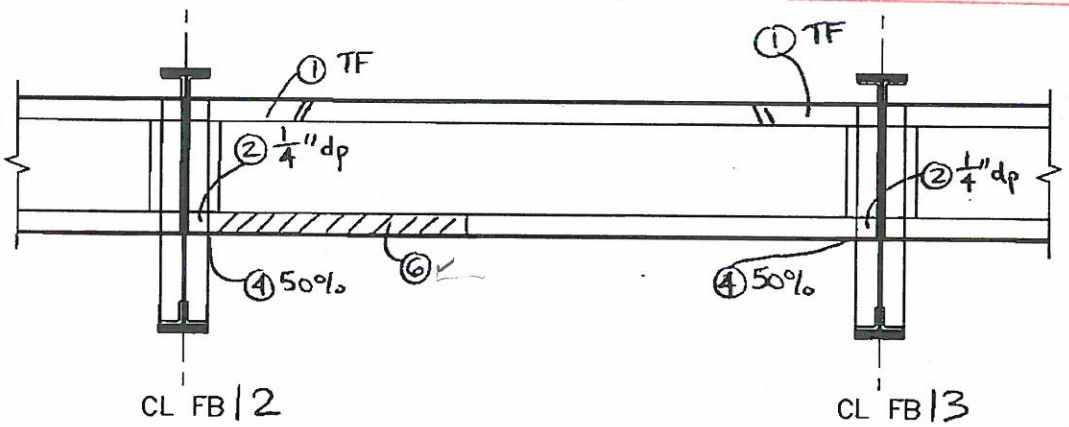


SOUTH ELEVATION

SPAN 7 TRACK 1 & 3 STRINGER 1 (FB12 TO FB13)

WSP-SELLS VERIFICATION INSPECTION
07/12/2013 NO REVISION

# FIELD NOTES

Stantec Consulting Services Inc.

| | |
|---|---|
| Bridge No.: | 08080R |
| Project No.: | 301-0099 |
| Crew: | LM & AF |
| Date: 5/4/09 | Sheet No.: 264 |

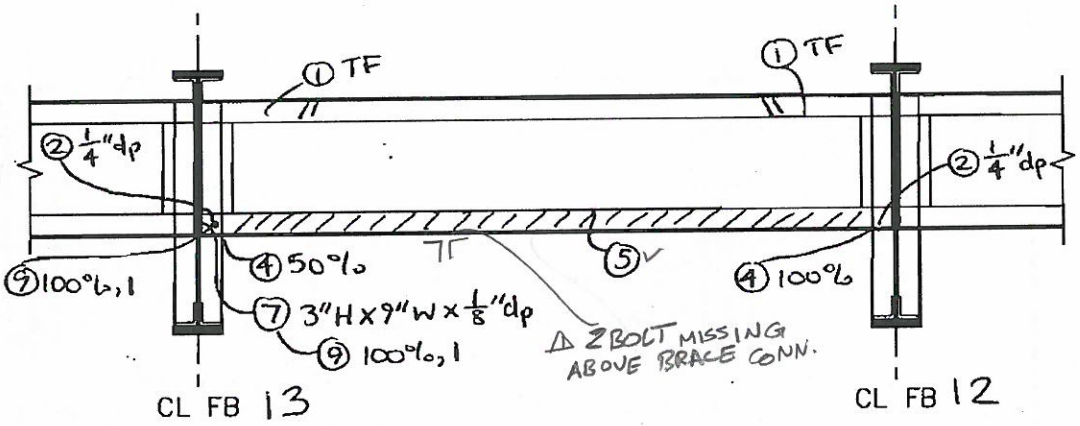


NORTH ELEVATION

| NO. | DATE | DESCRIPTION |
|---|---|---|
| | | |
| | | |
| Δ | 9/25/12 | WSP-SELLS MLMA |

REVISIONS

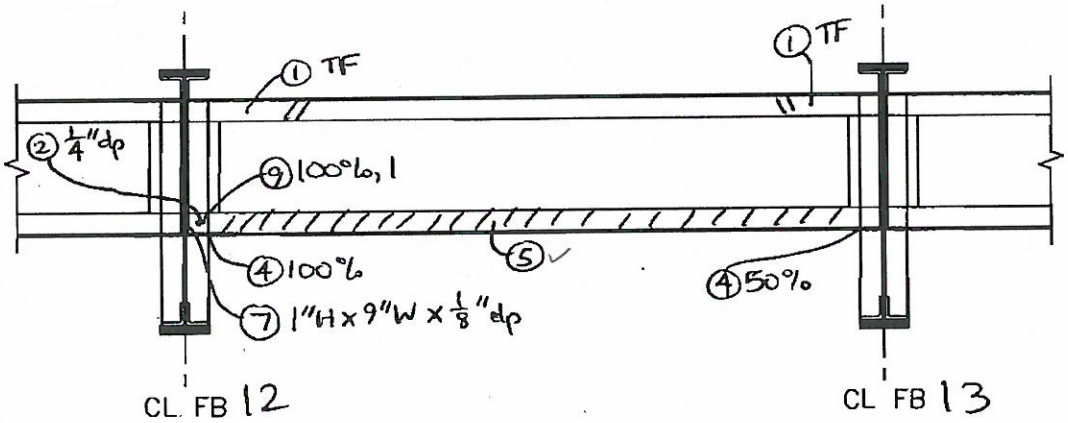


SOUTH ELEVATION

SPAN 7 TRACK 1 & 3 STRINGER 2 (FB12 TO FB13)

WSP-SELLS VERIFICATION INSPECTION
07/12/2013 NO REVISION

# FIELD NOTES

Stantec Consulting Services Inc.

| | |
|---|---|
| Bridge No.: 08080R | |
| Project No.: 301-0099 | |
| Crew: LM & AF | |
| Date: 5/4/09 | Sheet No.: 265 |

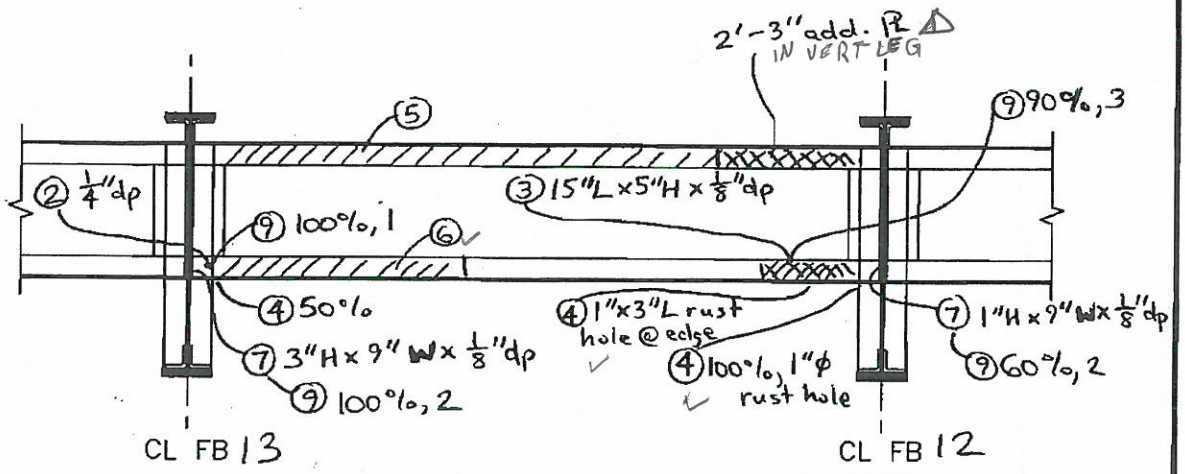


NORTH ELEVATION

| NO. | DATE | DESCRIPTION |
|---|---|---|
| | | |
| | | |
| 1 | 9/25/12 | WSP-SELLS MLMA |

REVISIONS

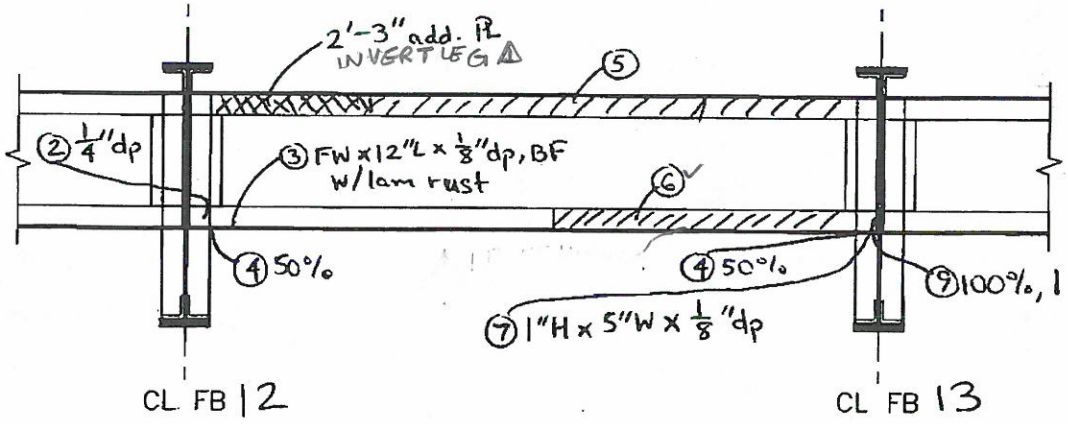


SOUTH ELEVATION

SPAN 7 TRACK 1 & 3 STRINGER 3 (FB12 TO FB 13)

WSP-SELLS VERIFICATION INSPECTION
07/12/2013 NO REVISION

# FIELD NOTES

Stantec Consulting Services Inc.

| | |
|---|---|
| Bridge No.: | 08080R |
| Project No.: | 301-0099 |
| Crew: | LM & AF |
| Date: 5/4/09 | Sheet No.: 266 |

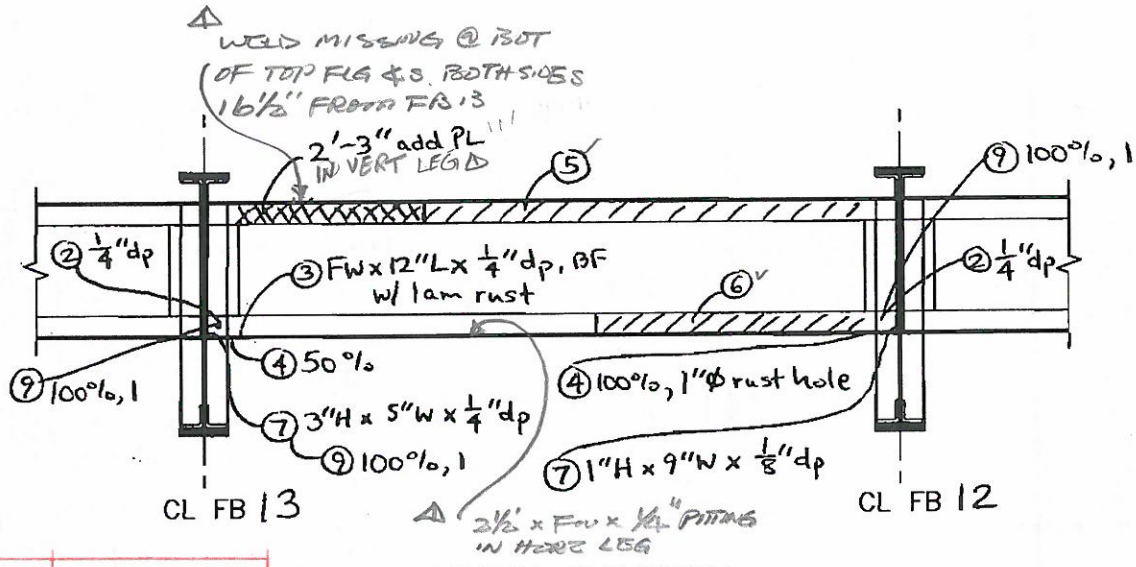


NORTH ELEVATION

| NO. | DATE | DESCRIPTION |
|---|---|---|
| 1 | 9/25/12 | WSP-SELLS ML, MA |

REVISIONS

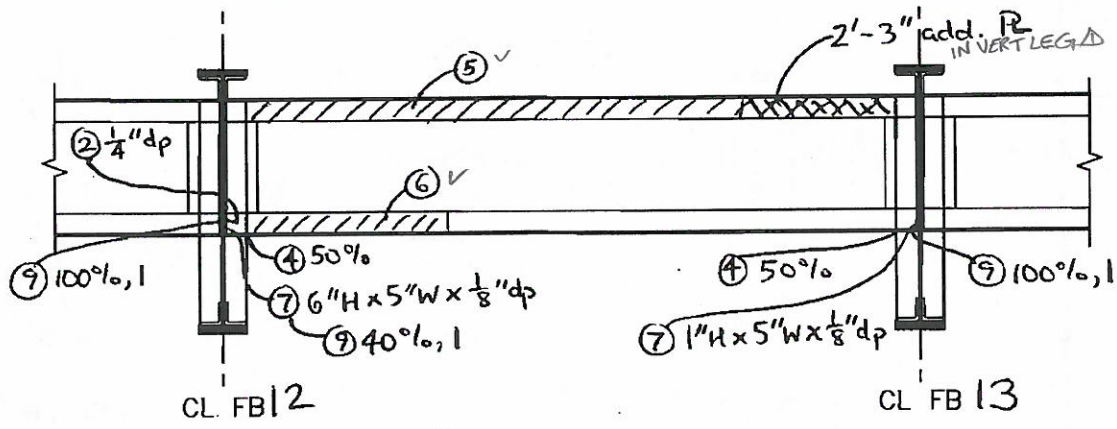


SOUTH ELEVATION

SPAN 7 TRACK 1 & 3 STRINGER 4 (FB12 TO FB 13)

WSP-SELLS VERIFICATION INSPECTION
07/12/2013 NO REVISION

# FIELD NOTES

Stantec Consulting Services Inc.

| | |
|---|---|
| Bridge No.: 08080R | |
| Project No.: 301-0099 | |
| Crew: LM & AF | |
| Date: 5/4/09 | Sheet No.: 267 |

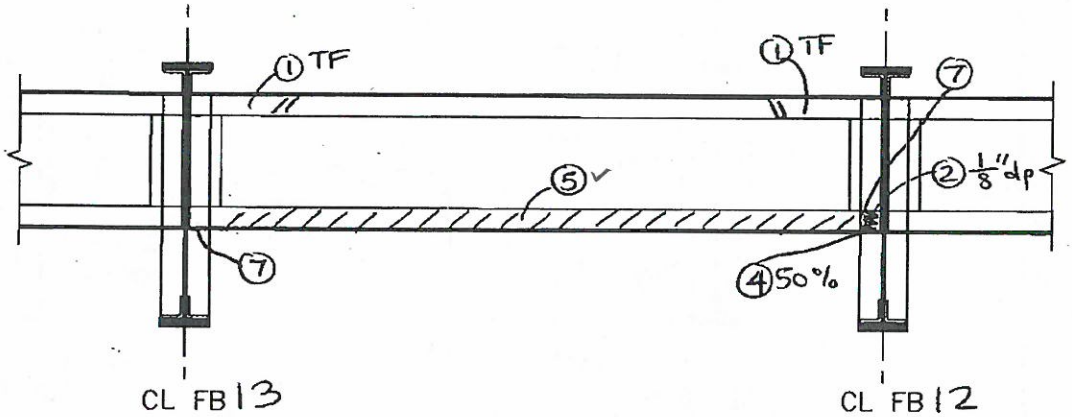


NORTH ELEVATION

| NO. | DATE | DESCRIPTION |
|---|---|---|
| 1 | 9/25/12 | WSP-SELLS MLMA |

REVISIONS

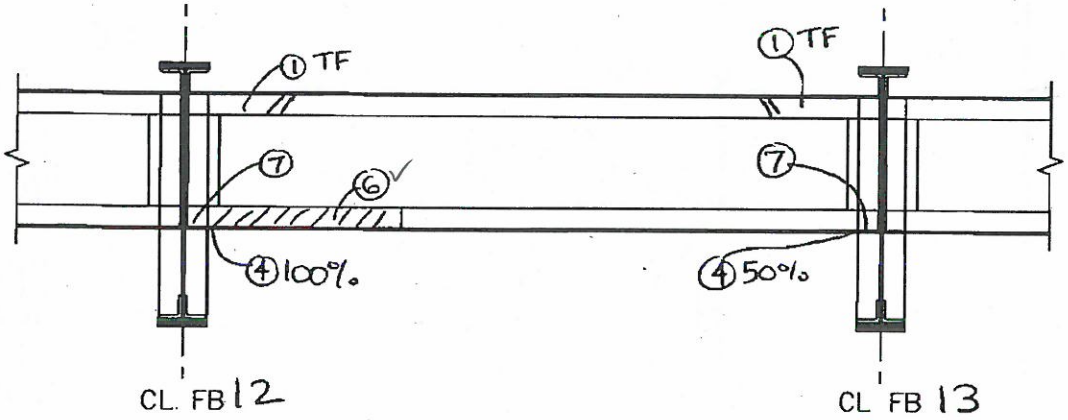


SOUTH ELEVATION

SPAN 7 TRACK 2 & 4 STRINGER 5 (FB12 TO FB 13)

WSP-SELLS VERIFICATION INSPECTION
07/12/2013

2

# FIELD NOTES

Stantec Consulting Services Inc.

| | |
|---|---|
| Bridge No.: | 08080R |
| Project No.: | 301-0099 |
| Crew: | LM & AF |
| Date: 5/4/09 | Sheet No.: 268 |

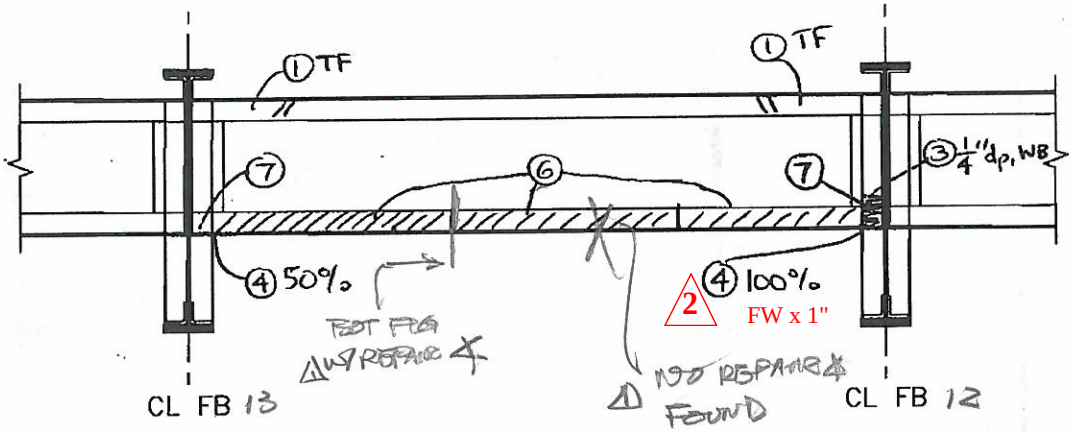


NORTH ELEVATION

| NO. | DATE | DESCRIPTION |
|---|---|---|
| 2 | 5/30/13 | WSP-SELLS; PA,MD |
| 1 | 9/25/12 | WSP-SELLS MD,MA |

REVISIONS

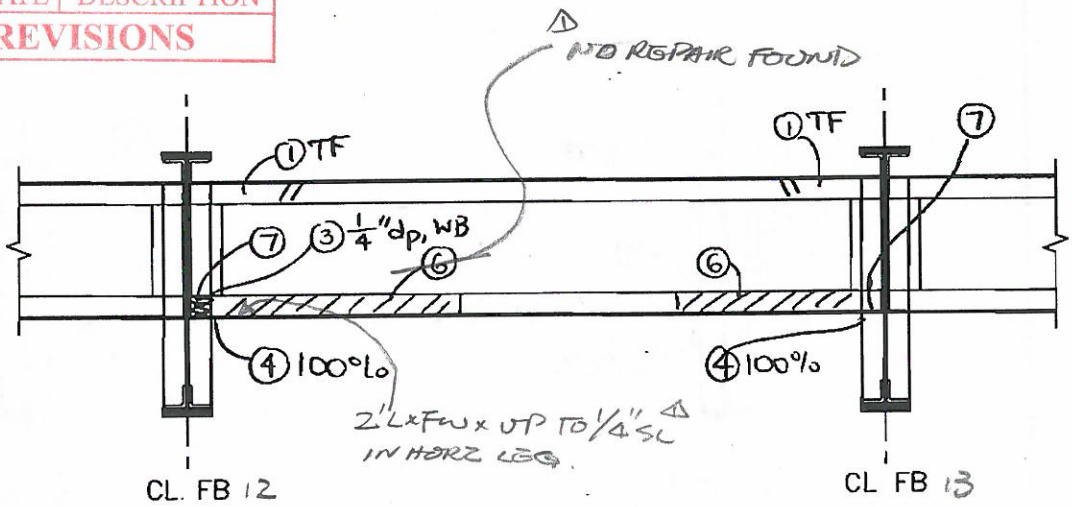


SOUTH ELEVATION

SPAN 7 TRACK 2 & 4 STRINGER 6 (FB12 TO FB 13)

WSP-SELLS VERIFICATION INSPECTION
07/12/2013 NO REVISION

# FIELD NOTES

Stantec Consulting Services Inc.

| | |
|---|---|
| Bridge No.: | 08080R |
| Project No.: | 301-0099 |
| Crew: | LM & AF |
| Date: 5/4/09 | Sheet No.: 269 |

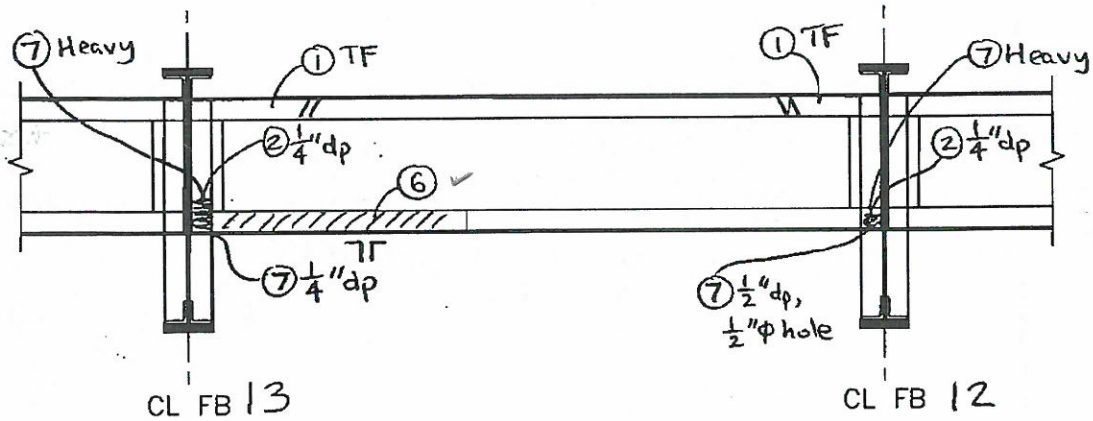


NORTH ELEVATION

| NO. | DATE | DESCRIPTION |
|---|---|---|
| 1 | 9/25/12 | WSP-SELLS MLMA |

REVISIONS

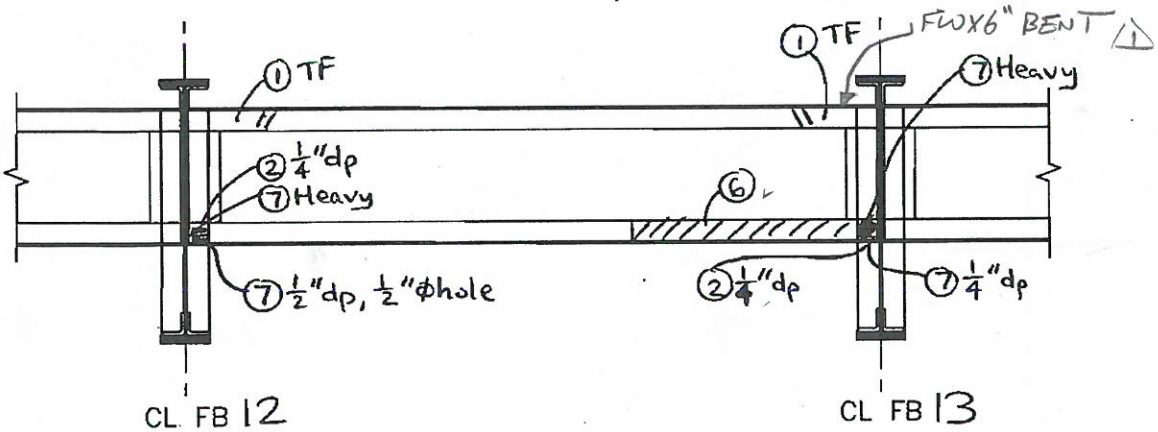


SOUTH ELEVATION

SPAN 7 TRACK 2 & 4 STRINGER 7 (FB12 TO FB 13)

WSP-SELLS VERIFICATION INSPECTION
07/12/2013 NO REVISION

# FIELD NOTES

Stantec Consulting Services Inc.

| | |
|---|---|
| Bridge No.: | 08080R |
| Project No.: | 301-0099 |
| Crew: | LM & AF |
| Date: 5/4/09 | Sheet No.: 270 |

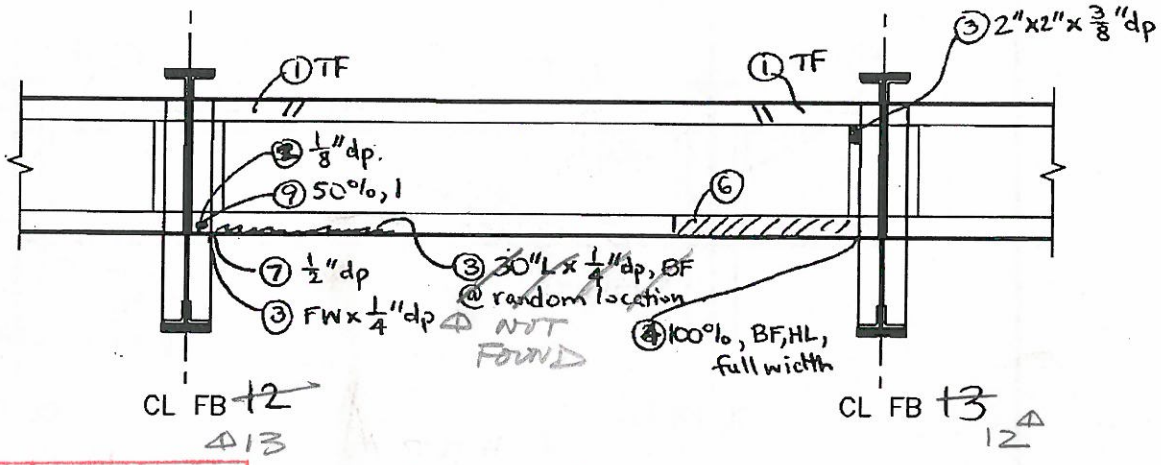


NORTH ELEVATION

| NO. | DATE | DESCRIPTION |
|---|---|---|
| 1 | 9/25/12 | WSP-SELLS ML, MA |

REVISIONS

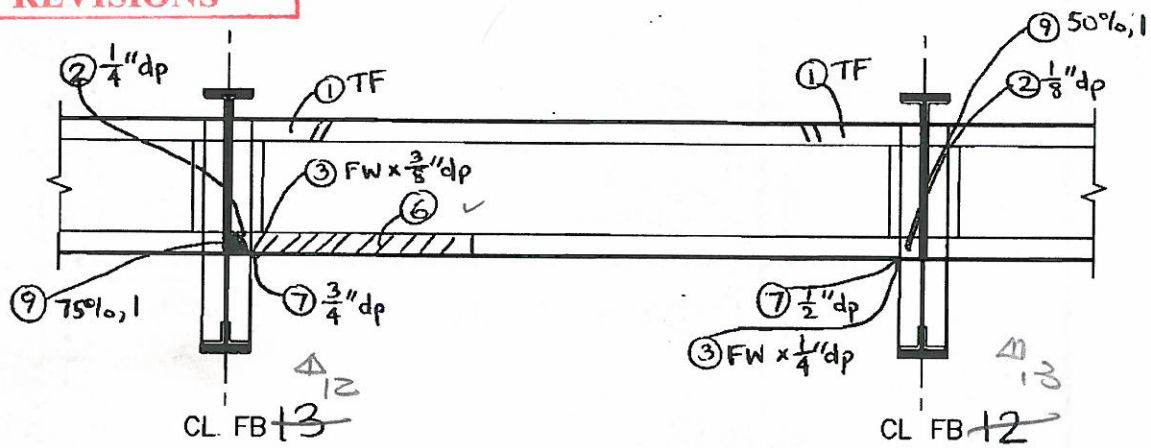


SOUTH ELEVATION

SPAN 7 TRACK 2 & 4 STRINGER 8 (FB 12 TO FB 13)

WSP-SELLS VERIFICATION INSPECTION
07/12/2013 NO REVISION

# FIELD NOTES

Stantec Consulting Services Inc.

| | |
|---|---|
| Bridge No.: | 08080R |
| Project No.: | 301-0099 |
| Crew: | LM & AF |
| Date: 5/4/09 | Sheet No.: 271 |

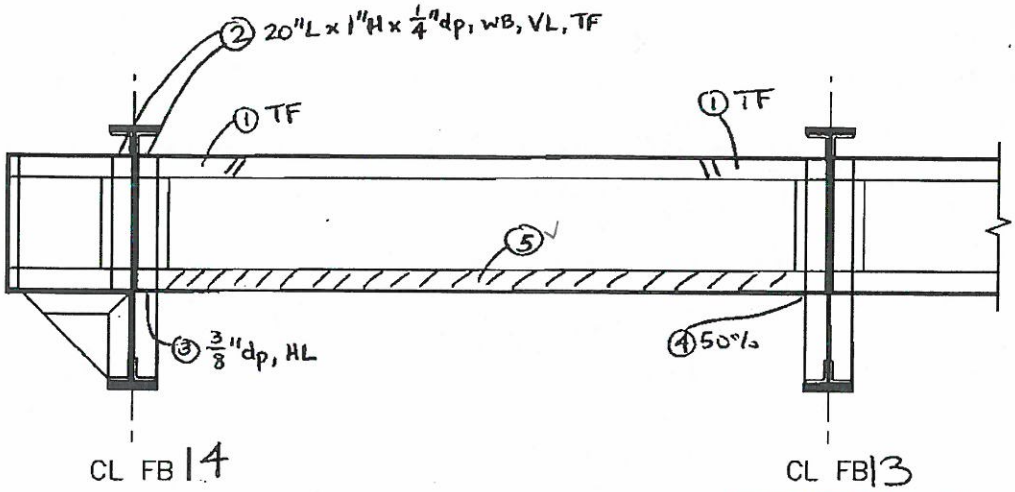


NORTH ELEVATION

| NO. | DATE | DESCRIPTION |
|---|---|---|
| 1 | 9/25/12 | WSP-SELLS ML, MA |

REVISIONS

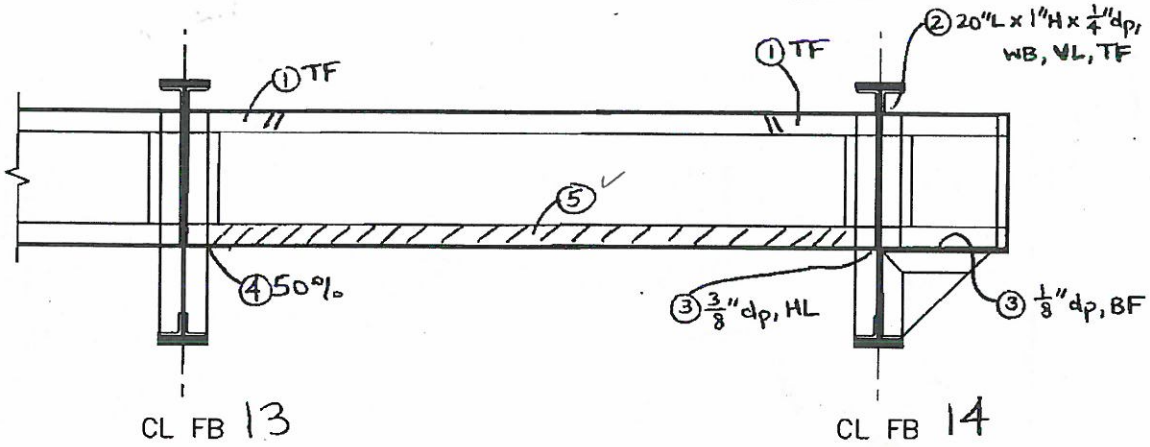


SOUTH ELEVATION

SPAN 7 TRACK 1 & 3 STRINGER 1 (FB 13 TO FB 14)

WSP-SELLS VERIFICATION INSPECTION
07/12/2013 NO REVISION

# FIELD NOTES

Stantec Consulting Services Inc.

| | |
|---|---|
| Bridge No.: | 08080R |
| Project No.: | 301-0099 |
| Crew: | LM & AF |
| Date: 5/4/09 | Sheet No.: 272 |

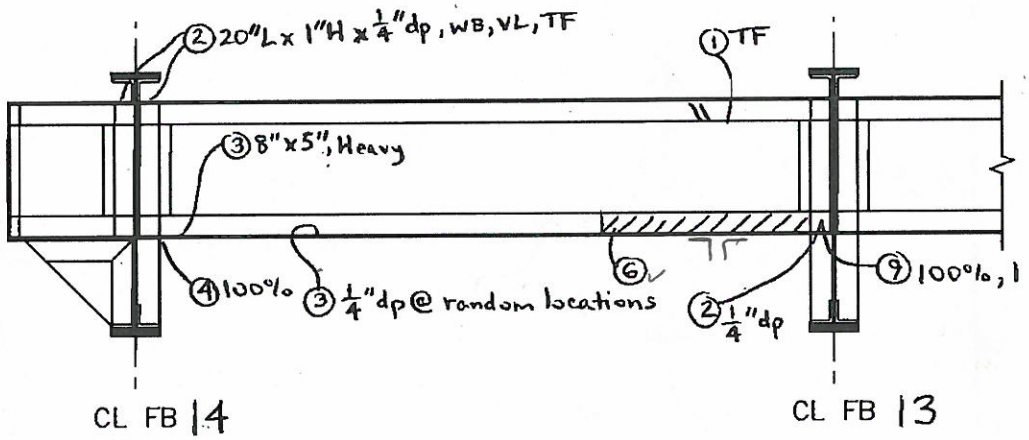


NORTH ELEVATION

| NO. | DATE | DESCRIPTION |
|---|---|---|
| | | |
| | | |
| 1 | 9/25/12 | WSP-SELLS MG MA |

REVISIONS

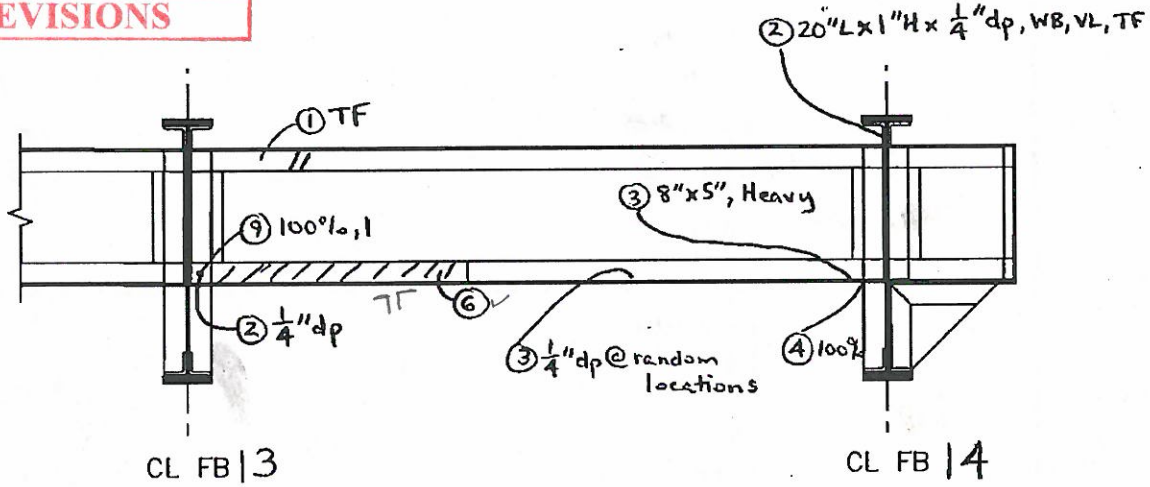


SOUTH ELEVATION

SPAN 7 TRACK 1 & 3 STRINGER 2 (FB 13 TO FB 14)

WSP-SELLS VERIFICATION INSPECTION
07/12/2013 NO REVISION

# FIELD NOTES

Stantec Consulting Services Inc.

| | |
|---|---|
| Bridge No.: | 08080R |
| Project No.: | 301-0099 |
| Crew: | LM & AF |
| Date: 5/4/09 | Sheet No.: 273 |

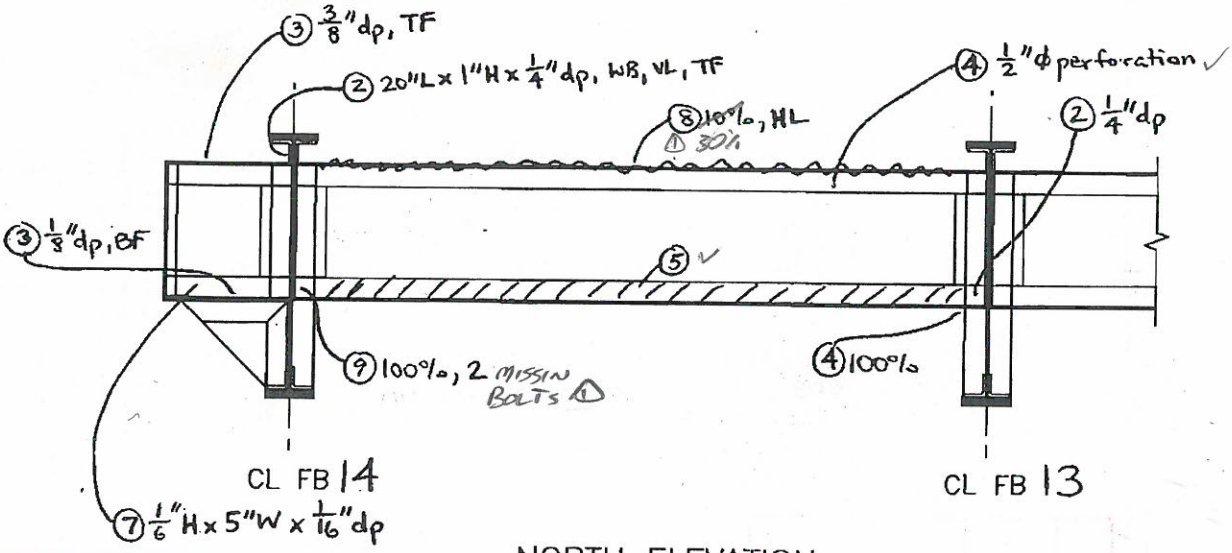


NORTH ELEVATION

| NO. | DATE | DESCRIPTION |
|---|---|---|
| △ | 9/25/12 | WSP-SELLS MYMA |

REVISIONS

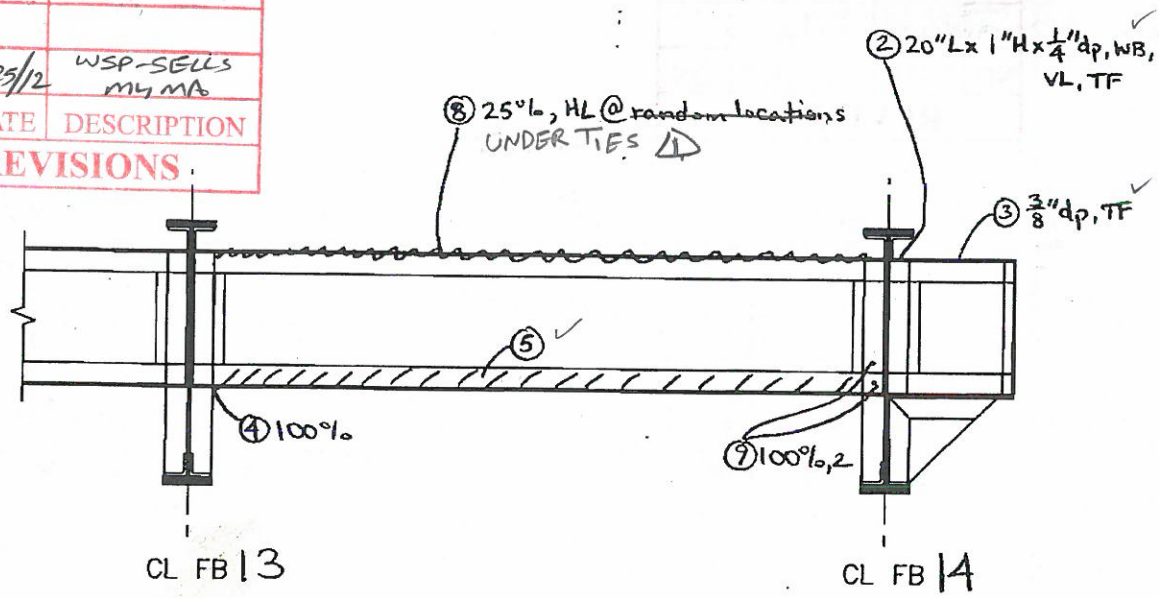


SOUTH ELEVATION

SPAN 7 TRACK 1 & 3 STRINGER 3 (FB 13 TO FB 14)

WSP-SELLS VERIFICATION INSPECTION
07/12/2013 NO REVISION

# FIELD NOTES

Stantec Consulting Services Inc.

Bridge No.: 08080R
Project No.: 301-0099
Crew: LM & AF
Date: 5/4/09 Sheet No.: 274

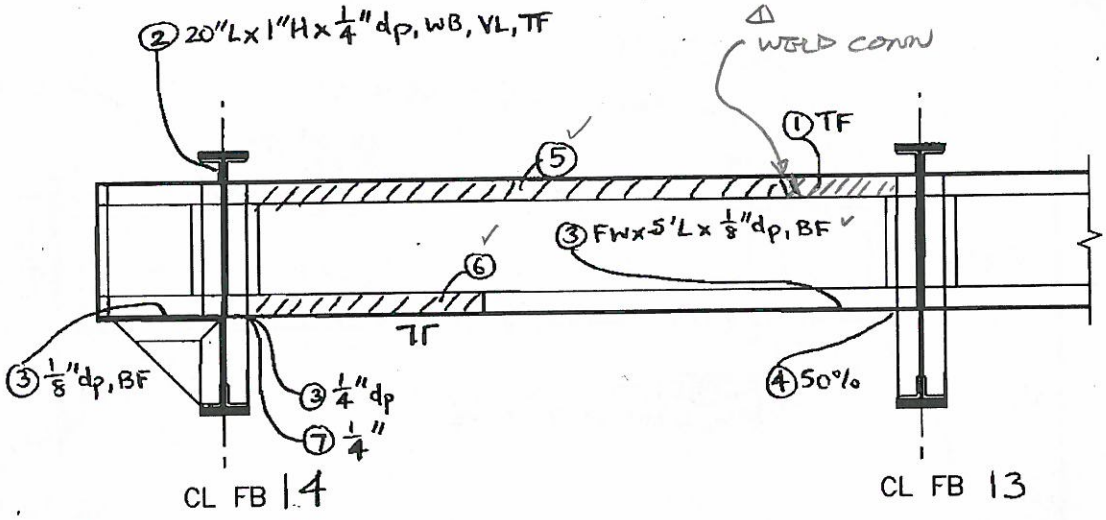


NORTH ELEVATION

| NO. | DATE | DESCRIPTION |
|---|---|---|
| | | |
| | | |
| 1 | 9/25/12 | WSP-SELLS MYMA |

REVISIONS

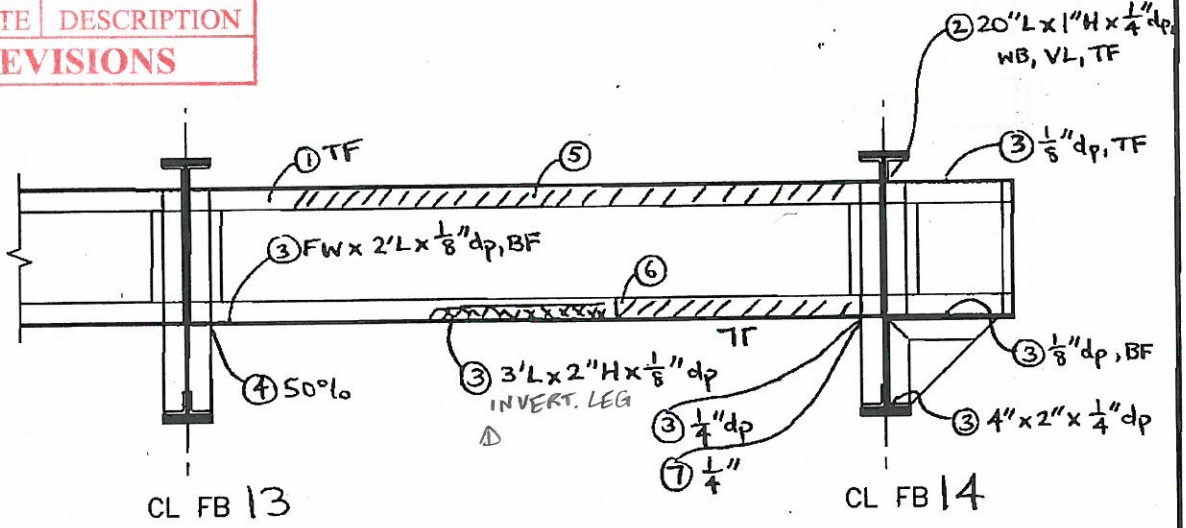


SOUTH ELEVATION

SPAN 7 TRACK 1 & 3 STRINGER 4 (FB 13 TO FB 14)

WSP-SELLS VERIFICATION INSPECTION
07/12/2013

2

# FIELD NOTES

Stantec Consulting Services Inc.

| | |
|---|---|
| Bridge No.: 08080R | |
| Project No.: 301-0099 | |
| Crew: LM & AF | |
| Date: 5/4/09 | Sheet No.: 275 |

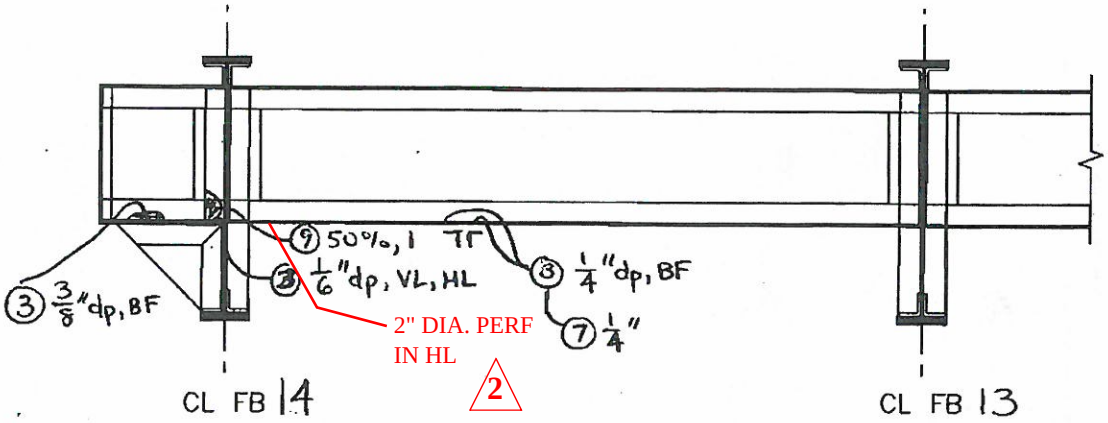


NORTH ELEVATION

| NO. | DATE | DESCRIPTION |
|---|---|---|
| 2 | 5/31/13 | WSP-SELLS; PA,MD |
| 1 | 9/25/12 | WSP-SELLS MY, MA |

REVISIONS

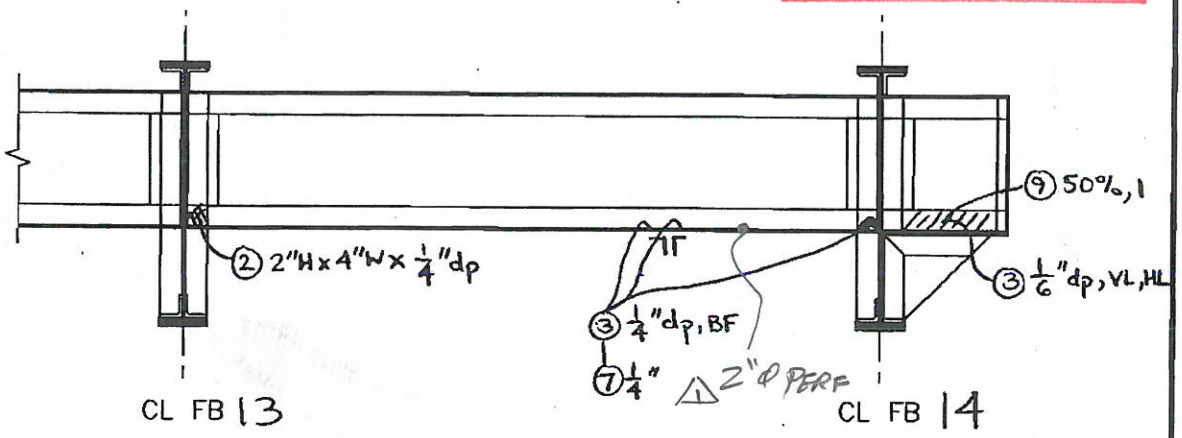


SOUTH ELEVATION

SPAN 7 TRACK 2 & 4 STRINGER 5 (FB 13 TO FB 14)

2 WSP-SELLS VERIFICATION INSPECTION
07/12/2013

# FIELD NOTES

Stantec Consulting Services Inc.

Bridge No.: 08080R
Project No.: 301-0099
Crew: LM & AF
Date: 5/4/09 Sheet No.: 276

2 TF HL BENT
1/2" OVER 1'L END

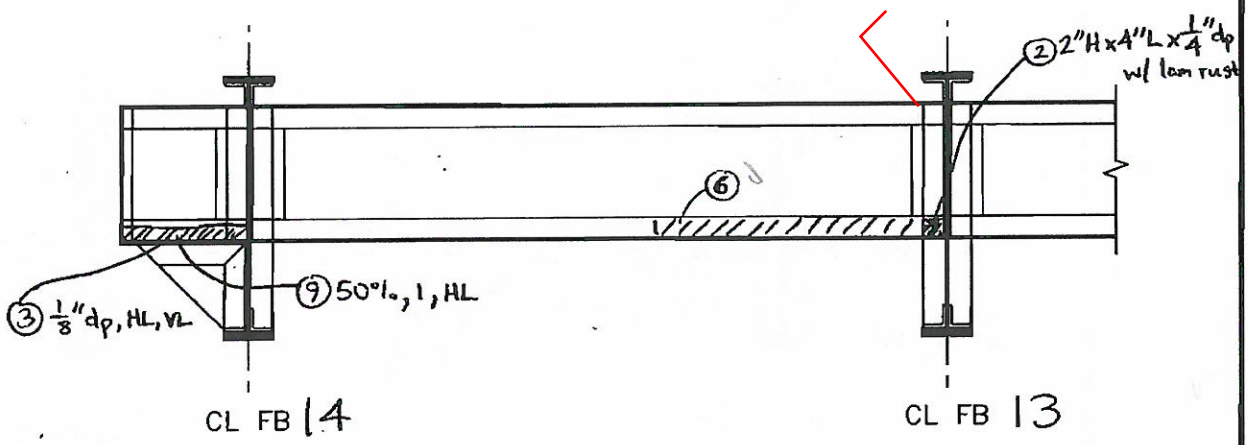


NORTH ELEVATION

| NO. | DATE | DESCRIPTION |
|---|---|---|
| 2 | 5/30/13 | WSP-SELLS; PA,MD |
| 1 | 9/25/12 | WSP-SELLS MGMA |

REVISIONS

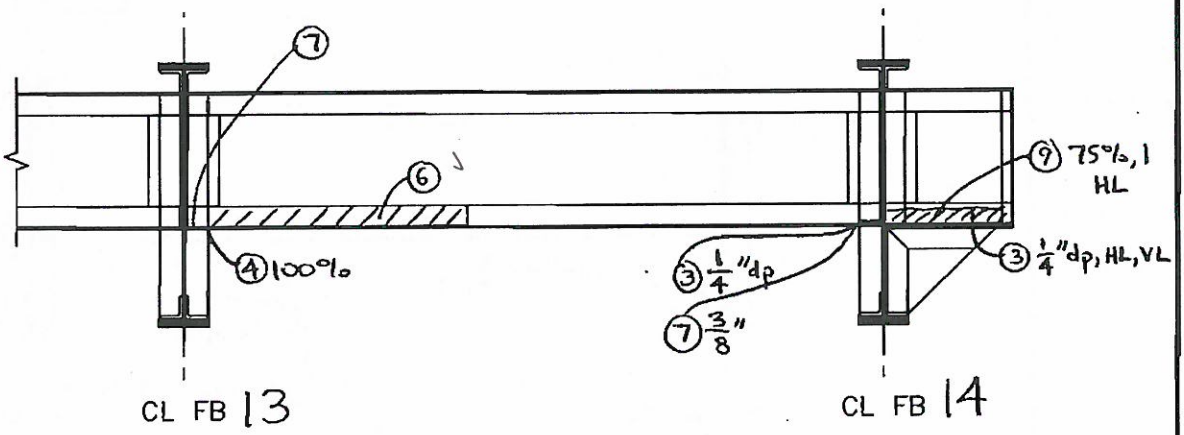


SOUTH ELEVATION

SPAN 7 TRACK 2 & 4 STRINGER 6 (FB 13 TO FB 14)

WSP-SELLS VERIFICATION INSPECTION
07/12/2013 NO REVISION

# FIELD NOTES

Stantec Consulting Services Inc.

| | |
|---|---|
| Bridge No.: | 08080R |
| Project No.: | 301-0099 |
| Crew: | LM & AF |
| Date: 5/4/09 | Sheet No.: 277 |

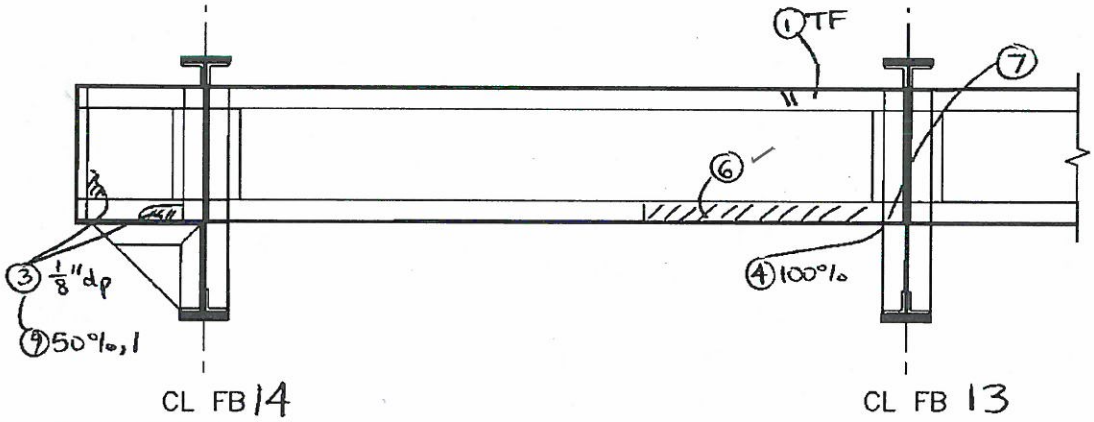


NORTH ELEVATION

| NO. | DATE | DESCRIPTION |
|---|---|---|
| 1 | 9/25/12 | WSP-SELLS MLMA |

REVISIONS

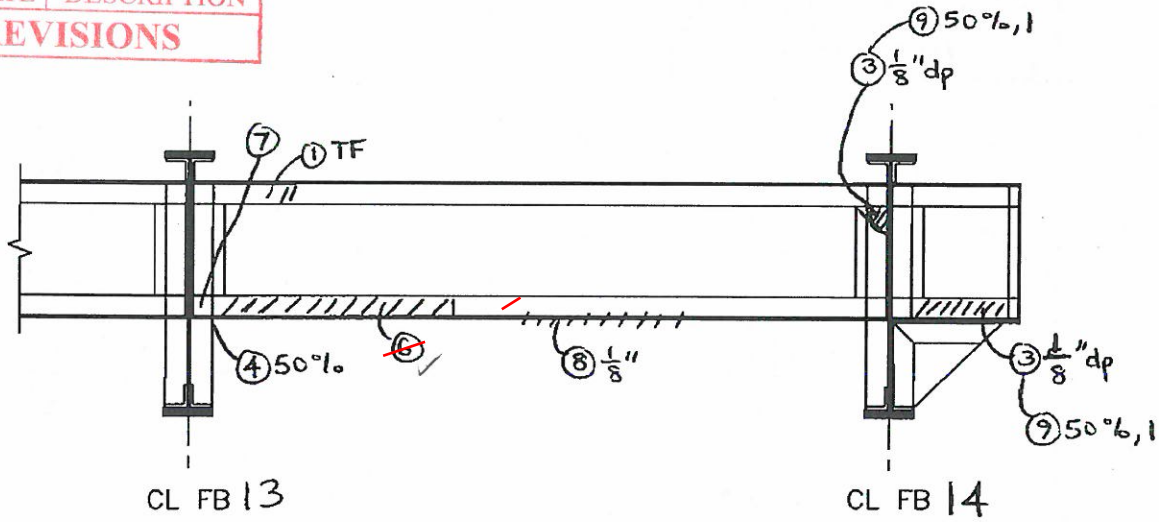


SOUTH ELEVATION

SPAN 7 TRACK 2 & 4 STRINGER 7 (FB 13 TO FB 14)

2 WSP-SELLS VERIFICATION INSPECTION
07/12/2013

# FIELD NOTES

Stantec Consulting Services Inc.

| | |
|---|---|
| Bridge No.: | 08080R |
| Project No.: | 301-0099 |
| Crew: | LM & AF |
| Date: 5/4/09 | Sheet No.: 278 |

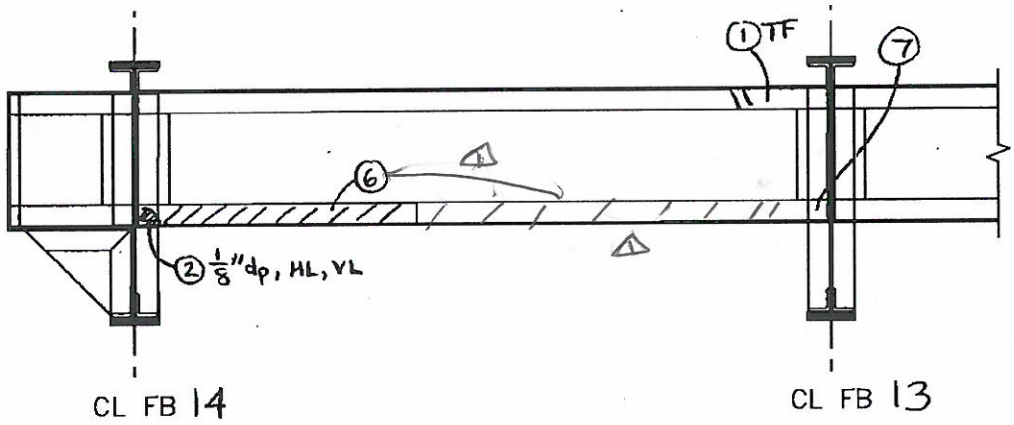


NORTH ELEVATION

| NO. | DATE | DESCRIPTION |
|---|---|---|
| 2 | 5/30/13 | WSP-SELLS; PA,MD |
| 1 | 9/25/12 | WSP-SELLS MG,MA |

REVISIONS

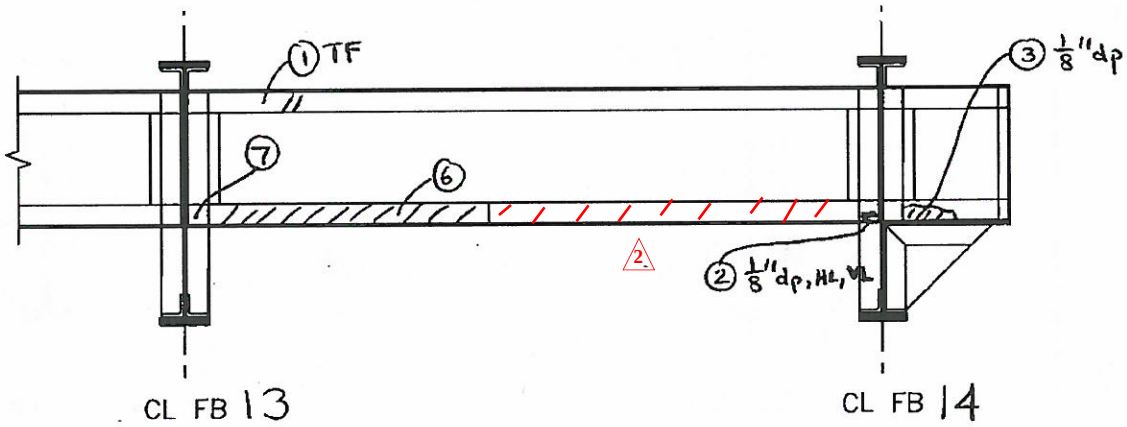


SOUTH ELEVATION

SPAN 7 TRACK 2 & 4 STRINGER 8 (FB13 TO FB 14)

279

WSP-SELLS

VERIFICATION INSPECTION
07/12/2013

# Laterals

WSP-SELLS VERIFICATION INSPECTION
07/12/2013 NO REVISION

| FIELD NOTES | Bridge No.: 08080R | |
|---|---|---|
| | Project No.: 301-0099 | |
| Stantec Consulting Services Inc. | Crew: LM AF | |
| | Date: 5/4/09 | Sheet No.: 280 |

LATERAL BRACINGS LEGEND:

(A) = REPLACEMENT CONNECTION ∠'S AT GUSSET PLATE

(B) = REFER TO FLOORBEAM AND STRINGER WORKSHEET

(C) = REPLACEMENT ∠'S FOR LATERALS

(D) = GUSSET PLATE REPLACEMENT

(E) = RETROFITTED CONNECTION ∠ TO FLOORBEAM

(1) = UP TO ¼" (UNLESS NOTED OTHERWISE) IMPACTED RUST BETWEEN BOTTOM OF STRINGERS AND TOP OF LATERAL BRACING WITH PLOS.

(2) = UP TO ¼" PLOS IN GUSSET PLATE

(3) = PERFORATION IN GUSSET PLATE

(4) = PACK RUST BETWEEN LATERAL ∠ LEGS

(5) = RIVET HEAD / NUT SECTION LOSS

(6) = PITTING LOSS OF SECTION AT CONNECTION ∠ TO FLOORBEAM

(7) = IMPACT / LAMINAR RUST AT CONNECTION ∠ TO FLOORBEAM

2 WSP-SELLS VERIFICATION INSPECTION
07/12/2013

# FIELD NOTES

Stantec Consulting Services Inc.

| | |
|---|---|
| Bridge No.: | 08080R |
| Project No.: | 301-0099 |
| Crew: | LM & AF |
| Date: 5/4/09 | Sheet No.: 281 |

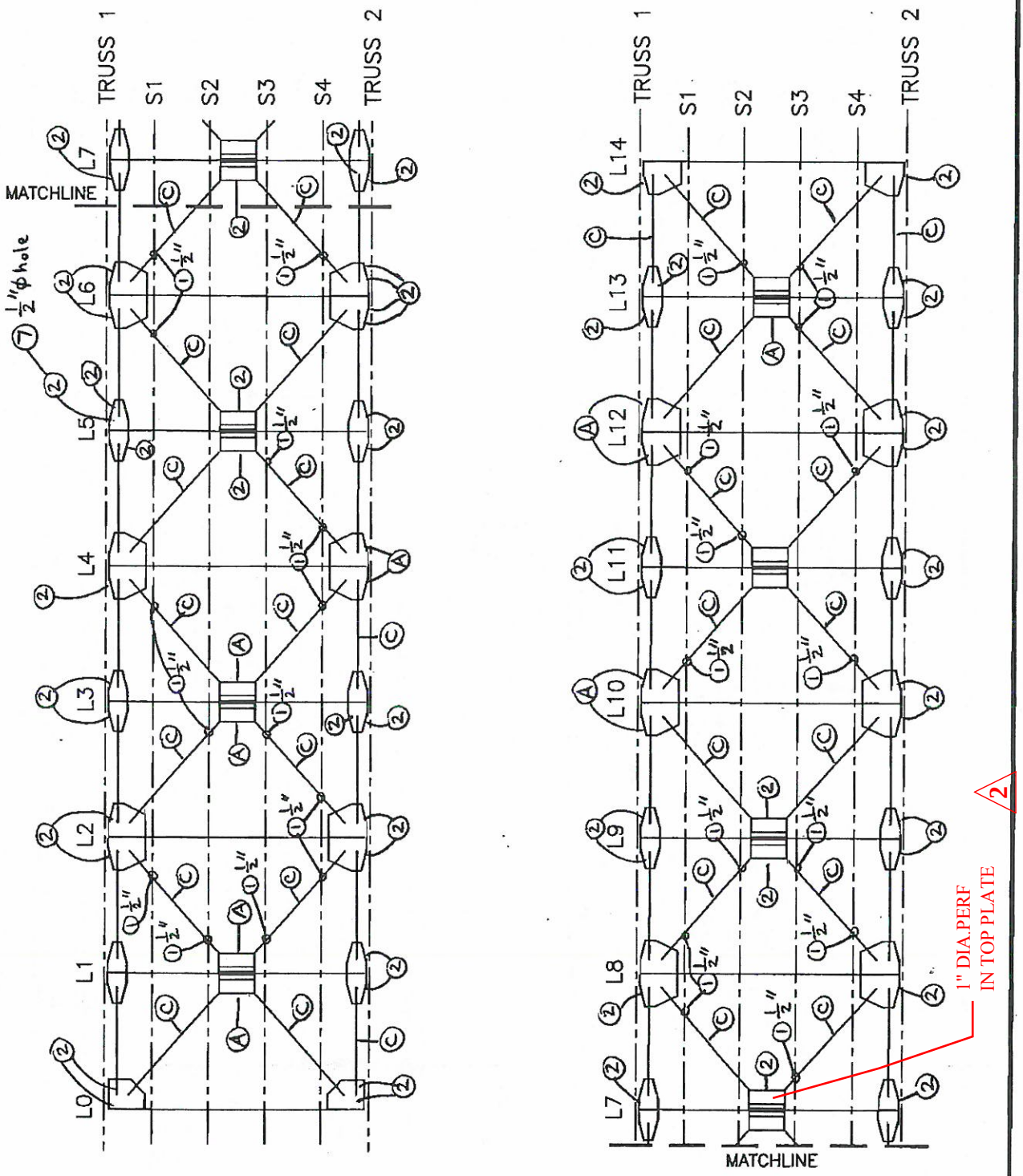


SPAN 7 TRACK 3 & 1

2 7/11/13 WSP-SELLS; PA,MD

1 9/25/12 WSP-SELLS, ML, MA

2 WSP-SELLS VERIFICATION INSPECTION
07/12/2013

# FIELD NOTES

Stantec Consulting Services Inc.

| | |
|---|---|
| Bridge No.: | 08080R |
| Project No.: | 301-0099 |
| Crew: | LM & AF |
| Date: 5/4/09 | Sheet No.: 282 |

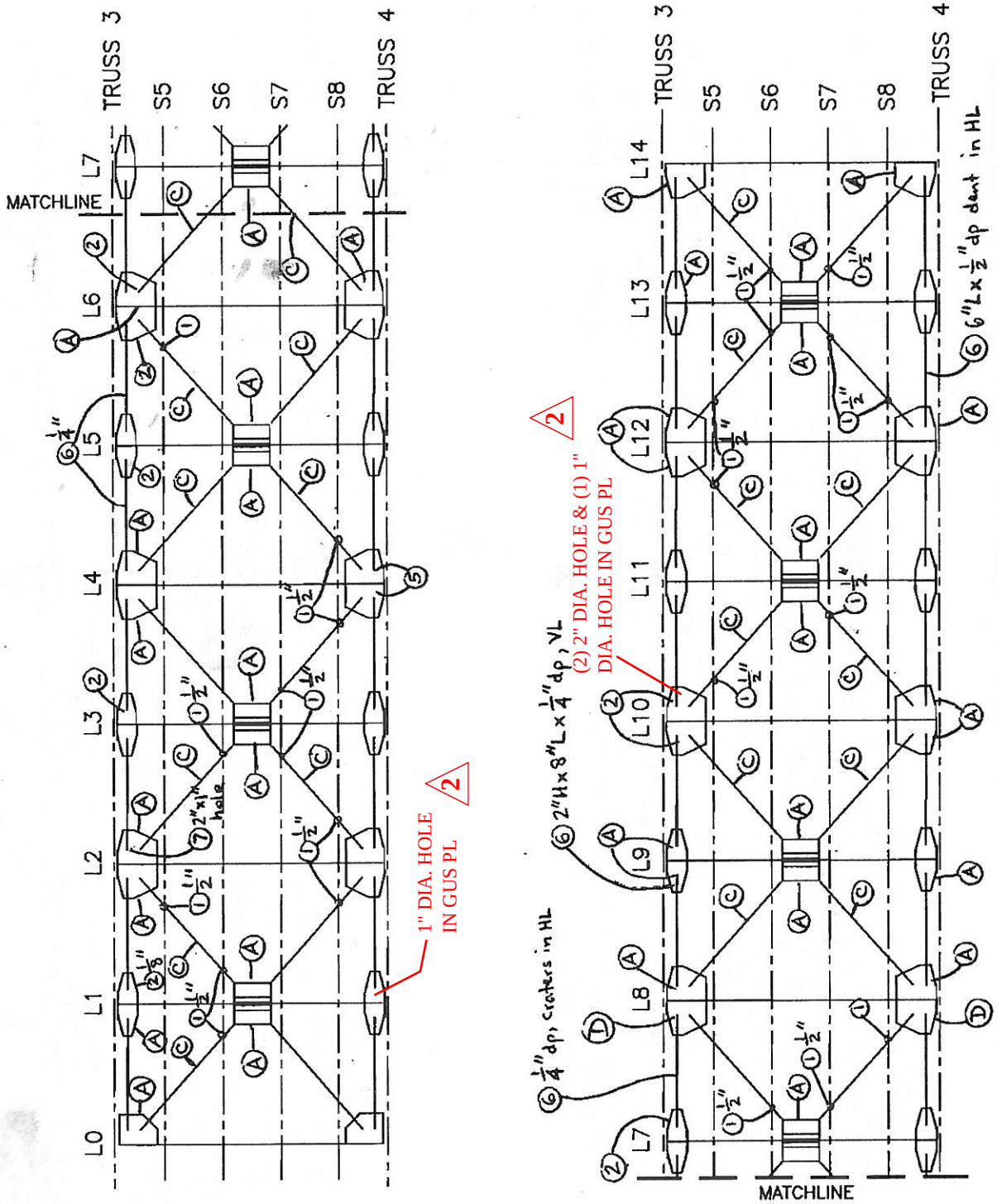


2 7/11/13 WSP-SELLS; PA,MD

1 9/25/12 WSP-SELLS, MLMA

SPAN 7 TRACK 2 & 4

WSP-SELLS
VERIFICATION INSPECTION
07/12/2013

# Top Laterals and Portals

WSP-SELLS VERIFICATION INSPECTION
07/12/2013 NO REVISION

# FIELD NOTES

Stantec Consulting Services Inc.

| | |
|---|---|
| Bridge No.: | 08080R |
| Project No.: | 301-0099 |
| Crew: | EH TB |
| Date: 5/11/09 | Sheet No.: 281 |

## TOP LATERAL LEGEND – SPANS 1 – 7

(1)$^{x}$ IMPACTED RUST FORCING CORNERS OF GUSSET PLATE UP

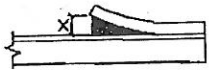


(2)$^{x}$ IR & LOS ASSOCIATED WITH LACING BAR LOCATIONS

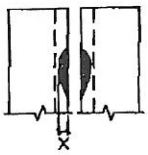


(3)$^{XxX}_{x\%}$ or PERFORATION & LOS TO BOTTOM OF BATTEN PLATE

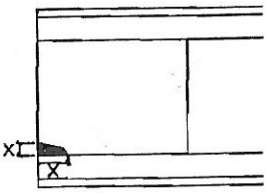


○ DETERIORATION IN TOP CHORDS AND GUSSET PLATES

◇ DETERIORATION IN BOTTOM CHORDS AND GUSSET PLATES

GENERAL CONDITION:
THERE ARE UP TO 3/8" DEPRESSIONS AT RANDOM LOCATIONS IN THE TOP FLANGE PLATE OF THE TOP CHORD WHICH ENABLES RAIN WATER TO POOL.

WSP-SELLS VERIFICATION INSPECTION
07/12/2013

2

# FIELD NOTES

Stantec Consulting Services Inc.

| | |
|---|---|
| Bridge No.: | 08080R |
| Project No.: | 301-0099 |
| Crew: | E/+ TB |
| Date: | 5/1/09 |
| Sheet No.: | 205 |

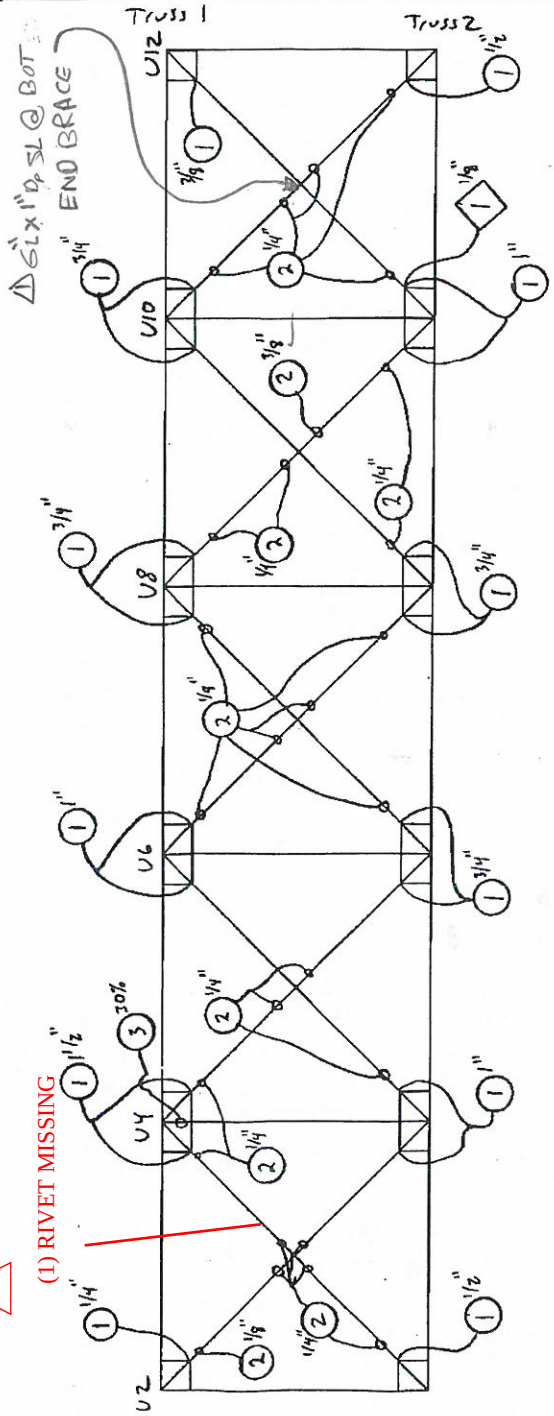


SPAN 7 TRACK 1+3
TOP CHORD PLAN

| NO. | DATE | DESCRIPTION |
|---|---|---|
| 2 | 6/3/13 | WSP-SELLS; PA,MD |
| 1 | 6/25/12 | WSP-SELLS MSMA |

REVISIONS

WSP-SELLS VERIFICATION INSPECTION
07/12/2013 NO REVISION

# FIELD NOTES

Stantec Consulting Services Inc.

| | |
|---|---|
| Bridge No.: | 08080R |
| Project No.: | 301-0099 |
| Crew: | EH TB |
| Date: | 5/11/09 |
| Sheet No.: | 286 |

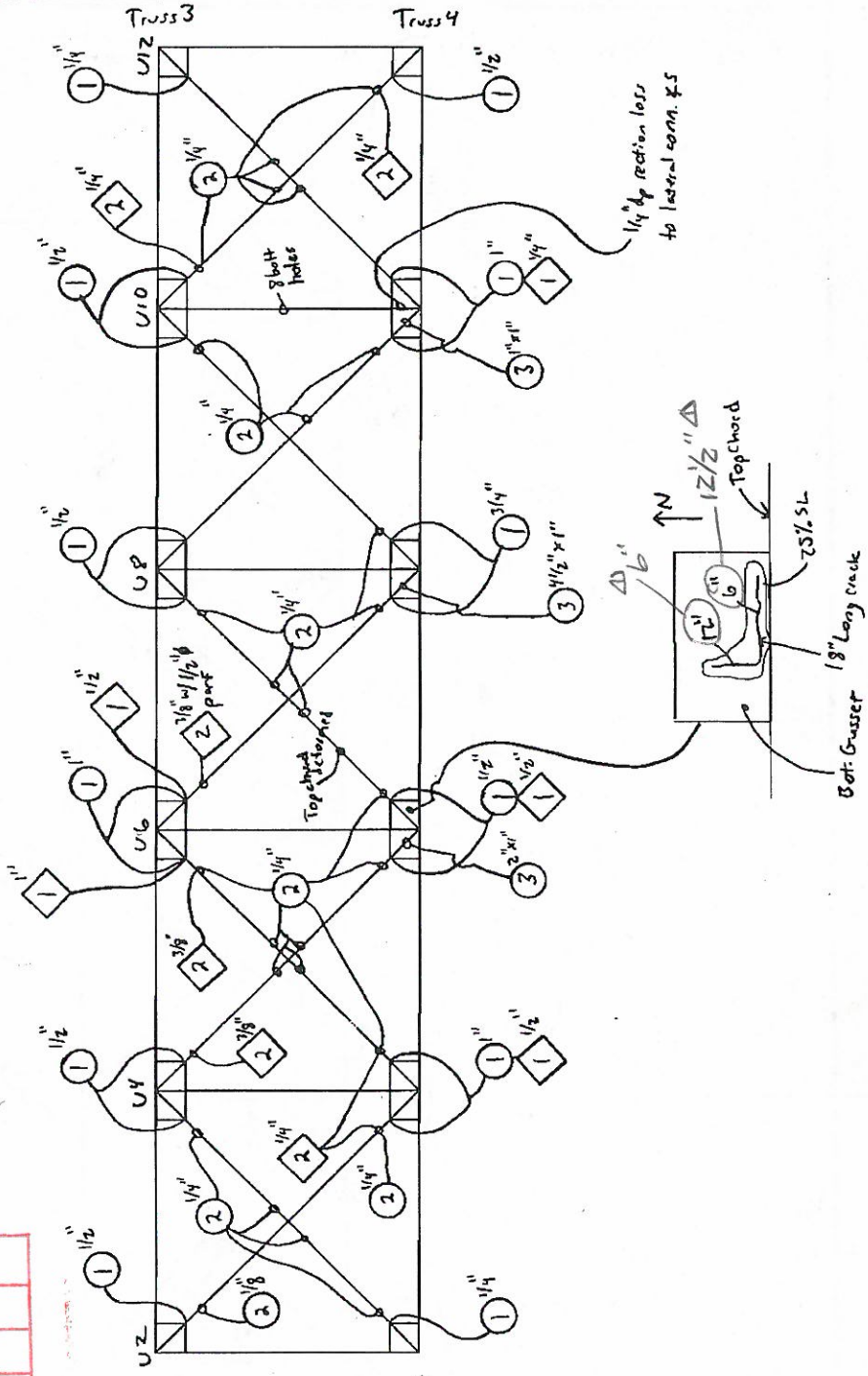


| NO. | DATE | DESCRIPTION |
|---|---|---|
| 1 | 1/14/13 | WSP-SELLS MLMA |

REVISIONS

SPAN 7 TRACK 3+4
TOP CHORD PLAN

WSP-SELLS

VERIFICATION INSPECTION
07/12/2013 NO REVISION

# FIELD NOTES

Stantec Consulting Services Inc.

| | |
|---|---|
| Bridge No.: | 08080R |
| Project No.: | 301-0099 |
| Crew: | EH TB |
| Date: 5/11/09 | Sheet No.: 287 |

| NO. | DATE | DESCRIPTION |
|---|---|---|
| 1 | 6/25/12 | WSP-SELLS ML, MA |

REVISIONS

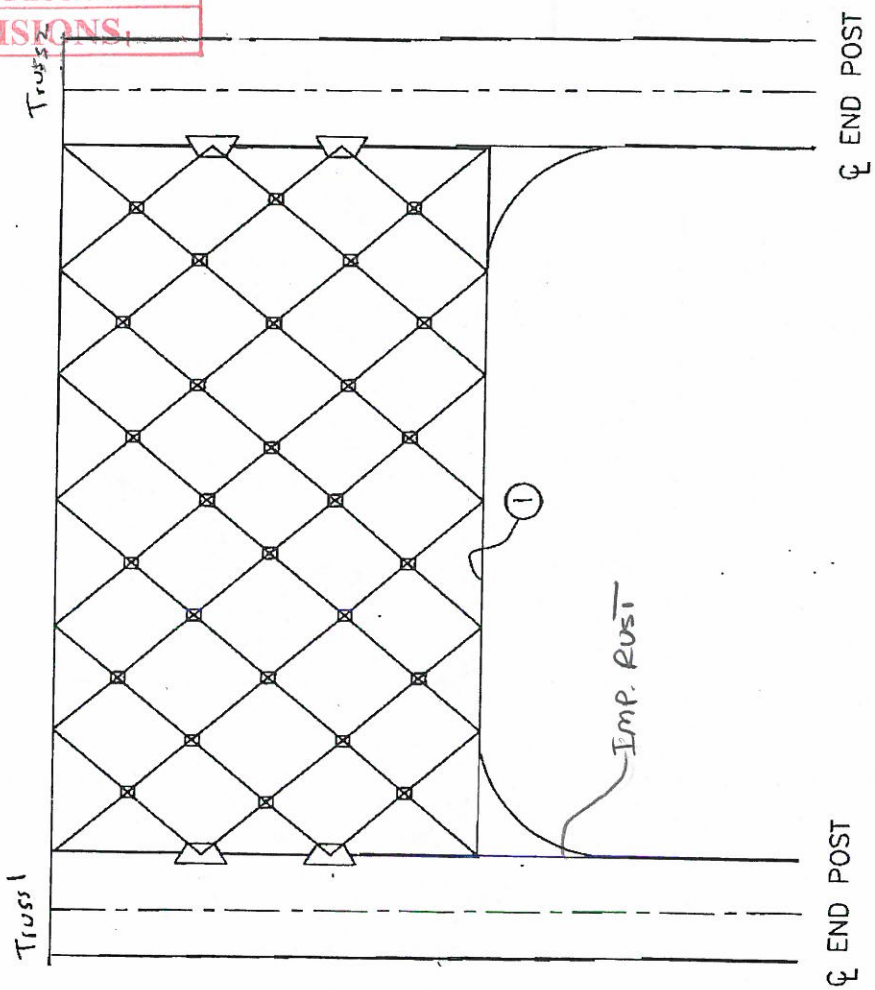


SPAN 7 PORTAL - Begin
Looking East

1 1/4" LOS in plate along bottom angle

WSP-SELLS
VERIFICATION INSPECTION
07/12/2013

2

# FIELD NOTES

Stantec Consulting Services Inc.

| | |
|---|---|
| Bridge No.: | 08080R |
| Project No.: | 301-0099 |
| Crew: | EH TB |
| Date: 5/11/09 | Sheet No.: 288 |

| NO. | DATE | DESCRIPTION |
|---|---|---|
| 2 | 7/11/13 | WSP-SELLS; PA,MD |
| 1 | 6/25/12 | WSP-SELLS MLMA |

REVISIONS

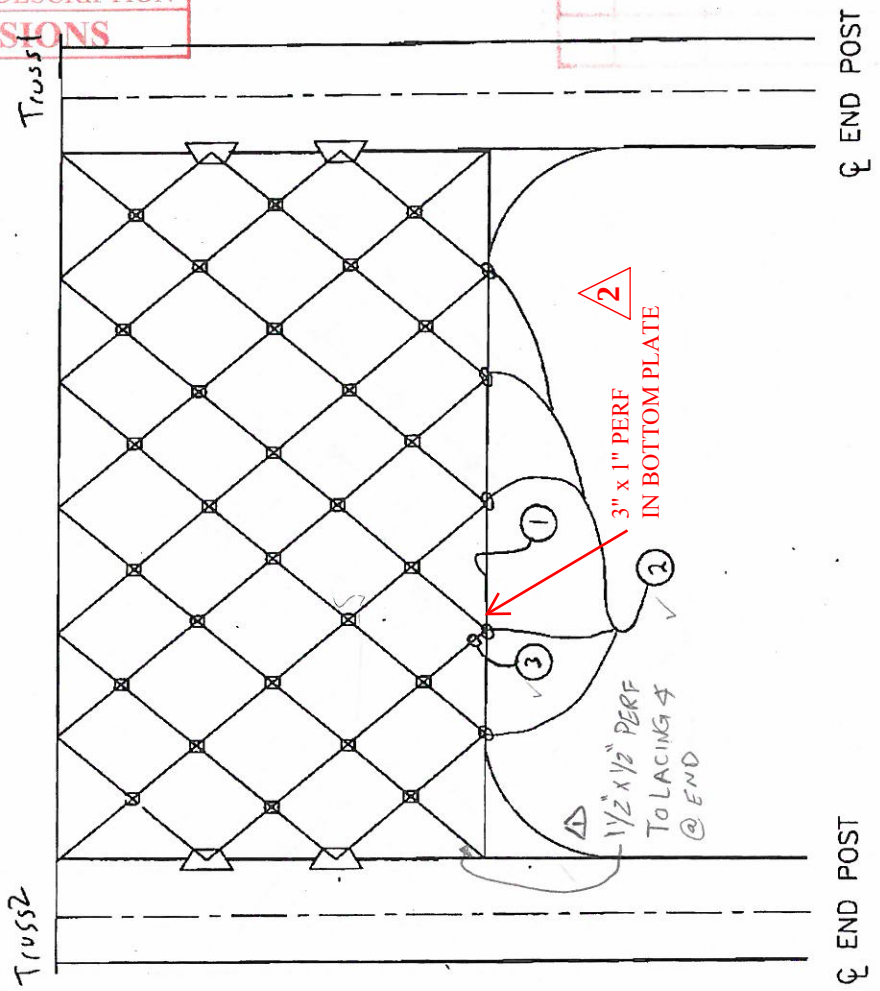


1. 1/4" LOS in plate along bottom angle
2. 1/4" LOS in plate at lacing angle connections
3. 3" x 1" perf to lacing angle

SPAN 7 PORTAL - End
Looking West

WSP-SELLS
VERIFICATION INSPECTION
07/12/2013 NO REVISION

# FIELD NOTES

Stantec Consulting Services Inc.

Bridge No.: 08080R
Project No.: 301-0099
Crew: EH TB
Date: 5/11/05 Sheet No.: 289

| NO. | DATE | DESCRIPTION |
|---|---|---|
| 1 | 6/25/12 | WSP-SELLS MYMA |

REVISIONS

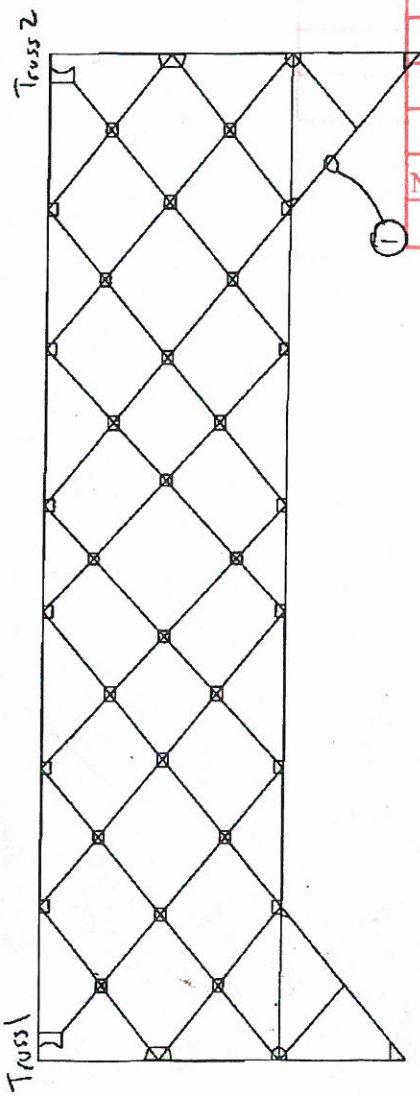


SPAN 7 A + PP 4
INTERIOR TOP STRUT SYSTEM

1 2" I.R. w/ SL to angles

WSP-SELLS

VERIFICATION INSPECTION
07/12/2013 NO REVISION

# FIELD NOTES

Stantec Consulting Services Inc.

Bridge No.: 08080R
Project No.: 301-0099
Crew: EH TB
Date: 8/11/09
Sheet No.: 290

| NO. | DATE | DESCRIPTION |
|---|---|---|
| 1 | 1/14/13 | WSP-SELLS MGMA |

REVISIONS

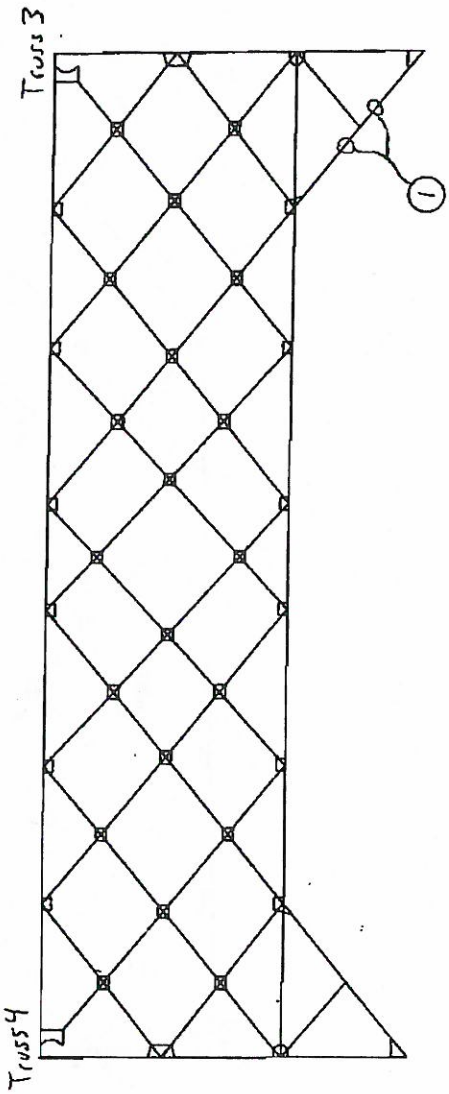


SPAN 7 At PP10
INTERIOR TOP STRUT SYSTEM

1 2"IR w/ SL to angles

WSP-SELLS
VERIFICATION INSPECTION
07/12/2013 NO REVISION

# FIELD NOTES

Stantec Consulting Services Inc.

| | |
|---|---|
| Bridge No.: | 08080R |
| Project No.: | 301-0099 |
| Crew: | EH TB |
| Date: 5/11/09 | Sheet No.: 291 |

| NO. | DATE | DESCRIPTION |
|---|---|---|
| 1 | 6/25/12 | WSP-SELLS MMMA |

REVISIONS

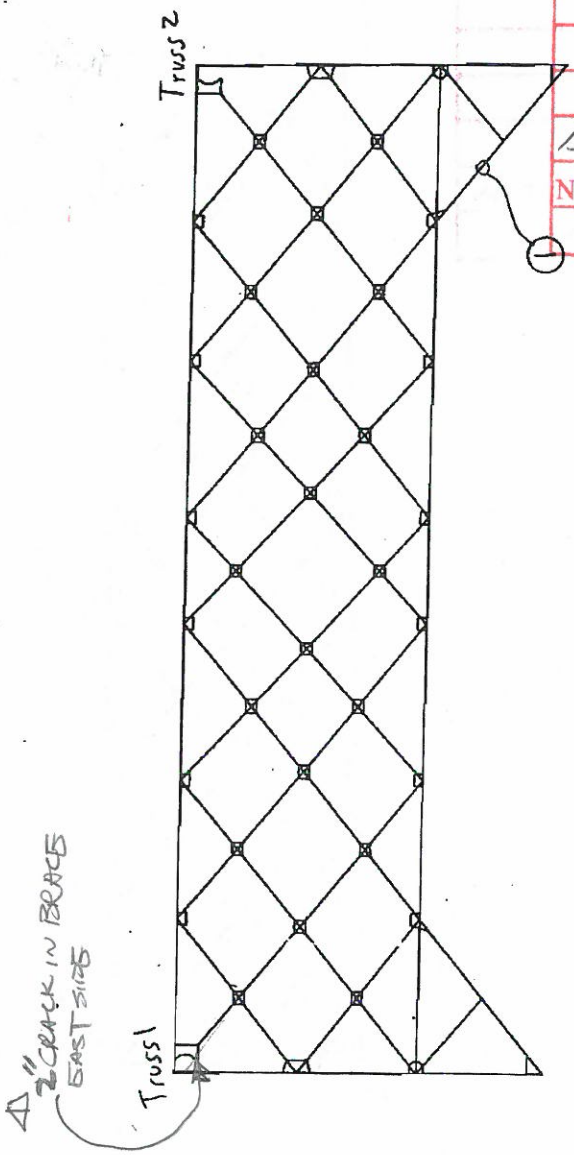


SPAN 7 At PP6
INTERIOR TOP STRUT SYSTEM

1 1½" I.R. w/ SL to angles

WSP-SELLS
VERIFICATION INSPECTION
07/12/2013 NO REVISION

# FIELD NOTES

Stantec Consulting Services Inc.

Bridge No.: 08080R
Project No.: 301-0099
Crew: Elt TB
Date: 5/11/09
Sheet No.: 292

| NO. | DATE | DESCRIPTION |
|---|---|---|
| 1 | 6/25/12 | WSP-SELLS ML, MA |

REVISIONS

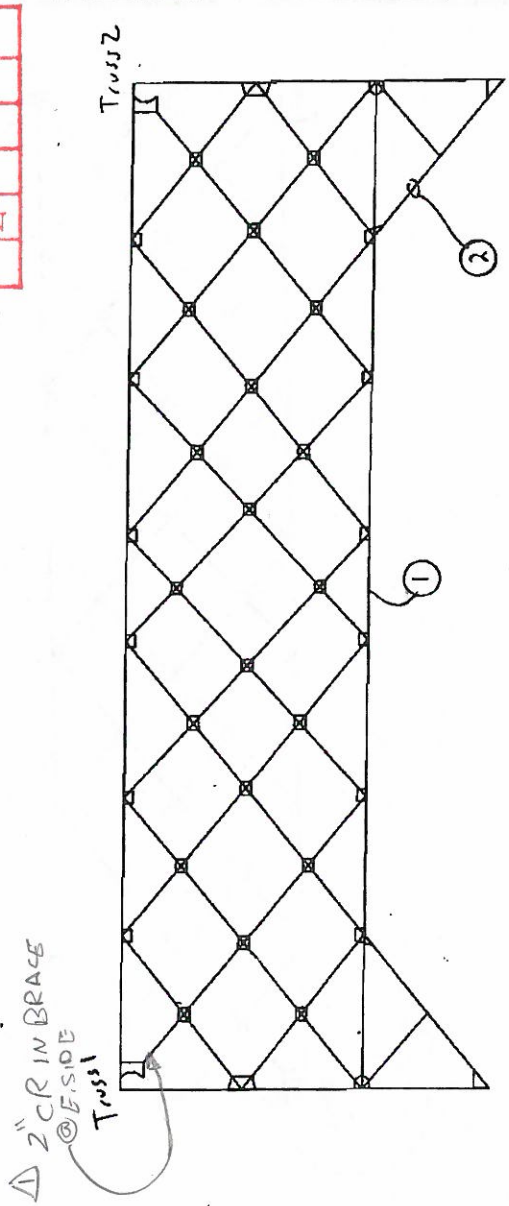


SPAN 7 At PP8
INTERIOR TOP STRUT SYSTEM

① 2" IR w/ SL to bottom angles at midspan
② 1½" IR w/ SL to angles

WSP-SELLS
VERIFICATION INSPECTION
07/12/2013 NO REVISION

# FIELD NOTES

Stantec Consulting Services Inc.

| | |
|---|---|
| Bridge No.: | 08080R |
| Project No.: | 301-0099 |
| Crew: | EH TB |
| Date: 5/11/09 | Sheet No.: 293 |

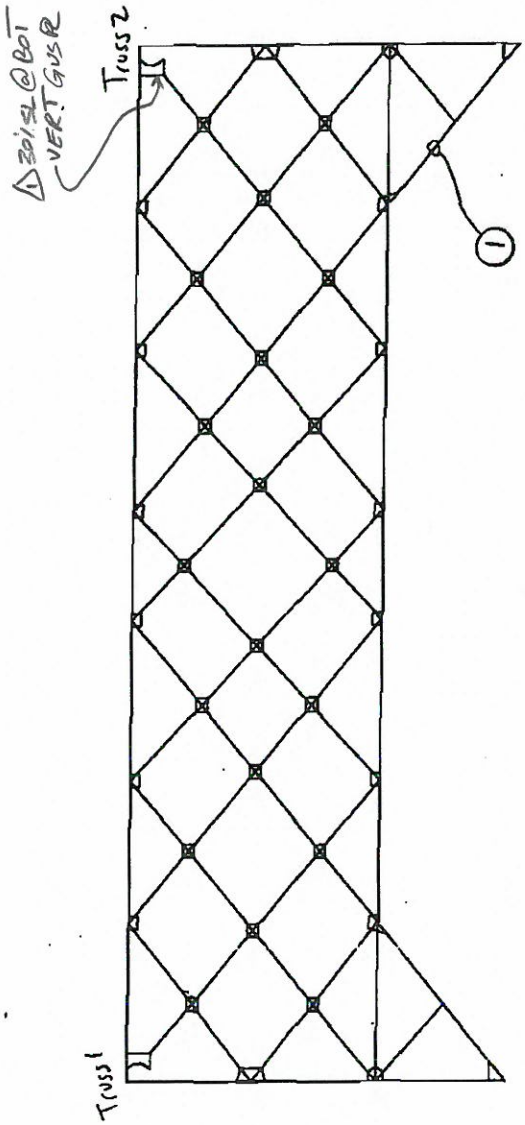


SPAN 7 At PP10
INTERIOR TOP STRUT SYSTEM

| NO. | DATE | DESCRIPTION |
|---|---|---|
| 1 | 6/25/12 | WSP-SELLS MLMA |

REVISIONS

1 1½" IR w/ SL to angles

WSP-SELLS

VERIFICATION INSPECTION
07/12/2013

# Substructure Units

WSP-SELLS VERIFICATION INSPECTION
07/12/2013 NO REVISION

Stantec Consulting Services Inc.

| | |
|---|---|
| Bridge No.: | 08080R |
| Project No.: | 301-0099 |
| Name: | C. Yorlano |
| Date: 7/10/09 | Sheet No.: ~~24~~ 295 |

△ 4/24/12 WSP-SELLS, ML, MA

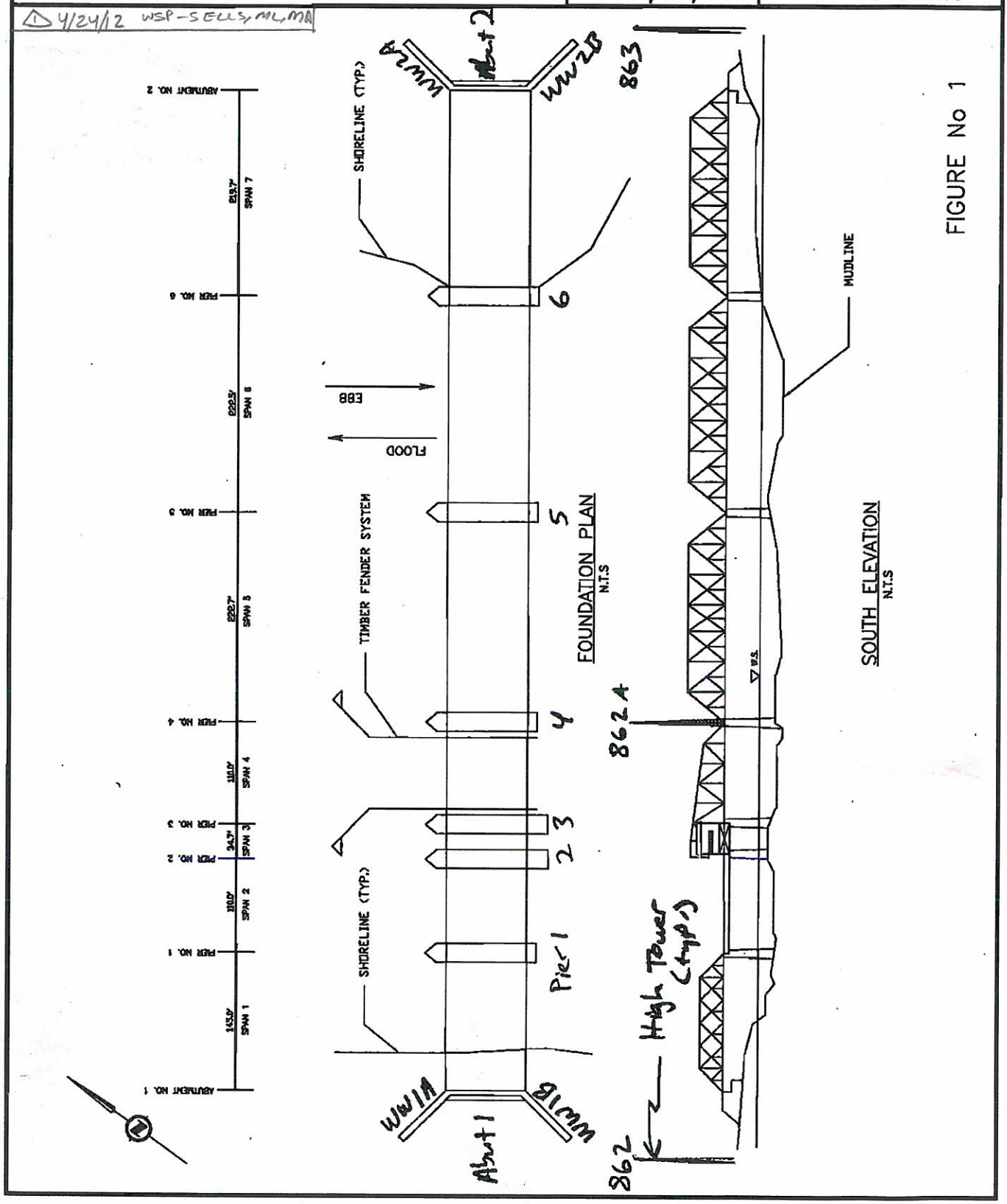


FIGURE No 1

WSP-SELLS VERIFICATION INSPECTION
07/12/2013 NO REVISION

# FIELD NOTES

Stantec Consulting Services Inc.

| | |
|---|---|
| Bridge No.: | 08080R |
| Project No.: | 301-0099 |
| Crew: | LM + AF |
| Date: | Sheet No.: 3296 △1 |

△1 WSP-SELLS MM MA 4/24/12

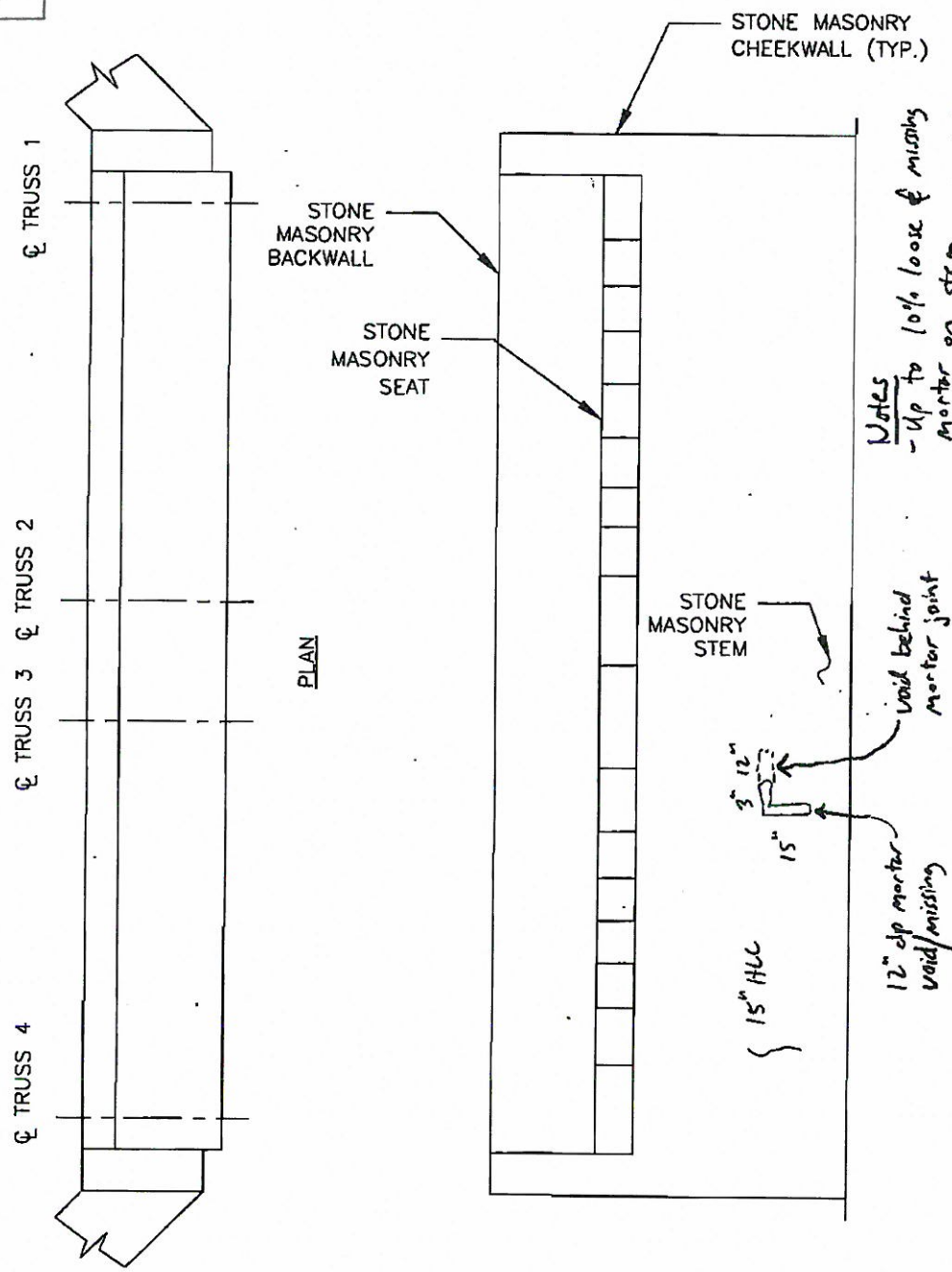


ABUTMENT NO. 1 ELEVATION

WSP-SELLS VERIFICATION INSPECTION
07/12/2013 NO REVISION

# FIELD NOTES

Stantec Consulting Services Inc.

| | |
|---|---|
| Bridge No.: | 08080R |
| Project No.: | 301-0099 |
| Crew: | LM FAF |
| Date: | Sheet No.: 297 △1 |

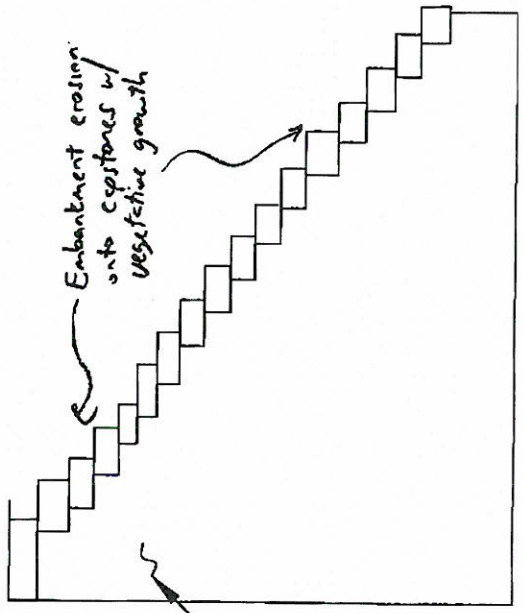


WINGWALL 1A
NTS

STONE MASONRY

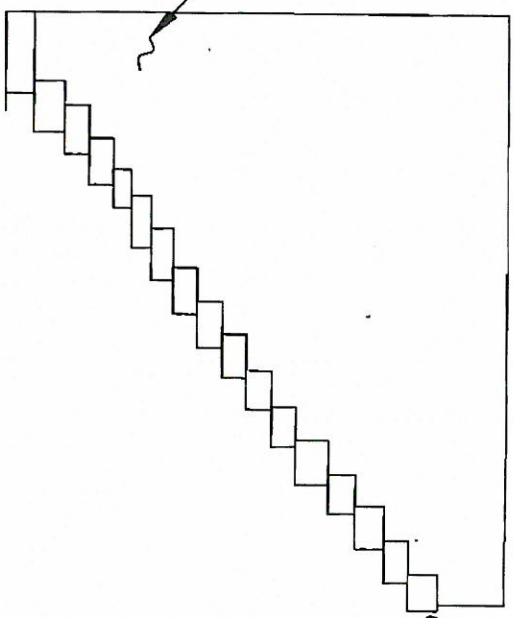


WINGWALL 1B
NTS

WINGWALL

Notes
- Up to 10% loose and missing mortar
- No loose or dislodged stones noted
- No evidence of movement or settlement

| NO. | DATE | DESCRIPTION |
|---|---|---|
| △1 | 4/24/12 | WSP-SELLS MJMA |

REVISIONS

WSP-SELLS
VERIFICATION INSPECTION
07/12/2013 NO REVISION

# FIELD NOTES

Stantec Consulting Services Inc.

| | |
|---|---|
| Bridge No.: | 08080R |
| Project No.: | 301-0099 |
| Crew: | |
| Date: | Sheet No.: 298 D |

△ 9/25/12 WSP-SELLS, ML, MA

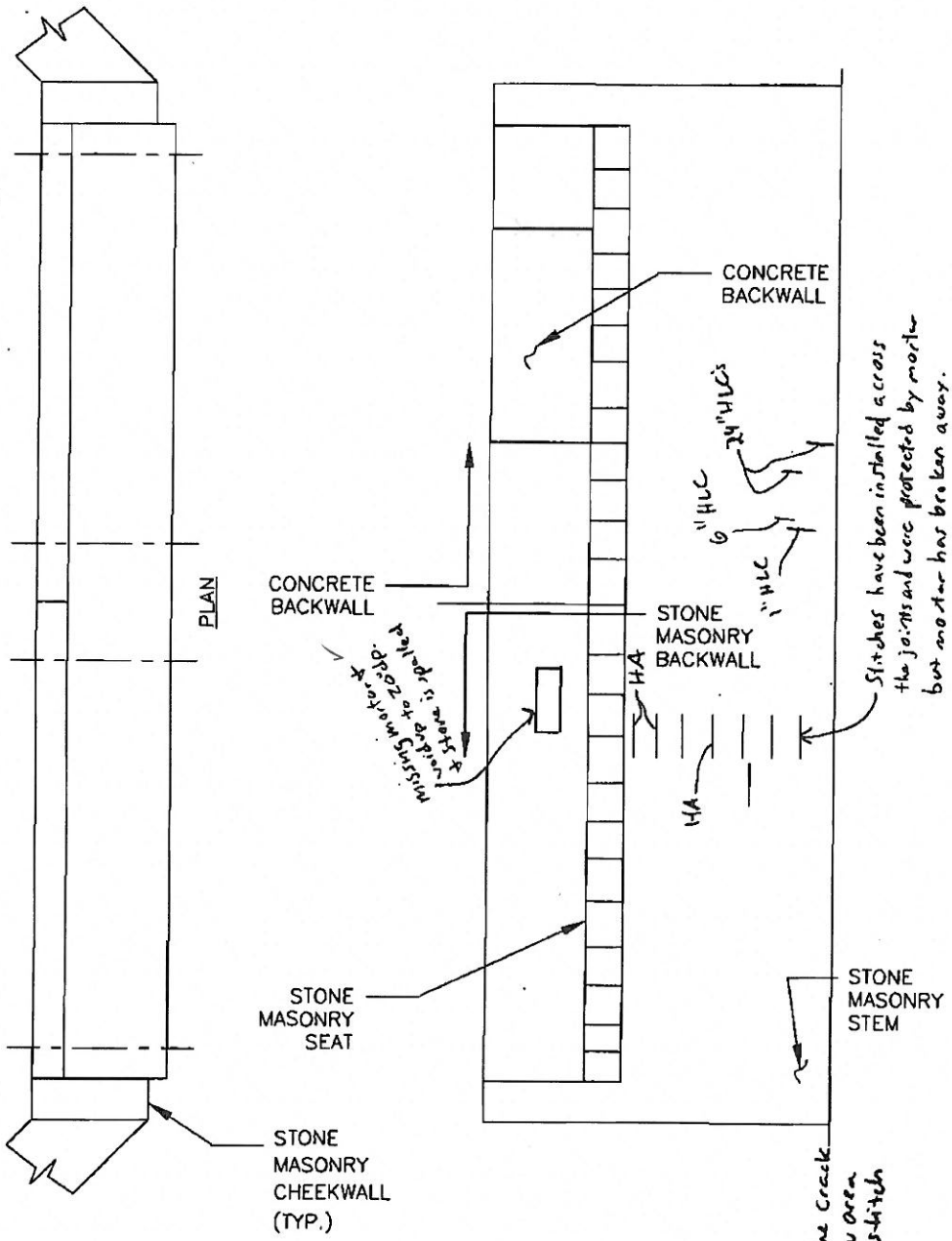


ABUTMENT NO. 2 ELEVATION

Notes:
1. The abutment stem exhibits approx. 10% cracked, loose or missing joint mortar
2. There are a few locations of efflo on the stones with a concentration of efflo adjacent to stitches
3. No evidence of scour or erosion + no dislodged stones
4. The cheekwall/stbackwall exhibit approx 10% cracked or missing joint mortar

Legend
HLC = Hairline crack
HA = Hollow area around stitch

WSP-SELLS
VERIFICATION INSPECTION
07/12/2013 NO REVISION

# FIELD NOTES

Stantec Consulting Services Inc.

| | |
|---|---|
| Bridge No.: | 08080R |
| Project No.: | 301-0099 |
| Crew: | |
| Date: | Sheet No.: 299 △1 |

△1 9/25/12 WSP-SELLS, MI, MA

Notes:
1. Both wingwalls exhibit approx 10% cracked, loose or missing joint mortar.
2. No evidence of scour or erosion along the face of either wall
3. Efflo at random locations
4. No evidence of movement or settlement
5. No loose, dislodged or cracked stones

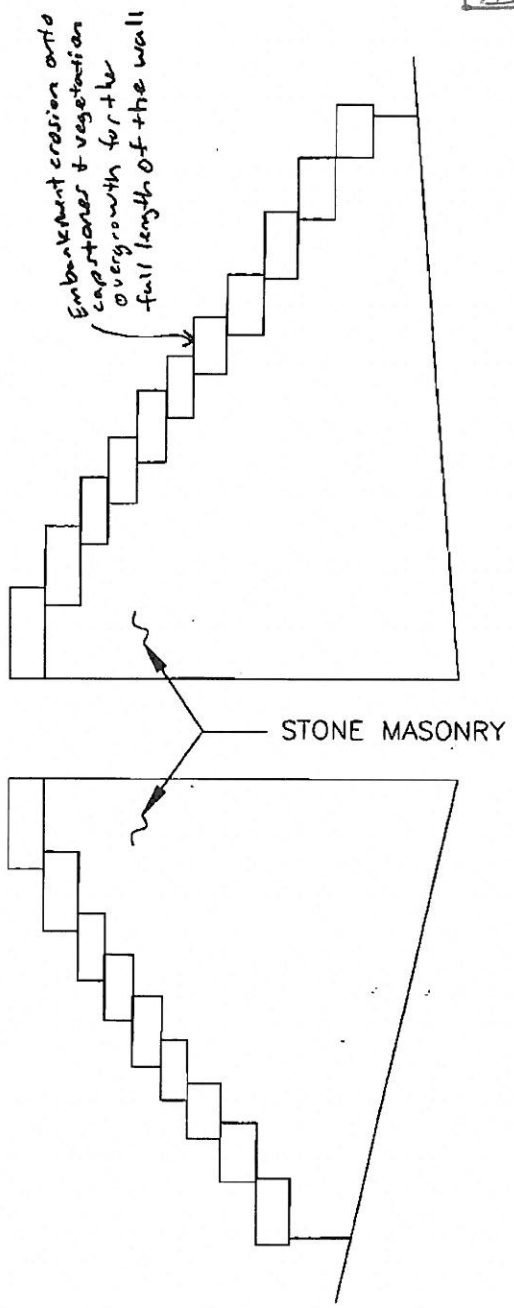


WINGWALL 2B
NTS

WINGWALL 2A
NTS

WINGWALL

WSP-SELLS VERIFICATION INSPECTION
07/12/2013 NO REVISION

# FIELD NOTES

Stantec Consulting Services Inc.

| | |
|---|---|
| Bridge No.: | 08080R |
| Project No.: | 301-0099 |
| Crew: | LM + AF |
| Date: | Sheet No.: Y 300 1 |

1 4/25/12 WSP-SELLS, ML, MA

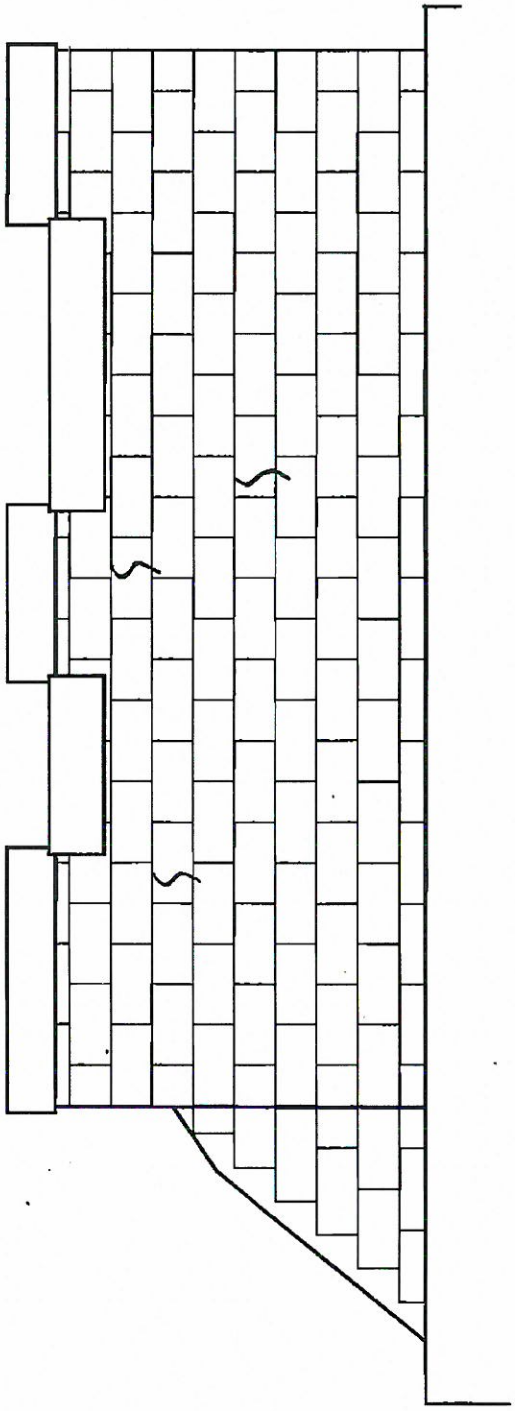

PIER NO. 1 – WEST ELEVATION
N.T.S.

Notes
- Up to 20% loose and missing mortar, up to 1½' deep
- No loose or dislodged stones noted

WSP-SELLS VERIFICATION INSPECTION
07/12/2013 NO REVISION

# FIELD NOTES

Stantec Consulting Services Inc.

| | |
|---|---|
| Bridge No.: | 08080R |
| Project No.: | 301-0099 |
| Crew: | LM + AF |
| Date: | Sheet No.: 8301 (1) |

(1) 4/25/12 WSP-SELLS, ML, MA

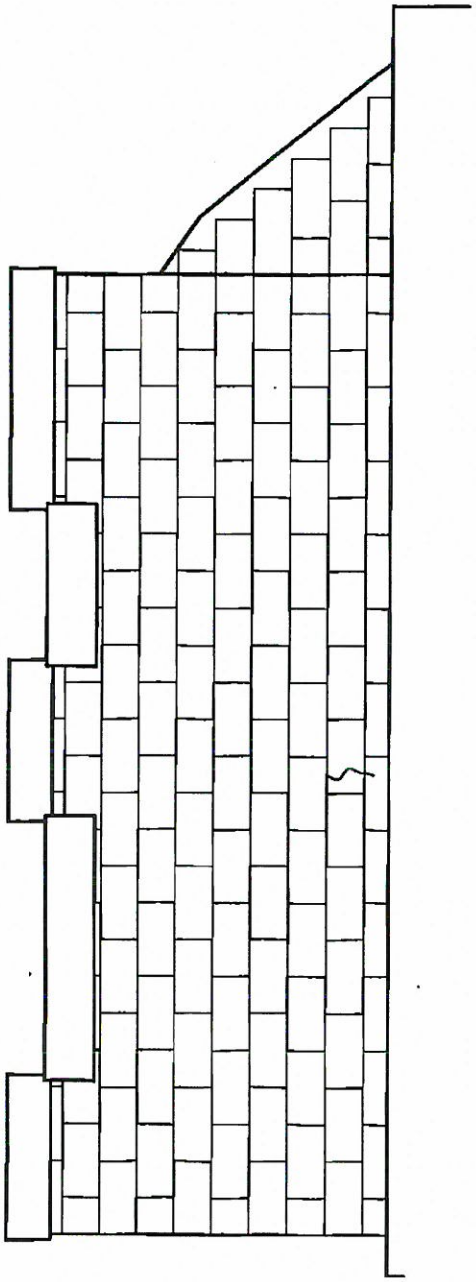

PIER NO. 1 – EAST ELEVATION
N.T.S.

Notes
- Up to 20% loose and missing mortar
- No loose or dislodged stones noted

WSP-SELLS VERIFICATION INSPECTION
07/12/2013 NO REVISION

# FIELD NOTES

Stantec Consulting Services Inc.

| | |
|---|---|
| Bridge No.: | 08080R |
| Project No.: | 301-0099 |
| Crew: | LM + AF |
| Date: | Sheet No.: 8 302 Δ |

Δ 4/25/12 WSP-SELLS, MLMA

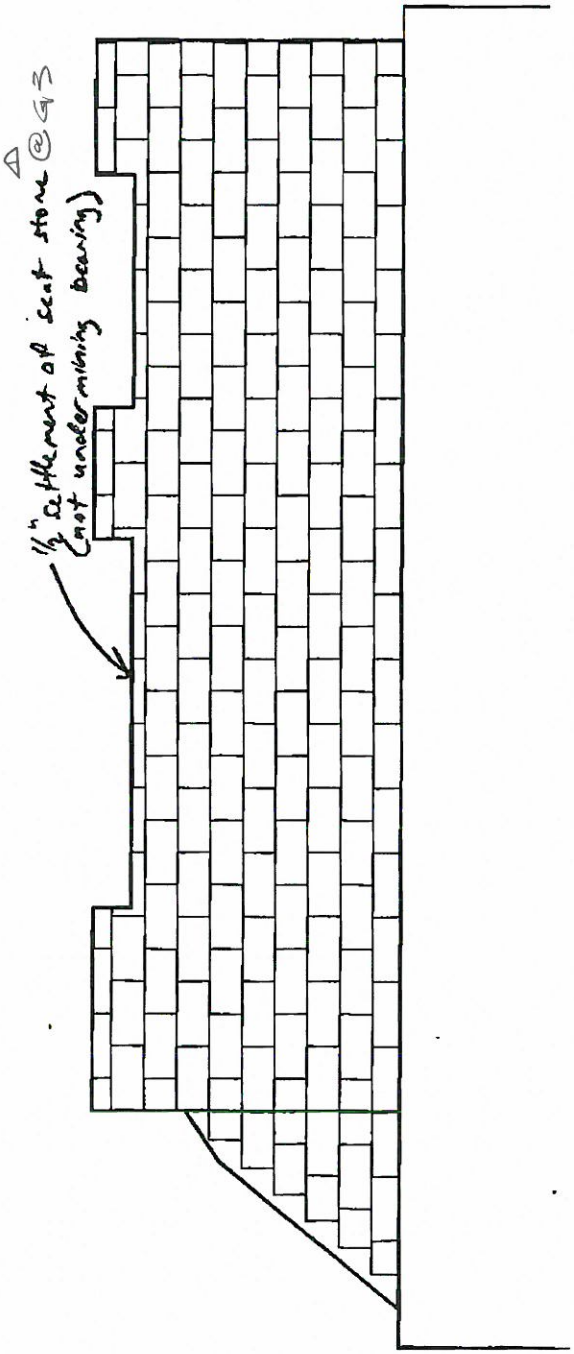


PIER NO. 2 – WEST ELEVATION
N.T.S.

Notes
- up to 20% loose or missing mortar
- No loose or dislodged stones noted

WSP-SELLS VERIFICATION INSPECTION
07/12/2013 NO REVISION

# FIELD NOTES

Stantec Consulting Services Inc.

| | |
|---|---|
| Bridge No.: | 08080R |
| Project No.: | 301-0099 |
| Crew: | LM + AF |
| Date: | Sheet No.: ~~10~~ 303 Δ |

Δ 9/25/12 WSP-SELLS ML, MA

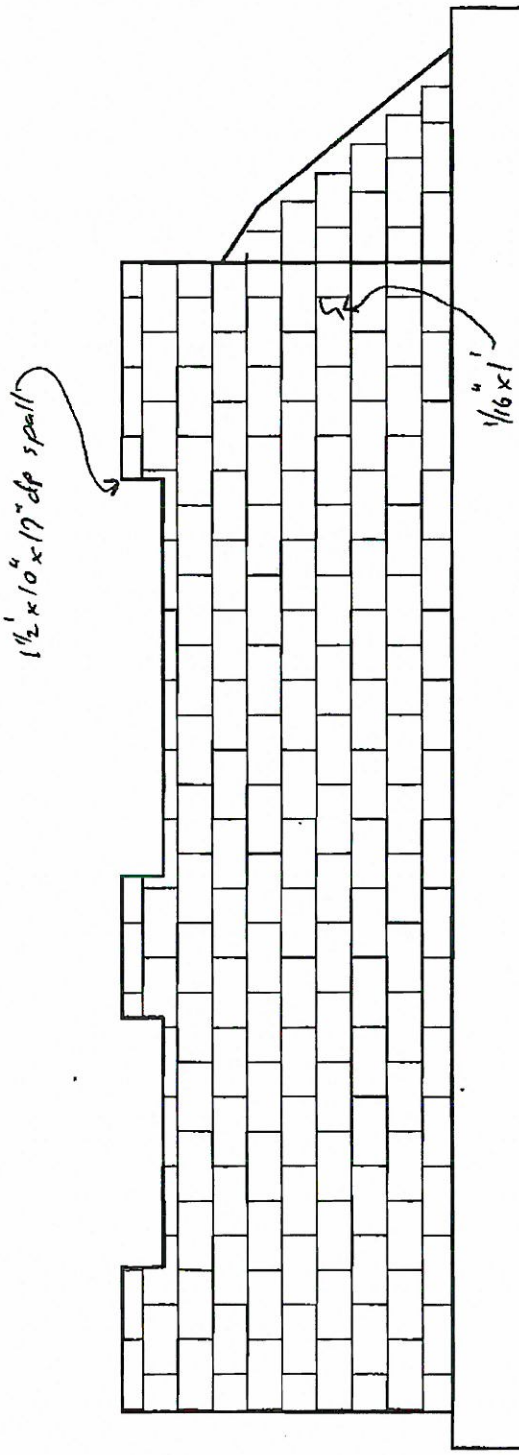


PIER NO. 2 – EAST ELEVATION

N.T.S.

Notes
- Up to 20% loose or missing mortar
- No loose or missing stones noted
- Heavy efflo. below tracks

WSP-SELLS
VERIFICATION INSPECTION
07/12/2013 NO REVISION

# FIELD NOTES

Stantec Consulting Services Inc.

Bridge No.: 08080R
Project No.: 301-0099
Crew: EH TB
Date: 5/11/09 Sheet No.: H 304 Δ
Δ 4/23/12 WSP-SELLS ML,MA

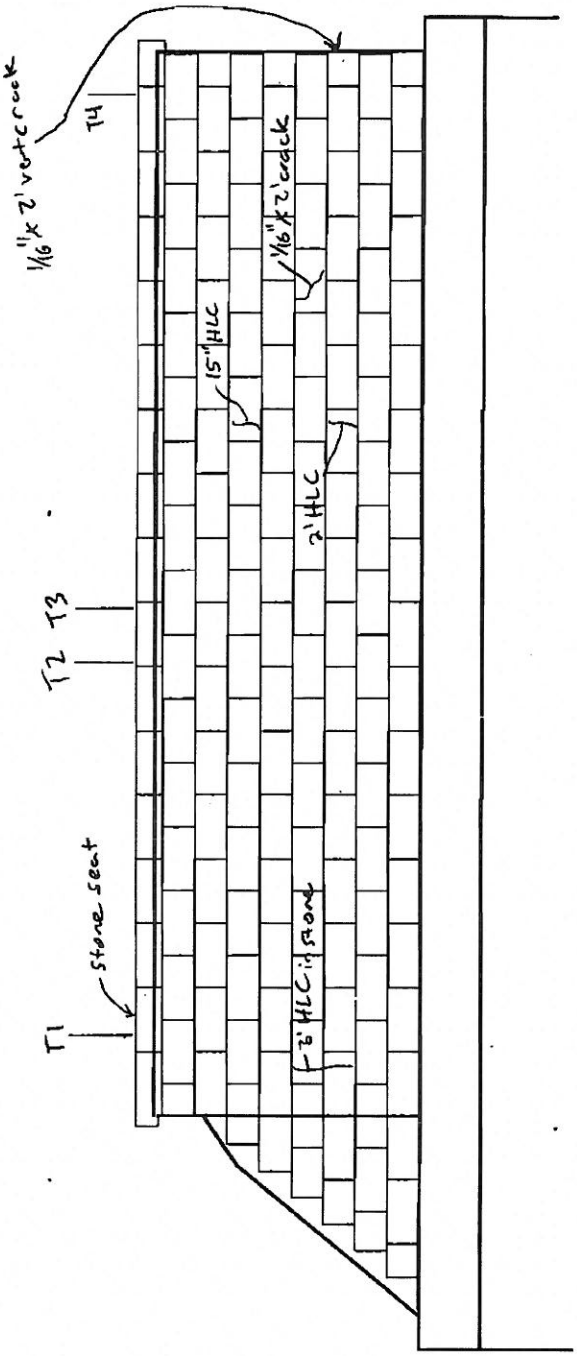


PIER NO. 3 – WEST ELEVATION
N.T.S.

Legend
HLC = Hairline crack

Notes
① There is approx 10% cracked, loose or missing mortar.
② There is efflo along the bottom of the stone seat
③ No loose or dislodged stones

WSP-SELLS
VERIFICATION INSPECTION
07/12/2013 NO REVISION

# FIELD NOTES

Stantec Consulting Services Inc.

| | |
|---|---|
| Bridge No.: | 08080R |
| Project No.: | 301-0099 |
| Crew: | |
| Date: | Sheet No.: ~~12~~ 305 Δ |

Δ 4/23/12 WSP-SELLS ML/MA

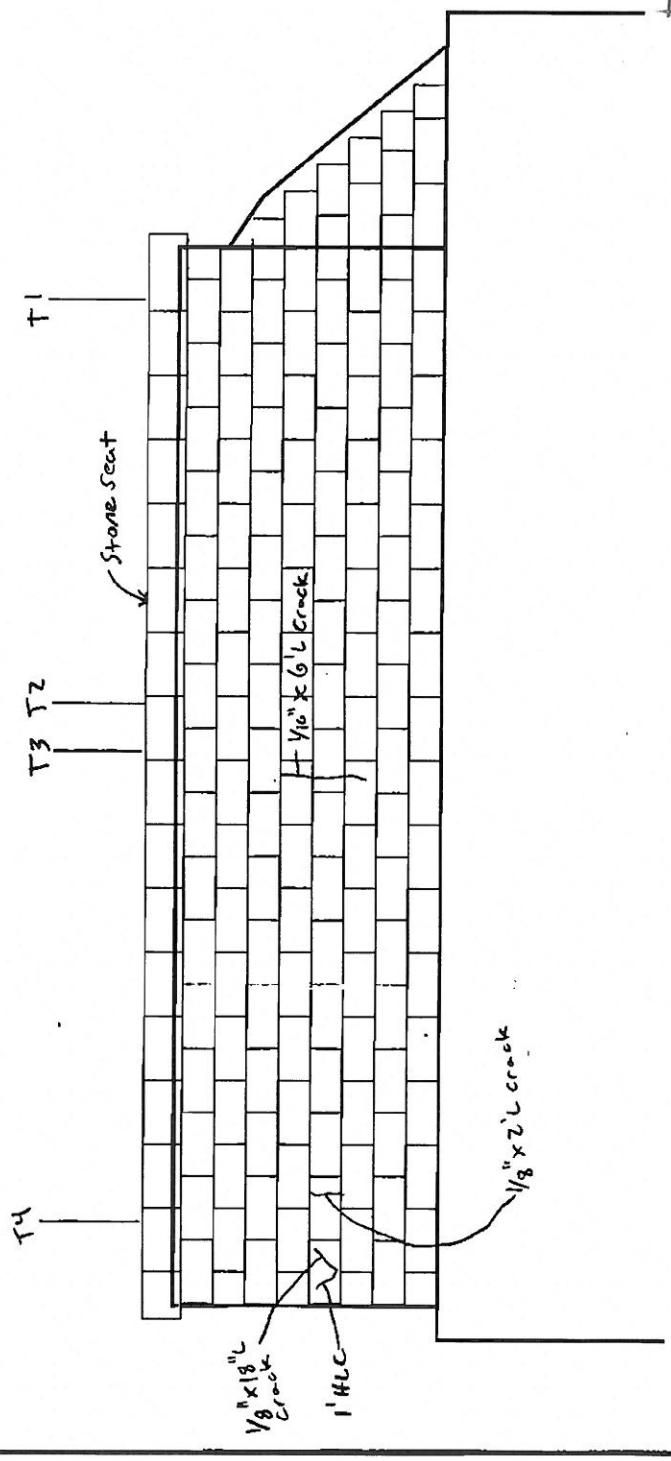


PIER NO. 3 – EAST ELEVATION
N.T.S.

Notes
1. There is approx 10% cracked, loose, or missing mortar
2. There is efflo at random locations, especially along the bottom of the seat
3. No loose or dislodged stones

WSP-SELLS
VERIFICATION INSPECTION
07/12/2013 NO REVISION

# FIELD NOTES

Stantec Consulting Services Inc.

| | |
|---|---|
| Bridge No.: | 08080R |
| Project No.: | 301-0099 |
| Crew: | |
| Date: | Sheet No.: 13 306 D |

D 4/23/12 WSP-SELLS, ML, MA

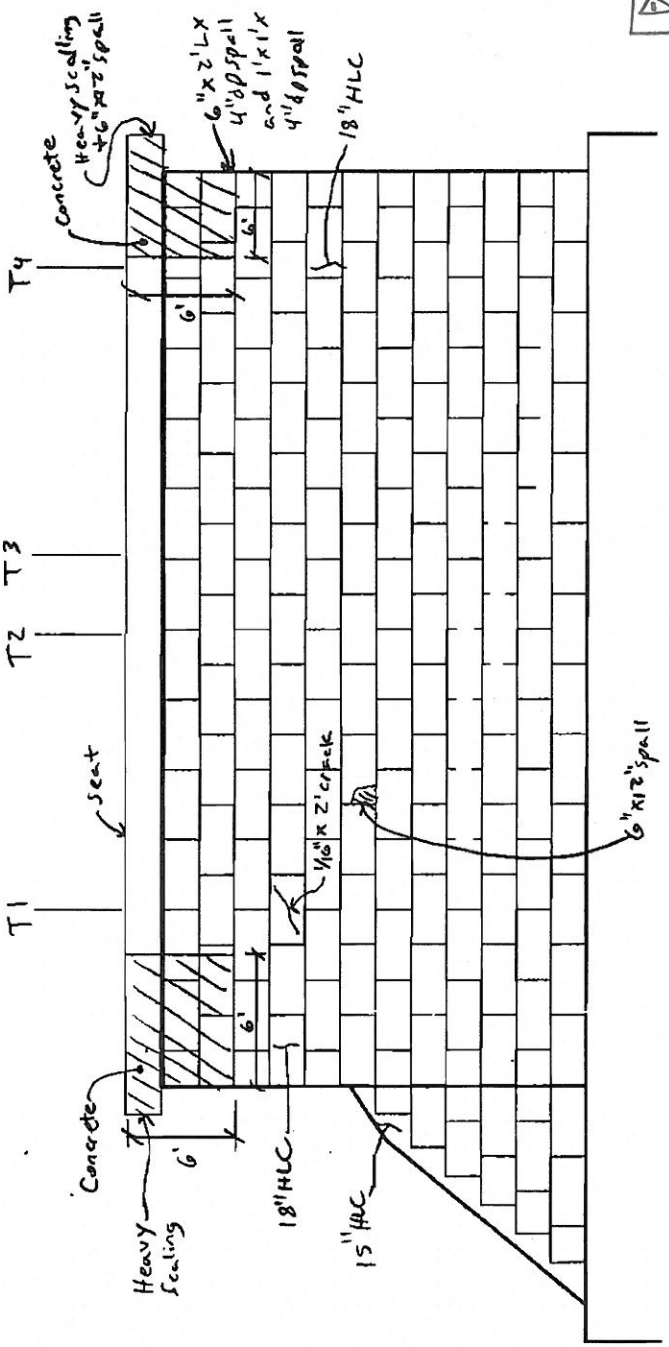


Legend
HLC = Hairline crack

PIER NO. 4 – WEST ELEVATION
N.T.S.

Notes
1. There is approx. 10% cracked, loose or missing joint mortar
2. No loose or dislodged stones
3. Efflo at random locations

WSP-SELLS
VERIFICATION INSPECTION
07/12/2013 NO REVISION

# FIELD NOTES

Stantec Consulting Services Inc.

| | |
|---|---|
| Bridge No.: | 08080R |
| Project No.: | 301-0099 |
| Crew: | |
| Date: | Sheet No.: 14 307 D |

D 5/3/12 WSP-SELLS, ML, MA

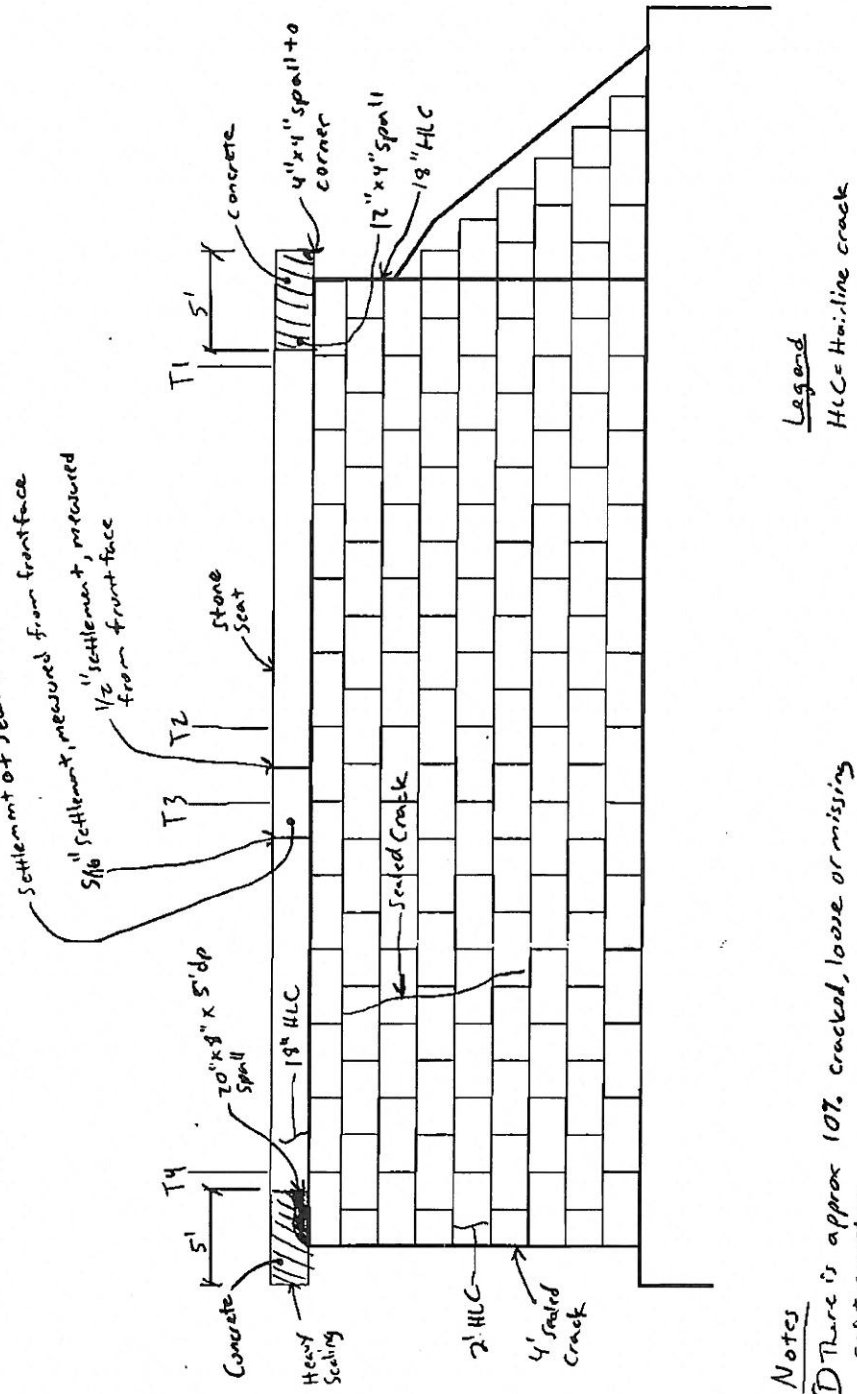


Legend
HLC = Hairline crack

PIER NO. 4 – EAST ELEVATION
N.T.S.

Notes
1. There is approx 10% cracked, loose or missing joint mortar
2. Efflo at random locations
3. No loose or dislodged stones

WSP-SELLS
VERIFICATION INSPECTION
07/12/2013 NO REVISION

# FIELD NOTES

Stantec Consulting Services Inc.

| | |
|---|---|
| Bridge No.: | 08080R |
| Project No.: | 301-0099 |
| Crew: | |
| Date: | Sheet No.: 15 308 Δ |

Δ 5/3/12 WSP-SELLS, ML, MA

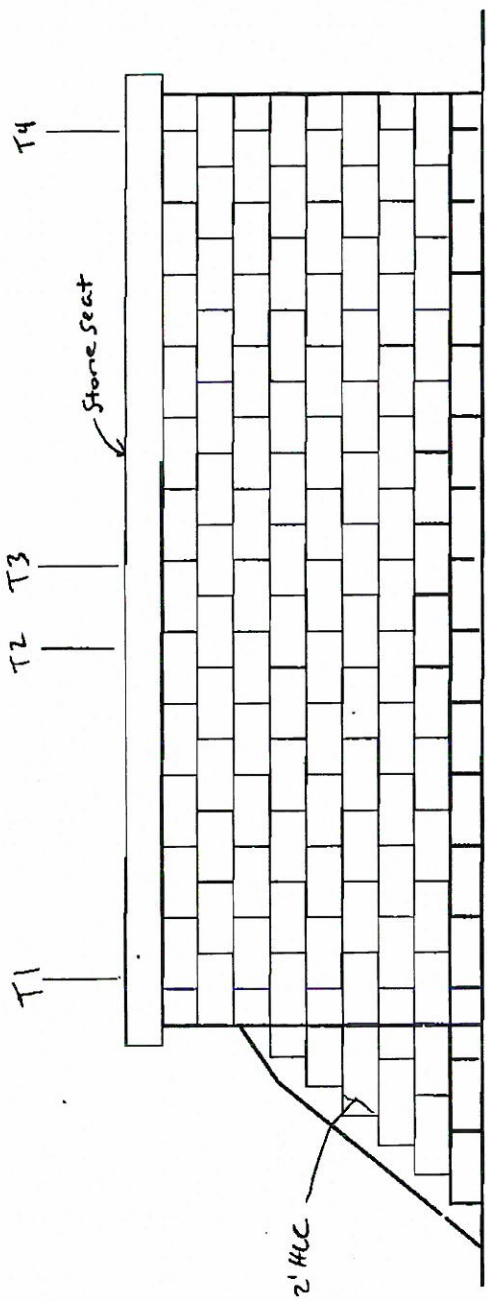


Legend
HLC = Hairline crack

PIER NO. 5 – WEST ELEVATION
N.T.S.

Notes
1. There is approx 10% cracked, loose or missing joint mortar ✓
2. Efflo at random locations, and heavy efflo under seat for its entire length ✓
3. No loose or dislodged stones ✓

WSP-SELLS
VERIFICATION INSPECTION
07/12/2013 NO REVISION

# FIELD NOTES

Stantec Consulting Services Inc.

| | |
|---|---|
| Bridge No.: | 08080R |
| Project No.: | 301-0099 |
| Crew: | |
| Date: | Sheet No.: 16 309 Δ |

Δ 5/7/12 WSP-SELLS, MYMA

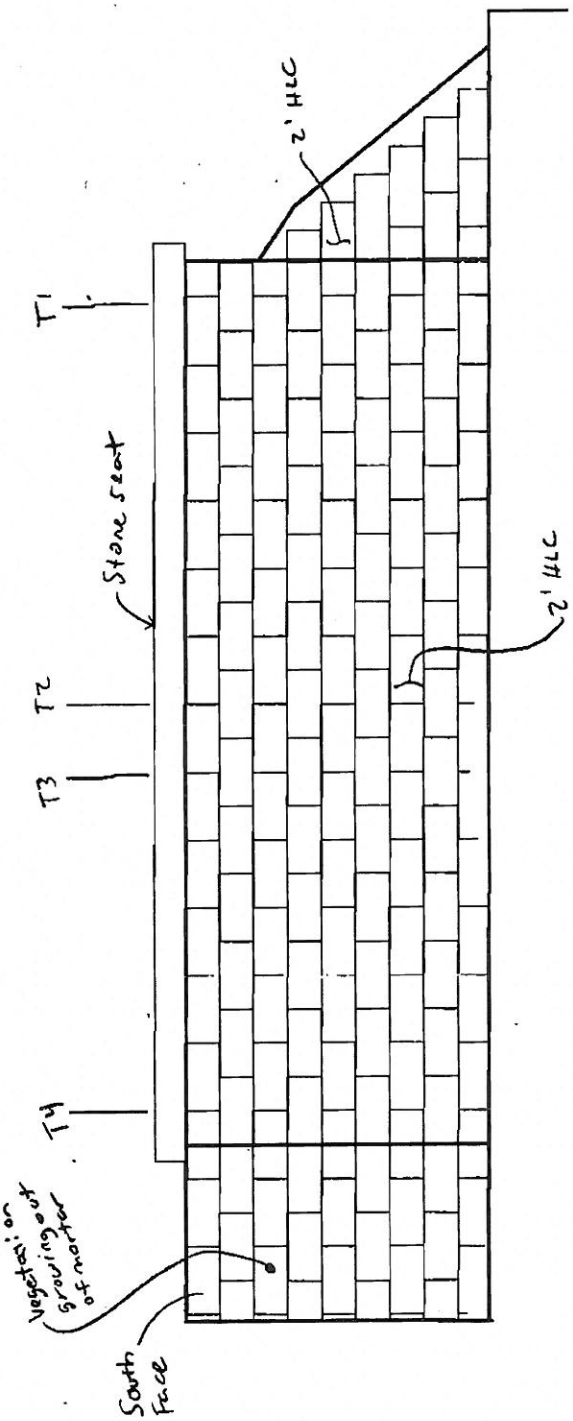


Legend
HLC = Hairline crack

PIER NO. 5 – EAST ELEVATION
N.T.S.

Notes
1. There is approx. 10% cracked, loose or missing joint mortar
2. Effflo at random locations and along bottom of seat
3. No loose or dislodged stones

WSP-SELLS

VERIFICATION INSPECTION

07/12/2013 NO REVISION

# FIELD NOTES

| | |
|---|---|
| Bridge No.: 08080R | |
| Project No.: 301-0099 | |
| Crew: | |
| Date: | Sheet No.: 17 310 D |

Stantec Consulting Services Inc.

△ 5/7/12 WSP-SELLS, ML, MA

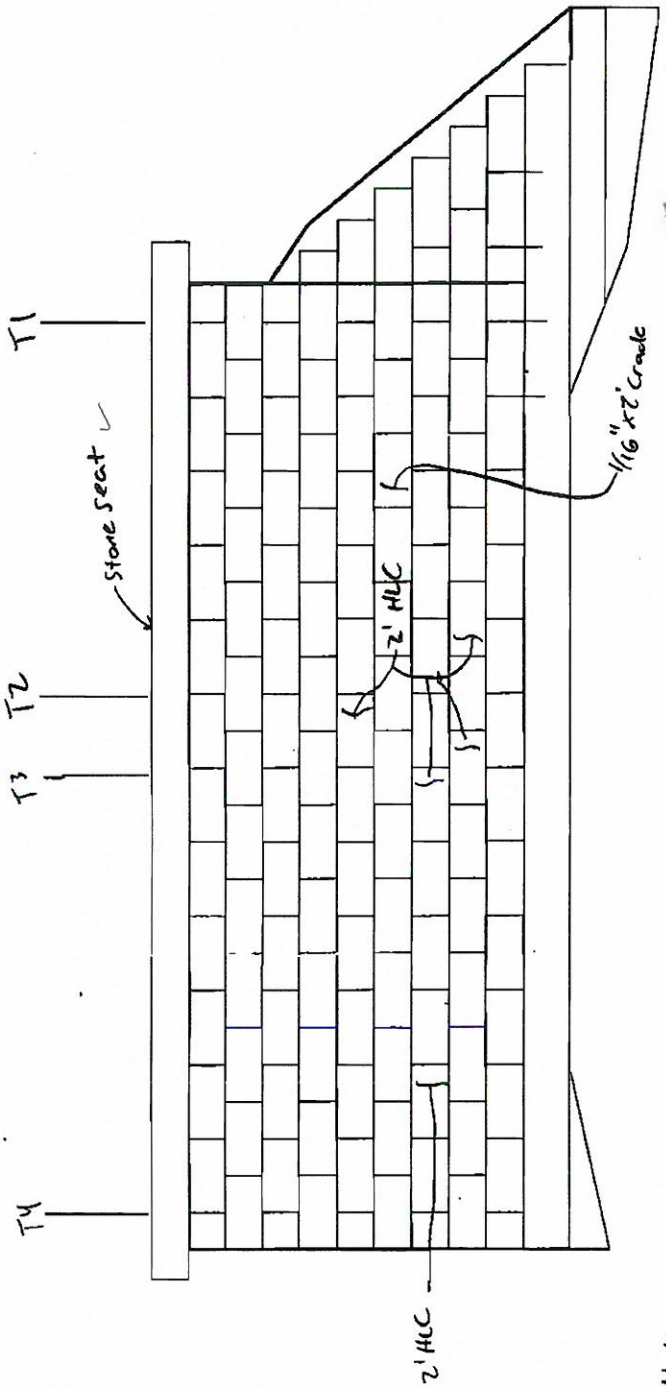


Legend

HLC = Hairline crack

PIER NO. 6 – EAST ELEVATION

N.T.S.

Notes:

1. There is approx 10% cracked, loose or missing joint mortar
2. Efflo at random locations
3. There are no loose or dislodged stones

WSP-SELLS
VERIFICATION INSPECTION
07/12/2013 NO REVISION

# FIELD NOTES

Stantec Consulting Services Inc.

| | |
|---|---|
| Bridge No.: | 08080R |
| Project No.: | 301-0099 |
| Crew: | |
| Date: | Sheet No.: 18 311 Δ |

Δ 9/25/12 WSP-SELLS, MY/MA

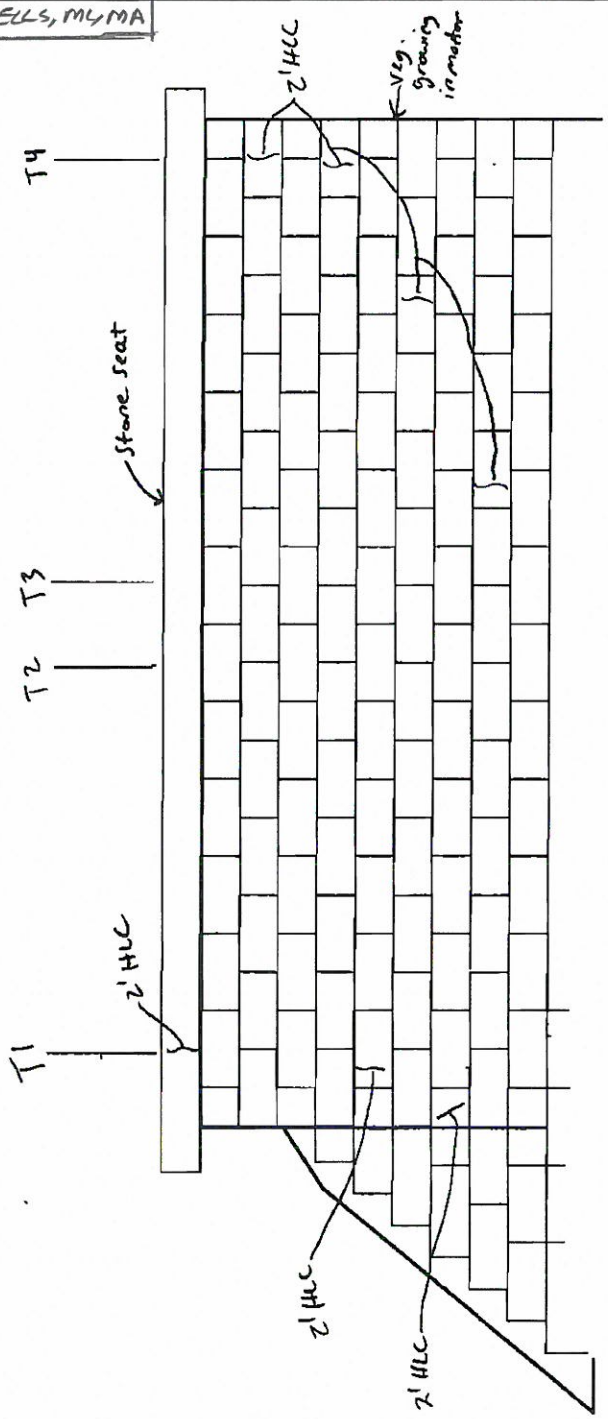


Legend
HLC = Hairline crack

PIER NO. 6 – WEST ELEVATION
N.T.S.

Notes
① There is approx 10% cracked, loose or missing joint mortar
② Efflo at random locations
③ No loose or dislodged stones

WSP-SELLS
VERIFICATION INSPECTION
07/12/2013

# Operator's House

# FIELD NOTES

Bridge No.: 08080R

Project No.: 301-0099

Stantec Consulting Services Inc.

Crew: AML JD

Date:

Sheet No.: 26 3/3 D

Windows

7 - 34" x 64" double hung, vinyl clad, double pane windows
All windows are functional
All windows are protected with security bars

Gutters

Gutters present and appear to be functional
Leaders direct rainfall away from structural members
55 gal drum installed since previous inspection at SW corner to collect and redirect rainfall away from structural members

Doors

3 - exterior 48" x 96" steel doors with 1' wide side windows
Upper half of each door is glass and is protected with security bars
All doors are functional
Some locations of damaged weatherstripping along the bottom of doors
The door side window at the SW door is cracked

Roof

3 tab asphalt shingles
No apparent ventilation between roof and house ceiling
Roof framing consists of wood rafters with plywood sheathing above metal framework

Siding

Clapboard style vinyl siding with 3" reveal
At several locations, the J-channel around the doors and platform adjacent to the doors is broken

Stairs to Operator's House

The open grate staors amd rails exhibit moderate to heavy rust

Cooling System

5000 BTU thru wall unit (White Westinghouse) and window unit at operator's table (Quasar) of unknown output
According to operator, the A/C function is to keep bridge control electronics cool
A/C units operational at time of inspection
Operator indicates cooling ssytem is adequate

Heating System

2 - Qmark 10,000 watt units and 1 - Chromalux 4,000 watt unit
Heating units operational at time of inspection
Operator indicates heating system is adequate

Floors/Flooring

12"x12" vinyl floor tiles
There are several locations of loose tiles, 1 missing tile in the bathroom

Ceiling

Original plaster ceiling covered with 2'x4' ceiling panels
Random panels bowed downward
Several ceiling tiles are missing/damaged

Insulation

Exterior walls insulated with R-11 fiberglass batt
Concrete floor not insulated

Interior Walls

Steel stud with sheetrock
One hole noted in sheetrock at floor level near sink

Plumbing

Electric incinerator toilet
Operator noted the ventilation in bathroom is inadequate

WSP-SELLS VERIFICATION INSPECTION
07/12/2013 NO REVISION

# FIELD NOTES

| | |
|---|---|
| Bridge No.: | 08080R |
| Project No.: | 301-0099 |
| Crew: | AL JD |
| Date: | Sheet No.: 2 of 3/4 D |

Stantec Consulting Services Inc.

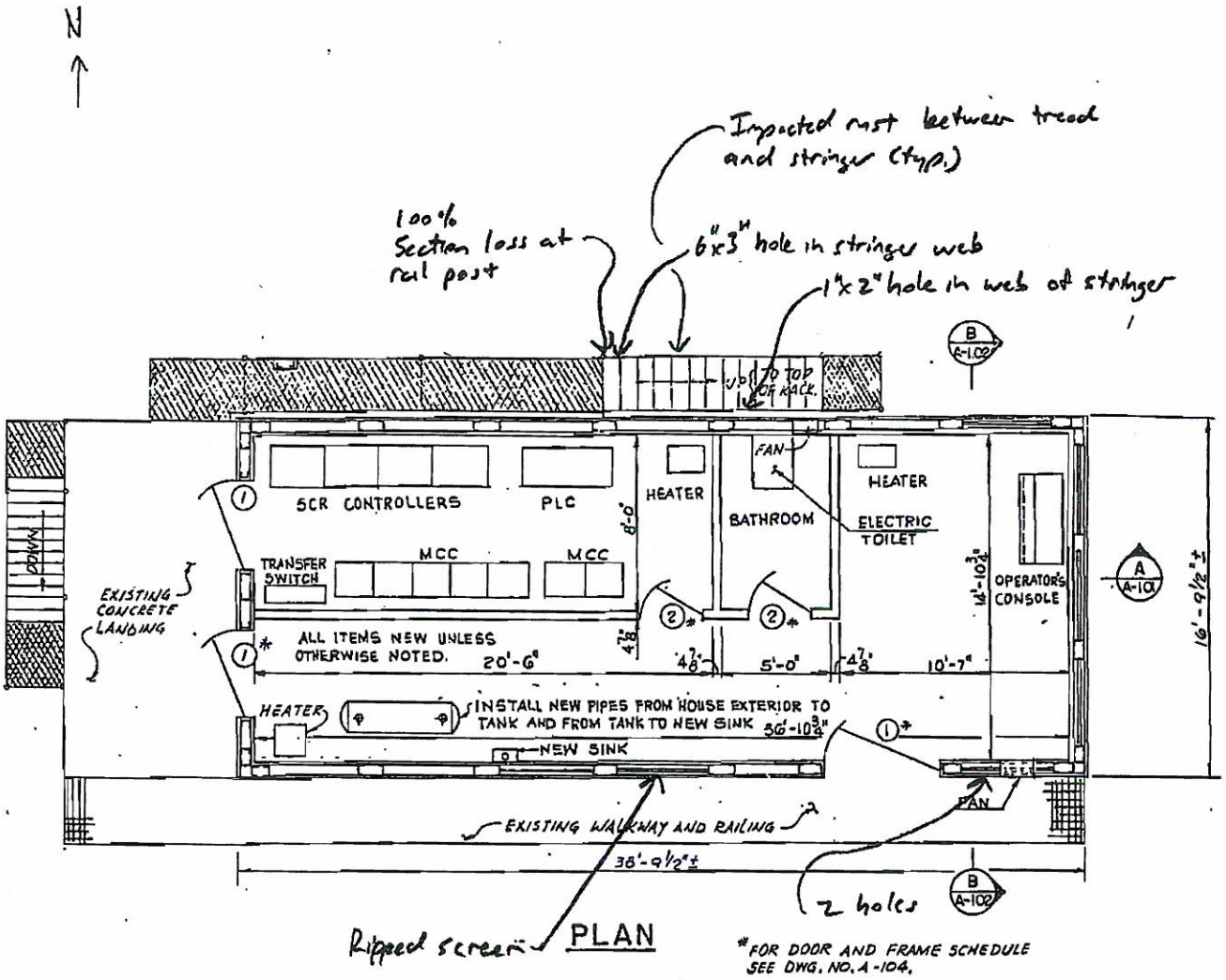


| NO. | DATE | DESCRIPTION |
|---|---|---|
| 1 | 6/18/12 | WSP-SELLS ML, MA |

REVISIONS

WSP-SELLS VERIFICATION INSPECTION
07/12/2013 NO REVISION

# FIELD NOTES

| | |
|---|---|
| Bridge No.: 08080R | |
| Project No.: 301-0099 | |
| Crew: | |
| Date: | Sheet No.: 315/1 |

Stantec Consulting Services Inc.

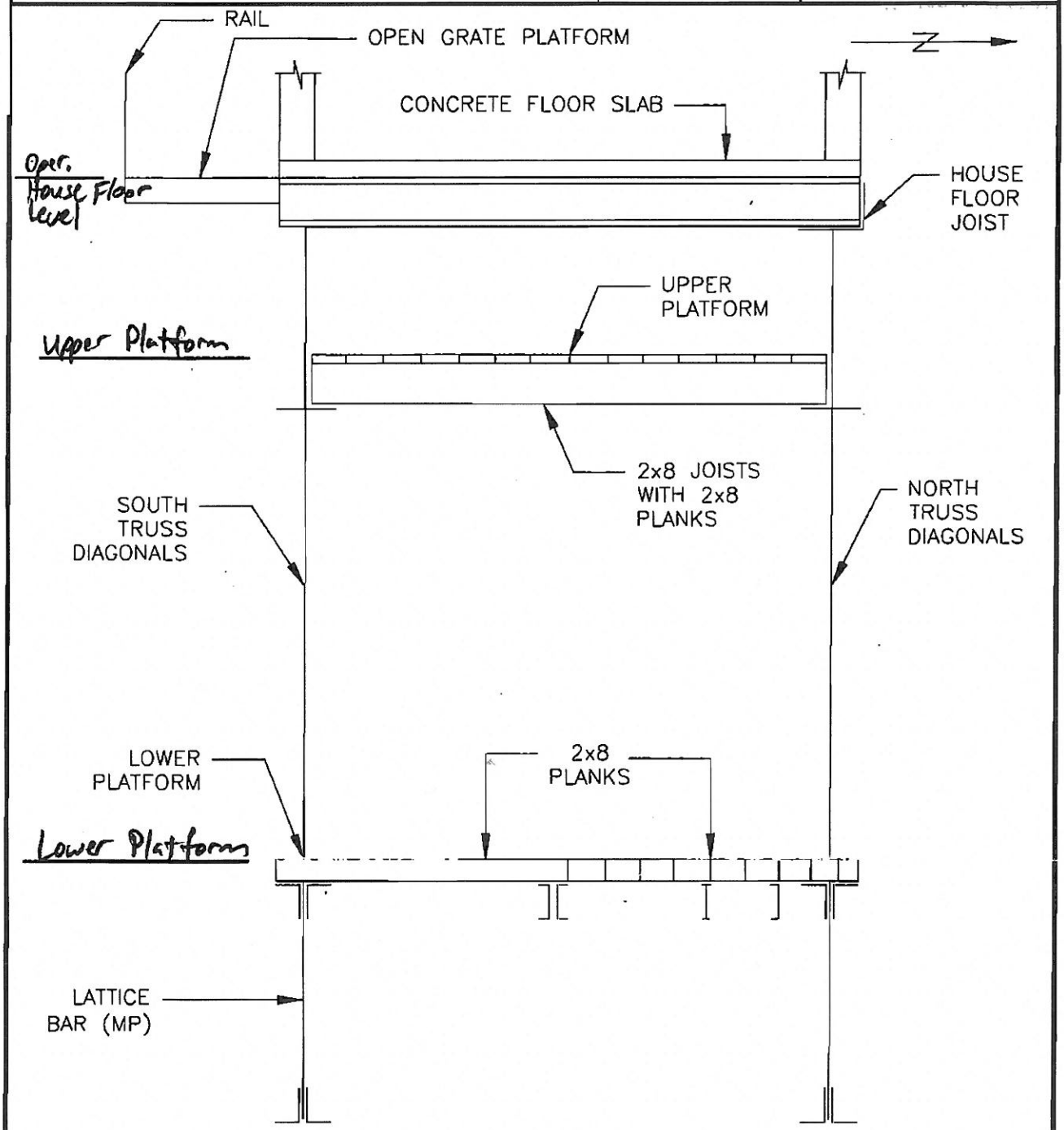


OPERATOR'S HOUSE FRAMING SECTION

| | | |
|---|---|---|
| 1 | 6/18/12 | WSP-SELLS MLMA |

WSP-SELLS VERIFICATION INSPECTION
07/12/2013 NO REVISION

# FIELD NOTES

Stantec Consulting Services Inc.

| | |
|---|---|
| Bridge No.: | 08080R |
| Project No.: | 301-0099 |
| Crew: | |
| Date: | Sheet No.: 316 D |

| NO. | DATE | DESCRIPTION |
|---|---|---|
| D | 6/18/12 | WSP-SELLS MYMA |

REVISIONS

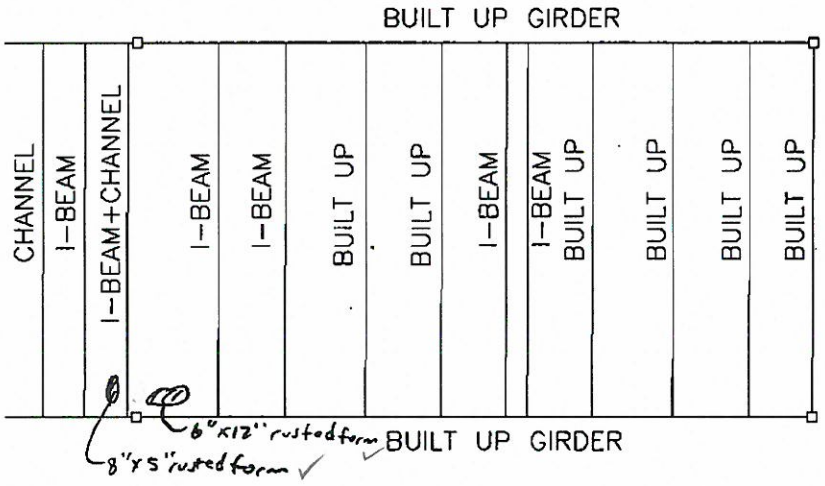


- The underside of the operators house is concealed from view by stay in place forms

OPERATOR HOUSE FLOOR FRAMING PLAN
(SOUTH SIDE OF SPAN 3)

WSP-SELLS VERIFICATION INSPECTION
07/12/2013 NO REVISION

# FIELD NOTES

Stantec Consulting Services Inc.

| | |
|---|---|
| Bridge No.: | 08080R |
| Project No.: | 301-0099 |
| Crew: | |
| Date: | Sheet No.: 317 △ |

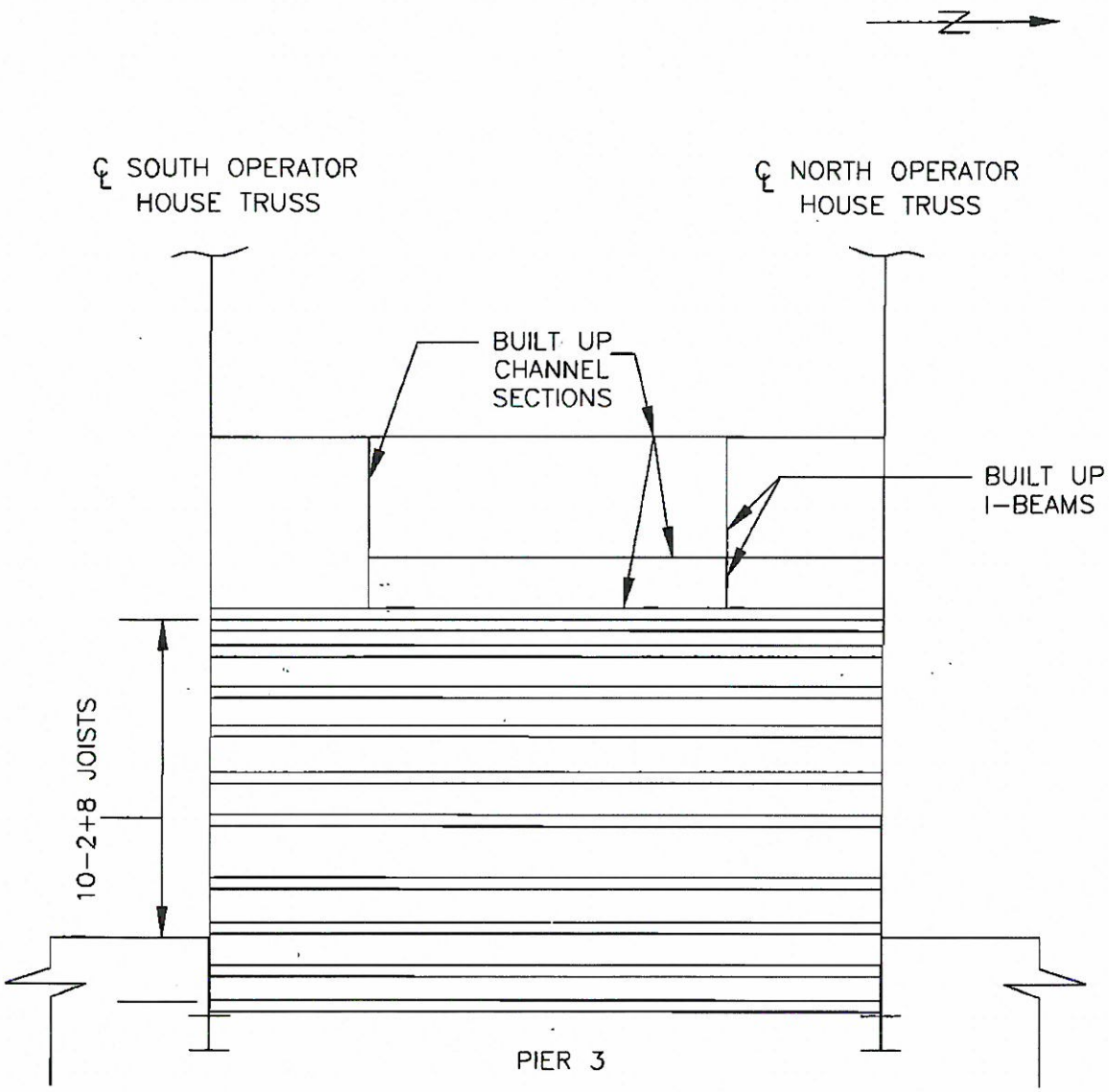


General Note:
The framing exhibits moderate to heavy rust

UPPER PLATFORM FRAMING PLAN

| NO. | DATE | DESCRIPTION |
|---|---|---|
| | | |
| | | |
| | | |
| △ | 6/18/12 | WSP-SELLS ML/MA |

REVISIONS

WSP-SELLS VERIFICATION INSPECTION
07/12/2013 NO REVISION

# FIELD NOTES

| | |
|---|---|
| Bridge No.: | 08080R |
| Project No.: | 301-0099 |
| Crew: | |
| Date: | Sheet No.: 31B/D |

Stantec Consulting Services Inc.

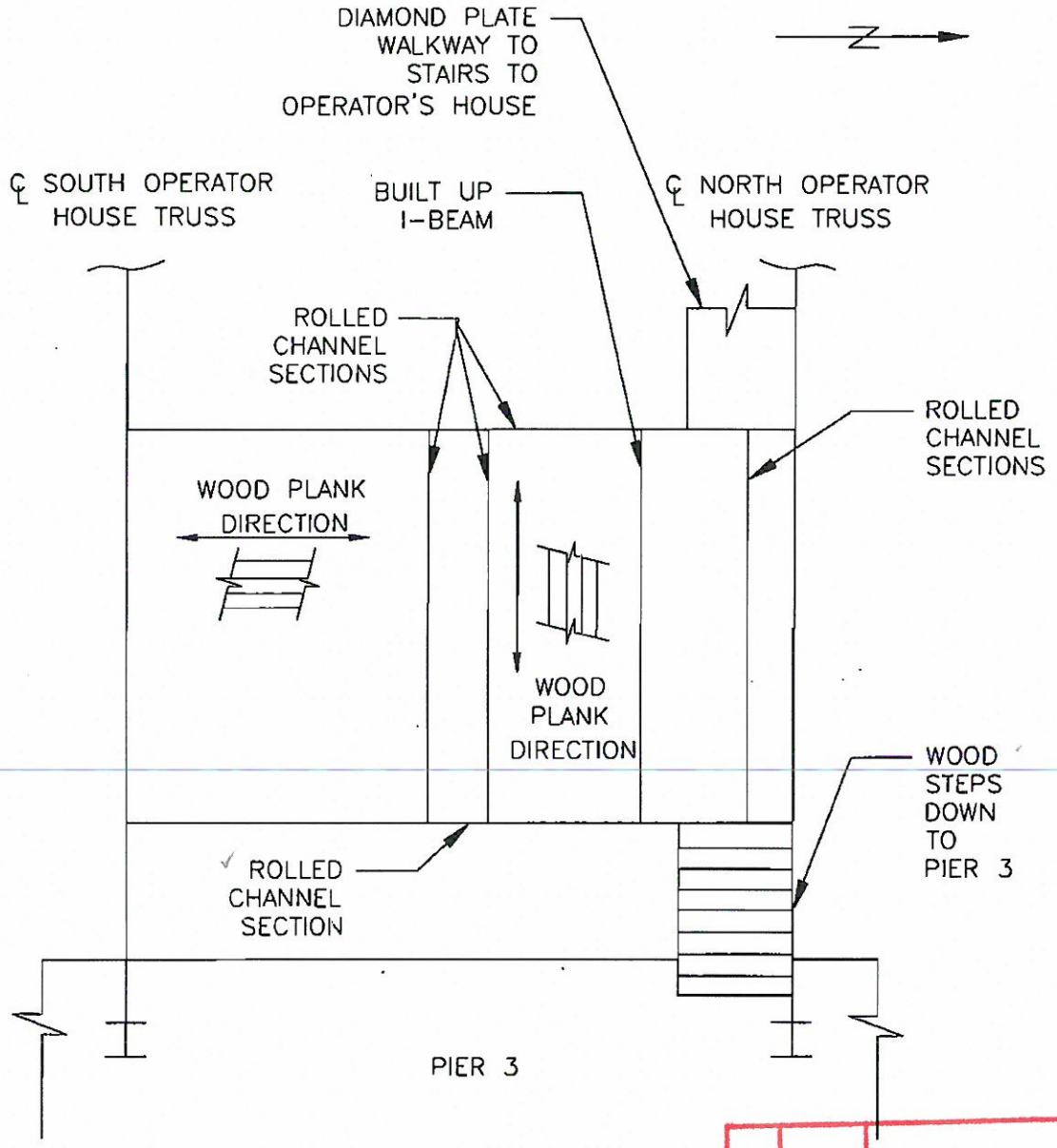


General Notes:
The framing exhibits moderate to heavy rust

LOWER PLATFORM FRAMING PLAN

| NO. | DATE | DESCRIPTION |
|---|---|---|
| 1 | 6/18/12 | WSP-SELLS MLMA |

REVISIONS

WSP-SELLS VERIFICATION INSPECTION
07/12/2013 NO REVISION

# FIELD NOTES

Stantec Consulting Services Inc.

| | |
|---|---|
| Bridge No.: | 08080R |
| Project No.: | 301-0099 |
| Crew: | |
| Date: | Sheet No.: 319 D |

General Note:
The framing exhibits moderate to heavy rust

| NO. | DATE | DESCRIPTION |
|---|---|---|
| D | 6/18/12 | WSP-SELLS MLMA |

REVISIONS

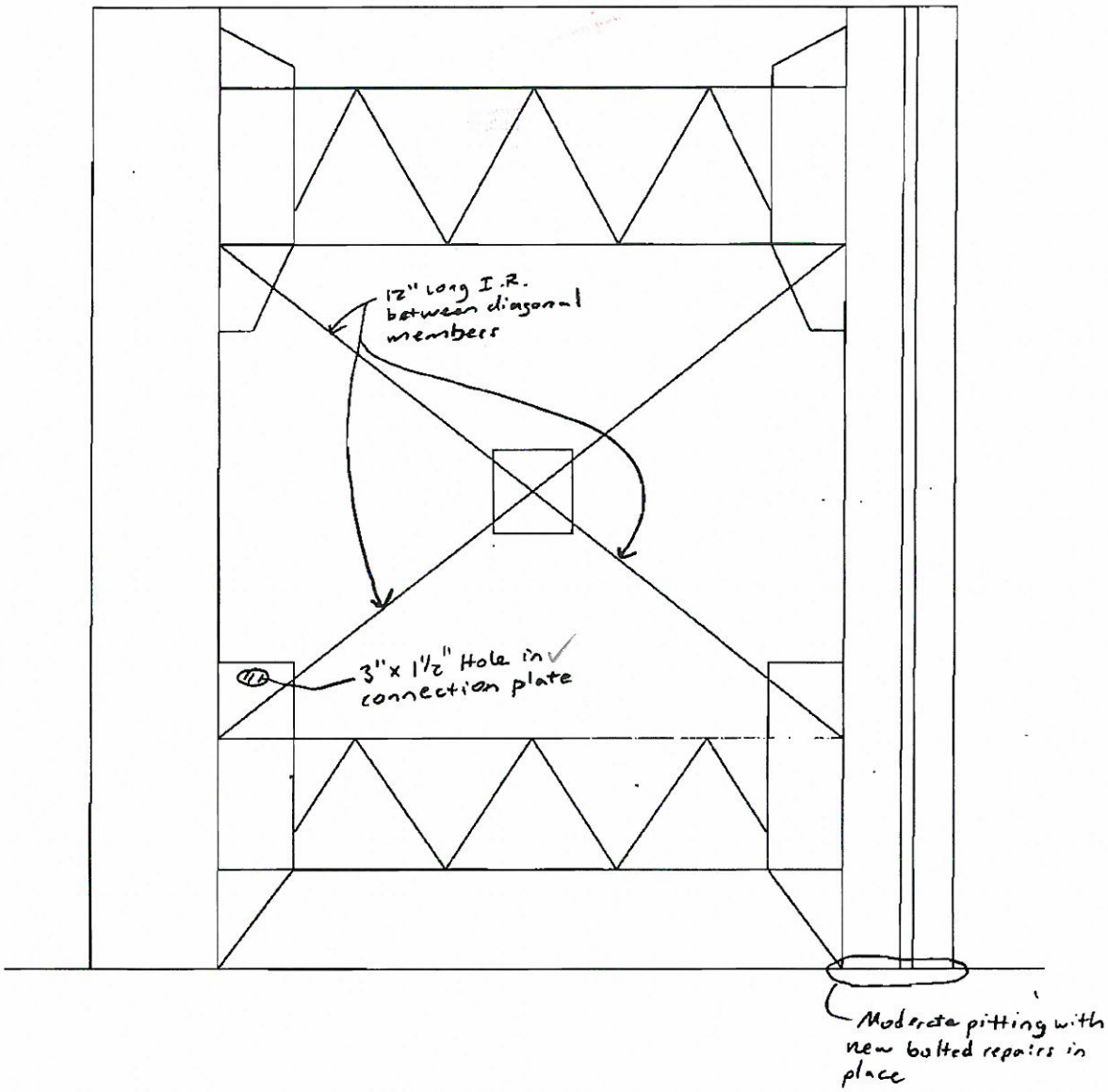


WEST TRUSS – LOOKING WEST

WSP-SELLS VERIFICATION INSPECTION
07/12/2013 NO REVISION

# FIELD NOTES

| | |
|---|---|
| Bridge No.: | 08080R |
| Project No.: | 301-0099 |
| Crew: | |
| Date: | Sheet No.: 32 |

Stantec Consulting Services Inc.

| NO. | DATE | DESCRIPTION |
|---|---|---|
| 1 | 6/18/12 | WSP-SELLS ML/MA |

REVISIONS

General Note:
The framing exhibits moderate to heavy rust

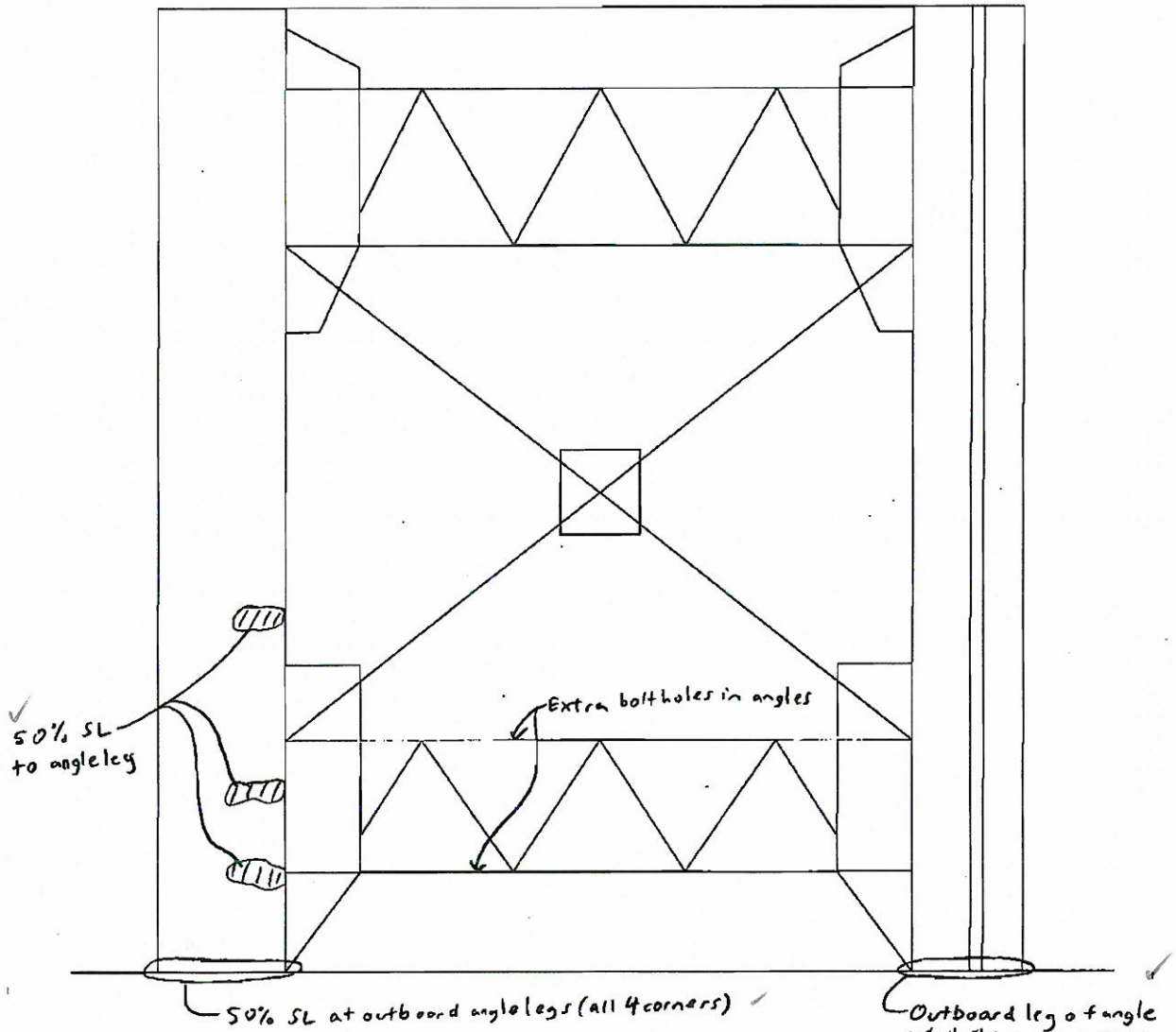


EAST TRUSS – LOOKING ~~EAST~~ WEST

# FIELD NOTES

Stantec

Stantec Consulting Services Inc.

Bridge No.: 08080R

Project No.: 301-0099

Crew:

Date:

Sheet No.: 321

△1 6/18/12 WSP-SELLS MLMA

1. The framing exhibits moderate to heavy rust – General note
2. New angles + web plates
3. 1"ϕ perf + 50% LOS to bottom of first stiffener + minor LOS to bottom flange of girder
4. 1/4" deep LOS to the inside corner of the south angle of the bottom flange
5. 3"x3" perf to bottom of second stiffener + 1/8" LOS to bottom flange, (See sketch at bot of page) perf + SL to web
6. 3"x3 1/2" perf to bottom of third stiffener
7. 1 1/2 I.R. between top flange + support stringer
8. At vertical connection, 1/4" LOS to southside of bot. flange + 1/8" LOS to web at bottom w/ up to 75% rivet head loss
9. First stiffener from end exhibits full width x5"H perf to bottom + 1/8" LOS to top of bottom flange
10. 1/4" deep LOS to gusset along angle brace + 1/4" deep LOS to inside corner of angle brace

SOUTH ELEVATION – NORTH TRUSS

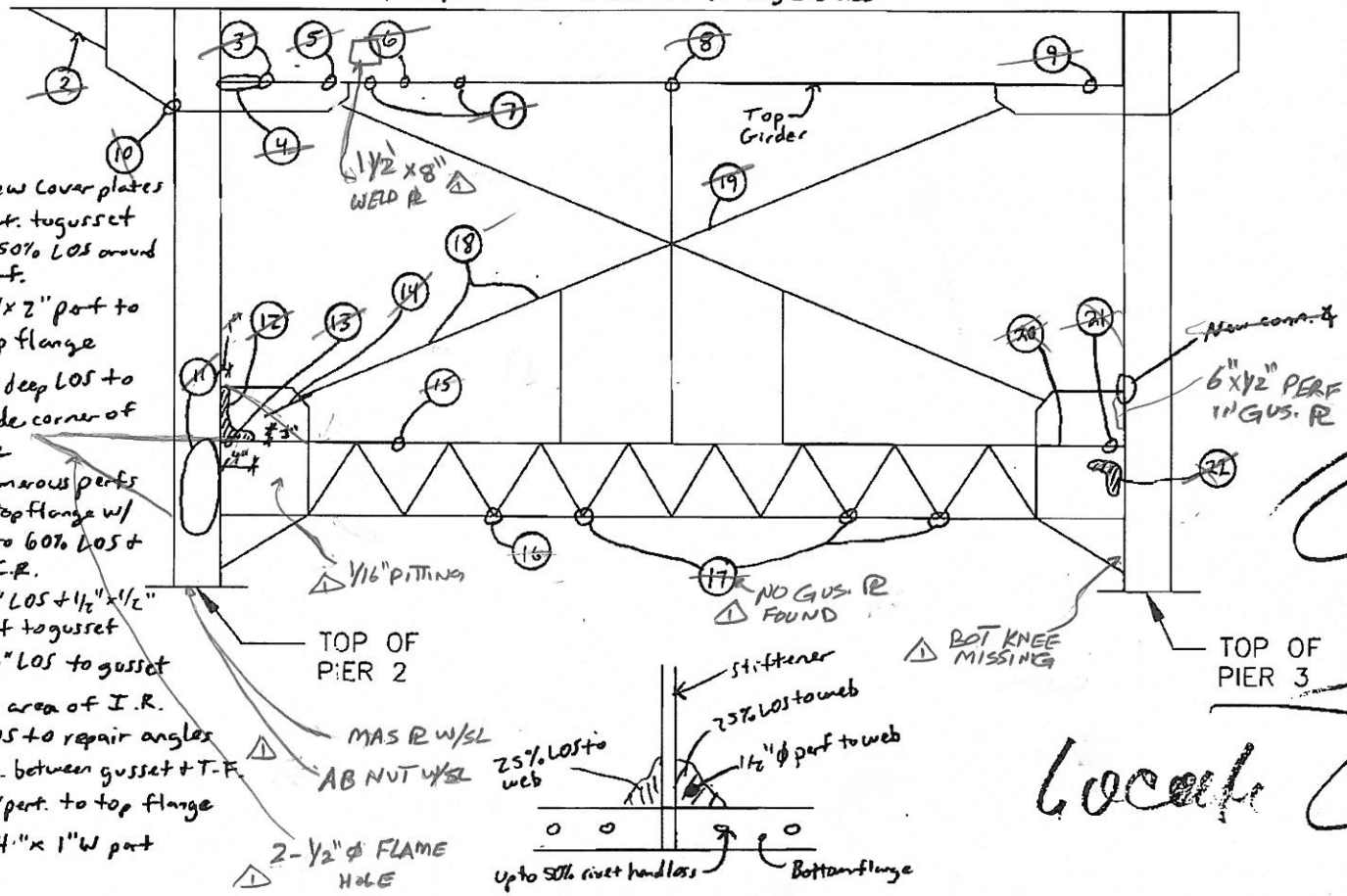


Top Girder Sketch

11. New cover plates
12. Perf. to gusset + 50% LOS around perf.
13. 3"x2" perf to top flange
14. 1/4" deep LOS to inside corner of angle
15. Numerous perfs to top flange w/ up to 60% LOS + 1 1/2" I.R.
16. 1/4" LOS + 1 1/2" x 1 1/2" perf to gusset
17. Up to 1/4" LOS to gusset
18. 2' Long area of I.R.
19. Minor LOS to repair angles
20. 1/2" I.R. between gusset + T.F.
21. 1 1/2" x 3" perf. to top flange
22. 3"L x 3"H x 1"W perf

Local

WSP-SELLS VERIFICATION INSPECTION
07/12/2013 NO REVISION

WSP-SELLS VERIFICATION INSPECTION
07/12/2013 NO REVISION

# FIELD NOTES

Stantec Consulting Services Inc.

| | |
|---|---|
| Bridge No.: | 08080R |
| Project No.: | 301-0099 |
| Crew: | AL JD |
| Date: | |
| Sheet No.: | ~~29~~ 322 (1) |

6/18/12

(1) 6/18/12 WSP-SELLS MLMA

(1) Framing exhibits moderate to heavy rust throughout
(2) Pitting up to 1" x 12" x 7/8" deep and 1" ϕ hole in TF
(3) 2"x2" hole in TF
(4) 4" x 10 1/2" hole in ~~web~~ GUSSET PL △
(5) Base PL to col. nuts w/ 25% loss + lam. rust
(6) 8" x 1/4" dp lam. rust
(7) Lam. rust w/up to 6" x 6" x 1/4" dp at TF, 100% loss @ 2"x2" hole
(8) 1/2" x 1" hole in conn. PL
(9) 2"x2" rust hole in web PL and 2"x3" hole in TF
(10) 2" x F.W. x 1/8" dp loss at col. angle
(11) loss up to 4" x 8" x 1/2" dp on flanges
(12) top of mas. PL up to 1/2" loss along edge of PL
(13) 6"x16" area of pitting rust along web w/ random holes up to 1.5" ϕ
(14) lam. rust w/ neg. losses
(15) 8" x 1/4" dp section loss at flange due to pitting
(16) 6 rivets w/ up to 30% loss

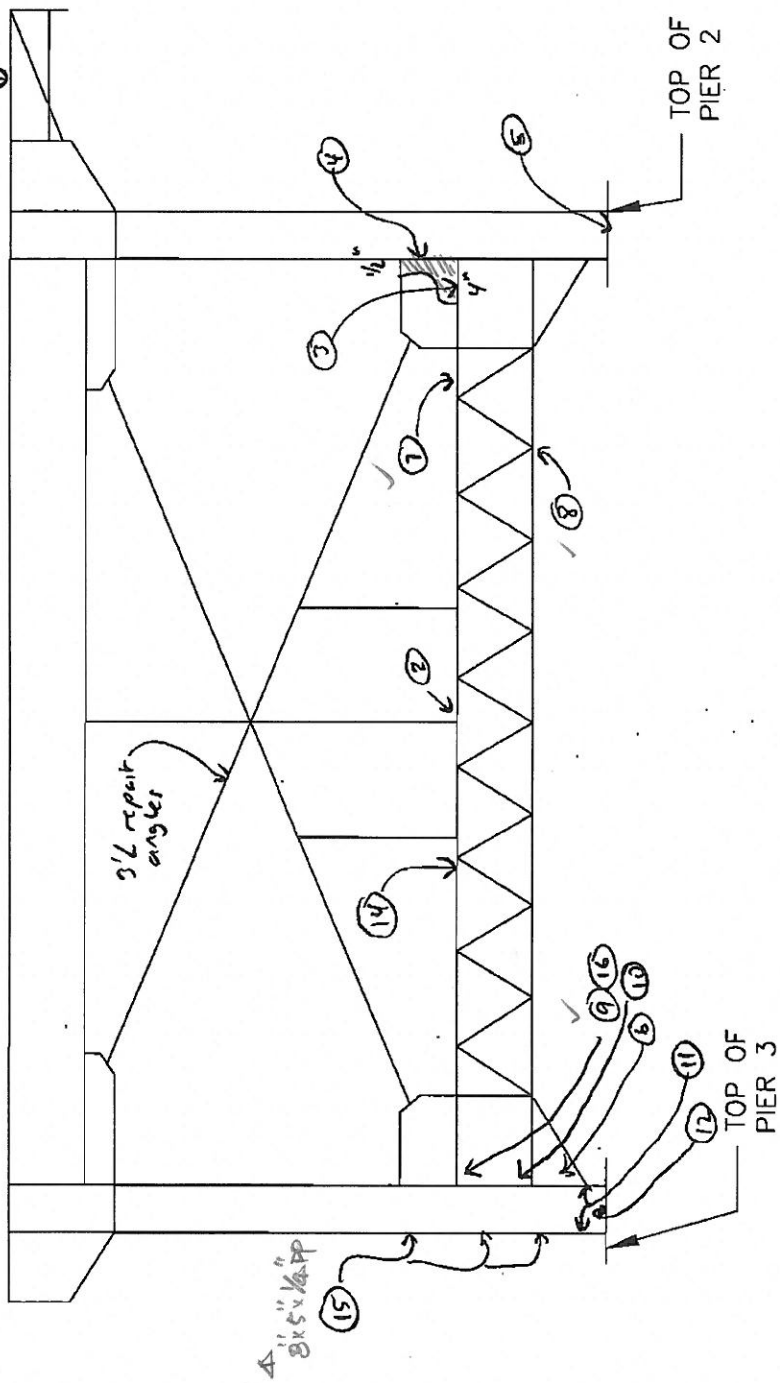


NORTH ELEVATION – SOUTH TRUSS