TABLE OF CONTENTS OF SPECIAL PROVISIONS

Note: This Table of Contents has been prepared for the convenience of those using this contract with the sole express purpose of locating quickly the information contained herein; and no claims shall arise due to omissions, additions, deletions, etc., as this Table of Contents shall not be considered part of the contract.

Table of Contents

CONTRACT TIME AND LIQUIDATED DAMAGES 3
NOTICE TO CONTRACTOR – ENVIRONMENTAL INVESTIGATIONS 4
NOTICE TO CONTRACTOR – BEST MANAGEMENT PRACTICE 6
REQUIREMENTS FOR WORKING IN A PUBLIC WATERSHED, ... 6
WELL HEAD PROTECTION AREA, AQUIFER PROTECTION 6
AREA (APA) AND/OR SOLE SOURCE AQUIFER AREA (SSA) 6
NOTICE TO CONTRACTOR – BIDDER'S QUESTIONS 8
NOTICE TO CONTRACTOR – STANDARD SPECIFICATIONS 9
NOTICE TO CONTRACTOR – GENERAL REQUIREMENTS AND 10
COVENANTS OF THE CONTRACT 10
NOTICE TO CONTRACTOR – MEASUREMENT AND PAYMENT 11
NOTICE TO CONTRACTOR – NOTICE OF INTENT TO CONSTRUCT 12
NOTICE TO CONTRACTOR – POTENTIAL FOR ASBESTOS 13
CONTAINING MATERIALS 13
CONTRACTOR CERTIFICATION: 15
RE/ ASBESTOS CONTENT OF MATERIALS 15
NOTICE TO CONTRACTOR – COLD WEATHER CONCRETE 16
ACTIVITIES 16
NOTICE TO CONTRACTOR – PROJECT DESCRIPTION 17
NOTICE TO CONTRACTOR – LIMITATION OF CONTRACTOR OPERATIONS 18
NOTICE TO CONTRACTOR – ENGINEER OCCUPANCY 19
NOTICE TO CONTRACTOR – SUBMITTALS 20
NOTICE TO CONTRACTOR – EARLY SUBMITTALS 21
NOTICE TO CONTRACTOR – PRE INSTALLATION MEETINGS 22
NOTICE TO CONTRACTOR – CLOSEOUT DOCUMENTS 23
NOTICE TO CONTRACTOR – COMPATIBILITY OF MOTOR FUEL 25
ISLAND FOR ETHANOL 25
NOTICE TO CONTRACTOR – SUPPLYING FUEL FOR STORAGE 26
TANKS 26
NOTICE TO CONTRACTOR – CADD FILES 27
NOTICE TO CONTRACTOR – USE OF STATE POLICE OFFICERS 29
NOTICE TO CONTRACTOR VOLUNTARY PARTNERING 30
PROCUREMENT 31
NOTICE TO CONTRACTOR – CONNECTICUT DEPARTMENT OF 32
TRANSPORTATION DISCLAIMER 32
NOTICE TO CONTRACTOR – GORE AREAS 33
NOTICE TO CONTRACTOR – VEHICLE EMISSIONS 34
NOTICE TO CONTRACTOR – SECTION 4.06 AND M.04 MIX 36
DESIGNATION EQUIVALENCY 36
NOTICE TO CONTRACTOR – SUPERPAVE DESIGN LEVEL INFORMATION 37
NOTICE TO CONTRACTOR – TRAFFIC DRUMS AND TRAFFIC CONES 38
NOTICE TO CONTRACTOR – NCHRP 350 REQ. FOR WORK ZONE 39
TRAFFIC CONTROL DEVICES 39
SECTION 1.01 – DEFINITIONS OF TERMS AND PERMISSIBLE 40
ABBREVIATIONS 40
SECTION 1.02 – PROPOSAL REQUIREMENTS AND CONDITIONS 41
SECTION 1.03 – AWARD AND EXECUTION OF CONTRACT 42
SECTION 1.04 – SCOPE OF WORK 47
SECTION 1.05 – CONTROL OF THE WORK 48
SECTION 1.06 – CONTROL OF MATERIALS 49
SECTION 1.07 – LEGAL RELATIONS AND RESPONSIBILITIES 50
SECTION 1.08 – PROSECUTION AND PROGRESS 52
SECTION 1.09 – MEASUREMENT AND PAYMENT 54
SECTION 1.20 – GENERAL CLAUSES FOR FACILITIES CONSTRUCTION 57
SECTION 4.06 BITUMINOUS CONCRETE 58
SECTION M.04 BITUMINOUS CONCRETE 82
SMALL CONTRACTOR AND SMALL CONTRACTOR MINORITY 118

BUSINESS ENTERPRISES \(SET ASIDE\) 118
ITEM #0000195A – TEMPORARY MAINTENANCE WORK AREA.....130
ITEM #0100072A – REMOVAL AND DISPOSAL OF UNDERGROUND TANKS.....138
ITEM #0101000A – ENVIRONMENTAL HEALTH AND SAFETY 143
ITEM #0101143A – HANDLING AND DISPOSAL OF REGULATED ITEMS.....152
ITEM #0177150A – GENERAL BUILDING RENOVATION.....157
ITEM #0603169A – PROGRESS PHOTOGRAPHS 158
ITEM #0901005A – BOLLARD 161
ITEM #0913041A – 8’ CHAIN LINK FENCE.....162
ITEM #0913053A – 10’ POLYVINYL CHLORIDE CHAIN LINK FENCE 166
ITEM #0913054A – 6’ POLYVINYL CHLORIDE CHAIN LINK DOUBLE 166
GATE 10’ HIGH 166
ITEM #0950008A – GRAVEL MULCH 172
ITEM # 0969070A – CONSTRUCTION FIELD OFFICE FURNISHINGS.....173
AND EQUIPMENT.....173
ITEM #0980001A – CONSTRUCTION STAKING 177
CSI SPECIFICATIONS.....180

March 6, 2013
FEDERAL AID PROJECT NO. N/A
STATE PROJECT NO. 22-105

Canterbury Maintenance Facility Tank Replacement

Town of Canterbury
Federal Aid Project No. N/A

The State of Connecticut, Department of Transportation, Standard Specifications for Roads, Bridges and Incidental Construction, Form 816, 2004, as revised by the Supplemental Specifications dated July 2012 (otherwise referred to collectively as "ConnDOT Form 816") is hereby made part of this contract, as modified by the Special Provisions contained herein. . The State of Connecticut Department of Transportation's "Construction Contract Bidding and Award Manual" ("Manual"), May 14, 2010 edition or latest issue, is hereby made part of this contract. If the provisions of this Manual conflict with provisions of other Department documents (not including statutes or regulations), the provisions of the Manual will govern. The Manual is available upon request from the Transportation Manager of Contracts. The Special Provisions relate in particular to the Canterbury Maintenance Facility Tank Replacement in the Town of Canterbury.

CONTRACT TIME AND LIQUIDATED DAMAGES

One Hundred Fifty Four (154) calendar days will be allowed for completion of the work on this project and the liquidated damages charge to apply will be One Thousand Seven Hundred Dollars ($1,700.00) per calendar day.

NOTICE TO CONTRACTOR – ENVIRONMENTAL INVESTIGATIONS

An environmental site investigation was conducted that evaluated soil quality from various locations within the Project limits. In addition, ground water quality was evaluated by obtaining a grab sample from one of the soil borings. The analytical results of this investigation indicate concentrations of volatile organic compounds (VOCs), extractable total petroleum hydrocarbons (ETPH) and total metals arsenic, barium and lead in soil below their respective, applicable Connecticut Remediation Standard Regulations (RSRs) criteria, specifically the Pollutant Mobility Criteria (GA) and/or Residential Direct Exposure Criteria. Therefore, the Project Area has been identified as a "Low Level" Area of Environmental Concern (LLAOEC). The presence of the compounds at these concentrations will not require material handling measures beyond those required for normal construction operations. However, the presence of these compounds will require the disposition of soils excavated from these areas to be restricted as described herein. Provisions will be made should there be materials excavated from within the LLAOECs that cannot be reused within the Project limits.

All suitable material excavated within the LLAOEC shall be utilized as fill/backfill within the Project limits, in accordance with the following conditions:

1. Such soil is deemed to be structurally suitable for use as fill by the Engineer;

2. Such soil is not placed below the water table;

3. The CT Department of Energy and Environmental Protection (CTDEEP) groundwater classification of the area where the soil is to be reused as fill does not preclude said reuse; and

4. Such soil is not placed in an area subject to erosion.

Soils deemed suitable for reuse within the LLAOEC are to be reused onsite before other soils and/or fill such that soils requiring offsite disposal are minimized.

The CTDEEP ground water classification beneath the Project is "GA may not meet current standards." Ground water was encountered only in the vicinity of the heating oil UST. A grab ground water sample was collected from one of the borings near the heating oil UST yielded detectable concentrations of semi-volatile organic compounds (SVOCs) and metals barium, chromium and lead below their respective, applicable RSRs criteria. The depth to ground water recorded at this location during the investigation was approximately 10.5 feet below grade. Although it is not anticipated that dewatering will be required, should it be determined (in the opinion of the Engineer) that it is necessary, the appropriate provision will be added. Further, under this circumstance, ground water will need to be characterized for consistency with the applicable CTDEEP permit. Due to the detection of SVOCs and metals in ground water, and the lack of a local Publicly Owned Treatment Works (POTW), the discharge of any water resulting

from dewatering activities will have to comply with the CTDEEP's *General Permit for the Discharge of Groundwater Remediation Wastewater Directly to Surface Water*.

The Contractor is hereby notified that they will be required to implement appropriate health and safety measures for all construction activities to be performed within the Project Area. These measures shall include, but are not limited to, air monitoring, engineering controls, personal protective equipment and decontamination, equipment decontamination and personnel training. THE PROVISION OF WORKER HEALTH AND SAFETY PROTOCOLS WHICH ADDRESS POTENTIAL AND/OR ACTUAL RISK OF EXPOSURE TO SITE SPECIFIC HAZARDS IS SOLELY THE RESPONSIBILITY OF THE CONTRACTOR.

The Sections which shall be reviewed by the Contractor include, but are not limited to, the following:

- Item No. 0101000A – Environmental Health and Safety
- Item No. 0100072A – Removal and Disposal of Underground Tanks
- Item No. 0101143A – Handling and Disposal of Regulated Items

The Contractor is alerted to the fact that a Department environmental consultant will be on site periodically during construction operations to observe site conditions for the State.

Information pertaining to the results of the environmental investigation discussed can be found in the document listed below. This document shall be available for review at the Office of Contracts, 2800 Berlin Turnpike, Newington, Connecticut.

- Task 210 – Subsurface Site Investigation Report, Canterbury Maintenance Facility, Canterbury, Connecticut. TRC, December 2012.

NOTICE TO CONTRACTOR – BEST MANAGEMENT PRACTICE REQUIREMENTS FOR WORKING IN A PUBLIC WATERSHED, WELL HEAD PROTECTION AREA, AQUIFER PROTECTION AREA (APA) AND/OR SOLE SOURCE AQUIFER AREA (SSA)

The Contractor is herby notified that the location of the project occurs within a public watershed, well head protection area, APA, and/or SSA. The Contractor is hereby notified that the location of Project No. 22-105 occurs within one of these sensitive areas. As a result of this location, special requirements must be followed for cleaning machinery, storage of materials, and servicing/fueling equipment.

1. All Contractors and their employees must be informed of the sensitive area that they are working in. No pollutants may be discharged that could have adverse effects on the public drinking water supply. Any fuel or other hazardous chemical spills must be reported immediately to the DEEP Oil and Chemical Spills Unit at (860) 424-3338 and the Department of Public Health's Drinking Water Division at 860-509-7333.

2. Contractors must adhere to specialized cleanup procedures while working within the watershed, well head protection area, APA and/or SSA. No cleaning of any machinery shall be performed within one hundred feet (100') of any water body within the sensitive area.
    a. Specifically for cleanup associated with the pavers and material transfer vehicles (MTV), the Contractor must move the machine off line onto a tarp. The tarp must be in an acceptable condition so as to prevent liquids and solids from passing through to the ground beneath. The cleanup area shall have oil absorbent pads placed on the tarp. The pavers and MTV shall be cleaned over the absorbent pads in a manner that will allow the pads to collect any liquids that are used for cleanup.
    b. Specifically for cleanup associated with dump trucks, a liquid tight five gallon pail shall be placed at each corner of the dump body below the lower hinges to capture any materials generated during the cleanup.

3. All materials generated during the cleanup procedures shall be removed off-site at the end of each day and disposed of in a manner consistent with all applicable laws and regulations. These materials shall not be buried outside of the roadway limits.

4. Servicing and fueling of equipment shall be conducted outside of a public watershed area, APA, SSA, and/or well head protection area.
    a. If equipment cannot be serviced and refueled outside of the watershed area, well head protection area, APA, or SSA then the Contractor shall utilize the proper spoils handling areas that are identified on the plans.

b. Servicing and fueling of equipment is not permitted within a 500 foot radius of a non-community well and within a 1000 foot radius of a community well.
c. Any fuel and/or hazardous materials that must be kept within these sensitive areas during working hours shall be stored in an enclosed spill proof container.
d. Spill containment systems must be utilized during fueling operations, and shall be manufactured by Sentry Lite Berms, Collapse-a-tainer, or approved equal. It shall have a minimum capacity of 80-gallons and shall be made of plastic or vinyl which is inert to all fuel types.
e. Fuel spill remediation kits shall be stored on-site so that spills may be contained and cleaned quickly.

5. Construction staging and laydown areas are prohibited within a watershed area, APA, and/or well head protection area. The Contractor shall submit to the Engineer the desired location of trailer(s), construction staging/laydown areas, containment systems, and sedimentation control systems for review and approval prior to the start of construction.

6. Millings may be re-used as asphalt material. Disposal of excess millings must be performed off-site in a manner consistent with all applicable laws and regulations. At no time can millings be dumped or buried outside of the roadway limits.

NOTICE TO CONTRACTOR – BIDDER'S QUESTIONS

The Contractor is hereby notified that during the bidding period, bidder's questions shall be submitted by the Contractor in writing to the Transportation Manager of Contracts for the State of Connecticut Department of Transportation, according to the State of Connecticut "Construction Contract Bidding and Award Manual". Questions shall be E-mailed to the attention of the Manager of Contracts at DOTContracts@ct.gov, faxed questions will no longer be accepted.

The Department cannot ensure a response to inquiries received later than ten (10) days prior to the original scheduled opening of the related bid. ConnDOT will issue an addendum addressing all questions that are made part of the bidding documents.

Refer to Article 1.02.04 of the Standard Specifications for additional information.

NOTICE TO CONTRACTOR – STANDARD SPECIFICATIONS

Whenever and wherever "ConnDOT Form 816," "Form 816," "Standard Specifications" are referenced herein, this shall mean and refer to "State of Connecticut, Department of Transportation, Standard Specifications for Roads, Bridges, and Incidental Construction, Form 816", including the Supplemental Specifications.

NOTICE TO CONTRACTOR – GENERAL REQUIREMENTS AND COVENANTS OF THE CONTRACT

Division I of the document entitled "State of Connecticut, Department of Transportation, Standard Specifications for Roads, Bridges, and Incidental Construction, Form 816, 2004," including the Division I Supplemental Specifications, shall collectively be known as the "General Requirements and Covenants of the Contract."

The Contractor is hereby advised of the potential for conflicts between provisions contained within Section 1.20 of the Form 816 with other Division I Sections of the Form 816. Where the aforementioned conflicts occur, Section 1.20 shall govern.

NOTICE TO CONTRACTOR – MEASUREMENT AND PAYMENT

This Project is being bid with both lump sum and unit price items. The bid items include unit price and lump sum items which are IN ADDITION TO the Major Lump Sum Item (MLSI) of the Project, Item No. 0177150A titled "General Building Renovation." These separate items will be measured for payment on a unit price or lump sum basis (whichever is applicable) for which a separate bid price is required, at the quantities as indicated in the Bid Proposal Form. Each item to be measured is more specifically described in a corresponding Form 816 Standard Specification related to that item, or a special provision, as applicable.

Standard Form 816 Items are referenced by their standard item numbers. Refer to the applicable article of Form 816 for the requirements for this item. Special Provisions included in this Contract are referenced by their item number followed by an "A" suffix. Refer to the Special Provisions contained within this Contract for requirements for this item.

All work depicted on the Contract Plans and described in the Contract Specifications, including mobilization, is included in the MLSI of the Project, with the exception of the unit price or other lump sum items listed in the Bid Proposal Form. Any work incidental to an item which is not specifically described or included in the item, but which is required for performance and completion of the work required under the Contract, is included in the MLSI.

NOTICE TO CONTRACTOR – NOTICE OF INTENT TO CONSTRUCT

The Contractor is hereby advised that a Notice of Intent to Construct (NOIC) will be issued as the Building Permit for this Project in accordance with CGS. The Contractor will not be required to apply for a Building Permit from the local Building Official.

NOTICE TO CONTRACTOR – POTENTIAL FOR ASBESTOS CONTAINING MATERIALS

The Contractor is hereby advised that it is the expressed intent of the Department that no materials containing asbestos of any kind or amount be installed in Department facilities as a result of any work being performed under this Contract.

For all materials that have a probability of containing asbestos, the Contractor shall provide a certification letter on the manufacturer's letterhead along with the regular submittal package to prove that asbestos is not contained in the materials. These materials will not be approved without the required manufacturer certification letter. The manufacturer certification letter shall be formatted in the following manner:

[Addressed to:] Commissioner of Transportation
Department of Transportation
P.O. Box 317546
Newington, Connecticut 06131-7546

Project Title and Number

[We] hereby certify that all materials manufactured by [Insert Manufacturer Name] are asbestos-free.

[Signature:] [Name of authorized signatory]
[Title]

The Contractor shall submit manufacturer certification letters for all materials specified in the following Contract provisions (including CSI-formatted specifications contained within a particular special provision):

1. Division 07 Section 079200, "Joint Sealants."
2. Division 26 Section 260519, "Low-Voltage Electrical Power Conductors and Cables."
3. Division 26 Section 260544, "Sleeves and Sleeve Seals for Electrical Raceways and Cabling."

The above list may not be all-inclusive and does not relieve the Contractor from its responsibility to provide manufacturer certification letters that are required under other Contract provisions. Furthermore, the Department may at any time require the Contractor to submit manufacturer certification letters proving that other materials do not contain asbestos.

Failure of the Contractor to provide the required documentation will result in the immediate removal of the material from the Project by the Contractor at its expense. The Contractor shall be responsible for all costs incurred as a result of such required action, and replacements thereof, in order to complete the Project.

Any asbestos containing material that is found to have been installed as a result of work performed under this Contract will be required to be removed by the Contractor at its expense as soon as such determination is made. The Contractor shall also replace the removed material with appropriate material that is in compliance with the Contract. The Contractor is also responsible to pay for any asbestos testing charges the Department incurred in order to prove that the material contains asbestos fibers. This obligation will extend throughout the one-year warranty period after the issuance of the Certificate of Compliance.

The Contractor shall complete and sign the attached certification form assuring the Department that no asbestos-containing materials have been used in the construction of this Project. This form shall be submitted prior to the Semi-Final Inspection. The Certificate of Compliance will not be issued without this completed and signed certification form.

CONTRACTOR CERTIFICATION:
RE/ ASBESTOS CONTENT OF MATERIALS

State of Connecticut
Department of Transportation
PO Box 317546
Newington, CT 06131-7546

1. Project Number: _____

2. Project Name: _____

3. Contractor Name: _____

4. This is to certify that I have read, understood, and complied with the terms and conditions identified under the "NOTICE TO CONTRACTOR – POTENTIAL FOR ASBESTOS CONTAINING MATERIALS" included in this Contract.

   I fully understand that it is the requirement of the Connecticut Department of Transportation that only materials that do not contain asbestos of any kind or amount are to be utilized in the construction of this Project.

   I therefore certify that, to the best of my knowledge, all materials installed under this Contract are asbestos-free.

   For the one-year warranty period after the issuance of the Certificate of Compliance, I agree to remove any asbestos-containing material identified by the Connecticut Department of Transportation and reinstall an approved, non-asbestos-containing material that is in compliance with the original Contract at no additional cost to the State.

5. Date of Certificate of Compliance: _____

6. Date of the Asbestos Certification: _____

7. Signature of Authorized Party Agreeing to the Terms & Conditions Identified Herein & as Further Stated in the Contract:

_____	_____
Signature	Title
_____	_____
Printed Name	Date

NOTICE TO CONTRACTOR – COLD WEATHER CONCRETE ACTIVITIES

The Contractor is hereby advised of the potential need for cold weather concrete activities. The Contractor shall strictly adhere to all required cold weather concrete procedures as specified within the Contract and conduct its activities accordingly. The Contractor shall bid the Project accordingly.

NOTICE TO CONTRACTOR – PROJECT DESCRIPTION

The Project consists of the replacement of the motor fueling facility and heating oil storage tank located at the Canterbury Maintenance Facility in Canterbury, Connecticut as shown and described in the Contract.

The work includes replacement of the motor fuel and heating oil underground storage tanks with aboveground storage tanks, and replacement of the heating oil piping. The motor fuel storage aboveground tanks will be protected with metal beam rail and enclosed in a 10-foot high chain link fence with PVC slats. The work also includes the replacement of the motor fuel island with dispensers installed adjacent to the tanks for unleaded gasoline and diesel fuel.

Environmental work associated with this facility includes monitoring of soils and developing an Environmental Health and Safety Plan, as further specified in the NOTICE TO CONTRACTOR – ENVIRONMENTAL INVESTIGATIONS.

NOTICE TO CONTRACTOR – LIMITATION OF CONTRACTOR OPERATIONS

Department personnel will occupy the Maintenance Facility, and the existing site weekdays between the hours of 6 a.m. and 4 p.m. as well as at all times during winter storms. The Contractor shall not interfere with the Department's employee's performance of their assigned work.

During all times that the Project Site is occupied by state personnel, the Contractor shall maintain the following systems to the extent described to permit Department operations:

1. Diesel Fuel: State personnel will have access to permanent or temporary diesel motor fuel at all times.

2. Fuel Oil System and Heating System: From October 1 to April 1 of the following year, no work related to the fuel oil system and heating system shall be permitted. The Department will be responsible for emptying the existing underground fuel oil tank prior to its removal by the Contractor

3. Tank Monitoring System: The existing tank monitoring system shall be fully operational if either the fuel oil tank or waste water holding tank is being used.

The Contractor shall repair at its own expense any and all damage caused by construction operations to the existing facility or the site unless said damage is scheduled as part of the Project work. The Contractor shall take all precautions necessary to protect the existing buildings and its occupants during the construction period.

The Contractor shall bid the Project accordingly.

NOTICE TO CONTRACTOR – ENGINEER OCCUPANCY

The Engineer and the Department personnel will occupy the Project Site during the entire construction period.

The Engineer reserves the right to occupy and to place and install equipment in completed areas of the Facility, prior to Final Inspection and the issuance of the Certificate of Compliance provided that such occupancy does not interfere with completion of the Project. Such placing of equipment and partial occupancy shall not constitute acceptance of the total Project. The Contractor shall allow and cooperate with such occupancy at no additional cost to the State.

1. The Engineer shall obtain from the Contractor written approval of such occupancy. The Engineer shall determine whether such occupancy or use is possible and, if so, will make arrangements for holding a job inspection with representatives of the Department and the Contractor.
2. Based on the inspection, a "Punch List" of outstanding or unacceptable work shall be developed.
3. The Contractor shall prepare a letter to the Engineer granting occupancy. The letter granting such occupancy shall state the terms and conditions of occupancy and include the status of completion of "Punch List" items.
4. Subsequent to the receipt of the letter granting occupancy, the Engineer shall notify the Contractor in writing that fire insurance coverage has been requested, and the effective date the Contractor may cancel the fire insurance coverage normally carried on the building by it.
5. Prior to partial Engineer occupancy, mechanical and electrical systems shall be fully operational. Required inspections and tests shall have been successfully completed. Upon occupancy the Engineer will provide operation and maintenance of mechanical and electrical systems in occupied portions of the building.

NOTICE TO CONTRACTOR – SUBMITTALS

Transmittal of Submittals: Unless otherwise stipulated, all submittals requiring review for conformance with the Contract shall be transmitted by letter and hand delivered or sent by mail directly to Mr. John W. Waleszczyk, Transportation Supervising Engineer, Facilities Design, Bureau of Engineering and Construction, Connecticut Department of Transportation, 2800 Berlin Turnpike, P.O. Box 317546, Newington, CT 06131-7546, Room 3405.

Copies of the transmittal letter shall be sent to the Office of Property and Facilities Services, Bureau of Finance and Administration, Connecticut Department of Transportation, 2800 Berlin Turnpike, P.O. Box 317546, Newington, CT 06131-7546, Attention: Mr. Daniel J. Smachetti.

Copies of the transmittal letter shall be sent to the District 2 Administration Office, 171 Salem Turnpike, Norwich, CT 06360, Attention: Mr. Carl E. Nelson, District Engineer.

Submittals requiring review for conformance with the Contract that shall be submitted directly to the District Engineer in lieu of the Designer are listed below. Copies of the transmittal letters shall be sent to the Transportation Supervising Engineer, Facilities Design.

Concrete Mix Design Certifications.
Certified Test Reports, Material Certificates, etc. from Form 816 Standard Items (non "A" Items from Bid List).

Submittal Preparation and Processing: The Contractor shall provide the Designer with complete submittal packages (Product Data, Shop Drawings, Samples, and Quality Assurance Submittals, as applicable) for individual elements of Project work for a concurrent review of all information. Incomplete submittal packages will be returned to the Contractor without being reviewed.

Except as otherwise noted, the Contractor shall submit 6 copies of each required submittal for the Designer's review.
Shop Drawings: The Contractor shall submit 1 correctable translucent reproducible print and 4 blue- or black-line prints for the Designer's review. The Contractor shall add 1 blue- or black-line print for each of the above noted CSI Sections for outside agency review.

Designer's Action: The Designer will return 3 copies marked with action taken and corrections or modifications required.

Shop Drawings: The Designer will return the reproducible print. One of the prints returned shall be marked-up and maintained as a "Record Document."

Maintenance manuals and warranties will not be returned unless they are Rejected.

NOTICE TO CONTRACTOR – EARLY SUBMITTALS

The Contractor is hereby advised that the Department has identified the potential need to order certain materials and equipment, and thereby submit certain submittals for approval early in the construction process to ensure the Project is completed within the allowable Contract Time. Submittals shall be in accordance with Form 816 Article 1.20-1.05.02. The following items have been identified as possibly requiring early ordering thereby requiring early submission of shop drawings and product data:

Temporary Aboveground Storage Tank
Aboveground Storage Tanks

The lists above are not intended to be all-inclusive and do not relieve the Contractor from coordinating the activities of its subcontractors and suppliers. The Contractor will not be permitted to perform any physical work on the Project without the approval of the required submittals. Failure to properly plan for long lead items within the Contract schedule will not be justification for additional construction time.

It is recommended that the Contractor identify early in the construction sequencing process the subcontractors and suppliers associated with long lead-time items and submit the appropriate shop drawings and supporting data, including color selection charts and samples, for review upon Notice to Proceed.

NOTICE TO CONTRACTOR – PRE-INSTALLATION MEETINGS

The Engineer will conduct a pre-installation meeting at the Project Site before each of the following construction activities:

1. Concrete: CSI Division 3 Section 033000, "Cast-In-Place Concrete."
2. Fuel Facility: CSI Division 13 Section 132160, "Installation of New Fuel Facility."

The above list may not be all-inclusive and does not relieve the Contractor from its responsibility to provide pre-installation meetings that are required under other Contract provisions.

NOTICE TO CONTRACTOR – CLOSEOUT DOCUMENTS

General: The list of special provisions (including CSI-formatted specifications) in the Table below may not be all-inclusive and does not relieve the Contractor from its responsibility to provide spare parts, operation and maintenance manuals, training, and warranties that are required under other Contract provisions.

Spare Parts: The Contractor shall deliver spare parts on products listed in the Table below to the Project Site.

Operation and Maintenance Manuals: Submit 4 copies of each manual to the Designer. The Designer and Mr. David A. Hartley, Office of Property and Facilities Services, will review the manuals for conformance to the Contract. The manuals will be processed in accordance with Form 816 Article 1.20-1.05.02, with 3 copies being forwarded to Mr. Hartley and one copy being sent to the Engineer.

Materials and Finishes Maintenance Manual: The Contractor shall provide complete information in the materials and finishes manual on products listed in the Table below.

Equipment and Systems Maintenance Manuals: The Contractor shall provide complete information in the equipment and systems manual on products listed in the Table below.

Training: The Contractor shall provide training on products listed in the Table below.

Warranties: Submit 4 copies of written warranties, including special warranties to the Designer. The Designer and Mr. David A. Hartley, Office of Property and Facilities Services, will review the warranties for conformance to the Contract. The warranties will be processed in accordance with Form 816 Article 1.20-1.05.02, with 3 copies being forwarded to Mr. Hartley and one copy being sent to the Engineer.

The Contractor shall provide special warranties on products and installations listed in the Table below.

TABLE

Special Provision (including CSI-formatted Specifications)	Warranties	Spare Parts	Training	Operation and Maintenance Manuals
CSI Section 132160, “Installation of New Fuel Facility”	X		X	X
CSI Section 132180, “Tank Monitoring System”			X	X
CSI Section 231113, “Facility Fuel-Oil Piping”	X			X
CSI Section 262416, “Panelboards”		X		X
CSI Section 262813, “Fuses”		X		X
CSI Section 262816, “Enclosed Switches and Circuit				X

Special Provision (including CSI-formatted Specifications)	Warranties	Spare Parts	Training	Operation and Maintenance Manuals
Breakers”				
CSI Section 265600, “Exterior Lighting”	X			X

NOTICE TO CONTRACTOR – COMPATIBILITY OF MOTOR FUEL ISLAND FOR ETHANOL

The Contractor is hereby advised of the requirement for the motor fuel island to be capable of dispensing E85 ethanol. Refer to CSI Section 132160, titled "Installation of New Fuel Facility" for additional information in this regard. The Contractor shall bid the Project accordingly.

NOTICE TO CONTRACTOR – SUPPLYING FUEL FOR STORAGE TANKS

The Contractor shall fill the fuel oil, gasoline, and diesel fuel storage tanks as specified in CSI Section 231113, titled "Facility Fuel-Oil Piping" and CSI Section 132160, titled "Installation of New Fuel Facility". A sample from each tanker shall be tested to confirm the product's conformance to the State's requirements. The sample shall be taken in the presence of the Engineer. The fuel shall remain in the storage tanks and shall become the property of the Engineer upon the acceptance of the Project. The Contractor is responsible for the fuel, including any leaks and spills until the Engineer accepts the Project.

The Contractor shall bid the Project accordingly.

NOTICE TO CONTRACTOR – CADD FILES

The Contractor is hereby advised that the Department will provide CADD Files to the Contractor (upon request) in Microstation format for their use during the construction of the Project. The Contractor shall make such request to the Engineer, and the Designer will provide the CADD Files within 14 calendar days.

The Contractor shall bid the Project accordingly.

Welcome
to the
Connecticut Department of Transportation
File Library Information
provided by the
Office of Information Systems

File(s) From the Connecticut Department of Transportation (ConnDOT) Office of Information Systems (OIS)

The ConnDOT OIS is committed to providing electronic access to appropriate files. We make every reasonable effort to do so in a cross-platform and complex multi-protocol environment. We constantly test and retest our connectivity and solutions to ensure the greatest degree of ease of access and compatibility.

If the Receiver proceeds, the Receiver agrees to the following terms and conditions:

1. The State of Connecticut, Department of Transportation (hereinafter referred to as ConnDOT) makes no warranty of any kind, express or implied, with respect to the file(s) which are the subject of this agreement, and specifically makes no warranty that said file(s) shall be merchantable or fit for any particular purpose. Furthermore, any description of said file(s) shall not be deemed to create an express warranty that such files shall conform to said description. The exhibition of any sample or model shall not be regarded as part of the basis of this agreement and shall not create an express warranty that the whole of the file(s) provided hereunder shall conform to any sample or model.

2. Receiver assumes all risk and liability for any losses, damages, claims or expenses resulting from the use, possession or resale of any file(s) furnished by ConnDOT pursuant to this agreement.

3. Receiver agrees to indemnify, defend and hold harmless ConnDOT, its officers, agents, and employees from and against any and all claims, suits, losses, damages or costs, including reasonable attorney's fees, arising from or by reason of receivers' use, possession or resale with respect to any of the file(s) furnished by ConnDOT pursuant to this agreement, and such indemnification shall survive acceptance of said file(s) by receiver.

4. Receiver agrees that it will not advertise, order for resale, or sell the file(s) furnished hereunder.

5. Receiver agrees that the ConnDOT has made every reasonable effort to provide information in a file format which offers cross-platform solutions (for both application and file compression). Some ConnDOT files are compressed. Compressed files can be identified by a file extension, (e.g., .sit, .bin, .hqx, .zip or .arc).

6. Receiver agrees that ConnDOT cannot be held responsible for problems arising from files which have been converted for use in non-native applications (e.g. Microsoft Word documents read in WordPerfect, Microstation design files to Autocad).

7. Receiver agrees that ConnDOT cannot provide the files in other file or compression formats, and agrees to use the files in the format provided.

8. These terms and conditions constitute the complete and final agreement of the parties hereto.

Receiver <u>ACCEPTS</u> the aforementioned terms and conditions.

SIGNATURE:_____ DATE:_____

GENERAL

NOTICE TO CONTRACTOR – USE OF STATE POLICE OFFICERS

The Department will reimburse services of State Police Officers as a direct payment to the Department of Emergency Services and Public Protection. Payment for State Police Officers utilized by the Contractor for its convenience, not approved by the Engineer, is the responsibility of the Contractor. No separate payment item for State Police Officers is included in this contract.

Any costs associated with coordination and scheduling of State Police Officers will be included under the cost of Item No. 0971001A – Maintenance and Protection of Traffic.

NOTICE TO CONTRACTOR - VOLUNTARY PARTNERING

The Connecticut Department of Transportation (ConnDOT) intends to encourage the foundation of a cohesive partnership with the Contractor and its principal subcontractors on this project. This partnership will be structured to draw on the strengths of each organization to identify and achieve reciprocal goals. The objectives are effective and efficient contract performance and completion within budget, on schedule, and in accordance with plans and specifications.

This partnership will be bilateral in makeup, and participation will be totally voluntary. Any cost associated with effectuating this partnering will be agreed to by both parties and will be shared equally.

To implement this partner initiative, the Contractor and ConnDOT will meet and plan a partnering development seminar/team building workshop. At this planning session arrangements will be made to determine attendees at the workshop, agenda of the workshop, duration and location. Persons required to be in attendance will be the ConnDOT District Engineer and key project personnel, the Contractor's on-site project manager and key supervision personnel of both the prime and principal subcontractors. The project design engineers and key local government personnel will also be required to have Regional/District and Corporate/State level managers on the project team.

Follow-up workshops will be held periodically throughout the duration of the Contract as agreed by the Contractor and ConnDOT.

The establishment of a partnership charter on a project will not change the legal relationship of the parties to the Contract nor relieve either party from any of the terms of the Contract.

ConnDOT and the Contractor will jointly select a facilitator to conduct the partnering workshops. The Contractor will obtain the services of the chosen facilitator and ConnDOT will reimburse the Contractor for fifty percent (50%) of the costs agreed to between ConnDOT and the Contractor.

NOTICE TO CONTRACTOR – PROCUREMENT OF MATERIALS

Upon award, the Contractor shall proceed with shop drawings, working drawings, procurement of materials, and all other submittals required to complete the work in accordance with the contract documents.

NOTICE TO CONTRACTOR – CONNECTICUT DEPARTMENT OF TRANSPORTATION DISCLAIMER

Connecticut Department of Transportation bidding and other information and documents which are obtained through the Internet, World Wide Web Sites or other sources are not to be construed to be official information for the purposes of bidding or conducting other business with the Department.

It is the responsibility of each bidder and all other interested parties to obtain all bidding related information and documents from official sources within the Department.

Persons and/or entities which reproduce and/or make such information available by any means are not authorized by the Department to do so and may be liable for claims resulting from the dissemination of unofficial, incomplete and/or inaccurate information.

NOTICE TO CONTRACTOR – GORE AREAS

Gore areas will no longer be available for disposal of surplus material.

NOTICE TO CONTRACTOR – VEHICLE EMISSIONS

All motor vehicles and/or construction equipment (both on-highway and non-road) shall comply with all pertinent State and Federal regulations relative to exhaust emission controls and safety.

The contractor shall establish staging zones for vehicles that are waiting to load or unload at the contract area. Such zones shall be located where the emissions from the vehicles will have minimum impact on abutters and the general public.

Idling of delivery and/or dump trucks, or other equipment shall not be permitted during periods of non-active use, and it should be limited to three minutes in accordance with the Regulations of Connecticut State Agencies Section 22a-174-18(b)(3)(c):

No mobile source engine shall be allowed "to operate for more than three (3) consecutive minutes when the mobile source is not in motion, except as follows:

(i) When a mobile source is forced to remain motionless because of traffic conditions or mechanical difficulties over which the operator has no control,

(ii) When it is necessary to operate defrosting, heating or cooling equipment to ensure the safety or health of the driver or passengers,

(iii) When it is necessary to operate auxiliary equipment that is located in or on the mobile source to accomplish the intended use of the mobile source,

(iv) To bring the mobile source to the manufacturer's recommended operating temperature,

(v) When the outdoor temperature is below twenty degrees Fahrenheit (20 degrees F),

(vi) When the mobile source is undergoing maintenance that requires such mobile source be operated for more than three (3) consecutive minutes, or

(vii) When a mobile source is in queue to be inspected by U.S. military personnel prior to gaining access to a U.S. military installation."

All work shall be conducted to ensure that no harmful effects are caused to adjacent sensitive receptors. Sensitive receptors include but are not limited to hospitals, schools, daycare facilities, elderly housing and convalescent facilities. Engine exhaust shall be located away from fresh air intakes, air conditioners, and windows.

A Vehicle Emissions Mitigation plan will be required for areas where extensive work will be performed in close proximity (less than 50 feet (15 meters)) to sensitive receptors. No work will proceed until a sequence of construction and a Vehicle Emissions Mitigation plan is submitted in writing to the Engineer for review and all comments are addressed prior to the commencement of any extensive construction work in close proximity (less than 50 feet (15 meters)) to sensitive receptors. The mitigation plan must address the control of vehicle emissions from all vehicles and construction equipment.

If any equipment is found to be in non-compliance with this specification, the contractor will be issued a Notice of Non-Compliance and given a 24 hour period in which to bring the equipment into compliance or remove it from the project. If the contractor then does not comply, the Engineer shall withhold all payments for the work performed on any item(s) on which the non-conforming equipment was utilized for the time period in which the equipment was out of compliance.

Any costs associated with this "Vehicle Emissions" notice shall be included in the general cost of the contract. In addition, there shall be no time granted to the contractor for compliance with this notice. The contractor's compliance with this notice and any associated regulations shall not be grounds for claims as outlined in Section 1.11 – "Claims".

NOTICE TO CONTRACTOR – SECTION 4.06 AND M.04 MIX DESIGNATION EQUIVALENCY

Sections 4.06 and M.04 have been replaced in their entirety with the Special Provisions included as part of this contract. These Special Provisions reflect changes in mix designations for various types of hot-mix asphalt (HMA). The following table is to be used to associate mix designations noted on the plans with that in the contract specifications and related documents. Mix designations on each row are equivalent and refer to a single mix, which shall be subject to the requirements of the Special Provisions replacing Sections 4.06 and M.04.

Mix Designation Equivalency Table

Official Mix Designation	Equivalent Mix Designation (a)	Equivalent Mix Designation (b)
(c)	Superpave 1.5 inch	Superpave 37.5 mm
HMA S1	Superpave 1.0 inch	Superpave 25.0 mm
HMA S0.5	Superpave 0.5 inch	Superpave 12.5 mm
HMA S0.375	Superpave 0.375 inch	Superpave 9.5 mm
HMA S0.25	Superpave 0.25 inch	Superpave 6.25 mm
(d)	Superpave #4	Superpave #4
Bituminous Concrete Class 1	N/A*	N/A*
Bituminous Concrete Class 2	N/A*	N/A*
Bituminous Concrete Class 3	N/A*	N/A*
Bituminous Concrete Class 4	N/A*	N/A*
Bituminous Concrete Class 12	N/A*	N/A*

(a) This mix designation is generally included with projects where the English measurement system is used. The mix designation may contain both the English measurement system designation and the SI (metric) measurement system designation, one of which would be in parenthesis.

(b) This mix designation is generally included with projects where the SI (metric) measurement system is used. The mix designation may contain both the English measurement system designation and the SI measurement system designation, one of which would be in parenthesis.

(c) This mix is no longer in use except by contract-specific Special Provision; if this mix is called for in the Plans but no such Special Provision is included for this contract a suitable substitute must be approved by the Engineer.

(d) This mix is no longer in use except by contract-specific Special Provision; if this mix is called for in the Plans but no such Special Provision is included for this contract a suitable substitute must be approved by the Engineer.

* N/A = Not applicable; mix designation has not changed.

NOTICE TO CONTRACTOR – SUPERPAVE DESIGN LEVEL INFORMATION

Hot-Mix Asphalt (HMA) constructed according to the Superpave mix-design system is required to attain a Superpave Design Level and is required to use a Performance Graded (PG) binder. The Superpave Design Levels required for this project are listed in Table 1. The required PG binder is indicated for each mix with an "X" in the appropriate box in Table 1.

TABLE 1 – Superpave Design Level and Performance Graded (PG) Binder

Project No. 22-105 will require the following Superpave Design Level(s):				
Mix Designation	**PG Binder**	**Route** _____ _____	**Route** _____ _____	**Route** _____ _____
	PG64-22	**Design Level**	**Design Level**	**Design Level**
HMA S0.25	-	-	-	-
HMA S0.375	-	2	-	-
HMA S0.5	-	2	-	-
HMA S1	-	-	-	-

NOTICE TO CONTRACTOR – TRAFFIC DRUMS AND TRAFFIC CONES

Traffic Drums and 42-inch (1 m) Traffic Cones shall have four six-inch (150 mm) wide stripes (two - white and two - orange) of flexible bright fluorescent sheeting.

The material for the stripes shall be one of the following, or approved equal:

- 3M Scotchlite Diamond Grade Flexible Work Zone Sheeting, Model 3910 for the white stripes and Model 3914 for the orange stripes,

- Avery Dennison WR-7100 Series Reboundable Prismatic Sheeting, Model WR-7100 for the white stripes and Model WR-7114 for the orange stripes.

NOTICE TO CONTRACTOR – NCHRP 350 REQ. FOR WORK ZONE TRAFFIC CONTROL DEVICES

CATEGORY 1 DEVICES (traffic cones, traffic drums, tubular markers, flexible delineator posts)

Prior to using the Category 1 Devices on the project, the Contractor shall submit to the Engineer a copy of the manufacturer's self-certification that the devices conform to NCHRP Report 350.

CATEGORY 2 DEVICES (construction barricades, construction signs and portable sign supports)

Prior to using Category 2 Devices on the project, the Contractor shall submit to the Engineer a copy of the Letter of Acceptance issued by the FHWA to the manufacturer documenting that the devices (both sign and portable support tested together) conform to NCHRP Report 350 (TL-3).

Specific requirements for these devices are included in the Special Provisions.

Information regarding NCHRP Report 350 devices may be found at the following web sites:

FHWA: http://safety.fhwa.dot.gov/roadway_dept/road_hardware/index.htm

ATSSA: http://www.atssa.com/resources/NCHRP350Crashtesting.asp

NOTE: The portable wooden sign supports that have been traditionally used by most contractors in the State of Connecticut do NOT meet NCHRP Report 350 criteria and shall not be utilized on any project advertised after October 01, 2000.

CATEGORY 3 DEVICES (Truck-Mounted Attenuators & Work Zone Crash Cushions)

Prior to using Category 3 Devices on the project, the Contractor shall submit to the Engineer a copy of the Letter of Acceptance issued by the FHWA to the manufacturer documenting that the devices conform to NCHRP Report 350.

SECTION 1.01 – DEFINITIONS OF TERMS AND PERMISSIBLE ABBREVIATIONS

1.01.01--Definitions:

Delete the following term:

"**SHOP DRAWINGS:** Drawings, including . . . in the Contract."

SECTION 1.02 – PROPOSAL REQUIREMENTS AND CONDITIONS

Article 1.02.04 – Examination of Plans, Specifications, Special Provisions and Site of Work:

Replace the third sentence of the last paragraph with:

The Department cannot ensure a response to inquiries received later than ten (10) days prior to the original scheduled opening of the related bid.

SECTION 1.03 – AWARD AND EXECUTION OF CONTRACT

1.03.07--Insurance:

Delete the Article in its entirety and replace with the following:

"Coverage shall be on a primary basis.

The Contractor shall carry and maintain at all times during the term of the Contract the insurance coverages required by this Article and any additional coverage(s) or higher minimum insurance coverage amount(s) required by the Special Provisions of the Contract.

If the Project includes work on or adjacent to railroad property additional insurance may be required as specified by the railroad. Please refer to the Special Provisions for any additional insurance requirements by the railroad.

1. **Worker's Compensation Insurance:** With respect to all operations the Contractor performs and all those performed for it by subcontractors, the Contractor shall carry, and require each subcontractor to carry, Workers' Compensation insurance as required by the laws of the State of Connecticut.

Employer's Liability insurance shall be provided in amounts not less than $100,000 per accident for bodily injury by accident; $100,000 policy limit by disease and $100,000 per employee for bodily injury by disease. Each Workers' Compensation policy shall contain the U.S. Longshoreman's and Harbor Workers' Act endorsement when work is to be performed over or adjacent to navigable water.

2. **Commercial General Liability Insurance:** With respect to the operations the Contractor performs and also those performed for it by subcontractors, the Contractor shall carry, and require each subcontractor to carry, Commercial General Liability insurance, including Contractual Liability, Products and Completed Operations, Broad Form Property Damage and Independent Contractors.

Products and completed operations insurance for ongoing and completed operations shall be maintained for a period of one (1) year after the acceptance of the project by the Department in accordance with Article 1.08.14. See chart below for applicable minimum coverage amounts.

Contract Amount ($)	Minimum Single Occurrence Amount ($)	Minimum Annual Aggregate Amount ($)
0 – 2,000,000	1,000,000	2,000,000
2,000,001 – 10,000,000	2,000,000	4,000,000
> 10,000,000	4,000,000	8,000,000

If underground work is to be undertaken, each policy shall have coverage for and exclusions removed for "Explosion, Collapse and Underground" ("XCU").

3. **Automobile Liability Insurance:** The Contractor shall obtain automobile liability insurance covering the operation of all motor vehicles, including those hired or borrowed, that are used in connection with the Project for all damages arising out of: (1) bodily injury to or death of all persons and/or (2) injury to or destruction of property; in any one accident or occurrence. This policy shall not be subject to an annual aggregate limitation. See chart above for applicable minimum coverage amounts.

4. **Owner's and Contractor's Protective Liability Insurance for and in the Name of the State:** With respect to the Contractor's Project operations and also those of its subcontractors, the Contractor shall carry, for and on behalf of the State for each accident or occurrence resulting in damages from (1) bodily injury to or death of persons and/or (2) injury to or destruction of property. See chart below for applicable minimum coverage amounts.

Contract Amount ($)	Minimum Single Occurrence Amount ($)	Minimum Annual Aggregate Amount ($)
0 - 20 Million	1,000,000	1,000,000
20 Million - 50 Million	2,000,000	2,000,000
> 50 Million	4,000,000	4,000,000

5. **Railroad Protective Liability Insurance:** When the Contract involves work within fifty (50) feet of the railroad right-of-way or State-owned rail property, with respect to Project operations and also those of its subcontractors, the Contractor shall carry, and require each subcontractor to carry, Railroad Protective Liability Insurance providing coverage of at least $2,000,000 for each accident or occurrence resulting in damages from (1) bodily injury to or death of all persons and/or (2) injury to or destruction of property, and subject to that limit per accident or occurrence, an aggregate coverage of at least $6,000,000 for all damages during the policy period, and with all entities falling within any of the following listed categories named as insured parties: (i) the owner of the railroad right-of-way, (ii) the owner of any railcar licensed or permitted to travel within that affected portion of railroad right-of-way, and (iii) the operator of any railcar licensed or permitted to travel within that affected portion of the railroad right-of-way, and with the State, if not falling within any of the above-listed categories, also named as an insured party.

6. **Blasting:** When explosives are to be used in the Project, the Commercial General Liability insurance policy shall include XCU coverage, in the same limits as the per occurrence policy limits.

7. **Protection and Indemnity Insurance for Marine Construction Operations in Navigable Waters:** If a vessel of any kind will be involved in Project work, the Contractor shall obtain the following additional insurance coverage:

A. Protection and Indemnity Coverage of at least $300,000 per vessel or equal to at least the value of hull and machinery, whichever is greater.

B. If there is any limitation or exclusion with regard to crew and employees under the protection and indemnity form, the Contractor must obtain and keep in effect throughout the Project a worker's compensation policy, including coverage for operations under admiralty jurisdiction, with a limit of liability of at least $300,000 per accident or a limit equal to at least the value of the hull and machinery, whichever is greater, or for any amount otherwise required by statute.

8. **Builder's Risk Insurance:** The Contractor shall maintain comprehensive replacement cost builder's risk (completed value) insurance providing coverage for the entire work at the Project site, including all fixtures, machinery and equipment, any heating, cooling and constituting a permanent part of the building and shall cover portions of work located away from the site, but intended for use at the site. If it is determined that all or a portion of the project is located within an area designated as a Special Flood Hazard Area, the Contractor shall maintain flood insurance (no less than $10,000,000 sublimit). The State of Connecticut shall be named as Loss Payee. Equipment breakdown coverage may be sub limited to 50% of the project cost.

9. **Architects and Engineer's Professional Liability Insurance:** When the Contractor is specifically required to make submittals to the Department which require the stamp of a Professional Engineer licensed in the State of Connecticut, these submittals shall include a copy of the liability insurance policy for the Professional Engineer. The Professional Liability Insurance shall have a minimum of $1,000,000 coverage and shall be provided and maintained at no direct cost to the State. The policy shall be maintained for a period of the lesser of (1) a period of 3 years from the date of the acceptance of the Project by the Commissioner, as evidenced by the State of Connecticut, Department of Transportation form entitled "Certificate of Acceptance of Work and Acceptance of Project" issued to the Contractor; or (2) a period of 3 years after the termination of the Contract, subject to the continued commercial availability of such insurance.

10. **Umbrella Liability Insurance:** The Contractor may satisfy the minimum limits required for Commercial General Liability and Automobile Liability Insurance using Umbrella Liability Insurance. In the event that the Contractor obtains Umbrella Liability Insurance to meet the minimum coverage requirements for Commercial General Liability or Automobile Liability Insurance coverage, the Umbrella Liability Insurance policy shall have an annual aggregate at a limit not less than twice the single occurrence and must specifically endorse the State of Connecticut as an additional insured. Specifically for Bridge Projects with a low bid equal to or higher than $80,000,000, the Umbrella Liability Insurance policy must have a minimum limit of at least $25,000,000.

11**. Certificate of Insurance.** Before the Contract is executed, the Contractor must provide to the Department a certificate of insurance acceptable to the Commissioner and executed by an insurance company or companies satisfactory to the State of Connecticut for the insurance coverage(s) required by this Article and the Special Provisions of the Contract. The Contractor shall maintain the required insurance coverage during the entire term of the Contract. The

certificate of insurance must clearly include the name of the insured and identify the project for which it is being issued.

12. **Copies of Policies**. The Contractor shall provide, within five (5) business days, a copy or copies of all applicable insurance policies when requested by the State. In providing said policies, the Municipality may redact provisions of the policy that are proprietary. This provision shall survive the expiration or termination of the Contract.

13. **Sovereign Immunity.** The Contractor may not assert the defense of sovereign immunity in the adjustment of claims or in the defense of any claim or suit brought against the Contractor or the State, unless the State, in writing, requests that the Contractor do so or consents to its doing.

14. **Contractor Assumes Costs**. The Contractor shall assume and pay all costs and billings for premiums, deductibles, self-insured retentions and audit charges earned and payable under the required insurance.

15. **State Named as Additional Insured**. The State must be named as an additional insured party for the Commercial General Liability and Automobile Liability insurance policies required by this Article and the Special Provisions to the Contract, and any Umbrella Liability Insurance, as applicable, obtained in accordance with this Article. Each policy shall waive right of recovery (waiver of subrogation) against the State of Connecticut.

16. **Termination or Change of Insurance:**

A. The Contractor shall notify the Department of any cancelation of insurance carrier or change to the required insurance coverage by submitting a new insurance certificate to the Department immediately following said cancelation or change in required coverage.

B. It is the responsibility of the Contractor to maintain evidence of a current insurance coverage with the Department for the duration of contract. It is the responsibility of the Contractor to file with the Department all renewals and new certificates of insurance issued due to changes in policy terms or changes in insurance carriers prior to the expiration dates on the forms already on file with the Department.

18. **Duration of Coverage**. The Contractor shall keep all the required insurance in continuous effect until the date that the Department designates for the termination of the Contractor's responsibility, as defined by Article 1.08.14.

19. **Compensation:** There shall be no direct compensation allowed the Contractor on account of any premium or other charge necessary to obtain and keep in effect any insurance or bonds in connection with the Project, but the cost thereof shall be considered included in the general cost of the Project work.

1.03.08--Notice to Proceed and Commencement of Work:

Delete the first paragraph and replace with the following:

"The Contractor shall commence and proceed with the Contract work on the date specified in a written Notice to Proceed issued by the Engineer to the Contractor. The date specified will be no later than 45 calendar days after the date of the execution of the Contract by the Department."

SECTION 1.04 – SCOPE OF WORK

Article 1.04.05 – Extra Work:

Add the following after the fourth sentence:

Bonding costs shall not be included in the contractor's compensation request. However, if the contractor incurs or will incur increased bonding costs related to the extra work, the contractor shall request separate compensation for such costs. The contractors request shall be itemized and include a certified statement from the bonding company stating that the value of the work will require an increase in bonding coverage and shall detail the additional costs (within allowable contract amount limitations). If satisfactory substantiation is provided, a new item for increased bonding costs will be incorporated into the contract by means of a construction order.

SECTION 1.05 – CONTROL OF THE WORK

1.05.02--Plans, Working Drawings, and Shop Drawings:

Delete the entire subsection entitled "2. Working Drawings:"

Delete the entire subsection entitled "3. Shop Drawings:"

SECTION 1.06 – CONTROL OF MATERIALS

1.06.01--Source of Supply and Quality:

Delete the last paragraph: "When one manufacturer's product . . . and Materials Certificate."

1.06.08--Warranties, Guarantees and Instruction Sheets:

Delete the entire Article.

SECTION 1.07 – LEGAL RELATIONS AND RESPONSIBILITIES

Article 1.07.05 - Load Restrictions:

Delete all three paragraphs and replace them with the following:

"(a) Vehicle Weights: This sub article will apply to travel both on existing pavements and pavements under construction. The Contractor shall comply with all legal load restrictions as to vehicle size, the gross weight of vehicles, and the axle weight of vehicles while hauling materials. Throughout the duration of the contract, the Contractor shall take precautions to ensure existing and newly installed roadway structures and appurtenances are not damaged by construction vehicles or operations.

Unless otherwise noted in contract specifications or plans, on and off road equipment of the Contractor, either loaded or unloaded, will not be allowed to travel across any bridge or on any highway when such a vehicle exceeds the statutory limit or posted limit of such bridge or highway. Should such movement of equipment become necessary the Contractor shall apply for a permit from the Department for such travel, as provided in the Connecticut General Statutes (CGS). The movement of any such vehicles within the project limits or detour routes shall be submitted to the Engineer for project record. Such permit or submittal will not excuse the Contractor from liability for damage to the highway caused by its equipment.

The Contractor is subject to fines, assessments and other penalties that may be levied as a result of violations by its employees or agents of the legal restrictions as to vehicle size and weight.

(b) Storage of Construction Materials/Equipment on Structures: Storage is determined to be non-operating equipment or material. The Contractor shall not exceed the statutory limit or posted limit for either an existing or new structure when storing materials and/or construction equipment. When a structure is not posted, then the maximum weight of equipment or material stored in each 12 foot wide travel lane of any given span shall be limited to 750 pounds per linear foot combined with a 20,000 pound concentrated load located anywhere within the subject lane. If anticipated storage of equipment or material exceeds the above provision, then the Contractor shall submit his proposal of storage supported by calculations stamped by a Professional Engineer registered in the State of Connecticut, to the Engineer for approval 14 days prior to the storage operation. Operations related to structural steel demolition or erection shall follow the guidelines under Section 6.03. All other submittals shall include a detailed description of the material/equipment to be stored, the quantity of storage if it is stockpiled materials, the storage location, gross weight with supporting calculations if applicable, anticipated duration of storage, and any environmental safety, or traffic protection that may be required. Storage location on the structure shall be clearly defined in the field. If structures are in a state of staged construction or demolition, additional structural analysis may be required prior to authorization of storage."

Article 1.07.10 - Contractor's Duty to Indemnify the State against Claims for Injury or Damage:

Add the following after the only paragraph:

"It is further understood and agreed by the parties hereto, that the Contractor shall not use the defense of Sovereign Immunity in the adjustment of claims or in the defense of any suit, including any suit between the State and the Contractor, unless requested to do so by the State."

SECTION 1.08 – PROSECUTION AND PROGRESS

Replace 1.08.01 – "Transfer of Work or Contract" with the following:

1.08.01—Transfer of Work or Contract: The Contractor shall perform with its own organization Contract work with a value under the Contract of at least 25% of the original total Contract value. If the Contractor sublets, sells, transfers, or otherwise disposes of any part of the Contract work without the Commissioner's prior written consent, the Contractor will not be relieved of any Contractual or other legal responsibility in connection therewith. Such an unauthorized act by the Contractor shall constitute a material breach of the Contract, and the Commissioner may, in such a case, terminate the Contract without further compensation to the Contractor.

The Contractor shall include the following alternative dispute resolution clause in all of its Project subcontracts:

"For any dispute arising out of the agreement between the Contractor and a subcontractor, including claims of late payment or non-payment, which cannot be settled within 60 days of the subcontractor submitting a written claim to the Contractor, either party may bring the dispute before an alternative dispute resolution entity for resolution. If the parties do not agree upon a particular dispute resolution entity for that purpose, the dispute shall be resolved under the auspices and construction arbitration rules of the American Arbitration Association, or under the rules of any other alternative dispute resolution entity approved by the Department either generally or for the specific dispute. The Department may not be made a party to formal arbitration regarding such a dispute. These rights and restrictions may not be waived, and if these provisions are not included in the Contractor's subcontracts for the Project, these provisions shall nonetheless be read into them."

The Contractor shall not knowingly enter into any lower tier transaction on a Department project with any person or entity which, under any federal or state law or regulation, or by voluntary agreement, is currently debarred or disqualified from bidding for construction contracts or participating in construction projects in any jurisdiction within the United States, unless after disclosure of such ineligibility, such participation is authorized by appropriate federal and State authorities, including the Commissioner.

The Contractor shall not sublet, sell, transfer, assign, or otherwise dispose of the Contract or any portion thereof, or of the work provided for therein, or of its right, title, or interest therein, to any individual or entity without the prior written consent of the Commissioner. No payment will be made for any part of the work sublet, sold, transferred, assigned, or otherwise disposed of by the Contractor, prior to the authorization date given in the written consent of the Commissioner. Such an unauthorized act by the Contractor shall constitute a material breach of the Contract, and the Commissioner may, in such a case, terminate the Contract without further compensation to the Contractor.

The Contractor shall pay the subcontractor for work performed within thirty (30) days after the Contractor receives payment for the work performed by the subcontractor. Withholding retainage by the Contractor, subcontractor or lower tier subcontractors is not allowed.

Payment for work that has been performed by a subcontractor does not eliminate the Contractor's responsibilities for all the work as defined in Article 1.07.12, "Contractor's Responsibility for Work."

Payment for work that has been performed by a subcontractor also does not release the subcontractor from its responsibility for maintenance and other periods of subcontractor responsibility specified for the subcontractor's items of work. Failure of a subcontractor to meet its maintenance, warranty and/or defective work responsibilities may result in administrative action on future Department contracts.

For any dispute regarding prompt payment, the alternate dispute resolution provisions of this article shall apply.

The above requirements are also applicable to all sub-tier subcontractors and the above provisions shall be made a part of all subcontract agreements.

Failure of the Contractor to comply with the provisions of this section may result in a finding that the Contractor is non-responsible on future projects.

Article 1.08.07 - Determination of Contract Time:

Delete the second, third and fourth paragraphs and replace them with the following:

When the contract time is on a calendar day basis, it shall be the number of consecutive calendar days stated in the contract, INCLUDING the time period from December 1 through March 31 of each year. The contract time will begin on the effective date of the Engineer's order to commence work, and it will be computed on a consecutive day basis, including all Saturdays, Sundays, Holidays, and non-work days.

1.08.08 - Extension of Time:

Delete the last paragraph, "If an approved extension of time…. the following April 1".

Article 1.08.09 - Failure to Complete Work on Time:

Delete the second paragraph, "If the last day...the project is substantially completed" *and replace it with* "Liquidated damages as specified in the Contract shall be assessed against the Contractor per calendar day from that day until the date on which the project is substantially completed.".

SECTION 1.09 – MEASUREMENT AND PAYMENT

Article 1.09.04 – Extra and Cost-Plus Work:

Section 1.09.04 (f) - Add the following after the first sentence:

Increases in bonding costs shall not be compensated within any extra work payment. Payment for such costs, if substantiated as outlined in Article 1.04.05, shall be based on a lump sum for actual costs with no additional mark-ups.

Replace 1.09.06 – "Partial Payments" with the following:

1.09.06—Partial Payments:

A. Monthly and Semi-monthly Estimates.

(1) Once each month, the Engineer will make, in writing, current estimates of the value of work performed in accordance with the Contract, calculated at Contract unit prices, including but not limited to the value of materials complete in place and materials not yet incorporated into the Project, but approved by the Engineer for payment (as provided for elsewhere in this article). Retainage will not be held.

Exceptions may be made as follows:

(a) When not in conflict with the interests of the State, the Contractor may request, and the Engineer may make, semi-monthly estimates for payment.

(b) No estimates for payments will be made when, in the judgment of the Engineer, the Project is not proceeding in accordance with the Contract.

(2) The Engineer may also make payment at Contract unit prices for the number of units that represent the value of the Project work performed to date, if said units are essentially, though not totally, complete.

(3) As soon as possible after the final inspection, the apparent final quantities will be sent to the Contractor. The Contractor shall respond in writing within 21 days of receipt by either signing and thus accepting the final quantities or by disagreeing in writing, citing the pay items involved with documentation and justification of such agreement. Failure to respond within the 21 days will be considered as acceptance of the final quantities and the Department may proceed with final payment.

B. Payment for Stored Materials: Non-perishable materials that meet Contract requirements, that have been produced or purchased specifically for incorporation into the Project, and that have been delivered to the Project site or to such location as the Engineer may have approved, but which have not yet been incorporated into the Project, may be included in current estimates at such fraction of the applicable Contract unit price or lump sum price as the Engineer may deem to represent a fair value for the material, if such materials have been paid for by the Contractor as shown by receipted bills or, in lieu of such receipted bill(s), a duly-executed Certification of Title executed by the Contractor and the Vendor in the form approved by the Department. When partial payment is made for stored materials, such materials shall become the property of the State; but such payment shall in no way release the Contractor from its responsibility for the condition, protection and, in case of loss, replacement of such materials, or from any liability resulting in any manner from the presence of such materials wherever they may be stored or kept. All materials shall be stored in accordance with Article 1.06.03 and in accordance with the manufacturer's recommendations. Material test approval by the Department shall be required prior to payment for such materials.

Offsite storage may be approved by the Engineer provided that the materials proposed for payment are segregated from other materials, clearly labeled as being owned by the Department for use on the identified Project, otherwise handled in compliance with Article 1.06.03, and stored in accordance with the manufacturer's recommendations. All such materials must be readily-available for inventory and inspection by the Engineer. Storage outside of the State of Connecticut may be considered only when a representative of the Department is able to verify that the above requirements have been satisfied.

For items requiring extended fabrication, manufacturing or assembly time, the Contractor may propose to the Engineer a schedule of values for the related material costs. If the Engineer approves such a schedule of values, it shall become the Basis of Payment for the stored materials, so long as all other pertinent Contract requirements have been satisfied.

Generic materials having a use on many projects will be considered for payment prior to their incorporation into the Project only if stored in unopened packaging or in large lots. Stock and raw materials will not be considered for such advance payment without the Engineer's prior written consent thereto.

In no case shall material payments exceed the Contract unit price or lump sum price less the actual value of delivery and installation of the materials; if they do exceed such a price, the Engineer reserves the right to reduce any related payment accordingly. Such reductions in payment shall in no way affect the Department's ownership interest in the stored materials.

Replace 1.09.07 – "Final Payment" with the following:

1.09.07—Final Payment: When the Commissioner has accepted the Project, the Engineer will prepare a final payment estimate and a list of final item quantities. The list will include the entire amount of each item of Project work performed, the value thereof, and the amount of all payments made on prior estimates, all such estimated payments being merely partial payments and subject to correction in the calculation of the final payment.

SECTION 1.20 – GENERAL CLAUSES FOR FACILITIES CONSTRUCTION

1.20-1.00 – General:

Delete the second sentence in the first paragraph and replace with the following:

The Department has determined that this Project is Facilities Construction, and therefore Section 1.20 applies.

1.20-1.02.13—Knowledge of Applicable Laws:

Delete Item 5 and replace with the following:

"5. The 2009 International Energy Conservation Code, including the 2011 Connecticut Amendments."

SECTION 4.06 BITUMINOUS CONCRETE

Section 4.06 is being deleted in its entirety and replaced with the following:

4.06.01—Description
4.06.02—Materials
4.06.03—Construction Methods
4.06.04—Method of Measurement
4.06.05—Basis of Payment

4.06.01—Description: Work under this section shall include the production, delivery and placement of a non-segregated, smooth and dense bituminous concrete mixture brought to proper grade and cross section. This section shall also include the method and construction of longitudinal joints. The Contractor shall furnish ConnDOT with a Quality Control Plan as described in Article 4.06.03.

The terms listed below as used in this specification are defined as:

Bituminous Concrete: A concrete material that uses a bituminous material (typically asphalt) as the binding agent and stone and sand as the principal aggregate components. Bituminous concrete may also contain any of a number of additives engineered to modify specific properties and/or behavior of the concrete material. For the purposes of this Specification, references to bituminous concrete apply to all of its sub-categories, for instance those defined on the basis of production and placement temperatures, such as hot-mix asphalt (HMA) or warm-mix asphalt (WMA), those categories derived from the mix-design procedure used, such as "Marshall" mixes or "Superpave" mixes, or those defined on the basis of composition, such as polymer-modified asphalt (PMA).

Course: A lift or multiple lifts comprised of the same bituminous concrete mixture placed as part of the pavement structure.

Density Lot: All material placed in a single lift and as defined in Article 4.06.03.

Disintegration: Wearing away or fragmentation of the pavement. Disintegration will be evident in the following forms: Polishing, weathering-oxidizing, scaling, spalling, raveling, potholes or loss of material.

Dispute Resolution: A procedure used to resolve conflicts resulting from discrepancies between the Engineer and the Contractor's density results that may affect payment.

Hot Mix Asphalt (HMA): A bituminous concrete mixture typically produced at 325°F.

Lift: An application of a bituminous concrete mixture placed and compacted to a specified thickness in a single paver pass.

Marshall: A bituminous concrete mix design used in mixtures designated as "Bituminous Concrete Class ( )".

Polymer Modified Asphalt (PMA): A bituminous concrete mixture containing a polymer modified asphalt binder in accordance with contract specifications.

Production Lot: All material placed during a continuous daily paving operation.

Quality Assurance (QA): All those planned and systematic actions necessary to provide confidence that a product or facility will perform as designed.

Quality Control (QC): The sum total of activities performed by the vendor (Producer, Manufacturer, and Contractor) to ensure that a product meets contract specification requirements.

Superpave: A bituminous concrete mix design used in mixtures designated as "S*" Where "S" indicates Superpave and * indicates the sieve related to the nominal maximum aggregate size of the mix.

Segregation: A non-uniform distribution of a bituminous concrete mixture in terms of volumetrics, gradation or temperature.

Warm Mix Asphalt (WMA): A bituminous concrete mixture that can be produced and placed at reduced temperatures than HMA using a qualified additive or technology.

4.06.02—Materials: All materials shall conform to the requirements of Section M.04.

1. Materials Supply: The bituminous concrete mixture must be from one source of supply and originate from one Plant unless authorized by the Engineer. Bituminous Concrete plant QC plan requirements are defined in Section M.04.

2. Recycle Option: The Contractor has the option of recycling reclaimed asphalt pavement (RAP) or Crushed Recycled Container Glass (CRCG) in bituminous concrete mixtures in accordance with Section M.04. CRCG shall not be used in the final lift of the surface course.

4.06.03—Construction Methods:

1. Material Documentation: All vendors producing bituminous concrete must have their truck-weighing scales, storage scales, and mixing plant automated to provide a detailed ticket.

Delivery tickets must include the following information:

a. State of Connecticut printed on ticket.
b. Name of producer, identification of plant, and specific storage bin (silo) if used.
c. Date and time of day.

d. Mixture Designation If RAP is used, the plant printouts shall include RAP dry weight, percentage and daily moisture content. If WMA technology is used, the technology and the additive rate or the water injection rate must be noted on the ticket. Class 3 mixtures for machine-placed curbing must state "curb mix only".
e. Net weight of mixture loaded into truck (When RAP is used, RAP moisture shall be excluded from mixture net weight).
f. Gross weight (Either equal to the net weight plus the tare weight or the loaded scale weight).
g. Tare weight of truck – Daily scale weight.
h. Project number, purchase order number, name of Contractor (if Contractor other than Producer).
i. Truck number for specific identification of truck.
j. Individual aggregate, RAP, and virgin asphalt high/target/low weights shall be printed on batch plant tickets (For drum plants and silo loadings, the plant printouts shall be printed out at 5 minute intervals maintained by the vendor for a period of three years after the completion of the project).
k. For every mixture designation the running daily total delivered and sequential load number.

The net weight of mixture loaded into the truck must be equal to the cumulative measured weight of its components.

The Contractor must notify the Engineer immediately if, during the production day, there is a malfunction of the weighing or recording system in the automated plant or truck-weighing scales. Manually written tickets containing all required information will be allowed for one hour, but for no longer, provided that each load is weighed on State-approved scales. At the Engineer's sole discretion, trucks may be approved to leave the plant if a State inspector is present to monitor weighing. If such a malfunction is not fixed within forty-eight hours, mixture will not be approved to leave the plant until the system is fixed to the Engineer's satisfaction. No damages will be considered should the State be unable to provide an inspector at the plant.

The State reserves the right to have an inspector present to monitor batching and /or weighing operations.

2. Transportation of Mixture: Trucks with loads of bituminous concrete being delivered to State projects must not exceed the statutory or permitted load limits referred to as gross vehicle weight (GVW). The Contractor shall furnish a list of all vehicles and allowable weights transporting mixture.

The State reserves the right to check the gross and tare weight of any delivery truck. A variation of 0.4 percent or less in the gross or tare weight shown on the delivery ticket and the certified scale weight shall be considered evidence that the weight shown on the delivery ticket is correct. If the gross or tare weight varies from that shown on the delivery ticket by more than 0.4 percent, the Engineer will recalculate the net weight. The Contractor shall take action to correct discrepancy to the satisfaction of the Engineer.

If a truck delivers mixture to the project and the ticket indicates that the truck is overweight, the load will not be rejected but a "Measured Weight Adjustment" will be taken in accordance with Article 4.06.04.

The mixture shall be transported from the mixing plant in trucks that have previously been cleaned of all foreign material and that have no gaps through which mixture might inadvertently escape. The Contractor shall take care in loading trucks uniformly so that segregation is minimized. Loaded trucks shall be tightly covered with waterproof covers acceptable to the Engineer. Mesh covers are prohibited. The front and rear of the cover must be fastened to minimize air infiltration. The Contractor shall assure that all trucks are in conformance with this specification. Trucks found not to be in conformance shall not be allowed to be loaded until re-inspected to the satisfaction of the Engineer.

Truck body coating and cleaning agents must not have a deleterious effect on the transported mixture. The use of solvents or fuel oil, in any concentration, is strictly prohibited for the coating of the inside of truck bodies. When acceptable coating or agents are applied, truck bodies shall be raised immediately prior to loading to remove any excess agent in an environmentally acceptable manner.

3. Paving Equipment: The Contractor shall have the necessary paving and compaction equipment at the project site to perform the work. All equipment shall be in good working order and any equipment that is worn, defective or inadequate for performance of the work shall be repaired or replaced by the Contractor to the satisfaction of the Engineer. During the paving operation, the use of solvents or fuel oil, in any concentration, is strictly prohibited as a release agent or cleaner on any paving equipment (i.e., rollers, pavers, transfer devices, etc.).

Refueling of equipment is prohibited in any location on the paving project where fuel might come in contact with bituminous concrete mixtures already placed or to be placed. Solvents for use in cleaning mechanical equipment or hand tools shall be stored clear of areas paved or to be paved. Before any such equipment and tools are cleaned, they shall be moved off the paved or to be paved area; and they shall not be returned for use until after they have been allowed to dry.

Pavers: Each paver shall have a receiving hopper with sufficient capacity to provide for a uniform spreading operation and a distribution system that places the mix uniformly, without segregation. The paver shall be equipped with and use a vibratory screed system with heaters or burners. The screed system shall be capable of producing a finished surface of the required evenness and texture without tearing, shoving, or gouging the mixture. Pavers with extendible screed units as part of the system shall have auger extensions and tunnel extenders as necessary. Automatic screed controls for grade and slope shall be used at all times unless otherwise authorized by the Engineer. The controls shall automatically adjust the screed to compensate for irregularities in the preceding course or existing base. The controls shall maintain the proper transverse slope and be readily adjustable, and shall operate from a fixed or moving reference such as a grade wire or floating beam.

Rollers: All rollers shall be self-propelled and designed for compaction of bituminous concrete. Rollers types shall include steel-wheeled, pneumatic or a combination thereof and may be capable of operating in a static or dynamic mode. Rollers that operate in a dynamic mode shall have drums that use a vibratory or oscillatory system or combination of. The vibratory system achieves compaction through vertical amplitude forces. Rollers with this system shall be equipped with indicators that provide the operator with amplitude, frequency and speed settings/readouts to measure the impacts per foot during the compaction process. The oscillatory system achieves compaction through horizontal shear forces. Rollers with this system shall be equipped with frequency indicators. Rollers can operate in the dynamic mode using the oscillatory system on concrete structures such as bridges and catch basins if at the lowest frequency setting.

Pneumatic tire rollers shall be self-propelled and equipped with wide-tread compaction tires capable of exerting an average contact pressure from 60 to 90 pounds per square inch uniformly over the surface, adjusting ballast and tire inflation pressure as required. The Contractor shall furnish evidence regarding tire size; pressure and loading to confirm that the proper contact pressure is being developed and that the loading and contact pressure are uniform for all wheels.

Lighting: For paving operations, which will be performed during hours of darkness, the paving equipment shall be equipped with lighting fixtures as described below, or with approved lighting fixtures of equivalent light output characteristics. A sufficient number of spare lamps shall be available on site as replacements in the event of failures. The Contractor shall provide brackets and hardware for mounting light fixtures and generators to suit the configuration of the rollers and pavers. Mounting brackets and hardware shall provide for secure connection of the fixtures, minimize vibration, and allow for adjustable positioning and aiming of the light fixtures. Lighting shall be aimed to maximize the illumination on each task and minimize glare to passing traffic. The Contractor shall provide generators on rollers and pavers of the type, size, and wattage, to adequately furnish 120 V AC of electric power to operate the specified lighting equipment. A sufficient amount of fuel shall be available on site. There shall be switches to control the lights. Wiring shall be weatherproof and installed to all applicable codes. The minimum lighting requirements are found in tables 4.06-1 and 4.06-2:

Table 4.06-1: Paver Lighting

Fixture	Quantity	Remarks
Type A	3	Mount over screed area
Type B (narrow) or Type C (spot)	2	Aim to auger and guideline
Type B (wide) or Type C (flood)	2	Aim 25 feet behind paving machine

Table 4.06-2: Roller Lighting

Fixture*	Quantity	Remarks
Type B (wide)	2	Aim 50 feet in front of and behind roller
Type B (narrow)	2	Aim 100 feet in front of and behind roller
OR		
Type C (flood)	2	Aim 50 feet in front of and behind roller
Type C (spot)	2	Aim 100 feet in front of and behind roller

*All fixtures shall be mounted above the roller.

Type A: Fluorescent fixture shall be heavy-duty industrial type. It shall be enclosed and sealed to keep out dirt and dampness. It shall be UL listed as suitable for wet locations. The fixture shall contain two 4-foot long lamps - Type "F48T12CWHO". The integral ballast shall be a high power factor, cold weather ballast, and 120 volts for 800 MA HO lamps. The housing shall be aluminum, and the lens shall be acrylic with the lens frame secured to the housing by hinging latches. The fixture shall be horizontal surface mounting, and be made for continuous row installation.

Type B: The floodlight fixture shall be heavy-duty cast aluminum housing, full swivel and tilt mounting, tempered-glass lens, sealed door, reflector to provide a wide distribution or narrow distribution as required, mogul lamp socket for 250 watt Metal Halide lamp, 120 volt integral ballast, and be UL listed as suitable for wet locations.
Type C: The power beam holder shall have ribbed die cast aluminum housing and a clear tempered-glass lens to enclose the fixture. There shall be an arm fully adjustable for aiming, with a male-threaded mount with serrated teeth and lock nuts. There shall be a 120-volt heatproof socket with extended fixture wiring for an "Extended Mogul End Prong" lamp base. The fixture shall have gaskets, and shall be UL listed as suitable for wet locations. The lamps shall be 1000-watt quartz PAR64, both Q1000PAR64MFL (flood) and Q1000PARNSP (spot) will be required.

Material Transfer Vehicle (MTV): A MTV shall be used when placing a bituminous concrete surface course as indicated in the contract documents. A surface course is defined as the total thickness of the same bituminous concrete mix that extends up to and includes the final wearing surface whether it is placed in a single or multiple lifts, and regardless of any time delays between lifts.

The MTV must be a self-propelled vehicle specifically designed for the purpose of delivering the bituminous concrete mixture from the delivery truck to the paver. The MTV must have the capability to remix the bituminous concrete mixture.

The use of a MTV will be subject to the requirements stated in Article 1.07.05- Load Restrictions. The Engineer may limit the use of the vehicle if it is determined that the use of the MTV may damage highway components, utilities, or bridges. The Contractor shall submit to the Engineer at time of pre-construction the following information:

- The make and model of the MTV to be used.
- The individual axle weights and axle spacing for each separate piece of paving equipment (haul vehicle, MTV and paver).
- A working drawing showing the axle spacing in combination with all three pieces of equipment that will comprise the paving echelon.

4. Seasonal Requirements: Paving, including placement of temporary pavements, shall be divided into two seasons, In-Season and Extended Season. In-Season paving shall occur from May 1 – October 14, and Extended Season shall occur from October 15- April 30. The following requirements shall apply unless otherwise authorized or directed by the Engineer:

- Bituminous concrete mixes shall not be placed when the air or subbase temperature is below 40°F regardless of the season.
- Should paving operations be scheduled during the Extended Season, the Contractor's Quality Control Plan for placement described in Section 9. "Contractor Quality Control Plan for Placement" shall include a separate section titled "Extended Season Paving" and address minimum delivered mix temperature, maximum paver speed, enhanced rolling patterns and the method to balance mixture delivery and placement operations. Work covered by the section on Extended Season paving shall not commence until the Engineer's comments have been incorporated into the section and approved.
- Should placement of the final lift of bituminous concrete be scheduled during the Extended Season, the Contractor is required to submit this plan to the Engineer for review 30 days prior to the paving operation.

5. Superpave Test Section: The Engineer may require the Contractor to place a test section whenever the requirements of this specification or Section M.04 are not met.

The Contractor shall submit the quantity of mixture to be placed and the location of the test section for review and acceptance by the Engineer. The equipment used in the construction of a passing test section shall be used throughout production.

If a test section fails to meet specifications, the Contractor shall stop production, make necessary adjustments to the job mix formula, plant operations, or procedures for placement and compaction. The Contractor shall construct test sections, as allowed by the Engineer, until all the required specifications are met. All test sections shall also be subject to removal as set forth in Article 1.06.04.

6. Transitions for Roadway Surface: Transitions shall be formed at any point on the roadway where the pavement surface deviates, vertically, from the uniform longitudinal profile as specified on the plans. Whether formed by milling or by bituminous concrete mixture, all transition lengths shall conform to the criteria below unless otherwise specified.

<u>Permanent Transitions</u>: A permanent transition is defined as any transition that remains as a permanent part of the work. All permanent transitions, leading and trailing ends shall meet the following length requirements:

a) Posted speed limit is greater than 35 MPH: 30 feet per inch of vertical change (thickness)
b) Posted speed limit is 35 MPH or less: 15 feet per inch of vertical change (thickness).
c) Bridge Overpass and underpass transition length will be 75 feet either
  (1) Before and after the bridge expansion joint, or
  (2) Before or after the parapet face of the overpass.

In areas where it is impractical to use the above described permanent transition lengths the use of a shorter permanent transition length may be permitted when approved by the Engineer.

Temporary Transitions: A temporary transition is defined as a transition that does not remain a permanent part of the work. All temporary transitions shall meet the following length requirements:

a) Posted speed limit is greater than 35 MPH
   (1) Leading Transitions = 15 feet per inch of vertical change (thickness)
   (2) Trailing Transitions = 6 feet per inch of vertical change (thickness)

b) Posted speed limit is 35 MPH or less
   (1) Leading and Trailing = 4 feet per inch of vertical change (thickness)

Note: Any temporary transition to be in-place over the winter shutdown period, holidays, or during extended periods of inactivity (more than 7 calendar days) shall conform to the "Permanent Transition" requirements shown above.

7. Spreading and Finishing of Mixture: Prior to the placement of the bituminous concrete, the underlying base course shall be brought to the plan grade and cross section within the allowable tolerance. Immediately before placing the mixture, the area to be surfaced shall be cleaned by sweeping or by other means acceptable to the Engineer. The bituminous concrete mixture shall not be placed whenever the surface is wet or frozen. The Engineer will verify the mix temperature by means of a probe or infrared type of thermometer. A probe type thermometer, verified by the Department on an annual basis, must be used in order to reject a load of mixture based on temperatures outside the range stated in the placement QC plan.

Placement: The bituminous concrete mixture shall be placed and compacted to provide a smooth, dense surface with a uniform texture and no segregation at the specified thickness and dimensions indicated in the plans and specifications.

When unforeseen weather conditions prevent further placement of the mix, the Engineer is not obligated to accept or place the bituminous concrete mixture that is in transit from the plant.

In advance of paving, traffic control requirements shall be set up daily, maintained throughout placement, and shall not be removed until all associated work including density testing is completed.

The Contractor shall inspect the newly placed pavement for defects in the mixture or placement before rolling is started. Any deviation from standard crown or section shall be immediately remedied by placing additional mixture or removing surplus mixture. Such defects shall be corrected to the satisfaction of the Engineer.

Where it is impractical due to physical limitations to operate the paving equipment, the Engineer may permit the use of other methods or equipment. Where hand spreading is permitted, the mixture shall be placed by means of suitable shovels and other tools, and in a uniformly loose layer at a thickness that will result in a completed pavement meeting the designed grade and elevation.

Placement Tolerances: Each lift of bituminous concrete placed at a uniform specified thickness shall meet the following requirements for thickness and area. Any pavement exceeding these limits shall be subject to an adjustment or removal. Lift tolerances will not relieve the Contractor from meeting the final designed grade. Lifts of specified non-uniform thickness, i.e. wedge or shim course, shall not be subject to thickness and area adjustments.

a) Thickness- Where the total thickness of the lift of mixture exceeds that shown on the plans beyond the tolerances shown in Table 4.06-3, the longitudinal limits of such variation including locations and intervals of the measurements will be documented by the Engineer for use in calculating an adjustment in accordance with Article 4.06.04.

TABLE 4.06-3 Thickness Tolerances

Mixture Designation	Lift Tolerance
Class 4 and S1	+/- ⅜ inch
Class 1, 2 and 12 and S0.25, S0.375, S0.5	+/- ¼ inch

Where the thickness of the lift of mixture is less than that shown on the plans beyond the tolerances shown in Table 4.06-3, the Contractor, with the approval of the Engineer, shall take corrective action in accordance with this specification.

b) Area- Where the width of the lift exceeds that shown on the plans by more than the specified thickness of each lift, the longitudinal limits of such variation including locations and intervals of the measurements will be documented by the Engineer for use in calculating the adjustment in Article 4.06.04.

c) Delivered Weight of Mixture - When the delivery ticket shows that the truck exceeds the allowable gross weight for the vehicle type the quantity of tons representing the overweight amount will be documented by the Engineer for use in calculating an adjustment in accordance with Article 4.06.04.

Transverse Joints: All transverse joints shall be formed by saw-cutting a sufficient distance back from the previous run, existing bituminous concrete pavement or bituminous concrete driveways to expose the full thickness of the lift. A brush of tack coat shall be used on any cold joint immediately prior to additional bituminous concrete mixture being placed.

Tack Coat Application: A thin uniform coating of tack coat shall be applied to the pavement immediately before overlaying and be allowed sufficient time to break (set). All surfaces in contact with the bituminous concrete that have been in place longer than 3 calendar days shall have an application of tack coat. The tack coat shall be applied by a non-gravity pressurized spray system that results in uniform overlapping coverage at an application rate of 0.03 to 0.05 gallons per square yard for a non-milled surface and an application rate of 0.05 to 0.07 gallons per square yard for a milled surface. For areas where both milled and un-milled surfaces occur, the tack coat shall be an application rate of 0.03 to 0.05 gallons per square yard. The Engineer must approve the equipment and the method of measurement prior to use. The material for tack coat shall not be heated in excess of 160°F and shall not be further diluted.

Compaction: The Contractor shall compact the mixture to meet the density requirements as stated in Article 4.06.03 and eliminate all roller marks without displacement, shoving, cracking, or aggregate breakage.

The Contractor shall only operate rollers in the dynamic mode using the oscillatory system at the lowest frequency setting on concrete structures such as bridges and catch basins. The use of the vibratory system on concrete structures is prohibited. Rollers operating in the dynamic mode shall be shut off when reversing directions.

If the Engineer determines that the use of compaction equipment in the dynamic vibratory mode may damage highway components, utilities, or adjacent property, the Contractor shall provide alternate compaction equipment. The Engineer may allow the Contractor to operate rollers in the dynamic mode using the oscillatory system at the lowest frequency setting.

These allowances will not relieve the Contractor from meeting pavement compaction requirements.

Surface Requirements: The pavement surface of any lift shall meet the following requirements for smoothness and uniformity. Any irregularity of the surface exceeding these requirements shall be corrected by the Contractor.

a) Smoothness- Each lift of the surface course shall not vary more than ¼ inch from a Contractor-supplied 10 foot straightedge. For all other lifts of bituminous concrete, the tolerance shall be ⅜ inch. Such tolerance will apply to all paved areas.

b) Uniformity- The paved surface shall not exhibit segregation, rutting, cracking, disintegration, flushing or vary in composition as determined by the Engineer.

8. Longitudinal Joint Construction Methods: Unless noted on the plans or the contract documents or directed by the Engineer, the Contractor shall use Method I- Notched Wedge Joint (see figure 4.06-1) when constructing longitudinal joints where lift thicknesses are between 1½ and 3 inches, except for S1 and Class 4 mixes. Method II Butt Joint (see figure 4.06-2) shall be used for lifts less than 1½ inches or greater than 3 inches, and S1 and Class 4 mixes. During placement of multiple lifts of bituminous concrete, the longitudinal joint shall be constructed in such a manner that it is located at least 6 inches from the joint in the lift immediately below. The joint in the final lift shall be at the centerline or at lane lines. Each longitudinal joint shall maintain a consistent offset from the centerline of the roadway along its entire length.

Method I - Notched Wedge Joint:

Figure 4.06-1

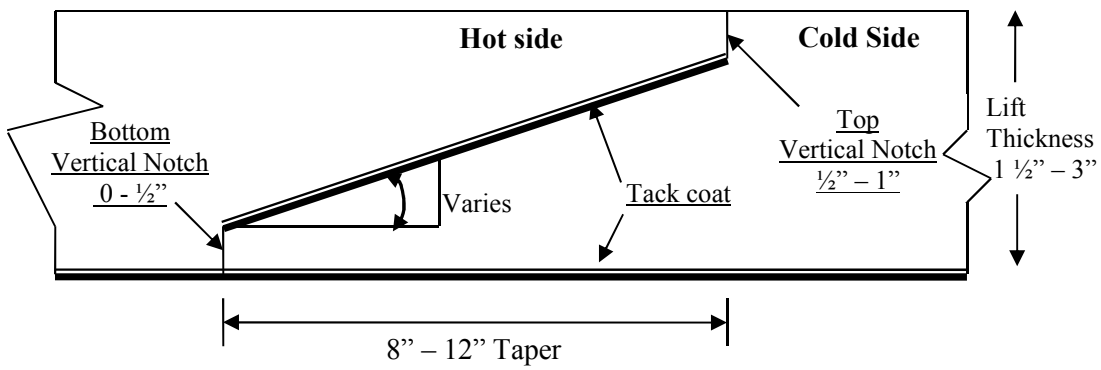

A notched wedge joint shall be constructed, as shown in the figure using a device that is capable of adjusting the top and bottom vertical notches independently and is attached to the paver screed.
The taper portion of the joint must be placed over the longitudinal joint in the lift immediately below. The top vertical notch must be located at the centerline or lane line in the final lift. The requirement for paving full width "curb to curb" as described in Method II may be waived if addressed in the QC plan and approved by the Engineer.

The taper portion of the wedge joint shall be compacted and not be exposed to traffic for more than 5 calendar days.

The pavement surface under the wedge joint must have an application of tack coat material. Prior to placing the completing pass (hot side), an application of tack coat must be applied to the exposed surface of the tapered section; regardless of time elapsed between paver passes. The in-place time allowance described in Sub article 4.06.03-7 does not apply to joint construction.

Any exposed wedge joint must be located to allow for the free draining of water from the road surface.

The Engineer reserves the right to define the paving limits when using a wedge joint that will be exposed to traffic.

<u>Method II - Butt Joint</u>:

Figure 4.06-2

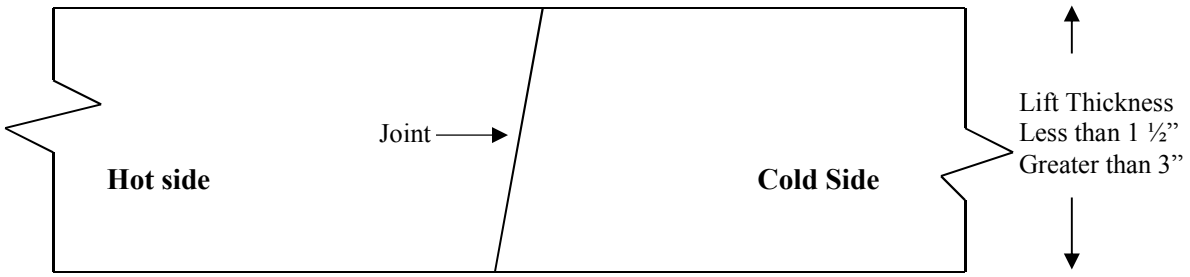

When adjoining passes are placed, the Contractor shall utilize equipment that creates a near vertical edge (refer to figure). The completing pass (hot side) shall have sufficient mixture so that the compacted thickness is not less than the previous pass (cold side). The end gate on the paver should be set so there is an overlap onto the cold side of the joint.

The Contractor shall not allow any butt joint to be incomplete at the end of a work shift unless otherwise allowed by the Engineer. When using this method, the Contractor is not allowed to leave a vertical edge exposed at the end of a work shift and must complete paving of the roadway full width "curb to curb."

<u>Method III- Butt Joint with Hot Poured Rubberized Asphalt Treatment</u>: When required by the contract or allowed by the Engineer, Method III (see figure 4.06-3) may be used.

Figure 4.06-3

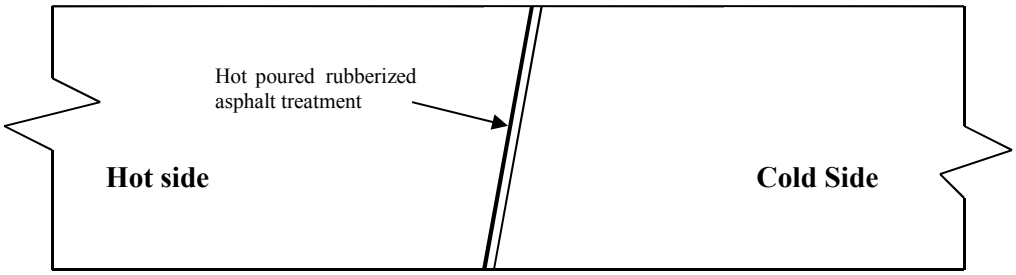

All of the requirements of Method II must be met with Method III. In addition, the longitudinal vertical edge must be treated with a joint seal material meeting the requirements of Section M.04 prior to placing a completing pass. The joint seal material shall be applied in accordance with the manufacturer's recommendation so as to provide a uniform coverage and avoid excess bleeding onto the newly placed pavement.

9. Contractor Quality Control (QC) Requirements for Placement:

The Contractor shall be responsible for maintaining adequate quality control procedures throughout the placement operations. Therefore, the Contractor must ensure that the materials, mixture and work provided by Subcontractors, Suppliers and Producers also meet contract specification requirements.

Quality Control Plan: Prior to placement the Contractor shall submit a QCP to the Engineer for approval. The QCP shall be submitted at the pre-construction meeting or a minimum 30 days prior to any production or paving. The QCP shall be in the format provided by the Engineer. Work covered by the QCP shall not commence until the Engineer's comments have been incorporated into the QCP and approved. The QCP shall detail every aspect of the placement process and if required, include a separate section on Extended Season paving as described in Section 4. "Seasonal Requirements". Information provided shall include the organization and procedures which the Contractor shall use to control all project site activity. The QCP must address the actions, inspection, or sampling and testing necessary to keep the production and placement operations in control, to determine when an operation has gone out of control and to respond to correct the situation in a timely fashion. The QCP shall also include details on when and who will communicate with personnel at the bituminous concrete plant to determine when immediate changes to the production or placement processes are needed, and to implement the required changes.

In addition the QCP shall also include the name and qualifications of a Quality Control Manager (QCM). The QCM shall be responsible for the administration of the QCP, and any modifications that may become necessary. The QCM shall have the ability to direct all Contractor personnel on the project during paving operations. All Contractor sampling, inspection and test reports shall be reviewed and signed by the QCM prior to submittal to the Engineer.

Approval of the QCP will be based on the inclusion of all of the required information. Approval of the QCP does not relieve the Contractor of its responsibility to comply with the project specifications. The Contractor may modify the QCP as work progresses and must document the changes in writing prior to commencing the next paving operation. These changes include but are not limited to changes in quality control procedures or personnel. Placement may be suspended by the Engineer until the revisions to the QCP have been put into effect.

The Quality Control Plan shall also include the name and qualifications of any outside testing laboratory performing any QC functions on behalf of the Contractor.

Quality Control Inspection, Sampling and Testing: The Contractor shall perform all quality control sampling and testing, provide inspection, and exercise management control to ensure that

bituminous concrete production and placement conforms to the requirements as outlined in its QCP during all phases of the work.

a) Control Charts: The Contractor shall develop and maintain density control charts and shall submit them to the Engineer. The control charts shall include the project number, test numbers, test parameter, applicable upper and lower specification limits, and test data. The control charts shall be used as part of the quality control system to document the placement process. The control chart(s) shall be updated each day of production, and e a copy shall be submitted prior to the next day's production.

b) Records of Inspection and Testing: For each day of placement, the Contractor shall document all test results and inspections on forms approved by the Engineer. The document shall be certified by the Quality Control Manager or his representative that the information in the document is accurate, and that all work complies with the requirements of the contract.

The Contractor shall submit complete and accurate density sampling, testing and inspection documents to the Engineer within 48 hours. The documents shall be submitted in a manner acceptable to the Engineer.

The Contractor may obtain one (1) mat core and one (1) joint core per day for process control, provided this process is detailed in the QCP. The results of these process control cores shall not be used to dispute the Department determinations from the acceptance cores. The Contractor shall submit the location of each process control core to the Engineer for approval prior to taking the core. Additional cores may be obtained to correlate a density gauge used by the contractor for quality control as approved by the Engineer. The core holes shall be filled to the same requirements described in Sub article 4.06.03-10.

10. **Density Testing of Bituminous Concrete Utilizing Core Samples:** This procedure describes the frequency and the method the Contractor shall use to obtain pavement cores for acceptance from the project. Coring shall be performed on each lift specified to a thickness of one and one-half (1 ½) inches or more. Each lift including the longitudinal joints shall be compacted to the degree specified in Tables 4.06-9 and 4.06-10. The density of each core shall be determined using the production lot's average maximum theoretical gravity established from the plant production testing. Bituminous concrete Class 4 and HMA S1 are excluded from the longitudinal joint density requirements.

The Contractor shall extract cores (4 or 6 inch diameter for S0.25, S0.375 and S0.5 mixes, 6 inch diameter for S1.0 mixtures -wet sawed) from sampling locations determined by the Engineer. The Engineer must witness the extraction and labeling of cores, as well as the filling of the core holes. The cores shall be labeled by the Contractor with the project number, lot number, and sub-lot number on the top surface of the core. When labeling the core lot number, include whether the core is from a mat lot or joint lot by using an "M" for a mat core and "J" for a joint core. For example, a core from the first sub-lot of the first mat lot shall be labeled with "Lot M1 – 1". The first number refers to the lot and the second number refers to the sub-lot. Refer to Figure 4.06-4. The side of the cores shall be labeled with the core lot number and date placed. The project inspector shall fill out a MAT-109 containing the same information to accompany

the cores. The Contractor shall deliver the cores and MAT-109 to the Department's Central Testing Lab in a safe manner to ensure no damage occurs to the cores. The Contractor shall use a container approved by the Engineer. In general the container shall consist of an attached lid container made out of plastic capable of being locked shut and tamper proof. The Contractor shall use foam, bubble wrap, or another suitable material to prevent the cores from being damaged during transportation. Once the cores and MAT-109 are in the container the Engineer will secure the lid using a security seal. The security seal's identification number must be documented on the MAT-109. The Central Lab will break the security seal and take possession of the cores upon receipt.

Figure 4.06-4

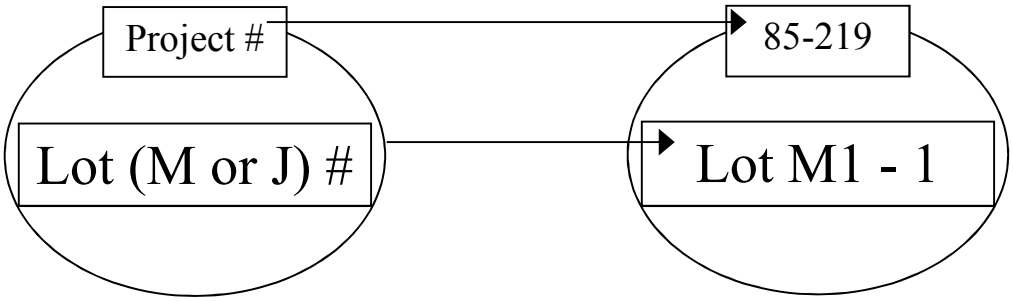

Frequency of sampling is in accordance with the following tables:

TABLE 4.06-4 - TESTING REQUIREMENT FOR BRIDGE DENSITY LOT

Length of Each Structure (Feet)	MAT – No. of Cores	JOINT - No. of cores
≤ 500'	See Table 4.06-5(A or B)	See Table 4.06-5(A or B)
501' – 1500'	3	3
1501' – 2500'	4	4
2501' and greater	5	5

All material placed on structures less than or equal to 500 feet in length shall be included as part of a standard lot as follows:

TABLE 4.06-5A – TESTING REQUIREMENT FOR DENSITY LOTS ≥ 500 TONS

Lot Type	No. of Mat Cores		No. of Joint Cores		Target Lot Size (Tons)
Lot Without Bridge(1)	4		4		2000
Lot With Bridge(s)(1)(2)	4 plus	1 per structure (≤ 300')	4 plus	1 per structure (≤ 300')	2000
		2 per structure (301' – 500')		2 per structure (301' – 500')	

TABLE 4.06-5B – TESTING REQUIREMENT FOR DENSITY LOTS < 500 TONS

Lot Type	No. of Mat Cores	No. of Joint Cores	Lot Size (Tons)
Lot Without Bridge(1)	3	3	1 per lift
Lot With Bridge(s)(1)(2)	3	3	1 per lift

Note (1): The number of "Required Paver Passes for Full Width" shall be used to determine the sub-lot sizes within the lot. The number of paver passes for full width is determined by the contractor.

Note (2): If a non-bridge mat or joint core location randomly falls on a structure, the core is to be obtained on the structure in addition to the core(s) required on the structure.

A density lot will be complete when the full designed paving width of the established lot length has been completed and shall include all longitudinal joints that exist between the curb lines regardless of date(s) paved. Quantity of material placed on structures less than or equal to 500 feet long is inclusive of the standard lot. Prior to paving, the total length of the project to be paved shall be split up into lots that contain approximately 2000 tons each. Areas such as highway ramps may be combined to create one lot. In general, combined areas should be set up to target a 2000 ton lot size. One adjustment will apply for each lot. The tons shall be determined using the yield calculation in Article 4.06.04. The last lot shall be the difference between the total payable tons for the project and the sum of the previous lots.

After the compaction process has been completed, the material shall be allowed to cool sufficiently to allow the cutting and removal of the core without damage. The Contractor shall core to a depth that allows extraction so that the uppermost layer being tested for density will not be affected.

A mat core shall not be taken any closer than one foot from the edge of a paver pass. If a random number locates a core less than one foot from any edge, locate the core so that the sample is one foot from the edge.

Joint cores must be taken so that the center of the core is 5 inches from the visible joint on the hot mat side. Refer to figure 4.06-5.

Figure 4.06-5

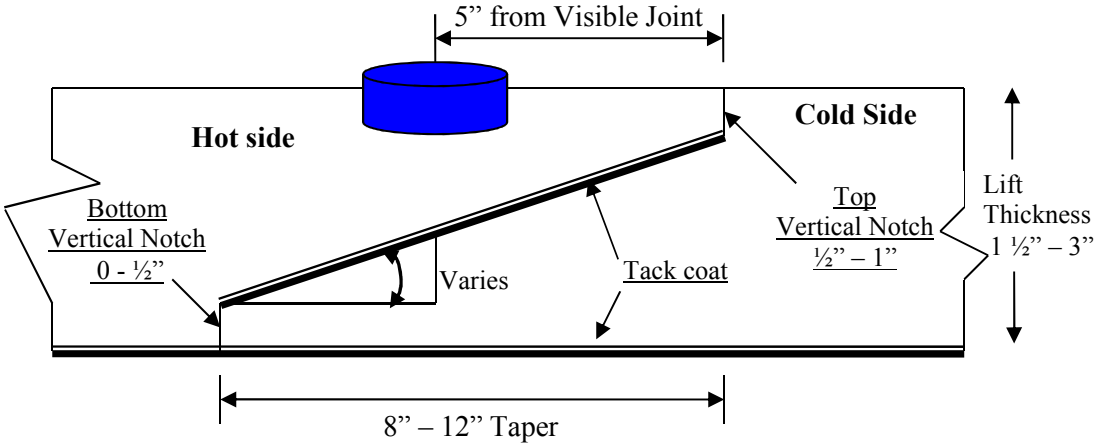

Cores may be obtained daily or weekly. All cores must be cut within 5 calendar days of placement. Any core that is damaged or obviously defective while being obtained will be replaced with a new core from a location within 2 feet measured in a longitudinal direction.

Core holes shall be filled immediately upon core extraction. Prior to being filled, the hole shall be prepared by removing any free water and applying tack coat using a brush or other means to uniformly cover the cut surface. The core hole shall be filled with a mixture containing the same nominal maximum aggregate size and compacted with a hand compactor or other mechanical means to the maximum compaction possible. The bituminous concrete mixture shall be compacted to ⅛ inch above the finished pavement prior to opening the roadway to traffic.

11. Acceptance Inspection, Sampling and Testing: Inspection, sampling, and testing to be used by the Engineer shall be performed at the minimum frequency specified in Section M.04 and stated herein.

Sampling for acceptance shall be established using ASTM D 3665, or a statistically based procedure of random sampling approved by the Engineer.

Plant Material Acceptance: The Contractor shall provide the required acceptance sampling, testing and inspection during all phases of the work in accordance with Section M.04. The Department will perform verification testing on the Contractor's acceptance test results. Should binder content or air void results exceed the specified tolerances in the Department's current QA Program for Materials, Acceptance and Assurance Testing Policies and Procedures, the Department will investigate to determine an assignable cause. Contractor's test results for a subject lot or sub lot may be replaced with verification's result for the purpose of assessing adjustments. The verification procedure is included in the Department's current QA Program for Materials.

Density Acceptance: The Engineer will perform all acceptance testing on the cores in accordance with AASHTO T 331(M).

12. Density Dispute Resolution Process: The Contractor and Engineer will work in partnership to avoid potential conflicts and to resolve any differences that may arise during quality control or acceptance testing for density. Both parties will review their sampling and testing procedures and results and share their findings. If the Contractor disputes the Engineer's test results, the Contractor must submit in writing a request to initiate the Dispute Resolution Process within 10 calendar days of the notification of the test results. No request for dispute resolution will be allowed unless the Contractor provides quality control results within the timeframe described in Sub article 4.06.03-9 supporting its position. Should the dispute not be resolved through evaluation of existing testing data or procedures, the Engineer may authorize the Contractor to obtain a new set of core samples per disputed lot. The core samples must be extracted no later than 30 calendar days from the date of Engineer's authorization. The number and type (mat, joint, or structure) of the cores taken for dispute resolution must reflect the number and type of the cores taken for acceptance. The location of each core shall be 36" from the original

acceptance core location forward along a line parallel to the baseline that results in the same type (mat, joint, or structure) of core. All such core samples shall be extracted and filled using the procedure outlined in Article 4.06.03. The results from the dispute resolution cores shall be added to the results from the acceptance cores and averaged for determining the final in-place density value.

13. Corrective Work Procedures: Any portion of the completed pavement that does not meet the requirements of the specification shall be corrected at the expense of the Contractor. Any corrective courses placed as the final wearing surface shall not be less than 1½ inches in thickness after compaction.

If pavement placed by the Contractor does not meet the specifications, and the Engineer requires its replacement or correction, the Contractor shall:

a) Propose a corrective procedure to the Engineer for review and approval prior to any corrective work commencing. The proposal shall include:
   - Limits of pavement to be replaced or corrected, indicating stationing or other landmarks that are readily distinguishable.
   - Proposed work schedule.
   - Construction method and sequence of operations.
   - Methods of maintenance and protection of traffic.
   - Material sources.
   - Names and telephone numbers of supervising personnel.

b) Perform all corrective work in accordance with the Contract and the approved corrective procedure.

14. Protection of the Work: The Contractor shall protect all sections of the newly finished pavement from damage that may occur as a result of the Contractor's operations for the duration of the Project. Prior to the Engineer's authorization to open the pavement to traffic, the Contractor is responsible to protect the pavement from damage.

15. Cut Bituminous Concrete Pavement: Work under this item shall consist of making a straight-line cut in the bituminous concrete pavement to the lines delineated on the plans or as directed by the Engineer. The cut shall provide a straight, clean, vertical face with no cracking, tearing or breakage along the cut edge.

4.06.04—Method of Measurement:

1. Bituminous Concrete Class ( ) or HMA S* or PMA S*: The quantity of bituminous concrete measured for payment will be determined by the documented net weight in tons accepted by the Engineer in accordance with this specification and Section M.04.

2. Adjustments: Adjustments may be applied to bituminous concrete quantities and will be measured for payment using the following formulas:

Yield Factor for Adjustment Calculation = 0.0575 Tons/SY/inch

Actual Area = [(Measured Length (ft)) x (Avg. of width measurements (ft))]

Actual Thickness (t) = Total tons delivered / [Actual Area (SY) x 0.0575 Tons/SY/inch]

a) Area: If the average width exceeds the allowable tolerance, an adjustment will be made using the following formula. The tolerance for width is equal to the specified thickness (in.) of the lift being placed.

Tons Adjusted for Area (T_A) = [(L x W_{adj})/9] x (t) x 0.0575 Tons/SY/inch = (-) Tons

Where: L = Length (ft)
(t) = Actual thickness (inches)
W_{adj} = (Designed width (ft) + tolerance /12) - Measured Width)

b) Thickness: If the actual thickness is less than the allowable tolerance, the Contractor shall submit a repair procedure to the Engineer for approval. If the actual thickness exceeds the allowable tolerance, an adjustment will be made using the following formula:

Tons Adjusted for Thickness (T_T) = A x t_{adj} x 0.0575 = (-) Tons

Where: A = Area = {[L x (Designed width + tolerance (lift thickness)/12)] / 9}
t_{adj} = Adjusted thickness = [(Dt + tolerance) - Actual thickness]
Dt = Designed thickness (inches)

c) Weight: If the quantity of bituminous concrete representing the mixture delivered to the project is in excess of the allowable gross vehicle weight (GVW) for each vehicle, an adjustment will be made using the following formula:

Tons Adjusted for Weight (T_W) = GVW – DGW= (-) Tons

Where: DGW = Delivered gross weight as shown on the delivery ticket or measured on a certified scale.

d) Mixture Adjustment: If the quantity of bituminous concrete representing the produced mixture exceeds one or more of the production tolerances for Marshall (Table 4.06-6) or Superpave mix designs (Table 4.06-7 and 4.06-8) , an adjustment will be made using the following formulas. The Department's Division of Material Testing will calculate the daily adjustment values for T_{MD} and T_{SD}.

(1) *Marshall Design*- The tolerances shown in Table 4.06-6 for gradation and binder content will be used to determine whether a mixture adjustment will apply. If the

mixture does not meet the requirements of Section M.04, an adjustment will be computed using the following formula:

Tons Adjusted for Marshall Design (T_{MD}) = M x 0.10

Where: M= Tons of bituminous concrete mixture exceeding the tolerances in Table 4.06-5.

TABLE 4.06-6
TOLERANCES FOR CONSECUTIVE TESTS (MARSHALL)

Classes	Criteria	% Tolerances (+/-)
-	Binder	0.4
1, 2, 4, 5, 5A & 5B	#200	2.0
1, 2, 4	#50	4
1, 2, 5, 5A & 5B	#30	5
1, 2, 4, 5, 5A & 5B	#8	6
1, 2, 4, 5, 5A & 5B	#4	7
1, 2, 4, 5, 5A & 5B	⅜ & ½ inch	8

(2) *Superpave Design*- The adjustment values in Table 4.06-7 and 4.06-8 shall be calculated for each sub lot based on the Air Void and Liquid Binder Content test results for that sub lot. The total adjustment for each day's production (lot) will be computed using tables and the following formulas:

Tons Adjusted for Superpave Design (T_{SD}) = $[(AdjAV_t + AdjPB_t) / 100]$ X Tons

<u>Percent Adjustment for Air Voids</u> = $AdjAV_t = [AdjAV_1 + AdjAV_2 + AdjAV_i + \ldots + AdjAV_n)] /n$

Where: $AdjAV_t$ = Total percent air void adjustment value for the lot
$AdjAV_i$ = Adjustment value from Table 4.06-7 resulting from each sub lot or the average of the adjustment values resulting from multiple tests within a sub lot, as approved by the Engineer.
n = number of sub lots based on Table M.04.03-1

TABLE 4.06-7
ADJUSTMENT VALUES FOR AIR VOIDS (SUPERPAVE)

Adjustment Value ($AdjAV_i$) (%)	S0.25, S0.375, S0.5, S1 Air Voids (AV)

+2.5	3.8 - 4.2
+3.125*(AV-3)	3.0 - 3.7
-3.125*(AV-5)	4.3 – 5.0
20*(AV-3)	2.3 – 2.9
-20*(AV-5)	5.1 – 5.7
-20.0	$\leq$ 2.2 or $\geq$ 5.8

Percent Adjustment for Liquid Binder = $AdjPB_t = [(AdjPB_1 + AdjPB_2 + AdjPB_i + \ldots + AdjPB_n)] / n$

Where: $AdjPB_t$= Total percent liquid binder adjustment value for the lot
$AdjPB_i$ = Adjustment value from Table 4.06-7 resulting from each sub lot
n = number of binder tests in a production lot

TABLE 4.06-8

Adjustment Value ($AdjAV_i$) (%)	**S0.25, S0.375, S0.5, S1 Pb (refer to Table M.04.03-5)**
0.0	Equal to or above the min. liquid content
- 10.0	Below the min. liquid content

e) Density Adjustment: The quantity of bituminous concrete measured for payment for a specified lift of pavement 1½ inches or greater may be adjusted for density. Separate density adjustments will be made for each lot and will not be combined to establish one density adjustment. If either the Mat or Joint adjustment value is "remove and replace", the density lot shall be removed and replaced (curb to curb).

Tons Adjusted for Density (T_D) = $[\{(PA_M \times .50) + (PA_J \times .50)\} / 100]$ X Density Lot Tons

Where: T_D = Total tons adjusted for density for each lot
PA_M = Mat density percent adjustment from Table 4.06-9
PA_J = Joint density percent adjustment from Table 4.06-10

TABLE 4.06-9
ADJUSTMENT VALUES FOR PAVEMENT MAT DENSITY

Average Core Result Percent Mat Density	**Percent Adjustment (Bridge and Non-Bridge) (1,2)**
97.1 - 100	-1.667*(ACRPD-98.5)
94.5 – 97.0	+2.5

93.5 – 94.4	+2.5*(ACRPD-93.5)
92.0 – 93.4	0
90.0 – 91.9	-5*(92-ACRPD)
88.0 – 89.9	-10*(91-ACRPD)
87.0 – 87.9	-30
86.9 or less	Remove and Replace (curb to curb)

TABLE 4.06-10
ADJUSTMENT VALUES FOR PAVEMENT JOINT DENSITY

Average Core Result Percent Joint Density	Percent Adjustment (Bridge and Non-Bridge) (1,2)
97.1 – 100	-1.667*(ACRPD-98.5)
93.5 – 97.0	+2.5
92.0 – 93.4	+1.667*(ACRPD-92)
91.0 – 91.9	0
89.0 – 90.9	-7.5*(91-ACRPD)
88.0 – 88.9	-15*(90-ACRPD)
87.0 – 87.9	-30
86.9 or less	Remove and Replace (curb to curb)

(1) ACRPD = Average Core Result Percent Density
(2) All Percent Adjustments to be rounded to the second decimal place. For example, 1.667 is to be rounded to 1.67.

3. Transitions for Roadway Surface: The installation of permanent transitions shall be measured under the appropriate item used in the formation of the transition.

The quantity of material used for the installation of temporary transitions shall be measured for payment under the appropriate item used in the formation of the transition. The installation and removal of a bond breaker, and the removal and disposal of any temporary transition formed by milling or with bituminous concrete pavement is not measured for payment.

4. Cut Bituminous Concrete Pavement: The quantity of bituminous concrete pavement cut will be measured in accordance with Article 2.02.04.

5. Material for Tack Coat: The quantity of tack coat will be measured for payment by the number of gallons furnished and applied on the Project and approved by the Engineer. No tack coat material shall be included that is placed in excess of the tolerance described in Article 4.06.03.

Method of Measurement:

a. Container Method- Material furnished in a container will be measured to the nearest ½ gallon. The volume will be determined by either measuring the volume in the original container by a method approved by the Engineer or using a separate graduated container capable of measuring the volume to the nearest ½ gallon. The container in which the material is furnished must include the description of material, including lot number or batch number and manufacturer or product source.

b. Truck Method- The Engineer will establish a weight per gallon of the bituminous material based on the specific gravity at 60ºF for the material furnished. The number of gallons furnished will be determined by weighing the material on scales furnished by and at the expense of the Contractor.

6. Material Transfer Vehicle (MTV) **- The furnishing and use of a MTV will be measured separately for payment based on the actual number of surface course tons delivered to a paver using the MTV.**

4.06.05—Basis of Payment:

1. Bituminous Concrete Class ( ), HMA S* or PMA S*: The furnishing and placing of bituminous concrete will be paid for at the Contract unit price per ton for "Bituminous Concrete, Class ( )" or "HMA S*" or "PMA S*".

- All costs associated with providing illumination of the work area are included in the general cost of the work.
- All costs associated with constructing longitudinal joints are included in the general cost of the work.
- All costs associated with obtaining cores for core correlation and dispute resolution are included in the general cost of the work.

2. Bituminous Concrete Adjustment Costs: The adjustment will be calculated using the formulas shown below if all of the measured adjustments in Article 4.06.04 do not equal zero. A payment will be made for a positive adjustment. A deduction from monies due the Contractor will be made for a negative adjustment.

Production Lot: $[T_T + T_A + T_W + (T_{MD} \text{ or } T_{SD})] \times \text{Unit Price} = \text{Est. (P)}$

Density Lot: $T_D \times \text{Unit Price} = \text{Est. (D)}$

Where: Unit Price = Contract unit price per ton per type of mixture

T_* = Total tons of each adjustment calculated in Article 4.06.04

Est. ( ) = Pay Unit represented in dollars representing incentive or disincentive.

The estimated cost figure if included in the bid proposal or estimate is not to be altered in any manner by the bidder. If the bidder should alter the amount shown, the altered figure will be disregarded and the original cost figure will be used to determine the amount of the bid for the Contract.

3. Transitions for Roadway Surface: The installation of permanent transitions shall be paid under the appropriate item used in the formation of the transition. The quantity of material used for the installation of temporary transitions shall be paid under the appropriate pay item used in the formation of the transition. The installation and removal of a bond breaker, and the removal and disposal of any temporary transition formed by milling or with bituminous concrete pavement is included in the general cost of the work.

4. The cutting of bituminous concrete pavement will be paid in accordance with Article 2.02.05.

5. Material for tack coat will be paid for at the Contract unit price per gallon for "Material for Tack Coat".

6. The Material Transfer Vehicle (MTV) will be paid at the Contract unit price per ton for a "Material Transfer Vehicle".

Pay Item*	Pay Unit*
Bituminous Concrete, Class ( )	ton
HMA S*	ton
PMA S*	ton
Bituminous Concrete Adjustment Cost	est.
Material for Tack Coat	gal.
Material Transfer Vehicle	ton

*For contracts administered by the State of Connecticut, Department of Administrative Services, the pay items and pay units are as shown in contract award price schedule.

SECTION M.04 BITUMINOUS CONCRETE

Section M.04 is being deleted in its entirety and replaced with the following:

M.04.01—Bituminous Concrete Materials and Facilities
M.04.02—Mix Design and Job Mix Formula (JMF)
M.04.03—Production Requirements

M.04.01—Bituminous Concrete Materials and Facilities: Each source of material, and facility or plant used to produce and test bituminous concrete must be qualified on an annual basis by the Engineer. Test Procedures and Specifications referenced herein are in accordance with the latest AASHTO and ASTM Standard Test Procedures and Specifications. Such references when noted with an (M) have been modified by the Engineer and are detailed in Table M.04.03-6.

The Contractor shall submit to the Engineer all sources of coarse aggregate, fine aggregate, mineral filler, PG binder, and if applicable any additives such as but not limited to anti-strip, warm mix, and polymer modifiers. The Contractor shall submit a Material Safety Data Sheet (MSDS) for each grade of binder, and additive to be used on the Project. The Contractor shall not change any material sources without prior approval of the Engineer.

An adequate quantity of each size aggregate, mineral filler, bitumen, and additives, shall be maintained at the bituminous concrete plant site at all times while the plant is in operation to ensure that the plant can consistently produce bituminous concrete mixtures that meet the job mix formula (JMF) as specified in Article M.04.02. The quantity of such material shall be reviewed by the Engineer on an individual plant basis and is dependent upon the plant's daily production capacity. A total quantity of any material on site that amounts to less than one day's production capacity may be cause for the job mix formula to be rejected.

1. Coarse Aggregate:

a. Requirements: The coarse aggregate shall consist of clean, hard, tough, durable fragments of crushed stone or crushed gravel of uniform quality. Aggregates from multiple sources of supply must not be mixed or stored in the same stockpile.

b. Basis of Approval: The request for approval of the source of supply shall include a washed sieve analysis in accordance with AASHTO T 27. The Gsa, Gsb, and Pw_a shall be determined in accordance with AASHTO T 85. The coarse aggregate must not contain more than 1% crusher dust, sand, soft disintegrated pieces, mud, dirt, organic and other injurious materials. When tested for abrasion using AASHTO T 96, the aggregate loss must not exceed 40%. When tested for soundness using AASHTO T 104 with a magnesium sulfate solution, the coarse aggregate must not have a loss exceeding 10% at the end of 5 cycles.

For all bituminous mixtures, materials shall also meet the coarse aggregate angularity criteria as specified in Tables M.04.02-2 thru M.04.02-4 for blended aggregates retained

on the #4 sieve when tested according to ASTM D 5821. The amount of aggregate particles of the coarse aggregate blend retained on the #4 sieve that are flat or elongated shall be determined in accordance with ASTM D 4791 and shall not exceed 10% by weight when tested to a 3:1 ratio, as shown in Tables M.04.02-2 thru M.04.02-4.

2. Fine Aggregate:

Requirements: The fine aggregate from each source quarry/pit deposit shall consist of clean, hard, tough, rough-surfaced and angular grains of natural sand; manufactured sand prepared from washed stone screenings; stone screenings, slag or gravel; or combinations thereof, after mechanical screening or manufactured by a process approved by the Engineer. The Contractor is prohibited from mixing two or more sources of fine aggregate on the ground for the purpose of feeding into a plant.

a. All fine aggregate shall meet the listed criteria shown in items #1 thru #7 of Table M.04.01-1. Table M.04.01-1 indicates the quality tests and criteria required for all fine aggregate sources. Individually approved sources of supply shall not be mixed or stored in the same stockpile. The fine aggregates must be free from injurious amounts of clay, loam, and other deleterious materials.

For Superpave mixtures, in addition to the above requirements, the fine aggregate angularity shall be determined by testing the materials passing the #8 sieve in accordance with AASHTO T 304, Method A. Qualification shall be based on the criteria listed in Tables M.04.02-2 thru M.04.02-4. The fine aggregate shall also be tested for clay content as a percentage contained in materials finer than the #8 sieve in accordance with AASHTO T 176.

Table M.04.01-1: Fine Aggregate Criteria by Pit/Quarry Source

Item	Title	AASHTO Protocol(s)	Criteria
1	Grading	T 27 & T 11	100% Passing 3/8 inch 95% Passing the #4 min.
2	Absorption	T 84	3% maximum
3	Plasticity limits	T 90	0 or not detectable
4	L.A. Wear	T 96	50% maximum(fine agg. particle size # 8 and above)
5	Soundness by Magnesium Sulfate	T 104	20% maximum @ 5 cycles
6	Clay Lumps and Friable Particles	T 112	3% maximum
7	Deleterious Material	As determined by the Engineer	Organic or inorganic calcite, hematite, shale, clay or clay lumps, friable materials, coal-lignite, shells, loam, mica, clinkers, or organic matter (wood, etc). -Shall not contain more than 3% by mass of any individual listed constituent and not more than 5% by mass in total of all listed constituents.
8	Petrographic Analysis	ASTM C 295	Terms defined in Section M.04.01-2c.

b. Basis of Approval: A Quality Control Plan for Fine Aggregate (QCPFA) provided by the Contractor shall be submitted for review and approval for each new source documenting how conformance to Items 1 through 7 as shown in Table M.04.01-1 is monitored. The QCPFA must be resubmitted any time the process, location or manner of how the fine aggregate (FA) is manufactured changes, or as requested by the Engineer. The QCPFA must include the locations and manufacturing processing methods. The QCPFA for any source may be suspended by the Engineer due to the production of inconsistent mixtures.

The Contractor shall submit all test results to the Engineer for review. The Contractor shall also include a washed sieve analysis in accordance with AASHTO T 27/T 11. Any fine aggregate component or final combined product shall have 100% passing the 3/8 inch sieve and a minimum of 95% passing the # 4. The Gsa, Gsb, and Pw_a shall be determined in accordance with AASHTO T 84.

The Contractor will be notified by the Engineer if any qualified source of supply fails any portion of Table M.04.01-1. One retest will be allowed for the Contractor to make corrections and/or changes to the process. If, upon retest, the material does not meet the requirements of items 1-7, additional testing will be required in accordance with item 8.

c. The Contractor may provide a Petrographic analysis of the material performed by a third party acceptable to the Engineer at its' own expense. The Contractor shall submit the results of the analysis with recommended changes to the manufacturing process to the Engineer. The Contractor shall submit fine aggregate samples for testing by the Engineer after the recommended changes have been made.

The Contractor may request the use of such fine aggregate on select project(s) for certain applications of bituminous concrete pavement. Such material will be monitored for a period no less than 48 months, at no cost to the State. Terms of any evaluation and suitable application will be determined by the Engineer.

3. Mineral Filler:

a. Requirements: Mineral filler shall consist of finely divided mineral matter such as rock dust, including limestone dust, slag dust, hydrated lime, hydraulic cement, or other accepted mineral matter. At the time of use it shall be freely flowing and devoid of agglomerations. Mineral filler shall be introduced and controlled at all times during production in a manner acceptable to the Engineer.

b. Basis of Approval: The request for approval of the source of supply shall include the location, manufacturing process, handling and storage methods for the material. Mineral filler shall conform to the requirements of AASHTO M-17

4. Liquid Bituminous Materials:

a. General:

i Liquid PG binders shall be uniformly mixed and blended and be free of contaminants such as fuel oils and other solvents. Binders shall be properly heated and stored to prevent damage or separation.

ii. The blending at mixing plants of PG binder from different suppliers is strictly prohibited. Contractors who blend PG binders will be classified as a supplier and will be required to certify the binder in accordance with AASHTO R-26(M). The binder shall meet the requirements of AASHTO M-320(M) and AASHTO R-29(M). The Contractor shall submit a Certified Test Report and bill of lading representing each delivery in accordance with AASHTO R-26(M). The Certified Test Report must also indicate the binder specific gravity at 77ºF; rotational viscosity at 275ºF and 329ºF and the mixing and compaction viscosity-temperature chart for each shipment.

iii. The Contractor shall submit the name(s) of personnel responsible for receipt, inspection, and record keeping of PG binder materials. Contractor plant personnel shall document specific storage tank(s) where binder will be transferred and stored until used, and provide binder samples to the Engineer upon request. The person(s) shall assure that each shipment (tanker truck) is accompanied by a statement certifying that the transport vehicle was inspected before loading and was found acceptable for the material shipped and that the binder will be free of contamination from any residual material, along with two (2) copies of the bill of lading.

iv. Basis of Approval: The request for approval of the source of supply shall list the location where the material will be manufactured, and the handling and storage methods, along with necessary certification in accordance with AASHTO R-26(M). Only suppliers/refineries that have an approved "Quality Control Plan for Performance Graded Binders" formatted in accordance with AASHTO R-26(M) will be allowed to supply PG binders to Department projects.

b. Neat Performance Grade (PG) Binder:

i. PG binder shall be classified by the supplier as a "Neat" binder for each lot and be so labeled on each bill of lading. Neat PG binders shall be free from modification with: fillers, extenders, reinforcing agents, adhesion promoters, thermoplastic polymers, acid modification and other additives, and shall indicate such information on each bill of lading and certified test report.

ii. The asphalt binder shall be Performance Grade PG 64-22.

c. Modified Performance Grade (PG) Binder

Unless otherwise noted, the asphalt binder shall be Performance Grade PG 76-22 asphalt modified with a Styrene-Butadiene-Styrene (SBS) polymer. The polymer modifier shall be added at either the refinery or terminal and delivered to the bituminous concrete production facility as homogenous blend. The stability of the modified binder shall be verified in accordance with ASTM D7173 using the Dynamic Shear Rheometer (DSR). The DSR G*/sin(δ) results from the top and bottom sections of the ASTM D7173 test shall not differ by more than 10%. The results of ASTM D7173 shall be included on the Certified Test Report. The binder shall meet the requirements of AASHTO M-320(M) and AASHTO R-29(M).

d. Warm Mix Additive or Technology:

i. The warm mix additive or technology must be listed on the NEAUPG Qualified Warm Mix Asphalt (WMA) Technologies List at the time of bid, which may be accessed online at http://www.neaupg.uconn.edu/wma_info.html.

ii. The warm mix additive shall be blended with the asphalt binder in accordance with the manufacturer's recommendations.

iii. The blended binder shall meet the requirements of AASHTO M-320(M) and AASHTO R-29(M) for the specified binder grade. The Contractor shall submit a Certified Test Report showing the results of the testing demonstrating the binder grade. In addition, it must include the grade of the virgin binder, the brand name of the warm mix additive, the manufacturer's suggested rate for the WMA additive, the water injection rate (when applicable) and the WMA Technology manufacturer's recommended mixing and compaction temperature ranges.

iv. Cut-backs (medium cure type);

i. Requirements: The liquid petroleum materials shall be produced by fluxing an asphalt base with appropriate petroleum distillates to produce the grade specified.

ii. Basis of Approval: The request for approval of the source of supply shall be submitted at least seven days prior to its use listing the location where the materials will be produced, and manufacturing, processing, handling and storage methods. The Contractor shall submit a Certified Test Report in accordance with Section 1.06 and a Material Safety Data Sheet (MSDS) for the grade to be used on the Project. The liquid asphalt shall be MC-250 conforming to AASHTO M-82.

e. Emulsions

i. Requirements: The emulsified asphalt shall be homogeneous and not be used if exposed to freezing temperatures.

ii. Basis of Approval**:** The request for approval of the source of supply must include the location where the materials will be produced, and manufacturing, processing, handling and storage methods.

1. Emulsified asphalts shall conform to the requirements of AASHTO M-140. Materials used for tack coat shall not be diluted and meet grade RS-1. When ambient temperatures are 80˚F and rising, grade SS-1 or SS-lh may be substituted if accepted by the Engineer. Each shipment shall be accompanied with a Certified Test Report listing Saybolt viscosity, residue by evaporation, penetration of residue, and weight per gallon.

2. Cationic emulsified asphalt shall conform to the requirements of AASHTO M-208(M). Materials used for tack coat shall not be diluted and meet grade CRS-1. The settlement and demulsibility test will not be performed unless deemed necessary by the Engineer. When ambient temperatures are 80˚F and rising, grade CSS-1 or CSS-lh may be substituted if accepted by the Engineer. Each shipment shall be accompanied with a Certified Test Report listing Saybolt viscosity, residue by evaporation, penetration of residue, and weight per gallon.

5. Reclaimed Asphalt Pavement (RAP):

a. Requirements: RAP shall consist of asphalt pavement constructed with asphalt and aggregate reclaimed by cold milling or other removal techniques approved by the Engineer. For bituminous concrete mixtures containing RAP, the Contractor shall submit a JMF in accordance with Article M.04.02 to the Engineer for review.

b. Basis of Approval: The RAP material will be accepted on the basis of one of the following criteria:

i. When the source of all RAP material is from pavements previously constructed on Department projects, the Contractor shall provide a materials certificate listing the detailed locations and lengths of those pavements and that the RAP is only from those locations listed.

ii. When the RAP material source or quality is not known, the Contractor shall test the material and provide the following information along with a request for approval to the Engineer at least 30 calendar days prior to the start of the paving operation. The request shall include a material certificate stating that the RAP consists of aggregates that meet the specification requirements of sub articles M.04.01-1 through 3 and that the binder in the RAP is substantially free of solvents, tars and other contaminants. The Contractor is prohibited from using unapproved material on Department projects

and shall take necessary action to prevent contamination of approved RAP stockpiles. Stockpiles of unapproved material shall remain separate from all other RAP materials at all times. The request for approval shall include the following:

1. A 50-pound sample of the RAP to be incorporated into the recycled mixture.
2. A 25-pound sample of the extracted aggregate from the RAP.
3. A statement that RAP material has been crushed to 100% passing the ½ inch sieve and remains free from contaminants such as joint compound, wood, plastic, and metals.

6. Crushed Recycled Container Glass (CRCG):

a. Requirements: The Contractor may propose to use clean and environmentally-acceptable CRCG in an amount not greater than 5% by weight of total aggregate.

b. Basis of Approval: The Contractor shall submit to the Engineer a request to use CRCG. The request shall state that the CRCG contains no more than 1% by weight of contaminants such as paper, plastic and metal and conform to the following gradation:

CRCG Grading Requirements	
Sieve Size	Percent Passing
3/8-inch	100
No. 4	35-100
No. 200	0.0-10.0

7. Joint Seal Material:

Requirements: Joint seal material shall be a hot-poured rubber compound intended for use in sealing joints and cracks in bituminous concrete pavements. Joint seal material must meet the requirements of AASHTO M-324 – Type 2.

8. Plant Requirements:

a. Mixing Plant and Machinery:

The mixing plant used in the preparation of the bituminous concrete shall comply with AASHTO M-156(M)/ASTM D 995 for a Batch Plant or a Drum Dryer Mixer Plant, and be approved by the Engineer.

b. Storage Silos:

For all mixes, the Contractor may use silos for short-term storage of Superpave mixtures with prior notification and approval of the Engineer. A silo must have heated cones and an unheated silo cylinder if it does not contain a separate internal heating system. Prior approval must be obtained for storage times greater than those indicated. When multiple

silos are filled, the Contractor shall discharge one silo at a time. Simultaneous discharge of multiple silos is not permitted.

Type of silo cylinder	Maximum storage time for all classes (hr)	
	HMA	WMA/PMA
Open Surge	4	Mfg Recommendations
Unheated – Non-insulated	8	Mfg Recommendations
Unheated – Insulated	18	Mfg Recommendations
Heated – No inert gas	TBD by the Engineer	

c. Documentation System: The mixing plant documentation system shall include equipment for accurately proportioning the components of the mixture by weight and in the proper order, controlling the cycle sequence and timing the mixing operations. Recording equipment shall monitor the batching sequence of each component of the mixture and produce a printed record of these operations on each delivery ticket, as specified herein. Material feed controls shall be automatically or manually adjustable to provide proportions within the tolerances listed below for any batch size.

An asterisk (*) shall be automatically printed next to any individual batch weight(s) exceeding the tolerances in ASTM D 995 section 8.7.3. The entire batching and mixing interlock cut-off circuits shall interrupt and stop the automatic batching operations when an error exceeding the acceptable tolerance occurs in proportioning.

There must be provisions so that scales are not manually adjusted during the printing process. In addition, the system shall be interlocked to allow printing only when the scale has come to a complete rest. A unique printed character (m) shall automatically be printed on the truck and batch plant printout when the automatic batching sequence is interrupted or switched to auto-manual or full manual during proportioning. For each day's production, each project shall be provided a clear, legible copy of these recordings on each delivery ticket.

d. Aggregates: The Contractor shall ensure that aggregate stockpiles are managed to provide uniform gradation and particle shape, prevent segregation and cross contamination in a manner acceptable to the Engineer. For drum plants only, the Contractor shall determine the percent moisture content at a minimum, prior to production and half way through production.

e. Mixture: The dry and wet mix times shall be sufficient to provide proper coating (minimum 95% as determined by AASHTO T 195(M)) of all particles with bitumen and produce a uniform mixture.

The Contractor shall make necessary adjustments to ensure all types of bituminous concrete mixtures contain no more than 0.5% moisture throughout when tested in accordance with AASHTO T 329.

f. RAP: The Contractor shall indicate the percent of RAP, the moisture content (as a minimum determined twice daily – prior to production and halfway through production), and the net dry weight of RAP added to the mixture on each truck ticket. For each day of production, the production shall conform to the job mix formula and RAP percentage and no change shall be made without the prior approval of the Engineer.

g. Asphalt Binder: The last day of every month, a binder log shall be submitted when the monthly production for the Department exceeds 5000 tons. Blending of PG binders from different suppliers or grades at the bituminous concrete production facility is strictly prohibited.

h. Warm mix additive: For mechanically foamed WMA, the maximum water injection rate shall not exceed 2.0% water by total weight of binder and the water injection rate shall be constantly monitored during production.

i. Field Laboratory: The Contractor shall furnish the Engineer an acceptable field laboratory at the production facility to test bituminous concrete mixtures during production. The field laboratory shall have a minimum of 300 square feet, have a potable water source and drainage in accordance with the CT Department of Public Health Drinking Water Division, be equipped with all necessary testing equipment as well as with a PC, printer, and telephone with a dedicated hard-wired phone line. In addition, the PC shall have a high speed internet connection with a minimum upstream of 384 Kbps and a functioning web browser with unrestricted access to https://ctmail.ct.gov. This equipment shall be maintained in clean and good working order at all times and be made available for use by the Engineer.

The laboratory shall be equipped with a suitable heating system capable of maintaining a minimum temperature of 65°F. It shall be clean and free of all materials and equipment not associated with the laboratory. Windows shall be installed to provide sufficient light and ventilation. During summer months adequate cooling or ventilation must be provided so the indoor air temperature shall not exceed the ambient outdoor temperature. Light fixtures and outlets shall be installed at convenient locations, and a telephone shall be within audible range of the testing area. The laboratory shall be equipped with an adequate workbench that has a suitable length, width, and sampling tables, and be approved by the Engineer.

The field laboratory testing apparatus, supplies, and safety equipment shall be capable of performing all tests in their entirety that are referenced in AASHTO R 35(M), *Standard Practice for Superpave Volumetric Design for Hot-Mix Asphalt (HMA)* and AASHTO M 323, *Standard Specification for Superpave Volumetric Mix Design*. In addition, the quantity of all equipment and supplies necessary to perform the tests must be sufficient to initiate and complete the number of tests identified in Table M.04.03-2 for the quantity of mixture produced at the facility on a daily basis. The Contractor shall ensure that the

Laboratory is adequately supplied at all times during the course of the project with all necessary testing materials and equipment.

The Contractor shall maintain a list of laboratory equipment used in the acceptance testing processes including but not limited to, balances, scales, manometer/vacuum gauge, thermometers, gyratory compactor, clearly showing calibration and/or inspection dates, in accordance with AASHTO R-18.The Contractor shall notify the Engineer if any modifications are made to the equipment within the field laboratory. The Contractor shall take immediate action to replace, repair, and/or recalibrate any piece of equipment that is out of calibration, malfunctioning, or not in operation.

M.04.02—Mix Design and Job Mix Formula (JMF)

1. Marshall Method - Class 1, 2, 3, 4, 5, 5A, 5B and 12:

a. Requirements: When specified, the Marshall method shall be employed to develop a bituminous concrete mix design that includes a JMF consisting of target values for gradation and bitumen content for each class of bituminous concrete designated for the project in accordance with the latest Asphalt Institute's MS-2 manual. Each class of bituminous concrete must meet the requirements as shown in Table M.04.02-1.

b. Basis of Approval: The Contractor shall submit to the Engineer a request for approval of the JMF annually in accordance with one of the methods described herein. Prior to the start of any paving operations, the JMF and production percentage of bitumen must be accepted by the Engineer, and the Contractor must demonstrate the ability to meet the accepted JMF and production percentage of bitumen for each class of mixture. Additionally, the fraction of material retained between any two consecutive sieves shall not be less than 4%.

The Engineer will test each class of mixture for compliance with the submitted JMF and Table M.04.02-1. The maximum theoretical density (Gmm) will be determined by AASHTO T 209(M). If the mixture does not meet the requirements, the JMF shall be adjusted within the ranges shown in Table M.04.02-1 until an acceptable mixture is produced. All equipment, tests and computations shall conform to the Marshall method in accordance with AASHTO T 245(M).

An accepted JMF from the previous operating season may be acceptable to the Engineer provided that there are no changes in the sources of supply for the coarse aggregate, fine aggregate, recycled material (if applicable) and the plant operation had been consistently producing acceptable mixture.

The Contractor shall not change sources of supply after a JMF has been accepted. Before a new source of supply for materials is used, a new JMF shall be submitted to the Engineer for approval.

c. Marshall Mixture (Virgin): For bituminous concrete mixtures that contain no recycled material, the limits prescribed in Table M.04.02-1 govern. The Contractor shall submit to the Engineer for approval, a JMF with the individual fractions of the aggregate expressed as percentages of the total weight of the mix and the source(s) of all materials. The JMF shall indicate two bitumen contents; the JMF target percentage and a production percentage (actual amount added to mix) of bitumen for each mix class by total weight. For surface course Class 1, a 0.45 power gradation chart shall also be submitted on which is plotted the percentage passing each sieve. The JMF shall also indicate the target temperature of completed mixture as it is dumped from the mixer and tested in accordance with Article M.04.03.

d. Marshall Mixtures with RAP: In addition to subarticles M.04.02 – 1a through c, RAP in bituminous concrete shall comply with requirements stated in Article M.04.01, and as stated herein. Upon approval of the Engineer, a maximum of 15% RAP may be used with no binder grade modification. RAP material shall not be used with any other recycling option.
The Contractor may increase the RAP percentage in 5% increments up to a maximum of 30% provided a new JMF is accepted by the Engineer. The following information shall be included in the JMF submittal:
- Gradation and asphalt content of the RAP.
- Percentage of RAP to be used.
- Virgin aggregate source(s).
- Total binder content based on total mixture weight.
- Production pull percentage of added virgin binder based on total mixture weight.
- Gradation of combined bituminous concrete mixture (including RAP).
- Grade of virgin added, if greater than 15% of total mix weight.

e. Marshall Mixture with CRCG: In addition to subarticle M.04.02 – 1a through c, for bituminous concrete that contains CRCG, the Contractor shall submit a materials certificate to the Engineer stating that the mixture and its components comply with requirements stated in subarticle M.04.01 - (6). Additionally, 1% hydrated lime, or other accepted non-stripping agent, shall be added to all mixtures containing CRCG. CRCG material shall not be used with any other recycling option.

2. Cold Patch Method - Class 5, 5A, 5B:

a. Requirements: This mixture must be capable of being stockpiled and workable at all times. A non-stripping agent accepted by the Engineer shall be used in accordance with manufacturer's recommendations. The Contractor shall take necessary steps to ensure that this mixture uses aggregate containing no more than 1% moisture and is not exposed to any rain, snow, or standing water for a period of 6 hours after being mixed. This mixture shall be mixed and stockpiled at the point of production on a paved surface at a height not greater than 4 feet during the first 48 hours prior to its use.

i. Class 5A mixture shall have 3/8 to ½ inch polypropylene fibers that have been approved by the Engineer added at a rate of 6 pounds per ton of mixture.
ii. Class 5B mixture shall have ¼ inch polyester fibers that have been approved by the Engineer added at the rate of 2 1/2 pounds per ton of mixture.
iii. Class 5 mixture shall not contain fibers.

b. Basis of Approval: The aggregates, fibers and binder (MC-250) shall meet the requirements as specified in sub articles M.04.01-1 through 4 and in Table M.04.02-1. The use of recycled material is not permitted with these classes of bituminous concrete. Mixtures not conforming to the binder content as shown in Table M.04.02-1 shall be subject to rejection. There is a two test minimum per day of production. Mixtures not conforming to the gradation as shown in Table M.04.02-1 shall be subject to payment adjustment as specified in Section 4.06.

TABLE M.04.02 – 1 MASTER RANGES FOR MARSHALL BITUMINOUS-CONCRETE MIXTURES

Notes: (a) 75 blow (Marshall Criteria). (b) 3-6% when used for a roadway wearing surface. (c) For divided highways with 4 or more lanes, a stability of 1500 lbs is required. (d) Contains an accepted non-stripping compound. (e) To help prevent stripping, the mixed material will be stockpiled on a paved surface and at a height not greater than 4 feet during the first 48 hours. (f) As determined by AASHTO T 245(M). (g) The percent passing the #200 sieve shall not exceed the percentage of bituminous asphalt binder determined by AASHTO T 164 or AASHTO T 308(M). (h) Mixture with 5% or more aggregate retained on ¾" sieve. (i) Mixtures finer than condition (h) above. (j) Class 5 mixture shall contain no fibers. Class 5A mixture shall have 3/8 to ½ inch polypropylene fibers that have been previously accepted by the Engineer added at a minimum rate of 6 pounds per ton of mixture. Class 5B mixture shall have ¼ inch polyester fibers that have been previously accepted by the Engineer added at the minimum rate of 2 1/2 pounds per ton of mixture

CLASS	1	2	3	4	12	5 (e)(j)	5A (e)(j)	5B (e)(j)	JMF % Tol. (±)
Grade of PG Binder content %	PG 64-22 5.0 – 6.5	PG 64-22 5.0 – 8.0	PG 64-22 6.5 - 9.0	PG 64-22 4.0 - 6.0	PG 64-22 7.5 - 10.0	MC-250 (d) 6.0 - 7.5	MC-250 (d) 6.0 - 7.5	MC-250 (d) 6.0 - 7.5	0.4
Sieve Size	Percent Passing (%)								
# 200	3.0 – 8.0 (g)	3.0 – 8.0 (g)	3.0 – 8.0 (g)	0.0 – 5.0 (g)	3.0 – 10.0 (g)	0.0 - 2.5	0 .0- 2.5	0.0 - 2.5	2.0
# 50	6 – 26	8 – 26	10 - 30	5 - 18	10 - 40				4
# 30	10 - 32	16 - 36	20 - 40		20 - 60	2 - 15	2 – 15	2 - 15	5
# 8	28 - 50	40 - 64	40 - 70	20 - 40	60 - 95	10 - 45	10 – 45	10 - 45	6
# 4	40 - 65	55 - 80	65 - 87	30 - 55	80 - 95	40 - 100	40 – 100	40 - 100	7
¼"									
3/8 "	60 - 82	90 - 100	95 - 100	42 - 66	98 - 100	100	100	100	8
½ "	70 - 100	100	100		100				8
¾"	90 - 100			60 - 80					8
1"	100								
2"				100					
Additionally, the fraction of material retained between any two consecutive sieves shall not be less than 4%									
Mixture Temperature									
Binder	325°F maximum					140-185° F			
Aggregate	280-350° F					100-175° F			
Mixtures	**265-325° F**				**275-325°F**	**120-175° F**			**25 °F**
Mixture Properties									
VOIDS - %	3.0 – 6.0 (a)	2.0 – 5.0 (b)	0 – 4.0		0 - 5.0 (a)				
Stability (f) lbs. min.	1200 (c)	1000	1000		1000				
FLOW (f) in.	.08 - .15	.08 - .15	.08 - .18		.08 - .15				
VMA % - min.	15(h) :16 (i)								

3. Superpave Design Method – S0.25, S0.375, S0.5, and S1

a. Requirements: The Contractor or its representative shall design and submit Superpave mix designs annually for approval. The design laboratory developing the mixes shall be approved by the Engineer. The mix design shall be based on the specified Equivalent Single-Axle Loads (ESAL). Each bituminous concrete mix type must meet the requirements shown in Tables M.04.02-2 thru Table M.04.02-5 and in accordance with AASHTO M 323(M) and AASHTO R 35(M). The mix design shall include the nominal maximum aggregate size and a JMF consisting of target values for gradation and bitumen content for each bituminous concrete mix type designated for the project.

The contractor shall provide test results with supporting documentation from an AASHTO Materials Reference Laboratory (AMRL) with the use of NETTCP Certified Technicians for the following tests;

1. Aggregate consensus properties for each type & level, as specified in Table M.04.02-3. In addition the Gsa, Gsb, Pw_a shall also be provided for each component aggregate.

2. New mixes shall be tested in accordance with AASHTO T 283(M) *Standard Method of Test for Resistance of Compacted Hot-Mix Asphalt (HMA) to Moisture-Induced Damage*, (TSR). The compacted specimens may be fabricated at a bituminous concrete facility and then tested at an AMRL accredited facility.

   The AASHTO T 283(M) test results, specimens, and corresponding JMF sheet (Form MAT-429s) shall be submitted by the Contractor for review.

The Contractor shall supply the Engineer with 1 gallon of the specified PG binder and 1 gallon of the same PG binder with the warm mix additive blended into it. The MSDS for the WMA additive shall be included with every submittal.

In addition, minimum binder content values apply to all types of bituminous concrete mixtures, as stated in Table M.04.02-5. For mixtures containing RAP, the virgin production and the anticipated proportion of binder contributed by the RAP cannot be less than the total permitted binder content value for that type nor the JMF minimum binder content.

i. Superpave Mixture (virgin): For bituminous concrete mixtures that contain no recycled material, the limits prescribed in Tables M.04.02-2 thru Table M.04.02-5 apply. The Contractor shall submit a JMF, on a form provided by the Engineer, with the individual fractions of the aggregate expressed as percentages of the total weight of the mix and the source(s) of all materials to the Engineer for approval. The JMF shall indicate the corrected target binder content and applicable binder correction factor (ignition oven or extractor) for each mix type by total weight of mix. The mineral filler (dust) shall be defined as that portion of blended mix that

passes the #200 sieve by weight when tested in accordance with AASHTO T 30(M). The dust-to-effective asphalt (D/Pbe) ratio shall be between 0.6 and 1.2 by weight. The dry/wet mix times and hot bin proportions (batch plants only) for each type shall be included in the JMF.

The percentage of aggregate passing each sieve shall be plotted on a 0.45 power gradation chart and shall be submitted for all bituminous concrete mixtures. This chart shall delineate the percentage of material passing each test sieve size as defined by the JMF. The percentage of aggregate passing each standard sieve shall fall within the specified control points, but outside the restricted zone limits as shown in Tables M.04.02-2 thru Table M.04.02-5. Mixes with documented performance history which pass through the restricted zone may be permitted for use as long as all other physical and volumetric criteria meets specifications as specified in Tables M.04.02-2 thru Table M.04.02-5 and with prior approval from the Engineer. A change in the JMF requires that a new chart be submitted.

ii. Superpave Mixtures with RAP: Use of approved RAP may be allowed with the following conditions:

- RAP amounts up to 15% may be used with no binder grade modification.
- RAP amounts up to 20% may be used provided a new JMF is approved by the Engineer. The JMF submittal shall include the grade of virgin binder added and test results that show the combined binder (recovered binder from the RAP, virgin binder at the mix design proportions and warm mix asphalt additive if used) meets the requirements of the specified binder grade.

Unless approved by the Engineer, RAP material shall not be used with any other recycling option.

b. Basis of Approval: On an annual basis, the Contractor shall submit to the Engineer any bituminous concrete mix design, and JMF anticipated for use on Department projects. Prior to the start of any paving operations, the mix design and JMF must be approved by the Engineer. Bituminous concrete mixture supplied to the project without an approved mix design and JMF will be rejected. The following information must be included in the mix design submittal:

a. Gradation, specific gravities and asphalt content of the RAP,
b. Source of RAP and percentage to be used.
c. Warm mix Technology and manufacturer's recommended additive rate and tolerances, mixing and compaction temperature ranges for the mix with and without the warm-mix technology incorporated.
d. Result of TSR testing, and if applicable Anti-strip manufacturer, and dosage rate.
e. Target Temperature at plant discharge.

Note – Testing to be performed shall be done in accordance with section M.04.03.

The JMF shall be accepted if the Plant mixture and materials meet all criteria as specified in Tables M.04.02-2 thru Table M.04.02-5. If the mixture does not meet the requirements, the contractor shall adjust the JMF within the ranges shown in Tables M.04.02-2 thru Table M.04.02-5 until an acceptable mixture is produced. All equipment, tests, and computations shall conform to the latest AASHTO R-35(M) and AASHTO M-323(M).

Any JMF, once approved, shall only be acceptable for use when it is produced by the designated plant, it utilizes the same component aggregates and binder source, and it continues to meet all criteria as specified herein, and component aggregates are maintained within the tolerances shown in Table M.04.02-2.

The Contractor shall not change any component source of supply including consensus properties after a JMF has been accepted. Before a new source of materials is used, a revised JMF shall be submitted to the Engineer for approval. Any approved JMF applies only to the plant for which it was submitted. Only one mix with one JMF will be approved for production at any one time. Switching between approved JMF mixes with different component percentages or sources of supply is prohibited.

Superpave mixture with CRCG: In addition to subarticles M.04.02 – 3 a through c, for bituminous concrete mixtures that contain CRCG, the Contractor shall submit a materials certificate to the Engineer stating that the CRCG complies with requirements stated in Article M.04.01, as applicable. Additionally, 1% hydrated lime, or other accepted non-stripping agent, shall be added to all mixtures containing CRCG. CRCG material shall not be used with any other recycling option.

c. Mix Status: Each facility will have each type of bituminous concrete mixture evaluated based on the previous year of production, for the next construction paving season, as determined by the Engineer. Based on the rating a type of mixture receives it will determine whether the mixture can be produced without the completion of a PPT. Ratings will be provided to each bituminous concrete producer annually prior to the beginning of the paving season.

The rating criteria are based on compliance with Air Voids and Voids in Mineral Aggregate (VMA) as indicated in Table M.04.03-3: *Superpave Master Range for Bituminous Concrete Mixture Production*, and are as follows:

Criteria A: Based on Air Voids. Percentage of acceptance results with passing air voids.

Criteria B: Based on Air Voids and VMA. The percentage of acceptance results with passing VMA, and the percentage of acceptance results with passing air voids, will be averaged.

The final rating assigned will be the lower of the rating obtained with Criteria A or Criteria B.

Ratings are defined as:

"A" – Approved:
A rating of "A" is assigned to each mixture type from a production facility with a current rating of 70% passing or greater.

"PPT" – Pre-Production Trial:
Rating assigned to each mixture type from a production facility when:

1. there are no passing acceptance production results submitted to the Department from the previous year;
2. there is a source change in one or more aggregate components from the JMF on record by more than 10% by weight;
3. there is a change in RAP percentage ,
4. the mixture has a rating of less than 70% from the previous season;
5. a new JMF not previously submitted.

Bituminous concrete mixtures rated with a "PPT" cannot be shipped or used on Department projects. A passing "PPT" test shall be performed with NETTCP certified personnel on that type of mixture by the bituminous concrete producer and meet all specifications (Table M.04.02-2 Table M.04.02-5) before production shipment may be resumed.
Contractors that have mix types rated a "PPT" may use one of the following methods to change the rating to an "A."

Option A: Schedule a day when a Department inspector can be at the facility to witness a passing "PPT" test or,

Option B: When the Contractor or their representative performs a "PPT" test without being witnessed by an inspector, the Contractor shall submit the test results and a split sample including 2 gyratory molds, 5,000 grams of boxed bituminous concrete for binder and gradation determination, and 5,000 grams of cooled loose bituminous concrete for Gmm determination for verification testing and approval. Passing verifications will designate the bituminous concrete type to be on an "A" status. Failing verifications will require the contractor to submit additional trials.

Option C: When the Contractor or their representative performs a "PPT" test without being witnessed by a Department inspector, the Engineer may verify the mix in the Contractor's laboratory. Passing verifications will designate the bituminous concrete type to be an "A" status. Failing verifications will require the Contractor to submit additional trials.

When Option (A) is used and the "PPT" test meets all specifications, the "PPT" test is considered a passing test and the rating for that mix is changed to "A". When the "PPT" test is not witnessed, the "PPT" Option (B) or (C) procedure must be followed. If the "PPT" Option (B) procedure is followed, the mixtures along with the test results must be delivered to the Materials Testing Lab. The test results must meet the "C" tolerances established by the Engineer. The tolerance Table is included in the Department's current QA Program for Materials, Acceptance and Assurance Testing Policies and Procedures.

"U" – No Acceptable Mix Design on File:

Rating assigned to a type of mixture that does not have a JMF submitted, or the JMF submitted has not been approved, or is incomplete. A mix design or JMF must be submitted annually seven (7) days prior in order to obtain an "A," or "PPT" status for that mix. A "U" will be used only to designate the mix status until the mix design has been approved, and is accompanied with all supporting data as specified. Bituminous concrete mixtures rated with a "U" cannot be used on Department projects.

TABLE M.04.02– 2: SUPERPAVE MASTER RANGE FOR BITUMINOUS CONCRETE MIXTURE DESIGN CRITERIA

Notes: (1) Minimum Pb as specified in Table M.04.02-5. (2) Voids in Mineral Aggregates shall be computed as specified herein. (3) Control point range is also defined as the master range for that mix. (4) Dust is considered to be the percent of materials passing the #200 sieve. (5) For WMA, lower minimum aggregate temperature will require Engineer's approval. (6) For WMA and PMA, the mix temperature shall meet manufacturer's recommendations.

	S0.25				**S0.375**				**S0.5**				**S1**			
Sieve	CONTROL POINTS (3)		*RESTRICTED ZONE*		CONTROL POINTS(3)		*RESTRICTED ZONE*		CONTROL POINTS(3)		*RESTRICTED ZONE*		CONTROL POINTS(3)		*RESTRICTED ZONE*	
inches	Min (%)	Max (%)	*Max (%)*	*Min (%)*	Min (%)	Max (%)	*Min (%)*	*Max (%)*	Min (%)	Max (%)	*Min (%)*	*Max (%)*	Min (%)	Max (%)	*Min (%)*	*Max (%)*
2.0	-	-	-	-	-	-	-	-	-	-	-	-	-	-	-	-
1.5	-	-	-	-	-	-	-	-	-	-	-	-	100	-	-	-
1.0	-	-	-	-	-	-	-	-	-	-	-	-	90	100	-	-
3/4	-	-	-	-	-	-	-	-	100	-	-	-	-	90	-	-
1/2	100	-	-	-	100	-	-	-	90	100	-	-	-	-	-	-
3/8	97	100	-	-	90	100	-	-	-	90	-	-	-	-	-	-
#4	-	90	-	-	-	90	-	-	-	-	-	-	-	-	*39.5*	*39.5*
#8	32	67	*47.2*	*47.2*	32	67	*47.2*	*47.2*	28	58	*39.1*	*39.1*	19	45	*26.8*	*30.8*
#16	-	-	*31.6*	*37.6*	-	-	*31.6*	*37.6*	-	-	*25.6*	*31.6*	-	-	*18.1*	*24.1*
#30	-	-	*23.5*	*27.5*	-	-	*23.5*	*27.5*	-	-	*19.1*	*23.1*	-	-	*13.6*	*17.6*
#50	-	-	*18.7*	*18.7*	-	-	*18.7*	*18.7*	-	-	*15.5*	*15.5*	-	-	*11.4*	*11.4*
#100	-	-	-	-	-	-	-	-	-	-	-	-	-	-	-	-
#200	2.0	10.0	-	-	2.0	10.0	-	-	2.0	10.0	-	-	1.0	7.0	-	-
Pb (1)	-	-	-	-	-	-	-	-	-	-	-	-	-	-	-	-
VMA (2) (%)	16.0 ± 1				16.0 ± 1				15.0 ± 1				13.0 ± 1			
VA (%)	4.0 ± 1				4.0 ± 1				4.0 ± 1				4.0 ± 1			
Gse	JMF value				JMF value				JMF value				JMF value			
Gmm	JMF ± 0.030				JMF ± 0.030				JMF ± 0.030				JMF ± 0.030			
Dust/Pbe(4)	0.6 – 1.2				0.6 – 1.2				0.6 – 1.2				0.6 – 1.2			
Agg. Temp(5)	280 – 350F				280 – 350F				280 – 350F				280 – 350F			
Mix Temp(6)	265 – 325 F				265 – 325 F				265 – 325 F				265 – 325 F			
Design TSR	≥ 80%				≥ 80%				≥ 80%				≥ 80%			
T-283 Stripping	Minimal, as determined by the Engineer															

TABLE M.04.02–3
SUPERPAVE MASTER RANGE FOR CONSENSUS PROPERTIES OF COMBINED AGGREGATE STRUCTURES

Notes: (1) If less than 25 % of a given layer is within 4 inches of the anticipated top surface, the layer may be considered to be below 4 inches for mixture design purposes.

Traffic Level	Design ESALs (80 kN)	Coarse Aggregate Angularity (1) ASTM D 5821	Fine Aggregate Angularity (7) AASHTO T 304	Flat or Elongated Particles ASTM D 4791	Sand Equivalent AASHTO T 176
-----	(million)			>#4	-----
1*	< 0.3	55/- -	40	10	40
2	0.3 to < 3.0	75/- -	40	10	40
3	≥ 3.0	95/90	45	10	45
	Design ESALs are the anticipated project traffic level expected on the design lane, projected over a 20 year period, regardless of the actual expected design life of the roadway.	Criteria presented as minimum values. 95/90 denotes that a minimum of 95% of the coarse aggregate, by mass, shall have one fractured face and that a minimum of 90% shall have two fractured faces.	Criteria presented as minimum percent air voids in loosely compacted fine aggregate passing the #8 sieve.	Criteria presented as maximum Percent by mass of flat or elongated particles of materials retained on the #4 sieve, determined at 3:1 ratio.	Criteria presented as minimum values for fine aggregate passing the #8 sieve.

*** NOTE: Level 1 for use by Towns and Municipalities ONLY.**

TABLE M.04.02– 4: SUPERPAVE MASTER RANGE FOR TRAFFIC LEVELS AND DESIGN VOLUMETRIC PROPERTIES.

Traffic Level	Design ESALs	Number of Gyrations by Superpave Gyratory Compactor			Percent Density of Gmm from HMA/WMA specimen			Voids Filled with Asphalt (VFA) Based on Nominal mix size – inch			
	(million)	Nini	Ndes	Nmax	Nini	Ndes	Nmax	0.25	0.375	0.5	1
1*	< 0.3	6	50	75	≤ 91.5	96.0	≤ 98.0	70 - 80	70 - 80	70 - 80	67 - 80
2	0.3 to < 3.0	7	75	115	≤ 90.5	96.0	≤ 98.0	65 - 78	65 - 78	65 - 78	65 - 78
3	≥ 3.0	8	100	160	≤ 90.0	96.0	≤ 98.0	73 – 76	73 - 76	65 - 75	65 - 75

*** NOTE: Level 1 for use by Towns and Municipalities ONLY.**

TABLE M.04.02– 5: SUPERPAVE MINIMUM BINDER CONTENT BY MIX TYPE & LEVEL.

Mix Type	Level	Binder Content Minimum (1)
S0.25	1*	5.6
S0.25	2	5.5
S0.25	3	5.4
S0.375	1*	5.6
S0.375	2	5.5
S0.375	3	5.4
S0.5	1*	5.0
S0.5	2	4.9
S0.5	3	4.8
S1	1*	4.6
S1	2	4.5
S1	3	4.4

*** NOTE: Level 1 for use by Towns and Municipalities ONLY.**

M.04.03— Production Requirements:

1. Quality Control Plan and Processes: The Contractor shall submit a Quality Control Plan (QCP) for bituminous concrete production specifically for the plant producing the bituminous concrete mixture for review and approval of the Engineer on an annual basis.

The QCP shall describe the organization and procedures which the Contractor shall use to administer quality control. The QCP shall include the procedures used to control the production process, to determine when immediate changes to the processes are needed, and to implement the required changes. The QCP must detail the inspection, sampling and testing protocols to be used, and the frequency for each.

Control Chart(s) shall be developed and maintained for critical aspect(s) of the production process as determined by the Contractor. The control chart(s) shall identify the material property, applicable upper and lower control limits, and be updated with current test data. The control chart(s) shall be used as part of the quality control system to document variability of the bituminous concrete production process. The control chart(s) shall be submitted to the Engineer upon request.

The QCP shall also include the name and qualifications of a Quality Control Manager. The Quality Control Manager shall be responsible for the administration of the QCP, including compliance with the plan and any plan modifications. All daily QC sampling, inspection and test reports shall be reviewed by the Quality Control Manager and be submitted to the Engineer upon request.

The QCP shall also include the name and qualifications of any outside testing laboratory performing any QC functions on behalf of the Contractor. The QCP must also include a list of sampling & testing methods and frequencies used during production, and the names of all Quality Control personnel and their duties.

Approval of the QCP does not imply any warranty by the Engineer that adherence to the plan will result in production of bituminous concrete that complies with these specifications. The Contractor shall submit any changes to the QCP as work progresses.

2. **Acceptance Sampling & Testing Methods:** Acceptance samples of mixtures shall be obtained from the hauling vehicles and tested by the Contractor at the facility during each day's production.

The hauling vehicle from which samples are obtained shall be selected using stratified – random sampling based on the total estimated tons of production in accordance with ASTM D 3665, except that the first test shall be randomly taken from the first 151 tons or as directed by the Engineer.

The number of sub lots and tests required per sub lot is based on the total estimated tons of production per day as indicated in Table M.04.03-1. Quantities of the same type/level mix per plant may be combined daily for multiple state projects to determine the number of sub lots.
The payment adjustment for air voids and liquid binder will be calculated per sub lot as described in Section 4.06.

An acceptance test shall not be performed within 150 tons of production from a previous acceptance test unless approved by the Engineer. Quality Control tests are not subject to this restriction. Unless otherwise tested, a minimum of one (1) acceptance test shall be performed for every four days of production at a facility for each type/level mix (days of production may or may not be consecutive days).

The Contractor shall submit all acceptance tests results to the Engineer within 24 hours or prior to the next day's production. All acceptance test specimens and supporting documentation must be retained by the Contractor. Verification testing will be performed by the Engineer on the retained specimens in accordance with the Department's QA Program for Materials.

Should the Department be unable to verify the Contractor's acceptance test result(s) due to a failure of the Contractor to retain acceptance test specimens or supporting documentation, the Contractor shall review its quality control plan, determine the cause of the nonconformance and respond in writing within 24 hours to the Engineer describing the corrective action taken at the plant. In addition the Contractor must provide supporting documentation or test results to validate the subject acceptance test result(s). The Engineer may invalidate any positive adjustments for material corresponding to the acceptance test(s). Failure of the Contractor to adequately address quality control issues at a facility may result in suspension of production for Department projects at that facility.

Contractor personnel performing acceptance sampling and testing must be present at the facility prior to, and during production, and be certified as a NETTCP HMA Plant Technician or Interim HMA Plant Technician and be in good standing. Production of material for use on State projects must be suspended by the Contractor if such personnel are not present.

Technicians found by the Engineer to be non-compliant with NETTCP or Department policies may be removed by the Engineer from participating in the acceptance testing process for Department projects until their actions can be reviewed.

Anytime during production that testing equipment becomes inoperable, production can continue for a maximum of 1 hour. The Contractor shall obtain box sample(s) in accordance with Table M.04.03-1 to satisfy the daily acceptance testing requirement for the quantity shipped to the project. The box sample(s) shall be tested once the equipment issue has been resolved to the satisfaction of the Engineer. Production beyond 1 hour may be considered by the Engineer. Production will not be permitted beyond that day until the subject equipment issue has been resolved.

Table M.04.03 – 1: Acceptance Testing Frequency per Type/Level/Plant

Daily quantity produced in tons (lot)	Number of Sub Lots/Tests
0 to 150	0, Unless requested by the Engineer
151 to 600	1
601 to 1,200	2
1,201 to 1,800	3
1,801 or greater	1 per 600 tons or portions thereof

i. Marshall Mix Acceptance Sampling and Testing Procedures: When the Marshall mix design is specified, the following acceptance procedures and AASHTO test methods shall be used:

Table M.04.03 – 2: Marshall Acceptance Test Procedures

Protocol	Reference	Description
1	**AASHTO T 30(M)**	Mechanical Analysis of Extracted Aggregate
2	**AASHTO T 40(M)**	Sampling Bituminous Materials
3	**AASHTO T 308(M)**	Binder content by Ignition Oven method (adjusted for aggregate correction factor)
4	**AASHTO T 245(M)**	Resistance to Plastic Flow of Bituminous Mixtures Using Marshall Apparatus
5	**AASHTO T 209(M)**	Theoretical Maximum Specific Gravity and Density of Bituminous Paving Mixtures
6	**AASHTO T 269(M)**	Percent Air Voids in Compacted Dense and Open Bituminous Paving Mixtures
7	**AASHTO T 329**	Moisture Content of Hot-Mix Asphalt (HMA) by Oven Method

a. Cessation of Supply: Marshall Mix Production shall cease for the Project from any facility that consistently fails to produce mixture that meets the JMF and volumetric properties. The criteria for ceasing the supply of a class of mixture from any plant are as follows:

i. Off-Test Status: The results of AASHTO T 164 or AASHTO T 308(M) and T 30(M) will be used to determine if the mixture is within the tolerances shown in Table M.04.02-1. The Contractor will be notified that a plant is "off test" for a class of mixture when the test results indicate that any single value for bitumen content or gradation are not within the tolerances shown in Table M.04.02-1 for that class of mixture.

ii. When multiple plants and silos are located at one site, mixture supplied to one project is considered as coming from one source for the purpose of applying the “off test” adjusted payment.

iii. If a test indicates that the bitumen content or gradation are outside the tolerances, the Contractor may make a single JMF change on classes 1, 2, 3, 4 and 12 as allowed by the Engineer prior to any additional testing. A JMF change shall

include the date and name of the Engineer that allowed it. Consecutive test results outside the requirements of Table M.04.02-1 JMF tolerances may result in rejection of the mixture.

iv. The Engineer may cease supply of mixture from the plant when the test results from three non-consecutive samples of a class of mixture are not within the JMF tolerances or the test results from two non-consecutive samples not within the master range indicated in Table M.04.02-1 during any one production period, due to inconsistent production.

v. Any modification to the JMF shall not exceed 50% of the JMF tolerances indicated in Table M.04.02-1 for any given component of the mixture without approval of the Engineer. When such an adjustment is made to the bitumen, the corresponding production percentage of bitumen shall be revised accordingly.

b. Adjustments for Off Test Mixture under Cessation of Supply: The bituminous concrete plant shall cease supplying to the project:

i. When the test results from three consecutive samples are "off test" and not within the JMF tolerances or,

ii. The test results from two consecutive samples are "off test" and not within the ranges indicated in Table M.04.02 – 1 or,

iii. When the percent of material passing the minus #200 sieve material exceeds the percent of extracted bitumen content for three consecutive samples during any production period of the values stated in Table M.04.02-1:

a. The quantity of mixtures shipped to the project determined to be "off test" and outside the tolerances will be tabulated by the Engineer and will be adjusted in accordance with Section 4.06.

b. Following cessation, a trial production period will be required at the plant for that class of mixture. Use of that class of mixture from that plant will be prohibited on the Project until the plant has demonstrated the ability to consistently produce acceptable mixture.

c. When the Engineer has accepted the mixtures from the trial production period, the use of that mixture on the Project may resume.

ii. Superpave Mix Acceptance Sampling and Testing Procedures: When the Superpave mix design is specified, the following acceptance and AASHTO test procedures shall be used:

Table M.04.03– 3: Superpave Acceptance Testing Procedures

Protocol	Reference	Description
1	AASHTO T 168(M)	Sampling of bituminous concrete
2	AASHTO T 308(M)	Binder content by Ignition Oven method (adjusted for aggregate correction factor)
3	AASHTO T 30(M)	Gradation of extracted aggregate for bituminous concrete mixture
4	AASHTO T 312(M)	(1)Superpave Gyratory molds compacted to N_{des}
5	AASHTO T 166(M)	(2)Bulk specific gravity of bituminous concrete
6	AASHTO R 35(M)	(2)Air voids, VMA
7	AASHTO T 209(M)	Maximum specific gravity of bituminous concrete (average of two tests)
8	AASHTO T 329	Moisture content of Production bituminous concrete

The Contractor shall perform moisture susceptibility (TSR) testing annually for all design levels of HMA-, WMA-, and PMA- S0.5 plant-produced mixtures, in accordance with the latest version of AASHTO T 283(M).

If any material source changes from the previous year, or during the production season, a mix design TSR as well as a production TSR is required for the new mixture. The AASHTO T 283(M) test shall be performed at an AASHTO Materials Reference Laboratory (AMRL) by NETTCP Certified Technicians. The test results and specimens shall be submitted to the Engineer for review. This shall be completed within 30 days from the start of production. Superpave mixtures that require anti-strip additives (either liquid or mineral) shall continue to meet all requirements specified herein for binder and bituminous concrete. The Contractor shall submit the name, manufacturer, percent used, and MSDS sheet for the anti-strip additive (if applicable) to the Engineer. In addition, compaction of samples shall be accomplished utilizing an accepted

Superpave Gyratory Compactor (SGC), supplied by the Contractor. The SGC shall be located at the facility supplying mixture to the project.

a. Determination of Off-Test Status:

i. Off Test Status: Superpave mixes shall be considered *"off test"* when any Control Point Sieve, VA, VMA, and Gmm values are outside of the limits specified in Table M.04.03-3 and the computed binder content (Pb) established by AASHTO T308(M) or as documented on the vehicle delivery ticket is below the minimum binder content stated in sub article M.04.03-5. Note that further testing of samples or portions of samples not initially tested for this purpose cannot be used to change the status.

ii. Any time the bituminous concrete mixture is considered Off-test:

1. The Contractor shall notify the Engineer (and project staff) when the plant is *"off test"* for a type of mixture. When multiple plants and silos are located at one site, mixture supplied to one project is considered as coming from one source for the purpose of applying the *"off test"* determination.

2. The Contractor must take immediate actions to correct the deficiency, minimize *"off test"* production to the project, and obtain an additional Process Control (PC) test after any corrective action to verify production is in conformance to the specifications. A PC test will not be used for acceptance and is solely for the use of the Contractor in its quality control process.

b. Cessation of Supply for Superpave Mixtures with no Payment Adjustment: Production of bituminous concrete shall cease for the Project from any plant that consistently fails to produce mixture that meets the JMF and volumetric properties. The quantity of Superpave mixtures shipped to the project that is "off-test" will not be adjusted for deficient mixtures.

A Contractor shall cease to supply mixture from a plant when:

1. Bituminous concrete mixture is "off test" on three (3) consecutive tests for VMA or Gmm, regardless of date of production due to inconsistency (i.e., small production requires 1 test per day for multiple days).

2. Bituminous concrete mixture is "off test" on two (2) consecutive tests for the Control Point sieves in one day's production.

Following cessation, the Contractor shall immediately make necessary material or process corrections and run a Pre-Production Trial (PPT) for that type of mixture. Use of that type of mixture from that plant will be prohibited on the Project until the Contractor has demonstrated the ability to produce acceptable mixture from that facility. When the Contractor has a passing test and has received approval from the Engineer, the use of that mixture to the Project may resume.

c. Cessation of Supply for Superpave Mixtures with Payment Adjustment:
Production of bituminous concrete shall cease for the Project from any plant that consistently fails to produce mixture that meets the Superpave minimum binder content by mix type and level listed in Table M.04.02-5. The quantity of Superpave mixtures shipped to the project that is "off-test" will be adjusted for deficient mixtures in accordance with Section 4.06.

A Contractor shall cease to supply mixture from a plant when the binder content (Pb) is below the requirements of Table M.04.03-5 on the ignition oven test result after two (2) consecutive tests, regardless of the date of production.

Following cessation, the Contractor shall immediately make necessary material or process corrections and run a Pre-Production Trial (PPT) for that type of mixture. Use of that type of mixture from that plant will be prohibited on the Project until the Contractor has demonstrated the ability to produce acceptable mixture from that facility. When the Contractor has a passing test and has received approval from the Engineer, the use of that mixture to the Project may resume.

d. JMF Changes for Superpave Mixture Production: It is understood that a JMF change is effective from the time it was submitted forward and is not retroactive to the previous test or tests. JMF changes are permitted to allow for trends in aggregate and mix properties but every effort shall be employed by the Contractor to minimize this to ensure a uniform and dense pavement.

JMF changes to the G_{mm} or mix Absorption Correction Factor (A_{cf}) are only permitted prior to or after a production shift for all bituminous-concrete types of mixtures and only when they:

i. Are requested in writing and pre-approved by the Engineer;
ii. Are based on a minimum of a two test trend;
iii. Are documented with a promptly submitted revised JMF on form provided by the Engineer.
iv. A revised JMF submittal shall include the date and name of the Engineer that allowed it.

TABLE M.04.03– 3: SUPERPAVE MASTER RANGE FOR BITUMINOUS CONCRETE MIXTURE PRODUCTION

Notes: (1) 300°F minimum after October 15. (2) Minimum Pb as specified in Table M.04.03-5 (3) Control point range is also defined as the master range for that mix. (4) JMF tolerances shall be defined as the limits for production compliance. VA & Pb payment is subject to adjustments, as defined in sub-article 4.06.04 - 2. (5) For WMA, lower minimum aggregate temperature will require Engineer's approval. (6) For WMA and/or polymer modified asphalt, the mix temperature shall meet manufacturer's recommendations. In addition, for WMA, the maximum mix temperature shall not exceed 325°F once the WMA technology is incorporated.

	S0.25		**S0.375**		**S0.5**		**S1**		**Tolerances**
Sieve	CONTROL POINTS (4)		CONTROL POINTS (4)		CONTROL POINTS (4)		CONTROL POINTS (4)		**JMF Limits** (4)
inches	Min(%)	Max(%)	Min(%)	Max(%)	Min(%)	Max(%)	Min(%)	Max(%)	±Tol
2.0	-	-	-	-	-	-	-	-	
1.5	-	-	-	-	-	-	100	-	
1.0	-	-	-	-	-	-	90	100	
3/4	-	-	-	-	100	-	-	90	
1/2	100	-	100	-	90	100	-	-	
3/8	97	100	90	100	-	90	-	-	
#4	-	90	-	90	-	-	-	-	
#8	32	67	32	67	28	58	19	45	
#16	-	-	-	-	-	-	-	-	
#200	2.0	10.0	2.0	10.0	2.0	10.0	1.0	7.0	
Pb(2)	-	-	-	-	-	-	-	-	note (2)
VMA (%)	16.0		16.0		15.0		13.0		1.0
VA (%)	4.0		4.0		4.0		4.0		1.0
Gmm	JMF value		JMF value		JMF value		JMF value		0.030
Agg. Temp (5)	280 – 350F		280 – 350F		280 – 350F		280 – 350F		
Mix Temp (6)	265 – 325 F (1)		265 – 325 F (1)		265 – 325 F (1)		265 – 325 F (1)		
Prod. TSR	N/A		N/A		≥80%		N/A		
T-283 Stripping	N/A		N/A		Minimal as determined by the Engineer		N/A		

TABLE M.04.03– 4: SUPERPAVE MASTER RANGE FOR TRAFFIC LEVELS AND DESIGN VOLUMETRIC PROPERTIES.

Traffic Level	Design ESALs (million)	Number of Gyrations by Superpave Gyratory Compactor	
		Nini	Ndes
1*	< 0.3	6	50
2	0.3 to < 3.0	7	75
3	≥3.0	8	100

*** NOTE: Level 1 for use by Towns and Municipalities ONLY.**

TABLE M.04.03– 5: SUPERPAVE MINIMUM BINDER CONTENT BY MIX TYPE & LEVEL.

Mix Type	Level	Binder Content Minimum (1)
S0.25	1*	5.6
S0.25	2	5.5
S0.25	3	5.4
S0.375	1*	5.6
S0.375	2	5.5
S0.375	3	5.4
S0.5	1*	5.0
S0.5	2	4.9
S0.5	3	4.8
S1	1*	4.6
S1	2	4.5
S1	3	4.4

*** NOTE: Level 1 for use by Towns and Municipalities ONLY.**

Table M.04.03-6:
Modifications to Standard AASHTO and ASTM Test Specifications and Procedures.

AASHTO Standard Specification	
Reference	**Modification**
M 320	1. Mass change for PG 64-22 shall be a maximum loss of 0.5% when tested in accordance with AASHTO T 240. 2. The two bottles used for the mass change determination may be re-heated and used for further testing.
AASHTO Standard Methods of Test	
Reference	**Modification**
T 27	Section 7.7 Samples are not washed
T 30	Section 6.2 thru 6.5 Samples are not routinely washed
T 168	Samples are taken at one point in the pile. All types of bituminous concrete except Class 4 are scooped from the sample container instead of remixing and quartering. (Method verified by laboratory study). Samples from a hauling vehicle are taken from only one point instead of three as specified. Selection of Samples: Sampling is equally important as the testing, and the sampler shall use every precaution to obtain samples that are truly representative of the bituminous mixture. Box Samples: In order to enhance the rate of processing samples taken in the field by construction or maintenance personnel the samples will be tested in the order received and data processed to be determine conformance to material specifications and to prioritize inspections by laboratory personnel.
T 195	Section 4.3 only one truck load of mixture is sampled. Samples are taken from opposite sides of the load.
T 209	Article 9.5.1 Bowl is suspended 2 minutes prior to reading rather than 10 minutes. This makes no significant difference in results. Section 7.2 The average of two bowls is used proportionally in order to satisfy minimum mass requirements. 8.3 Omit Pycnometer method.
T 245	Article 3.3.2 A compacting temperature of 140 to 146°C (284 to 295°F) is used Article 3.5.2 Seventy-five (75) blows per side are used on Classes 1 and 12, per ConnDOT design requirements Section 3.1 for production testing: one specimen is molded for each extraction test for production over 275 metric tons/day (300 tons/day). Other mixtures: two specimens per extraction test.
T 283	When foaming technology is used, the material used for the fabrication of the specimens shall be cooled to room temperature, and then reheated to the manufactures recommended compaction temperature prior to fabrication of the

	specimens.
T 308	In addition to the standard testing procedure, the Department has adopted a procedure that addresses a correction factor that is calculated using the composite aggregate percentages (**C**omposite **A**ggregate **C**orrection **F**actor **M**ethod **(CACF)**). The aggregate is burned in compliance with the standard AASHTO procedure Method A exclusively. All modifications are listed for this method only. A2.2 and A2.3 Omit A2.4 Omit. Replace with: Determine an aggregate gradation for each aggregate component "blank" in accordance with T30. A2.5 Omit. Replace with: The individual aggregate samples are to be dried in an oven at a maximum temperature of 148 ± 5ºC (300 ± 9º F) to a constant weight. RAP samples are to be oven dried at a maximum temperature of 110 ± 5ºC (230 ± 9º F) to a constant weight. RAP samples will be burned for total binder content only and not to arrive at a correction factor for a mixture. A2.6 and A2.7 and A2.8 Omit. A2.8.1 Omit Note 2 A2.9 Omit. Replace with: Perform a gradation analysis on the residual aggregate in accordance with T30 and compare it to the gradation performed prior to burning. A2.9.1 and A2.9.2 Omit The correction factors for each size aggregate are provided by the Contractor to the Engineer prior to the Annual Plant Inspection. The Engineer may verify the correction factors. The Composite Aggregate Correction Factor (CACF) for any mixture may be calculated by summing the result of the correction factor for each individual aggregate multiplied by the percentage of that aggregate in the overall mixture. (Note: All correction factors must be re-calculated every time the percentage of any aggregate changes within the mixture.) If the average corrected Pb content from the ignition oven differs by 0.3% or more from the average bituminous concrete facility production weigh ticket in five (5) consecutive tests regardless of the production date (moving average), the Contractor shall immediately investigate, determine an assignable cause and correct the issue. When two consecutive moving average differences are 0.3% or more, the Engineer may require a new correction factor calculation for all the aggregate components in the mix. In addition to the standard testing procedure, the Department has adopted a procedure that addresses the time involved between sampling the hot-mix asphalt specimen and the beginning of the test. 6.3 Omit. Replace with: The test specimen must be ready to be placed in an approved ignition furnace for testing within ten minutes of being obtained from the hauling vehicle and the test shall start immediately after.

T 331	6.1 Cores are dried to a constant mass prior to testing using a core-dry machine.

AASHTO Standard Recommended Practices

Reference	Modification
R 35	**<u>Volumetric Calculations of VMA and Correction Factor</u>** VMA_a - Voids in Mineral Aggregate from (Va + Vbe) the mix: A. VMA calculated from the mix shall be determined in accordance with *Formula 5.16.1A*. It can be correlated that the VMA calculated from AASHTO R-35 is equivalent to VMA_a when the Pb_a x (100-Pb_t) / 100 is known and substituted for A_{cf}, as shown in *Formula 5.16.1A (ii)*. Test results from VMA_a shall therefore be required to meet all contract specifications. Values of VMA_a that are out of specifications during production may be cause for the contractor to determine assignable reason, take corrective action, and modify the Job Mix Formula (JMF), as needed. Continued VMA_a data that is out of specifications may be cause for the Engineer to order cessation of supply. *Formula 5.16.1A.* Determining the VMA of bituminous concrete by the mix or air voids & effective binder method: $$VMA_a = V_a + \left[\frac{(Gmb_d \times (Pb_t - A_{cf})}{G_b} \right]$$ Where: VMA_a = VMA calculated from plant production mix(V_a + Vb_e) Gmb_d = Bulk specific gravity as determined by AASHTO T 166(M) Pb_t = Total Binder Content (corrected) by AASHTO T 308(M) A_{cf} = Absorption correction factor provided by Contractor (refer to B. i and ii) B. Determining the bituminous concrete mix binder correction factor for each class by use of percent absorption of water by AASHTO T 84/85, AASHTO M 323 and D_f method. This value shall be performed by the Contractor during the mix design only and submitted as a JMF value. Two methods for determining the A_{cf} are shown, although method (i) will be the desired method to be used. Both methods are equivalent when the Gsa, Gsb and Pwa are recent and valid for the mix. *i.* $A_{cf} = Df \times Pwa \times (100 - Pb_t) / 100$ *ii.* $A_{cf} = (Pb_a \text{ from annual JMF submittal}) \times (100 - Pb_t) / 100$ Where: Df = as determined by Formula 5.16.1B. Pwa = as determined by AASHTO T 84/85 Pb_a = as determined by AASHTO M 323 (from annual JMF submittal) D_f (Density Factor): The Contractor shall calculate the bituminous concrete

	mix design D_f (*derived from formula X1.2 APPENDIX X1 of AASHTO R 35)* for each class of material, in accordance with *Formula 5.16.1B*. *Formula 5.16.1B*. Determining the Density Factor *(D_f)* of mix design bituminous concrete: $$D_f = \left(\frac{Gse - Gsb}{Gsa - Gsb}\right)$$ Where: D_f = Density Factor or multiplier determined by AASHTO R-35(M) Gse = Effective Specific Gravity determined by AASHTO M-323 at plant Gsa = Apparent Specific Gravity determined by AASHTO T 84/85 of mix design Gsb = Bulk Specific Gravity determined by AASHTO T 84/85 of mix design
R 26	Quality Control Plans must be formatted in accordance with AASHTO R 26, certifying suppliers of performance-graded asphalt binders, Section 9.0, Suppliers Quality Control Plan, and "NEAUPG Model PGAB QC Plan." 1. The Department requires that all laboratory technician(s) responsible for testing PG-binders be certified or Interim Qualified by the New England Transportation Technician Certification Program (NETTCP) as a PG Asphalt Binder Lab Technician. 2. Sampling of asphalt binders should be done under the supervision of qualified technician. NECTP "Manual of Practice," Chapter 2 Page 2-4 (Key Issues 1-8). 3. A copy of the Manual of Practice for testing asphalt binders in accordance with the Superpave PG Grading system shall be in the testing laboratory. 4. All laboratories testing binders for the Department are required to be accredited by the AASHTO Materials Reference Laboratory (AMRL). 5. Sources interested in being approved to supply PG-binders to the Department by use of an "in-line blending system," must record properties of blended material, and additives used. 6. Each source of supply of PG-binder must indicate that the binders contain no additives used to modify or enhance their performance properties. Binders that are manufactured using additives, modifiers, extenders etc., shall disclose the type of additive, percentage and any handling specifications/limitations required. Suppliers shall provide AASHTO M-320 Table 2 testing at a minimum of once per month on one sample of material. Each supplier shall rotate the PG grade each month (including polymer-modified asphalt (PMA)), so that data can be collected for all the grades produced.

SMALL CONTRACTOR AND SMALL CONTRACTOR MINORITY BUSINESS ENTERPRISES (SET-ASIDE)

March, 2001

NOTE: Certain of the requirements and procedures stated in this "Special Provision" are applicable prior to the execution of the Contract.

I. GENERAL

A. The Contractor shall cooperate with the Connecticut Department of Transportation (CONNDOT) in implementing the required contract obligations concerning "Small Contractor" and "Small Contractor Minority Business Enterprise" use on this Contract in accordance with Section 4a-60g of the Connecticut General Statutes as revised. References, throughout this "Special Provision", to "Small Contractors" are also implied references to "Small Contractor Minority Business Enterprises" as both relate to Section IIA of these provisions. The Contractor shall also cooperate with CONNDOT in reviewing the Contractor's activities relating to this provision. This "Special Provision" is in addition to all other equal opportunity employment requirements of this Contract.

B. For the purpose of this "Special Provision", the "Small Contractor(s)" and "Minority Business Enterprise(s)" named to satisfy the set-aside requirement must be certified by the Department of Administrative Services, Business Connections/ Set-Aside Unit [(860) 713-5236 www.das.state.ct.us/busopp.htm] as a "Small Contractor" and "Minority Business Enterprises" as defined by Section 4a-60g Subsections (1) and (3) of the Connecticut General Statutes as revised and is subject to approval by CONNDOT to do the work for which it is nominated pursuant to the criteria stipulated in Section IIC-3.

C. Contractors who allow work which they have designated for "Small Contractor" participation in the pre-award submission required under Section IIC to be performed by other than the approved "Small Contractor" organization and prior to concurrence by CONNDOT, will not be paid for the value of the work performed by organizations other than the "Small Contractor" designated.

D. If the Contractor is unable to achieve the specified contract goals for "Small Contractor" participation, the Contractor shall submit written documentation to CONNDOT's Manager of Construction Operations indicating his/her good faith efforts to satisfy goal requirements. Documentation is to include but not be limited to the following:

1. A detailed statement of the efforts made to select additional subcontract opportunities for work to be performed by each "Small Contractor" in order to increase the likelihood of achieving the stated goal.

2. A detailed statement, including documentation of the efforts made to contact and solicit contracts with each "Small Contractor", including the names, addresses, dates and telephone numbers of each "Small Contractor" contacted, and a description of the information provided to each "Small Contractor" regarding the scope of services and anticipated time schedule of items proposed to be subcontracted and the nature of response from firms contacted.

3. For each "Small Contractor" that placed a subcontract quotation which the Contractor considered not to be acceptable, provide a detailed statement of the reasons for this conclusion.

4. Documents to support contacts made with CONNDOT requesting assistance in satisfying the contract specified or adjusted "Small Contractor" dollar requirements.

5. Document other special efforts undertaken by the Contractor to meet the defined goal.

E. Failure of the Contractor to have at least the specified dollar amount of this contract performed by "Small Contractor" as required in Section IIA of this "Special Provision" will result in the reduction in contract payment to the Contractor by an amount equivalent to that determined by subtracting from the specific dollar amount required in Section IIA, the dollar payments for the work actually performed by each "Small Contractor". The deficiency in "Small Contractor" achievement, will therefore, be deducted from the final contract payment. However, in instances where the Contractor can adequately document or substantiate its good faith efforts made to meet the specified or adjusted dollar amount to the satisfaction of CONNDOT, no reduction in payments will be imposed.

F. All records must be retained for a period of three (3) years following completion of the contract and shall be available at reasonable times and places for inspection by authorized representatives of CONNDOT.

G. Nothing contained herein, is intended to relieve any contractor or subcontractor or material supplier or manufacturer from compliance with all applicable Federal and State legislation or provisions concerning equal employment opportunity, affirmative action, nondiscrimination and related subjects during the term of this Contract.

II. **SPECIFIC REQUIREMENTS**

In order to increase the participation of "Small Contractors", CONNDOT requires the following:

A. Not less than **25** (%) percent of the **final** value of this Contract shall be subcontracted to and performed by, and/or supplied by, manufactured by and paid to "Small Contractors" and/or "Small Contractors Minority Business Enterprises".

If the above percentage is zero (0%) AND an asterisk (*) has been entered in the adjacent brackets [ ], this Contract is 100% solely set-aside for participation by "Small Contractors" and/or "Small Contractors Minority Business Enterprises".

B. The Contractor shall assure that each "Small Contractor" will have an equitable opportunity to compete under this "Special Provision", particularly by arranging solicitations, time for the preparation of Quotes, Scope of Work, and Delivery Schedules so as to facilitate the participation of each "Small Contractor".

C. The Contractor shall provide to CONNDOT's Manager of Contracts within Seven (7) days after the bid opening the following items:

1. An affidavit (Exhibit I) completed by each named "Small Contractor" subcontractor listing a description of the work and indicating the dollar amount of all contract(s) and/or subcontract(s) that have been awarded to him/her for the current State Fiscal Year (July 1 - June 30) does not exceed the Fiscal Year limit of $10,000,000.00.

2. A certification of work to be subcontracted (Exhibit II) signed by both the Contractor and the "Small Contractor" listing the work items and the dollar value of the items that the nominated "Small Contractor" is to perform on the project to achieve the minimum percentage indicated in Section IIA above.

3. A certification of past experience (Exhibit III) indicating the scope of work the nominated "Small Contractor" has performed on all projects, public and private, for the past two (2) years.

4. In instances where a change from the originally approved named "Small Contractor" (see Section IB) is proposed, the Contractor is required to submit, in a reasonable and expeditious manner, a revised submission, comprised of the documentation required in Section IIC, Paragraphs 1, 2 and 3 and Section E together with documentation to substantiate and

justify the change, (i.e., documentation to provide a basis for the change) to CONNDOT's Manager of Construction Operations for its review and approval prior to the implementation of the change. The Contractor must demonstrate that the originally named "Small Contractor" is unable to perform in conformity to specifications, or unwilling to perform, or is in default of its contract, or is overextended on other jobs. The Contractor's ability to negotiate a more advantageous contract with another "Small Contractor" is not a valid basis for change. Documentation shall include a letter of release from the originally named "Small Contractor" indicating the reason(s) for the release.

D. After the Contractor signs the Contract, the Contractor will be required to meet with CONNDOT's Manager of Construction Operations or his/her designee to review the following:

1. What is expected with respect to the "Small Contractor" set aside requirements.

2. Failure to comply with and meet the requirement can and will result in monetary deductions from payment.

3. Each quarter after the start of the "Small Contractor" the Contractor shall submit a report to CONNDOT's Manager of Construction Operations indicating the work done by, and the dollars paid to each "Small Contractor" to date.

4. What is required when a request to sublet to a "Small Contractor" is submitted.

E. The Contractor shall submit to CONNDOT's Manager of Construction Operations all requests for subcontractor approvals on standard forms provided by the Department.

If the request for approval is for a "Small Contractor" subcontractor for the purpose of meeting the contract required "Small Contractor" percentage stipulated in Section IIA, a copy of the legal contract between the Contractor and the "Small Contractor" subcontractor must also be submitted at the same time. Any subsequent amendments or modifications of the contract between the Contractor and the "Small Contractor" subcontractor must also be submitted to CONNDOT's Manager of Construction Operations with an explanation of the change(s). The contract must show items of work to be performed, unit prices and, if a partial item, the work involved by both parties.

In addition, the following documents are to be attached:

(1) A statement explaining any method or arrangement for renting equipment. If rental is from a Contractor, a copy of Rental Agreement must be submitted.

(2) A statement addressing any special arrangements for manpower.

(3) A statement addressing who will purchase material.

F. Contractors subcontracting with a "Small Contractor" to perform work or services as required by this "Special Provision" shall not terminate such firms without advising CONNDOT, in writing, and providing adequate documentation to substantiate the reasons for termination if the designated "Small Contractor" firm has not started or completed the work or the services for which it has been contracted to perform.

G. Material Suppliers or Manufacturers

If the Contractor elects to utilize a "Small Contractor" supplier or manufacturer to satisfy a portion or all of the specified dollar requirements, the Contractor must provide the Department with:

1. An executed Affidavit Small Contractor (Set-Aside) Connecticut Department of Transportation Affidavit Supplier or Manufacturer (sample attached), and

2. Substantiation of payments made to the supplier or manufacturer for materials used on the project.

Brokers and packagers shall not be regarded as material Suppliers or manufacturer.

H. Non-Manufacturing or Non-Supplier "Small Contractor" Credit

Contractors may count towards its "Small Contractor" goals the following expenditures with "Small Contractor" firms that are not manufacturers or suppliers:

1. Reasonable fees or commissions charged for providing a bona fide service such as professional, technical, consultant or managerial services and assistance in the procurement of essential personnel, facilities, equipment, material or supplies necessary for the performance of the contract provided that the fee or commission is determined by the Department of Transportation to be reasonable and consistent with fees customarily allowed for similar services.

2. The fees charged for delivery of materials and supplies required on a job site (but not the cost of the materials and supplies themselves) when the hauler, trucker, or delivery service is not also the manufacturer of or a regular dealer in the materials and supplies, provided that the fee is determined by the Department of Transportation to be reasonable and not excessive as compared with fees customarily allowed for similar services.

3. The fees or commissions charged for providing any bonds or insurance specifically required for the performance of the Contract, provided that the fee or commission is determined by the Department of Transportation to be reasonable and not excessive as compared with fees customarily allowed for similar services.

III. BROKERING

For the purpose of this "Special Provision", a "Broker" is one who acts as an agent for others in negotiating contracts, purchases, sales, etc., in return for a fee or commission. Brokering of work by a "Small Contractor" is not allowed and is a contract violation.

IV. PRE-AWARD WAIVERS:

If the Contractor's submission of the "Small Contractor" listing, as required by Section IIC indicates that it is unable, by subcontracting to obtain commitments which at least equal the amount required by Section IIA, it may request, in writing, a waiver of up to 50% of the amount required by Section IIA. To obtain such a waiver, the Contractor must submit a completed "Application for Waiver of Small Contractor Minority Business Enterprise Goals" to CONNDOT's Manager of Contracts which must also contain the following documentation:

1. Information described in Section ID.

2. For each "Small Contractor" contacted but unavailable, a statement from each "Small Contractor" confirming its unavailability.

Upon receipt of the submission requesting a waiver, the CONNDOT's Manager of Contracts shall submit the documentation to the Director of the Office of Contract Compliance who shall review it for completeness. After completion of the Director of Contract Compliance's review, she/he should write a narrative of his/her findings of the application for a waiver, which is to include his/her recommendation. The Director of Contract Compliance shall submit the written narrative to the Chairperson of the DBE Screening Committee at least five (5) working days before the scheduled meeting. The Contractor shall be invited to attend the meeting and present his/her position. The DBE Screening Committee shall render a decision on the waiver request within five (5)

working days after the meeting. The DBE Screening Committee's decision shall be final. Waiver applications are available from the CONNDOT Manager of Contracts.

EXHIBIT I Mar. 01

SMALL CONTRACTOR/*MINORITY BUSINESS ENTERPRISE
(* Delete if not Applicable)
SET-ASIDE PROGRAM
(QUALIFICATION AFFIDAVIT)

PROJECT(s) _____
(INCLUDING TOWN & DESCRIPTION)

STATE OF _____CONNECTICUT_____

COUNTY OF_____

I_____,ACTING IN BEHALF
NAME OF PARTY SIGNING AFFIDAVIT
OF_____,DO HEREBY CERTIFY
PERSON FIRM OR ORGANIZATION
AND AFFIRM THAT THE INFORMATION SET FORTH BELOW IS TRUE AND ACCURATE TO THE BEST OF MY KNOWLEDGE. AS OF THIS DATE_____THE LIST OF SMALL CONTRACTOR SET-ASIDE PROGRAM - CONTRACTS AND/OR SUBCONTRACTS AWARDED DURING THE CURRENT FISCAL YEAR (JULY 1 - JUNE 30) 20_____ IS AS FOLLOWS:

Col. 1 TOWN AND PROJECT NUMBER	Col. 2 STATE AGENCY WHICH AWARDED CONTRACT	Col. 3 CONTRACT AMOUNT AWARDED UNDER THIS PROGRAM	Col. 4 AMOUNT OF WORK SUBCONTRACTED FROM OTHER FIRMS UNDER THIS PROGRAM	Col. 5 TOTAL AMOUNT OF ALL WORK UNDER THIS PROGRAM Col. 3 Plus Col. 4
	TOTALS	$	$	$

_____
NAME OF PERSON, FIRM OR ORGANIZATION

(FIRM SEAL)

_____
SIGNATURE & TITLE OF OFFICIAL

SWORN TO AND SUBSCRIBED BEFORE ME BY_____

WHO IS PERSONALLY KNOWN TO ME, THIS_____DAY OF_____, 20_____

_____
(NOTARY PUBLIC)

MY COMMISSION EXPIRES_____SEAL

PLEASE NOTE THAT ALL THE WORK AWARDED OR SUBCONTRACTED TO YOUR FIRM UNDER THE SET-ASIDE PROGRAM IN A FISCAL YEAR (JULY 1-JUNE 30) INCLUDING THIS PROJECT, CANNOT BE MORE THAN $10,000,000.00

GENERAL

Mar.01

EXHIBIT II

DEPARTMENT OF TRANSPORTATION
CONTRACT DIVISION
2800 BERLIN TURNPIKE
NEWINGTON, CT 06111

CERTIFICATION OF WORK TO BE SUBCONTRACTED
NOMINATED SMALL CONTRACTOR/*MINORITY BUSINESS ENTERPRISE

* Delete if not applicable

PLEASE INCLUDE A COPY OF CERTIFICATION LETTER

CONTRACTOR_____

ADDRESS_____

TOWN_____PROJECT NO._____

DESCRIPTION OF PROJECT_____

_____

CONTRACT BID AMOUNT $_____

DATE_____

Listed below is the Nominated Small Contractor/Minority Business Enterprise for the above project and the requested data:

Name, Address & Tel No. of the Nominated Firm	ITEM(s)NUMBER(s) and Description of the Item(s) to be performed by and paid to the Subcontractor	Quantities (indicate if partial)	Prime's Bid Amount For Item	Dollar Amount Subcontracted	Small Business Set-Aside Dollar Requirement

Signed By _____
Small Contractor/*Minority Business Enterprise
(Subcontractor)

Signed By_____
Contractor

Title_____

EXHIBIT III

Mar.01

CERTIFICATION
PAST CONSTRUCTION EXPERIENCE

SMALL CONTRACTOR / * MINORITY BUSINESS ENTERPRISES

* Delete if not applicable

PLEASE LIST ALL CONSTRUCTION PROJECTS YOUR ORGANIZATION HAS WORKED ON IN THE PAST TWO FISCAL YEARS

PROJECT LOCATION NUMBER AND DESCRIPTION APPLICABLE	CONTRACT AMOUNT	IF WORK PERFORMED AS PRIME GIVE OWNERS NAME IF WORK PERFORMED AS SUBCONTRACTOR GIVE CONTRACTORS NAME	START DATE	ACTUAL OR ESTIMATED COMPLETION DATE	NAME AND PHONE OF OWNER OR PRIME CONTRACTOR AS

SIGNED BY: _____

SMALL BUSINESS CONTRACTOR
*MINORITY BUSINESS ENTERPRISES

D.O.T. PROJECT NO. _____

* Delete if not applicable

MARCH, 2001

SMALL CONTRACTOR/SMALL CONTRACTOR MINORITY BUSINESS ENTERPRISE (MBE) (SET-ASIDE) CONNECTICUT DEPARTMENT OF TRANSPORTATION AFFIDAVIT – SUPPLIER OR MANUFACTURER

This affidavit must be completed by the State Contractor's designated Small Contractor/ Small Contractor Minority Business Enterprise (MBE), notarized and attached to the contractor's request to utilize a Small Contractor/Small Contractor Minority Business Enterprise (MBE) supplier or manufacturer as a credit towards its Small Contractor/Small Contractor Minority Business Enterprise (MBE) contract requirement; failure to do so will result in not receiving credit towards the contract Small Contractor/Small Contractor Minority Business Enterprise (MBE) requirement.

State Project No. _____
Federal Aid Project No. _____
Description of Project _____

I, _____, acting in behalf of _____
(Name of person signing Affidavit) (Small Contractor/Small Contractor MBE contractor person,
_____ of which I am the_____ affirm that _____
firm, association or certify and corporation) (Title of Person) (Small
_____is a certified Small Contractor/Small
Contractor/Small Contractor MBE person, firm, association or corporation)
Contractor Minority Business Enterprise, as defined by Section 4a-60g of the Connecticut General Statutes, as revised.

I further certify and affirm that _____
(Small Contractor/Small Contractor MBE person, firm, association or corporation)
will assume the actual and contractual responsibility for the provision of the materials and/or supplies sought by _____. If a manufacturer, I produce goods from raw
(State Contractor)
materials or substantially alter them before resale, or if a supplier, I perform a commercially useful function in the supply process.

I understand that false statements made herein are punishable at Law (Sec. 53a-157, CGS, as revised).

_____
(Name of Small Contractor/Small Contractor MBE person, firm, association or corporation)

_____
(Signature and Title of Official making the Affidavit)

Subscribed and sworn to before me, the _____ day of _____ 200____.

_____
Notary Public (Commissioner of the Superior Court)

My Commission Expires _____

CERTIFICATE OF CORPORATION

I, _____, certify that I am the _____ (Official) of the Corporation named in the foregoing instrument; that I have been duly authorized to affix the seal of the Corporation to such papers as require the seal; that _____, who signed said instrument on behalf of the Corporation, was then _____ of said corporation; that said instrument was duly signed for and in behalf of said Corporation by authority of its governing body and is within the scope of its corporation powers.

_____

(Signature of Person Certifying) (Date)

(Corporate Seal)

ITEM #0000195A – TEMPORARY MAINTENANCE WORK AREA

Description:

Under this item, the Contractor shall provide temporary facilities for the exclusive use of the Owner and its representatives. The Contractor shall (1) set-up all temporary facilities on the Project Site; (2) connect all temporary facilities to all utilities and support services; and (3) make all temporary facilities fully functional and acceptable to the Engineer prior to the start of demolition of the existing motor fuel island.

Temporary facilities shall remain on the Project Site for the duration of the Project, including Contract time extensions if any occur, and if required for a maximum of 30 days thereafter.

The Owner will make precast concrete barriers available to the Contractor for pickup at the ConnDOT Stores Facility located at 660 Brook Street, Rocky Hill, CT, 06067. Contact Mr. Fred Connors at 860-258-1980 a minimum of 24 hours in advance to obtain the precast concrete barriers.

The Owner will make the temporary Fuel Management Unit (FMU) available to the Contractor. Contact Mr. John Longo at 860-666-5174 a minimum of 24 hours in advance to obtain the temporary FMU.

The Contractor shall submit the following in accordance with Form 816 Article 1.20-1.05.02 for the fuel dispensing island equipment:

1. Product Data: For each type of product indicated. Include rated capacities of selected model clearly indicated, installation and start-up instructions, and calibration charts.
2. Shop Drawings: Include wiring diagrams that detail wiring for power, signal, and control systems and differentiate between portions of wiring that are factory-installed and portions to be field-installed.
3. Quality Assurance Submittals:

    a. Submit certification that test equipment conforms to State and Federal requirements and that the persons performing the tests are qualified on said test equipment.
    b. Field Test Results.

The Engineer will approve the remaining materials to be installed by the Contractor, unless otherwise noted.

The Contractor shall register each aboveground fuel tank and serial number with STI in accordance with instructions provided by the tank manufacturer.

The Contractor shall submit the following special project warranty to the Engineer: 30 year warranty that the aboveground fuel tank was fabricated in accordance with requirements of UL 2085 and UL 142. This warranty shall be in addition to, and not a limitation of, the other rights the Engineer may have against the Contractor under the Contract.

Materials:

Compacted Granular Fill: Refer to Form 816, Section 2.14 “Compacted Granular Fill” for material and construction methods required.

Concrete Pads: Comply with the requirements in CSI Division 03 Section 033000, “Cast-in-Place Concrete.”

Chain Link Fence and Gate: Refer to Form 816, Section 9.13 “Chain Link Fence” for material and construction methods required.

The fuel dispensing equipment (tank, tank accessories, fuel dispenser, FMU, emergency controls and miscellaneous components) shall meet all of the applicable regulatory requirements set forth by ASTM, NFPA, STI, and UL.

Fire-Rated Aboveground Storage Tank: 2,000-gallon cylindrical tank with integral tank supports for the storage of diesel fuel at or near atmospheric pressure as manufactured by Fireguard, or an approved equal. The primary and secondary tanks shall be manufactured in accordance with STI Publication No. F941-94, "Standard for Thermally Insulated Aboveground Storage Tanks."

The tank shall consist of an inner steel wall, encased by a porous lightweight thermal insulation material, and an outer steel wall. Thermal insulation shall provide a minimum two-hour fire rating, shall allow liquid to migrate through the interstice to the monitoring point, shall not be exposed to weathering and shall be protected by the steel secondary containment outer wall, and shall be factory installed and be in accordance with ASTM Standards C-332 and C-495.

The outer steel wall shall be UL 2085 listed for secondary containment and capable of providing a minimum 110% containment of the primary storage tank's content. A legible UL 2085 label shall be affixed to the side of the aboveground storage tank. Steel outer wall of the tank shall be coated to prolong weather resistance and to further reduce maintenance needs.

The tank shall include the following accessories:

a. Provide an interstitial monitoring tube for monitoring the tank's interstice for liquids.
b. Provide 1 normal atmospheric or pressure/vacuum vent for the primary tank. Vent shall discharge upward, be protected from the rain, and incorporate a flame arrestor. Vent installation shall comply with applicable sections of the fire and mechanical codes, including, but not limited to, NFPA 30 and NFPA 30A.

c. Provide 1 emergency primary tank vent, sized based on the tank configuration, the primary tank capacity, and the product stored per manufacturers recommendations. Emergency venting shall comply with provisions of NFPA 30 and NFPA 30A.
d. Provide 1 emergency vent for each secondary containment tank interstice. The venting capacity is determined by the tank configuration, secondary tank capacity, and the product stored per manufacturers recommendations. Emergency venting shall comply with provisions of NFPA 30, NFPA 30A, UL 142, and UL 2085. Vents shall be located as close to the center of the tank as possible.
e. For tanks with top fill assembly, provide 1 lockable tight fill cap, adapter, fill pipe, and drop tube per tank. The bottom of the fill drop tube shall be cut at a 45-degree angle with the open end facing the long dimension of the tank. The drop tube shall terminate 6-inches from the bottom of the tank. Comply with provisions of NFPA 30.
f. Provide a spill container with cover and lockable hasp to contain product spills from the fill hose. Fill pipe spill container shall have a capacity of not less than five gallons. Provide a means for returning collected product to the storage tank.
g. Provide overfill prevention equipment which complies with the requirements of NFPA 30A and which incorporates the following features:

    1. An audible alarm which will sound when the product level in the tank has reached 85% of tank capacity, or a liquid level gauge marked at 85% of tank capacity.
    2. A positive shut-off fill limiter which will stop the flow of liquid into the tank when product level reaches 90% of tank capacity.
    3. The fill-limiting device shall be rated to accept the fill flow rate and pressure.

h. Provide submersible pump with construction type AG high capacity, 1/3-HP, 230 volt, single phase, FE Petro Model No. STPAG33 as manufactured by Franklin Fueling Systems, or an approved equal, with model length sized to fit tank.
i. Provide 1 mechanical tank liquid level sight gauge accessible to the delivery operator in accordance with NFPA 30A.
j. Provide an external stairway to allow access to top of tank for filling and maintenance that complies with applicable OSHA standards and building codes.

The Contractor shall provide power-reset type, shelf-mounted, fuel dispenser suitable for dispensing a single product through one hose, Model No. E/G6101D/2JK/S1 as manufactured by Wayne, or an approved equal. Each component in the product path shall be compatible with dispensing E85 Ethanol. Cabinet shall be heavy gauge stainless steel including bezel, top, base, side structural columns. Hinged, lockable cabinet door panel shall be heavy gauge steel factory color coded "Yellow." Dispenser shall include the following accessories:

a. Dispenser-Mounted Pulse Transmitter: Individually set for any number of pulses from 1 to 1000 for each unit of measurement for every hose on every dispenser.
b. Shelf-Mount Kit: Manufacturer's standard carbon steel shelf brackets for mounting dispenser to the tank.
c. High hose retractors and static wires: Manufacturer standard.

d. Filter and Filter Adapter: 1-inch spin-on filter with adapter, suitable for externally mounting to dispenser, Model No. 400BMG-10 as manufactured by Cim-Tek, or an approved equal.
e. Breakaway Hose Coupling: ¾-inch diameter re-connectable breakaway coupling Model No. 66REC as manufactured by OPW, or an approved equal.
f. Hose: ¾-inch diameter, black rubber, smooth bore hose with stainless steel fittings.

    1. Hose Length from Dispenser to Breakaway Coupling: 17-feet.
    2. Hose Length from Breakaway Coupling to Nozzle: 8-inches.

g. Swivel: Multi-plane swivel designed, aluminum with electroless nickel plating, fluorosilicone inner O-ring, fluorocarbon outer O-ring, sized to fit hose and nozzle, Model No. 6350 as manufactured by Husky Corporation, or an approved equal.
h. Nozzle: Aluminum body and spout with 15/16” O.D., automatic-type, with full rubber hand insulator, Model No. 1A, color-coded “Yellow” as manufactured by Husky Corporation, or an approved equal.

Product piping shall be Schedule 40 steel pipe with standard malleable iron fittings.

Flexible connectors may be used to connect piping to fixed components if they are listed for use aboveground for the application intended.

The Contractor shall provide mounting hardware and miscellaneous parts to complete installation.

The Contractor shall provide a steel or nodular iron block valve to allow the tank and piping to be isolated and secured.

The Contractor shall provide an anti-siphon device in the product piping at the tank that will prevent the flow of liquid from the tank unless the suction pump is operating, in accordance with NFPA 30A. Anti-siphoning may be met by modifying the drop tube, piping or by installation of an electric solenoid valve. A solenoid valve used in conjunction with an under pump vacuum operated valve meets this requirement.

The Contractor shall provide a pressure relief valve in each segment of blocked piping that will relieve excessive pressure resulting from thermal expansion and return any excess product to the tank.

Floodlight and Support: The floodlights shall be rugged, weather resistant die-cast aluminum with gasket, and shall be equipped with a photocell for Dusk-to-Dawn operation. Lithonia model # OFTH300PR with two 90 Watt lamps, 120 Volts, and photocell. The mast support for the lights shall be composed of steel c-channel as specified under Specification CSI Division 26 Section 260529, "Hangers and Supports for Electrical Systems."

The Contractor shall use threaded RGSC for all power and communication feeds when conduits enter into a Class I, Division 1/Division 2 hazardous location and for all surface mounted conduit around the dispenser as shown on Drawing No. ED-002.

The Contractor shall use a minimum #12 stranded copper conductors rated for 600 volts with THWN or THNN insulation within the Class I, Division 1 hazardous location unless otherwise noted. Grounding wire shall be green-type.

Junction Boxes shall be threaded, explosion-proof, Model No. GRSS-2 as manufactured by Killark, or an approved equal.

Explosion-proof fittings shall be threaded, recessed-type, close-up plugs, Model No. EYSF75 as manufactured by Appleton, or an approved equal. Screwdriver slotted close-up plugs shall not be accepted. When necessary to employ flexible connections, as at motor terminals, flexible fittings listed for Class I locations shall be used.

Conduit Seals shall be approved for Class I, Division I locations as described in section 501-15(a)-(f) of the NEC. Sealing compound shall be approved and shall provide a seal against passage of gas or vapors through the seal fitting, shall not be affected by the surrounding atmosphere or liquids, shall not have melting point of less than 200 degrees F. In a completed seal, the minimum thickness of the sealing compound shall no be less than the trade size of the sealing fitting and, in no case, less than 5/8 inch.

Each circuit leading to or through dispensing equipment, including equipment for remote pumping systems, shall be provided with a clearly identified and readily accessible switch or other acceptable means, located remote from the dispensing device, to disconnect simultaneously from the source of supply, all conductors of the circuit, including the grounded (neutral) conductor. Emergency controls shall be more than 20 feet but less than 100 feet from the dispenser.

Emergency Shut-off (Quick Stop Button): The quick stop button functions to remove power by depressing the red mushroom-shaped button. Power restored by manually resetting the shunt trip device and turning the button clockwise a partial turn until it pops back out to the reset position.

The dispenser shall be controlled by the dispenser's "on/off" handle at the point of fuel distribution and remotely by the circuit breaker.

Fixed wiring: Threaded RMC with termination fittings and wiring methods approved for Class I location shall be employed. All boxes, fittings and joints shall be threaded for connection to conduit and shall be explosion-proof. Threaded joints shall be made up with at least 5 threads fully engaged.

Grounding: All metal raceways and all non-current carrying metal parts of fixed or portable electrical equipment, regardless of voltage, shall be grounded as provided in NEC

Article 250 and per Article 514-16. The locknut–bushing and double-locknut types of contacts shall not be depended on for bonding purposes, but bonding jumpers with proper fittings shall be used. Such means of bonding shall apply to all intervening raceways, fittings, boxes, enclosures, etc., between Class I location and the point of grounding for service equipment. Bonding shall be jumpers with proper fittings for bonding purposes.

An approved seal shall be provided in each conduit run entering or leaving a dispenser or any cavities or enclosures in direct communication therewith. The sealing fitting shall be the first fitting after the conduit emerges from the earth or the concrete.

Splices and taps shall not be made in fittings intended only for sealing with compound, nor shall other fittings in which splices or taps are made be filled with compound.

The cross-sectional area of the conductors permitted in a seal shall not exceed 25% of the cross-sectional area of a RGSC of the same trade.

Construction Methods:

Installation: The Contractor shall locate temporary facilities where shown on the plans and as directed by the Engineer. The temporary facilities shall be installed in accordance with Form 816 Article 1.08.02, as supplemented herein.

The Contractor shall install each component of the fuel dispensing island as shown on the plans, in accordance with manufacturer's installation instructions, and in accordance with NFPA 30 and 30A. Additional installation requirements are described herein, where applicable. The Contractor shall provide a fully operational system when complete.

The tank and associated equipment shall be installed in accordance with the STI installation instructions for Fireguard aboveground tanks (Publication No. R942-94, Installation and Testing Instructions for Thermally Insulated Lightweight Double Wall Fireguard Aboveground Storage Tanks).

The Contractor shall (1) use tank handling equipment of adequate size to lift and set the tank without dragging or dropping it; (2) advise the Engineer of any shipping or handling damage encountered; and (3) not make any modifications to any tank without the prior written approval of the manufacturer and the Engineer. Such modifications include any welding on tank shells, adding penetrations in the tank structure, or repairing damage that might affect the integrity of the inner or outer tank.

The Contractor shall locate precast concrete barriers where shown on the plans and as directed by the Engineer.

The Contractor shall attach fuel dispenser to the tank and make all necessary piping connections.

The Contractor shall protect exposed piping and equipment from corrosion by painting or wrapping it with a coating that is compatible with diesel fuel and the conditions of the exposure.

Install temporary FMU and retrofit to work with dispenser.

Provide a fully operational temporary automated fuel management system. The temporary FMU shall interface with the existing head-end located at 2800 Berlin Turnpike, Newington, CT. Coordinate dial-up programming with ConnDOT Fuel Control. The following information shall be recorded by the system for each fueling transaction: user identification number, vehicle odometer/hourmeter, vehicle number, quantity of fuel dispensed, fuel site, date and time, hose number and product number, and key type.

The power Requirements for the FMU are 120 volts, 60 Hz, from a separate dedicated circuit.

The Contractor shall firmly attach the c-channel mast to the precast concrete barrier to support the floodlight. The Contractor shall install a surface mounted metallic box to attach the floodlights to the mast. Route surface mounted RGSC conduit along the c-channel to feed the floodlights.

The Contractor shall install the emergency shut-off (quick stop button) to shunt trip main power to the fuel dispensing equipment as shown on Drawing No. ED-002.

The Contractor shall install all conduit, boxes, and wiring in accordance to NFPA 70 and shall run green bond wire in all conduits.

The Contractor shall install RGSC from the source of power to the fuel dispensing system, and complete conduit, terminations with explosion-proof fittings. All E.Y. fittings for conduit runs to the fuel island shall be properly sealed. The Contractor shall leave close-up plugs hand tight after sealing to provide for the Engineer's inspection of these fittings.

The Contractor shall extend fuel dispensing island power and communication circuits from the power panels and communication cabinets in the existing building to the temporary fuel island location. The Contractor shall complete all necessary terminations in accordance with NEC Article 514 and sections described above.

The Contractor shall perform air pressure testing of the inner tank and secondary containment tank on-site in the presence of the Engineer before placing the tank in service. Refer to STI Publication No. R942-94 for complete procedural details.

The Contractor shall test piping on-site in the presence of the Engineer before placing the piping in service. The Contractor shall perform minimum hydrostatic or pneumatic test-pressures measured at highest point in system, minimum 1.5 times the designed working pressure but not less than 5 psig for minimum 2 hours, isolate storage tanks if test pressure in piping will cause pressure in storage tanks to exceed 10 psig and shall soap pipe fittings. Piping will be considered

defective if it does not pass tests. Defective piping shall be repaired or replaced, and then retested.

The Contractor shall test each component of the system for calibration, tightness and proper operation in accordance with the instructions of the component manufacturer.

Testing shall be documented by the Contractor and witnessed by the Engineer. Record the date and time of the test, the name of the tester and their affiliation with the Project, and the names of each individual witnessing the test. The Contractor shall record the test method, duration and results, and provide a record of the testing to the Engineer at the time of system start-up.

The Owner will supply diesel fuel to fill the temporary tank upon its acceptance by the Engineer.

Project Closeout: When the Engineer determines that the temporary facilities are no longer needed, the Owner will empty the temporary tank and the Contractor shall:

1. Prepare the temporary tank for removal from the Project Site;
2. Move the following Owner property to the ConnDOT Stores Facility located at 660 Brook Street, Rocky Hill, CT, 06067 within 14 calendar days of their abandonment: temporary tank, all associated tank accessories, fuel dispenser, precast concrete barriers, chain link fence and gate, floodlight and support; and
3. Contact Mr. John Longo at 860-666-5174 for pickup of the temporary FMU within 24 hours of their abandonment; and
4. Restore the Project Site to its original condition.

Method of Measurement:

This item will be paid for at the contract lump sum price for "Temporary Maintenance Work Area" complete.

Basis of Payment:

This item will be paid for at the contract lump sum price for "Temporary Maintenance Work Area," which price shall include all administrative and procedural requirements, material, equipment, labor, and work incidental thereto.

PAY ITEM	PAY UNIT
Temporary Maintenance Work Area	LS

ITEM #0100072A – REMOVAL AND DISPOSAL OF UNDERGROUND TANKS

Description:

Work under this item shall include all activities related to the excavation, removal and disposal of a 4,000 gallon gasoline underground storage tank (UST), a 4,000-gallon diesel fuel UST, a 2,000-gallon No. 2 fuel oil UST, and their associated equipment and piping as shown on the Contract Plans.

The work shall be performed by an experienced firm that has successfully completed UST excavation, removal and disposal work similar to that indicated herein.

All activities shall be performed in accordance with USEPA 40 CFR Parts 260-268, 280 and 281, OSHA 29 CFR 1926, OSHA 29 CFR 1910.120, CTDEP 22a-449(d)-1 and 22a-449(c), NFPA 30, NFPA 327, API 1604, API 2015, and all other applicable state and federal regulations and codes.

Materials:

Backfill material shall conform to the requirements of Section 2.13 of the Specifications.

Construction Methods:

(1) Pre-Excavation and Removal Submittals:

(a) At least fifteen (15) working days prior to the start of any excavation, removal and disposal work, the Contractor shall submit the following to the Engineer for review and approval:

1. Proposed excavation and removal procedures to be utilized, including vapor purging and atmosphere testing.
2. Proposed protective/safety measures to be implemented.
3. Proposed C&D bulky waste disposal facility.
4. Proposed steel/scrap metal recycling facility.

(b) Seventy-two (72) hours prior to the start of any excavation/removal related activity, the Contractor shall notify the following:

1. Office of the State Fire Marshal, Fire and Life Safety Specialist.
2. Town of Canterbury Fire Marshal.

Prior to the start of on-site activity, the Contractor shall provide the Engineer with written confirmation that the above contacts have been appropriately notified.

(2) General Provisions:

The Contractor shall clean (removal of sludges and residuals), remove and dispose of: one 4,000 gallon gasoline UST, one 4,000-gallon diesel fuel UST and one 2,000-gallon fuel oil UST located on 158 Westminster Road in Canterbury, Connecticut, as indicated on the Plans.

Removal and disposal shall include the removal of all appurtenances associated with the tanks (manways, fuel piping, vent piping, conduits, tank and piping monitoring devices, etc.). Removal shall also include all necessary vapor purging, defuming, cleaning, etc.

Disposal of petroleum products and waters from within the tanks and piping structures shall be performed by the Contractor in accordance with Item 0101143A – Handling and Disposal of Regulated Items.

Handling of contaminated groundwater is not anticipated.

The Contractor shall exercise all necessary precautions for fire prevention. Acceptable fire extinguishers shall be made available at all times. Flame/torch cutting is prohibited.

The Contractor shall prevent damage to any existing utilities, structures, equipment and appurtenances that are to remain in service.

(3) Vapor Purging:

After removing any liquid product, the vapor remaining in the UST shall be displaced by adding solid carbon dioxide (dry ice) to the tank in the amount of at least 0.25 ounces per gallon of tank capacity. The dry ice shall be crushed and distributed evenly over the greatest possible area in the tank to promote rapid evaporation. With the exception of the tank vent, the Contractor shall plug as many tank openings as possible after introducing the dry ice. As the dry ice evaporates, flammable vapors will flow out of the tank and may surround the area. Therefore, the Contractor shall conduct air monitoring around the tank as indicated below. All dry ice must evaporate before proceeding with UST excavation and removal. Alternate vapor purging methods will not be permitted without prior approval from the Engineer.

(4) Atmosphere Testing:

The atmosphere inside the UST and around the excavation area shall be regularly tested by the Contractor for flammable or combustible vapor concentrations until the tank is removed from both the excavation area and the site. Such tests are to be made with a combustible gas indicator provided by the Contractor which is properly calibrated and maintained according to the manufacturer's instructions. Contractor personnel responsible for testing must be completely familiar with the use of the instrument and the interpretation of the instrument's readings.

The atmosphere inside the UST shall be tested by placing the combustible gas indicator probe into the fill opening after the drop tube has been removed. If the tank is equipped with a non-

removable fill tube, readings shall be taken through another opening. Readings shall be taken at the bottom, middle and upper portions of the tank, and the instrument shall be cleared after each reading. Liquid product must not enter the probe. All readings must be 20 percent or less of the lower explosive limit (LEL) before the tank is considered safe for removal from the ground. The Contractor shall also use an oxygen indicator to monitor the oxygen concentration in the tank(s).

(5) Excavation and Removal Provisions:

Excavation and removal practices shall be acceptable to the Engineer, shall ensure the safety of persons, equipment and structures that are to remain, and shall provide adequate protection of the environment. The Contractor shall schedule excavation and removal activities to minimize delays and construction traffic on-site.

The Contractor shall furnish and employ such shores, braces, pumps, etc., as may be necessary for the protection of property, proper completion of the work and the safety of the public and employees of the Contractor and the Department.

Excavation by machinery shall be discontinued when excavation approaches pipes, conduits or other underground structures. The work shall be completed in these areas by use of hand tools.

The Contractor shall excavate test pits when necessary to determine the exact location of tank(s), pipe(s) or other underground structure.

For structures not scheduled for demolition, any holes resulting from the removal of vent pipe brackets, return and supply pipes, or other conduits removed or abandoned as a part of excavation and removal activities shall be plugged with cement masonry.

The Contractor shall saw cut pavement in a neat and workman-like manner anywhere partial pavement removal is necessary to complete the work.

The Contractor shall prevent surface waters from entering the tank excavation area(s) at all times.

The Contractor shall assist in tank grave confirmation sampling by providing equipment and an operator to collect excavation bottom and side-wall soil. After collection of samples, the Contractor shall allow the excavations to remain open pending the receipt of laboratory analytical results by the Engineer. The Contractor shall backfill the excavations immediately upon notification in writing by the Engineer. Any additional excavation beyond that necessary for UST removal shall be as directed by the Engineer. Any tank grave that cannot be backfilled before the end of the day shall be adequately protected by the Contractor. This includes the use of safety fencing or other appropriate barricade to prevent individuals or vehicles from falling into excavations, orange flashing hazard lighting along the fencing, or other lighting considered necessary by the Engineer.

Excavation areas (tank grave areas, piping removal areas, soil removal areas, etc.) shall be backfilled to grade with any surplus suitable excavated "clean fill" materials from the project. Any additional fill material required to bring the subsurface area to grade shall conform to Article 2.13 of the Standard Specifications. Prior to placement of fill materials, areas to be filled shall be free of standing water, frost, frozen material, trash and debris.

After fill placement and compaction, the Contractor shall grade surface to meet adjacent contours and provide flow to surface drainage structures. Grading shall not create any depressions that can retain water, create any diversions to surface flow, or block the intended flow of surface water.

For excavations conducted in areas where bituminous concrete or asphalt were cut/removed to facilitate access to the UST, the Contractor shall restore the paved surfaces to equal or better quality than before disturbance. All pavement markings disturbed during construction shall be restored.

(6) Disposal Procedures:

Scrap metal (tanks, piping, etc) generated during the demolition process shall be recycled as scrap metal at an approved scrap metal recycling facility following cleaning.

Non-hazardous, non-metallic waste shall be recycled off site or disposed of at a landfill. The Contractor shall transport materials, including but not limited to concrete and asphalt, removed from excavated USTs and dispose/recycle off site as C&D bulky waste in accordance with the Connecticut Department of Energy and Environmental Protection (CTDEEP) solid waste management standards. The Contractor shall recycle as much C&D bulky waste as practical.

Excavated underground items shall not be reused or salvaged by the Contractor.

(7) Post-Excavation and Removal Submittals:

The Contractor shall provide the Engineer, within 30 days of completion of the excavation and removal work, a compliance package, which shall include, but not be limited to, the following:

1. Shipping papers from the approved solid waste bulky waste disposal/recycling facility indicating receipt and acceptance of C&D bulky waste debris.
2. Shipping papers and Certificates of Destruction/Recycling from the approved scrap metal recycling facility indicating receipt and acceptance of scrap metal debris (tank, piping, etc).

Method of Measurement:

This item will be paid for at the contract lump sum price for "Removal and Disposal of Underground Tanks" complete. Materials associated with the excavation, removal and disposal of the UST, such as permits, equipment, disposal, etc. will not be measured for payment.

ITEM #0100072A

Basis of Payment:

The Contract price lump sum shall include all related necessary work and material associated with the excavation, removal and disposal of the UST, including, but not limited to permits, equipment, material recycling and disposal, air monitoring, backfill, fencing, barricades, and lighting. No additional payment will be made for shoring, bracing, pumping, bailing, or for material or equipment necessary for the satisfactory completion of the work.

Removal and disposal of residual liquid product from the UST will be in accordance with Item 0101143A – Handling and Disposal of Regulated Items.

Pay Item	Pay Unit
Removal and Disposal of Underground Tanks	LS

ITEM #0101000A – ENVIRONMENTAL HEALTH AND SAFETY

Description:

Under this item, the Contractor shall establish protocols and provide procedures to protect the health and safety of its employees and subcontractors as related to the proposed construction activities performed within the Project Area. Work under this Item consists of the development and implementation of a written Health and Safety Plan (HASP) that addresses the relative risk of exposure to potential hazards associated with working around current and historic tank graves that will be encountered as part of this Project, including those related to cleaning and removal of gasoline, diesel, and fuel oil tanks and possible entry into confined spaces or excavations with the potential for vapors to accumulate. The HASP shall establish health and safety protocols that address the relative risk of exposure to regulated substances in accordance with 29 CFR 1910.120 and 29 CFR 1926.65. Such protocols shall only address those potential concerns directly related to site conditions.

Note: The Engineer will prepare a site-specific HASP, which is compatible with the Contractor's HASP, and will be responsible for the health and safety of all Project Inspectors, Department employees and consulting engineers.

Materials:

The Contractor must provide chemical protective clothing (CPC) and personal protective equipment (PPE) as stipulated in the Contractor's HASP during the performance of work in areas identified as potentially posing a risk to worker health and safety for workers employed by the Contractor and all subcontractors.

Construction Methods:

A. Existing Information

The Contractor shall utilize all available information and existing records and data pertaining to chemical and physical hazards associated with any of the regulated substances identified in the environmental site investigation to develop the HASP. The documents containing this data are referenced in "Notice to Contractor – Environmental Investigations." Note that as indicated in the Notice to Contractor for this project, the chemical data obtained recently at this site suggest impacts to soil or ground water that would precipitate the designation of a "Low-Level" Area of Environmental Concern (LLAOEC). Furthermore, the potential for historic releases exists.

B. General

The requirements set forth herein pertain to the provision of workers' health and safety as it relates to proposed Project activities when performed in the presence of hazardous or

regulated materials or otherwise environmentally sensitive conditions. THE PROVISION OF WORKER HEALTH AND SAFETY PROTOCOLS WHICH ADDRESS POTENTIAL AND/OR ACTUAL RISK OF EXPOSURE TO SITE SPECIFIC HAZARDS POSED TO CONTRACTOR EMPLOYEES IS SOLELY THE RESPONSIBILITY OF THE CONTRACTOR.

The Contractor shall be responsible for the development, implementation and oversight of the HASP throughout the performance of work within the limits of the Project, as identified in the Contract Documents, and in other areas identified by the Engineer or by the HASP where site conditions may pose a risk to worker health and safety and/or the environment. **No physical aspects of the work on the Project shall begin until the HASP is reviewed by the Engineer and is determined to meet the requirements of the specifications. However, the Contract time, in accordance with Article 1.03.08, will begin on the date stipulated in the Notice to Proceed.**

C. Regulatory Requirements

All construction related activities performed by the Contractor within the limits of the Project or in other areas where site conditions may pose a risk to worker health and safety and/or the environment shall be performed in conformance with 29 CFR 1926, Safety and Health Regulations for Construction and 29 CFR 1910, Safety and Health Regulations for General Industry. Conformance to 29 CFR 1910.120, Hazardous Waste Site Operations and Emergency Response (HAZWOPER) may also be required, where appropriate.

D. Submittals

Three copies of the HASP shall be submitted to the Engineer within four (4) weeks after the Award of Contract or four (4) weeks prior to the start of any work on the Project, whichever is first, but not before the Award of the Contract.

The HASP shall be developed by a qualified person designated by the Contractor. This qualified person shall be a Certified Industrial Hygienist (CIH), Certified Hazardous Material Manager (CHMM), or a Certified Safety Professional (CSP). He/she shall have review and approval authority over the HASP and be identified as the Health and Safety Manager (HSM). The HASP shall bear the signature of said HSM indicating that the HASP meets the minimum requirements of 29 CFR 1910.120 and 29 CFR 1926.65.

The Engineer will review the HASP within four (4) weeks of submittal and provide written comments as to deficiencies in and/or exceptions to the plan, if any, to assure consistency with the specifications, applicable standards, policies and practices and appropriateness given potential or known site conditions. Items identified in the HASP which do not conform to the specifications will be brought to the attention of the Contractor, and the Contractor shall revise the HASP to correct the deficiencies and resubmit it to the Engineer for determination of compliance with this item. The Contractor shall not be allowed to commence work activities on the Project, as shown on the Plans, or where site conditions exist which may

pose a risk to worker health and safety and/or the environment, until the HASP has been reviewed and accepted by the Engineer. **No claim for delay in the progress of work will be considered for the Contractor's failure to submit a HASP that conforms to the requirements of the Contract.**

E. HASP Provisions

1. General Requirements

The Contractor shall prepare a HASP covering all Project site work regulated by 29 CFR 1910.120(b)/1926.65(b) to be performed by the Contractor and all subcontractors under this Contract. The HASP shall establish in detail, the protocols necessary for the recognition, evaluation, and control of all hazards associated with each task performed under this Contract. The HASP shall address site-specific safety and health hazards of each phase of site operation and include the requirements and procedures for employee protection. The level of detail provided in the HASP shall be tailored to the type of work, complexity of operations to be performed, and hazards anticipated. Details about some activities may not be available when the initial HASP is prepared and submitted. Therefore, the HASP shall address, in as much detail as possible, all anticipated tasks, their related hazards and anticipated control measures.

The HASP shall interface with the Contractor's Safety and Health Program. Any portions of the Safety and Health Program that are referenced in the HASP shall be included as appendices to the HASP. All topics regulated by the 29 CFR 1910.120(b)(4) and those listed below shall be addressed in the HASP. Where the use of a specific topic is not applicable to the Project, the HASP shall include a statement to justify its omission or reduced level of detail and establish that adequate consideration was given the topic.

2. Elements

a. Site Description and Contamination Characterization

The Contractor shall provide a site description and contaminant characterization in the HASP that meets the requirements of 29 CFR 1910.120/1926.65.

b. Safety and Health Risk Analysis/Activity Hazard Analysis

The HASP shall address the safety and health hazards on this site for every operation to be performed. The Contractor shall review existing records and data to identify potential chemical and physical hazards associated with the site and shall evaluate their impact on field operations. Sources, concentrations (if known), potential exposure pathways, and other factors as noted in CFR 1910.120/126.65, paragraph (c)(7) employed to assess risk shall be described. The Contractor shall develop and justify action levels for implementation of engineering controls and PPE upgrades

and downgrades for controlling worker exposure to the identified hazards. If there is no permissible exposure limit (PEL) or published exposure level for an identified hazard, available information from other published studies may be used as guidance. Any modification of an established PEL must be fully documented.

The HASP shall include a comprehensive section that discusses the tasks and objectives of the site operations and logistics and resources required to complete each task. The hazards associated with each task shall be identified. Hazard prevention techniques, procedures and/or equipment shall be identified to mitigate each of the hazards identified.

c. Staff Organization, Qualifications and Responsibilities

The HASP shall include a list of personnel expected to be engaged in site activities and certify that said personnel have completed the educational requirements stipulated in 29 CFR 1910.120 and 29 CFR 1926.65, are currently monitored under a medical surveillance program in compliance with those regulations, and that they are fit for work under "Level C" conditions.

The Contractor shall assign responsibilities for safety activities and procedures. An outline or flow chart of the safety chain of command shall be provided in the HASP. Qualifications, including education, experience, certifications, and training in safety and health for all personnel engaged in safety and health functions shall be documented in the HASP. Specific duties of each on-site team member should be identified. Typical team members include but are not limited to Team Leader, Scientific Advisor, Site Safety Officer, Public Information Officer, Security Officer, Record Keeper, Financial Officer, Field Team Leader, and Field Team members.

The HASP shall also include the name and qualifications of the individual proposed to serve as Health and Safety Officer (HSO). The HSO shall have full authority to carry out and ensure compliance with the HASP. The Contractor shall provide a competent HSO onsite who is capable of identifying existing and potential hazards in the surroundings or working conditions which are unsanitary, hazardous or dangerous to employees and who has authorization to take prompt corrective measures to eliminate or control them. The qualifications of the HSO shall include completion of OSHA 40-hour HAZWOPER training, including current 8-hour refresher training, and 8-hour HAZWOPER supervisory training; a minimum of one year of working experience with the regulated compounds that have been documented to exist within Project limits; a working knowledge of federal and state safety regulations; specialized training or documented experience (one year minimum) in personal and respiratory protective equipment program implementation; the proper use of air monitoring instruments, air sampling methods and procedures; and certification training in first aid and CPR by a recognized, approved organization such as the American Red Cross.

The primary duties of the HSO shall be those associated with worker health and safety. The Contractor's HSO responsibilities shall be detailed in the written HASP and shall include, but not be limited to the following:

i. Directing and implementing the HASP.

ii. Ensuring that all Project personnel have been adequately trained in the recognition and avoidance of unsafe conditions and the regulations applicable to the work environment to control or eliminate any hazards or other exposure to illness or injury (29 CFR 1926.21). All personnel shall be adequately trained in procedures outlined in the Contractor's written HASP.

iii. Authorizing Stop Work Orders, which shall be executed upon the determination of an imminent health and safety concern.

iv. Contacting the Contractor's HSM and the Engineer immediately upon the issuance of a Stop Work order when the HSO has made the determination of an imminent health and safety concern.

v. Authorizing work to resume, upon approval from the Contractor's HSM.

vi. Directing activities, as defined in the Contractor's written HASP, during emergency situations; and

vii. Providing personal monitoring where applicable, and as identified in the HASP.

d. Employee Training Assignments

The Contractor shall develop a training program to inform employees, supplier's representatives, and official visitors of the special hazards and procedures (including PPE, its uses and inspections) to control these hazards during field operations. Official visitors include but are not limited to Federal Agency Representatives, State Agency Representatives, Municipal Agency Representatives, Contractors, subcontractors, etc. This program shall be consistent with the requirements of 29 CFR 1910.120 and 29 CFR 1926.65.

e. Personal Protective Equipment

The plan shall include the requirements and procedures for employee protection and should include a detailed section on respiratory protection. The Contractor shall describe in detail and provide appropriate PPE to insure that workers are not exposed to levels greater than the action level for identified hazards for each operation stated for each work zone. The level of protection shall be specific for each operation and shall be in compliance with all requirements of 29 CFR 1910 and 29 CFR 1926. The Contractor shall provide, maintain, and properly dispose of all PPE.

f. Medical Surveillance Program

All on-site Contractor personnel engaged in 29 CFR 1910.120/1926.65 operations shall have medical examinations meeting the requirements of 29 CFR 1910.120(f) prior to commencement of work.

The HASP shall include certification of medical evaluation and clearance by the physician for each employee engaged in 29 CFR 1910.120/1926.65 operations at the site.

g. Exposure Monitoring / Air Sampling Program

The Contractor shall submit an Air Monitoring Plan as part of the HASP, which is consistent with 29 CFR 1910.120, paragraphs (b)(4)(ii)(E), (c)(6), and (h). The Contractor shall identify specific air sampling equipment, locations, and frequencies in the air-monitoring plan. Air and exposure monitoring requirements shall be specified in the Contractor's HASP. The Contractor's CIH shall specify exposure monitoring/air sampling requirements after a careful review of the contaminants of concern and planned site activities.

h. Site Layout and Control

The HASP shall include a map, work zone delineation (support, contamination, reduction and exclusion), on/off-site communications, site access controls, and security (physical and procedural).

i. Communications

Written procedures for routine and emergency communications procedures shall be included in the Contractor's HASP.

j. Personal Hygiene, Personal Decontamination and Equipment Decontamination

Decontamination facilities and procedures for PPE, sampling equipment, and heavy equipment shall be discussed in detail in the HASP.

k. Emergency Equipment and First Aid Requirements

The Contractor shall provide appropriate emergency first aid kits and equipment suitable to treat exposure to the hazards identified, including chemical agents. The Contractor will provide personnel that have certified first aid/CPR training onsite at all times during site operations.

l. Emergency Response Plan and Spill Containment Program

The Contractor shall establish procedures in order to take emergency action in the event of immediate hazards (i.e., a chemical agent leak or spill, fire or personal injury). Personnel and facilities supplying support in emergency procedures will be identified. The emergency equipment to be present on-site and the Emergency Response Plan procedures, as required 29 CFR 1910.120, paragraph (1)(1)(ii) shall be specified in the Emergency Response Plan. The Emergency Response Plan shall be included as part of the HASP. This Emergency Response Plan shall include written directions to the closest hospital as well as a map showing the route to the hospital.

m. Logs, Reports and Record Keeping

The Contractor shall maintain safety inspections, logs, and reports, accident/incident reports, medical certifications, training logs, monitoring results, etc. All exposure and medical monitoring records are to be maintained according to 29 CFR 1910 and 29 CFR 1926. The format of these logs and reports shall be developed by the Contractor to include training logs, daily logs, weekly reports, safety meetings, medical surveillance records, and a phase-out report. These logs, records, and reports shall be maintained by the Contractor and be made available to the Engineer.

The Contractor shall immediately notify the Engineer of any accident/incident. Within two working days of any reportable accident, the Contractor shall complete and submit to the Engineer an accident report.

n. Confined Space Entry Procedures

Confined space entry procedures, both permit required and non permit required, shall be discussed in detail.

o. Pre-Entry Briefings

The HASP shall provide for pre-entry briefings to be held prior to initiating any site activity and at such other times as necessary to ensure that employees are apprised of the HASP and that this plan in being followed.

p. Inspections/Audits

The HSM or HSO shall conduct Inspections or audits to determine the effectiveness of the HASP. The Contractor shall correct any deficiencies in the effectiveness of the HASP.

F. HASP Implementation

The Contractor shall implement and maintain the HASP throughout the performance of work. In areas identified as having a potential risk to worker health and safety, and in any other areas deemed appropriate by the HSO, the Contractor shall be prepared to immediately implement the appropriate health and safety measures, including but not limited to the use of PPE, and engineering and administrative controls.

If the Engineer observes deficiencies in the Contractor's operations with respect to the HASP, they shall be assembled in a written field directive and given to the Contractor. The Contractor shall immediately correct the deficiencies and respond, in writing, as to how each was corrected. Failure to bring the work area(s) and implementation procedures into compliance will result in a Stop Work Order and a written directive to discuss an appropriate resolution(s) to the matter. When the Contractor demonstrates compliance, the Engineer shall remove the Stop Work Order. If a Stop Work Order has been issued for cause, no delay claims on the part of the Contractor will be honored.

Disposable CPC/PPE (i.e. disposable coveralls, gloves, etc.) which come in direct contact with hazardous or potentially hazardous material shall be placed into 55 gallon USDOT 17-H drums and disposed of in accordance with federal, state, and local regulations. The drums shall be temporarily staged and secured within the temporary waste stockpile area (WSA) until the material is appropriately disposed.

G. HASP Revisions

The HASP shall be maintained onsite by the Contractor and shall be kept current with construction activities and site conditions under this Contract. The HASP shall be recognized as a flexible document which shall be subject to revisions and amendments, as required, in response to actual site conditions, changes in work methods and/or alterations in the relative risk present. All changes and modifications shall be signed by the Contractor's HSM and shall require the review and acceptance by the Engineer prior to the implementation of such changes.

Should any unforeseen hazard become evident during the performance of the work, the HSO shall bring such hazard to the attention of the Contractor and the Engineer as soon as possible. In the interim, the Contractor shall take action, including Stop Work Orders and/or upgrading PPE as necessary to re-establish and maintain safe working conditions and to safeguard on-site personnel, visitors, the public and the environment. The HASP shall then be revised/amended to reflect the changed condition.

Method of Measurement:

A. Within thirty (30) calendar days of the award of the Contract, the Contractor shall submit to the Engineer for acceptance a breakdown of its lump sum bid price for this item detailing:

   1. The development costs associated with preparing the HASP in accordance with these Specifications.

   2. The cost per month for the duration of the Project to implement the HASP and provide the services of the HSM and the HSO.

B. If the lump sum bid price breakdown is unacceptable to the Engineer, substantiation showing that the submitted costs are reasonable shall be required.

C. Upon acceptance of the payment schedule by the Engineer, payments for work performed will be made as follows:

   1. The lump sum development cost will be certified for payment.

   2. The Contractor shall demonstrate to the Engineer monthly that the HASP has been kept current and is being implemented and the monthly cost will be certified for payment.

   3. Any month where the HASP is found not to be current or is not being implemented, the monthly payment for the Environmental Health and Safety Item shall be deferred to the next monthly payment estimate. If the HASP is not current or being implemented for more than thirty calendar days, there will be no monthly payment.

   4. <u>Failure of the Contractor to implement the HASP in accordance with this Specification shall result in the withholding of all Contract payments.</u>

Basis of Payment:

This work will be paid for at the Contract lump sum price for "ENVIRONMENTAL HEALTH AND SAFETY" which shall include all materials, tools, equipment and labor incidental to the completion of this item for the duration of the Project to maintain, revise, monitor and implement the HASP. Such costs include providing the services of the HSM and HSO, Contractor employee training, CPC, PPE, disposal of PPE and CPC, medical surveillance, decontamination facilities, engineering controls, monitoring and all other HASP protocols and procedures established to protect the Health and Safety for all on-site workers.

Pay Item	Pay Unit
Environmental Health and Safety	Lump Sum

ITEM #0101143A – HANDLING AND DISPOSAL OF REGULATED ITEMS

Description:

Work under this item shall include the management of regulated items and all associated work by persons who are knowledgeable, qualified and trained in the handling and disposal of these materials/items and the subsequent cleaning of the affected environment. Regulated items include hazardous and other materials and wastes, the disposal of which is restricted by federal and/or state laws and regulations and which may be within the USTs to be removed from the site. Regulated items include those listed herein, or additional similar items identified on site by the Engineer. Work under this item does not include asbestos-containing materials, lead paint or contaminated soils.

Activities shall be performed in accordance with, but not limited to, the current revision of the USEPA and CTDEEP Hazardous Waste Regulations (40 CFR 260-282, 22a-209 and 22a-449(c)), USEPA PCB Regulations (40 CFR 761), USEPA Protection of Stratospheric Ozone (40 CFR 82), OSHA Hazard Communication (29 CFR 1910.1200), OSHA Hazardous Waste & Emergency Response Regulations (29 CFR 1910.120), USDOT Hazardous Materials Regulation (49 CFR 171-180), OSHA, RCRA, CERCLA, CAA, TSCA, and all other laws and regulations.

The work activities include the removal, handling, packing, labeling, transport, manifesting and recycling or disposal of liquids and/or sludges contained in three (3) underground storage tanks (USTs) to be excavated and removed from the site. The contents of these USTs include gasoline, diesel fuel and No. 2 fuel oil.

The Contractor is responsible for verifying actual locations and quantities of the items with hazardous/regulated material/waste constituents and for their proper handling and disposal. The recycling or proper disposal, as appropriate, of all regulated items shall be completed prior to the initiation of any UST removal activities.

Materials

All materials shall be suitable for the management of regulated items and shall meet all applicable federal, state and local regulations. Such materials include, but are not limited to, proper containers, packing materials, labels, signs, shipping papers, personnel protective equipment (PPE) and spill kits.

Construction Methods

A. Allowable Disposal/Recycling Facilities

Disposal facilities for RCRA-hazardous, TSCA-hazardous, Connecticut Regulated, and Universal wastes shall be selected from among those listed below. No other facility shall be used for these types of wastes without the written approval of the Engineer.

Bridgeport United Recycling, Inc. 50 Cross Street Bridgeport, CT 06610 Phone: (800) 404-4408 Fax: (203) 334-1666 RCRA and CRW Waste Oil, Fuel, Wastewater	Clean Harbors of Braintree, Inc. 1 Hill Avenue Braintree, MA 02184 Phone: (781) 849-1807 Fax: (781) 356-1574 RCRA, TSCA & CRW Gas, Liquid, Solid, Sludge
Clean Harbors of Connecticut, Inc. 51 Broderick Road Bristol, CT 06010 Phone: (860) 583-8917 Fax: (860)583-3696 RCRA TSCA & CRW Gas, Liquid, Solid, Sludge	Clean Harbors of Woburn (Murphy's Waste Oil Serv., Inc.) 252 Salem Street Woburn, MA 01801 Phone: (781) 935-9066 Fax: (800) 522-4645 RCRA, CRW: Oil, Oil/Water Mixtures, Oil Filters, Oily Soil and Debris, F001/F002 Contaminated Oils, Antifreeze
Northland Environmental, Inc. (PSC Environmental Syst) 275 Allens Ave Providence, RI 02905 Phone: (401) 781-6340 Fax: (401) 781-9710 RCRA Liquid and Solid Organics, Oils, Solvents, Pesticides, Chlorinated Hydrocarbons, Empty Drums	United Oil Recovery, Inc. 136 Gracey Avenue Meriden, CT 06451 Phone: (203) 238-6745 Fax: (888) 276-0887 RCRA, CRW Waste Oil, Fuel, Wastewater

The category of material accepted by each facility listed above is for informational purposes only. The Contractor shall verify facility acceptance of each type of regulated item.

B. Submittals

Thirty (30) days prior to commencement of work involving the management of regulated items, the Contractor shall submit to the Engineer for approval, the following documentation:

1. Copy of Spill Contractor Permit registration issued by the Connecticut Department of Energy and Environmental Protection (CTDEEP).
2. Hazard communication training for all employees performing this work.
3. Names of the treatment facilities, recycling facilities and/or disposal facilities the Contractor intends to use to receive each type of regulated item.
4. Names of the Hazardous Material Transporter(s) the Contractor intends use to transport hazardous materials from this Project.
5. Hazardous Material Transporter USDOT Certificate of Registration for each transporter.
6. Hazardous Waste Transporter Permit for the State of Connecticut, the destination state(s), and all other applicable states for each transporter.

One (1) week prior to the start of work that will generate RCRA hazardous waste above conditionally exempt small quantities, the Contractor shall obtain from the Engineer a temporary EPA Hazardous Waste Generators ID number, for use in manifesting the waste.

C. Regulated Item Management Provisions

(a) General Requirements

The Contractor's OSHA Competent Person shall be in control on the job site at all times during hazardous material management work activities. This person must be capable of identifying existing hazards, possess the authority to implement corrective measures to reduce/eliminate the hazards, comply with applicable federal, state and local regulations that mandate work practices, and be capable of performing the work of this contract. All employees who perform regulated material management related work shall be properly trained and qualified to perform such duties.

All labor, materials, tools, equipment, services, testing, insurance and incidentals necessary or required to perform the work in accordance with applicable governmental regulations, industry standards and codes, and these specifications shall be provided by the Contractor.

The Contractor shall be responsible for verification of all field conditions affecting performance of the work. The Contractor shall submit to the Engineer for concurrence any additional items not listed herein that it believes to be regulated items included under this item. However, compliance with applicable requirements is solely the responsibility of the Contractor.

Environmental sampling shall be conducted as deemed necessary by the Engineer. Spill areas shall be cleaned by the Contractor until accepted by the Engineer. The Engineer may sample the spill area to demonstrate Contractor compliance with an acceptable standard.

(b) Personnel Protection

Prior to commencing work, the Contractor shall provide hazard communication training to all employees as necessary in accordance with OSHA 29 CFR 1926.59 and 29 CFR 1910.1200 and instruct all workers in all aspects of personnel protection, work procedures, emergency procedures and use of equipment including procedures unique to this project. Worker health and safety protocols that address potential and/or actual risk of exposure to site specific hazards are solely the responsibility of the Contractor.

The Contractor shall provide respiratory protection that meets the requirements of OSHA as required in 29 CFR 1910.134 and 29 CFR 1926.1000. A formal respiratory protection program, including appropriate medical surveillance, must be implemented in accordance with OSHA standards. The Contractor shall, as necessary, conduct exposure assessment air sampling, analysis and reporting to ensure the workers are afforded appropriate respiratory protection.

The Contractor shall provide and require all workers to wear appropriate personnel protective equipment, including protective clothing and respiratory protection, as required, within regulated work areas which exceed OSHA Personnel Exposure Limits (PELs) or when handling hazardous waste.

(c) Regulated Item Management Work Procedures

Prior to beginning work on-site, the Contractor shall prepare waste characterization profile forms for each type of waste stream to be generated and forward such forms to the Engineer for review, approval and signature on behalf of ConnDOT. Upon approval, the Contractor shall forward such forms to the appropriate disposal facilities for acceptance.

The Contractor shall utilize all appropriate engineering controls and safety and protective equipment while performing the work in accordance with ConnDOT, OSHA, USEPA, USDOT, CTDEEP and Connecticut Department of Public Health (CTDPH) regulations.

The Contractor shall employ work practices so as to minimize the disturbance of the constituents in the regulated items, and prevent breakage and spills. In the event of a spill, the Contractor shall cordon off the area and notify the Engineer. The Contractor is responsible to have spills and the affected areas decontaminated to the acceptance of the Engineer by personnel trained in hazardous waste operations and emergency response.

The Contractor shall carefully and properly remove, handle, pack, label and manifest all of the regulated items in waste containers specified and suitable to contain the waste in accordance with all federal and state regulations.

Prior to transportation and recycling and/or disposal, all proper ConnDOT, USEPA, OSHA, CTDEEP and USDOT labels and placards shall be affixed to the waste containers and hazardous materials shipping papers, such as waste manifests and bills of lading, shall be completed.

(d) Waste Disposal

Efforts shall be made to recycle the constituents of the regulated items rather than dispose of them in accordance with the waste minimization efforts required under RCRA.

The Contractor shall forward the appropriate originals of shipping papers to the Engineer the same day the regulated items leave the project site. All vehicles departing the site transporting hazardous materials shall display proper USDOT placards, as appropriate for the type of waste being transported.

(e) Project Closeout Documents:

Within thirty (30) days after completion of the on-site project work, the Contractor shall submit to the Engineer copies of the following completed documents:

1. Hazardous Waste Manifests
2. Waste Shipment Records/Bills of Lading
3. Recycling Receipts

All of these documents must include the signature of an authorized disposal facility representative acknowledging receipt of hazardous materials.

Method of Measurement

The work of "Handling and Disposal of Regulated Items" shall be provided for in accordance with Article 1.04.05 – Extra Work.

Basis of Payment:

The work of "Handling and Disposal of Regulated Items" shall be paid for in accordance with Article 1.04.05 – Extra Work, which price shall include the management, removal, handling, packing, labeling, transport, manifesting, recycling or disposal of the regulated constituents in the specific equipment/items scheduled for impact at the project site, and all equipment, materials, tools and labor incidental to the work.

Final payment will not be made until completed copies of the specified Project Closeout Documents have been provided to the Engineer. Once completed and facility-signed copies have been received in their entirety, the Engineer will approve the final payment.

Pay Item	Pay Unit
Handling and Disposal of Regulated Items	Est.

END OF SECTION

ITEM #0100143A

ITEM #0177150A – GENERAL BUILDING RENOVATION

Description: Under this item, the Contractor shall complete all work depicted on the Contract Plans and described in the CSI-formatted Specifications that make up this Major Lump Sum Item (MLSI). Refer to Form 816 Article 1.20-1.02.04 for additional information in this regard.

Any work incidental to another bid item which is not specifically described or included in the bid item, but which is required for performance and completion of the work required under the Contract, shall be considered to be included under this item.

Materials: All materials shall be as required by the Contract Plans and as described in the CSI-formatted Specifications that make up this MLSI.

Construction Methods: All methods of construction shall conform to the requirements as stipulated in the CSI-formatted Specifications that make up this MLSI.

Method of Measurement: This item will be paid for at the contract lump sum price for "General Building Renovation" complete.

Basis of Payment: This item will be paid for at the contract lump sum price for "General Building Renovation", which price shall include all administrative and procedural requirements, material, equipment, labor, and work incidental thereto.

PAY ITEM	PAY UNIT
General Building Renovation	LS

ITEM #0603169A – PROGRESS PHOTOGRAPHS

Description: Under this item, the Contractor shall engage a qualified commercial photographer to take photographs during construction. The photographer shall be a firm or an individual of established reputation that has been regularly engaged as a professional photographer for not less than 3 years.

At the Preconstruction Meeting, submit to the Designer for approval the name of the photographer whom will be responsible for taking the photographs during construction.

Submit photos of each view within seven (7) calendar days of taking photographs. Three (3) photographic sets of photos shall be submitted. ALL photos shall be submitted in IBM-PC compatible digital format on compact disc (CD). Other than the photo thumbnail index and the photo key plan required for submission with each CD, no other hardcopy photos shall be required for the project. One (1) set of photos (on CD) of each submittal shall be sent directly to each of the following offices:

1. Office of Facilities Design, Connecticut Department of Transportation, 2800 Berlin Turnpike, P.O. Box 317546, Newington, CT 06131-7546, Attention: Mr. Theodore H. Nezames, Room 3405NW.
2. District 2 Construction, Connecticut Department of Transportation, Project Chief Inspector.
3. Bureau of Finance and Administration, Property and Facilities Services, Connecticut Department of Transportation, 2800 Berlin Turnpike, P.O. Box 317546, Newington, CT 06131-7546, Attention: Mr. Daniel J. Smachetti, Room 2448SW.

Each CD and CD jewel case shall be labeled with the name of the project, State project number, name of the Contractor, date of submission, and name and address of the photographer.

Materials:

Provide digital images in IBM-PC compatible JPEG format, with uncompressed (open) image size equal to or greater than the following dimensions: Pixel Dimensions = 1596 x 2000; Resolution = 200 pixels/inch. JPEG compression for each image shall equal "Quality 7" (High). Images shall be color (RGB mode).

Digital Cameras used for the purpose of creating the above noted image files shall have a minimum sensor size of 7 million pixels.

Image files shall be named and a photo thumbnail index created with the following file naming convention: *Project number_date of submission_photo number.jpg*

For example: If the first set of photos on CD for project number 22-105, is submitted on 12/13/01, the first photo of the submission shall be file named: 00220105_121301_1.jpg and the

tenth photo of the set shall be file named: 00220105_121301_10.jpg. In the second set of photos on CD, submitted 1/12/02, the first photo of the set shall be file named: 00220105_011202_1.jpg

A hardcopy "Photo Thumbnail" index shall be provided with each CD submission. The photo thumbnails shall be printed on 8 ½" x 11" "glossy photo quality" ink jet paper with a minimum 720 dot-per-inch ink jet printer. The thumbnail images shall be a minimum 200 x 250 pixels at 200 pixel per inch resolution. The file names shall be located under each image. The thumbnail images shall be arranged so that they can all be contained on a single 8 ½-in by 11-in inkjet print. *For example*, 35 images would be arranged in five (5) columns and seven (7) rows. The CD shall also contain the digital file of the photo thumbnail index in jpeg format. The file shall share the same format as the above noted photo file format but the word "index" shall be placed in the location of the photo number. *For example*: 00220105_121301_index1.jpg

Photos shall be numbered and referenced by number on a "Photo Key Plan." A hardcopy of the photo key plan shall be provided with each CD submission. The photo key plan shall be printed on 8 1/2"x 11" "glossy photo quality" ink jet paper with a minimum 720 dot-per-inch ink jet printer. The key plan shall be made on digital images of the projects overall site plans and/or the overall building plans, as appropriate for the photos being submitted, and shall include an arrow pointing in the direction of the photo with the associated photo number. The CD shall also contain the digital file of the photo key plan in jpeg format. The file shall share the same format as the above noted photo file format but the word "key plan" shall be placed in the location of the photo number. 00220105_121301_keyplan1.jpg.

In lieu of using a digital camera to provide the above noted image files, standard 35 mm cameras and 35 mm color negative film may be used to take the images, and the images may then be captured as a digital file through the use of a designated 35mm film scanner. The 35mm scanner must have the following minimum specifications: 2700 dot per inch optical resolution; 3.4 Dmax; 36 bit color depth. The use of flatbed scanners shall not be permitted for this purpose.

Project progress photos shall be submitted as digital files on write-once CD-ROM in a jewel case on a monthly basis. **All subsequent CD submissions shall include the image files of the previous submissions and an updated hardcopy of the photo thumbnail index that contains all current and previous photos.**

Construction Methods:

Where used herein, one set of photographs will be defined as Twelve (12) photographs.

Before starting construction, take one set of color photographs of the site and surrounding properties from different points of view as selected by the Engineer. Take photographs to show existing conditions to the property before starting Work. Take photographs of existing buildings either on or adjoining the property in sufficient detail to record accurately the physical conditions at the start of construction.

Take one set of color photographs at no greater than monthly intervals, coinciding as closely as possible with the completion of a major construction phase. The photographer shall select the vantage points for each shot each month to best show the status of construction and progress since the last photographs were taken. Prior to taking any photographs, review the proposed vantage points for each shot with the Engineer. Photographs are for a record of the progress of work. Therefore, they shall be taken at a maximum interval of one month, whether or not they show any completion of work performed during the preceding month.

Take one set of color photographs upon notification by the Engineer of Final Inspection of the Project. Prior to taking any photographs, review the proposed vantage points for each shot with the Engineer. Take photographs from opposing views of the site in an effort to display various characteristics of the new construction.

Method of Measurement: This work will be measured for payment by the number of photographic sets submitted to the Engineer. "Each" photographic set shall be defined as Twelve (12) photographs. For purposes of bidding, the pay unit for a photographic set shall be "Each."

Basis of Payment: This work will be paid for at the Contract unit price each for "Progress Photographs" which price shall include all material, equipment, and labor incidental thereto. Where any submission's image files do not conform to the requirements herein, the Contractor shall not receive any payment for the item.

Pay Item	Pay Unit
Progress Photographs	EA

ITEM #0901005A – BOLLARD

Description:
Work under this item shall consist of furnishing and installing concrete filled bollards with polyethylene sleeves at the locations called for on the plans, or as directed by the Engineer.

Materials:
Steel bollard: Schedule 80 galvanized steel pipe, 8 inch nominal size (8.625" O.D.), conforming to the requirements of ASTM-A53.

Concrete: Shall meet the requirements of CSI Division 03, Section 033000, "Cast-in-Place Concrete". Class A.

Polyethylene sleeve: Bumper (Bollard) Post Sleeve #PLS1009, as manufactured by New Pig Corporation or approved equivalent. Sleeve shall be yellow in color with ¼"-thick polyethylene shell.

Construction Methods:
Bollards shall be installed in the locations shown on the plans. The steel pipe shall be securely set plumb in concrete and filled with concrete. The polyethylene sleeve shall be installed as recommended by the manufacturer.

Method of Measurement:
This work will be measured for Payment by the actual number of bollards installed, accepted and measured in place.

Basis of Payment:
This work will be paid for at the unit price for each "Bollard" complete in place, which shall include all material, tools and labor incidental thereto.

Pay Item	Pay Unit
Bollard	EA

ITEM #0913041A – 8' CHAIN LINK FENCE

Description:

Work under this item shall consist of furnishing and installing chain link fence in the locations and to the dimensions shown on the plans or as directed by the Engineer.

Submit the following in accordance with Form 816 Article 1.20-1.05.02 and NOTICE TO CONTRACTOR - SUBMITTALS.

1. Product Data in the form of manufacturer's technical data, specifications, and installation instructions for fence posts, fabric, and accessories.

2. Shop Drawings showing location of fence, each post, and details of post installation, hardware, and accessories.

3. Quality Assurance Submittals: Installer Qualifications: Engage an experienced Installer who has at least three years' experience and has completed at least five chain link fence projects with same material and of similar scope to that indicated for this Project with a successful construction record of in-service performance.

Single-Source Responsibility: Obtain chain link fences, including accessories, fittings, and fastenings, from a single source.

Materials:

General: Round member sizes are given in actual outside diameter (OD) to the nearest thousandth of inches. Round fence posts and rails are often referred to in ASTM standard specifications by nominal pipe sizes (NPS) or the equivalent trade sizes in inches. The following indicates these equivalents all measured in inches:

Actual OD	NPS Size	Trade Size
1.315	1	1-3/8
1.660	1-1/4	1-5/8
1.900	1-1/2	2
2.375	2	2-1/2
2.875	2-1/2	3
3.500	3	3-1/2
4.000	3-1/2	4
6.625	6	6-5/8
8.625	8	8-5/8

FENCE POSTS AND RAIL:

General: Type I Round Posts, standard weight (schedule 40) galvanized-steel pipe conforming to ASTM F 1083, according to heavy industrial requirements of ASTM F 669, Group IA, with minimum yield strength of 25,000 psi, not less than 1.8 oz. of zinc per sq. ft. Type A coating inside and outside according to ASTM F 1234, as determined by ASTM A 90, and weights per foot as follows:

Actual OD(in)	Weight(lb/ft)
1.315	1.68
1.660	2.27
1.900	2.72
2.375	3.65
2.875	5.79
3.500	7.58
4.000	9.11
6.625	8.97
8.625	28.55

Line or Intermediate Posts: 2.375-inch OD Type I round steel pipe.

End, Corner, and Pull Posts: 2.875-inch OD Type I round steel pipe.

Top Rail: Manufacturer's longest lengths (17 to 21 feet) with swedged-end or expansion-type coupling. Provide rail ends or other means for attaching top rail securely to each gate, corner, pull, and end post. 1.660-inch OD Type I round steel pipe.

FABRIC:

Steel Chain-Link Fence Fabric: Fabricated in one-piece widths for fencing 12 feet and less in height to comply with Chain Link Fence Manufacturers Institute (CLFMI) "Product Manual" and with requirements indicated below:

1. Mesh and Wire Size: 2-inch mesh, 0.148-inch diameter (9 gage).
2. Coating: ASTM A 817, Type 1, 0.40 oz./ft^2 aluminum coating.

FITTINGS AND ACCESSORIES:

General: Comply with ASTM F 626. Mill-finished aluminum or galvanized iron or steel to suit manufacturer's standards. Unless specified otherwise, hot-dip galvanize pressed steel or cast-iron fence fittings and accessories with at least 1.2 oz. zinc per sq. ft. as determined by ASTM A 90.

Post and Line Caps: Provide weather-tight closure cap for each post. Provide line post caps with loop to receive top rail.

Post Brace Assembly: Manufacturer's standard adjustable brace. 1.660-inch OD Type I round steel pipe for brace, and truss to line posts with 3/8-inch-diameter rod and adjustable tightener. Provide manufacturer's standard galvanized-steel, cast-iron or cast-aluminum cap for each end.

Top Rail Sleeves: Rail sleeve material shall be a minimum of 0.051 in. in thickness, and a minimum of 6 in. in length. Rail sleeve must be fabricated to prevent movement along the rail.

Tension or Stretcher Bars: Hot-dip galvanized steel with a minimum length 2 inches less than the full height of fabric, a minimum cross section of 3/16 inch by 3/4 inch, and a minimum of 1.2 oz. of zinc coating per sq. ft. Provide one bar for each gate and end post, and two for each corner and pull post, except where fabric is integrally woven into the post.

Tension and Brace Bands: ¾-inch-wide minimum hot-dip galvanized steel with a minimum of 1.2 oz. of zinc coating per sq. ft.

1. Tension Bands: 0.074 inch thick (14 gage) minimum.
2. Brace Bands: 0.105 inch thick (12 gage) minimum.

Truss Rod Assembly: Steel rods shall be 5/16 in. diameter and it and all related devices shall be hot-dip galvanized after threading with a minimum of 1.2 oz. of zinc coating per sq. ft. Truss rod and tightener shall be capable of withstanding a tension of 2000 lb.

Tension Wire: 0.177-inch-diameter metallic-coated steel Marcelled tension wire conforming to ASTM A 824 with finish to match fabric. Coating shall be Type I aluminum with a minimum coating weight of 0.40 oz. per sq. ft. as determined by ASTM A 824.

Tie Wires and Clips: 0.148-inch diameter (9 gage)steel with a tensile strength range from 55 to 65 ksi with a minimum coating of 0.40 oz./ft^2 of aluminum. Round metallic-coated steel tie wires, clips and hog rings shall withstand all forming or twisting operations without cracking or flaking of the aluminum coating. Bend ends of wire to minimize hazard to persons or clothing.

Construction Methods:

General: Install fence to comply with ASTM F 567, in the location indicated on the plans. Do not begin installation and erection before final grading is completed, unless otherwise permitted.

Excavation: Drill or hand-excavate (using post-hole digger) holes for all posts to diameters and spacings indicated, in firm, undisturbed or compacted soil. All excavated soil material shall be handled in accordance with Form 816, Section 2.02, “Earth Excavation. Excavate holes for each fence post to a minimum of 9 inches in diameter for all line posts and 12 inches in diameter for terminal, pull or corner posts, but not less than four times the largest cross section of post. Excavate holes for all fence posts to depths not less than 40 inches below finish grade surface.

Setting Posts: Center and align posts in holes 4 inches above bottom of excavation. Space a maximum of 10 feet o.c., unless otherwise indicated. Pull posts shall be provided where a change in vertical or horizontal alignment of ten (10) degrees or more occurs. Place concrete for the full depth of excavation, around all posts (including, but not limited to, line, corner and gate posts) and vibrate

or tamp for consolidation. Unless otherwise indicated, extend concrete footings 2 inches above grade and trowel to a crown to shed water. Protect portion of posts above ground from concrete splatter. Check each post for vertical and top alignment, and hold in position during placement and finishing operations.

Brace Assemblies: Install braces at end posts and at both sides of corner and pull posts. Locate horizontal braces at mid-height of fabric on fences with top rail. Install so posts are plumb when diagonal rod is under proper tension.

Top Rails: Run rail continuously through line post caps for entire length of fence, terminating at rail end attached to posts or at post caps fabricated to receive rail. Provide expansion couplings as recommended by fencing manufacturer.

Bottom Tension Wire: Install tension wire within 6 inches of bottom of fabric before stretching fabric and tie to each post with not less than same gage and type of wire. Pull wire taut, without sags. Fasten to fabric with wire ties spaced a maximum of 24 inches o.c.

Fabric: Apply fabric to outside of the area enclosed. Leave approximately 2 inches between finish grade and bottom selvage. Place the fabric by securing one end and applying sufficient tension to remove all slack before making attachment elsewhere. Tighten the fabric to provide a smooth uniform appearance free from sag. Cut the fabric by untwisting a picket and attach each span independently at all terminal posts. Thread tension bars through fabric and secure to end, corner, pull, and gate posts with tension bands spaced not over 15 inches o.c. Fasten fabric to the line posts at intervals not exceeding 15 in. Fasten fabric to the rail or tension wire at intervals not exceeding 24 in.

Fasteners: Install nuts for tension bands and carriage bolts on the side of the fence opposite the fabric side. Peen ends of bolts or score threads to prevent removal of nuts for added security.

Method of Measurement:

Chain Link Fence: This work shall be measured for Payment by the number of linear feet of completed and accepted chain link fence of the height specified, measured from outside to outside of terminal posts.

Basis of Payment:

Chain Link Fence: This work shall be paid for at the unit price per linear foot for "Chain Link Fence" of the height specified, complete in place, which price shall include all materials, equipment, tools, excavation, backfill, disposal of surplus material and labor incidental thereto.

Pay Item	Pay Unit
8' Chain Link Fence	L.F.

ITEM #0913053A – 10' POLYVINYL CHLORIDE CHAIN LINK FENCE

ITEM #0913054A – 6' POLYVINYL CHLORIDE CHAIN LINK DOUBLE GATE 10' HIGH

Description:

Work under this item shall consist of furnishing and installing chain link fence and gates in the locations and to the dimensions shown on the plans or as directed by the Engineer.

Submit the following in accordance with Form 816 Article 1.20-1.05.02 and NOTICE TO CONTRACTOR - SUBMITTALS.

1. Product Data in the form of manufacturer's technical data, specifications, and installation instructions for fence and gate posts, fabric, and accessories.

2. Shop Drawings showing location of fence, gates, each post, and details of post installation, hardware, and accessories.

3. Submit samples for verification of PVC color in form of 6 inch length of actual fabric wire to be used in color selected.

4. Quality Assurance Submittals: Installer Qualifications: Engage an experienced Installer who has at least three years' experience and has completed at least five chain link fence projects with same material and of similar scope to that indicated for this Project with a successful construction record of in-service performance.

Single-Source Responsibility: Obtain chain link fences and gates, including accessories, fittings, and fastenings, from a single source.

Materials:

General: Round member sizes are given in actual outside diameter (OD) to the nearest thousandth of inches. Round fence posts and rails are often referred to in ASTM standard specifications by nominal pipe sizes (NPS) or the equivalent trade sizes in inches. The following indicates these equivalents all measured in inches:

Actual OD	NPS Size	Trade Size
1.315	1	1-3/8
1.660	1-1/4	1-5/8
1.900	1-1/2	2
2.375	2	2-1/2
2.875	2-1/2	3
3.500	3	3-1/2
4.000	3-1/2	4

6.625	6	6-5/8
8.625	8	8-5/8

FENCE POSTS AND RAIL:

General: Type I Round Posts, standard weight (schedule 40) galvanized-steel pipe conforming to ASTM F 1083, according to heavy industrial requirements of ASTM F 669, Group IA, with minimum yield strength of 25,000 psi, not less than 1.8 oz. of zinc per sq. ft. Type A coating inside and outside according to ASTM F 1234, as determined by ASTM A 90, and weights per foot as follows:

Actual OD(in)	Weight(lb/ft)
1.315	1.68
1.660	2.27
1.900	2.72
2.375	3.65
2.875	5.79
3.500	7.58
4.000	9.11
6.625	8.97
8.625	28.55

Supplemental Color Coating: In addition to above metallic coatings, provide posts and rails with manufacturer's standard polymer coating according to ASTM F 1234, 10-mil minimum polyvinyl chloride (PVC) or 3-mil minimum polyester plastic resin finish applied to exterior surfaces and, except for tubular shapes, to exposed interior surfaces. Color to match chain link fabric.

Line or Intermediate Posts: 2.375-inch OD Type I round steel pipe.

End, Corner, and Pull Posts: 2.875-inch OD Type I round steel pipe.

Swing Gate Posts: Furnish posts to support single gate leaf, or one leaf of a double-gate installation, according to ASTM F 900, sized as follows for steel and pipe posts:

1. Fence height over 6 feet and gate leaf width:
   a. Up to and Including 6 Feet: 2.875-inch OD pipe weighing at least 4.64 lb per ft.

Top Rail: Manufacturer's longest lengths (17 to 21 feet) with swedged-end or expansion-type coupling. Provide rail ends or other means for attaching top rail securely to each gate, corner, pull, and end post. 1.660-inch OD Type I round steel pipe.

GATE FRAME MEMBERS:

Swing Gate Frame Members: Provide horizontal and vertical members to ensure proper gate operation and attachment of fabric, hardware, and accessories. The gate frame shall be constructed from same material and finish as fence framework, welded at all corners or assembled with corner fittings. Members are sized as follows for steel and pipe posts:

1. Gate height over 6 feet: 1.90-inch OD round pipe weighing at least 2.28 lb. per foot.

Truss rods: Gate frames assembled with corner fittings shall have adjustable truss rods. 5/16-inch OD round pipe of the same metal and finish as the frame.

Interior bracing: Gate leaf shall have vertical interior bracing at maximum intervals of 8 ft. and shall have a horizontal interior member if fabric height is 8 ft. or more. Additional horizontal, vertical or diagonal member or diagonal truss rods may be needed to comply with ASTM F 900 Section 5.2.1. 5/16-inch OD round pipe of the same metal and finish as the frame.

FABRIC:

Steel Chain-Link Fence Fabric: Fabricated in one-piece widths for fencing 12 feet and less in height to comply with Chain Link Fence Manufacturers Institute (CLFMI) "Product Manual" and with requirements indicated below:

1. Mesh and Wire Size: 2-inch mesh, 0.148-inch diameter (9 gage).
2. Coating: ASTM A 817, Type 1, 0.40 oz./ft^2 aluminum coating.
3. PVC Coating Color: Dark green, complying with ASTM F 934.

Chain Link Gate Fabric: The fabric shall same as specified for fence. Secure fabric at vertical edges with tension bars and bands and to top and bottom of frame with tie wires.

FITTINGS AND ACCESSORIES:

General: Comply with ASTM F 626. Mill-finished aluminum or galvanized iron or steel to suit manufacturer's standards. Unless specified otherwise, hot-dip galvanize pressed steel or cast-iron fence fittings and accessories with at least 1.2 oz. zinc per sq. ft. as determined by ASTM A 90.

Supplemental Color Coating: In addition to above metallic coatings, provide a 10-mil minimum polyvinyl chloride (PVC) or 3-mil minimum polyester plastic resin finish applied to exterior surfaces and, except inside cap shapes, to exposed interior surfaces. Color to match chain link fabric.

Post and Line Caps: Provide weather-tight closure cap for each post. Provide line post caps with loop to receive top rail.

Post Brace Assembly: Manufacturer's standard adjustable brace. 1.660-inch OD Type I round steel pipe for brace, and truss to line posts with 3/8-inch-diameter rod and adjustable tightener. Provide manufacturer's standard galvanized-steel, cast-iron or cast-aluminum cap for each end.

Top Rail Sleeves: Rail sleeve material shall be a minimum of 0.051 in. in thickness, and a minimum of 6 in. in length. Rail sleeve must be fabricated to prevent movement along the rail.

Tension or Stretcher Bars: Hot-dip galvanized steel with a minimum length 2 inches less than the full height of fabric, a minimum cross section of 3/16 inch by 3/4 inch, and a minimum of 1.2 oz. of

zinc coating per sq. ft. Provide one bar for each gate and end post, and two for each corner and pull post, except where fabric is integrally woven into the post.

Tension and Brace Bands: ¾-inch-wide minimum hot-dip galvanized steel with a minimum of 1.2 oz. of zinc coating per sq. ft.

1. Tension Bands: 0.074 inch thick (14 gage) minimum.
2. Brace Bands: 0.105 inch thick (12 gage) minimum.

Truss Rod Assembly: Steel rods shall be 5/16 in. diameter and it and all related devices shall be hot-dip galvanized after threading with a minimum of 1.2 oz. of zinc coating per sq. ft. Truss rod and tightener shall be capable of withstanding a tension of 2000 lb.

Tension Wire: 0.177-inch-diameter metallic-coated steel Marcelled tension wire conforming to ASTM A 824 with finish to match fabric. Coating shall be Type I aluminum with a minimum coating weight of 0.40 oz. per sq. ft. as determined by ASTM A 824.

Tie Wires and Clips: 0.148-inch diameter (9 gage) steel with a tensile strength range from 55 to 65 ksi with a minimum coating of 0.40 oz./ft^2 of aluminum. Round metallic-coated steel tie wires, clips and hog rings shall withstand all forming or twisting operations without cracking or flaking of the aluminum coating. Bend ends of wire to minimize hazard to persons or clothing.

Privacy Slats: Winged-type, extruded PVC members of length to match fence height

1. Color: Green.

GATE HARDWARE:

General: Provide galvanized hardware and accessories for each gate.

Hinges: Size and material to suit gate size, non-lift-off type, offset to permit 180-degree gate opening. Provide 1-1/2 pair of hinges for each leaf over 6-foot nominal height.

Latch: Drop rod or plunger-bar type to permit operation from either side of gate, with padlock eye as an integral part of latch.

Keeper: Provide a keeper for vehicle gates that automatically engages gate leaf and holds it in the open position until manually released.

Gate Stops: Provide gate stops for double gates consisting of mushroom-type flush plate with anchors, set in concrete, and designed to engage a center drop rod or plunger bar. Include a locking device and padlock eyes as an integral part of the latch, permitting both gate leaves to be locked with a single padlock.

Chain: Provide welded stainless steel, Type 347 0.375 dia. chain in lengths required as specified by the Engineer.

Construction Methods:

General: Install fence to comply with ASTM F 567, in the location indicated on the drawings. Do not begin installation and erection before final grading is completed, unless otherwise permitted.

Excavation: Drill or hand-excavate (using post-hole digger) holes for all posts to diameters and spacings indicated, in firm, undisturbed or compacted soil. All excavated soil material shall be handled in accordance with Form 816, Section 2.02, "Earth Excavation." Excavate holes for each fence post to a minimum of 9 inches in diameter for all line posts and 12 inches in diameter for terminal, pull or corner posts, but not less than four times the largest cross section of post. Excavate holes for all fence posts to depths not less than 40 inches below finish grade surface. Gate post holes shall comply with the following:

1. Gate width up to 12 feet: Excavate to a minimum diameter of 12 in. and a minimum depth of 40 in.

Setting Posts: Center and align posts in holes 4 inches above bottom of excavation. Space a maximum of 10 feet o.c., unless otherwise indicated. Pull posts shall be provided where a change in vertical or horizontal alignment of ten (10) degrees or more occurs. Place concrete for the full depth of excavation, around all posts (including, but not limited to, line, corner and gate posts) and vibrate or tamp for consolidation. Unless otherwise indicated, extend concrete footings 2 inches above grade and trowel to a crown to shed water. Protect portion of posts above ground from concrete splatter. Check each post for vertical and top alignment, and hold in position during placement and finishing operations.

Brace Assemblies: Install braces at end and gate posts and at both sides of corner and pull posts. Locate horizontal braces at mid-height of fabric on fences with top rail and at two thirds fabric height on fences without top rail. Install so posts are plumb when diagonal rod is under proper tension.

Top Rails: Run rail continuously through line post caps for entire length of fence, terminating at rail end attached to posts or at post caps fabricated to receive rail. Provide expansion couplings as recommended by fencing manufacturer.

Bottom Tension Wire: Install tension wire within 6 inches of bottom of fabric before stretching fabric and tie to each post with not less than same gage and type of wire. Pull wire taut, without sags. Fasten to fabric with wire ties spaced a maximum of 24 inches o.c.

Fabric: Apply fabric to outside of the area enclosed. Leave approximately 2 inches between finish grade and bottom selvage. Place the fabric by securing one end and applying sufficient tension to remove all slack before making attachment elsewhere. Tighten the fabric to provide a smooth uniform appearance free from sag. Cut the fabric by untwisting a picket and attach each span independently at all terminal posts. Thread tension bars through fabric and secure to end, corner, pull, and gate posts with tension bands spaced not over 15 inches o.c. Fasten fabric to the line posts at intervals not exceeding 15 in. Fasten fabric to the rail or tension wire at intervals not exceeding 24 in.

Privacy Slats: Install privacy slats according to manufacturer's instructions.

Fasteners: Install nuts for tension bands and carriage bolts on the side of the fence opposite the fabric side. Peen ends of bolts or score threads to prevent removal of nuts for added security.

Gate Installation: Install gates, according to manufacturer's instructions, plumb, level, and secure for full opening without interference. Install ground-set items in concrete for anchorage. Adjust hardware for smooth operation and lubricate where necessary. After repeated operation of completed installation equivalent to 3 days use by normal traffic, readjust gates and gate operators and controls for optimum operating condition and safety. Lubricate operating equipment and clean exposed surfaces.

Method of Measurement:

Chain Link Fence: This work shall be measured for Payment by the number of linear feet of completed and accepted chain link fence of the height specified, measured from outside to outside of terminal posts.

Chain Link Gates: This work shall be measured for Payment by the actual number of gates of the height and width specified, installed and accepted.

Basis of Payment:

Chain Link Fence: This work shall be paid for at the unit price per linear foot for "Chain Link Fence" of the height specified, complete in place, which price shall include all materials, equipment, tools, excavation, backfill, disposal of surplus material and labor incidental thereto.

Chain Link Gates: This work shall be paid for at the contract unit price each for "Chain Link Gate" of the height and width specified, complete in place, which price shall include all materials, equipment, tools, excavation, backfill, disposal of surplus material and labor incidental thereto.

Pay Item	Pay Unit
10' Polyvinyl Chloride Chain Link Fence	L.F.
6' Polyvinyl Chloride Chain Link Double Gate 10' High	EA.

ITEM #0950008A – GRAVEL MULCH

Description:

This work shall consist of furnishing, placing and shaping gravel mulch in areas shown on the plan or where directed by the Engineer. The mulch shall be placed to the depth of 4 inches on a geotextile fabric as a weed control barrier.

Materials:

Stone: Stone mulch shall be clean, native, durable stone conforming to the following type, size range, and color:

1. Type: Rounded riverbed gravel, or smooth-faced stone
2. Particle Size Range: 3/4 inch maximum, 1/4 inch minimum screen.
3. Color: Uniform tan-beige color range acceptable to the Engineer or readily available natural gravel color range.

Geotextile: Geotextile shall comply with the requirements of M.08.01-26. Materials incidental to, and necessary for the installation of the geotextile, including sewing thread, staples, pins, etc., shall conform to the requirements of the fabric manufacturer.

Construction Methods:

Grade areas to be mulched to 4” below finished grade. Install geotextile over entire area, as recommended by the manufacturer, or as directed by the Engineer. Mulch shall then be spread and shaped to the limits and grades shown on the plans. The gravel shall be placed within the curbing and over the geo-textile fabric in areas shown on plans.

Method of Measurement:

This work will be measured for payment by the number of square yards of area on which the mulch has been placed completed and work accepted.

Basis of Payment:

This work will be paid for at the contract unit price per square yards for "Gravel Mulch" which price shall include all materials, equipment, tools, labor and work incidental thereto.

Pay Item	Pay Unit
Gravel Mulch	SY

ITEM # 0969070A – CONSTRUCTION FIELD OFFICE FURNISHINGS AND EQUIPMENT

Description: This item requires that all equipment, labor, materials, service contracts, maintenance, replacements, and incidental work necessary to maintain said equipment, be provided by the Contractor, for the duration of the work, and if necessary, for a maximum of ninety days thereafter. The equipment will be supplied for the exclusive use of ConnDOT forces and others who may be engaged to augment ConnDOT forces with relation to the contract. Ownership and liability of the equipment shall remain with the Contractor.

Materials/Supplies/Equipment: Materials, supplies and equipment shall be in like new condition as approved by the Engineer.

General Requirements: This item does not include an office, but does include the equipment indicated below.

The Contractor shall provide the additional equipment and/or services described in this specification to the satisfaction of the Engineer.

The following equipment shall be provided:

QTY	Description:
1	Digital Camera as specified below under Computer Hardware and Software. All supplies and maintenance shall be provided by the Contractor.
1	Cellular Phone as specified below under Computer Hardware and Software. All supplies, maintenance and service plans shall be provided by the Contractor.
1	Laptop computer as specified below under Computer Hardware and Software. All supplies and maintenance shall be provided by the Contractor.
1	Concrete Curing Box as specified below under Concrete Testing Equipment.
1	Concrete Air Meter as specified below under Concrete Testing Equipment.
1	Concrete Slump Cone as specified below under Concrete Testing Equipment.

The equipment required herein shall remain the property of the Contractor. Any supplies required to maintain or operate the equipment above listed above shall be provided by the Contractor for the duration of the project at no additional charge.

Computer Hardware and Software:

The ConnDOT Project Engineer will provide the Contractor with a copy of the current PC specifications as soon as possible after the contract is awarded.

Before ordering the computer hardware and software, the Contractor must submit a copy of their proposed PC specifications to the ConnDOT Project Engineer for review by the ConnDOT Data Center. If the specification meets or exceeds the minimum specifications listed below, then the Contractor will be notified that the order may be placed.

Arrangements must be made a minimum of 24 hours in advance of delivery of equipment to the Data Center. Arrangements should be made by calling 860-594-3500 and following the instructions. All software, hardware and licenses listed below shall be clearly labeled, specifying the (1) Project No., (2) Contractor Name, (3) Project Engineer's Name and (4) Project Engineer's Phone No., and shall be delivered to the ConnDOT Data Center, 2710 Berlin Turnpike, Newington, CT, where it will be configured and prepared for field use. Installation if necessary will then be coordinated with ConnDOT field personnel.

The computer system furnished shall have all software and hardware necessary for the complete installation of the latest versions of the software listed, and therefore supplements the minimum specifications below. The Engineer reserves the right to expand or relax the specification to adapt to the software and hardware limitations and availability, the compatibility with current agency systems, and to provide the Department with a computer system that can handle the needs of the project. This requirement is to ensure that the rapid changing environment that computer systems have experienced does not leave the needs of the project orphan to what has been specified. **Price adjustment due to the change in the minimum system requirements will not be entertained.**

The Contractor shall provide the Engineer with a licensed copy registered in the Department's name of the latest versions of the software listed and maintain customer support services offered by each software producer for the duration of the Contract. The Contractor shall deliver to the Engineer all supporting documentation for the software and hardware including any instructions or manuals. The Contractor shall provide original backup media for the software.

The Contractor shall provide the computer system with all required supplies, maintenance and repairs (including labor and parts) throughout the Contract life.

Once the Contract has been completed, the computer will remain the property of the Contractor. Prior to the return of any computer(s) to the Contractor, field personnel will coordinate with the Data Center personnel for the removal of Department owned equipment, software, data, and associated equipment.

A) Digital Camera – Minimum Specification:

Optical – 5 mega pixel, with 3x optical zoom.
Memory – 16 GB.
Features – Date/time stamp feature.
Connectivity – USB cable or memory card reader.
Software – Must be compatible with Windows 7 Professional 64-Bit.
Power – Rechargeable battery and charger.

B) Laptop Computer – Minimum Specification:

Processor – Intel® Core i5 Processor (2.50 GHz, 1333 MHz FSB, 3M Cache)
Memory – 4 GB DIMM DDR3 1333MHz.

Screen – 14.0 inch LED anti-glare.
Graphics – Intel Graphics Media Accelerator 3000. or equivalent.
Hard Drive – 250 GB 7200 rpm hard drive (Western Digital, IBM or Seagate).
USB ports – Four (4).
Optical Drive – CD-RW/DVD-RW Combo.
Multimedia Package – Integrated microphone and speakers.
Integrated Network Adapter – comparable to 3COM PCI 10/100/1000 twisted pair Ethernet.
Wireless Network Adapter – Intel® Centrino a/b/g/n.
Card Reader – multi-card reader including SD.
Battery – Two (2) 9-cell batteries: 1-primary and 1-spare.
Power adapters – One (1) AC wall adapter and One (1) 12 Volt DC Auto adapter.
Mouse – Cordless laser 2-button mouse with scroll wheel.
Operating System – Windows 7 Professional 64-Bit Service Pack 1.
Application Software – MS Office 2010 Professional Edition.
Additional Software (Latest Releases, including subscription services for the life of the Contract.–

- Norton Anti-Virus,
- CD/DVD burning software (ROXIO or NERO),
- Adobe Acrobat Standard

Resource or Driver CD/DVD – CD/DVD with all drivers and resource information so that computer can be restored to original prior to shipment back to the contractor.
Carrying Case – Carrying case sized to carry laptop and accessories.

The Contractor is responsible for service and repairs to all computer hardware. All repairs must be performed with-in 48 hours. If the repairs require more than a 48 hours then a replacement must be provided. All supplies and maintenance for the computers, laptops, shall be provided by the Contractor.

Repair(s) or replacement(s) of equipment for any reason shall be provided at no additional cost to the State excluding the case stated below.

Major repair or replacement of equipment due to physical damage, shall be limited to not more than two (2) occurrences per unit.

If the number of occurrences of major repair or replacement of computer equipment exceed two (2) occurrences per unit, due to physical damage, the cost of the repair or replacement, excluding the Contractor's labor and equipment costs, shall be compensated on a Cost Plus basis under a separate item.

Communications:

The Contractor shall provide rugged cell phones with unlimited nation-wide calling plan that operates on the Verizon, ATT or Sprint networks. The phones should be capable of sending and

receiving text messaging and shall also include voice mail. Additional features beyond those described shall be at no additional cost to the Department. Accessories for each cell phone shall include holster, AC wall charger, DC auto charger, and extended life battery.

Concrete Testing Equipment:

If the Contract includes items that require compressive strength cylinders for concrete, in accordance with the Schedule of Minimum Testing Requirements for Sampling Materials for Test, the Contractor shall provide the following. All testing equipment will remain the property of the Contractor at the completion of the project.

A) Concrete Cylinder Curing Box – meeting the requirements of Section 6.12 of the Standard Specifications.

B) Air Meter – The air meter provided shall be in good working order and will meet the requirements of AASHTO T 152.

C) Slump Cone Mold – Slump cone, base plate, and tamping rod shall be provided in like-new condition and meet the requirements of AASHTO T119, Standard Test Method for Slump of Hydraulic-Cement Concrete.

Method of Measurement: The furnishing and maintenance of the construction field office furnishings and equipment will be measured for payment by the number of calendar months that the equipment is in place and in operation, measured to the nearest month.

There will not be a price adjustment due to a change in the minimum computer system requirements.

Basis of Payment: The furnishing and maintenance of the construction field office furnishings and equipment will be paid at the listed unit price per month for the respective item "Construction Field Office Furnishings and Equipment", which price shall include all material, equipment, labor, service contracts, licenses, repair or replacement of hardware and software, and work incidental thereto, as outlined in the various sections of this specification.

The State will be responsible for payment of data communication user fees and for toll calls by State personnel.

Pay Item	Pay Unit
Construction Field Office Furnishings and Equipment	Month

ITEM #0980001A – CONSTRUCTION STAKING

9.80.01—Description: The work under this item shall consist of construction layout and reference staking necessary for the proper control and satisfactory completion of all work on the project, except property lines, highway lines, or non-access lines.

9.80.02—Materials: All stakes used for control staking shall be of the same quality as used by the Department for this purpose. For slope limits, pavement edges, gutter lines, etc., where so-called "green" or "working" stakes are commonly used, lesser quality stakes will be acceptable, provided the stakes are suitable for the intended purpose.

9.80.03—Construction Methods: The Department will furnish the Contractor such control points, bench marks, and other data as may be necessary for the construction staking and layout by qualified engineering or surveying personnel as noted elsewhere herein.

The Contractor shall be responsible for the placement and preservation of adequate ties to all control points, necessary for the accurate re-establishment of all base lines, center lines, and all critical grades as shown on the plans.

All stakes, references, and batter boards which may be required for construction operations, signing and traffic control shall be furnished, set and properly referenced by the Contractor. The Contractor shall be solely and completely responsible for the accuracy of the line and grade of all features of the work. Any errors or apparent discrepancies found in previous surveys, plans, specifications or special provisions shall be called to the Engineer's attention immediately for correction or interpretation prior to proceeding with the work.

During roadway construction (or site work), the Contractor shall provide and maintain for the periods needed, as determined by the Engineer, reference stakes at 100 foot intervals outside the slope limits. Further, the Contractor shall provide and maintain reference stakes at 50 foot intervals immediately prior to and during the formation of subgrade and the construction of all subsequent pavement layers. These stakes shall be properly marked as to station, offset and shall be referenced to the proposed grade, even if laser or GPS machine controls are used.

The Contractor shall provide and maintain reference stakes at drainage structures, including reference stakes for the determination of the structure alignments as may be needed for the proper construction of the drainage structure. The reference stakes shall be placed immediately prior to and maintained during the installation of the drainage structure. These stakes shall be properly marked as to station, offset and shall be referenced to the proposed grade.

The Contractor shall furnish copies of data used in setting and referencing stakes and other layout markings used by the Contractor after completion of each operation.

The Contractor shall provide safe facilities for convenient access by Department forces to control points, batter boards, and references.

All staking shall be performed by qualified engineering or surveying personnel who are trained, experienced and skilled in construction layout and staking of the type required under the contract. Prior to start of work, the Contractor shall submit for review and comment the qualifications of personnel responsible for construction staking on the project. On all projects with an original contract value greater than $25 million and bridge rehabilitation and reconstruction projects greater than $10 million, surveying shall be performed under the direct supervision of a Professional Surveyor licensed in the State of Connecticut. The submission shall

include a description of the experience and training which the proposed staff possesses and a list of state projects the personnel have worked on previously. All field layout and staking required for the project shall be performed under the direct supervision of a person, or persons, of engineering background experienced in the direction of such work and acceptable to the Engineer. If the personnel responsible for construction staking change during the course of the project, then a revised submittal will be required.

The Department may check the control of the work, as established by the Contractor, at any time as the work progresses. The Contractor will be informed of the results of these checks, but the Department by so doing in no way relieves the Contractor of responsibility for the accuracy of the layout work. The Contractor shall correct or replace, at the Contractor's own expense, any deficient layout and construction work which may be the result of the inaccuracies in the Contractor's staking operations or the failure to report such inaccuracies, or the Contractor's failure to report inaccuracies found in work done by the Department or by others. If, as a result of these inaccuracies, the Department is required to make further studies, redesign, or both, all expenses incurred by the Department due to such inaccuracies will be deducted from any monies due the Contractor.

The Contractor shall furnish all necessary personnel, engineering equipment and supplies, materials, transportation, and work incidental to the accurate and satisfactory completion of this work.

For roadways where the existing pavement markings need to be reestablished:
Prior to any resurfacing or obliteration of existing pavement markings, the Contractor and a representative of the Engineer must establish and document pavement marking control points from the existing markings. These control points shall be used to reestablish the positions of the lanes, the beginnings and endings of tapers, channelization lines for on and off ramps, lane use arrows, stop bars, and any lane transitions in the project area. The Contractor shall use these control points to provide appropriate premarking prior to the installation of the final markings.

The Contractor shall provide and maintain reference stakes and/or markings at 100 foot intervals immediately off the edge of pavement to be used to reestablish the existing pavement markings. The Contractor shall also provide and maintain reference stakes and/or markings at any point where there is a change in pavement markings to reestablish the existing pavement markings.

For non-limited access roadways
On non-limited access roadways it may be necessary to adjust the final locations of the pavement markings to accommodate pedestrians and bicyclists where feasible. Prior to any resurfacing or obliteration of existing pavement markings, the Contractor, a representative of the Engineer, and a representative of the Division of Traffic Engineering must establish and document pavement marking control points from the existing markings as described above. The control points at that time may be adjusted to provide minimum shoulder widths of 4 to 5 feet wherever possible while maintaining travel lane widths of no less than 11 feet and no more than 12 feet.

9.80.04—Method of Measurement: Construction staking will be at the Contract lump sum for construction staking.

When no price for "Construction Staking" is asked for on the proposal form, the cost of the work described above shall be included in the general cost of the work and no direct payment for "Construction Staking" will be made.

9.80.05—Basis of Payment: Construction staking will be paid for at the Contract lump sum price for "Construction Staking," which price shall include all materials, tools, equipment, labor and work incidental thereto. A schedule of values for payment shall be submitted to the Department for review and comment prior to payment.

Pay Item	Pay Unit
Construction Staking	l.s.

CSI SPECIFICATIONS

INDEX OF CSI-FORMATTED SPECIFICATION AND
CORRESPONDING FORM 816 ITEM NUMBER
CANTERBURY MAINTENANCE FACILITY TANK REPLACEMENT AT
CANTERBURY, CONNECTICUT
STATE PROJECT NO. 22-105

Item #	CSI Sect.	Description of Item
		DIVISION 3 - CONCRETE
0177150A	033000	CAST-IN-PLACE CONCRETE
		DIVISION 7 – THERMAL AND MOISTURE PROTECTION
0177150A	079200	JOINT SEALANTS
		DIVISION 13 - SPECIAL CONSTRUCTION
0177150A	132160	INSTALLATION OF A NEW FUEL FACILITY
0177150A	132180	TANK MONITORING SYSTEM
		DIVISION 23 – HEATING, VENTILATING AND AIR CONDITIONING
0177150A	230517	SLEEVES AND SLEEVE SEALS FOR HVAC PIPING
0177150A	230529	HANGERS AND SUPPORTS FOR HVAC PIPING AND EQUIPMENT
0177150A	230553	IDENTIFICATION FOR HVAC PIPING AND EQUIPMENT
0177150A	231113	FACILITY FUEL-OIL PIPING
		DIVISION 26 - ELECTRICAL
0177150A	260519	LOW-VOLTAGE ELECTRICAL POWER CONDUCTORS AND CABLES
0177150A	260526	GROUNDING AND BONDING FOR ELECTRICAL SYSTEMS
0177150A	260529	HANGERS AND SUPPORTS FOR ELECTRICAL SYSTEMS
0177150A	260533	RACEWAY AND BOXES FOR ELECTRICAL SYSTEMS
0177150A	260543	UNDERGROUND DUCTS AND RACEWAYS FOR ELECTRICAL SYSTEMS
0177150A	260544	SLEEVES AND SLEEVE SEALS FOR ELECTRICAL RACEWAYS AND CABLING

GENERAL

DIVISION 26 - ELECTRICAL

0177150A	260553	IDENTIFICATION FOR ELECTRICAL SYSTEMS
0177150A	262416	PANELBOARDS
0177150A	262726	WIRING DEVICES
0177150A	262813	FUSES
0177150A	262816	ENCLOSED SWITCHES AND CIRCUIT BREAKERS
0177150A	265600	EXTERIOR LIGHTING

SECTION 033000 - CAST-IN-PLACE CONCRETE

PART 1 - GENERAL

1.1 SUMMARY:

A. This Section specifies cast-in-place concrete, including formwork, reinforcement, concrete materials, mixture design, placement procedures, and finishes.

B. Related CSI Sections include the following:

1. Division 07 Section 079200, "Joint Sealants" for expansion joint over one inch and perimeter and joint sealants for floor and wall joints.

1.2 SUBMITTALS:

A. Submit the following in accordance with Form 816 Article 1.20-1.05.02 and NOTICE TO CONTRACTOR – SUBMITTALS.

B. Product Data: For proprietary materials and items, including reinforcement and forming accessories, admixtures, joint systems, curing compounds, colored hardener and others if requested by the Designer.

C. Shop Drawings: For reinforcement detailing fabricating, bending, and placing concrete reinforcement. Comply with ACI 315 Detailing Manual – SP-66(94) showing bar schedules and arrangement of concrete reinforcement. Include special reinforcing required for openings through concrete structures. For slabs with mechanically-connected steel reinforcement, indicate anchors and inserts locations, proposed locations of all control, expansion and construction joints not otherwise shown on the plans.

D. Quality Assurance Submittals:

1. Laboratory test reports for concrete materials and mix design test.
2. Material certificates in lieu of material laboratory test reports when permitted by Engineer. Material certificates shall be signed by manufacturer and Contractor, certifying that each material item complies with or exceeds specified requirements. Provide certification from admixture manufacturers that chloride content complies with specification requirements.
3. Evidence that concrete materials have been tested and the test results are on file with the State of Connecticut Department of Transportation Laboratory.
4. Certified Materials Test Reports for each lot of reinforcement showing that it complies with ASTM A 615.

1.3 QUALITY ASSURANCE:

A. Codes and Standards: Comply with provisions of the following codes, specifications and standards, except where more stringent requirements are shown or specified:

1. State of Connecticut Department of Transportation "Form 816," "Standard Specification for Roads, Bridges and Incidental Construction"
2. ACI 301, "Specifications for Structural Concrete for Buildings."
3. ACI 318, "Building Code Requirements for Reinforced Concrete."
4. CRSI, "Manual of Standard Practice."
5. ACI 315, "Details and Detailing of Concrete Reinforcement"
6. ACI 347, "Recommended Practice for Concrete Formwork"
7. ACI 304R, "Recommended Practice for Measuring, Mixing, Transportation and Placing Concrete"
8. ACI 302.1R, "Guide for Concrete Floor and Slab Construction"
9. ACI 305R, "Hot Weather Concreting"
10. ACI 306R, "Cold Weather Concreting"
11. ACI 306.1, "Standard Specifications for Cold Weather Concreting"
12. ACI 308, "Standard Practice for Curing Concrete"
13. 309R "Standard Practice for Consolidating of Concrete"
14. ACI 211.1, "Standard Practice for Selecting Proportions for Normal, Heavy Weight and Mass Concrete"
15. ACI 303.1 "Standard Specifications for Cast-In-Place Architectural Concrete"
16. ASTM C309 "Standard Specifications for Liquid Membrane-Forming Compounds for Curing Concrete"
17. ASTM C494 "Standard Specifications for Chemical Admixtures for Concrete"

B. Testing Agency Qualifications: An independent agency, acceptable to the Engineer to perform material evaluation tests and to design concrete mixes, qualified according to ASTM C 1077 and ASTM E 329 for testing indicated, as documented according to ASTM E 548.

C. Materials and installed work may require testing and retesting at any time during progress of work. Tests, including retesting of rejected materials for installed work, shall be done at the Contractor's expense.

D. Concrete Testing Service: Engage a qualified independent testing agency, acceptable to the Engineer, to perform material evaluation tests and to design concrete mixtures. The Engineer or his designated representative will perform material evaluation tests on the concrete mixes designed by the Contractor.

E. Conduct a Pre-Installation Meeting at the Project Site in compliance with the requirements of Form 816 Article 1.20-1.05.24, subsection 2.

1. At least 35 calendar days prior to submitting design mixes, conduct a meeting to review detailed requirements for preparing concrete design mixes and to determine procedures for satisfactory concrete operations. Review requirements

for submittals, status of coordinating work, and availability of materials. Establish materials inspection, testing, and certifications. Require representatives of each entity directly concerned with cast-in-place concrete to attend the meeting.

F. Source Limitations: Obtain each type or class of cementitious material of the same brand from the same manufacturer's plant, obtain aggregate from one source, and obtain admixtures and color hardener through one source from a single manufacturer in accordance with Form 816 Article 1.20-1.06.01.

1.4 DELIVERY, STORAGE, AND HANDLING:

A. Refer to Form 816 Article 1.06.03 and Form 816 Article 1.20-1.06.03 for additional information.

B. Steel Reinforcement: Deliver, store, and handle steel reinforcement to prevent bending and damage. Avoid damaging coatings on steel reinforcement. Repair damaged epoxy coatings on steel reinforcement according to ASTM D 3963.

C. Water-stops: Store water-stops under cover to protect from moisture, sunlight, dirt, oil, and other contaminants.

PART 2 - PRODUCTS

2.1 FORM-FACING MATERIALS:

A. Forms for Exposed Finish Concrete: Plywood, metal, metal-framed plywood faced, or other acceptable panel type material that will provide continuous, true, and smooth, exposed concrete surfaces. Furnish in largest practicable sizes to minimize number of joints and to conform to joint system shown on the plans.

1. Use overlaid plywood complying with DOC PS-1 "A-C or B-B High Density Overlaid Concrete Form," Class I or better.
2. Use plywood complying with DOC PS-1 "B-B (Concrete Form) Plywood," Class I, Exterior Grade or better, mill-oiled and edge-sealed, with each piece bearing legible inspection trademark.

B. Forms for Unexposed Finished Concrete: Plywood, lumber, metal, or another approved material. Provide lumber dressed on at least two edges and one side for tight fit.

C. Chamfer Strips: Wood, metal, PVC, or rubber strips, 3/4 by 3/4 inch, minimum.

D. Form-Release Agent: Commercially formulated form-release agent that will not bond with, stain, or adversely affect concrete surfaces and will not impair subsequent

treatments of concrete surfaces. Comply with local regulations controlling use of volatile organic compounds (VOC's).

2.2 STEEL REINFORCEMENT:

A. Reinforcing Bars: ASTM A 615, Grade 60, deformed.

B. Epoxy-Coated Reinforcing Bars: ASTM A 775, with less than 2 percent damaged coating in each 12-inch bar length.

C. Plain-Steel Welded Wire Reinforcement: ASTM A 185, plain, fabricated from as-drawn steel wire into flat sheets.

2.3 REINFORCEMENT ACCESSORIES:

A. Joint Dowel Bars: ASTM A 615, Grade 60, plain-steel bars, cut bars true to length with ends square and free of burrs.

B. Epoxy Repair Coating: Liquid, two-part, epoxy repair coating; compatible with epoxy coating on reinforcement and complying with ASTM A 775.

C. Bar Supports: Bolsters, chairs, spacers, and other devices for spacing, supporting, and fastening reinforcing bars and welded wire reinforcement in place. Manufacture bar supports from steel wire, plastic, or pre-cast concrete according to CRSI's "Manual of Standard Practice," of greater compressive strength than concrete and as follows:

1. For concrete surfaces exposed to view where legs of wire bar supports contact forms, use CRSI Class 1 plastic-protected steel wire or CRSI Class 2 stainless-steel bar supports.

2.4 CONCRETE MATERIALS:

A. Cementitious Material: Use the following cementitious materials, of the same type, brand, and source, throughout Project:

1. Portland Cement: ASTM C 150, Type 1 or II, gray. Do not use air entraining cement.
2. Fly Ash: ASTM C618, Type C or F.

B. Normal-Weight Aggregates: ASTM C 33, Class 3S. Provide aggregates from a single source for exposed concrete.

1. For exposed exterior surfaces, do not use fine or coarse aggregates that contain substances that cause spalling.

2. Provide evidence that all aggregates are non-reactive with alkaline when tested in accordance with ASTM C 289 and C 227.
3. Local aggregates not complying with ASTM C 33 but have shown to produce concrete of adequate strength and durability by special tests or actual service may be used when acceptable to the Engineer.

C. Water: ASTM C 94, clean and potable.

2.5 ADMIXTURES:

A. Air-Entraining Admixture: ASTM C 260.

B. Chemical Admixtures: Provide admixtures certified by manufacturer to be compatible with other admixtures and that will not contribute water-soluble chloride ions exceeding those permitted in hardened concrete. Do not use calcium chloride or admixtures containing calcium chloride.

1. Water-Reducing Admixture: ASTM C 494, Type A.
2. Water-Reducing and Retarding Admixture: ASTM C 494, Type D.
3. High-Range, Water-Reducing Admixture: ASTM C 494, Type F.

C. Corrosion-Inhibiting Admixture: Commercially formulated, non-set-accelerating, anodic inhibitor or mixed cathodic and anodic inhibitor; capable of forming a protective barrier and minimizing chloride reactions with steel reinforcement in concrete.

2.6 WATERSTOPS:

A. Flexible PVC Water-stops: CE CRD-C 572, for embedding in concrete to prevent passage of fluids through joints. Factory-fabricate corners, intersections, and directional changes. Size to suit joints.

1. Profile: Flat, dumbbell with center bulb.

2.7 CURING MATERIALS:

A. Evaporation Retarder: Waterborne, monomolecular film forming, manufactured for application to fresh concrete.

B. Absorptive Cover: AASHTO M 182, Class 2, burlap cloth made from jute or kenaf, weighing approximately 9 oz./sq. yd. when dry. No curing membranes can be used on slabs-on grade and slab above the basement.

C. Moisture-Retaining Cover: ASTM C 171, polyethylene film or white burlap-polyethylene sheet.

D. Water: Clean and potable.

E. Clear, Waterborne, Membrane-Forming Curing Compound: ASTM C 309, Type 1, Class B, dissipating.

F. Clear, Waterborne, Membrane-Forming Curing Compound: ASTM C 309, Type 1, Class B, nondissipating, certified by curing compound manufacturer to not interfere with bonding of floor covering.

2.8 RELATED MATERIALS:

A. Expansion and Isolation-Joint-Filler Strips: ASTM D 1751, asphalt-saturated cellulosic fiber or ASTM D 1752, cork or self-expanding cork.

B. Semi-rigid Joint Filler: Two-component, semi-rigid, 100 percent solids, epoxy resin with a Type A Shore Durometer hardness of 80 per ASTM D 2240.

C. Bonding Agent: ASTM C 1059, Type II, non-redispersible, acrylic emulsion or styrene butadiene.

A. Epoxy Bonding Adhesive: ASTM C 881, two-component epoxy resin, capable of humid curing and bonding to damp surfaces, of class suitable for application temperature and of grade to suit requirements, and as follows:

1. Types I and II, non-load bearing, for bonding hardened or freshly mixed concrete to hardened concrete.

B. Compacted Granular Fill: Refer to Form 816, Section 2.14 “Compacted Granular Fill” for material and construction methods required.

2.9 REPAIR MATERIALS:

A. Repair Underlayment: Cement-based, polymer-modified, self-leveling product that can be applied in thicknesses from 1/8 inch and that can be feathered at edges to match adjacent floor elevations.

1. Cement Binder: ASTM C 150, Portland cement or hydraulic or blended hydraulic cement as defined in ASTM C 219.
2. Primer: Product of underlayment manufacturer recommended for substrate conditions and application.
3. Aggregate: Well-graded, washed gravel, 1/8 to 1/4 inch or coarse sand as recommended by underlayment manufacturer.
4. Compressive Strength: Not less than 4000 psi at 28 days when tested according to ASTM C 109/C 109M.

B. Repair Over-layment: Cement-based, polymer-modified, self-leveling product that can be applied in thicknesses from 1/8 inch and that can be feathered at edges to match adjacent floor elevations.

1. Cement Binder: ASTM C 150, Portland cement or hydraulic or blended hydraulic cement as defined in ASTM C 219.
2. Primer: Product of topping manufacturer recommended for substrate, conditions, and application.
3. Aggregate: Well-graded, washed gravel, 1/8 to 1/4 inch or coarse sand as recommended by topping manufacturer.
4. Compressive Strength: Not less than 4000 psi at 28 days when tested according to ASTM C 109/C 109M.

C. Penetrating Sealer: slabs-on-grade shall receive a coating of penetrating sealer applied in accordance with manufacturer's written instructions. Provide certification by manufacturer that product complies with local regulations controlling the use of volatile organic compounds (VOC). Available Products include, but are not limited to the following:

1. Hydrozo Silane 40M and Hydrozo Enviroseal 40 by Hydrozo.
2. Chem-Trete BSM 40 by Huls-America.
3. Masterseal SL40 by Master Builders.
4. Penetrating Sealer 40 - by Sonneborn Building Products.

2.10 CONCRETE MIXTURES, GENERAL:

A. Prepare design mixtures for each type and strength of concrete, proportioned on the basis of laboratory trial mixture or field test data, or both, according to ACI 301.

1. Use a qualified independent testing agency for preparing and reporting proposed mixture designs based on laboratory trial mixtures.

B. Cementitious Materials: Limit percentage, by weight, of cementitious materials other than Portland cement in concrete as follows:

1. Fly Ash: 15 percent. Not allowed in cement mixes for slab-on-grade.

C. Limit water-soluble, chloride-ion content in hardened concrete to 0.15 percent by weight of cement.

D. Admixtures: Use admixtures according to manufacturer's written instructions and only when approved by the Engineer.

1. Use water-reducing high-range water-reducing or plasticizing admixture in concrete, as required, for placement and workability.
2. Use water-reducing and retarding admixture when required by high temperatures, low humidity, or other adverse placement conditions.
3. Use water-reducing admixture in pumped concrete, except footings, concrete for heavy-use industrial slabs and parking structure slabs, concrete required to be watertight, and concrete with a water-cementitious materials ratio below 0.50.

4. Use non-chlorine accelerating admixture in concrete slabs placed at ambient temperatures below 50 deg F.
5. Corrosion-inhibiting admixture for salt shed stems and piers shall contain calcium nitrite at 4 gal. per cubic yard of a 30 percent solid solution.
6. No admixtures containing calcium chloride shall be permitted in slabs-on-grade and other concrete floors.

2.11 CONCRETE MIXTURES FOR BUILDING ELEMENTS:

A. Slabs-on-Grade: Proportion normal-weight concrete mixture as follows:

1. Minimum Compressive Strength: 4000 psi at 28 days.
2. Minimum Cementitious Materials Content: 540 lb/cu. yd.
3. Slump Limit: 3 inches , plus or minus 1 inch
4. Air Content: 6 percent, plus or minus 1.5 percent at point of delivery for 1-inch nominal maximum aggregate size.
5. Air Content: Do not allow air content of troweled finished floors to exceed 3 percent.

2.12 FABRICATING REINFORCEMENT:

A. Fabricate steel reinforcement according to CRSI's "Manual of Standard Practice."

2.13 CONCRETE MIXING:

A. Ready-Mixed Concrete: Measure, batch, mix, and deliver concrete according to ASTM C 94, and furnish batch ticket information.

1. When air temperature is between 85 and 90 deg F, reduce mixing and delivery time from 1-1/2 hours to 75 minutes; when air temperature is above 90 deg F, reduce mixing and delivery time to 60 minutes.
2. Project-Site Mixing: Measure, batch, and mix concrete materials and concrete according to ASTM C 94. Mix concrete materials in appropriate drum-type batch machine mixer.
3. For mixer capacity of 1 cu. yd or smaller, continue mixing at least 1-1/2 minutes, but not more than 5 minutes after ingredients are in mixer, before any part of batch is released. For mixer capacity larger than 1 cu. yd, increase mixing time by 15 seconds for each additional 1 cu. yd.
4. Provide batch ticket for each batch discharged and used in the Work, indicating Project identification name and number, date, mixture type, mixture time, quantity, and amount of water added. Record approximate location of final deposit in structure.

PART 3 - EXECUTION

3.1 FORMWORK:

A. Construct formwork so concrete members and structures are of size, shape, alignment, elevation, and position indicated, within tolerance limits of ACI 117.

B. Limit concrete surface irregularities, designated by ACI 347R as abrupt or gradual, as follows:

1. Class A, 1/8 inch for concrete surfaces exposed to view.
2. Class B, 1/4 inch for other concrete surfaces.

D. Construct forms tight enough to prevent loss of concrete mortar.

E. Fabricate forms for easy removal without hammering or prying against concrete surfaces. Provide crush or wrecking plates where stripping may damage cast concrete surfaces

1. Install keyways, reglets, recesses, and the like, for easy removal.
2. Do not use rust-stained steel form-facing material.

F. Set edge forms, bulkheads, and intermediate screed strips for slabs to achieve required elevations and slopes in finished concrete surfaces. Provide and secure units to support screed strips; use strike-off templates or compacting-type screeds.

G. Chamfer exterior corners and edges of permanently exposed concrete.

I. Form openings, chases, offsets, sinkages, keyways, blocking, screeds, and bulkheads required in the Work. Determine sizes and locations from trades providing such items.

J. Clean forms and adjacent surfaces to receive concrete. Remove chips, wood, sawdust, dirt, and other debris just before placing concrete.

K. Retighten forms and bracing before placing concrete, as required, to prevent mortar leaks and maintain proper alignment.

L. Coat contact surfaces of forms with form-release agent, according to manufacturer's written instructions, before placing reinforcement.

3.2 STEEL REINFORCEMENT:

A. General: Comply with CRSI's "Manual of Standard Practice" for placing reinforcement.

B. Clean reinforcement of loose rust and mill scale, earth, ice, and other foreign materials that would reduce bond to concrete.

C. Install welded wire reinforcement in longest practicable lengths on bar supports spaced to minimize sagging. Lap edges and ends of adjoining sheets at least one mesh spacing. Offset laps of adjoining sheet widths to prevent continuous laps in either direction. Lace overlaps with wire.

D. Epoxy-Coated Reinforcement: Repair cut and damaged epoxy coatings with epoxy repair coating according to ASTM D 3963/D 3963M. Use epoxy-coated steel wire ties to fasten epoxy-coated steel reinforcement.

1. Use Epoxy-Coated Reinforcing Bars for all concrete exposed to salt such as Slabs-on-Grade and Fuel Island.

3.3 JOINTS:

E. General: Construct joints true to line with faces perpendicular to surface plane of concrete.

F. Construction Joints: Install so strength and appearance of concrete are not impaired, at locations indicated or as approved by the Engineer.

1. Place joints perpendicular to main reinforcement. Continue reinforcement across construction joints, unless otherwise indicated. Do not continue reinforcement through sides of strip placements of floors and slabs.

G. Contraction Joints in Slabs-on-Grade: Form weakened-plane contraction joints, sectioning concrete into areas as indicated. Construct contraction joints for a depth equal to at least one-fourth of concrete thickness as follows:

1. Grooved Joints: Form contraction joints after initial floating by grooving and finishing each edge of joint to a radius of 1/8 inch. Repeat grooving of contraction joints after applying surface finishes. Eliminate groover tool marks on concrete surfaces.
2. Sawed Joints: Form contraction joints with power saws equipped with shatterproof abrasive or diamond-rimmed blades. Cut 1/8-inch-wide joints into concrete when cutting action will not tear, abrade, or otherwise damage surface and before concrete develops random contraction cracks.

3.4 WATERSTOPS:

A. Flexible Water-stops: Install in construction joints and at other joints indicated to form a continuous diaphragm. Install in longest lengths practicable. Support and protect exposed water-stops during progress of the Work. Field-fabricate joints in water-stops according to manufacturer's written instructions.

3.5 CONCRETE PLACEMENT:

A. Before placing concrete, verify that installation of formwork, reinforcement, and embedded items is complete and that required inspections have been performed.

B. Do not add water to concrete during delivery, at Project Site, or during placement unless approved by the Engineer.

C. Before test sampling and placing concrete, water may be added at Project Site, subject to limitations of ACI 301.

1. Do not add water to concrete after adding high-range water-reducing admixtures to mixture.

D. Deposit concrete continuously in one layer or in horizontal layers of such thickness that no new concrete will be placed on concrete that has hardened enough to cause seams or planes of weakness. If a section cannot be placed continuously, provide construction joints as indicated. Deposit concrete to avoid segregation.

1. Deposit concrete in horizontal layers of depth to not exceed formwork design pressures and in a manner to avoid inclined construction joints.
2. Consolidate placed concrete with mechanical vibrating equipment according to ACI 301.
3. Do not use vibrators to transport concrete inside forms. Insert and withdraw vibrators vertically at uniformly spaced locations to rapidly penetrate placed layer and at least 6 inches into preceding layer. Do not insert vibrators into lower layers of concrete that have begun to lose plasticity. At each insertion, limit duration of vibration to time necessary to consolidate concrete and complete embedment of reinforcement and other embedded items without causing mixture constituents to segregate.

E. Deposit and consolidate concrete for floors and slabs in a continuous operation, within limits of construction joints, until placement of a panel or section is complete.

1. Consolidate concrete during placement operations so concrete is thoroughly worked around reinforcement and other embedded items and into corners.
2. Maintain reinforcement in position on chairs during concrete placement.
3. Screed slab surfaces with a straightedge and strike off to correct elevations.
4. Slope surfaces uniformly to drains where required.
5. Begin initial floating using bull floats or darbies to form a uniform and open-textured surface plane, before excess bleed-water appears on the surface. Do not further disturb slab surfaces before starting finishing operations.

B. Cold-Weather Placement: Comply with ACI 306.1 and as follows. Protect concrete work from physical damage or reduced strength that could be caused by frost, freezing actions, or low temperatures.

1. When average high and low temperature is expected to fall below 40 deg F for three successive days, maintain delivered concrete mixture temperature within the temperature range required by ACI 301.
2. Do not use frozen materials or materials containing ice or snow. Do not place concrete on frozen sub-grade or on sub-grade containing frozen materials.
3. Do not use calcium chloride, salt, or other materials containing antifreeze agents or chemical accelerators unless otherwise specified and approved in mixture designs.

C. Hot-Weather Placement: Comply with ACI 301 and as follows:

1. Maintain concrete temperature below 90 deg F at time of placement. Chilled mixing water or chopped ice may be used to control temperature, provided water equivalent of ice is calculated to total amount of mixing water. Using liquid nitrogen to cool concrete is Contractor's option.
2. Fog-spray forms, steel reinforcement, and sub-grade just before placing concrete. Keep sub-grade uniformly moist without standing water, soft spots, or dry areas.

3.6 FINISHING SLABS:

A. General: Comply with ACI 302.1R recommendations for screeding, re-straightening, and finishing operations for concrete surfaces. Do not wet concrete surfaces.

1. Edge, Float and Groove the Slab, when all traces of the water are gone and the concrete starts to harden. Start by running the edger around the perimeter to round and compact the corner. After finishing edging start slab Float and Trowel the Surface to Smooth and Compact; Floating removes the marks left by edging and brings the surface one-step closer to a final finish. After finishing slab-floating, start the grooving process at the slab surrounding the pump island. Construct positive limiting barrier as per Plans. Use a straightedge and proper groove tool.

B. Broom Finish: Apply a broom finish to exterior concrete platforms, steps, and ramps, and elsewhere as indicated.

1. Immediately after float finishing, slightly roughen trafficked surface by brooming with fiber-bristle broom perpendicular to main traffic route. The slab shall be uniform in appearance. The broom finish shall not dislodge aggregate nor leave large particles of cement paste which not conform to the broom finish. Coordinate required final finish with Engineer before application.

3.7 MISCELLANEOUS CONCRETE ITEMS:

A. Filling In: Fill in holes and openings left in concrete structures, unless otherwise indicated, after work of other trades is in place. Mix, place, and cure concrete, as specified, to blend with in-place construction. Provide other miscellaneous concrete filling indicated or required to complete the Work.

3.8 CONCRETE PROTECTING AND CURING:

A. General: Protect freshly placed concrete from premature drying and excessive cold or hot temperatures. Comply with ACI 306.1 for cold-weather protection and ACI 301 for hot-weather protection during curing. Do not use curing membranes on slabs-on-grade and concrete floors generally in areas of etched floors.

B. Evaporation Retarder: Apply evaporation retarder to unformed concrete surfaces if hot, dry, or windy conditions cause moisture loss approaching 0.2 lb/sq. ft. x h before and during finishing operations. Apply according to manufacturer's written instructions after placing, screeding, and bull floating or darbying concrete, but before float finishing.

C. Formed Surfaces: Cure formed concrete surfaces, including underside of beams, supported slabs, and other similar surfaces. If forms remain during curing period, moist cure after loosening forms. If removing forms before end of curing period, continue curing for the remainder of the curing period.

D. Cure concrete according to ACI 308.1, by one or a combination of the following methods:

1. Moisture Curing: Keep surfaces continuously moist for not less than seven days with the following materials:

   a. Water.
   b. Continuous water-fog spray.
   c. Absorptive cover, water saturated, and kept continuously wet. Cover concrete surfaces and edges with 12-inch lap over adjacent absorptive covers.

2. Moisture-Retaining-Cover Curing: Cover concrete surfaces with moisture-retaining cover for curing concrete, placed in widest practicable width, with sides and ends lapped at least 12 inches and sealed by waterproof tape or adhesive. Cure for not less than seven days. Immediately repair any holes or tears during curing period using cover material and waterproof tape.

   a. Moisture cure or use moisture-retaining covers to cure concrete surfaces to receive floor coverings.
   b. Moisture cure or use moisture-retaining covers to cure concrete surfaces to receive penetrating liquid floor treatments.
   c. Cure concrete surfaces to receive floor coverings with either a moisture-retaining cover or a curing compound that the manufacturer certifies will not interfere with bonding of floor covering used on Project.

3. Curing Compound: Apply uniformly in continuous operation by power spray or roller according to manufacturer's written instructions. Recoat areas subjected to heavy rainfall within three hours after initial application. Maintain continuity of coating and repair damage during curing period.

a. After curing period has elapsed, remove curing compound without damaging concrete surfaces by method recommended by curing compound manufacturer unless manufacturer certifies curing compound will not interfere with bonding of floor covering used on Project.

4. Curing and Sealing Compound: Apply uniformly to floors and slabs indicated in a continuous operation by power spray or roller according to manufacturer's written instructions. Recoat areas subjected to heavy rainfall within three hours after initial application. Repeat process 24 hours later and apply a second coat. Maintain continuity of coating and repair damage during curing period.

3.9 FIELD QUALITY CONTROL:

A. Testing and Inspecting: The State will engage a qualified testing and inspecting agency to perform field tests and inspections and prepare test reports.

B. Inspections:

1. Steel reinforcement placement.
2. Verification of use of required design mixture.
3. Concrete placement, including conveying and depositing.
4. Curing procedures and maintenance of curing temperature.
5. Verification of concrete strength before removal of shores and forms.

C. Concrete Tests: Testing of composite samples of fresh concrete obtained according to ASTM C 172 shall be performed according to the following requirements:

1. Testing Frequency: Obtain one composite sample for each day's pour of each concrete mixture exceeding 5 cu. yd., but less than 25 cu. yd. , plus one set for each additional 50 cu. yd. or fraction thereof.

   a. When frequency of testing will provide fewer than five compressive-strength tests for each concrete mixture, testing shall be conducted from at least five randomly selected batches or from each batch if fewer than five are used.

2. Slump: ASTM C 143; one test at point of placement for each composite sample, but not less than one test for each day's pour of each concrete mixture. Perform additional tests when concrete consistency appears to change.
3. Air Content: ASTM C 231, pressure method, for normal-weight concrete; one test for each composite sample, but not less than one test for each day's pour of each concrete mixture.
4. Concrete Temperature: ASTM C 1064; one test hourly when air temperature is 40 deg F and below and when 80 deg F and above, and one test for each composite sample.
5. Compression Test Specimens: ASTM C 31.

a. Cast and laboratory cure two sets of two standard cylinder specimens for each composite sample.

6. Compressive-Strength Tests: ASTM C 39; test one set of two laboratory-cured specimens at 7 days and one set of two specimens at 28 days.

   a. Test one set of two field-cured specimens at 7 days and one set of two specimens at 28 days.
   b. A compressive-strength test shall be the average compressive strength from a set of two specimens obtained from same composite sample and tested at age indicated.

7. When strength of field-cured cylinders is less than 85 percent of companion laboratory-cured cylinders, Contractor shall evaluate operations and provide corrective procedures for protecting and curing in-place concrete.
8. Strength of each concrete mixture will be satisfactory if every average of any three consecutive compressive-strength tests equals or exceeds specified compressive strength and no compressive-strength test value falls below specified compressive strength by more than 500 psi .
9. Test results shall be reported in writing to the Engineer, concrete manufacturer, and Contractor within 48 hours of testing. Reports of compressive strength tests shall contain Project identification name and number, date of concrete placement, name of concrete testing and inspecting agency, location of concrete batch in Work, design compressive strength at 28 days, concrete mixture proportions and materials, compressive breaking strength, and type of break for both 7- and 28-day tests.
10. Nondestructive Testing: Impact hammer, sonoscope, or other nondestructive device may be permitted by Engineer but will not be used as sole basis for approval or rejection of concrete.
11. Additional Tests: Testing and inspecting agency shall make additional tests of concrete when test results indicate that slump, air entrainment, compressive strengths, or other requirements have not been met, as directed by Engineer. Testing and inspecting agency may conduct tests to determine adequacy of concrete by cored cylinders complying with ASTM C 42 or by other methods as directed by Engineer.
12. Additional testing and inspecting, at Contractor's expense, will be performed to determine compliance of replaced or additional work with specified requirements.
13. Correct deficiencies in the Work that test reports and inspections indicate does not comply with the Contract.

D. Measure floor and slab flatness and levelness according to ASTM E 1155 within 48 hours of finishing.

END OF SECTION 033000

SECTION 079200 - JOINT SEALANTS

PART 1 - GENERAL

1.1 SUMMARY

A. Section Includes:

1. Silicone joint sealants, general.

B. Related Sections:

1. Division 03 Section 033000, "Cast-in-Place Concrete" for concrete control and expansion joint fillers and joint sealing.

1.2 PERFORMANCE REQUIREMENTS:

A. Provide elastomeric joint sealants that establish and maintain watertight and airtight continuous joint seals without staining or deteriorating joint substrates.

1.3 SUBMITTALS:

A. Submit the following in accordance with Form 816 Article 1.20-1.05.02 and NOTICE TO CONTRACTOR – SUBMITTALS.

B. Product Data: For each joint-sealant product indicated.

C. Quality Assurance Submittals:

1. Manufacturer Certification Letter in accordance with NOTICE TO CONTRACTOR – POTENTIAL FOR ASBESTOS CONTAINING MATERIALS.

D. Joint-Sealant Schedule: Include the following information:

1. Joint-sealant application, joint location, and designation.
2. Joint-sealant manufacturer and product name.
3. Joint-sealant formulation.

E. Product Certificates: For each kind of joint sealant and accessory, from manufacturer.

F. Sealant, Waterproofing, and Restoration Institute (SWRI) Validation Certificate: For each sealant specified to be validated by SWRI's Sealant Validation Program.

1.4 QUALITY ASSURANCE:

A. Installer Qualifications: Manufacturer's authorized representative who is trained and approved for installation of units required for this Project.

B. Source Limitations: Obtain each kind of joint sealant from single source from single manufacturer.

1.5 PROJECT CONDITIONS:

A. Do not proceed with installation of joint sealants under the following conditions:

1. When ambient and substrate temperature conditions are outside limits permitted by joint-sealant manufacturer or are below 40 deg F.
2. When joint substrates are wet.
3. Where joint widths are less than those allowed by joint-sealant manufacturer for applications indicated.
4. Where contaminants capable of interfering with adhesion have not yet been removed from joint substrates.

PART 2 - PRODUCTS

2.1 MATERIALS, GENERAL:

A. Compatibility: Provide joint sealants, backings, and other related materials that are compatible with one another and with joint substrates under conditions of service and application, as demonstrated by joint-sealant manufacturer, based on testing and field experience.

B. VOC Content of Interior Sealants: Provide sealants and sealant primers for use inside the weatherproofing system that comply with the following limits for VOC content when calculated according to 40 CFR 59, Part 59, Subpart D (EPA Method 24):

1. Architectural Sealants: 250 g/L.
2. Sealant Primers for Nonporous Substrates: 250 g/L.
3. Sealant Primers for Porous Substrates: 775 g/L.

2.2 SILICONE JOINT SEALANTS:

A. Single-Component, Nonsag, Neutral-Curing Silicone Joint Sealant: ASTM C 920, Type S, Grade NS, Class 100/50, for Use NT.

1. Available Products: Subject to compliance with requirements, available products that may be incorporated into the Work include, but are not limited to, the following:

a. Dow Corning Corporation; 790.
b. GE Advanced Materials - Silicones; SilPruf LM SCS2700.
c. May National Associates, Inc.; Bondaflex Sil 290.
d. Pecora Corporation; 311 NS.
e. Sika Corporation, Construction Products Division; SikaSil-C990.
f. Tremco Incorporated; Spectrem 1.

B. Mildew-Resistant, Single-Component, Nonsag, Neutral-Curing Silicone Joint Sealant: ASTM C 920, Type S, Grade NS, Class 25, for Use NT.

1. Available Products: Subject to compliance with requirements, available products that may be incorporated into the Work include, but are not limited to, the following:

a. Pecora Corporation; 898.

2.3 JOINT SEALANT BACKING:

A. General: Provide sealant backings of material that are nonstaining; are compatible with joint substrates, sealants, primers, and other joint fillers; and are approved for applications indicated by sealant manufacturer based on field experience and laboratory testing.

B. Cylindrical Sealant Backings: ASTM C 1330, Type C (closed-cell material with a surface skin), Type O (open-cell material), Type B (bicellular material with a surface skin), or any of the preceding types, as approved in writing by joint-sealant manufacturer for joint application indicated, and of size and density to control sealant depth and otherwise contribute to producing optimum sealant performance.

C. Bond-Breaker Tape: Polyethylene tape or other plastic tape recommended by sealant manufacturer for preventing sealant from adhering to rigid, inflexible joint-filler materials or joint surfaces at back of joint. Provide self-adhesive tape where applicable.

2.4 MISCELLANEOUS MATERIALS:

A. Primer: Material recommended by joint-sealant manufacturer where required for adhesion of sealant to joint substrates indicated, as determined from preconstruction joint-sealant-substrate tests and field tests.

B. Cleaners for Nonporous Surfaces: Chemical cleaners acceptable to manufacturers of sealants and sealant backing materials, free of oily residues or other substances capable of staining or harming joint substrates and adjacent nonporous surfaces in any way, and formulated to promote optimum adhesion of sealants to joint substrates.

C. Masking Tape: Nonstaining, nonabsorbent material compatible with joint sealants and surfaces adjacent to joints.

PART 3 - EXECUTION

3.1 EXAMINATION:

A. Examine joints indicated to receive joint sealants, with Installer present, for compliance with requirements for joint configuration, installation tolerances, and other conditions affecting joint-sealant performance.

B. Proceed with installation only after unsatisfactory conditions have been corrected.

3.2 PREPARATION:

A. Surface Cleaning of Joints: Clean out joints immediately before installing joint sealants to comply with joint-sealant manufacturer's written instructions and the following requirements:

1. Remove all foreign material from joint substrates that could interfere with adhesion of joint sealant, including dust, paints (except for permanent, protective coatings tested and approved for sealant adhesion and compatibility by sealant manufacturer), old joint sealants, oil, grease, waterproofing, water repellents, water, surface dirt, and frost.
2. Clean porous joint substrate surfaces by brushing, grinding, mechanical abrading, or a combination of these methods to produce a clean, sound substrate capable of developing optimum bond with joint sealants. Remove loose particles remaining after cleaning operations above by vacuuming or blowing out joints with oil-free compressed air. Porous joint substrates include the following:

   a. Concrete.

3. Remove laitance and form-release agents from concrete.

B. Joint Priming: Prime joint substrates where recommended by joint-sealant manufacturer or as indicated by preconstruction joint-sealant-substrate tests or prior experience. Apply primer to comply with joint-sealant manufacturer's written instructions. Confine primers to areas of joint-sealant bond; do not allow spillage or migration onto adjoining surfaces.

C. Masking Tape: Use masking tape where required to prevent contact of sealant or primer with adjoining surfaces that otherwise would be permanently stained or damaged by such contact or by cleaning methods required to remove sealant smears. Remove tape immediately after tooling without disturbing joint seal.

3.3 INSTALLATION OF JOINT SEALANTS:

A. General: Comply with joint-sealant manufacturer's written installation instructions for products and applications indicated, unless more stringent requirements apply.

B. Sealant Installation Standard: Comply with recommendations in ASTM C 1193 for use of joint sealants as applicable to materials, applications, and conditions indicated.

C. Install sealant backings of kind indicated to support sealants during application and at position required to produce cross-sectional shapes and depths of installed sealants relative to joint widths that allow optimum sealant movement capability.

1. Do not leave gaps between ends of sealant backings.
2. Do not stretch, twist, puncture, or tear sealant backings.
3. Remove absorbent sealant backings that have become wet before sealant application and replace them with dry materials.

D. Install bond-breaker tape behind sealants where sealant backings are not used between sealants and backs of joints.

E. Install sealants using proven techniques that comply with the following and at the same time backings are installed:

1. Place sealants so they directly contact and fully wet joint substrates.
2. Completely fill recesses in each joint configuration.
3. Produce uniform, cross-sectional shapes and depths relative to joint widths that allow optimum sealant movement capability.

F. Tooling of Nonsag Sealants: Immediately after sealant application and before skinning or curing begins, tool sealants according to requirements specified in subparagraphs below to form smooth, uniform beads of configuration indicated; to eliminate air pockets; and to ensure contact and adhesion of sealant with sides of joint.

1. Remove excess sealant from surfaces adjacent to joints.
2. Use tooling agents that are approved in writing by sealant manufacturer and that do not discolor sealants or adjacent surfaces.
3. Provide concave joint profile per Figure 8A in ASTM C 1193, unless otherwise indicated.
4. Provide flush joint profile where indicated per Figure 8B in ASTM C 1193.
5. Provide recessed joint configuration of recess depth and at locations indicated per Figure 8C in ASTM C 1193.

    a. Use masking tape to protect surfaces adjacent to recessed tooled joints.

G. Installation of Preformed Silicone-Sealant System: Comply with the following requirements:

1. Apply masking tape to each side of joint, outside of area to be covered by sealant system.
2. Apply silicone sealant to each side of joint to produce a bead of size complying with preformed silicone-sealant system manufacturer's written instructions and covering a bonding area of not less than 3/8 inch. Hold edge of sealant bead 1/4 inch inside masking tape.
3. Within 10 minutes of sealant application, press silicone extrusion into sealant to wet extrusion and substrate. Use a roller to apply consistent pressure and ensure uniform contact between sealant and both extrusion and substrate.
4. Complete installation of sealant system in horizontal joints before installing in vertical joints. Lap vertical joints over horizontal joints. At ends of joints, cut silicone extrusion with a razor knife.

H. Installation of Preformed Foam Sealants: Install each length of sealant immediately after removing protective wrapping. Do not pull or stretch material. Produce seal continuity at ends, turns, and intersections of joints. For applications at low ambient temperatures, apply heat to sealant in compliance with sealant manufacturer's written instructions.

3.4 FIELD QUALITY CONTROL:

A. Field-Adhesion Testing: Field test joint-sealant adhesion to joint substrates as follows:

1. Extent of Testing: Test completed and cured sealant joints as follows:

   a. Perform 1 test for each 1000 feet of joint length thereafter or 1 test per each floor per elevation.

2. Test Method: Test joint sealants according to Method A, Field-Applied Sealant Joint Hand Pull Tab, in Appendix X1 in ASTM C 1193 or Method A, Tail Procedure, in ASTM C 1521.

   a. For joints with dissimilar substrates, verify adhesion to each substrate separately; extend cut along one side, verifying adhesion to opposite side. Repeat procedure for opposite side.

3. Inspect tested joints and report on the following:

   a. Whether sealants filled joint cavities and are free of voids.
   b. Whether sealant dimensions and configurations comply with specified requirements.
   c. Whether sealants in joints connected to pulled-out portion failed to adhere to joint substrates or tore cohesively. Include data on pull distance used to test each kind of product and joint substrate. Compare these results to determine if adhesion passes sealant manufacturer's field-adhesion hand-pull test criteria.

4. Record test results in a field-adhesion-test log. Include dates when sealants were installed, names of persons who installed sealants, test dates, test locations, whether joints were primed, adhesion results and percent elongations, sealant fill, sealant configuration, and sealant dimensions.
5. Repair sealants pulled from test area by applying new sealants following same procedures used originally to seal joints. Ensure that original sealant surfaces are clean and that new sealant contacts original sealant.

B. Evaluation of Field-Adhesion Test Results: Sealants not evidencing adhesive failure from testing or noncompliance with other indicated requirements will be considered satisfactory. Remove sealants that fail to adhere to joint substrates during testing or to comply with other requirements. Retest failed applications until test results prove sealants comply with indicated requirements.

3.5 CLEANING:

A. Clean off excess sealant or sealant smears adjacent to joints as the Work progresses by methods and with cleaning materials approved in writing by manufacturers of joint sealants and of products in which joints occur.

3.6 PROTECTION:

A. Protect joint sealants during and after curing period from contact with contaminating substances and from damage resulting from construction operations or other causes so sealants are without deterioration or damage at time of the issuance of the Certificate of Compliance. If, despite such protection, damage or deterioration occurs, cut out and remove damaged or deteriorated joint sealants immediately so installations with repaired areas are indistinguishable from original work.

END OF SECTION 079200

SECTION 132160 – INSTALLATION OF NEW FUEL FACILITY

PART 1 - GENERAL

1.1 SUMMARY:

A. The Contractor shall install the complete fuel facility, except as otherwise noted, in conformity with the lines, grades, dimensions and details shown on the plans and as described herein.

B. Each component of the fuel facility shall be compatible with the dispensing of E85 Ethanol. Where model numbers are used herein, but are not compatible with E85 Ethanol, the appropriate E85 Ethanol compatible component shall be supplied at no additional cost to the Engineer.

C. The tank nipple arrangement described herein and shown on the plans is based upon the aboveground storage tank identified herein. "Or Equal" submissions will address the need for an alternative tank nipple arrangement, if necessary, that is acceptable to the Designer. Alternative tank nipple arrangements will also be at no additional cost to the Engineer.

D. Related CSI Sections include the following:

1. Division 13 Section 132180, "Tank Monitoring System" for aboveground and underground storage tank monitoring system.

1.2 DEFINITIONS:

A. AST: Aboveground storage tank.

1.3 ACTION SUBMITTALS:

A. Submit the following in accordance with Form 816 Article 1.20-1.05.02 and NOTICE TO CONTRACTOR – SUBMITTALS.

B. Product Data: For each type of product indicated. Include construction details, material descriptions, and dimensions of individual components and profiles. Also include, where applicable, rated capacities, operating characteristics, electrical characteristics, and furnished specialties and accessories.

1. Spare Parts: Include name, address, and telephone number of in-state supplier of spare parts. No out-of-state suppliers shall be permitted.

C. Shop Drawings: For storage tanks and pumps, include details of supports and anchors. Indicate all critical dimensions, locations of all nipples, and accessories, etc.

1.4 INFORMATIONAL SUBMITTALS:

A. Quality Assurance Submittals:

1. Certification that tank test equipment conforms to State and Federal requirements and that the persons performing the tests are qualified on said test equipment.
2. Field quality control test reports.

1.5 CLOSEOUT SUBMITTALS:

A. Operation and Maintenance Data: For fuel facility equipment and accessories to include in the operation and maintenance manuals specified in Form 816 Article 1.20-1.08.14 subsection 2 and described in NOTICE TO CONTRACTOR – CLOSEOUT DOCUMENTS. Include the following:

1. Interconnection as-built wiring diagrams with identified system components and devices for the entire fuel control center and fuel island.

B. Warranty: Special warranties specified in Part 1.9, "WARRANTY."

1.6 QUALITY ASSURANCE:

A. Electrical Installer Qualifications: An experienced electrician capable of wiring, installing, and troubleshooting all related portions of a fuel facility as specified in this Section.

B. Conduct a Pre-Installation Meeting at the Project Site in compliance with the requirements of Form 816 Article 1.20-1.05.24 subsection 2.

1. Meet with Engineer's representatives before any conduit or conductors are installed to develop a mutual understanding of the details and interconnections of the Fuel Management System, Tank Monitoring System, fuel dispensers, and submersible pumps. Ensure the participation of the Contractor, Electrical Installer, Fuel Management System manufacturers' authorized service representative, Tank Monitoring System manufacturers' authorized service representative, submersible pump manufacturers' authorized service representative, and other support personnel. Provide seven calendar days' advance notice of scheduled meeting time and location.

1.7 DELIVERY, STORAGE, AND HANDLING:

A. Lift tanks in accordance with manufacturer's instructions and with the proper equipment. Do not use chain or cables around tanks at any time. If tanks have to be moved, set on smooth ground free of rocks and foreign objects. Do not drop or roll tanks. Do not allow tanks to be impacted.

B. Other Tank Materials: Store material in a clean dry area protected from damage. Materials may be stored outside only with the written approval of the Engineer.

1.8 COORDINATION:

A. A charge of $20,000.00 shall be included in the contract bid price for the filling of the gasoline and diesel ASTs to 50% of the rated capacity with Automotive Unleaded Gasoline and Ultra Low Sulfur Vehicular Diesel, or as otherwise directed by the Engineer. All Contractors will include the above amount for gasoline and diesel AST filling in the Contract Bid Price. If it is determined that different charges apply, the Contractor's bid will be adjusted to reflect the differential by construction order, provided that the Contractor provides all applicable written billing documentation. The Contractor will be compensated only for the difference between the billed amount and the estimated amount. No additional Contractor markup will be allowed.

1.9 WARRANTY:

A. Refer to Form 816 Article 1.20-1.06.08 and NOTICE TO CONTRACTOR – CLOSEOUT DOCUMENTS for additional information.

B. Special Warranty: Manufacturer's standard form in which manufacturer agrees to repair or replace storage tanks that fail in materials or workmanship within specified warranty period.

1. Storage Tanks:

a. Failures include, but are not limited to, the following when used for storage of motor fuel at temperatures not exceeding 150 deg F:

1) Structural failures including cracking, breakup, and collapse.
2) Corrosion failure including external and internal corrosion of tanks.

b. Warranty Period: 30 years from the issuance of the Certificate of Compliance.

PART 2 - PRODUCTS

2.1 PIPES, TUBES, AND FITTINGS:

A. Black Steel Pipe: Schedule 40, conforming to ASTM A53 with malleable iron fittings conforming to ANSI B16.3.

B. Galvanized Steel Pipe: Schedule 40, conforming to ASTM A53 with zinc-coated malleable iron fittings conforming to ANSI B16.3.

2.2 PIPING SPECIALTIES:

A. Flexible Connectors: Comply with UL 567.

1. Metallic Connectors:

a. Manufacturers: Subject to compliance with requirements, available manufacturers offering products that may be incorporated into the Work include, but are not limited to, the following:

1) Flexicraft Industries.
2) FLEX-ING, Inc.; Model Fireflex with 346 swivel.
3) Hose Master, Inc.

b. Listed and labeled for aboveground and underground applications by an NRTL acceptable to authorities having jurisdiction.
c. Stainless-steel bellows with woven, flexible, bronze or stainless-steel, wire-reinforcing protective jacket.
d. Minimum Operating Pressure: 150 psig.
e. End Connections: Socket, flanged, or threaded end to match connected piping.
f. Maximum Length: 30 inches.
g. Swivel end, 50-psig maximum operating pressure.

2.3 JOINING MATERIALS:

A. Per manufacturer recommendations unless otherwise noted.

2.4 MANUAL SHUTOFF VALVES:

A. General Requirements for Metallic Valves, NPS 2 and Smaller for Liquid Service: Comply with UL 842.

1. CWP Rating: 125 psig.
2. Threaded Ends: Comply with ASME B1.20.1.

3. Dryseal Threads on Flare Ends: Comply with ASME B1.20.3.
4. Tamperproof Feature: Locking feature for valves indicated in the valve schedule.
5. Service Mark: Initials "WOG" shall be permanently marked on valve body.

B. Two-Piece, Full-Port, Bronze Ball Valves with Bronze Trim: MSS SP-110.

1. Manufacturers: Subject to compliance with requirements, available manufacturers offering products that may be incorporated into the Work include, but are not limited to, the following:

   a. BrassCraft Manufacturing Company; a Masco company.
   b. Conbraco Industries, Inc.; Apollo Div.
   c. Lyall, R. W. & Company, Inc.
   d. McDonald, A. Y. Mfg. Co.
   e. Perfection Corporation; A Subsidiary of American Meter Company.

2. Body: Bronze, complying with ASTM B 584.
3. Ball: Chrome-plated bronze.
4. Stem: Bronze; blowout proof.
5. Seats: Reinforced TFE; blowout proof.
6. Packing: Threaded-body packnut design with adjustable-stem packing.
7. Ends: Threaded, flared, or socket as indicated in the valve schedule.
8. CWP Rating: 600 psig.
9. Service Mark: Initials "WOG" shall be permanently marked on valve body.

2.5 CONCRETE-VAULTED, STEEL, MOTOR FUEL AST:

A. Basis-of-Design Product: Subject to compliance with requirements, provide ConVault aboveground storage tanks manufactured by United Concrete Products Inc., or an approved equal.

B. Description: The AST shall consist of a primary steel tank covered by a minimum of ¼" thick extruded polystyrene foam insulation panels. The secondary containment shall consist of a 30 mil thick high-density polyethylene membrane enclosing the steel tank and insulation material. The primary steel tank and the secondary containment shall be encased in six inches of monolithic reinforced concrete, with minimum design strength of 5,000 psi at 28 days.

C. Construction: The concrete design shall include the following for long-term durability: air entrainment, water reducing admixture, and steel reinforcement. Concrete encasements with seams will not be approved. The protected and insulated AST systems shall contain no cold joints or heat sinks (heat transfer points). The AST must be shop fabricated and tested in accordance with UL 2085. Designs that use two layers of steel with insulation material between them will not be approved. No steel or insulating material shall come in contact with the concrete or other corrosive material.

D. Protection: The AST's shall be suitable for operation at atmospheric pressure; fabricated to meet the following criteria:

1. Provide two (2) hour fire protection in accordance with UL 2085.
2. Vehicle Impact Resistance: Tanks shall be designed to have a low center of gravity that can withstand vehicle impact and tipping during earthquakes and other natural disasters.
3. Ballistic Resistance: Tanks shall withstand bullet resistance tests in compliance with UL 2085.
4. Lightning Protection: The protected and insulated AST systems shall have two (2) bolts for connecting grounding conductors for lightning protection. Grounding conductor and grounding rod materials and installation shall be in accordance with NFPA 780.

E. The primary steel tanks shall include an atmospheric vent and emergency venting in accordance with NFPA 30 Code requirements.

F. Support legs shall be monolithically cast with the concrete vault.

2.6 MOTOR FUEL AST ACCESSORIES:

A. Threaded pipe connection nipples on top of tank for fill, vapor recovery, submersible pump, vent, in-tank probe, and gauging, in locations and of sizes indicated on the Plans.

B. 24" Manway Assembly for access to inside the tank with 8" Emergency Vent. The emergency vent relief system shall relieve the pressure of the primary tank if the tank pressure exceeds 1/2 psig.

C. Tank Fill Assembly: 7-gallon powder coated, UL listed spill containment. The assembly shall include a normally closed drain valve to release spilled product into the primary tank and a stick port for manual gauging.

D. Tank Charts: Provide (3) copies. Mount 1 copy in a glass frame secured to the wall with 4 screws adjacent to the Fuel Control Center, or as directed by the Engineer. Charts shall be calibrated to show tank capacity in gallons from feet and inches, graduated by eighths.

E. Gauge Stick: Wooden, manufacturer's recommended length, treated after graduating to prevent swelling and damage from fuel. Gauge stick shall be graduated in feet, inches, and eighths.

F. Stair Assembly: Tank manufacturer's standard galvanized steel stairway for access to the top of the tank. Stairs and railings shall comply with OSHA Standards.

2.7 TANK INSTALLATION MATERIALS:

A. Grout: Non-shrink type.

B. Compacted Granular Fill: Refer to Form 816, Section 2.14 "Compacted Granular Fill" for material and construction methods required.

C. Concrete Pads: Comply with the requirements in CSI Division 03 Section 033000, "Cast-in-Place Concrete."

2.8 MOTOR FUEL STORAGE TANK SPECIALTIES:

A. Submersible Pump: Construction type AG high capacity, ¾-HP, 230 volt, single phase, FE Petro Model No. STPAG75 as manufactured by Franklin Fueling Systems, or an approved equal, with model length sized to fit tank.

B. Overfill Prevention:

1. Overfill Prevention Valve: Suitable for installation in aboveground motor fuel storage tanks and compatible with E85 Ethanol, provide Model No. 61fSTOP-100M as manufactured by OPW, or an approved equal.
2. Lower Drop Tube: Fiberglass, compatible with overfill prevention valve, as manufactured by NOV Fiber Glass Systems, or an approved equal. Drop tube shall terminate 6-inches above the bottom of the tank, with the end of drop tube cut off at a 45-degree angle.

C. Fill Adaptor and Cap: 2-inch Tank Inlet Spout Adaptor Model No. 633AST with 2-inch locking dust cap, Model No. 634BK as manufactured by OPW, or an approved equal.

D. Vapor Recovery Adaptor and Cap: Threaded Adaptor, Model No. 323, and locking vapor adaptor cap, Model No. 323C, as manufactured by Morrison Bros., or an approved equal.

E. Vent Cap:

1. Gasoline: Pressure vacuum type, corrosion-resistant, internal wire screen designed to protect vent lines from water, debris, and insects, and normally closed poppet, Model No. 523V as manufactured by OPW, or an approved equal.
2. Diesel: Open atmospheric type, corrosion-resistant, internal wire screen designed to protect vent lines from water, debris, and insects, Model No. 23 as manufactured by OPW, or an approved equal.

F. Solenoid Valves with Thermal Pressure Relief: Two-way electrically operated, normally closed diaphragm valve to prevent accidental siphoning of fuel in case of a leak or break in the fuel line, provide Model No. 821 with Model No. 82RV relief valve as manufactured by OPW, or an approved equal.

G. External Emergency Valve: Designed for installation at the outlet of an AST where product flow must be stopped in the event of a fire. UL listed, 2” NPT, ductile iron body, with 165 degree F. fusible link, Model No. 346 as manufactured by Morrison Bros., or an approved equal.

H. Ball Valves: Full Port Two-Way as manufactured by OPW, or an approved equal.

I. Tank Monitoring Assemblies:

1. Probe Cap and Adaptor: Bronze, side-sealing adaptor, side sealing cap (tapped), wire grommet to secure cables, Model No. 62M as manufactured by OPW, or an approved equal.

2.9 SOURCE QUALITY CONTROL:

A. Pressure test and inspect fuel storage tanks, after fabrication and before shipment, according to ASME and the following:

1. Horizontal, Concrete-Vaulted and Insulated, Steel ASTs: UL 142 and UL 2085.

B. Affix standards organization's code stamp.

2.10 FUEL DISPENSERS:

A. Subject to compliance with requirements, single product dispensers shall be E/G6101D/2JK/S1 as manufactured by Wayne, or an approved equal.

B. General: Power-reset-type, pedestal-mounted, suitable for dispensing a single product through 1 hose. Each component in the product path shall be compatible with dispensing E85 Ethanol. Cabinet shall be heavy gauge stainless steel including bezel, top, base, side structural columns. Hinged, lockable cabinet door panel shall be heavy gauge steel factory color coded:

1. Gasoline: “Silver.”
2. Diesel: “Yellow.”

C. Pedestal-Mount Kit: Manufacturer’s standard stainless steel dispenser platform for mounting dispenser to AST, with 11 gallon spill capacity.

D. Emergency Shear Valve (Product): Cast-iron body double-poppet-type with Viton seals, Model No. A0060 and manufacturer standard mounting kit Model No. A0065 as manufactured by Emco Wheaton, or an approved equal.

E. Filter and Filter Adapter: 1-inch spin-on filter with adapter, suitable for mounting within dispenser pedestal, as manufactured by Cim-Tek, or an approved equal:

1. Gasoline: Model No. 400MB-10.
2. Diesel: Model No. 400BMG-10.

F. High hose retractors and static wires: Manufacturer standard.

G. Breakaway Hose Couplings:

1. Gasoline and Diesel: ¾-inch diameter re-connectable breakaway coupling Model No. 66REC as manufactured by OPW, or an approved equal.

H. Hose:

1. Gasoline and Diesel: ¾-inch diameter, black rubber, smooth bore, whip hose with stainless steel fittings.

a. Hose Length from Dispenser to Breakaway Coupling: 17-feet.
b. Hose Length from Breakaway Coupling to Nozzle: 8-inches.

I. Swivels:

1. Gasoline and Diesel: Multi-plane swivel designed for use with unleaded, diesel, and all ethanol blends through E100 fuel with aluminum with electroless nickel plating, fluorosilicone inner O-ring, fluorocarbon outer O-ring, sized to fit hose and nozzle, Model No. 6350 as manufactured by Husky Corporation, or an approved equal.

J. Nozzles:

1. Gasoline: Aluminum body and spout with 13/16" O.D., automatic-type, with full rubber hand insulator Model No. 21Ge-0492, Color-coded "Black" as manufactured by OPW, or an approved equal .
2. Diesel: Aluminum body and spout with 15/16" O.D., automatic-type, with full rubber hand insulator, Model No. 1A, color-coded "Yellow" as manufactured by Husky Corporation, or an approved equal.

2.11 AUTOMATED FUEL MANAGEMENT SYSTEM:

A. Subject to compliance with requirements, the automated fuel management system shall be a FUELMASTER FMU2500 as manufactured by SYN-TECH Systems, Inc. (telephone number 1-800-888-9136). No "or equals" will be permitted. The automated fuel management system (hereinafter referred to as the system) is required to be fully compatible with all requirements of the ConnDOT Standard Automated Fuel Management System including, but not limited to, the following:

1. The ability to interface with the existing central location (Headend), located at 2800 Berlin Turnpike, Newington, CT.
2. The ability to accept the existing ConnDOT issued read/write keys.
3. Interface with the tank monitoring system specified in CSI Division 13 Section 132180, "Tank Monitoring System."

B. The system shall include the following operational requirements:

1. Allow for unattended operation, seven days a week, 24 hours a day.
2. Turn fuel dispensers on and off.
3. Monitor and record up to 8 hoses dispensing simultaneously.
4. Lock out any unauthorized keys.
5. Limit the fueling product options for any key.

C. The system shall include the following components:

1. Fuel Management Unit (FMU): Flexible, modular design, to accept any future system upgrades, with the following features: key reader, LCD display to prompt vehicle operators, control keys for data input by vehicle operators, surge suppressor, and an emergency stop switch. FMU shall be suitable for outdoor installation, being capable of resisting the affects or rain, snow, and blowing sand. FMU shall have an operating temperature range of -60 to 140° Fahrenheit. FMU shall have the ability to store all collected data for 3 months. Memory shall be removable, with the capability of being installed in an operational FMU for data recovery.
2. Dispenser-Mounted Pulse Transmitters: Individually set for any number of pulses from 1 to 1000 for each unit of measurement for every hose on every dispenser.
3. Communications Interface (Network Card): Provides the tank monitoring system pass-through capability so that the tank monitoring and fuel management reports are uploaded to the Headend via 10/100 Ethernet communications.

D. The following information shall be recorded by the system for each fueling transaction: user identification number, vehicle odometer/hourmeter, vehicle number, quantity of fuel dispensed, fuel site, date and time, hose number and product number, and key type.

2.12 FUEL CONTROL CENTER:

A. Panelboards: Comply with requirements in CSI Division 26 Section 262416, "Panelboards".

B. Shunt Trip Device: 3-pole, 50-amp, enclosed circuit breaker with shunt trip device shall be provided in separate enclosure to protect Fuel Control Center Panel.

C. Emergency Shut-off (Quick Stop Buttons): Provide on exterior of building and at Fuel Control Center. The quick stop button functions to remove power by depressing the red mushroom-shaped button. Power restored by manually resetting the shunt trip breaker

and turning the button clockwise a partial turn until it pops back out to the reset position.

D. Emergency Telephone: Weather-resistant, wall mounted, ADA compliant emergency telephone that provides two-way communications with the press of a single button. Enclosure shall be cast aluminum with epoxy safety yellow finish, NEMA 3R rated with an LED providing visual indication that a call was received and "HELP" label with braille located next to the pushbutton. Device shall not require any battery or external power. Provide Red Alert Model No. 393AL-00x as manufactured by GAI-Tronics or an approved equal.

E. Fuel Island Signage: Locate as directed by Engineer.

1. Material and Thickness: Multilayer, multicolor, plastic labels for mechanical engraving, 1/16 inch thick, and having predrilled holes for attachment hardware.
2. Letter Color: Red.
3. Background Color: White.
4. Minimum Label Size: Length and width vary for required label content, but not less than 2-1/2 by 3/4 inch.
5. Minimum Letter Size: 1/4 inch for name of units if viewing distance is less than 24 inches, 1/2 inch for viewing distances up to 72 inches, and proportionately larger lettering for greater viewing distances. Include secondary lettering two-thirds to three-fourths the size of principal lettering.
6. Fasteners: Suitable for mounting to masonry.
7. Label Content (Fuel Island): Label shall read as follows:

EMERGENCY ISLAND POWER SHUTOFF
AND PHONE LOCATED ON BUILDING

PHONE WILL AUTOMATICALLY CALL 911
UPON ACTIVATION

STAY OUTSIDE OF VEHICLE DURING FUELING AND
IN SIGHT OF NOZZLE DURING DISPENSING

IN CASE OF FIRE OR SPILL USE
EMERGENCY STOP BUTTON ON BUILDING

REPORT INCIDENT USING EMERGENCY PHONE

8. Label Content (Emergency Phone): Label shall read as follows:

EMERGENCY
POWER SHUTOFF
AND PHONE

F. Disconnect Switches: Heavy-duty type, two-pole, as manufactured by Square D, or an approved equal.

G. Switches: 1-pole, 20-amp, ivory, as manufactured by Square D, or an approved equal with 4-inch-square switch boxes.

H. Surface Mounted Communication Jack: RJ45 jack that fits in a single gang opening with one (1) receptacle, color orange, for Category 5E (blue cable).

I. Conduit: Comply with requirements in CSI Division 26 Section 260533, "Raceway and Boxes for Electrical Systems".

J. Wire: Minimum #12 stranded copper conductors rated for 600 volts with THWN or THHN insulation unless otherwise noted. Grounding wire shall be green-type.

K. Submersible Pump Control Boxes: Single-phase control box with line contactor relay and dispenser hook isolation. These disconnects shall switch the neutral conductor used for the control circuits in the dispensers. The live conductor for the control circuits shall be tapped off the load side of each disconnect to the appropriate dispenser. Control boxes shall be Model No. STP-CBS, along with dispenser hook isolation Model STP-DHI, as manufactured by Franklin Fueling Systems, or an approved equal.

L. Explosionproof Junction Boxes: Model No. GRSS-2 as manufactured by Killark, or an approved equal.

M. Explosionproof Fittings: Threaded, recessed-type, close-up plugs, Model No. EYSF75 as manufactured by Appleton, or an approved equal. Screwdriver slotted close-up plugs shall not be accepted.

PART 3 - EXECUTION

3.1 EXCAVATION AND BACKFILL:

A. Refer to 816 Section 2.02, “Roadway Excavation, Formation of Embankment and Disposal of Surplus Material” and Section 2.05, “Trench Excavation” for excavating, trenching, and backfilling requirements.

B. Compacted Granular Fill shall be installed in accordance with Form 816 Article 2.14 beneath the concrete pads and apron as indicated on the plans. Protect buried items during compaction.

1. Concrete Pads: Provide a minimum of 6-inches of compacted granular fill for concrete pads, compacted to support the concrete pad installation.

C. No backfilling over any underground piping or electrical connections may take place until the work is inspected by the Engineer and the authorities having jurisdiction.

Failure to have work inspected will result in the Contractor uncovering work to allow for inspection.

3.2 OUTDOOR PIPING INSTALLATION:

A. Install metal pipes and tubes, fittings, valves, and flexible connectors at piping connections to AST.

B. Install flexible connectors at the dispensers. Heat shrink-wrap flexible connectors with a minimum of 2-inches overlap on each end.

C. Install fittings for changes in direction in rigid pipe.

D. Install system components with pressure rating equal to or greater than system operating pressure.

3.3 VALVE INSTALLATION:

A. Install valves in accessible locations.

B. Protect valves from physical damage.

3.4 PIPING JOINT CONSTRUCTION:

A. Ream ends of pipes and tubes and remove burrs.

B. Remove scale, slag, dirt, and debris from inside and outside of pipe and fittings before assembly.

C. Threaded Joints: Thread pipe with tapered pipe threads according to ASME B1.20.1. Cut threads full and clean using sharp dies. Ream threaded pipe ends to remove burrs and restore full ID. Join pipe fittings and valves as follows:

1. Apply appropriate tape or thread compound to external pipe threads unless dry seal threading is specified.
2. Damaged Threads: Do not use pipe or pipe fittings with threads that are corroded or damaged. Do not use pipe sections that have cracked or open welds.

3.5 MOTOR FUEL AST INSTALLATION:

A. Excavate as described herein and as shown on the Plans.

B. Set tank on concrete pad and grout legs in accordance with manufacturer's instructions.

C. Each component of the storage tank system shall be installed as shown on the Plans and in accordance with manufacturer recommendations. Additional installation requirements of the storage tank system are described in subsequent portions of this Section where applicable.

D. Connect piping.

E. Pressure Testing of Tank and Piping: Refer to Part 3.6, "Field Quality Control."

F. Supplying Fuel:

1. Refer to Part 1.8 "Coordination" for filling tanks. Supply appropriate fuel in accordance with specifications set forth in the most current State of Connecticut, Department of Administrative Services contract award for:

   - 0035-066 - Gasoline, Automotive Unleaded
   - 0035-042 - Diesel Fuel No. 1 & 2

2. To determine product suitability for application into State equipment, Contractor will be responsible for testing sample from tanker at time of delivery. Written results of testing will be provided within 7 days to the Engineer. Contracts with corresponding detailed specifications can be obtained by accessing the State of Connecticut, Department of Administrative Services' website at http://das.ct.gov/Purchase/Commodity.htm.
3. Prior to the issuance of the Certificate of Compliance, the Contractor shall fill all motor fuel tanks in accordance with the Contract requirements.

3.6 FIELD QUALITY CONTROL:

A. Perform tests and inspections.

1. Tanks: Hydrostatic or compressed-air test pressures for horizontal, shop-fabricated, aboveground storage tanks: Isolate product piping from the tanks during testing. In-tank probes shall not be installed in the tanks during testing. Maintain the test pressure for one hour.

   a. Primary Tanks: Minimum 3 psig and maximum 5 psig.

2. Piping: Minimum hydrostatic or pneumatic test-pressures measured at highest point in system. Soap pipe fittings.

   a. Product Piping: Minimum 1.5 times the designed working pressure but not less than 50 psig nor more than the manufacturer's recommended pressure rating for minimum 3 hours.
   b. Isolate storage tanks if test pressure in piping will cause pressure in storage tanks to exceed 10 psig.

B. Piping and equipment will be considered defective if it does not pass tests and inspections. Defective piping and equipment shall be repaired or replaced, and then retested.

C. Prepare test and inspection reports.

3.7 FUEL DISPENSERS:

A. Bolt fuel dispensers into place and make all necessary piping connections. Secure crash valves to dispensers.

3.8 AUTOMATED FUEL MANAGEMENT SYSTEM:

A. The automated fuel management system Installer shall provide a fully operational system including, but not limited to, the following:

1. Fuel Management Unit (FMU)
2. Dispenser-Mounted Pulse Transmitters and all necessary conduit
3. Communications Interface (Network Card): Provides the tank monitoring system pass-through capability so that the tank monitoring and fuel management reports are uploaded to the Headend via 10/100 Ethernet communications.
4. The following information shall be recorded by the system for each fueling transaction: user identification number, vehicle odometer/hourmeter, vehicle number, quantity of fuel dispensed, fuel site, date and time, hose number and product number, and key type.
5. Coordinate with Department Fuel Control for FMU configuration.
6. Coordinate network communications with the Department network administrator.

B. Power Requirements for FMU: 120 volts, 60 Hz, from a separate, dedicated circuit from the Fuel Control Center DP1.

C. FMU shall be anchored to the concrete only with stainless steel hardware.

3.9 FUEL CONTROL CENTER:

A. Install all necessary conduit and wiring. A green bond wire shall be run in all conduit, terminating at Fuel Control Center Panel DP1.

B. Conduit from the building to the base of each dispenser, submersible pump, FMU, level sensors, and island light fixture shall be rigid conduit, terminations with explosionproof fittings.

C. All E.Y. fittings shall be properly sealed. Leave close-up plugs hand tight after sealing to provide for inspection of these fittings.

D. Install junction boxes beneath dispensers to facilitate future maintenance.

E. Each submersible pump shall have a separate, dedicated circuit from Fuel Control Center DP1, wired through its own disconnect switch and control box.

3.10 DISPENSER ISLAND, APRON, AND PAD FOR TANKS:

A. Construct the concrete apron with bollards, and pads for the tanks, dispensers, and FMU as shown on the Plans. Concrete installation requirements are specified in CSI Division 03 Section 033000, "Cast-in-Place Concrete."

3.11 PIPING SCHEDULE:

A. Product Piping, Aboveground: 1-1/2-inch black steel pipe and pipe fittings.

B. AST Pipe Risers: 4-inch galvanized steel pipe and fittings.

C. AST Vent Pipe and Fittings, Aboveground: 2-inch galvanized steel pipe and pipe fittings.

3.12 TRAINING:

A. Refer to Form 816 Article 1.20-1.08.14 subsection 3 for additional information.

B. Engage a factory-authorized service representative for the automated fuel management system for a 4-hour on-site class to train the Owner's maintenance personnel on all operating, routine maintenance, and service procedures. Provide copies of all training materials to all in attendance.

END OF SECTION 132160

SECTION 132180 - TANK MONITORING SYSTEM

PART 1 - GENERAL

1.1 SUMMARY:

A. This Section includes the complete tank monitoring system for aboveground and underground storage tanks as indicated on the Plans.

B. Each component of the tank monitoring system shall be compatible with the dispensing of E85 Ethanol. Where model numbers are used herein, but are not compatible with E85 Ethanol, the appropriate E85 Ethanol compatible component shall be supplied at no additional cost to the Engineer.

C. The following contain requirements that relate to this Section:

1. CSI Division 13 Section 132160, "Installation of New Fuel Facility."
2. CSI Division 22 Section 231113, "Facility Fuel-Oil Piping."

1.2 ACTION SUBMITTALS:

A. Submit the following in accordance with Form 816 Article 1.20-1.05.02 and NOTICE TO CONTRACTOR – SUBMITTALS.

B. Product Data: Include rated capacities of selected model clearly indicated, furnished specialties and accessories; wiring diagrams; and installation and start-up instructions.

1. Spare Parts: Include name, address, and telephone number of in-state supplier of spare parts. No out-of-state suppliers shall be permitted.

1.3 INFORMATIONAL SUBMITTALS:

A. Quality Assurance Submittals:

1. Installer Certifications as specified in Part 1.5, "Quality Assurance."
2. Field quality control test reports as specified in Part 3.3, "Field Quality Control."

1.4 CLOSEOUT SUBMITTALS:

A. Operation and Maintenance Data: Include in the operation and maintenance manuals specified in Form 816 Article 1.20-1.08.14 subsection 2 and described in NOTICE TO CONTRACTOR – CLOSEOUT DOCUMENTS.

1.5 QUALITY ASSURANCE:

A. The tank monitoring system manufacturer shall identify the approved distributor and repair staff located within a 50 mile radius of the Project Site, staffed with factory trained engineers fully capable of providing instruction, routine maintenance and 24 hour emergency repair service on all system components. Emergency repair service is to be available within a 24-hour period of time. Spare parts required for the system installed should be available within 2-4 calendar days.

B. The Tank Monitoring System Installer shall provide the engineering, installation, calibration, software programming and check-out necessary for a complete and fully operational tank monitoring system.

C. The Tank Monitoring System Installer shall be a certified to program and start-up the system.

D. The Tank Monitoring System Installer shall have:

1. Adequate experience and verifiable history in the installation of tank monitoring systems matching the criteria defined in this Specification.
2. Proven expertise and experience in dealing with coordination of installing tank monitoring systems for municipal fueling facilities.

PART 2 - PRODUCTS

2.1 MANUFACTURERS:

A. Available Manufacturers: Subject to compliance with requirements, manufacturers offering products that may be incorporated into the Work are limited to the following:

1. Incon.
2. Pneumercator.
3. Veeder Root

B. "Or Equal" manufacturers will not be considered for this project due to serviceability and training concerns.

2.2 GENERAL:

A. The tank monitoring system (hereinafter referred to as the system) shall be capable of monitoring 8 tanks, 4 pressurized lines, and 24 liquid sensors.

B. The system shall be capable of and suitable for monitoring Fuel Oil, Gasoline, Diesel Fuel, E85 Ethanol, Waste Oil, and Wastewater in aboveground and underground storage tanks.

C. The system is required to be fully-compatible with the existing ConnDOT standard Automated Fuel Management System, including the ability to interface with the Headend.

2.3 CONSOLE:

A. The console shall be microprocessor-based, of a flexible and modular design so as to accept future system upgrades, and equipped with the following features:

1. All necessary electronics and hardware to continuously accept, process, display, print, and store all probe and sensor data, reporting not only operating conditions, but also system malfunctions or failures contained within a single secured enclosure.
2. Front panel display for on-site viewing of all inventory, leak detection, and alarm information.
3. Front panel annunciator to annunciate alarm or system error conditions. Acknowledgment via front panel control keys shall be programmable to silence alarm horn for all previous conditions.
4. Front panel control keys for on-site control of the system.
5. A printer, of minimum 24 column width, shall provide hard copy reports for documentation of inventory, leak detection, alarm information, etc. Hard copy reports shall exit from the front panel.
6. A back-up battery and/or non-volatile memory shall maintain all configuration data in the case of a power outage. The system's memory shall be capable of storing the most recent inventory, leak detection, and alarm information.

B. The console shall consist of, but not be limited to, 3 compartments to separate intrinsically safe wiring and devices, high power wiring and devices, and communications wiring and devices.

1. Intrinsically Safe Wiring and Devices. The system shall have the ability to accept 8 in-tank magnetostrictive probes, 4 line leak detectors, and 24 liquid sensors.

a. Console shall be UL-listed as intrinsically safe.
b. Sensor input electronics shall include support for supervised wiring between the console and the sensor to identify short or open-circuited wiring.
c. All probe and leak sensor inputs shall be protected against voltage spikes, such as "near hit" lightning activity.

2. High Power Wiring and Devices. The system shall have the ability via relays, controllers, etc., to actuate external audible and visual alarm devices, monitor the activity of the submersible pumps and valves, etc. Relays shall be UL-listed devices having the following capabilities and features:

a. Relays shall be individually programmable via the control keys or the communications interfaces to trigger on any combination of events,

including, but not limited to, leak, setpoint, water, theft, or contact closure input.

b. Relays shall be individually programmable for, or have connections for, normally energized/de-energized operation.

c. Relays shall be individually programmable to enable or disable front panel control key acknowledgment. If enabled, acknowledgment shall restore relay to its normal state.

d. The system shall allow the programmed activation of a second relay for any event listed above. This feature shall provide isolated control and signaling outputs.

e. Contact closure inputs shall be individually programmable for normally open/closed operation.

f. Contact closure inputs shall be individually programmable as an acknowledge or gating function to any relay, to trigger an alarm condition, and for pump override control applications.

3. Communications Wiring and Devices. The system shall have a minimum of 4 communications ports with the following capabilities:

a. The ability to communicate with locally attached electronic devices (FMU and printer) through RS-232 ports.

b. The ability to communicate with networked electronic devices (Headend) through a factory installed network interface card.

2.4 IN-TANK PROBES:

A. The probes shall be magnetostrictive type suitable for leak detection and inventory management in both underground and aboveground storage tanks. Unless otherwise noted, probes shall include 2 floats (product and water), and shall also include a minimum of 5 temperature sensors along its length to allow product temperature averaging.

1. Temperature measurement accuracy of +/- 0.5□.
2. Level measurement accuracy of +/- .0005-inch.

B. The probes shall be gasoline, ethanol, benzene, and oil-resistant. The probes shall be UL-listed as intrinsically safe and shall utilize digital or time-based transmission techniques for high noise immunity and fault detection.

C. Leak Detection: Capable of manually or automatically performing a static tank tightness test to an accuracy of 0.1-gph, with a 99% probability of detection [P(D)] and a 1% probability of false alarm [P(FA)].

1. System shall be third-party certified to be in accordance with EPA standards for 0.1-gph annual tightness test and for 0.2-gph monthly monitoring.

D. The probes shall be capable of continuously gauging the water level from within 0.75-inch off of the bottom of the tank to a depth of at least 10-inches for riser pipe installations.

E. The probes shall be supplied with the manufacturer's standard probe installation kits and wiring.

2.5 INTERSTITIAL SENSORS:

A. Wet Monitoring:

1. The hydrostatic sensors shall perform automatic, continuous leak sensing by monitoring the liquid level in the reservoir of a brine-filled interstitial space (annulus) of double-wall tanks, to detect a breach in the inner or outer shell. Single float sensors shall include a float and reed switch assembly. The contact shall be a normally closed dry contact.
2. The sensors shall be unaffected by hydrocarbon vapors, and shall be easily installed and removed without damage. Sensors shall be field replaceable, reusable, and testable for regulatory purposes.
3. The sensors shall be supplied with a lockable, watertight riser cap to prevent accidental spills into the tank reservoir. The cap shall be equipped with a vent tube to vent air out of the reservoir area and prevent liquids from entering into the reservoir.
4. The sensors shall be supplied with the manufacturer's standard sensor installation kits and wiring.

B. Dry Monitoring:

1. The sensors shall perform automatic, continuous leak sensing by monitoring the dry interstitial space (annulus) of double wall tanks. Sensors shall be a non-discriminating type, sensing only wet or dry conditions.
2. The sensors shall be unaffected by hydrocarbon vapors, and shall be easily installed and removed without damage. Sensors shall be field replaceable, reusable, and testable for regulatory purposes.
3. The sensors shall be supplied with the manufacturer's standard sensor installation kits and wiring.

2.6 TANK OVERFILL ALARM:

A. Remote external audible and visual overfill alarm annunciator shall be housed in a weatherproof enclosure. The overfill alarm shall activate if a tank product level reaches the overfill alarm setpoint of 90% capacity.

B. Remote alarm acknowledge unit shall be housed in a weatherproof enclosure. Acknowledge unit shall silence audible and visual overfill alarms.

2.7 SOFTWARE:

A. Network Communications for Remote Alarming/Reporting:

1. The manufacturer shall provide its communications/database software package and license (Headend) to poll remote tank monitoring sites from a total of five (5) locations, including the central location (2800 Berlin Turnpike, Newington, CT), via a network connection.
2. The Headend operator shall connect to remote sites by selecting the user-definable name associated with the site.
3. The Headend operator shall be able to connect to the system and gain access to the full control, reporting, troubleshooting, and system modification capabilities described in this specification.
4. The Headend shall provide a communications mode, in which it can automatically and continuously poll locations that have been designated for data retrieval, and store data in a standard database format.
5. The system shall have the ability to automatically upload all alarms, reports, logs, and other features as described in this specification. The software package shall provide the ability to program the system from remote locations.
6. In the event that the system is unable to connect with the Headend, it shall continue to attempt communication on a predetermined interval until communication is successful.
7. The stored data shall be easily transferable to other software packages, such as spreadsheets, database packages, etc., for data manipulation.

B. Reports and Logs. The following reports and logs shall be provided for each tank as indicated on the Plans:

1. Environmental Compliance Reports. The system shall have the ability to capture the following environmental compliance reports, as well as to provide hard copies of these reports at the console.

   a. In-Tank Warnings and Alarms.
   b. In-Tank Tightness Test Results.
   c. Liquid Sensor Warnings and Alarms.
   d. System Hardware and Software Errors.
   e. System Status Messages.
   f. Normally-closed Sensor warning and alarm conditions.
   g. External input messages.

2. The system shall also generate hard copy reports at the console for system errors, system clock and calendar, and system setup and configuration data.

C. Reports and Logs. The following reports and logs shall be provided for each gasoline tank, diesel fuel tank, and fuel oil tank as indicated on the Plans.

1. Inventory Management Reports shall be generated for each tank either automatically a minimum of three times per day (programmable) or manually. In addition to the system capturing this data, hard copies of the reports will be generated at the console. Inventory Reports shall include the tank identification, product name, time and date, product level and volume, water level and volume, product temperature, gross volume, temperature compensated net volume, percent capacity, 90% ullage, and last in-tank leak test result.
2. Product Delivery Reports shall be generated for each tank automatically after a delivery to the tank is complete. In addition to the system capturing this data, hard copies of the report will be generated at the console. Fuel Delivery Reports shall include the tank identification, product name, time and date, starting and ending product levels and volumes, starting and ending product temperatures, and the net product volume increase.
3. Product Order Reports shall be manually generated for each tank. In addition to the system capturing this data, hard copies of the reports will be generated at the console. Fuel Order Report shall include the average daily product usage calculated from the last delivery, the total and usable inventory, the remaining product supply in days, and the maximum order amount (90% ullage) at the time of report generation.
4. Water Removal Report shall be generated for each tank automatically upon the removal of water from each tank. In addition to the system capturing this data, hard copies of the reports will be generated at the console. Water Removal Reports shall include the tank identification, product name, time and date; and starting and ending product volumes, water volumes, gross volume, percent capacities, and 90% ullage.

D. Alarms.

1. The system shall provide audible and visual indication of all system, in-tank leak (3.0-gph, 0.2-gph, and 0.1-gph failures), and external sensor (product, water, sensor out) alarm conditions. The system shall also capture this data, and hard copies will be generated.
2. The system shall provide the operator the ability to disable the audible portion of an alarm. The visual portion of an alarm shall not be disabled until the alarm condition has been corrected.
3. The system alarms include:

    a. High High Limit (Overfill).
    b. High Limit.
    c. Low Inventory Limit
    d. High Water Limit.
    e. Temperature.
    f. Theft.
    g. Delivery needed alarm.
    h. Periodic warning and alarm.
    i. Annual warning and alarm.
    j. Non-IS contact closure input.

k. IS (liquid) sensor input.
l. System error.
m. Power recovery.
n. Leak Test Failed.

4. The product limit alarms identified in subpart a, b, and c in Part 3 above shall be programmable in units of volume, percent volume, or level.
5. The operator shall have complete programming control to determine which alarm conditions, if any, shall control pumps, valves, or any other devices. Unless the system is set up to shut part of the system down on alarm, system shall remain operational during all alarm conditions.

E. Diagnostics and Troubleshooting.

1. The system shall provide the manufacturer's standard diagnostic and troubleshooting capabilities to facilitate field service. These capabilities shall include, but are not limited to, the following:

a. Identifying the location of the malfunction, whether in the field or console.
b. The system shall be capable of detecting and reporting corruption of configuration and set-up data. Affected system function(s) shall be disabled until corruption is corrected.
c. The system shall be capable of limiting the range of selections on input to only "acceptable" values, or the system shall be capable of scanning operator-entered configuration and set-up data to check for "acceptable" values. Values that result in improper calculations or required entries that have not been defined by the operator shall generate a warning report, and shall disable the affected system function(s).
d. The system shall be capable of detecting and reporting a power-up sequence, including power loss and recovery dates and times.
e. The system shall be capable of ensuring the integrity of its hardware and software.
f. Supervised wiring between the console and the interstitial sensors to identify short or open circuited wiring. System shall identify fault to the failed sensor.
g. Supervised wiring between the console and the in-tank probes to detect a fault, either as failed hardware or as a result of faulty wiring. System shall identify fault to the tank.

2. The system shall generate hard copy reports of the diagnostic information, including the alarm history and alarm status at the console.

2.8 RELATED ELECTRICAL WORK:

A. Conduit: Comply with requirements in CSI Division 26 Section 260533, "Raceway and Boxes for Electrical Systems".

B. Explosionproof Fittings: Threaded, recessed-type, close-up plugs, Model No. EYSF75 as manufactured by Appleton, or an approved equal. Screwdriver slotted close-up plugs shall not be accepted.

PART 3 - EXECUTION

3.1 EXAMINATION:

A. Examine areas and conditions under which the tank monitoring system is to be installed. Do not proceed with work until unsatisfactory conditions have been corrected in manner acceptable to the Tank Monitoring Installer.

3.2 INSTALLATION REQUIREMENTS:

A. All probe and leak sensor inputs shall be protected against damage from short circuit conditions due to inadvertent field wiring errors.

B. In-tank Probes.

1. Probes, probe installation kits, and wiring shall be installed according to manufacturer-supplied installation manuals and Plans.
2. Probe assemblies for monitoring product and water levels are required for all storage tanks as indicated on the Plans.
3. Probe assemblies in underground storage tanks shall top-mount from a 4-inch diameter probe riser pipe. Riser installation is not work of this Section; risers shall be installed by the applicable CSI Section and as indicated on the Plans.
4. Probe leader cables to connect inside watertight junction box, sealed off with an explosion proof fitting, for connection to console.

C. Interstitial Sensors.

1. Sensors and wiring shall be installed according to manufacturer-supplied installation manuals and plans.
2. Sensors for monitoring the interstitial spaces are required for all double-wall underground storage tanks as indicated on the Plans.
3. Sensor assemblies in underground storage tanks shall top-mount in a 4-inch diameter sensor riser pipe installed in the annulus of the tank. Riser installation is not work of this Section; risers shall be installed by the applicable CSI Section and as indicated on the Plans.
4. Sensor leader cables to connect inside watertight junction box, sealed off with an explosion proof fitting, for connection to console.

D. Tank Overfill Alarm:

1. Remote alarm annunciator and acknowledge unit wiring shall be installed according to manufacturer-supplied installation manuals.
2. The alarm light shall be visible and the alarm horn shall be audible within the fuel tank filling area.
3. The acknowledge unit shall be accessible to the tank filling attendant.
4. Remote alarm annunciator and acknowledge unit shall be mounted near the tank filling sites for the following as indicated on the Plans.

    a. Gasoline and diesel fuel tanks.
    b. Fuel oil tank.

E. The wall-mounted console with printer shall be located as shown on the Plans.

1. Console shall be mounted and wired according to manufacturer-supplied installation manuals, with all intrinsically safe field wiring enclosed in dedicated conduit and separate from all other wiring. The system's high voltage wiring may share existing conduit with other high voltage devices in accordance with applicable guidelines published in the NEC.
2. Console power requirements: 120-volts, 60-Hz, from a separate, dedicated circuit from the Fuel Control Center panel.

F. Related Electrical Work: Install conduit. Seal E.Y. fittings. Leave close-up plugs hand tight after sealing to provide for inspection of these fittings.

3.3 FIELD QUALITY CONTROL:

A. Engage a factory-authorized service representative to inspect and test the system and to perform start-up service. Power shall not be applied to the system prior to start-up.

B. Perform all necessary testing and run diagnostic tests to ensure proper operation. Test equipment as recommended by manufacturer. Generate all software and enter all database information necessary to perform the sequence of control and specified software routines.

1. An acceptance test shall be performed in the presence of the Engineer.

C. The manufacturer shall provide a written certification of installation, start-up, and calibration of the complete system.

D. The manufacturer shall supply third-party documentation for all products certifying that the performance meets or exceeds EPA requirements.

3.4 TRAINING:

A. Refer to Form 816 Article 1.20-1.08.14 subsection 3 for additional information.

B. Engage a factory-authorized service representative for an 8-hour on-site class to train Owner's maintenance personnel on all installation, programming, troubleshooting, operating, routine maintenance, and service procedures.

END OF SECTION 132180

SECTION 230517 - SLEEVES AND SLEEVE SEALS FOR HVAC PIPING

PART 1 - GENERAL

1.1 SUMMARY:

A. Section Includes:

1. Sleeves.
2. Sleeve-seal systems.
3. Grout.

1.2 ACTION SUBMITTALS:

A. Submit the following in accordance with Form 816 Article 1.20-1.05.02 and NOTICE TO CONTRACTOR – SUBMITTALS.

B. Product Data: For each type of product indicated.

PART 2 - PRODUCTS

2.1 SLEEVES:

A. Galvanized-Steel Wall Pipes: ASTM A 53/A 53M, Schedule 40, with plain ends and welded steel collar; zinc coated.

2.2 SLEEVE-SEAL SYSTEMS:

A. Manufacturers: Subject to compliance with requirements, available manufacturers offering products that may be incorporated into the Work include, but are not limited to, the following:

1. CALPICO, Inc.
2. Metraflex Company (The).

B. Description: Modular sealing-element unit, designed for field assembly, for filling annular space between piping and sleeve.

1. Sealing Elements: EPDM-rubber interlocking links shaped to fit surface of pipe. Include type and number required for pipe material and size of pipe.
2. Pressure Plates: Plastic.

3. Connecting Bolts and Nuts: Carbon steel, with corrosion-resistant coating of length required to secure pressure plates to sealing elements.

2.3 GROUT:

A. Standard: ASTM C 1107/C 1107M, Grade B, post-hardening and volume-adjusting, dry, hydraulic-cement grout.

B. Characteristics: Nonshrink; recommended for interior and exterior applications.

C. Design Mix: 5000-psi, 28-day compressive strength.

D. Packaging: Premixed and factory packaged.

PART 3 - EXECUTION

3.1 SLEEVE INSTALLATION:

A. Install sleeves for piping passing through penetrations in concrete walls.

1. Cut sleeves to length for mounting flush with both surfaces.
2. Using grout, seal the space outside of sleeves in walls.

B. For sleeves that will have sleeve-seal system installed, select sleeves of size large enough to provide 1-inch annular clear space between piping and walls.

3.2 SLEEVE-SEAL-SYSTEM INSTALLATION:

A. Install sleeve-seal systems in sleeves in exterior concrete walls at service piping entries into building.

B. Select type, size, and number of sealing elements required for piping material and size and for sleeve ID or hole size. Position piping in center of sleeve. Center piping in penetration, assemble sleeve-seal system components, and install in annular space between piping and sleeve. Tighten bolts against pressure plates that cause sealing elements to expand and make a watertight seal.

3.3 SLEEVE AND SLEEVE-SEAL SCHEDULE:

A. Use sleeves and sleeve seals for the following piping-penetration applications:

1. Exterior Concrete Walls above Grade:

a. Piping Smaller than NPS 6: Galvanized-steel wall sleeves.

END OF SECTION 230517

SECTION 230529 - HANGERS AND SUPPORTS FOR HVAC PIPING AND EQUIPMENT

PART 1 - GENERAL

1.1 SUMMARY:

A. Section Includes:

1. Metal pipe hangers and supports.

1.2 DEFINITIONS:

A. MSS: Manufacturers Standardization Society of The Valve and Fittings Industry Inc.

1.3 PERFORMANCE REQUIREMENTS:

A. Structural Performance: Hangers and supports for HVAC piping and equipment shall withstand the effects of gravity loads and stresses within limits and under conditions indicated according to ASCE/SEI 7.

1. Design supports for multiple pipes, including pipe stands, capable of supporting combined weight of supported systems, system contents, and test water.
2. Design equipment supports capable of supporting combined operating weight of supported equipment and connected systems and components.
3. Design seismic-restraint hangers and supports for piping and equipment.

1.4 ACTION SUBMITTALS:

A. Submit the following in accordance with Form 816 Article 1.20-1.05.02 and NOTICE TO CONTRACTOR – SUBMITTALS.

B. Product Data: For each type of product indicated.

1.5 INFORMATIONAL SUBMITTALS:

A. Quality Assurance Submittals:

1. Welding certificates.

1.6 QUALITY ASSURANCE:

A. Structural Steel Welding Qualifications: Qualify procedures and personnel according to AWS D1.1/D1.1M, "Structural Welding Code - Steel."

PART 2 - PRODUCTS

2.1 METAL PIPE HANGERS AND SUPPORTS:

A. Carbon-Steel Pipe Hangers and Supports:

1. Description: MSS SP-58, Types 1 through 58, factory-fabricated components.
2. Galvanized Metallic Coatings: Pregalvanized or hot dipped.
3. Hanger Rods: Continuous-thread rod, nuts, and washer made of carbon steel.

PART 3 - EXECUTION

3.1 HANGER AND SUPPORT INSTALLATION:

A. Metal Pipe-Hanger Installation: Comply with MSS SP-69 and MSS SP-89. Install hangers, supports, clamps, and attachments as required to properly support piping from the building structure.

B. Install hangers and supports complete with necessary attachments, inserts, bolts, rods, nuts, washers, and other accessories.

C. Install hangers and supports to allow controlled thermal and seismic movement of piping systems, to permit freedom of movement between pipe anchors, and to facilitate action of expansion joints, expansion loops, expansion bends, and similar units.

D. Install building attachments within concrete slabs or attach to structural steel. Install additional attachments at concentrated loads, including valves, flanges, and strainers, NPS 2-1/2 and larger and at changes in direction of piping. Install concrete inserts before concrete is placed; fasten inserts to forms and install reinforcing bars through openings at top of inserts.

E. Load Distribution: Install hangers and supports so that piping live and dead loads and stresses from movement will not be transmitted to connected equipment.

F. Pipe Slopes: Install hangers and supports to provide indicated pipe slopes and to not exceed maximum pipe deflections allowed by ASME B31.9 for building services piping.

3.2 ADJUSTING:

A. Hanger Adjustments: Adjust hangers to distribute loads equally on attachments and to achieve indicated slope of pipe.

B. Trim excess length of continuous-thread hanger and support rods to 1-1/2 inches.

3.3 PAINTING:

A. Touchup: Clean and touchup painting of field welds, bolted connections, and abraded areas of shop paint on miscellaneous metal.

B. Galvanized Surfaces: Clean welds, bolted connections, and abraded areas and apply galvanizing-repair paint to comply with ASTM A 780.

3.4 HANGER AND SUPPORT SCHEDULE:

A. Specific hanger and support requirements are in CSI Sections specifying piping systems and equipment.

B. Comply with MSS SP-69 for pipe-hanger selections and applications that are not specified in piping system Sections.

C. Use carbon-steel pipe hangers and supports and attachments for general service applications.

D. Horizontal-Piping Hangers and Supports: Unless otherwise indicated and except as specified in piping system Sections, install the following types:

1. Adjustable, Steel Clevis Hangers (MSS Type 1): For suspension of noninsulated or insulated, stationary pipes NPS 1/2 to NPS 30.
2. Single-Pipe Rolls (MSS Type 41): For suspension of pipes NPS 1 to NPS 30, from two rods if longitudinal movement caused by expansion and contraction might occur.

E. Vertical-Piping Clamps: Unless otherwise indicated and except as specified in piping system Sections, install the following types:

1. Extension Pipe or Riser Clamps (MSS Type 8): For support of pipe risers NPS 3/4 to NPS 24.
2. Carbon- or Alloy-Steel Riser Clamps (MSS Type 42): For support of pipe risers NPS 3/4 to NPS 24 if longer ends are required for riser clamps.

F. Hanger-Rod Attachments: Unless otherwise indicated and except as specified in piping system Sections, install the following types:

1. Steel Turnbuckles (MSS Type 13): For adjustment up to 6 inches for heavy loads.
2. Steel Clevises (MSS Type 14): For 120 to 450 deg F piping installations.
3. Swivel Turnbuckles (MSS Type 15): For use with MSS Type 11, split pipe rings.
4. Steel Weldless Eye Nuts (MSS Type 17): For 120 to 450 deg F piping installations.

G. Building Attachments: Unless otherwise indicated and except as specified in piping system Sections, install the following types:

1. Top-Beam C-Clamps (MSS Type 19): For use under roof installations with bar-joist construction, to attach to top flange of structural shape.
2. Center-Beam Clamps (MSS Type 21): For attaching to center of bottom flange of beams.
3. C-Clamps (MSS Type 23): For structural shapes.
4. Welded-Steel Brackets: For support of pipes from below or for suspending from above by using clip and rod. Use one of the following for indicated loads:

    a. Light (MSS Type 31): 750 lb.
    b. Medium (MSS Type 32): 1500 lb.
    c. Heavy (MSS Type 33): 3000 lb.

H. Spring Hangers and Supports: Unless otherwise indicated and except as specified in piping system Sections, install the following types:

1. Restraint-Control Devices (MSS Type 47): Where indicated to control piping movement.
2. Spring Cushions (MSS Type 48): For light loads if vertical movement does not exceed 1-1/4 inches.
3. Spring-Cushion Roll Hangers (MSS Type 49): For equipping Type 41, roll
4. Spring Sway Braces (MSS Type 50): To retard sway, shock, vibration, or thermal expansion in piping systems.
5. Variable-Spring Hangers (MSS Type 51): Preset to indicated load and limit variability factor to 25 percent to allow expansion and contraction of piping system from hanger.

END OF SECTION 230529

SECTION 230553 - IDENTIFICATION FOR HVAC PIPING AND EQUIPMENT

PART 1 - GENERAL

1.1 SUMMARY:

A. Section Includes:

1. Pipe labels.

1.2 ACTION SUBMITTALS:

A. Submit the following in accordance with Form 816 Article 1.20-1.05.02 and NOTICE TO CONTRACTOR – SUBMITTALS.

B. Product Data: For each type of product indicated.

1.3 QUALITY ASSURANCE:

A. ASME Compliance: Comply with ASME 13.1 "Scheme for the Identification of Piping Systems" for letter size, length of color field, colors, and viewing angles of identification devices for piping.

1.4 COORDINATION:

A. Coordinate installation of identifying devices with completion of covering and painting of surfaces where devices are to be applied.

B. Coordinate installation of identifying devices with locations of access panels and doors.

C. Install identifying devices before installing acoustical ceilings and similar concealment.

PART 2 - PRODUCTS

2.1 PIPE LABELS:

A. General Requirements for Manufactured Pipe Labels: Preprinted, color-coded, with lettering indicating service, and showing flow direction.

B. Pretensioned Pipe Labels: Precoiled, semirigid plastic formed to cover full circumference of pipe and to attach to pipe without fasteners or adhesive.

C. Self-Adhesive Pipe Labels: Printed plastic with contact-type, permanent-adhesive backing.

D. Pipe Label Contents: Include identification of piping service using same designations or abbreviations as used on Plans, pipe size, and an arrow indicating flow direction.

1. Flow-Direction Arrows: Integral with piping system service lettering to accommodate both directions, or as separate unit on each pipe label to indicate flow direction.
2. Lettering Size: At least 1-1/2 inches high.

PART 3 - EXECUTION

3.1 PREPARATION:

A. Clean piping and equipment surfaces of substances that could impair bond of identification devices, including dirt, oil, grease, release agents, and incompatible primers, paints, and encapsulants.

3.2 PIPE LABEL INSTALLATION:

A. Locate pipe labels where piping is exposed or above accessible ceilings in finished spaces; machine rooms; accessible maintenance spaces such as shafts, tunnels, and plenums; and exterior exposed locations as follows:

1. Near each valve and control device.
2. Near each branch connection, excluding short takeoffs for fixtures and terminal units. Where flow pattern is not obvious, mark each pipe at branch.
3. Near penetrations through walls, floors, ceilings, and inaccessible enclosures.
4. At access doors, manholes, and similar access points that permit view of concealed piping.
5. Near major equipment items and other points of origination and termination.
6. Spaced at maximum intervals of 50 feet along each run. Reduce intervals to 25 feet in areas of congested piping and equipment.
7. On piping above removable acoustical ceilings. Omit intermediately spaced labels.

B. Pipe Label Color Schedule: In accordance with ASME A13.1.

END OF SECTION 230553

SECTION 231113 - FACILITY FUEL-OIL PIPING

PART 1 - GENERAL

1.1 SUMMARY:

A. This Section includes fuel-oil storage and distribution system.

1.2 DEFINITIONS:

A. AST: Aboveground storage tank.

1.3 PERFORMANCE REQUIREMENTS:

A. Maximum Operating-Pressure Ratings: 3-psig fuel-oil supply pressure at oil-fired appliances.

1.4 ACTION SUBMITTALS:

A. Submit the following in accordance with Form 816 Article 1.20-1.05.02 and NOTICE TO CONTRACTOR – SUBMITTALS.

B. Product Data: For each type of product indicated. Include construction details, material descriptions, and dimensions of individual components and profiles. Also include, where applicable, rated capacities, operating characteristics, electrical characteristics, and furnished specialties and accessories.

C. Shop Drawings: For fuel-oil storage tanks, include details of supports and anchors. Indicate all critical dimensions, locations of all fittings, accessories, and manholes, etc.

1.5 INFORMATIONAL SUBMITTALS:

A. Quality Assurance Submittals:

1. Certification that tank test equipment conforms to State and Federal requirements and that the persons performing the tests are qualified on said test equipment.
2. Field quality control test reports.

1.6 CLOSEOUT SUBMITTALS:

A. Operation and Maintenance Data: For fuel-oil equipment and accessories to include in the operation and maintenance manuals specified in Form 816 Article 1.20-1.08.14 subsection 2 and described in NOTICE TO CONTRACTOR – CLOSEOUT DOCUMENTS.

B. Warranty: Special warranties specified in Part 1.10, "WARRANTY."

1.7 DELIVERY, STORAGE, AND HANDLING:

A. Lift tanks in accordance with manufacturer's instructions and with the proper equipment. Do not use chain or cables around tanks at any time. If tanks have to be moved, set on smooth ground free of rocks and foreign objects. Do not drop or roll tanks. Do not allow tanks to be impacted.

B. Other Tank Materials: Store material in a clean dry area protected from damage. Materials may be stored outside only with the written approval of the Engineer.

1.8 COORDINATION:

A. Coordinate sizes and locations of concrete bases with actual equipment provided.

B. A charge of $3,500.00 shall be included in the contract bid price for the filling of the Fuel-Oil UST to 50% of the rated capacity with No. 2 Fuel Oil, or as otherwise directed by the Engineer. All Contractors will include the above amount for fuel oil UST filling in the Contract Bid Price. If it is determined that different charges apply, the Contractor's bid will be adjusted to reflect the differential by construction order, provided that the Contractor provides all applicable written billing documentation. The Contractor will be compensated only for the difference between the billed amount and the estimated amount. No additional Contractor markup will be allowed.

1.9 PROJECT CONDITIONS:

A. Interruption of Existing Fuel-Oil Service: Do not interrupt fuel-oil service to facilities occupied by Owner or others unless permitted under the following conditions and then only after arranging to provide temporary fuel-oil supply according to requirements indicated:

1. Notify Engineer no fewer than two days in advance of proposed interruption of fuel-oil service.
2. Do not proceed with interruption of fuel-oil service without Engineer's written permission.

1.10 WARRANTY:

A. Refer to Form 816 Article 1.20-1.06.08 and NOTICE TO CONTRACTOR – CLOSEOUT DOCUMENTS for additional information.

B. Special Warranty: Manufacturer's standard form in which manufacturer agrees to repair or replace storage tanks that fail in materials or workmanship within specified warranty period.

1. Storage Tanks:

a. Failures include, but are not limited to, the following when used for storage of fuel oil at temperatures not exceeding 150 deg F:

1) Structural failures including cracking, breakup, and collapse.
2) Corrosion failure including external and internal corrosion of steel tanks.

b. Warranty Period: 30 years from the issuance of the Certificate of Compliance.

PART 2 - PRODUCTS

2.1 PIPES, TUBES, AND FITTINGS:

A. See Part 3 piping schedules for where pipes, tubes, fittings, and joining materials are applied in various services.

B. Steel Pipe:

1. ASTM A 53/A 53M, black steel, Schedule 40, Type E or S, Grade B.

a. Malleable-Iron Threaded Fittings: ASME B16.3, Class 150, standard pattern.

2. ASTM A 53/A 53M, galvanized steel, Schedule 40.

a. Malleable-Iron Threaded Fittings: Zinc-coated, ASME B16.3, Class 150, standard pattern.

2.2 JOINING MATERIALS:

A. Joint Compound and Tape: Suitable for fuel oil.

2.3 CONCRETE-VAULTED, STEEL, FUEL-OIL AST:

A. Basis-of-Design Product: Subject to compliance with requirements, provide ConVault aboveground storage tanks manufactured by United Concrete Products Inc., or an approved equal.

B. Description: The AST shall consist of a primary steel tank covered by a minimum of ¼" thick extruded polystyrene foam insulation panels. The secondary containment shall consist of a 30 Mil thick High-Density Polyethylene membrane enclosing the steel tank and insulation material. The primary steel tank and the secondary containment shall be encased in six inches of monolithic reinforced concrete, with minimum design strength of 5,000 psi at 28 days.

C. Construction: The concrete design shall include the following for long-term durability: air entrainment, water reducing admixture, and steel reinforcement. Concrete encasements with seams will not be approved. The protected and insulated AST systems shall contain no cold joints or heat sinks (heat transfer points). The AST must be shop fabricated and tested in accordance with UL 2085. Designs that use two layers of steel with insulation material between them will not be approved. No steel or insulating material shall come in contact with the concrete or other corrosive material.

D. Protection: The AST's shall be suitable for operation at atmospheric pressure; fabricated to meet the following criteria:

1. Provide two (2) hour fire protection in accordance with UL 2085.
2. Vehicle Impact Resistance: Tanks shall be designed to have a low center of gravity that can withstand vehicle impact and tipping during earthquakes and other natural disasters.
3. Ballistic Resistance: Tanks shall withstand bullet resistance tests in compliance with UL 2085.
4. Lightning Protection: The protected and insulated AST systems shall have two (2) bolts for connecting grounding conductors for lightning protection. Grounding conductor and grounding rod materials and installation shall be in accordance with NFPA 780.

E. The primary steel tanks shall include an atmospheric vent and emergency venting in accordance with NFPA 30 Code requirements.

F. Support legs shall be monolithically cast with the concrete vault.

2.4 FUEL-OIL AST ACCESSORIES:

A. Threaded pipe connection nipples on top of tank, for fill, supply, vent, in-tank probe, and gaging in locations and of sizes indicated on the Plans.

B. 24” Manway Assembly for access to inside the tank with 8” Emergency Vent. The emergency vent relief system shall relieve the pressure of the primary tank if the tank pressure exceeds ½ psig.

C. Tank Fill Assembly: 7-gallon powder coated, UL listed spill containment. The assembly shall include a normally closed drain valve to release spilled product into the primary tank and a stick port for manual gauging.

D. Tank Charts: Provide (3) copies. Mount 1 copy in a glass frame secured to the wall with 4 screws adjacent to the Fuel Control Center, or as directed by the Engineer. Charts shall be calibrated to show tank capacity in gallons from feet and inches, graduated by eighths.

E. Gauge Stick: Wooden, manufacturer’s recommended length, treated after graduating to prevent swelling and damage from fuel. Gauge stick shall be graduated in feet, inches, and eighths.

F. Stair Assembly: Tank manufacturer’s standard galvanized steel stairway for access to the top of the tank. Stairs and railings shall comply with OSHA Standards.

2.5 TANK INSTALLATION MATERIALS:

A. Grout: Non-shrink type.

B. Compacted Granular Fill: Refer to Form 816, Section 2.14 “Compacted Granular Fill” for material and construction methods required.

C. Concrete Pads: Comply with the requirements in CSI Division 03 Section 033000, “Cast-in-Place Concrete.”

2.6 FUEL-OIL STORAGE TANK SPECIALTIES:

A. Overfill Prevention:

1. Overfill Prevention Valve: Suitable for installation in aboveground fuel oil storage tanks, provide Model No. 61fSTOP-100M as manufactured by OPW, or an approved equal.
2. Lower Drop Tube: Aluminum, compatible with overfill prevention valve, as manufactured by OPW, or an approved equal. Drop tube shall terminate 6-inches above the bottom of the tank, with the end of drop tube cut off at a 45-degree angle.

B. Antisiphon Valves: Poppet-type, bronze or corrosion-resistant metal components, built-in thermal expansion pressure relief valve, and adjustable to meet field conditions of hydrostatic head pressure.

C. Fill Adaptor and Cap: 2-inch Tank Inlet Spout Adaptor Model No. 633AST with 2-inch locking dust cap, Model No. 634BK as manufactured by OPW, or an approved equal.

D. Vent Cap:

1. Fuel Oil: Open, atmospheric type, corrosion-resistant, internal wire screen designed to protect vent lines from water, debris, and insects, Model No. 23 as manufactured by OPW, or an approved equal.

E. Probe Cap and Adaptor: Bronze, side-sealing adaptor, side sealing cap (tapped), wire grommet to secure cables, Model No. 62M as manufactured by OPW, or an approved equal.

2.7 FUEL OIL

A. Fuel Oil: ASTM D 396, Grade No. 2.

2.8 SOURCE QUALITY CONTROL:

A. Pressure test and inspect fuel-oil storage tanks, after fabrication and before shipment, according to ASME and the following:

1. Horizontal, Concrete-Vaulted and Insulated, Steel ASTs: UL 142 and UL 2085.

B. Affix standards organization's code stamp.

PART 3 - EXECUTION

3.1 EXAMINATION:

A. Examine roughing-in for fuel-oil piping system to verify actual locations of piping connections before equipment installation.

B. Proceed with installation only after unsatisfactory conditions have been corrected.

3.2 EXCAVATION AND BACKFILL:

A. Refer to Form 816 Section 2.02, “Roadway Excavation, Formation of Embankment and Disposal of Surplus Material” and Section 2.05, “Trench Excavation” for excavating, trenching, and backfilling requirements.

B. Compacted Granular Fill shall be installed in accordance with Form 816 Article 2.14 beneath the concrete pads as indicated on the plans. Protect buried items during compaction.

1. Concrete Pads: Provide a minimum of 6-inches of compacted granular fill for concrete pads, compacted to support the concrete pad installation.

3.3 PREPARATION:

A. Close equipment shutoff valves before turning off fuel oil to premises or piping section.

B. Comply with NFPA 30 and NFPA 31 requirements for prevention of accidental ignition.

3.4 OUTDOOR PIPING INSTALLATION:

A. Install metal pipes and tubes, fittings, and specialties at piping connections to AST.

B. Install fittings for changes in direction in rigid pipe.

C. Install system components with pressure rating equal to or greater than system operating pressure.

3.5 INDOOR PIPING INSTALLATION:

A. Plans indicate general location and arrangement of piping systems. Indicated locations and arrangements were used to size pipe and calculate friction loss, expansion, and other design considerations. Install piping as indicated unless deviations to layout are approved by the Designer.

B. Arrange for pipe spaces, sleeves, and openings in building structure during progress of construction, to allow for mechanical installations.

C. Install piping in equipment rooms and service areas at right angles or parallel to building walls. Diagonal runs are prohibited unless specifically indicated otherwise.

D. Install piping free of sags and bends.

E. Install fittings for changes in direction.

F. Verify final equipment locations for roughing-in.

G. Prohibited Locations:

1. Do not install fuel-oil piping in or through circulating air ducts, chimneys or gas vents (flues), ventilating ducts.
2. Do not install fuel-oil piping in solid walls or partitions.

H. Do not use fuel-oil piping as grounding electrode.

I. Install sleeve seals for piping penetrations of concrete walls and slabs. Comply with requirements for sleeve seals specified in CSI Division 23 Section 230517, "Sleeves and Sleeve Seals for HVAC Piping."

3.6 PIPING JOINT CONSTRUCTION:

A. Ream ends of pipes and tubes and remove burrs.

B. Remove scale, slag, dirt, and debris from inside and outside of pipe and fittings before assembly.

C. Threaded Joints: Thread pipe with tapered pipe threads according to ASME B1.20.1. Cut threads full and clean using sharp dies. Ream threaded pipe ends to remove burrs and restore full ID. Join pipe fittings and valves as follows:

1. Apply appropriate tape or thread compound to external pipe threads unless dry seal threading is specified.
2. Damaged Threads: Do not use pipe or pipe fittings with threads that are corroded or damaged. Do not use pipe sections that have cracked or open welds.

3.7 FUEL-OIL AST INSTALLATION:

A. Excavate as described herein and as shown on the Plans.

B. Set tank on concrete pad and grout legs in accordance with manufacturer's instructions.

C. Each component of the storage tank system shall be installed as shown on the Plans and in accordance with manufacturer recommendations. Additional installation requirements of the storage tank system are described in subsequent portions of this Section where applicable.

D. Connect piping.

E. Pressure Testing of Tank and Piping: Refer to Part 3.11, "Field Quality Control."

F. Supplying Fuel:

1. Refer to Part 1.8 "Coordination" for filling tanks. Supply appropriate fuel in accordance with specifications set forth in the most current State of Connecticut, Department of Administrative Services contract award for:

- 0035-048 - Fuel No. 1, 2 and 4

2. To determine product suitability for application into State equipment, Contractor will be responsible for testing sample from tanker at time of delivery. Written results of testing will be provided within 7 days to the Engineer. Contracts with

corresponding detailed specifications can be obtained by accessing the State of Connecticut, Department of Administrative Services' website at http://das.ct.gov/Purchase/Commodity.htm.

3. Prior to the issuance of the Certificate of Compliance, the Contractor shall fill all motor fuel tanks in accordance with the Contract requirements.

G. Adjust antisiphon valve to meet hydrostatic head pressure conditions.

3.8 CONNECTIONS:

A. Connect piping to existing piping as indicated on the Plans.

3.9 HANGER AND SUPPORT INSTALLATION:

A. Pipe hanger and support and equipment support materials and installation requirements are specified in CSI Division 23 Section 230529, "Hangers and Supports for HVAC Piping and Equipment."

3.10 LABELING AND IDENTIFYING:

A. Nameplates, pipe identification, and signs are specified in CSI Division 23 Section 230553, "Identification for HVAC Piping and Equipment."

3.11 PAINTING:

A. Paint exposed, exterior metal piping and piping specialties, except components with factory-applied paint or protective coating.

1. Alkyd System: MPI EXT 5.1D.

a. Prime Coat: Alkyd anticorrosive metal primer.
b. Intermediate Coat: Exterior alkyd enamel matching topcoat.
c. Topcoat: Exterior alkyd enamel
d. Color: Gray

3.12 FIELD QUALITY CONTROL:

A. Perform tests and inspections.

B. Tests and Inspections:

1. Tanks: Hydrostatic or compressed-air test pressures for horizontal, shop-fabricated, aboveground storage tanks: Isolate product piping from the tanks

during testing. In-tank probes shall not be installed in the tanks during testing. Maintain the test pressure for one hour.

a. Primary Tanks: Minimum 3 psig and maximum 5 psig.

2. Piping: Minimum hydrostatic or pneumatic test-pressures measured at highest point in system. Soap pipe fittings.

a. Fuel-Oil Piping: Minimum 5 psig for minimum 2 hours.
b. Isolate storage tanks if test pressure in piping will cause pressure in storage tanks to exceed 10 psig.

3. Existing Boiler Burner: Perform startup checks according to manufacturer's written instructions.

C. Fuel-oil piping and equipment will be considered defective if it does not pass tests and inspections. Defective piping and equipment shall be repaired or replaced, and then retested.

D. Prepare test and inspection reports.

3.13 CONCRETE PADS:

A. Concrete installation requirements are specified in CSI Division 03 Section 033000, “Cast-in-Place Concrete.”

3.14 OUTDOOR PIPING SCHEDULE:

A. Aboveground fuel-oil piping shall be the following:

1. NPS 2 and Smaller: Steel pipe, steel or malleable-iron threaded fittings, and threaded joints.

B. AST pipe riser and vent piping shall be the following:

1. AST Pipe Risers: 4-inch galvanized steel pipe and fittings.

2. AST Vent Pipe and Fittings: 2-inch galvanized steel pipe and pipe fittings.

3.15 INDOOR PIPING SCHEDULE:

A. Fuel-oil piping shall be the following:

1. NPS 2 and Smaller: Steel pipe, steel or malleable-iron threaded fittings, and threaded joints.

END OF SECTION 231113

SECTION 260519 – LOW-VOLTAGE ELECTRICAL POWER CONDUCTORS AND CABLES

PART 1 - GENERAL

1.1 SUMMARY:

A. This Section includes building wires and cables and associated connectors, splices, and terminations for wiring systems rated 600 V and less.

B. This Section also includes communication conductors.

C. Related CSI Sections: The following sections contain requirements that relate to this Section:

1. Division 26 Section 260533 "Raceway and Boxes for Electrical Systems".
2. Division 26 Section 260543 "Underground Ducts and Raceways for Electrical Systems".

1.2 SUBMITTALS:

A. Submit the following in accordance with Form 816 Article 1.20 – 1.05.02 and NOTICE TO CONTRACTOR – SUBMITTALS.

B. Product Data: For the following products:

1. 600 volt insulated wires and cables, all sizes
2. Communication conductors
3. All terminals, lugs and wire connectors

C. Quality Assurance Submittals

1. Manufacturer Certification Letter in accordance with NOTICE TO CONTRACTOR – POTENTIAL FOR ASBESTOS CONTAINING MATERIALS.

1.3 QUALITY ASSURANCE:

A. Testing Agency Qualifications: Testing agency as defined by OSHA in 29 CFR 1910.7 or a member company of the NETA and that is acceptable to authorities having jurisdiction.

1. Testing Agency's Field Supervisor: Person currently certified by the NETA or the NICET to supervise on-site testing specified in Part 3.

B. Electrical Components, Devices, and Accessories: Listed and labeled as defined in NFPA 70, Article 100, by a testing agency acceptable to authorities having jurisdiction, and marked for intended use.

C. Comply with NFPA 70.

1.4 DELIVERY, STORAGE, AND HANDLING:

A. Deliver wires and cables according to NEMA WC 26.

1.5 COORDINATION:

A. Coordinate layout and installation of cables with other installations.

B. Revise locations and elevations from those indicated, as required to suit field conditions and as approved by Engineer.

PART 2 - PRODUCTS

2.1 MANUFACTURERS:

A. Available Manufacturers: Subject to compliance with requirements, manufacturers offering products that may be incorporated into the Work include, but are not limited to, the following:

1. Wires and Cables:

a. Alcan Aluminum Corporation; Alcan Cable Div.
b. American Insulated Wire Corp.; Leviton Manufacturing Co.
c. Southwire Comany
d. Carol Cable Co., Inc.
e. Belden

2. Multi taps and connectors for wires and cables:

a. Hubbell Power Systems, Inc.
b. 3M; Electrical Products Division
c. Grainger
d. Square D Co.; Anderson.

2.2 BUILDING WIRES AND CABLES:

A. UL-listed building wires and cables with conductor material, insulation type, cable construction, and rating as specified in Part 3.2 "Wire and Insulation Applications".

B. Rubber Insulation Material: Comply with NEMA WC 3.

C. Thermoplastic Insulation Material: Comply with NEMA WC 5.

D. Conductor Material: Copper.

E. Stranding: All wires shall be stranded.

F. General:

1. The Contract Plans show the locations, type, size and number of wires and cables to be used for this Contract. Each type shall comply with the Specifications contained herein.
2. Cables which have been manufactured more than two years prior to installation will not be accepted.
3. The conductors, unless otherwise noted, shall be soft or annealed copper conforming to ANSI/ASTM B 33 if coated, ANSI/ASTM B 3 if uncoated. In addition, unless otherwise specified, stranded conductors shall have concentric stranding as per ANSI/ASTM B 8.
4. Cables shall be supplied with both ends of each length sealed against the entry of moisture.

G. 600 Volt Insulated Wires and Cables:

1. General:

a. Power, instrumentation, grounding, and control cable shall be approved for use in wet or dry locations, indoors or outdoors in raceway, wireways, trenches, conduits, underground ducts.
b. Asbestos, in any form, is prohibited from the cable. This prohibition includes such items as fillers and binding tapes even though the item is encapsulated, or the asbestos fibers are impregnated with binder material.
c. All conductors shall be copper, insulated, 600 Volt, unless otherwise noted. Wire size No.8 and smaller shall be type THHN-THWN, unless otherwise noted or shown; wire size No. 6 AWG and larger shall be type THWN or XHHW.
d. Conductors with higher insulation temperature rating shall be provided as required. Conductors shall be rated and of a type approved for the specific application.
e. All conductors shall be installed in raceways Refer to CSI Division 26 Section 260533 "Raceways and Boxes for Electrical Systems" and CSI

Division 26 Section 260543 "Underground Ducts and Raceways for Electrical Systems."

f. Conductor and conduit sizes shown on the drawings are based on copper conductors with Type THHN-THWN or XHHW insulation, unless otherwise noted. Increase conductor and conduit sizes as necessary for other approved insulation types.

g. Aluminum is not approved for conductors or wire.

h. Power conductors shall be a minimum of No. 12 AWG stranded unless otherwise noted. All wire shall be stranded unless otherwise noted. Control conductors shall be a minimum of No. 14 AWG stranded, unless otherwise noted.

i. When the distance from the panel to the first outlet on a 20 Amp 120 Volt circuit exceeds 100 feet and on a 20 Amp 240 Volt circuit exceeds 200 feet, the conductor shall be increased to No. 10 AWG.

j. Wires, conductors, and cables shall be single conductor, except as otherwise specified or indicated on drawings.

k. Cable meeting special requirements such as twisted pairs, triads, or individual shielding shall be provided where recommended by the system manufacturer.

l. Conductor insulation shall be color coded.

240/120 Volt	
Phase A	Black
Phase B	Red
Neutral	White
Ground	Green

m. Switch leg wiring shall be of the same color code as the corresponding phase.

n. System color coding shall be in accordance with color code furnished by system manufacturer and shown on wiring diagrams.

o. Colors, except colors for conductors No. 4 AWG and larger, shall be factory applied the entire length of the conductors by solid color compound, solid color coating, or colored striping or bands, 2 sets 180° apart. Onsite coloring shall not be done, except color coding by means of paint or tapes is approved only for conductors No. 4 AWG and larger.

p. Voltage rating, manufacturer, type and conductor AWG size indication shall be continuous, factory applied the entire length of each conductor.

q. Joints and splices shall be made in a manner equivalent electrically and mechanically to the conductor itself. Connections shall be of the pressure or compression type.

r. All lugs terminating feeder conductors shall be of the solderless type UL listed for use with copper wire. All lugs and terminals shall be UL listed for 90°C application.

s. Branch circuit connections or joints shall have an approved type solderless connector suitable for copper conductors.

t. Wire connectors shall consist of a phenolic compound body with a cone-shaped coil spring insert and threaded skirt. Outer shell shall be knurled for each grip and capable of use with a wrench or pliers.

H. Telephone Cable:

1. General:

a. Cabling between Tank Monitoring System and Fuel Master Unit (FMU); Cabling shall be installed in ¾" conduit. The cable shall be as follows:

1) Cable shall be gray. Homerun shall be with no splices. Cable shall be shielded twisted pair cable, 4-conductor, #24 AWG., 100 Ohms. Maximum cable length – 328 feet. It shall be suited for underground installations.

b. Cabling between the patch panel and the emergency telephone located on the exterior of the building. The cable shall be as follows:

1) Cable shall be gray. Homerun shall be with no splices. Cable shall be shielded twisted pair cable, Category 5E. The cable shall be suited for underground installation.

c. All cabling shall be in full compliance with EIA/TIA-568B Commercial Building Telecommunications Standard and EIA/TIA-569B Commercial Building Standard for Telecommunications Pathways and Spaces.

d. Size of conductors and number of pairs shall be as shown on the Contract Plans and shall be per the system manufacturer's requirements if there is any conflict.

I. Network Cable:

1. General:

a. Cabling between Fuel Master Unit and Data Panel in the office #1; Cabling shall be installed in conduit. The cable shall be as follows:

1) Cable shall be blue. Homerun shall be with no splices. Cable shall be shielded twisted pair cable, Category 5E. The cable shall be suited for underground installation.

2) Spare cable shall be gray.

b. Cabling between the Tank Monitoring System and the Data Panel in the office #1: Cabling shall be installed in conduit. The cable shall be as follows:

1) Cable shall be blue. Homerun shall be with no splices. Cable shall be twisted pair cable, Category 5E. The cable shall be suited for underground installation.

c. All cabling shall be in full compliance with EIA/TIA-568B Commercial Building Telecommunications Standard and EIA/TIA-569B Commercial Building Standard for Telecommunications Pathways and Spaces.

d. Size of conductors and number of pairs shall be as shown on the Contract Plans and shall be per the system manufacturer's requirements if there is any conflict.

2.3 CONNECTORS AND SPLICES:

A. UL-listed, factory-fabricated wiring connectors of size, ampacity rating, material, type, and class for application and service indicated. Comply with Project's installation requirements and as specified in Part 3.2 "Wire and Insulation Applications".

PART 3 - EXECUTION

3.1 EXAMINATION:

A. Examine raceways and building finishes receiving wires and cables for compliance with requirements for installation tolerances and other conditions affecting performance of wires and cables. Do not proceed with installation until unsatisfactory conditions have been corrected.

3.2 WIRE AND INSULATION APPLICATIONS:

A. Service Entrance: Type RHW or THWN, in raceway.

B. Feeders: Type THHN/THWN, in raceway.

C. Branch Circuits: Type THHN/THWN, in raceway.

D. Fire Alarm Circuits: Power-limited, fire-protective, signaling circuit cable.

E. Class 1 Control Circuits: Type THHN/THWN, in raceway.

F. Class 2 Control Circuits: Power-limited cable, concealed in building finishes.

3.3 INSTALLATION:

A. All conductors shall be installed in metal raceways, RGSC, EMT, PVC, and FMC in accordance with the NEC except where specifically noted otherwise.

B. Terminals shall be arranged phase A-B or 1-2 from left to right, top to bottom, and front to back.

C. Branch circuit phase wires shall be connected to separate phases of supply mains to assure balanced condition in that circuit and proper load balance on the panel. Circuit numbers assigned on drawings are used for convenience and need not necessarily designate the circuit on the panel to which that circuit may be connected. Actual circuiting shall suit job conditions.

D. Equipment requiring electric service is also named on the drawings or schedules of other disciplines, or in other Sections. Where receptacles or convenience outlets are specified to serve named equipment, the Contractor shall provide approved receptacle, plug, connection, and conduit to equipment.

E. Drawings do not necessarily indicate the required number of conductors in each raceway. Unless it is specifically noted that raceways are empty by the word "spare", the Contractor shall provide all required conductors, power, control, supervisory, alarm, or branch circuits. The Contractor shall make all final connections, flexible or fixed, as required, to all equipment requiring final electrical connections.

F. Regardless of the number of conductors shown, each circuit (conductors No. 8 and smaller) to panels or equipment shall contain a full size neutral conductor, which, if not utilized, shall be taped and insulated at the final point of connection to equipment.

G. All grounding conductors shall have green color coded insulation and shall be sized in accordance with the NEC.

H. Install wires and cables as indicated, according to manufacturer's written instructions and NECA's "Standard of Installation."

I. Pull Conductors: Use manufacturer-approved pulling compound or lubricant where necessary; compound used must not deteriorate conductor or insulation. Do not exceed manufacturer's recommended maximum pulling tensions and sidewall pressure values.

J. Use pulling means, including fish tape, cable, rope, and basket-weave wire/cable grips, that will not damage cables or raceway.

K. Support cables in conduit according to CSI Division 26 Section 260529, "Hangers and Supports for Electrical Systems."

L. Identify wires and cables according to CSI Division 26 Section 260553, "Identification for Electrical Systems."

3.4 CONNECTIONS:

A. Conductor Splices: Keep to minimum.

B. Install splices and taps that possess equivalent or better mechanical strength and insulation ratings than conductors being spliced.

C. Wiring at Outlets: Install conductor at each outlet, with at least 12 inches of slack.

D. Connect outlets and components to wiring and to ground as indicated and instructed by manufacturer.

E. Tighten electrical connectors and terminals according to manufacturer's published torque-tightening values. If manufacturer's torque values are not indicated, use those specified in UL 486A and UL 486B.

3.5 FIELD QUALITY CONTROL:

A. Testing: On installation of wires and cables and before electrical circuitry has been energized, demonstrate product capability and compliance with requirements.

1. Procedures: Perform each visual and mechanical inspection and electrical test stated in NETA Acceptance Testing Specification. Certify compliance with test parameters.
2. Measure insulation resistance phase-to-phase and phase-to-ground with insulation-resistance tester. Use test voltages and procedure recommended by manufacturer. Comply with manufacturer's specified minimum resistance.

   a. Check for electrical continuity of circuits and for short circuits.
   b. Inspect for physical damage, proper installation and connection, and integrity of barriers, covers, and safety features.

3. Ground-Fault Tests: Coordinate with testing of ground-fault protective devices for power delivery from both sources.

   a. Verify grounding connections.

B. Correct malfunctioning conductors and cables at Project Site, where possible, and retest to demonstrate compliance; otherwise, remove and replace with new conductors and retest.

END OF SECTION 260519

SECTION 260526 – GROUNDING AND BONDING FOR ELECTRICAL SYSTEMS

PART 1 - GENERAL

1.1 SUMMARY:

A. This Section includes grounding of electrical systems and equipment. Grounding requirements specified in this Section may be supplemented by special requirements of systems described in other Sections.

B. Related CSI Sections include the following:

1. Division 26 Section 260543, "Underground Ducts and Raceways for Electrical Systems".

2. Division 26 Section 260533, “Raceways and Boxes for Electrical Systems”.

3. Division 26 Section 260519, “Low-voltage Electrical Power Conductors and Cables”.

C. System grounding shall be as shown on the plans. All grounding conductors incorporated to the existing system shall be approved by the Engineer.

1.2 SUBMITTALS:

A. Submit the following in accordance with Form 816 Article 1.20-1.05.02 and NOTICE TO CONTRACTOR – SUBMITTALS.

B. Product Data: For the following:

1. Ground rods.
2. Hardware including clamps, connectors, etc.

C. Qualification Data: For firms and persons specified in Part 1.3, "Quality Assurance".

D. Field Test Reports: Submit written test reports to include the following:

1. Test procedures used.
2. Test results that comply with requirements.
3. Results of failed tests and corrective action taken to achieve test results that comply with requirements.

1.3 QUALITY ASSURANCE:

A. Testing Agency Qualifications: Testing agency as defined by OSHA in 29 CFR 1910.7 or a member company of the NETA and that is acceptable to authorities having jurisdiction.

1. Testing Agency's Field Supervisor: Person currently certified by the NETA to supervise on-site testing specified in Part 3.

B. Electrical Components, Devices, and Accessories: Listed and labeled as defined in NFPA 70, Article 100, by a testing agency acceptable to authorities having jurisdiction, and marked for intended use.

1. Comply with UL 467 for grounding and bonding materials and equipment.

PART 2 - PRODUCTS

2.1 MANUFACTURERS:

A. Available Manufacturers: Subject to compliance with requirements, manufacturers offering products that may be incorporated into the Work include, but are not limited to, the following:

2. Grounding Conductors, Cables, Connectors, and Rods:

a. Galvan Industries, Inc.
b. Lightning Master Corp.
c. Salisbury: W.H. Salisbury & Co., Utility
d. Thomas & Betts, Electrical.

2.2 GROUNDING CONDUCTORS:

A. Ground Cable: annealed concentric stranded, copper cable the size shown on the plans and in accordance with ASTM 8 and Article 250 of the NEC. For insulated conductors, comply with CSI Division 26 Section 260519, "Low-Voltage Electrical Power Conductors and Cables".

B. Material: Copper.

C. Equipment Grounding Conductors: Insulated with green-colored insulation.

D. Intrinsically Safe Ground Conductors: Insulated with green-colored insulation with yellow stripe. On feeders with isolated ground, use colored tape, alternating bands of

green and yellow tape to provide a minimum of three bands of green and two bands of yellow.

E. Grounding Electrode Conductors: Annealed, concentric stranded, copper cable sized in accordance with ASTM B 8 and Article 250 of the NEC.

C. Underground Conductors shall be bare, tinned, stranded, unless otherwise indicated.

D. Bare Copper Conductors: Comply with the following:

1. Assembly of Stranded Conductors: ASTM B 8.

E. Copper Bonding Conductors: As follows:

1. Bonding Cable: 28 kcmil, 14 strands of No. 17 AWG copper conductor, 1/4 inch in diameter.
2. Bonding Conductor: No. 4 or No. 6 AWG, stranded copper conductor.
3. Bonding Jumper: Bare copper tape, braided bare copper conductors, terminated with copper ferrules; 1-5/8 inches wide and 1/16 inch thick.

F. Grounding Bus: Bare, annealed copper bars of rectangular cross section, with insulators.

2.3 CONNECTOR PRODUCTS:

A. Comply with IEEE 837 and UL 467; listed for use for specific types, sizes, and combinations of conductors and connected items.

B. Bolted Connectors: Bolted-pressure-type connectors, or compression type.

C. Welded Connectors: Exothermic-welded type, in kit form, and selected per manufacturer's written instructions. Below–grade (embedded or buried) copper grounding cable connections shall be made by exothermic welding. Exothermic welded connectors shall be Erico products Company, Cadweld or approved equal. Bolted connectors shall be of the types shown on the plans. Connections to stainless steel cables shall be welded.

D. Compression Type Cable Connectors: Shall be the heavy duty, cast-copper-alloy type, compressed by precision dies and shall have a current-carrying capacity at least equal to that of the copper cable with which they are used. Tooling shall be made by the same manufacturer as the connectors. Compression type connectors shall be Thomas and Betts type 53050 and 53065-58GR, or approved equal

2.4 GROUNDING ELECTRODES:

A. Ground Rods: Ground Rods: Shall be sectionalized, copper-clad steel, 3/4-inch in diameter and ten feet long (minimum) or as shown on plans.

1. Size: 3/4 by 120 inches.

PART 3 - EXECUTION

3.1 APPLICATION:

A. All electrical equipment enclosures and equipment, and all metallic parts of the installation, including metallic conduits, wireways shall be bonded and connected to the nearest ground cable, whether shown on the Plans or not. Use only copper conductors for both insulated and bare grounding conductors in direct contact with earth, concrete, masonry, crushed stone, and similar materials.

B. In raceways, use insulated equipment grounding conductors. The electrical continuity of wireways, air ducts, fence, enclosures, and handrails shall be maintained by bonding. Bonding of electrical raceway and enclosures shall assure electrical continuity and the capacity to conduct safety and fault current that could be imposed. Bonding shall comply fully with Article 250 of the NEC.

C. Exothermic-Welded Connections: Use for connections for underground connections. Grounding connections shall be made in accordance with the Contract and as specified. Paint, scale, rust, corrosion, and other foreign matter shall be removed from the points of contact on metal surfaces before ground connections are made.

D. Ground tap connections to equipment shall be made at the points provided on the equipment for grounding in accordance with the equipment manufacturer's recommendations. Connections from ground conductors to the ground bars of panelboards, and other cabinet-mounted equipment shall be made by means of an acceptable bolted fittings.

E. All electrical power apparatus shall be provided with a ground-fault-current return path. Motors and power receptacles shall utilize a grounded, identified separate grounding conductor in the feeder or branch circuit raceway which connects the motor frame or receptacle to the panelboard ground bus.

F. All electrical power equipment shall be provided with an identified grounding conductor, including rigid steel conduit. in accordance with NEC 344, is used for the raceway.

G. The Grounding conductor shall in no case be a system neutral or a current-carrying conductor. Where a circuit consists of two or more power conductors in a conduit or wiring channel, the grounding conductor may be one standard wire size smaller than the power conductor, but in no case smaller than No. 14 nor larger than No. 4/0, and shall be stranded and covered by green insulation. In all cases, the white insulated wire shall be used for the current-carrying neutral only.

H. Metallic sheaths or shields of shielded cable for power and control shall be terminated by a copper grounding strip provided with a connector for connection to the station ground. The manufacturer of the cable shall furnish instructions for ground termination of shielded cable.

3.2 EQUIPMENT GROUNDING CONDUCTORS:

A. Comply with NFPA 70, Article 250, for types, sizes, and quantities of equipment grounding conductors, unless specific types, larger sizes, or more conductors than required by NFPA 70 are indicated.

B. Install equipment grounding conductors in all feeders and circuits.

C. Install insulated equipment grounding conductor with circuit conductors for the following items, in addition to those required by NEC:

1. Feeders and branch circuits.
2. Receptacle circuits.
3. Single-phase motor and appliance branch circuits

D. Busway Supply Circuits: Install insulated equipment grounding conductor from the grounding bus in the switchgear, switchboard, or distribution panel to equipment grounding bar terminal on busway.

E. Computer Outlet Circuits: Install insulated equipment grounding conductor in branch-circuit runs from computer-area power panels or power-distribution units.

F. Nonmetallic Raceways: Install an equipment grounding conductor in nonmetallic raceways unless they are designated for telephone or data cables.

G. Common Ground Bonding: Use bonding conductor sized same as system grounding electrode conductor, and install in conduit.

1. Use bonding conductor sized the same as system grounding electrode conductor, and install in conduit.

K. Metal Poles Supporting Outdoor Lighting Fixtures: Provide a grounding electrode in addition to installing a separate equipment grounding conductor with supply branch-circuit conductors

3.3 INSTALLATION:

A. All grounding electrodes shall be bonded together to form the grounding electrode system.

B. Ground Rods: Install at least two rods spaced at least one-rod length from each other and located at least the same distance from other grounding electrodes.

1. Drive ground rods until tops are 6 inches below finished floor or final grade, unless otherwise indicated.
2. Interconnect ground rods with grounding electrode conductors. Use exothermic welds, except as otherwise indicated. Make connections without exposing steel or damaging copper coating.

C. Grounding Conductors: Route along shortest and straightest paths possible, unless otherwise indicated. Avoid obstructing access or placing conductors where they may be subjected to strain, impact, or damage.

D. Bonding Straps and Jumpers: Install so vibration by equipment mounted on vibration isolation hangers and supports is not transmitted to rigidly mounted equipment. Use exothermic-welded connectors for outdoor locations, unless a disconnect-type connection is required; then, use a bolted clamp. Bond straps directly to the basic structure taking care not to penetrate any adjacent parts. Install straps only in locations accessible for maintenance.

E. Bond interior metal piping systems and metal air ducts to equipment grounding conductors of associated pums, fans, blowers, electric heaters, and air cleaners. Use braided-type bonding straps.

3.4 CONNECTIONS:

A. General: Make connections so galvanic action or electrolysis possibility is minimized. Select connectors, connection hardware, conductors, and connection methods so metals in direct contact will be galvanically compatible.

1. Use electroplated or hot-tin-coated materials to ensure high conductivity and to make contact points closer to order of galvanic series.
2. Make connections with clean, bare metal at points of contact.

3. Make aluminum-to-steel connections with stainless-steel separators and mechanical clamps.
4. Make aluminum-to-galvanized steel connections with tin-plated copper jumpers and mechanical clamps.
5. Coat and seal connections having dissimilar metals with inert material to prevent future penetration of moisture to contact surfaces.

B. Exothermic-Welded Connections: Comply with manufacturer's written instructions. Welds that are puffed up or that show convex surfaces indicating improper cleaning are not acceptable.

C. Equipment Grounding Conductor Terminations: For No. 8 AWG and larger, use pressure-type grounding lugs. No. 10 AWG and smaller grounding conductors may be terminated with winged pressure-type connectors.

D. Noncontact Metal Raceway Terminations: If metallic raceways terminate at metal housings without mechanical and electrical connection to housing, terminate each conduit with a grounding bushing. Connect grounding bushings with a bare grounding conductor to grounding bus or terminal in housing. Bond electrically noncontinuous conduits at entrances and exits with grounding bushings and bare grounding conductors, unless otherwise indicated.

E. Tighten screws and bolts for grounding and bonding connectors and terminals according to manufacturer's published torque-tightening values. Compression-Type Connections: Use hydraulic compression tools to provide correct circumferential pressure for compression connectors. Use tools and dies recommended by connector manufacturer. Provide embossing die code or other standard method to make a visible indication that a connector has been adequately compressed on grounding conductor.

F. Moisture Protection: If insulated grounding conductors are connected to ground rods or grounding buses, insulate entire area of connection and seal against moisture penetration of insulation and cable.

END OF SECTION 260526

SECTION 260529 - HANGERS AND SUPPORTS FOR ELECTRICAL SYSTEMS

PART 1 - GENERAL

1.1 SUMMARY:

A. This Section includes the following:

1. Hangers and supports for electrical equipment and systems.

1.2 PERFORMANCE REQUIREMENTS:

A. Delegated Design: Design supports for multiple raceways, including comprehensive engineering analysis by a qualified professional engineer, using performance requirements and design criteria indicated.

B. Design supports for multiple raceways capable of supporting combined weight of supported systems and its contents.

C. Design equipment supports capable of supporting combined operating weight of supported equipment and connected systems and components.

1.3 SUBMITTALS:

A. Submit the following in accordance with Form 816 Article 1.20-1.05.02 and NOTICE TO CONTRACTOR – SUBMITTALS.

B. Product Data: For the following:

1. Steel slotted support systems.

C. Shop Drawings: For the following:

1. Trapeze hangers.
2. Steel slotted channel systems.
3. Equipment supports.

D. Welding certificates.

1.4 QUALITY ASSURANCE:

A. Welding: Qualify procedures and personnel according to AWS D1.1/D1.1M, "Structural Welding Code - Steel."

B. Comply with NFPA 70.

PART 2 - PRODUCTS

2.1 SUPPORT, ANCHORAGE, AND ATTACHMENT COMPONENTS:

A. Steel Slotted Support Systems and C-channels: Comply with MFMA-4, factory-fabricated components for field assembly.

1. Available Manufacturers: Subject to compliance with requirements, manufacturers offering products that may be incorporated into the Work include, but are not limited to, the following:

a. Allied Tube & Conduit.
b. Cooper B-Line, Inc.; a division of Cooper Industries.
c. ERICO International Corporation.
d. Thomas & Betts Corporation.

2. Metallic Coatings: Hot-dip galvanized after fabrication and applied according to MFMA-4.
3. Channel Dimensions: Selected for applicable load criteria.

B. Raceway and Cable Supports: As described in NECA 1 and NECA 101.

C. Conduit and Cable Support Devices: Steel hangers, clamps, and associated fittings, designed for types and sizes of raceway or cable to be supported. PVC coated or Stainless steel required for corrosive locations.

D. Support for Conductors in Vertical Conduit: Factory-fabricated assembly consisting of threaded body and insulating wedging plug or plugs for non-armored electrical conductors or cables in riser conduits. Plugs shall have number, size, and shape of conductor gripping pieces as required to suit individual conductors or cables supported. Body shall be malleable iron.

E. Structural Steel for Fabricated Supports and Restraints: ASTM A 36/A 36M, steel plates, shapes, and bars; black and galvanized.

F. Mounting, Anchoring, and Attachment Components: Items for fastening electrical items or their supports to building surfaces include the following:

1. Powder-Actuated Fasteners: Threaded-steel stud, for use in hardened portland cement concrete, steel, or wood, with tension, shear, and pullout capacities appropriate for supported loads and building materials where used.

a. Available Manufacturers: Subject to compliance with requirements, manufacturers offering products that may be incorporated into the Work include, but are not limited to, the following:

1) Hilti Inc.
2) ITW Ramset/Red Head; a division of Illinois Tool Works, Inc.
3) MKT Fastening, LLC.

2. Mechanical-Expansion Anchors: Insert-wedge-type, stainless steel, for use in hardened portland cement concrete with tension, shear, and pullout capacities appropriate for supported loads and building materials in which used.

a. Available Manufacturers: Subject to compliance with requirements, manufacturers offering products that may be incorporated into the Work include, but are not limited to, the following:

1) Hilti Inc.
2) ITW Ramset/Red Head; a division of Illinois Tool Works, Inc.
3) MKT Fastening, LLC.

3. Concrete Inserts: Steel or malleable-iron, slotted support system units similar to MSS Type 18; complying with MFMA-4 or MSS SP-58.
4. Clamps for Attachment to Steel Structural Elements: MSS SP-58, type suitable for attached structural element.
5. Through Bolts: Structural type, hex head, and high strength. Comply with ASTM A 325.
6. Toggle Bolts: All-steel springhead type.
7. Hanger Rods: Threaded steel.

G. Hardware: For corrosive areas and wet locations all hardware shall be stainless steel. For all other areas use zinc plated hardware.

PART 3 - EXECUTION

3.1 APPLICATION:

A. Comply with NECA 1 and NECA 101 for application of hangers and supports for electrical equipment and systems except if requirements in this Section are stricter.

B. Maximum Support Spacing and Minimum Hanger Rod Size for Raceway: Space supports for EMT, and RGSC as required by scheduled in NECA 1, where its Table 1 lists maximum spacings less than stated in NFPA 70. Minimum rod size shall be 1/4 inch in diameter.

C. Multiple Raceways or Cables: Install trapeze-type supports fabricated with steel slotted or other support system, sized so capacity can be increased by at least 25 percent in future without exceeding specified design load limits.

1. Secure raceways and cables to these supports with two-bolt conduit clamps or approved clamps.

D. Spring-steel clamps designed for supporting single conduits without bolts may be used for 1-1/2-inch and smaller raceways serving branch circuits and communication systems above suspended ceilings and for fastening raceways to trapeze supports.

3.2 SUPPORT INSTALLATION:

A. Comply with NECA 1 and NECA 101 for installation requirements except as specified herein.

B. Raceway Support Methods: In addition to methods described in NECA 1, EMT and RGSC may be supported by openings through structure members, as permitted in NFPA 70.

C. Strength of Support Assemblies: Where not indicated, select sizes of components so strength will be adequate to carry present and future static loads within specified loading limits. Minimum static design load used for strength determination shall be weight of supported components plus 200 lb.

D. Mounting and Anchorage of Surface-Mounted Equipment and Components: Anchor and fasten electrical items and their supports to building structural elements by the following methods unless otherwise indicated by code:

1. To Wood: Fasten with lag screws or through bolts.
2. To New Concrete: Bolt to concrete inserts.
3. To Masonry: Approved toggle-type bolts on hollow masonry units and expansion anchor fasteners on solid masonry units.
4. To Existing Concrete: Expansion anchor fasteners.
5. Instead of expansion anchors, powder-actuated driven threaded studs provided with lock washers and nuts may be used in existing standard-weight concrete 4 inches thick or greater. Do not use for anchorage to lightweight-aggregate concrete or for slabs less than 4 inches thick.
6. To Steel: Welded threaded studs complying with AWS D1.1/D1.1M, with lock washers and nuts. Or Beam clamps (MSS Type 19, 21, 23, 25, or 27) complying with MSS SP-69.
7. To Light Steel: Sheet metal screws.
8. Items Mounted on Hollow Walls and Nonstructural Building Surfaces: Mount cabinets, panelboards, disconnect switches, control enclosures, pull and junction boxes, transformers, and other devices on slotted-channel racks attached to substrate by means that meet seismic-restraint strength and anchorage requirements.

E. Drill holes for expansion anchors in concrete at locations and to depths that avoid reinforcing bars.

END OF SECTION 260529

SECTION 260533 - RACEWAY AND BOXES FOR ELECTRICAL SYSTEMS

PART 1 - GENERAL

1.1 SUMMARY:

A. Section Includes:

1. Raceways include the following:

a. RGSC
b. EMT above 10’ elevation in bays
Electrical Room, Mechanical Room, Office.
c. FMC.

2. Boxes, enclosures, and cabinets include the following:

a. Device boxes.
b. Outlet boxes.
c. Pull and junction boxes.
d. Cabinets and hinged-cover enclosures.
f. Explosion proof fittings.

B. Related CSI Sections include the following:

1. Division 26 Section 260544, "Sleeves and Sleeve Seals"
2. Division 26 Section 260543, “Underground Ducts and Raceways for Electrical Systems”
3. Division 26 Section 262726, "Wiring Devices"

1.2 DEFINITIONS:

1. EMT: Electrical metallic tubing.
2. FMC: Flexible metal conduit.
3. RGSC: Rigid galvanized metal conduit.

1.3 SUBMITTALS:

A. Submit the following in accordance with Form 816 Article 1.20 -1.05.02 and NOTICE TO CONTRACTOR – SUBMITTALS.

B. Product Data: For surface raceways, wireways and fittings, hinged-cover enclosures, and cabinets.

C. Shop Drawings: For the following raceway components. Include plans, elevations, sections, details, and attachments to other work.

1. Custom enclosures and cabinets.
2. For boxes, including the following:

a. Conduit entry provisions, including locations and conduit sizes
b. Box cover design
c. Grounding details
d. Dimensioned locations of cable rack inserts, and pulling-in and lifting irons
e. Joint details

1.4 QUALITY ASSURANCE:

A. Listing and Labeling: Provide raceways and boxes specified in this Section that are listed and labeled.

1. The Terms "Listed" and "Labeled": As defined in NFPA 70, Article 100.

B. Comply with NEC's "Standard of Installation."

C. Comply with NFPA 70.

1.5 COORDINATION:

A. Coordinate layout and installation of raceways and boxes with other construction elements to ensure adequate headroom, working clearance, and access.

PART 2 - PRODUCTS

2.1 MANUFACTURERS:

A. Available Manufacturers: Subject to compliance with requirements, manufacturers offering products that may be incorporated into the Work include, but are not limited to, the following:

1. Metal Conduit and Tubing:

a. Alflex Corp.
b. Anamet, Inc.; Anaconda Metal Hose.
c. Anixter Brothers, Inc.

2. Conduit Bodies and Fittings:

a. American Electric; Construction Materials Group.
b. Crouse-Hinds; Div. of Cooper Industries.
c. Emerson Electric Co.; Appleton Electric Co.

3. Metal Wireways:

a. Hoffman Engineering Co.
b. Keystone/Rees, Inc.
c. Square D Co.

4. Boxes, Enclosures, and Cabinets:

a. American Electric; FL Industries.
b. Butler Manufacturing Co.; Walker Division.
c. Crouse-Hinds; Div. of Cooper Industries.

2.2 METAL CONDUIT AND TUBING:

A. RGSC: ANSI C80.1. Fittings: threaded type.

B. EMT and Fittings: ANSI C80.3. Fittings: Set-screw or compression type. Cast fittings shall be made of steel or malleable iron, hot-dip galvanized finish.

C. FMC: Zinc-coated steel.

D. Fittings/conduit bodies: NEMA FB 1; match conduit/tubing materials. Cast fittings shall be made of steel or malleable iron, hot-dip galvanized finish. Covers for conduit bodies installed in wet locations shall be gasketed.

E. Explosionproof fittings: Threaded, recessed-type, close-up plugs. Screwdriver slotted close-up plugs shall not be accepted. Fittings shall be made of malleable iron,

2.3 METAL WIREWAYS:

A. Material: Sheet metal sized and shaped as indicated. The exterior installed wireways shall be stainless steel 4X as indicated on plans.

B. Fittings and Accessories: Include couplings, offsets, elbows, expansion joints, adapters, hold-down straps, end caps, and other fittings to match and mate with wireways as required for complete system.

C. Select features, unless otherwise indicated, as required to complete wiring system and to comply with NFPA 70.

D. Wireway Covers: Hinged type.

E. Finish: Manufacturer's standard enamel finish.

2.4 OUTLET AND DEVICE BOXES:

A. Sheet Metal Boxes: NEMA OS 1.

B. Steel-Metal Boxes: NEMA FB 1, Type FD, cast box with gasketed cover.

C. Nonmetallic Boxes: NEMA OS 2.

D. Boxes and fittings: Boxes and fittings shall comply with the applicable provisions of NFPA 70, Article 370.

2.5 PULL AND JUNCTION BOXES:

A. Small Sheet Metal Boxes: NEMA OS 1.

B. Cast-Metal Boxes: NEMA FB 1, steel with gasketed cover.

2.6 ENCLOSURES AND CABINETS:

A. Hinged-Cover Enclosures: NEMA 250, Type 1, with continuous hinge cover and flush latch.

1. Metal Enclosures: Steel, finished inside and out with manufacturer's standard enamel.
2. Nonmetallic Enclosures: Plastic finished inside with radio-frequency-resistant paint.

B. Cabinets: NEMA 250, Type 1, galvanized steel box, finished inside and out with manufacturer's standard enamel. Hinged door in front covers with flush latch and concealed hinge. Key latch to match panelboards. Include metal barriers to separate wiring of different systems and voltage, and include accessory feet where required for freestanding equipment.

PART 3 - EXECUTION

3.1 EXAMINATION:

A. Examine surfaces to receive raceways, boxes, enclosures, and cabinets for compliance with installation tolerances and other conditions affecting performance of raceway installation. Do not proceed with installation until unsatisfactory conditions have been corrected.

3.2 WIRING METHODS:

A. Indoors: Use the following wiring methods:

1. Office Areas: RGSC where exposed and EMT where concealed and above 10' elevation.
2. Damp locations: RGSC.
3. Mechanical Room, Bay area, Stores' area: RGSC up to 10' elevation, EMT over 10' elevation.
4. Boxes and Enclosures: NEMA 250, Type 1, except as follows:

   (a) Corrosive Locations: NEMA Type 4X, stainless steel.
   (b) Damp or Wet Locations: NEMA 250, Type 4, nonmetallic, Raceway Fittings: Compatible with raceways and suitable for use and location.

5. Rigid Steel Conduit: Use threaded rigid steel conduit fittings, unless otherwise indicated.

3.3 INSTALLATION:

A. Install raceways, boxes, enclosures, and cabinets as indicated, according to manufacturer's written instructions, following NEC and local codes. Install conduit clamps within 3’ of boxes and at 10’ maximum distance between junction points.

B. Minimum Raceway Size: 3/4-inch trade size.

C. Conceal conduit and EMT, unless otherwise indicated, within finished walls and ceilings.

D. Keep raceways at least 6 inches away from parallel runs of flues and hot-water pipes. Install horizontal raceway runs above water and steam piping.

E. Install raceways level and square and at proper elevations. Provide adequate headroom.

F. Complete raceway installation before starting conductor installation.

G. Support raceways as specified in CSI Division 26 Section 260529, "Hangers and Supports for Electrical Systems."

H. Use temporary closures to prevent foreign matter from entering raceways.

I. Stub-ups shall be rigid conduit. Protect stub-ups from damage where conduits rise through floor slabs. Arrange so curved portion of bends is not visible above the finished slab.

J. Make bends and offsets so ID is not reduced. Keep legs of bends in the same plane and straight legs of offsets parallel, unless otherwise indicated.

K. Use raceway fittings compatible with raceways and suitable for use and location. For rigid steel conduit, use threaded rigid steel conduit fittings.

L. Run concealed raceways, with a minimum of bends, in the shortest practical distance considering the type of building construction and obstructions, unless otherwise indicated.

M. Install exposed raceways parallel or at right angles to nearby surfaces or structural members, and follow the surface contours as much as practical.

    1. Run parallel or banked raceways together, on common supports where practical.
    2. Make bends in parallel or banked runs from same centerline to make bends parallel. Use factory elbows only where elbows can be installed parallel; otherwise, provide field bends for parallel raceways.

N. Join raceways with fittings designed and approved for the purpose and make joints tight.

1. Make raceway terminations tight. Use bonding bushings or wedges at connections subject to vibration. Use bonding jumpers where joints cannot be made tight.
2. Use insulating bushings to protect conductors.

O. Tighten set screws of threadless fittings with suitable tools.

P. Terminations: Where raceways are terminated with locknuts and bushings, align raceways to enter squarely and install locknuts with dished part against the box. Where terminations are not secure with 1 locknut, use 2 locknuts: 1 inside and 1 outside the box.

Q. Where raceways are terminated with threaded hubs, screw raceways or fittings tightly into the hub so the end bears against the wire protection shoulder. Where chase nipples are used, align raceways so the coupling is square to the box and tighten the chase nipple so no threads are exposed.

R. Install pull wires in empty raceways. Use No. 14 AWG zinc-coated steel or monofilament plastic line with not less than 200-lb tensile strength. Leave at least 12 inches of slack at each end of the pull wire. Ends shall be capped.

S. Telephone and Signal System Raceways: 3/4-Inch trade size minimum: In addition to the above requirements, install raceways in maximum lengths of 150 feet and with a maximum of two 90-degree bends or equivalent. Separate lengths with pull or junction boxes where necessary to comply with these requirements.

T. Install raceway sealing fittings according to manufacturer's written instructions. Locate fittings at suitable, approved, and accessible locations and fill them with UL-listed sealing compound. For concealed raceways, install each fitting in a flush steel box with a blank cover plate having a finish similar to that of adjacent plates or surfaces. Install raceway sealing fittings at the following points:

1. Where otherwise required by NFPA 70.

U. Stub-up Connections: Extend rigid metal conduits through concrete floor for connection to freestanding equipment. Install with an adjustable top or coupling threaded inside for plugs set flush with the finished floor. Extend conductors to equipment with rigid steel conduit; FMC may be used 6 inches above the floor or where call on the plans.

V. Install hinged-cover enclosures and cabinets plumb. Support at each corner.

W. Conduits entering enclosures, other than threaded cast boxes, shall be securely fastened by means of two lock-nuts, one on each side of the enclosure. The conduit shall be terminated in a bushing. Conduit bushings made entirely of non-metallic materials shall not be used.

X. Do not leave any box openings exposed. Install hole plugs on any knockout holes that are removed without any conduit attached.

Y. Install boxes level and plumb and with orientation and depth coordinated with connecting conduits to minimize bends and deflections required for proper entrances.

Z. Unless otherwise indicated, support units on a level bed of crushed stone or gravel, graded from 1/2-inch sieve to No. 4 sieve and compacted to same density as adjacent undisturbed earth.

AA. Install removable hardware, including pulling eyes, cable stanchions, cable arms, and insulators, as required for installation and support of cables and conductors and as indicated. Select arm lengths to be long enough to provide spare space for future cables, but short enough to preserve adequate working clearances in the enclosure.

BB. Field-cut openings for conduits according to enclosure manufacturer's written instructions. Cut wall of enclosure with a tool designed for material to be cut. Size holes for terminating fittings to be used, and seal around penetrations after fittings are installed.

3.4 PROTECTION:

A. Provide final protection and maintain conditions, in a manner acceptable to manufacturer and Installer that ensure coatings, finishes, and cabinets are without damage or deterioration at the issuance of the Certificate of Compliance.

1. Repair damage to galvanized finishes with zinc-rich paint recommended by manufacturer.
2. Repair damage to PVC or paint finishes with matching touchup coating recommended by manufacturer.

3.5 CLEANING:

A. On completion of installation, including outlet fittings and devices, inspect exposed finish. Remove burrs, dirt, and construction debris and repair damaged finish, including chips, scratches, and abrasions.

END OF SECTION 260533

SECTION 260543 - UNDERGROUND DUCTS AND RACEWAYS FOR ELECTRICAL SYSTEMS

PART 1 - GENERAL

1.1 SUMMARY:

A. This section includes underground electrical work including the following:

1. Underground conduits and conduit accessories.
2. Saw cutting paved areas, trenching, backfilling and satisfactory disposal of all surplus excavated material.
3. Restoration of any paved or turfed areas.

B. Note the following items shall not be paid for under the MLSI, bases of payment shall be under their respective pay item:
1. 0202000 EARTH EXCAVATION
2. 0202529 CUT BITUMINOUS CONCRETE PAVEMENT
3. 0205001 TRENCH EXCAVATION 0'-4' DEEP
4. 0209001 FORMATION OF SUBGRADE
5. 0212000 SUBBASE
6. 0304002 PROCESSED AGGREGATE BASE
7. 0406171 HMA S0.50
8. 0406172 HMA S0.375
9. 0406236 MATERIAL FOR TACK COAT
10. 0815001 BITUMINOUS CONCRETE LIP CURBING

C. All materials and construction methods shall conform to State of Connecticut Department of Transportation's Form 816 and/ or the above listed specifications unless as noted within this specification.

1.2 SUBMITTALS:

A. Submit the following in accordance with Form 816 Article 1.20-1.05.02 and NOTICE TO CONTRACTOR SUBMITTALS.

B. Product Data: For the following:

1. Underground conduits
2. Conduits and their accessories, including elbows, end bells, bends, and fittings
3. Warning tape

1.3 DEFINITIONS:

A. RGSC: Rigid galvanized steel conduit

B. RNC: Rigid nonmetallic conduit

1.4 QUALITY ASSURANCE:

A. Testing Agency Qualifications: Qualified according to ASTM E 329 for testing indicated.

B. Comply with ANSI C2.

C. Comply with NFPA 70.

PART 2 - PRODUCTS

2.1 CONDUIT:

A. Rigid Steel Conduit: Galvanized. Comply with ANSI C80.1.

B. RNC: NEMA TC2, Type EPC-80-PVC, UL 651, with matching fittings by same manufacturer as the conduit, complying with NEMA TC 3 and UL 514B.

2.2 RACEWAY/DUCT SEALING COMPOUND:

A. Compound: Nonhardening, putty-like consistency workable at temperatures as low as 35°F. Compound shall not slump at a temperature of 300°F and shall readily adhere to clean surfaces of plastic ducts, metallic conduits, conduit coatings, concrete, masonry, lead, cable sheaths, cable jackets, insulation materials, and the common metals. Compound shall have no injurious effect on worker's hands or materials.

2.3 TRENCHING AND BACKFILLING MATERIALS:

A. Form materials for this work for the encasement of conduit or cable, shall be bedding material, all of which passes a 3/8-inch sieve, and not more than 10% passes a No. 200 (75-micron) sieve. Topsoil, fertilizer, seed and mulch shall conform to Section M.13.

B. Backfill shall consist of satisfactory soil materials free of clay, rock or gravel larger than 2 inches in any dimension, debris, waste, frozen materials, vegetation and other deleterious matter. Satisfactory soil materials are defined as those complying with ASTM D2487 soil

classification groups GW, GP, GM, SM, SW, and SP. Satisfactory material encountered during the excavation may be stored in segregated stockpile for re-use as backfill.

PART 3 - EXECUTION

3.1 UNDERGROUND CONDUITS:

A. All underground conduit shall contain a pull wire, Greenlee No. 430 Poly Pull Line or equal, approved by the Designer. Use PVC schedule 80 under grass and pavement. RGSC conduit shall be installed the last two feet as the conduit is routed to the fuel dispensers, underground tanks, lighting poles, and building stub-ups.

B. RGSC:

1. RGSC conduit shall be installed outside of building areas, under pavement. All metallic conduits shall be installed in accordance with manufacturer's instructions. Minimum size shall be ¾ inches.
2. Termination of conduits in handholes or other concrete structures shall be made with end bells.
3. All conduit runs shall leave or enter structures perpendicularly.

C. PVC:

1. PVC conduit shall be installed outside of building areas, under pavement to the Fuel Island and motor fuel. All nonmetallic conduits shall be installed in accordance with manufacturer's instructions. Minimum size shall be ¾ inches.
2. RGSC shall be used for the last two (2) feet of underground run to emergence or the point of connection to the aboveground raceway in accordance with NEC 514.8, Exception No. 2 and NEC 515.8(A).
3. All conduit runs shall leave or enter structures perpendicularly.

D. Elbows or bends shall be in accordance the NEC.

E. Transitions between conduits of different materials shall be made using the manufacturer's standard adapters.

F. Building Wall Penetrations: Rigid steel conduit. Use fittings manufactured for duct-to-conduit transition. Install conduit penetrations of building walls as specified in CSI Division 26 Section 260544, “Sleeves and Sleeve Seals for Electrical Systems."

G. Sealing: Provide temporary closure at terminations of ducts that have cables pulled. Seal spare ducts at terminations. Use sealing compound and plugs to withstand at least 15-psig hydrostatic pressure.

H. Pulling Cord: Install test Greenlee No. 430 Poly Pull Line nylon cord in conduits, including spares.

3.2 CONDUIT – CLEANING AND TESTING:

A. After conduits and accessories have been installed and all concreting operations, if any, completed, carefully clean and clear all conduit runs of all obstructions and foreign matter to the satisfaction of the Engineer.

B. Test conduits in the presence of the Engineer by pulling through each conduit 20 foot lengths of single conductor, Type THWN cable of the size and number given in the following table, or where called for, a flexible cylindrical mandrel having an outside diameter 1/4-inch less than the inside diameter of the conduit. Only nylon cable (no rope) that will withstand a reasonable stress shall be used to pull the mandrel through the conduit system.

Conduit Size	Wire Size or Mandrel
2 inch	3 - 250 kcmil
3 inch and larger	Mandrel

3.3 GROUNDING:

A. Ground underground ducts according to CSI Division 26 Section 260526 "Grounding and Bonding for Electrical Systems."

3.4 EXCAVATION AND BACKFILL:

A. The trench shall be backfilled in at least two layers with excavated material not larger than 4 inches in diameter and thoroughly tamped and compacted to at least the density of the surrounding undisturbed soil. If necessary to obtain the desired compaction, the backfill material shall be moistened or aerated as required.

B. Where trenching occurs in riprap or crushed stone areas, the surface material shall be replaced in kind. Where trenching in paved areas, the trench shall be sawcut and backfilled to the depth of the surface required to replace the removed pavement structure,

which shall then be replaced. The edges of all trenches in paved surfaces shall be sawcut to neat lines prior to repaving.

C. Trenches shall not be excessively wet and shall not contain pools of water during backfilling operations.

D. The trench shall be completely backfilled and tamped level with the adjacent surface: except that, when sod is to be placed over the trench, the backfilling shall be stopped at a depth equal to the thickness of the sod to be used, with proper allowance for settlement.

E. Any excess excavation material shall be removed and disposed of in accordance with instructions issued by then Engineer.

F. For ducts without concrete envelope, 8 inches of sand, soft earth, or other fine fill (loose measurement) shall be placed around the ducts and carefully tamped around and over them with hand tampers. The remaining trench may be filled with regular run of excavated material and thoroughly tamped as specified above.

G. Where sod has been removed, it shall be replaced as soon as possible after the backfilling is completed. All areas disturbed by the trenching, storing of dirt, cable laying, pad construction and other work shall be restored to its original condition. The restoration shall include any necessary topsoiling, fertilizing, liming, seeding, sprigging, or mulching. The Installer shall be held responsible for maintaining all disturbed surfaces and replacements until final acceptance.

3.5 FIELD QUALITY CONTROL:

A. Perform the following tests and inspections and prepare test reports:

1. Demonstrate capability and compliance with requirements on completion of installation of underground ducts and utility structures.
2. Pull aluminum or wood test mandrel through duct to prove joint integrity and test for out-of-round duct. Provide mandrel equal to 80 percent fill of duct. If obstructions are indicated, remove obstructions and retest.

B. Correct deficiencies and retest as specified above to demonstrate compliance.

3.6 CLEANING:

A. Pull leather-washer-type duct cleaner, with graduated washer sizes, through full length of ducts. Follow with rubber duct swab for final cleaning and to assist in spreading lubricant throughout ducts.

END OF SECTION 260543

SECTION 260544 – SLEEVE AND SEALS FOR ELECTRICAL RACEWAYS AND CABLING

PART 1 - GENERAL

1.1 SUMMARY:

A. Section Includes:

1. Sleeves for raceways
2. Sleeve-seal systems
3. Sleeve-seal fittings
4. Grout.
5. Silicon Sealants

1.2 DEFINITIONS:

A. EPDM: Ethylene-propylene-diene terpolymer rubber.

B. NBR: Acrylonitrile-butadiene rubber.

1.3 SUBMITTALS:

A. Submit the following in accordance with Form 816 Article 1.20-1.05.02 and NOTICE TO CONTRACTOR SUBMITTALS.

B. Product Data: For sleeve seals and silicon sealants.

C. Quality Assurance Submittals

1. Manufacturer Certification Letter in accordance with NOTICE TO CONTRACTOR – POTENTIAL FOR ASBESTOS CONTAINING MATERIALS.

1.4 COORDINATION:

A. Coordinate sleeve selection and application with selection and application of firestopping.

PART 2 - PRODUCTS

2.1 SLEEVES FOR RACEWAYS AND CABLES:

A. Steel Pipe Sleeves: ASTM A 53/A 53M, Type E, Grade B, Schedule 40, galvanized steel, plain ends.

B. Sleeves for Conduits penetrating Non-Fire-Rated Gypsum Board Assemblies: galvanized-steel sheet, 0.0239 inch minimum thickness; round tube closed with welded longitudinal joint, with tabs for screw-fastening the sleeve to the board.

C. Sleeves for Rectangular Openings: Galvanized sheet steel.

1. Minimum Metal Thickness:

a. For sleeve cross-section rectangle perimeter less than 50 inches and no side more than 16 inches, thickness shall be 0.052 inch.
b. For sleeve cross-section rectangle perimeter equal to, or more than, 50 inches and 1 or more sides equal to, or more than, 16 inches, thickness shall be 0.138 inch.

D. Coordinate sleeve selection and application of firestopping.

2.2 SLEEVE-SEAL SYSTEM:

A. Description: Modular sealing device, designed for field assembly, to fill annular space between sleeve and raceway or cable.

1. Manufacturers: Subject to compliance with requirements. Available manufacturers offering products that may be incorporated into the Work include, but are not limited to, the following:

a. Advance Products & Systems, Inc.
b. Calpico, Inc.
c. Metraflex Co.
d. Pipeline Seal and Insulator, Inc.

2. Sealing Elements: Interlocking links shaped to fit surface of cable or conduit. Include type and number required for material and size of raceway or cable.
3. Pressure Plates: Carbon steel. Include two for each sealing element.
4. Connecting Bolts and Nuts: Carbon steel of length required to secure pressure plates to sealing elements. Include one for each sealing element.

2.3 SLEEVE-SEAL FITTINGS:

A. Description: Manufactured plastic, sleeve-type, waterstop assembly made for embedding in concrete slab or wall. Unit shall have plastic or rubber waterstop collar with center opening to match piping OD.

1. Manufacturers: Subject to compliance with requirements. Available manufacturers offering products that may be incorporated into the Work include, but are not limited to, the following:

a. Presealed Systems.

2.4 GROUT:

A. Nonmetallic, Shrinkage-Resistant Grout: ASTM C 1107, factory-packaged, nonmetallic aggregate grout, noncorrosive, nonstaining, mixed with water to consistency suitable for application and a 30-minute working time.

2.5 SILICONE SEALANTS:

A. Silicone Sealants: Single-component, silicone-based, neutral-curing elastomeric sealants of grade indicated below.

1. Grade: Pourable (self-leveling) formulation for openings in floors and other horizontal surfaces that are not fire rated.

2. Sealant shall have VOC content of 43 g/L or less when calculated according to 40 CFR 59, Subpart D (EPA Method 24).

3. Sealant shall comply with the testing and product requirements of the California Department of Health Services' "Standard Practice for the Testing of Volatile Organic Emissions from Various Sources Using Small-Scale Environmental Chambers."

B. Silicone Foams: Multicomponent, silicone-based liquid elastomers that, when mixed, expand and cure in place to produce a flexible, nonshrinking foam

PART 3 - EXECUTION

3.1 SLEEVE INSTALLATION FOR RACEWAYS AND CABLES:

A. Comply with NECA 1.

B. Comply with NEMA VE 2 for cable tray and cable penetrations.

C. Sleeves for Conduits Penetrating Above-Grade Non-Fire-Rated Concrete and Masonry-Unit Floors and Walls:

1. Interior Penetrations of Non-Fire-Rated Walls and Floors:

a. Seal annular space between sleeve and raceway or cable, using joint sealant appropriate for size, depth, and location of joint.
b. Seal space outside of sleeves with mortar or grout. Pack sealing material solidly between sleeve and wall so no voids remain. Tool exposed surfaces smooth; protect material while curing.

2. Use pipe sleeves unless penetration arrangement requires rectangular sleeved opening.
3. Size pipe sleeves to provide ¼ annular clear space between sleeve and raceway or cable unless sleeve seal is to be installed.
4. Install sleeves for wall penetrations unless core-drilled holes or formed openings are used. Install sleeves during erection of walls. Cut sleeves to length for mounting flush with both surfaces of walls. Deburr after cutting.
5. Install sleeves for floor penetrations. Extend sleeves installed in floors 2 inches above finished floor level. Install sleeves during erection of floors.

D. Sleeves for Conduits Penetrating Non-Fire-Rated Gypsum Board Assemblies:

1. Use circular metal sleeves unless penetration arrangement requires rectangular sleeved opening.
2. Seal space outside of sleeves with approved joint compound for gypsum board assemblies.

E. Aboveground, Exterior-Wall Penetrations: Seal penetrations using steel pipe sleeves and mechanical sleeve seals. Select sleeve size to allow for 1-inch annular clear space between pipe and sleeve for installing mechanical sleeve seals.

F. Underground, Exterior-Wall and Floor Penetrations: Install galvanized steel sleeves. Size sleeves to allow for 1-inch annular clear space between raceway or cable and sleeve for installing sleeve-seal system.

G. Fire-Rated-Assembly Penetrations: Maintain indicated fire rating of walls, partitions, ceilings, and floors at raceway and cable penetrations. Install sleeves and seal raceway and cable penetration sleeves with firestop materials.

H. Openings around electrical penetrations through fire-resistant- rated walls, partitions, floors, or ceilings shall be firestopped using approved methods to maintain the fire resistance rating.

I. Materials used in firestop systems are to be installed in accordance with the manufacturers' instructions provided with the materials. The structural integrity of the floor or wall assembly needs to be evacuated when providing openings for the penetrating items

3.2 SLEEVE-SEAL-SYSTEM INSTALLATION:

A. Install sleeve-seal systems in sleeves in exterior concrete walls and slabs-on-grade at raceway entries into building.

B. Install type and number of sealing elements recommended by manufacturer for raceway or cable material and size. Position raceway or cable in center of sleeve. Assemble mechanical sleeve seals and install in annular space between raceway or cable and sleeve. Tighten bolts against pressure plates that cause sealing elements to expand and make watertight seal.

3.3 SLEEVE-SEAL-FITTING INSTALLATION

A. Install sleeve-seal fittings in new walls and slabs as they are constructed.

B. Assemble fitting components of length to be flush with both surfaces of concrete slabs and walls. Position waterstop flange to be centered in concrete slab or wall.

C. Secure nailing flanges to concrete forms.

D. Using grout, seal the space around outside of sleeve-seal fittings

END OF SECTION 260544

SECTION 260553 – IDENTIFICATION FOR ELECTRICAL SYSTEMS

PART 1 - GENERAL

1.1 SUMMARY:

A. This Section includes electrical identification materials and devices required to comply with ANSI C2, NFPA 70, OSHA standards, and authorities having jurisdiction.

1.2 SUBMITTALS:

A. Submit the following in accordance with Form 816 Article 1.20-1.05.02 and NOTICE TO CONTRACTOR – SUBMITTALS.

B. Product Data: For each electrical identification product indicated.

C. Schedule of Nomenclature: An index of electrical equipment and system components used in identification signs and labels.

1.3 QUALITY ASSURANCE:

A. Comply with ANSI C2.

B. Comply with NFPA 70.

C. Comply with ANSI A13.1 and NFPA 70 for color-coding.

PART 2 - PRODUCTS

2.1 RACEWAY AND CABLE LABELS:

A. Comply with ANSI A13.1, Table 3, for minimum size of letters for legend and for minimum length of color field for each raceway and cable size.

1. Color: Black letters on orange field.
2. Legend: Indicates voltage and service.

B. Pretensioned, Wraparound Plastic Sleeves: Flexible, preprinted, color-coded, acrylic band sized to suit the diameter of the line it identifies and arranged to stay in place by pretensioned gripping action when placed in position.

C. Underground-Line Warning Tape: Permanent, bright-colored, continuous-printed, vinyl tape.

1. Not less than 6 inches wide by 4 mils thick
2. Compounded for permanent direct-burial service.
3. Embedded continuous metallic strip or core.
4. Printed legend indicating type of underground line.

D. Aluminum-Faced, Card-Stock Tags: Weather-resistant, 18-point minimum card stock faced on both sides with embossable aluminum sheet, 0.002 inch thick, laminated with moisture-resistant acrylic adhesive, punched for fasteners, and preprinted with legends to suit each application.

E. Wrap Around Cable Markers: Black, non-smear legends on white background with plastic coated cloth material which remains flexible. Strong adhesive shall assure firm bond on wire.

2.2 NAMEPLATES AND SIGNS:

A. Safety Signs: Comply with 29 CFR, Chapter XVII, Part 1910.145.

B. Engraved Plastic Nameplates and Signs: Engraving stock, melamine plastic laminate, minimum 1/16 inch thick for signs up to 20 sq. in. and 1/8 inch thick for larger sizes.

1. Engraved legend with white letters on black face.
2. Punched or drilled for mechanical fasteners.

C. Exterior, Metal-Backed, Butyrate Signs: Weather-resistant, nonfading, preprinted, cellulose-acetate butyrate signs with 0.0396-inch galvanized-steel backing; and with colors, legend, and size required for the application. 1/4-inch grommets in corners for mounting.

D. Fasteners for Nameplates and Signs: Self-tapping, stainless-steel screws or No. 10/32, stainless-steel machine screws with nuts and flat and lock washers.

2.3 MISCELLANEOUS IDENTIFICATION PRODUCTS:

A. Cable Ties: Fungus-inert, self-extinguishing, one-piece, self-locking, Type 6/6 nylon cable ties.

1. Minimum Width: 3/16 inch.
2. Tensile Strength: 50 lb minimum.
3. Temperature Range: Minus 40 to plus 185 deg F.
4. Color: According to color-coding.

PART 3 - EXECUTION

3.1 INSTALLATION:

A. Identification Materials and Devices: Install at locations for most convenient viewing without interference with operation and maintenance of equipment.

B. Lettering, Colors, and Graphics: Coordinate names, abbreviations, colors, and other designations with corresponding designations in the Contract or with those required by codes and standards. Use consistent designations throughout Project.

C. Sequence of Work: If identification is applied to surfaces that require finish, install identification after completing finish work.

D. Color Banding Raceways and Exposed Cables: Band exposed and accessible raceways of the systems listed below:

1. Bands: Pretensioned, wraparound plastic sleeves; colored adhesive tape; or a combination of both. Make each color band 2 inches wide, completely encircling conduit, and place adjacent bands of two-color markings in contact, side by side.
2. Band Locations: At changes in direction, at penetrations of walls and floors, at 25-foot maximum intervals in straight runs, and at 10-foot maximum intervals in congested areas.
3. Apply the following colors to the systems listed below:

a. Telecommunication System: Green or yellow.

E. Paths of Underground Electrical Lines: During trench backfilling, for exterior underground power, control, signal, and communication lines, install continuous underground plastic line marker located directly above line at 6 to 8 inches below finished grade. Where width of multiple lines installed in a common trench or concrete envelope does not exceed 16 inches overall, use a single line marker.

F. Tape shall have lettering at least 1-inch high with not less than the following identification on the tape: "CAUTION BURIED ELECTRIC LINE BELOW".

G. Secondary Service, Feeder, and Branch-Circuit Conductors: Color-code throughout the secondary electrical system.

1. Color-code 240/120-V system as follows:

a. Phase A: Black.
b. Phase B: Red.
c. Neutral: White.
d. Ground: Green.

2. Factory apply color the entire length of conductors, except the following field-applied, color-coding methods may be used instead of factory-coded wire for sizes larger than No. 10 AWG:

    a. Colored, pressure-sensitive plastic tape in half-lapped turns for a distance of 6 inches from terminal points and in boxes where splices or taps are made. Apply last two turns of tape with no tension to prevent possible unwinding. Use 1-inch- wide tape in colors specified. Adjust tape bands to avoid obscuring cable identification markings.
    b. Colored cable ties applied in groups of three ties of specified color to each wire at each terminal or splice point starting 3 inches from the terminal and spaced 3 inches apart. Apply with a special tool or pliers, tighten to a snug fit, and cut off excess length.

H. Apply identification to conductors as follows:

1. Multiple Power or Lighting Circuits in the Same Enclosure: Identify each conductor with source, voltage, circuit number, and phase. Use color-coding to identify circuits' voltage and phase.
2. Multiple Control and Communication Circuits in the Same Enclosure: Identify each conductor by its system and circuit designation. Use a consistent system of tags, color-coding, or cable marking tape.

I. Apply identification to junction boxes including voltage, circuit number, and phase of enclosed circuits. Apply warning, caution, and instruction signs as follows:

1. Warnings, Cautions, and Instructions: Install to ensure safe operation and maintenance of electrical systems and of items to which they connect. Install engraved plastic-laminated instruction signs with approved legend where instructions are needed for system or equipment operation. Install metal-backed butyrate signs for outdoor items.
2. Emergency Operation: Install engraved laminated signs with white legend on red background with minimum 3/8-inch high lettering for emergency instructions on power transfer, load shedding, and other emergency operations.

J. Equipment Identification Labels: Engraved plastic laminate. Install on each unit of equipment, including central or master unit of each system. This includes power, lighting, communication, signal, and alarm systems, unless units are specified with their own self-explanatory identification. Unless otherwise indicated, provide a single line of text with 1/2-inch- high lettering on 1-1/2-inch- high label; where two lines of text are required, use labels 2 inches high. Use white lettering on black field. Apply labels for each unit of the following categories of equipment using mechanical fasteners:

1. Panelboards, electrical cabinets, and enclosures.
2. Access doors and panels for concealed electrical items.
3. Emergency system boxes and enclosures.

4. Disconnect switches.
5. Enclosed circuit breakers.
6. Motor starters.
7. Push-button stations.
8. Contactors.
9. Control devices.
10. Power-generating units.
11. Telecommunications equipment.
12. Main disconnect.

K. Exterior, Metal-Backed, Butyrate Signs: Weather-resistant, non-fading, preprinted, cellulose-acetate butyrate signs with 0.0396-inch galvanized-steel backing; and with legend and size required for the application. 1/4-inch grommets in corners for mounting. Use white lettering on black field. Apply labels for each unit of the following categories of equipment using mechanical fasteners:

END OF SECTION 260553

SECTION 262416 - PANELBOARDS

PART 1 - GENERAL

1.1 SUMMARY:

A. This Section includes lighting and power panelboards and associated auxiliary equipment rated 600 V and less.

B. Related CSI Sections include the following:

1. Division 26 Section 260553, "Identification for Electrical Systems" for labeling materials.

1.2 SUBMITTALS:

A. Submit the following in accordance with Form 816 Article 1.20 – 1.05.02 and NOTICE TO CONTRACTOR – SUBMITTALS.

B. Product Data: For each type of panelboard, accessory item, and component specified.

1. Spare Parts: Include name, address, and telephone number of in-state supplier of spare parts. No out-of-state suppliers shall be permitted.

C. Shop Drawings: For panelboards. Include dimensioned plans, sections, and elevations. Show tabulations of installed devices, major features, and voltage rating. Include the following:

1. Enclosure type with details for types other than NEMA 250, Type 1.
2. Bus configuration and current ratings.
3. Short-circuit current rating of panelboard.
4. Features, characteristics, ratings, and factory settings of individual protective devices and auxiliary components.
5. Wiring Diagrams: Details of schematic diagram including control wiring and differentiating between manufacturer-installed and field-installed wiring.
6. Shunt trip main breaker information.

D. Quality Assurance Submittals:

1. Qualification Data: For firms and persons specified in Part 1.4, “Quality Assurance.”
2. Panelboard Schedules: For installation in panelboards. Submit final versions after load balancing.

E. Maintenance Data: For panelboard components to include in the operational and maintenance manuals specified in Article 1.20 – 1.08.14 subsection 2 and described in NOTICE TO CONTRACTOR – CLOSEOUT DOCUMENTS. Include manufacturer's written instructions for testing circuit breakers.

1.3 QUALITY ASSURANCE:

A. Listing and Labeling: Provide products specified in this Section that are listed and labeled.

1. The Terms “Listed” and “Labeled”: As defined in the NEC, Article 100.
2. Comply with NFPA 70.
3. Comply with NEMA PB 1.

1.4 COORDINATION:

A. Coordinate layout and installation of panelboards and components with other construction that penetrates walls or is supported by them, including electrical and other types of equipment, raceways, piping, and encumbrances to workspace clearance requirements.

1.5 SPARE PARTS:

A. Furnish to the Engineer spare parts described below that match products installed and that are packaged with protective covering for storage and identified with labels described contents.

1. Keys: 6 spares of each type for new panelboard cabinet lock.

PART 2 - PRODUCTS

2.1 MANUFACTURERS:

A. Available Manufacturers: Subject to compliance with requirements, manufacturers offering products that may be incorporated into the Work include, but are not limited to, the following:

1. Siemens Energy & Automation, Inc.
2. Eaton Corp.; Westinghouse & Cutler-Hammer Products.
3. General Electric Co.; Electrical Distribution & Control Div.
4. Square D Co.

2.2 PANELBOARD FABRICATION:

A. Enclosures: Flush- or surface-mounted cabinets as indicated. NEMA PB 1, Type 1, unless otherwise indicated to meet environmental conditions at installed location.

1. Outdoor Locations: NEMA 250, Type 3R.

B. Directory Frame: Metal, mounted inside each panelboard door.

C. Bus: Hard drawn copper of 98 percent conductivity.

D. Equipment Ground Bus: Adequate for feeder and branch-circuit equipment ground conductors. Bonded to box.

2.3 LIGHTING AND APPLIANCE BRANCH-CIRCUIT PANELBOARDS:

A. Branch Overcurrent Protective Devices: Bolt-on circuit breakers, replaceable without disturbing adjacent units.

B. Doors: In panelboard front, with concealed hinges. Secure with flush catch and tumbler lock, all keyed alike.

2.4 OVERCURRENT PROTECTIVE DEVICES:

A. Molded-Case Circuit Breaker: NEMA AB 1, handle lockable.

1. Characteristics: Frame size, trip rating, number of poles, and auxiliary devices as indicated and interrupting capacity rating to meet available fault current.
2. Application Listing: Appropriate for application, including Type SWD for switching fluorescent lighting loads and Type HACR for heating, air-conditioning, and refrigerating equipment.
3. Circuit Breakers, 200 A and Larger: Trip units interchangeable within frame size.
4. Circuit Breakers, 400 A and Larger: Field-adjustable short-time and continuous current settings.
5. Current-Limiting Trips: Where indicated, let-through ratings less than NEMA FU 1, Class RK-5.
6. Current Limiters: Where indicated, integral fuse listed for circuit breaker.
7. Lugs: Mechanical lugs and power-distribution connectors for number, size, and material of conductors indicated.
8. Shunt Trip: Where indicated.

B. Fusible Switch: NEMA KS 1, Type HD, clips to accommodate specified fuses, handle lockable.

2.5 ACCESSORY COMPONENTS AND FEATURES:

A. Accessory Set: Include tools and miscellaneous items as required for overcurrent protective device test, inspection, maintenance, and operation.

B. Portable Test Set: Arranged to permit testing of functions of solid-state trip devices without removal from panelboard.

PART 3 - EXECUTION

3.1 INSTALLATION:

A. Install panelboards and accessory items according to NEMA PB 1.1.

B. Mounting Heights: 48 inches above finished floor, measured to the center of the panelboard, or as shown on Contract plans.

C. Mounting: Plumb and rigid without distortion of box. Mount flush panelboards uniformly flush with wall finish.

D. Circuit Directory: Type directory to indicate installed circuit loads after balancing panelboard loads. Obtain approval before installing.

E. Install filler plates in unused spaces.

F. Provision for Future Circuits at Flush Panelboards: Stub four 1-inch (27-GRC) empty conduits from panelboard into accessible ceiling space or space designated to be ceiling space in the future. Stub four 1-inch (27-GRC) empty conduits into raised floor space or below slab not on grade.

G. Wiring in Panelboard Gutters: Arrange conductors into groups, and bundle and wrap with wire ties after completing load balancing.

3.2 IDENTIFICATION:

A. Identify field-installed wiring and components and provide warning signs as specified in CSI Division 26 Section 260553, "Identification for Electrical Systems."

B. Panelboard Nameplates: Label each panelboard with engraved laminated-plastic or metal nameplates mounted with corrosion-resistant screws.

3.3 GROUNDING:

A. Make equipment grounding connections for panelboards as specified in CSI Division 26, Section 260526, "Grounding and Bonding for Electrical Systems."

3.4 CONNECTIONS:

A. Tighten electrical connectors and terminals, including grounding connections, according to manufacturer's published torque-tightening values. Where manufacturer's torque values are not indicated, use those specified in UL 486A and UL 486B.

3.5 FIELD QUALITY CONTROL:

A. Prepare for acceptance tests as follows:

1. Make insulation-resistance tests of each panelboard bus, component, and connecting supply, feeder, and control circuits.
2. Make continuity tests of each circuit.

B. Testing: After installing panelboards and after electrical circuitry has been energized, demonstrate product capability and compliance with requirements.

1. Procedures Perform each visual and mechanical inspection and electrical test stated in NETA ATS, Section 7.5 for switches and Section 7.6 for molded-case circuit breakers or as specified by the manufacturer. Certify compliance with test parameters.
2. Correct malfunctioning units on-site, where possible, and retest to demonstrate compliance; otherwise, remove and replace with new units, and retest.

C. Balancing Loads: Contractor shall maintain 20 percent between phase loads within each panelboard during installation, or maintain panel layout according to plans.

3.6 CLEANING:

A. On completion of installation, inspect interior and exterior of panelboards. Remove paint splatters and other spots, dirt, and debris. Touch up scratches and mars of finish to match original finish.

END OF SECTION 262416

SECTION 262726 - WIRING DEVICES

PART 1 - GENERAL

1.1 SUMMARY:

A. This Section includes the following:

1. Receptacles
2. Ground Fault Circuit Interrupter Receptacles
3. Snap Switches
4. Wall Plates

B. Related CSI Sections include the following:

1. Division 26 Section 260519, "Low-Voltage Electrical Power Conductors and Cables"
2. Division 26 Section 260533, "Raceway and Boxes for Electrical Systems"

1.2 SUBMITTALS:

A. Submit the following in accordance with Form 816 Article 1.20 – 1.05.02 and NOTICE TO CONTRACTOR – SUBMITTALS.

B. Product Data: For receptacles, GFCI receptacles, plugs, snap switches and wall plates.

1.3 QUALITY ASSURANCE:

A. Comply with NFPA 70.

B. UL and NEMA Compliance: Provide wiring devices which are listed and labeled by UL and comply with applicable UL and NEMA standards.

1.4 SEQUENCE AND SCHEDULING:

A. Schedule installation of finish plates after the surface upon which they are installed has received final finish.

PART 2 - PRODUCTS

2.1 WIRING DEVICES:

A. General: Provide specification grade wiring devices, in types, characteristics, colors, and electrical ratings for applications indicated which are UL listed and which comply with NEMA WD 1 and other applicable UL and NEMA standards.

1. General: Wiring devices include receptacles, switches and special outlets installed in raceway or conduit boxes, complete with cover plates. Devices shall conform to NEMA WD-1 and shall be UL approved.
2. All devices of a given type and all finished device plates shall be the products of a single manufacturer.
3. Plugs of types to match the associated receptacle shall be provided with each item of portable equipment as specified in other sections. In addition, are spare plugs to match each special receptacle as herein after specified shall be furnished.
4. Explosion-proof devices shall be provided in hazardous areas such as paint storerooms, and other hazardous areas as indicated on the plans.

B. Enclosures: NEMA Type 1 for Maintenance Facility or as indicated on plans

C. Switches:

1. AC tumbler-toggle switches: Meeting minimum requirements of UL 20 and further requirements herein specified and of specification grade, heavy duty, of the type indicated on the plans.

a. Provide switches that operate in any position and are fully enclosed cup type with entire body and cover of molded phenolic, urea or melamine. Do not use fiber, paper or similar insulating material for body or cover.
b. Equip switches with metal mounting yoke with plaster ears, insulating from the mechanism and fastened to the switch body by bolts, screws, rivets or other substantial means that meet test requirements.
c. Provide a green-colored equipment grounding screw on the yoke.
d. Provide the section of yoke normally intended to bear on the surface outside the box with a minimum overall dimension of 3/4 inch, measured at right angles to the longitudinal axis of the yoke.
e. Make switch contacts between silver or silver alloys.
f. Switches shall be side wired with terminal of screw or combination screw-clamp type. Provide access holes for back wiring.

g. Wiring terminals capable of receiving and holding proper wire sizes as shown below:

Switch Rating	Wire Size, AWG No.
20 amperes	12
30 amperes	10

2. Switches for Heavy Duty: Unless specified otherwise, use standard tumble-toggle switches of the AC single unit, toggle type, heavy duty, general use snap switches in accordance with NEMA WD 1 for heavy duty general use type.
3. Switches for Use on Incandescent, Fluorescent, Metal Halide, or High Pressure Sodium Lighting Circuits: Fully rated 20 or 30 amperes at 120 or 277 volts, as indicated on the plans. Actual connected lamp wattage not to exceed the following:

Switch Rating at 120 and 277 Volts	Maximum Wattage Allowed
20 amperes	1,400
30 amperes	2,400

4. Switches for Power Equipment: Switches controlling outlets other than lighting, such as motors less than 1/4 horsepower, may be specification grade, flush type, AC/DC contacts rated ten amperes, 125 volts. Switches controlling straight resistance loads may be snap switches as specified herein, of the proper rating up to 30 amperes at 120-240 volts. Switches used for controlling motors shall be rated for at least the horsepower of the motor controlled.
5. Available Manufacturers: Subject to compliance with requirements, manufacturers offering products which may be incorporated in the work include, but are not limited to, the following:

   a. Arrow-Hart Division, Crouse-Hinds Company.
   b. Bryant Electric Company.
   c. Hubbell, Inc.
   d. General Electric.
   e. Pass and Seymour.
   f. Leviton

D. Receptacles and Plugs:

1. General Use: Grounding duplex type, conforming to NEMA WD-1, configuration 5-20R. Bodies shall be of thermosetting plastic supported on a metal mounting strap. Wiring terminals shall be of the screw type, back or side wired.
2. Ground Fault Interrupter Receptacle: NEMA Designation 5-20R, duplex, three wire, 20 amperes, 125 volt, ground fault interrupter type with pilot light to indicate if receptacle is working or faulted (tripped). Do not arrange to protect

connected downstream receptacles on same circuit unless called for on plans or approved by Designer. Design units for installation in a 2-3/4-inch- deep outlet box without an adapter.

E. Device/Communication Plates:

1. All device plates shall be 0.040 inch minimum with struck-up beveled edges, void of sharp corners and burrs.
2. Unless otherwise noted herein and on drawings, all device plates for wall outlets and switches shall be brush satin finish stainless steel for office areas and bay areas.
3. Device plates for wall telephone outlets shall contain two openings for RJ45 Jacks. One Jack for voice and the other for data. Unless otherwise specified on the plans.
4. Device plates for exposed work shall be steel. Plates for wet locations shall be gasketed and shall have in-use covers.
5. Plate for floor receptacle shall be forged brass with duplex flap type openings and specifically designed for the associated floor box.
6. Plate-Securing Screws: Metal with head color to match plate finish.

PART 3 - EXECUTION

3.1 INSTALLATION OF WIRING DEVICES AND ACCESSORIES:

A. Install wiring devices and accessories as indicated, in accordance with manufacturer's written instructions, applicable requirements of NEC and in accordance with recognized industry practices to fulfill project requirements.

B. Coordinate with other Work, including painting, electrical boxes and wiring installations, as necessary to interface installation of wiring devices with other Work.

C. Install wiring devices only in electrical boxes which are clean; free from building materials, dirt, and debris.

D. Protect devices and assemblies during painting. Install wall plates after painting work is completed.

E. Tighten connectors and terminals, including screws and bolts, in accordance with equipment manufacturer's published torque tightening values for wiring devices. Where manufacturer's torquing requirements are not indicated, tighten connectors and terminals to comply with tightening torques specified in UL Standard 486A. Use properly scaled torque indicating hand tool.

F. Switches and Receptacles: Unless otherwise indicated, mount flush, with long dimension vertical. Wall switches shall be mounted 4' above finished floor opposite hinge side of door, 4" from door trim, and ganged under one cover where more than one switch is shown. Disconnect switches shall be mounted 5' above finished floor and receptacles shall be mounted 24" above finished floor, and in office areas unless otherwise noted. Where finned tube radiation exists, mount receptacles 2" above finned tube radiation unless otherwise noted on plans. All wall switches and receptacles shall be flush mounted in finished areas.

3.2 PROTECTION:

A. Protect installed components from damage. Replace damaged items prior to final acceptance.

3.3 FIELD QUALITY CONTROL:

A. Testing: Prior to energizing circuits, test wiring for electrical continuity, and for short-circuits. Ensure proper polarity of connections is maintained. Subsequent to energizing, test wiring devices and demonstrate compliance with requirements, operating each operable device at least six times.

B. Test ground fault interrupter operation with both local and remote fault simulations in accordance with manufacturer recommendations.

C. Remove malfunctioning units, replace with new units, and retest as specified above.

3.4 CLEANING:

A. General: Internally clean devices, device outlet boxes, and enclosures. Replace stained or improperly painted wall plates or devices.

END OF SECTION 262726

SECTION 262813 - FUSES

PART 1 - GENERAL

1.1 SUMMARY:

A. Section Includes:

1. Fuses.

1.2 SUBMITTALS:

A. Submit the following in accordance with Form 816 Article 1.20 – 1.05.02 and NOTICE TO CONTRACTOR – SUBMITTALS.

B. Product Data: For each fuse type specified. Include the following:

1. Descriptive data and time-current curves.
2. Let-through current curves for fuses with current-limiting characteristics.
3. Coordination charts and tables and related data.

Spare Parts: Include name, address, and telephone number of in-state supplier of spare parts. No out-of-state suppliers shall be permitted.

C. Maintenance Data: For tripping devices to include in the operation and maintenance manuals specified in Form 816 Article 1.20 – 1.08.14 subsection 2 and described in NOTICE TO CONTRACTOR – CLOSEOUT DOCUMENTS.

1.3 QUALITY ASSURANCE:

A. Source Limitations: Obtain fuses from one source and by a single manufacturer.

B. Comply with NFPA 70 for components and installation.

C. Listing and Labeling: Provide fuses specified in this Section that are listed and labeled.

1. The Terms "Listed" and "Labeled": As defined in the NEC, Article 100.

1.4 SPARE PARTS:

A. Furnish to the Engineer spare parts described below that match products installed, are packaged with protective covering for storage, and are identified with labels describing contents.

1. Spare Fuses: Furnish quantity equal to 20 percent of each fuse type and size installed, but not less than 1 set of 3 of each type and size.

PART 2 - PRODUCTS

2.1 MANUFACTURERS:

A. Available Manufacturers: Subject to compliance with requirements, manufacturers offering fuses that may be incorporated into the Work include, but are not limited to, the following:

1. Cooper Industries, Inc.; Bussmann Div.
2. Eagle Electric Mfg. Co., Inc.
3. Edison Fuse, Inc.
4. General Electric Co.; Wiring Devices Div.

2.2 CARTRIDGE FUSES:

A. Characteristics: NEMA FU 1, nonrenewable cartridge fuse; class as specified or indicated; current rating as indicated; voltage rating consistent with circuit voltage.

PART 3 - EXECUTION

3.1 EXAMINATION:

A. Examine utilization equipment nameplates and installation instructions to verify proper fuse locations, sizes, and characteristics.

B. Do not proceed with installation until unsatisfactory conditions have been corrected.

3.2 FUSE APPLICATIONS:

A. Main Service: Class L, fast acting.

B. Main Feeders up to 600A: Class J, time delay.

C. Motor Branch Circuits: Class RK1, time delay.

D. Other Branch Circuits: Class RK5, non-time delay.

3.3 INSTALLATION:

A. Install fuses in fusible devices as indicated. Arrange fuses so fuse ratings are readable without removing fuse.

3.4 IDENTIFICATION:

A. Install labels complying with requirements for identification specified in CSI Division 26, Section 260553 "Identification for Electrical Systems" and indicate fuse replacement information on inside door of each fused switch and adjacent to each fuse block, socket, and holder.

END OF SECTION 262813

SECTION 262816 - ENCLOSED SWITCHES AND CIRCUIT BREAKERS

PART 1 - GENERAL

1.1 SUMMARY:

A. This Section includes individually mounted switches and circuit breakers used for the following:

1. Feeder and equipment disconnect switches
2. Feeder branch-circuit protection
3. Motor disconnect switches
4. Bolt-on circuit breakers

B. Related Sections: The following Sections contain requirements that relate to this section:

1. CSI Division 26 Section 262726, "Wiring Devices" for attachment plugs and receptacles, and snap switches used for disconnect switches.

1.2 SUBMITTALS:

A. Submit the following in accordance with Form 816 Article 1.20 – 1.05.02 and NOTICE TO CONTRACTOR – SUBMITTALS.

B. Product Data for switches, circuit breakers, and accessories specified in this section include the following:

1. Descriptive data and time-current curves.
2. Let-through current curves for circuit breakers with current-limiting characteristics.
3. Coordination charts and tables and related data.
4. Wiring diagrams detailing wiring for power and control systems and differentiating between manufacturer-installed and field-installed wiring.

Spare Parts: Include name, address, and telephone number of in-state supplier of spare parts. No out-of-state suppliers shall be permitted.

C. Quality Assurance Submittals:

1. Qualification data for firms and persons specified in Part 1.3 "Quality Assurance" to demonstrate their capabilities and experience. Include lists of completed projects with project names and addresses, names and addresses of architects and owners, and other information specified.

D. Maintenance Data: For tripping devices to include in the operation and maintenance manuals specified in Form 816 Article 1.20 – 1.08.14 subsection 2 and described in NOTICE TO CONTRACTOR – CLOSEOUT DOCUMENTS.

1.3 QUALITY ASSURANCE:

A. Testing Agency Qualifications: The independent testing agency shall meet OSHA criteria for accreditation of testing laboratories, Title 29, Part 1907, or shall be a full member company of NETA.

1. Testing Agency's Field Supervisor: Person currently certified by NETA or the NICET, to supervise on-site testing specified in Part 3.

B. Source Limitations: Obtain disconnect switches and circuit breakers from one source and by a single manufacturer.

C. Comply with NFPA 70 for components and installation.

D. Listing and Labeling: Provide disconnect switches and circuit breakers specified in this Section that are listed and labeled.

1. The Terms "Listed" and "Labeled": As defined in the NEC, Article 100.

1.4 COORDINATION:

A. Coordinate layout and installation of switches, circuit breakers, and components with other construction, including conduit, piping, equipment, and adjacent surfaces. Maintain required workspace clearances and required clearances for equipment access doors and panels.

B. Coordinate the installation of new bolt-on circuit breakers and main circuit breakers with existing panels. Match existing breakers including breaker manufacturer and short circuit rating.

PART 2 - PRODUCTS

2.1 MANUFACTURERS:

A. Available Manufacturers: Subject to compliance with requirements, manufacturers offering disconnect switches and circuit breakers that may be incorporated into the work include, but are not limited to, the following:

1. Fusible Switches and Nonfusible Switches:

    a. Eaton Corp.; Cutler-Hammer Products
    b. General Electric Co.; Electrical Distribution and Control Division
    c. General Switch Corp.
    d. Siemens Energy & Automation, Inc.
    e. Square D Co.
    f. Westinghouse Electric Corp.; Distribution & Control Business Unit

2. Molded-Case Circuit Breakers:

    a. American Circuit Breaker Corp.
    b. Eaton Corp.; Cutler-Hammer Products
    c. General Electric Co.; Electrical Distribution and Control Division
    d. General Switch Corp.
    e. Klockner-Moeller
    f. Siemens Energy & Automation, Inc.
    g. Square D Co.
    h. Westinghouse Electric Corp.; Distribution & Control Business Unit

3. Combination Circuit Breaker and Ground Fault Trip:

    a. American Circuit Breaker Corp.
    b. General Electric Co.; Electrical Distribution and Control Division
    c. Siemens Energy & Automation, Inc.
    d. Square D Co.
    e. Westinghouse Electric Corp.; Distribution & Control Business Unit

4. Molded-Case, Current-Limiting Circuit Breakers:

    a. General Electric Co.; Electrical Distribution and Control Division
    b. Siemens Energy & Automation, Inc.
    c. Square D Co.
    d. Westinghouse Electric Corp.; Distribution & Control Business Unit

5. Integrally Fused, Molded-Case Circuit Breakers

    a. General Electric Co.; Electrical Distribution and Control Division
    b. Siemens Energy & Automation, Inc.
    c. Westinghouse Electric Corp.; Distribution & Control Business Unit.

6. Bolt-on circuit breakers

    a. Square D. Co.
    b. General Electric Co.

2.2 DISCONNECT SWITCHES:

A. Enclosed, Nonfusible Switch: NEMA KS 1, Type HD, with lockable handle.

B. Enclosed, Fusible Switch, 800 A and Smaller: NEMA KS 1, Type HD, clips to accommodate specified fuses, enclosure consistent with environment where located, handle lockable with 2 padlocks, and interlocked with cover in CLOSED position.

C. Enclosure: NEMA KS 1, Type 1, unless otherwise specified or required to meet environmental conditions of the installed location.

1. Outdoor Locations: Type 3R.
2. Other Wet or Damp Indoor Locations: Type 4.
3. Hazardous Areas Indicated on Drawings: Type 7C.

2.3 ENCLOSED CIRCUIT BREAKERS:

A. Enclosed, Molded-Case Circuit Breaker: NEMA AB 1, with lockable handle.

B. Characteristics: Frame size, trip rating, number of poles, and auxiliary devices as indicated and interrupting rating to meet available fault current.

C. Application Listing: Appropriate for application, including switching fluorescent lighting loads or heating, air-conditioning, and refrigerating equipment.

D. Circuit Breakers, 200 A and Larger: Trip units interchangeable within frame size.

E. Circuit Breakers, 400 A and Larger: Field-adjustable, short-time and continuous-current settings.

F. Current-Limiting Trips: Where indicated, let-through ratings less than NEMA FU 1, Class RK-5.

G. Current Limiters: Where indicated, integral fuse listed for circuit breaker.

H. Molded-Case Switch: Where indicated, molded-case circuit breaker without trip units.

I. Lugs: Mechanical lugs and power-distribution connectors for number, size, and material of conductors indicated.

J. Shunt Trip: Where indicated.

K. Accessories: As indicated.

L. Enclosure: NEMA AB 1, Type 1, unless otherwise specified or required to meet environmental conditions of installed location.

1. Outdoor Locations: Type 3R.
2. Other Wet or Damp Indoor Locations: Type 4.
3. Hazardous Areas Indicated on plans: Type 7C.

PART 3 - EXECUTION

3.1 INSTALLATION:

A. Install disconnect switches and circuit breakers in locations as indicated, according to manufacturer's written instructions.

B. Install disconnect switches and circuit breakers level and plumb.

C. Connect disconnect switches and circuit breakers and components to wiring system and to ground as indicated and instructed by manufacturer.

1. Tighten electrical connectors and terminals according to manufacturer's published torque-tightening values. Where manufacturer's torque values are not indicated, use those specified in UL 486A and UL 486B.

D. Identify each disconnect switch and circuit breaker according to requirements specified in CSI Division 26 Section 260553, "Identification for Electrical Systems."

E. Enclosure Nameplates: Label each enclosure with engraved metal or laminated-plastic nameplate mounted with corrosion-resistant screws

3.2 FIELD QUALITY CONTROL:

A. Testing: After installing disconnect switches and circuit breakers and after electrical circuitry has been energized, demonstrate product capability and compliance with requirements.

1. Procedures: Perform each visual and mechanical inspection and electrical test stated in NETA ATS, Section 7.5 for disconnect switches and Section 7.6 for molded-case circuit breakers. Manufacturer's recommended testing is also valid. Certify compliance with test parameters.

B. Correct malfunctioning units on-site, where possible, and retest to demonstrate compliance; otherwise, remove and replace with new units and retest.

3.3 CLEANING:

A. After completing system installation, including outlet fittings and devices, inspect exposed finish. Remove burrs, dirt, and construction debris and repair damaged finish including chips, scratches, and abrasions.

END OF SECTION 262816

SECTION 265600 - EXTERIOR LIGHTING

PART 1 - GENERAL

1.1 SUMMARY:

A. This Section includes exterior lighting fixtures, lamps, ballasts, poles, and accessories for the complete outdoor lighting as shown on plans.

B. Related CSI Sections include the following:

1. Division 26, Section 260533, "Raceways and Boxes for Electrical Systems"
2. Division 26, Section 262726, "Wiring Devices."

C. Description:

1. The lighting system shall operate from 240/120 volts, single phase, three wire, 60 Hertz systems or as called for on the project plans. High-pressure sodium and, complete with ballasts, shall be installed as shown on the plans.
2. Fixtures, outlets, receptacles, switches and all other applicable lighting system components and details shall be as shown on the plans or as specified.
3. The plans show the location, number, size and type of lighting units and fixture schedule. All fixtures shall be UL listed.
4. Lighting plans are diagrammatic, with fixture outlets located approximately to scale but not dimensioned. Raceways are not generally shown. The Installer shall check lighting drawings against field conditions and the drawings of other disciplines for interferences and shall select and lay out locations for outlets and obtain approval for final locations from Engineer.
5. Fixtures to be installed in wet, damp, moist, corrosive or outdoor locations will be acceptable only when designed and manufactured specifically for outdoor, rugged, weatherproof services. Each part, component, nut, bolt, rivet and spring shall be made of materials of effective corrosion resistance or have been subjected to finishing treatment which will assure such resistance. Fixtures shall be certified by manufacturer for intended purpose.

1.2 SUBMITTALS:

A. Submit the following in accordance with Form 816 Article 1.20 – 1.05.02 and NOTICE TO CONTRACTOR – SUBMITTALS.

B. Product Data: Include photometric curves, illustrations, specifications, schedules and material lists with quantities showing complete details of all proposed equipment.

C. Maintenance Data: For interior lighting to include in the operation and maintenance manuals specified in Form 816 Article 1.20-1.08-14 subsection 2 and described in NOTICE TO CONTRACTOR – CLOSEOUT DOCUMENTS.

1.3 QUALITY ASSURANCE:

A. Comply with applicable local code requirements of the authority having jurisdiction and NEC Articles 225, 250, 410, and 501 as applicable to installation, and construction of exterior building lighting fixtures.

B. Comply with requirements of UL standards, including Standards 484A and B, pertaining to exterior lighting fixtures. Provide exterior lighting fixtures and components which are UL-listed and labeled.

C. Comply with applicable requirements of NFPA 780, "Lightning Protection Code," pertaining to installation of exterior lighting fixtures.

D. Comply with ANSI C2, "National Electrical Safety Code."

1.4 SEQUENCING AND SCHEDULING:

A. Coordinate with other work including conductors and cable, raceways and boxes, to properly interface installation of interior lighting fixtures with other work.

1.5 STORAGE AND HANDLING OF POLES:

A. General: Store poles on decay-resistant treated skids at least 1 ft above grade and vegetation. Support pole to prevent distortion and arrange to provide free air circulation.

B. Metal Poles: Retain factory-applied pole wrappings until just before pole installation. For poles with nonmetallic finishes, handle with web fabric straps.

.

1.6 SPARE PARTS:

A. Furnish to the Engineer spare parts described below that match products installed and that are packaged with protective covering for storage and identified with labels describing contents.

1. Fifteen percent spare lamps, but not less than 1, of each type and size lamp used in each fixture.

1.7 WARRANTIES:

A. Refer to Form 816 Article 1.20-1.06.08 and NOTICE TO CONTRACTOR – CLOSEOUT DOCUMENTS for additional information.

B. Warranty period: 5 years from the issuance of Certificate of Compliance for HID fixture, factory-installed electrical component system; a minimum of two years for other luminaire components. The warranty shall cover both parts and labor for the complete warranty period.

C. Replace defective and burned out lamps for a period of one year following the date of Certificate of Compliance.

PART 2 - PRODUCTS

2.1 MANUFACTURERS:

A. Available Manufacturers: Subject to compliance with CDOT Maintenance requirements, lighting manufacturers offering products that may be incorporated in the work are the following or an approved equal:

1. Holophane
2. Lithonia
3. Hubbell

B. Available Manufacturers: Subject to compliance with CDOT Maintenance requirements, lamp manufacturers offering products that may be incorporated in the work are the following or an approved equal:

1. General Electric
2. Philips
3. Osram (Sylvania)

2.2 MATERIALS:

A. General: Lighting fixtures (luminaires) shall be complete with ballasts, mounting brackets and hardware, lamps, installation accessories, fixture wire, and all accessories as required, as specified in the Fixture Schedule, as shown on the Contract plans and as required by NEC.

B. Lighting Fixtures: The specified manufacturers and catalog numbers are consistent with lighting fixtures currently utilized at other CDOT facilities.

C. High-Pressure Sodium Ballasts: Electromagnetic type with solid-state igniter/starter and capable of open-circuit operation without reduction of average lamp life. Igniter/starter shall have an average life in pulsing mode of 10,000 hours at an igniter/starter-case temperature of 90 deg C.

1. Instant-Restrike Device: Integral with ballast, or solid-state potted module, factory installed within fixture and compatible with lamps, ballasts, and mogul sockets up to 150 W.

a. Restrike Range: 105- to 130-V ac.
b. Maximum Voltage: 250-V peak or 150-V ac rms.

D. High-Pressure Sodium Lamps: ANSI C78.42, CRI 21 (minimum), CCT color temperature 1900K, and average rated life of 24,000 hours, minimum.

1. Dual-Arc Tube Lamp: Arranged so only one of two arc tubes is lighted at one time and, when power is restored after an outage, the cooler arc tube, with lower internal pressure, lights instantly, providing an immediate 8 to 15 percent of normal light output.

E. Refractors and Reflectors: All glassware and plastic shall be uniform, free from defects and photometrically tested for distribution by an independent testing laboratory. Plastic diffusers shall be of new virgin-acrylic plastic material. Designer reserves the right to review photometric test.

F. Conduits: Conduit, including hangers and fittings, shall be installed where shown on the Contract plans and shall be in accordance with CSI Division 26 Section 260533, "Raceways & Boxes for Electrical Systems."

G. Fuel Island Luminairenaire

1. Type “L2” fixture housings shall be constructed of heavy duty die cast, low copper aluminum housing. Housing shall be finished with seven-stage pretreatment and electrostatically applied and baked polyester powder paint. All exposed parts shall be stainless steel. The yoke shall be constructed of stainless steel. Door shall be sealed with hollow core silicone gaskets. Type

"L2" light fixtures shall also consist of a flat glass full cutoff refractor. Twin configuration shall be provided. Basis of design: Holophane's Mongoose Series, Catalog No. G100HP-MA-L-NF-A-Z-F1FUS5C-R-S67514 or approved equal, equipped with a photocell. One photocell for each light fixture. The Contractor shall submit a complete light analysis if a different manufacturer is used.

2. Type "L2" fixture Ballasts: Ballasts shall have a high power factor of 90% or above, be copper wound provide full rated wattage to lamp. Electrical components shall be removable and replaceable as a single unit. Each ballast shall be capable of starting and operating a specified lamp at minus 22 degrees Fahrenheit. The ballast shall operate under a +/- 10% line voltage variation. Fixture shall be listed to US safety standards, "Wet Locations", "Marine Use" and "Hazardous Areas".

2.3 FIXTURE SUPPORT COMPONENTS:

A. Wind-Load Strength: 105 mph and 1.3 gust factor for total support assembly, including pole, base, and anchorage, where used, to carry the fixtures, supports, and appurtenances at the indicated heights above grade without deflection or whipping.

B. Mountings, Fastenings, and Appurtenances:

1. Corrosion-resistant components compatible with the poles and fixtures that will not cause galvanic action at contact points. Provide mountings that will correctly position the luminaire to provide the indicated light distribution.

C. Pole Shaft: Square Straight Steel, one piece construction, tenon and, base cover standard square, Gasketed hand hole cover, Lektrocote finish standard.

D. Pole Bases: per manufacturer.

E. Poles: Galvanized Square Steel. Basis of design: Holophane's Catalog No. SSS1655C-D2-R3-BZ-AB or approved equal.

F. Metal Pole Grounding Provisions: Ground lug connected to a ¾", 10' long copper ground rod with a #8 AWG conductor.

G. Pole-Top: Fabricated to support the fixtures indicated and securely fastened to the pole top.

H. Finish: Dark Bronze

I. Wind Rating: 105 MPH with 1.3 Gust Factor

J. Bolt Circle: Per Manufacturer's Recommendation

K. Foundation: Per plan detail. Bolt circle per pole manufacturer recommendation.

L. Anchor bolts: Galvanized "J" bolt, template included (4-bolt design), sized in accordance with pole manufacturer's recommendation. Pole shall be rated to withstand 105 MPH winds and a 1.3 gust factor.

2.4 LAMPS:

A. Conform to ANSI Standards, C78 series, applicable to each type of lamp as indicated on the drawings, and recommended by the manufacturer.

2.5 FINISH:

A. Metal Parts: Manufacturer's standard finish except as otherwise indicated. For fixtures mounted on poles, match finish of poles and luminaire fixtures. Finish applied over corrosion-resistant primer, free of streaks, runs, holidays, stains, blisters, and similar defects. Remove poles, fixtures, and accessories showing evidence of corrosion or finish failure during Project warranty period and replace with new items.

B. Other Parts: Manufacturer's standard finish except as otherwise indicated.

PART 3 - EXECUTION

3.1 EXAMINATION:

A. Examine areas and conditions under which lighting fixtures are to be installed, and substrate for supporting lighting fixtures. Notify Engineer in writing of conditions detrimental to proper completion of the work. Do not proceed with work until unsatisfactory conditions have been corrected in manner acceptable to Installer and with approval of Engineer.

3.2 INSTALLATION:

A. Install all luminaires, lamps and associated supports, fittings, conduit, boxes, wiring and grounding conductors as called for in this section, as shown on the plans, as required and in accordance with the manufacturer's instructions and recommendations.

B. Prior to the issuance of the Certificate of Compliance, thoroughly clean the luminaires, lamps and accessories and shall replace all lamps which were used for a period equivalent to 50 percent or more of their rated life, at no additional cost.

C. All fixtures shall be aligned and directed as shown or so as to illuminate the desired area properly. Fixtures shall be directly and rigidly mounted on their supporting structures using bolted connections. The conduit system shall not be used to support fixtures unless called for.

D. Where aluminum contacts concrete or dissimilar metal, separate contact surfaces with gasket, non-absorptive tape or bituminous coating to prevent corrosion. Use stainless steel fasteners.

E. Fixtures shall be mounted plumb, level and in straight lines. Rows of fixtures shall be installed accurately as to line and level. Fastenings and supports shall be firmly set so that the fixtures will not be distorted by handling incident to normal maintenance. All parts including lamps shall be secured to prevent falling or dislocation.

F. Lighting fixtures shall be positioned to clear all obstructions.

G. All auxiliary steel, supports and brackets of all kinds for safety erecting the fixtures shall be furnished and installed in place by the Installer.

H. Where coordination with other equipment is necessary some departure from the locations shown may be permitted on approval of Engineer.

I. All lighting units when installed shall be set true and shall be free of leaks, warps, dents or other imperfections.

J. All lighting fixtures shall be directly grounded to the equipment grounding system by means of a conductor of size not less than that required by NEC. If insulated, the ground conductor insulation shall be colored green.

K. The Installer shall fill in circuit designations on the panelboard directory as soon as permanent connections are completed.

L. Taps and splices shall be made with insulated wire nut connectors of the setscrew or spring type or with indent compression type connectors. Solid wire shall be terminated at screw type connections by looping around the terminal screw. At panelboards, solid wire may be terminated using screw type pressure terminals; stranded wire may be terminated using saddle type pressure terminals.

M. Install poles plumb. Provide shims or double nits to adjust plumb. Grout around each base.

N. All fixtures shall be installed for seismic requirements.

3.3 GROUNDING:

A. Provide equipment grounding connections for interior lighting fixtures as indicated under CSI Division 26 Section 260526, "Grounding and Bonding for Electrical Systems."

3.4 FIELD QUALITY CONTROL:

A. The Installer is not responsible for the foot candles of illumination provided by the completed systems. However, if after the lighting is installed and in operation, any areas are noted which are obviously under or overlit, the Installer shall promptly advise the Engineer.

B. Lamps furnished for temporary use during the construction period shall be similar to those shown on the fixture schedule. Fixtures shall be protected and maintained in good condition during construction. At the completion of the work, all fixtures shall be cleaned, inspected, and repaired, or replaced if damaged, and a complete set of new incandescent lamps shall be installed.

3.5 ADJUSTING AND CLEANING:

A. Clean lighting fixtures of dirt and construction debris upon completion of installation. Clean finger-prints and smudges from lenses.

B. Protect installed fixtures from damage during remainder of construction period.

C. Adjust aim-able fixtures to provide required light intensities.

END OF SECTION 265600

State of Connecticut

Department of Transportation

SUPPLEMENTAL SPECIFICATIONS

TO

THE STANDARD SPECIFICATIONS

FOR

ROADS, BRIDGES AND INCIDENTAL CONSTRUCTION

FORM 816

2004

JULY 2012

July 2012

DIVISION I
GENERAL REQUIREMENTS AND COVENANTS

SECTION		SPECIFICATION NUMBER
1.01	Definition of Terms and Permissible Abbreviations	101
1.05	Control of the Work	105
1.08	Prosecution and Progress	108
1.09	Measurement and Payment	109
1.10	Environmental Compliance	110
1.11	Claims	111
1.20	General Clauses for Facilities Construction	120

DIVISION II
CONSTRUCTION DETAILS

SECTION		SPECIFICATION NUMBER
2.02	Roadway Excavation, Formation of Embankment and Disposal of Surplus Material	202
2.05	Trench Excavation	205
3.04	Processed Aggregate Base	304
4.01	Concrete Pavement	401
5.14	Prestressed Concrete Members	514
6.01	Concrete for Structures	601
6.03	Structural Steel	603
6.12	Concrete Cylinder Curing Box	612
6.51	Culverts	651
7.02	Piles	702
8.22	Temporary Precast Concrete Barrier Curb	822
9.10	Metal Beam Rail	910
9.18	Three-Cable Guide Railing (I-Beam Post) and Anchorages	918
9.22	Bituminous Concrete Sidewalk Bituminous Concrete Driveway	922
9.44	Topsoil	944
9.49	Furnishing, Planting and Mulching Trees, Shrubs, Vines and Ground Cover Plants	949
9.75	Mobilization	975
10.01	Trenching and Backfilling	1001
10.10	Concrete Handhole	1010
11.13	Control Cable	1113
12.10	Epoxy Resin Pavement Markings, Symbols and Legends	1210

July 2012

DIVISION III
MATERIALS SECTION

SECTION		SPECIFICATION NUMBER
M.06	Metals	M06
M.13	Roadside Development	M13
M.16	Traffic Control Signals	M16
M.17	Elastomeric Materials	M17
M.18	Signing	M18

July 2012

STANDARD SPECIFICATIONS
FOR
ROADS, BRIDGES AND INCIDENTAL CONSTRUCTION
FORM 816

ERRATA

PG.	ARTICLE OR SUBARTICLE	LINE NO.	CORRECTION
iv	Table of Contents	11	Change “Guild” to “Guide”
4	1.01.01	8	After the end of the definition for “Plans,” insert as a subset, “A. Standard Sheets – Standardized plans containing details approved by the Department and the FHWA, for construction of a given type on any project, included in contracts on an as-needed basis.”
6	1.01.02	41	Change “Aluminum Association” to “Aluminum Association, Inc. (The)”
6	1.01.02	42	Delete “AAA – Aluminum Alloy Association”
7	1.01.02	1	Insert “AABC – Associated Air Balance Council”
7	1.01.02	1	Insert “AAMA – American Architectural Manufacturers Association”
7	1.01.02	12	Insert “ABMA – American Bearing Manufacturers Association”
7	1.01.02	12	Insert “ACGIH – American Council of Government Industrial Hygienists”
7	1.01.02	12	Change “American Concrete Institute” to “ACI International (American Concrete Institute)”
7	1.01.02	14	Insert “ADAAG – Americans with Disabilities Act (ADA) Accessibility Guidelines for Buildings and Facilities”
7	1.01.02	16	Change “Associated General Contractors of America” to “Associated General Contractors of America (The)”
7	1.01.02	19	Insert “AI – Asphalt Institute”
7	1.01.02	19	Change “American Institute of Architects” to “American Institute of Architects (The)”
7	1.01.02	20	Delete “AIEE – American Institute of Electrical Engineers “
7	1.01.02	24	Delete “ALI – Associated Laboratories, Inc.”
7	1.01.02	26	Change “American Lumber Standard Committee” to “American Lumber Standards Committee, Incorporated”
7	1.01.02	27	Change “Air Movement and Control Association” to “Air Movement and Control Association International, Inc.”
7	1.01.02	31	Delete “AOEC – Area of Environmental Concern”
7	1.01.02	33	Change “The Engineered Wood Association” to “APA-The Engineered Wood Association”
7	1.01.02	37	Change “Air Conditioning” to “Air-Conditioning”
8	1.01.02	7	Change “Air Conditioning” to “Air-Conditioning”
8	1.01.02	8	Change “American Society of Mechanical Engineers” to “ASME International (The American Society of Mechanical Engineers International)”
8	1.01.02	18	Delete “ATA – American Transit Association”
8	1.01.02	20	Delete “AWG – American Wire Gauge”
8	1.01.02	22	Change “Wood-Preservers” to “Wood-Preservers’ “
8	1.01.02	33	Delete “AZI – American Zinc Institute”
8	1.01.02	35	Change “Building Officials and Code Administrators International” to “BOCA International, Inc.”

PG.	ARTICLE OR SUBARTICLE	LINE NO.	CORRECTION
8	1.01.02	38	Change “Library” to “Laboratory”
9	1.01.02	2	Change “CONNDOT” to “ConnDOT”
9	1.01.02	6	Delete “CPI – Clay Pipe Institute”
9	1.01.02	9	Delete “CS – Commercial Standard”
9	1.01.02	10	Change “Construction Specifications Institute” to “Construction Specifications Institute (The)”
9	1.01.02	12	Change “Tower” to ”Technology”
9	1.01.02	17	Delete “DFPA – Douglas Fir Plywood Association”
9	1.01.02	19	Change “Department of Defense” to “Department of Defense Military Specifications and Standards”
9	1.01.02	21	Change “Association” to “Alliance”
9	1.01.02	23	Delete “U.S. Department of Transportation”
9	1.01.02	28	Delete “U.S. Department of Transportation”
9	1.01.02	30	Insert “FMG – FM Global”
9	1.01.02	31	Delete “U.S. Department of Transportation”
10	1.01.02	2	Delete “HASP – Health and Safety Plan”
10	1.01.02	3	Delete “HMA – Hot Mix Asphalt or Bituminous Concrete”
10	1.01.02	4	Delete “HPMA – Hardwood Plywood Manufacturers Association”
10	1.01.02	5	Insert “HPVA – Hardwood Plywood & Veneer Association”
10	1.01.02	9	Insert “ICC – International Code Council”
10	1.01.02	9	Change “Insulated Cable Engineers Association” to “Insulated Cable Engineers Association, Inc.”
10	1.01.02	10	Change “Institute of Electrical and Electronics Engineers” to “Institute of Electrical and Electronics Engineers, Inc. (The)”
10	1.01.02	21	Change “Military Standardization Documents, U.S. Department of Defense” to “(MILSPEC) Military Specification and Standards”
10	1.01.02	24	Delete “MS – Military Specifications”
10	1.01.02	26	Change “Manufacturers Standardization Society of the Valve and Fittings Industry Inc.” to “Manufacturers Standardization Society of The Valve and Fittings the Valve Industry Inc.”
10	1.01.02	29	Change “National Association of Architectural Metal Manufacturers (The)” to “National Association of Architectural Metal Manufacturers”
10	1.01.02	31	Insert “NADCA – National Air Duct Cleaners Association”
10	1.01.02	34	Delete “NBS – National Bureau of Standards”
10	1.01.02	35	Delete “NC – National Course”
11	1.01.02	3	Delete “NCPRC – National Clay Pipe Research Corporation”
11	1.01.02	10	Change “International Electrical Testing Association” to “InterNational Testing Association”
11	1.01.02	12	Delete “NFS – NFS International”
11	1.01.02	13	Insert “NHLA – National Hardwood Lumber Association”
11	1.01.02	18	Insert “NLGA – National Lumber Grades Authority”
11	1.01.02	18	Delete “NLMA – National Lumber Manufacturers Association”
11	1.01.02	21	Insert “NSF – NSF International”
11	1.01.02	21	Change “National Terrazzo and Mosaic Association (The)” to “National Terrazzo and Mosaic Association, Inc.”
11	1.01.02	26	Delete “PCC – Portland Cement Concrete”
11	1.01.02	28	Delete “PLP – Plastic Laminate Producers”
11	1.01.02	29	Delete “PS – Product Standard of NBS, U.S. Department of Commerce”
11	1.01.02	32	Delete “RLMI – Reflector and Lamp Manufacturers’ Institute”

PG.	ARTICLE OR SUBARTICLE	LINE NO.	CORRECTION
11	1.01.02	35	Delete “SAWP – Society of American Wood Preservers”
11	1.01.02	36	Insert “SDI – Steel Deck Institute”
11	1.01.02	36	Insert “S.D.I. – Steel Door Institute”
11	1.01.02	37	Insert “SJI – Steel Joist Institute”
11	1.01.02	37	Insert “SMACNA – Sheet Metal and Air Conditioning Contractors’ National Association”
11	1.01.02	37	Change “Southern Pine Inspection Bureau” to “Southern Pine Inspection Bureau (The)”
12	1.01.02	9	Change “Tile Council of America“ to “Tile Council of America, Inc.”
12	1.01.02	10	Insert “TIA – Telecommunications Industry Association”
12	1.01.02	10	Insert “TPI – Truss Plate Institute, Inc.”
12	1.01.02	10	Delete “UBC – Uniform Building Code”
12	1.01.02	11	Change “Underwriters Laboratories, Inc.” to “Underwriters Laboratories Inc.”
12	1.01.02	12	Delete “UMTA – Urban Mass Transportation Administration, U.S. Department of Transportation”
12	1.01.02	14	Delete “UPC – Uniform Plumbing Code”
12	1.01.02	15	Insert “USGBC – U.S. Green Building Council”
12	1.01.02	16	Delete “USS – United States Standard”
12	1.01.02	17	Delete “VOC – Volatile Synthetic Organic Chemicals”
12	1.01.02	19	Delete “WCLA – West Coast Lumberman’s Association”
12	1.01.02	20	Insert “WCSC – Window Covering Safety Council”
12	1.01.02	20	Delete “WSA – Temporary Waste Stockpile Area”
12	1.01.03	31	Insert “AOEC – Area of Environmental Concern”
12	1.01.03	31	Insert “AWG – American Wire Gauge”
13	1.01.03	16	Insert “HASP – Health and Safety Plan”
13	1.01.03	29	Insert “PCC – Portland Cement Concrete”
14	1.01.03	25	Insert “VOC – Volatile Organic Compound”
14	1.01.03	26	Insert “WSA – Temporary Waste Stockpile Area”
22	1.03.07	23	Change “**$1,000,000**” to “**$2,000,000**”
32	1.05.01	38	Change “Connecticut General Statutes” to “CGS”
45	1.05.15	29	Change “Department of Public Utility Control” to “DPUC”
105	1.20	29	Change “Workmen and Equipment” to “Personnel and Equipment”
105	1.20	31	Delete “Completion of Construction Work and”
107	1.20-1.02.13	15	Change “Americans with Disabilities Act Accessibility Guidelines” to “ADAAG”
108	1.20-1.04.01	26	Change “othewise” to “otherwise”
119	1.20-1.05.25	4	Change “Certificate of Compliance” to “C.O.C.”
122	1.20-1.06.08	3	Change “Certificate of Compliance” to “C.O.C.”
131	1.20-1.08.05	34	Change “Workmen and Equipment” to “Personnel and Equipment”
132	1.20-1.08.11	12	Change “Certificate of Compliance” to “C.O.C.”
133	1.20-1.08.13	7	Delete “Completion of Construction Work and”
133	1.20-1.08.13	9	Change “Certificate of Compliance” to “C.O.C.”
133	1.20-1.08.11	15	Change “Certificate of Compliance” to “C.O.C.”
133	1.20-1.08.11	20	Change “Certificate of Compliance” to “C.O.C.”
143	2.02.01	28	Insert “, swales” after “channels”
245	4.06.04	11	Change “**Over weight (mass) Adjustments -**” and replace with indented “Over weight (mass) Adjustments -” as a subsection of “**1. Bituminous Concrete Class ( )**”.

PG.	ARTICLE OR SUBARTICLE	LINE NO.	CORRECTION
259	5.03.03	24	Change “Such requirements of Article 5.02.03 as are pertinent shall apply equally to this construction.” To “All such plans prepared by the Contractor shall be considered working drawings and shall be submitted with engineering calculations to the Engineer for review in accordance with the requirements of Article 1.05.02."
270	5.08.02	4	Change “M.06.02-12” to “M.06.02-4 Welded Stud Shear Connectors”
271	5.09.02	39	Change “M.06.02-12” to “M.06.02-4 Welded Stud Shear Connectors”
284	5.14.03-12	12	Change “Article M.06.02-13” to “Subarticle 6.03.03 (a) Shop Fabrication Notice”
351	6.03.03	8	Change “MS MIL-C-11796B” to “MIL-C-11796B”
434	9.04.02	14	Change “Subarticle M.06.02-1” to “Article 6.03.02”
434	9.04.02	15	Change “M.06.02-9(d) for metal bridge rail (cast post—aluminum).” to “Malleable castings shall conform to the requirements of the specifications for malleable iron castings, ASTM A 47, Grade No. 32510 (22010). Ductile iron castings shall conform to the Specifications for Ductile Iron Castings, ASTM A 536, Grade 60-40-18 (414-276-18) unless otherwise specified. In addition to the specified test coupons, test specimens from parts integral with the castings, such as risers, shall be tested for castings having a weight (mass) of more than 1000 pounds (455 kilograms) to determine that the required quality is obtained in the castings in the finished condition.”
452	9.14.02	2	Change “Subarticle M.06.02-8” to “ASTM A 53, Type E or S, Grade A, Schedule 40 Black Finish.”
452	9.14.02	4	Change “Subarticle M.06.02-9(d) except that the grade shall be 32510” to “the specifications for malleable iron castings, ASTM A 47, Grade No. 32510 (22010). Ductile iron castings shall conform to the Specifications for Ductile Iron Castings, ASTM A 536, Grade 60-40-18 (414-276-18) unless otherwise specified. In addition to the specified test coupons, test specimens from parts integral with the castings, such as risers, shall be tested for castings having a weight (mass) of more than 1000 pounds (455 kilograms) to determine that the required quality is obtained in the castings in the finished condition.”
496	9.70.01	37	Change “CDOT” to “ConnDOT”
569	11.14.05	19	Change “Span Wire” to “Span Wire (Type)”
577	12.01.03	7	Change “6.03.03-19” to “6.03.03-4 (f) High Strength Bolted Connections”
577	12.01.03	23	Change “Article 6.03.03-15” to “Subarticle 6.03.03-4(c) Bearings”
577	12.01.03	27	Change “Article 6.03.03-19 (c)(3)” to “Subarticle 6.03.03-4 (f) High Strength Bolted Connections Turn-of-Nut Installation Method”
604	18.00.02	7	Change “National Cooperative Highway Research Program (NCHRP)” to “NCHRP”
623	M.03.01	9	Change “Cement and Concrete Reference Laboratory” to “CCRL”
623	M.03.01	13	Change “Cement and Concrete Reference Laboratory” to “CCRL”
626	M.03.01	2	Change “Cement and Concrete Reference Laboratory” to “CCRL”

PG.	ARTICLE OR SUBARTICLE	LINE NO.	CORRECTION
626	M.03.01	3	Change “NBS” to “NIST”
632	M.03.01	18	Change “Cement and Concrete Reference Laboratory” to “CCRL”
638	M.04.02	37	Change “Asphalt Institute’s” to “AI’s”
711	M.10.02-1	17	Change “Subarticle M.06.02-1(b)” to “Article M.06.02”
720	M.10.08-3	2	Change “Subarticle M.06.02-1(b)” to “Article M.06.02”
735	M.13.03	22	Change “AOAC International” to “AOAC”
760	M.15.15	21	Change “non-fusible” to “fused”
780	M.16.08	41	Change “Americans With Disabilities Act (ADA)” to “ADA”
790	M.16.10	24	Change “Underwriter’s Laboratory” to “UL”
800	M.17.01	19	Change “AAA 6061-T6” to “AA 6061-T6”
837	Pay Items	24	Change “Span Wire” to “Span Wire (Type)”
845	Index	6	Add page 133 to “Acceptance of Project”
846	Index	13	Add page 107 to “Bids: Consideration of”
847	Index	28	Add page 132 to “Cleaning Up, Final”
849	Index	25	Add page 107 to “Consideration of Bids”
849	Index	39	Add page 108 to “Contract: Intent of”
850	Index	3	Add page 133 to “Contractor’s: Responsibility, Termination of the”
850	Index	13	Add page 114 to “Cooperation by Contractor”
850	Index	15	Add page 114 to “Coordination of Special Provisions, Plans, Supplemental Specifications and Standard Specifications and Other Contract Requirements”
850	Index	40	Add page 128 to “Cutting and Patching:”
852	Index	16	Add page 106 to “Examination of Plans, Specifications, Special Provisions and Site of Work”
852	Index	38	Insert “Facilities, Temporary…126”
853	Index	7	Add page 132 to “Final: Cleaning Up”
854	Index	35	Add page 115 to “Inspection”
855	Index	11	Add page 108 to “Intent of Contract”
855	Index	22	Add page 106 to “Knowledge of Applicable Laws”
855	Index	25	Add page 106 to “Laws: Knowledge of Applicable”
856	Index	27	Add page 120 to “Materials: Source of Supply and Quality”
856	Index	28	Add page 121 to “Materials: Storage of”
857	Index	33	Add page 133 to “Operation and Maintenance Manuals:”
857	Index	34	Change page 133 to 136 for “Equipment and Systems Maintenance Manual”
859	Index	2	Add page 131 to “Personnel and Equipment”
860	Index	6	Add page 114 to “Plans: Coordination of Special Provisions, Supplemental Specifications and Standard Specifications and Other Contract Requirements”
860	Index	7	Add page 106 to “Plans: Examination of”
860	Index	30	Change page 108 to 112 for “Product Data”
860	Index	31	Change page 108 to 112 for “Product Samples “
860	Index	32	Add page 124 to “Product Selection:”
861	Index	12	Add page 126 to “Prosecution of Work”
861	Index	38	Change page 115 to 135 for “Record Drawings”
863	Index	3	Add page 125 to “Sanitary Provisions”
863	Index	18	Insert “Services, Temporary…126”
863	Index	23	Add page 111 to “Shop Drawings”
864	Index	4	Add page 106 to “Site of Work, Examination of”

PG.	ARTICLE OR SUBARTICLE	LINE NO.	CORRECTION
864	Index	12	Add page 120 to “Source of Supply and Quality”
864	Index	19	Add page 114 to “Special Provisions: Coordination of Plans, Supplemental Specifications and Standard Specifications and Other Contract Requirements”
864	Index	20	Add page 106 to “Special Provisions: Examination of”
864	Index	26	Add page 114 to “Specifications: Coordination of Plans, Special Provisions and Other Contract Requirements”
864	Index	27	Add page 106 to “Specifications: Examination of”
864	Index	43	Add page 121 to “Storage”
865	Index	27	Delete page 108 from “Submittals: Shop Drawings”
865	Index	45	Insert “Temporary Utilities, Services, and Facilities…126”
866	Index	2	Add page 133 to “Termination of Contractor’s Responsibility”
866	Index	23	Insert “Training…137”
866	Index	45	Add page 133 to “Utility Services”
867	Index	8	Insert “Warranties…121”
867	Index	24	Add page 126 to “Work: Prosecution of”

CONNECTICUT
SUPPLEMENTAL SPECIFICATION
SECTION 1.01
DEFINITIONS OF TERMS AND PERMISSIBLE ABBREVIATIONS

1.01.01 — Definitions:

Add the following definition:

SUBSTANTIAL COMPLETION: The date at which the performance of all work on the Project has
been completed except minor or incidental items, final cleanup, work required under a warranty, and repair
of unacceptable work, and provided the Engineer has determined that:

A. The Project is safe and convenient for use by the public, and

B. All traffic lanes including all safety appurtenances are in their final configuration, and

C. Failure to complete the work and repairs excepted above does not result in the deterioration of other completed work; and provided further, that the value of work remaining to be performed, repairs, and cleanup is less than one percent (1%) of the estimated final Contract amount, and

D. If applicable a Certificate of Compliance has been issued.

1.01.02 — Abbreviations, Publications, and Standards:

Delete the like-named abbreviations and replace it with the following abbreviations:

"AA – Aluminum Association, Inc. (The)
ALSC – American Lumber Standard Committee, Incorporated
AMCA – Air Movement and Control Association International, Inc.
AOSA – Association of Official Seed Analysts, Inc.
ASME – ASME International (The American Society of Mechanical Engineers International)
CTI – Cooling Technology Institute
EIA – Electronic Industries Alliance
ICEA – Insulated Cable Engineers Association, Inc.
IEEE – Institute of Electrical and Electronics Engineers, Inc. (The)
NTMA – National Terrazzo & Mosaic Association, Inc. (The)
TCA – Tile Council of America, Inc."

Delete the Following abbreviations:

"ADA – Americans with Disabilities Act
AFPA – American Forest and Paper Association

BOCA – Building Officials and Code Administrators International
FM – Factory Mutual System
ICBO – International Conference of Building Officials
MIL – Military Standardization Documents, U.S Department of Defense
MS – Military Specifications
NWWDA – National Wood Window and Door Association
NFS – NFS International"

Add the following abbreviations:

"ADAAG – Americans with Disabilities Act (ADA)
AABC – Associated Air Balance Council
AAMA – American Architectural Manufacturers Association
ABMA – American Bearing Manufacturers Association
AF&PA – American Forest & Paper Association
AI – Asphalt Institute
BIA – Brick Industry Association (The)
CDA – Copper Development Association Inc.
CGA – Compressed Gas Association
FMG – FM Global
HI – Hydraulic Institute
HPVA – Hardwood Plywood & Veneer Association
ICC – International Code Council
ICC-ES – ICC Evaluation Service, Inc.
IEC – International Electrotechnical Commission
IGMA – Insulating Glass Manufacturers Alliance
ISO – International Organization for Standardization
MILSPEC – Military Specification and Standards
NADCA –National Air Duct Cleaners Association
NFRC – National Fenestration Rating Council
NHLA – National Hardwood Lumber Association
NSF – NSF International (National Sanitation Foundation International)
PDI – Plumbing & Drainage Institute
SDI – Steel Deck Institute *or*
- Steel Door Institute
SJI – Steel Joist Institute
SMACNA – Sheet Metal and Air Conditioning Contractors' National Association
SPRI – Single Ply Roofing Industry
SWRI – Sealant, Waterproofing, & Restoration Institute
TIA/EIA – Telecommunications Industry Association/Electronic Industries Alliance
TRB – Transportation Research Board
UFAS – Uniform Federal Accessibility Standards
USGBC – U.S. Green Building Council
WDMA – Window & Door Manufacturers Association"

CONNECTICUT
SUPPLEMENTAL SPECIFICATION
SECTION 1.05
CONTROL OF THE WORK

Replace Article 1.05.08 – Vacant with the following:

1.05.08—SCHEDULES AND REPORTS:

When a project coordinator is not required by the Contract the following shall apply:

Baseline Bar Chart Construction Schedule: Within 20 calendar days after contract award the Contractor shall develop a comprehensive bar chart as a baseline schedule for the project. The bar chart schedule shall be submitted to the Engineer for approval and shall be based on the following guidelines:
1. The bar chart schedule shall contain a list of activities that represents the major activities of the project. At a minimum, this list should include a breakdown by individual structure or stage, including major components of each. The bar chart schedule shall contain sufficient detail to describe the progression of the work in a comprehensive manner. As a guide, 10 to 15 bar chart activities should be provided for each $1 million of contract value. The following list is provided as an example only and is not meant to be all-inclusive or all-applicable:

General Activities Applicable to all projects

Project Constraints
- -Winter shutdowns
- -Environmental permits/application time of year restrictions
- -Milestones
- -Third Party approvals
- -Long lead time items (procurement and fabrication of major elements)
- -Adjacent Projects or work by others

Award
Notice to Proceed
Signing (Construction, temporary, permanent by location)
Mobilization
Permits as required
Field Office
Utility Relocations
Submittals/shop drawings/working drawings/product data
Construction of Waste Stock pile area
Clearing and Grubbing
Earthwork (Borrow, earth ex, rock ex etc.)
Traffic control items (including illumination and signalization)
Pavement markings
Roadway Construction (Breakdown into components)
Drainage (Breakdown into components)

Culverts
Plantings (including turf establishment)
Semi-final inspection
Final Cleanup

As required the following may supplement the activities listed above for the specific project types indicated:

a. For bridges and other structures, include major components such as abutments, wingwalls, piers, decks and retaining walls; further breakdown by footings, wall sections, parapets etc.

Temporary Earth Retention Systems
Cofferdam and Dewatering
Structure Excavation
Piles/test piles
Temporary Structures
Removal of Superstructure
Bearing Pads
Structural Steel (Breakdown by fabrication, delivery, installation, painting etc.)
Bridge deck

b. Multiple location projects such as traffic signal, incident management, lighting, planting and guiderail projects will be broken down first by location and then by operation. Other major activities of these types of projects should include, but are not limited to:

Installation of anchors
Driving posts
Foundations
Trenching and Backfilling
Installation of Span poles/mast arms
Installation of luminaries
Installation of cameras
Installation of VMS
Hanging heads
Sawcut loops
Energizing equipment

c. Facility Projects – Facilities construction shall reflect the same breakdown of the project as the schedule of values:

Division 2 – Existing Conditions
Division 3 – Concrete
Division 4 – Masonry
Division 5 – Metals

Division 6 – Wood, Plastic, and Composites
Division 7 – Thermal and Moisture Protection
Division 8 – Openings
Division 9 – Finishes
Division 10 – Specialties
Division 11 – Equipment
Division 12 - Furnishings
Division 13 – Special Construction
Division 14 – Conveying Equipment
Division 21 – Fire Suppression
Division 22 – Plumbing
Division 23 – Heating, Ventilating, and Air Conditioning
Division 26 – Electrical
Division 27 – Communications
Division 28 – Electronic Safety and Security
Division 31 – Earthwork
Division 32 – Exterior Improvements
Division 33 - Utilities

2. If the Engineer determines that additional detail is necessary, the Contractor shall provide it.
3. Each activity shall have a separate schedule bar. The schedule timeline shall be broken into weekly time periods with a vertical line to identify the first working day of each week.
4. The bar chart schedule shall show relationships among activities. The critical path for the Project shall be clearly defined on the schedule. The schedule shall show milestones for major elements of work, and shall be prepared on a sheet, or series of sheets of sufficient width to show data for the entire construction period.
5. If scheduling software is used to create the bar chart schedule, related reports such as a predecessor and successor report, a sort by total float, and a sort by early start shall also be submitted.

6. Project activities shall be scheduled to demonstrate that the construction completion date for the Project will occur prior to expiration of the Contract time. In addition, the schedule shall demonstrate conformance with any other dates stipulated in the Contract.
7. The Contractor is responsible to inform its subcontractor(s) and supplier(s) of the project schedule and any relevant updates.
8. There will be no direct payment for furnishing schedules, the cost thereof shall be considered as included in the general cost of the work.
9. For projects without a Mobilization item, 5% of the contract value will be withheld until such time as the Baseline Schedule is approved.

Monthly Updates: No later than the 10th day of each month, unless directed otherwise by the Engineer, the Contractor shall deliver to the Engineer three copies of the schedule to show the work actually accomplished during the preceding month, the actual time spent on each activity, and the estimated time needed to complete any

activity which has been started but not completed. Each time bar shall indicate, in 10% increments, the estimated percentage of that activity which remains to be completed. As the Project progresses, the Contractor shall place a contrasting mark in each bar to indicate the actual percentage of the activity that has been completed.

The monthly update shall include revisions of the schedule necessitated by revisions to the Project directed by the Engineer (including, but not limited to extra work), during the month preceding the update. Similarly, any changes of the schedule required due to changes in the Contractor's planning or progress shall also be included. The Engineer reserves the right to reject any such revisions. If the schedule revisions extend the contract completion date, due to extra or added work or delays beyond the control of the Contractor, the Contractor shall submit a request in writing for an extension of time in accordance with Article 1.08.08. This request shall be supported by an analysis of the schedules submitted previously.

Any schedule revisions shall be identified and explained in a cover letter accompanying the monthly update. The letter shall also describe in general terms the progress of the Project since the last schedule update and shall identify any items of special interest.

If the Contractor fails to provide monthly schedule updates, the Engineer has the right to hold 10% of the monthly estimated payment, or $5,000, whichever is less, until such time as an update has been provided in accordance with this provision.

Biweekly Schedules: Each week, the Contractor shall submit to the Engineer a two week look-ahead schedule. This short-term schedule may be handwritten but shall clearly indicate all work planned for the following two week period.

Recovery Schedules: If the updated schedule indicates that the Project has fallen behind schedule, the Contractor shall either submit a time extension request in accordance with 1.08.08 or immediately institute steps acceptable to the Engineer to improve its progress of the Project. In such a case, the Contractor shall submit a recovery plan, as may be deemed necessary by the Engineer, to demonstrate the manner in which an acceptable rate of progress will be regained.

Replace the first paragraph of Article 1.05.12 – Payrolls with the following:

For each week of the Project from the first week during which an employee of the Contractor does Project work to which prevailing wage requirements apply, until the last week on which such an employee does such work, the Contractor shall furnish to the Engineer certified copies of payrolls showing (a) the names of the employees who worked on the Project and whose work is subject to prevailing wage requirements, (b) the specific days and hours and numbers of hours that each such employee worked on the Project, and (c) the amount of money paid to each such employee for Project work. Each such payroll shall include the statement(s) of compliance with prevailing wage laws required by the State of Connecticut and, if applicable, by the Federal government. Said payrolls must contain all information required by Connecticut General Statutes Section 31-53 (as it may be revised). For contracts subject to Federal prevailing wage requirements, each payroll shall also contain the information required by the Davis Bacon and Related Acts (DBR). All of the payroll requirements in this Article shall also apply to the work of any subcontractor or other party that performs work on the Project site, and the Contractor shall be responsible for ensuring that each such party meets said requirements.

Add the following Article:

1.05.17 - WELDING

The Contractor shall ensure that all welding of materials permanently incorporated into the work, and welding of materials used temporarily during construction of the work is performed in accordance with the following codes:

- American Welding Society (AWS) Structural Welding Code – Steel – ANSI/AWS D1.1: Miscellaneous steel items that are statically loaded including but not limited to columns, and floor beams in buildings, railings, sign supports, cofferdams, tubular items, and modifications to existing statically loaded structures.
- AWS Structural Welding Code – Aluminum – AWS D1.2/D1.2M: Any aluminum structure or member including but not limited to brackets, light standards, and poles.
- AWS Structural Welding Code – Sheet Steel – AWS D1.3/D1.3M: Sheet steel and cold-formed members 0.18 in.(4.6 mm) or less in thickness used as, but not limited, to decking and stay-in-place forms.
- AWS Structural Welding Code – Reinforcing Steel – AWS D1.4/D1.4M: Steel material used in the reinforcement of cast-in-place or pre-cast Portland cement concrete elements including but not limited to bridge decks, catch basin components, walls, beams, deck units, and girders.
- AASHTO/AWS – Bridge Welding Code, AASHTO/AWS D1.5/D1.5M: Steel highway bridges and other dynamically loaded steel structures. Also includes sign supports, and any other fracture critical structure.

The edition governing the work shall be in effect on the date the Contract was advertised for solicitation of bids.

The Contractor is responsible to provide a Certified Welding Inspector in accordance with the above noted codes. The cost for this service is included in the general cost of the work.

All welders shall be certified by the Engineer in accordance with Section 6.03.

CONNECTICUT
SUPPLEMENTAL SPECIFICATION
SECTION 1.08
PROSECUTION AND PROGRESS

Article 1.08.01 – Transfer of Work or Contract:

Replace the last paragraph with the following:

The Contractor shall not sublet, sell, transfer, assign, or otherwise dispose of the Contract or any portion thereof, or of the work provided for therein, or of its right, title, or interest therein, to any individual or entity without the written consent of the Commissioner. No payment will be made for such work until written consent is provided by the Commissioner.

Article 1.08.07 – Determination of Contract Time:

Replace the fifth paragraph with the following:

The total elapsed time in calendar days, computed as described above, from the commencement date specified in the Engineer's "Notice to Proceed" to the “Substantial Completion” date specified in the Engineer's "Notice of Substantial Completion" shall be considered as the time used in the performance of the Contract work.

Article 1.08.09 – Failure to Complete Work on Time:

Replace the second paragraph with the following:

If the last day of the initial Contract time or the initial Contract date determined for Substantial Completion is before December 1 in the given year, liquidated damages as specified in the Contract shall be assessed against the Contractor per calendar day (including any days during a winter shutdown period) from that day until the date on which the Project is substantially completed.

1.08.12—Final Inspection:

Replace the first paragraph with the following:

If the Engineer determines that the work may be substantially complete, a Semi Final Inspection will be held as soon as practical. After the Semi Final Inspection is held and the Engineer determines that the requirements for Substantial Completion have been satisfied the Engineer will prepare a “Notice of Substantial Completion”.

When the Contractor has completed all work listed in the “Notice of Substantial Completion” the Contractor shall prepare a written notice requesting a Final Inspection and a “Certificate of Acceptance of Work”. The Engineer will hold an Inspection of the Project as soon as practical after the Engineer determines that the Project may be completed. If the Engineer deems the Project complete, said inspection shall constitute the Final Inspection, and the Engineer will notify the Contractor in writing that the Final Inspection has been performed.

1.08.13 – Acceptance of Work and Termination of the Contractor’s Responsibility:

Replace the only paragraph with the following:

The Contractor’s responsibility for non-administrative Project work will be considered terminated when the final inspection has been held, any required additional work and final cleaning-up have been completed, all final operation and maintenance manuals have been submitted, and all of the Contractor’s equipment and construction signs have been removed from the Project site. When these requirements have been met to the satisfaction of the Engineer, the Commissioner will accept the work by certifying in writing to the Contractor that the non-administrative Project work has been completed.

CONNECTICUT
SUPPLEMENTAL SPECIFICATION
SECTION 1.09
MEASUREMENT AND PAYMENT

Article 1.09.04 – Extra and Cost-Plus Work

Delete the word "bonding" *under section* ***(a) Labor****, (3).*

Delete existing section (e) and replace with the following:

(e) Administrative Expense: When extra work on a cost-plus basis is performed by an authorized subcontractor, the Department will pay the Contractor an additional 7.5% for that work; such payment will be in addition to the percentage payments described in (a), (b), (c) and (d) above, as a reimbursement for the Contractor's administrative expense in connection with such work. Approval of such additional payments will be given only after the Contractor provides to the Engineer receipted invoices for all relevant costs.

Change Section designation for Miscellaneous from:

(f) Miscellaneous to: **(g) Miscellaneous**

Add the following as ***(f)****:*

(f) Bonding Costs: For bonding on the total cost of the cost-plus work including administrative expenses as outlined in (e) above, the Contractor shall receive its actual cost. The Contractor shall provide to the Engineer documentation, satisfactory to the Engineer in form and substance, of all such costs.

CONNECTICUT
SUPPLEMENTAL SPECIFICATION
SECTION 1.10
ENVIRONMENTAL COMPLIANCE

Add the following Article:

1.10.08 – VEHICLE EMISSIONS

All motor vehicles and/or construction equipment (both on-highway and non-road) shall comply with all pertinent State and Federal regulations relative to exhaust emission controls and safety.

The Contractor shall establish staging zones for vehicles that are waiting to load or unload at the contract area. Such zones shall be located where the emissions from the vehicles will have minimum impact on abutters and the general public.

Idling of delivery trucks, dump trucks, and other equipment shall not be permitted in excess of 3 minutes during periods of non-activity except as allowed by the Regulations of Connecticut State Agencies Section 22a-174-18(b)(3)(c):

No mobile source engine shall be allowed "to operate for more than three (3) consecutive minutes when the mobile source is not in motion, except as follows:

(i) When a mobile source is forced to remain motionless because of traffic conditions or mechanical difficulties over which the operator has no control,

(ii) When it is necessary to operate defrosting, heating or cooling equipment to ensure the safety or health of the driver or passengers,

(iii) When it is necessary to operate auxiliary equipment that is located in or on the mobile source to accomplish the intended use of the mobile source,

(iv) To bring the mobile source to the manufacturer's recommended operating temperature,

(v) When the outdoor temperature is below twenty degrees Fahrenheit (20 degrees F) [negative seven degrees Celsius (-7 degrees C)],

(vi) When the mobile source is undergoing maintenance that requires such mobile source be operated for more than three (3) consecutive minutes, or

(vii) When a mobile source is in queue to be inspected by U.S. military personnel prior to gaining access to a U.S. military installation."

All work shall be conducted to ensure that no harmful effects are caused to adjacent sensitive receptors. Sensitive receptors include but are not limited to hospitals, schools, daycare facilities, elderly housing and convalescent facilities. Engine exhaust shall be located away from fresh air intakes, air conditioners, and windows.

A Vehicle Emissions Mitigation plan will be required for areas where extensive work will be performed within (less than 50 feet (15 meters)) to sensitive receptors. No work will proceed until a sequence of construction and a Vehicle Emissions Mitigation plan is submitted in writing to the Engineer for review and all comments are addressed in a manner acceptable to the Engineer. The mitigation plan must address the control of vehicle emissions from all vehicles and construction equipment.

Any costs associated with this “Vehicle Emissions” article shall be included in the general cost of the Contract. In addition, there shall be no time granted to the contractor for compliance with this notice. The contractor’s compliance with this notice and any associated regulations shall not be grounds for claims as outlined in Section 1.11 – “Claims”.

CONNECTICUT
SUPPLEMENTAL SPECIFICATION
SECTION 1.11
CLAIMS

Add the following Section:

1.11.01 – General: When filing a formal claim under Section 4-61 (referred to as "Section 4-61" below) of the C.G.S. (as revised), either as a lawsuit in the Superior Court or as a demand for arbitration, the Contractor must follow the procedures and comply with the requirements set forth in this Section of the Specifications. This Section does not, unless so specified, govern informal claims for additional compensation which the Contractor may bring before the Department. The Contractor should understand, however, that the Department may need, before the Department can resolve such a claim, the same kinds of documentation and other substantiation that it requires under this Section. It is the intent of the Department to compensate the Contractor for actual increased costs caused by or arising from acts or omissions on the part of the Department that violate legal or contractual duties owed to the Contractor by the Department.

1.11.02 – Notice of Claim: Whenever the Contractor intends to file a formal claim against the Department under Section 4-61, seeking compensation for additional costs, the Contractor shall notify the Commissioner in writing (in strict compliance with Section 4-61) of the details of said claim. Such written notice shall contain all pertinent information described in Article 1.11.05 below.

Once formal notice of a claim under C.G.S. Section 4-61 (b) (as revised) has been given to the Commissioner, the claimant may not change the claim in any way, in either concept or monetary amount, (1) without filing a new notice of claim and demand for arbitration to reflect any such change and (2) without the minimum period of six months after filing of the new demand commencing again and running before any hearing on the merits of the claim may be held. The only exception to this limitation will be for damages that continue to accrue after submission of the notice, in ways described and anticipated in the notice.

1.11.03 – Record Keeping: The Contractor shall keep daily records of all costs incurred in connection with its construction-related activities on behalf of the Department. These daily records shall identify each aspect of the Project affected by matters related to any claim for additional compensation that the Contractor has filed, intends to file, or has reason to believe that it may file against the Department; the specific Project locations where Project work has been so affected; the number of people working on the affected aspects of the Project at the pertinent time(s); and the types and number of pieces of equipment on the Project site at the pertinent time(s). If possible, any potential or anticipated effect on the Project's progress or schedule which may result in a claim by the Contractor should also be noted contemporaneously with the cause of the effect, or as soon thereafter as possible.

1.11.04 – Claim Compensation: The payment of any claim, or any portion thereof, that is deemed valid by the Engineer shall be made in accordance with the following provisions of this Article:

(a) Compensable Items: The liability of the Department for claims will be limited to the following specifically-identified items of cost, insofar as they have not otherwise been paid for by the Department, and insofar as they were caused solely by the actions or omissions of the Department or its agents (except that with regard to payment for extra work, the Department will pay to the Contractor the mark-ups provided for in Article 1.04.05.):

(1) Additional Project-site labor expenses.
(2) Additional costs for materials.
(3) Additional, unabsorbed Project-site overhead (**e.g.**, for mobilization and demobilization).
(4) Additional costs for active equipment.
(5) For each day of Project delay or suspension caused solely by actions or omissions of the Department, either

(i) an additional ten percent (10%) of the total amount of the costs identified in Subarticles (1) through (4) above; except that if the delay or suspension period prevented the Contractor from incurring enough Project costs under Subarticles (1) through (4) during that period to require a payment by the Department that would be greater than the payment described in subparagraph (ii) below, then the payment for affected home office overhead and profit shall instead be made in the following *per diem* amount:

(ii) six percent (6%) of the original total Contract amount divided by the original number of days of Contract time.

Payment under either (i) or (ii) hereof shall be deemed to be complete and mutually-satisfactory compensation for any unabsorbed home office overhead and any profit related to the period of delay or suspension.

(6) Additional equipment costs. Only actual equipment costs shall be used in the calculation of any compensation to be made in response to claims for additional Project compensation. Actual equipment costs shall be based upon records kept in the normal course of business and in accordance with generally-accepted accounting principles. Under no circumstances shall Blue Book or other guide or rental rates be used for this purpose (unless the Contractor had to rent the equipment from an unrelated party, in which case the actual rental charges paid by the Contractor, so long as they are reasonable, shall be used). Idle equipment, for instance, shall be paid for based only on its actual cost to the Contractor.
(7) Subcontractor costs limited to, and determined in accordance with, Subarticles (1), (2), (3), (4), and (5) above and applicable statutory and case law. Such subcontractor costs may be paid for by the Department only (a) in the context of an informal claims settlement or (b) if the Contractor has itself paid or legally-assumed, present unconditional liability for those subcontractor costs.

(b) Non-Compensable Items: The Department will have no liability for the following specifically-identified non-compensable items:

(1) Profit, in excess of that provided for herein.
(2) Loss of anticipated profit.
(3) Loss of bidding opportunities.
(4) Reduction of bidding capacity.
(5) Home office overhead in excess of that provided for in Article 1.11.04(a)(5) hereof.
(6) Attorneys fees, claims preparation expenses, or other costs of claims proceedings or resolution.
(7) Any other consequential or indirect expenses or costs, such as tort damages, or any other form of expense or damages not provided for in these Specifications or elsewhere in the Contract.

1.11.05 – Required Claim Documentation: All claims shall be submitted in writing to the Commissioner, and shall be sufficient in detail to enable the Engineer to ascertain the basis and the amount of each claim, and to investigate and evaluate each claim in detail. As a minimum, the Contractor must provide the following information for each and every claim and sub-claim asserted:

(a) A detailed factual statement of the claim, with all dates, locations and items of work pertinent to the claim.
(b) A statement of whether each requested additional amount of compensation or extension of time is based on provisions of the Contract or on an alleged breach of the Contract. Each supporting or breached Contract provision and a statement of the reasons why each such provision supports the claim, must be specifically identified or explained.
(c) Excerpts from manuals or other texts which are standard in the industry, if available, that support the Contractor's claim.
(d) The details of the circumstances that gave rise to the claim.
(e) The date(s) on which any and all events resulting in the claim occurred, and the date(s) on which conditions resulting in the claim first became evident to the Contractor.
(f) Specific identification of any pertinent document, and detailed description of the substance of any material oral communication, relating to the substance of such claim.
(g) If an extension of time is sought, the specific dates and number of days for which it is sought, and the basis or bases for the extension sought. A critical path method, bar chart, or other type of graphical schedule that supports the extension must be submitted.

(h) When submitting any claim over $50,000, the Contractor shall certify in writing, under oath and in accordance with the formalities required by the contract, as to the following:
    (1) That supporting data is accurate and complete to the Contractors best knowledge and belief;
    (2) That the amount of the dispute and the dispute itself accurately reflects what the Contractor in good faith believes to be the Departments liability;
    (3) The certification shall be executed by:
        a. If the Contractor is an individual, the certification shall be executed by that individual.
        b. If the Contractor is not an individual, the certification shall be executed by a senior company official in charge at the Contractor's plant or location involved or an officer or general partner of the Contractor having overall responsibility for the conduct of the Contractors affairs.

1.11.06 – Auditing of Claims: All claims filed against the Department shall be subject to audit by the Department or its agents at any time following the filing of such claim. The Contractor and its subcontractors and suppliers shall cooperate fully with the Department's auditors. Failure of the Contractor**,** its subcontractors, or its suppliers to maintain and retain sufficient records to allow the Department or its agents to fully evaluate the claim shall constitute a waiver of any portion of such claim that cannot be verified by specific, adequate, contemporaneous records, and shall bar recovery on any claim or any portion of a claim for which such verification is not produced. Without limiting the foregoing requirements, and as a minimum, the Contractor shall make available to the Department and its agents the following documents in connection with any claim that the Contractor submits:

(1) Daily time sheets and foreman's daily reports.
(2) Union agreements, if any.
(3) Insurance, welfare, and benefits records.
(4) Payroll register.
(5) Earnings records.
(6) Payroll tax returns.
(7) Records of property tax payments.
(8) Material invoices, purchase orders, and all material and supply acquisition contracts.
(9) Materials cost distribution worksheets.
(10) Equipment records (list of company equipment, rates, etc.).
(11) Vendor rental agreements
(12) Subcontractor invoices to the Contractor, and the Contractor's certificates of payments to subcontractors.
(13) Subcontractor payment certificates.
(14) Canceled checks (payroll and vendors).
(15) Job cost reports.
(16) Job payroll ledger.

(17) General ledger, general journal (if used), and all subsidiary ledgers and journals**,** together with all supporting documentation pertinent to entries made in these ledgers and journals.
(18) Cash disbursements journals.
(19) Financial statements for all years reflecting the operations on the Project.
(20) Income tax returns for all years reflecting the operations on the Project.
(21) Depreciation records on all company equipment**,** whether such records are maintained by the company involved, its accountant, or others.
(22) If a source other than depreciation records is used to develop costs for the Contractor's internal purposes in establishing the actual cost of owning and operating equipment, all such other source documents.
(23) All documents which reflect the Contractor's actual profit and overhead during the years that the Project was being performed**,** and for each of the five years prior to the commencement of the Project.
(24) All documents related to the preparation of the Contractor's bid**,** including the final calculations on which the bid was based.
(25) All documents which relate to the claim or to any sub-claim, together with all documents that support the amount of damages as to each claim or sub-claim.
(26) Worksheets used to prepare the claim, which indicate the cost components of each item of the claim, including but not limited to the pertinent costs of labor, benefits and insurance, materials, equipment, and subcontractors' damages, as well as all documents which establish the relevant time periods, individuals involved, and the Project hours and the rates for the individuals.
(27) The name, function, and pertinent activity of each Contractor's or subcontractor's official, or employee involved in or knowledgeable about events that give rise to, or facts that relate to, the claim.
(28) The amount(s) of additional compensation sought and a break-down of the amount(s) into the categories specified as payable under Article 1.11.04 above.
(29) The name, function, and pertinent activity of each Department official, employee or agent involved in or knowledgeable about events that give rise to, or facts that relate to, the claim.

CONNECTICUT
SUPPLEMENTAL SPECIFICATION
SECTION 1.20
GENERAL CLAUSES FOR FACILITIES CONSTRUCTION

1.20-1.00 – General:

Delete the last sentence of the first paragraph and replace with the following:

"Facilities Construction is defined as the type of construction that requires the issuance of a Certificate of Compliance (C.O.C.) by the State Building Inspector or his authorized representative at the completion of a project, and includes site work considered ancillary to this type of construction."

Add the following article:

1.20-1.01.01—Definitions:

OWNER: Where used herein, it is synonymous with Department or State.

1.20-1.02.04 – Examination of Plans, Specifications, Special Provisions and Site of Work:

Delete the first sentence of the first paragraph and replace with the following:

"CSI-formatted specifications are organized into Divisions and Sections based on the CSI's "MasterFormat" numbering system."

1.20-1.02.13 – Knowledge of Applicable Laws:

Delete Items 1 through 9 in their entirety and replace with the following:

1. "The 2003 International Building Code with the State Building Code, including latest Connecticut Supplement and Amendments.
2. The 2003 International Plumbing Code.
3. The 2003 International Mechanical Code.
4. The 2003 International Existing Building Code.
5. The 2006 International Energy Conservation Code.
6. The 2005 NFPA 70 National Electrical Code.
7. The 2003 ICC/ANSI A117.1.

8. The Fire Safety Code, including latest Connecticut Supplement and Amendments.
9. The 2003 International Fire Code.
10. The 2003 NFPA 1 Uniform Fire Code.
11. The 2003 NFPA 101 Life Safety Code."

Add the following as the new last paragraph:

"All work to be performed by the Contractor shall comply with the "Americans with Disabilities Act Accessibility Guidelines."

1.20-1.03.01 – Consideration of Bids:

Delete the entire article and replace with the following:

"The apparent low bidder shall submit to the Manager of Contracts a Schedule of Values within 14 days after bid opening. Any other Contractor that the Department may subsequently designate as the apparent lowest bidder shall make the aforesaid submission within 14 days from the date on which the Department notifies said Contractor that it has become the apparent lowest bidder. If, however, the Department deems it necessary for such a subsequently designated Contractor to make said submission within a shorter period of time, the Contractor shall make the submission within the time designated by the Department.

The total in the Schedule of Values shall equal the bid dollar amount for the Major Lump Sum Item (MLSI).

The Schedule of Values shall be divided into "Line Items" listed separately for each CSI Section of the Special Provisions. An additional line item for "Mobilization" may be incorporated into the Schedule of Values; however, this item may not exceed 10% of the value of the MLSI. The "Mobilization" line item will also include costs associated with "General Conditions" and "Insurance/Bonding." Where requested by the Department, the Contractor shall break down the line items further into more specific line items.

In the event that this Contract is terminated or a portion of this Contract is deleted for any reason or in any way allowable by law under this Contract after the apparent low bidder has been awarded the Contract, the Schedule of Values will <u>not</u> be used for estimating payment due the Contractor for work completed prior to such termination of the Contract or deletion of work thereunder. In the case of Contract termination, payment shall be made in accordance with Article 1.05.14."

1.20-1.05.02--Shop Drawings, Product Data, Product Samples and Quality Assurance Submittals

Delete the last sentence of the first paragraph and replace with the following:

"All facsimiles or other electronic documents from the Contractor shall be followed by an official transmittal."

Delete the third paragraph and replace with the following:

"The Contractor shall number each submittal consecutively: When resubmitting a "Revise and Resubmit" or "Rejected" submittal, the Contractor shall label the transmittal with the original submittal number followed by a letter to designate the additional submission. All submittals shall be numbered conforming to the following examples:"

In column B of line 001, line 001a, and line 001b of the table in subsection 1, replace "07511" with "075110."

Add the following to the end of the first paragraph of subsection 2:

"The Department reserves the right to return partial submittals unreviewed to the Contractor."

Revise the third paragraph of subsection 2 to read:

"The Contractor shall allow at least 60 calendar days for review of any submittal requiring approval by FAA, FTA, any railroad, DEP, U.S. Coast Guard, Army Corps of Engineers, or any other outside agency."

Delete the third and fourth paragraphs of subsection 3 and replace with the following:

"The Designer will not review submittals and the Engineer will not process payment estimates until the initial submittal schedule has been provided. Any delays in construction due to the Contractor's failure to provide a submittal schedule shall be the responsibility of the Contractor.

The Contractor must update its submittal schedule at least once a month, and distribute and post each updated schedule in the manner described above. The Engineer reserves the right not to process payment estimates without a recently updated submittal schedule on file."

Replace the first sentence of the first paragraph of subsection 4 with the following:

"Shop Drawings consist of fabrication and installation drawings, roughing-in and setting drawings, schedules, patterns, templates and similar drawings, and wiring diagrams showing field-installed wiring, including power, signal, and control wiring."

Replace the second paragraph of subsection 4 with the following:

"Shop drawings shall include the following information: Contract number, Project description, number and title of the drawing, date of drawing, revision number, name of Contractor and subcontractor submitting drawings, dimensions, identification of products, shopwork manufacturing instructions, design calculations, statement of compliance with Contractual standards, notation of dimensions established by field measurement, relationship to adjoining construction clearly indicated, seal and signature of a professional engineer if specified, and any other information required by individual Contract provisions."

Replace the first sentence of the first paragraph of subsection 5 with the following:

"Product data consist of printed information such as manufacturer's product specifications, manufacturer's installation instructions, manufacturer's catalog cuts, standard color charts, wiring diagrams showing factory-installed wiring, printed performance curves, operational range diagrams, and mill reports."

Replace the first sentence of the first paragraph of subsection 7 with the following:

"Quality assurance submittals consist of qualification data, design data, certifications, manufacturer's instructions, manufacturer's field reports, test reports, Material Safety Data Sheets (MSDSs), and other quality assurance information required by individual Contract provisions."

1.20-1.05.04—Coordination of Special Provisions, Plans, Supplemental Specifications and Standard Specifications and Other Contract Requirements:

Delete the first and second paragraphs and replace with the following:

"Industry Standards: Each entity engaged in construction of the Contract shall be familiar with industry standards applicable to that entity's construction activities. If printed standards have been established by organizations referenced in Article 1.01.02 or in the Contract, the Contractor shall obtain copies of said standards directly from the publication source.

Unless the Special Provisions include more stringent requirements, applicable construction industry standards have the same force and effect as if bound or copied directly into the Special Provisions to the extent referenced. Such standards are made a part of the Contract by reference."

Add the following article:

1.20-1.05.08—Schedules and Reports:

Daily Construction Reports: The Contractor shall assist the Engineer in the preparation of a daily construction report, by ensuring that each of the Contractor's employees and subcontractors working on the Project site on a given day signs the Engineer's sign-in sheet for that day; and by keeping and providing to the Engineer its own daily list of employees and subcontractors who worked on the Project site on that day.

Add the following article:

1.20-1.05.23—Requests for Information (RFIs):

The Contractor shall forward all RFIs to the Engineer in writing (facsimile or other electronic document) for review. The Engineer will forward the RFI to the Designer for review. Upon receipt of an RFI, the Designer will attempt to determine if additional information is required from the Contractor to respond to the RFI, and request said information from the Engineer.

All other RFIs will be responded to within 10 calendar days of receipt by the Designer.

1.20-1.05.24--Project Meetings:

Delete the third paragraph under subsection 1.

Delete the second paragraph under subsection 2 and replace with the following:

"The meeting participants shall review progress of other construction activities and preparations for the particular activity under consideration, including requirements of Contract documents, related requests for interpretations, related construction orders, purchases, deliveries, submittals, review of mockups, possible conflicts, compatibility problems, time schedules, weather limitations, manufacturer's written recommendations, warranty requirements, compatibility of materials, acceptability of substrates, temporary facilities and controls, space and access limitations, regulations of authorities having jurisdiction, testing and inspecting requirements, installation procedures coordination with other work, required performance results, protection of adjacent work, and protection of construction and personnel."

Delete the second, third and fourth paragraph under subsection 3 and replace with the following:

"The Contractor shall provide the Engineer with a detailed agenda for the proposed

meeting, specifying what topics will be covered. In addition to representatives of the Engineer, each subcontractor, supplier or other entity concerned with current progress or involved in planning, coordination or performance of future activities shall attend these meetings. All participants at the meeting shall be familiar with the Project and authorized to conclude matters relating to the Project.

At each progress meeting, the participants shall (1) review items of significance that could affect progress; (2) discuss topics appropriate to the current status of the Project; (3) review progress since the last meeting; (4) determine whether each activity is on time, ahead of schedule, or behind schedule, in relation to the Contractor's Construction Schedule; (5) determine how to expedite any Project work that may be behind schedule; (6) discuss whether or not schedule revisions are required to ensure that current and subsequent activities will be completed within the Contract time; and (7) review the present and future needs of each entity represented at the meeting, including such items as interface requirements, time, sequences, deliveries, off-site fabrication problems, access, site utilization, temporary facilities and controls, hours of work, hazards and risks, housekeeping, quality and work standards, status of correction of deficient items, field observations, requests for interpretations, status of proposal requests, pending changes, status of construction orders, and documentation of information for payment requests. The Engineer will distribute copies of minutes of the meeting to the Designer and the Contractor. The Contractor shall distribute copies to parties who were or should have been at the meeting."

*Delete article **1.20-1.05.25—Schedules and Reports** in its entirety*

1.20-1.06.08 - Warranties:

Delete the eighth and ninth paragraph and replace with the following:

"The Contractor shall:

(a) Bind warranties in heavy-duty, commercial-quality, durable 3-ring vinyl-covered loose-leaf binders, thick enough to accommodate the contents, and sized to receive 8 1/2-inch x 11-inch paper (216-millimeter x 279-millimeter) paper.

(b) Identify the binder's contents on the binder's front and spine with the typed or printed title "WARRANTIES," the Project title or name, and the name of the Contractor.

(c) Provide a heavy paper divider with a tab for each separate warranty.

(d) Mark the tab to identify the related product or installation.

(e) Provide a typed description of the product or installation, including the name of the product, and the name, address and telephone number of the Contractor or pertinent subcontractor.

(f) Furnish to the Department a written warranty for all Project work accompanied by a cover letter with the following contents:

[Addressed to:]

Commissioner of Transportation
Department of Transportation
P.O. Box 317546
Newington, Connecticut 06131-7546

Project Title and Number

[We] hereby warrant all materials and workmanship for all work performed under this Contract for a period of one (1) year from [date of issuance of C.O.C.] against failures of workmanship and materials in accordance with the Contract. Furthermore, as a condition of this warranty, [we] agree to have in place all insurance coverage identified in the Contract for the performance of any warranty work.

[Signature:] [Name of authorized signatory]
[Title]

(g) Submit to the Engineer, upon completion of installation of materials or assemblies that are required to have either a flame-rating or a fire-endurance hourly rating, a detailed letter certifying that the required rating has been attained.

Upon determination by the Engineer that Project work covered by a warranty has failed, the Contractor shall replace or rebuild the work to an acceptable condition complying with Contract requirements. The Contractor is responsible for the cost of replacing or rebuilding defective construction or components and those which may have needed to be damaged or removed in order to cure the defective work including costs of material, equipment, labor, and material disposal, regardless of whether or not the State has benefited from use of the work through a portion of its anticipated useful service life. The Contractor shall respond to the Project Site when Project work covered by a warranty has failed within 3 calendar days, unless in the Engineer's opinion said failure is deemed to be an emergency, in which case the Contractor shall respond to the Project Site as directed by the Engineer."

1.20-1.08.03—Prosecution of Work:

Under subsection '3. Cutting and Patching,' delete the heading 'B. Protection of Structural Elements' and replace with the following:

"**B. Protection:**"

Move the existing first and second paragraphs to under the following subparagraph:

"1. Structural Elements:"

Add the following after the first paragraph under B:

"2. Operational Elements: The Contractor shall not cut and patch operating elements and related components in a manner that results in their reducing their capacity to perform as intended or that results in increased maintenance or decreased operational life or safety.

3. Miscellaneous Elements: The Contractor shall not cut and patch miscellaneous elements or related components in a manner that could change their load-carrying capacity, that results reducing their capacity to perform as intended, or that results in increased maintenance or decreased operational life or safety."

Add the following after subsection 3:

"4. Selective Demolition:

A. Definitions:

Remove: The Contractor shall detach materials from existing construction and legally dispose or recycle them off-site, unless indicated to be removed and salvaged or removed and reinstalled. Except for materials indicated to be reused, salvaged,

reinstalled, or otherwise indicated to remain Engineer's property, demolished materials shall become Contractor's property and shall be removed from the Project Site.

Remove and Salvage: The Contractor shall detach materials from existing construction and deliver them to Engineer. The Engineer reserves the right to identify other materials for salvage during the course of demolition.

Remove and Reinstall: The Contractor shall detach materials from existing construction, prepare them for reuse, and reinstall them where indicated.

Existing to Remain: Existing materials of construction that are not to be removed and that are not otherwise indicated to be removed, removed and salvaged, or removed and reinstalled.

B. Approval Process:

The Contractor shall submit pre-demolition photographs to the Engineer prior to the commencement of Project work to show existing conditions of adjoining construction and site improvements, including finish surfaces, that might be misconstrued as damage caused by selective demolition operations.

Well in advance of performing any selective demolition on the Project, the Contractor shall submit to the Engineer a proposal describing the procedures that the Contractor intends to use for same.

The Contractor shall include the following information, as applicable, in its proposal: (1) detailed sequence of selective demolition and removal work with starting and ending dates for each activity while ensuring that the Engineer's on-site operations are not disrupted; (2) interruption of utility services; (3) coordination for shutoff, capping, and continuation of utility services; (4) use of elevators and stairs; (5) locations of temporary partitions and means of egress; (6) coordination of Engineer's continuing occupancy of

portions of existing building and of Engineer's partial occupancy of completed Project work; and (7) means of protection for items to remain and items in path of waste removal from building.

The Contractor shall comply with (1) governing EPA notification regulations before beginning selective demolition; (2) hauling and disposal regulations of authorities having jurisdiction; (3) ANSI A10.6; and (4) NFPA 241.

The Engineer will conduct a Pre-Demolition Meeting at the Project site in accordance with Article 1.20-1.05.24. Said meeting will review the methods and procedures related to selective demolition including, but not limited to, the following: (1) an inspection and discussion of the condition of construction to be selectively demolished; (2) a review of the structural load limitations of the existing structure; (3) a review and finalization of the

selective demolition schedule and a verification of the availability of materials, demolition personnel, equipment, and facilities needed to make progress and avoid delays; (4) a review of requirements of Project work performed by other trades that rely on substrates exposed by selective demolition operations; and (5) a review of areas where existing construction is to remain and requires protection.

C. Repair Materials:

The Contractor shall comply with Article 1.20-1.08.03 subsection 3E for repair materials and shall comply with material and installation requirements specified in other Contract provisions.

D. Examination:

The Contractor shall (1) verify that utilities have been disconnected and capped; (2) survey existing conditions and correlate with requirements indicated to determine extent of selective demolition required; (3) inventory and record the condition of items to be removed and reinstalled and items to be removed and salvaged; (4) investigate and measure the nature and extent of unanticipated mechanical, electrical, or structural elements that conflict with intended function or design and submit a written report to

Engineer; and (5) perform surveys as the Project work progresses to detect hazards resulting from selective demolition activities.

E. Utility Services:

The Contractor shall (1) maintain existing utility services indicated to remain and protect them against damage during selective demolition operations; (2) not interrupt existing utilities serving occupied or operating facilities unless authorized in writing by the Engineer; (3) provide temporary services during interruptions to existing utilities, as acceptable to Engineer; (4) provide at least 3 calendar days notice to the Engineer if shutdown of service is required during changeover; and (5) locate, identify, disconnect,

and seal or cap off indicated utilities serving areas to be selectively demolished. The Contractor shall arrange to shut off indicated utilities with utility companies. If utility services are required to be removed, relocated, or abandoned, before proceeding with selective demolition the Contractor shall provide temporary utilities that bypass area of selective demolition and that maintain continuity of service to other parts of building. The Contractor shall cut off pipe or conduit in walls or partitions
to be removed and shall cap, valve, or plug and seal remaining portion of pipe or conduit after bypassing.

The Contractor shall refer to other Contract provisions for shutting off, disconnecting, removing, and sealing or capping utilities. The Contractor shall not start selective demolition work until utility disconnecting and sealing have been completed and verified by the Engineer in writing.

F. Preparation:

The Contractor shall conduct selective demolition and debris-removal operations to ensure minimum interference with adjacent occupied and used facilities on the Project site. The Contractor shall not disrupt the Owner's operations without the Engineer's permission. The Contractor shall protect existing site improvements, appurtenances, and landscaping to remain.

The Contractor shall provide temporary barricades and other protection required to prevent injury to people and damage to adjacent buildings and facilities to remain. The Contractor shall provide temporary weather protection, during interval between selective demolition of existing construction on exterior surfaces and new construction, to prevent water leakage and damage to structure and interior areas. The Contractor shall protect walls, ceilings, floors, and other existing finish work that are to remain or that are
exposed during selective demolition operations. The Contractor shall cover and protect furniture, furnishings, and equipment that have not been removed.

The Contractor shall provide temporary enclosures for protection of existing building

and construction, in progress and completed, from exposure, foul weather, other construction operations, and similar activities. The Contractor shall provide temporary weathertight enclosure for building exterior. Where heating is needed and permanent enclosure is not complete, the Contractor shall provide insulated temporary enclosures and shall coordinate enclosure with ventilating and material drying or curing requirements to avoid dangerous conditions and effects.

The Contractor shall erect and maintain dustproof partitions and temporary enclosures to limit dust and dirt migration and to separate areas from fumes and noise.

The Contractor shall provide and maintain interior and exterior shoring, bracing, or structural support to preserve stability and prevent movement, settlement, or collapse of construction to remain, and to prevent unexpected or uncontrolled movement or collapse of construction being demolished. The Contractor shall strengthen or add new supports when required during progress of selective demolition.

G. Pollution Controls:

The Contractor shall comply with governing regulations pertaining to environmental protection.

The Contractor shall not use water when it may create a hazardous or objectionable condition such as ice, flooding, or pollution.

The Contractor shall remove and transport debris in a manner that will prevent spillage on adjacent surfaces and areas. The Contractor shall remove debris from elevated portions of building by chute, hoist, or other device that will convey debris to grade level in a controlled descent.

The Contractor shall clean adjacent structures and improvements of dust, dirt, and debris caused by selective demolition operations. The Contractor shall return adjacent areas to condition existing before selective demolition operations began.

H. Performance:

The Contractor shall not use explosives for demolition purposes.

The Contractor shall demolish and remove existing construction only to the extent required by new construction and as indicated. The Contractor shall (1) proceed with selective demolition systematically; (2) neatly cut openings and holes plumb, square, and true to dimensions required; (3) use cutting methods least likely to damage

remaining or adjoining construction; (4) use hand tools or small power tools designed for sawing or grinding, not hammering and chopping, to minimize disturbance of adjacent surfaces; (5) temporarily cover openings to remain; (6) cut or drill from the

exposed or finished side into concealed surfaces to avoid marring existing finished surfaces; (7) not use cutting torches until work area is cleared of flammable materials; (8) verify condition and contents of concealed spaces such as duct and pipe interiors before starting flame-cutting operations; (9) maintain fire watch and portable fire-suppression devices during flame-cutting operations; (10) maintain adequate ventilation when using cutting torches; (11) remove decayed, vermin-infested, or otherwise dangerous or unsuitable materials and promptly dispose of off-site; (12) remove structural framing members and lower to ground by method suitable to avoid free fall and to prevent ground impact or dust generation; (13) locate selective demolition equipment and remove debris and materials so as not to impose excessive loads on supporting walls, floors, or framing; and (14) dispose of demolished items and materials promptly.

The Contractor shall comply with the Engineer's requirements for using and protecting walkways, building entries, and other building facilities during selective demolition operations.

The Contractor shall demolish and remove foundations and other below grade structures completely unless otherwise indicated on the plans. The Contractor shall fill below grade areas and voids resulting from demolition of structures with granular fill materials. Prior to placement of fill materials, the Contractor shall ensure that the areas to be filled are free of standing water, frost, frozen material, trash, and debris. After fill placement and compaction, grade surface to meet adjacent contours and provide flow

to surface drainage structures. Backfilling and grading related to demolition is included in the Major Lump Sum Item (MLSI) for the Project. There will be no separate payment for this backfilling and grading.

The Contractor shall (1) demolish concrete in sections; (2) cut concrete at junctures with construction to remain to the depth shown on the Contract plans and at regular intervals using power-driven saw; and (3) remove concrete between saw cuts.

The Contractor shall (1) demolish masonry in small sections; (2) cut masonry at junctures with construction to remain using power-driven saw; and (3) remove masonry between saw cuts.

The Contractor shall (1) saw-cut perimeter of concrete slabs-on-grade to be demolished as shown on the Contract plans; and (2) break up and remove concrete slabs-on-grade.

The Contractor shall (1) remove floor coverings and adhesive according to recommendations in RFCI-WP and its Addendum; and (2) remove residual adhesive and prepare substrate for new floor coverings by one of the methods recommended by RFCI.

The Contractor shall (1) only remove existing roofing in one day to the extent that it can

be covered by new roofing; and (2) refer to other Contract provisions for new roofing requirements.

The Contractor shall remove air conditioning equipment without releasing refrigerants.

I. Reuse of Building Elements:

The Contractor shall not demolish building elements beyond what is indicated on the plans without the Engineer's approval.

J. Removed and Salvaged Materials:

Unless otherwise directed by the Engineer, the Contractor shall (1) store materials in a secure area until delivery to the owner; (2) transport materials to the owner's storage area off-site; and (3) protect materials from damage during transport and storage.

K. Removed and Reinstalled Materials:

Unless otherwise directed by the Engineer, the Contractor shall (1) clean and repair materials to functional condition adequate for intended reuse; (2) paint equipment to match the color of new equipment; (3) protect materials from damage during transport and storage; and (4) reinstall items in locations indicated complying with installation requirements for new materials and equipment and providing connections, supports, and miscellaneous materials necessary to make item functional for use indicated.

L. Existing Materials to Remain:

The Contractor shall protect construction indicated to remain against damage and soiling during selective demolition.

The Contractor shall drain piping and cap or plug piping with the same or a compatible piping material for piping to be abandoned in place.

The Contractor shall cap or plug ducts with the same or a compatible ductwork material for ducts to be abandoned in place.

The Contractor shall cut and remove concealed conduits and wiring to be abandoned in place 2-inches (50-mm) below the surface of the adjacent construction, cap the conduit end, and patch the surface to match the existing finish. The Contractor shall cut existing conduits installed in concrete slabs to be abandoned in place flush with the top of the slab and fill conduit end with a minimum of 4-inches (100-mm) of concrete.

M. Patching and Repairing:

The Contractor shall comply with Article 1.20-1.08.03 subsection 3H for patching and

repairing damage to adjacent construction caused by selective demolition operations.

N. Disposal of Demolished Materials:

The Contractor shall (1) not allow demolished materials to accumulate or be sold on the Project Site; (2) not burn demolished materials on the Project Site; and (3) promptly and legally dispose or recycle demolished materials off the Project Site."

1.20-1.08.05--Personnel and Equipment:

Replace "FM with "FMG" in subsection (a)

Add the following article:

"**1.20-1.08.12--Semi-Final and Final Inspections:**

1. Semi-Final Inspection: Before requesting the Semi-Final Inspection, the Contractor shall show 100% completion for all Project work claimed as complete. The Contractor shall submit final test/adjust/balance records including the final air and water balance report. For all incomplete Project work, the Contractor shall prepare its own "Punch List" of the incomplete items and reasons the work is not complete. The Contractor shall submit final test/adjust/balance records including the final air and water balance report.

On receipt of a Contractor request for inspection, the Engineer will proceed with inspection or notify the Contractor of unfulfilled requirements. The Engineer will prepare a "Punch List" of unfilled, substandard, or incomplete items. During this inspection, the Contractor shall have all technicians necessary to demonstrate the complete operation of all systems on-site. Examples of such systems include, but are not limited to, the following: boiler, HVAC, fire alarm, and building automation. The Engineer will advise the Contractor of the construction that must be completed or corrected before the issuance of the C.O.C. Results of the completed inspection will form the basis of requirements for the Final Inspection. The Engineer reserves the right to issue the C.O.C. after the Semi-Final Inspection if there are no Building Code or Fire Code compliance issues or any major "Punch List" items.

2. Final Inspection: Before requesting Final Inspection for issuance of the C.O.C., the Contractor shall: (1) submit specific warranties, maintenance service agreements, final certifications and similar documents; (2) submit Record Drawings, Record Specifications, operations and maintenance manuals, final project photographs, property surveys, and similar final record information; (3) deliver spare parts; (4) make final changeover of permanent locks and deliver the keys to the Engineer; (5) complete start-up testing of systems; (6) train the owner's operation and maintenance personnel; (7) discontinue or change over and remove temporary facilities from the Project Site, along with construction tools, mock-ups, and similar elements; (8) complete final

cleaning requirements, including touch-up painting; (9) touch-up and otherwise repair and restore marred exposed finishes to eliminate visual defects; (10) submit a certified copy of the Engineer's “Punch List” of items to be completed or corrected, stating that each item has been completed or otherwise resolved for acceptance, and the list has been endorsed and dated by the Engineer; (11) submit final meter readings for utilities, a measured record of stored fuel, and similar data as of the date of Final Inspection, or when the Engineer took possession of and responsibility for corresponding elements of the Project work; and (12) install permanent electrical service. The Contractor shall

install permanent electrical service prior to Semi-Final Inspection if requested by the Engineer, or if necessary for the Engineer or Contractor to perform testing of building and other related systems and equipment to certify acceptance and completion of Project work. The Contractor shall submit all outstanding items or unacceptable submissions from the Semi-Final Inspection, or other outstanding items required for submittal, prior to the Final Inspection.

On receipt of a Contractor request for inspection, the Engineer will proceed with inspection and notify the Contractor of unfulfilled requirements.”

1.20 – 1.08.13 – Termination of the Contractor’s Responsibility:

Add subsection 3 as follows:

“**3. Insurance Coverage:** The Contractor shall have in place all insurance coverage identified in Article 1.03.07 for the performance of any warranty work.”

1.20-1.08.14--Acceptance of Project:

Add the following to subsection 2 under the heading “Equipment and Systems Maintenance Manual:”

“(j) Copies of maintenance agreements with service agent name and telephone number.”

Add the following paragraph in subsection 3 after the second paragraph:

“The Contractor shall provide a syllabus prior to the training to ensure that the appropriate owner’s operation and maintenance personnel are in attendance.”

Delete the last paragraph and replace with the following:

The Contractor shall submit to the Engineer for approval, a qualified commercial videographer to videotape the training sessions. The videographer shall be a firm or an individual of established reputation that has been regularly engaged as a professional videographer for not less than 3 years.

The Contractor shall video record each training session and provide said video in DVD format to the Engineer for the owner's future use."

Add the following section:

"1.20-1.09.06—Partial Payments:

With each payment request under the MLSI, the Contractor shall submit AIA Form G702 (Application and Certificate of Payment) and Form G703 (Continuation Sheet). The Contractor is not required to obtain the Architect's signature on Form G702. Once approved by the Engineer, the Forms G702 and G703 become the basis of payment under the MLSI."

Add the following section:

"1.20-9.75.04—Method of Measurement:

Mobilization as defined in Article 1.20-1.03.01 will be paid in the manner described hereinafter; however, the determination of the total contract price earned shall not include the amount of mobilization earned during the period covered by the current monthly estimate – but shall include amounts previously earned and certified for payment:

1. When the first payment estimate is made, 25 percent of the "Mobilization" line item will be certified for payment.

2. When the Baseline Schedule, as specified under Section 1.05.08, is accepted, 50 percent of the "Mobilization" line item, minus any previous payments, will be certified for payment.

3. When 10 percent of the total original contract price is earned and the Baseline Schedule, as specified under Section 1.05.08, is accepted, 75 percent of the "Mobilization" line item, minus any previous payments, will be certified for payment.

4. When 30 percent of the total original contract price is earned and the Baseline Schedule, as specified under Section 1.05.08, is accepted, 100 percent of the "Mobilization" line item, minus any previous payments, will be certified for payment."

CONNECTICUT
SUPPLEMENTAL SPECIFICATION
SECTION 2.02
ROADWAY EXCAVATION, FORMATION OF EMBANKMENT AND DISPOSAL OF SURPLUS MATERIAL

2.02.04 – Method of Measurement:

Second to last Paragraph - replace the last sentence with the following:

"Bituminous parking areas are considered as bituminous concrete pavement."

CONNECTICUT
SUPPLEMENTAL SPECIFICATION
SECTION 2.05
TRENCH EXCAVATION

Delete the entire Section and replace with the following:

2.05.01--Description:

Paragraph 2 - Delete the only sentence and replace with the following:

2) The removal of stormwater drainage structures, stormwater pipes and appurtenances beyond the limits of the roadway and structure excavation.

Sub article 2 - Rock in Trench - Delete the only sentence and replace with the following:

(2) Rock, insofar as it applies to trench excavation, shall be defined as rock in definite ledge formation, boulders, or portions of boulders, cement masonry structures, concrete structures, reinforced concrete pipe, Portland cement concrete pavement or base, of 1/2 cubic yard (0.5 cubic meters) or more in volume, removed as indicated or directed from within the payment lines for trench excavation.

2.05.05 -Basis of Payment

Paragraph 13 - Delete the entire sentence “There will be no direct payment for the plugging of existing pipes....." and replace with the following:

There will be no direct Payment for the plugging of existing pipes, removal and disposal of metal or plastic pipes or for the breaking up of floors in drainage structures being abandoned. The cost shall be included in the contract unit prices of the drainage and excavation items.

CONNECTICUT
SUPPLEMENTAL SPECIFICATION
SECTION 3.04
PROCESSED AGGREGATE BASE

Delete the entire Section and replace with the following:

3.04.01--Description: The base shall consist of a foundation constructed on the prepared subbase or subgrade in accordance with these specifications and in conformity with the lines, grades, compacted thickness and typical cross-section as shown on the plans.

3.04.02--Materials: All materials for this work shall conform to the requirements of Article M.05.01.

3.04.03--Construction Methods: Only one type of coarse aggregate shall be used on a project unless otherwise permitted by the Engineer.

Prior to placing the processed aggregate base, the prepared subbase or subgrade shall be maintained true to line and grade, for a minimum distance of 200 feet (60 meters) in advance of the work. None of the aggregate courses shall be placed more than 500 feet (150 meters) ahead of the compaction and binding operation on that particular course.

The processed aggregate base shall be spread uniformly by a method approved by the Engineer. The thickness of each course shall not be more than 4 inches (100 millimeters) after compaction, unless otherwise ordered.

After the aggregate is spread, it shall be thoroughly compacted and bound by use of equipment specifically manufactured for that purpose. Rollers shall deliver a ground pressure of not less than 300 pounds per lineal inch (52.5 newtons/millimeter) of contact width and shall have a weight (mass) not less than 10 tons (9100 kilograms). Vibratory units shall have a static weight (mass) of not less than 4 tons (3650 kilograms). Water may be used during the compaction and binding operation and shall be applied from an approved watering device. The compacting and binding operation shall begin at the outside edges, overlapping the shoulders for a distance of not less than 6 inches (150 millimeters) and progress towards the middle, parallel with the centerline of the pavement. The work shall cover the entire surface of the course with uniform overlapping of each preceding track or pass. Areas of super-elevation and special cross slope shall be compacted by beginning at the lowest edge and proceeding towards the higher edge, unless otherwise directed by the Engineer. The compacting and binding operation shall be continued until the voids in the aggregates have been reduced to provide a firm and uniform surface satisfactory to the Engineer. The amount of compactive effort shall in no case shall be less than four (4) complete passes of the compacting and binding operations. All aggregate shall be completely compacted and bound at the end of each day's work or when traffic is to be permitted to operate on the

road. The dry density of each layer of processed aggregate base after compaction shall not be less than 95 percent of the dry density for that material when tested in accordance with AASHTO T180, Method D.

Should the subbase or subgrade material become churned up or mixed with the processed aggregate base at any time, the Contractor shall, without additional compensation remove the mixture. The Contractor shall add new subbase material, if required, and reshape and recompact the subbase in accordance with the requirements of Article 2.12.03. New aggregate material shall be added, compacted and bound, as hereinbefore specified, to match the surrounding surface.

Any surface irregularities which develop during, or after work on each course, shall be corrected by loosening material already in place and removing or adding aggregate as required. The entire area, including the surrounding surface, shall be re-compacted and rebound until it is brought to a firm and uniform surface satisfactory to the Engineer.

3.04.04--Method of Measurement: Processed Aggregate Base will be measured horizontally in–place after final grading and compaction. Materials placed beyond the horizontal limits indicated on the plans will not be measured for payment.

The total thickness shall be as indicated on the plans, or as ordered by the Engineer and within a tolerance of minus three-fourths of an inch (-$^{3}/_{4}$") to plus one-half inch (+ $^{1}/_{2}$") (-19 millimeters to +13 millimeters).

Measurements to determine the thickness will be taken by the Engineer at intervals of 500 feet (150 meters) or less, along lanes, and shall be considered representative of the lane. For the purpose of these measurements, a shoulder will be considered a lane.

If a thickness measurement is taken and found deficient, the Engineer will take such additional measurements as he considers necessary to determine the longitudinal limits of the deficiency. Areas not within allowable tolerances shall be corrected, as ordered by the Engineer, without additional compensation to the Contractor.

3.04.05--Basis of Payment: This work will be paid for at the contract unit price per cubic yard for "Processed Aggregate Base", complete in place, which price shall include all materials, tools, equipment and work incidental thereto.

Pay Item	Pay Unit
Processed Aggregate Base	c.y. (cu. m)

CONNECTICUT
SUPPLEMENTAL SPECIFICATION
SECTION 4.01
CONCRETE PAVEMENT

Article 4.01.03-A. Composition:

Add the following new paragraph before the last paragraph:

"The temperature of the concrete at the time of placement shall not be less than 60˚ F (15.5˚ C) or greater than 90˚ F (32˚ C). For pumped concrete, the temperature shall be determined at the placement end of the pump line. The temperature of the concrete shall be determined in accordance with ASTM C1064."

CONNECTICUT
SUPPLEMENTAL SPECIFICATION
SECTION 5.14
PRESTRESSED CONCRETE MEMBERS

Article 5.14.03 – Construction Methods:

Change the last sentence of 5.14.03-16 – Methods and Equipment to read:

"The results of this investigation, including computations, shall be submitted to the Engineer."

CONNECTICUT
SUPPLEMENTAL SPECIFICATION
SECTION 6.01
CONCRETE FOR STRUCTURES

Article 6.01.02 – Materials:

Add the following:

Material for stay-in-place metal forms shall be made of zinc-coated (galvanized) steel sheet conforming to ASTM Specification A653, Structural Steel (SS) Grade 33 through 80 (ASTM Specification A653M, Structural Steel (SS) Grade 250 through 550). The minimum gage thickness shall be 20 gage. Coating weight shall conform to ASTM A924, Class G235 (ASTM A924M, Class Z700) and shall otherwise meet all requirements relevant to steel stay-in-place metal forms and the placing of concrete as specified herein and as noted on the contract drawings.

Material for the form supports shall be fabricated from the same material and conform to the same material requirements as the forms themselves or they shall be fabricated from structural steel conforming to the requirements of ASTM A36 (ASTM A36M) which shall be hot-dip galvanized in accordance with ASTM A123 (ASTM A123M).

Lightweight filler material shall be as recommended by the form's manufacturer.

Subarticle 6.01.03 – 3, Forms:

Add the following:

Stay-in-Place Metal Form System:

Stay-in-place metal forms shall have a minimum depth of form valley equal to two inches (50 millimeters). The forms shall have closed tapered ends. Lightweight filler material shall be used in the form valleys.

The metal forms shall be designed on the basis of dead load of the form, reinforcement and the plastic concrete, including the additional weight of concrete due to the deflection of the metal forms, plus 50 pounds per square foot (2.40 kilopascals) for construction loads. The allowable stress in the corrugated form and the accessories shall not be greater than 0.725 times the yield strength of the furnished material and the allowable stress shall not exceed 36,000 psi (250 megapascal). The span for design and deflection shall be the clear distance between edges of the beams or girders less two inches (50 millimeters) and shall be measured parallel to the form flutes. Maximum deflection of the forms under the weight of the plastic concrete, reinforcement, and forms shall not exceed 1/180 of the form span or 0.5 inches (13 millimeters), whichever is less. The permissible form camber shall be based on the actual dead load condition. Camber shall not be used to compensate for deflection in excess of the foregoing limits.

Form support angles shall be designed as a cantilever. The horizontal leg of the form's support angle shall not be greater than 3 inches (75 millimeters).

Before fabricating any material, the Contractor shall submit working drawings to the Engineer for review in accordance with Article 1.05.02-2, Working Drawings. These drawings shall include the proposed method of form construction, erection plans including weld procedure(s), material lists, material designation, gage of all materials, and the details of corrugation. Also, copies of the form design computations shall be submitted with the working drawings.

Form supports shall be used and no stay-in-place metal forms shall be placed over or be directly supported by the top flanges of beams or girders. The form supports may be supported by or be attached to the top flanges. Stay-in-place metal forms shall not be used in bays where longitudinal slab construction joints are located. Stay-in-place metal forms shall not be used under cantilevered slabs such as the overhang outside of fascia members.

Welding to the top flanges of steel beams and girders is not allowed in the areas where the top flanges are in tension, or as indicated on the plans. Alternate installation procedures shall be submitted addressing this condition.

Drilling of holes in prestressed concrete beams or the use of power-actuated tools on the prestressed concrete beams for fastening of the form supports to the prestressed concrete beams will not be permitted. No welding will be permitted on the reinforcing steel in the prestressed units.

All edges of openings cut for drains, pipes, and similar appurtenances shall be independently supported around the entire periphery of the opening.

All fabricated stay-in-place metal forms shall be unloaded, stored, and handled in such a manner as to preclude damage to the forms. Damaged material shall be replaced at no additional cost. Any exposed form or form support metal where the galvanized coating has been damaged, shall be thoroughly cleaned, wire brushed, then coated with two coats of a zinc dust-zinc oxide primer, FS No. TT-P-641d, Type II, as directed by the Engineer.

All fabricated stay-in-place metal forms shall be stored at the project site at least four inches (100 millimeters) above the ground on platforms, skids or other suitable supports and shall be protected against corrosion and damage.

Forms shall be installed from the topside in accordance with the manufacturer's placing plans, recommended details, and printed instructions. Forms shall be constructed to the lines, grades, shapes, and dimensions shown on the plans, unless otherwise directed by the Engineer. Form supports shall ensure that forms retain their correct dimensions and positions during use at all times. Form supports shall provide vertical adjustment to maintain design slab thickness at the crest of corrugation, to compensate for variations in camber of beams and girders, and to allow for deflections.

Field cutting of form sheet metal shall be made by a steel cutting saw. Supports, closures and cut-outs shall be cut with shears or saw. No flame cutting will be permitted.

All welding shall be accomplished by Connecticut certified welders in accordance with Subarticle 6.03.03 – 6, Welding.

The steel form supports shall be placed in direct contact with the flange of stringer or floor beam flanges and attached by bolts, clips, welding where permitted, or other approved means. Form sheets shall not be permitted to rest directly on the top of the stringer or floor beam flanges. Forms shall be securely fastened to form supports with self-drilling fasteners and shall have a minimum bearing length of one inch (25 millimeters) at each end.

In the areas where the form sheets lap, the form sheets shall be securely fastened to one another by fasteners at a maximum spacing of eighteen inches (450 millimeters). The ends of the form sheets shall be securely attached to the support angles with fasteners at a maximum spacing of eighteen inches (450 millimeters) or two corrugation widths, whichever is less. Welding of forms to supports is not allowed.

The depth of the concrete slab shall be as shown on the plans and the corrugated forms shall be placed so that the top of the corrugation will coincide with the bottom of the deck slab. No part of the forms or their supports shall protrude into the slab. All reinforcement in the bottom reinforcement mat shall have a minimum concrete cover of one inch (25 millimeters) unless noted otherwise on the plans.

The completed stay-in-place metal form system shall be sufficiently tight to prevent leakage of mortar or concrete.

Where forms or their installation are unsatisfactory in the opinion of the Engineer, either before or during placement of the concrete, the Contractor shall correct the defects before proceeding with the construction work. The cost of such corrective work shall be at the sole expense of the Contractor.

There will be no direct payment for the cost of the forms and form supports, or any material, tools, equipment, or labor incidental thereto, but the cost shall be considered included in the contract unit price per cubic yard (cu. m) for “Class ‘F’ Concrete”.

<u>Article 6.01.03-8. Placing Concrete:</u>

Add the following new paragraph after the first paragraph:

“The temperature of the concrete at the time of placement shall not be less than 60˚ F (15.5˚ C) or greater than 90˚ F (32˚ C). For pumped concrete, the temperature shall be determined at the placement end of the pump line. The temperature of the concrete shall be determined in accordance with ASTM C1064.”

Subarticle 6.01.03 – 9, Concrete for Bridge Decks:

Add the following:

Screed and runway supports shall not be located on any stay-in-place metal form sheets, form supports or reinforcing steel.

Concrete shall not be placed on the forms to a depth greater than twelve inches (300 millimeters) above the top of the forms. Concrete shall not be dropped more than three feet (1 meter) above the top of the forms, beams or girders.

CONNECTICUT
SUPPLEMENTAL SPECIFICATION
SECTION 6.03
STRUCTURAL STEEL

Delete the entire section and replace it with the following:

SECTION 6.03
STRUCTURAL STEEL

Description: Work under this item shall consist of furnishing, fabricating, transporting, storing, handling and erecting of structural steel of the type and size designated, as shown on the plans, as directed by the Engineer and in accordance with these specifications.

All work except as stated in the following paragraph shall conform to the requirements of the AASHTO LRFD Bridge Construction Specifications and the ANSI/AASHTO/AWS D1.5 – Bridge Welding Code.

All work subject to railroad loading shall conform to AREMA and the ANSI/AASHTO/AWS D1.5 – Bridge Welding Code.

Materials: The materials for this work shall conform to the requirements of Section M.06.

Materials for this work shall be stored off the ground before, during, and after fabrication. It shall be kept free from dirt, grease and other contaminants and shall be reasonably protected from corrosion. In addition, weathering steel shall be stored as to allow free drainage and promote the development of the oxide coating and a uniform appearance.

Construction Methods:

1. Pre-qualification:

(a) Fabricators producing material for Department projects under this item are required to have as a minimum, an active AISC Certification for Simple Steel Bridges. For fabrication of material for use on bridges other than un-spliced rolled beam bridges, AISC Major Steel Bridge Certification is required. If so noted on the plans, additional AISC endorsement for fabrication of fracture critical members is also required.

(b) Field Welders: Prior to working on material for Department projects under this specification, all field welders, field welding operators, and field tackers must posses a valid welder certification card issued by the Department's Division of Materials Testing. If such person has not been engaged in welding operations on a Department project or

project acceptable to the Department within a period of six months, or if he cannot produce an approved welding certificate dated within the previous twelve months from a welding agency acceptable to the Engineer, he shall be required to re-qualify through examination. The Engineer may require re-qualification of anyone whose quality of work he questions.

2. Submittals:

(a) Shop Drawings: Prior to any fabrication, the Contractor shall submit shop drawings in accordance with Article 1.05.02-3 to the Engineer for review and approval. Shop drawings shall include a cambering procedure and diagram. In the case of trusses, the Contractor is responsible for calculation of the camber (lengthening and shortening) of all truss members.

(b) Shop Schedule: The Contractor shall submit a detailed shop fabrication schedule to the Engineer for review within 30 days of the notice to proceed unless otherwise agreed to by the Engineer. At a minimum the schedule shall include the start date, milestone dates, and completion date. Any significant changes shall be brought to the attention of the Engineer immediately.

(c) Welding Procedures: Prior to start of fabrication, all weld procedures shall be submitted to the Engineer for review and approval.

(d) Working Drawings for Falsework and Erection of Structural Steel: Prior to erecting any steel fabricated under this specification, the Contractor shall submit drawings and supporting calculations, including erection stresses, in accordance with Article1.05.02-2 to the Engineer. The design of temporary supports and falsework shall conform to the *AASHTO Specifications,* the *AASHTO Guide Design Specifications for Bridge Temporary Works* or any other standard acceptable to the Engineer. Falsework shall be of sufficient rigidity and strength to safely support all loads imposed and to produce in the finished structure the lines and grades indicated in the contract documents. The submittal shall include at a minimum:

- Title block with contract number, project identification number (PIN), town, and structure number and name.
- Plan of the work area showing support structures, roads, railroad tracks, Federal and State regulated areas as depicted on the plans, utilities or any other information relative to erection.
- A detailed narrative describing the erection sequence for main members and secondary members (cross frames, diaphragms, lateral bracing, portals, etc.), noting use of holding cranes or temporary supports, falsework, or bents.
- Delivery location of each girder.
- Location of each crane for each pick.
- Capacity chart for each crane and boom length used in the work.
- The capacity of the crane and of all lifting and connecting devices shall be adequate for the total pick load including spreaders and other materials. In the area of railroads and navigable waterways, the capacity shall be as required by Amtrak, Metro North, U.S. Coast Guard or other regulatory authorities. No picks shall be

allowed over vehicular or pedestrian traffic unless otherwise noted on the plans or permitted by the Engineer.

- Pick point location(s) on each member.
- Lifting weight of each member (including clamps, spreader beams, etc.)
- Lift and setting radius for each pick (or maximum lift radius).
- Description of lifting devices or other connecting equipment.
- Girder tie-down details or other method of stabilizing erected girders.
- Bolting requirements, including the minimum number of bolts and erection pins required to stabilize members during the erection sequence.
- Blocking details for stabilizing members supported on expansion bearings and on bearings that do not limit movement in the transverse direction.
- The method and location for temporary supports for field spliced or curved girders, including shoring, false work, holding cranes, guys, etc. The Engineer will review, but not approve details of temporary supports. The design, erection, and stability of these supports shall be the sole responsibility of the Contractor.
- Offsets necessary to adjust expansion bearings during erection to provide for temperature variance and dead load rotation.

The following notes shall be placed on the Erection Drawings:

- Cranes shall be operated in accordance with the Connecticut Department of Public Safety regulations.
- The Contractor shall be responsible for verifying the weight of each lift and for insuring the stability of each member during all phases of erection.
- Members shall be subject to only light drifting to align holes. Any drifting that results in distortion of the member or damage to the holes will be cause for rejection of the member.
- Field reaming of holes shall not be performed unless required by the Contract Drawing or approved by the Engineer.

The Contractor shall submit these documents to the Engineer at least 60 calendar days in advance of their proposed use. If the proposed method of erection requires additional members or modifications to the existing members of the structure, such additions and modifications shall be made by the Contractor at no expense to the State.

3. Shop Fabrication: Unless otherwise shown on the plans or indicated in the Special Provisions, Structural Steel shall be fabricated in accordance with the AASHTO LRFD Bridge Construction Specifications, amended as follows:

(a) Notification: The Contractor shall submit written notification to both the Engineer and the Director of Research and Materials Testing not less than 30 calendar days prior to start of fabrication. No material shall be manufactured or worked in the shop before the Engineer has been so notified. The notification shall include the name and location of the fabrication shop where the work will be done so that arrangements can be made for an audit of the facility and the assignment of a Department Quality Assurance inspector.

(b) Camber: All members shall be cambered prior to heat curving and painting. Rolled beams shall be heat cambered by methods approved by the Engineer. Plate girders shall be cambered by cutting the web to the prescribed shape with allowances for shrinkage due to cutting, welding, and heat curving. The fabricator is responsible to determine what allowances should be made. Rolled, plate-rolled, or fabricated sections shall be cambered to the total amount shown on the plans and within the camber deviation tolerances permitted for welded beams and girders, as indicated in the ANSI/AASHTO/AWS D1.5 Bridge Welding Code. The Contractor must submit to the Engineer for approval, a plan for corrective action if the actual camber is not within tolerance.

(c) Welding: Unless otherwise indicated on the plans or specifications, all work shall be performed in accordance with ANSI/AASHTO/AWS D1.5 – Bridge Welding Code.

(d) Preassembly of Field Connections: Field connections of main members of continuous beams, plate girders, bents, towers, rigid frames, trusses and arches shall be preassembled prior to erection as necessary to verify the geometry of the completed structure or unit and to verify or prepare field splices. The Contractor shall propose an appropriate method of preassembly for review and comment by the Engineer. The method and details of preassembly shall be consistent with the erection procedures shown on the working drawings and camber diagrams. As a minimum, the preassembly procedure shall consist of assembling three contiguous panels accurately adjusted for line and camber. Successive assemblies shall consist of at least one section or panel of the previous assembly plus two or more sections or panels added at the advancing end. In the case of structures longer than 150 feet (45 meters), each assembly shall not be less than 150 feet (45 meters) long regardless of the length of individual continuous panels or section. All falsework, tools, machinery and appliances, including drift pins and bolts necessary for the expeditious handling of the work shall be provided by the Contractor at no cost to the State.

(e) Inspection: The Contractor shall furnish facilities for the inspection of material and workmanship in the shop by the Engineer. The Engineer and his representative shall be allowed free access to the necessary parts of the premises.

The Engineer will provide Quality Assurance (QA) inspection at the fabrication shop to assure that all applicable Quality Control plans and inspections are adequately adhered to and maintained by the Contractor during all phases of the fabrication. A thorough inspection of a random selection of elements at the fabrication shop may serve as the basis of this assurance.

Prior to shipment to the project, each individual piece of structural steel shall be stamped or marked in a clear and permanent fashion by a representative of the fabricators' Quality Control (QC) Department to indicate complete final inspection by the fabricator and conformance to the project specifications for that piece. The stamp or mark must be dated. A Materials Certificate in accordance with Article 1.06.07 may be used in lieu of individual stamps or markings, for all material in a single shipment. The Materials Certificate must list each piece within the shipment and accompany the shipment to the project site.

Following the final inspection by the fabricator's QC personnel, the Engineer may select pieces of structural steel for re-inspection by the Department's QA inspector. Should non-conforming pieces be identified, all similar pieces must be re-inspected by the fabricator and repair procedure(s) submitted to the Engineer for approval. Repairs will be made at the Contractor's expense.

The pieces selected for re-inspection and found to be in conformance, or adequately repaired pieces, may be stamped or marked by the QA inspector. Such markings indicate the Engineer takes no exception to the pieces being sent to the project site. Such marking does not indicate acceptance or approval of the material by the Engineer.

Following delivery to the project site, the Engineer will perform a visual inspection of all material to verify shipping documents, fabricator markings, and that there was no damage to the material or coatings during transportation and handling.

The Engineer is not responsible for approving or accepting any fabricated materials prior to final erection and assembly at the project site.

(f) Nondestructive Testing: All nondestructive testing of structural steel and welding shall be performed as designated on the plans and in the project specifications. Such testing shall be performed by personnel approved by the Engineer.

Personnel performing Radiographic, Ultrasonic or Magnetic Particle testing shall be certified as a NDT Level II technician in accordance with the American Society for Non Destructive Testing (ASNT), Recommended Practice SNT-TC-1A.

Nondestructive testing shall be performed in accordance with the procedures and standards set forth in the AASHTO/AWS D1.5, Bridge Welding Code. The Department reserves the right to perform additional testing as determined by the Engineer.

All nondestructive testing shall be witnessed by an authorized representative of the Department. Certified reports of all tests shall be submitted to the Materials Testing Division for examination. Each certified report shall identify the structure, member, and location of weld or welds tested. Each report shall also list the length and location of any defective welds and include information on the corrective action taken and results of all retests of repaired welds.

Should the Engineer require nondestructive testing on welds not designated in the contract, the cost of such inspection shall be borne by the Contractor if the testing indicates that any weld is defective. If the testing indicates the weld to be satisfactory, the actual cost of such inspection will be paid by the Department.

(g) Marking: Each member shall be identified with an erection mark corresponding with the member identification mark on the approved shop drawings. Identification marks shall be impressed into the member with a low stress stamp in a location in accordance with standard industry practice.

(h) Shipping, Handling, Storage and Receiving: The Contractor shall make all arrangements necessary to properly load, transport, unload, handle and store all material. The Contractor shall furnish to the Engineer copies of all shipping statements. The weight (mass) of the individual members shall be shown on the statements. Members having a weight (mass) of more than 3 tons (2700 kilograms) shall have the weight (mass) marked thereon. All material shall be unloaded promptly upon delivery. The Contractor shall be responsible for any demurrage charges. Damage to any material during transportation, improper storage, faulty erection, or undocumented fabrication errors may be cause for rejection of said material at the project site. Top lateral bracing should be installed in tub girders prior to shipping and erection of the field pieces. All costs associated with any corrective action will be borne by the Contractor.

4. Field Erection: A meeting shall be held on site prior to any erection of structural steel. The Contractor shall name the person responsible for the steel erection work and provide copies of all crane operator licenses. Proposed equipment, rigging, timetable and methods shall be proposed at this meeting.

(a) Falsework: Any temporary work shall be constructed in conformance with the working drawings. The Contractor shall verify that the quality of materials and work employed are consistent with their design.

All girders shall be stabilized with falsework, temporary braces, or holding cranes until a sufficient number of adjacent girders are erected with all diaphragms and cross frames connected to provide necessary lateral support as shown in the erecting diagrams.

Adjustment shall be provided in the falsework and other temporary supports so that the temporary elevation of the structural steel provided by the falsework is consistent with the deflections that will occur as the structure is completed. The elevation of falsework shall be such as to support the girders at the cambered no-load elevation. Unloading of temporary supports should be performed such that all temporary supports at each cross section are unloaded uniformly. Unless specifically permitted by the Engineer, welding of falsework support brackets to structural steel is not allowed.

Unless erected by the cantilever method, truss spans shall be erected on blocking. The blocking shall be left in place until the tension chord splices are fully bolted and all other truss connections pinned and bolted and the proper geometric shape is achieved.

(b) Anchorages: Anchor bolts and similar materials which are to be placed during the erection of the structural steel shall be carefully and accurately set to the requirements of Article 6.01.03.

(c) Bearings: Bearing plates shall have a full and uniform bearing upon the substructure masonry. Bearing plates shall be placed upon bearing areas which are finished according to the requirements of Article 6.01.03.

Prefabricated pads conforming to the requirements of Article M-12.01 shall be installed unless specifically noted otherwise on the contract plans.

Each piece shall be the same size as the bearing plate it is to support and the holes to accommodate the anchor bolts shall be clearly and accurately punched before setting the pad in place.

In placing expansion bearings, due consideration shall be given to the temperature at the time of erection and stage construction requirements. The nuts of anchor bolts at expansion bearings shall be adjusted to permit the free movement of the span.

(d) Field Assembly: Members and components shall be accurately assembled as shown on the plans and any match marks shall be followed. The material shall be carefully handled so that no components will be bent, broken or otherwise damaged.

Hammering which will injure or distort the members is not permitted. Bearing surfaces and surfaces to be in permanent contact shall be cleaned before the members are assembled.

Cylindrical erection pins shall be 1/32 inch (0.8 mm) larger than the nominal diameter of the holes.

Splices and field connections of main stress carrying members shall be made with a minimum of 50% of the holes filled and tightened with high strength bolts before the lifting system is released. The bolts shall be installed uniformly throughout the connection. Lateral stability must be maintained until the deck is placed.

The Contractor shall ensure that girders are stable throughout the erection process. The stage of completeness of the bolted connections shall be considered when evaluating the strength and stability of the steel during erection. For Closed Box and Tub Girders the Contractor shall ensure that the cross- section shape of each box is maintained during erection. Top lateral bracing should be installed in tub girders prior to shipping and erection of the field pieces.

(e) Welded Connections:

Unless otherwise shown on the plans or indicated by the special provisions, welding of structural steel shall be done in accordance with “ANSI/AASHTO/AWS D1.5 Bridge Welding Code.”

The Contractor’s welding and inspection procedures for each type of field weld and field tacking must be submitted to the Engineer on the form designated by the Department. All procedures must be approved by the Materials Testing Division prior to any work and must be adhered to at all times.

Quality control is the responsibility of the Contractor. The Contractor must provide an AWS Certified Welding Inspector (CWI) in accordance with AWS D1.5. The CWI must be qualified and certified in accordance with the provisions of AWS QC1, *Standard for Qualification and Certification of Welding Inspectors.*

The CWI shall make visual inspection of all welds. The Contractor will perform magnetic particle inspection, ultrasonic testing inspection, or radiographic testing inspection of field welds when required on the plans or special provisions. Each test may be witnessed by an authorized representative of the Engineer.

Welds or sections of welds containing imperfections determined to be unacceptable by either the CWI or the Engineer shall be removed and re-welded by the Contractor at their expense. Welds so removed and replaced shall be re-inspected by the CWI. All costs for re-inspection or testing of such welds shall be borne by the Contractor.

(f) High Strength Bolted Connections:

The assembly of structural connections using ASTM A 325/ A 325M or ASTM A 490/A 490M high-strength bolts shall be installed so as to develop the minimum required bolt tension specified in Table A. The Manufacturer's certified test report; including the rotational capacity test results **must** accompany the fastener assemblies. Fastener Assemblies delivered without the certified reports will be rejected.

Bolts, nuts and washers from each rotational-capacity lot shall be shipped in the same container. If there is only one production lot number for each size of nut and washer, the nuts and washers may be shipped in separate containers. Each container shall be permanently marked with the rotational-capacity lot number such that identification will be possible at any stage prior to installation. Assemblies of bolts, nuts and washers shall be installed from the same rotational-capacity lot. Pins, small parts and packages of bolts, washers, and nuts shall be shipped in boxes, crates, kegs, or barrels. A list and description of the contained materials shall be plainly marked on the outside of each shipping container.

Bolted Parts: All material within the grip of the bolt shall be steel; there shall be no compressible material, such as gaskets or insulation, within the grip. Bolted steel shall fit solidly together after the bolts are tensioned. The length of the bolts shall be such that the end of the bolt will be flush with or outside of the face of the nut when properly installed.

Surface Conditions: At the time of assembly, all connection surfaces, including surfaces adjacent to the bolt head and nut, shall be free of scale, except tight mill scale, and shall be free of dirt or other foreign material. Burrs that would prevent solid seating of the connected parts in the snug tight condition shall be removed.

Paint is permitted on the faying surface, including slip critical connections, only when shown on the plans. The faying surfaces of slip-critical connections shall meet the requirements of the following paragraphs, as applicable:

- Connections specified to have un-coated faying surfaces: any paint, including any inadvertent over spray, shall be excluded from areas closer than one bolt diameter, but not less than 1.0 in. (25 mm), from the edge of any hole and all areas within the bolt pattern.

- Connections specified to have painted faying surfaces: shall be blast cleaned and coated in accordance with Section 6.04, and shall not be assembled until the coating system has been properly cured.

- Connections specified to have galvanized faying surfaces: shall be hot-dip galvanized in accordance with ASTM A 123/A 123M, and shall subsequently be roughened by means of hand wire brushing. Power wire brushing is not permitted.

Installation: At the pre-erection meeting, the Contractor shall inform the Engineer of their planned method of tensioning high strength bolts. Acceptable methods are: Turn-of-Nut, Calibrated Wrench or Direct Tension Indicator.

Fastener Assemblies:

A "fastener assembly" is defined as a bolt, a nut, and a washer. Only complete fastener assemblies of appropriately assigned lot numbers shall be installed.

Fastener assemblies shall be stored in an area protected from dirt and moisture. Only as many fastener assemblies as are anticipated to be installed and tensioned during a work shift shall be taken from protected storage. Fastener assemblies not used shall be returned to protected storage at the end of the shift. Prior to installation, fastener assemblies shall not be cleaned of lubricant. Fastener assemblies which accumulate rust or dirt resulting from site conditions shall be cleaned, relubricated and tested for rotational-capacity prior to installation. All galvanized nuts shall be lubricated with a lubricant containing a visible dye. Plain bolts must be oily to the touch when delivered and installed. Lubricant shall be removed prior to painting.

All bolts shall have a hardened washer under the turned element (nut or bolt head). All hardened washers shall conform to the requirements of ASTM F 436/F 436M.

Where necessary, washers may be clipped on one side to a point not closer than 7/8 of the bolt diameter from the center of the washer. Circular and beveled washers, when used adjacent to direct tension indicator washers shall not be clipped. Direct tension indicator washers shall not be clipped.

Bolt Tension Measuring Device: The Contractor shall provide a calibrated bolt tension measuring device (a Skidmore-Wilhelm calibrator (Skidmore) or other acceptable bolt tension indicating device) at all times when, and at all locations where high-strength fasteners are being installed and tensioned. The tension measuring device (Skidmore) shall be calibrated by an approved testing agency at least annually. The Skidmore shall be used to perform the rotational-capacity test of the fastener assemblies. The Skidmore will also be used to substantiate (1) the suitability of the fastener assembly to satisfy the requirements of Table A, including lubrication as required, (2) calibration of the installation wrenches, if applicable, and (3) the understanding and proper use by the contractor of the selected method of tensioning to be used.

Complete fastener assemblies shall be installed in properly aligned holes and then tensioned by the Turn-of-Nut, Calibrated Wrench or Direct Tension Indicator method to the minimum tension specified in Table A. Tensioning may be done by turning the bolt while the nut is prevented from rotating when it is impractical to turn the nut. Impact wrenches, if

used, shall be of adequate capacity and sufficiently supplied with air to perform the required tensioning of each bolt in approximately 10 seconds.

Bolts shall be installed in all holes of the connection and the connection brought to a snug condition. Snug is defined as having all the plies of the connection in firm contact. Snugging shall progress systematically from the most rigid part of the connection to the free edges. The bolts of the connection shall then be tightened in a similar manner as necessary until the connection is properly tensioned.

Nuts shall be located, whenever practical, on the side of the connection which will not be visible from the traveled way.

Unless otherwise approved by the Engineer fastener assemblies shall be brought to full tension immediately following snugging.

Fully tensioned fastener assemblies shall not be reused. Retightening previously tensioned bolts which may have been loosened by the tensioning of adjacent bolts shall not be considered as reuse.

Rotational-Capacity Tests: In addition to the certified test reports, on site Rotational-capacity tests may be required by the Engineer. This test shall be performed by the Contractor at the location where the fasteners are installed and tensioned. When performed in the field, the procedure shall conform to the requirements of ASTM A 325/ A 325M Appendix A-1.

Turn-of-Nut Installation Method:

At the start of the work, the Contractor shall demonstrate that the procedure used by the bolting crew to develop a snug condition and to control the turns from a snug condition develops the tension required in Table A. To verify their procedure, the Contractor shall test a representative sample of not less than three complete fastener assemblies of each diameter, length and grade to be used in the work. This shall be performed at the start of work using a Skidmore. Periodic retesting shall be performed when ordered by the Engineer.

After snugging the connection, the applicable amount of rotation specified in Table B shall be achieved. During the tensioning operation there shall be no rotation of the part not turned by the wrench. Tensioning shall progress systematically from the most rigid part of the connection to its free edges.

Calibrated Wrench Installation Method:

Calibrated wrench method may be used only when the installation wrenches are properly calibrated daily, or as determined by the Engineer. Standard torques determined from tables or from formulas which are assumed to relate torque to tension **shall not** be acceptable.

The Contractor shall demonstrate to the Engineer periodically that all equipment and wrenches are providing a torque which has been calibrated to produce the minimum tension specified in Table A. The installation procedures shall be verified periodically, as determined by the Engineer, for each bolt diameter, length and grade using the fastener assemblies that are being installed in the work. This verification testing shall be accomplished in a Skidmore by tensioning three complete fastener assemblies of each diameter, length and grade from those being installed with a hardened washer under the element turned.

When significant difference is noted in the surface condition of the bolts, threads, nuts or washers, as determined by the Engineer, wrenches shall be recalibrated. The Contractor shall verify during the installation of the assembled steel work that the wrench adjustment selected by the calibration does not produce a nut or bolt head rotation from snug greater than that permitted in Table B. If manual torque wrenches are used, nuts shall be turned in the tensioning direction when torque is measured.

When calibrated wrenches are used to install and tension bolts in a connection, bolts shall be installed with hardened washers under the element turned to tension the bolts. Once the connection has been snugged, the bolts shall be tensioned using the calibrated wrench. Tensioning shall progress systematically from the most rigid part of the connection to its free edges. A calibrated torque wrench shall be used to "touch up" previously tensioned bolts which may have been relaxed as a result of the subsequent tensioning of adjacent bolts until all bolts are tensioned to the prescribed amount.

Direct Tension Indicator Installation Method:

When Direct Tension Indicators (DTIs) meeting the requirements of Section M.06 are used with high-strength bolts to indicate bolt tension, they shall be subjected to the verification testing described below and installed in accordance with the method specified below. Unless otherwise approved by the Engineer, the DTIs shall be installed under the head of the bolt and the nut turned to tension the bolt. The Manufacturer’s recommendations shall be followed for the proper orientation of the DTI and additional washers, if any, required for the correct use of the DTI. Installation of a DTI under the turned element may be permitted if a washer is used to separate the turned element from the DTI.

Verification: Verification testing shall be performed in a Skidmore. A special flat insert shall be used in place of the normal bolt head holding insert. Three verification tests shall be required for each combination of fastener assembly rotational-capacity lot, DTI lot, and DTI position relative to the turned element (bolt head or nut) to be used on the project. The fastener assembly shall be installed in the tension-measuring device with the DTI located in the same position as in the work. The element intended to be stationary (bolt or nut) shall be restrained from rotation.

The verification tests shall be conducted in two stages. The bolt nut and DTI assembly shall be installed in a manner so that at least three and preferably not more than five threads are located between the bearing face of the nut and the bolt head. The bolt shall be tensioned first to the load equal to that listed in Table C

under Verification Tension for the grade and diameter of the bolt. If an impact wrench is used, the tension developed using the impact wrench shall be no more than two-thirds of the required tension. Subsequently, a manual wrench shall be used to attain the required tension. The number of refusals of the 0.005-in. (0.125-mm) tapered feeler gage in the spaces between the protrusions shall be recorded. The number of refusals for uncoated DTIs under the stationary or turned element, or coated DTIs under the stationary element, shall not exceed the number listed under Maximum Verification Refusals in Table C for the grade and diameter of bolt used. The maximum number of verification refusals for coated DTIs (galvanized, painted, or epoxy-coated), when used under the turned element, shall be no more than the number of spaces on the DTI less one. The DTI lot shall be rejected if the number of refusals exceeds the values in the table or, for coated DTIs if the gage is refused in all spaces.

After the number of refusals is recorded at the verification load, the bolt shall be further tensioned until the 0.005-in (0.125-mm) feeler gage is refused at all the spaces and a visible gap exists in at least one space. The load at this condition shall be recorded and the bolt removed from the tension-measuring device. The nut shall be able to be run down by hand for the complete thread length of the bolt excluding thread run-out. If the nut cannot be run down for this thread length, the DTI lot shall be rejected unless the load recorded is less than 95 percent of the average load measured in the rotational capacity test of the fastener lot as specified previously in "Rotational-Capacity Tests."

If the bolt is too short to be tested in the calibration device, the DTI lot shall be verified on a long bolt in a calibrator to determine the number of refusals at the verification tension listed in Table C. The number of refusals shall not exceed the values listed under maximum verification refusals in Table C. Another DTI from the same lot shall then be verified with the short bolt in a convenient hole in the work. The bolt shall be tensioned until the 0.005-in. (0.125-mm) feeler gage is refused in all spaces and a visible gap exists in at least one space. The bolt shall then be removed from the tension-measuring device and the nut shall be able to be run down by hand for the complete thread length of the bolt excluding thread run-out. The DTI lot shall be rejected if the nut cannot be run down this thread length.

Installation: Installation of fastener assemblies using DTIs shall be performed in two stages. The stationary element shall be held against rotation during each stage of the installation. The connection shall be first snugged with bolts installed in all holes of the connection and tensioned sufficiently to bring all the plies of the connection into firm contact. The number of spaces in which a 0.005-in. (0.125-mm) feeler gage is refused in the DTI after snugging shall not exceed those listed under maximum verification refusals in Table C. If the number exceeds the values in the table, the fastener assembly shall be removed and another DTI installed and snugged.

For uncoated DTIs used under a stationary or turned element and for coated DTIs used under a stationary element, the bolts shall be further tensioned until the number of refusals of the 0.005-in. (0.125-mm) feeler gage shall be equal or greater than the number listed under Minimum Installation Refusals in Table C. If the bolt is

tensioned so that no visible gap in any space remains, the bolt and DTI shall be removed and replaced by a new properly tensioned bolt and DTI.

When coated DTIs (galvanized, painted or epoxy coated) are used under a turned element, the 0.005-in (0.125-mm) feeler gage shall be refused in all spaces.

Inspection:

The Contractor shall provide all the material, equipment, tools and labor necessary for the inspection of the bolted connections. Access to the bolted parts and fastener assemblies, both before and after the fasteners are installed and tensioned, shall be provided.

The Contractor is responsible for Quality Control (QC). The Contractor shall review this specification with its project personnel prior to performing the work. The Contractor shall verify the proper markings, surface conditions and storage of fastener assemblies. The Contractor shall inspect the faying surfaces of connections for compliance with the plans and specifications. The Contractor shall provide to the Engineer a copy of their written QC report for each shift of the calibration or verification testing specified. This report shall confirm that the selected procedure is properly used and that the fastener assemblies installed meet the tensions specified in Table A. The Contractor shall monitor the installation of fasteners in the work to assure that the selected procedure, as demonstrated in the initial testing to provide the specified tension, is routinely and properly applied.

The Contractor, in the presence of the Engineer, shall inspect the tensioned bolts using an inspection torque wrench, as defined below. If direct tension indicator devices are used, the appropriate feeler gauge will be used. Inspection tests shall be performed within 24 hours of bolt tensioning to prevent possible loss of lubrication or corrosion influence on tensioning torque.

The inspection torque wrench shall be calibrated as follows. Three bolts of the same grade, size, and condition as those under inspection shall be placed individually in a device calibrated to measure bolt tension. This calibration operation shall be done at least once each inspection day. There shall be a washer under the part turned in torquing each bolt. In the calibrated device, each bolt shall be tightened by any convenient means to the specified tension. The inspection wrench shall then be applied to the tensioned bolt to determine the torque required to turn the nut or head five degrees in the tightening direction. The average of the torque required for all three bolts shall be defined as the job-inspection torque.

Twenty-five percent, but a minimum of two, of the tensioned bolts shall be selected by the Engineer for inspection in each connection. (The Engineer may reduce the number of bolts tested at a connection to 10% based on the Contractor's past performance and splice location.) The job-inspection torque shall then be applied to each selected assembly with the inspection torque wrench turned in the tightening direction. If all inspected bolt heads or nuts do not turn, the bolts in the connection shall be considered to be properly tensioned. If the torque turns one or more bolt heads or nuts, the job-inspection torque shall then be applied to **all** bolts in the connection or to the satisfaction of the Engineer. Any bolt whose head or nut turns shall be re-tensioned and re-inspected. The Contractor

may, however, re-tension all the bolts in the connection with the inspection torque wrench and resubmit it for inspection, so long as the bolts are not over-tensioned or damaged by this action.

(g) Field Corrections and Misfits: Reaming of bolt holes during erection shall be permitted only with approval of the Engineer. No excessive forces shall be applied to any member to provide for proper alignment of the bolt holes.

The correction of minor misfits involving minor amounts of reaming, cutting, grinding and chipping shall be considered a legitimate part of the erection. However, any error in the shop fabrication or deformation resulting from handling and transportation may be cause for rejection. The Contractor shall be responsible for all misfits, errors and damage and shall make the necessary corrections and replacements.

TABLE A (Metric)
Minimum Bolt Tension in Kilonewtons*

Bolt Size	ASTM A 325M	ASTM A 490M
M16	91	114
M20	142	179
M22	176	221
M24	205	257
M27	267	334
M30	326	408
M36	475	595

*Equal to 70% of specified minimum tensile strength of bolts (as specified in ASTM Specifications for tests of full-size A 325M and A 490M bolts with metric coarse threads series ANSI B1.13M, loaded in axial tension) rounded to the nearest kilonewton.

Table A (English)
Minimum Bolt Tension in kips*

Bolt Size (Inches)	ASTM A 325	ASTM A 490
5/8	19	24
¾	28	35
7/8	39	49
1	51	64
11/8	56	80
1¼	71	102
13/8	85	121
1½	103	148

*Equal to 70% of specified minimum tensile strength of bolts (as specified in ASTM Specifications for tests of full-size A 325 and A 490 bolts with UNC threads, loaded in axial tension) rounded to the nearest kip.

TABLE B (English and Metric)
Nut Rotation from the Snug Condition
Geometry[a,b,c] of Outer Faces of Bolted Parts

Bolt Length (measured from underside of head to end of bolt)	Both Faces Normal to Bolt Axis	One Face Normal to Bolt Axis and Other Face Sloped Not More Than 1:20, Bevel Washer Not Used	Both Faces Sloped Not More Than 1:20 From Normal to Bolt Axis, Bevel Washer Not Used
Up to and including 4 diameters	1/3 turn	1/2 turn	2/3 turn
Over 4 diameters but not exceeding 8 diameters	1/2 turn	2/3 turn	5/6 turn
Over 8 diameters but not exceeding 12 diameters	2/3 turn	5/6 turn	1 turn

(a) Nut rotation, as used in Table B, shall be taken as relative to the bolt, regardless of the element (nut or bolt) being turned. For bolts installed by 1/2 turn and less, the tolerance should be plus or minus 30 degrees; for bolts installed by 2/3 turn and more, the tolerance should be plus or minus 45 degrees.

To determine the nut rotation for installation and inspection of the fasteners, the nut and the end of the bolt or the head of the bolt and the adjacent steel shall be match marked.

(b) The values, given in Table B, shall be applicable only to connections in which all material within grip of the bolt is steel.

(c) No research work has been performed by the Research Council Riveted and Bolted Structural Joints to establish the turn-of-nut procedure when bolt lengths exceed 12 diameters. For situations in which the bolt length, measured from the underside of the head to the end of the bolt, exceeds 12 diameters, the required rotation shall be determined by actual tests in a suitable tension device simulating the actual conditions.

TABLE C (Metric)

Bolt Dia. (in.)	Verification Tension		Maximum Verification Refusals		DTI Spaces		Minimum Installation Refusals	
	A325	A490	Type 8.8	Type 10.9	Type 8.8	Type 10.9	Type 8.8	Type 10.9
M16	96	120	1	1	4	4	2	2
M20	149	188	2	2	5	6	3	3
M22	185	232	2	2	5	6	3	3
M24	215	270	2	2	5	6	3	3
M27	280	351	2	3	6	7	3	4
M30	342	428	3	3	7	8	4	4
M36	499	625	3	4	8	9	4	5

TABLE C (English)

Bolt Dia. (in.)	Verification Tension		Maximum Verification Refusals		DTI Spaces		Minimum Installation Refusals	
	A325	A490	325	490	325	490	325	490
5/8	20	25	1	2	4	5	2	3
¾	29	37	2	2	5	6	3	3
7/8	41	51	2	2	5	6	3	3
1	54	67	2	3	6	7	3	4
1 1/8	59	84	2	3	6	7	3	4
1¼	75	107	3	3	7	8	4	4
1 3/8	89	127	3	3	7	8	4	4
1½	108	155	3	4	8	9	4	5

Method of Measurement: Payment under this item will be at the contract lump sum price per each complete bridge structure or shall be based on the net weight (mass) of metal in the fabricated structure, whichever method appears on the proposal form.

When payment is based on a lump sum basis, the work, including anchor bolts, steel bearings and plates will not be measured for payment. Bearing plates welded to the girder are included in the price of the structural steel and bearing plates bonded to the bearings are included in the price of the bearing.

When payment is based on the net weight (mass) of metal in the fabricated structure, it shall be computed as described below.

The weight (mass) of the metal works to be paid for under the item of structural steel shall be computed on the basis of the net finished dimensions of the parts as shown on the shop drawings, deducting for copes, cuts, clips and all open holes, except bolt holes, and on the following basis:

1. The weights (masses) of rolled shapes shall be computed on the basis of their nominal weights (masses) per foot (meter), as shown in the shop drawings or listed in handbooks.

The weight (mass) of plates shall be computed on the basis of the nominal weight (mass) for their width and thickness as shown on the shop drawings.

2. The weight (mass) of temporary erection bolts, shop and field paint, galvanization, boxes, crates and other containers used for shipping, and materials used for supporting members during transportation and erection, shall not be included.

3. The weight (mass) of all high strength bolts, nuts, and washers shall be included on the basis of the following weights (masses):

Weight per 100				
Nominal diameter of H.S. bolt (inch)	**Bolthead, nut, 1 washer and stickthrough (lbs)**		**Nominal diameter of H.S. bolt (mm)**	**Bolthead, nut, 1 washer and stickthrough (kg)**
1/2	22		16	17
5/8	33		20	26
3/4	55		22	39
7/8	84		24	50
1	120		27	60
1 1/8	169		30	73
1 1/4	216		36	122

4. The weight (mass) of weld metal shall be computed on the basis of the theoretical volume from plan dimensions of the welds.

Size of fillet in Inches (mm)		**Weight of weld in pounds per foot (kg per meter)**	
3/16	(5)	0.08	(0.119)
¼	(6)	0.14	(0.208)
5/16	(8)	0.22	(0.327)
3/8	(9.5)	0.30	(0.446)
½	(13)	0.55	(0.818)
5/8	(16)	0.80	(1.190)
¾	(19)	1.10	(1.636)
7/8	(22)	1.50	(2.231)
1	(25)	2.00	(2.974)

5. The weight (mass) of steel shims, filler plates and anchor bolts shall be measured for payment.

When the pay item “Materials for Structural Steel (Site No.)” is included in the Contract, payment for furnishing of the raw steel material for the plates and shape material only, excluding any markup, based on the net weight (mass) required, and the payment will be made under the estimated item “Materials for Structural Steel (Site No.)”. The overruns or wastage shall not exceed ten per cent for straight girders and fifteen per cent for curved girders. All other work specified in this section for the bridge will be deemed paid for under the lump sum price. In the absence of the pay item “Materials for Structural Steel (Site No.)”, the cost of the raw material is included in the Lump Sum payment for this item, “Structural Steel (Site No.)”.

Basis of Payment: The structural steel, incorporated in the completed and accepted structure, will be paid for at the contract lump sum price for "Structural Steel (Site No.)," or at the contract unit price per hundred weight (kilogram) for "Structural Steel," whichever is indicated in the contract documents.

Payment for either method shall be for structural steel, complete in place, which price shall include quality control, furnishing, fabricating, transporting, storing, erecting, welding, surface preparation and all materials including fastener assemblies, steel bearing assemblies and anchor bolts, equipment, tools and labor incidental thereto.

When the pay item “Materials for Structural Steel (Site No.)” is included in the Contract, payment for furnishing of the raw steel material for the plates and shape material only,

excluding any markup, based on the net weight (mass) required, and the payment will be made under the estimated item “Materials for Structural Steel (Site No.)”. All remaining work including, but not limited to, preparation of shop drawings, fabricating, transporting, storage and handling, erecting, surface preparation and all materials, equipment, tools and labor incidental thereto, will be paid for under “Structural Steel (Site No.)”.

In the absence of the pay item “Materials for Structural Steel (Site No.)”, the cost of the raw material is included in the Lump Sum payment for this item, “Structural Steel (Site No.)”. All remaining work including, but not limited to, preparation of shop drawings, fabricating, transporting, storage and handling, erecting, surface preparation and all materials, equipment, tools and labor incidental thereto, will be paid for under “Structural Steel (Site No.)”.

No direct payment will be made for setting anchor bolts, preparing bearing areas, furnishing and placing materials under bearings. No direct payment will be made for non destructive testing as shown on the plans.

Pay Item	Pay Unit
Structural Steel (Site No.)	l.s. (l.s.)
Structural Steel	cwt. (kg)

CONNECTICUT
SUPPLEMENTAL SPECIFICATION
SECTION 6.12
CONCRETE CYLINDER CURING BOX

Delete the entire section and replace with it the following:

6.12.01 –Description: This item shall consist of furnishing a box for curing concrete test cylinders. The box shall be commercially available and manufactured specifically for curing concrete test cylinders. The box will remain the property of the Contractor at the conclusion of the project. The box shall be delivered to a location on the project as directed by the Engineer.

6.12.02 – Materials: A catalog cut listing detailed specifications of the box and operating instructions from the manufacturer must be submitted to the Engineer. The box and its components shall be constructed of non-corroding materials and shall be capable of storing a minimum of 18 test cylinders, 6” X 12” (152 mm X 305 mm) stored vertically with the lid closed. The lid must be watertight when closed and hinged in the back with security latches on the front that can be padlocked. The box must be capable of holding water to a maximum level of one inch above test cylinders placed in the box vertically. A drain hole must be provided in a wall of the box to allow manual drainage of the water that exceeds this level. A drain hole must also be provided at the bottom of the box so that it can be manually emptied. The temperature of the water must be controlled by heating and cooling device capable of maintaining the temperature of the water within a range of 60 to 80º F, +/- 2 ºF (15.5 to 26.7 ºC, +/- 1 ºC) within an outside ambient air temperature range of -10 to 120 º F (-23.3 to 49 ºC). The heating and cooling device must be positioned to allow free circulation of air and water around the cylinders and be rated at 120 volts and 15 amps. A rack must be provided within the box to support the cylinders above the pool of temperature controlled water. The device must be thermostatically controlled with a digital readout that is capable of displaying the high/low water temperature within the box since the last reading was taken.

6.12.03 - Construction Methods: The Contractor shall maintain the curing box in working order and shall provide all necessary electrical service and water so that the curing box can be used properly during the entire course of the project. Any curing box that is not operating properly, as determined by the Engineer, shall be replaced within 24 hours by the Contractor at no expense to the State. The Engineer reserves the right to prohibit placement of fresh concrete on the project until a curing box acceptable to the Engineer is operational on the project site.

6.12.04 - Method of Measurement: The furnishing of the concrete test cylinder curing box will be measured for payment by the number of boxes delivered by the Contractor and accepted by the Engineer.

6.12.05 – Basis of Payment: This item will be paid for at the contract unit price each for "Concrete Cylinder Curing Box" ordered and accepted on the project, which price shall include all submittals, material, tools, equipment, and labor incidental thereto. The price shall also include all maintenance and operating costs related to the curing box for the duration of the project.

CONNECTICUT
SUPPLEMENTAL SPECIFICATION
SECTION 6.51
CULVERTS

6.51.02 – Materials:

In the 2nd paragraph replace "Gravel fill" with "Granular fill".

6.51.03 – Construction Methods:

In the 8th paragraph replace "gravel fill" with "granular fill".

Delete the 13th paragraph, "Bituminous fiber and … as the pipe."

6.51.04 – Methods of Measurement:

In the 7th paragraph replace "Gravel Fill" with "Granular Fill".

6.51.05 – Basis of Payment:

In the 8th paragraph replace "Gravel Fill" with "Granular Fill".

CONNECTICUT
SUPPLEMENTAL SPECIFICATION
SECTION 7.02
PILES

Article 7.02.05- Basis of Payment:

In the first sentence of the first paragraph of Section "2. Timber Piles" change "Furnishing Timber Piles Foot (Meter Length) and Furnishing Treated Timber Piles Foot (Meter Length)" to "Furnishing (Type) Timber Piles (Foot (Meter) Length)".

In the first sentence of the last paragraph of Section "2. Timber Piles" change "Driving Timber Piles" and "Driving Treated Timber Piles " to "Driving (Type) Timber Piles".

Under Pay Items:

Delete:

Pay Item	Pay Unit
Furnishing (Type) Piles (Lengths)	lb. (kg)

Add:

Pay Item	Pay Unit
Furnishing (Type) Timber Piles (Length)	ea. (ea)
Furnishing Steel Piles	lb. (kg)
Furnishing (Type) Prestressed Concrete Piles	l.f. (m)
Cast-in-Place Concrete Piles	l.f. (m)

CONNECTICUT
SUPPLEMENTAL SPECIFICATION
SECTION 8.22
TEMPORARY PRECAST CONCRETE BARRIER CURB

Article 8.22.04 – Method of Measurement:

Add the following sentence to the end of the second paragraph:

"Relocation of Temporary Precast Concrete Barrier Curb for access to the work area or for the convenience of the Contractor shall be considered incidental to Maintenance and Protection of Traffic and will not be measured for payment."

CONNECTICUT
SUPPLEMENTAL SPECIFICATION
SECTION 9.10
METAL BEAM RAIL

Article 9.10.04 – Method of Measurement

Subarticle 1 – Metal Beam Rail (Type)

Delete the only sentence and replace with the following:

The length of metal beam rail measured for payment will be the number of linear feet (meters) of accepted rail of the type or designation installed, including radius rail other than Curved Guide Rail Treatment, measured along the top of rail between centers of end posts in each continuous section.

CONNECTICUT
SUPPLEMENTAL SPECIFICATION
SECTION 9.18
THREE CABLE GUIDE RAILING
(I-BEAM POSTS) AND ANCHORAGES

9.18.03 – Construction Methods:

In the 10th paragraph, replace "MIL" with "MILSPEC."

CONNECTICUT
SUPPLEMENTAL SPECIFICATION
SECTION 9.22
BITUMINOUS CONCRETE SIDEWALK
BITUMINOUS CONCRETE DRIVEWAY

9.22.03 – Construction Methods:

Replace the first paragraph with the following:

"**1. Excavation:** Excavation, including saw cutting, removal of any existing sidewalk, or driveway, shall be made to the required depth below the finished grade, as shown on the plans or as directed by the Engineer. All soft and yielding material shall be removed and replaced with suitable material."

9.22.05 – Basis of Payment:

Replace the only paragraph with the following:

"This work will be paid for at the contract unit price per square yard (square meter) for "Bituminous Concrete Sidewalk" or "Bituminous Concrete Driveway," as the case may be, complete in place, which price shall include all saw cutting, excavation as specified above, backfill, disposal of surplus material, gravel or reclaimed miscellaneous aggregate base, and all equipment, tools, labor and materials incidental thereto."

CONNECTICUT
SUPPLEMENTAL SPECIFICATION
SECTION 9.44
TOPSOIL

Add the following paragraph to the beginning of article 9.44.03 – Construction Methods:

"The Contractor shall notify the Engineer of the location of the topsoil at least 15 calendar days prior to delivery. The topsoil and its source shall be inspected and approved by the Engineer before the material is delivered to the project. Any material delivered to the project, which does not meet specifications or which has become mixed with undue amounts of subsoil during any operation at the source or during placing and spreading, will be rejected and shall be replaced by the Contractor with acceptable material."

CONNECTICUT
SUPPLEMENTAL SPECIFICATION
SECTION 9.49
FURNISHING, PLANTING and MULCHING
TREES, SHRUBS, VINES and GROUND COVER PLANTS

9.49.03 – Construction Methods:

Replace subsection 5. Pits with the following:

"5. Pits: The pit diameters shall be twice the diameter of the root-spread or container diameters, and shall be 2- inches (50 millimeters) less than the height of the rootball measured from the bottom of the ball to the root collar. (i. e. A 12-inch (300 millimeters) measurement between the root collar and the bottom of the rootball will require a 10-inch (250 millimeters) deep pit). Any excavation in excess of that required shall be replaced with planting soil and compacted to the satisfaction of the Engineer."

Add the following sentence to subsection 6. Obstructions Below Ground:

"If removal of obstructions results in a deeper hole than needed for planting, backfill material shall be added and compacted to the satisfaction of the Engineer."

Replace subsection 7. Preparation of Backfill with the following:

"**7. Backfill:** Backfill shall conform to M.13.01-1 Planting Soil."

Replace subsection 8. Setting Plants with the following:

"**8. Setting Plants:** All plants shall be plumb and at a level that is 2-inches (50 millimeters) higher than the surrounding ground. Backfill material for all plants shall be thoroughly and properly settled by firming or tamping. Thorough watering shall accompany backfilling. Saucers capable of holding water shall be formed at individual plants (exclusive of plant beds) by placing ridges of planting soil around each, or as directed by the Engineer.

a. Balled and Burlapped plants: Plants shall be handled in such manner so that the soil will not be loosened from the roots inside of the ball. Carefully place the plant into the prepared pits and backfill with planting soil to one - half the depth of the pit, thoroughly tamp to the satisfaction of the Engineer around the ball. Fill the remaining area of the pit with water. Once water has completely drained, loosen the burlap and peel down the top one third. If wire baskets are used, cut and bend down the top third of the basket. Roots that have been wrapped around the ball within the burlap shall be straightened and the remainder of the pit filled with planting soil tamped to ensure that no air pockets remain.

b. Container Grown Plants: Carefully remove the plant from the container over the prepared pits. Gently loosen the soil and straighten all roots as naturally as possible. Place into the bottom of the pit. Backfill with planting soil to one - half the depth of the pit. Thoroughly tamp to the satisfaction of the Engineer. Fill remaining area of the pit with water. Once water has completely drained fill the remainder of the pit with planting soil tamped to ensure that no air pockets remain.

c. Bare-roots Plants: Carefully spread roots as naturally as possible and place into the bottom of the pit. All broken or frayed roots shall be cleanly cut off. Backfill with planting soil to one - half the depth of the pit. Thoroughly tamp to the satisfaction of the Engineer. Fill remaining area of the pit with water. Once water has completely drained fill the remainder of the pit with planting soil tamped to ensure that no air pockets remain."

Replace subsection 10. Watering with the following:

"**10. Watering:** All plants shall be watered upon setting and as many times thereafter as conditions warrant.

The following is a guide for minimum requirements:

Trees:
2 ½" Caliper and less – Fifteen (15) gallons each.
3" to 5" Caliper – Twenty (20) gallon each.
5 ½" Caliper and above – Twenty-five (25) gallon each.
Shrubs:
24" and less – Six (6) gallon each.
More than 24"- Ten (10) gallon each.
Vines, Perennials, and Ornamental Grasses – Three (3) gallons each.
Groundcovers and Bulbs – Two (2) gallons per square foot.

Water shall be applied at a controlled rate and in such a manner to ensure that the water reaches the root zone (saucer) of the plant or plant bed and does not run off to adjacent areas. Watering shall be applied in a manner that does not dislodge plants, erode soil or mulch, or cause damage to saucer.

The Contractor may use slow-release, drip irrigation bags for watering in accordance with manufacturer's instructions. The use of these portable/temporary irrigation bags will require the approval of the Engineer.

Overhead hydro-seeder spray nozzles shall not be used as watering devices."

Replace subsection 17. Establishment Period with the following:

"**17. One-Year Establishment Period:** All plant material shall be subject to a One-Year Establishment Period. During this time, the Contractor shall use currently accepted horticultural practices to keep all plant material installed in a healthy, vigorous growing condition at the date of final acceptance. The date of final

acceptance shall be one full calendar year following the satisfactory completion of the planting activities as confirmed by the Engineer.

An inspection will be held one year from the date of installation with the Contractor, Engineer, and Landscape Designer to determine the acceptability of the plant establishment. An inventory of losses and rejected materials will be made and corrective and necessary clean up measures will be determined at the plant inspection."

CONNECTICUT
SUPPLEMENTAL SPECIFICATION
SECTION 9.75
MOBILIZATION

9.75.04 – Method of Measurement:

Delete the entire section and replace with the following:

This work will be measured for payment in the manner described hereinafter; however, the determination of the total contract price earned shall not include the amount of mobilization earned during the period covered by the current monthly estimate- but shall include amounts previously earned and certified for payment:

1. When the first payment estimate is made, 25 percent of the lump sum bid price for this item or 2.5 percent of the total original contract price, whichever is less, shall be certified for payment.

2. When the Baseline Schedule, as specified under Section 1.05.08, is accepted, 50 percent of the lump sum bid price or 5 percent of the total original contract price, whichever is less, minus any previous payments, will be certified for payment.

3. When 10 percent of the total original contract price is earned and the Baseline Schedule, as specified under Section 1.05.08, is accepted, 75 percent of the lump sum price of this item or 7.5 percent of the total original contract price, whichever is less, minus any previous payments, will be certified for payment.

4. When 30 percent of the total original contract price is earned and the Baseline Schedule, as specified under Section 1.05.08, is accepted, 100 percent of the lump sum price of this item or 10 percent of the total original contract price, whichever is less, minus any previous payments, will be certified for payment.

Upon completion of all work on the project, payment of any amount bid for mobilization in excess of 10 percent of the original contract amount will be paid.

Nothing herein shall be construed to limit or preclude partial payments otherwise provided for by the contract.

CONNECTICUT
SUPPLEMENTAL SPECIFICATION
SECTION 10.01
TRENCHING AND BACKFILLING

Article 10.01.01- Description:

In the only sentence of the first paragraph after "…satisfactory…" *add the following:* "clean-up and".

In the only sentence of the second paragraph after "…reconstruction of…" *add the following:* "bituminous, concrete and granite curbing,".

Article 10.01.05- Basis of Payment:

In the only sentence of the second paragraph after "…mulching…" *add the following:* "clean-up and". *After* "…installing…" *add the word* "curbing,".

At the end of the third paragraph, add the following: "In the absence of a "Rock in Trench Excavation" item, the work will be compensated as extra work."

In the only sentence of the sixth paragraph, after …"…unit price for 'Concrete Sidewalk'…" *add the following:* "or as extra work, if no unit price has been established."

CONNECTICUT
SUPPLEMENTAL SPECIFICATION
SECTION 10.10
CONCRETE HANDHOLE

Article 10.10.05 – Basis of Payment

Remove the words “ground wire”.

At the end of the paragraph add the following sentence:

The ground wire (bonding wire) is included in the Contract unit price under Section 10.08 – Electrical Conduit.

Add the word “Cover” *to the end of the pay item* “Cast Iron Handhole”

CONNECTICUT
SUPPLEMENTAL SPECIFICATION
SECTION 11.13
CONTROL CABLE

11.13.03 – Construction Methods:

In the 1st paragraph of subsection 2 replace "MIL" with "MILSPEC."

CONNECTICUT
SUPPLEMENTAL SPECIFICATION
SECTION 12.10
EPOXY RESIN PAVEMENT MARKINGS, SYMBOLS AND LEGENDS

12.10.03 (2) – Procedures:

Insert the following after the sixth paragraph:

The epoxy shall be uniformly applied to the surface to be marked to ensure a wet film thickness of the applied epoxy, without glass beads, of 20 mils +/- 1 mil (500 um +/- 25 um).

CONNECTICUT
SUPPLEMENTAL SPECIFICATION
SECTION M.06
METALS

Article M.06.01 – Reinforcing Steel:

Subarticle 1. Bar Reinforcement:

Delete the third paragraph and replace it with:

"Epoxy coated bar reinforcement shall conform to the requirements of ASTM A 615/A 615M, Grade 60 (420) and shall be epoxy coated to the requirements of ASTM A 775/A 775M. All field repairs of the epoxy coating shall conform to the requirements of ASTM D 3963/D 3963M."

Article M.06.02—Structural Steel and Other Structural Materials:

Delete the entire article and replace it with the following:

Article M.06.02—Structural Steel: The materials for this work shall conform to the following requirements:

1. **Structural Steel:**
   Structural steel for bridges shall conform to the designation shown on the plans. Unless otherwise indicated in the plans or specifications, structural steel for non-bridge related members or components shall conform to ASTM A709/A709M, Grade 36 (250).

   All surfaces of steel plates and shapes used in the fabrication of bridge girders shall be blast cleaned and visually inspected by the Contractor prior to any fabrication or preparation for fabrication. Blast cleaning shall conform to the requirements of SSPC-SP-6-Commercial Blast.

   All steel plates and shapes used in the fabrication of bridge girders shall be substantially free from pitting and gouges, regardless of the cause. Substantially free is defined as:
   - The measured surface area of all pits and gouges regardless of depth represent less than 1% of the surface area of theplate or shape.
   - No pit or gouge greater than 1/32 (0.08mm) inch deep.
   - No pit or gouge closer than six inches (15.25 cm) from another.

Any repair of plates or shapes will be performed in accordance with ASTM A6/A 6M.

2. **Anchor Bolts:**
Unless otherwise designated on the plans, anchor bolts, including suitable nuts and washers, shall conform to the following requirements:

Anchor bolt assemblies shall conform to the requirements of ASTM F1554, Grade 36 (250). All components of the bolt assembly shall be galvanized in conformance with ASTM A 153/A 153M.

Certified Test Reports and Material Samples: The Contractor shall submit notarized copies of Certified Test Reports in conformance with Article 1.06.07. Prior to incorporation into the work, the Contractor shall submit samples of the anchor bolt assemblies to the Engineer for testing in accordance with the latest edition of the "Schedule of Minimum Requirements for Acceptance Testing". One sample shall be submitted for each diameter, material designation, grade or coating of anchor bolt assembly.

3. **High Strength Bolts:** High strength bolts, including suitable nuts and hardened washers, shall conform to the following requirements:

   a) High strength bolts shall conform to ASTM A325 or ASTM A490 as shown on the plans. High-strength bolts used with coated steel shall be mechanically galvanized, unless otherwise specified. High-strength bolts used with uncoated weathering grades of steel shall be Type 3.

   Nuts for ASTM A325 bolts shall conform to ASTM A563, grades DH, DH3, C, C3 and D. Where galvanized high-strength bolts are used, the nuts shall be galvanized, heat treated grade DH or DH3. Where Type 3 high-strength bolts are used, the nuts shall be grade C3 or DH3.

   Nuts for ASTM A490 bolts shall conform to the requirements of ASTM A563, grades DH and DH3. Where Type 3 high-strength bolts are used, the nuts shall be grade DH3.

   All galvanized nuts shall be lubricated with a lubricant containing a visible dye of any color that contrasts with the color of the galvanizing. Black bolts must be oily to the touch when delivered and installed.

   Circular flat and square or rectangular beveled, hardened steel washers shall conform to ASTM F436. Unless otherwise specified, galvanized washers shall be furnished when galvanized high-strength bolts are specified, and washers with atmospheric corrosion resistance and weathering characteristics shall be furnished when Type 3 high-strength bolts are specified.

   Compressible-washer-type direct tension indicator washers, used in conjunction with high strength bolts, shall conform to ASTM F959. Where galvanized high-strength bolts are used, the washers shall be galvanized in accordance with ASTM B695, Class 50. Where Type 3 high-strength bolts are used, the washers shall be galvanized in accordance with ASTM B695, Class 50 and coated with epoxy.

b) **Identifying Marks:** ASTM A325 for bolts and the specifications referenced therein for nuts require that bolts and nuts manufactured to the specification be identified by specific markings on the top of the bolt head and on one face of the nut. Head markings must identify the grade by the symbol "A325", the manufacturer and the type, if Type 2 or 3. Nut markings must identify the grade, the manufacturer and if Type 3, the type. Markings on direct tension indicators must identify the manufacturer and Type "325". Other washer markings must identify the manufacturer and if Type 3, the type.

   ASTM A490 for bolts and the specifications reference therein for nuts require that bolts and nuts manufactured to the specifications be identified by specific markings on the top of the bolt head and on one face of the nut. Head markings must identify the grade by the symbol "A490", the manufacturer and the type, if Type 2 or 3. Nut markings must identify the grade, the manufacturer and if Type 3, the type. Markings on direct tension indicators must identify the manufacturer and Type "490". Other washer markings must identify the manufacturer and if Type 3, the type.

c) **Dimensions:** Bolt and nuts dimensions shall conform to the requirements for Heavy Hexagon Structural Bolts and for Heavy Semi-Finished Hexagon Nuts given in ANSI Standard B18.2.1 and B18.2.2, respectively.

d) **Galvanized Bolts:** Galvanized bolts shall conform to ASTM A325, Type 1. The bolts shall be hot-dip galvanized in accordance with ASTM A153, Class C or mechanically galvanized in accordance with ASTM B695, Class 50. Bolts, nuts, and washers of any assembly shall be galvanized by the same process. The nuts shall be overtapped to the minimum amount required for the fastener assembly, and shall be lubricated with a lubricant containing a visible dye so a visual check can be made for the lubricant at the time of field installation. Galvanized bolts shall be tension tested after galvanizing. ASTM A 490 bolts shall not be galvanized.

e) **Test Requirements:** The maximum hardness of A325 bolts 1" or less in diameter shall be 33 HRC.

   Plain, ungalvanized nuts shall have a minimum hardness of 89 HRB.

   Proof load tests, in accordance with the requirements of ASTM F606 Method 1, shall be required for the bolts. Wedge tests of full-size bolts are required in accordance with Section 8.3 of ASTM A325. Galvanized bolts shall be wedge tested after galvanizing. Proof load tests of ASTM A563 are required for nuts. Proof load tests for nuts used with galvanized bolts shall be performed after galvanizing, overtapping and lubricating.

Rotational-capacity tests are required and shall be performed on all plain or galvanized (after galvanizing) bolt, nut and washer assemblies by the manufacturer or distributor prior to shipping and by the Contractor at the job site.

The thickness of galvanizing on bolts, nuts and washers shall be measured. On bolts, it shall be measured on the wrench flats or on top of the bolt head, and on nuts it shall be measured on the wrench flats.

f) Certified Test Reports and Materials Certificates: The Contractor shall submit notarized copies of Certified Test Reports and Materials Certificates in conformance with Article 1.06.07 for fastener assemblies. In addition the Certified Test Reports and Materials Certificates shall include the following:

a. Mill test reports shall indicate the place where the material was melted and manufactured.

b. Test reports for proof load tests, wedge tests, and rotational-capacity tests shall indicate where the tests were performed, date of tests, location of where the components were manufactured and lot numbers.

c. The test report for galvanized components shall indicate the thickness of the galvanizing.

g) Material Samples: Prior to incorporation into the work, the Contractor shall submit samples of the bolt assemblies to the Engineer for testing in accordance with the latest edition of the "Schedule of Minimum Requirements for Acceptance Testing". Samples shall be submitted for each diameter, length, material designation, grade, coating and manufacturer of bolt assembly.

4. Welded Stud Shear Connectors:

a) Materials: Stud shear connectors shall conform to the requirements of ASTM A 108, cold-drawn bar, Grades 1015, 1018 or 1020, either semi- or fully-killed. If flux-retaining caps are used, the steel for the caps shall be of a low carbon grade suitable for welding and shall comply with ASTM A 109.

Stud shear connectors shall be of a design suitable for electrically end-welding to steel with automatically timed stud welding equipment. The studs shall be of the sizes and dimensions noted on the plans. Flux for welding shall be furnished with each stud, either attached to the end of the stud or combined with the arc shield for automatic application in the welding operation. Each stud shall be furnished with a disposable ferrule of sufficient strength to remain intact during the welding operation and not crumble or break; it shall not be detrimental to the weld or create excessive slag.

Tensile properties, as determined by tests of bar stock after drawing or of finished studs, shall conform to the following requirements in which the yield strength is as determined by the 0.2% offset method:

Tensile strength (min.)	60,000 psi (415 megapascals)
Yield strength (min.)	50,000 psi (345 megapascals)
Elongation (min.)	20% in 2 inches (50 millimeters)
Reduction of area (min.)	50%

b) Test Methods: Tensile properties shall be determined in accordance with the applicable sections of ASTM A 370. Tensile tests of finished studs shall be made on studs welded to test plates using a test fixture similar to that shown in Figure 7.2 of the current AASHTO/AWS D1.5 – Bridge Welding Code. If fracture occurs outside of the middle half of the gage length, the test shall be repeated.

c) Finish: Finished studs shall be of uniform quality and condition, free from injurious laps, fins, seams, cracks, twists, bends or other injurious defects. Finish shall be as produced by cold-drawing, cold-rolling or machining.

d) Certified Test Reports and Materials Certificates: The Contractor shall submit a certified copy of the in-plant quality control test report in conformance with Article 1.06.07. The Contractor shall submit a Materials Certificate in conformance with Article 1.06.07 for the welded studs.

e) Sample Materials for Testing: Prior to incorporation into the work, the Contractor shall submit samples of the stud shear connectors to the Engineer for testing in accordance with the latest edition of the "Schedule of Minimum Requirements for Acceptance Testing". One sample shall be submitted for each diameter and length of welded stud.

CONNECTICUT
SUPPLEMENTAL SPECIFICATION
SECTION M.13
ROADSIDE DEVELOPMENT

Delete article M.13.01 – Topsoil and replace it with the following:

"**Article M.13.01 – Topsoil:** The term topsoil used herein shall mean a soil meeting the soil textural classes established by the USDA Classification System based upon the proportion of sand, silt, and clay size particles after passing a No. 10 (2 millimeter) sieve and subjected to a particle size analysis. The topsoil shall contain 5% to 20% organic matter as determined by loss on ignition of oven-dried samples dried at 221° F (105° C). The pH range of the topsoil shall be 5.5 to 7.0.

The following textural classes shall be acceptable:

Loamy sand, including coarse, loamy fine, and loamy very fine sand, with not more than 80% sand
Sandy loam, including coarse, fine and very fine sandy loam
Loam
Clay loam, with not more than 30% clay
Silt loam, with not more than 60% silt
Sandy clay loam, with not more than 30% clay
All textural classes of topsoil with greater than 80% sand content will be rejected.

The topsoil furnished by the Contractor shall be a natural, workable soil that is screened and free of subsoil, refuse, stumps, roots, brush, weeds, rocks and stones over 1 1/4 inches (30 millimeters) in diameter, and any other foreign matter that would be detrimental to the proper development of plant growth.

The Contractor shall notify the Engineer of the location of the topsoil at least 15 calendar days prior to delivery. The topsoil and its source shall be inspected and approved by the Engineer before the material is delivered to the project. Any material delivered to the project, which does not meet specifications or which has become mixed with undue amounts of subsoil during any operation at the source or during placing and spreading, will be rejected and shall be replaced by the Contractor with acceptable material.

When topsoil is not furnished by the Contractor, it shall be material that is stripped in accordance with Section 2.02 or is furnished by the State, and will be tested as determined by the Engineer.

1. Planting Soil: Soil Material to be used for plant backfill shall be one of the following textural classes:

Loamy sand, with not more than 80% sand
Sandy loam
Loam
Clay loam, with not more than 30% clay
Silt loam, with not more than 60% silt
Sandy clay loam, with not more than 30% clay

Planting soil shall be premixed, consisting of approximately 50 % topsoil, 25 % compost or peat, and 25% native soil. Planting soil shall be loose, friable, and free from refuse, stumps, roots, brush, weeds, rocks and stones 2 inches (50 millimeters) in diameter. In addition, the material shall be free from any material that will prevent proper development and plant growth.

(a) For ericaceous plants and broad-leaved evergreens requiring an acid soil, planting soil shall have a true pH of 4.5 to 5.5. If it has not, it shall be amended by the Contractor at his own expense to the proper pH range by mixing with sulphur.

(b) Planting soil for general planting of nonacid-loving plants shall have a true pH value of 5.6 to 6.5. If it has not, it shall be amended by the Contractor at his own expense to the proper pH range by mixing with dolomitic limestone.

The amount of either sulphur or limestone required to adjust the planting soil to the proper pH range (above) shall be determined by the Engineer based on agronomic tests. The limestone shall conform to the requirements of Article M.13.02. The sulphur shall be commercial or flour sulphur, unadulterated, and shall be delivered in containers with the name of the manufacturer, material, analysis, and net weight (mass) appearing on each container.

The Engineer reserves the right to draw such samples and to perform such tests as he deems necessary to ensure that these specifications are met.”

CONNECTICUT
SUPPLEMENTAL SPECIFICATION
SECTION M.16
TRAFFIC CONTROL SIGNALS

Article M.16.04 – Poles:

Subarticle 1. Steel Poles:

(i) Wire Entrance Fitting:

In the second sentence, delete "required to accept the cables".

Article M.16.06 – Traffic Signals:

In the 1st paragraph of subsection 9 replace "MIL" with "MILSPEC".

Under the paragraph entitled Third Coat, replace the first two sentence with the following:

" Dark Green Enamel: Shall be Dark Green exterior baked enamel and shall comply with FS A-A 2962. The color shall be No. 14056, FS No. 595."

and in the third sentence replace "MIL" with "MILSPEC."

Article M.16.08 – Pedestrian Push Button

Subarticle – Painting

Delete the entire "Third Coat" paragraph and replace with the following:

Third Coat: Dark Green Enamel, shall be DARK GREEN exterior-baking enamel and shall comply with Federal Specifications A-A 2962. The color shall be No. 14056, Federal Standard No. 595.

M.16.15 – Messenger and Span Wire:

Delete the entire article and replace with the following:

The materials for this work shall conform to the following requirements:

1. Messenger wire shall be made of double-galvanized 7-strand utilities-grade steel wire cable, not less than 3/16 inch (4.8 millimeters) in diameter, with at least a 2,400-pound (10.7-killinewton) breaking strength.

2. Span wire:

(a) “Span wire” shall be made of double-galvanized 7-strand utilities-grade steel wire cable, not less than 3/8 inch (9.5 millimeters) in diameter, with at least an 11,200-pound (50-kilonewton) breaking strength.

(b) “Span wire (high strength)” shall be made of double-galvanized 7-strand extra-high-strength-grade steel wire cable, not less than 7/16 inch (11.1 millimeters) in diameter, with at least a 20,800-pound (94-kilonewton) breaking strength.

3. All hardware accessories shown on the plans to be used in span wire or messenger mounting shall be made of high-strength, double-galvanized, first-quality materials.

CONNECTICUT
SUPPLEMENTAL SPECIFICATION
SECTION M.17
ELASTOMERIC MATERIALS

M.17.01 – Elastomeric Bearing Pads:

In the 2nd paragraph of subsection 4(b), replace "MS MIL" with "MILSPEC."

CONNECTICUT
SUPPLEMENTAL SPECIFICATION
SECTION M.18
SIGNING

M.18.10 – Demountable Copy:

In the chart under subsection 3H, replace "MS MIL" with "MILSPEC."

Construction Contracts - Required Contract Provisions
(State Funded Only Contracts)

Index

1. Title VI of the Civil Rights Act of 1964 / Nondiscrimination Requirements

2. Contractor Work Force Utilization / Specific Equal Employment Opportunity

3. Contract Wage Rates

4. Americans with Disabilities Act of 1990

5. Connecticut Statutory Labor Requirements

    a. Construction, Alteration or Repair of Public Works Projects; Wage Rates
    b. Debarment List - Limitation on Awarding Contracts
    c. Construction Safety and Health Course
    d. Awarding of Contracts to Occupational Safety and Health Law Violators Prohibited
    e. Residents Preference in Work on Other Public Facilities (Not Applicable to Federal Aid Contracts)

6. Tax Liability - Contractor's Exempt Purchase Certificate (CERT – 141)

7. Executive Orders (State of CT)

8. Non Discrimination Requirement (pursuant to section 4a-60 and 4a-60a of the Connecticut General Statutes, as revised)

9. Whistleblower Provision

10. Connecticut Freedom of Information Act

    a. Disclosure of Records
    b. Confidential Information

11. Service of Process

12. Substitution of Securities for Retainages on State Contracts and Subcontracts

13. Health Insurance Portability and Accountability Act of 1996 (HIPAA)

14. Forum and Choice of Law

15. Summary of State Ethics Laws

16. Audit and Inspection of Plants, Places of Business and Records

17. Campaign Contribution Restriction

18. Tangible Personal Property

19. Bid Rigging and/or Fraud – Notice to Contractor

20. Consulting Agreement Affidavit

Index of Exhibits

EXHIBIT A – Title VI Contractor Assurances (page 13)
EXHIBIT B – Contractor Work Force Utilization / Equal Employment Opportunity (page 14)
EXHIBIT C – Health Insurance Portability and Accountability Act of 1996 (HIPAA) (page 17)
EXHIBIT D - Campaign Contribution Restriction (page 25)
EXHIBIT E - State Wage Rates (Attached at the end)

1. Title VI of the Civil Rights Act of 1964 / Nondiscrimination Requirements

The Contractor shall comply with Title VI of the Civil Rights Act of 1964 as amended (42 U.S.C. 2000 et seq.), all requirements imposed by the regulations of the United States Department of Transportation (49 CFR Part 21) issued in implementation thereof, and the Title VI Contractor Assurances attached hereto at Exhibit A, all of which are hereby made a part of this Contract.

2. Contractor Work Force Utilization / Equal Employment Opportunity

(a) The Contractor shall comply with the Contractor Work Force Utilization / Equal Employment Opportunity requirements attached at Exhibit B and hereby made part of this Contract, whenever a contractor or subcontractor at any tier performs construction work in excess of $10,000. These goals shall be included in each contract and subcontract. Goal achievement is calculated for each trade using the hours worked under each trade.

(b) Companies with contracts, agreements or purchase orders valued at $10,000 or more will develop and implement an Affirmative Action Plan utilizing the ConnDOT Affirmative Action Plan Guideline. This Plan shall be designed to further the provision of equal employment opportunity to all persons without regard to their race, color, religion, sex or national origin, and to promote the full realization of equal employment opportunity through a positive continuation program. Plans shall be updated as required by ConnDOT.

3. Contract Wage Rates

The Contractor shall comply with:

The State wage rate requirements indicated in Exhibit E hereof are hereby made part of this Contract.

Prevailing Wages for Work on State Highways; Annual Adjustments. With respect to contracts for work on state highways and bridges on state highways, the Contractor shall comply with the provisions of Section 31-54 and 31-55a of the Connecticut General Statutes, as revised.

As required by section 1.05.12 (Payrolls) of the State of Connecticut, Department of Transportation's Standard Specification for Roads, Bridges and Incidental Construction (FORM 816), as may be revised, every Contractor or subcontractor performing project work on a federal aid project is required to post the relevant prevailing wage rates as determined by the United States Secretary of Labor. The wage rate determinations shall be posted in prominent and easily accessible places at the work site.

4. Americans with Disabilities Act of 1990

This provision applies to those Contractors who are or will be responsible for compliance with the terms of the Americans with Disabilities Act of 1990, (42 U.S.C. 12101 et seq.), (Act), during the term of the Contract. The Contractor represents that it is familiar with the terms of this Act and that it is in compliance with the Act. Failure of the Contractor to satisfy this standard as the same applies to performance under this Contract, either now or during the term of the Contract as it may be amended, will render the Contract voidable at the option of the State upon notice to the contractor. The Contractor warrants that it will hold the State harmless and indemnify the State from any liability which may be imposed upon the State as a result of any failure of the Contractor to be in compliance with this Act, as the same applies to performance under this Contract.

5. Connecticut Statutory Labor Requirements

(a) Construction, Alteration or Repair of Public Works Projects; Wage Rates. The Contractor shall comply with Section 31-53 of the Connecticut General Statutes, as revised. The wages paid on an hourly basis to any person performing the work of any mechanic, laborer or worker on the work herein contracted to be done and the amount of payment or contribution paid or payable on behalf of each such person to any employee welfare fund, as defined in subsection (i) of section 31-53 of the Connecticut General Statutes, shall be at a rate equal to the rate customary or prevailing for the same work in the same trade or occupation in the town in which such public works project is being constructed. Any contractor who is not obligated by agreement to make payment or contribution on behalf of such persons to any such employee welfare fund shall pay to each mechanic, laborer or worker as part of such person's wages the amount of payment or contribution for such person's classification on each pay day.

(b) Debarment List. Limitation on Awarding Contracts. The Contractor shall comply with Section 3l-53a of the Connecticut General Statutes, as revised.

(c) Construction Safety and Health Course. The Contractor shall comply with section 31-53b of the Connecticut General Statutes, as revised. The contractor shall furnish proof to the Labor Commissioner with the weekly certified payroll form for the first week each employee begins work on such project that any person performing the work of a mechanic, laborer or worker pursuant to the classifications of labor under section 31-53 of the Connecticut General Statutes, as revised, on such public works project, pursuant to such contract, has completed a course of at least ten hours in duration in construction safety and health approved by the federal Occupational Safety and Health Administration or, has completed a new miner training program approved by the Federal Mine Safety and Health Administration in accordance with 30 CFR 48 or, in the case of telecommunications employees, has completed at least ten hours of training in accordance with 29 CFR 1910.268.

Any employee required to complete a construction safety and health course as required that has not completed the course, shall have a maximum of fourteen (14) days to complete the course. If the employee has not been brought into compliance, they shall be removed from the project until such time as they have completed the required training.

Any costs associated with this notice shall be included in the general cost of the contract. In addition, there shall be no time granted to the contractor for compliance with this notice. The contractor's compliance with this notice and any associated regulations shall not be grounds for claims as outlined in Section 1.11 – "Claims".

(d) Awarding of Contracts to Occupational Safety and Health Law Violators Prohibited. The Contract is subject to Section 31-57b of the Connecticut General Statutes, as revised.

(e) Residents Preference in Work on Other Public Facilities. NOT APPLICABLE TO FEDERAL AID CONTRACTS. Pursuant to Section 31-52a of the Connecticut General Statutes, as revised, in the employment of mechanics, laborers or workmen to perform the work specified herein, preference shall be given to residents of the state who are, and continuously for at least six months prior to the date hereof have been, residents of this state, and if no such person is available, then to residents of other states

6. Tax Liability - Contractor's Exempt Purchase Certificate (CERT – 141)

The Contractor shall comply with Chapter 219 of the Connecticut General Statutes pertaining to tangible personal property or services rendered that is/are subject to sales tax. The Contractor is responsible for determining its tax liability. If the Contractor purchases materials or supplies pursuant to the Connecticut Department of Revenue Services' "Contractor's Exempt Purchase Certificate (CERT-141)," as may be revised, the Contractor acknowledges and agrees that title to such materials and supplies installed or placed in the project will vest in the State simultaneously with passage of title from the retailers or vendors thereof, and the Contractor will have no property rights in the materials and supplies purchased.

Forms and instructions are available anytime by:

Internet: Visit the DRS website at www.ct.gov/DRS to download and print Connecticut tax forms; or Telephone: Call 1-800-382-9463 (Connecticut calls outside the Greater Hartford calling area only) and select Option 2 or call 860-297-4753 (from anywhere).

7. Executive Orders

This Contract is subject to the provisions of Executive Order No. Three of Governor Thomas J. Meskill, promulgated June 16, 1971, concerning labor employment practices, Executive Order No. Seventeen of Governor Thomas J. Meskill, promulgated February 15, 1973, concerning the listing of employment openings and Executive Order No. Sixteen of Governor John G. Rowland promulgated August 4, 1999, concerning violence in the workplace, all of which are incorporated into and are made a part of the Contract as if they had been fully set forth in it. The Contract may also be subject to the applicable parts of Executive Order No. 7C of Governor M. Jodi Rell, promulgated July 13, 2006, concerning contracting reforms and Executive Order No. 14 of Governor M. Jodi Rell, promulgated April 17, 2006, concerning procurement of cleaning products and services, in accordance with their respective terms and conditions. If Executive Orders 7C and 14 are applicable, they are deemed to be incorporated into and are made a part of the Contract as if they had been fully set forth in it. At the Contractor's request, the Department shall provide a copy of these orders to the Contractor.

8. Non Discrimination Requirement (pursuant to section 4a-60 and 4a-60a of the Connecticut General Statutes, as revised): References to "minority business enterprises" in this Section are not applicable to Federal-aid projects/contracts. Federal-aid projects/contracts are instead subject to the Federal Disadvantaged Business Enterprise Program.

(a) For purposes of this Section, the following terms are defined as follows:

i. "Commission" means the Commission on Human Rights and Opportunities;
ii. "Contract" and "contract" include any extension or modification of the Contract or contract;
iii. "Contractor" and "contractor" include any successors or assigns of the Contractor or contractor;
iv. "gender identity or expression" means a person's gender-related identity, appearance or behavior, whether or not that gender-related identity, appearance or behavior is different from that traditionally associated with the person's physiology or assigned sex at birth, which gender-related identity can be shown by providing evidence including, but not limited to, medical history, care or treatment of the gender-related identity, consistent and uniform assertion of the gender-related identity or any other evidence that the gender-related identity is sincerely held, part of a person's core identity or not being asserted for an improper purpose.

v. “good faith" means that degree of diligence which a reasonable person would exercise in the performance of legal duties and obligations;

vi. "good faith efforts" shall include, but not be limited to, those reasonable initial efforts necessary to comply with statutory or regulatory requirements and additional or substituted efforts when it is determined that such initial efforts will not be sufficient to comply with such requirements;

vii. "marital status" means being single, married as recognized by the state of Connecticut, widowed, separated or divorced;

viii. "mental disability" means one or more mental disorders, as defined in the most recent edition of the American Psychiatric Association's "Diagnostic and Statistical Manual of Mental Disorders", or a record of or regarding a person as having one or more such disorders;

ix. "minority business enterprise" means any small contractor or supplier of materials fifty-one percent or more of the capital stock, if any, or assets of which is owned by a person or persons: (1) who are active in the daily affairs of the enterprise, (2) who have the power to direct the management and policies of the enterprise, and (3) who are members of a minority, as such term is defined in subsection (a) of Connecticut General Statutes § 32-9n; and

x. “public works contract" means any agreement between any individual, firm or corporation and the State or any political subdivision of the State other than a municipality for construction, rehabilitation, conversion, extension, demolition or repair of a public building, highway or other changes or improvements in real property, or which is financed in whole or in part by the State, including, but not limited to, matching expenditures, grants, loans, insurance or guarantees.

For purposes of this Section, the terms "Contract" and “contract” do not include a contract where each contractor is (1) a political subdivision of the state, including, but not limited to, a municipality, (2) a quasi-public agency, as defined in Conn. Gen. Stat. Section 1-120, (3) any other state, including but not limited to any federally recognized Indian tribal governments, as defined in Conn. Gen. Stat. Section 1-267, (4) the federal government, (5) a foreign government, or (6) an agency of a subdivision, agency, state or government described in the immediately preceding enumerated items (1), (2), (3), (4) or (5).

(b) (1) The Contractor agrees and warrants that in the performance of the Contract such Contractor will not discriminate or permit discrimination against any person or group of persons on the grounds of race, color, religious creed, age, marital status, national origin, ancestry, sex, gender identity or expression, mental retardation, mental disability or physical disability, including, but not limited to, blindness, unless it is shown by such Contractor that such disability prevents performance of the work involved, in any manner prohibited by the laws of the United States or of the State of Connecticut; and the Contractor further agrees to take affirmative action to insure that applicants with job-related qualifications are employed and that employees are treated when employed without regard to their race, color, religious creed, age, marital status, national origin, ancestry, sex, gender identity or expression, mental retardation, mental disability or physical disability, including, but not limited to, blindness, unless it is shown by the Contractor that such disability prevents performance of the work involved; (2) the Contractor agrees, in all solicitations or advertisements for employees placed by or on behalf of the Contractor, to state that it is an "affirmative action-equal opportunity employer" in accordance with regulations adopted by the Commission; (3) the Contractor agrees to provide each labor union or representative of workers with which the Contractor has a collective bargaining Agreement or other contract or understanding and each vendor with which the Contractor has a contract or

understanding, a notice to be provided by the Commission, advising the labor union or workers' representative of the Contractor's commitments under this section and to post copies of the notice in conspicuous places available to employees and applicants for employment; (4) the Contractor agrees to comply with each provision of this Section and Connecticut General Statutes §§ 46a-68e and 46a-68f and with each regulation or relevant order issued by said Commission pursuant to Connecticut General Statutes §§ 46a-56, 46a-68e and 46a-68f; and (5) the Contractor agrees to provide the Commission on Human Rights and Opportunities with such information requested by the Commission, and permit access to pertinent books, records and accounts, concerning the employment practices and procedures of the Contractor as relate to the provisions of this Section and Connecticut General Statutes § 46a-56. If the contract is a public works contract, the Contractor agrees and warrants that he will make good faith efforts to employ minority business enterprises as subcontractors and suppliers of materials on such public works projects.

(c) Determination of the Contractor's good faith efforts shall include, but shall not be limited to, the following factors: The Contractor's employment and subcontracting policies, patterns and practices; affirmative advertising, recruitment and training; technical assistance activities and such other reasonable activities or efforts as the Commission may prescribe that are designed to ensure the participation of minority business enterprises in public works projects.

(d) The Contractor shall develop and maintain adequate documentation, in a manner prescribed by the Commission, of its good faith efforts.

(e) The Contractor shall include the provisions of subsection (b) of this Section in every subcontract or purchase order entered into in order to fulfill any obligation of a contract with the State and such provisions shall be binding on a subcontractor, vendor or manufacturer unless exempted by regulations or orders of the Commission. The Contractor shall take such action with respect to any such subcontract or purchase order as the Commission may direct as a means of enforcing such provisions including sanctions for noncompliance in accordance with Connecticut General Statutes §46a-56; provided if such Contractor becomes involved in, or is threatened with, litigation with a subcontractor or vendor as a result of such direction by the Commission, the Contractor may request the State of Connecticut to enter into any such litigation or negotiation prior thereto to protect the interests of the State and the State may so enter.

(f) The Contractor agrees to comply with the regulations referred to in this Section as they exist on the date of this Contract and as they may be adopted or amended from time to time during the term of this Contract and any amendments thereto.

(g) (1) The Contractor agrees and warrants that in the performance of the Contract such Contractor will not discriminate or permit discrimination against any person or group of persons on the grounds of sexual orientation, in any manner prohibited by the laws of the United States or the State of Connecticut, and that employees are treated when employed without regard to their sexual orientation; (2) the Contractor agrees to provide each labor union or representative of workers with which such Contractor has a collective bargaining Agreement or other contract or understanding and each vendor with which such Contractor has a contract or understanding, a notice to be provided by the Commission on Human Rights and Opportunities advising the labor union or workers' representative of the Contractor's commitments under this section, and to post copies of the notice in conspicuous places available to employees and applicants for employment; (3) the Contractor agrees to comply with each provision of this section and with each regulation or relevant order issued by said Commission pursuant to Connecticut General Statutes § 46a-56;

and (4) the Contractor agrees to provide the Commission on Human Rights and Opportunities with such information requested by the Commission, and permit access to pertinent books, records and accounts, concerning the employment practices and procedures of the Contractor which relate to the provisions of this Section and Connecticut General Statutes § 46a-56.

(h) The Contractor shall include the provisions of the foregoing paragraph in every subcontract or purchase order entered into in order to fulfill any obligation of a contract with the State and such provisions shall be binding on a subcontractor, vendor or manufacturer unless exempted by regulations or orders of the Commission. The Contractor shall take such action with respect to any such subcontract or purchase order as the Commission may direct as a means of enforcing such provisions including sanctions for noncompliance in accordance with Connecticut General Statutes § 46a-56; provided, if such Contractor becomes involved in, or is threatened with, litigation with a subcontractor or vendor as a result of such direction by the Commission, the Contractor may request the State of Connecticut to enter into any such litigation or negotiation prior thereto to protect the interests of the State and the State may so enter."

The Nondiscrimination Certifications can be found at the Office of Policy and Management website.

http://www.ct.gov/opm/cwp/view.asp?a=2982&Q=390928

9. Whistleblower Provision

The following clause is applicable if the Contract has a value of Five Million Dollars ($5,000,000) or more.

Whistleblowing. This Contract may be subject to the provisions of Section 4-61dd of the Connecticut General Statutes. In accordance with this statute, if an officer, employee or appointing authority of the Contractor takes or threatens to take any personnel action against any employee of the Contractor in retaliation for such employee's disclosure of information to any employee of the contracting state or quasi-public agency or the Auditors of Public Accounts or the Attorney General under the provisions of subsection (a) of such statute, the Contractor shall be liable for a civil penalty of not more than five thousand dollars for each offense, up to a maximum of twenty per cent of the value of this Contract. Each violation shall be a separate and distinct offense and in the case of a continuing violation, each calendar day's continuance of the violation shall be deemed to be a separate and distinct offense. The State may request that the Attorney General bring a civil action in the Superior Court for the Judicial District of Hartford to seek imposition and recovery of such civil penalty. In accordance with subsection (f) of such statute, each large state contractor, as defined in the statute, shall post a notice of the provisions of the statute relating to large state contractors in a conspicuous place which is readily available for viewing by the employees of the Contractor.

10. Connecticut Freedom of Information Act

(a) Disclosure of Records. This Contract may be subject to the provisions of section 1-218 of the Connecticut General Statutes. In accordance with this statute, each contract in excess of two million five hundred thousand dollars between a public agency and a person for the performance of a governmental function shall (a) provide that the public agency is entitled to receive a copy of records and files related to the performance of the governmental function, and (b) indicate that such records and files are subject to FOIA and may be disclosed by the public agency pursuant to FOIA. No request to inspect or copy such records or files shall be valid unless the request is made to the public agency in accordance with FOIA. Any complaint by a person who is denied the right to inspect or copy such records or files shall be brought to the Freedom of Information Commission in accordance with the provisions of sections 1-205 and 1-206 of the Connecticut General Statutes.

(b) Confidential Information. The State will afford due regard to the Contractor's request for the protection of proprietary or confidential information which the State receives from the Contractor. However, all materials associated with the Contract are subject to the terms of the FOIA and all corresponding rules, regulations and interpretations. In making such a request, the Contractor may not merely state generally that the materials are proprietary or confidential in nature and not, therefore, subject to release to third parties. Those particular sentences, paragraphs, pages or sections that the Contractor believes are exempt from disclosure under the FOIA must be specifically identified as such. Convincing explanation and rationale sufficient to justify each exemption consistent with the FOIA must accompany the request. The rationale and explanation must be stated in terms of the prospective harm to the competitive position of the Contractor that would result if the identified material were to be released and the reasons why the materials are legally exempt from release pursuant to the FOIA. To the extent that any other provision or part of the Contract conflicts or is in any way inconsistent with this section, this section controls and shall apply and the conflicting provision or part shall not be given effect. If the Contractor indicates that certain documentation is submitted in confidence, by specifically and clearly marking the documentation as "CONFIDENTIAL," DOT will first review the Contractor's claim for consistency with the FOIA (that is, review that the documentation is actually a trade secret or commercial or financial information and not required by statute), and if determined to be consistent, will endeavor to keep such information confidential to the extent permitted by law. See, *e.g.*, Conn. Gen. Stat. §1-210(b)(5)(A-B). The State, however, has no obligation to initiate, prosecute or defend any legal proceeding or to seek a protective order or other similar relief to prevent disclosure of any information that is sought pursuant to a FOIA request. Should the State withhold such documentation from a Freedom of Information requester and a complaint be brought to the Freedom of Information Commission, the Contractor shall have the burden of cooperating with DOT in defense of that action and in terms of establishing the availability of any FOIA exemption in any proceeding where it is an issue. In no event shall the State have any liability for the disclosure of any documents or information in its possession which the State believes are required to be disclosed pursuant to the FOIA or other law.

11. Service of Process

The Contractor, if not a resident of the State of Connecticut, or, in the case of a partnership, the partners, if not residents, hereby appoints the Secretary of State of the State of Connecticut, and his successors in office, as agent for service of process for any action arising out of or as a result of this Contract; such appointment to be in effect throughout the life of this Contract and six (6) years thereafter.

12. Substitution of Securities for Retainages on State Contracts and Subcontracts

This Contract is subject to the provisions of Section 3-ll2a of the General Statutes of the State of Connecticut, as revised.

13. Health Insurance Portability and Accountability Act of 1996 (HIPAA)

The Contractor shall comply, if applicable, with the Health Insurance Portability and Accountability Act of 1996 and, pursuant thereto, the provisions attached at Exhibit C, and hereby made part of this Contract.

14. Forum and Choice of Law

Forum and Choice of Law. The parties deem the Contract to have been made in the City of Hartford, State of Connecticut. Both parties agree that it is fair and reasonable for the validity and construction of the Contract to be, and it shall be, governed by the laws and court decisions of the State of Connecticut, without giving effect to its principles of conflicts of laws. To the extent that any immunities provided by Federal law or the laws of the State of Connecticut do not bar an action against the State, and to the extent that these courts are courts of competent jurisdiction, for the purpose of venue, the complaint shall be made returnable to the Judicial District of Hartford only or shall be brought in the United States District Court for the District of Connecticut only, and shall not be transferred to any other court, provided, however, that nothing here constitutes a waiver or compromise of the sovereign immunity of the State of Connecticut. The Contractor waives any objection which it may now have or will have to the laying of venue of any Claims in any forum and further irrevocably submits to such jurisdiction in any suit, action or proceeding.

15. Summary of State Ethics Laws

Pursuant to the requirements of section 1-101qq of the Connecticut General Statutes, the summary of State ethics laws developed by the State Ethics Commission pursuant to section 1-81b of the Connecticut General Statutes is incorporated by reference into and made a part of the Contract as if the summary had been fully set forth in the Contract.

16. Audit and Inspection of Plants, Places of Business and Records

(a) The State and its agents, including, but not limited to, the Connecticut Auditors of Public Accounts, Attorney General and State's Attorney and their respective agents, may, at reasonable hours, inspect and examine all of the parts of the Contractor's and Contractor Parties' plants and places of business which, in any way, are related to, or involved in, the performance of this Contract. For the purposes of this Section, "Contractor Parties" means the Contractor's members, directors, officers, shareholders, partners, managers, principal officers, representatives, agents, servants, consultants, employees or any one of them or any other person or entity with whom the Contractor is in privity of oral or written contract and the Contractor intends for such other person or entity to Perform under the Contract in any capacity.

(b) The Contractor shall maintain, and shall require each of the Contractor Parties to maintain, accurate and complete Records. The Contractor shall make all of its and the Contractor Parties' Records available at all reasonable hours for audit and inspection by the State and its agents.

(c) The State shall make all requests for any audit or inspection in writing and shall provide the Contractor with at least twenty-four (24) hours' notice prior to the requested audit and inspection date. If the State suspects fraud or other abuse, or in the event of an emergency, the State is not obligated to provide any prior notice.

(d) The Contractor shall keep and preserve or cause to be kept and preserved all of its and Contractor Parties' Records until three (3) years after the latter of (i) final payment under this Agreement, or (ii) the expiration or earlier termination of this Agreement, as the same may be modified for any reason. The State may request an audit or inspection at any time during this period. If any Claim or audit is started before the expiration of this period, the Contractor shall retain or cause to be retained all Records until all Claims or audit findings have been resolved.

(e) The Contractor shall cooperate fully with the State and its agents in connection with an audit or inspection. Following any audit or inspection, the State may conduct and the Contractor shall cooperate with an exit conference.

(f) The Contractor shall incorporate this entire Section verbatim into any contract or other agreement that it enters into with any Contractor Party.

17.Campaign Contribution Restriction

For all State contracts, defined in Conn. Gen. Stat. §9-612(g)(1) as having a value in a calendar year of $50,000 or more, or a combination or series of such agreements or contracts having a value of $100,000 or more, the authorized signatory to this Agreement expressly acknowledges receipt of the State Elections Enforcement Commission's notice advising state contractors of state campaign contribution and solicitation prohibitions, and will inform its principals of the contents of the notice, as set forth in "Notice to Executive Branch State Contractors and Prospective State Contractors of Campaign Contribution and Solicitation Limitations," attached as Exhibit D.

18. Tangible Personal Property

(a) The Contractor on its behalf and on behalf of its Affiliates, as defined below, shall comply with the provisions of Conn. Gen. Stat. §12-411b, as follows:

(1) For the term of the Contract, the Contractor and its Affiliates shall collect and remit to the State of Connecticut, Department of Revenue Services, any Connecticut use tax due under the provisions of Chapter 219 of the Connecticut General Statutes for items of tangible personal property sold by the Contractor or by any of its Affiliates in the same manner as if the Contractor and such Affiliates were engaged in the business of selling tangible personal property for use in Connecticut and had sufficient nexus under the provisions of Chapter 219 to be required to collect Connecticut use tax;
(2) A customer's payment of a use tax to the Contractor or its Affiliates relieves the customer of liability for the use tax;
(3) The Contractor and its Affiliates shall remit all use taxes they collect from customers on or before the due date specified in the Contract, which may not be later than the last day of the month next succeeding the end of a calendar quarter or other tax collection period during which the tax was collected;
(4) The Contractor and its Affiliates are not liable for use tax billed by them but not paid to them by a customer; and
(5) Any Contractor or Affiliate who fails to remit use taxes collected on behalf of its customers by the due date specified in the Contract shall be subject to the interest and penalties provided for persons required to collect sales tax under chapter 219 of the general statutes.

(b) For purposes of this section of the Contract, the word "Affiliate" means any person, as defined in section 12-1 of the general statutes, that controls, is controlled by, or is under common control with another person. A person controls another person if the person owns, directly or indirectly, more than ten per cent of the voting securities of the other person. The word "voting security" means a security that confers upon the holder the right to vote for the election of members of the board of directors or similar governing body of the business, or that is convertible into, or entitles the holder to receive, upon its exercise, a security that confers such a right to vote. "Voting security" includes a general partnership interest.

(c) The Contractor represents and warrants that each of its Affiliates has vested in the Contractor plenary authority to so bind the Affiliates in any agreement with the State of Connecticut. The Contractor on its own behalf and on behalf of its Affiliates shall also provide, no later than 30 days after receiving a request by the State's contracting authority, such information as the State may require to ensure, in the State's sole determination, compliance with the provisions of Chapter 219 of the Connecticut General Statutes, including, but not limited to, §12-411b.

19. Bid Rigging and/or Fraud – Notice to Contractor

The Connecticut Department of Transportation is cooperating with the U.S. Department of Transportation and the Justice Department in their investigation into highway construction contract bid rigging and/or fraud.

A toll-free "HOT LINE" telephone number 800-424-9071 has been established to receive information from contractors, subcontractors, manufacturers, suppliers or anyone with knowledge of bid rigging and/or fraud, either past or current. The "HOT LINE" telephone number will be available during normal working hours (8:00 am – 5:00 pm EST). Information will be treated confidentially and anonymity respected.

20. Consulting Agreement Affidavit

The Contractor shall comply with Connecticut General Statutes Section 4a-81(a) and 4a-81(b), as revised. Pursuant to Public Act 11-229, after the initial submission of the form, if there is a change in the information contained in the form, a contractor shall submit the updated form, as applicable, either (i) not later than thirty (30) days after the effective date of such change or (ii) prior to execution of any new contract, whichever is earlier.

The Affidavit/Form may be submitted in written format or electronic format through the Department of Administrative Services (DAS) website.

EXHIBIT A

TITLE VI CONTRACTOR ASSURANCES

During the performance of this Contract, the contractor, for itself, its assignees and successors in interest (hereinafter referred to as the "Contractor") agrees as follows:

1. **Compliance with Regulations:** The Contractor shall comply with the regulations relative to nondiscrimination in federally assisted programs of the United States Department of Transportation (hereinafter, "USDOT"), Title 49, Code of Federal Regulations, Part 21, as they may be amended from time to time (hereinafter referred to as the "Regulations"), which are herein incorporated by reference and made a part of this contract.

2. **Nondiscrimination:** The Contractor, with regard to the work performed by it during the Contract, shall not discriminate on the grounds of race, color, national origin, sex, age, or disability in the selection and retention of subcontractors, including procurements of materials and leases of equipment. The Contractor shall not participate either directly or indirectly in the discrimination prohibited by Subsection 5 of the Regulations, including employment practices when the Contract covers a program set forth in Appendix B of the Regulations.

3. **Solicitations for Subcontracts, Including Procurements of Materials and Equipment:**
In all solicitations either by competitive bidding or negotiation made by the Contractor for work to be performed under a subcontract, including procurements of materials or leases of equipment, each potential subcontractor or supplier shall be notified by the Contractor of the Contractor's obligations under this contract and the Regulations relative to nondiscrimination on the grounds of race, color, national origin, sex, age, or disability.

4. **Information and Reports:** The Contractor shall provide all information and reports required by the Regulations or directives issued pursuant thereto and shall permit access to its books, records, accounts, other sources of information, and its facilities as may be determined by the Connecticut Department of Transportation (ConnDOT) or the Funding Agency (FHWA, FTA and FAA) to be pertinent to ascertain compliance with such Regulations, orders, and instructions. Where any information required of a Contractor is in the exclusive possession of another who fails or refuses to furnish this information, the Contractor shall so certify to ConnDOT or the Funding Agency, as appropriate, and shall set forth what efforts it has made to obtain the information.

5. **Sanctions for Noncompliance:** In the event of the Contractor's noncompliance with the nondiscrimination provisions of this Contract, the ConnDOT shall impose such sanctions as it or the Funding Agency may determine to be appropriate, including, but not limited to:

A. Withholding contract payments until the Contractor is in-compliance; and/or
B. Cancellation, termination, or suspension of the Contract, in whole or in part.

6. **Incorporation of Provisions:** The Contractor shall include the provisions of paragraphs 1 through 5 in every subcontract, including procurements of materials and leases of equipment, unless exempt by the Regulations or directives issued pursuant thereto. The Contractor shall take such action with respect to any subcontract or procurement as the ConnDOT or the Funding Agency may -direct as a means of enforcing such provisions including sanctions for noncompliance. Provided, however, that in the event a Contractor becomes involved in, or is threatened with, litigation with a subcontractor or supplier as a result of such direction, the Contractor may request the ConnDOT to enter into such litigation to protect the interests of the Funding Agency, and, in addition, the Contractor may request the United States to enter into such litigation to protect the interests of the United States

EXHIBIT B

CONTRACTOR WORKFORCE UTILIZATION / EQUAL EMPLOYMENT OPPORTUNITY

1. **Project Workforce Utilization Goals:**
   These goals are applicable to all the Contractor's construction work (whether or not it is Federal or Federally assisted or funded) performed in the covered area. If the contractor performs construction work in a geographical area located outside of the covered area, it shall apply the goals established for the geographical area where the work is actually performed.

   Whenever the Contractor, or any Subcontractor at any tier, subcontracts a portion of the work involving any construction trade, it shall physically include in each subcontract in excess of $10,000 the provisions of these specifications which contain the applicable goals for minority and female participation.

   The goals for minority and female utilization are expressed in percentage terms for the contractor's aggregate work-force in each trade on all construction work in the covered area, are referenced in the Appendix A below.

STATE FUNDED PROJECTS (only)
APPENDIX A
(Labor Market Goals)

LABOR MARKET AREA GOAL				***Minority*** **Female**
Bridgeport				**14%** **6.9%**
Ansonia	Beacon Falls	Bridgeport	Derby	
Easton	Fairfield	Milford	Monroe	
Oxford	Seymour	Shelton	Stratford	
Trumbull				
Danbury				**4%** **6.9%**
Bethel	Bridgewater	Brookfield	Danbury	
Kent	New Fairfield	New Milford	Newtown	
Redding	Ridgefield	Roxbury	Sherman	
Washington				
Danielson				**2%** **6.9%**
Brooklyn	Eastford	Hampton	Killingly	
Pomfret	Putnam	Scotland	Sterling	
Thompson	Voluntown	Union	Woodstock	
Hartford				**15%** **6.9%**
Andover	Ashford	Avon	Barkhamsted	

Belin	Bloomfield	Bolton	Bristol
Burlington	Canton	Chaplin	Colchester
Columbia	Coventry	Cromwell	Durham
East Granby	East Haddam	East Hampton	East Hartford
East Windsor	Ellington	Enfield	Farmington
Glastonbury	Granby	Haddam	Hartford
Harwinton	Hebron	Lebanon	Manchester
Mansfield	Marlborough	Middlefield	Middletown
Newington	Plainville	Plymouth	Portland
Rocky Hill	Simsbury	Somers	South Windsor
Southington	Stafford	Suffield	Tolland
Vernon	West Hartford	Wethersfield	Willington
Winchester	Windham	Windsor	Windsor Locks

Lower River 6.9%	**2%**

Chester	Deep River	Essex	Old Lyme
Westbrook			

New Haven 6.9%	**14%**

Bethany	Branford	Cheshire	Clinton
East Haven	Guilford	Hamden	Killingworth
Madison	Meriden	New Haven	North Branford
North Haven	Orange	Wallingford	West Haven
Woodbridge			

New London 6.9%	**8%**

Bozrah	Canterbury	East Lyme	Franklin
Griswold	Groton	Ledyard	Lisbon
Montville	New London	North Stonington	Norwich
Old Lyme	Old Saybrook	Plainfield	Preston
Salem	Sprague	Stonington	Waterford
Hopkinton	RI – Westerly Rhode Island		

Stamford 6.9%	**17%**

Darien	Greenwich	New Canaan	Norwalk
Stamford	Weston	Westport	Wilton

Torrington 6.9%	**2%**

Canaan	Colebrook	Cornwall	Goshen
Hartland	Kent	Litchfield	Morris
Norfolk	North Canaan	Salisbury	Sharon
Torrington	Warren		

Waterbury 6.9%			**10%**
Bethlehem	Middlebury	Naugatuck	Prospect
Southbury	Thomaston	Waterbury	Watertown
Wolcott	Woodbury		

EXHIBIT C

Health Insurance Portability and Accountability Act of 1996 ("HIPAA").

(a) If the Contactor is a Business Associate under the requirements of the Health Insurance Portability and Accountability Act of 1996 ("HIPAA"), the Contractor must comply with all terms and conditions of this Section of the Contract. If the Contractor is not a Business Associate under HIPAA, this Section of the Contract does not apply to the Contractor for this Contract.

(b) The Contractor is required to safeguard the use, publication and disclosure of information on all applicants for, and all clients who receive, services under the Contract in accordance with all applicable federal and state law regarding confidentiality, which includes but is not limited to HIPAA, more specifically with the Privacy and Security Rules at 45 C.F.R. Part 160 and Part 164, subparts A, C, and E; and

(c) The State of Connecticut Agency named on page 1 of this Contract (hereinafter the "Department") is a "covered entity" as that term is defined in 45 C.F.R. § 160.103; and

(d) The Contractor, on behalf of the Department, performs functions that involve the use or disclosure of "individually identifiable health information," as that term is defined in 45 C.F.R. § 160.103; and

(e) The Contractor is a "business associate" of the Department, as that term is defined in 45 C.F.R. § 160.103; and

(f) The Contractor and the Department agree to the following in order to secure compliance with the HIPAA, the requirements of Subtitle D of the Health Information Technology for Economic and Clinical Health Act (hereinafter the HITECH Act), (Pub. L. 111-5, sections 13400 to 13423), and more specifically with the Privacy and Security Rules at 45 C.F.R. Part 160 and Part 164, subparts A, C, and E.

(g) Definitions

(1) "Breach shall have the same meaning as the term is defined in section 13400 of the HITECH Act (42 U.S.C. §17921(1))

(2) "Business Associate" shall mean the Contractor.

(3) "Covered Entity" shall mean the Department of the State of Connecticut named on page 1 of this Contract.

(4) "Designated Record Set" shall have the same meaning as the term "designated record set" in 45 C.F.R. § 164.501.

(5) "Electronic Health Record" shall have the same meaning as the term is defined in section 13400 of the HITECH Act (42 U.S.C. §17921(5))

(6) "Individual" shall have the same meaning as the term "individual"' in 45 C.F.R. § 160.103 and shall include a person who qualifies as a personal representative as defined in 45 C.F.R. § 164.502(g).

(7) "Privacy Rule" shall mean the Standards for Privacy of Individually Identifiable Health Information at 45 C.F.R. part 160 and parts 164, subparts A and E.

(8) "Protected Health Information" or "PHI" shall have the same meaning as the term "protected health information" in 45 C.F.R. § 160.103, limited to information created or received by the Business Associate from or on behalf of the Covered Entity.

(9) "Required by Law"' shall have the same meaning as the term "required by law" in 45 C.F.R. § 164.103.

(10) "Secretary" shall mean the Secretary of the Department of Health and Human Services or his designee.

(11) "More stringent" shall have the same meaning as the term "more stringent" in 45 C.F.R. § 160.202.

(12) "This Section of the Contract" refers to the HIPAA Provisions stated herein, in their entirety.

(13) "Security Incident" shall have the same meaning as the term "security incident" in 45 C.F.R.§ 164.304.

(14) "Security Rule" shall mean the Security Standards for the Protection of Electronic Protected Health Information at 45 C.F.R. part 160 and parts 164, subpart A and C.

(15) "Unsecured protected health information" shall have the same meaning as the term as defined in section 13402(h)(1)(A) of HITECH. Act. (42 U.S.C. §17932(h)(1)(A)).

(h) Obligations and Activities of Business Associates.

(1) Business Associate agrees not to use or disclose PHI other than as permitted or required by this Section of the Contract or as Required by Law.

(2) Business Associate agrees to use appropriate safeguards to prevent use or disclosure of PHI other than as provided for in this Section of the Contract.

(3) Business Associate agrees to use administrative, physical and technical safeguards that reasonably and appropriately protect the confidentiality, integrity, and availability of electronic protected health information that it creates, receives, maintains, or transmits on behalf of the Covered Entity.

(4) Business Associate agrees to mitigate, to the extent practicable, any harmful effect that is known to the Business Associate of a use or disclosure of PHI by Business Associate in violation of this Section of the Contract.

(5) Business Associate agrees to report to Covered Entity any use or disclosure of PHI not provided for by this Section of the Contract or any security incident of which it becomes aware.

(6) Business Associate agrees to insure that any agent, including a subcontractor, to whom it provides PHI received from, or created or received by Business Associate, on behalf of the Covered Entity, agrees to the same restrictions and conditions that apply through this Section of the Contract to Business Associate with respect to such information.

(7) Business Associate agrees to provide access, at the request of the Covered Entity, and in the time and manner agreed to by the parties, to PHI in a Designated Record Set, to Covered Entity or, as directed by Covered Entity, to an Individual in order to meet the requirements under 45 C.F.R. § 164.524.

(8) Business Associate agrees to make any amendments to PHI in a Designated Record Set that the Covered Entity directs or agrees to pursuant to 45 C.F.R. § 164.526 at the request of the Covered Entity, and in the time and manner agreed to by the parties.

(9) Business Associate agrees to make internal practices, books, and records, including policies and procedures and PHI, relating to the use and disclosure of PHI received from, or created or received by, Business Associate on behalf of Covered Entity, available to Covered Entity or to the Secretary in a time and manner agreed to by the parties or designated by the Secretary, for purposes of the Secretary determining Covered Entity's compliance with the Privacy Rule.

(10) Business Associate agrees to document such disclosures of PHI and information related to such disclosures as would be required for Covered Entity to respond to a request by an Individual for an accounting of disclosures of PHI in accordance with 45 C.F.R. § 164.528 and section 13405 of the HITECH Act (42 U.S.C. § 17935) and any regulations promulgated thereunder.

(11) Business Associate agrees to provide to Covered Entity, in a time and manner agreed to by the parties, information collected in accordance with clause h. (10) of this Section of the Contract, to permit Covered Entity to respond to a request by an Individual for an accounting of disclosures of PHI in accordance with 45 C.F.R. § 164.528 and section 13405 of the HITECH Act (42 U.S.C. § 17935) and any regulations promulgated thereunder. Business Associate agrees at the Covered Entity's direction to provide an accounting of disclosures of PHI directly to an individual in accordance with 45 C.F.R. § 164.528 and section 13405 of the HITECH Act (42 U.S.C. § 17935) and any regulations promulgated thereunder.

(12) Business Associate agrees to comply with any state or federal law that is more stringent than the Privacy Rule.

(13) Business Associate agrees to comply with the requirements of the HITECH Act relating to privacy and security that are applicable to the Covered Entity and with the requirements of 45 C.F.R. sections 164.504(e), 164.308, 164.310, 164.312, and 164.316.

(14) In the event that an individual requests that the Business Associate (a) restrict disclosures of PHI; (b) provide an accounting of disclosures of the individual's PHI; or (c) provide a copy of the individual's PHI in an electronic health record, the Business Associate agrees to notify the covered entity, in writing, within two business days of the request.

(15) Business Associate agrees that it shall not, directly or indirectly, receive any remuneration in exchange for PHI of an individual without (1) the written approval of the covered entity, unless receipt of remuneration in exchange for PHI is expressly authorized by this Contract and (2) the valid authorization of the individual, except for the purposes provided under section 13405(d)(2) of the HITECH Act,(42 U.S.C. § 17935(d)(2)) and in any accompanying regulations

(16) Obligations in the Event of a Breach

A. The Business Associate agrees that, following the discovery of a breach of unsecured protected health information, it shall notify the Covered Entity of such breach in accordance with the requirements of section 13402 of HITECH (42 U.S.C. 17932(b) and the provisions of this Section of the Contract.
B. Such notification shall be provided by the Business Associate to the Covered Entity without unreasonable delay, and in no case later than 30 days after the breach is discovered by the Business Associate, except as otherwise instructed in writing by a law enforcement official pursuant to section 13402 (g) of HITECH (42 U.S.C. 17932(g)) . A breach is considered discovered as of the first day on which it is, or reasonably should have been, known to the Business Associate. The notification shall include the identification and last known address, phone number and email address of each individual (or the next of kin of the individual if the individual is deceased) whose unsecured protected health information has been, or is reasonably believed by the Business Associate to have been, accessed, acquired, or disclosed during such breach.
C. The Business Associate agrees to include in the notification to the Covered Entity at least the following information:
    1. A brief description of what happened, including the date of the breach and the date of the discovery of the breach, if known.

    2. A description of the types of unsecured protected health information that were involved in the breach (such as full name, Social Security number, date of birth, home address, account number, or disability code).

    3. The steps the Business Associate recommends that individuals take to protect themselves from potential harm resulting from the breach.

    4. A detailed description of what the Business Associate is doing to investigate the breach, to mitigate losses, and to protect against any further breaches.

    5. Whether a law enforcement official has advised either verbally or in writing the Business Associate that he or she has determined that notification or notice to

individuals or the posting required under section 13402 of the HITECH Act would impede a criminal investigation or cause damage to national security and; if so, include contact information for said official.

D. Business Associate agrees to provide appropriate staffing and have established procedures to ensure that individuals informed by the Covered Entity of a breach by the Business Associate have the opportunity to ask questions and contact the Business Associate for additional information regarding the breach. Such procedures shall include a toll-free telephone number, an e-mail address, a posting on its Web site and a postal address. Business Associate agrees to include in the notification of a breach by the Business Associate to the Covered Entity, a written description of the procedures that have been established to meet these requirements. Costs of such contact procedures will be borne by the Contractor.

E. Business Associate agrees that, in the event of a breach, it has the burden to demonstrate that it has complied with all notifications requirements set forth above, including evidence demonstrating the necessity of a delay in notification to the Covered Entity.

(i) Permitted Uses and Disclosure by Business Associate.

(1) General Use and Disclosure Provisions Except as otherwise limited in this Section of the Contract, Business Associate may use or disclose PHI to perform functions, activities, or services for, or on behalf of, Covered Entity as specified in this Contract, provided that such use or disclosure would not violate the Privacy Rule if done by Covered Entity or the minimum necessary policies and procedures of the Covered Entity.

(2) Specific Use and Disclosure Provisions

(A) Except as otherwise limited in this Section of the Contract, Business Associate may use PHI for the proper management and administration of Business Associate or to carry out the legal responsibilities of Business Associate.

(B) Except as otherwise limited in this Section of the Contract, Business Associate may disclose PHI for the proper management and administration of Business Associate, provided that disclosures are Required by Law, or Business Associate obtains reasonable assurances from the person to whom the information is disclosed that it will remain confidential and used or further disclosed only as Required by Law or for the purpose for which it was disclosed to the person, and the person notifies Business Associate of any instances of which it is aware in which the confidentiality of the information has been breached.

(C) Except as otherwise limited in this Section of the Contract, Business Associate may use PHI to provide Data Aggregation services to Covered Entity as permitted by 45 C.F.R. § 164.504(e)(2)(i)(B).

(j) Obligations of Covered Entity.

(1) Covered Entity shall notify Business Associate of any limitations in its notice of privacy practices of Covered Entity, in accordance with 45 C.F.R. § 164.520, or to the extent that such limitation may affect Business Associate's use or disclosure of PHI.

(2) Covered Entity shall notify Business Associate of any changes in, or revocation of, permission by Individual to use or disclose PHI, to the extent that such changes may affect Business Associate's use or disclosure of PHI.

(3) Covered Entity shall notify Business Associate of any restriction to the use or disclosure of PHI that Covered Entity has agreed to in accordance with 45 C.F.R. § 164.522, to the extent that such restriction may affect Business Associate's use or disclosure of PHI.

(k) Permissible Requests by Covered Entity. Covered Entity shall not request Business Associate to use or disclose PHI in any manner that would not be permissible under the Privacy Rule if done by the Covered Entity, except that Business Associate may use and disclose PHI for data aggregation, and management and administrative activities of Business Associate, as permitted under this Section of the Contract.

(l) Term and Termination.

(1) Term. The Term of this Section of the Contract shall be effective as of the date the Contract is effective and shall terminate when the information collected in accordance with clause h. (10) of this Section of the Contract is provided to the Covered Entity and all of the PHI provided by Covered Entity to Business Associate, or created or received by Business Associate on behalf of Covered Entity, is destroyed or returned to Covered Entity, or, if it is infeasible to return or destroy PHI, protections are extended to such information, in accordance with the termination provisions in this Section.

(2) Termination for Cause Upon Covered Entity's knowledge of a material breach by Business Associate, Covered Entity shall either:

(A) Provide an opportunity for Business Associate to cure the breach or end the violation and terminate the Contract if Business Associate does not cure the breach or end the violation within the time specified by the Covered Entity; or

(B) Immediately terminate the Contract if Business Associate has breached a material term of this Section of the Contract and cure is not possible; or

(C) If neither termination nor cure is feasible, Covered Entity shall report the violation to the Secretary.

(3) Effect of Termination

(A) Except as provided in (l)(2) of this Section of the Contract, upon termination of this Contract, for any reason, Business Associate shall return or destroy all PHI received from Covered Entity, or created or received by Business Associate on behalf of Covered Entity. Business Associate shall also provide the information collected in accordance with clause h. (10) of this Section of the Contract to the Covered Entity

within ten business days of the notice of termination. This provision shall apply to PHI that is in the possession of subcontractors or agents of Business Associate. Business Associate shall retain no copies of the PHI.

(B) In the event that Business Associate determines that returning or destroying the PHI is infeasible, Business Associate shall provide to Covered Entity notification of the conditions that make return or destruction infeasible. Upon documentation by Business Associate that return or destruction of PHI is infeasible, Business Associate shall extend the protections of this Section of the Contract to such PHI and limit further uses and disclosures of PHI to those purposes that make return or destruction infeasible, for as long as Business Associate maintains such PHI. Infeasibility of the return or destruction of PHI includes, but is not limited to, requirements under state or federal law that the Business Associate maintains or preserves the PHI or copies thereof.

(m) Miscellaneous Provisions.

(1) Regulatory References. A reference in this Section of the Contract to a section in the Privacy Rule means the section as in effect or as amended.

(2) Amendment. The Parties agree to take such action as in necessary to amend this Section of the Contract from time to time as is necessary for Covered Entity to comply with requirements of the Privacy Rule and the Health Insurance Portability and Accountability Act of 1996, Pub. L. No. 104-191.

(3) Survival. The respective rights and obligations of Business Associate shall survive the termination of this Contract.

(4) Effect on Contract. Except as specifically required to implement the purposes of this Section of the Contract, all other terms of the Contract shall remain in force and effect.

(5) Construction. This Section of the Contract shall be construed as broadly as necessary to implement and comply with the Privacy Standard. Any ambiguity in this Section of the Contract shall be resolved in favor of a meaning that complies, and is consistent with, the Privacy Standard.

(6) Disclaimer. Covered Entity makes no warranty or representation that compliance with this Section of the Contract will be adequate or satisfactory for Business Associate's own purposes. Covered Entity shall not be liable to Business Associate for any claim, civil or criminal penalty, loss or damage related to or arising from the unauthorized use or disclosure of PHI by Business Associate or any of its officers, directors, employees, contractors or agents, or any third party to whom Business Associate has disclosed PHI contrary to the provisions of this Contract or applicable law. Business Associate is solely responsible for all decisions made, and actions taken, by Business Associate regarding the safeguarding, use and disclosure of PHI within its possession, custody or control.

(7) Indemnification. The Business Associate shall indemnify and hold the Covered Entity harmless from and against any and all claims, liabilities, judgments, fines, assessments, penalties, awards and any statutory damages that may be imposed or assessed pursuant to HIPAA, as amended or the

HITECH Act, including, without limitation, attorney's fees, expert witness fees, costs of investigation, litigation or dispute resolution, and costs awarded thereunder, relating to or arising out of any violation by the Business Associate and its agents, including subcontractors, of any obligation of Business Associate and its agents, including subcontractors, under this section of the contract, under HIPAA, the HITECH Act, the Privacy Rule and the Security Rule.

Notice to Executive Branch State Contractors and Prospective State Contractors of Campaign Contribution and Solicitation Limitations

This notice is provided under the authority of Connecticut General Statutes §9-612(g)(2), as amended by P.A. 10-1, and is for the purpose of informing state contractors and prospective state contractors of the following law (italicized words are defined on the reverse side of this page).

CAMPAIGN CONTRIBUTION AND SOLICITATION LIMITATIONS

No *state contractor, prospective state contractor, principal of a state contractor or principal of a prospective state contractor*, with regard to a *state contract* or *state contract solicitation* with or from a state agency in the executive branch or a quasi-public agency or a holder, or principal of a holder of a valid prequalification certificate, shall make a contribution to (i) an exploratory committee or candidate committee established by a candidate for nomination or election to the office of Governor, Lieutenant Governor, Attorney General, State Comptroller, Secretary of the State or State Treasurer, (ii) a political committee authorized to make contributions or expenditures to or for the benefit of such candidates, or (iii) a party committee (which includes town committees).

In addition, no holder or principal of a holder of a valid prequalification certificate, shall make a contribution to (i) an exploratory committee or candidate committee established by a candidate for nomination or election to the office of State senator or State representative, (ii) a political committee authorized to make contributions or expenditures to or for the benefit of such candidates, or (iii) a party committee.

On and after January 1, 2011, no state contractor, prospective state contractor, principal of a state contractor or principal of a prospective state contractor, with regard to a state contract or state contract solicitation with or from a state agency in the executive branch or a quasi-public agency or a holder, or principal of a holder of a valid prequalification certificate, shall **knowingly** *solicit* contributions from the state contractor's or prospective state contractor's employees or from a *subcontractor* or *principals of the subcontractor* on behalf of (i) an exploratory committee or candidate committee established by a candidate for nomination or election to the office of Governor, Lieutenant Governor, Attorney General, State Comptroller, Secretary of the State or State Treasurer, (ii) a political committee authorized to make contributions or expenditures to or for the benefit of such candidates, or (iii) a party committee.

DUTY TO INFORM

State contractors and prospective state contractors are required to inform their principals of the above prohibitions, as applicable, and the possible penalties and other consequences of any violation thereof.

PENALTIES FOR VIOLATIONS

Contributions or solicitations of contributions made in violation of the above prohibitions may result in the following civil and criminal penalties:

Civil penalties—Up to $2,000 or twice the amount of the prohibited contribution, whichever is greater, against a principal or a contractor. Any state contractor or prospective state contractor which fails to make reasonable efforts to comply with the provisions requiring notice to its principals of these prohibitions and the possible consequences of their violations may also be subject to civil penalties of up to $2,000 or twice the amount of the prohibited contributions made by their principals.

Criminal penalties—Any knowing and willful violation of the prohibition is a Class D felony, which may subject the violator to imprisonment of not more than 5 years, or not more than $5,000 in fines, or both.

CONTRACT CONSEQUENCES

In the case of a state contractor, contributions made or solicited in violation of the above prohibitions may resulting the contract being voided.

In the case of a prospective state contractor, contributions made or solicited in violation of the above prohibitions shall result in the contract described in the state contract solicitation not being awarded to the prospective state contractor, unless the State Elections Enforcement Commission determines that mitigating circumstances exist concerning such violation.

The State shall not award any other state contract to anyone found in violation of the above prohibitions for a period of one year after the election for which such contribution is made or solicited, unless the State Elections Enforcement Commission determines that mitigating circumstances exist concerning such violation.
Additional information may be found on the website of the State Elections Enforcement Commission, www.ct.gov/seec. Click on the link to “Lobbyist/Contractor Limitations.”

DEFINITIONS

"State contractor" means a person, business entity or nonprofit organization that enters into a state contract. Such person, business entity or nonprofit organization shall be deemed to be a state contractor until December thirty-first of the year in which such contract terminates. "State contractor" does not include a municipality or any other political subdivision of the state, including any entities or associations duly created by the municipality or political subdivision exclusively amongst themselves to further any purpose authorized by statute or charter, or an employee in the executive or legislative branch of state government or a quasi-public agency, whether in the classified or unclassified service and full or part-time, and only in such person's capacity as a state or quasi-public agency employee.

"Prospective state contractor" means a person, business entity or nonprofit organization that (i) submits a response to a state contract solicitation by the state, a state agency or a quasi-public agency, or a proposal in response to a request for proposals by the state, a state agency or a quasi-public agency, until the contract has been entered into, or (ii) holds a valid prequalification certificate issued by the Commissioner of Administrative Services under section 4a-100. "Prospective state contractor" does not include a municipality or any other political subdivision of the state, including any entities or associations duly created by the municipality or political subdivision exclusively amongst themselves to further any purpose authorized by statute or charter, or an employee in the executive or legislative branch of state government or a quasi-public agency, whether in the classified or unclassified service and full or part-time, and only in such person's capacity as a state or quasi-public agency employee.

"Principal of a state contractor or prospective state contractor" means (i) any individual who is a member of the board of directors of, or has an ownership interest of five per cent or more in, a state contractor or prospective state contractor, which is a business entity, except for an individual who is a member of the board of directors of a nonprofit organization**,** (ii) an individual who is employed by a state contractor or prospective state contractor, which is a business entity, as president, treasurer or executive vice president, (iii) an individual who is the chief executive officer of a state contractor or prospective state contractor, which is not a business entity, or if a state contractor or prospective state contractor has no such officer, then the officer who duly possesses comparable powers and duties, (iv) an officer or an employee of any state contractor or prospective state contractor who has *managerial or discretionary responsibilities with respect to a state contract,* (v) the spouse or a *dependent child* who is eighteen years of age or older of an individual described in this subparagraph, or (vi) a political committee established or controlled by an individual described in this subparagraph or the business entity or nonprofit organization that is the state contractor or prospective state contractor.

"State contract" means an agreement or contract with the state or any state agency or any quasi-public agency, let through a procurement process or otherwise, having a value of fifty thousand dollars or more, or a combination or series of such agreements or contracts having a value of one hundred thousand dollars or more in a calendar year, for (i) the rendition of services, (ii) the furnishing of any goods, material, supplies, equipment or any items of any kind, (iii) the construction, alteration or repair of any public building or public work, (iv) the acquisition, sale or lease of any land or building, (v) a licensing arrangement, or (vi) a grant, loan or loan guarantee. "State contract" does not include any agreement or contract with the state, any state agency or any quasi-public agency that is exclusively federally funded, an education loan, a loan to an individual for other than commercial purposes or any agreement or contract between the state or any state agency and the United States Department of the Navy or the United States Department of Defense.

"State contract solicitation" means a request by a state agency or quasi-public agency, in whatever form issued, including, but not limited to, an invitation to bid, request for proposals, request for information or request for quotes, inviting bids, quotes or other types of submittals, through a competitive procurement process or another process authorized by law waiving competitive procurement.

"Managerial or discretionary responsibilities with respect to a state contract" means having direct, extensive and substantive responsibilities with respect to the negotiation of the state contract and not peripheral, clerical or ministerial responsibilities.

"Dependent child" means a child residing in an individual's household who may legally be claimed as a dependent on the federal income tax of such individual.

"Solicit" means (A) requesting that a contribution be made, (B) participating in any fund-raising activities for a candidate committee, exploratory committee, political committee or party committee, including, but not limited to, forwarding tickets to potential contributors, receiving contributions for transmission to any such committee or bundling contributions, (C) serving as chairperson, treasurer or deputy treasurer of any such committee, or (D) establishing a political committee for the sole purpose of soliciting or receiving contributions for any committee. Solicit does not include: (i) making a contribution that is otherwise permitted by Chapter 155 of the Connecticut General Statutes; (ii) informing any person of a position taken by a candidate for public office or a public official, (iii) notifying the person of any activities of, or contact information for, any candidate for public office; or (iv) serving as a member in any party committee or as an officer of such committee that is not otherwise prohibited in this section.

"Subcontractor" means any person, business entity or nonprofit organization that contracts to perform part or all of the obligations of a state contractor's state contract. Such person, business entity or nonprofit organization shall be deemed to be a subcontractor until December thirty first of the year in which the subcontract terminates. "Subcontractor" does not include (i) a municipality or any other political subdivision of the state, including any entities or associations duly created by the municipality or political subdivision exclusively amongst themselves to further any purpose authorized by statute or charter, or (ii) an employee in the executive or legislative branch of state government or a quasi-public agency, whether in the classified or unclassified service and full or part-time, and only in such person's capacity as a state or quasi-public agency employee.

"Principal of a subcontractor" means (i) any individual who is a member of the board of directors of, or has an ownership interest of five per cent or more in, a subcontractor, which is a business entity, except for an individual who is a member of the board of directors of a nonprofit organization, (ii) an individual who is employed by a subcontractor, which is a business entity, as president, treasurer or executive vice president, (iii) an individual who is the chief executive officer of a subcontractor, which is not a business entity, or if a subcontractor has no such officer, then the officer who duly possesses comparable powers and duties, (iv) an officer or an employee of any subcontractor who has managerial or discretionary responsibilities with respect to a subcontract with a state contractor, (v) the spouse or a dependent child who is eighteen years of age or older of an individual described in this subparagraph, or (vi) a political committee established or controlled by an individual described in this subparagraph or the business entity or nonprofit organization that is the subcontractor.

EXHIBIT E

(state wages will be inserted here)

Project: Canterbury Maintenance Facility Tank Replacement

Minimum Rates and Classifications
for Heavy/Highway Construction

Connecticut Department of Labor
Wage and Workplace Standards Division

ID#: **H** 17606

By virtue of the authority vested in the Labor Commissioner under provisions of Section 31-53 of the General Statutes of Connecticut, as amended, the following are declared to be the prevailing rates and welfare payments and will apply only where the contract is advertised for bid within 20 days of the date on which the rates are established. Any contractor or subcontractor not obligated by agreement to pay to the welfare and pension fund shall pay this amount to each employee as part of his/her hourly wages.

Project Number: | Project Town Canterbury
FAP Number: | State Number: 22-105
Project: Canterbury Maintenance Facility Tank Replacement

CLASSIFICATION	Hourly Rate	Benefits
01) Asbestos/Toxic Waste Removal Laborers: Asbestos removal and encapsulation (except its removal from mechanical systems which are not to be scrapped), toxic waste removers, blasters. **See Laborers Group 5 and 7**		
1) Boilermaker	33.79	34% + 8.96
1a) Bricklayer, Cement Masons, Cement Finishers, Plasterers, Stone Masons	32.50	25.81
2) Carpenters, Piledrivermen	29.65	21.00

As of: Thursday, March 21, 2013

Project: Canterbury Maintenance Facility Tank Replacement

2a) Diver Tenders	29.65	21.00
3) Divers	38.11	21.00
4) Painters: (Bridge Construction) Brush, Roller, Blasting (Sand, Water, etc.), Spray	42.75	16.90
4a) Painters: Brush and Roller	30.22	16.90
4d) Painters: Blast and Spray	33.22	16.90
4e) Painters: Tanks, Tower and Swing	32.22	16.90
5) Electrician (Trade License required: E-1,2 L-5,6 C-5,6 T-1,2 L-1,2 V-1,2,7,8,9)	37.10	22.12

As of: Thursday, March 21, 2013

Project: Canterbury Maintenance Facility Tank Replacement

6) Ironworkers: (Ornamental, Reinforcing, Structural, and Precast Concrete Erection)	33.50	27.98 + a
7) Plumbers (Trade License required: (P-1,2,6,7,8,9 J-1,2,3,4 SP-1,2) and Pipefitters (Including HVAC Work) (Trade License required: S-1,2,3,4,5,6,7,8 B-1,2,3,4 D-1,2,3,4 G-1, G-2, G-8, G-9)	38.67	25.56

----LABORERS---- - Last updated 4/11/12

8) Group 1: Laborer (Unskilled), Common or General, acetylene burner, concrete specialist	25.80	16.45
9) Group 2: Chain saw operators, fence and guard rail erectors, pneumatic tool operators, powdermen, air tool operator	26.05	16.45
10) Group 3: Pipelayers	26.30	16.45
11) Group 4: Jackhammer/Pavement breaker (handheld); mason tenders (cement/concrete), catch basin builders, asphalt rakers, air track operators, block pavers and curb setters	26.30	16.45

As of: Thursday, March 21, 2013

Project: Canterbury Maintenance Facility Tank Replacement

12) Group 5: Toxic waste removal (non-mechanical systems)	27.80	16.45
13) Group 6: Blasters	27.55	16.45
Group 7: Asbestos Removal, non-mechanical systems (does not include leaded joint pipe)	26.80	16.45
Group 8: Traffic control signalmen	16.00	16.45

----LABORERS (TUNNEL CONSTRUCTION, FREE AIR). Shield Drive and Liner Plate Tunnels in Free Air.---- Last updated 4/11/12----

13a) Miners, Motormen, Mucking Machine Operators, Nozzle Men, Grout Men, Shaft & Tunnel Steel & Rodmen, Shield & Erector, Arm Operator, Cable Tenders	31.28	16.45 + a
13b) Brakemen, Trackmen	30.37	16.45 + a

As of: Thursday, March 21, 2013

Project: Canterbury Maintenance Facility Tank Replacement

----CLEANING, CONCRETE AND CAULKING TUNNEL----Last updated 4/11/12----

14) Concrete Workers, Form Movers, and Strippers	30.37	16.45 + a
15) Form Erectors	30.68	16.45 + a

----ROCK SHAFT LINING, CONCRETE, LINING OF SAME AND TUNNEL IN FREE AIR:----Last updated 4/11/12----

16) Brakemen, Trackmen, Tunnel Laborers, Shaft Laborers	30.37	16.45 + a
17) Laborers Topside, Cage Tenders, Bellman	30.26	16.45 + a
18) Miners	31.28	16.45 + a

As of: Thursday, March 21, 2013

Project: Canterbury Maintenance Facility Tank Replacement

----TUNNELS, CAISSON AND CYLINDER WORK IN COMPRESSED AIR: ----Last updated 4/11/12----

18a) Blaster	37.41	16.45 + a
19) Brakemen, Trackmen, Groutman, Laborers, Outside Lock Tender, Gauge Tenders	37.22	16.45 + a
20) Change House Attendants, Powder Watchmen, Top on Iron Bolts	35.35	16.45 + a
21) Mucking Machine Operator	37.97	16.45 + a

----TRUCK DRIVERS----(*see note below)

Two axle trucks	27.88	17.22 + a

As of: Thursday, March 21, 2013

Three axle trucks; two axle ready mix	27.98	17.22 + a
Three axle ready mix	28.03	17.22 + a
Four axle trucks, heavy duty trailer (up to 40 tons)	28.08	17.22 + a
Four axle ready-mix	28.13	17.22 + a
Heavy duty trailer (40 tons and over)	28.33	17.22 + a
Specialized earth moving equipment other than conventional type on-the road trucks and semi-trailer (including Euclids)	28.13	17.22 + a

----POWER EQUIPMENT OPERATORS----

Project: Canterbury Maintenance Facility Tank Replacement

Group 1: Crane handling or erecting structural steel or stone, hoisting engineer (2 drums or over), front end loader (7 cubic yards or over), Work Boat 26 ft. & Over. (Trade License Required)	35.50	20.50 + a
Group 2: Cranes (100 ton rate capacity and over); Backhoe/Excavator over 2 cubic yards; Piledriver ($3.00 premium when operator controls hammer). (Trade License Required)	35.18	20.50 + a
Group 3: Excavator/Backhoe under 2 cubic yards; Cranes (under 100 ton rated capacity), Gradall; Master Mechanic; Hoisting Engineer (all types of equipment where a drum and cable are used to hoist or drag material regardless of motive power of operation), Rubber Tire Excavator (Drott-1085 or similar);Grader Operator; Bulldozer Fine Grade (slopes, shaping, laser or GPS, etc.). (Trade License Required)	34.44	20.50 + a
Group 4: Trenching Machines; Lighter Derrick; Concrete Finishing Machine; CMI Machine or Similar; Koehring Loader (Skooper)	34.05	20.50 + a
Group 5: Specialty Railroad Equipment; Asphalt Paver; Asphalt Spreader; Asphalt Reclaiming Machine; Line Grinder; Concrete Pumps; Drills with Self Contained Power Units; Boring Machine; Post Hole Digger; Auger; Pounder; Well Digger; Milling Machine (over 24" Mandrell)	33.46	20.50 + a
Group 5 continued: Side Boom; Combination Hoe and Loader; Directional Driller.	33.46	20.50 + a
Group 6: Front End Loader (3 up to 7 cubic yards); Bulldozer (rough grade dozer).	33.15	20.50 + a

As of: Thursday, March 21, 2013

Project: Canterbury Maintenance Facility Tank Replacement

Group 7: Asphalt Roller; Concrete Saws and Cutters (ride on types); Vermeer Concrete Cutter; Stump Grinder; Scraper; Snooper; Skidder; Milling Machine (24" and Under Mandrel).	32.81	20.50 + a
Group 8: Mechanic, Grease Truck Operator, Hydroblaster, Barrier Mover, Power Stone Spreader; Welder; Work Boat under 26 ft.; Transfer Machine.	32.41	20.50 + a
Group 9: Front End Loader (under 3 cubic yards), Skid Steer Loader regardless of attachments (Bobcat or Similar); Fork Lift, Power Chipper; Landscape Equipment (including hydroseeder).	31.98	20.50 + a
Group 10: Vibratory Hammer, Ice Machine, Diesel and Air Hammer, etc.	29.94	20.50 + a
Group 11: Conveyor, Earth Roller; Power Pavement Breaker (whiphammer), Robot Demolition Equipment.	29.94	20.50 + a
Group 12: Wellpoint Operator.	29.88	20.50 + a
Group 13: Compressor Battery Operator.	29.30	20.50 + a

As of: Thursday, March 21, 2013

Project: Canterbury Maintenance Facility Tank Replacement

Group 14: Elevator Operator; Tow Motor Operator (Solid Tire No Rough Terrain).	28.16	20.50 + a
Group 15: Generator Operator; Compressor Operator; Pump Operator; Welding Machine Operator; Heater Operator.	27.75	20.50 + a
Group 16: Maintenance Engineer/Oiler	27.10	20.50 + a
Group 17: Portable asphalt plant operator; portable crusher plant operator; portable concrete plant operator.	31.41	20.50 + a
Group 18: Power Safety Boat; Vacuum Truck; Zim Mixer; Sweeper; (minimum for any job requiring CDL license).	28.99	20.50 + a

**NOTE: SEE BELOW

----LINE CONSTRUCTION----(Railroad Construction and Maintenance)----Last updated 9/3/2010----

As of: Thursday, March 21, 2013

Project: Canterbury Maintenance Facility Tank Replacement

20) Lineman, Cable Splicer, Dynamite Man	44.36	3% + 13.70
21) Heavy Equipment Operator	39.92	3% + 13.70
22) Equipment Operator, Tractor Trailer Driver, Material Men	37.71	3% + 13.70
23) Driver Groundmen	33.27	3% + 13.70

----LINE CONSTRUCTION----Last updated 4/17/09----

24) Driver Groundmen	30.92	6.5% + 9.70
25) Groundmen	22.67	6.5% + 6.20

As of: Thursday, March 21, 2013

Project: Canterbury Maintenance Facility Tank Replacement

26) Heavy Equipment Operators	37.10	6.5% + 10.70
27) Linemen, Cable Splicers, Dynamite Men	41.22	6.5% + 12.20
28) Material Men, Tractor Trailer Drivers, Equipment Operators	35.04	6.5% + 10.45

As of: Thursday, March 21, 2013

Project: Canterbury Maintenance Facility Tank Replacement

Welders: Rate for craft to which welding is incidental.

**Note: Hazardous waste removal work receives additional $1.25 per hour for truck drivers.*

***Note: Hazardous waste premium $3.00 per hour over classified rate*

Crane with 150 ft. boom (including jib) - $1.50 extra
Crane with 200 ft. boom (including jib) - $2.50 extra
Crane with 250 ft. boom (including jib) - $5.00 extra
Crane with 300 ft. boom (including jib) - $7.00 extra
Crane with 400 ft. boom (including jib) - $10.00 extra

All classifications that indicate a percentage of the fringe benefits must be calculated at the percentage rate times the "base hourly rate".

Apprentices duly registered under the Commissioner of Labor's regulations on "Work Training Standards for Apprenticeship and Training Programs" Section 31-51-d-1 to 12, are allowed to be paid the appropriate percentage of the prevailing journeymen hourly base and the full fringe benefit rate, providing the work site ratio shall not be less than one full-time journeyperson instructing and supervising the work of each apprentice in a specific trade.

~~Connecticut General Statute Section 31-55a: Annual Adjustments to wage rates by contractors doing state work ~~

The Prevailing wage rates applicable to this project are subject to annual adjustments each July 1st for the duration of the project.

Each contractor shall pay the annual adjusted prevailing wage rate that is in effect each July 1st, as posted by the Department of Labor.

It is the contractor's responsibility to obtain the annual adjusted prevailing wage rate increases directly from the Department of Labor's website.

The annual adjustments will be posted on the Department of Labor's Web page: www.ct.gov/dol.

The Department of Labor will continue to issue the initial prevailing wage rate schedule to the Contracting Agency for the project.

All subsequent annual adjustments will be posted on our Web Site for contractor access.

As of: Thursday, March 21, 2013

Project: Canterbury Maintenance Facility Tank Replacement

Effective October 1, 2005 - Public Act 05-50: any person performing the work of any mechanic, laborer, or worker shall be paid prevailing wage

All Person who perform work ON SITE must be paid prevailing wage for the appropriate mechanic, laborer, or worker classification.

All certified payrolls must list the hours worked and wages paid to All Persons who perform work ON SITE regardless of their ownership i.e.: (Owners, Corporate Officers, LLC Members, Independent Contractors, et. al)

Reporting and payment of wages is required regardless of any contractual relationship alleged to exist between the contractor and such person.

~~Unlisted classifications needed for work not included within the scope of the classifications listed may be added after award only as provided in the labor standards contract clause (29 CFR 5.5 (a) (1) (ii)).

Please direct any questions which you may have pertaining to classification of work and payment of prevailing wages to the Wage and Workplace Standards Division, telephone (860)263-6790.

As of: Thursday, March 21, 2013

Connecticut Department of Labor
Wage and Workplace Standards Division
FOOTNOTES

Please Note: If the "Benefits" listed on the schedule for the following occupations includes a letter(s) (+ a or + a+b for instance), refer to the information below.

Benefits to be paid at the appropriate prevailing wage rate for the listed occupation.

If the "Benefits" section for the occupation lists only a dollar amount, disregard the information below.

Bricklayers, Cement Masons, Cement Finishers, Concrete Finishers, Stone Masons
(Building Construction) and
(Residential- Hartford, Middlesex, New Haven, New London and Tolland Counties)

a. Paid Holiday: Employees shall receive 4 hours for Christmas Eve holiday provided the employee works the regularly scheduled day before and after the holiday. Employers may schedule work on Christmas Eve and employees shall receive pay for actual hours worked in addition to holiday pay.

Elevator Constructors: Mechanics

a. Paid Holidays: New Year's Day, Memorial Day, Independence Day, Labor Day, Veterans' Day, Thanksgiving Day, Christmas Day, plus the Friday after Thanksgiving.

b. Vacation: Employer contributes 8% of basic hourly rate for 5 years or more of service or 6% of basic hourly rate for 6 months to 5 years of service as vacation pay credit.

Glaziers

a. Paid Holidays: Labor Day and Christmas Day.

Power Equipment Operators
(Heavy and Highway Construction & Building Construction)

a. Paid Holidays: New Year's Day, Good Friday, Memorial day, Independence Day, Labor Day, Thanksgiving Day and Christmas Day, provided the employee works 3 days during the week in which the holiday falls, if scheduled, and if scheduled, the working day before and the working day after the holiday. Holidays falling on Saturday may be observed on Saturday, or if the employer so elects, on the preceding Friday.

Ironworkers

a. Paid Holiday: Labor Day provided employee has been on the payroll for the 5 consecutive work days prior to Labor Day.

Laborers (Tunnel Construction)

a. Paid Holidays: New Year's Day, Memorial Day, Independence Day, Labor Day, Thanksgiving Day and Christmas Day. No employee shall be eligible for holiday pay when he fails, without cause, to work the regular work day preceding the holiday or the regular work day following the holiday.

Roofers

a. Paid Holidays: July 4th, Labor Day, and Christmas Day provided the employee is employed 15 days prior to the holiday.

Sprinkler Fitters

a. Paid Holidays: Memorial Day, July 4th, Labor Day, Thanksgiving Day and Christmas Day, provided the employee has been in the employment of a contractor 20 working days prior to any such paid holiday.

Truck Drivers

(Heavy and Highway Construction & Building Construction)

a. Paid Holidays: New Year's Day, Memorial Day, Independence Day, Labor Day, Thanksgiving Day, Christmas day, and Good Friday, provided the employee has at least 31 calendar days of service and works the last scheduled day before and the first scheduled day after the holiday, unless excused.

Information Bulletin
Occupational Classifications

The Connecticut Department of Labor has the responsibility to properly determine "job classification" on prevailing wage projects covered under C.G.S. Section 31-53.

Note: This information is intended to provide a sample of some occupational classifications for guidance purposes only. It is not an all-inclusive list of each occupation's duties. This list is being provided only to highlight some areas where a contractor may be unclear regarding the proper classification.

Below are additional clarifications of specific job duties performed for certain classifications:

- **ASBESTOS WORKERS**

  Applies all insulating materials, protective coverings, coatings and finishes to all types of mechanical systems.

- **ASBESTOS INSULATOR**

  Handle, install apply, fabricate, distribute, prepare, alter, repair, dismantle, heat and frost insulation, including penetration and fire stopping work on all penetration fire stop systems.

- **BOILERMAKERS**

  Erects hydro plants, incomplete vessels, steel stacks, storage tanks for water, fuel, etc. Builds incomplete boilers, repairs heat exchanges and steam generators.

- **BRICKLAYERS, CEMENT MASONS, CEMENT FINISHERS, MARBLE MASONS, PLASTERERS, STONE MASONS, PLASTERERS. STONE MASONS, TERRAZZO WORKERS, TILE SETTERS**

  Lays building materials such as brick, structural tile and concrete cinder, glass, gypsum, terra cotta block. Cuts, tools and sets marble, sets stone, finishes concrete, applies decorative steel, aluminum and plastic tile, applies cements, sand, pigment and marble chips to floors, stairways, etc.

- **CARPENTERS, MILLWRIGHTS. PILEDRIVERMEN. LATHERS. RESILEINT FLOOR LAYERS, DOCK BUILDERS, DIKERS, DIVER TENDERS**

  Constructs, erects, installs and repairs structures and fixtures of wood, plywood and wallboard. Installs, assembles, dismantles, moves industrial machinery. Drives piling into ground to provide foundations for structures such as buildings and bridges, retaining walls for earth embankments, such as cofferdams. Fastens wooden, metal or rockboard lath to walls, ceilings and partitions of buildings, acoustical tile layer, concrete form builder. Applies firestopping materials on fire resistive joint systems only. Installation of curtain/window walls only where attached to wood or metal studs. Installation of insulated material of all types whether blown, nailed or attached in other ways to walls, ceilings and floors of buildings. Assembly and installation of modular furniture/furniture systems. Free-standing furniture is not covered. This includes free standing: student chairs, study top desks, book box desks, computer furniture, dictionary stand, atlas stand, wood shelving, two-position information access station, file cabinets, storage cabinets, tables, etc.

- **CLEANING LABORER**

  The clean up of any construction debris and the general cleaning, including sweeping, wash down, mopping, wiping of the construction facility, washing, polishing, dusting, etc., prior to the issuance of a certificate of occupancy falls under the *Labor classification.*

- **DELIVERY PERSONNEL**

  If delivery of supplies/building materials is to one common point and stockpiled there, prevailing wages are not required. If the delivery personnel are involved in the distribution of the material to multiple locations within the construction site then they would have to be paid prevailing wages for the type of work performed: laborer, equipment operator, electrician, ironworker, plumber, etc.

  An example of this would be where delivery of drywall is made to a building and the delivery personnel distribute the drywall from one "stockpile" location to further sub-locations on each floor. Distribution of material around a construction site is the job of a laborer/tradesman and not a delivery personnel.

- **ELECTRICIANS**

  Install, erect, maintenance, alteration or repair of any wire, cable, conduit, etc., which generates, transforms, transmits or uses electrical energy for light, heat, power or other purposes, including the Installation or maintenance of telecommunication, LAN wiring or computer equipment, and low voltage wiring. ***License required per Connecticut General Statutes: E-1,2 L-5,6 C-5,6 T-1,2 L-1,2 V-1,2,7,8,9.**

- **ELEVATOR CONSTRUCTORS**

  Install, erect, maintenance and repair of all types of elevators, escalators, dumb waiters and moving walks. ***License required by Connecticut General Statutes: R-1,2,5,6.**

- **FORK LIFT OPERATOR**

  Laborers Group 4) Mason Tenders - operates forklift solely to assist a mason to a maximum height of nine (9) feet only.

  Power Equipment Operator Group 9 - operates forklift to assist any trade, and to assist a mason to a height over nine (9) feet.

- **GLAZIERS**

  Glazing wood and metal sash, doors, partitions, and 2 story aluminum storefronts. Installs glass windows, skylights, store fronts and display cases or surfaces such as building fronts, interior walls, ceilings and table tops and metal store fronts. Installation of aluminum window walls and curtain walls is the "joint" work of glaziers and ironworkers which requires either a blended rate or equal composite workforce.

- **IRONWORKERS**

  Erection, installation and placement of structural steel, precast concrete, miscellaneous iron, ornamental iron, metal curtain wall, rigging and reinforcing steel. Handling, sorting, and installation of reinforcing steel (rebar). Metal bridge rail (traffic), metal bridge handrail, and decorative security fence installation. Installation of aluminum window walls and curtain walls is the "joint" work of glaziers and ironworkers which requires either a blended rate or equal composite workforce. Insulated metal and insulated composite panels are still installed by the Ironworker.

- **INSULATOR**

  Installing fire stopping systems/materials for "Penetration Firestop Systems": transit to cables, electrical conduits, insulated pipes, sprinkler pipe penetrations, ductwork behind radiation, electrical cable trays, fire rated pipe penetrations, natural polypropylene, HVAC ducts, plumbing bare metal, telephone and communication wires, and boiler room ceilings. Past practice using the applicable licensed trades, Plumber, Sheet Metal, Sprinkler Fitter, and Electrician, is not inconsistent with the Insulator classification and would be permitted.

- **LABORERS**

  Acetylene burners, asphalt rakers, chain saw operators, concrete and power buggy operator, concrete saw operator, fence and guard rail erector (except metal bridge rail (traffic), metal bridge handrail, and decorative security fence installation.), hand operated concrete vibrator operator, mason tenders, pipelayers (installation of storm drainage or sewage lines on the street only), pneumatic drill operator, pneumatic gas and electric drill operator, powermen and wagon drill operator, air track operator, block paver, curb setters, blasters, concrete spreaders.

- **PAINTERS**

  Maintenance, preparation, cleaning, blasting (water and sand, etc.), painting or application of any protective coatings of every description on all bridges and appurtenances of highways, roadways, and railroads. Painting, decorating, hardwood finishing, paper hanging, sign writing, scenic art work and drywall hhg for any and all types of building and residential work.

- **LEAD PAINT REMOVAL**

  Painter's Rate
  1. Removal of lead paint from bridges.
  2. Removal of lead paint as preparation of any surface to be repainted.
  3. Where removal is on a Demolition project prior to reconstruction.

  Laborer's Rate
  1. Removal of lead paint from any surface NOT to be repainted.
  2. Where removal is on a *TOTAL* Demolition project only.

- **PLUMBERS AND PIPEFITTERS**

  Installation, repair, replacement, alteration or maintenance of all plumbing, heating, cooling and piping. ***License required per Connecticut General Statutes: P-1,2,6,7,8,9 J-1,2,3,4 SP-1,2 S-1,2,3,4,5,6,7,8 B-1,2,3,4 D-1,2,3,4.***

- **POWER EQUIPMENT OPERATORS**

  Operates several types of power construction equipment such as compressors, pumps, hoists, derricks, cranes, shovels, tractors, scrapers or motor graders, etc. Repairs and maintains equipment. ***License required, crane operators only, per Connecticut General Statutes.**

- **ROOFERS**

  Covers roofs with composition shingles or sheets, wood shingles, slate or asphalt and gravel to waterproof roofs, including preparation of surface. (tear-off and/or removal of any type of roofing and/or clean-up of any and all areas where a roof is to be relaid)

- **SHEETMETAL WORKERS**

  Fabricate, assembles, installs and repairs sheetmetal products and equipment in such areas as ventilation, air-conditioning, warm air heating, restaurant equipment, architectural sheet metal work, sheetmetal roofing, and aluminum gutters. Fabrication, handling, assembling, erecting, altering, repairing, etc. of coated metal material panels and composite metal material panels when used on building exteriors and interiors as soffits, facia, louvers, partitions, wall panel siding, canopies, cornice, column covers, awnings, beam covers, cladding, sun shades, lighting troughs, spires, ornamental roofing, metal ceilings, mansards, copings, ornamental and ventilation hoods, vertical and horizontal siding panels, trim, etc. The sheet metal classification also applies to the vast variety of coated metal material panels and composite metal material panels that have evolved over the years as an alternative to conventional ferrous and non-ferrous metals like steel, iron, tin, copper, brass, bronze, aluminum, etc. Insulated metal and insulated composite panels are still installed by the Iron Worker. Fabrication, handling, assembling, erecting, altering, repairing, etc. of architectural metal roof, standing seam roof, composite metal roof, metal and composite bathroom/toilet partitions, aluminum gutters, metal and composite lockers and shelving, kitchen equipment, and walk-in coolers.

- **SPRINKLER FITTERS**

  Installation, alteration, maintenance and repair of fire protection sprinkler systems. ***License required per Connecticut General Statutes: F-1,2,3,4.**

- **TILE MARBLE AND TERRAZZO FINISHERS**

  Assists and tends the tile setter, marble mason and terrazzo worker in the performance of their duties.

- **TRUCK DRIVERS**

Definitions:

1) "Site of the work" (29 Code of Federal Regulations (CFR) 5.2(l)(b) is the physical place or places where the building or work called for in the contract will remain and any other site where a significant portion of the building or work is constructed, provided that such site is established specifically for the performance of the contact or project;

(a) Except as provided in paragraph (l) (3) of this section, job headquarters, tool yards, batch plants, borrow pits, etc. are part of the "site of the work"; provided they are dedicated exclusively, or nearly so, to the performance of the contract or project, and provided they are adjacent to "the site of work" as defined in paragraph (e)(1) of this section;

(b) Not included in the "site of the work" are permanent home offices, branch plant establishments, fabrication plants, tool yards etc, of a contractor or subcontractor whose location and continuance in operation are determined wholly without regard to a particular State or political subdivision contract or uncertain and indefinite periods of time involved of a few seconds or minutes duration and where the failure to count such time is due to consideration justified by industrial realities (29 CFR 785.47)

2) "Engaged to wait" is waiting time that belongs to and is controlled by the employer which is an integral part of the job and is therefore compensable as hours worked. (29 CFR 785.15)

3) "Waiting to be engaged" is waiting time that an employee can use effectively for their own purpose and is not compensable as hours worked. (29 CFR 785.16)

4) "De Minimus" is a rule that recognizes that unsubstantial or insignificant periods of time which cannot as a practical administrative matter be precisely recorded for payroll purposes, may be disregarded. This rule applies only where there are uncertain and indefinite periods of time involved of a short duration and where the failure to count such time is due to consideration justified by worksite realities. For example, with respect to truck drivers on prevailing wage sites, this is typically less than 15 minutes at a time.

Coverage of Truck Drivers on State or Political subdivision Prevailing Wage Projects

Truck drivers <u>are covered</u> for payroll purposes under the following conditions:

- Truck Drivers for time spent working on the site of the work.

- Truck Drivers for time spent loading and/or unloading materials and supplies on the site of the work, if such time is not de minimus

- Truck drivers transporting materials or supplies between a facility that is deemed part of the site of the work and the actual construction site.

- Truck drivers transporting portions of the building or work between a site established specifically for the performance of the contract or project where a significant portion of such building or work is constructed and the physical places where the building or work outlined in the contract will remain.

For example: Truck drivers delivering asphalt are covered under prevailing wage while" engaged to wait" on the site and when directly involved in the paving operation, provided the total time is not "de minimus"

Truck Drivers <u>are not</u> covered in the following instances:

- Material delivery truck drivers while off "the site of the work"

- Truck Drivers traveling between a prevailing wage job and a commercial supply facility while they are off the "site of the work"

- Truck drivers whose time spent on the "site of the work" is de minimus, such as under 15 minutes at a time, merely to drop off materials or supplies, including asphalt.

These guidelines are similar to U.S. Labor Department policies. The application of these guidelines may be subject to review based on factual considerations on a case by case basis.

For example:

- Material men and deliverymen are not covered under prevailing wage as long as they are not directly involved in the construction process. If, they unload the material, they would then be covered by prevailing wage for the classification they are performing work in: laborer, equipment operator, etc.
- Hauling material off site is not covered provided they are not dumping it at a location outlined above.
- Driving a truck on site and moving equipment or materials on site would be considered covered work, as this is part of the construction process.

Any questions regarding the proper classification should be directed to:
Public Contract Compliance Unit
Wage and Workplace Standards Division
Connecticut Department of Labor
200 Folly Brook Blvd, Wethersfield, CT 06109
(860) 263-6543

Statute 31-55a

Last Updated: June 02, 2008

- Special Notice -

To All State and Political Subdivisions,Their Agents, and Contractors

Connecticut General Statute 31-55a - Annual adjustments to wage rates by contractors doing state work.

Each contractor that is awarded a contract on or after October 1, 2002, for (1) the construction of a state highway or bridge that falls under the provisions of section 31-54 of the general statutes, or (2) the construction, remodeling, refinishing, refurbishing, rehabilitation, alteration or repair of any public works project that falls under the provisions of section 31-53 of the general statutes shall contact the Labor Commissioner on or before July first of each year, for the duration of such contract, to ascertain the prevailing rate of wages on an hourly basis and the amount of payment or contributions paid or payable on behalf of each mechanic, laborer or worker employed upon the work contracted to be done, and shall make any necessary adjustments to such prevailing rate of wages and such payment or contributions paid or payable on behalf of each such employee, effective each July first.

- The prevailing wage rates applicable to any contract or subcontract awarded on or after October 1, 2002 are subject to annual adjustments each July 1st for the duration of any project which was originally advertised for bids on or after October 1, 2002.
- Each contractor affected by the above requirement shall pay the annual adjusted prevailing wage rate that is in effect each July 1st, as posted by the Department of Labor.
- It is the ***contractor's*** responsibility to obtain the annual adjusted prevailing wage rate increases directly from the Department of Labor's Web Site. The annual adjustments will be posted on the Department of Labor Web page: www.ctdol.state.ct.us. For those without internet access, please contact the division listed below.
- The Department of Labor will continue to issue the initial prevailing wage rate schedule to the Contracting Agency for the project. All subsequent annual adjustments will be posted on our Web Site for contractor access.

Any questions should be directed to the Contract Compliance Unit, Wage and Workplace

Standards Division, Connecticut Department of Labor, 200 Folly Brook Blvd., Wethersfield, CT 06109 at (860)263-6790.

Workplace Laws

Published by the Connecticut Department of Labor, Project Management Office

November 29, 2006

Notice

To All Mason Contractors and Interested Parties Regarding Construction Pursuant to Section 31-53 of the Connecticut General Statutes (Prevailing Wage)

The Connecticut Labor Department Wage and Workplace Standards Division is empowered to enforce the prevailing wage rates on projects covered by the above referenced statute.

Over the past few years the Division has withheld enforcement of the rate in effect for workers who operate a forklift on a prevailing wage rate project due to a potential jurisdictional dispute.

The rate listed in the schedules and in our Occupational Bulletin (see enclosed) has been as follows:

Forklift Operator:

- **Laborers (Group 4) Mason Tenders -** operates forklift solely to assist a mason to a maximum height of nine feet only.

- **Power Equipment Operator (Group 9) -** operates forklift to assist any trade and to assist a mason to a height over nine feet.

The U.S. Labor Department conducted a survey of rates in Connecticut but it has not been published and the rate in effect remains as outlined in the above Occupational Bulletin.

Since this is a classification matter and not one of jurisdiction, effective January 1, 2007 the Connecticut Labor Department will enforce the rate on each schedule in accordance with our statutory authority.

Your cooperation in filing appropriate and accurate certified payrolls is appreciated.

Informational Bulletin

THE 10-HOUR OSHA CONSTRUCTION SAFETY AND HEALTH COURSE

(applicable to public building contracts entered into *on or after July 1, 2007,* where the total cost of all work to be performed is at least $100,000)

(1) This requirement was created by Public Act No. 06-175, which is codified in Section 31-53b of the Connecticut General Statutes (pertaining to the prevailing wage statutes);

(2) The course is required for public building construction contracts (projects funded in whole or in part by the state or any political subdivision of the state) entered into on or after July 1, 2007;

(3) It is required of private employees (not state or municipal employees) and apprentices who perform manual labor for a general contractor or subcontractor on a public building project where the total cost of all work to be performed is at least $100,000;

(4) The ten-hour construction course pertains to the ten-hour Outreach Course conducted in accordance with federal OSHA Training Institute standards, and, for telecommunications workers, a ten-hour training course conducted in accordance with federal OSHA standard, 29 CFR 1910.268;

(5) The internet website for the federal OSHA Training Institute is http://www.osha.gov/fso/ote/training/edcenters/fact_sheet.html;

(6) The statutory language leaves it to the contractor and its employees to determine who pays for the cost of the ten-hour Outreach Course;

(7) Within 30 days of receiving a contract award, a general contractor must furnish proof to the Labor Commissioner that all employees and apprentices performing manual labor on the project will have completed such a course;

(8) Proof of completion may be demonstrated through either: (a) the presentation of a *bona fide* student course completion card issued by the federal OSHA Training Institute; *or* (2) the presentation of documentation provided to an employee by a trainer certified by the Institute pending the actual issuance of the completion card;

(9) Any card with an issuance date more than 5 years prior to the commencement date of the construction project shall not constitute proof of compliance;

(10) Each employer shall affix a copy of the construction safety course completion card to the certified payroll submitted to the contracting agency in accordance with Conn. Gen. Stat. § 31-53(f) on which such employee's name first appears;

(11) Any employee found to be in non-compliance shall be subject to removal from the worksite if such employee does not provide satisfactory proof of course completion to the Labor Commissioner by the fifteenth day after the date the employee is determined to be in noncompliance;

(12) Any such employee who is determined to be in noncompliance may continue to work on a public building construction project for a maximum of fourteen consecutive calendar days while bringing his or her status into compliance;

(13) The Labor Commissioner may make complaint to the prosecuting authorities regarding any employer or agent of the employer, or officer or agent of the corporation who files a false certified payroll with respect to the status of an employee who is performing manual labor on a public building construction project;

(14) The statute provides the minimum standards required for the completion of a safety course by manual laborers on public construction contracts; any contractor can exceed these minimum requirements; and

(15) Regulations clarifying the statute are currently in the regulatory process, and shall be posted on the CTDOL website as soon as they are adopted in final form.

(16) Any questions regarding this statute may be directed to the Wage and Workplace Standards Division of the Connecticut Labor Department via the internet website of http://www.ctdol.state.ct.us/wgwkstnd/wgemenu.htm; or by telephone at (860)263-6790.

THE ABOVE INFORMATION IS PROVIDED EXCLUSIVELY AS AN EDUCATIONAL RESOURCE, AND IS NOT INTENDED AS A SUBSTITUTE FOR LEGAL INTERPRETATIONS WHICH MAY ULTMATELY ARISE CONCERNIG THE CONSTRUCTION OF THE STATUTE OR THE REGULATIONS.

Sec. 31-53b. **Construction safety and health course**. **Proof of completion required for employees on public building projects. Enforcement. Regulations**. (a) Each contract entered into on or after July 1, 2007, for the construction, remodeling, refinishing, refurbishing, rehabilitation, alteration or repair of any public building project by the state or any of its agents, or by an political subdivision of the state or any of its agents, where the total cost of all work to be performed by all contractors and subcontractors in connection with the contract is at least one hundred thousand dollars, shall contain a provision requiring that, not later than thirty days after the date such contract is awarded, each contractor furnish proof to the Labor Commissioner that all employees performing manual labor on or in such public building, pursuant to such contract, have completed a course of at least ten hours in duration in construction safety and health approved by the federal Occupational Safety and Health Administration or, in the case of telecommunications employees, have completed at least ten hours of training in accordance with 29 CFR 1910.268.

(b) Any employee required to complete a construction safety and health course required under subsection (a) of this section who has not completed the course shall be subject to removal from the worksite if the employee does not provide documentation of having completed such course by the fifteenth day after the date the employee is found to be in noncompliance. The Labor Commissioner or said commissioner's designee shall enforce this section.

(c) Not later than January 1, 2007, the Labor Commissioner shall adopt regulations, in accordance with the provisions of chapter 54, to implement the provisions of subsections (a) and (b) of this section. Such regulations shall require that the ten-hour construction safety and health courses required under subsection (a) of this section be conducted in accordance with federal Occupational Safety and Health Administration Training Institute standards, or in accordance with 29 CFR 1910.268, as appropriate. The Labor Commissioner shall accept as sufficient proof of compliance with the provisions of subsection (a) or (b) of this section a student course completion card issued by the federal Occupational Safety and Health Administration Training Institute, or such other proof of compliance said commissioner deems appropriate, dated no earlier than five years before the commencement date of such public works project.

(d) For the purposes of this section, "public building" means a structure, paid for in whole or in part with state funds, within a roof and within exterior walls or fire walls, designed for the housing, shelter, enclosure and support or employment of people, animals or property of any kind, including, but not limited to, sewage treatment plants and water treatment plants, "Public building" does not include site work, roads or bridges, rail lines, parking lots or underground water, sewer or drainage systems including pump houses or other utility systems.

CONNECTICUT DEPARTMENT OF LABOR
WAGE AND WORKPLACE STANDARDS DIVISION

CONTRACTORS WAGE CERTIFICATION FORM

I,_____of _____
Officer, Owner, Authorized Rep. Company Name

do hereby certify that the _____
Company Name

_____
Street

_____
City

and all of its subcontractors will pay all workers on the

_____
Project Name and Number

_____
Street and City

the wages as listed in the schedule of prevailing rates required for such project (a copy of which is attached hereto).

_____
Signed

Subscribed and sworn to before me this _____ day of _____,

_____
Notary Public

☞ Return to:

Connecticut Department of Labor
Wage & Workplace Standards Division
200 Folly Brook Blvd.
Wethersfield, CT 06109