05 - EXISTING PLANS

INDEX OF DRAWINGS

DRAWING NUMBER	DRAWING TITLE	DRAWING NUMBER	DRAWING TITLE
EXIST - 1	INDEX OF DRAWINGS		
EXIST - 2	EXISTING BRIDGE PLANS - 1		
EXIST - 3	EXISTING BRIDGE PLANS - 2		
EXIST - 4	EXISTING BRIDGE PLANS - 3		
EXIST - 5	EXISTING CATENARY INFORMATION - 1		
EXIST - 6	EXISTING CATENARY INFORMATION - 2		
EXIST - 7	EXISTING CATENARY INFORMATION - 3		
EXIST - 8	EXISTING CATENARY INFORMATION - 4		
EXIST - 9	EXISTING CATENARY INFORMATION - 5		

DESIGNED BY:

LOCHNER
H.W. LOCHNER, INC
2110 Silas Deane Highway
Rocky Hill, CT 06067

STATE OF CONNECTICUT
RICHARD A. BRAY
LICENSED
PROFESSIONAL ENGINEER

Richard A. Bray
2013.02.13
10:08:14
-05'00'

REV.	DATE	REVISION DESCRIPTION	SHEET NO.
-	-	-	-
-	-	-	-
-	-	-	-
-	-	-	-
-	-	-	-
-	-	-	-

THE INFORMATION, INCLUDING ESTIMATED QUANTITIES OF WORK, SHOWN ON THESE SHEETS IS BASED ON LIMITED INVESTIGATIONS BY THE STATE AND IS IN NO WAY WARRANTED TO INDICATE THE CONDITIONS OF ACTUAL QUANTITIES OF WORK WHICH WILL BE REQUIRED.

PLOTTED: 2/12/2013

DESIGNER/DRAFTER:

CHECKED BY:

SCALE AS NOTED

STATE OF CONNECTICUT
DEPARTMENT OF TRANSPORTATION

FILENAME: ...\303007_05_01_title_sheet.dgn

LOCHNER
H.W. LOCHNER, INC
2110 Silas Deane Highway
Rocky Hill, CT 06067

APPROVED BY: R. BRAY DATE: 02/13/2013

PROJECT TITLE:
BRIDGE NO. 00710R METRO-NORTH NEW CANAAN BRANCH M.P. 5.76 OVER THE MERRITT PARKWAY

TOWN: NEW CANAAN

DRAWING TITLE: INDEX OF DRAWINGS

PROJECT NO. 303-007

DRAWING NO. EXIST-1

SHEET NO. 05.05.01

FED. ROAD DIST. NO.	STATE	TOWN	FED. AID PROJ. NO.	FISCAL YEAR	ROUTE NO.	SHEET NO.	TOTAL SHEETS
9	CONN.						

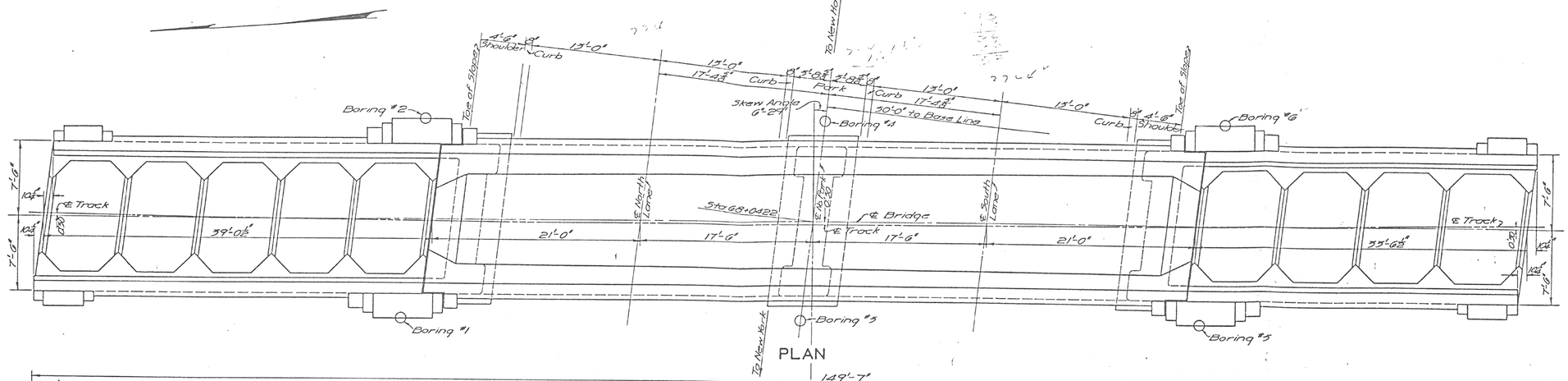

PLAN

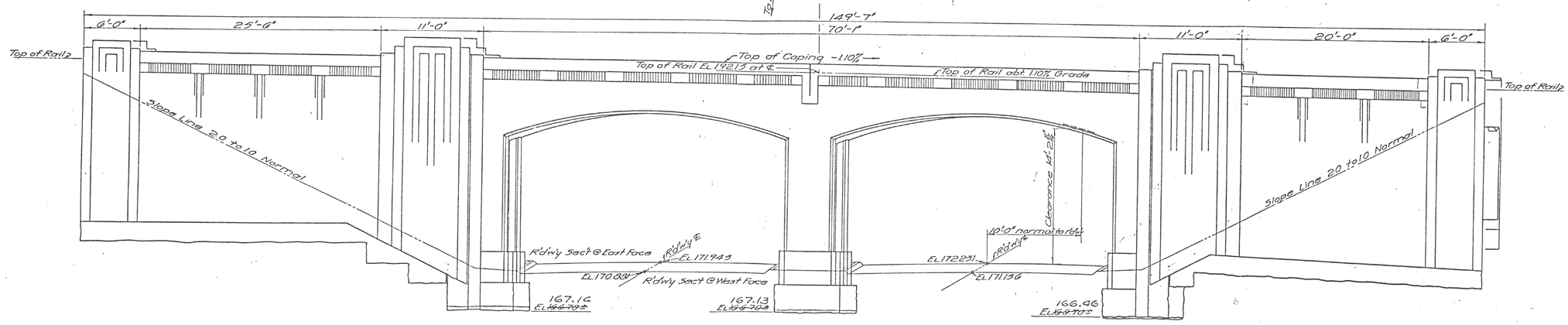

WEST ELEVATION

NOTE: Changes In Red Show Bridge As Constructed

General Notes

Specifications - Conn. State Highway Dept - 1935.

Designed for E-60 engine loading plus 100% impact.

Contract Price for 4" Vitrified Tile Pipe Drain shall include cost of .1 cu.ft of crushed stone per lin.ft of drain complete in place.

Class "A" (1:2:4) concrete is to be used thruout.

Reinforcing is to consist of deformed bars of an approved type.

Centering and falsework under the arches need not be left in place longer than the usual period for curing concrete.

Backfilling shall be placed in such a manner as to maintain approximately equal heights at both ends of the frame and shall be thoroughly tamped in layers.

Waterproof painting shall be placed on backs of frame legs below membrane waterproofing, to tops of footing and on backs of wing walls from fill line to 2'-0" below front slope line.

Quantities given are approximate only, and do not relieve the contractor from the responsibility of checking them in preparing his bid.

Waterproof painting shall also be placed completely around all tie walls.

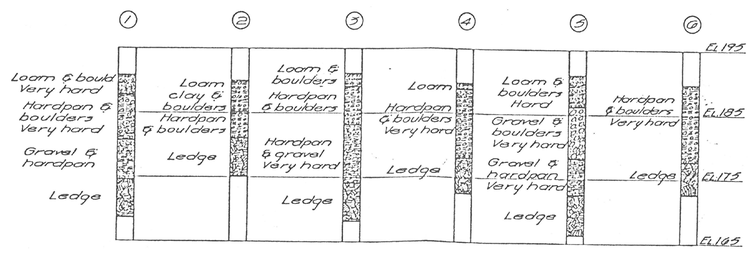

TEST BORINGS

QUANTITIES

Unclassified Excavation	300	cu.yd.
Class "A" Concrete	665	cu.yd.
½" Cork Joint Filler	470	sq.ft.
Deformed Steel Bars	47900	lbs.
Waterproof Painting	200	sq.yd.
Membrane Waterproofing	145	sq.yd.
Portland Cement	1016	bbls.
4" Vit. Tile Pipe Drain	76	lin.ft.

Revised 3-29-37 J.W.C.

APPROVED February 1 1937
J. H. Willis
ENGINEER OF BRIDGE DESIGN

APPROVED Feb. 2 1937
ENGINEER OF BRIDGES & STRUCTURES

APPROVED 193
DEPUTY HIGHWAY COMMISSIONER

Bridge Sheet #1 of 3

CONNECTICUT
STATE HIGHWAY DEPARTMENT
TOWN OF NEW CANAAN
MERRITT PARKWAY
UNDER
N.Y. N.H. & H. RAILROAD
REINF. CONCRETE RIGID FRAME.
GENERAL PLAN

SCALES 3/8"=1'-0"
MADE BY J.W.C.-C.J.H.-T.V.P. DATE 12-10-36
CHECKED BY L.D.W.-J.W.C. DATE 1-4-37
APPROVED J.E.W. DATE
PROJECT NUMBER 180-53
SHEET NO. 3 OF 19
STANDARD No.

180 53

FOR INFORMATION ONLY

REDUCED DRAWING
NOT TO SCALE

REV.	DATE	REVISION DESCRIPTION	SHEET NO.
-	-	-	-
-	-	-	-
-	-	-	-
-	-	-	-
-	-	-	-
-	-	-	-

THE INFORMATION, INCLUDING ESTIMATED QUANTITIES OF WORK, SHOWN ON THESE SHEETS IS BASED ON LIMITED INVESTIGATIONS BY THE STATE AND IS IN NO WAY WARRANTED TO INDICATE THE CONDITIONS OF ACTUAL QUANTITIES OF WORK WHICH WILL BE REQUIRED.

PLOTTED: 2/12/2013

DESIGNER/DRAFTER: H. MARTINDALE
CHECKED BY: A. MORTON
SCALE AS NOTED

STATE OF CONNECTICUT
DEPARTMENT OF TRANSPORTATION

FILENAME: ...\303007_05_02-Existing Bridge Plans-1.dgn

LOCHNER
H.W. LOCHNER, INC
2110 Silas Deane Highway
Rocky Hill, CT 06067
APPROVED BY: R. BRAY DATE: 02/13/2013

STATE OF CONNECTICUT RICHARD A. BRAY LICENSED PROFESSIONAL ENGINEER

PROJECT TITLE: BRIDGE NO. 00710R METRO-NORTH NEW CANAAN BRANCH M.P. 5.76 OVER THE MERRITT PARKWAY

TOWN: NEW CANAAN

DRAWING TITLE: EXISTING BRIDGE PLANS - 1

PROJECT NO. 303-007
DRAWING NO. EXIST-2
SHEET NO. 05.05.02

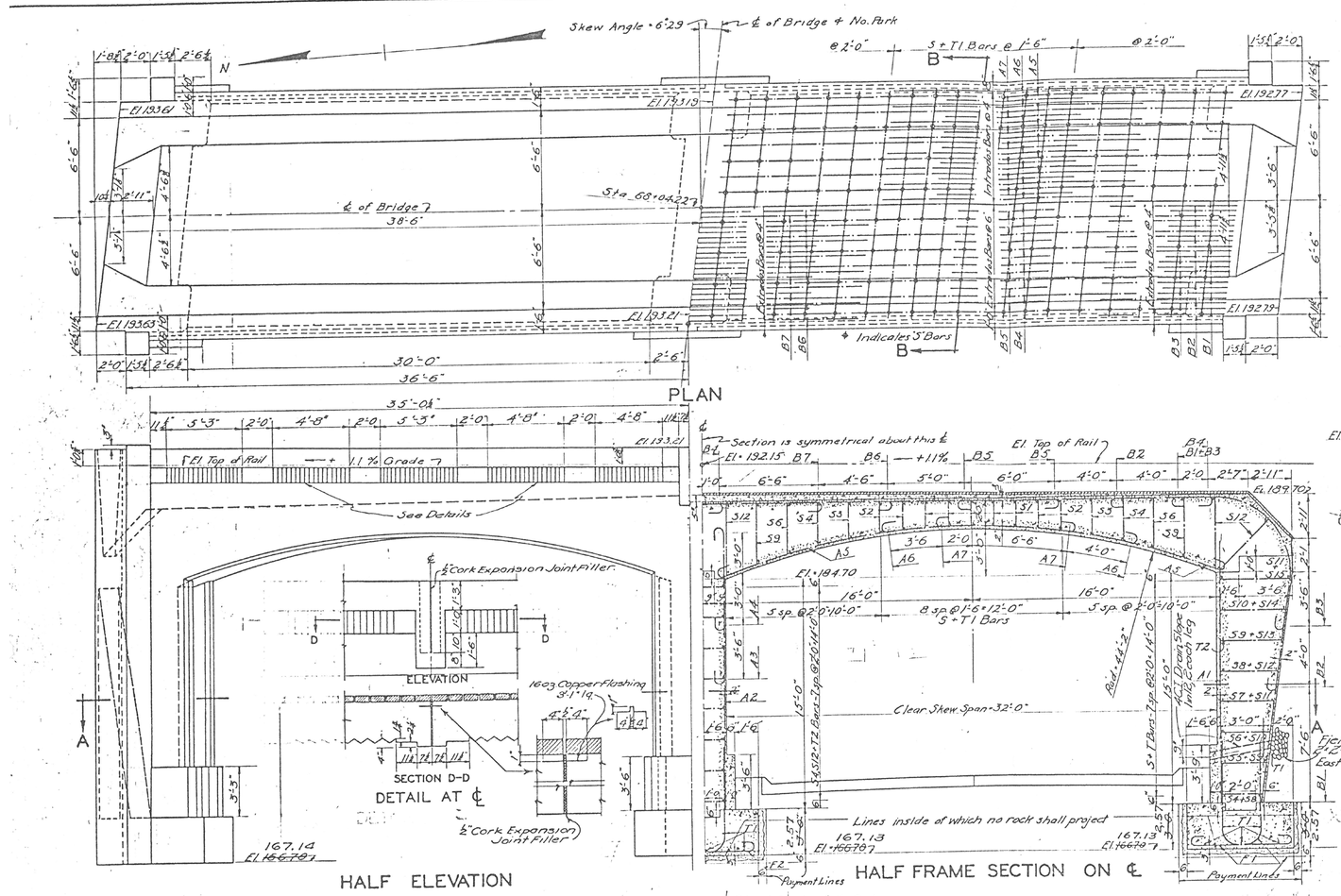

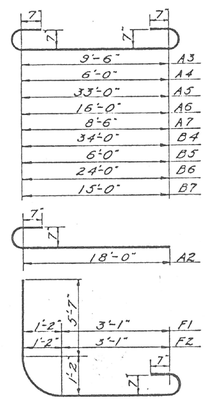

BAR BILL FRAME					
MARK	SIZE	NO.	LENGTH	WEIGHT	REMARKS
A1	1" Φ	30	17'-0"	1377	Straight
A2	- -	30	19'-6"	1580	See Detail
A3	- -	30	12'-6"	1013	- -
A4	- -	30	9'-0"	729	- -
A5	- -	30	36'-0"	2916	- -
A6	- -	30	19'-0"	1539	- -
A7	- -	30	11'-6"	932	- -
B1	- -	30	26'-9"	2167	- -
B2	- -	30	24'-8"	1998	- -
B3	- -	30	16'-8"	1350	- -
B4	- -	30	37'-0"	2997	- -
B5	- -	30	9'-0"	729	- -
B6	1" □	15	27'-0"	2175	- -
B7	-	15	18'-0"	1450	- -
F1	1" Φ	60	12'-0"	1944	- -
F2	- -	30	12'-0"	972	- -

MARK	SIZE	NO.	LENGTH	WEIGHT	REMARKS
T1	½" Φ	109	14'-10"	1089	Straight
T2	- -	32	16'-10"	366	See Detail
S1	⅝" Φ	80	3'-0"	91	- -
S2	- -	64	3'-3"	79	- -
S3	- -	32	3'-9"	46	- -
S4	- -	72	4'-0"	109	- -
S5	- -	8	4'-3"	13	- -
S6	- -	40	4'-6"	68	- -
S7	- -	8	4'-9"	14	- -
S8	- -	16	5'-0"	30	- -
S9	- -	48	5'-3"	96	- -
S10	- -	16	5'-6"	33	- -
S11	- -	16	5'-9"	35	- -
S12	- -	88	6'-0"	201	- -
S13	- -	8	6'-3"	19	- -
S14	- -	8	6'-6"	20	- -
S15	- -	8	6'-9"	21	- -
C1	⅝" Φ	8	36'-0	438	Straight
			Total	28646	

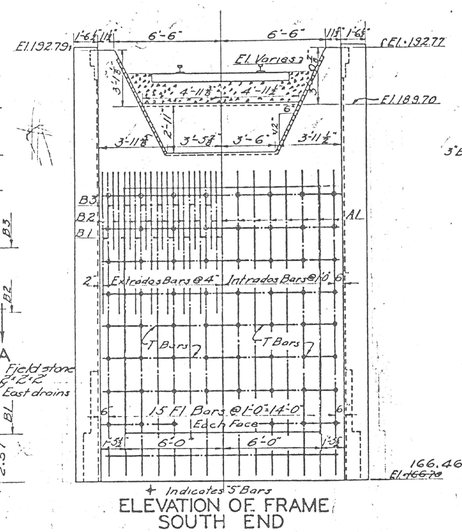

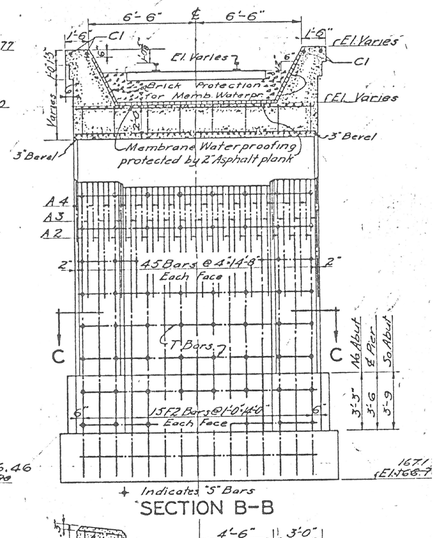

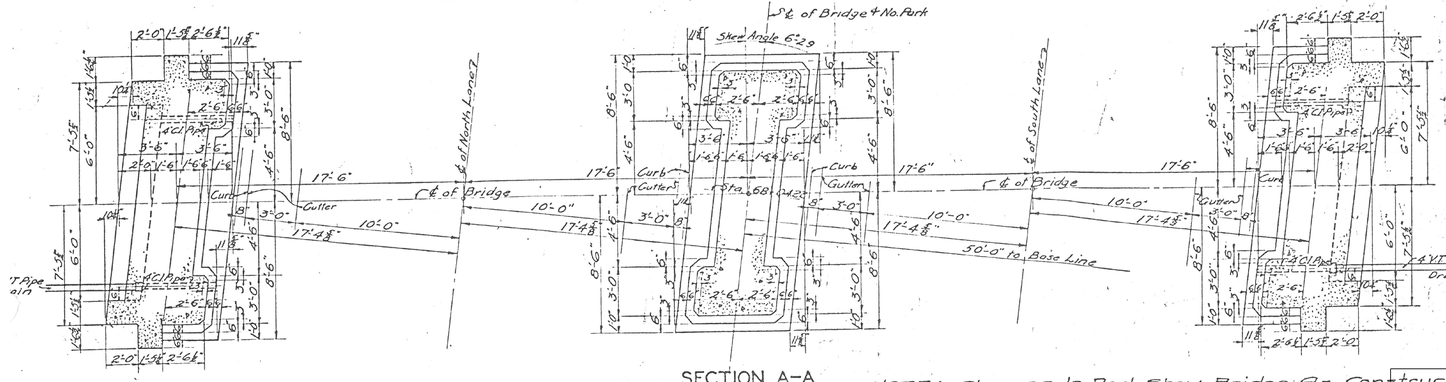

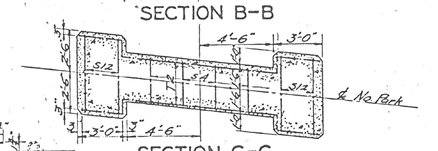

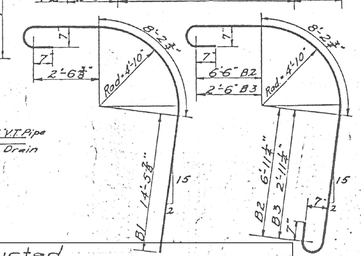

Bend in Place	
2'-4½"	S1
2'-7½"	S2
3'-1½"	S3
3'-4½"	S4
3'-7½"	S5
3'-10½"	S6
4'-1½"	S7
4'-4½"	S8
4'-7½"	S9
4'-10½"	S10
5'-1½"	S11
5'-4½"	S12
5'-7½"	S13
5'-10½"	S14
6'-1½"	S15

Bridge Sheet 2 of 3

CONNECTICUT
STATE HIGHWAY DEPARTMENT
TOWN OF NEW CANAAN
MERRITT PARKWAY
UNDER
N.Y., N.H. & H. RAILROAD
REINF. CONCRETE RIGID FRAME
FRAME DETAILS

SCALES ¼" = 1'-0"
MADE BY J.W.C. & C.H. Traced L.W.H. DATE 8-8-36
CHECKED BY L.D.W. & J.W.C. DATE 1-6-37
APPROVED J.T. Wallin DATE 2-1-37
PROJECT NUMBER 180-
SHEET 1 OF 70
STANDARD No.

Revised 3-29-37 JWC.

NOTE: Changes in Red Show Bridge As Constructed

FOR INFORMATION ONLY

REDUCED DRAWING
NOT TO SCALE

180 53

REV.	DATE	REVISION DESCRIPTION	SHEET NO.
-	-	-	-
-	-	-	-
-	-	-	-
-	-	-	-
-	-	-	-
-	-	-	-

THE INFORMATION, INCLUDING ESTIMATED QUANTITIES OF WORK, SHOWN ON THESE SHEETS IS BASED ON LIMITED INVESTIGATIONS BY THE STATE AND IS IN NO WAY WARRANTED TO INDICATE THE CONDITIONS OF ACTUAL QUANTITIES OF WORK WHICH WILL BE REQUIRED.

PLOTTED: 2/12/2013

DESIGNER/DRAFTER: H. MARTINDALE
CHECKED BY: A. MORTON
SCALE AS NOTED

STATE OF CONNECTICUT
DEPARTMENT OF TRANSPORTATION

FILENAME: ...\303007_05_03-Existing Bridge Plans-2.dgn

LOCHNER
H.W. LOCHNER, INC
2110 Silas Deane Highway
Rocky Hill, CT 06067

APPROVED BY: R. BRAY DATE: 02/13/2013

STATE OF CONNECTICUT RICHARD A. BRAY LICENSED PROFESSIONAL ENGINEER

PROJECT TITLE:
BRIDGE NO. 00710R METRO-NORTH NEW CANAAN BRANCH M.P. 5.76 OVER THE MERRITT PARKWAY

TOWN: NEW CANAAN

DRAWING TITLE: EXISTING BRIDGE PLANS - 2

PROJECT NO. 303-007
DRAWING NO. EXIST-3
SHEET NO. 05.05.03

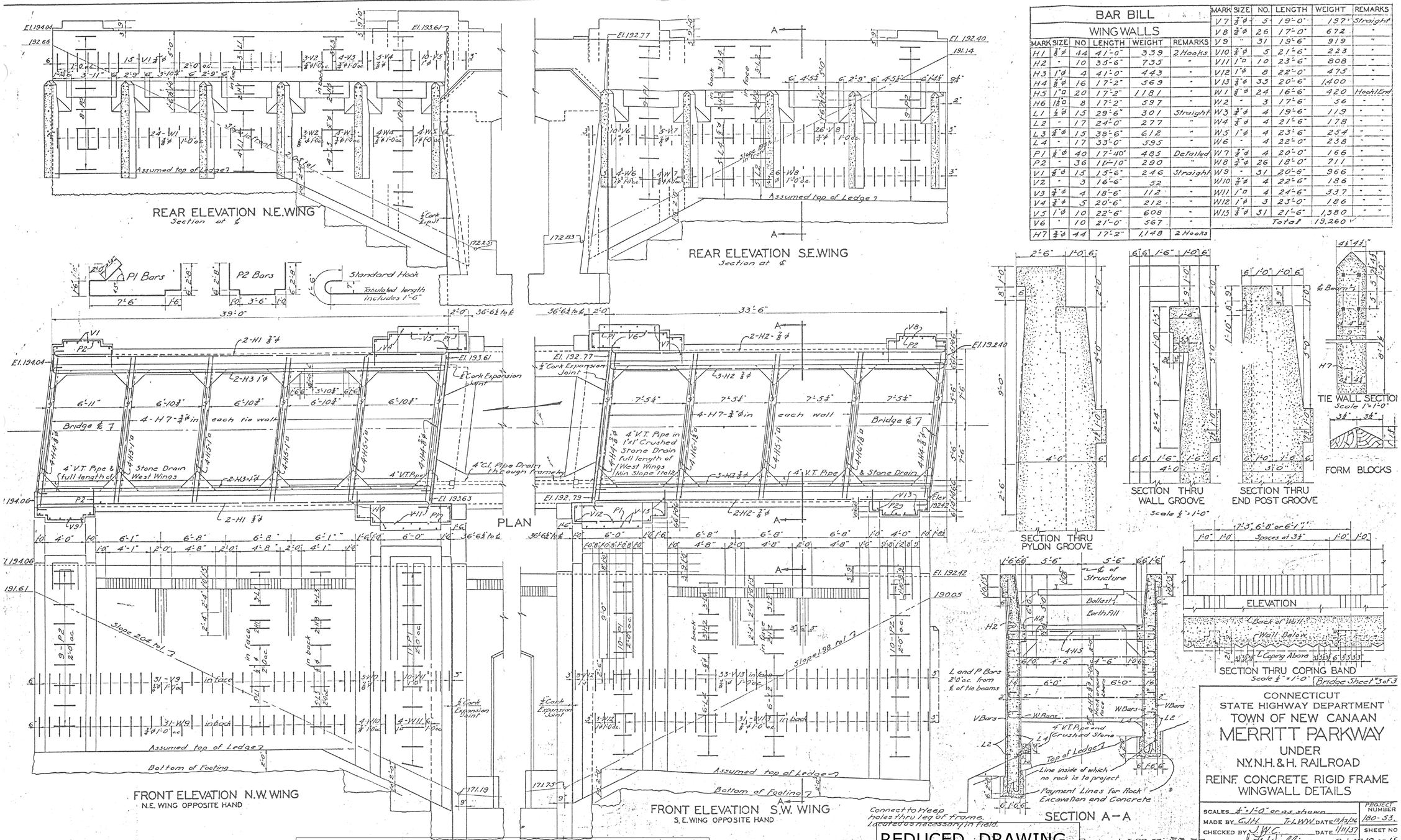

BAR BILL

WING WALLS

MARK	SIZE	NO	LENGTH	WEIGHT	REMARKS
H1	⅞"ϕ	44	41'-0"	939	2 Hooks
H2	"	10	35'-6"	735	"
H3	1"ϕ	4	41'-0"	443	"
H4	⅞"ϕ	16	17'-2"	569	"
H5	1"□	20	17'-2"	1181	"
H6	1⅛"□	8	17'-2"	597	"
L1	½"ϕ	15	29'-6"	301	Straight
L2	"	17	24'-0"	277	"
L3	⅞"ϕ	15	38'-6"	612	"
L4	"	17	33'-0"	595	"
P1	½"ϕ	40	17'-10"	483	Detailed
P2	"	36	11'-10"	290	"
V1	⅞"ϕ	15	15'-6"	246	Straight
V2	"	3	16'-6"	52	"
V3	¾"ϕ	4	18'-6"	112	"
V4	⅞"ϕ	5	20'-6"	212	"
V5	1"ϕ	10	22'-6"	608	"
V6	"	10	21'-0"	567	"
H7	¾"ϕ	44	17'-2"	1,148	2 Hooks

MARK	SIZE	NO.	LENGTH	WEIGHT	REMARKS
V7	⅞"ϕ	5	19'-0"	197	Straight
V8	¾"ϕ	26	17'-0"	672	"
V9	"	31	19'-6"	919	"
V10	⅞"ϕ	5	21'-6"	223	"
V11	1"□	10	23'-6"	808	"
V12	1"ϕ	8	22'-0"	475	"
V13	⅞"ϕ	33	20'-6"	1,400	"
W1	⅞"ϕ	24	16'-6"	420	Hook 1 End
W2	"	3	17'-6"	56	"
W3	¾"ϕ	4	19'-6"	119	"
W4	⅞"ϕ	4	21'-6"	178	"
W5	1"ϕ	4	23'-6"	254	"
W6	"	4	22'-0"	238	"
W7	⅞"ϕ	4	20'-0"	166	"
W8	¾"ϕ	26	18'-0"	711	"
W9	"	31	20'-6"	966	"
W10	⅞"ϕ	4	22'-6"	186	"
W11	1"□	4	24'-6"	337	"
W12	1"ϕ	3	23'-0"	186	"
W13	⅞"ϕ	31	21'-6"	1,380	"
			Total	13,260	

CONNECTICUT
STATE HIGHWAY DEPARTMENT
TOWN OF NEW CANAAN
MERRITT PARKWAY
UNDER
N.Y.N.H.&H. RAILROAD
REINF. CONCRETE RIGID FRAME
WINGWALL DETAILS

SCALES 1"=1'-0" or as shown
MADE BY E.J.H. / T.L.W.W. DATE 8/3/36
CHECKED BY J.W.C. DATE 1/11/37
APPROVED J. H. Willis DATE 2-1-37
PROJECT NUMBER 180-53
SHEET NO. 7 OF 10

FOR INFORMATION ONLY

REDUCED DRAWING
NOT TO SCALE

REV.	DATE	REVISION DESCRIPTION	SHEET NO.
-	-	-	-
-	-	-	-
-	-	-	-
-	-	-	-
-	-	-	-
-	-	-	-

THE INFORMATION, INCLUDING ESTIMATED QUANTITIES OF WORK, SHOWN ON THESE SHEETS IS BASED ON LIMITED INVESTIGATIONS BY THE STATE AND IS IN NO WAY WARRANTED TO INDICATE THE CONDITIONS OF ACTUAL QUANTITIES OF WORK WHICH WILL BE REQUIRED.

PLOTTED: 2/12/2013

DESIGNER/DRAFTER: H. MARTINDALE
CHECKED BY: A. MORTON
SCALE AS NOTED

STATE OF CONNECTICUT
DEPARTMENT OF TRANSPORTATION

FILENAME: ...\303007_05_04-Existing Bridge Plans-3.dgn

LOCHNER
H.W. LOCHNER, INC
2110 Silas Deane Highway
Rocky Hill, CT 06067

APPROVED BY: R. BRAY
DATE: 02/13/2013

STATE OF CONNECTICUT RICHARD A. BRAY LICENSED PROFESSIONAL ENGINEER

PROJECT TITLE:
BRIDGE NO. 00710R METRO-NORTH NEW CANAAN BRANCH M.P. 5.76 OVER THE MERRITT PARKWAY

TOWN: **NEW CANAAN**

DRAWING TITLE:
EXISTING BRIDGE PLANS - 3

PROJECT NO. **303-007**
DRAWING NO. **EXIST-4**
SHEET NO. **05.05.04**

STATE OF CONNECTICUT DEPT. OF TRANSPORTATION

F.H.W.A. REGION NO.	STATE	TOWN	FED. AID PROJ. NO.	PROJ. NO.	YEAR	ROUTE NO.	SHEET NO.	TOTAL SHEETS
1	CONN.	VARIOUS		303-01	1991		14	93

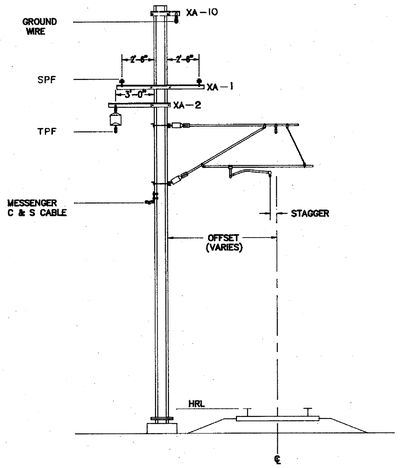

TYPE A1

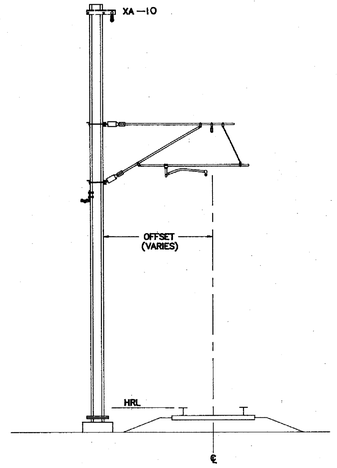

TYPE A2

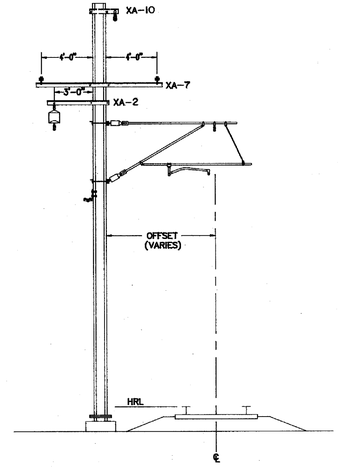

TYPE A3

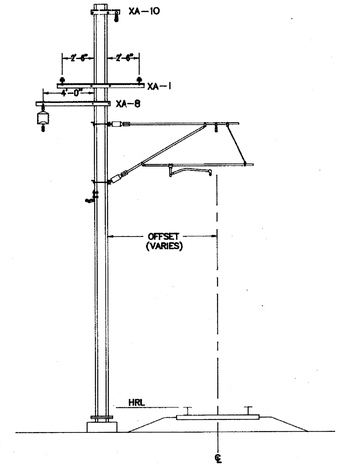

TYPE A4

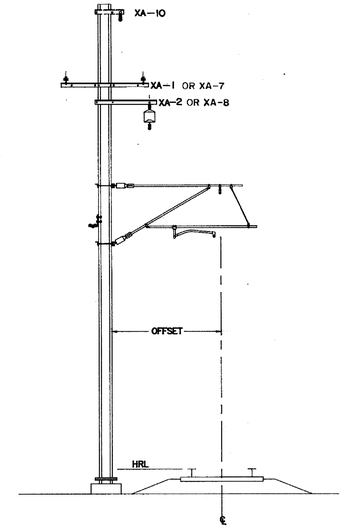

TYPE B

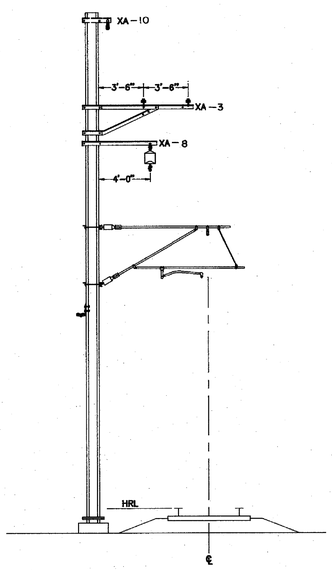

TYPE C1

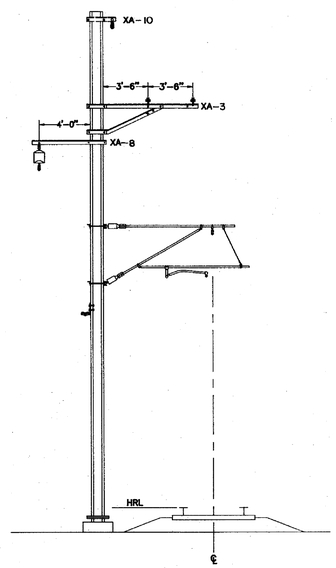

TYPE C2

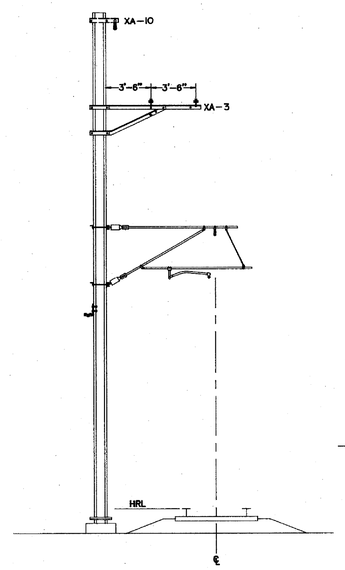

TYPE C3

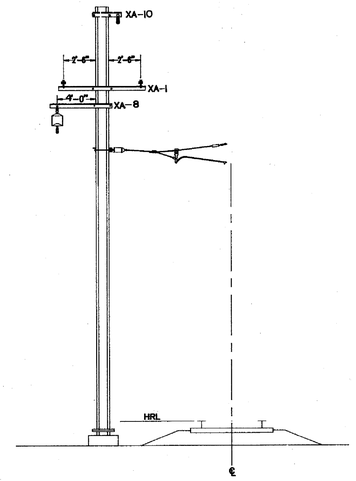

TYPE D

NOTES:

1. FOR GENERAL NOTES REFER TO DRAWING NO. CG – 03 – 00.
2. THE CONFIGURATIONS INDICATE THE GENERAL ARRANGEMENT OF ASSEMBLIES ON THE POLE. FOR ASSEMBLY DETAILS AND HEIGHT OF WIRES FROM HRL REFER TO THE RESPECTIVE ASSEMBLY DRAWINGS, AND CATENARY LAYOUT PLANS.
3. N.S. ON CATENARY LAYOUT PLAN MEANS THE PARTICULAR WIRE IS "NOT SUPPORTED" ON THE POLE AND CORRESPONDING ASSEMBLY BE DELETED FOR THAT POLE.
4. FOR CROSSARM AND MISCELLANEOUS STEEL DETAILS REFER TO DRAWINGS CS-01-00 THROUGH CS-05-00

STATE OF CONNECTICUT STEVEN D. BEZEAU No. 17129 LICENSED PROFESSIONAL ENGINEER

CONNECTICUT
DEPARTMENT OF TRANSPORTATION

NEW CANAAN BRANCH CATENARY REPLACEMENT

TYPICAL STRUCTURE CONFIGURATIONS

electrack A DIVISION OF
EMJ/McFARLAND – JOHNSON ENGINEERS, INC.
HYATTSVILLE, MARYLAND

NO.	DATE	DESCRIPTION
		REVISIONS

ENGINEER JCD
DESIGNER JCD/MKS | DRAFTER HJ CADD | CHECKER SDB
APPROVED D. McALPINE
DRAWING NO. CR – 04 – 00 | SHEET 14 OF 93

FOR INFORMATION ONLY

REDUCED DRAWING
NOT TO SCALE

REV.	DATE	REVISION DESCRIPTION	SHEET NO.
-	-	-	-
-	-	-	-
-	-	-	-
-	-	-	-
-	-	-	-
-	-	-	-

THE INFORMATION, INCLUDING ESTIMATED QUANTITIES OF WORK, SHOWN ON THESE SHEETS IS BASED ON LIMITED INVESTIGATIONS BY THE STATE AND IS IN NO WAY WARRANTED TO INDICATE THE CONDITIONS OF ACTUAL QUANTITIES OF WORK WHICH WILL BE REQUIRED.

PLOTTED: 2/12/2013

DESIGNER/DRAFTER: H. MARTINDALE
CHECKED BY: A. MORTON
SCALE AS NOTED

STATE OF CONNECTICUT
DEPARTMENT OF TRANSPORTATION

FILENAME: ...\303007_05_05-Existing Catenary Information-1.dgn

LOCHNER
H.W. LOCHNER, INC
2110 Silas Deane Highway
Rocky Hill, CT 06067

APPROVED BY: R. BRAY
DATE: 02/13/2013

STATE OF CONNECTICUT RICHARD A. BRAY No. 15425 LICENSED PROFESSIONAL ENGINEER

PROJECT TITLE:
BRIDGE NO. 00710R METRO-NORTH NEW CANAAN BRANCH M.P. 5.76 OVER THE MERRITT PARKWAY

TOWN: NEW CANAAN

DRAWING TITLE:
EXISTING CATENARY INFORMATION - 1

PROJECT NO. 303-007
DRAWING NO. EXIST-5
SHEET NO. 05.05.05

STATE OF CONNECTICUT DEPT. OF TRANSPORTATION

F.H.W.A. REGION NO.	STATE	TOWN	FED. AID PROJ. NO.	PROJ. NO.	YEAR	ROUTE NO.	SHEET NO.	TOTAL SHEETS
1	CONN.	VARIOUS		303-01	1991		11	93

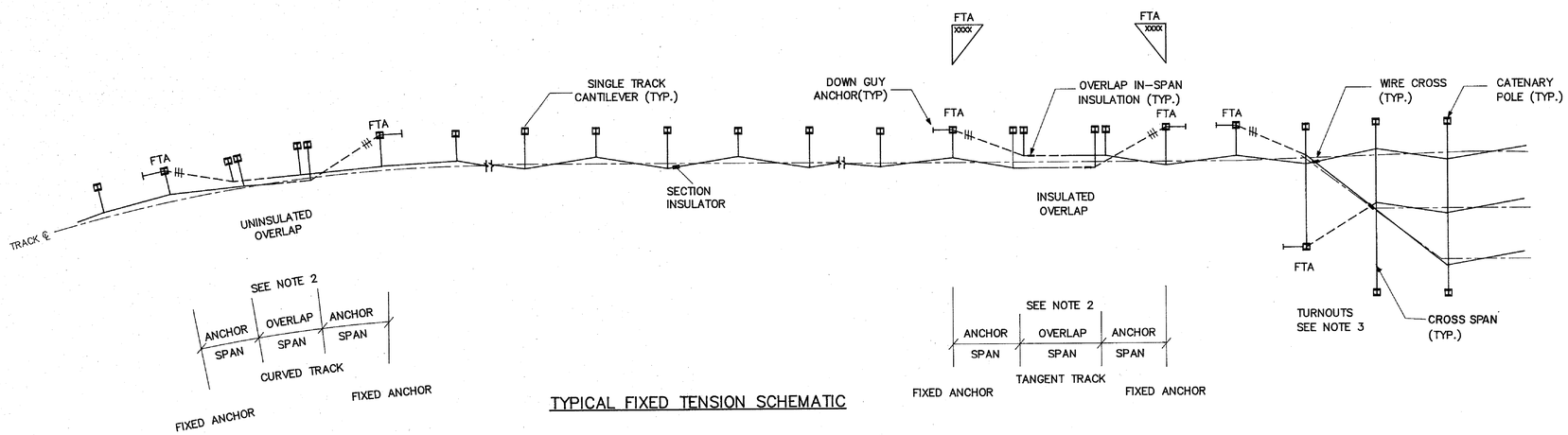

TYPICAL FIXED TENSION SCHEMATIC

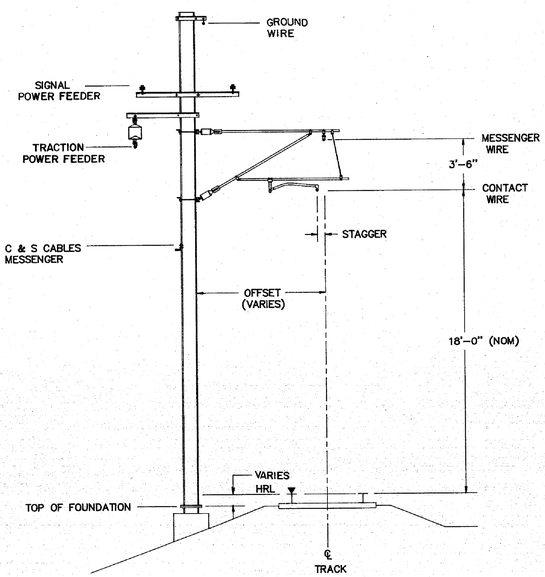

TYPICAL CROSS SECTION ON TANGENT TRACK

NOTES:

1. FOR STRUCTURE SPACINGS ON TANGENT OR CURVED TRACK, REFER TO DRAWING CT-03-00
2. FOR OVERLAP ARRANGEMENT, REFER TO DRAWING CR-02-00
3. FOR TURNOUT ARRANGEMENT, REFER TO DRAWING CR-03-00

CONNECTICUT
DEPARTMENT OF TRANSPORTATION

NEW CANAAN BRANCH CATENARY REPLACEMENT

FIXED TENSION LAYOUT SCHEMATIC

electrack A DIVISION OF EMJ/McFARLAND – JOHNSON ENGINEERS, INC. HYATTSVILLE, MARYLAND

NO.	DATE	DESCRIPTION

REVISIONS

ENGINEER JCD
DESIGNER JCD/MKS DRAFTER HJ/CAD CHECKER SDB
APPROVED D. McALPINE
DRAWING NO. CR – 01 – 00 SHEET 11 OF 93

FOR INFORMATION ONLY

REDUCED DRAWING NOT TO SCALE

REV.	DATE	REVISION DESCRIPTION	SHEET NO.
-	-	-	-
-	-	-	-
-	-	-	-
-	-	-	-
-	-	-	-
-	-	-	-

THE INFORMATION, INCLUDING ESTIMATED QUANTITIES OF WORK, SHOWN ON THESE SHEETS IS BASED ON LIMITED INVESTIGATIONS BY THE STATE AND IS IN NO WAY WARRANTED TO INDICATE THE CONDITIONS OF ACTUAL QUANTITIES OF WORK WHICH WILL BE REQUIRED.

PLOTTED: 2/12/2013

DESIGNER/DRAFTER: H. MARTINDALE
CHECKED BY: A. MORTON
SCALE AS NOTED

STATE OF CONNECTICUT
DEPARTMENT OF TRANSPORTATION

FILENAME: ...\303007_05_06-Existing Catenary Information-2.dgn

LOCHNER
H.W. LOCHNER, INC
2110 Silas Deane Highway
Rocky Hill, CT 06067

APPROVED BY: R. BRAY DATE: 02/13/2013

PROJECT TITLE: BRIDGE NO. 00710R METRO-NORTH NEW CANAAN BRANCH M.P. 5.76 OVER THE MERRITT PARKWAY

TOWN: NEW CANAAN

DRAWING TITLE: EXISTING CATENARY INFORMATION - 2

PROJECT NO. 303-007
DRAWING NO. EXIST-6
SHEET NO. 05.05.06

STATE OF CONNECTICUT DEPT. OF TRANSPORTATION

F.H.W.A. REGION NO.	STATE	TOWN	FED. AID PROJ. NO.	PROJ. NO.	YEAR	ROUTE NO.	SHEET NO.	TOTAL SHEETS
1	CONN.	VARIOUS		303-01	1991		37	93

MISC. ASSEMBLY	16E				18A, (2)18B, 18C		21A, XA-4, (2)6B
IN-SPAN ASSEMBLY	5A	5A	5A		5A, 5B, 9A	7A	7A
GUY HEIGHT/ASSEMBLY				19A	21'-9"/ HG-1		
C&S MESS. HEIGHT/ASSEMBLY	N.S.	(R) 18'-0" /16A	(R) 18'-0" /16A		N.S.	N.S.	N.S.
TPF HEIGHT/ASSEMBLY	(L) 28'-0" /11C, XA-8	(L) 28'-0" /11C, XA-8	(L) 28'-0" /11C, XA-8		(R) 27'-6" /11C, XA-8	(R) 27'-6" /11C, XA-8	N.S.
SPF HEIGHT/ASSEMBLY	N.S.	(R) 34'-0" /(2)11D, XA-3	(L) 34'-0" /(2)11D, XA-3		(R) 33'-6" /(2)11D, XA-3	(R) 33'-6" /(2)11D, XA-3	N.S.
GW HEIGHT/ASSEMBLY	(L) 37'-6"/16B, XA-10, 36-6"/10E, SL-1	(L) 40'-6" /16B, XA-10	(L) 40'-6" /16B, XA-10		(R) 40'-0" /16B, XA-10	(R) 40'-0" /16B, XA-10	(R) 40'-0" /16C, XA-10
CANTILEVER ASSEMBLY	1B	1B	1B		1A	1A	3A
POLE REFERENCE/RAKE	W 12X58/1"	W 12X58/0"	W 12X58/1"		W 12X58/2"	W 12X58/1½"	HP 10X42/1"
FOUNDATION TYPE/DEPTH	A 13'-6"	A 14'-0"	A 13'-0"	SA-1	A 13'-0"	A 13'-0"	A 11'-0"
FOUNDATION LEVEL	+1'-0"	-0'-3"	+1'-3"		-0'-3"	0'-0"	0'-0"
WIRE TERMINATION HEIGHT					20'-6"/22'-6", (2)SL-1		
MESSENGER WIRE HEIGHT	23'-6"	23'-6"	23'-6"		23'-0"	23'-0"	24'-3"
CONTACT WIRE HEIGHT	20'-0"	20'-0"	20'-0"		19'-6"	19'-6"	20'-3"
POLE FACE TO TRK ℄ OFFSET	9'-0"	9'-0"	9'-0"	8'-8"	8'-8"	8'-8"	8'-8"
STAGGER (IN)	↑ 6	↑ 6	↑ 6		↑ 6	↑ 6	↓ 21
TRACK SUPERELEVATION (IN)	⅝	1	⅝		¾	1	1
POLE NUMBER	NC-134	NC-135	NC-136	CA-9	NC-137	NC-138A	NC-138B
TYPE OF STRUCTURE CONFIG.	C1 (OMIT SIGNAL WIRES)	C1 (SIGNAL WIRES ON (R))	C1		C1	C1	F1

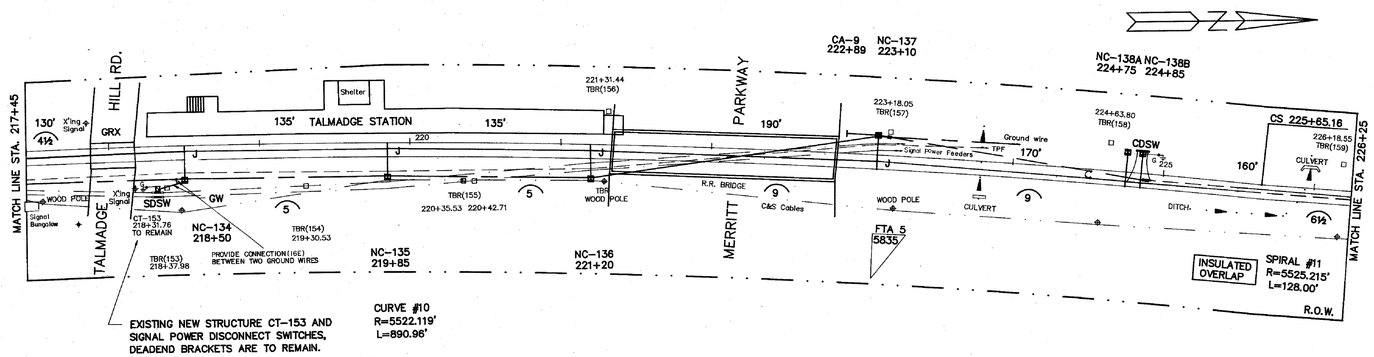

CURVE #10
R=5522.119'
L=890.96'

EXISTING NEW STRUCTURE CT-153 AND SIGNAL POWER DISCONNECT SWITCHES, DEADEND BRACKETS ARE TO REMAIN.

CONTRACTOR IN TO INSTALL NEW ASS'Y 10B(4) ONTO THE EXISTING DEADEND BRACKETS, AND INSTALL SIGNAL FEEDER TAPS TO THE EXISTING DISCONNECT SWITCHES.

INSTALL GROUND MAT ASS'Y 16F.

INSTALL ASS'Y 10D – 6" BELOW TOP OF POLE.

CONTRACTOR IS TO REPOSITION THE DEADEND BRACKETS AS REQUIRED, TO MAINTAIN ELECTRICAL CLEARANCE BETWEEN THE SIGNAL POWER WIRES AND THE NEW NC-134 POLE.

STATE OF CONNECTICUT
DEPARTMENT OF TRANSPORTATION
NEW CANAAN BRANCH CATENARY REPLACEMENT

CATENARY LAYOUT
STATION 217+45 TO 226+45

STATE OF CONNECTICUT
STEVEN J. DEMBOWSKI
No. 17129
LICENSED PROFESSIONAL ENGINEER

LONGITUDINAL SCALE: 1"=40'
TRANSVERSE SCALE: 1"=20'

elec track A DIVISION OF
EMJ/McFARLAND – JOHNSON ENGINEERS, INC.
HYATTSVILLE, MARYLAND

NO.	DATE	DESCRIPTION
		REVISIONS

ENGINEER JCD
DESIGNER JCD/MKS | DRAFTER HJ/CAD | CHECKER SDB
APPROVED D. McALPINE
DRAWING NO. CL – 20 – 00 | SHEET 37 OF 93

161039

FOR INFORMATION ONLY

REDUCED DRAWING
NOT TO SCALE

REV.	DATE	REVISION DESCRIPTION	SHEET NO.
-	-	-	-
-	-	-	-
-	-	-	-
-	-	-	-
-	-	-	-
-	-	-	-

THE INFORMATION, INCLUDING ESTIMATED QUANTITIES OF WORK, SHOWN ON THESE SHEETS IS BASED ON LIMITED INVESTIGATIONS BY THE STATE AND IS IN NO WAY WARRANTED TO INDICATE THE CONDITIONS OF ACTUAL QUANTITIES OF WORK WHICH WILL BE REQUIRED.

PLOTTED: 2/12/2013

DESIGNER/DRAFTER: H. MARTINDALE
CHECKED BY: A. MORTON
SCALE AS NOTED

STATE OF CONNECTICUT
DEPARTMENT OF TRANSPORTATION

FILENAME: ...\303007_05_07-Existing Catenary Information-3.dgn

LOCHNER
H.W. LOCHNER, INC
2110 Silas Deane Highway
Rocky Hill, CT 06067

APPROVED BY: R. BRAY
DATE: 02/13/2013

STATE OF CONNECTICUT
RICHARD A. BRAY
No. 18125
LICENSED PROFESSIONAL ENGINEER

PROJECT TITLE:
BRIDGE NO. 00710R METRO-NORTH
NEW CANAAN BRANCH M.P. 5.76
OVER THE MERRITT PARKWAY

TOWN: NEW CANAAN

DRAWING TITLE:
EXISTING CATENARY
INFORMATION - 3

PROJECT NO. 303-007
DRAWING NO. EXIST-7
SHEET NO. 05.05.07

CANTILEVER PIPE LENGTHS(IN)	
TOP PIPE	116
STRUT PIPE	94
REGISTRATION PIPE	133
LONG BRACE	——
SHORT BRACE	——

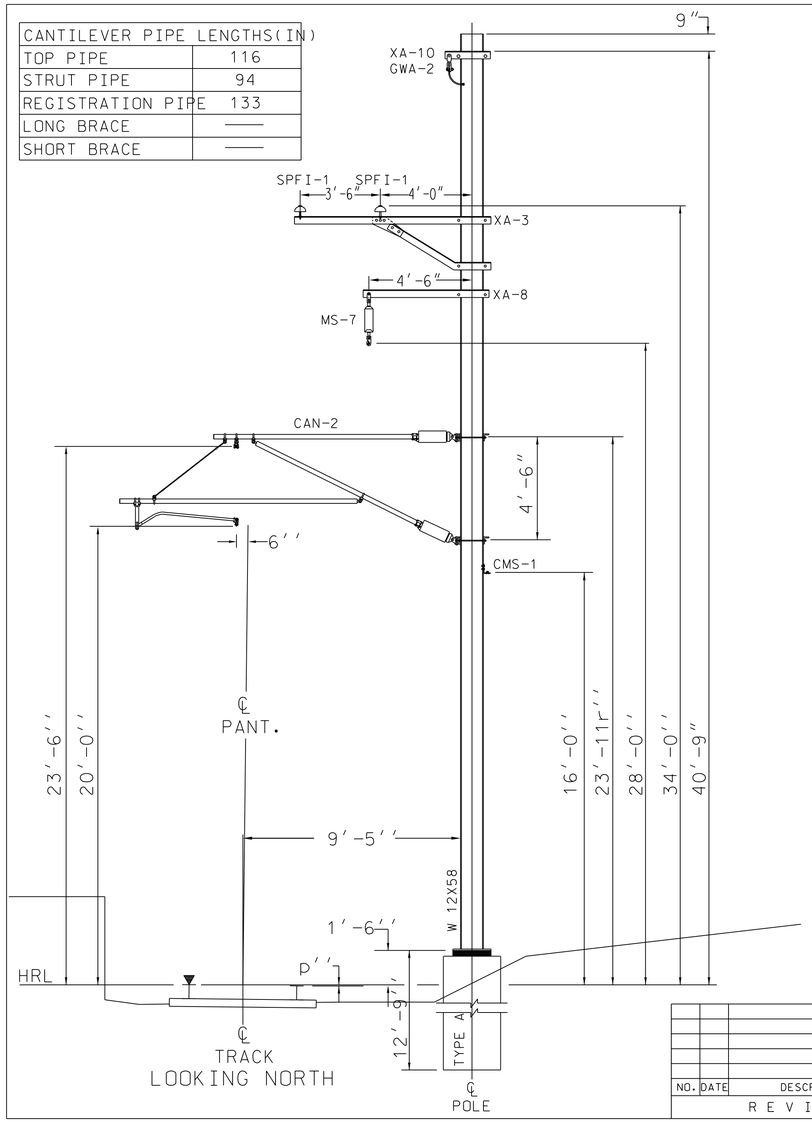

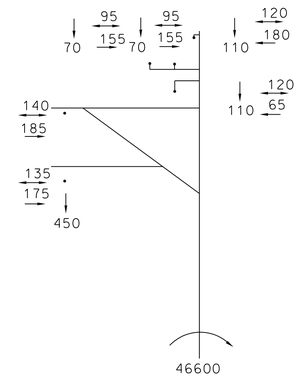

LOADING DIAGRAM

BILL OF MATERIALS

WIRE No.	DESCRIPTION	REFERENCE No.	QTY.
FOUNDATION			
	FOUNDATION TYPE	A	1
STRUCTURAL STEELWORK AND GUYS			
	POLE AND PILE	W 12x58	1
	SPF CROSS ARM	XA-3	1
	TPF CROSS ARM	XA-8	1
	GW CROSS ARM	XA-10	1
SUPPORT AND REGISTRATION ASSEMBLY			
4	CANTILEVER ASSEMBLY	CAN-2	1
	TPF ASSEMBLY	MS-7	1
	SPF ASSEMBLY	SPFI-1	2
	COMM. SUPPORT ASSEMBLY	CMS-1	1
IN SPAN ASSEMBLY			
4	IN SPAN JUMPER	TYPE∠∠C''	1
GROUND WIRE ASSEMBLY			
	GW ASSEMBLY	GWA-2	1
MISCELLANEOUS AND SWITCHING			

STRUCTURE STATION 221+20 | STRUCTURE No. NC-136

NEW CANAAN BRANCH LINE

STATE OF CONNECTICUT
DEPARTMENT OF TRANSPORTATION

TITLE: CATENARY SYSTEM ERECTION DIAGRAM

SCALE 1"=5' | DATE 6-24-94

DRAWING No. ED-NC-136

SHEET 144 OF 235

elec track
A DIVISION OF HEERY INTERNATIONAL, INC.
8201 CORPORATE DR. SUITE 800, LANDOVER, MD. 20785

NO.	DATE	DESCRIPTION	DRWN	CHKD	APPVD

REVISIONS

DESIGNED: J. DENG
DRAWN: H. JASSO
CHECKED: M. SHARMA
APPROVED: S. BEZNER

FOR INFORMATION ONLY

REDUCED DRAWING
NOT TO SCALE

REV.	DATE	REVISION DESCRIPTION	SHEET NO.
-	-	-	-
-	-	-	-
-	-	-	-
-	-	-	-
-	-	-	-
-	-	-	-

THE INFORMATION, INCLUDING ESTIMATED QUANTITIES OF WORK, SHOWN ON THESE SHEETS IS BASED ON LIMITED INVESTIGATIONS BY THE STATE AND IS IN NO WAY WARRANTED TO INDICATE THE CONDITIONS OF ACTUAL QUANTITIES OF WORK WHICH WILL BE REQUIRED.

PLOTTED: 2/12/2013

DESIGNER/DRAFTER: H. MARTINDALE
CHECKED BY: A. MORTON
SCALE AS NOTED

STATE OF CONNECTICUT
DEPARTMENT OF TRANSPORTATION

FILENAME: ...\303007_05_08-Existing Catenary Information-4.dgn

LOCHNER
H.W. LOCHNER, INC
2110 Silas Deane Highway
Rocky Hill, CT 06067

APPROVED BY: R. BRAY | DATE: 02/13/2013

STATE OF CONNECTICUT RICHARD A. BRAY LICENSED PROFESSIONAL ENGINEER

PROJECT TITLE:
BRIDGE NO. 00710R METRO-NORTH NEW CANAAN BRANCH M.P. 5.76 OVER THE MERRITT PARKWAY

TOWN: **NEW CANAAN**

DRAWING TITLE: **EXISTING CATENARY INFORMATION - 4**

PROJECT NO. **303-007**
DRAWING NO. **EXIST-8**
SHEET NO. **05.05.08**

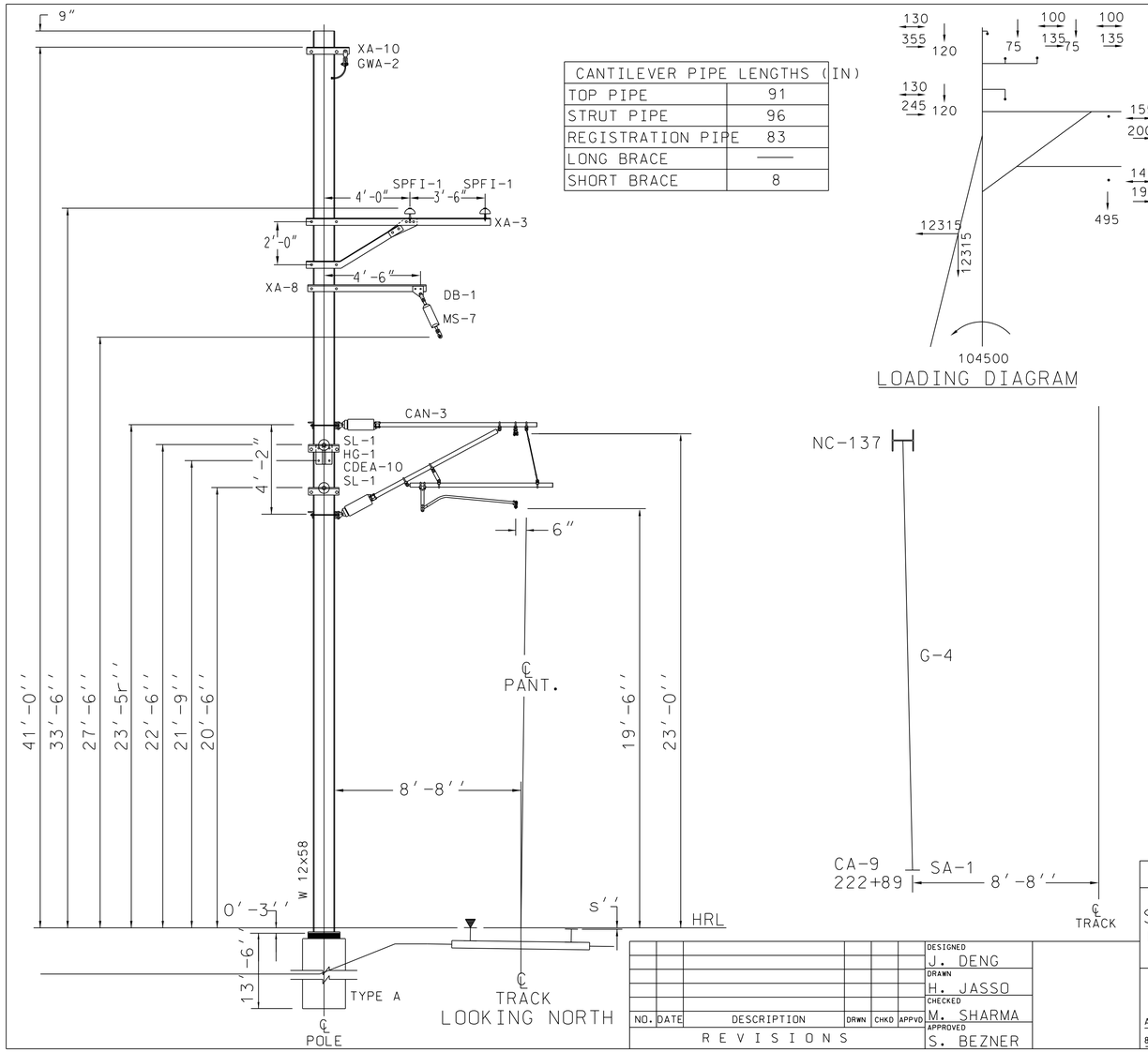

CANTILEVER PIPE LENGTHS (IN)	
TOP PIPE	91
STRUT PIPE	96
REGISTRATION PIPE	83
LONG BRACE	——
SHORT BRACE	8

LOADING DIAGRAM

BILL OF MATERIALS

WIRE No.	DESCRIPTION	REFERENCE No.	QTY.
FOUNDATION			
	FOUNDATION TYPE	A	1
	FOUNDATION TYPE	SA-1	1
STRUCTURAL STEELWORK AND GUYS			
	POLE AND PILE	W 12x58	1
	SPF CROSS ARM	XA-3	1
	TPF CROSS ARM	XA-8	1
	GW CROSS ARM	XA-10	1
	TERMINATION BRACKET	SL-1	2
	GUY BRACKET	HG-1	1
	DROP BRACKET	DB-1	1
SUPPORT AND REGISTRATION ASSEMBLY			
4	CANTILEVER ASSEMBLY	CAN-3	1
	TPF ASSEMBLY	MS-7	1
	SPF ASSEMBLY	SPFI-1	2
IN SPAN ASSEMBLY			
4	IN-SPAN JUMPER	TYPE∠∠C''	1
4-5	IN-SPAN JUMPER	TYPE∠∠D''	1
5	MESSENGER & CONTACT TERMINATION ASSEMBLY	CDEA-10	1
GROUND WIRE ASSEMBLY			
	GW ASSEMBLY	GWA-2	1
MISCELLANEOUS AND SWITCHING			
	GROUND WIRE SPLICE	GWS-1	1
	SIGNAL POWER FEEDER SPLICE	SPFS-1	2
	TRACTION POWER FEEDER SPLICE	TPFS-1	1
	GUY ASSEMBLY	G-4	1

STRUCTURE STATION 223+10 | STRUCTURE No. NC-137

NEW CANAAN BRANCH LINE

STATE OF CONNECTICUT
DEPARTMENT OF TRANSPORTATION

elec track
A DIVISION OF HEERY INTERNATIONAL. INC.
8201 CORPORATE DR. SUITE 800. LANDOVER. MD. 20785

TITLE: CATENARY SYSTEM ERECTION DIAGRAM

SCALE: 1"=5' | DATE: 6-24-94

DRAWING No. ED-NC-137

SHEET 145 OF 235

NO.	DATE	DESCRIPTION	DRWN	CHKD	APPVD

REVISIONS

DESIGNED: J. DENG
DRAWN: H. JASSO
CHECKED: M. SHARMA
APPROVED: S. BEZNER

FOR INFORMATION ONLY

REDUCED DRAWING
NOT TO SCALE

REV.	DATE	REVISION DESCRIPTION	SHEET NO.
-	-	-	-
-	-	-	-
-	-	-	-
-	-	-	-
-	-	-	-
-	-	-	-

THE INFORMATION, INCLUDING ESTIMATED QUANTITIES OF WORK, SHOWN ON THESE SHEETS IS BASED ON LIMITED INVESTIGATIONS BY THE STATE AND IS IN NO WAY WARRANTED TO INDICATE THE CONDITIONS OF ACTUAL QUANTITIES OF WORK WHICH WILL BE REQUIRED.

PLOTTED: 2/12/2013

DESIGNER/DRAFTER: H. MARTINDALE
CHECKED BY: A. MORTON
SCALE AS NOTED

STATE OF CONNECTICUT
DEPARTMENT OF TRANSPORTATION

FILENAME: ...\303007_05_09-Existing Catenary Information-5.dgn

LOCHNER
H.W. LOCHNER, INC
2110 Silas Deane Highway
Rocky Hill, CT 06067

APPROVED BY: R. BRAY
DATE: 02/13/2013

STATE OF CONNECTICUT · RICHARD A. BRAY · LICENSED PROFESSIONAL ENGINEER

PROJECT TITLE:
BRIDGE NO. 00710R METRO-NORTH NEW CANAAN BRANCH M.P. 5.76 OVER THE MERRITT PARKWAY

TOWN: **NEW CANAAN**

DRAWING TITLE: **EXISTING CATENARY INFORMATION - 5**

PROJECT NO. **303-007**
DRAWING NO. **EXIST-9**
SHEET NO. **05.05.09**