04 - STRUCTURAL
INDEX OF DRAWINGS

DRAWING NUMBER	DRAWING TITLE	DRAWING NUMBER	DRAWING TITLE
STR-1	BRIDGE NO. 00710R INDEX OF DRAWINGS		
STR-2	GENERAL PLAN AND ELEVATION		
STR-3	TYPICAL SECTIONS		
STR-4	CONSTRUCTION STAGING		
STR-5	CONSTRUCTION STAGING 2		
STR-6	TIMBER SUPPORT MAT		
STR-7	TEMPORARY CROSSING		
STR-8	GENERAL REPAIR PLAN AND ELEVATIONS		
STR-9	STEEL PLATFORM DETAIL		
STR-10	PARAPET RECONSTRUCTION		
STR-11	PARAPET DETAILS		
STR-12	PYLON RECONSTRUCTION AND WINGWALL REPAIR		
STR-13	CONCRETE REPAIR AND BARRIER RECONSTRUCTION		
STR-14	DECK DRAINAGE AND WATERPROOFING		
STR-15	DRAINAGE DETAILS		

DESIGNED BY:

LOCHNER
H.W. LOCHNER, INC
2110 Silas Deane Highway
Rocky Hill, CT 06067

STATE OF CONNECTICUT
RICHARD A. BRAY
LICENSED
PROFESSIONAL ENGINEER

Richard A. Bray
2013.02.13
10:07:38
-05'00'

REV.	DATE	REVISION DESCRIPTION	SHEET NO.
-	-	-	-
-	-	-	-
-	-	-	-
-	-	-	-
-	-	-	-
-	-	-	-

THE INFORMATION, INCLUDING ESTIMATED QUANTITIES OF WORK, SHOWN ON THESE SHEETS IS BASED ON LIMITED INVESTIGATIONS BY THE STATE AND IS IN NO WAY WARRANTED TO INDICATE THE CONDITIONS OF ACTUAL QUANTITIES OF WORK WHICH WILL BE REQUIRED.

PLOTTED: 2/12/2013

DESIGNER/DRAFTER: H. MARTINDALE
CHECKED BY: A. MORTON
SCALE AS NOTED

STATE OF CONNECTICUT
DEPARTMENT OF TRANSPORTATION

FILENAME: ...\303007_04_01_title_sheet.dgn

LOCHNER
H.W. LOCHNER, INC
2110 Silas Deane Highway
Rocky Hill, CT 06067

APPROVED BY: R. BRAY DATE: 02/13/2013

PROJECT TITLE:
BRIDGE NO. 00710R METRO-NORTH
NEW CANAAN BRANCH M.P. 5.76
OVER THE MERRITT PARKWAY

TOWN: NEW CANAAN

DRAWING TITLE:
BRIDGE NO. 00710R
INDEX OF DRAWINGS

PROJECT NO. 303-007
DRAWING NO. STR-1
SHEET NO. 05.04.01

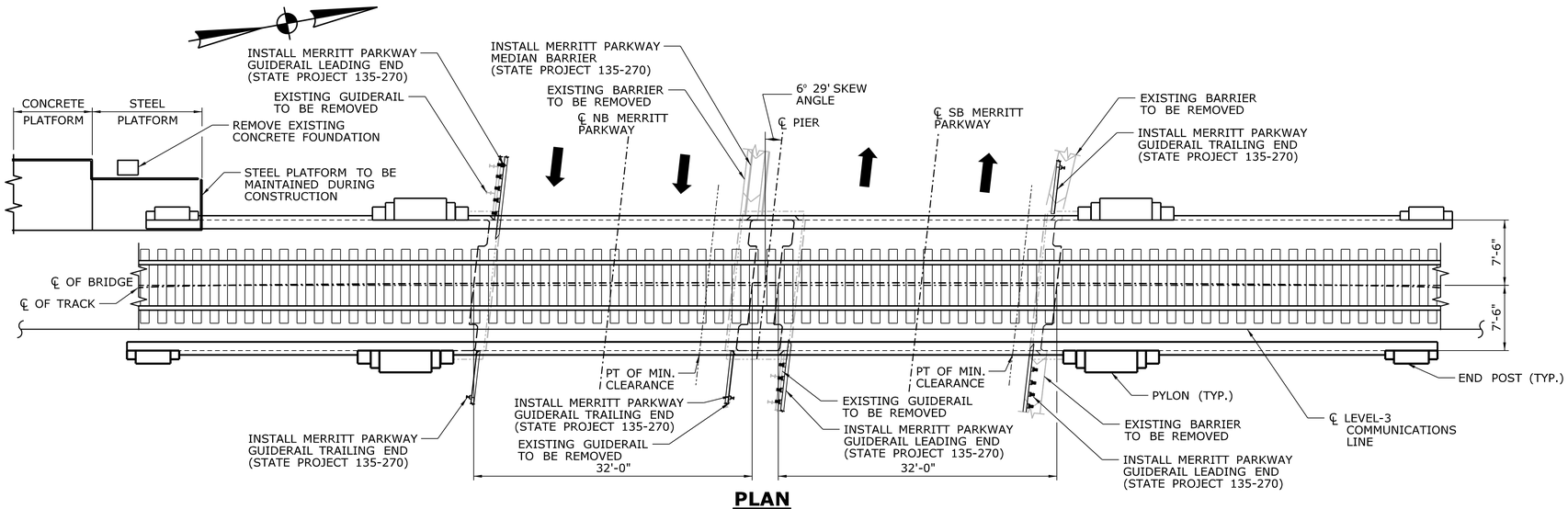

PLAN

SCALE: 1/8" = 1'-0"

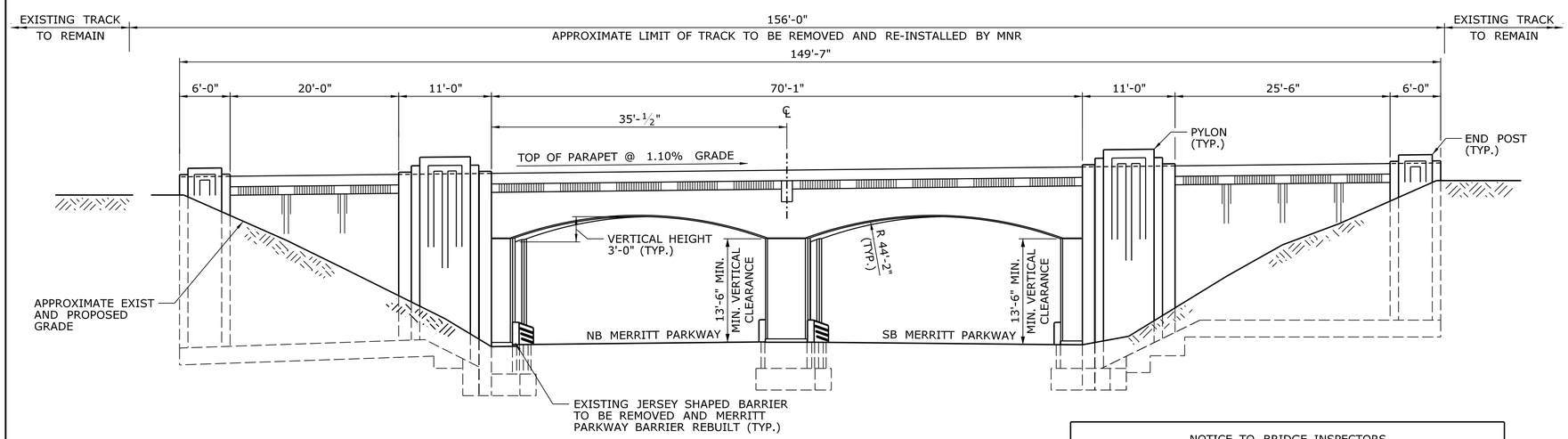

EAST ELEVATION

SCALE: 1/8" = 1'-0"

INSPECTION OF FIELD WELDS		
METHOD	UNIT	QUANTITY
ULTRASONIC	IN	----------
MAGNETIC	LF	----------

CONCRETE DISTRIBUTION		
SUPERSTRUCTURE**	120	CY
SUBSTRUCTURE	6	CY
FOOTING	----------	CY
TOTAL	126	CY

** RECONSTRUCTION, NOT REPAIR

NOTICE TO BRIDGE INSPECTORS

THE DEPARTMENT'S BRIDGE SAFETY PROCEDURES REQUIRE THIS BRIDGE TO BE INSPECTED FOR, BUT NOT LIMITED TO, ALL APPROPRIATE COMPONENTS INDICATED IN THE GOVERNING MANUALS FOR BRIDGE INSPECTION/197 ATTENTION MUST BE GIVEN TO INSPECTING THE FOLLOWING SPECIAL COMPONENTS AND DETAILS. (THE LISTING OF COMPONENTS FOR SPECIFIC ATTENTION SHALL NOT BE CONSTRUED TO REDUCE THE IMPORTANCE OF INSPECTION OF ANY OTHER COMPONENT OF THE STRUCTURE.) THE FREQUENCY OF INSPECTION OF THIS STRUCTURE SHALL BE IN ACCORDANCE WITH THE GOVERNING MANUALS FOR BRIDGE INSPECTION, UNLESS OTHERWISE DIRECTED BY THE ENGINEER OF BRIDGES AND STRUCTURES.

COMPONENT OF DETAIL	SHEET REFERENCE
CONCRETE DECK	----------

GENERAL NOTES:

SPECIFICATIONS: CONNECTICUT DEPARTMENT OF TRANSPORTATION FORM 816 (2004). INCLUDING SUPPLEMENTAL SPECIFICATIONS DATED JULY 2012 AND SPECIAL PROVISIONS.

DESIGN SPECIFICATIONS: AREMA - 2011 MANUAL FOR RAILWAY ENGINEERING SUPPLEMENTED BY 2010 AASHTO STANDARD SPECIFICATIONS FOR HIGHWAY BRIDGES.

ALLOWABLE DESIGN STRESSES:

CLASS "C" CONCRETE .....BASED ON f'c = 4000 PSI

CLASS "F" CONCRETE .....BASED ON f'c = 4000 PSI

CLASS "S" CONCRETE .....BASED ON f'c = 3000 PSI

REINFORCEMENT
(ASTM A615 GRADE 60) .....BASED ON fy = 60 KSI

STRUCTURAL STEEL
(AASHTO M270 GRADE 50) .....BASED ON fy = 50 KSI

LIVE LOAD: COOPER E80, 60% IMPACT.

TRAFFIC: ALL WORK SHALL BE DONE IN ACCORDANCE WITH SPECIAL PROVISIONS, "MAINTENANCE AND PROTECTION OF TRAFFIC", "PROSECUTION AND PROGRESS" AND THE SUGGESTED SEQUENCE OF CONSTRUCTION PLAN.

UTILITIES: THE CONTRACTOR SHALL VERIFY THE SIZE AND LOCATION OF ALL UTILITIES WITHIN THE PROJECT LIMIT PRIOR TO THE START OF CONSTRUCTION AND SHALL TAKE NECESSARY PRECAUTIONS WHEN WORKING NEAR UTILITIES SO AS NOT TO DISTURB THEM OR PLACE ANY LOAD OR EQUIPMENT ON THEM.

COMMUNICATIONS LINE: THE FIBER OPTICS LINE (LEVEL 3 COMMUNICATIONS) WILL BE RELOCATED TO A TEMPORARY LOCATION ON THE CONTRACTOR'S TEMPORARY WORK PLATFORM PRIOR TO THE FIRST WEEKEND SHUTDOWN. CONTRACTOR TO COORDINATE RELOCATION OF LINE WITH LEVEL 3 COMMUNICATIONS.

EXISTING DIMENSIONS: DIMENSIONS, ANGLES AND ELEVATIONS OF THE EXISTING STRUCTURE SHOWN ON THESE PLANS ARE FOR GENERAL REFERENCE ONLY. THE CONTRACTOR SHALL TAKE THE FIELD MEASUREMENTS NECESSARY TO VERIFY THE GEOMETRY AND TO ASSURE PROPER FIT OF THE FINISHED WORK. THE CONTRACTOR SHALL ASSUME FULL RESPONSIBILITY FOR DIMENSIONAL ACCURACY. WHEN SHOP DRAWINGS BASED ON FIELD MEASUREMENTS ARE SUBMITTED FOR APPROVAL, THE FIELD MEASUREMENTS SHALL ALSO BE SUBMITTED FOR REFERENCE BY THE REVIEWER.

EXPOSED EDGES: EXPOSED EDGES OF CONCRETE SHALL NOT BE BEVELED UNLESS DIMENSIONED OTHERWISE.

CONCRETE COVER: ALL REINFORCEMENT SHALL HAVE 2" MIN COVER UNLESS DIMENSIONED OTHERWISE.

EPOXY COATED REINFORCEMENT BARS: ALL REINFORCEMENT IN THE BRIDGE PARAPET, PYLONS AND WINGWALL PARAPET SHALL BE EPOXY COATED AND SHALL BE INCLUDED IN THE PAY ITEM "DEFORMED STEEL (EPOXY COATED)".

REINFORCEMENT: ALL REINFORCEMENT SHALL BE ASTM A615 GRADE 60.

CONCRETE: CLASS "C" -REPLICATED SHALL BE USED FOR BRIDGE PARAPET, WINGWALL PARAPET, PYLON AND END BLOCK RECONSTRUCTION. AS SHOWN ON THE PLAN.

CONCRETE: CLASS "S" FOR HISTORIC BRIDGES SHALL BE USED FOR THE FASCIA AND UNDERSIDE OF THE ARCH REPAIR.

CONCRETE: ALL NEW CONCRETE SHALL HAVE A RUBBED FINISH. AS SHOWN ON THE PLANS.

CONSTRUCTION JOINTS: CONSTRUCTION JOINTS, OTHER THAN THOSE SHOWN ON THE PLAN, WILL NOT BE PERMITTED WITHOUT THE PRIOR APPROVAL OF THE ENGINEER.

ORIGINAL DRAWING: ORIGINAL DRAWINGS OF BRIDGE NO. 00710R ARE AVAILABLE AT CONNECTICUT D.O.T., PASCONE PLACE, NEWINGTON, CT.

REV.	DATE	REVISION DESCRIPTION	SHEET NO.
-	-	-	-
-	-	-	-
-	-	-	-
-	-	-	-
-	-	-	-
-	-	-	-

THE INFORMATION, INCLUDING ESTIMATED QUANTITIES OF WORK, SHOWN ON THESE SHEETS IS BASED ON LIMITED INVESTIGATIONS BY THE STATE AND IS IN NO WAY WARRANTED TO INDICATE THE CONDITIONS OF ACTUAL QUANTITIES OF WORK WHICH WILL BE REQUIRED.

PLOTTED: 2/12/2013

DESIGNER/DRAFTER: H. MARTINDALE
CHECKED BY: A. MORTON
SCALE AS NOTED

STATE OF CONNECTICUT
DEPARTMENT OF TRANSPORTATION

FILENAME: ...\303007_04_02_Gen Plan & Elevation.dgn

LOCHNER
H.W. LOCHNER, INC
2110 Silas Deane Highway
Rocky Hill, CT 06067

APPROVED BY: R. BRAY
DATE: 02/13/2013

STATE OF CONNECTICUT RICHARD A. BRAY LICENSED PROFESSIONAL ENGINEER

PROJECT TITLE:
BRIDGE NO. 00710R METRO-NORTH NEW CANAAN BRANCH M.P. 5.76 OVER THE MERRITT PARKWAY

TOWN: NEW CANAAN

DRAWING TITLE:
GENERAL PLAN AND ELEVATION

PROJECT NO. 303-007
DRAWING NO. STR-2
SHEET NO. 05.04.02

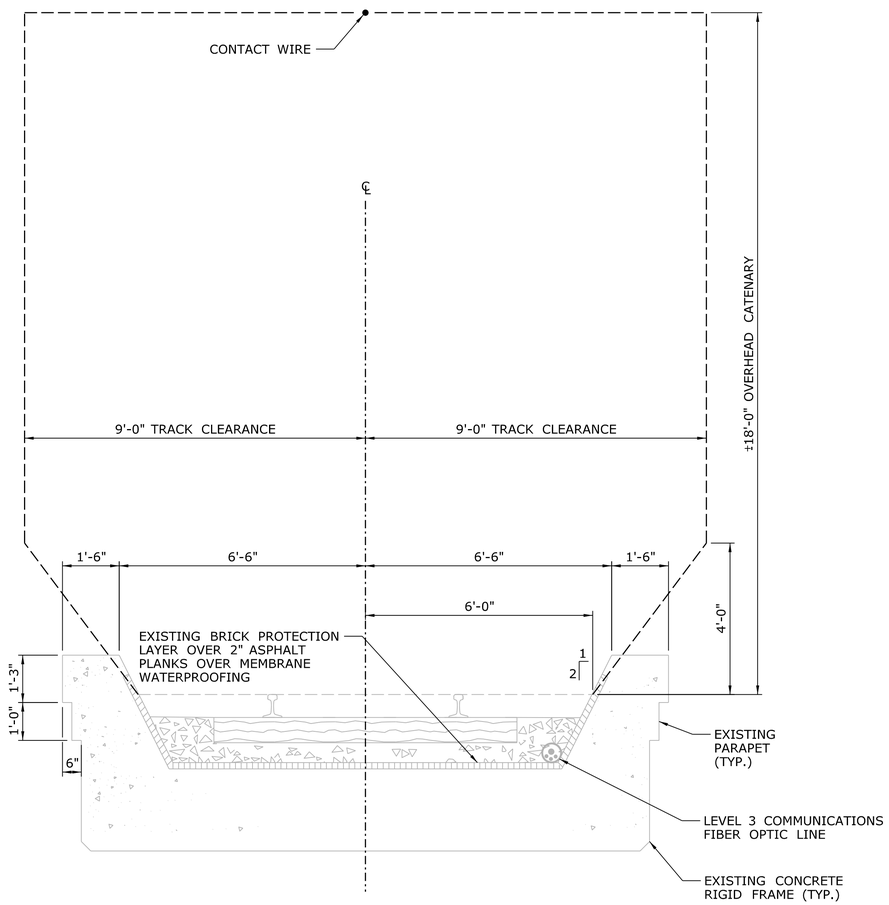

EXISTING TYPICAL SECTION

SCALE: 1/2" = 1'-0"

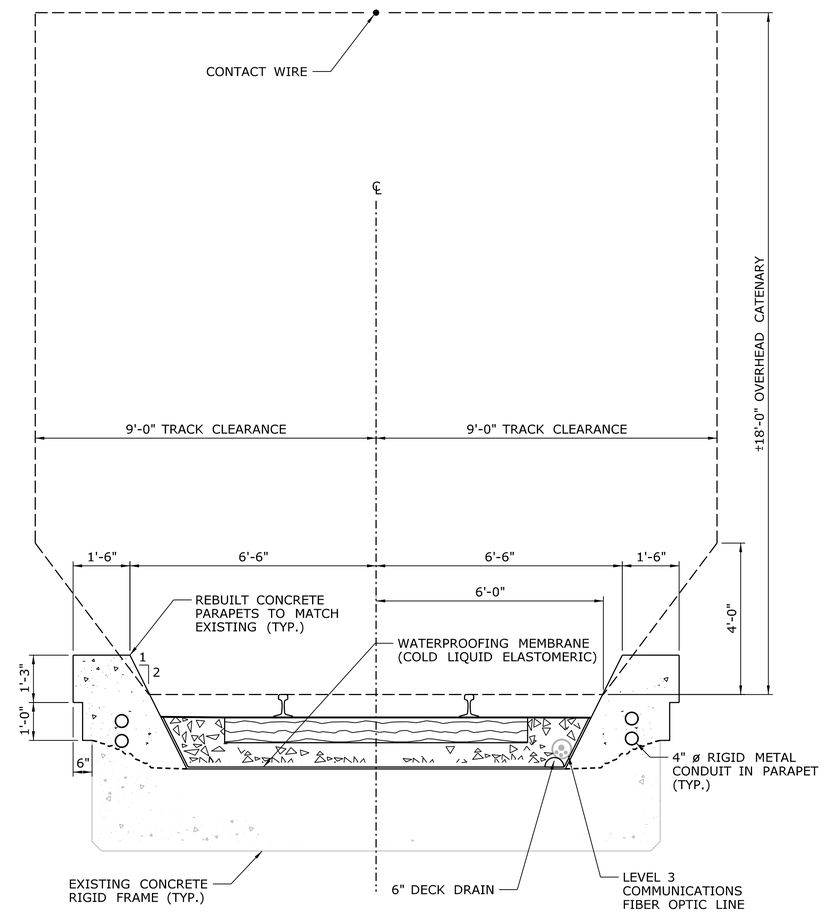

PROPOSED TYPICAL SECTION

SCALE: 1/2" = 1'-0"

REV.	DATE	REVISION DESCRIPTION	SHEET NO.
-	-	-	-
-	-	-	-
-	-	-	-
-	-	-	-
-	-	-	-
-	-	-	-

THE INFORMATION, INCLUDING ESTIMATED QUANTITIES OF WORK, SHOWN ON THESE SHEETS IS BASED ON LIMITED INVESTIGATIONS BY THE STATE AND IS IN NO WAY WARRANTED TO INDICATE THE CONDITIONS OF ACTUAL QUANTITIES OF WORK WHICH WILL BE REQUIRED.

PLOTTED: 2/12/2013

DESIGNER/DRAFTER: H. MARTINDALE
CHECKED BY: A. MORTON
SCALE AS NOTED

STATE OF CONNECTICUT
DEPARTMENT OF TRANSPORTATION

FILENAME: ...\303007_04_03_Typ Section and quantities.dgn

LOCHNER
H.W. LOCHNER, INC
2110 Silas Deane Highway
Rocky Hill, CT 06067

APPROVED BY: R. BRAY
DATE: 02/13/2013

STATE OF CONNECTICUT RICHARD A. BRAY LICENSED PROFESSIONAL ENGINEER

PROJECT TITLE:
BRIDGE NO. 00710R METRO-NORTH NEW CANAAN BRANCH M.P. 5.76 OVER THE MERRITT PARKWAY

TOWN: **NEW CANAAN**

DRAWING TITLE: **TYPICAL SECTIONS**

PROJECT NO. **303-007**
DRAWING NO. **STR-3**
SHEET NO. **05.04.03**

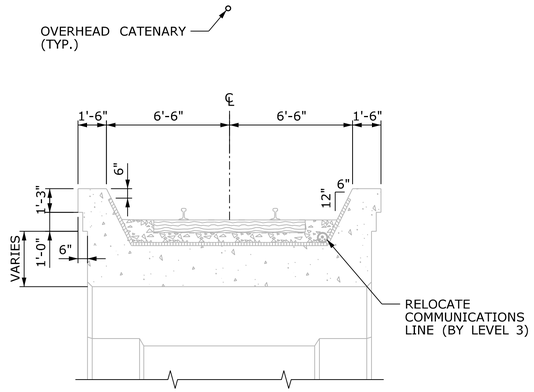

EXISTING BRIDGE SECTION

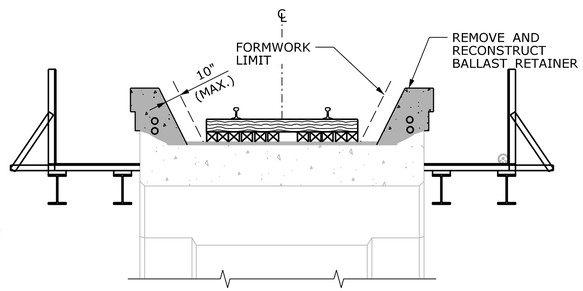

STAGE IIB & IIIB

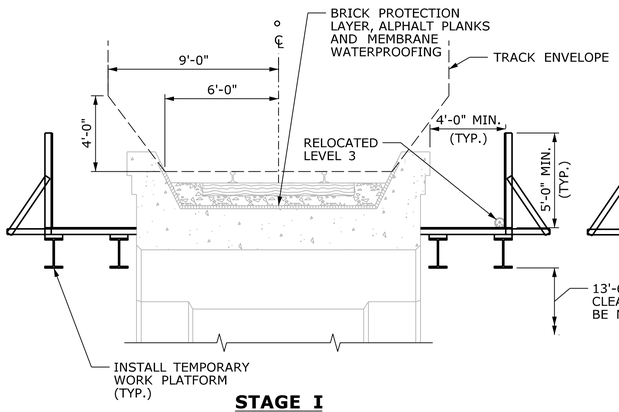

STAGE I

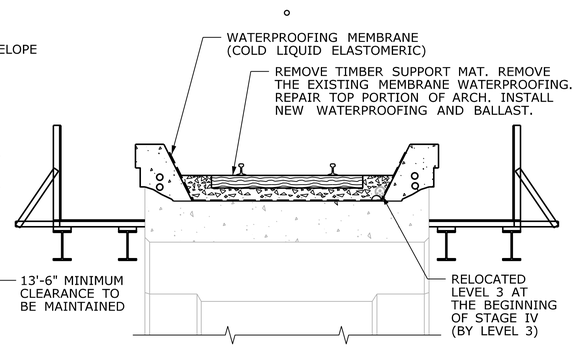

STAGE IIC & IIIC

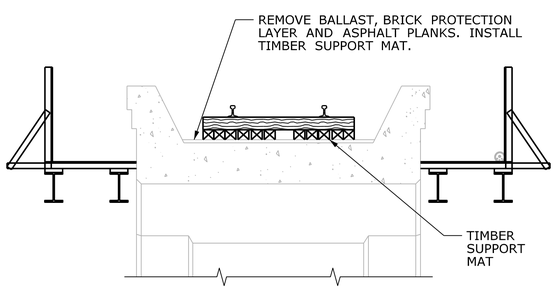

STAGE IIA & IIIA

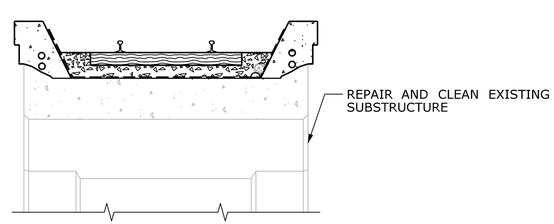

STAGE IV

TYPICAL STAGING SECTIONS

SCALE: N.T.S.

CONSTRUCTION SEQUENCE GENERAL NOTES:

THE SUGGESTED SEQUENCE OF CONSTRUCTION ILLUSTRATES A SEQUENCE OF CONSTRUCTION THAT SATISFIES OPERATIONAL REQUIREMENTS FOR BOTH RAILROAD TRAFFIC AND VEHICULAR TRAFFIC ON ROUTE 15. THE CONTRACTOR MAY MAKE WRITTEN REQUESTS TO THE ENGINEER FOR MODIFICATIONS TO THE CONSTRUCTION SEQUENCE THAT SATISFY THE MINIMUM OPERATIONAL REQUIREMENTS.

THE CONTRACTOR IS ADVISED THAT TRAFFIC MUST BE MAINTAINED ON ROUTE 15 IN ACCORDANCE WITH SECTION 1.08 "PROSECUTION AND PROGRESS" AND THE SPECIAL PROVISIONS ITEM "MAINTENANCE AND PROTECTION OF TRAFFIC". IT IS ANTICIPATED THAT A SIGNIFICANT PORTION OF CONSTRUCTION ACTIVITIES WILL OCCUR AT NIGHT DUE TO LIMITED ALLOWABLE PERIODS FOR CLOSING LANES DURING THE DAY.

THE CONTRACTOR IS ADVISED THAT RAILROAD OPERATIONS MUST BE MAINTAINED DURING CONSTRUCTION IN ACCORDANCE WITH SECTION 1.05 "CONTROL OF THE WORK". IT IS ANTICIPATED THAT A SIGNIFICANT PORTION OF THE CONSTRUCTION ACTIVITIES WILL BE PERFORMED AT NIGHT OR ON WEEKENDS DURING OFF-PEAK HOURS FOR THE RAILROAD. THE CONTRACTOR MUST COORDINATE ALL ACTIVITIES WITH METRO-NORTH RAILROAD IN ACCORDANCE WITH SECTION 1.05.

THE SUGGESTED SEQUENCE OF CONSTRUCTION WAS DEVELOPED ASSUMING THAT A TOTAL OF FOUR EXTENDED TRACK OUTAGES WOULD BE PROVIDED ON NON-HOLIDAY WEEKENDS FOR THE BRIDGE REHABILITATION. EXTENDED WEEKEND TRACK OUTAGES REQUIRE SIGNIFICANT ADVANCE NOTICE FROM THE CONTRACTOR TO ALLOW FOR NOTICES TO THE PUBLIC AS WELL AS TO ALLOW FOR PLANNING OF ALTERNATE MASS TRANSIT. ANY REQUESTS BY THE CONTRACTOR TO MODIFY THE SEQUENCE OF CONSTRUCTION THAT REQUIRE ADDITIONAL WEEKEND TRACK OUTAGES WILL NOT BE CONSIDERED.

THE CONTRACTOR SHALL PERFORM ALL REHABILITATION WORK REQUIRED IN ACCORDANCE WITH THE PLANS AND SPECIAL PROVISIONS INCLUDING BUT NOT LIMITED TO THE SPECIAL PROVISIONS ITEMS "PROSECUTION AND PROGRESS", "MAINTENANCE AND PROTECTION OF TRAFFIC" AND SECTION 1.05 "CONTROL OF WORK"

THE CONTRACTOR MAY REQUEST TO PERFORM CERTAIN REHABILITATION ACTIVITIES WHILE THE TRACK IS NOT IN THE TEMPORARY CONFIGURATION SUPPORTED BY THE TIMBER SUPPORT MAT. ANY SUCH REQUESTS SHALL BE MADE IN WRITING TO THE ENGINEER AND METRO-NORTH RAILROAD FOR REVIEW AND APPROVAL. ONLY THOSE ACTIVITIES THAT WILL HAVE NO POTENTIAL IMPACT TO THE SUPPORT OF THE TRACK SYSTEM OR THE TIME THE TRACK WILL BE IN THE TEMPORARY CONFIGURATION WILL BE CONSIDERED.

THE CONTRACTOR MAY REQUEST TO USE HI-RAIL MOUNTED EQUIPMENT FOR THE TRANSPORT AND PLACEMENT OF MATERIALS AND EQUIPMENT REQUIRED FOR THE COMPLETION OF THE CONSTRUCTION ACTIVITIES. CONTRACTOR REQUESTS FOR APPROVAL TO USE SPECIAL EQUIPMENT MUST BE SUBMITTED TO METRO-NORTH RAILROAD AND THE ENGINEER IN ACCORDANCE WITH SECTION 1.05 "CONTROL OF THE WORK". ACCESS TO THE RAILROAD RIGHT OF WAY FOR HI-RAIL EQUIPMENT WILL BE FROM THE GRADE CROSSING AT TALMADGE HILL ROAD, SOUTH OF THE BRIDGE.

THE TEMPORARY WORK PLATFORMS SHALL SATISFY CERTAIN GEOMETRIC AND STRUCTURAL MINIMUM REQUIREMENTS AS NOTED ON THE PLANS AND IN THE SPECIAL PROVISION "TEMPORARY CROSSING". THESE WORK BRIDGES WILL SERVE AS SAFETY WALKWAYS FOR METRO-NORTH RAILROAD EMPLOYEES PERFORMING ROUTINE INSPECTIONS OF THEIR TRACK, AND WILL ALSO PROVIDE A PROTECTIVE SAFETY AND VISUAL BARRIER FOR THE TEMPORARY TRACK CONFIGURATION FROM ROUTE 15 TRAFFIC. THE CONTRACTOR MAY ELECT TO DETAIL THE CROSSINGS TO PROVIDE ADDITIONAL WIDTH AND CAPACITY TO SERVE AS WORK BRIDGES FOR THEIR PLANNED CONSTRUCTION ACTIVITIES. THE TEMPORARY WORK PLATFORMS ARE TO BE DESIGNED AND DETAILED BY THE CONTRACTOR AND SUBMITTED TO THE ENGINEER FOR APPROVAL IN ACCORDANCE WITH THE SPECIAL PROVISIONS ITEM "TEMPORARY CROSSING". STRUCTURAL ATTACHMENTS TO THE EXISTING BRIDGE SUPERSTRUCTURE ARE NOT ALLOWED WITHOUT APPROVAL FROM THE ENGINEER.

SUGGESTED SEQUENCE OF CONSTRUCTION:

STAGE I

CONTRACTOR SHALL INSTALL TEMPORARY WORK PLATFORM ALONG EAST AND WEST SIDES OF THE BRIDGE. THESE TEMPORARY BRIDGES ARE TO BE IN ACCORDANCE WITH THE PLANS AND THE SPECIAL PROVISIONS ITEM "TEMPORARY CROSSING".

THE COMMUNICATIONS LINE SUPPORTED BY BRIDGE NO. 00710R WILL BE RELOCATED BY LEVEL 3 COMMUNICATIONS INC. TO THE TEMPORARY WORK PLATFORM.

THE CONTRACTOR SHALL DIG TEST PITS IN ACCORDANCE WITH THE SPECIAL PROVISION "TIMBER SUPPORT MAT", TO DETERMINE THE REQUIRED HEIGHT OF THE TIMBER SUPPORT MAT.

ALL MATERIAL REQUIRED TO PERFORM THE WORK IN STAGES II THRU IV SHALL BE ON SITE PRIOR TO THE START OF STAGE II.

STAGES II-A AND III-A

TRACK TO BE TAKEN OUT OF SERVICE BY METRO-NORTH RAILROAD DURING AN APPROVED WEEKEND. THE CATENARY IN THE WORK AREA WILL BE DE-ENERGIZED BY METRO-NORTH RAILROAD, AS REQUIRED.

METRO-NORTH RAILROAD TO REMOVE EXISTING RAILS TO THE APPROXIMATE HORIZONTAL LIMITS SHOWN ON THE STAGING PLANS, FOR EACH STAGE.

THE CONTRACTOR SHALL REMOVE EXISTING CROSS TIES AND BALLAST TO THE HORIZONTAL AND VERTICAL LIMITS SHOWN ON THE STAGING PLANS. ALL MATERIAL REMOVED SHALL BE HANDLED IN ACCORDANCE WITH THE HEALTH AND SAFETY PLAN SUBMITTED BY THE CONTRACTOR.

THE CONTRACTOR SHALL INSTALL A TIMBER SUPPORT MAT AND DECK ANCHORS AS SHOWN ON THE STAGING PLANS AND WITHIN THE TOLERANCES SPECIFIED IN THE SPECIAL PROVISIONS ITEM "TIMBER SUPPORT MAT".

METRO-NORTH RAILROAD TO INSTALL TRACK IN A TEMPORARY CONFIGURATION SUPPORTED BY THE TIMBER SUPPORT MAT INSTALLED PREVIOUSLY BY THE CONTRACTOR. METRO-NORTH SHALL INSTALL THE TRACK TO THE REQUIRED PROFILE AND SHALL ANCHOR THE TRACK TO THE TIMBER SUPPORT MAT. THE TRACK WILL BE RETURNED TO SERVICE.

STAGES II-B AND III-B

THE CONTRACTOR SHALL MONITOR THE TRACK INSTALLED ON THE TIMBER SUPPORT MAT ACCORDING TO THE SPECIAL PROVISION ITEM "TRACK MONITORING".

THE CONTRACTOR SHALL REMOVE THE PARAPETS TO THE LIMITS SHOWN OR AS DIRECTED BY THE ENGINEER, AND SHALL RECONSTRUCT THE BRIDGE PARAPETS AS SHOWN ON THE STAGING PLANS. ANY CONCRETE REPAIRS OR PYLON RECONSTRUCTION WORK REQUIRING THE TEMPORARY WORK PLATFORM SHALL ALSO BE CONDUCTED.

CONCRETE FORM WORK FOR THE PARAPETS MUST NOT PROJECT WITHIN THE RAILROAD EQUIPMENT CLEARANCE DIAGRAM AS SHOWN ON THE PLANS.

STAGES II-C AND III-C

THE TRACK IS TO BE TAKEN OUT OF SERVICE BY METRO-NORTH RAILROAD DURING AN APPROVED WEEKEND. THE CATENARY IN THE WORK AREA WILL BE DE-ENERGIZED BY METRO-NORTH RAILROAD AS REQUIRED.

METRO-NORTH RAILROAD TO REMOVE TRACK SECTIONS PREVIOUSLY INSTALLED BY METRO-NORTH RAILROAD ON THE TIMBER SUPPORT MAT.

THE CONTRACTOR SHALL REMOVE TIMBER SUPPORT MAT INCLUDING ANCHORS.

THE CONTRACTOR SHALL REMOVE THE WATERPROOFING SYSTEM IN ACCORDANCE WITH THE STAGING PLANS REMOVAL LIMITS AND THE SPECIAL PROVISIONS ITEM "REMOVE RAILROAD DECK WATERPROOFING". THE MATERIALS REMOVED SHALL BE HANDLED IN ACCORDANCE WITH THE HEALTH AND SAFETY PLAN SUBMITTED BY THE CONTRACTOR.

THE ENGINEER SHALL PERFORM AN INSPECTION OF THE TOP SURFACE OF THE EXPOSED CONCRETE RIGID FRAME AND SHALL DELINEATE AREAS OF DETERIORATION REQUIRING PATCHING.

THE CONTRACTOR SHALL REMOVE DETERIORATED CONCRETE WHERE DIRECTED AND APPLY DECK REPAIR MATERIAL IN ACCORDANCE WITH THE SPECIAL PROVISIONS ITEM "SURFACE PATCH".

THE CONTRACTOR SHALL PREPARE THE SURFACE AND INSTALL THE WATERPROOFING MEMBRANE IN ACCORDANCE WITH THE SPECIAL PROVISIONS ITEM "MEMBRANE WATERPROOFING (COLD LIQUID ELASTOMERIC)". OVER-SPRAY PROTECTION SHALL BE PROVIDED.

AFTER THE WATERPROOFING MEMBRANE HAS CURED PER THE MANUFACTURER'S RECOMMENDATIONS, THE CONTRACTOR SHALL PLACE THE 6" PIPE FOR BRIDGE DRAINAGE, SUBBALLAST AND UNDERDRAIN IN ACCORDANCE WITH CONTRACT DOCUMENTS. THE BALLAST SHALL BE PLACED TO THE PLAN LIMITS AND IN ACCORDANCE WITH THE SPECIAL PROVISIONS ITEM "BALLAST". THE BALLAST SHALL BE PLACED BY THE CONTRACTOR TO AN ELEVATION 4" BELOW THE PROPOSED BOTTOM OF CROSS TIES AT THE GRADE RAIL.

METRO-NORTH RAILROAD TO INSTALL THE TRACK TO ITS PERMANENT CONFIGURATION INCLUDING THE SUPPLY AND INSTALLATION OF THE REMAINING BALLAST.

STAGE IV

THE CONTRACTOR SHALL COORDINATE WITH LEVEL 3 COMMUNICATIONS, FOR THE RELOCATION OF THEIR FIBER OPTIC LINE FROM THE TEMPORARY WORK PLATFORM TO THE PERMANENT LOCATION IN THE BALLAST ON THE DECK.

THE CONTRACTOR SHALL REMOVE THE TEMPORARY WORK PLATFORM AND COMPLETE THE REMAINING REPAIR AND REHABILITATION WORK, INCLUDING REBUILDING THE HIGHWAY BARRIER AND LANDSCAPING.

REV.	DATE	REVISION DESCRIPTION	SHEET NO.
-	-	-	-
-	-	-	-
-	-	-	-
-	-	-	-
-	-	-	-
-	-	-	-

THE INFORMATION, INCLUDING ESTIMATED QUANTITIES OF WORK, SHOWN ON THESE SHEETS IS BASED ON LIMITED INVESTIGATIONS BY THE STATE AND IS IN NO WAY WARRANTED TO INDICATE THE CONDITIONS OF ACTUAL QUANTITIES OF WORK WHICH WILL BE REQUIRED.

PLOTTED: 2/12/2013

DESIGNER/DRAFTER: H. MARTINDALE
CHECKED BY: A. MORTON
SCALE AS NOTED

STATE OF CONNECTICUT
DEPARTMENT OF TRANSPORTATION

FILENAME: ...\303007_04_04_Construction Staging.dgn

LOCHNER
H.W. LOCHNER, INC
2110 Silas Deane Highway
Rocky Hill, CT 06067

APPROVED BY: R. BRAY
DATE: 02/13/2013

STATE OF CONNECTICUT RICHARD A. BRAY LICENSED PROFESSIONAL ENGINEER

PROJECT TITLE:
BRIDGE NO. 00710R METRO-NORTH NEW CANAAN BRANCH M.P. 5.76 OVER THE MERRITT PARKWAY

TOWN: **NEW CANAAN**

DRAWING TITLE: **CONSTRUCTION STAGING**

PROJECT NO. **303-007**
DRAWING NO. **STR-4**
SHEET NO. **05.04.04**

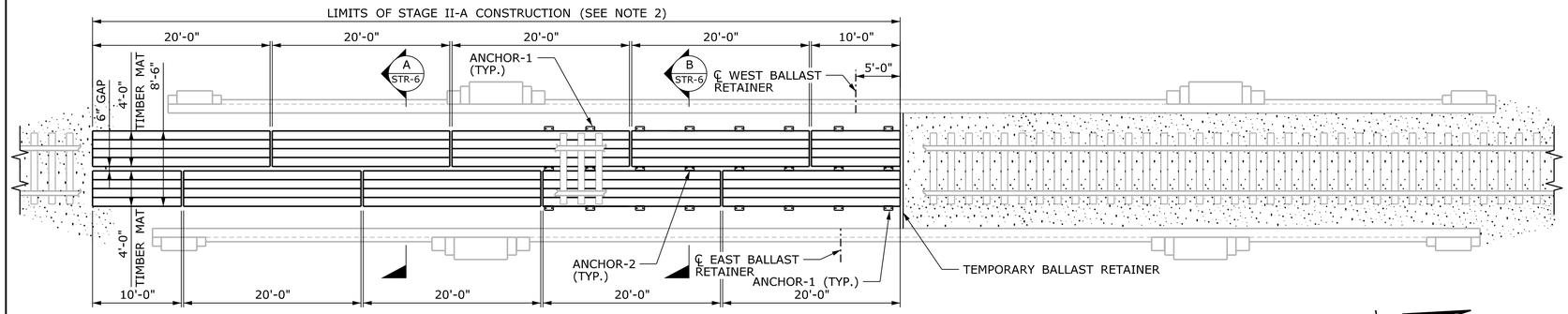

STAGE II-A

SCALE: 1/8" = 1'-0"

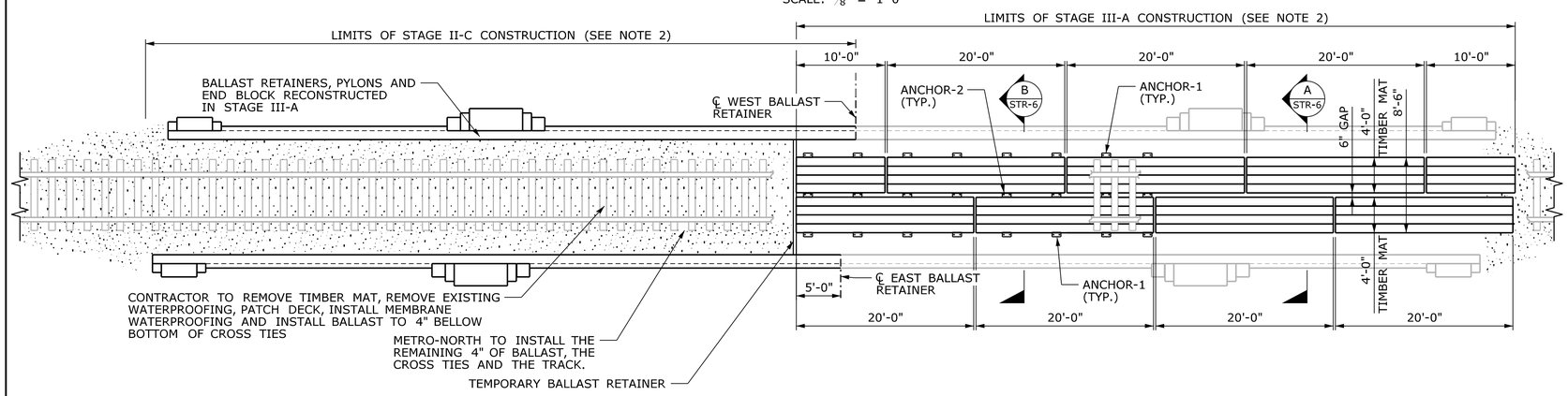

STAGE II-C AND III-A

SCALE: 1/8" = 1'-0"

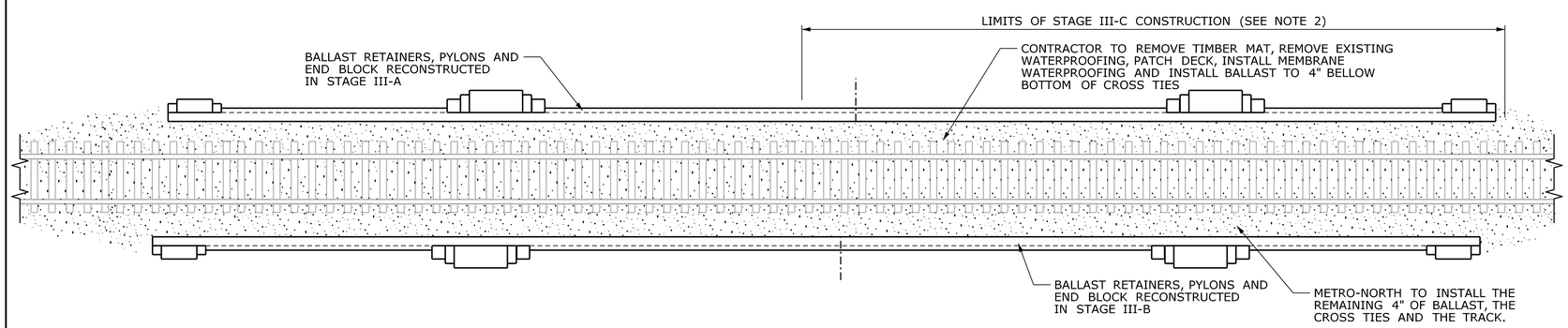

STAGE III-C

SCALE: 1/8" = 1'-0"

STAGE I

PRIOR TO THE FIRST WEEKEND OUTAGE,

1. METRO-NORTH WILL CUT THE EXISTING 136RE CONTINUOUS WELDED RAIL, INSTALL JOINT BARS AND PREBUILD TRACK PANELS.
2. THE CONTRACTOR SHALL DIG TEST PITS IN THE BALLAST ABOVE THE ARCH TO DETERMINE THE REQUIRED HEIGHT OF THE TIMBER SUPPORT MAT.

STAGE II-A

1. ON FRIDAY METRO-NORTH WILL SUSPEND TRAIN SERVICE, AND REMOVE THE RAIL BETWEEN THE PREVIOUSLY INSTALLED TRACK JOINTS.
2. THE CONTRACTOR SHALL REMOVE THE TIMBER TIES WITH TIE PLATES WITHIN THE LIMITS OF THE REMOVED RAIL. THE CONTRACTOR SHALL REMOVE THE BALLAST AND WATERPROOFING SYSTEM AT THE DECK AND TO THE DEPTH REQUIRED TO INSTALL THE TIMBER SUPPORT MAT AT THE SOUTH APPROACH.
3. THE CONTRACTOR SHALL INSTALL THE TIMBER SUPPORT MAT(S) TO THE APPROXIMATE LIMITS AS SHOWN ON THE PLANS.
4. METRO-NORTH WILL INSTALL TRACK PANELS BETWEEN THE TRACK JOINTS AND RESTORE TRAIN SERVICE.

STAGE II-B (NOT SHOWN)

1. THE CONTRACTOR SHALL REMOVE AND RECONSTRUCT THE BALLAST RETAINERS AND PORTIONS OF THE PYLONS AND END BLOCKS ON THE SOUTHERN SIDE OF THE BRIDGE WITH THE TRACK IN SERVICE.

STAGES II-C

1. ON FRIDAY METRO-NORTH WILL SUSPEND TRAIN SERVICE, AND REMOVE THE TRACK PANELS INSTALLED ON THE TIMBER MAT IN STAGE II-A.
2. THE CONTRACTOR SHALL REMOVE THE TIMBER SUPPORT MAT INSTALLED IN STAGE II-A.
3. THE CONTRACTOR SHALL COMPLETE THE REMOVAL OF THE EXISTING WATERPROOFING SYSTEM WITHIN THE LIMITS OF STAGE II-A.
4. THE ENGINEER WILL INSPECT THE EXPOSED DECK AND DELINEATE AREAS OF DETERIORATION REQUIRING PATCHING.
5. THE CONTRACTOR SHALL REMOVE DETERIORATED CONCRETE WHERE DIRECTED AND APPLY REPAIR MATERIAL IN ACCORDANCE WITH THE SPECIAL PROVISIONS ITEM "SURFACE PATCH".
6. AFTER AREAS PATCHED HAVE SET IN ACCORDANCE WITH THE MANUFACTURER'S RECOMMENDATIONS, THE CONTRACTOR SHALL PREPARE THE SURFACE AND INSTALL THE WATERPROOFING MEMBRANE IN ACCORDANCE WITH THE SPECIAL PROVISION ITEM "MEMBRANE WATERPROOFING (COLD LIQUID ELASTOMERIC)".
7. AFTER THE WATERPROOFING MEMBRANE HAS CURED PER THE MANUFACTURER'S RECOMMENDATIONS, THE CONTRACTOR SHALL PLACE THE 6" PIPE FOR BRIDGE DRAINAGE, SUBBALLAST AND OUTLET IN ACCORDANCE WITH CONTRACT DOCUMENTS TO THE LIMITS OF STAGE II-A. THE BALLAST SHALL BE PLACED BY THE CONTRACTOR TO AN ELEVATION 4" BELOW THE PROPOSED BOTTOM OF CROSS TIES AT THE GRADE RAIL.
8. METRO-NORTH WILL INSTALL TRACK PANELS BETWEEN THE TRACK JOINTS AND RESTORE TRAIN SERVICE.

STAGE III-A

1. ON FRIDAY METRO-NORTH WILL SUSPEND TRAIN SERVICE, AND REMOVE THE TRACK PANELS WITH IN THE LIMITS OF STAGE III-A CONSTRUCTION.
2. THE CONTRACTOR SHALL REMOVE THE BALLAST AND WATERPROOFING SYSTEM AT THE DECK AND TO THE DEPTH REQUIRED TO INSTALL THE TIMBER SUPPORT MAT WITHIN THE LIMITS OF STAGE III-A.
3. THE CONTRACTOR SHALL INSTALL THE TIMBER SUPPORT MAT(S) TO THE APPROXIMATE LIMITS AS SHOWN ON THE PLANS.
4. METRO-NORTH WILL INSTALL TRACK PANELS BETWEEN THE TRACK JOINTS AND RESTORE TRAIN SERVICE.

STAGE III-B (NOT SHOWN)

1. THE CONTRACTOR SHALL REMOVE AND RECONSTRUCT THE BALLAST RETAINERS AND PORTIONS OF THE PYLONS AND END BLOCKS ON THE NORTHERN HALF OF THE BRIDGE WITH THE TRACK IN SERVICE.

STAGE III-C

1. ON FRIDAY METRO-NORTH WILL SUSPEND TRAIN SERVICE, AND REMOVE THE TRACK PANELS.
2. THE CONTRACTOR SHALL REMOVE THE TIMBER SUPPORT MAT INSTALLED IN STAGE III-A.
3. THE CONTRACTOR SHALL COMPLETE THE REMOVAL OF THE WATERPROOFING SYSTEM.
4. THE ENGINEER WILL INSPECT THE EXPOSED DECK AND DELINEATE AREAS OF DETERIORATION REQUIRING PATCHING.
5. THE CONTRACTOR SHALL REMOVE DETERIORATED CONCRETE WHERE DIRECTED AND APPLY REPAIR MATERIAL IN ACCORDANCE WITH THE SPECIAL PROVISIONS ITEM "SURFACE PATCH".
6. AFTER AREAS PATCHED HAVE SET IN ACCORDANCE WITH THE MANUFACTURER'S RECOMMENDATIONS, THE CONTRACTOR SHALL PREPARE THE SURFACE AND INSTALL THE WATERPROOFING MEMBRANE.
7. AFTER THE WATERPROOFING MEMBRANE HAS CURED PER THE MANUFACTURER'S RECOMMENDATIONS, THE CONTRACTOR SHALL PLACE THE REMAINING 6" PIPE FOR BRIDGE DRAINAGE AND SUBBALLAST IN ACCORDANCE WITH CONTRACT DOCUMENTS TO THE LIMITS FOR STAGE III.
8. THE CONTRACTOR SHALL PLACE THE BALLAST TO THE STAGE III PLAN LIMITS AND IN ACCORDANCE WITH THE SPECIAL PROVISION "BALLAST". THE BALLAST SHALL BE PLACED BY THE CONTRACTOR TO AN ELEVATION 4" BELOW THE PROPOSED BOTTOM OF CROSS TIES AT THE GRADE RAIL.
9. METRO-NORTH TO INSTALL THE TRACK TO ITS PERMANENT CONFIGURATION, INCLUDING THE SUPPLY AND INSTALLATION OF THE REMAINING BALLAST AND WILL RESTORE TRAIN SERVICE.

STAGE IV

1. LEVEL 3 COMMUNICATIONS WILL RELOCATE THEIR CONDUIT FROM THE TEMPORARY WORK PLATFORM TO THE FINAL LOCATION IN BALLAST ON THE BRIDGE.
2. THE CONTRACTOR SHALL REMOVE THE TEMPORARY WORK PLATFORMS AND COMPLETE THE REMAINING REPAIR AND REHABILITATION WORK, INCLUDING REBUILDING THE HIGHWAY BARRIER AND LANDSCAPING.

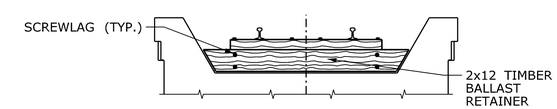

TEMPORARY BALLAST RETAINER

SCALE: 1/4" = 1'-0"

NOTES:

1. FOR TIMBER SUPPORT MAT DETAILS AND NOTES SEE DRAWING NO. STR-6.
2. ACTUAL LIMITS OF CONSTRUCTION TO BE COORDINATED WITH METRO-NORTH RAILROAD BASED ON TRACK REMOVAL LIMITS.

REV.	DATE	REVISION DESCRIPTION	SHEET NO.
-	-	-	-
-	-	-	-
-	-	-	-
-	-	-	-
-	-	-	-
-	-	-	-

THE INFORMATION, INCLUDING ESTIMATED QUANTITIES OF WORK, SHOWN ON THESE SHEETS IS BASED ON LIMITED INVESTIGATIONS BY THE STATE AND IS IN NO WAY WARRANTED TO INDICATE THE CONDITIONS OF ACTUAL QUANTITIES OF WORK WHICH WILL BE REQUIRED.

PLOTTED: 2/12/2013

DESIGNER/DRAFTER: H. MARTINDALE
CHECKED BY: A. MORTON
SCALE AS NOTED

STATE OF CONNECTICUT
DEPARTMENT OF TRANSPORTATION

FILENAME: ...\303007_04_05_Construction Staging 2.dgn

LOCHNER
H.W. LOCHNER, INC
2110 Silas Deane Highway
Rocky Hill, CT 06067

APPROVED BY: R. BRAY
DATE: 02/13/2013

STATE OF CONNECTICUT RICHARD A. BRAY LICENSED PROFESSIONAL ENGINEER

PROJECT TITLE:
BRIDGE NO. 00710R METRO-NORTH NEW CANAAN BRANCH M.P. 5.76 OVER THE MERRITT PARKWAY

TOWN: **NEW CANAAN**

DRAWING TITLE: **CONSTRUCTION STAGING 2**

PROJECT NO. **303-007**
DRAWING NO. **STR-5**
SHEET NO. **05.04.05**

NOTES:

1. INDIVIDUAL TIMBER MATS TO BE INSTALLED IN STAGGERED PATTERN AS SHOWN IN THE STAGING PLANS ON DRAWING NO. STR-5.
2. CONTRACTOR TO INSTALL BALLAST ON SIDES OF TIMBER SUPPORT MAT IN APPROACH SPANS AS SHOWN IN SECTION A. THIS WORK IS INCLUDED IN ITEM "TIMBER SUPPORT MAT".
3. TIMBER MATS TO BE MADE UP OF INDIVIDUAL HARDWOOD TIMBER.
4. THE CONTRACTOR SHALL PROVIDE HARDWOOD SHIMS AS NECESSARY TO INSTALL TIMBER MATS TO THE REQUIRED PROFILE. ALL SHIMS SHALL BE INSTALLED BETWEEN THE CONCRETE DECK AND THE TIMBER MATS.
5. THE TOP OF THE TIMBER SUPPORT MAT SHALL BE SET TO A PROFILE OFFSET 1'-3" FROM THE TOP OF RAIL PROFILE WITHIN A TOLERANCE OF ± ½".
6. ANCHOR ASSEMBLIES INCLUDING ANCHOR BOLTS AND CHEMICAL ANCHOR ARE INCLUDED IN ITEM "TIMBER SUPPORT MAT".
7. ANCHOR BOLTS SHALL MEET THE REQUIREMENTS OF ASTM A449, AND SHALL BE ANCHORED USING A CHEMICAL ANCHOR IN CONFORMANCE WITH SECTION M.03.01-15 OF FORM 816A. DEPTH OF EMBEDMENT TO BE PER MANUFACTURER'S RECOMMENDATION TO DEVELOP A PULL OUT RESISTANCE OF 125% OF YIELD STRENGTH.

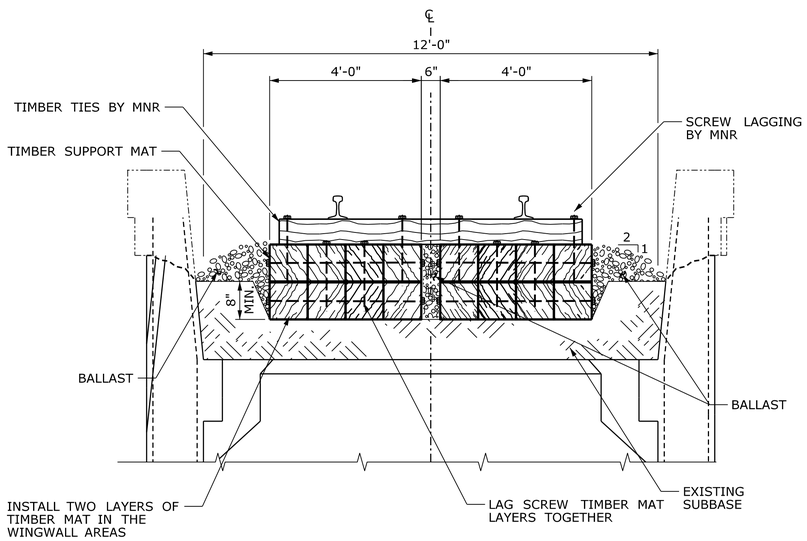

SECTION A (STR-5)
SCALE: ½" = 1'-0"

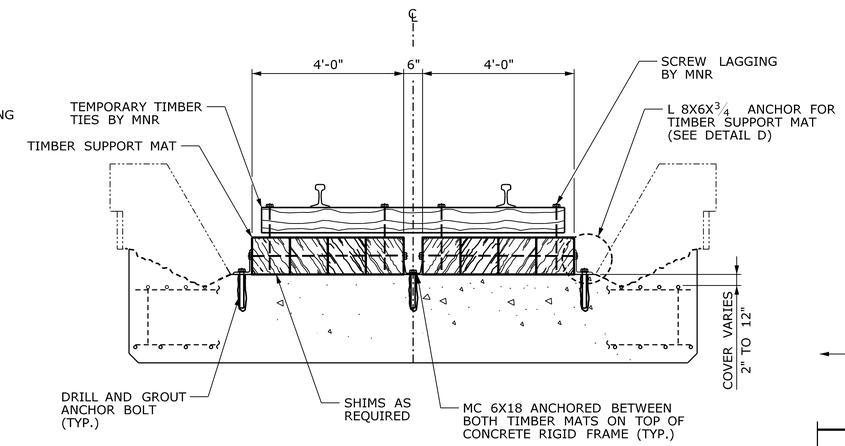

SECTION B (STR-5)
SCALE: ½" = 1'-0"

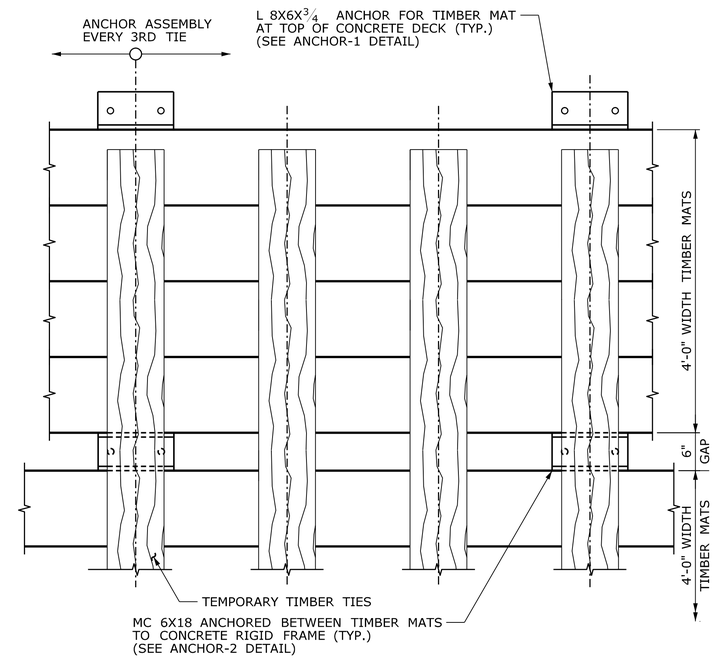

ANCHOR ASSEMBLY LOCATION
SCALE: 1" = 1'-0"

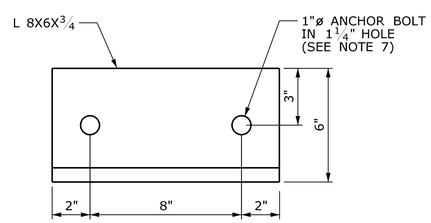

ANCHOR-1
SCALE: 3" = 1'-0"

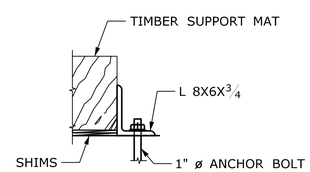

DETAIL D
SCALE: 1" = 1'-0"

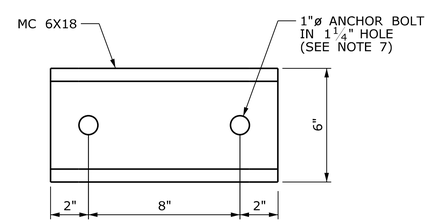

ANCHOR-2
SCALE: 3" = 1'-0"

ANCHOR ASSEMBLY DETAIL
SCALE AS NOTED

REV.	DATE	REVISION DESCRIPTION	SHEET NO.
-	-	-	-
-	-	-	-
-	-	-	-
-	-	-	-
-	-	-	-
-	-	-	-

THE INFORMATION, INCLUDING ESTIMATED QUANTITIES OF WORK, SHOWN ON THESE SHEETS IS BASED ON LIMITED INVESTIGATIONS BY THE STATE AND IS IN NO WAY WARRANTED TO INDICATE THE CONDITIONS OF ACTUAL QUANTITIES OF WORK WHICH WILL BE REQUIRED.

PLOTTED: 2/12/2013

DESIGNER/DRAFTER: H. MARTINDALE
CHECKED BY: A. MORTON
SCALE AS NOTED

STATE OF CONNECTICUT
DEPARTMENT OF TRANSPORTATION

FILENAME: ...\303007_04_06_Timber Support Mat.dgn

LOCHNER
H.W. LOCHNER, INC
2110 Silas Deane Highway
Rocky Hill, CT 06067

APPROVED BY: R. BRAY
DATE: 02/13/2013

STATE OF CONNECTICUT RICHARD A. BRAY LICENSED PROFESSIONAL ENGINEER

PROJECT TITLE:
BRIDGE NO. 00710R METRO-NORTH NEW CANAAN BRANCH M.P. 5.76 OVER THE MERRITT PARKWAY

TOWN: **NEW CANAAN**

DRAWING TITLE: **TIMBER SUPPORT MAT**

PROJECT NO. **303-007**
DRAWING NO. **STR-6**
SHEET NO. **05.04.06**

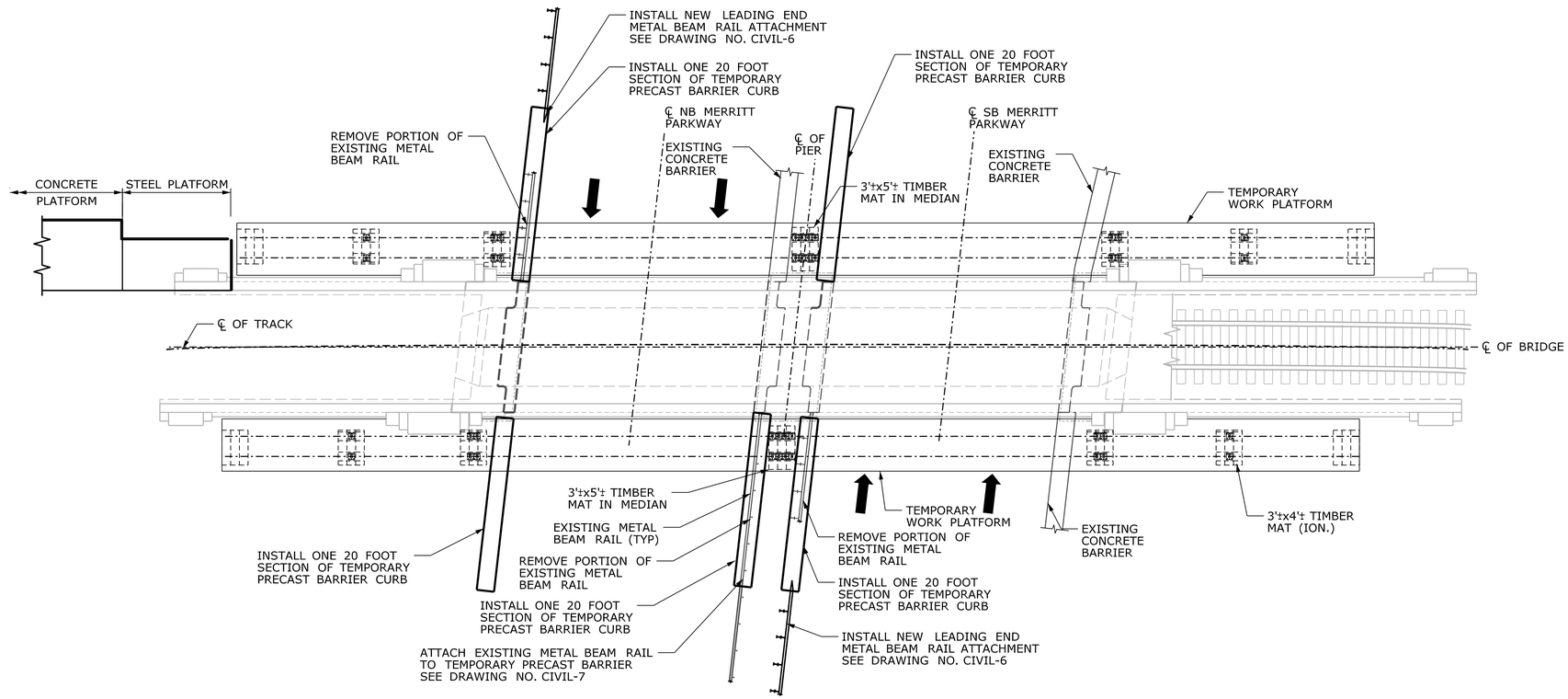

PLAN

SCALE: 1/8" = 1'-0"

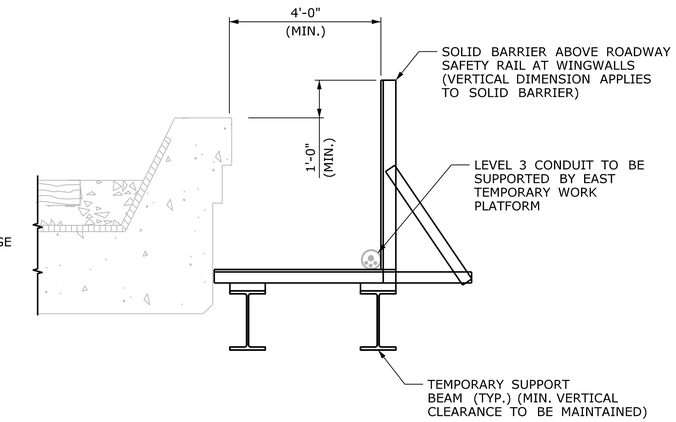

TYPICAL SECTION

SCALE: 1/2" = 1'-0"

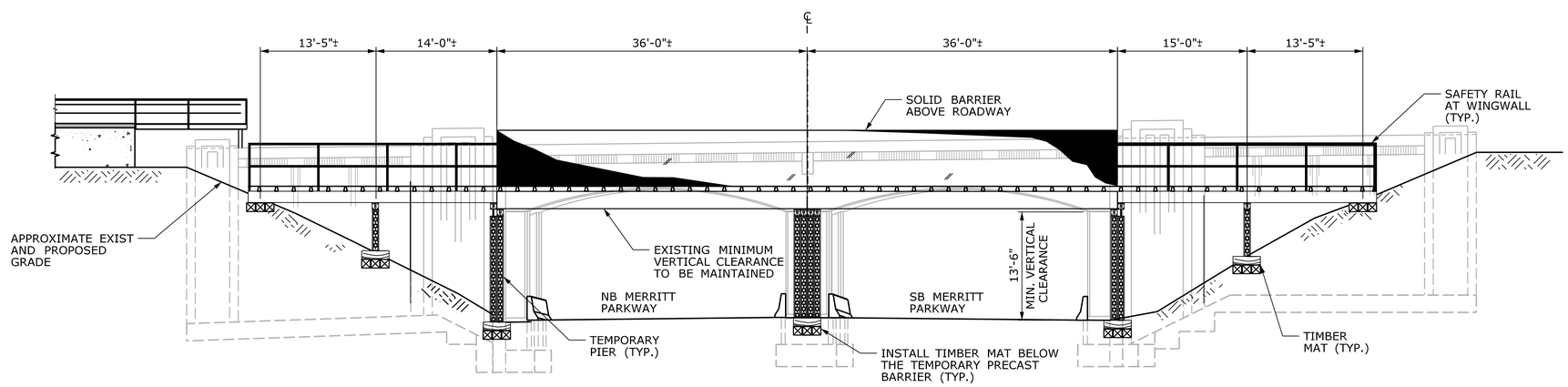

EAST ELEVATION

SCALE: 1/8" = 1'-0"

NOTES:

1. THE TEMPORARY WORK PLATFORM SHOWN IS ONLY A CONCEPT. THE CONTRACTOR IS TO DESIGN A TEMPORARY WORK PLATFORM ACCORDING TO THE SPECIAL PROVISION "TEMPORARY CROSSING".
2. EAST TEMPORARY CROSSING IS TO BE DESIGNED TO SUPPORT THE LEVEL 3 CONDUIT.

REV.	DATE	REVISION DESCRIPTION	SHEET NO.
-	-	-	-
-	-	-	-
-	-	-	-
-	-	-	-
-	-	-	-
-	-	-	-

THE INFORMATION, INCLUDING ESTIMATED QUANTITIES OF WORK, SHOWN ON THESE SHEETS IS BASED ON LIMITED INVESTIGATIONS BY THE STATE AND IS IN NO WAY WARRANTED TO INDICATE THE CONDITIONS OF ACTUAL QUANTITIES OF WORK WHICH WILL BE REQUIRED.

PLOTTED: 2/12/2013

DESIGNER/DRAFTER: H. MARTINDALE
CHECKED BY: A. MORTON
SCALE AS NOTED

STATE OF CONNECTICUT
DEPARTMENT OF TRANSPORTATION

FILENAME: ...\303007_04_07_Temporary Support Platform.dgn

LOCHNER
H.W. LOCHNER, INC
2110 Silas Deane Highway
Rocky Hill, CT 06067

APPROVED BY: R. BRAY
DATE: 02/13/2013

STATE OF CONNECTICUT RICHARD A. BRAY LICENSED PROFESSIONAL ENGINEER

PROJECT TITLE:
BRIDGE NO. 00710R METRO-NORTH NEW CANAAN BRANCH M.P. 5.76 OVER THE MERRITT PARKWAY

TOWN: **NEW CANAAN**

DRAWING TITLE: **TEMPORARY WORK PLATFORM**

PROJECT NO. **303-007**
DRAWING NO. **STR-7**
SHEET NO. **05.04.07**

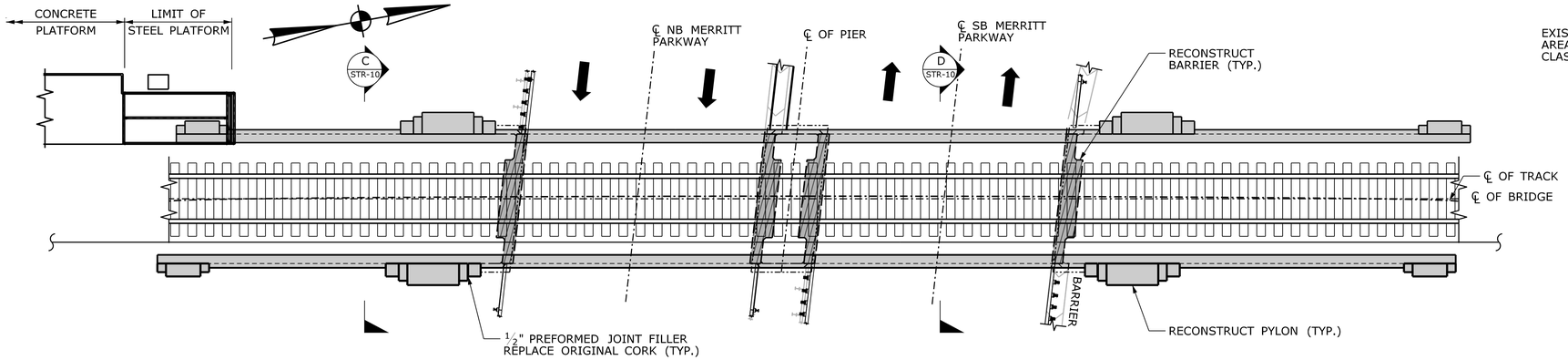

PLAN

SCALE: 1/8" = 1'-0"

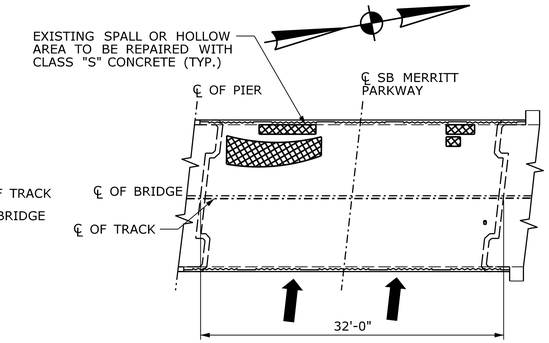

SOUTHBOUND BOTTOM VIEW (LOOKING UP)

SCALE: 1/8" = 1'-0"

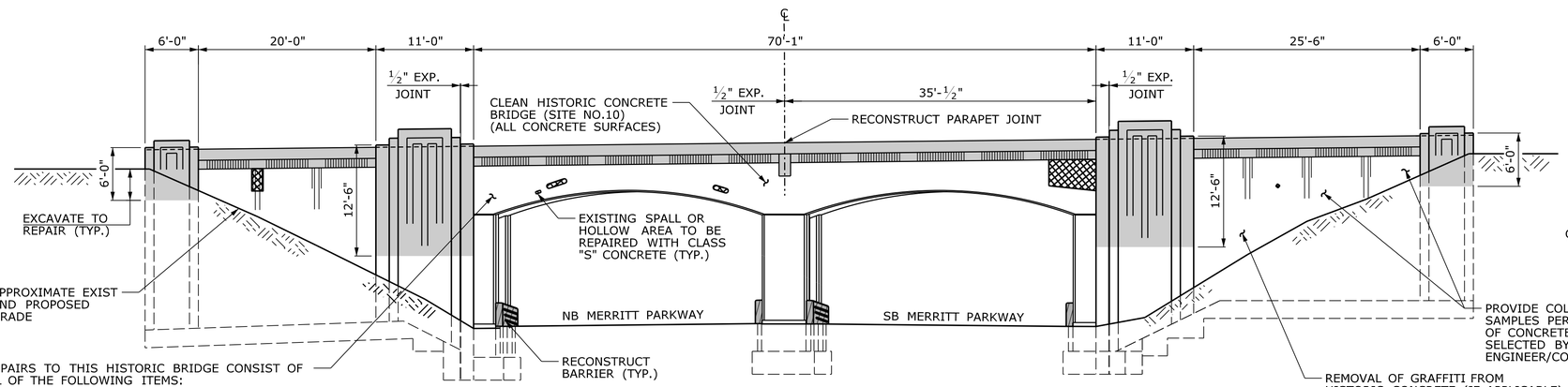

EAST ELEVATION

SCALE: 1/8" = 1'-0"

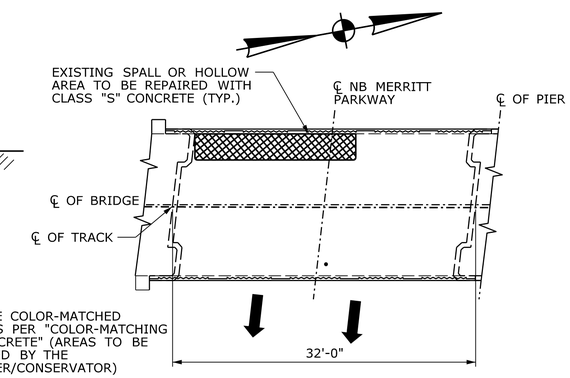

NORTHBOUND BOTTOM VIEW (LOOKING UP)

SCALE: 1/8" = 1'-0"

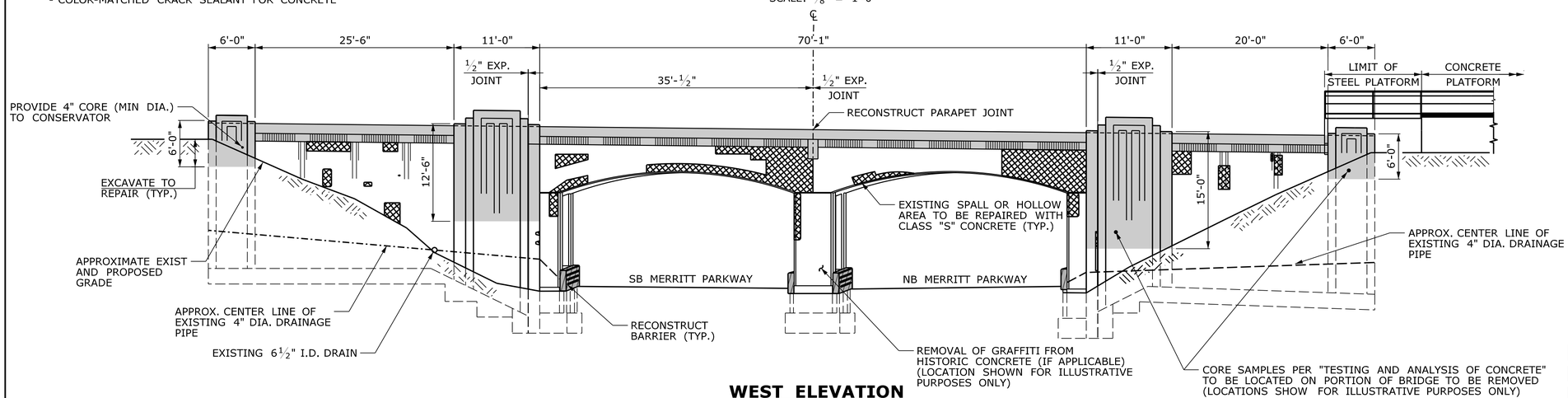

WEST ELEVATION

SCALE: 1/8" = 1'-0"

NOTES:

1. STEEL RAILROAD STATION PLATFORM TO BE MAINTAINED DURING CONSTRUCTION. SEE DRAWING NO. STR-9 FOR DETAILS.
2. THE ACTUAL LOCATION AND EXTENT OF CLASS "S" REPAIRS AND VARIABLE DEPTH REPAIRS WILL BE DETERMINED BY A SURVEY CONDUCTED BY THE ENGINEER. THE CONTRACTOR SHALL REPAIR ALL AREAS DETERMINED NECESSARY BY THE SURVEY AS DIRECTED BY THE ENGINEER.
3. ALL GRAFFITI AND GRAFFITI COATING TO BE REMOVED ACCORDING TO THE SPECIAL PROVISION "REMOVAL OF GRAFFITI FROM HISTORIC CONCRETE".
4. THE BRIDGE IS TO BE CLEANED ACCORDING TO THE SPECIAL PROVISION "CLEAN HISTORIC CONCRETE BRIDGE (SITE NO. 10)".
5. A CLEAR SEALER SHALL BE APPLIED TO ALL EXPOSED CONCRETE SURFACES AFTER THE COMPLETION OF THE CLEANING.
6. CONCRETE REMOVAL: PERIMETER OF ALL CONCRETE REMOVAL AREAS SHALL BE SAW CUT A MINIMUM OF 1" DEEP PRIOR TO CHIPPING/REMOVING CONCRETE.

LEGEND

- CLASS "C" CONCRETE RECONSTRUCTION
- CLASS "F" CONCRETE RECONSTRUCTION
- CLASS "S" CONCRETE REPAIR

REV.	DATE	REVISION DESCRIPTION	SHEET NO.
-	-	-	-
-	-	-	-
-	-	-	-
-	-	-	-
-	-	-	-
-	-	-	-

THE INFORMATION, INCLUDING ESTIMATED QUANTITIES OF WORK, SHOWN ON THESE SHEETS IS BASED ON LIMITED INVESTIGATIONS BY THE STATE AND IS IN NO WAY WARRANTED TO INDICATE THE CONDITIONS OF ACTUAL QUANTITIES OF WORK WHICH WILL BE REQUIRED.

PLOTTED: 2/12/2013

DESIGNER/DRAFTER: H. MARTINDALE
CHECKED BY: A. MORTON
SCALE AS NOTED

STATE OF CONNECTICUT
DEPARTMENT OF TRANSPORTATION

FILENAME: ...\303007_04_08_Repair plan and elevation.dgn

LOCHNER
H.W. LOCHNER, INC
2110 Silas Deane Highway
Rocky Hill, CT 06067

APPROVED BY: R. BRAY
DATE: 02/13/2013

STATE OF CONNECTICUT RICHARD A. BRAY LICENSED PROFESSIONAL ENGINEER

PROJECT TITLE:
BRIDGE NO. 00710R METRO-NORTH NEW CANAAN BRANCH M.P. 5.76 OVER THE MERRITT PARKWAY

TOWN: **NEW CANAAN**

DRAWING TITLE: **GENERAL REPAIR PLAN AND ELEVATIONS**

PROJECT NO. **303-007**
DRAWING NO. **STR-8**
SHEET NO. **05.04.08**

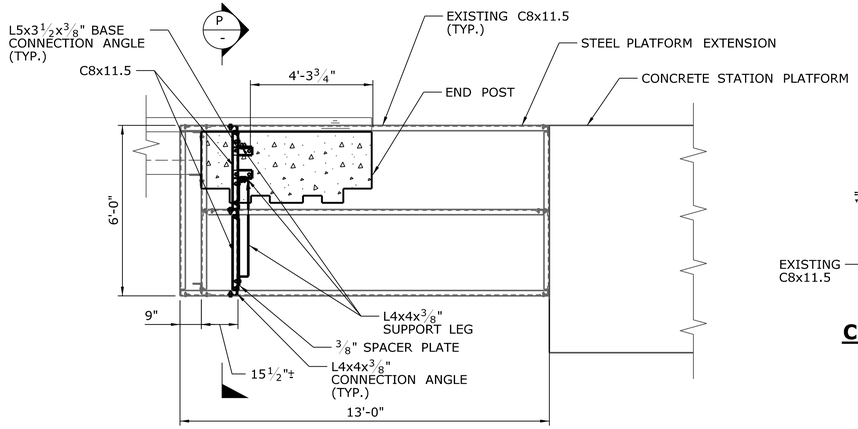

STEEL PLATFORM PLAN

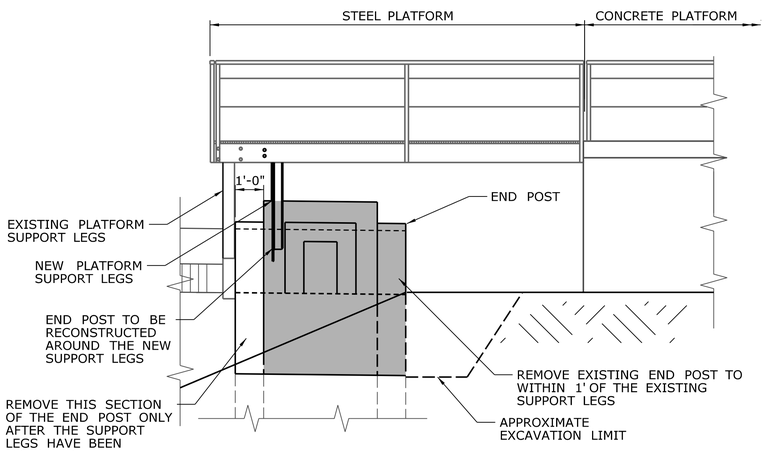

STEEL PLATFORM ELEVATION

STEEL PLATFORM DETAIL

SCALE: ⅜" = 1'-0"

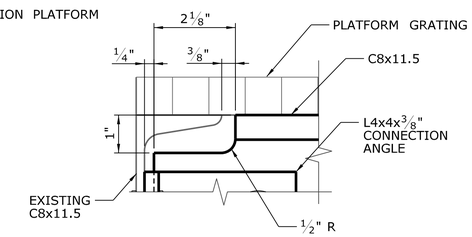

CHANNEL COPE DETAIL

SCALE: 6" = 1'-0"

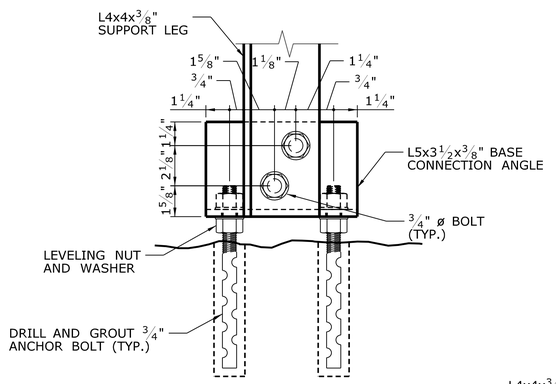

BASE CONNECTION DETAIL

SCALE: 3" = 1'-0"

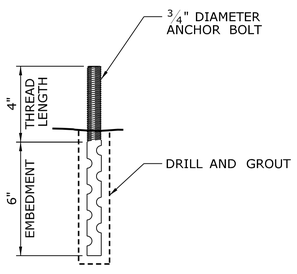

ANCHOR BOLT DETAIL

SCALE: 3" = 1'-0"

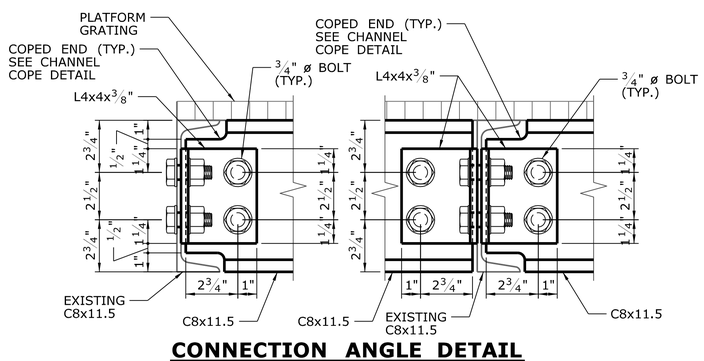

CONNECTION ANGLE DETAIL

SCALE: 3" = 1'-0"

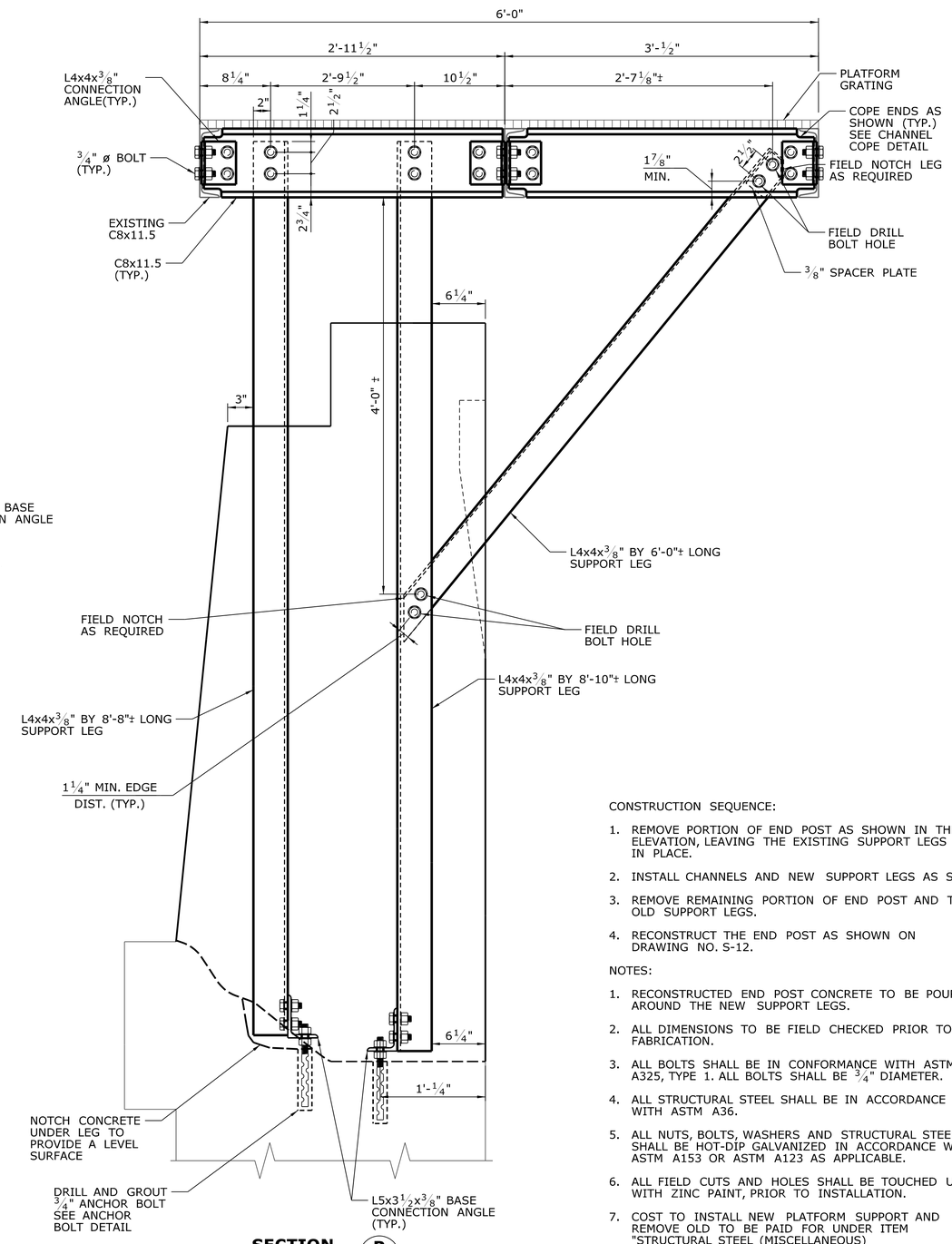

SECTION P

SCALE: 1½" = 1'-0"

CONSTRUCTION SEQUENCE:

1. REMOVE PORTION OF END POST AS SHOWN IN THE ELEVATION, LEAVING THE EXISTING SUPPORT LEGS IN PLACE.
2. INSTALL CHANNELS AND NEW SUPPORT LEGS AS SHOWN.
3. REMOVE REMAINING PORTION OF END POST AND THE OLD SUPPORT LEGS.
4. RECONSTRUCT THE END POST AS SHOWN ON DRAWING NO. S-12.

NOTES:

1. RECONSTRUCTED END POST CONCRETE TO BE POURED AROUND THE NEW SUPPORT LEGS.
2. ALL DIMENSIONS TO BE FIELD CHECKED PRIOR TO FABRICATION.
3. ALL BOLTS SHALL BE IN CONFORMANCE WITH ASTM A325, TYPE 1. ALL BOLTS SHALL BE ¾" DIAMETER.
4. ALL STRUCTURAL STEEL SHALL BE IN ACCORDANCE WITH ASTM A36.
5. ALL NUTS, BOLTS, WASHERS AND STRUCTURAL STEEL SHALL BE HOT-DIP GALVANIZED IN ACCORDANCE WITH ASTM A153 OR ASTM A123 AS APPLICABLE.
6. ALL FIELD CUTS AND HOLES SHALL BE TOUCHED UP WITH ZINC PAINT, PRIOR TO INSTALLATION.
7. COST TO INSTALL NEW PLATFORM SUPPORT AND REMOVE OLD TO BE PAID FOR UNDER ITEM "STRUCTURAL STEEL (MISCELLANEOUS)

REV.	DATE	REVISION DESCRIPTION	SHEET NO.
-	-	-	-
-	-	-	-
-	-	-	-
-	-	-	-
-	-	-	-
-	-	-	-

THE INFORMATION, INCLUDING ESTIMATED QUANTITIES OF WORK, SHOWN ON THESE SHEETS IS BASED ON LIMITED INVESTIGATIONS BY THE STATE AND IS IN NO WAY WARRANTED TO INDICATE THE CONDITIONS OF ACTUAL QUANTITIES OF WORK WHICH WILL BE REQUIRED.

PLOTTED: 2/12/2013

DESIGNER/DRAFTER: H. MARTINDALE
CHECKED BY: A. MORTON
SCALE AS NOTED

STATE OF CONNECTICUT
DEPARTMENT OF TRANSPORTATION

FILENAME: ...\303007_04_09_Steel Platform Details.dgn

LOCHNER
H.W. LOCHNER, INC
2110 Silas Deane Highway
Rocky Hill, CT 06067

APPROVED BY: R. BRAY
DATE: 02/13/2013

STATE OF CONNECTICUT RICHARD A. BRAY LICENSED PROFESSIONAL ENGINEER

PROJECT TITLE:
BRIDGE NO. 00710R METRO-NORTH NEW CANAAN BRANCH M.P. 5.76 OVER THE MERRITT PARKWAY

TOWN: **NEW CANAAN**

DRAWING TITLE: **STEEL PLATFORM DETAILS**

PROJECT NO. 303-007
DRAWING NO. STR-09
SHEET NO. 05.04.09

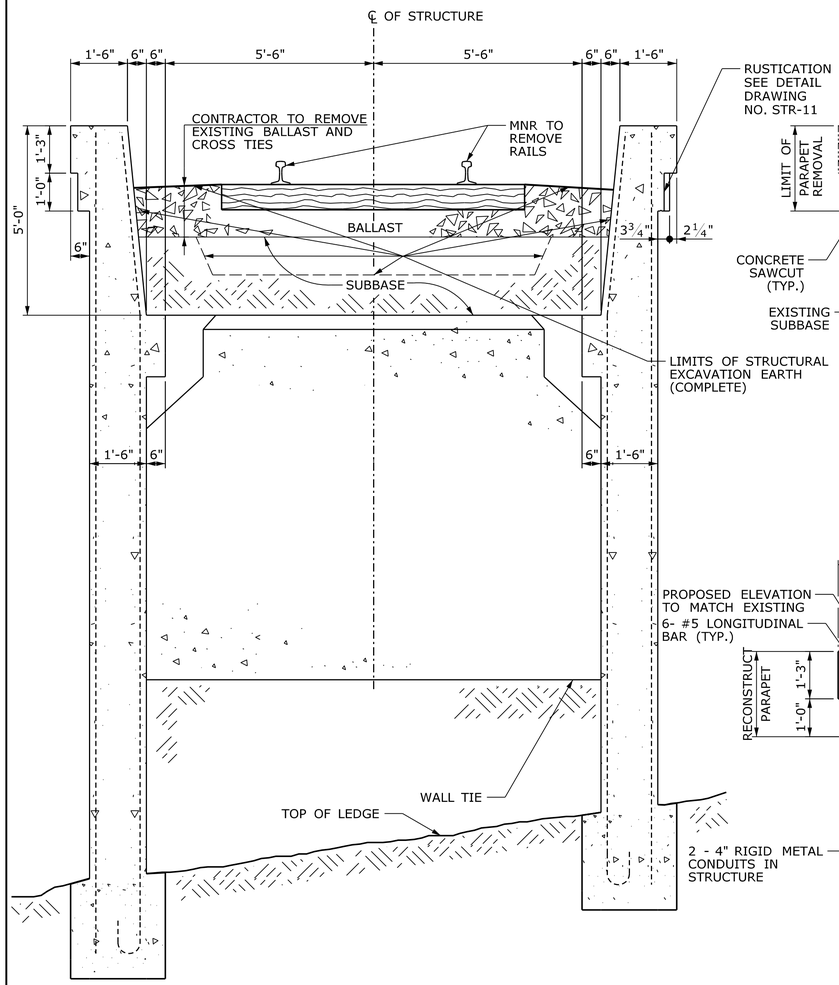

TYPICAL WINGWALL SECTION

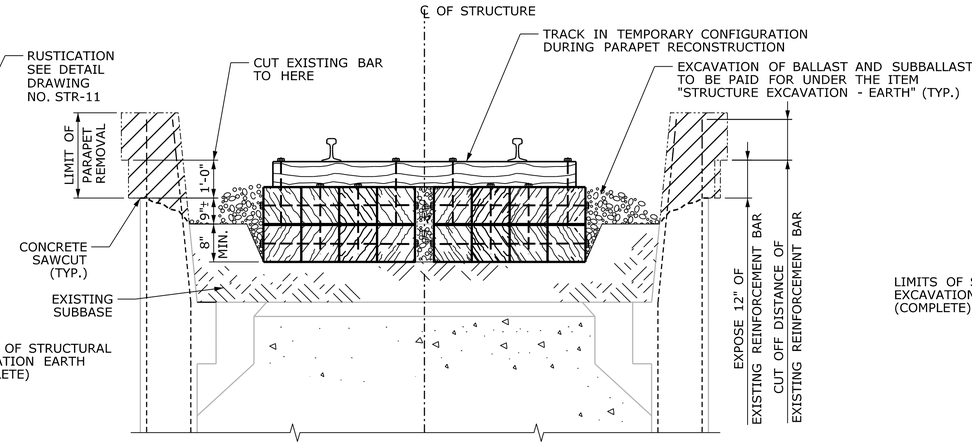

WINGWALL PARAPET REMOVAL LIMITS

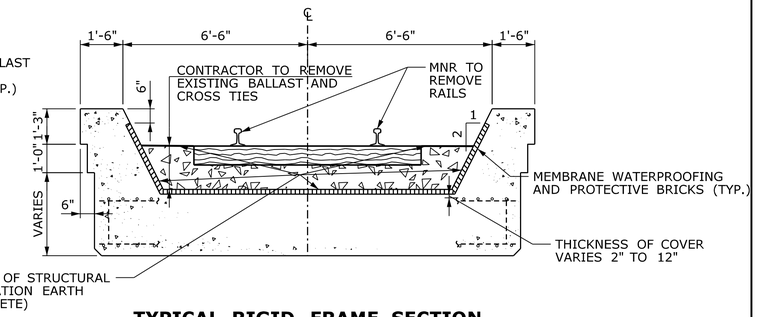

TYPICAL RIGID FRAME SECTION

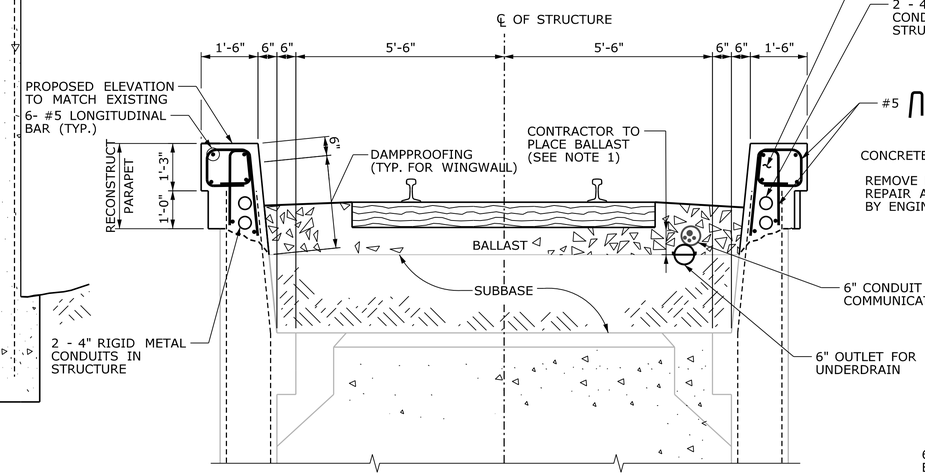

PROPOSED WINGWALL PARAPET RECONSTRUCTION

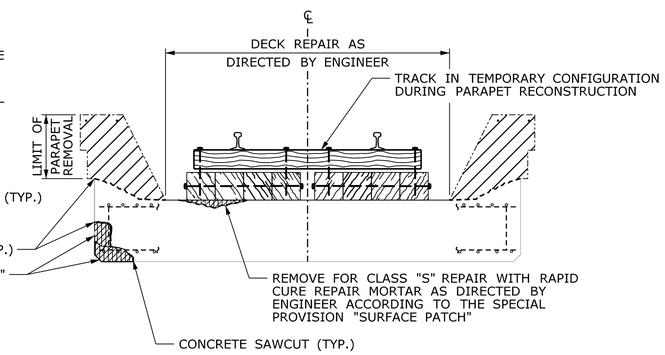

PARAPET REMOVAL LIMITS

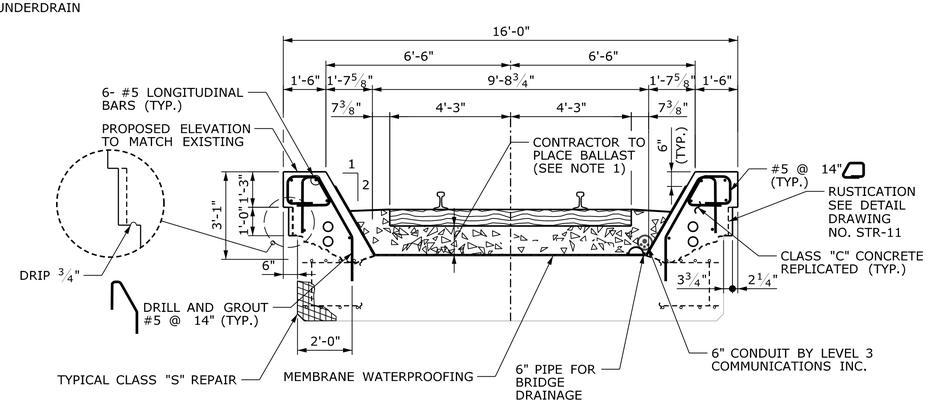

PROPOSED PARAPET RECONSTRUCTION

SECTION C STR-8
SCALE: ½" = 1'-0"

SECTION D STR-8
SCALE: ⅜" = 1'-0"

NOTES:

1. CONTRACTOR TO PLACE BALLAST TO 4" BELOW CROSS TIES. METRO-NORTH RAILROAD TO SUPPLY AND PLACE REMAINING BALLAST AND TRACK.
2. ALL REINFORCEMENT STEEL SHALL HAVE 2" COVER.
3. PARAPET REMOVAL TO BE PAID AS ITEM "REMOVAL OF EXISTING MASONRY LIMITED METHODS".

LEGEND

LIMITS OF DEMOLITION

REV.	DATE	REVISION DESCRIPTION	SHEET NO.
-	-	-	-
-	-	-	-
-	-	-	-
-	-	-	-
-	-	-	-
-	-	-	-

THE INFORMATION, INCLUDING ESTIMATED QUANTITIES OF WORK, SHOWN ON THESE SHEETS IS BASED ON LIMITED INVESTIGATIONS BY THE STATE AND IS IN NO WAY WARRANTED TO INDICATE THE CONDITIONS OF ACTUAL QUANTITIES OF WORK WHICH WILL BE REQUIRED.

PLOTTED: 2/12/2013

DESIGNER/DRAFTER: H. MARTINDALE
CHECKED BY: A. MORTON
SCALE AS NOTED

STATE OF CONNECTICUT
DEPARTMENT OF TRANSPORTATION

FILENAME: ...\303007_04_10_Parapet Reconstruction.dgn

LOCHNER
H.W. LOCHNER, INC
2110 Silas Deane Highway
Rocky Hill, CT 06067

APPROVED BY: R. BRAY
DATE: 02/13/2013

STATE OF CONNECTICUT RICHARD A. BRAY LICENSED PROFESSIONAL ENGINEER

PROJECT TITLE:
BRIDGE NO. 00710R METRO-NORTH NEW CANAAN BRANCH M.P. 5.76 OVER THE MERRITT PARKWAY

TOWN: **NEW CANAAN**

DRAWING TITLE: **PARAPET RECONSTRUCTION**

PROJECT NO. **303-007**
DRAWING NO. **STR-10**
SHEET NO. **05.04.10**

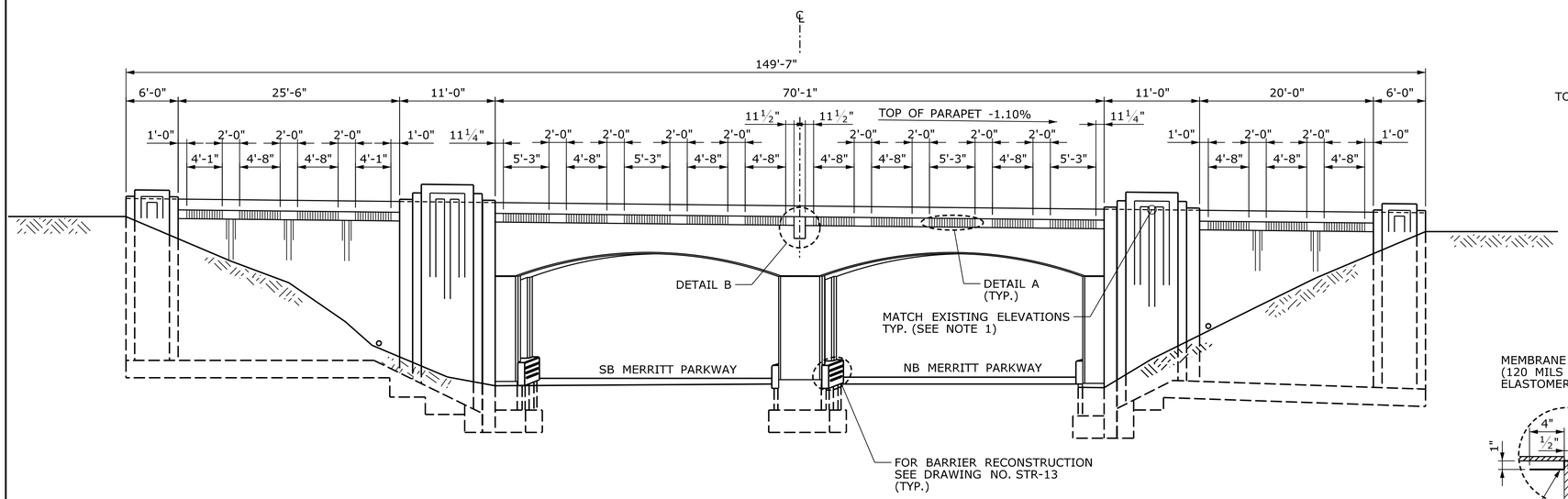

FULL PARAPET COPING BAND

SCALE: 1/8" = 1'-0"

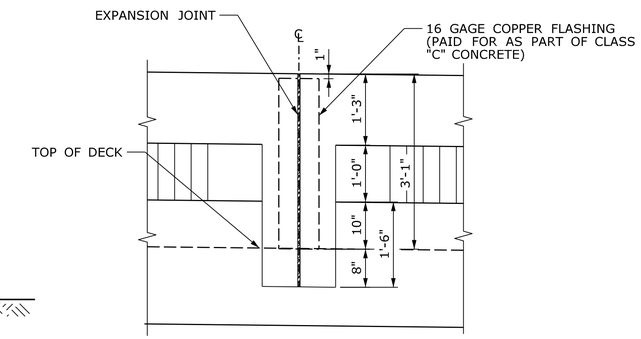

ELEVATION

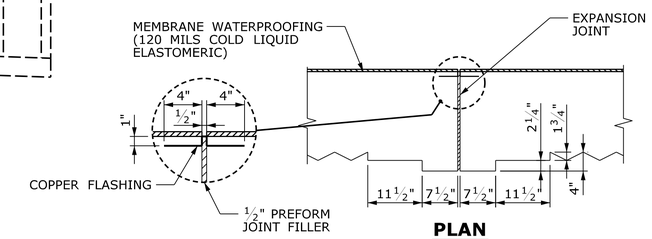

PLAN

DETAIL B

SCALE: 3/4" = 1'-0"

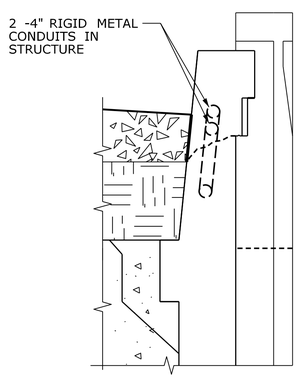

SECTION AT END OF WINGWALL

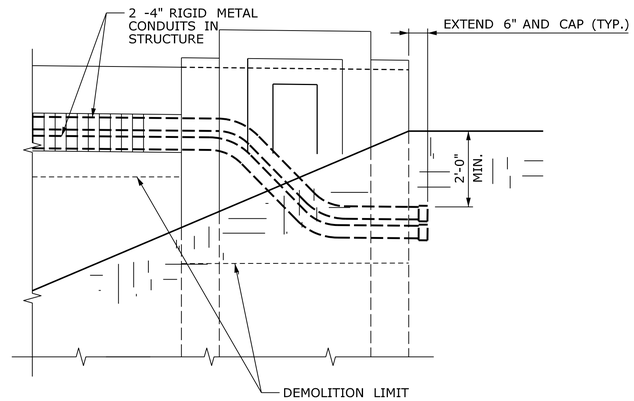

ELEVATION OF WINGWALL

CONDUIT DETAIL AT END POST

SCALE: 1/2" = 1'-0"

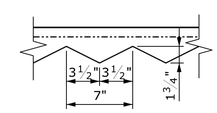

RUSTICATION DETAIL

SCALE: 3/8" = 1'-0"

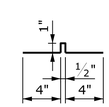

16 GAGE COPPER FLASHING

SCALE: 3/8" = 1'-0"

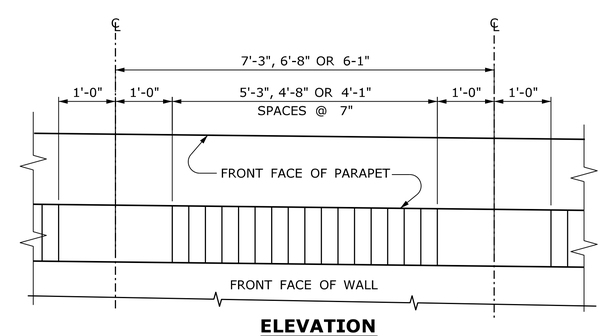

ELEVATION

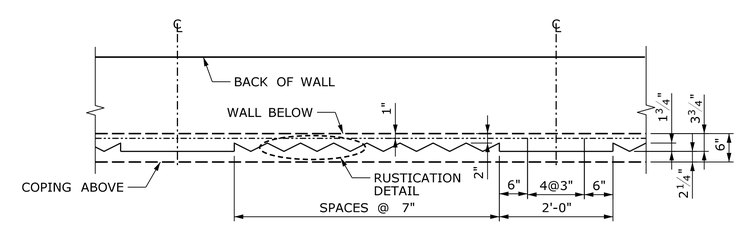

PLAN

DETAIL A

SCALE: 3/4" = 1'-0"

NOTES:

1. CONTRACTOR SHALL PERFORM A LIMITED FIELD SURVEY TO ESTABLISH PARAPET DIMENSIONING AND ELEVATIONS PRIOR TO DEMOLITION. (RECONSTRUCT GEOMETRY IN KIND).

REV.	DATE	REVISION DESCRIPTION	SHEET NO.
-	-	-	-
-	-	-	-
-	-	-	-
-	-	-	-
-	-	-	-
-	-	-	-

THE INFORMATION, INCLUDING ESTIMATED QUANTITIES OF WORK, SHOWN ON THESE SHEETS IS BASED ON LIMITED INVESTIGATIONS BY THE STATE AND IS IN NO WAY WARRANTED TO INDICATE THE CONDITIONS OF ACTUAL QUANTITIES OF WORK WHICH WILL BE REQUIRED.

PLOTTED: 2/12/2013

DESIGNER/DRAFTER: H. MARTINDALE
CHECKED BY: A. MORTON
SCALE AS NOTED

STATE OF CONNECTICUT
DEPARTMENT OF TRANSPORTATION

FILENAME: ...\303007_04_11_Parapet Details.dgn

LOCHNER
H.W. LOCHNER, INC
2110 Silas Deane Highway
Rocky Hill, CT 06067

APPROVED BY: R. BRAY
DATE: 02/13/2013

STATE OF CONNECTICUT RICHARD A. BRAY LICENSED PROFESSIONAL ENGINEER

PROJECT TITLE:
BRIDGE NO. 00710R METRO-NORTH NEW CANAAN BRANCH M.P. 5.76 OVER THE MERRITT PARKWAY

TOWN: NEW CANAAN

DRAWING TITLE: PARAPET DETAILS

PROJECT NO. 303-007
DRAWING NO. STR-11
SHEET NO. 05.04.11

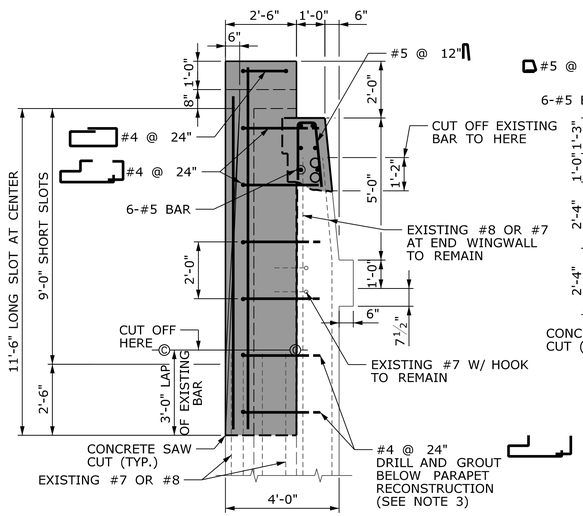

SECTION H
SCALE: 1/2" = 1'-0"
(SECTION THROUGH PLYON GROOVE)

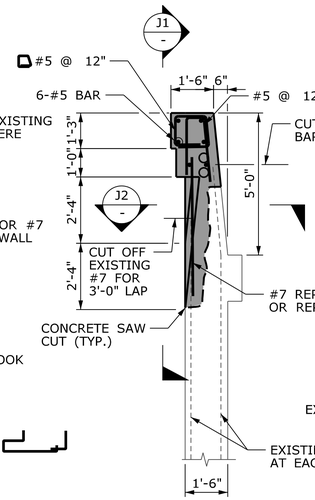

SECTION J
SCALE: 1/2" = 1'-0"
(SECTION THROUGH WALL GROOVE)

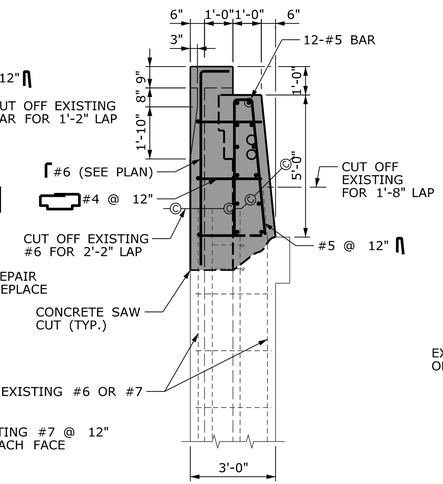

SECTION F
SCALE: 1/2" = 1'-0"
(SECTION THROUGH END POST GROOVE)

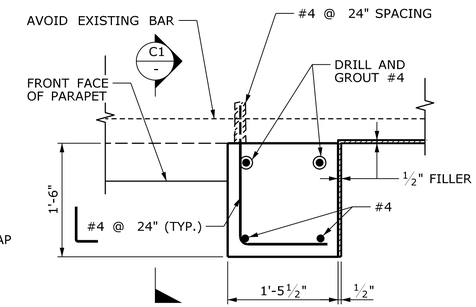

FRAME PYLON PLAN
SCALE: 1" = 1'-0"

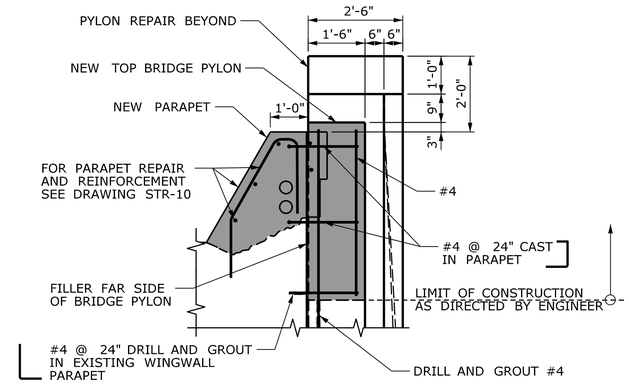

SECTION C1
SCALE: 1/2" = 1'-0"

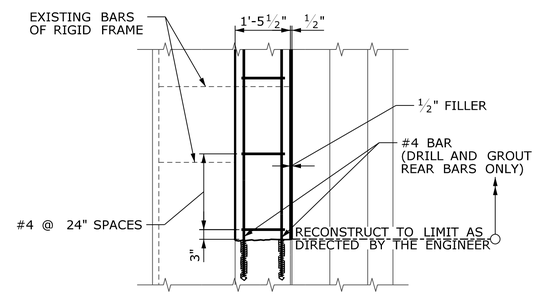

FRAME PYLON ELEVATION
SCALE: 1/2" = 1'-0"

DETAIL C
SCALE AS NOTED

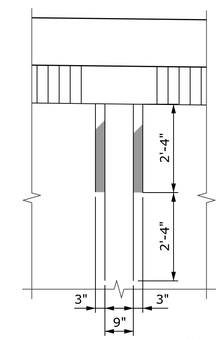

SECTION J1
SCALE: 1/2" = 1'-0"

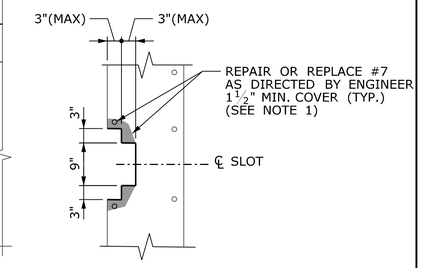

SECTION J2
SCALE: 3/4" = 1'-0"

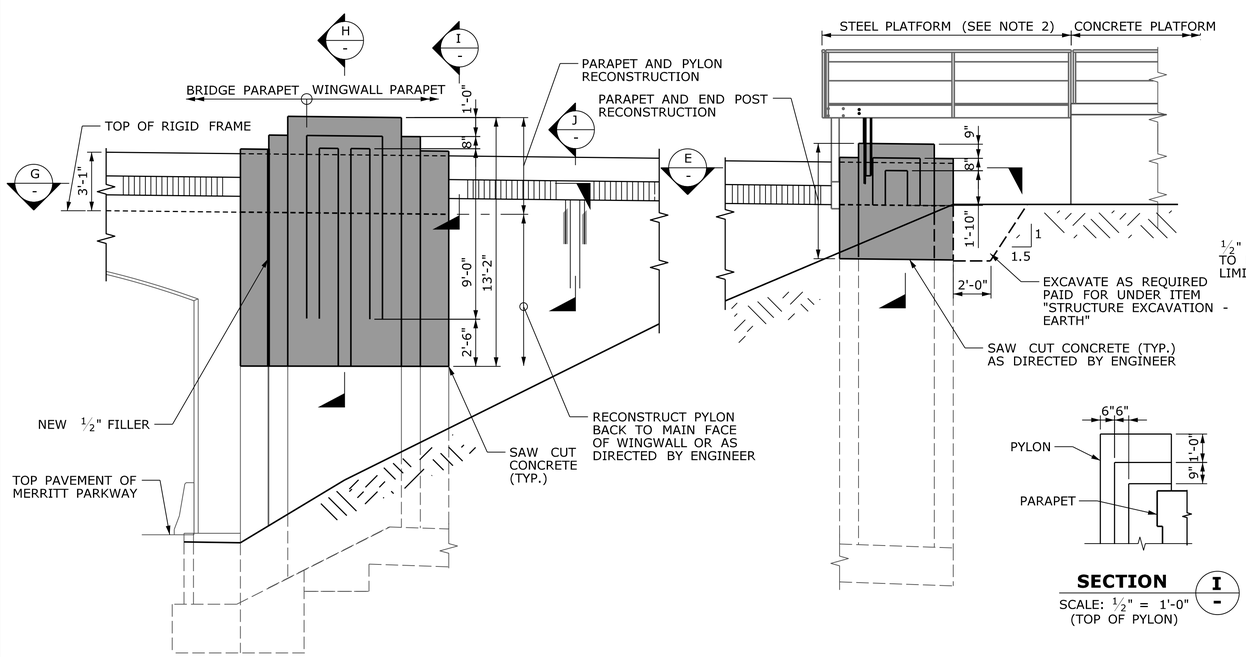

WINGWALL DETAIL
SCALE: 1/4" = 1'-0"

SECTION I
SCALE: 1/2" = 1'-0"
(TOP OF PYLON)

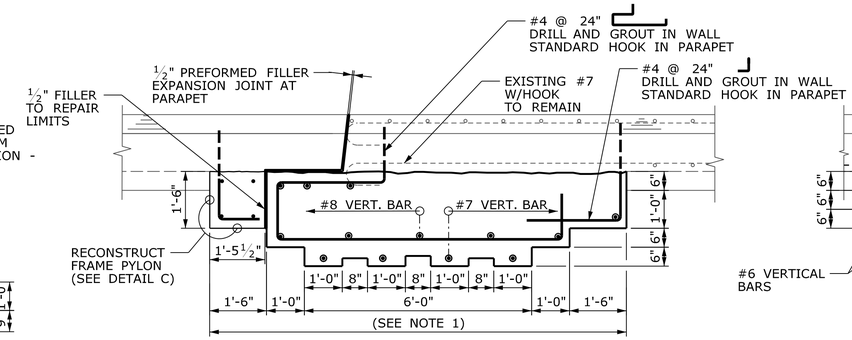

SECTION G
SCALE: 1/2" = 1'-0"

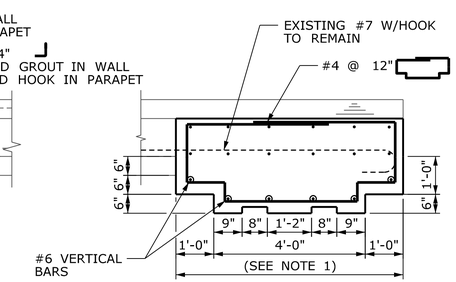

SECTION E
SCALE: 1/2" = 1'-0"

NOTES:

1. EXPOSED EDGES OF PARAPETS, RECONSTRUCTED PYLONS AND REPAIRED SLOTS WILL NOT HAVE BEVELED EDGES.
2. STEEL PLATFORM TO BE MAINTAINED DURING CONSTRUCTION. SEE DRAWING NO. STR-9 FOR DETAILS.
3. ALL REINFORCING BARS DRILLED AND GROUTED TO BE INSTALLED PER MANUFACTURER'S RECOMMENDATION TO DEVELOP 1.25 Fy.

LEGEND

LIMITS OF DEMOLITION & RECONSTRUCTION

REV.	DATE	REVISION DESCRIPTION	SHEET NO.
-	-	-	-
-	-	-	-
-	-	-	-
-	-	-	-
-	-	-	-
-	-	-	-

THE INFORMATION, INCLUDING ESTIMATED QUANTITIES OF WORK, SHOWN ON THESE SHEETS IS BASED ON LIMITED INVESTIGATIONS BY THE STATE AND IS IN NO WAY WARRANTED TO INDICATE THE CONDITIONS OF ACTUAL QUANTITIES OF WORK WHICH WILL BE REQUIRED.

PLOTTED: 2/12/2013

DESIGNER/DRAFTER: H. MARTINDALE
CHECKED BY: A. MORTON
SCALE AS NOTED

STATE OF CONNECTICUT
DEPARTMENT OF TRANSPORTATION

FILENAME: ...\303007_04_12_Pylon Reconstruction & Wingwall Repair.dgn

LOCHNER
H.W. LOCHNER, INC
2110 Silas Deane Highway
Rocky Hill, CT 06067

APPROVED BY: R. BRAY
DATE: 02/13/2013

STATE OF CONNECTICUT RICHARD A. BRAY LICENSED PROFESSIONAL ENGINEER

PROJECT TITLE:
BRIDGE NO. 00710R METRO-NORTH NEW CANAAN BRANCH M.P. 5.76 OVER THE MERRITT PARKWAY

TOWN: **NEW CANAAN**

DRAWING TITLE:
PYLON RECONSTRUCTION AND WINGWALL REPAIR

PROJECT NO. **303-007**
DRAWING NO. **STR-12**
SHEET NO. **05.04.12**

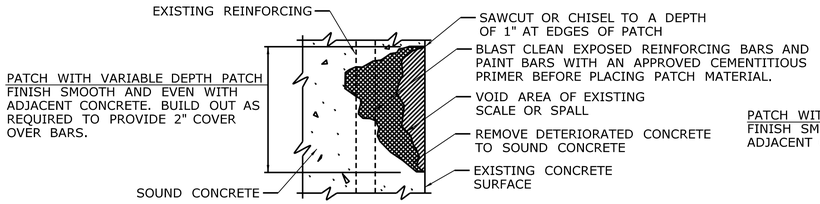

VARIABLE DEPTH PATCH AND
VARIABLE DEPTH PATCH FOR HISTORIC CONCRETE BRIDGES REPAIR
(REINFORCING PARTIALLY EXPOSED)

NOT TO SCALE

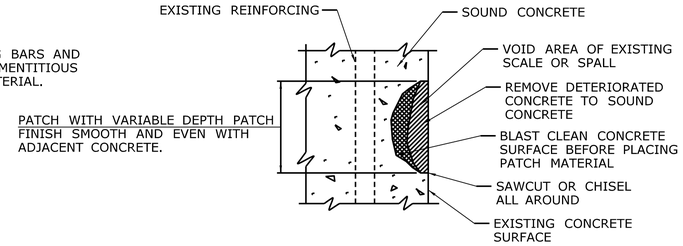

VARIABLE DEPTH PATCH AND
VARIABLE DEPTH PATCH FOR HISTORIC CONCRETE BRIDGES REPAIR
(NO REINFORCING EXPOSED)

NOT TO SCALE

TABLE OF SPLICE LENGTH		
	BAR SIZE	MIN. SPLICE LENGTH
MAIN REINF. @ ≥ 6 O.C. **	#6 #7 #8	1'-9" 2'-4" 3'-0"
MAIN REINF. @ ≥ 6 O.C. **	#4 #5	1'-4" 1'-4"

** FOR BARS SPACED < 6" O.C. MULTIPLY TABLE VALUES BY 1.25

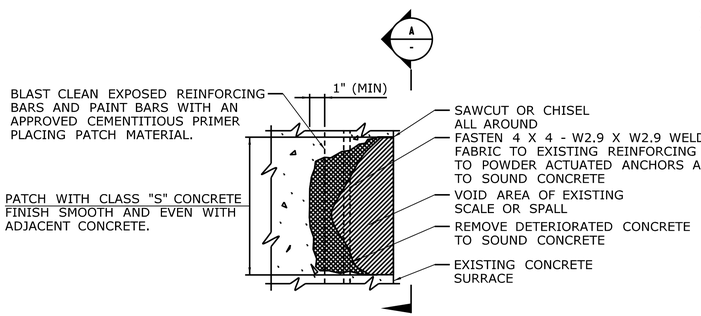

CLASS "S" CONCRETE AND
CLASS "S" CONCRETE FOR HISTORIC BRIDGES REPAIR

NOT TO SCALE

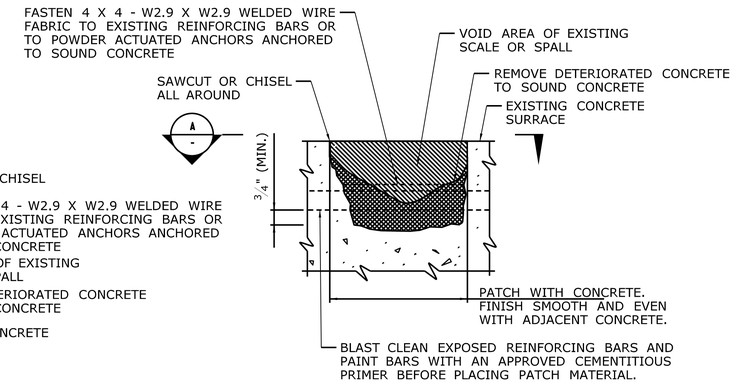

PARTIAL DEPTH PATCH REPAIR

NOT TO SCALE

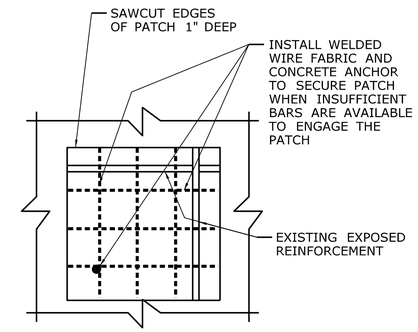

SECURING PATCH
WITH WELDED WIRE FABRIC

NOT TO SCALE

A
-

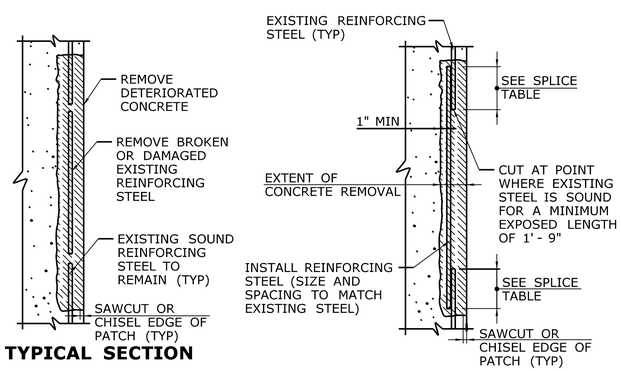

TYPICAL SECTION

DAMAGED REINFORCING

TYPICAL SPLICE DETAIL

REINFORCING REPAIR DETAIL

NOT TO SCALE

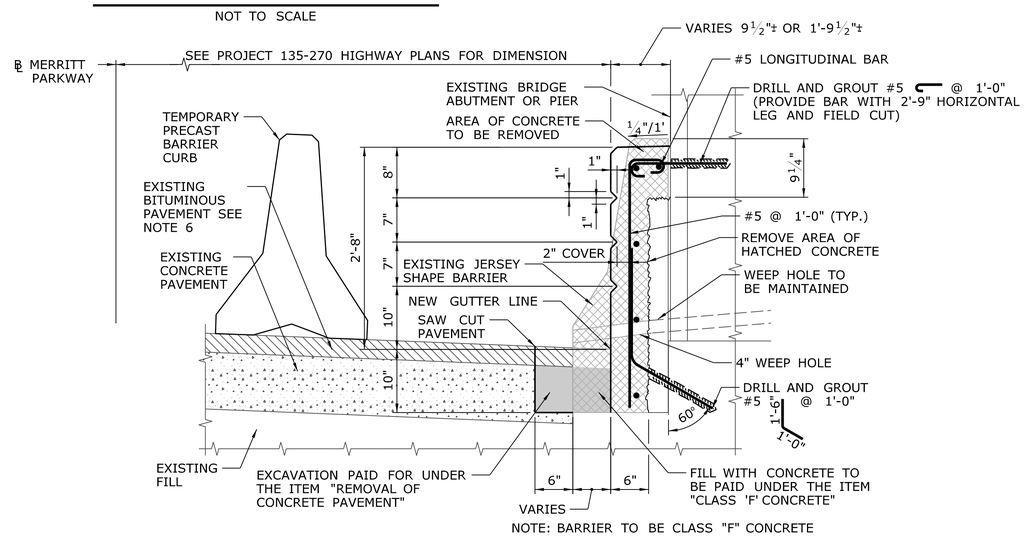

NOTE: BARRIER TO BE CLASS "F" CONCRETE

CONSTRUCTION OF MERRITT PARKWAY
BARRIER BELOW BRIDGES

NOT TO SCALE

THE ENGINEER WILL DETERMINE THE LOCATIONS OF UNSOUND OR DETERIORATED CONCRETE TO BE REPAIRED. THE METHOD USED TO DELINEATE AREAS OF CONCRETE TO BE REPAIRED SHALL NOT PERMANENTLY MARK THE CONCRETE, LEAVE ANY RESIDUE AFTER REMOVAL, OR REQUIRE HARSH CHEMICALS TO REMOVE.

THE CONTRACTOR SHALL REMOVE THE DETERIORATED CONCRETE IN ACCORDANCE WITH THE GUIDELINES SET IN THESE NOTES AND IN THE SPECIAL PROVISIONS AND THE ENGINEER WILL DETERMINE THE TYPE OF REPAIR REQUIRED FOR EACH AREA USING THE BELOW GUIDELINE FOR REPAIR TYPES.

THE CONTRACTOR SHALL SUPPLY WHATEVER MEANS NECESSARY, INCLUDING BUT NOT LIMITED TO LADDERS, LIFTS AND TRAFFIC PROTECTION FOR THE ENGINEER TO SAFELY ACCESS VARIOUS AREAS FOR INSPECTION. THE COST OF PROVIDING ACCESS FOR THE INSPECTION IS INCLUDED IN THE GENERAL COST OF THE PROJECT.

CONCRETE REPAIR MAY BE ONE OF THE FOLLOWING TYPES:

CLASS "S" CONCRETE / CLASS "S" CONCRETE FOR HISTORIC BRIDGES

THIS TYPE OF REPAIR SHALL BE USED WHERE THE REINFORCING BARS ARE SUFFICENTLY EXPOSED TO ENGAGE AND ANCHOR THE PATCHING MATERIAL. CLASS "S" CONCRETE MAY BE USED FOR SMALLER AREAS LESS THAN FOUR SQUARE FEET WHERE THERE IS A SUFFICIENT TOTAL AREA TO JUSTIFY THE USE OF THIS MATERIAL AND WHERE THE PATCH CAN BE SECURELY ANCHORED BY THE REINFORCING.

OVERHEAD PATCHES SHALL BE A CLASS "S" TYPE UNLESS OTHERWISE DIRECTED BY THE ENGINEER AND SHALL BE ANCHORED SECURELY TO THE REINFORCING BARS.

AT VERTICAL AND FLAT FACES, ONLY THE OUTER BARS OF THE OUTSIDE MAT OF REINFORCING NEED TO BE ENGAGED BY THE PATCH UNLESS THE DETERIORATION EXTENDS BEHIND THE NEXT LAYER.

BEFORE APPLYING THE PATCHING MATERIAL, THE REINFORCING BARS SHALL BE BLAST CLEANED AND PAINTED WITH AN APPROVED CEMENTITIOUS PRIMER.

VARIABLE DEPTH PATCH / VARIABLE DEPTH PATCH FOR HISTORIC CONCRETE BRIDGES

THIS TYPE OF REPAIR SHALL BE USED TO REPAIR FLAT AND VERTICAL SURFACES WHERE THE REINFORCING BARS ARE NOT EXPOSED OR ARE ONLY PARTIALLY EXPOSED. IT SHALL GENERALLY BE USED FOR SMALLER REPAIRS WHERE CLASS "S" REPAIR TYPES ARE NOT APPROPRIATE.

THE ENGINEER MAY DIRECT THE CONTRACTOR TO REPAIR SMALL AREAS WHERE REINFORCING IS FULLY EXPOSED AS CLASS "S" TYPE WHEN A SUFFICIENT VOLUME OF REPAIRS ARE IDENTIFIED.

SEE SPECIAL PROVISIONS FOR MORE INFORMATION REGARDING APPLICATION OF EACH REPAIR MATERIAL.

REINFORCING BAR REPAIRS

REINFORCING WHICH IS DETERMINED BY THE ENGINEER TO BE IN NEED OF REPLACEMENT, SHALL BE REMOVED TO A POINT WHERE IT IS SOUND. FOR SUBSTRUCTURES, THE PATCH SHALL EXTEND A SUFFICIENT DISTANCE BEYOND THIS POINT TO DEVELOP A SPLICE LENGTH SPECIFIED IN THE TABLE ON THIS SHEET. THE ENGINEER WILL EVALUATE REINFORCING BAR REPAIR NEED FOR PIERS AFTER THE BARS HAVE BEEN EXPOSED.

REINFORCING BARS WILL BE PAID FOR AT THE CONTRACT UNIT PRICE FOR "DEFORMED STEEL BARS".

SEALING CRACKS IN CONCRETE

IN GENERAL, CRACKS SHALL BE SEALED ONLY WHERE THERE IS NO EARTH FILL BEHIND THE CONCRETE FEATURE TO AVOID THE POSSIBILITY OF GROUND WATER PRESSURE BEING EXERTED ON THE SEALANT.

CRACK SEALING WILL BE PAID FOR UNDER "COLOR-MATCHED CRACK SEALANT FOR CONRETE"

RESTRICTIONS

THE REMOVAL OF DETERIORATED CONCRETE SHALL PROCEED AS DIRECTED BY THE ENGINEER. IF THE REMOVAL OF DETERIORATED CONCRETE BECOMES EXCESSIVE, THE REMOVAL WORK SHALL BE STOPPED AT THE LOCATION AND THE ENGINEER NOTIFIED IMMEDIATELY.

MAXIMUM HAMMER SIZE USED TO REMOVE DETERIORATED CONCRETE SHALL BE 15 POUNDS.

IF REMOVAL EXTENDS MORE THAN 1½" BEHIND THE MAIN REINFORCING BARS, THE REMOVAL WORK SHALL BE STOPPED AND THE ENGINEER NOTIFIED IMMEDIATELY.

NOTES

1. IN AREAS WHERE THE REINFORCING STEEL, ON REMOVAL OF DETERIORATED CONCRETE, HAS LESS THAN HALF OF ITS SURFACE EXPOSED, THE REINFORCEMENT SHALL BE COATED WITH A CEMENTITIOUS PRIMER PRIOR TO PLACING THE PATCHING MATERIAL. THE COST OF THIS COATING IS INCLUDED IN THE APPLICABLE REPAIR PAY ITEM.
2. IF AFTER CONCRETE REMOVAL THE REINFORCING STEEL HAS AT LEAST ONE HALF OF ITS SURFACE AREA EXPOSED, THE CONCRETE SHALL BE FURTHER REMOVED TO A DEPTH OF 1" AROUND THE STEEL.
3. THE 1" DEEP SAW CUT SHALL BE INCLUDED IN THE CONTRACT BID PRICE OF THE APPLICABLE REPAIR PAY ITEM.
4. IF THE AREA OR DEPTH OF REMOVAL IS DEEMED TO BE EXCESSIVE, THE ENGINEER SHALL BE IMMEDIATELY NOTIFIED BEFORE CONTINUING REMOVAL WORK.
5. EXPOSED REINFORCEMENT TO BE THOROUGHLY CLEANED BEFORE PATCHING.
6. THE PERMANENT BITUMINOUS PAVEMENT TO BE INSTALLED AND PAID FOR IN PROJECT 135-270.

REV.	DATE	REVISION DESCRIPTION	SHEET NO.
-	-	-	-
-	-	-	-
-	-	-	-
-	-	-	-
-	-	-	-
-	-	-	-

THE INFORMATION, INCLUDING ESTIMATED QUANTITIES OF WORK, SHOWN ON THESE SHEETS IS BASED ON LIMITED INVESTIGATIONS BY THE STATE AND IS IN NO WAY WARRANTED TO INDICATE THE CONDITIONS OF ACTUAL QUANTITIES OF WORK WHICH WILL BE REQUIRED.

PLOTTED: 2/12/2013

DESIGNER/DRAFTER: H. MARTINDALE
CHECKED BY: A. MORTON
SCALE AS NOTED

STATE OF CONNECTICUT
DEPARTMENT OF TRANSPORTATION

FILENAME: ...\303007_04_13_Class S repair & Barrier Reconstruction.dgn

LOCHNER
H.W. LOCHNER, INC
2110 Silas Deane Highway
Rocky Hill, CT 06067

APPROVED BY: R. BRAY
DATE: 02/13/2013

STATE OF CONNECTICUT RICHARD A. BRAY LICENSED PROFESSIONAL ENGINEER

PROJECT TITLE:
BRIDGE NO. 00710R METRO-NORTH NEW CANAAN BRANCH M.P. 5.76 OVER THE MERRITT PARKWAY

TOWN: **NEW CANAAN**

DRAWING TITLE:
CONCRETE REPAIR AND BARRIER RECONSTRUCTION

PROJECT NO. **303-007**
DRAWING NO. **STR-13**
SHEET NO. **05.04.13**

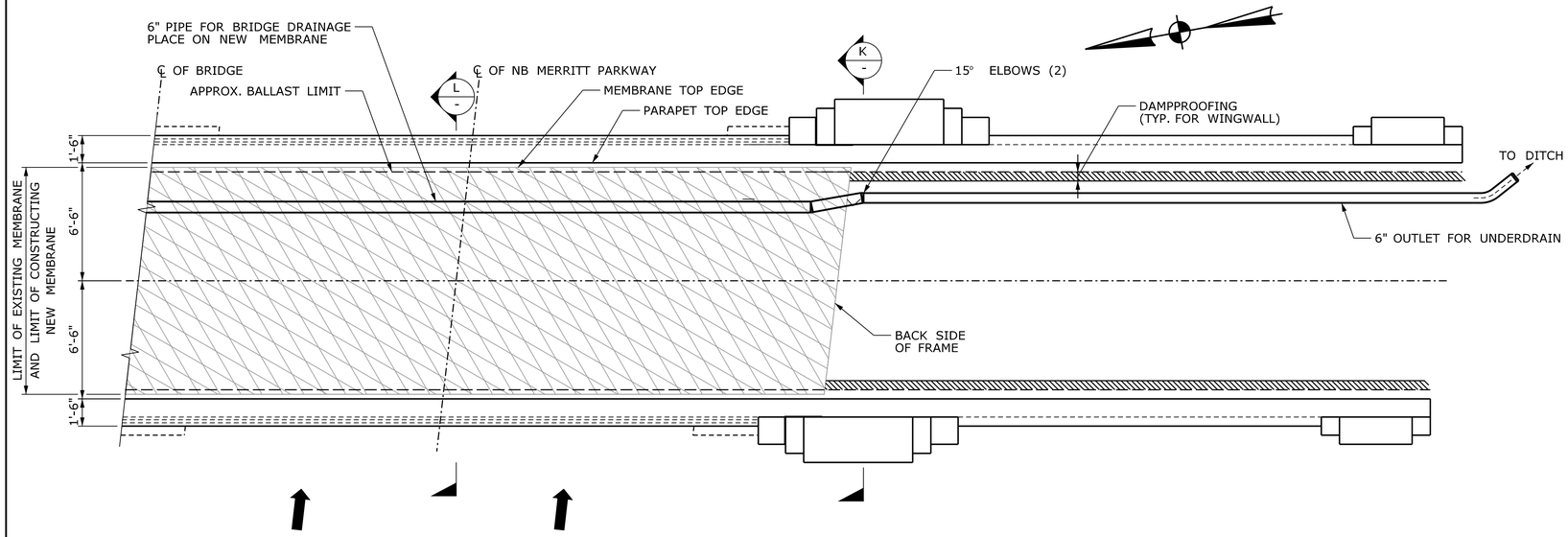

PLAN

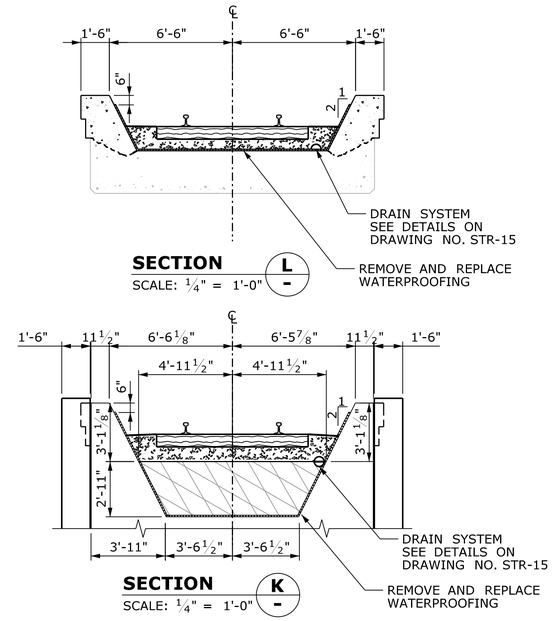

SECTION L
SCALE: ¼" = 1'-0"

SECTION K
SCALE: ¼" = 1'-0"

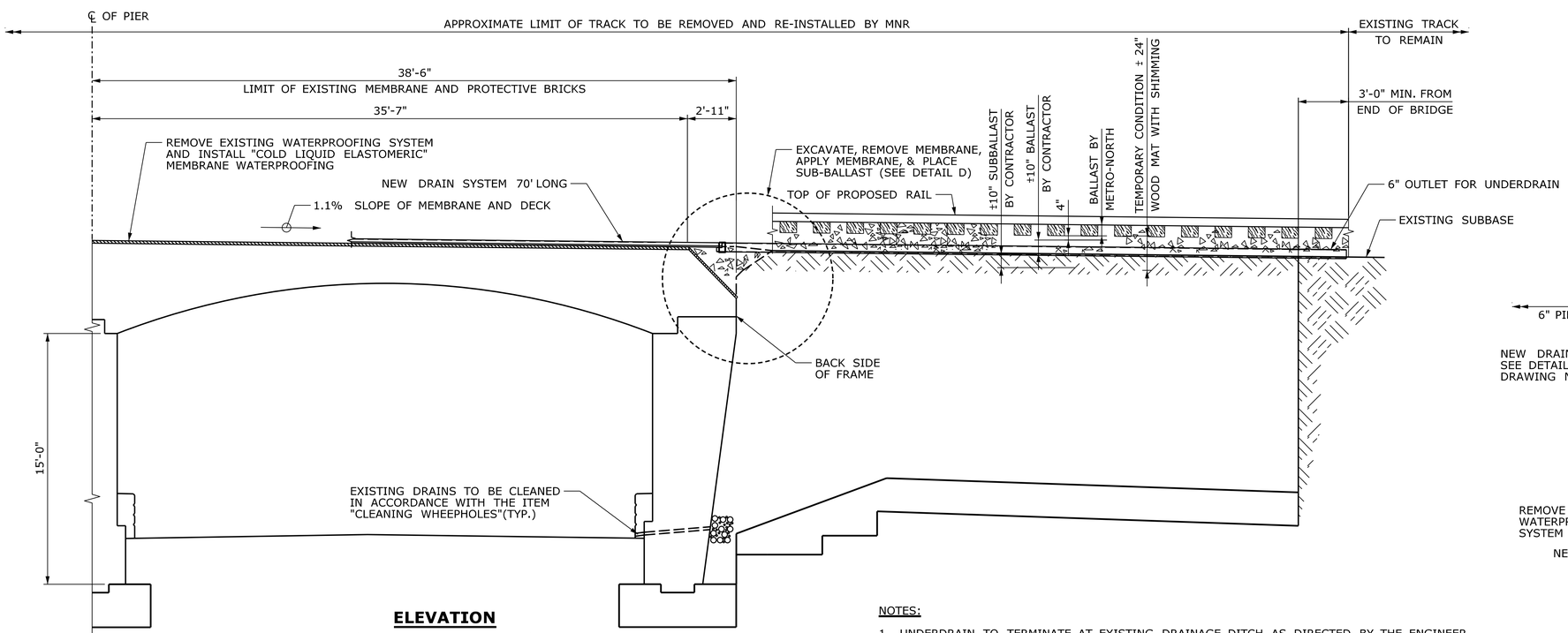

ELEVATION
(AT CENTER LINE OF BRIDGE)

MEMBRANE REMOVAL LIMIT
(SOUTH END SHOWN, NORTH END SIMILAR)
SCALE: ¼" = 1'-0"

NOTES:

1. UNDERDRAIN TO TERMINATE AT EXISTING DRAINAGE DITCH AS DIRECTED BY THE ENGINEER. STANDARD CONCRETE ENDWALL TO BE PROVIDED AT OUTLET.

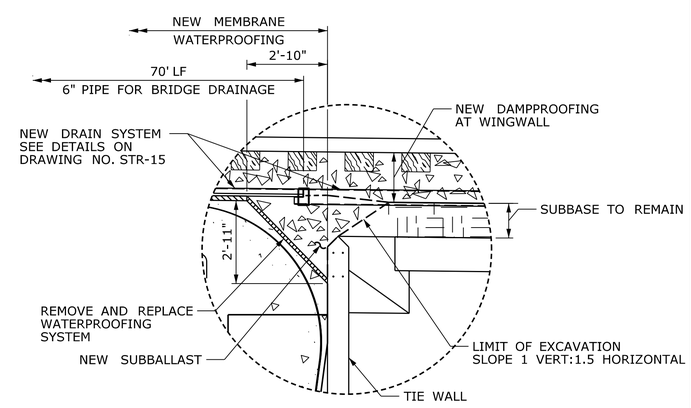

DETAIL D
SCALE: ⅜" = 1'-0"

LEGEND

NEW MEMBRANE ON SCARIFIED (LIGHT BLAST) DECK

REV.	DATE	REVISION DESCRIPTION	SHEET NO.
-	-	-	-
-	-	-	-
-	-	-	-
-	-	-	-
-	-	-	-
-	-	-	-

THE INFORMATION, INCLUDING ESTIMATED QUANTITIES OF WORK, SHOWN ON THESE SHEETS IS BASED ON LIMITED INVESTIGATIONS BY THE STATE AND IS IN NO WAY WARRANTED TO INDICATE THE CONDITIONS OF ACTUAL QUANTITIES OF WORK WHICH WILL BE REQUIRED.

PLOTTED: 2/12/2013

DESIGNER/DRAFTER: H. MARTINDALE
CHECKED BY: A. MORTON
SCALE AS NOTED

STATE OF CONNECTICUT
DEPARTMENT OF TRANSPORTATION

FILENAME: ...\303007_04_14_Deck Drainage and Waterproofing.dgn

LOCHNER
H.W. LOCHNER, INC
2110 Silas Deane Highway
Rocky Hill, CT 06067

APPROVED BY: R. BRAY
DATE: 02/13/2013

STATE OF CONNECTICUT
RICHARD A. BRAY
LICENSED PROFESSIONAL ENGINEER

PROJECT TITLE:
BRIDGE NO. 00710R METRO-NORTH NEW CANAAN BRANCH M.P. 5.76 OVER THE MERRITT PARKWAY

TOWN: **NEW CANAAN**

DRAWING TITLE: **DECK DRAINAGE AND WATERPROOFING**

PROJECT NO. **303-007**
DRAWING NO. **STR-14**
SHEET NO. **05.04.14**

NOTES:

1. CONTRACTOR SHALL PROVIDE GALVANIZED 1/8" END PLATE AT NORTH END OF 6" PIPE FOR BRIDGE DRAINAGE.
2. 6" OUTLET PIPE, CONCRETE ENDWALL AND BALLAST TO BE INCLUDED IN THE PAY ITEM "6" OUTLET FOR UNDERDRAIN".
3. FOR OUTLETS IN EXISTING BALLAST SLOPES, THE BALLAST MAY BE DELETED IF APPROVED BY THE ENGINEER.

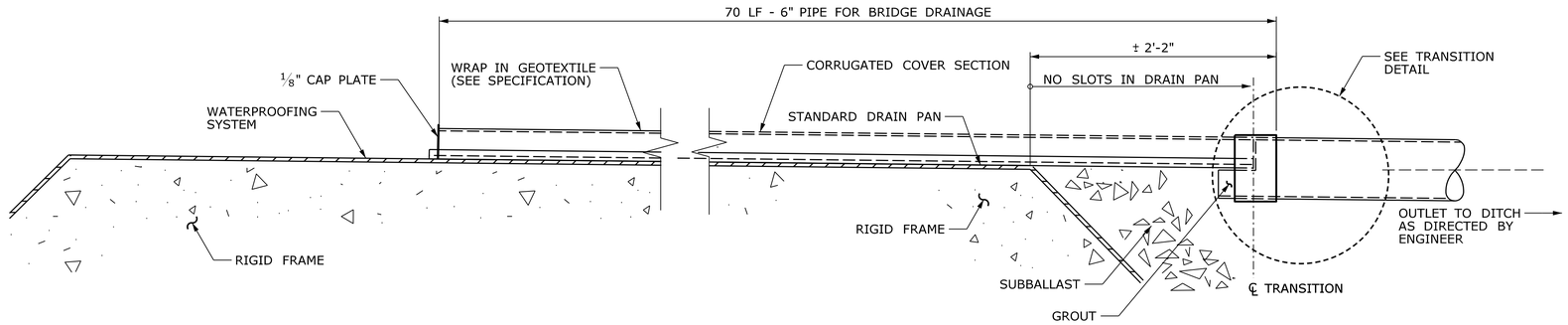

DECK DRAINAGE - DETAIL E

SCALE: 1 1/2" = 1'-0"

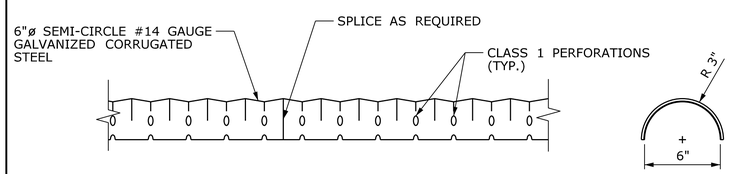

CORRUGATED COVER SECTION

SCALE: 2" = 1'-0"

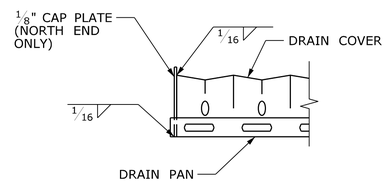

END CAP DETAIL

SCALE: 3" = 1'-0"

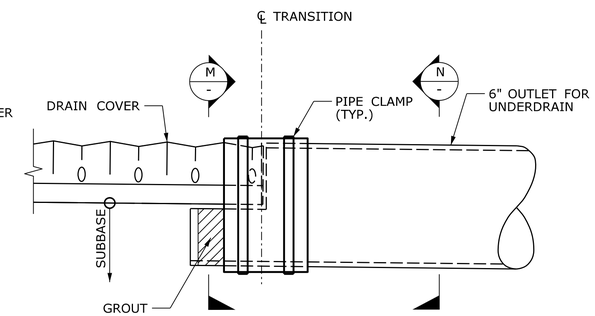

TRANSITION DETAIL

SCALE: 3" = 1'-0"

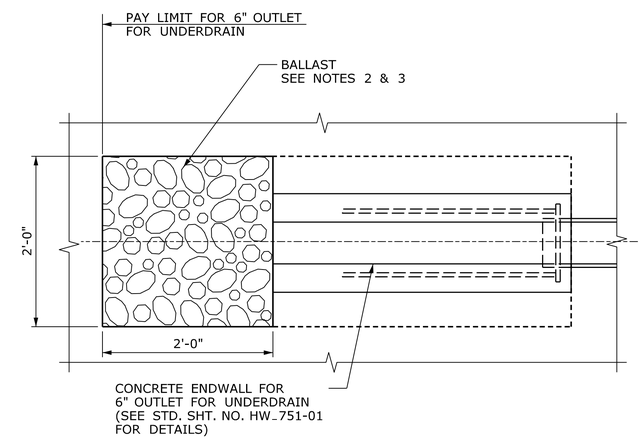

PLAN

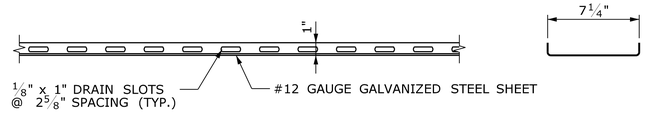

STANDARD DRAIN PAN

SCALE: 2" = 1'-0"

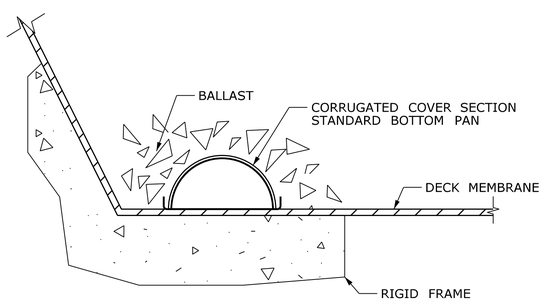

TYPICAL DRAIN CROSS SECTION

SCALE: 2" = 1'-0"

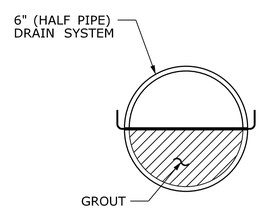

SECTION M

SCALE: 3" = 1'-0"

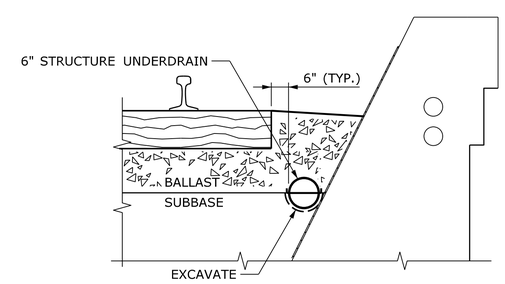

SECTION N

SCALE: 3/4" = 1'-0"

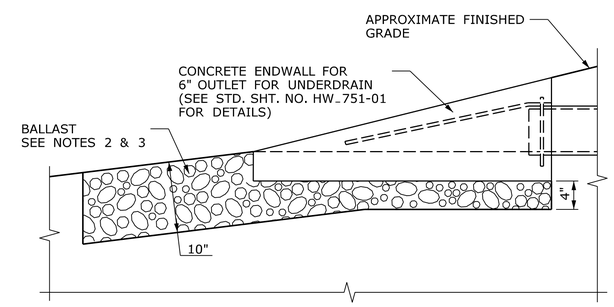

ELEVATION

UNDERDRAIN OUTLET DETAIL

N.T.S.

REV.	DATE	REVISION DESCRIPTION	SHEET NO.
-	-	-	-
-	-	-	-
-	-	-	-
-	-	-	-
-	-	-	-
-	-	-	-

THE INFORMATION, INCLUDING ESTIMATED QUANTITIES OF WORK, SHOWN ON THESE SHEETS IS BASED ON LIMITED INVESTIGATIONS BY THE STATE AND IS IN NO WAY WARRANTED TO INDICATE THE CONDITIONS OF ACTUAL QUANTITIES OF WORK WHICH WILL BE REQUIRED.

PLOTTED: 2/12/2013

DESIGNER/DRAFTER: H. MARTINDALE
CHECKED BY: A. MORTON
SCALE AS NOTED

STATE OF CONNECTICUT
DEPARTMENT OF TRANSPORTATION

FILENAME: ...\303007_04_15_Drainage Details.dgn

LOCHNER
H.W. LOCHNER, INC
2110 Silas Deane Highway
Rocky Hill, CT 06067

APPROVED BY: R. BRAY
DATE: 02/13/2013

STATE OF CONNECTICUT RICHARD A. BRAY LICENSED PROFESSIONAL ENGINEER

PROJECT TITLE:
BRIDGE NO. 00710R METRO-NORTH NEW CANAAN BRANCH M.P. 5.76 OVER THE MERRITT PARKWAY

TOWN: NEW CANAAN

DRAWING TITLE: DRAINAGE DETAILS

PROJECT NO. 303-007
DRAWING NO. STR-15
SHEET NO. 05.04.15