04 - STRUCTURES
INDEX OF DRAWINGS

DRAWING NUMBER	DRAWING TITLE	DRAWING NUMBER	DRAWING TITLE
S-01	INDEX OF DRAWINGS - 1	S-21	NB: FRAMING PLAN 2 OF 2
S-02	INDEX OF DRAWINGS - 2	S-22	NB: SUPERSTRUCTURE DETAILS
S-03	GENERAL PLAN	S-23	NB: REPAIR DETAILS BUILT UP GIRDERS - 1
S-04	GENERAL NOTES & QUANTITIES	S-24	NB: REPAIR DETAILS BUILT UP GIRDERS - 2
S-05	NB: GENERAL PLAN & ELEVATION	S-25	NB: REPAIR DETAILS ROLLED GIRDERS - 1
S-06	NB: TYPICAL BRIDGE SECTIONS	S-26	NB: REPAIR DETAILS ROLLED GIRDERS - 2
S-07	NB: CONSTRUCTION STAGING	S-27	NB: REPAIR DETAILS WEB STIFFENERS - 1
S-08	NB: ABUTMENT 1	S-28	NB: REPAIR DETAILS WEB STIFFENERS - 2
S-09	NB: ABUTMENT 2	S-29	NB: REPAIR DETAILS WELDS
S-10	NB: PIERS 1 & 2	S-30	NB: HEAT STRAIGHTENING DETAILS - 1
S-11	NB: PIERS 3 & 4	S-31	NB: HEAT STRAIGHTENING DETAILS - 2
S-12	NB: PIER 5	S-32	NB: REFLECTED DECK PLAN
S-13	NB: KEEPER BLOCK DETAILS	S-33	NB: DECK PLAN
S-14	NB: SUBSTRUCTURE REPAIR DETAILS - 1	S-34	NB: DECK REHABILITATION PATCH DETAILS
S-15	NB: SUBSTRUCTURE REPAIR DETAILS - 2	S-35	NB: JOINT REPAIR DETAILS - 1
S-16	NB: BEARING REPLACEMENT PLAN	S-36	NB: JOINT REPAIR DETAILS - 2
S-17	NB: EXPANSION BEARING REPLACEMENT	S-37	SB: GENERAL PLAN & ELEVATION
S-18	NB: EXPANSION BEARING BOLSTER DETAILS	S-38	SB: TYPICAL BRIDGE SECTIONS
S-19	NB: EXPANSION BEARING DETAILS	S-39	SB: CONSTRUCTION STAGING
S-20	NB: FRAMING PLAN 1 OF 2	S-40	SB: ABUTMENT 1

DESIGNED BY:
Stantec
STANTEC CONSULTING SERVICES INC.
2321 WHITNEY AVENUE
HAMDEN, CT 06518

STATE OF CONNECTICUT ANDREW M. LESSARD LICENSED PROFESSIONAL ENGINEER
Andrew Lessard
2013.12.23
15:22:19-05'00'

REV.	DATE	REVISION DESCRIPTION	SHEET NO.
-	-	-	-
-	-	-	-
-	-	-	-
-	-	-	-
-	-	-	-
-	-	-	-

THE INFORMATION, INCLUDING ESTIMATED QUANTITIES OF WORK, SHOWN ON THESE SHEETS IS BASED ON LIMITED INVESTIGATIONS BY THE STATE AND IS IN NO WAY WARRANTED TO INDICATE THE CONDITIONS OF ACTUAL QUANTITIES OF WORK WHICH WILL BE REQUIRED.

Plotted Date: 12/23/2013

DESIGNER/DRAFTER: CY
CHECKED BY: CW

STATE OF CONNECTICUT
DEPARTMENT OF TRANSPORTATION

Filename: ...\S-01_Structure Title Sheet - 1.dgn

SIGNATURE/BLOCK:
Stantec Consulting Services Inc.
2321 Whitney Ave.
Hamden, CT 06518

PROJECT TITLE:
REHABILITATION OF BRIDGE I-91 NB & SB OVER US 5, AMTRAK & FERRY STREET

TOWN: NEW HAVEN

DRAWING TITLE: INDEX OF DRAWINGS - 1

PROJECT NO. 092-0612
DRAWING NO. S-01
SHEET NO. 04.01

Connecticut Department of Transportation
QA/QC Format Check

04 - STRUCTURES
INDEX OF DRAWINGS

DRAWING NUMBER	DRAWING TITLE	DRAWING NUMBER	DRAWING TITLE
S-41	SB: ABUTMENT 1 WINGWALLS	S-61	SB: REPAIR DETAILS WEB STIFFENERS - 2
S-42	SB: ABUTMENT 2	S-62	SB: REPAIR DETAILS WELDS
S-43	SB: ABUTMENT 2 WINGWALL	S-63	SB: REFLECTED DECK PLAN 1 OF 2
S-44	SB: PIERS 1 & 2	S-64	SB: REFLECTED DECK PLAN 2 OF 2
S-45	SB: PIERS 3 & 4	S-65	SB: DECK PLAN 1 OF 2
S-46	SB: KEEPER BLOCK DETAILS	S-66	SB: DECK PLAN 2 OF 2
S-47	SB: SUBSTRUCTURE REPAIR DETAILS - 1	S-67	SB: DECK REHABILITATION PATCH DETAILS
S-48	SB: SUBSTRUCTURE REPAIR DETAILS - 2	S-68	SB: JOINT REPAIR DETAILS - 1
S-49	SB: BEARING REPLACEMENT PLAN	S-69	SB: JOINT REPAIR DETAILS - 2
S-50	SB: EXPANSION BEARING REPLACEMENT	S-70	NB & SB: UNDERBRIDGE LUMINAIRE
S-51	SB: EXPANSION BEARING BOLSTER DETAILS	S-71	ORIGINAL BORING LOGS - 1
S-52	SB: EXPANSION BEARING DETAILS	S-72	ORIGINAL BORING LOGS - 2
S-53	SB: FRAMING PLAN 1 OF 2	S-73	ORIGINAL BORING LOGS - 3
S-54	SB: FRAMING PLAN 2 OF 2	S-74	ORIGINAL BORING LOGS - 4
S-55	SB: SUPERSTRUCTURE DETAILS	S-75	CLEARANCE AND CONTAINMENT DIAGRAM
S-56	SB: REPAIR DETAILS BUILT UP GIRDERS - 1		
S-57	SB: REPAIR DETAILS BUILT UP GIRDERS - 2		
S-58	SB: REPAIR DETAILS ROLLED GIRDERS - 1		
S-59	SB: REPAIR DETAILS ROLLED GIRDERS - 2		
S-60	SB: REPAIR DETAILS WEB STIFFENERS - 1		

DESIGNED BY:
Stantec
STANTEC CONSULTING SERVICES INC.
2321 WHITNEY AVENUE
HAMDEN, CT 06518

REV.	DATE	REVISION DESCRIPTION	SHEET NO.
-	-	-	-
-	-	-	-
-	-	-	-
-	-	-	-
-	-	-	-
-	-	-	-

THE INFORMATION, INCLUDING ESTIMATED QUANTITIES OF WORK, SHOWN ON THESE SHEETS IS BASED ON LIMITED INVESTIGATIONS BY THE STATE AND IS IN NO WAY WARRANTED TO INDICATE THE CONDITIONS OF ACTUAL QUANTITIES OF WORK WHICH WILL BE REQUIRED.

Plotted Date: 12/23/2013

DESIGNER/DRAFTER: CY
CHECKED BY: CW

STATE OF CONNECTICUT
DEPARTMENT OF TRANSPORTATION

Filename: ...\S-02. Structure Title Sheet - 2.dgn

SIGNATURE/BLOCK:
Stantec Consulting Services Inc.
2321 Whitney Ave.
Hamden, CT 06518

PROJECT TITLE:
REHABILITATION OF BRIDGE I-91 NB & SB OVER US 5, AMTRAK & FERRY STREET

TOWN: NEW HAVEN

DRAWING TITLE: INDEX OF DRAWINGS - 2

PROJECT NO. 092-0612
DRAWING NO. S-02
SHEET NO. 04.02

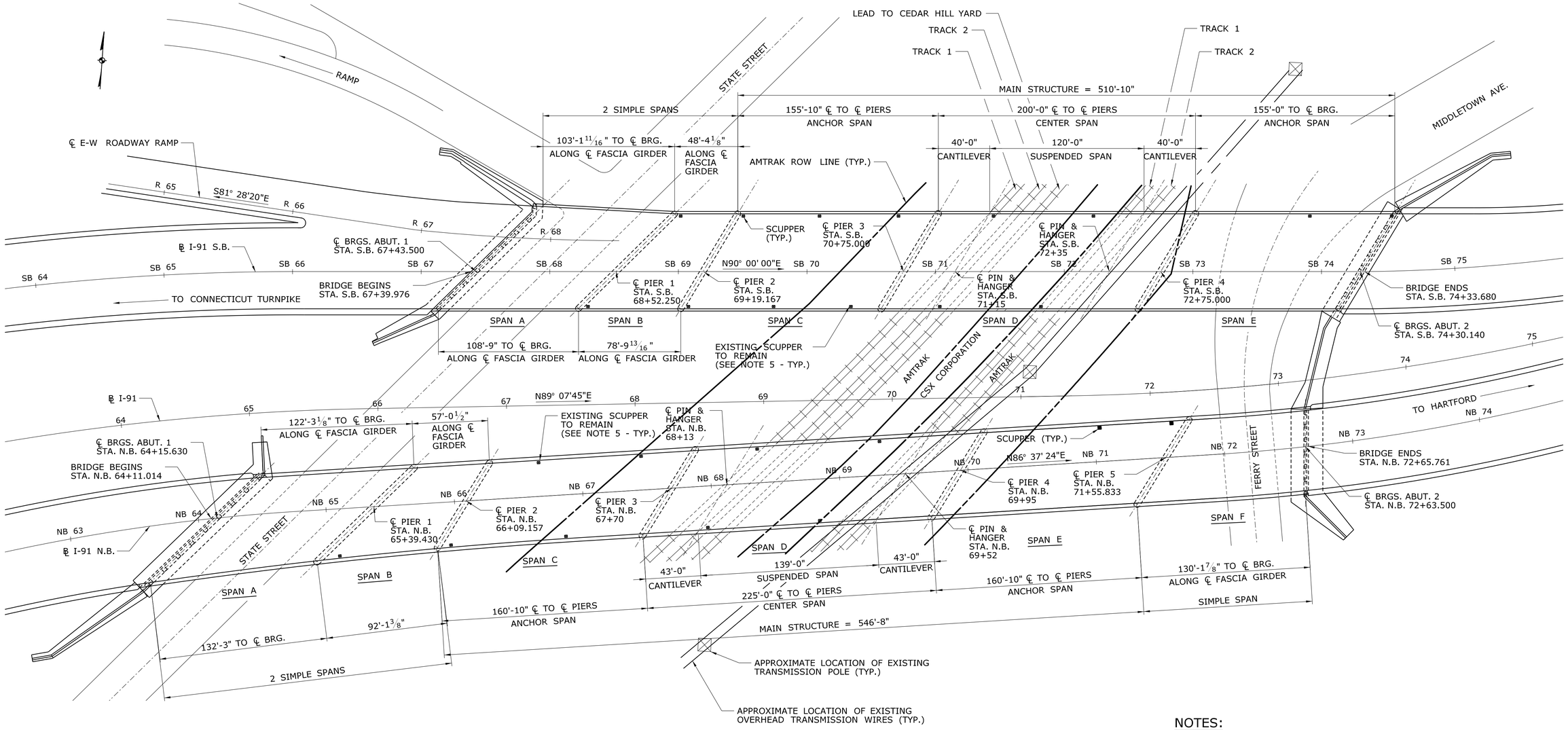

PLAN

SCALE: 1"=40'

NOTES:

1. FOR ADDITIONAL DETAILS OF I-91 N.B., SEE DRAWINGS S-05 THRU S-36, S-70.
2. FOR ADDITIONAL DETAILS OF I-91 S.B., SEE DRAWINGS S-37 THRU S-70.
3. BRIDGE 03021 CARRYING 1-91 N.B. SHALL BE CONSIDERED "SITE NO. 1".
4. BRIDGE 03022 CARRYING 1-91 S.B. SHALL BE CONSIDERED "SITE NO. 2".
5. SCUPPERS TO REMAIN SHALL HAVE FILTER FABRIC WRAPPED AROUND FRAME FOR SEDIMENT CONTROL.

REV.	DATE	REVISION DESCRIPTION	SHEET NO.

THE INFORMATION, INCLUDING ESTIMATED QUANTITIES OF WORK, SHOWN ON THESE SHEETS IS BASED ON LIMITED INVESTIGATIONS BY THE STATE AND IS IN NO WAY WARRANTED TO INDICATE THE CONDITIONS OF ACTUAL QUANTITIES OF WORK WHICH WILL BE REQUIRED.

Plotted: 12/23/2013

DESIGNER/DRAFTER: **EW**

CHECKED BY: **CW**

SCALE AS NOTED

STATE OF CONNECTICUT
DEPARTMENT OF TRANSPORTATION

Filename: $FILE$

SIGNATURE/ BLOCK:

Stantec Consulting Services Inc.
2321 Whitney Ave.
Hamden, CT 06518

PROJECT TITLE:

REHABILITATION OF BRIDGE I-91 NB & SB OVER US 5, AMTRAK & FERRY STREET

TOWN: **NEW HAVEN**

DRAWING TITLE: **GENERAL PLAN**

PROJECT NO. **092-0612**

DRAWING NO. **S-03**

SHEET NO. **04.03**

TABLE OF BRIDGE QUANTITIES

ITEM	UNIT	QUANTITY BRIDGE 03021	QUANTITY BRIDGE 03022
LEAD COMPLIANCE FOR ABRASIVE BLAST CLEANING	LS	LS	LS
REMOVAL OF EXISTING WEARING SURFACE	SY	6450	6050
HMA S0.5	TON	742	696
HMA S0.25	TON	371	348
MATERIAL FOR TACK COAT	GAL	406	381
BRIDGE STRAIGHTENING	LS	LS	-
JACKING EXISTING SUPERSTRUCTURE (SITE NO. 1)	LS	LS	-
JACKING EXISTING SUPERSTRUCTURE (SITE NO. 2)	LS	-	LS
DISCONNECT AND RECONNECT EXISTING DIAPHRAGMS	EA	6	10
CLEAN BRIDGE DRAINAGE SYSTEM	LF	710	640
SILICONE EXPANSION JOINT SYSTEM	LF	555	557
ASPHALTIC PLUG EXPANSION JOINT SYSTEM	CF	28	0
BEARING REPLACEMENT WITH ELASTOMERIC BEARING PADS	EA	32	27
CONSTRUCT CONCRETE KEEPER BLOCKS	EA	16	18
CLASS "S" CONCRETE	CF	45	61
VARIABLE DEPTH PATCH	CF	45	61
SURFACE PATCH	SF	409	918
FULL DEPTH PATCH (HIGH EARLY STRENGTH CONCRETE)	CY	4	9
PARTIAL DEPTH PATCH	CF	102	230
REPAIR OF BEARING PAD	EA	2	6
REPAIR DEFECTIVE WELD	LF	80	3
STRUCTURAL STEEL (SITE NO. 1)	LS	1	-
STRUCTURAL STEEL (SITE NO. 2)	LS	-	1
DISPOSAL OF LEAD DEBRIS FROM ABRASIVE BLAST CLEANING	TON	20	20
CLASS 1 CONTAINMENT AND COLLECTION OF SURFACE PREPARATION DEBRIS (SITE NO. 1)	LS	LS	-
CLASS 1 CONTAINMENT AND COLLECTION OF SURFACE PREPARATION DEBRIS (SITE NO. 2)	LS	-	LS
EMBEDDED GALVANIC ANODES	EA	462	630
STRUCTURAL STEEL	LB	2361	2280
ABRASIVE BLAST CLEANING AND FIELD PAINTING OF STRUCTURE (SITE NO. 1)	LS	LS	-
ABRASIVE BLAST CLEANING AND FIELD PAINTING OF STRUCTURE (SITE NO. 2)	LS	-	LS
CONCRETE HAUNCH REMOVAL	LF	7000	7600
MEMBRANE WATERPROOFING (WOVEN GLASS FABRIC)	SY	6450	6050
UNDERBRIDGE LUMINAIRE HIGH PRESSURE SODIUM (100 WATT)	EA	6	8
REMOVE UNDERBRIDGE LUMINAIRE	EA	6	8
REMOVE CONDUIT	LF	0	3520
18" X 12" X 8" CAST IRON JUNCTION BOX	EA	2	2
NO. 2 SINGLE CONDUCTOR	LF	129	141
NO. 8 BARE COPPER GROUNDING CONDUCTOR	LF	65	80
MAINTAIN EXISTING ILLUMINATION	LS	LS	LS

GENERAL NOTES:

1. SPECIFICATIONS: CONNECTICUT DEPARTMENT OF TRANSPORTATION FORM 816 (2004), SUPPLEMENTAL SPECIFICATIONS DATED JULY 2013 AND SPECIAL PROVISIONS.
2. DESIGN SPECIFICATIONS: AASHTO LRFD BRIDGE DESIGN SPECIFICATIONS CUSTOMARY U.S. UNITS 4TH EDITION 2007, WITH INTERIM SPECIFICATIONS UP TO AND INCLUDING 2012, AS SUPPLEMENTED BY THE CONNECTICUT DEPARTMENT OF TRANSPORTATION BRIDGE DESIGN MANUAL (2003).
3. ALLOWABLE DESIGN STRESSES

   STRUCTURAL STEEL: AASHTO M270 GRADE 36T2; FY = 36,000 PSI

   CLASS 'A' CONCRETE: BASED ON F'C = 3,000 PSI

   CLASS 'F' CONCRETE: BASED ON F'C = 4,000 PSI

   REINFORCMENT: ASTM A615 GRADE 60; FY = 60,000 PSI
4. LIVE LOAD: HL-93 (FOR BEARINGS ONLY)
5. DIMENSIONS: ALL ELEVATIONS ARE GIVEN IN FEET. WHEN ELEVATIONS ARE GIVEN TO LESS THAN THREE DECIMAL PLACES, THE OMITTED DIGITS SHALL BE ASSUMED TO BE ZEROS.
6. EXISTING DIMENSIONS: DIMENSIONS OF THE EXISTING STRUCTURE SHOWN ON THESE PLANS ARE FOR GENERAL REFERENCE ONLY. THEY HAVE BEEN TAKEN FROM THE ORIGINAL DESIGN DRAWINGS AND ARE NOT GUARANTEED. THE CONTRACTOR SHALL TAKE ALL FIELD MEASUREMENTS NECESSARY TO ASSURE PROPER FIT OF THE FINISHED WORK AND SHALL ASSUME FULL RESPONSIBILITY FOR THEIR ACCURACY. WHEN SHOP DRAWINGS BASED ON FIELD MEASUREMENTS ARE SUBMITTED FOR APPROVAL, THE FIELD MEASUREMENTS SHALL ALSO BE SUBMITTED FOR REFERENCE BY THE REVIEWER.
7. TRAFFIC: ALL WORK SHALL BE DONE IN ACCORDANCE WITH THE SPECIAL PROVISIONS "MAINTENANCE AND PROTECTION OF TRAFFIC" AND "PROSECUTION AND PROGRESS"
8. UTILITIES: THE CONTRACTOR SHALL TAKE THE PROPER PRECAUTIONS TO ENSURE THERE WILL BE NO DISRUPTION OF EXISTING UTILITIES WHILE COMPLETING WORK. UTILITIES SHALL BE NOTIFIED PRIOR TO COMMENCING WORK ADJACENT TO, OR POTENTAILLY AFFECTING UTILITIES, 2 WEEKS PRIOR TO THE START OF WORK ON BRIDGES NO. 03021 AND 03022.
9. RAILROAD: SEE APPLICABLE NOTICE TO CONTRACTOR.
10. THE REPAIR DETAILS AND PROCEDURES SHOWN HEREIN ARE DEPICTED FOR INFORMATION ONLY. THE CONTRACTOR SHALL DEVELOP REPAIR DETAILS AND PROCEDURES BASED ON THE ACTUAL CONDITIONS IDENTIFIED IN THE FIELD AND AS APPROVED BY THE ENGINEER.

REHABILITATION OF EXISTING STRUCTRUAL STEEL NOTES:

1. REMOVAL OF DETERIORATED PORTIONS OF EXISTING STRUCTURAL STEEL WILL NOT BE MEASURED FOR PAYMENT AND SHALL BE INCLUDED FOR PAYMENT UNDER THE ITEM "STRUCTURAL STEEL."
2. ALL STRUCTURAL STEEL PLATES SHALL CONFORM TO AASHTO M270 GRADE 36T2.
3. ALL STRUCTURAL STEEL PLATES SHALL BE SMOOTH, FREE OF BURRS, NICKS, GOUGES, OIL OR OTHER COATINGS.
4. WELDING DETAILS, PROCEDURES AND TESTING METHODS SHALL CONFORM TO THE ANSI/AASHTO/AWS D1.5:2008 - BRIDGE WELDING CODE, UNLESS OTHERWISE NOTED ON THE PLAN.
5. ALL REPAIR PLATE TO FLANGE, WEB AND OR CONNECTION/STIFFENER PLATE FILLET WELDS SHALL BE INSPECTED BY THE MAGNETIC PARTICLE METHOD. ALL COMPLETE JOINT PENETRATION GROOVE WELDS SHALL BE INSPECTED BY ULTRASONIC TESTING.
6. MULTIPLE PASS WELDS, INSPECTED BY THE MAGNETIC PARTICLE METHOD, SHALL HAVE EACH PASS OR LAYER INSPECTED AND ACCEPTED BEFORE PROCEEDING TO THE NEXT PASS OR LAYER, AS DETERMINED BY THE ENGINEER.
7. DIMENSIONS OF AREAS FOR STEEL REPAIRS ARE TAKEN FROM MOST RECENT INSPECTION REPORTS. THE CONTRACTOR SHALL PROVIDE THE ENGINEER ACCESS TO THE LOCATIONS FOR FURTHER INSPECTION AND DETERMINATION OF THE REPAIR AREA.
8. NEW REPAIR PLATE TO EXTEND A MINIMUM OF 3" PAST DETERIORATED AREA OR AS DIRECTED BY THE ENGINEER.
9. FURNISHING AND INSTALLING NEW STEEL REPAIR PLATES INCLUDING ARC GOUGING, FLAME CUTTING AND WELDING SHALL BE PAID FOR UNDER THE PER LB ITEM "STRUCTURAL STEEL."
10. IN THE EVENT THAT ADDITIONAL DETERIORATION IS FOUND OTHER THAN THAT WHICH IS INDICATED ON THE FRAMING PLANS, THE FOLLOWING GUIDANCE SHALL BE FOLLOWED FOR STEEL REPAIRS:

    WEBS:
    LESS THAN 20% SECTION LOSS: NO REPAIRS REQUIRED
    GREATER THAN 20% SECTION LOSS: NOTIFY THE ENGINEER FOR REPAIR DETAILS.

    FLANGES:
    LESS THAN 15% SECTION LOSS: NO REPAIRS REQUIRED
    GREATER THAN 15% SECTION LOSS: NOTIFY THE ENGINEER FOR REPAIR DETAILS.

    BEARING STIFFENERS:
    LESS THAN 15% SECTION LOSS: NO REPAIRS REQUIRED
    GREATER THAN 15% SECTION LOSS: NOTIFY THE ENGINEER FOR REPAIR DETAILS.

    CONNECTION PLATES:
    LESS THAN 30% SECTION LOSS: NO REPAIRS REQUIRED
    GREATER THAN 30% SECTION LOSS: NOTIFY THE ENGINEER FOR REPAIR DETAILS.

    DIAPHRAGMS AND CROSS FRAMES:
    LESS THAN 30% SECTION LOSS: NO REPAIRS REQUIRED
    GREATER THAN 30% SECTION LOSS: NOTIFY THE ENGINEER FOR REPAIR DETAILS.

ILLUMINATION NOTES:

1. THE CONTRACTOR SHALL PERFORM ALL WORK IN SUCH A MANNER SO THAT NIGHTTIME HIGHWAY ILLUMINATION REMAINS OPERATIONAL THROUGHOUT ALL STAGES OF CONSTRUCTION.
2. EXISTING UNDERBRIDGE LIGHTING SHALL REMAIN OPERATIONAL THROUGHOUT ALL STAGES OF CONSTRUCTION AND SHALL BE PAID FOR UNDER ITEM 1020042A "MAINTAIN EXISTING ILLUMINATION."
3. ALL EXISTING UNDERBRIDGE LUMINAIRES WITH PENDANT MOUNTS, SURFACE MOUNTED RMC AND SURFACE MOUNTED JUNCTION BOXES SHALL BE REMOVED AND REPLACED PER THE ELECTRICAL DETAILS. ALL CONDUCTORS, FROM THE LUMINAIRE TO THE EXISTING JUNCTION BOX CAST INTO THE BRIDGE PARAPET, SHALL BE REMOVED AND REPLACED PER THE ELECTRICAL DETAILS. REFER TO THE UNDERBRIDGE LUMINAIRE DETAIL SHEET ON DRAWING S-70 FOR FURTHER INFORMATION.
4. THE CONTRACTOR SHALL PROVIDE TEMPORARY LIGHTING FOR SIDEWALKS DURING TIMES WHEN THE TEMPORARY SIDEWALK PROTECTION IS IN PLACE OVERHEAD.

TEMPORARY ACCESS NOTES:

1. DESIGNING, FURNISHING, INSTALLING, AND REMOVING ACCESS PLATFORMS TO FACILITATE REPAIR OF STEEL BEAMS, UNDERSIDE OF DECK, PIERS, AND ABUTMENTS, AND TO FACILITATE ACCESS TO THE SAME BY THE ENGINEER, WILL NOT BE MEASURED FOR PAYMENT, THE COST OF WHICH SHALL BE INCLUDED IN THE OVERALL COST OF THE PROJECT.
3. ACCESS PLATFORMS EXTENDING OVER ACTIVE SIDEWALKS OR WITHIN 5 FEET OF AN ACTIVE SIDEWALK SHALL INCLUDE PROTECTION ABOVE THE SIDEWALK. SIDEWALK PROTECTION SHALL BE PAID FOR UNDER THE ITEM "TEMPORARY WALKWAY".
4. AT NO TIME WILL DEBRIS BE PERMITTED TO DROP ONTO AN ACTIVE SIDEWALK OR ROADWAY.
5. WORK PLATFORMS SHALL NOT EXTEND OVER ACTIVE LANES OF THE ROADWAY.

CONCRETE REPAIR NOTES:

1. THE DETERIORATION AND REPAIR DIMENSIONS SHOWN HEREIN ARE BASED ON LIMITED FIELD OBSERVATIONS AND BRIDGE SAFETY INSPECTION REPORTS. THE INFORMATION IS INTENDED TO BE USED AS A GUIDE AND DOES NOT NECESSARILY REFLECT THE CURRENT CONDITION OF THE STRUCTURE. THE EXACT LOCATION AND LIMITS OF DETERIORATED CONCRETE TO BE REPAIRED SHALL BE DETERMINED BY THE ENGINEER DURING CONSTRUCTION.
2. THE CONTRACTOR SHALL PROVIDE SAFE ACCESS TO ALL AREAS TO BE REPAIRED FOR THE ENGINEER TO DELINEATE AND REVIEW THE REPAIR WORK. THE COST OF PROVIDING ACCESS SHALL BE INCLUDED IN THE COST OF APPROPRIATE REPAIR ITEMS. NO SEPARATE PAYMENT WILL BE MADE FOR THIS WORK.
3. THE CONTRACTOR SHALL NOT PERFORM ANY REPAIR WORK WITHOUT PRIOR APPROVAL FROM THE ENGINEER.
4. SPALLS AND HOLLOW AREAS SHALL BE REPAIRED IN ACCORDANCE WITH "CLASS 'S' CONCRETE" OR "VARIABLE DEPTH PATCH."
5. CRACKS AND MAP CRACKING IN THE SUBSTRUCTURE SHALL NOT BE REPAIRED UNLESS DIRECTED BY THE ENGINEER, WITH THE EXCEPTION OF PEDESTALS. AT LOCATIONS WERE CRACKS IN PEDESTALS ARE FOUND, THE AREA SHALL BE SOUNDED FOR LOOSE OR DETERIORATED CONCRETE. IF SUCH CONCRETE IS FOUND, THE PEDESTAL SHALL BE REPAIRED IN A MANNER SIMILAR TO THAT SHOWN ON S-48.
6. AT ABUTMENTS, PIERS AND COLUMNS: DETERIORATED CONCRETE SHALL BE REMOVED FROM THE DESIGNATED AREAS IN ACCORDANCE WITH THE DETAILS AND NOTES ON DRAWINGS S-14 AND S-47: "SUBSTRUCTURE REPAIR DETAILS - 1" AND DRAWINGS S-15 AND S-48: "SUBSTRUCTURE REPAIR DETAILS - 2", THE SPECIAL PROVISIONS FOR "CLASS 'S' CONCRETE" AND "VARIABLE DEPTH PATCH", AND THE FOLLOWING GUIDELINES:

   A. THE REMOVAL OF DETERIORATED CONCRETE SHALL PROCEED AS DIRECTED BY THE ENGINEER. IF REMOVAL OF DETERIORATED CONCRETE BECOMES EXCESSIVE, THE REMOVAL WORK SHALL BE STOPPED AT THAT LOCATION AND THE ENGINEER NOTIFIED IMMEDIATELY.

   B. AT EACH COLUMN, IF REMOVAL OF DETERIORATED CONCRETE EXTENDS INSIDE THE MAIN REINFORCING, REMOVAL SHALL BE LIMITED TO ONE FACE OF THE MEMBER AT A TIME AND A MAXIMUM AREA OF 4 SF. REMOVAL MAY BE PERMITTED ON MORE THAN ONE FACE OF THE COLUMN SIMULTANEOUSLY IF THE AREAS OF REMOVAL ARE NOT ADJACENT TO OR DIRECTLY OPPOSITE ONE ANOTHER. IF REMOVAL EXTENDS MORE THAN $1\frac{1}{2}$" BEHIND THE MAIN REINFORCING BARS, THE REMOVAL WORK SHALL BE STOPPED AND THE ENGINEER NOTIFIED IMMEDIATELY.

   C. BEFORE EXPOSING THE MAIN REINFORCING BARS OF MORE THAN ONE PIER COLUMN AT THE SAME TIME, THE ENGINEER SHALL BE CONSULTED.

   D. AT EACH COLUMN, NO MORE THAN ONE THIRD OF THE ELEMENT SHOULD BE REPAIRED AT ONE TIME. IF THE ENTIRE ELEMENT IS TO BE PATCHED, BEGIN AT ONE END AND PATCH ONE THIRD OF THE CLEAR SPAN OF THE ELEMENT. AFTER THE PATCH HAS GAINED SUFFICIENT STRENGTH, BEGIN AT THE OPPOSITE END OF THE ELEMENT AND PATCH ONE THIRD OF THE SPAN. THE MIDDLE THIRD SHOULD BE PATCHED LAST.

   E. IF A SPLICE IS ENCOUNTERED DURING REMOVAL OF CONCRETE, WORK AT THAT LOCATION SHALL BE STOPPED AND THE ENGINEER SHALL BE NOTIFIED. WORK AT THAT LOCATION SHALL NOT PROCEED UNTIL DIRECTION IS GIVEN BY THE ENGINEER.
7. AT CONCRETE DECK: DETERIORATED CONCRETE SHALL BE REMOVED FROM THE DESIGNATED AREAS IN ACCORDANCE WITH DETAILS AND NOTES ON DRAWINGS S-36 AND S-68: "DECK REHABILITATION PATCH DETAILS", AND THE SPECIAL PROVISIONS FOR "PARTIAL DEPTH PATCH" AND "FULL DEPTH PATCH (HIGH EARLY STRENGTH CONCRETE)". WORK AT THE UNDERSIDE OF DECK SHALL CONSIST OF REMOVAL OF LOOSE AND HOLLOW CONCRETE, AND APPLYING "SURFACE PATCH" MATERIAL.

PAINTING NOTES:

1. ALL EXISTING AND NEW STEEL SUPERSTRUCTURE ELEMENTS, INCLUDING BEAMS, CONNECTION PLATES, BEARING STIFFENERS, DIAPHRAGMS, CROSS-FRAMES, BEARINGS AND REPAIR PLATES SHALL BE CLEANED AND PAINTED.
2. REMOVAL OF EXISTING PAINT SYSTEM, SURFACE PREPARATION OF STEEL AND REPAINTING OF THE BRIDGES SHALL BE INCLUDED IN THE ITEM "ABRASIVE BLAST CLEANING AND FIELD PAINTING OF SUPERSTRUCTURE (SITE NO.)".
3. CLASS 1 CONTAINMENT SHALL BE PROVIDED TO COLLECT AND CONTAIN DEBRIS RESULTING FROM THE REMOVAL OF COATINGS IN THE PREPARATION OF STEEL SURFACES FOR PAINTING. THIS WORK SHALL BE INCLUDED IN THE ITEM "CLASS 1 CONTAINMENT & COLLECTION OF SURFACE PREPARATION DEBRIS (SITE NO.)".
4. ALL CONTAINMENT AND COLLECTION OF PAINTING DEBRIS SHALL BE DONE IN STRICT CONFORMANCE WITH CURRENT FEDERAL ENVIRONMENTAL PROTECTION AGENCY AND CONNECTICUT DEPARTMENT OF ENVIRONMENTAL PROTECTION REGULATIONS.
5. THE COLOR OF THE TOP COAT ON THE STRUCTURAL STEEL SHALL CONFORM TO FEDERAL STANDARD 595, COLOR AS TABULATED BELOW:

PAINT COLOR	
SITE NO.	FEDERAL COLOR
1	26329
2	26329

REV.	DATE	REVISION DESCRIPTION	SHEET NO.

THE INFORMATION, INCLUDING ESTIMATED QUANTITIES OF WORK, SHOWN ON THESE SHEETS IS BASED ON LIMITED INVESTIGATIONS BY THE STATE AND IS IN NO WAY WARRANTED TO INDICATE THE CONDITIONS OF ACTUAL QUANTITIES OF WORK WHICH WILL BE REQUIRED.

Plotted: 12/23/2013

DESIGNER/DRAFTER: EW
CHECKED BY: CW
SCALE AS NOTED

STATE OF CONNECTICUT
DEPARTMENT OF TRANSPORTATION

Filename: $FILE$

SIGNATURE/BLOCK:

Stantec Consulting Services Inc.
2321 Whitney Ave.
Hamden, CT 06518

PROJECT TITLE: REHABILITATION OF BRIDGE I-91 NB & SB OVER US 5, AMTRAK & FERRY STREET

TOWN: NEW HAVEN

DRAWING TITLE: GENERAL NOTES & QUANTITIES

PROJECT NO. 092-0612
DRAWING NO. S-04
SHEET NO. 04.04

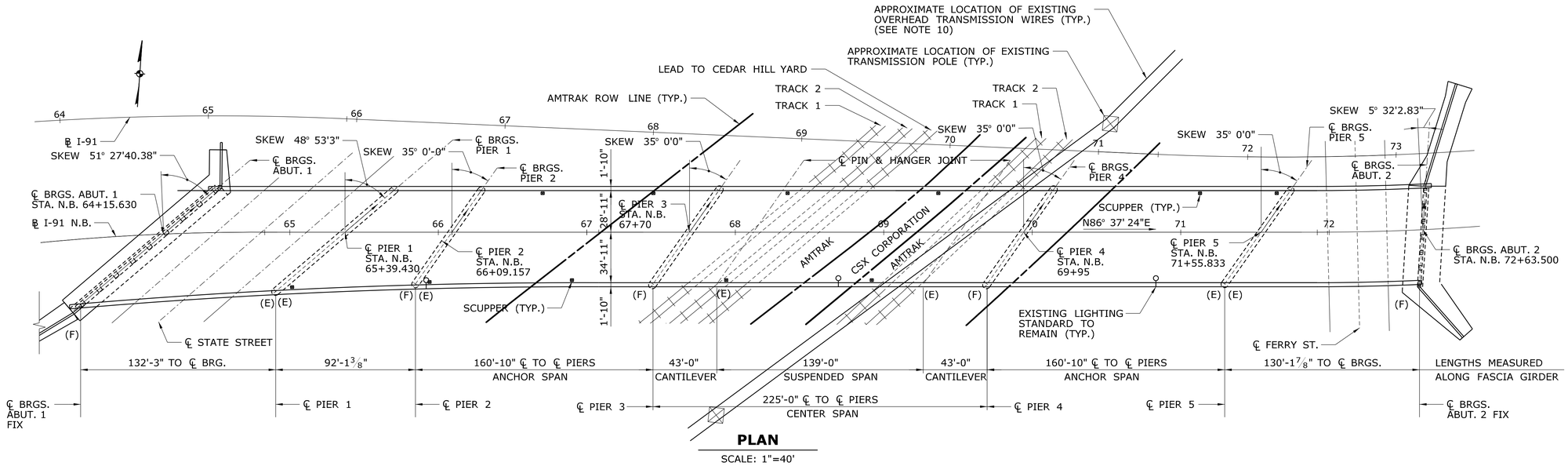

PLAN

SCALE: 1"=40'

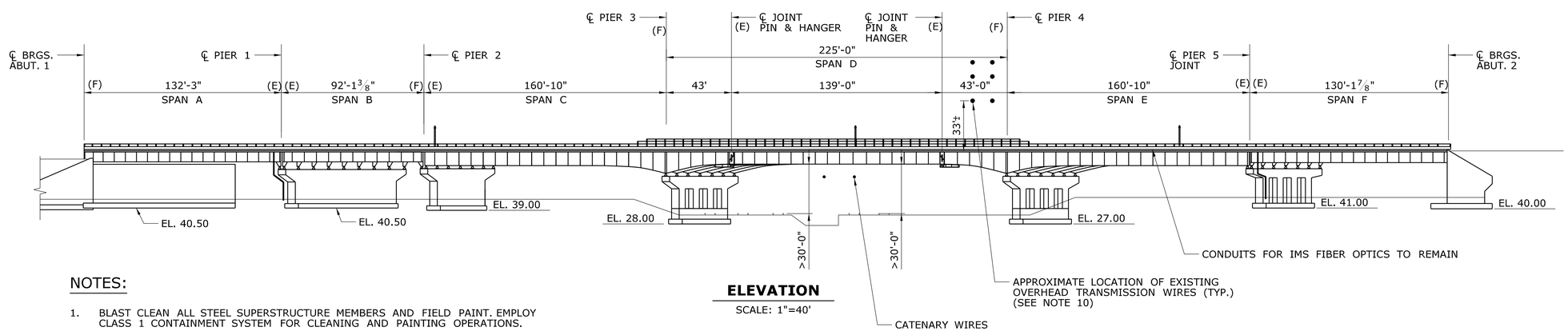

ELEVATION

SCALE: 1"=40'

NOTES:

1. BLAST CLEAN ALL STEEL SUPERSTRUCTURE MEMBERS AND FIELD PAINT. EMPLOY CLASS 1 CONTAINMENT SYSTEM FOR CLEANING AND PAINTING OPERATIONS.
2. REMOVE OVERLAY AND WATERPROOF MEMBRANE SYSTEM, REPLACE WITH NEW WEARING SURFACE AND MEMBRANE WATERPROOFING AFTER PERFORMING DECK REPAIRS.
3. JOINT AT ABUTMENT 2 TO BE REPLACED WITH ASPHALTIC PLUG EXPANSION JOINT SYSTEM. JOINTS AT ABUTMENT 1, EAST PIN AND HANGER, WEST PIN AND HANGER, AND PIERS 1, 2 AND 5 TO BE REPLACED WITH SILICONE EXPANSION JOINT SYSTEM.
4. ALL EXPANSION BEARINGS AND SOLE PLATES IN SPAN A, SPAN B GIRDERS B-1 AND B-2, AND SPANS C THROUGH F TO BE REPLACED WITH ELASTOMERIC BEARINGS.
5. INSTALL CONCRETE KEEPER BLOCKS AT PIERS 1, 2 AND 5.
6. HAUNCH OVERHANG IN SPANS A, D AND F TO BE REMOVED FOR THE ENTIRE LENGTH OF THE SPAN.
7. ONLY ONE SIDEWALK MAY BE CLOSED TO PEDESTRIAN ACCESS ON STATE STREET AND FERRY STREET AT ANY GIVEN TIME DURING OVERHEAD CONSTRUCTION OPERATIONS. SEE MAINTENANCE AND PROTECTION OF TRAFFIC SUBSET FOR SIDEWALK CLOSURE DETAILS. THIS WORK TO BE INCLUDED IN THE ITEM "MAINTENANCE AND PROTECTION OF TRAFFIC."
8. MAINTAIN 10' MINIMUM CLEARANCE FROM CATENARY WIRES OVER AMTRAK.
9. CLEAN ENTIRE BRIDGE DRAINAGE SYSTEM AND SCUPPERS.
10. THE CONTRACTOR SHALL MAINTAIN A MINIMUM OF 20 FEET CLEARANCE FROM THE OVERHEAD TRANSMISSION WIRE AT ALL TIMES.

REV.	DATE	REVISION DESCRIPTION	SHEET NO.

THE INFORMATION, INCLUDING ESTIMATED QUANTITIES OF WORK, SHOWN ON THESE SHEETS IS BASED ON LIMITED INVESTIGATIONS BY THE STATE AND IS IN NO WAY WARRANTED TO INDICATE THE CONDITIONS OF ACTUAL QUANTITIES OF WORK WHICH WILL BE REQUIRED.

Plotted: 12/23/2013

DESIGNER/DRAFTER: EW
CHECKED BY: CW
SCALE AS NOTED

STATE OF CONNECTICUT
DEPARTMENT OF TRANSPORTATION

Filename: $FILE$

SIGNATURE/BLOCK:

Stantec Consulting Services Inc.
2321 Whitney Ave.
Hamden, CT 06518

PROJECT TITLE:
REHABILITATION OF BRIDGE I-91 NB & SB OVER US 5, AMTRAK & FERRY STREET

TOWN: **NEW HAVEN**

DRAWING TITLE: **NB: GENERAL PLAN & ELEVATION**

PROJECT NO. 092-0612
DRAWING NO. S-05
SHEET NO. 04.05

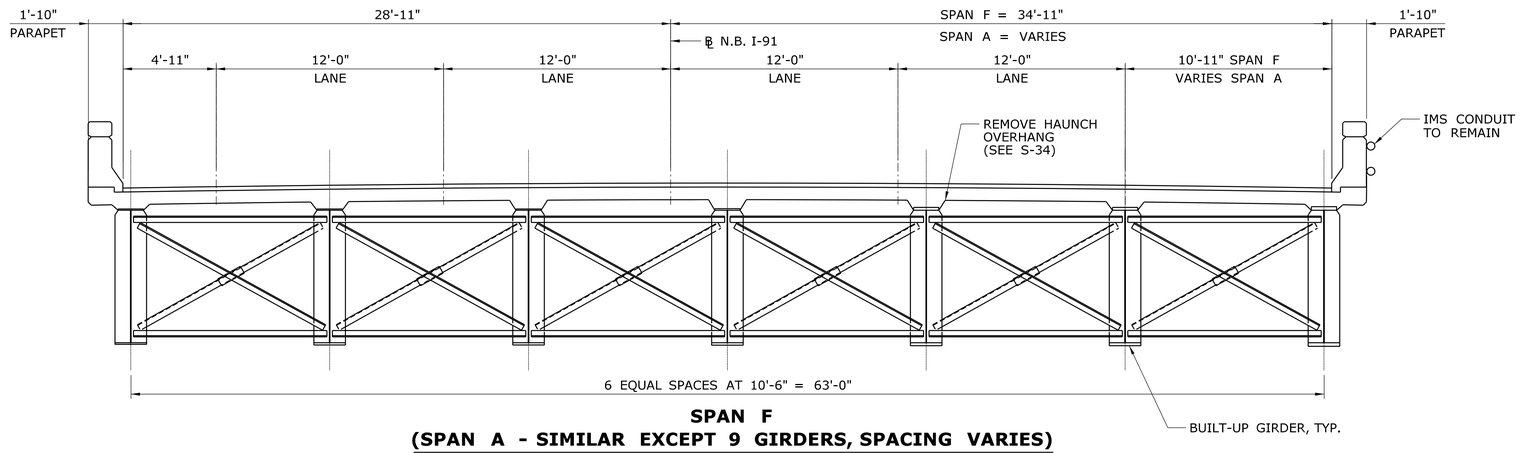

SPAN F
(SPAN A - SIMILAR EXCEPT 9 GIRDERS, SPACING VARIES)

SCALE : 1/4" = 1'-0"

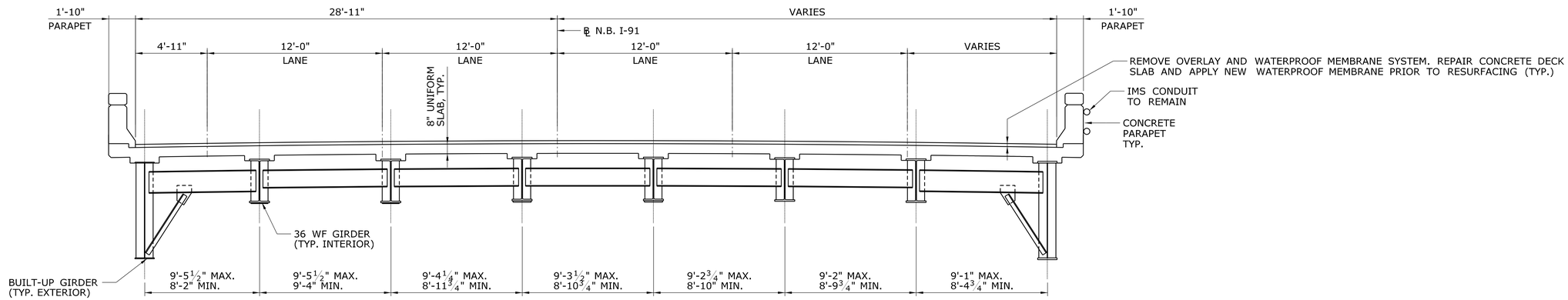

SPAN B

SCALE : 1/4" = 1'-0"

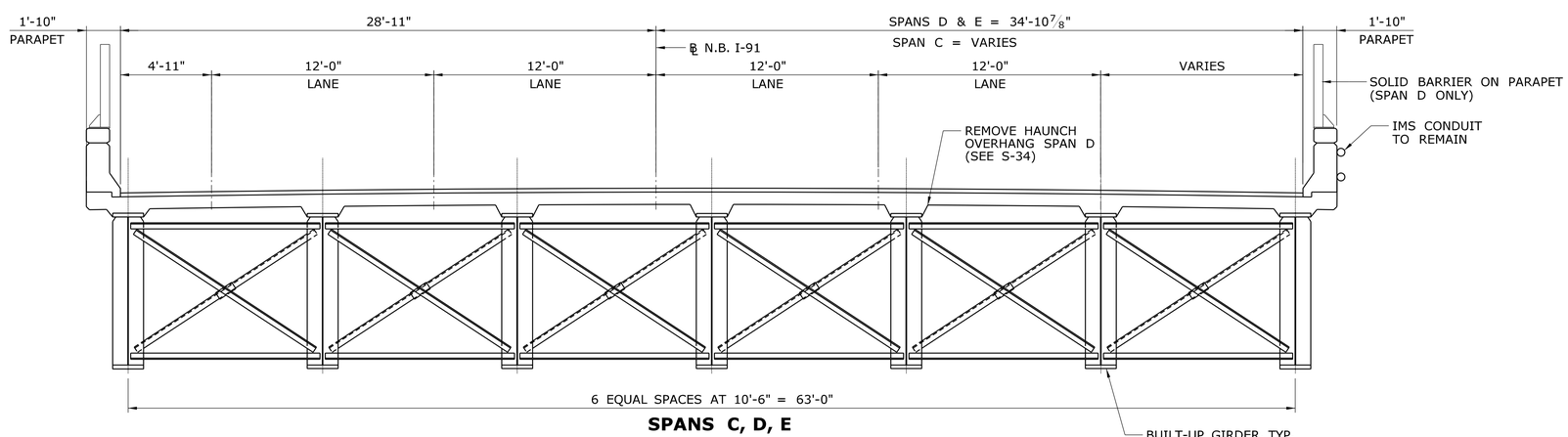

SPANS C, D, E
MAIN STRUCTURE

SCALE : 1/4" = 1'-0"

NOTES:

1. BLAST CLEAN ALL STEEL SUPERSTRUCTURE MEMBERS AND FIELD PAINT. EMPLOY CLASS 1 CONTAINMENT SYSTEM FOR CLEANING AND PAINTING OPERATIONS.
2. REMOVE OVERLAY AND WATERPROOF MEMBRANE SYSTEM, REPLACE WITH NEW WEARING SURFACE AND MEMBRANE WATERPROOFING.
3. REPAIR AREAS OF DETERIORATED CONCRETE DECK ENCOUNTERED AFTER MILLING OPERATIONS HAVE BEEN COMPLETED PRIOR TO RESURFACING.

REV.	DATE	REVISION DESCRIPTION	SHEET NO.

THE INFORMATION, INCLUDING ESTIMATED QUANTITIES OF WORK, SHOWN ON THESE SHEETS IS BASED ON LIMITED INVESTIGATIONS BY THE STATE AND IS IN NO WAY WARRANTED TO INDICATE THE CONDITIONS OF ACTUAL QUANTITIES OF WORK WHICH WILL BE REQUIRED.

Plotted: 12/23/2013

DESIGNER/DRAFTER: EW
CHECKED BY: CW
SCALE AS NOTED

STATE OF CONNECTICUT
DEPARTMENT OF TRANSPORTATION

Filename: $FILE$

SIGNATURE/BLOCK:

Stantec Consulting Services Inc.
2321 Whitney Ave.
Hamden, CT 06518

PROJECT TITLE:
REHABILITATION OF BRIDGE I-91 NB & SB OVER US 5, AMTRAK & FERRY STREET

TOWN: **NEW HAVEN**

DRAWING TITLE: **NB: TYPICAL BRIDGE SECTIONS**

PROJECT NO. **092-0612**
DRAWING NO. **S-06**
SHEET NO. **04.06**

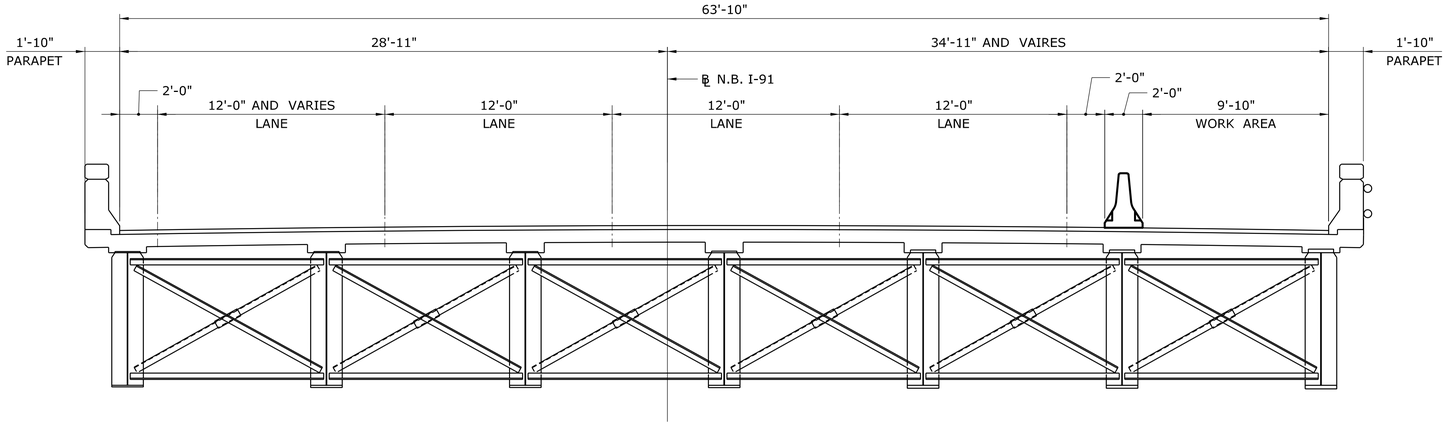

NORTHBOUND LEFT SHOULDER CLOSURE

SCALE : ¼" = 1'-0"

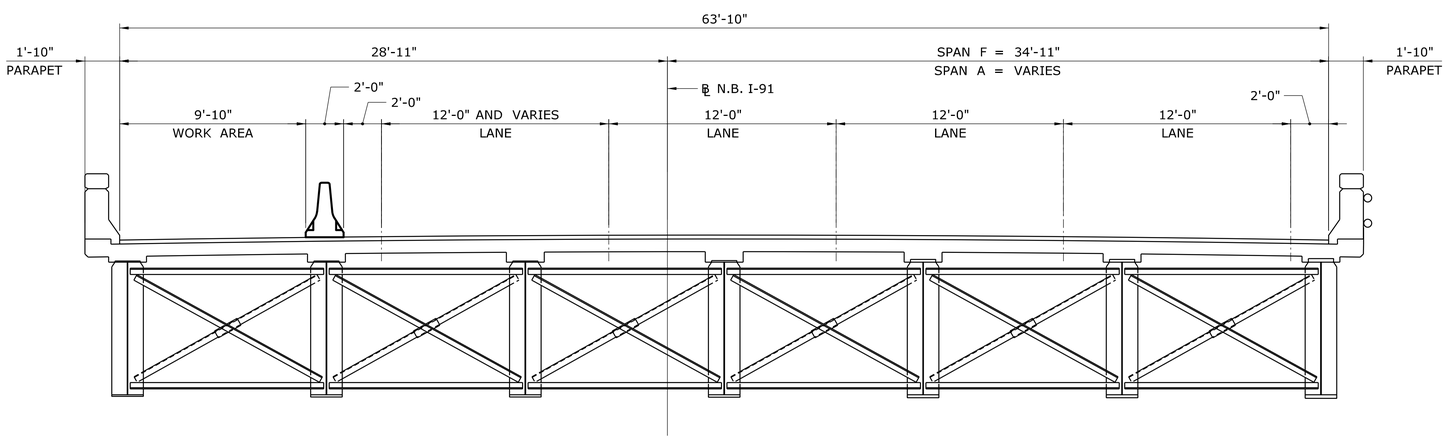

NORTHBOUND RIGHT SHOULDER CLOSURE

SCALE : ¼" = 1'-0"

REV.	DATE	REVISION DESCRIPTION	SHEET NO.

THE INFORMATION, INCLUDING ESTIMATED QUANTITIES OF WORK, SHOWN ON THESE SHEETS IS BASED ON LIMITED INVESTIGATIONS BY THE STATE AND IS IN NO WAY WARRANTED TO INDICATE THE CONDITIONS OF ACTUAL QUANTITIES OF WORK WHICH WILL BE REQUIRED.

Plotted: 12/23/2013

DESIGNER/DRAFTER: JRA

CHECKED BY: AML

SCALE AS NOTED

STATE OF CONNECTICUT
DEPARTMENT OF TRANSPORTATION

Filename: $FILE$

SIGNATURE/ BLOCK:

Stantec Consulting Services Inc.
2321 Whitney Ave.
Hamden, CT 06518

PROJECT TITLE:

REHABILITATION OF BRIDGE I-91 NB & SB OVER US 5, AMTRAK & FERRY STREET

TOWN: **NEW HAVEN**

DRAWING TITLE: **NB: CONSTRUCTION STAGING**

PROJECT NO. **092-0612**

DRAWING NO. **S-07**

SHEET NO. **04.07**

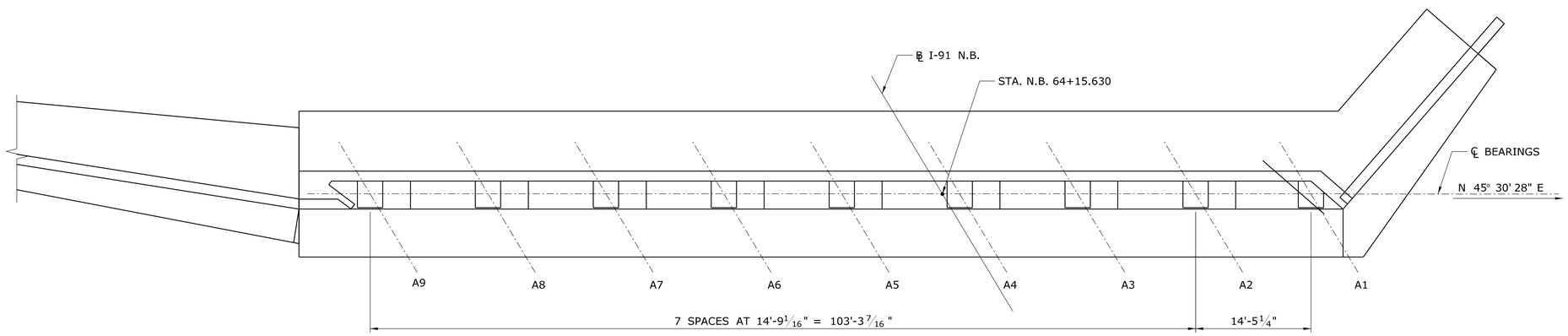

ABUTMENT 1 PLAN

SCALE : 1/8" = 1'-0"

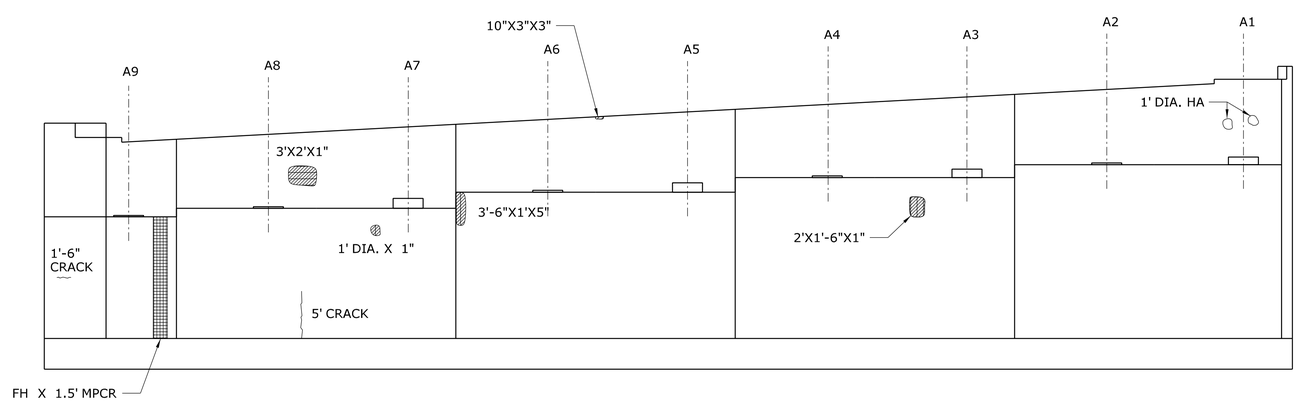

ABUTMENT 1 ELEVATION

SCALE : 1/8" = 1'-0"

NOTES:

1. SEE DRAWING S-14 FOR REPAIR DETAILS.
2. SEE DRAWING S-04 FOR CONCRETE REPAIR NOTES.
3. REMOVE VEGETATIVE GROWTH. TO BE PAID FOR UNDER THE ITEM "CLEARING AND GRUBBING."

LEGEND

HA = HOLLOW AREA

MPCR = MAP CRACKING

FH = FULL HEIGHT

DIA. = DIAMETER

CRACK

HOLLOW AREA

MAP CRACKING

SPALL AREA

SPALL AREA WITH EXPOSED REBAR

REV.	DATE	REVISION DESCRIPTION	SHEET NO.

THE INFORMATION, INCLUDING ESTIMATED QUANTITIES OF WORK, SHOWN ON THESE SHEETS IS BASED ON LIMITED INVESTIGATIONS BY THE STATE AND IS IN NO WAY WARRANTED TO INDICATE THE CONDITIONS OF ACTUAL QUANTITIES OF WORK WHICH WILL BE REQUIRED.

Plotted: 12/23/2013

DESIGNER/DRAFTER: EW

CHECKED BY: CW

SCALE AS NOTED

STATE OF CONNECTICUT
DEPARTMENT OF TRANSPORTATION

Filename: $FILE$

SIGNATURE/ BLOCK:

Stantec Consulting Services Inc.
2321 Whitney Ave.
Hamden, CT 06518

PROJECT TITLE:

REHABILITATION OF BRIDGE I-91 NB & SB OVER US 5, AMTRAK & FERRY STREET

TOWN: **NEW HAVEN**

DRAWING TITLE: **NB: ABUTMENT 1**

PROJECT NO. **092-0612**

DRAWING NO. **S-08**

SHEET NO. **04.08**

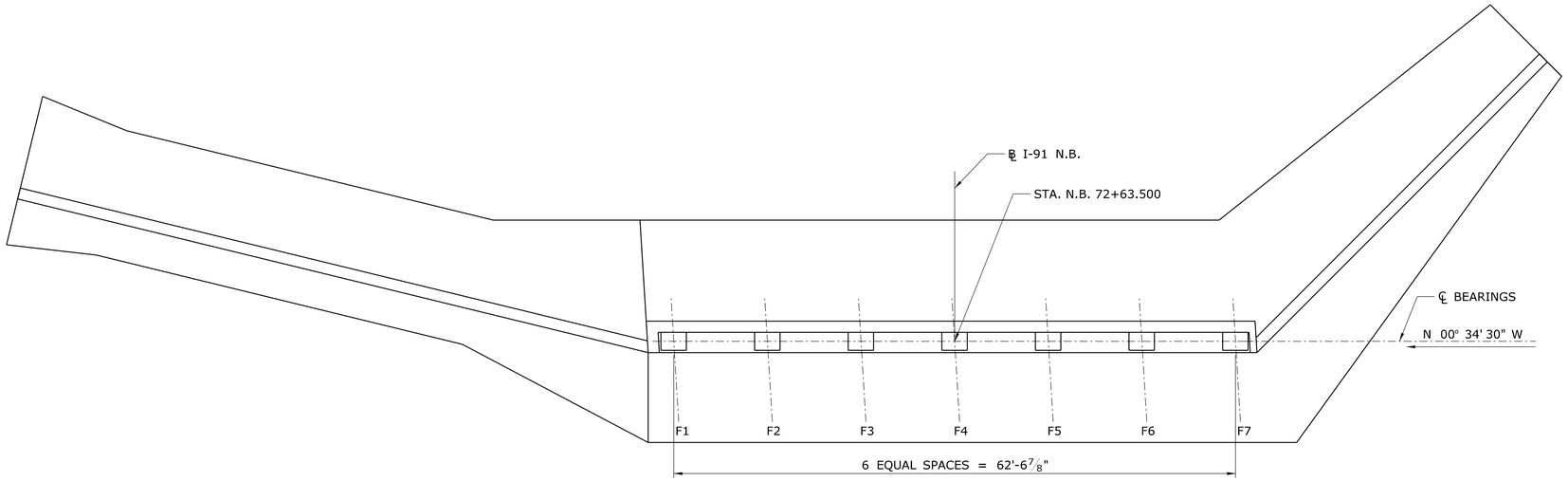

ABUTMENT 2 PLAN

SCALE : 1/8" = 1'-0"

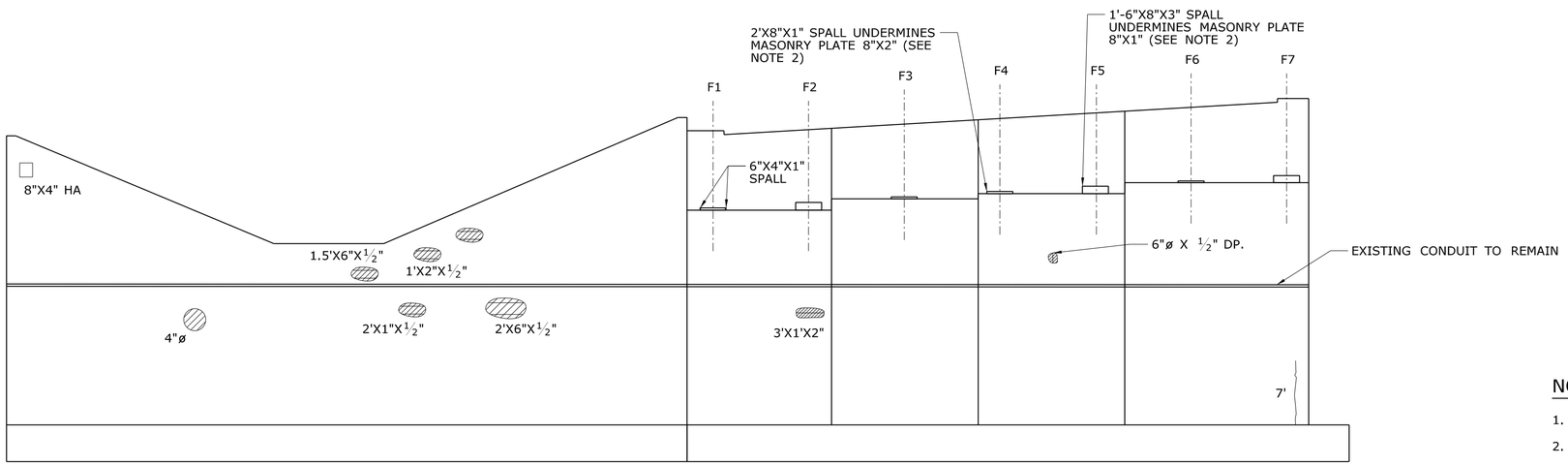

ABUTMENT 2 ELEVATION

SCALE : 1/8" = 1'-0"

NOTES:

1. SEE DRAWING S-14 FOR REPAIR DETAILS.
2. SEE DRAWING S-15 FOR PEDESTAL REPAIR DETAILS.
3. SEE DRAWING S-04 FOR CONCRETE REPAIR NOTES.
4. REMOVE VEGETATIVE GROWTH. TO BE PAID FOR UNDER THE ITEM "CLEARING AND GRUBBING."

LEGEND

- CRACK
- HOLLOW AREA
- MAP CRACKING
- SPALL AREA
- SPALL AREA WITH EXPOSED REBAR

REV.	DATE	REVISION DESCRIPTION	SHEET NO.

THE INFORMATION, INCLUDING ESTIMATED QUANTITIES OF WORK, SHOWN ON THESE SHEETS IS BASED ON LIMITED INVESTIGATIONS BY THE STATE AND IS IN NO WAY WARRANTED TO INDICATE THE CONDITIONS OF ACTUAL QUANTITIES OF WORK WHICH WILL BE REQUIRED.

Plotted: 12/23/2013

DESIGNER/DRAFTER: EW
CHECKED BY: CW
SCALE AS NOTED

STATE OF CONNECTICUT
DEPARTMENT OF TRANSPORTATION

Filename: $FILE$

SIGNATURE/BLOCK:

Stantec Consulting Services Inc.
2321 Whitney Ave.
Hamden, CT 06518

PROJECT TITLE:
REHABILITATION OF BRIDGE I-91 NB & SB OVER US 5, AMTRAK & FERRY STREET

TOWN: **NEW HAVEN**

DRAWING TITLE: **NB: ABUTMENT 2**

PROJECT NO. **092-0612**
DRAWING NO. **S-09**
SHEET NO. **04.09**

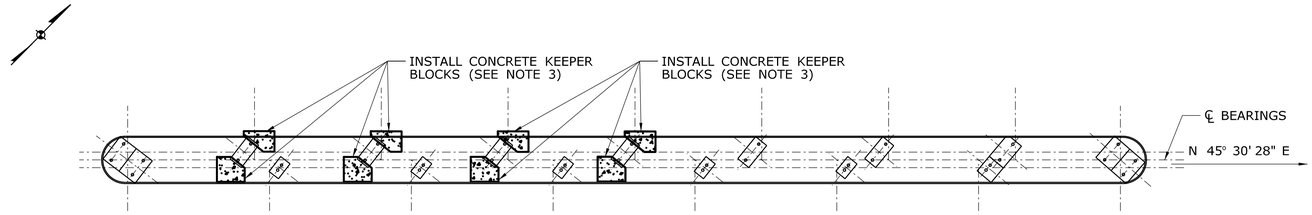

PIER 1 PLAN

SCALE : 1/8" = 1'-0"

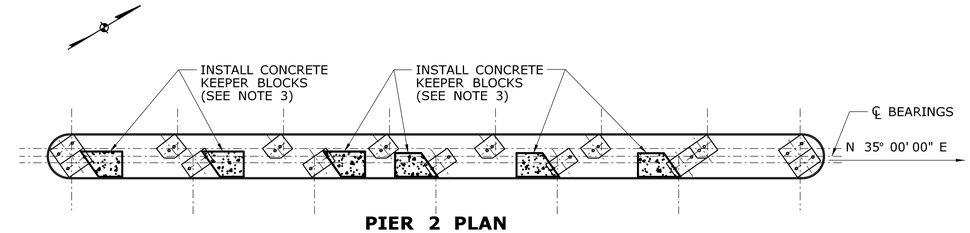

PIER 2 PLAN

SCALE : 1/8" = 1'-0"

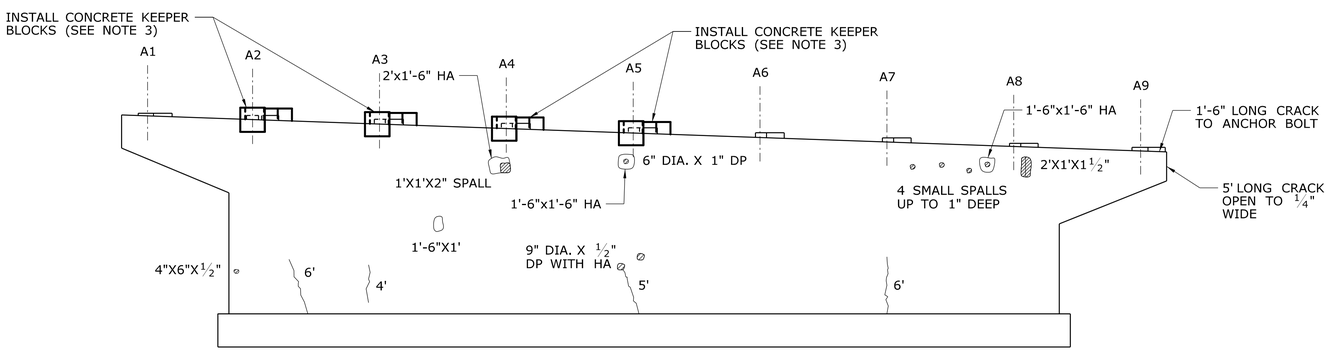

PIER 1 WEST ELEVATION

SCALE : 1/8" = 1'-0"

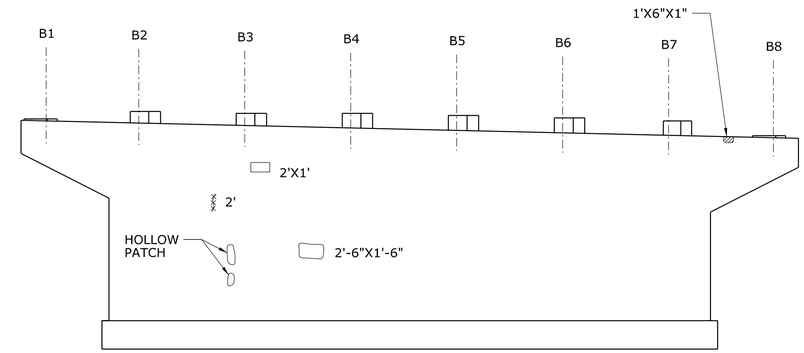

PIER 2 WEST ELEVATION

SCALE : 1/8" = 1'-0"

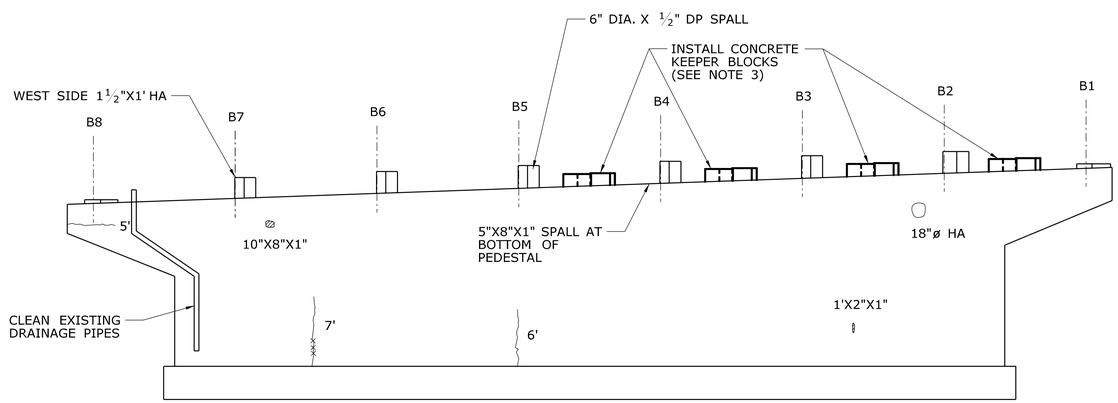

PIER 1 EAST ELEVATION

SCALE : 1/8" = 1'-0"

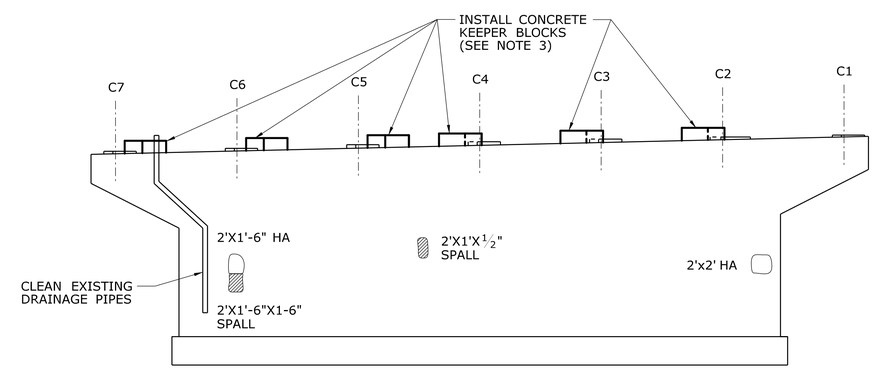

PIER 2 EAST ELEVATION

SCALE : 1/8" = 1'-0"

NOTES:

1. SEE DRAWING S-14 FOR REPAIR DETAILS.
2. SEE DRAWING S-04 FOR CONCRETE REPAIR NOTES.
3. SEE DRAWING S-13 FOR KEEPER BLOCK DETAILS.
4. REMOVE VEGETATIVE GROWTH. TO BE PAID FOR UNDER THE ITEM "CLEARING AND GRUBBING."

LEGEND

- CRACK
- HOLLOW AREA
- SPALL AREA
- SPALL AREA WITH EXPOSED REBAR

DIA. = DIAMETER

DP = DEEP

HA = HOLLOW AREA

REV.	DATE	REVISION DESCRIPTION	SHEET NO.

THE INFORMATION, INCLUDING ESTIMATED QUANTITIES OF WORK, SHOWN ON THESE SHEETS IS BASED ON LIMITED INVESTIGATIONS BY THE STATE AND IS IN NO WAY WARRANTED TO INDICATE THE CONDITIONS OF ACTUAL QUANTITIES OF WORK WHICH WILL BE REQUIRED.

Plotted: 12/23/2013

DESIGNER/DRAFTER: EW

CHECKED BY: CW

SCALE AS NOTED

STATE OF CONNECTICUT
DEPARTMENT OF TRANSPORTATION

Filename: $FILE$

SIGNATURE/BLOCK:

Stantec Consulting Services Inc.
2321 Whitney Ave.
Hamden, CT 06518

PROJECT TITLE:

REHABILITATION OF BRIDGE I-91 NB & SB OVER US 5, AMTRAK & FERRY STREET

TOWN: **NEW HAVEN**

DRAWING TITLE: **NB: PIERS 1 & 2**

PROJECT NO. **092-0612**

DRAWING NO. **S-10**

SHEET NO. **04.10**

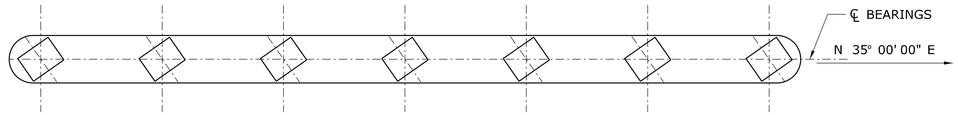

PIER 3 PLAN

SCALE : 1/8" = 1'-0"

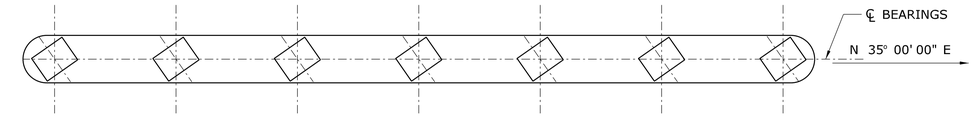

PIER 4 PLAN

SCALE : 1/8" = 1'-0"

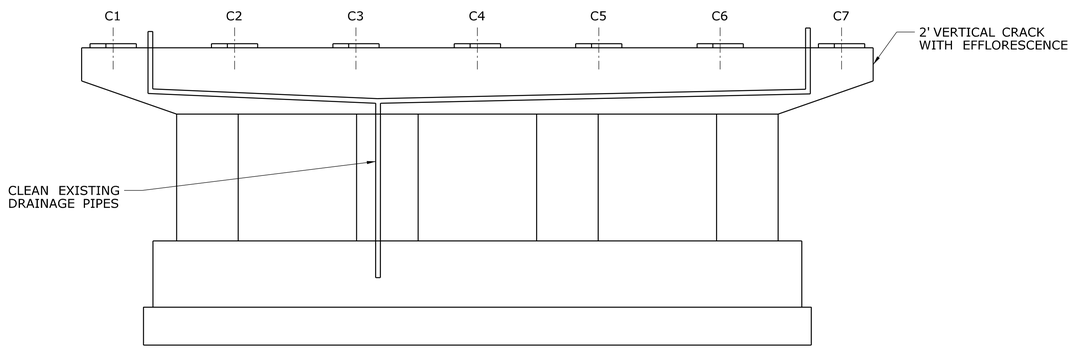

PIER 3 WEST ELEVATION

SCALE : 1/8" = 1'-0"

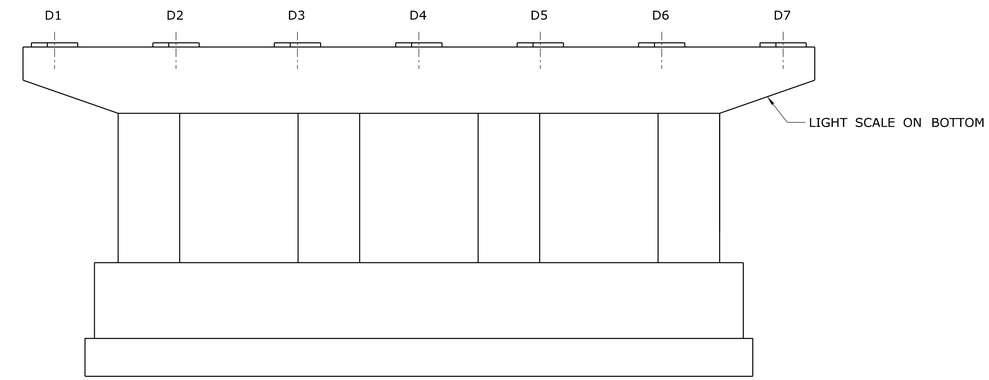

PIER 4 WEST ELEVATION

SCALE : 1/8" = 1'-0"

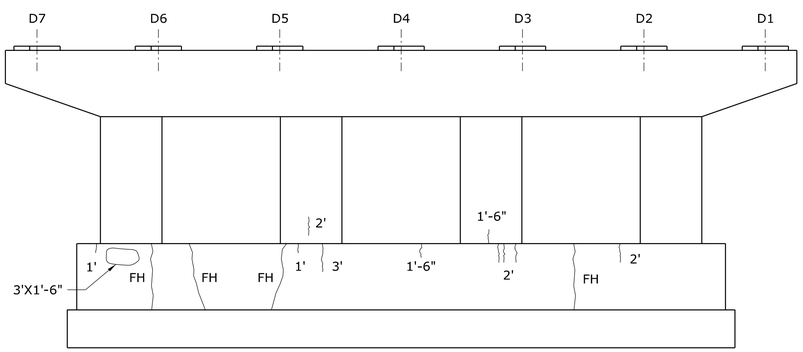

PIER 3 EAST ELEVATION

SCALE : 1/8" = 1'-0"

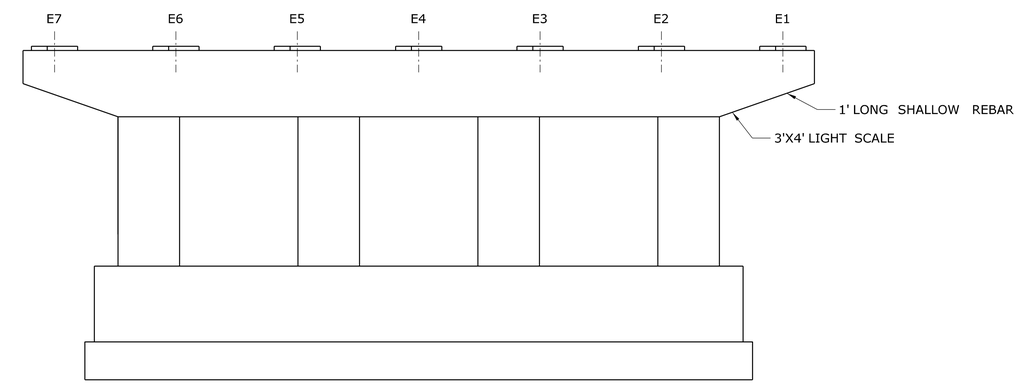

PIER 4 EAST ELEVATION

SCALE : 1/8" = 1'-0"

NOTES:

1. SEE DRAWING S-14 FOR REPAIR DETAILS.
2. SEE DRAWING S-04 FOR CONCRETE REPAIR NOTES.
3. REMOVE VEGETATIVE GROWTH. TO BE PAID FOR UNDER THE ITEM "CLEARING AND GRUBBING."
4. PIER 3 AND 4 ARE LOCATED WITHIN AMTRAK RIGHT-OF-WAY. SEE GENERAL PLAN.

LEGEND

CRACK

HOLLOW AREA

FH = FULL HEIGHT

REV.	DATE	REVISION DESCRIPTION	SHEET NO.

THE INFORMATION, INCLUDING ESTIMATED QUANTITIES OF WORK, SHOWN ON THESE SHEETS IS BASED ON LIMITED INVESTIGATIONS BY THE STATE AND IS IN NO WAY WARRANTED TO INDICATE THE CONDITIONS OF ACTUAL QUANTITIES OF WORK WHICH WILL BE REQUIRED.

Plotted: 12/23/2013

DESIGNER/DRAFTER: EW

CHECKED BY: CW

SCALE AS NOTED

STATE OF CONNECTICUT
DEPARTMENT OF TRANSPORTATION

Filename: $FILE$

SIGNATURE/ BLOCK:

Stantec Consulting Services Inc.
2321 Whitney Ave.
Hamden, CT 06518

PROJECT TITLE:

REHABILITATION OF BRIDGE I-91 NB & SB OVER US 5, AMTRAK & FERRY STREET

TOWN: **NEW HAVEN**

DRAWING TITLE: **NB: PIERS 3 & 4**

PROJECT NO. **092-0612**

DRAWING NO. **S-11**

SHEET NO. **04.11**

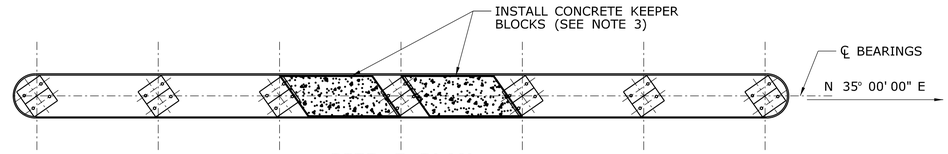

PIER 5 PLAN

SCALE : 1/8" = 1'-0"

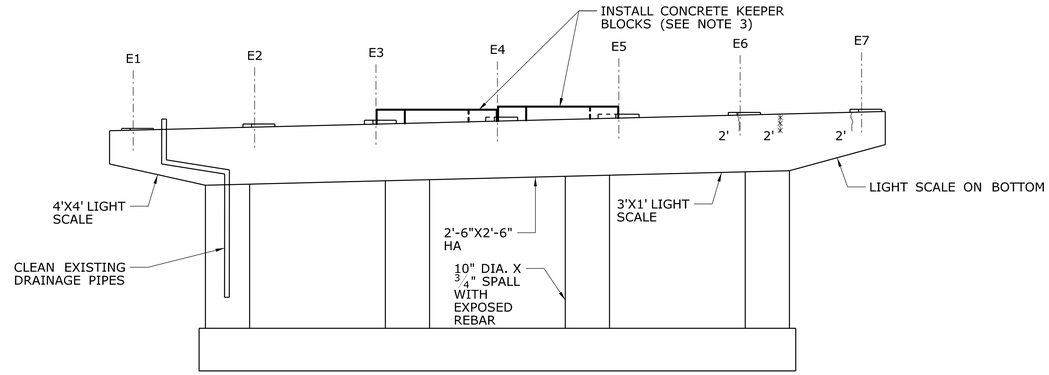

PIER 5 WEST ELEVATION

SCALE : 1/8" = 1'-0"

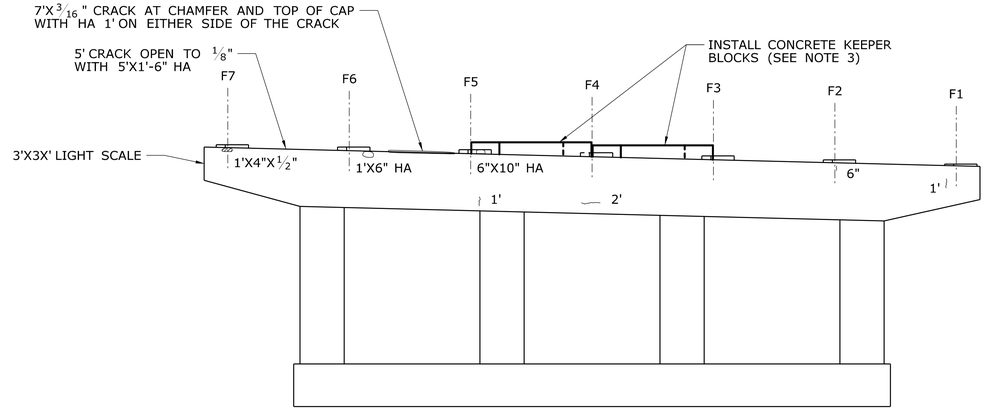

PIER 5 EAST ELEVATION

SCALE : 1/8" = 1'-0"

NOTES:

1. SEE DRAWING S-14 FOR REPAIR DETAILS.
2. SEE DRAWING S-04 FOR CONCRETE REPAIR NOTES.
3. SEE DRAWING S-13 FOR KEEPER BLOCK DETAILS.
4. REMOVE VEGETATIVE GROWTH. TO BE PAID FOR UNDER THE ITEM "CLEARING AND GRUBBING."

LEGEND

CRACK — DIA. = DIAMETER

HOLLOW AREA — HA = HOLLOW AREA

REV.	DATE	REVISION DESCRIPTION	SHEET NO.

THE INFORMATION, INCLUDING ESTIMATED QUANTITIES OF WORK, SHOWN ON THESE SHEETS IS BASED ON LIMITED INVESTIGATIONS BY THE STATE AND IS IN NO WAY WARRANTED TO INDICATE THE CONDITIONS OF ACTUAL QUANTITIES OF WORK WHICH WILL BE REQUIRED.

Plotted: 12/23/2013

DESIGNER/DRAFTER: EW

CHECKED BY: CW

SCALE AS NOTED

STATE OF CONNECTICUT
DEPARTMENT OF TRANSPORTATION

Filename: $FILE$

SIGNATURE/BLOCK:

Stantec Consulting Services Inc.
2321 Whitney Ave.
Hamden, CT 06518

PROJECT TITLE:
REHABILITATION OF BRIDGE I-91 NB & SB OVER US 5, AMTRAK & FERRY STREET

TOWN: **NEW HAVEN**

DRAWING TITLE: **NB: PIER 5**

PROJECT NO. **092-0612**

DRAWING NO. **S-12**

SHEET NO. **04.12**

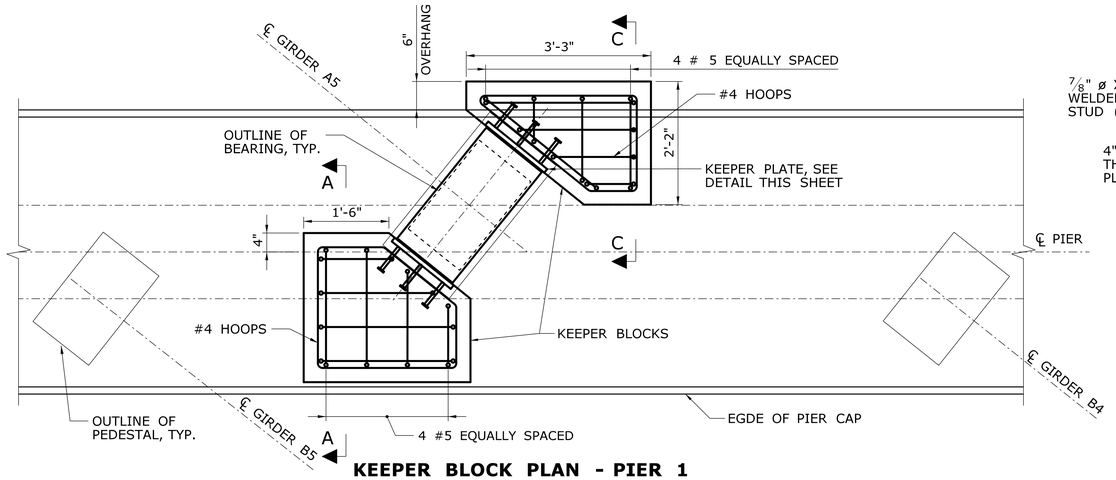

KEEPER BLOCK PLAN - PIER 1

SCALE: $\frac{3}{4}$" = 1'-0"

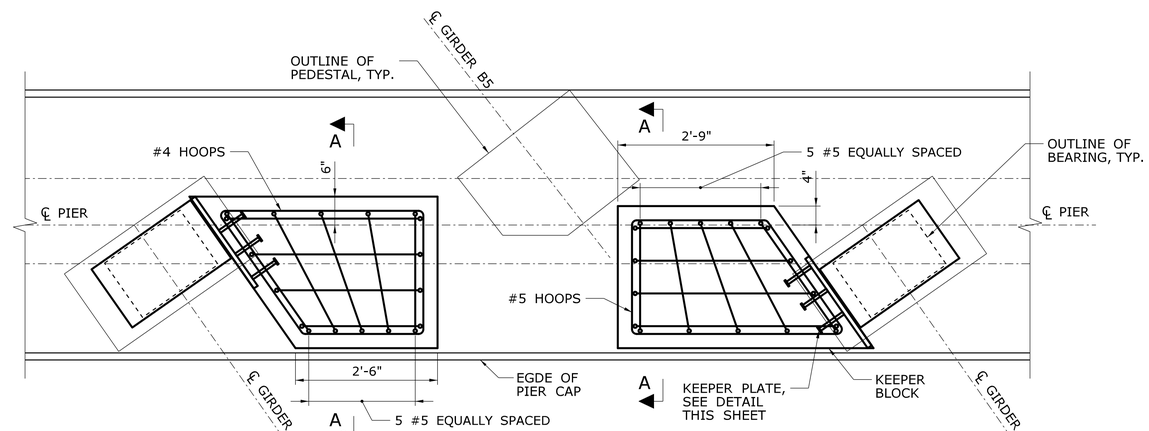

KEEPER BLOCK PLAN - PIER 2

SCALE: $\frac{3}{4}$" = 1'-0"

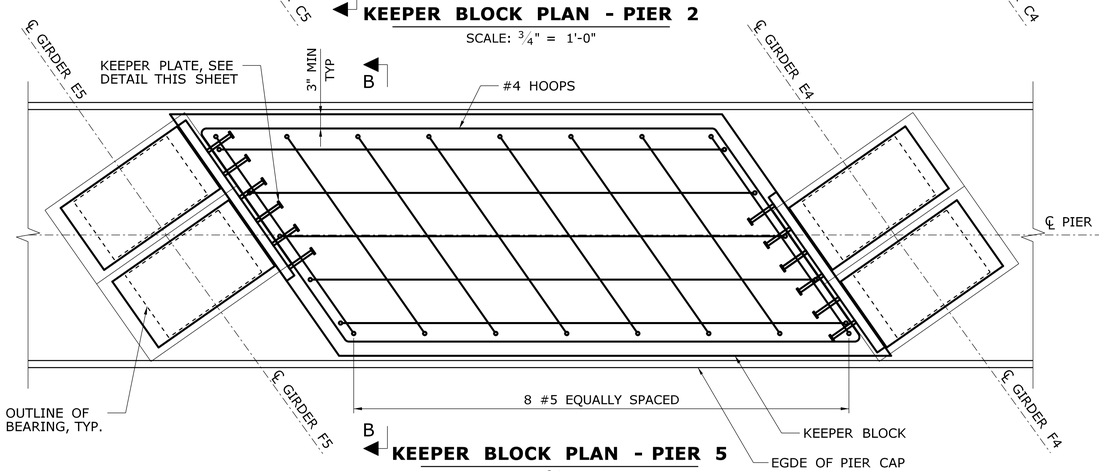

KEEPER BLOCK PLAN - PIER 5

SCALE: $\frac{3}{4}$" = 1'-0"

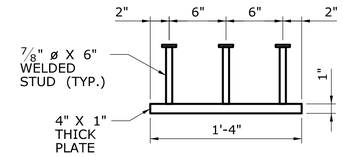

PIER 1 KEEPER PLATE

SCALE: $1\frac{1}{2}$" = 1'-0"

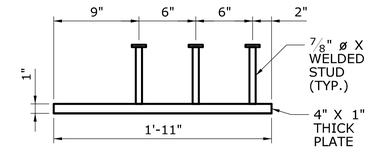

PIER 2 KEEPER PLATE

SCALE: $1\frac{1}{2}$" = 1'-0"

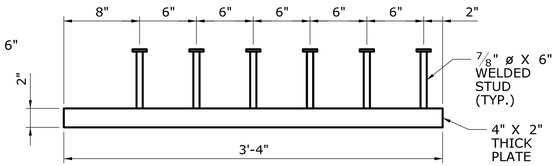

PIER 5 KEEPER PLATE

SCALE: $1\frac{1}{2}$" = 1'-0"

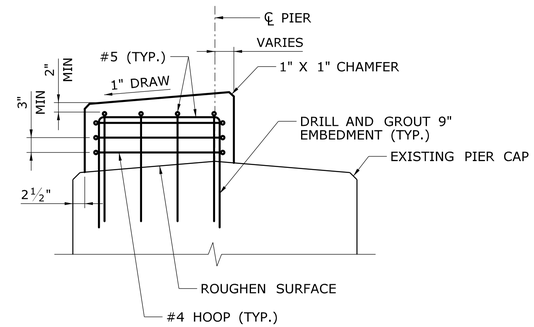

SECTION A-A

SCALE: $\frac{3}{4}$" = 1'-0"

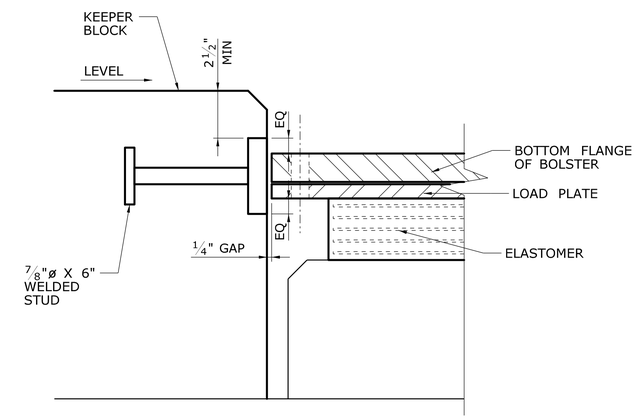

KEEPER BLOCK DETAIL

SCALE: 3" = 1'-0"

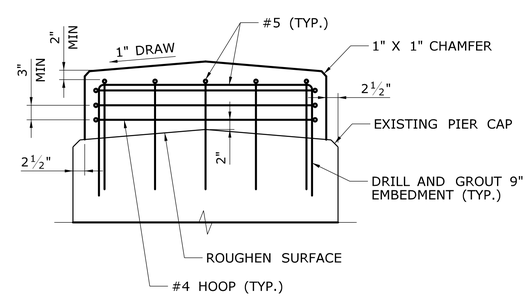

SECTION B-B

SCALE: $\frac{3}{4}$" = 1'-0"

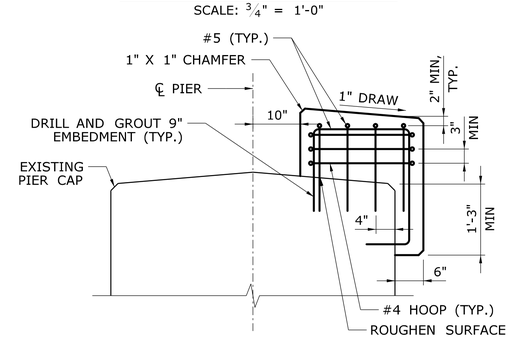

SECTION C-C

SCALE: $\frac{3}{4}$" = 1'-0"

CONCRETE KEEPER BLOCK NOTES:

1. CLASS 'F' CONCRETE SHALL BE USED FOR CONSTRUCTION OF CONCRETE KEEPER BLOCKS.
2. REINFORCEMENT SHALL BE UNCOATED AND CONFORM TO ASTM 615, GRADE 60. ALL REINFORCING SHALL HAVE 2" COVER, UNLESS DIMENSIONED OTHERWISE.
3. STEEL KEEPER PLATES SHALL CONFORM TO THE REQUIREMENTS OF AASHTO M270, GRADE 50 AND BE HOT-DIP GALVANIZED ACCORDING TO THE REQUIREMENTS OF ASTM A123 AFTER STUDS HAVE BEEN ATTACHED.
4. THE KEEPER BLOCKS SHALL BE CONSTRUCTED AFTER THE ELASTOMERIC BEARINGS HAVE BEEN INSTALLED. KEEPER PLATES AND TOP OF KEEPER BLOCK SHALL BE LOCATED RELATIVE TO THE INSTALLED LOCATION OF THE BEVELED SOLE PLATE AND LOAD PLATE, AS SHOWN ON THE KEEPER BLOCK DETAIL.
5. WHEN DRILLING HOLES IN THE PIER CAPS, THE CONTRACTOR SHALL AVOID ALL EXISTING REINFORCEMENT. A PACHOMETER SHALL BE USED TO LOCATE THE EXISTING REINFORCEMENT. THE HOLE DIAMETER AND DEPTH SHALL BE AS RECOMMENDED BY THE MANUFACTURER OF THE CHEMICAL ANCHORING MATERIAL FOR THE REINFORCING BAR SIZE SPECIFIED.
6. PRIOR TO PLACING THE CONCRETE, THE EXISTING CONCRETE SURFACES SHALL BE CLEANED AND FRE OF DIRT, DUST AND OTHER FOREIGN MATTER. THE ROUGHENED SURFACE SHALL BE DAMPENED WITH WATER JUST PRIOR TO PLACING THE CONCRETE. ANY STANDING WATER SHALL BE REMOVED.
7. THE COST OF CONSTRUCTING THE KEEPER BLOCKS, INCLUDING REINFORCING, DRILLING AND GROUTING OF DOWELS AND STEEL KEEPER PLATES WITH STUDS, SHALL BE INCLUDED IN THE ITEM "CONSTRUCT CONCRETE KEEPER BLOCKS".
8. KEEPER BLOCK DETAILS ARE TYPICAL FOR EACH PIER AND SHALL BE USED AT ALL KEEPER BLOCK LOCATIONS AT EACH PIER.

REV.	DATE	REVISION DESCRIPTION	SHEET NO.

THE INFORMATION, INCLUDING ESTIMATED QUANTITIES OF WORK, SHOWN ON THESE SHEETS IS BASED ON LIMITED INVESTIGATIONS BY THE STATE AND IS IN NO WAY WARRANTED TO INDICATE THE CONDITIONS OF ACTUAL QUANTITIES OF WORK WHICH WILL BE REQUIRED.

Plotted: 12/23/2013

DESIGNER/DRAFTER: EW

CHECKED BY: CW

SCALE AS NOTED

STATE OF CONNECTICUT
DEPARTMENT OF TRANSPORTATION

Filename: $FILE$

SIGNATURE/BLOCK:

Stantec Consulting Services Inc.
2321 Whitney Ave.
Hamden, CT 06518

PROJECT TITLE:
REHABILITATION OF BRIDGE I-91 NB & SB OVER US 5, AMTRAK & FERRY STREET

TOWN: **NEW HAVEN**

DRAWING TITLE: **NB: KEEPER BLOCK DETAILS**

PROJECT NO. **092-0612**

DRAWING NO. **S-13**

SHEET NO. **04.13**

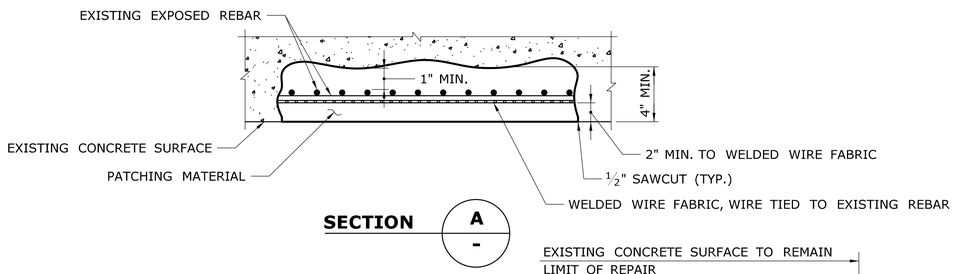

SECTION A / -

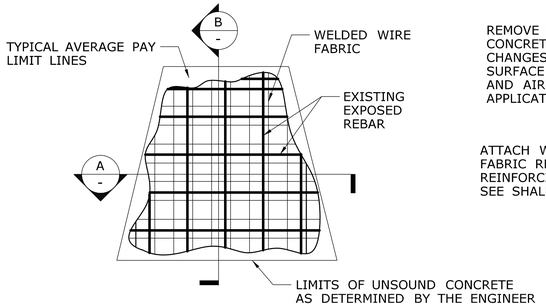

ELEVATION

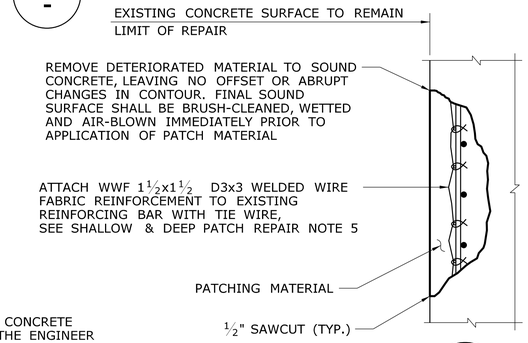

SECTION B / -

DEEP PATCH REPAIR DETAIL - WITHOUT BUILD-OUT

NOT TO SCALE

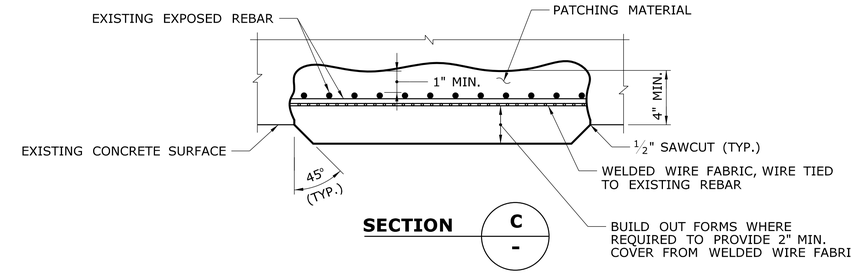

SECTION C / -

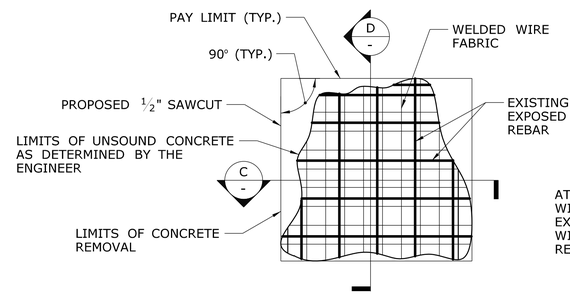

ELEVATION

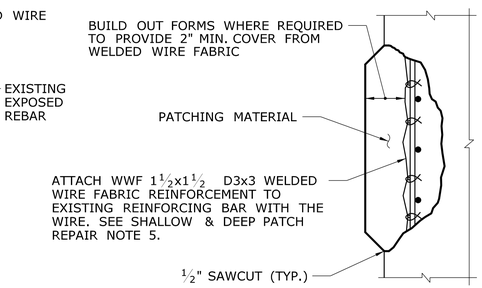

SECTION D / -

DEEP PATCH REPAIR DETAIL - WITH BUILD-OUT

NOT TO SCALE

DEEP PATCH REPAIR PROCEDURE:

1. DEEP PATCH REPAIR DETAIL APPLIES TO DETERIORATED AREAS OF REINFORCED CONCRETE WHERE REINFORCING IS EXPOSED.
2. REMOVE DETERIORATED MATERIAL TO SOUND CONCRETE LEAVING NO OFFSET OR ABRUPT CHANGES IN CONTOUR.
3. CLEAN EXISTING REINFORCING STEEL AND CONCRETE (NEWLY EXPOSED), SEE SPECIFICATIONS. MISSING OR DETERIORATED REINFORCING STEEL SHALL BE REPLACED AND SPLICED AS SHOWN IN DETAIL OR AS DIRECTED BY THE ENGINEER. COST OF SPLICING TO BE PAID UNDER THE COST FOR PATCHING MATERIAL.
4. INSTALL WELDED WIRE FABRIC AND APPLY ZINC RICH PRIMER TO EXISTING AND NEW REINFORCING STEEL IMMEDIATELY PRIOR TO PLACING PATCHING CONCRETE. COST OF WELDED WIRE FABRIC AND PRIMER TO BE PAID UNDER THE COST FOR PATCHING MATERIAL.
5. FORM AND PATCH SURFACE.
6. A MINIMUM OF 72 HOURS SHALL ELAPSE BETWEEN PLACING OF CONCRETE AND START OF NEXT ADJACENT PATCH.
7. ALL NEW EXPOSED CONCRETE SURFACES WITHIN AREA TO BE REPAIRED SHALL BE RUBBED TO PRODUCE A SMOOTH FINISH.

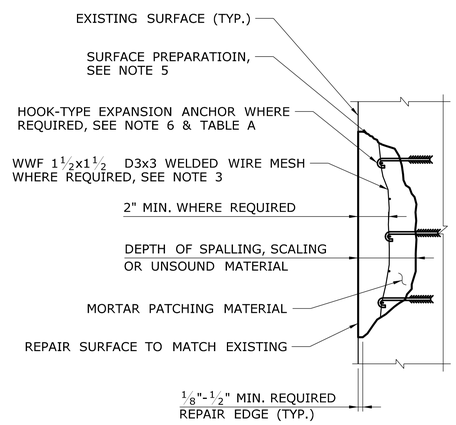

TABLE A	
SIZE AND SPACING OF HOOK-TYPE BOLTS	
THICKNESS OF PATCH MAT'L	SIZE AND SPACING
4" ±	1/2" DIA. AT 24" ± CTRS.
5" ±	1/2" DIA. AT 22" ± CTRS.
6" ±	1/2" DIA. AT 20" ± CTRS.

SHALLOW PATCH REPAIR PROCEDURE:

1. SHALLOW PATCH REPAIR DETAIL APPLIES TO DETERIORATED AREAS OF UNREINFORCED CONCRETE OR REPAIR AREAS WHERE NO REINFORCING IS EXPOSED.
2. REPAIR DEPTH SHALL BE 1/2" (MIN.) OR GREATER. REPAIR DEPTHS LESS THAN 1/2" NEED NOT BE REPAIRED.
3. FOR AREAS WHERE THE CONCRETE REPAIR EXCEED 4" IN DEPTH, A SINGLE LAYER OF WIRE MESH SHALL BE USED TO REINFORCE EACH 2" THICKNESS OF PATCHING MATERIAL. THE COST OF WELDED WIRE FABRIC SHALL BE INCLUDED IN THE COST OF PATCHING MATERIAL.
4. THE PERIMETER OF EACH DETERIORATED AREA SHALL BE SQUARED-OFF BY CHISELING OR SAWCUTTING.
5. SURFACE PREPARATION:

   REMOVE LOOSE AND DETERIORATED CONCRETE, INCLUDING DIRT, OIL, GREASE, AND ALL BOND-INHIBITING MATERIALS FROM SURFACE, LEAVING NO OFFSET OR ABRUPT CHANGES IN CONTOUR. SURFACE PREPARATION SHALL BE DONE BY SCABBLER, CHISELING, WIRE BRUSHING OR OTHER APPROPRIATE MECHANICAL MEANS.

   ROUGHEN CONTACT SURFACE WITH A MINIMUM PROFILE OF APPROXIMATELY 1/16" FOR BONDING WITH PATCHING MATERIAL.

   SATURATE WITH CLEAN WATER PRIOR TO APPLYING MORTAR. SUBSTRATE SHOULD BE SATURATED SURFACE DRY (SSD) WITH NO STANDING WATER DURING APPLICATION OF PATCHING MORTAR.
6. HOOK-TYPE EXPANSION ANCHOR BOLTS SHALL BE MECHANICALLY GALVANIZED IN ACCORDANCE WITH ASTM B695, CLASS 50, TYPE 1. COST OF HOOK-TYPE BOLTS, INCLUDING MATERIAL AND INSTALLATION, SHALL BE INCLUDED IN THE COST OF PATCHING MATERIAL.
7. NEW CONCRETE SHALL MATCH SHAPE AND COLOR OF EXISTING CONRETE SURFACE AS CLOSELY AS POSSIBLE.

SHALLOW PATCH REPAIR DETAIL

NOT TO SCALE

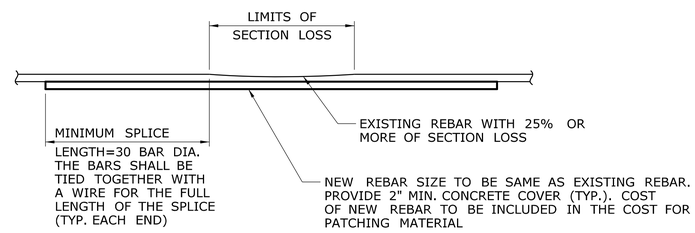

LAPPED TIED SPLICE BAR

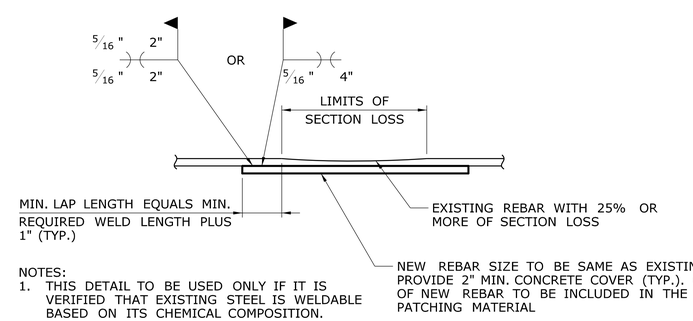

NOTES:
1. THIS DETAIL TO BE USED ONLY IF IT IS VERIFIED THAT EXISTING STEEL IS WELDABLE BASED ON ITS CHEMICAL COMPOSITION.
2. WELDING SHALL BE DONE IN ACCORDANCE AWS D1.4 STRUCTURAL WELDING CODE - REINFORCING STEEL.

LAPPED WELDED SPLICE BAR

REINFORCEMENT SPLICE DETAIL

NOT TO SCALE

SHALLOW AND DEEP PATCH REPAIR NOTES:

1. ALL WORK SHOWN ON THIS DRAWING SHALL BE PERFORMED WHERE DIRECTED BY THE ENGINEER.
2. DEEP PATCH REPAIRS SHALL BE PAID UNDER ITEM CLASS "S" CONCRETE. SHALLOW PATCH REPAIRS SHALL BE PAID UNDER ITEM "VARIABLE DEPTH PATCH." SEE SPECIAL PROVISIONS.
3. SURFACE PREPARATION, PROPORTIONING AND MIXING OF MATERIALS, APPLICATION OF MATERIALS AND REPAIR PROCEDURES SHALL BE IN ACCORDANCE WITH THE MANUFACTURER'S RECOMMENDATIONS.
4. NEW CONCRETE PATCHES SHALL MATCH SHAPE OF EXISTING CONCRETE SURFACE. COLOR OF NEW PATCH CONCRETE SHALL MATCH COLOR OF THE ADJACENT SURFACES AS CLOSELY AS POSSIBLE.
5. EXPOSED REINFORCING BARS SHALL BE BLAST CLEANED AND COATED WITH A ZINC RICH PRIMER THAT CONFORMS TO FEDERAL SPECIFICATION TT-P-641, TYPE 1, BEFORE APPLYING THE PATCHING MATERIAL. COST OF PRIMER SHALL BE INCLUDED IN THE COST OF THE PATCHING MATERIAL ITEM.
6. SPLICED REINFORCING BARS SHALL BE COATED WITH A ZINC RICH PRIMER THAT CONFORMS TO FERERAL SPECIFICATIONS TT-P-641, TYPE 1, BEFORE APPLYING PATCHING MATERIAL. COST OF PRIMER SHALL BE INCLUDED IN THE COST OF THE PATCHING MATERIAL.
7. THE REMOVAL OF DETERIORATED CONCRETE SHALL PROCEED AS DIRECTED BY THE ENGINEER. IF THE REMOVAL OF DETERIORATED CONCRETE BECOMES EXCESSIVE, THE REMOVAL WORK SHALL BE STOPPED AT THAT LOCATION AND THE ENGINEER NOTIFIED IMMEDIATELY. COST OF REMOVAL OF DETERIORATED CONCRETE AND SURFACE PREPARATION OF THE REPAIR AREA SHALL BE INCLUDED IN THE APPROPRIATE PAY ITEM OF THE PATCHING MATERIAL.
8. THE CONTRACTOR SHALL NOT REMOVE CONCRETE EXCEPT IN THE PRESENCE OF THE ENGINEER OR HIS APPOINTED REPRESENTATIVE. IF THE AREA REMOVED EXCEEDS THE AREAS SHOWN ON THE PLANS BY 25%, OR IF THE REMOVAL DEPTH EXTENDS MORE THAN 1 1/2" BEHIND THE MAIN REINFORCING BARS, THE CONTRACTOR SHALL CEASE REMOVAL OPERATIONS AND NOTIFY THE ENGINEER IMMEDIATELY. THE ENGINEER SHALL DETERMINE IF THE REMOVAL OPERATIONS REDUCE THE STRUCTURAL CAPACITY OF THE ELEMENT.
9. AREAS DISTURBED BY CONSTRUCTION SHALL BE RESTORED TO THEIR ORIGINAL CONDITION UNLESS OTHERWISE NOTED OR AS ORDERED BY THE ENGINEER.
10. REPAIR DETAILS APPLY TO SPALLED, SCALED AND HOLLOW AREAS IN ABUTMENTS AND PIERS WHERE REQUIRED AND NOTED ON DRAWINGS, AND AS ORDERED BY THE ENGINEER.

REV.	DATE	REVISION DESCRIPTION	SHEET NO.

THE INFORMATION, INCLUDING ESTIMATED QUANTITIES OF WORK, SHOWN ON THESE SHEETS IS BASED ON LIMITED INVESTIGATIONS BY THE STATE AND IS IN NO WAY WARRANTED TO INDICATE THE CONDITIONS OF ACTUAL QUANTITIES OF WORK WHICH WILL BE REQUIRED.

Plotted Date: 12/23/2013

DESIGNER/DRAFTER: EW
CHECKED BY: CW
SCALE AS NOTED

STATE OF CONNECTICUT
DEPARTMENT OF TRANSPORTATION

Filename: ...\S-14_Substructure Repair Details1_NB.dgn

SIGNATURE/BLOCK:
Stantec Consulting Services Inc.
2321 Whitney Ave.
Hamden, CT 06518

PROJECT TITLE:
REHABILITATION OF BRIDGE I-91 NB & SB OVER US 5, AMTRAK & FERRY STREET

TOWN: **NEW HAVEN**

DRAWING TITLE: **NB: SUBSTRUCTURE REPAIR DETAILS - 1**

PROJECT NO. 092-0612
DRAWING NO. S-14
SHEET NO. 04.14

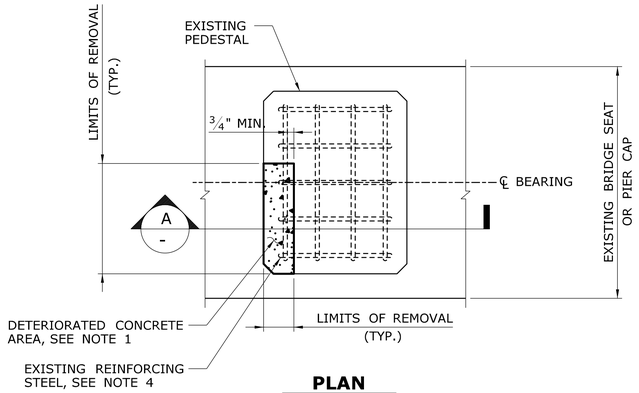

PLAN

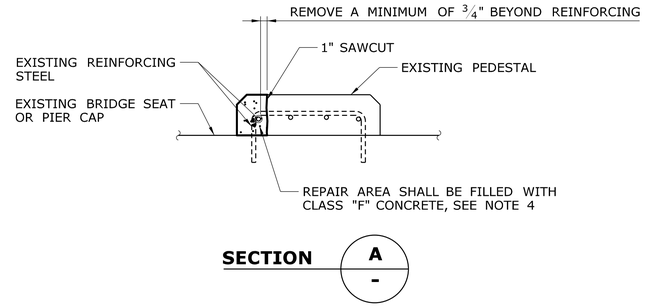

PEDESTAL REPAIR DETAIL

NOT TO SCALE

PEDESTAL REPAIR NOTES:

1. ALL DETERIORATED, SPALLED, LOOSE, HOLLOW AND HONEYCOMBED CONCRETE AREAS SHALL BE REMOVED A MINIMUM OF 3/4" BEYOND REINFORCING TO PROVIDE ADEQUATE ANCHORAGE OF NEW CONCRETE OR AS DIRECTED BY THE ENGINEER. PROVIDE A 1" SAWCUT ALONG THE PERIMETER OF THE REPAIR AREA. EXTREME CARE SHALL BE TAKEN WHERE REINFORCING STEEL IS UNCOVERED NOT TO DAMAGE THE STEEL OR ITS BOND IN THE SURROUNDING CONCRETE, SEE SPECIAL PROVISIONS.
2. ALL EXPOSED REINFORCING STEEL SHALL BE THOROUGHLY CLEANED, SEE SPECIAL PROVISIONS.
3. THE REMOVAL AREAS SHALL BE FILLED AND FINISHED WITH CLASS "F" CONCRETE IN A MANNER SUITABLE TO THE ENGINEER SUCH THAT THE ORIGINAL DIMENSIONS ARE RESTORED, SEE SPECIAL PROVISION FOR "REPAIR OF BEARING PAD".
4. PEDESTAL REPAIR TO BE PAID FOR UNDER THE ITEM "REPAIR OF BEARING PAD", SEE SPECIAL PROVISIONS.
5. JACKING OF EXISTING BEAMS MAY BE REQUIRED TO FACILITATE THE REPAIR OF CERTAIN BEARING PEDESTALS, THE NEED FOR WHICH SHALL BE DETERMINED BY THE ENGINEER. JACKING OF EXISTING BEAMS TO BE INCLUDED IN THE PAY ITEM "JACKING EXISTING SUPERSTRUCTURE (SITE NO. 1)."

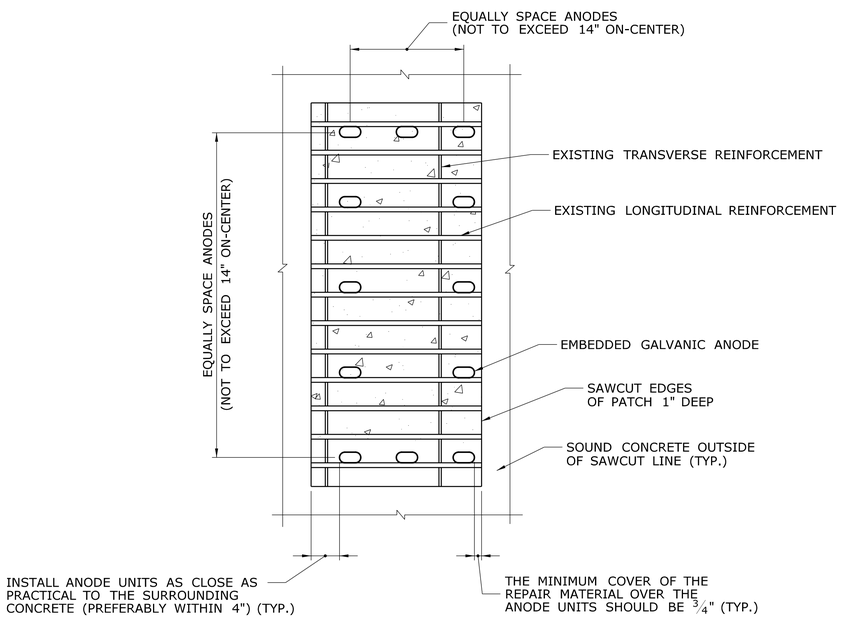

ANODE PLACEMENT - LARGE RECTANGULAR-TYPE PATCH

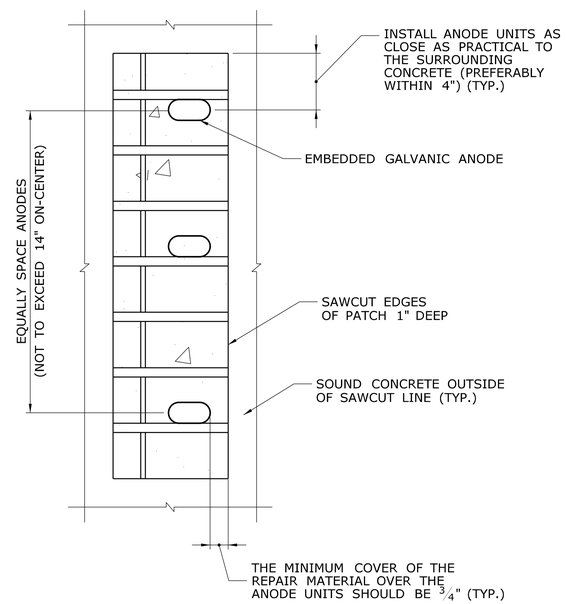

ANODE PLACEMENT - NARROW-TYPE PATCH

EMBEDDED GALVANIC ANODES:

ANODES ARE TO BE INSTALLED IN "CLASS 'S' CONCRETE" CONCRETE REPAIRS. THEIR PRIME PURPOSE IS TO PROTECT REINFORCING BARS THAT CROSS THE EDGES OF THE PATCH.

INSTALLATION OF ANODES SHALL BE AS DETAILED ON THIS PLAN AND PER THE RECOMMENDATIONS OF THE ANODE MANUFACTURER'S REPRESENTATIVE AND AS DIRECTED BY THE ENGINEER.

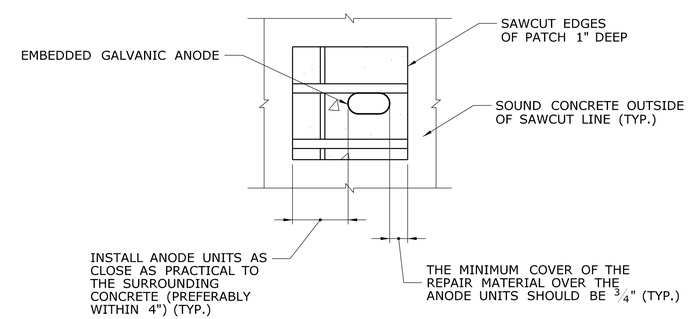

ANODE PLACEMENT - SMALL PATCH

INSTALLATION OF EMBEDDED GALVANIC ANODES

NOTE TO SCALE

REV.	DATE	REVISION DESCRIPTION	SHEET NO.

THE INFORMATION, INCLUDING ESTIMATED QUANTITIES OF WORK, SHOWN ON THESE SHEETS IS BASED ON LIMITED INVESTIGATIONS BY THE STATE AND IS IN NO WAY WARRANTED TO INDICATE THE CONDITIONS OF ACTUAL QUANTITIES OF WORK WHICH WILL BE REQUIRED.

Plotted Date: 12/23/2013

DESIGNER/DRAFTER: EW
CHECKED BY: CW
SCALE AS NOTED

STATE OF CONNECTICUT
DEPARTMENT OF TRANSPORTATION

Filename: ...\S-15_Substructure Repair Details2_NB.dgn

SIGNATURE/BLOCK:
Stantec Consulting Services Inc.
2321 Whitney Ave.
Hamden, CT 06518

PROJECT TITLE:
REHABILITATION OF BRIDGE I-91 NB & SB OVER US 5, AMTRAK & FERRY STREET

TOWN: **NEW HAVEN**

DRAWING TITLE: **NB: SUBSTRUCTURE REPAIR DETAILS - 2**

PROJECT NO. **092-0612**
DRAWING NO. **S-15**
SHEET NO. **04.15**

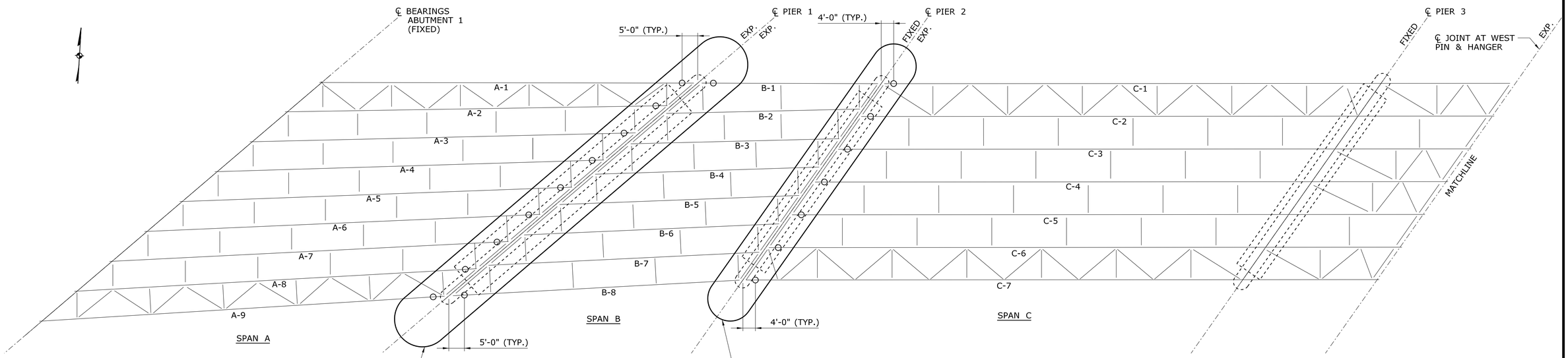

NOTES:

1. ALL EXISTING BEARINGS TO REMAIN SHALL HAVE THEIR STRUCTURAL COMPONENTS PAINTED. SEE PAINTING NOTES ON DRAWING S-04.
2. JACKING SUPPORTS SHALL BE DESIGNED FOR A 149 KIP UNFACTORED DEAD LOAD AND A 190 KIP UNFACTORED LIVE LOAD. JACKING SUPPORTS SHALL HAVE A 24" WIDE x 14" LONG BEARING AREA.

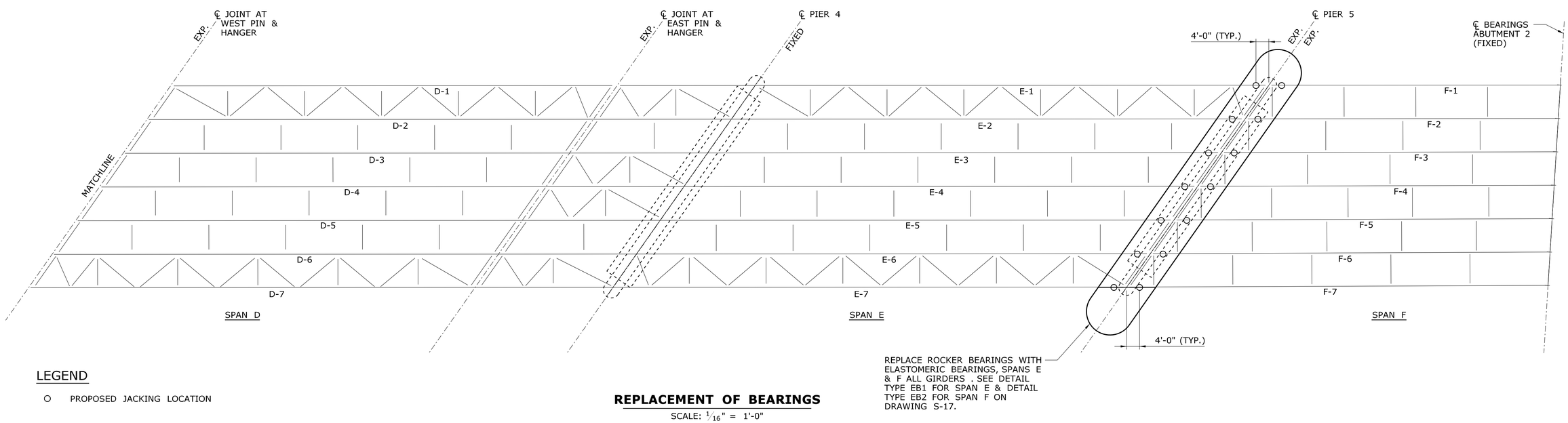

LEGEND

○ PROPOSED JACKING LOCATION

REPLACEMENT OF BEARINGS

SCALE: 1/16" = 1'-0"

REV.	DATE	REVISION DESCRIPTION	SHEET NO.

THE INFORMATION, INCLUDING ESTIMATED QUANTITIES OF WORK, SHOWN ON THESE SHEETS IS BASED ON LIMITED INVESTIGATIONS BY THE STATE AND IS IN NO WAY WARRANTED TO INDICATE THE CONDITIONS OF ACTUAL QUANTITIES OF WORK WHICH WILL BE REQUIRED.

Plotted: 12/23/2013

DESIGNER/DRAFTER: EW

CHECKED BY: CW

SCALE AS NOTED

STATE OF CONNECTICUT
DEPARTMENT OF TRANSPORTATION

Filename: $FILE$

SIGNATURE/BLOCK:

Stantec Consulting Services Inc.
2321 Whitney Ave.
Hamden, CT 06518

PROJECT TITLE:

REHABILITATION OF BRIDGE I-91 NB & SB OVER US 5, AMTRAK & FERRY STREET

TOWN: **NEW HAVEN**

DRAWING TITLE: **NB: BEARING REPLACEMENT PLAN**

PROJECT NO. **092-0612**

DRAWING NO. **S-16**

SHEET NO. **04.16**

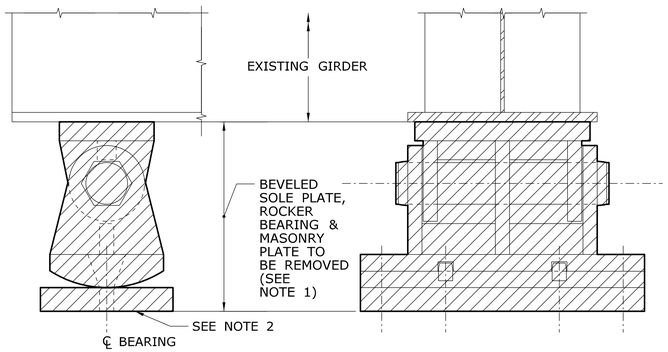

EXISTING CONDITION
EXPANSION BEARING - TYPE EB1
(SPANS C & E)

SCALE: $1\frac{1}{2}$" = 1'-0"

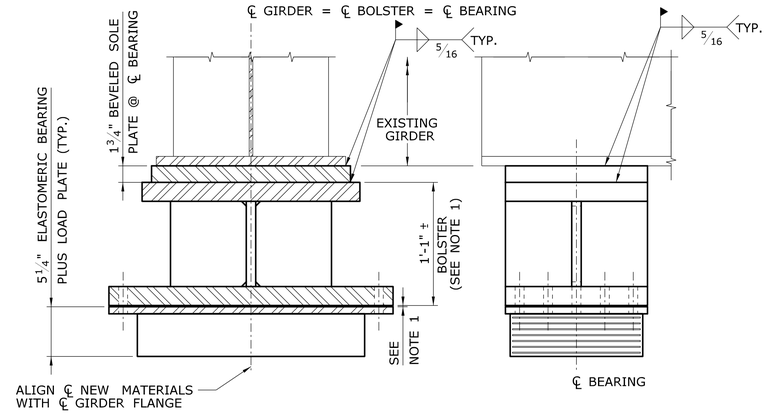

PROPOSED ELASTOMERIC BEARING
WITH BOLSTER - TYPE EB1
(SPANS C & E)

SCALE: $1\frac{1}{2}$" = 1'-0"

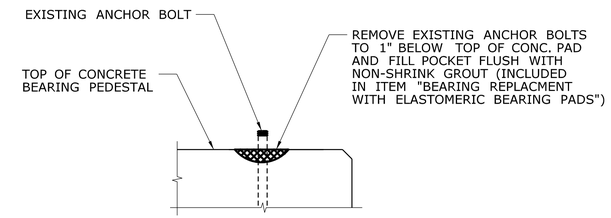

SURFACE PREPARATION DETAIL

NOT TO SCALE

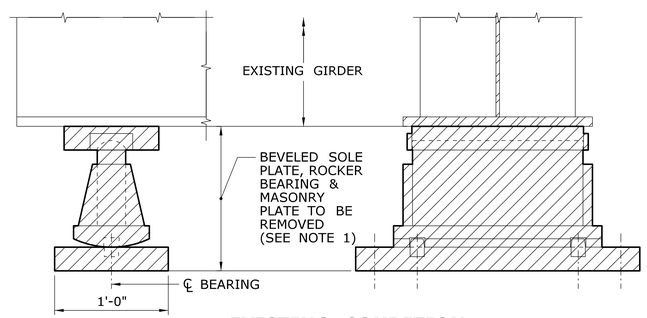

EXISTING CONDITION
EXPANSION BEARING - TYPE EB2
(SPANS A & F)

SCALE: $1\frac{1}{2}$" = 1'-0"

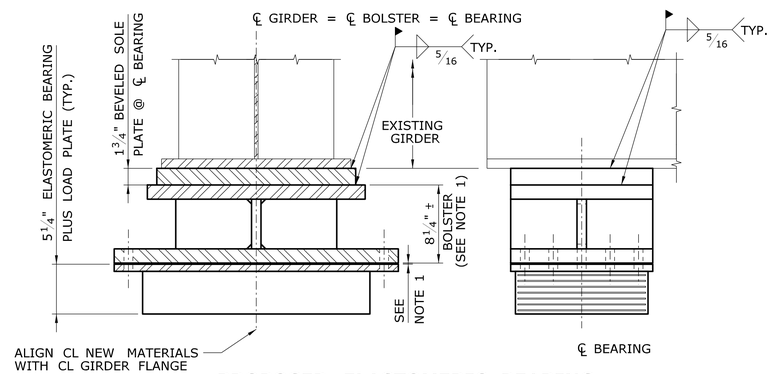

PROPOSED ELASTOMERIC BEARING
WITH BOLSTER - TYPE EB2
(SPANS A & F)

SCALE: $1\frac{1}{2}$" = 1'-0"

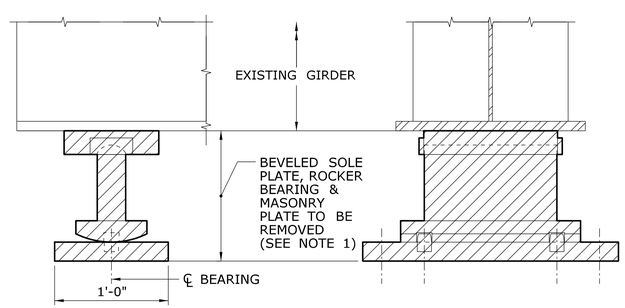

EXISTING CONDITION
EXPANSION BEARING - TYPE EB3
(SPAN B, GIRDERS B-1 & B-8)

SCALE: $1\frac{1}{2}$" = 1'-0"

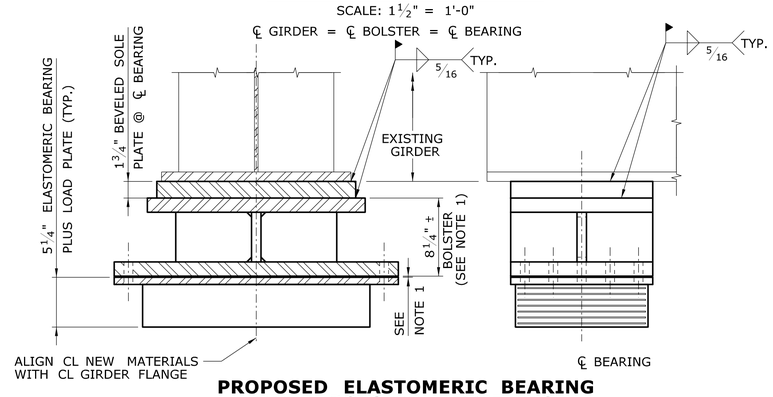

PROPOSED ELASTOMERIC BEARING
WITH BOLSTER - TYPE EB3
(SPAN B, GIRDERS B-1 & B-8)

SCALE: $1\frac{1}{2}$" = 1'-0"

NOTES:

1. THE CONTRACTOR SHALL TAKE FIELD MEASUREMENTS AT ALL EXISTING ROCKER BEARINGS IN ORDER TO DETERMINE THE DISTANCES BETWEEN BOTTOM OF GIRDER AND THE CONCRETE BEARING PAD. INCLUDE COST OF THESE MEASUREMENTS UNDER ITEM "BEARING REPLACEMENT WITH ELASTOMERIC BEARING PADS." THESE MEASUREMENTS SHALL BE USED TO FABRICATE THE NEW BOLSTERS (SEE DRAWING S-18). THE MEASUREMENTS SHALL ALSO BE USED TO DETERMINE THE HEIGHT AT CENTER LINE OF BEARING AS INDICATED ON THIS SHEET. NOTE THAT GIRDERS MAY HAVE LIFTED UP DUE TO CORROSION IN THE ROCKER BEARINGS SO THAT THE "AS BUILT" HEIGHT IS NOW GREATER. FOR THE FINAL CONDITION THE TOTAL HEIGHT OF THE REPLACEMENT MATERIALS SHALL MATCH THE EXISTING HEIGHT AT CENTER LINE OF BEARING.
2. CONTRACTOR IS HEREBY NOTIFIED OF THE PRESENCE OF LEAD UNDER THE EXISTING MASONRY PLATES.
3. CENTER LINE OF SOLE PLATE THICKNESS ($1\frac{3}{4}$") IS BASED ON ASSUMED EXISTING CONDITIONS. IN NO CASE SHALL THE BEVELING OF THE SOLE PLATE CAUSE THE THICKNESS AT THE THIN EDGE TO BE LESS THAN $1\frac{1}{4}$".
4. THE BOLSTERS AND BEVELED SOLE PLATE WILLL NOT BE MEASURED FOR PAYMENT, AND SHALL BE INCLUDED IN THE PAY ITEM "STRUCTURAL STEEL (SITE NO. 1)."
5. THE LOAD PLATE AND ELASTOMERIC BEARING PADS WILL NOT BE MEASURED FOR PAYMENT, AND SHALL BE INCLUDED IN THE PAY ITEM "BEARING REPLACEMENT WITH ELASTOMERIC BEARING PADS."

REV.	DATE	REVISION DESCRIPTION	SHEET NO.

THE INFORMATION, INCLUDING ESTIMATED QUANTITIES OF WORK, SHOWN ON THESE SHEETS IS BASED ON LIMITED INVESTIGATIONS BY THE STATE AND IS IN NO WAY WARRANTED TO INDICATE THE CONDITIONS OF ACTUAL QUANTITIES OF WORK WHICH WILL BE REQUIRED.

Plotted: 12/23/2013

DESIGNER/DRAFTER: EW
CHECKED BY: CW
SCALE AS NOTED

STATE OF CONNECTICUT
DEPARTMENT OF TRANSPORTATION

Filename: $FILE$

SIGNATURE/BLOCK:
Stantec Consulting Services Inc.
2321 Whitney Ave.
Hamden, CT 06518

PROJECT TITLE:
REHABILITATION OF BRIDGE I-91 NB & SB OVER US 5, AMTRAK & FERRY STREET

TOWN: **NEW HAVEN**

DRAWING TITLE: **NB: EXPANSION BEARING REPLACEMENT**

PROJECT NO. 092-0612
DRAWING NO. S-17
SHEET NO. 04.17

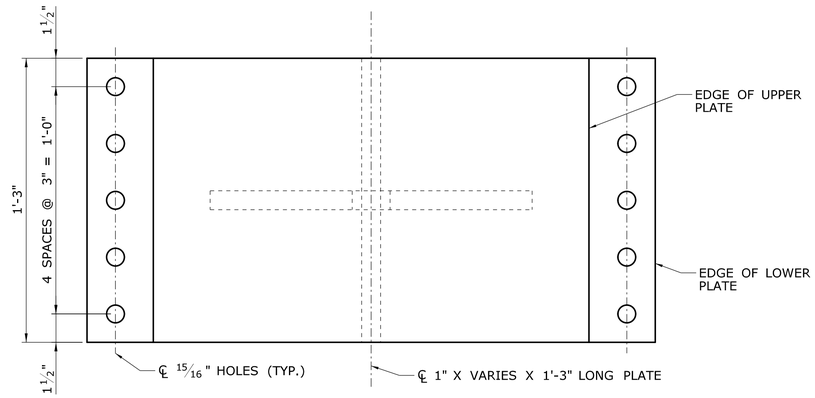

PLAN VIEW

SCALE: 3" = 1'-0"

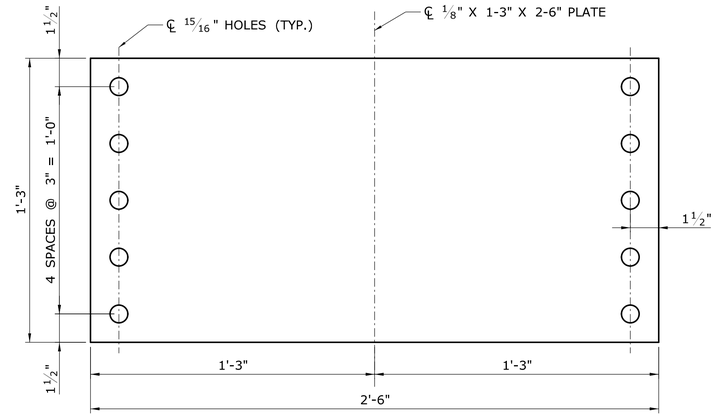

PLAN VIEW SPACER PLATES DETERMINE NUMBER IN THE FIELD

SCALE: 3" = 1'-0"

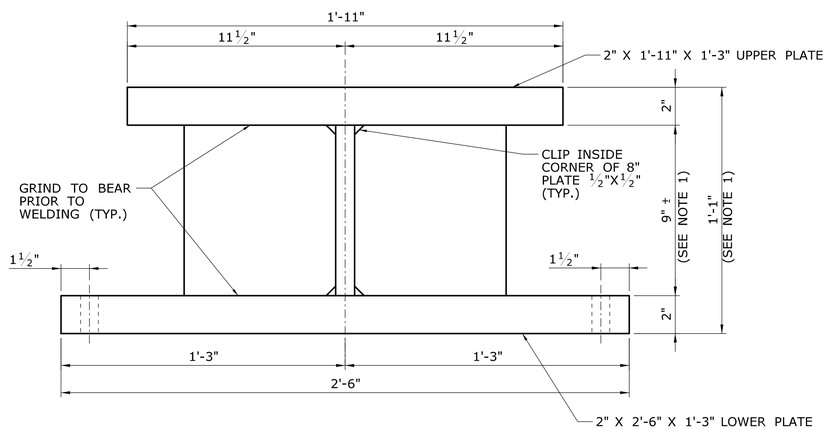

VIEW OF TYPE "A" BOLSTER

SCALE: 3" = 1'-0"

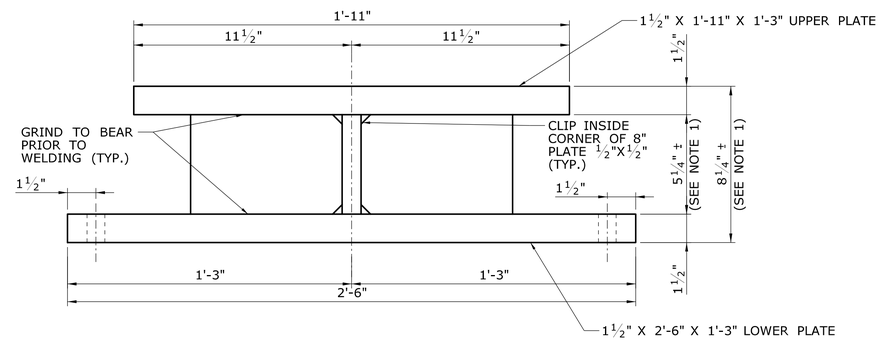

VIEW OF TYPE "B" BOLSTER

SCALE: 3" = 1'-0"

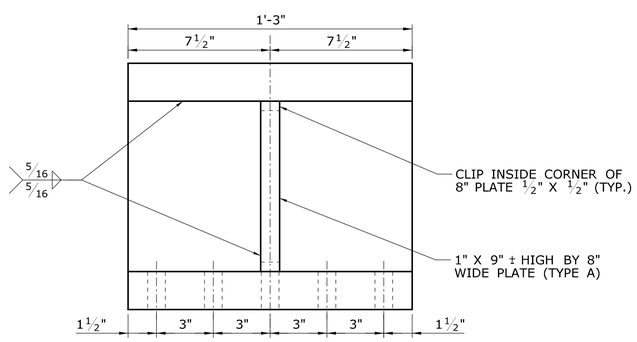

END VIEW OF TYPE "A" BOLSTER

SCALE: 3" = 1'-0"

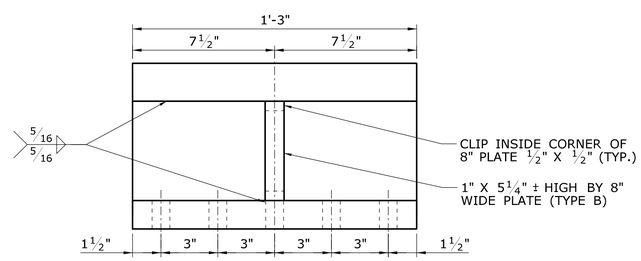

END VIEW OF TYPE "B" BOLSTER

SCALE: 3" = 1'-0"

NOTES:

1. THE CONTRACTOR SHALL TAKE FIELD MEASUREMENTS AT ALL EXISTING ROCKER BEARINGS IN ORDER TO DETERMINE THE DISTANCES BETWEEN BOTTOM OF GIRDER AND THE CONCRETE BEARING PAD. INCLUDE COST OF THESE MEASUREMENTS UNDER ITEM "BEARING REPLACEMENT WITH ELASTOMERIC BEARING PADS." THESE MEASUREMENTS SHALL BE USED TO FABRICATE THE NEW BOLSTERS. THE MEASUREMENTS SHALL ALSO BE USED TO DETERMINE THE HEIGHT AT CENTER LINE OF BEARING AS INDICATED ON THIS SHEET. NOTE THAT GIRDERS MAY HAVE LIFTED UP DUE TO CORROSION IN THE ROCKER BEARINGS SO THAT THE "AS BUILT" HEIGHT IS NOW GREATER. FOR THE FINAL CONDITION THE TOTAL HEIGHT OF THE REPLACEMENT MATERIALS SHALL MATCH THE EXISTING HEIGHT AT CENTER LINE OF BEARING.

2. THE BOLSTERS AND BEVELED SOLE PLATE SHALL NOT BE MEASURED FOR PAYMENT, AND SHALL BE INCLUDED IN THE PAY ITEM "STRUCTURAL STEEL (SITE NO. 1)."

REV.	DATE	REVISION DESCRIPTION	SHEET NO.

THE INFORMATION, INCLUDING ESTIMATED QUANTITIES OF WORK, SHOWN ON THESE SHEETS IS BASED ON LIMITED INVESTIGATIONS BY THE STATE AND IS IN NO WAY WARRANTED TO INDICATE THE CONDITIONS OF ACTUAL QUANTITIES OF WORK WHICH WILL BE REQUIRED.

Plotted: 12/23/2013

DESIGNER/DRAFTER: EW

CHECKED BY: CW

SCALE AS NOTED

STATE OF CONNECTICUT
DEPARTMENT OF TRANSPORTATION

Filename: $FILE$

SIGNATURE/BLOCK:

Stantec Consulting Services Inc.
2321 Whitney Ave.
Hamden, CT 06518

PROJECT TITLE:
REHABILITATION OF BRIDGE I-91 NB & SB OVER US 5, AMTRAK & FERRY STREET

TOWN: **NEW HAVEN**

DRAWING TITLE:
NB: EXPANSION BEARING BOLSTER DETAILS

PROJECT NO. **092-0612**

DRAWING NO. **S-18**

SHEET NO. **04.18**

BEARING NOTES

1. THE ELASTOMERIC BEARINGS ARE DESIGNED USING METHOD A OF THE AASHTO LRFD BRIDGE DESIGN SPECIFICATIONS.
2. THE CONTRACTOR SHALL RECORD THE GRADE OF THE EXISTING GIRDERS (BOTH LONGITUDINALLY AND CROSS SECTIONALLY) TO ACCURATELY FABRICATE THE NEW BEVELED SOLE PLATES IN TWO DIMENSIONS.
3. THE ELASTOMER SHALL CONTAIN ONLY VIRGIN POLYCHLOROPRENE (NEOPRENE) AS THE RAW POLYMER AND HAVE A SHEAR MODULUS BETWEEN 0.110 KSI AND 0.175 KSI.
4. THE INTERNAL STEEL LAMINAE SHALL CONFORM TO ASTM A1011, GRADE 36 OR 40.
5. THE STEEL FOR THE BEVELED SOLE PLATE AND LOAD PLATE SHALL CONFORM TO THE REQUIREMENTS OF AASHTO M270, GRADE 50T2.
6. ANCHOR BOLTS SHALL BE $^{7}/_{8}$" DIAMETER AND SHALL CONFORM TO ASTM F1554.
7. THE LOAD PLATE SHALL BE HOT BONDED TO THE ELASTOMERIC BEARING DURING VULCANIZATION AS DESCRIBED BELOW.
8. WELDING DETAILS, PROCEDURES AND TESTING METHODS SHALL CONFORM TO THE LATEST ANSI/AASHTO/AWS D1.5 - BRIDGE WELDING CODE, UNLESS OTHERWISE NOTED ON THE PLANS.
9. THE EXPOSED SURFACES OF THE ELASTOMER SHALL NOT BE PAINTED.
10. THE ELASTOMERIC BEARINGS SHALL BE INSTALLED WHEN THE AMBIENT AIR AND BEARING TEMPERATURES ARE BETWEEN 40° F AND 80° F AND HAVE BEEN WITHIN THIS RANGE FOR AT LEAST TWO HOURS.
11. THE COST OF REMOVING THE EXISTING BEARINGS, AND FURNISHING AND INSTALLING THE ELASTOMERIC BEARINGS, INCLUDING THE LOAD PLATES, SHALL BE PAID FOR UNDER ITEM "BEARING REPLACEMENT WITH ELASTOMERIC BEARING PADS".
12. JACKING OF GIRDERS FOR REPLACING BEARINGS SHALL BE PAID FOR UNDER ITEM "JACKING EXISTING SUPERSTRUCTURE (SITE NO. 1)."
13. REMOVAL OF EXISTING PAINT, SURFACE PREPERATION, AND NEW PAINT: SEE SPECIAL PROVISIONS.
14. THE MAXIMUM DESIGN LOAD (DL + LL WITHOUT IMPACT) FOR EACH BEARING IS 339 KIPS. THIS INFORMATION IS PROVIDED FOR THE PROOF LOAD TEST DESCRIBED IN THE SPECIAL PROVISION "BEARING REPLACEMENT WITH ELASTOMERIC BEARING PADS."

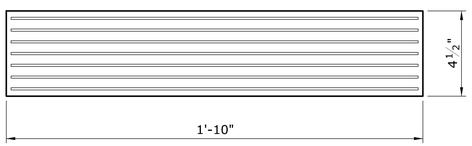

ELEVATION OF ELASTOMERIC BEARING

SCALE: 3" = 1'-0"

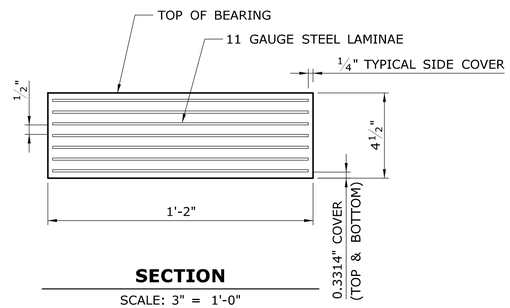

SECTION

SCALE: 3" = 1'-0"

NOTE: TOP OF REINFORCED ELASTOMERIC BEARING SHALL BE SHOP VULCANIZED TO THE EXTERNAL LOAD PLATE. (LOAD PLATE NOT SHOWN FOR CLARITY)

EXPANSION BEARING NOTES

THE STEEL-LAMINATED ELASTOMERIC BEARING SHALL BE FABRICATED AS FOLLOWS:

2- 0.3314" COVER ELASTOMER LAYER	=	0.6628"
6- 0.5" INTERNAL ELASTOMER LAYERS	=	3.00"
7- 0.1196" 11 GAUGE STEEL LAMINAE	=	0.8372"
TOTAL BEARING PAD THICKNESS	=	4.50"

NOTE:

CENTER LINE OF SOLE PLATE THICKNESS ($1^{3}/_{4}$") IS BASED ON ASSUMED EXISTING CONDITIONS. IN NO CASE SHALL THE BEVELING OF THE SOLE PLATE CAUSE THE THICKNESS AT THE THIN EDGE TO BE LESS THAN $1^{1}/_{4}$".

BEARING LOADS

DEAD LOAD	=	149 KIPS
LIVE LOAD	=	190 KIPS
TOTAL LOAD	=	339 KIPS

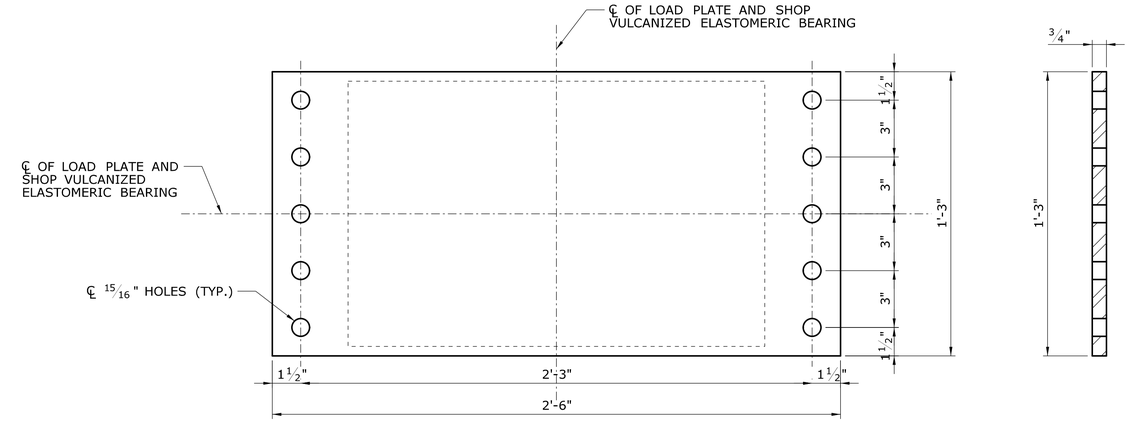

PLAN VIEW OF BEARING

SCALE: 3" = 1'-0"

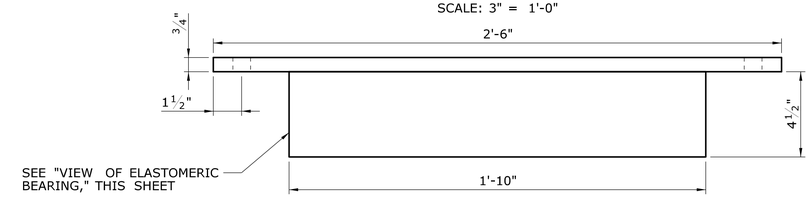

ELEVATION VIEW OF BEARING

SCALE: 3" = 1'-0"

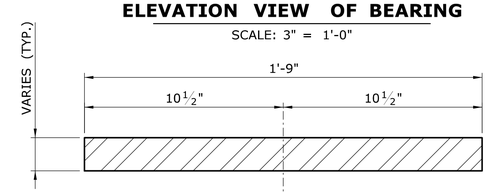

SECTION

SCALE: 3" = 1'-0"

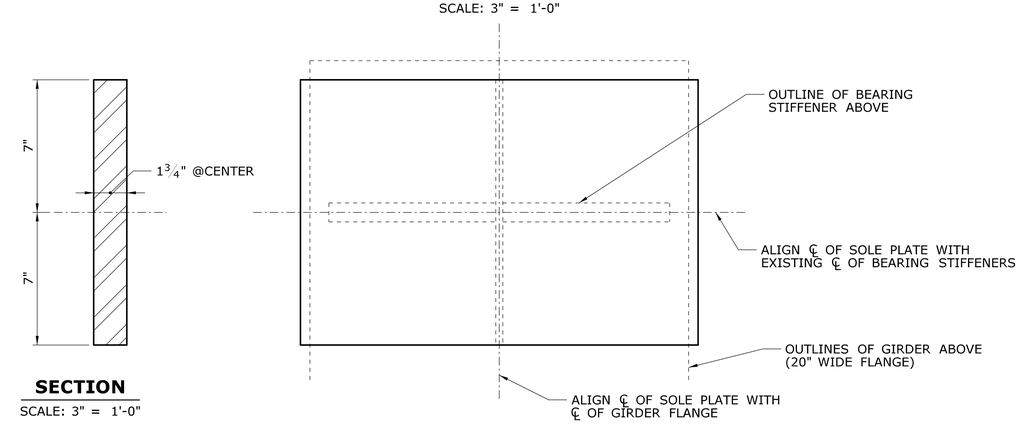

SECTION

SCALE: 3" = 1'-0"

PLAN VIEW OF TYPICAL BEVELED SOLE PLATE (BR. NO. 03021)

SCALE: 3" = 1'-0"

REV.	DATE	REVISION DESCRIPTION	SHEET NO.

THE INFORMATION, INCLUDING ESTIMATED QUANTITIES OF WORK, SHOWN ON THESE SHEETS IS BASED ON LIMITED INVESTIGATIONS BY THE STATE AND IS IN NO WAY WARRANTED TO INDICATE THE CONDITIONS OF ACTUAL QUANTITIES OF WORK WHICH WILL BE REQUIRED.

Plotted: 12/23/2013

DESIGNER/DRAFTER: EW

CHECKED BY: CW

SCALE AS NOTED

STATE OF CONNECTICUT
DEPARTMENT OF TRANSPORTATION

Filename: $FILE$

SIGNATURE/BLOCK:

Stantec Consulting Services Inc.
2321 Whitney Ave.
Hamden, CT 06518

PROJECT TITLE:
REHABILITATION OF BRIDGE I-91 NB & SB OVER US 5, AMTRAK & FERRY STREET

TOWN: NEW HAVEN

DRAWING TITLE: NB: EXPANSION BEARING DETAILS

PROJECT NO. 092-0612

DRAWING NO. S-19

SHEET NO. 04.19

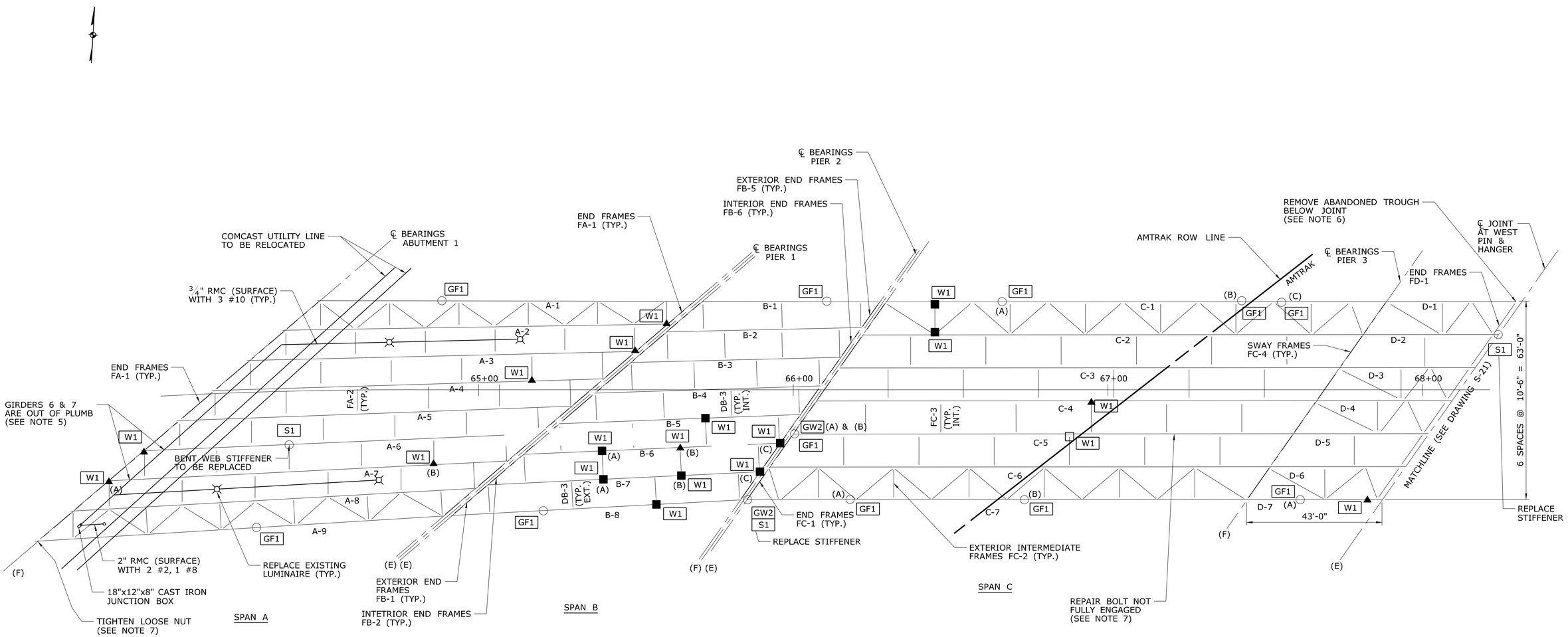

PLAN

SCALE : 1/16" = 1'-0"

REPAIR TYPE LEGEND

- GFX — GIRDER FLANGE REPAIR
- GWX — GIRDER WEB REPAIR
- WX — WELD REPAIR
- SX — STIFFENER REPAIR
- (X) — REPAIR LOCATION FOR MULTIPLE REPAIRS AT SAME MEMBER

LEGEND

- ▲ CRACKED WELD
- ■ MISSING WELD
- □ POOR QUALITY WELD
- ○ STEEL SECTION LOSS
- • STOP HOLES, COVER PLATES TO BE ADDED

NOTES:

1. FOR REPAIR DETAILS, SEE DRAWINGS S-23 THRU S-29.
2. BLAST CLEAN ALL STEEL SUPERSTRUCTURE MEMBERS AND FIELD PAINT. EMPLOY CLASS 1 CONTAINMENT SYSTEM FOR CLEANING AND PAINTING OPERATIONS.
3. CLEAN NOTED SPLICE PLATES AND DETERMINE SECTION LOSS, IF ANY.
4. PLUG ALL UNNECESSARY EXISTING WEEP PIPES. WEEP PIPES LOCATED AT LOW END OF EACH DECK JOINT TO REMAIN. SEE S-34 FOR WEEPHOLE DETAIL.
5. FOR HEAT STRAIGHTENING DETAILS, SEE DRAWINGS S-30 & S-31.
6. REMOVE ABANDONED TROUGHS. THIS WORK NOT MEASURED FOR PAYMENT AND SHALL BE INCLUDED IN THE PAY ITEM "STRUCTURAL STEEL."
7. TIGHTEN ALL LOOSE NUTS AND BOLTS. THIS WORK NOT MEASURED FOR PAYMENT AND SHALL BE INCLUDED IN THE PAY ITEM "STRUCTURAL STEEL."

REV.	DATE	REVISION DESCRIPTION	SHEET NO.

THE INFORMATION, INCLUDING ESTIMATED QUANTITIES OF WORK, SHOWN ON THESE SHEETS IS BASED ON LIMITED INVESTIGATIONS BY THE STATE AND IS IN NO WAY WARRANTED TO INDICATE THE CONDITIONS OF ACTUAL QUANTITIES OF WORK WHICH WILL BE REQUIRED.

Plotted: 12/23/2013

DESIGNER/DRAFTER: EW
CHECKED BY: CW
SCALE AS NOTED

STATE OF CONNECTICUT
DEPARTMENT OF TRANSPORTATION

Filename: $FILE$

SIGNATURE/BLOCK:
Stantec Consulting Services Inc.
2321 Whitney Ave.
Hamden, CT 06518

PROJECT TITLE:
REHABILITATION OF BRIDGE I-91 NB & SB OVER US 5, AMTRAK & FERRY STREET

TOWN: **NEW HAVEN**

DRAWING TITLE: **NB: FRAMING PLAN 1 OF 2**

PROJECT NO. **092-0612**
DRAWING NO. **S-20**
SHEET NO. **04.20**

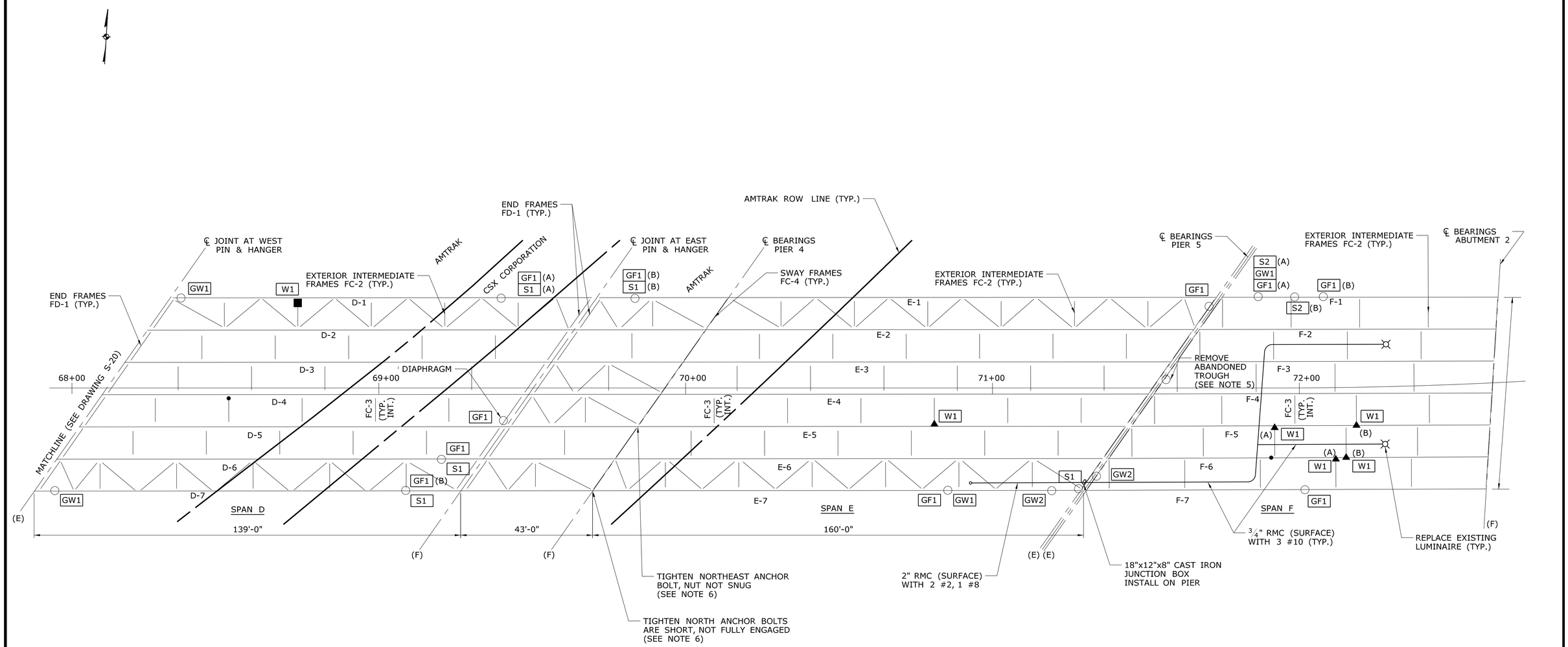

PLAN

SCALE : 1/16" = 1'-0"

REPAIR TYPE LEGEND

- GFX — GIRDER FLANGE REPAIR
- GWX — GIRDER WEB REPAIR
- WX — WELD REPAIR
- SX — STIFFENER REPAIR
- (X) — REPAIR LOCATION FOR MULTIPLE REPAIRS AT SAME MEMBER

LEGEND

- ▲ CRACKED WELD
- ■ MISSING WELD
- □ POOR QUALITY WELD
- ○ STEEL SECTION LOSS
- • STOP HOLES, COVER PLATES TO BE ADDED

NOTES:

1. FOR REPAIR DETAILS, SEE DRAWINGS S-23 THRU S-24.
2. BLAST CLEAN ALL STEEL SUPERSTRUCTURE MEMBERS AND FIELD PAINT. EMPLOY CLASS 1 CONTAINMENT SYSTEM FOR CLEANING AND PAINTING OPERATIONS.
3. CLEAN NOTED SPLICE PLATES AND DETERMINE SECTION LOSS, IF ANY.
4. PLUG ALL UNNECESSARY EXISTING WEEP PIPES. WEEP PIPES LOCATED AT LOW END OF EACH DECK JOINT TO REMAIN. SEE S-34 FOR WEEPHOLE DETAIL.
5. REMOVE ABANDONED TROUGHS. THIS WORK NOT MEASURED FOR PAYMENT AND SHALL BE INCLUDED IN THE PAY ITEM "STRUCTURAL STEEL."
6. TIGHTEN ALL LOOSE NUTS AND BOLTS. THIS WORK NOT MEASURED FOR PAYMENT AND SHALL BE INCLUDED IN THE PAY ITEM "STRUCTURAL STEEL."

REV.	DATE	REVISION DESCRIPTION	SHEET NO.

THE INFORMATION, INCLUDING ESTIMATED QUANTITIES OF WORK, SHOWN ON THESE SHEETS IS BASED ON LIMITED INVESTIGATIONS BY THE STATE AND IS IN NO WAY WARRANTED TO INDICATE THE CONDITIONS OF ACTUAL QUANTITIES OF WORK WHICH WILL BE REQUIRED.

Plotted: 12/23/2013

DESIGNER/DRAFTER: EW
CHECKED BY: CW
SCALE AS NOTED

STATE OF CONNECTICUT
DEPARTMENT OF TRANSPORTATION

Filename: $FILE$

SIGNATURE/BLOCK:

Stantec Consulting Services Inc.
2321 Whitney Ave.
Hamden, CT 06518

PROJECT TITLE:
REHABILITATION OF BRIDGE I-91 NB & SB OVER US 5, AMTRAK & FERRY STREET

TOWN: **NEW HAVEN**

DRAWING TITLE: **NB: FRAMING PLAN 2 OF 2**

PROJECT NO. 092-0612
DRAWING NO. S-21
SHEET NO. 04.21

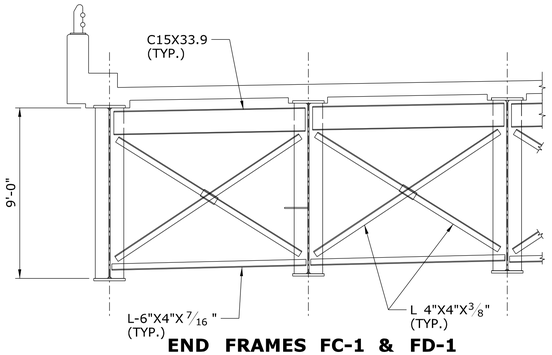

END FRAMES FC-1 & FD-1
(SPAN C&D)
SCALE : 1/4" = 1'-0"

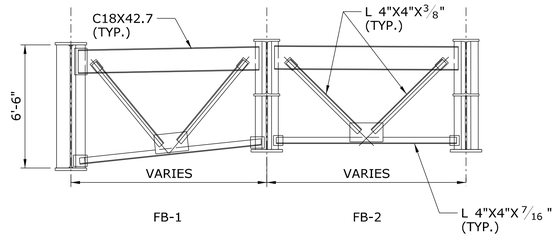

END FRAMES
(SPAN B)
SCALE : 1/4" = 1'-0"

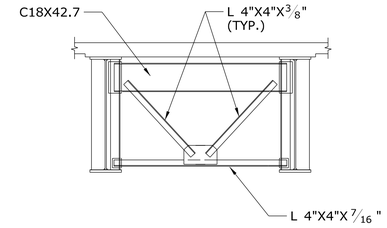

END FRAME FA-1
(SPAN F)
SCALE : 1/4" = 1'-0"

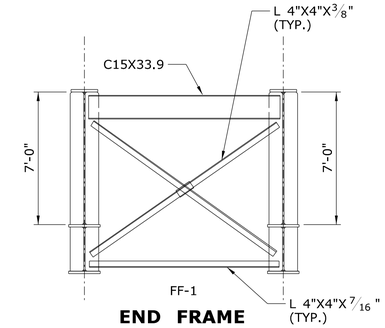

END FRAME
(SPAN F)
SCALE : 1/4" = 1'-0"

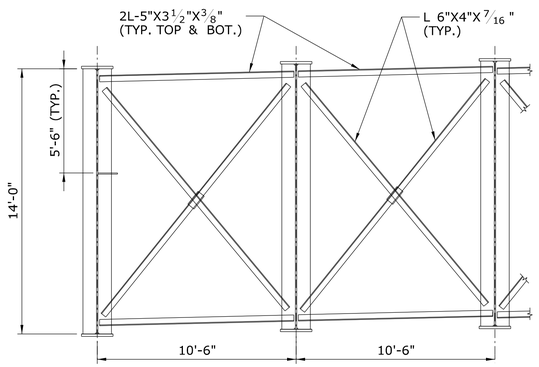

SWAY FRAMES FC-4
(SPAN C)
SCALE : 1/4" = 1'-0"

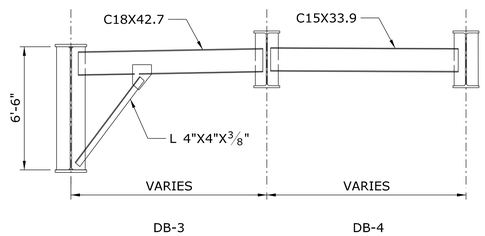

INTERMEDIATE DIAPHRAGM
(SPAN B)
SCALE : 1/4" = 1'-0"

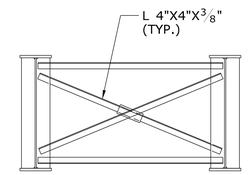

INTERMEDIATE CROSS FRAME FA-2
(SPAN A)
SCALE : 1/4" = 1'-0"

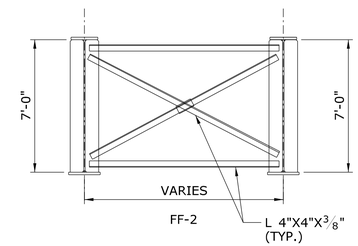

INTERMEDIATE CROSS FRAME
(SPAN F)
SCALE : 1/4" = 1'-0"

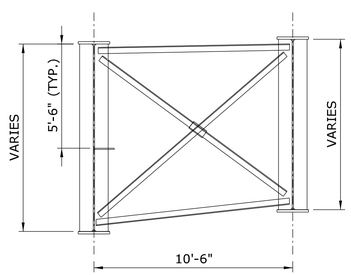

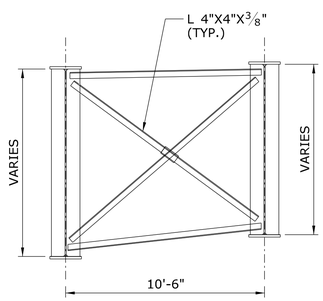

INTERMEDIATE CROSS FRAMES
(SPAN C)
SCALE : 1/4" = 1'-0"

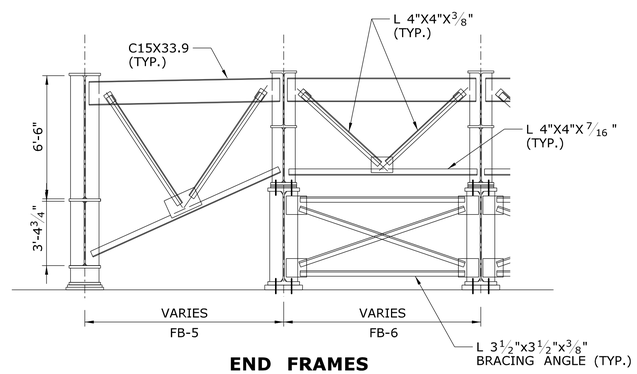

END FRAMES
(SPAN B)
SCALE : 1/4" = 1'-0"

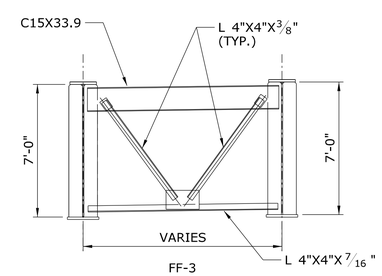

END FRAME
(SPAN F)
SCALE : 1/4" = 1'-0"

THIS SHEET PROVIDED FOR INFORMATION PURPOSES ONLY

REV.	DATE	REVISION DESCRIPTION	SHEET NO.

THE INFORMATION, INCLUDING ESTIMATED QUANTITIES OF WORK, SHOWN ON THESE SHEETS IS BASED ON LIMITED INVESTIGATIONS BY THE STATE AND IS IN NO WAY WARRANTED TO INDICATE THE CONDITIONS OF ACTUAL QUANTITIES OF WORK WHICH WILL BE REQUIRED.

Plotted: 12/23/2013

DESIGNER/DRAFTER: EW
CHECKED BY: CW
SCALE AS NOTED

STATE OF CONNECTICUT
DEPARTMENT OF TRANSPORTATION

Filename: $FILE$

SIGNATURE/BLOCK:
Stantec Consulting Services Inc.
2321 Whitney Ave.
Hamden, CT 06518

PROJECT TITLE:
REHABILITATION OF BRIDGE I-91 NB & SB OVER US 5, AMTRAK & FERRY STREET

TOWN: **NEW HAVEN**

DRAWING TITLE: **NB: SUPERSTRUCTURE DETAILS**

PROJECT NO. **092-0612**
DRAWING NO. **S-22**
SHEET NO. **04.22**

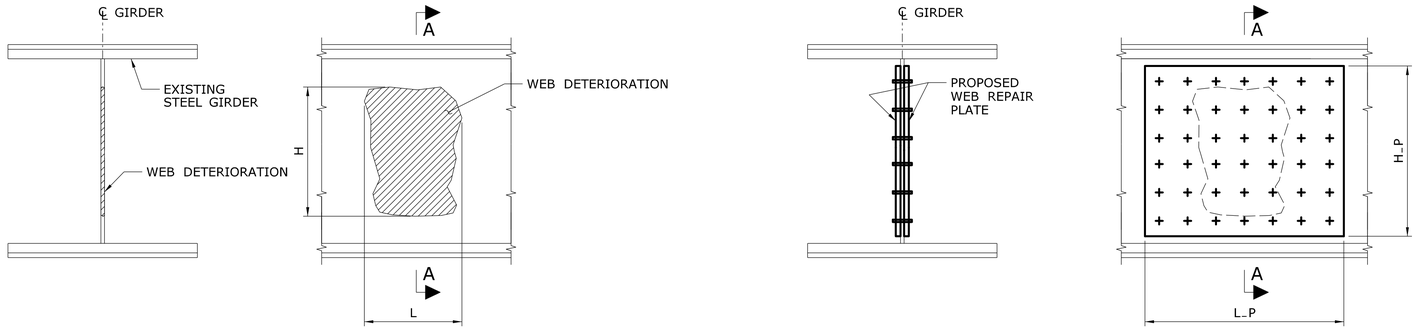

EXISTING SECTION A-A EXISTING ELEVATION PROPOSED SECTION A-A PROPOSED ELEVATION

REPAIR DETAIL - TYPE GW1

SCALE: $1\frac{1}{2}$" = 1'-0"

REPAIR TABLE - TYPE GW1					
LOCATION	'H' (IN)	'L' (IN)	'H_P' (IN)	'L_P' (IN)	PLATE THICKNESS (IN)
D-1	6	24	13	37	$\frac{3}{8}$
D-7	9	24	16	37	$\frac{3}{8}$
E-7	3	120	10	133	$\frac{1}{2}$
F-1	18	24	25	37	$\frac{3}{8}$

GENERAL NOTES:

1. THE CONTRACTOR SHALL EXAMINE AND VERIFY IN THE FIELD ALL EXISTING AND GIVEN CONDITIONS AND DIMENSIONS WITH THOSE SHOWN ON THE PLANS. IF THE FIELD CONDITIONS AND DIMENSIONS DIFFER FROM THOSE SHOWN ON THE PLANS, THE CONTRACTOR SHALL USE THE FIELD CONDITIONS AND DIMENSIONS, AND MAKE THE APPROPRIATE CHANGES TO THOSE SHOWN ON THE PLANS, AS APPROVED BY ENGINEER. THE RESULT OF THIS CHECK OF CONDITIONS SHALL BE NOTED ON THE DRAWINGS SUBMITTED FOR APPROVAL.
2. ALL NEW STRUCTURAL STEEL SHALL CONFORM TO ASTM A709 GRADE 36 UNLESS NOTED OTHERWISE, WITH A SPECIFIED MINIMUM YIELD STRENGTH Fy OF 36,000 psi.
3. ALL BOLTED CONNECTIONS FOR STRUCUTRAL STEEL ELEMENTS SHALL BE MADE WITH $\frac{7}{8}$" DIAMETER HIGH-STRENGTH BOLTS UNLESS OTHERWISE NOTED. ALL HIGH-STRENGTH BOLTS IN STRUCTURAL CONNECTIONS SHALL BE ASTM A325 TYPE 1, UNLESS OTHERWISE NOTED. ALL NUTS SHALL BE A563 GR. DH AND WASHERS SHALL BE F436, TYPE 1.

SUGGESTED WORK SEQUENCE FOR WEB DETERIORATION:

1. PREPARE AND CLEAN THE EXISTING STEEL SURFACE AREA WITHIN THE WORK LIMITS TO BARE METAL IN ACCORDANCE WITH SPECIAL PROVISIONS.
2. USING PROPOSED SHOP DRILLED REPAIR PLATES AND ANGLES AS A TEMPLATE, FIELD DRILL ALL $\frac{15}{16}$" DIAMETER HOLES IN THE WEB AND THE WEB FILL PLATE.
3. CONNECT THE EXISTING STRINGER WEB TO REPAIR PLATES AND ANGLES USING $\frac{7}{8}$" DIAMETER ASTM A325 (TYPE 1) HIGH STRENGTH BOLTS.
4. PAINT THE NEW AND/OR EXISTING STEEL.

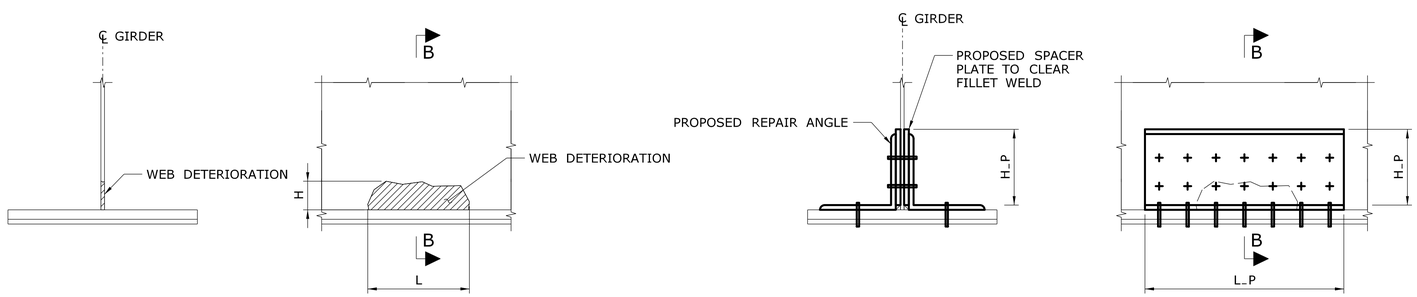

EXISTING SECTION B-B EXISTING ELEVATION PROPOSED SECTION B-B PROPOSED ELEVATION

REPAIR DETAIL - TYPE GW2

SCALE: $1\frac{1}{2}$" = 1'-0"

REPAIR TABLE - TYPE GW2						
LOCATION	'H' (IN)	'L' (IN)	REPAIR ANGLE	'H_P' (IN)	'L_P' (IN)	PLATE THICKNESS (IN)
C-5A	6	3	8x8x$\frac{1}{2}$	9	10	$\frac{1}{2}$
C-5B	30	2			9	$\frac{1}{2}$
C-7	6	6	8x8x$\frac{1}{2}$	9	13	$\frac{1}{2}$
E-7	1	$1\frac{1}{2}$	4x4x$\frac{1}{2}$	5	$8\frac{1}{2}$	$\frac{1}{2}$
F-7	4	7	6x6x$\frac{3}{8}$	7	14	$\frac{3}{8}$

REV.	DATE	REVISION DESCRIPTION	SHEET NO.

THE INFORMATION, INCLUDING ESTIMATED QUANTITIES OF WORK, SHOWN ON THESE SHEETS IS BASED ON LIMITED INVESTIGATIONS BY THE STATE AND IS IN NO WAY WARRANTED TO INDICATE THE CONDITIONS OF ACTUAL QUANTITIES OF WORK WHICH WILL BE REQUIRED.

Plotted: 12/23/2013

DESIGNER/DRAFTER: EW
CHECKED BY: CW
SCALE AS NOTED

STATE OF CONNECTICUT
DEPARTMENT OF TRANSPORTATION

Filename: $FILE$

SIGNATURE/BLOCK:

Stantec Consulting Services Inc.
2321 Whitney Ave.
Hamden, CT 06518

PROJECT TITLE:
REHABILITATION OF BRIDGE I-91 NB & SB OVER US 5, AMTRAK & FERRY STREET

TOWN: **NEW HAVEN**

DRAWING TITLE: **NB: REPAIR DETAILS BUILT UP GIRDERS - 1**

PROJECT NO. 092-0612
DRAWING NO. S-23
SHEET NO. 04.23

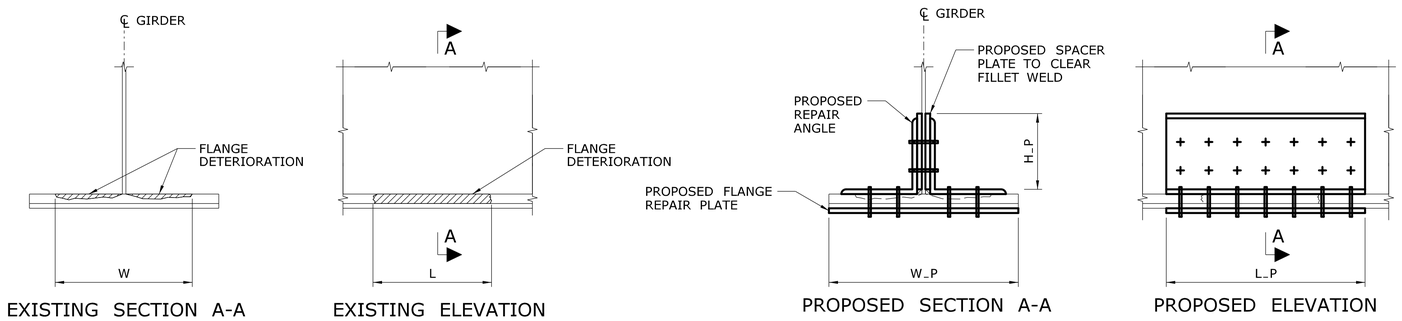

REPAIR DETAIL - TYPE GF1

SCALE: 1½" = 1'-0"

GENERAL NOTE:

1. REFER TO GENERAL NOTES ON DRAWING S-23.

REPAIR TABLE - TYPE GF1							
LOCATION	'W' (IN)	'L' (IN)	REPAIR ANGLE	'H_P' (IN)	'W_P' (IN)	'L_P' (IN)	PLATE THICKNESS (IN)
A-1	15	24	8x8x1	9	20	37	2
A-9	15	24	8x8x1	9	20	37	2
B-1	8	8	6x6x¾	7	16	21	¾
B-8	8	8	6x6x1	7	16	21	1½
C-1A	6	6	6x6x1	7	20	19	1½
C-1B	15	24	8x8x1	9	20	37	1½
C-1C	15	24	8x8x1	9	20	37	1½
C-5	30	9	6x6x1	7	20	43	1
C-7A	8	10	6x6x1	7	20	23	1
C-7B	6	6	6x6x1	7	20	19	1½
D-1A	15	156	8x8x1	9	20	169	1¾
D-1B	15	144	8x8x1	9	20	169	1
D-5	15	150	8x8x1	9	20	165	2
D-6	15	156	8x8x1	9	20	169	1
D-7A	8	18	6x6x1	7	20	31	1½
D-7B	15	156	8x8x1	9	20	169	1¾
E-1	15	24	8x8x1	9	20	37	1
E-7	15	24	8x8x1	9	20	37	1½
F-1A	FULL WIDTH	192	8x8x1	9	20	205	1
F-1B	10	24	8x8x1	9	20	37	1
F-7	10	24	8x8x1	9	20	37	2

REV.	DATE	REVISION DESCRIPTION	SHEET NO.

THE INFORMATION, INCLUDING ESTIMATED QUANTITIES OF WORK, SHOWN ON THESE SHEETS IS BASED ON LIMITED INVESTIGATIONS BY THE STATE AND IS IN NO WAY WARRANTED TO INDICATE THE CONDITIONS OF ACTUAL QUANTITIES OF WORK WHICH WILL BE REQUIRED.

Plotted: 12/23/2013

DESIGNER/DRAFTER: EW

CHECKED BY: CW

SCALE AS NOTED

STATE OF CONNECTICUT
DEPARTMENT OF TRANSPORTATION

Filename: $FILE$

SIGNATURE/BLOCK:

Stantec Consulting Services Inc.
2321 Whitney Ave.
Hamden, CT 06518

PROJECT TITLE:
REHABILITATION OF BRIDGE I-91 NB & SB OVER US 5, AMTRAK & FERRY STREET

TOWN: NEW HAVEN

DRAWING TITLE:
NB: REPAIR DETAILS BUILT UP GIRDERS - 2

PROJECT NO. 092-0612

DRAWING NO. S-24

SHEET NO. 04.24

EXISTING SECTION A-A

EXISTING ELEVATION

PROPOSED SECTION A-A

PROPOSED ELEVATION

REPAIR DETAIL - TYPE GW3

SCALE: 1½" = 1'-0"

REPAIR TABLE - TYPE GW3		
LOCATION	'H' (IN)	'L' (IN)
-	-	-

GENERAL NOTE:

1. REFER TO GENERAL NOTES ON DRAWING S-23.
2. THE DETAILS ON THIS SHEET ARE PROVIDED FOR REFERENCE, AND SHALL BE USED SHOULD ANY ROLLED BEAM DETERIORATION BE IDENTIFIED AFTER BLAST CLEANING OPERATIONS ARE COMPLETED. THE ENGINEER SHALL DETERMINE THE NEED FOR THESE REPAIR DETAILS AND DIMENSIONS OF REPAIR PIECES.

SUGGESTED WORK SEQUENCE FOR WEB DETERIORATION:

1. REFER TO SUGGESTED WORK SEQUENCE FOR WEB DETERIORATION ON DRAWING S-23.

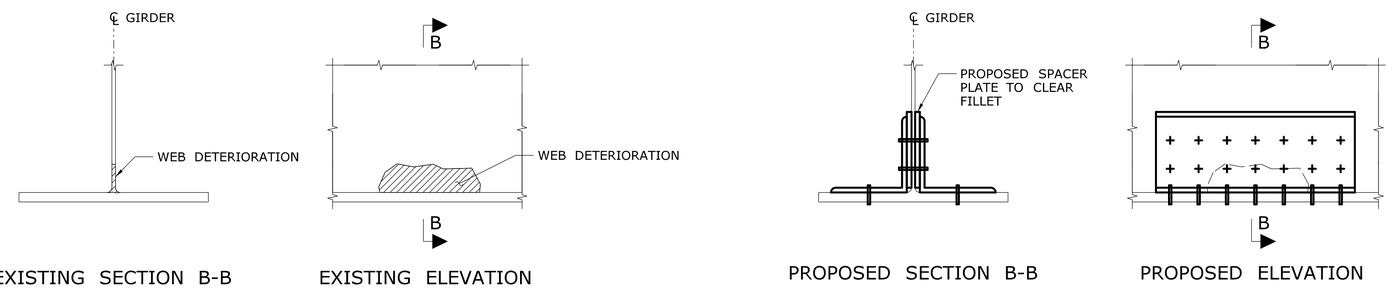

EXISTING SECTION B-B

EXISTING ELEVATION

PROPOSED SECTION B-B

PROPOSED ELEVATION

REPAIR DETAIL - TYPE GW4

SCALE: 1½" = 1'-0"

REPAIR TABLE - TYPE GW4		
LOCATION	'H' (IN)	'L' (IN)
-	-	-

REV.	DATE	REVISION DESCRIPTION	SHEET NO.

THE INFORMATION, INCLUDING ESTIMATED QUANTITIES OF WORK, SHOWN ON THESE SHEETS IS BASED ON LIMITED INVESTIGATIONS BY THE STATE AND IS IN NO WAY WARRANTED TO INDICATE THE CONDITIONS OF ACTUAL QUANTITIES OF WORK WHICH WILL BE REQUIRED.

Plotted: 12/23/2013

DESIGNER/DRAFTER: EW

CHECKED BY: CW

SCALE AS NOTED

STATE OF CONNECTICUT
DEPARTMENT OF TRANSPORTATION

Filename: $FILE$

SIGNATURE/BLOCK:

Stantec Consulting Services Inc.
2321 Whitney Ave.
Hamden, CT 06518

PROJECT TITLE:
REHABILITATION OF BRIDGE I-91 NB & SB OVER US 5, AMTRAK & FERRY STREET

TOWN: **NEW HAVEN**

DRAWING TITLE:
NB: REPAIR DETAILS ROLLED GIRDERS - 1

PROJECT NO. 092-0612

DRAWING NO. S-25

SHEET NO. 04.25

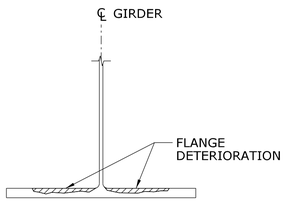

EXISTING SECTION A-A

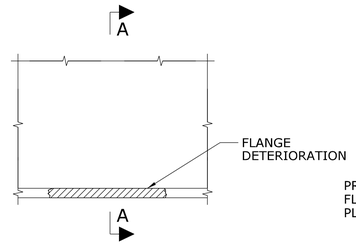

EXISTING ELEVATION

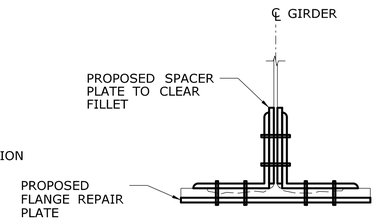

PROPOSED SECTION A-A

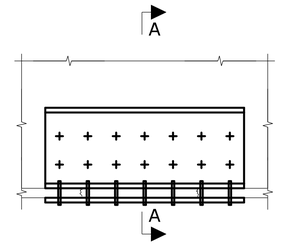

PROPOSED ELEVATION

REPAIR DETAIL - TYPE GF2

SCALE: 1½" = 1'-0"

REPAIR TABLE - TYPE GF2		
LOCATION	'W' (IN)	'L' (IN)
-	-	-

GENERAL NOTE:

1. REFER TO GENERAL NOTES ON DRAWING S-23.
2. THE DETAILS ON THIS SHEET ARE PROVIDED FOR REFERENCE, AND SHALL BE USED SHOULD ANY ROLLED BEAM DETERIORATION BE IDENTIFIED AFTER BLAST CLEANING OPERATIONS ARE COMPLETED. THE ENGINEER SHALL DETERMINE THE NEED FOR THESE REPAIR DETAILS AND DIMENSIONS OF REPAIR PIECES.

REV.	DATE	REVISION DESCRIPTION	SHEET NO.

THE INFORMATION, INCLUDING ESTIMATED QUANTITIES OF WORK, SHOWN ON THESE SHEETS IS BASED ON LIMITED INVESTIGATIONS BY THE STATE AND IS IN NO WAY WARRANTED TO INDICATE THE CONDITIONS OF ACTUAL QUANTITIES OF WORK WHICH WILL BE REQUIRED.

Plotted: 12/23/2013

DESIGNER/DRAFTER: EW

CHECKED BY: CW

SCALE AS NOTED

STATE OF CONNECTICUT
DEPARTMENT OF TRANSPORTATION

Filename: $FILE$

SIGNATURE/ BLOCK:

Stantec Consulting Services Inc.
2321 Whitney Ave.
Hamden, CT 06518

PROJECT TITLE:

REHABILITATION OF BRIDGE I-91 NB & SB OVER US 5, AMTRAK & FERRY STREET

TOWN: **NEW HAVEN**

DRAWING TITLE: **NB: REPAIR DETAILS ROLLED GIRDERS - 2**

PROJECT NO. **092-0612**

DRAWING NO. **S-26**

SHEET NO. **04.26**

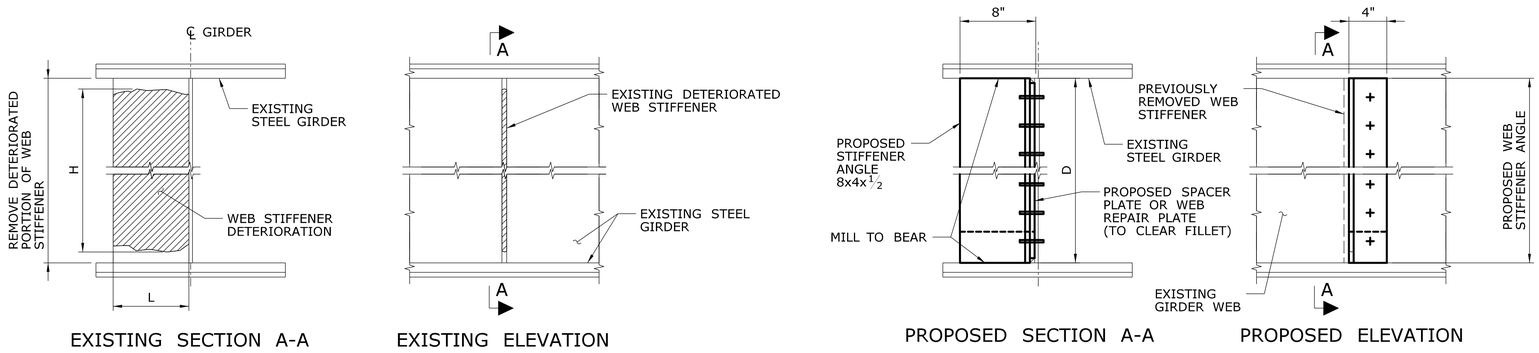

EXISTING SECTION A-A EXISTING ELEVATION PROPOSED SECTION A-A PROPOSED ELEVATION

REPAIR DETAIL - TYPE S1

SCALE: 1½" = 1'-0"

REPAIR TABLE - TYPE S1			
LOCATION	'H' (IN)	'L' (IN)	APPROX. REPAIR ANGLE HEIGHT 'D' (IN)
A-6	20	1	78
C-7	72	2	108
D-1A	72	2	96
D-1B	81	2	108
D-2	72	2	96
D-6	72	2	96
D-7	72	2	96
E-7	4	7	108

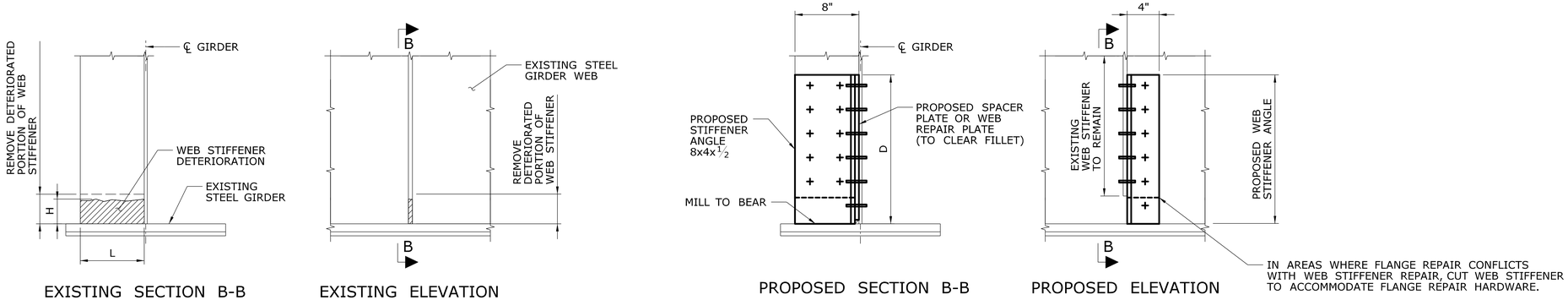

EXISTING SECTION B-B EXISTING ELEVATION PROPOSED SECTION B-B PROPOSED ELEVATION

REPAIR DETAIL - TYPE S2

SCALE: 1½" = 1'-0"

REPAIR TABLE - TYPE S2			
LOCATION	'H' (IN)	'L' (IN)	APPROX. REPAIR ANGLE HEIGHT 'D' (IN)
F-1A	4	2	21
F-1B	1	8	18

GENERAL NOTES:

1. CARE SHALL BE TAKEN WHEN CUTTING THE EXISTING CONNECTION PLATE SO THE EXISTING GIRDER WEB IS NOT DAMAGED.
2. PROPOSED STIFFENER ANGLES SHALL BE SIZED TO MATCH THE EXISTING STIFFENERS BOTH IN THICKNESS AND WIDTH.
3. AT LOCATIONS WERE DIAPHRAGMS OR CROSS-FRAMES COINCIDE WITH STIFFENER REPAIRS, THE DIAPHRAGM OR CROSS-FRAME SHALL BE DISCONNECTED AT THE REPAIR END OF THE MEMBER. THE CONTRACTOR SHALL PROVIDE ADEQUATE SUPPORT WHILE THE DIAPHRAGM IS PARTIALLY DISCONNECTED. HOLES SHALL BE DRILLED AS REQUIRED TO FACILITATE RECONNECTION TO THE EXISTING DIAPHRAGM. OMIT NEW SPLICE BOLTS THAT CONFLICT WITH THE DIAPHRAGM INSTALLATION.
4. FOR ADDITIONAL NOTES, REFER TO GENERAL NOTES ON DRAWING S-23.

SUGGESTED WORK SEQUENCE:

1. CUT AND REMOVE PORTION OF STIFFENER AS SHOWN. IF 50% OR MORE OF THE STIFFENER MUST BE REMOVED, CUT AND REMOVE THE ENTIRE SIFFENER AND REPLACE IT WITH A NEW ANGLE. IF LESS THAN 50% OF THE STIFFENER MUST BE REMOVED, CUT THE STIFFENER AND BOLT THE PROPOSED ANGLE TO THE REMAINING PORTION OF THE PARTIAL STIFFENER IN ADDITION TO THE EXISTING GIRDER WEB. STIFFENERS SHALL BE CUT BACK 1" CLEAR OF ALL DETERIORATION.
2. GRIND SMOOTH, PREPARE, AND CLEAN ALL SURFACES AND EXISTING WELDS BEFORE CONNECTING PROPOSED STIFFENER ANGLES.
3. USING SHOP DRILLED REPAIR PLATES AS A TEMPLATE, FIELD DRILL 15/16" DIAMETER HOLES IN THE WEB AND PARTIAL STIFFENERS.
4. CONNECT THE EXISTING GIRDER WEB TO THE REPAIR STIFFENER ANGLES USING 7/8" DIAMETER ASTM A325 (TYPE 1) HIGH STRENGTH BOLTS.
5. PAINT THE NEW AND/OR EXISTING STEEL.

REV.	DATE	REVISION DESCRIPTION	SHEET NO.

THE INFORMATION, INCLUDING ESTIMATED QUANTITIES OF WORK, SHOWN ON THESE SHEETS IS BASED ON LIMITED INVESTIGATIONS BY THE STATE AND IS IN NO WAY WARRANTED TO INDICATE THE CONDITIONS OF ACTUAL QUANTITIES OF WORK WHICH WILL BE REQUIRED.

Plotted: 12/23/2013

DESIGNER/DRAFTER: EW
CHECKED BY: CW
SCALE AS NOTED

STATE OF CONNECTICUT
DEPARTMENT OF TRANSPORTATION

Filename: $FILE$

SIGNATURE/BLOCK:
STATE OF CONNECTICUT · PROFESSIONAL ENGINEER · 32384 · LICENSED
Stantec Consulting Services Inc.
2321 Whitney Ave.
Hamden, CT 06518

PROJECT TITLE:
REHABILITATION OF BRIDGE I-91 NB & SB OVER US 5, AMTRAK & FERRY STREET

TOWN: **NEW HAVEN**

DRAWING TITLE:
NB: REPAIR DETAILS WEB STIFFENERS - 1

PROJECT NO. **092-0612**
DRAWING NO. **S-27**
SHEET NO. **04.27**

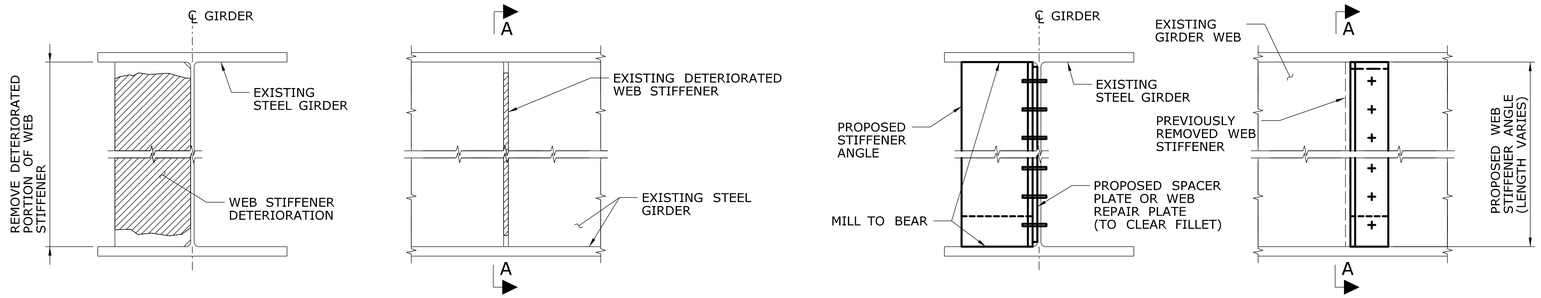

EXISTING SECTION A-A EXISTING ELEVATION PROPOSED SECTION A-A PROPOSED ELEVATION

REPAIR DETAIL - TYPE S3

SCALE: $1\frac{1}{2}$" = 1'-0"

REPAIR TABLE - TYPE S3		
LOCATION	'H' (IN)	'L' (IN)
-	-	-

GENERAL NOTES:

1. REFER TO GENERAL NOTES ON DRAWING S-23.
2. REFER TO GENERAL NOTES ON DRAWING S-27.
3. THE DETAILS ON THIS SHEET ARE PROVIDED FOR REFERENCE, AND SHALL BE USED SHOULD ANY ROLLED BEAM DETERIORATION BE IDENTIFIED AFTER BLAST CLEANING OPERATIONS ARE COMPLETED. THE ENGINEER SHALL DETERMINE THE NEED FOR THESE REPAIR DETAILS AND DIMENSIONS OF REPAIR PIECES.

SUGGESTED WORK SEQUENCE:

1. REFER TO SUGGESTED WORK SEQUENCE ON DRAWING S-27.

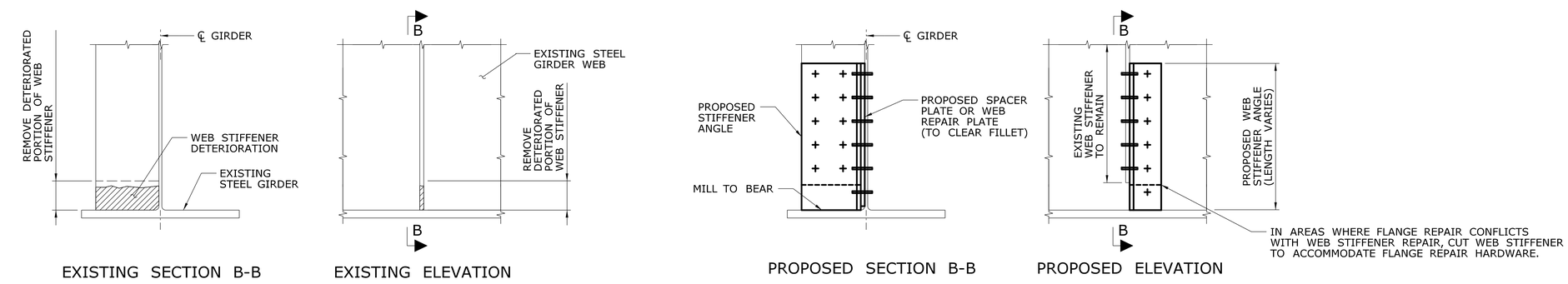

EXISTING SECTION B-B EXISTING ELEVATION PROPOSED SECTION B-B PROPOSED ELEVATION

REPAIR DETAIL - TYPE S4

SCALE: $1\frac{1}{2}$" = 1'-0"

REPAIR TABLE - TYPE S4		
LOCATION	'H' (IN)	'L' (IN)
-	-	-

REV.	DATE	REVISION DESCRIPTION	SHEET NO.

THE INFORMATION, INCLUDING ESTIMATED QUANTITIES OF WORK, SHOWN ON THESE SHEETS IS BASED ON LIMITED INVESTIGATIONS BY THE STATE AND IS IN NO WAY WARRANTED TO INDICATE THE CONDITIONS OF ACTUAL QUANTITIES OF WORK WHICH WILL BE REQUIRED.

Plotted: 12/23/2013

DESIGNER/DRAFTER: EW
CHECKED BY: CW
SCALE AS NOTED

STATE OF CONNECTICUT
DEPARTMENT OF TRANSPORTATION

Filename: $FILE$

SIGNATURE/BLOCK:

Stantec Consulting Services Inc.
2321 Whitney Ave.
Hamden, CT 06518

PROJECT TITLE:
REHABILITATION OF BRIDGE I-91 NB & SB OVER US 5, AMTRAK & FERRY STREET

TOWN: **NEW HAVEN**

DRAWING TITLE:
NB: REPAIR DETAILS WEB STIFFENERS - 2

PROJECT NO. 092-0612
DRAWING NO. S-28
SHEET NO. 04.28

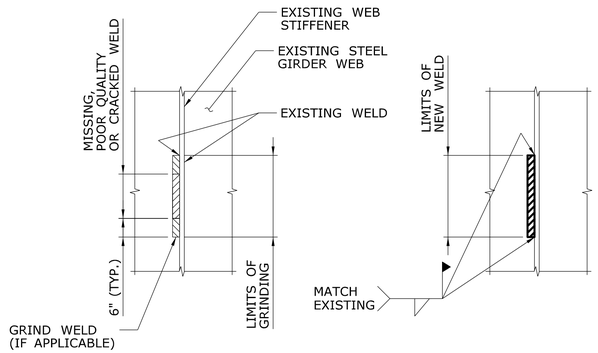

REPAIR DETAIL - TYPE W1

SCALE: 1½" = 1'-0"

REPAIR TABLE - TYPE W1			
LOCATION	'L' (IN)	TYPE	LIMIT OF NEW WELD (IN)
A-2	78	CRACKED	78
A-3	78	CRACKED	78
A-4	3½	CRACKED	15½
A-6	78	CRACKED	78
A-7A	78	CRACKED	78
A-7B	2	CRACKED	14
B-5	34	MISSING	34
B-6A	34	MISSING	34
B-6B	34	CRACKED	34
B-6C	34	MISSING	34
B-7A	34	MISSING	34
B-7B	34	MISSING	34
B-7C	34	MISSING	34
B-8	78	MISSING	78
C-1	36	MISSING	36
C-2	36	MISSING	36
C-4	1¼ WEST SIDE, 1 EAST SIDE	CRACKED	13¼ WEST SIDE, 13 EAST SIDE
C-5	5½	POOR QUALITY	17½
D-1	36	MISSING	36
D-7	36	CRACKED	36
E-5	½ WEST SIDE, ¼ EAST SIDE	CRACKED	12½ WEST SIDE, 12¼ EAST SIDE
F-5A	1¼ EAST SIDE	CRACKED	13¼ EAST SIDE
F-5B	1 WEST SIDE, ¼ & ⅜ EAST SIDE	CRACKED	13 WEST SIDE, 12¼ & 12⅜ EAST SIDE
F-6A	⅝ EAST SIDE	CRACKED	12⅝ EAST SIDE
F-6B	⅝ WEST SIDE, ⅝ EAST SIDE	CRACKED	12⅝ WEST SIDE, 12⅝ EAST SIDE

GENERAL NOTES:

1. REFER TO GENERAL NOTE #1 ON DRAWING S-23.
2. FOR LOCATIONS WHERE 'L' AND LIMIT OF NEW WELD ARE THE SAME LENGTH, WELD IS DETERIORATED FOR FULL LENGTH OF WEB STIFFENER TO GIRDER WEB CONNECTION. AT THESE LOCATIONS, WHERE WELD IS CRACKED OR POOR QUALITY, WELD CANNOT BE GRINDED 6" BEYOND LIMITS OF DETERIORATION AS SHOWN IN THE REPAIR DETAIL. GRIND WELD FOR FULL LENGTH OF CONNECTION.

REV.	DATE	REVISION DESCRIPTION	SHEET NO.

THE INFORMATION, INCLUDING ESTIMATED QUANTITIES OF WORK, SHOWN ON THESE SHEETS IS BASED ON LIMITED INVESTIGATIONS BY THE STATE AND IS IN NO WAY WARRANTED TO INDICATE THE CONDITIONS OF ACTUAL QUANTITIES OF WORK WHICH WILL BE REQUIRED.

Plotted: 12/23/2013

DESIGNER/DRAFTER: EW
CHECKED BY: CW
SCALE AS NOTED

STATE OF CONNECTICUT
DEPARTMENT OF TRANSPORTATION

Filename: $FILE$

SIGNATURE/BLOCK:

Stantec Consulting Services Inc.
2321 Whitney Ave.
Hamden, CT 06518

PROJECT TITLE:
REHABILITATION OF BRIDGE I-91 NB & SB OVER US 5, AMTRAK & FERRY STREET

TOWN: **NEW HAVEN**

DRAWING TITLE: **NB: REPAIR DETAILS WELDS**

PROJECT NO. **092-0612**
DRAWING NO. **S-29**
SHEET NO. **04.29**

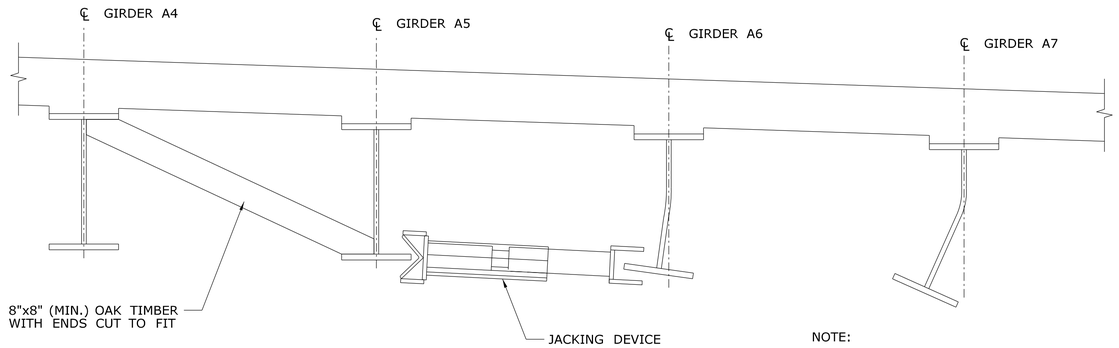

NOTE:

1. THE NUMBER OF JACKING DEVICES AND TIMBER REQUIRED SHALL BE DETERMINED BY THE CONTRACTOR'S ENGINEER.

TYPICAL ARRANGEMENT OF JACKING DEVICE DETAIL 1 (LOOKING WEST)

SCALE: N.T.S.

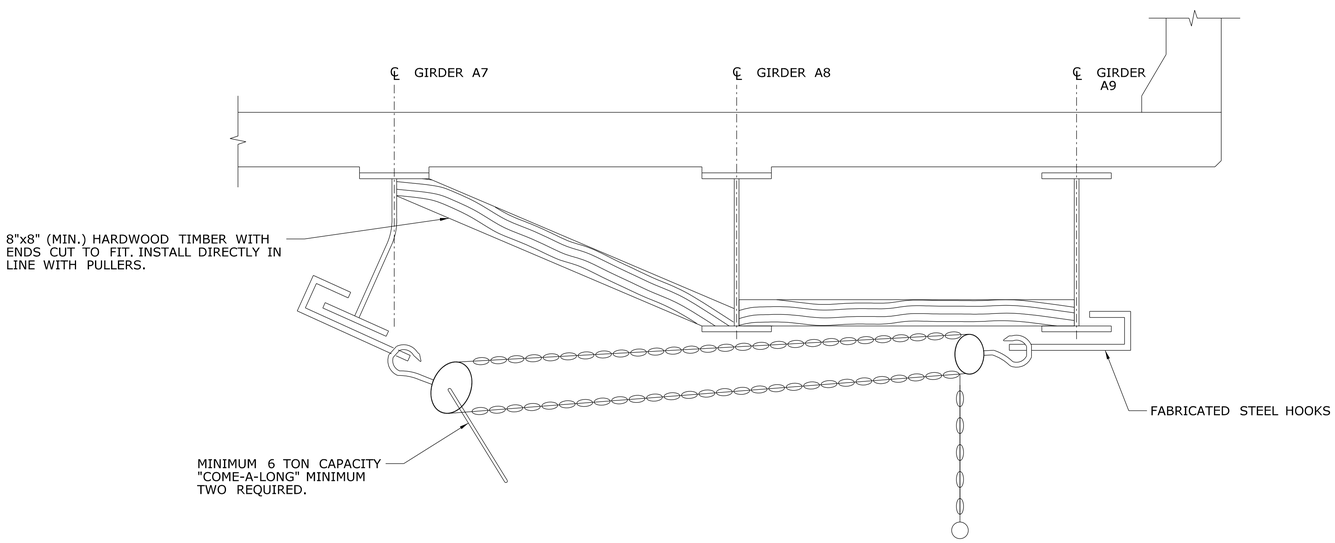

TYPICAL INSTALLATION OF COME-ALONG PULLERS DETAIL 2 (LOOKING WEST) (ALTERNATE TO JACKING DEVICE)

SCALE: N.T.S.

PROCEDURE FOR HEAT STRAIGHTENING OF TWISTED GIRDER:

1. REFER TO GENERAL NOTES ON DRAWING S-23.
2. A VISUAL INPSECTION SHALL BE PERFORMED ON THE BENT AREAS AND ON THE CONNECTION PLATES AT BOTH ENDS OF THE BENT. IN ADDITION, BOTH SIDES OF THE WEB ON EITHER SIDE OF THE BENT SHALL BE INSPECTED. PARTICULAR ATTENTION SHALL BE PAID TO AREAS WHERE THE PAINT HAS FLAKED AND/OR RUST IS APPARENT. IT WILL BE NECESSARY TO REMOVE PAINT IN THESE AREAS PRIOR TO INSPECTION. IF CRACKS ARE FOUND, THE ENGINEER SHALL BE NOTIFIED PRIOR TO REPAINTING.
3. INSTALL A MINIMUM OF TWO HARDWOOD TIMBERS IN THE BAY ADJACENT TO THE BENT GIRDER AS SHOWN ON DETAIL 1. THE TIMBER SHOULD BE SPACED ABOUT TWO FEET APART, APPROXIMATELY OPPOSITE THE BENT AREA.
4. INSTALL THE JACKING DEVICE AS SHOWN IN DETAIL 1, WITH THE RAM END AT THE BENT AREA AND WITH THE JACKING END CENTERED BETWEEN THE TIMBERS. LOAD THE JACKS UNTIL SUBSTANTIAL RESISTANCE IS FELT. THIS IS TO PRODUCE A LOAD THAT IS SUFFICIENT TO RESTRAIN THE PIECE DURING THE HEAT-SHRINK STRAIGHTENING, BUT WOULD NOT PRODUCE A STRESS GREATER THAN 20 KSI UNDER ANY CONDITION.
5. USING TWO TORCHES AT THE SAME PATTERN, ONE DIRECTED AT THE TOP OF THE BOTTOM FLANGE AND ONE DIRECTED UP FROM BELOW THE GIRDER, HEAT WITH THE PATTERNS DESCRIBED IN FHWA GUIDE FOR HEAT-STRAIGHTENING OF DAMAGED STEEL BRIDGE MEMBERS. HEAT TO BRING THE STEEL UP TO A TEMPERATURE OF BETWEEN 1050 AND 1150 DEGREES AS QUICKLY AS POSSIBLE. THE MAXIMUM TEMPERATURE SHALL BE CAREFULLY CONTROLLED, USING TEMPERATURE-INDICATING CRAYONS. DO NOT OVERHEAT THE STEEL.
6. THE FIRST HEAT PATTERN SHALL BE APPLIED TO THE CONVEX SIDE OF THE BENT MEMBER AT THE POINT OF IMPACT.
7. AS THE WORK PROGRESSES, PRESSURE SHOULD BE MAINTAINED ON THE JACKS. THIS IS A RESTRAINT LOAD AND NOT A HEAT-FORGING LOAD. ADDITIONAL PRESSURE SHALL NOT BE APPLIED TO THE JACKS WHILE THE STEEL IS BEING HEATED OR IMMEDIATELY AFTER MAXIMUM HEAT HAS BEEN ATTAINED.
8. THE STRUCTURAL STEEL WILL MOVE IN THE DESIRED DIRECTION AS THE STEEL COOLS. IT IS DURING THIS COOLING-DEFORMATION PHASE THAT THE PRESSURE SHOULD BE MAINTAINED ON THE JACKS. HEATING PATTERNS CAN BE HEATED IN ANY ORDER PROVIDED THAT SURROUNDING AREAS HAVE HAD A CHANCE TO COOL TO A TEMPERATURE LESS THAN 100° F. HEATING STEEL THAT IS ALREADY HOT DOES NOT PRODUCE EFFECTIVE RESULTS. THE INITIAL HEATING PATTERNS MAY BE SPACED AT A MINIMUM OF 18 INCHES CENTER TO CENTER OR LARGER SPACING SO THAT ADDITIONAL PATTERNS MAY BE PLACED BETWEEN THEM AS REQUIRED. CARE SHALL BE TAKEN DURING HEATING SO AS NOT TO DAMAGE THE STEEL.
9. STRAIGHTENING TO A TOLERANCE OF ABOUT $\frac{1}{4}$" PER 10 FEET OF MEASURED LENGTH IS GENERALLY CONSIDERED ACCEPTABLE. LOCALIZED DENTS ARE ALMOST IMPOSSIBLE TO REPAIR IN FLANGES. LOCALIZED SWEEPS ARE GENERALLY LEFT UNREPAIRED. DENTS IN THE STEEL ARE BEST REPAIRED BY WELDING.
10. AFTER ANY STRAIGHTENING AND BEFORE WELDING, THE REPAIRED AREA SHALL HAVE MAGNETIC PARTICLE INSPECTION PERFORMED BY A QUALIFIED PERSONNEL. ANY CRACKS DISCOVERED SHALL BE REPAIRED BY WELDING, AS DIRECTED BY THE ENGINEER.
11. ANY BENT GOUGES AT THE BENT LOCATION SHALL BE REPAIRED BY GRINDING OR WELDING. GRIND THE BENT LOCATION TO REMOVE THE GOUGED METAL. AFTER GRINDING, MAGNETIC PARTICLE TESTING SHALL BE PERFORMED TO ENSURE THAT THERE ARE NO CRACKS PRESENT. ANY CRACKS DISCOVERED WILL REQUIRE MORE GRINDING UNTIL THE CRACK IS FULLY REMOVED. CRACKS WHICH EXTEND INTO THE FLANGE TO COVER PLATE FILLET WELD WILL REQUIRE A MORE EXTENSIVE REPAIR PROCEDURE.
12. ONCE THE BENT STEEL AND ANY CRACKS ARE FULLY REMOVED, DENTS AND NOTCHES EXCEEDING $\frac{1}{4}$" IN THE AFFECTED AREA SHALL BE REPAIRED BY WELDING. WELDING MUST BE PERFORMED BY A CERTIFIED WELDER IN ACCORDANCE WITH AN APPROVED WELDING PROCEDURE SPECIFICATION.
13. AFTER THE REPAIR WELDING IS COMPLETE, THE AREAS MUST BE ULTRASONIC TESTED (UT) TO ENSURE THE QUALITY OF THE WELDS.
14. AFTER ALL REPAIRS AND REQUIRED TESTING HAS SUCCESSFULLY BEEN COMPLETED, THE REPAIRED AREAS SHALL BE REPAINTED AS DIRECTED BY THE ENGINEER.

REV.	DATE	REVISION DESCRIPTION	SHEET NO.

THE INFORMATION, INCLUDING ESTIMATED QUANTITIES OF WORK, SHOWN ON THESE SHEETS IS BASED ON LIMITED INVESTIGATIONS BY THE STATE AND IS IN NO WAY WARRANTED TO INDICATE THE CONDITIONS OF ACTUAL QUANTITIES OF WORK WHICH WILL BE REQUIRED.

Plotted: 12/23/2013

DESIGNER/DRAFTER: EW
CHECKED BY: CW
SCALE AS NOTED

STATE OF CONNECTICUT
DEPARTMENT OF TRANSPORTATION

Filename: $FILE$

SIGNATURE/BLOCK:

Stantec Consulting Services Inc.
2321 Whitney Ave.
Hamden, CT 06518

PROJECT TITLE:
REHABILITATION OF BRIDGE I-91 NB & SB OVER US 5, AMTRAK & FERRY STREET

TOWN: **NEW HAVEN**

DRAWING TITLE: **NB: HEAT STRAIGHTENING DETAILS - 1**

PROJECT NO. **092-0612**
DRAWING NO. **S-30**
SHEET NO. **04.30**

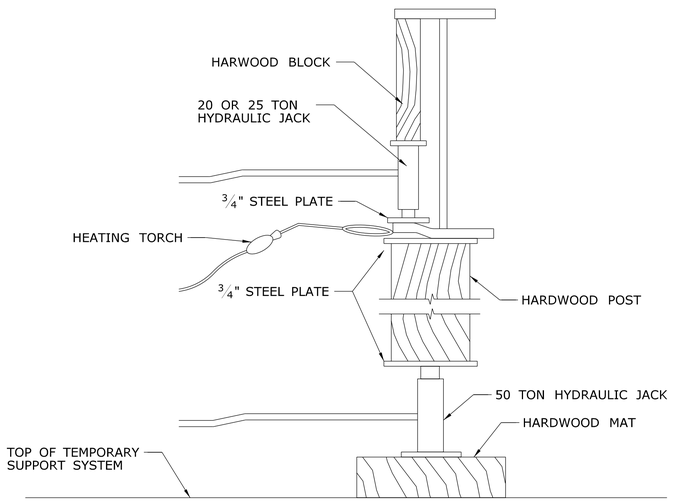

HEAT STRAIGHTENING GIRDER BOTTOM FLANGE DETAIL 3

SCALE: N.T.S.

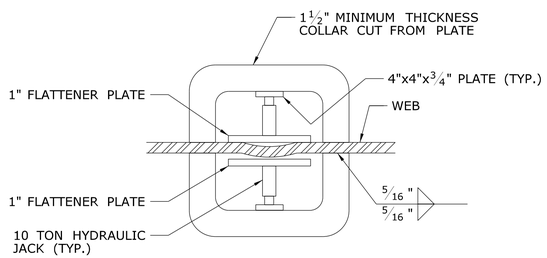

GIRDER WEB STRAIGHTENING DETAIL 4

SCALE: N.T.S.

SUGGESTED REPAIR PROCEDURE FOR HEAT STRAIGHTENING GIRDER BOTTOM FLANGE:

1. REFER TO GENERAL NOTES ON THIS SHEET.
2. REMOVE PAINT FOR SIX INCHES AROUND ANY AREA THAT WILL BE CUT, HEATED OR WELDED USING AN APPROVED PAINT REMOVAL PROCEDURE.
3. INSTALL TWO 8"x8" HARDWOOD TIMBER BLOCKING, ONE ABOVE AND ONE BELOW THE FLANGE AT THE BENT LOCATION, AS SEEN IN DETAIL 3.
4. INSTALL AT LEAST TWO JACKS AS SHOWN IN DETAIL 3. ADDITIONAL JACKS MAY BE INSTALLED IF REQUIRED BY CONTRACTOR'S DESIGN WITH MINIMUM THREE FEET SPACING.
5. LOAD THE JACKS TO A TOTAL LOAD OF FIVE TONS (2.5 TONS PER JACK). THIS IS TO PRODUCE A LOAD THAT IS SUFFICIENT TO RESTRAIN THE GIRDER DURING HEAT STRAIGHTENING BUT NOT ENOUGH TO CAUSE MECHANICAL STRAIGHTENING.
6. USING ONE TORCH, HEAT THE FLANGE AS DESCRIBED IN FHWA GUIDE FOR HEAT STRAIGHTENING OF DAMAGED STEEL BRIDGE MEMBERS TO BRING THE STEEL UP TO A TEMPERATURE OF BETWEEN 1050 AND 1200 DEGREES F, AS QUICKLY AS POSSIBLE.
7. THE FIRST HEAT PATTERN SHOULD BE APPLIED TO THE CONVEX SIDE OF THE BENT MEMBER.
8. AS THE STEEL COOLS, MAINTAIN THE PRESSURE OBTAINED IN STEP 4 ON THE JACKS.
9. THE STRUCTURAL STEEL WILL MOVE IN THE DESIRED DIRECTION AS THE STEEL COOLS AND CONTRACTS. IT IS DURING THIS COOLING/DEFORMATION PHASE THAT THE PRESSURE SHOULD BE MAINTAINED ON THE JACKS. HEATING PATTERNS MAY BE HEATED IN ANY ORDER, PROVIDED THE SURROUNDING AREAS HAVE HAD A CHANCE TO COOL TO A TEMPERATURE BELOW 100 DEGREES F. HEATING STEEL THAT IS ALREADY HOT DOES NOT PRODUCE EFFECTIVE RESULTS.

SUGGESTED REPAIR PROCEDURE FOR STRAIGHTENING GIRDER WEB:

1. REFER TO GENERAL NOTES ON THIS SHEET.
2. INSTALL PLATE COLLARS AND JACKS AT THE DEFORMATION, AS SHOWN IN DETAIL 4.
3. HEAT WEB DEFORMATION TO A TEMPERATURE OF BETWEEN 1050° F AND 1200° F AS QUICKLY AS POSSIBLE. TEMPERATURE SHALL BE CHECKED BY TEMPERATURE-INDICATING CRAYONS.
4. MAINTAIN PRESSURE ON WEB DEFORMATION AS THE STEEL COOLS.
5. REPEAT STEPS 1 AND 2 UNTIL AREA IS FLATTENED TO WITHIN THE TOLERANCES GIVEN IN ANNEX C OF AWS D1.5.
6. AFTER THE WEB IS STRAIGHTENED TO ACCEPTABLE TOLERANCES REMOVE THE COLLAR PLATES BY AIR-ARC GOUGING OR FLAME CUTTING SO AS NOT TO DAMAGE THE WEB AND GRIND THE AREA FLUSH AND SMOOTH. CHECK THE AREA FOR CRACKS BY MAGNETIC PARTICLE INSPECTION. ALL WELDING SHALL BE PERFORMED IN ACCORDANCE WITH WELDING PROCEDURE SPECIFICATIONS APPROVED BY THE ENGINEER. MINIMUM PREHEAT AND INTERPASS TEMPERATURE REQUIREMENTS SHALL APPLY TO ALL WELDS, TEMPORARY AND PERMANENT.

GENERAL NOTES FOR HEAT STRAIGHTENING OF STEEL MEMBERS:

1. ALL HEAT STRAIGHTENING WORK SHALL BE PERFORMED IN ACCORDANCE WITH FHWA GUIDE FOR HEAT STRAIGHTENING OF DAMAGED STEEL BRIDGE MEMBERS.
2. PAINT SHALL BE REMOVED AT LEAST 6 INCHES FROM WORK AREA BEFORE FLAME CUTTING, FLAMGE STRAIGHTENING, AIR-CARBON ARC GOUGING AND/OR WELDING OPERATIONS. THIS SHALL BE DONE AS DIRECTED BY THE ENGINEER. PAINT REMOVAL PROCEDURE SHALL BE APPROVED BY THE ENGINEER.
3. PRIOR TO WELDING, THE AREAS TO BE WELDED SHALL BE CLEANED TO BRIGHT METAL, THEN PREHEATED AS REQUIRED IN ACCORDANCE WITH SECTION 4.2 OF AWS D1.5, BRIDGE WELDING CODE. BASE METAL PREHEAT AND INTERPASS TEMPERATURE CONTROL SHALL BE CLOSELY MONITORED WITH THE USE OF TEMPERATURE-INDICATING CRAYONS OR SOME OTHER ELEVATED TEMPERATURE MONITORING DEVICE.
4. FLAME CUTTING, AIR-CARBON ARC GOUGING AND WELDING SHALL BE PERFORMED BY WELDING PERSONNEL IN POSSESSION OF A CURRENT CONNECTICUT DOT FIELD WELDER CERTIFICATION.
5. FIELD WELDING SHALL BE DONE UTILIZING ONLY LOW HYDROGEN ELECTRODES, AWS CLASSIFICATION F/018, OR FOR WEATHER GRADES F8048-C3. ELECTRODES SHALL BE CONDITIONED, STORED AND USED IN ACCORDANCE WITH THE APPLICABLE PROVISIONS OF AWS D1.5, BRIDGE WELDING CODE.
6. ALL WELDING SHALL BE PERFORMED IN COMPLIANCE WITH AN APPROVED WELDING PROCEDURE SPECIFICATION (WPS).
7. NONDESTRUCTIVE TESTING (NDT) SHALL BE PERFORMED IN ACCORDANCE WITH THE APPLICABLE SECTION(S) OF THE AWS D1.5, BRIDGE WELDING CODE.
8. WELDED REPAIRS WHICH ARE MADE IN TENSION AREAS OF THE MAIN MEMBERS SHALL BE ULTRASONICALLY EXAMINED (UT).
9. REPAIRED AREAS SHALL BE REPAINTED USING A PAINT SYSTEM WHICH IS APPROVED BY THE ENGINEER.
10. ANY DAMAGE THAT EXTENDS LESS THAN 1/4" INTO THE BASE METAL OF THE STRUCTURE MAY BE REPAIRED BY GRINDING. THE BASE METAL SHALL BE MADE SMOOTH AND FLUSH AND SHALL BE FLAIRED-OUT TO A SLOPE NO LESS THAN 1 IN 10 BY GRINDING.
11. DENTS AND GOUGES GREATER THAN 1/4" DEEP SHALL BE REPAIRED BY WELDING USING THE SMAW PROCESS.
12. IF THERE IS A CRACK PRESENT AT THE BENT LOCATIONS, IT MUST BE FULLY GROUND OUT BEFORE FURTHER REPAIRS ARE ATTEMPTED. GRIND THE CRACK LOCATION AND THEN TEST BY EITHER MAGNETIC PARTICLE TESTING OR BY DYE PENETRANT. IF THE CRACK HAS NOT BEEN FULLY REMOVED, MORE GRINDING AND TESTING WILL BE REQUIRED. ONCE THE CRACK IS FULLY REMOVED, CONTINUE WITH THE REPAIR WELDING.
13. ONCE WELDING IS COMPLETE, REMOVE THE RUN OFF TAB OR BACK UP PLATE, GRIND THE AREA SMOOTH TO BLEND IN WITH THE ADJOINING BASE METAL. ULTRASONIC TESTING MUST BE PERFORMED AT THE REPAIR AREA BEFORE PAINTING.
14. JACKS OR OTHER FORCE APPLICATION DEVICES SHOULD BE GAUGED AND CALIBRATED SO THAT THE FORCE EXERTED BY THE DEVICE MAY BE CONTROLLED AND MEASURED. NO EXTERNAL FORCE SHALL BE APPLIED TO THE STRUCTURE BY THE CONTRACTOR UNLESS IT IS MEASURED. CONTRACTOR SHALL DETERMINE AND DOCUMENT JACKING FORCE AT EACH DISTORTED GIRDER LOCATION, AND THE PROPOSED SEQUENCE OF JACKING AND HEATING. COPIES OF THE DOCUMENTATION SHALL BE SUBMITTED TO THE ENGINEER FOR ACCEPTANCE BEFORE BEGINNING REPAIRS. MODIFICATIONS DUE TO CHANGING CONDITIONS SHALL BE SUBMITTED TO THE ENGINEER.
15. CONTRACTOR SHALL IDENTIFY AND DOCUMENT ALL YIELD ZONES, YIELD LINES AND ASSOCIATED DISTORTION AND PROVIDE THIS INFORMATION TO THE ENGINEER PRIOR TO INITIATION OF HEAT STRAIGHTENING.
16. HEATING SHALL BE PERFORMED USING LARGE, APPROXIMATELY 1" DIAMETER MULTIPLE ORIFICE TIP OR ROSEBUD HEATING TORCHES OPERATING ON MULTI-FUEL (I.E. PROPANE, PROPYLENE, ACETYLENE, NATURAL GAS, ETC.) SUBJECT TO THE ENGINEER'S APPROVAL. NO CUTTING TORCH HEADS ARE PERMITTED.
17. HEATED AREAS SHALL BE CLOSELY MONITORED WITH TEMPERATURE-INDICATING CRAYONS MANUFACTURED FOR 100, 600, 1050, 1150 AND 1200 DEGREES FAHRENHEIT. HEATING MEASUREMENTS SHALL BE MADE IMMEDIATELY AFTER THE REMOVAL OF THE HEATING FLAME FROM THE STEEL.
18. ANY HEATING PROCEDURE WHICH CAUSES A PORTION OF THE STEEL TO BE HEATED TO A TEMPERATURE GREATER THAN 1200 DEGREES F SHALL BE CONSIDERED DESTRUCTIVE HEATING. DESTRUCTIVE HEATING SHALL BE INVESTIGATED FOR REACCEPTANCE, REPAIR OR REPLACEMENT BY TESTS ORDERED BY THE ENGINEER. THE COST OF SUCH TESTS AND ANY NECESSARY REPAIR OR REPLACEMENT SHALL BE BORNED BY THE CONTRACTOR.

REV.	DATE	REVISION DESCRIPTION	SHEET NO.

THE INFORMATION, INCLUDING ESTIMATED QUANTITIES OF WORK, SHOWN ON THESE SHEETS IS BASED ON LIMITED INVESTIGATIONS BY THE STATE AND IS IN NO WAY WARRANTED TO INDICATE THE CONDITIONS OF ACTUAL QUANTITIES OF WORK WHICH WILL BE REQUIRED.

Plotted: 12/23/2013

DESIGNER/DRAFTER: EW
CHECKED BY: CW
SCALE AS NOTED

STATE OF CONNECTICUT
DEPARTMENT OF TRANSPORTATION

Filename: $FILE$

SIGNATURE/BLOCK:

Stantec Consulting Services Inc.
2321 Whitney Ave.
Hamden, CT 06518

PROJECT TITLE:
REHABILITATION OF BRIDGE I-91 NB & SB OVER US 5, AMTRAK & FERRY STREET

TOWN: **NEW HAVEN**

DRAWING TITLE: **NB: HEAT STRAIGHTENING DETAILS - 2**

PROJECT NO. 092-0612
DRAWING NO. S-31
SHEET NO. 04.31

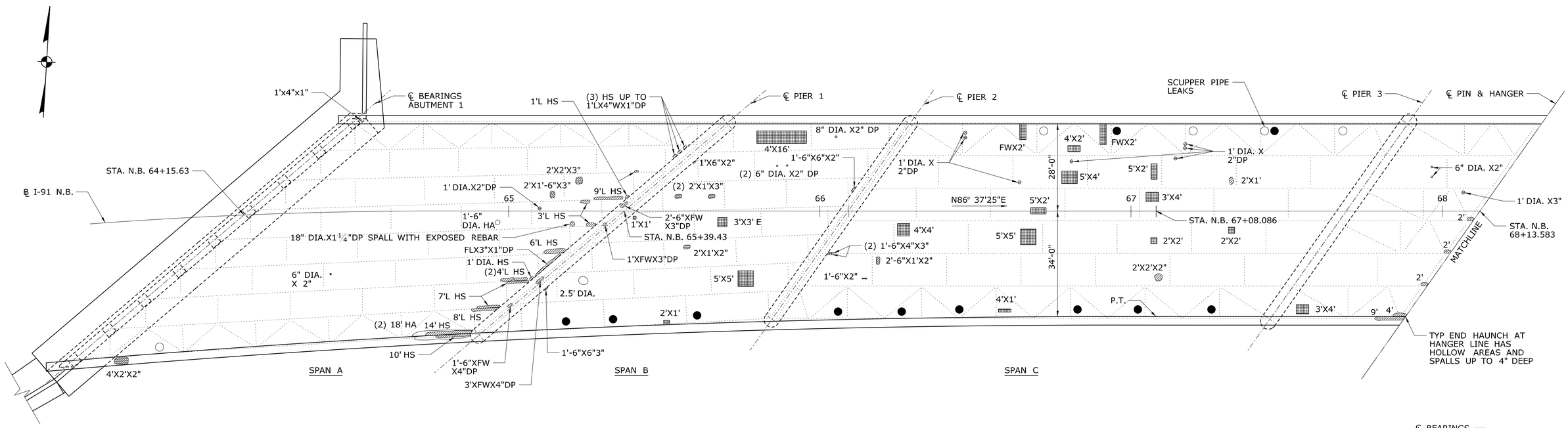

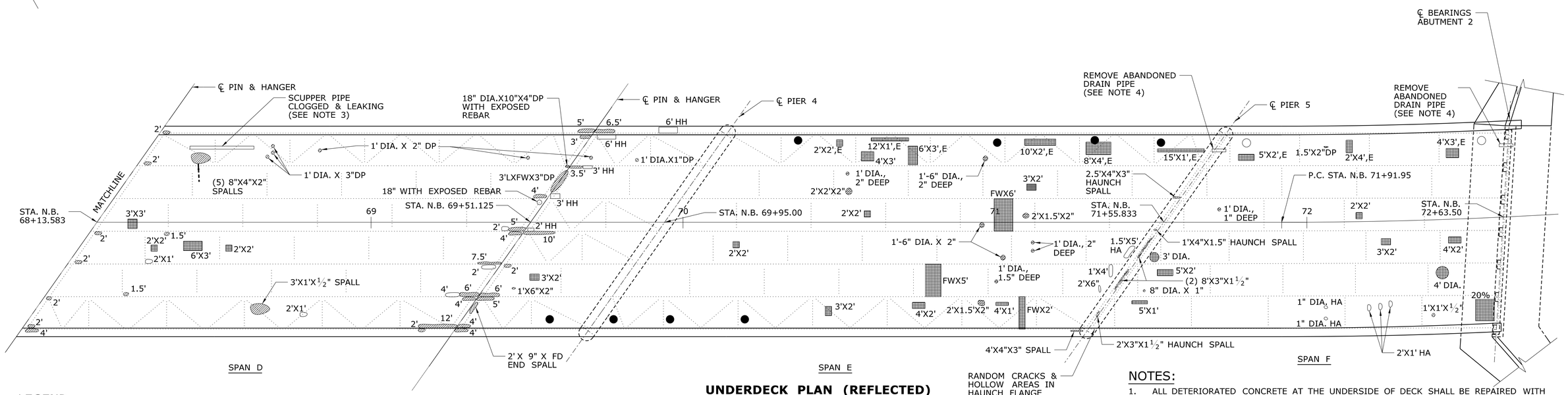

UNDERDECK PLAN (REFLECTED)

SCALE: 1/16"=1'-0"

LEGEND

- E EFFLORESCENCE
- HOLLOW AREA
- MAP CRACKING
- SHORT WEEP HOLE PIPE
- SPALL AREA
- SPALL AREA WITH EXPOSED REBAR
- WEEP HOLE PIPE

FW = FULL WIDTH
DP = DEEP
HA = HOLLOW AREA
HH = HOLLOW HAUNCH

HS = HOLLOW SOUNDING
L = LENGTH
W = WIDTH

NOTES:

1. ALL DETERIORATED CONCRETE AT THE UNDERSIDE OF DECK SHALL BE REPAIRED WITH "SURFACE PATCH." SEE DETAIL ON S-34.
2. PLUG ALL UNNECESSARY EXISTING WEEP PIPES. WEEP PIPES LOCATED AT LOW END OF EACH DECK JOINT TO REMAIN. SEE S-34 FOR WEEPHOLE DETAIL.
3. CLEAN ALL SCUPPERS AND DRAINAGE PIPES.
4. THE COST OF REMOVAL OF ABANDONED DRAIN PIPE SHALL BE INCLUDED IN THE PAY ITEM "CLEAN BRIDGE DRAINAGE SYSTEM" AND SHALL NOT BE MEASURED FOR PAYMENT.
5. SEE GENERAL PLAN FOR AMTRAK RIGHT-OF-WAY LINES.

REV.	DATE	REVISION DESCRIPTION	SHEET NO.

THE INFORMATION, INCLUDING ESTIMATED QUANTITIES OF WORK, SHOWN ON THESE SHEETS IS BASED ON LIMITED INVESTIGATIONS BY THE STATE AND IS IN NO WAY WARRANTED TO INDICATE THE CONDITIONS OF ACTUAL QUANTITIES OF WORK WHICH WILL BE REQUIRED.

Plotted: 12/23/2013

DESIGNER/DRAFTER: EW
CHECKED BY: CW
SCALE AS NOTED

STATE OF CONNECTICUT
DEPARTMENT OF TRANSPORTATION

Filename: $FILE$

SIGNATURE/BLOCK:
Stantec Consulting Services Inc.
2321 Whitney Ave.
Hamden, CT 06518

PROJECT TITLE:
REHABILITATION OF BRIDGE I-91 NB & SB OVER US 5, AMTRAK & FERRY STREET

TOWN: NEW HAVEN

DRAWING TITLE: NB: REFLECTED DECK PLAN

PROJECT NO. 092-0612
DRAWING NO. S-32
SHEET NO. 04.32

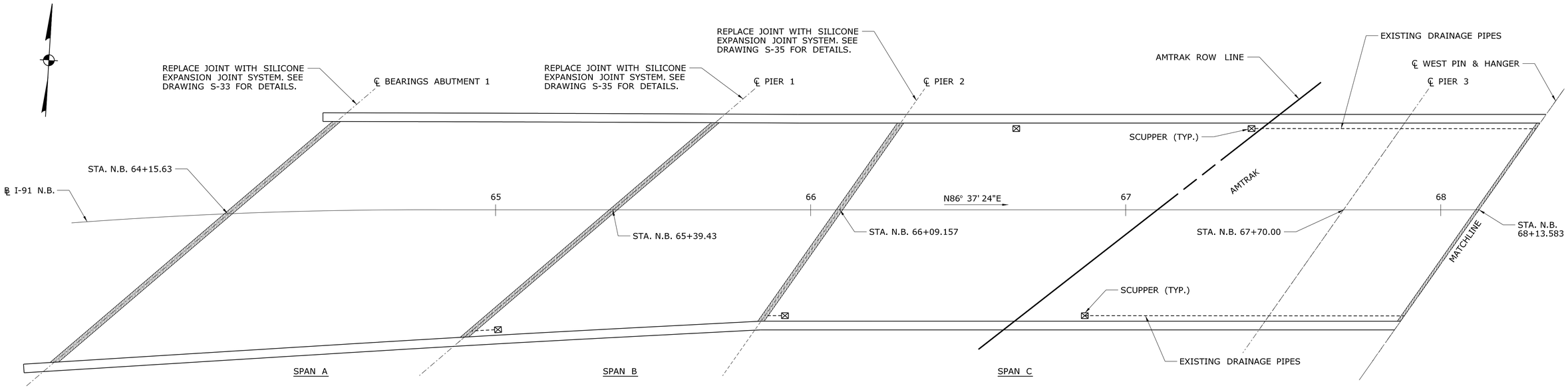

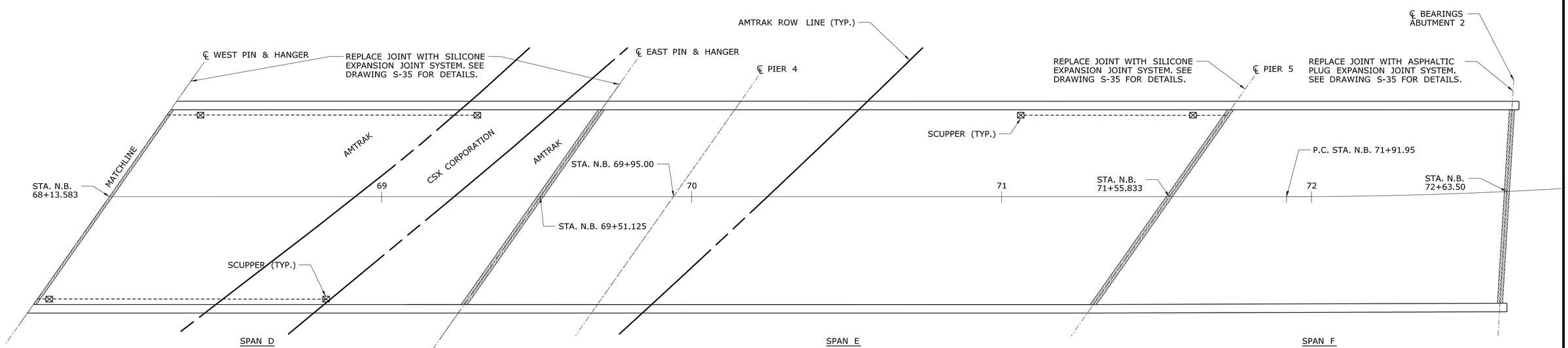

DECK PLAN

SCALE: 1/16"=1'-0"

NOTES:

1. REMOVE EXISTING OVERLAY AND WATERPROOF MEMBRANE SYSTEM, REPLACE WITH NEW WEARING SURFACE AND MEMBRANE WATERPROOFING.
2. REPAIR AREAS OF DETERIORATED CONCRETE DECK ENCOUNTERED AFTER MILLING OPERATIONS HAVE BEEN COMPLETED PRIOR TO RESURFACING.
3. CLEAN ALL SCUPPERS AND DRAINAGE PIPES.

REV.	DATE	REVISION DESCRIPTION	SHEET NO.

THE INFORMATION, INCLUDING ESTIMATED QUANTITIES OF WORK, SHOWN ON THESE SHEETS IS BASED ON LIMITED INVESTIGATIONS BY THE STATE AND IS IN NO WAY WARRANTED TO INDICATE THE CONDITIONS OF ACTUAL QUANTITIES OF WORK WHICH WILL BE REQUIRED.

Plotted: 12/23/2013

DESIGNER/DRAFTER: EW

CHECKED BY: CW

SCALE AS NOTED

STATE OF CONNECTICUT
DEPARTMENT OF TRANSPORTATION

Filename: $FILE$

SIGNATURE/ BLOCK:

Stantec Consulting Services Inc.
2321 Whitney Ave.
Hamden, CT 06518

PROJECT TITLE:

REHABILITATION OF BRIDGE I-91 NB & SB OVER US 5, AMTRAK & FERRY STREET

TOWN: **NEW HAVEN**

DRAWING TITLE: **NB: DECK PLAN**

PROJECT NO. **092-0612**

DRAWING NO. **S-33**

SHEET NO. **04.33**

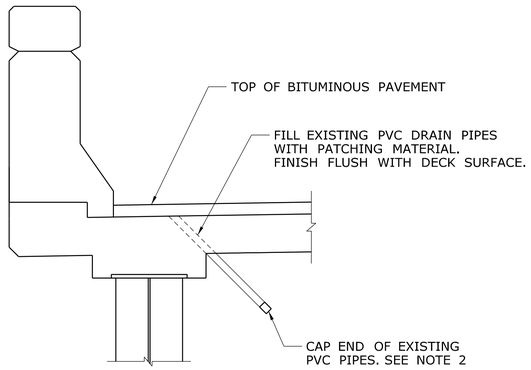

PLUG WEEPHOLE DETAIL

NOT TO SCALE

WEEPHOLE NOTES:

1. FOR APPROXIMATE LOCATIONS OF THE WEEP PIPES, SEE REFLECTED DECK PLAN DRAWINGS.
2. ALL UNNECESSARY WEEP PIPES WILL BE PLUGGED WITH PATCHING MATERIAL AND SHALL BE PAID FOR UNDER THE ITEM "PARTIAL DEPTH PATCH." END CAPS SHALL CONFORM TO THE REQUIREMENTS OF ASTM D2467. SOLVENT CEMENT USED FOR JOINING THE END CAP TO THE EXISTING PIPE SHALL CONFORM TO ASTM 2564. THE END CAPS SHALL MATCH THE EXISTING PIPES IN COLOR.
3. WEEP PIPES LOCATED AT LOW END OF EACH DECK JOINT TO REMAIN.

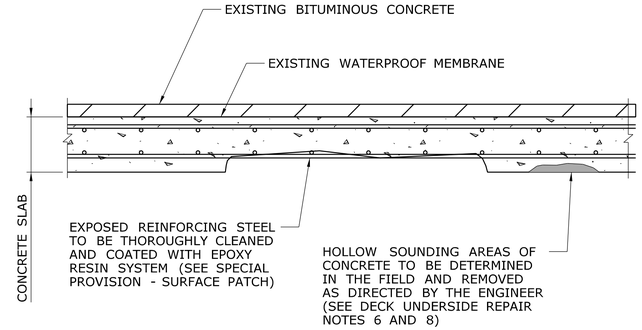

SURFACE PATCH REPAIR DETAILS

NOT TO SCALE

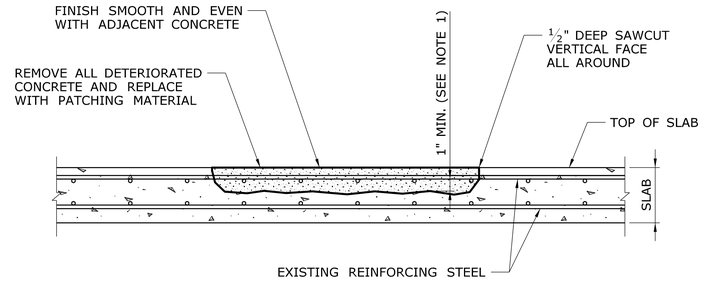

PATCH BELOW TOP REINFORCING STEEL

PARTIAL DEPTH PATCH REPAIR DETAILS

NOT TO SCALE

DECK UNDERSIDE REPAIR NOTES:

1. EPOXY COATING THE DECK UNDERSIDE REINFORCEMENT SHALL BE PERFORMED IN ACCORDANCE WITH DETAILS SHOWN ON THIS SHEET AND THE SPECIAL PROVISIONS. THIS WORK SHALL PAID UNDER THE ITEM "SURFACE PATCH" (SEE SPECIAL PROVISIONS).
2. ALL WORK SHALL BE CONTAINED BY A TEMPORARY DEBRIS SHIELD INACCORDANCE WITH THE PERMIT REQUIREMENTS CONTAINED ELSEWHERE IN THE CONTRACT DOCUMENTS. THE COST OF THIS SHALL BE INCLUDED IN THE GENERAL COST OF CONSTRUCTION.
3. THE EXISTING SLAB UNDERSIDE SHALL BE SOUNDED FOR HOLLOW AREAS OF CONCRETE TO THE SATISFACTION OF THE ENGINEER. THE CONTRACTOR SHALL PROVIDE SAFE ACCESS TO THE ENGINEER FOR DELINEATION AND INSPECTION OF THE DECK UNDERSIDE, AND THE REPAIR WORK. THE COST OF PROVIDING ACCESS FOR THE INSPECTION SHALL BE INCLUDED IN THE COST OF THE ITEM "SURFACE PATCH."
4. ALL EXPOSED REINFORCING STEEL SHALL BE THOROUGHLY CLEANED TO REMOVE ANY DEBRIS OR RESIDUE BEFORE APPLYING THE EPOXY RESIN COATING (SEE SPECIAL PROVISION).
5. ANY EXPOSED REINFORCING STEEL IN THE AREAS OF POP-OUTS CAUSED BY THE REMOVAL OF DETERIORATED CONCRETE SHALL BE CLEANED AND COATED WITH EPOXY RESIN COATING.
6. THE DECK UNDERSIDE DETERIORATION AND REPAIR ESTIMATES ARE BASED ON LIMITED FIELD OBSERVATIONS AND BRIDGE SAFETY INSPECTION REPORTS. THE EXACT LOCATION AND LIMITS OF EXPOSED REINFORCEMENT AND HOLLOW AREAS OF CONCRETE IN THE DECK UNDERSIDE SHALL BE DETERMINED BY THE ENGINEER DURING CONSTRUCTION (SEE SPECIAL PROVISIONS).
7. THE CONTRACTOR SHALL NOT PERFORM ANY REPAIR WORK WITHOUT PRIOR APPROVAL FROM THE ENGINEER. THE REMOVAL OF DETERIORATED CONCRETE SHALL PROCEED AS DIRECTED BY THE ENGINEER.
8. THE PRIMARY INTENDED REPAIR IS TO APPLY EPOXY RESIN COATING TO THE UNDERSIDE OF THE DETERIORATED DECK SURFACE. IF THE REMOVAL OF DETERIORATED CONCRETE EXTENDS GREATER THAN 3 INCHES IN DEPTH, OR IF THE REMOVAL EXPOSES THE FULL CIRCUMFERENCE OF THE REINFORCING STEEL BAR FOR A LENGTH EXCEEDING 12 INCHES, THE WORK SHALL BE STOPPED AND THE ENGINEER SHALL BE NOTIFIED IMMEDIATELY. THESE AREAS SHALL BE REPAIRED BY "FULL DEPTH PATCHING" AS DIRECTED BY THE ENGINEER.

CONCRETE PATCHING NOTES:

1. IF THE REINFORCING STEEL HAS AT LEAST ONE HALF OF ITS SURFACE AREA EXPOSED AFTER CONCRETE REMOVAL, THE CONCRETE SHALL BE FURTHER REMOVED TO A DEPTH OF 1" BELOW THE STEEL. IN AREAS WHERE REINFORCING STEEL IS ONLY PARTIALLY EXPOSED AFTER REMOVAL OF DETERIORATED CONCRETE, THE REINFORCEMENT SHALL BE COATED WITH EPOXY BONDING COMPOUND (SEE SPECIAL PROVISIONS) BEFORE PLACING "PARTIAL DEPTH PATCH" MATERIAL.
2. EXPOSED REINFORCING STEEL IN POP-OUTS CAUSED BY REMOVAL OF DETERIORATED CONCRETE SHALL BE PROTECTED WITH EPOXY COATING.
3. IF REMOVAL OF DETERIORATED CONCRETE FOR "PARTIAL DEPTH PATCH" EXCEEDS TWO-THIRDS OF THE TOTAL THICKNESS OF THE SLAB, REMOVE THE REMAINDER OF THE CONCRETE TO THE BOTTOM OF THE SLAB AND PERFORM "FULL DEPTH PATCH." FINAL PAYMENT SHALL BE MADE AS "FULL DEPTH PATCH" ONLY (SEE SPECIAL PROVISIONS).
4. ADDITIONAL CONCRETE REMOVAL REQUIRED FOR THE REPAIR OF THE REINFORCING STEEL SHALL BE PAID FOR UNDER THE ITEM "FULL DEPTH PATCH" OR " PARTIAL DEPTH PATCH", WHICHEVER CONDITION APPLIES.

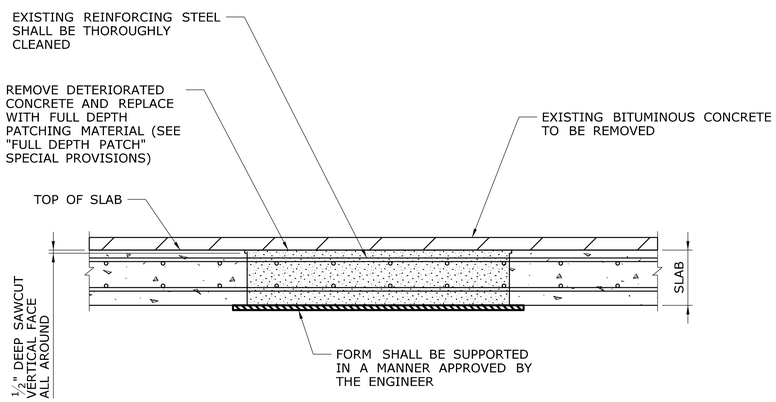

FULL DEPTH PATCH REPAIR DETAIL

NOT TO SCALE

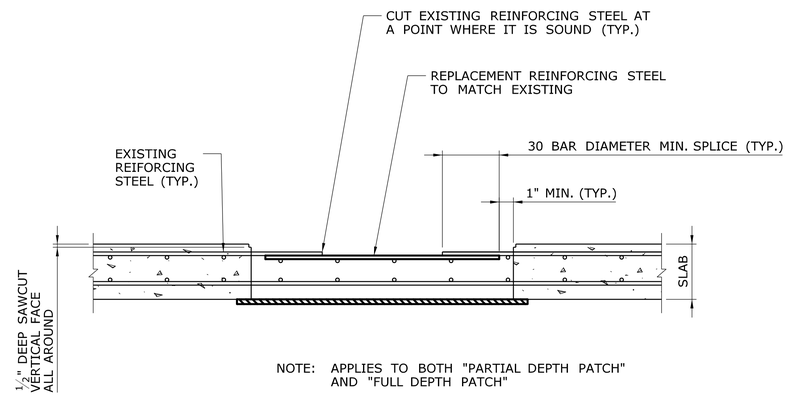

NOTE: APPLIES TO BOTH "PARTIAL DEPTH PATCH" AND "FULL DEPTH PATCH"

DEFECTIVE REINFORCING STEEL REPAIR

NOT TO SCALE

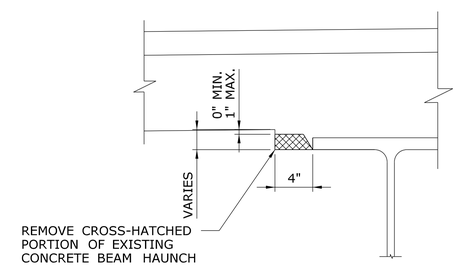

HAUNCH REMOVAL

SCALE: 1½" = 1'-0"

REV.	DATE	REVISION DESCRIPTION	SHEET NO.

THE INFORMATION, INCLUDING ESTIMATED QUANTITIES OF WORK, SHOWN ON THESE SHEETS IS BASED ON LIMITED INVESTIGATIONS BY THE STATE AND IS IN NO WAY WARRANTED TO INDICATE THE CONDITIONS OF ACTUAL QUANTITIES OF WORK WHICH WILL BE REQUIRED.

Plotted Date: 12/23/2013

DESIGNER/DRAFTER: CY
CHECKED BY: CW
SCALE AS NOTED

STATE OF CONNECTICUT
DEPARTMENT OF TRANSPORTATION

Filename: ...\S-34_Deck_Rehab_Patch_Details_NB.dgn

SIGNATURE/BLOCK:
Stantec Consulting Services Inc.
2321 Whitney Ave.
Hamden, CT 06518

PROJECT TITLE:
REHABILITATION OF BRIDGE I-91 NB & SB OVER US 5, AMTRAK & FERRY STREET

TOWN: NEW HAVEN

DRAWING TITLE:
NB: DECK REHABILITATION PATCH DETAILS

PROJECT NO. 092-0612
DRAWING NO. S-34
SHEET NO. 04.34

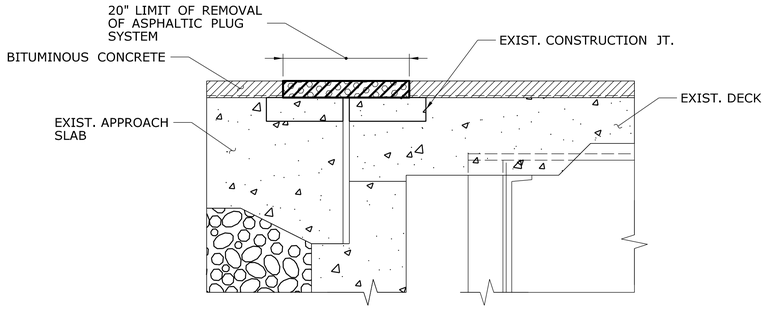

EXISTING CONDITION
ABUTMENTS 1 AND 2

SCALE : 1" = 1'-0"

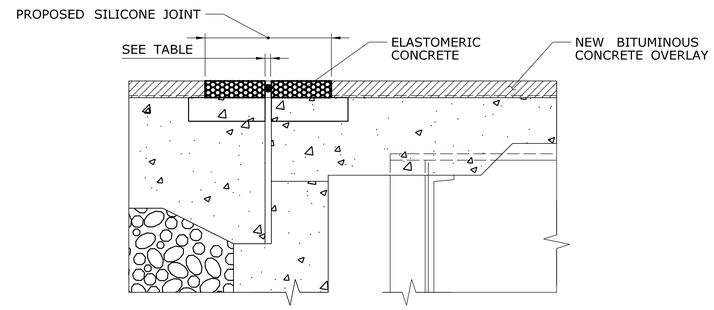

PROPOSED REPAIR - SILICONE JOINT
ABUTMENT 1

SCALE : 1" = 1'-0"

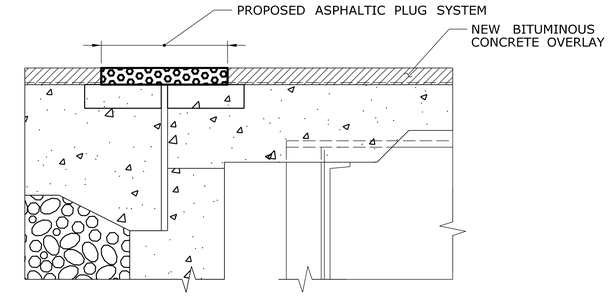

PROPOSED REPAIR - ASPHALTIC PLUG
ABUTMENT 2

SCALE : 1" = 1'-0"

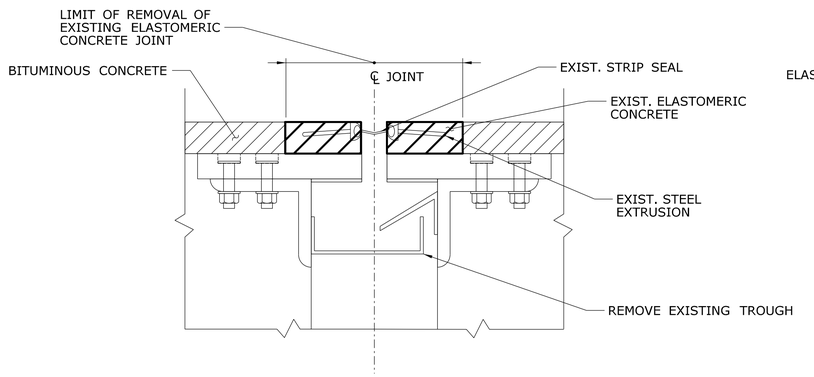

EXISTING CONDITION
PIERS 1, 2, 5 AND WEST PIN & HANGER

SCALE : 3" = 1'-0"

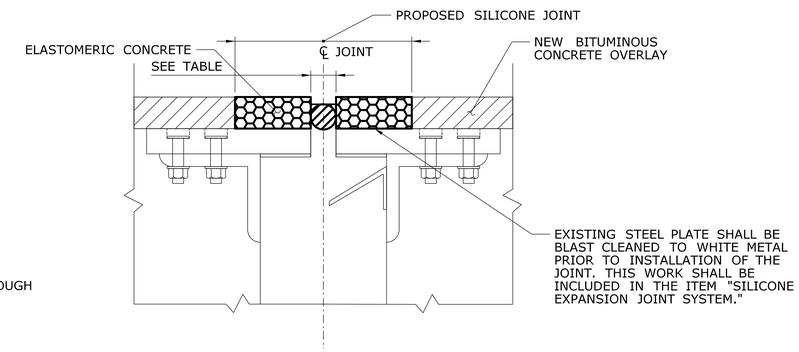

PROPOSED REPAIR - SILICONE JOINT
PIERS 1, 2, 5 AND WEST PIN & HANGER

SCALE : 3" = 1'-0"

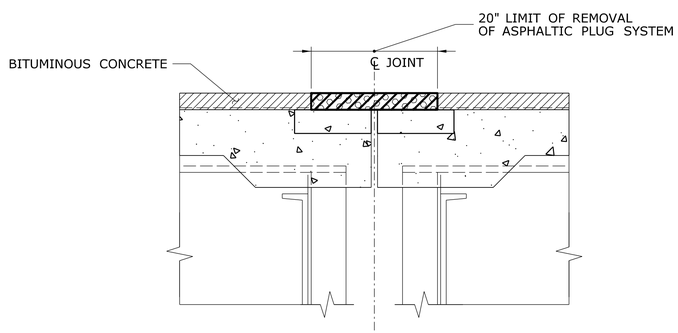

EXISTING CONDITION
EAST PIN & HANGER

SCALE : 1" = 1'-0"

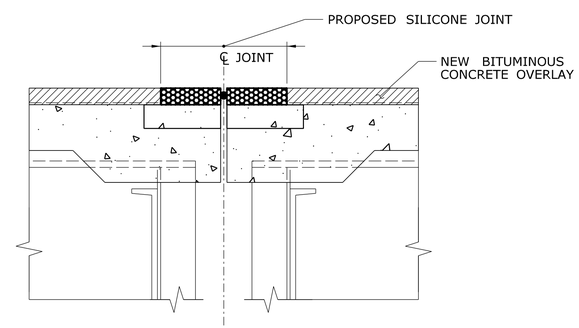

PROPOSED REPAIR - SILICONE JOINT
EAST PIN & HANGER

SCALE : 1" = 1'-0"

REV.	DATE	REVISION DESCRIPTION	SHEET NO.

THE INFORMATION, INCLUDING ESTIMATED QUANTITIES OF WORK, SHOWN ON THESE SHEETS IS BASED ON LIMITED INVESTIGATIONS BY THE STATE AND IS IN NO WAY WARRANTED TO INDICATE THE CONDITIONS OF ACTUAL QUANTITIES OF WORK WHICH WILL BE REQUIRED.

Plotted: 12/23/2013

DESIGNER/DRAFTER: **EW**

CHECKED BY: **CW**

SCALE AS NOTED

STATE OF CONNECTICUT
DEPARTMENT OF TRANSPORTATION

Filename: $FILE$

SIGNATURE/ BLOCK:

Stantec Consulting Services Inc.
2321 Whitney Ave.
Hamden, CT 06518

PROJECT TITLE:
REHABILITATION OF BRIDGE I-91 NB & SB OVER US 5, AMTRAK & FERRY STREET

TOWN: **NEW HAVEN**

DRAWING TITLE: **NB: JOINT REPAIR DETAILS - 1**

PROJECT NO. **092-0612**

DRAWING NO. **S-35**

SHEET NO. **04.35**

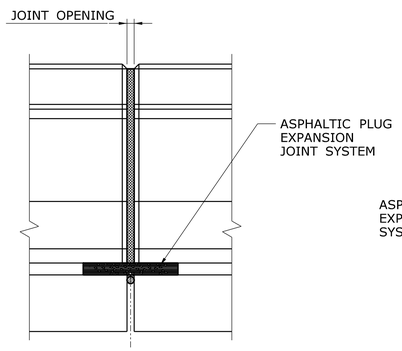

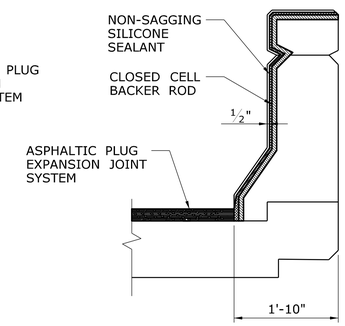

AT PARAPET
SCALE: 1" = 1'-0"

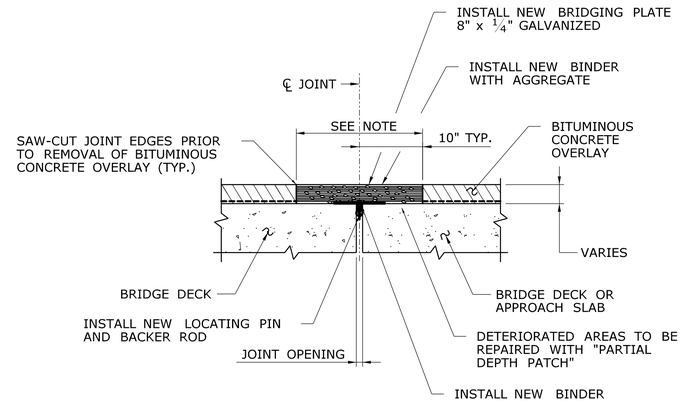

SECTION
NOT TO SCALE

ASPHALTIC PLUG EXPANSION JOINT SYSTEM NOTES:

1. REMOVE NEW HMA OVERLAY AND MEBRANE WATERPROOFING. REPLACE WITH ASPHALTIC PLUG EXPANSION JOINT SYSTEM. TO BE PAID FOR UNDER THE ITEM "ASPHALTIC PLUG EXPANSION JOINT SYSTEM".
2. THE CLOSED CELL BACKER ROD SHALL BE PLACED A MINIMUM OF 2" FROM THE OUTSIDE FACE OF PARAPET AND MEDIAN BARRIER.
3. THE NON-SAGGING SILICONE SEALANT SHALL BE PLACED ON THE BACKER ROD 1/2" THICK. AT THE GUTTERS, THE SILICONE SEALANT SHALL BE FLUSH WITH THE OUTSIDE FACE OF CONCRETE.
4. PRIOR TO INSTALLING THE SILICONE SEALANT, CLEAN JOINT SIDES BY SANDBLASTING. DUST SHALL BE REMOVED BY THE METHOD APPROVED BY THE ENGINEER. THIS WORK SHALL BE PAID FOR UNDER THE ITEM "ASPHALTIC PLUG EXPANSION JOINT SYSTEM".
5. ASPHALTIC PLUG EXPANSION JOINT SYSTEM SHALL BE INSTALLED WHEN THE AMBIENT AIR TEMPERATURE IS BETWEEN 40° F AND 80° F.
6. SILICONE SEALANT AND BACKER ROD THROUGH THE PARAPET AND MEDIAN BARRIER IS INCLUDED IN THE ITEM "ASPHALTIC PLUG EXPANSION JOINT SYSTEM".

ASPHALTIC PLUG EXPANSION JOINT SYSTEM

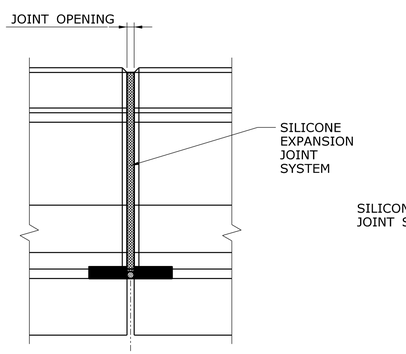

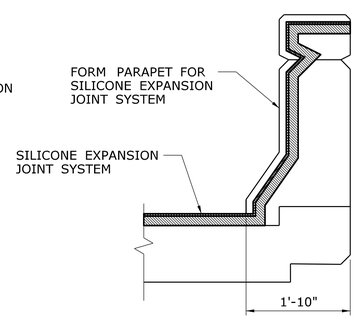

AT PARAPET
SCALE: 1" = 1'-0"

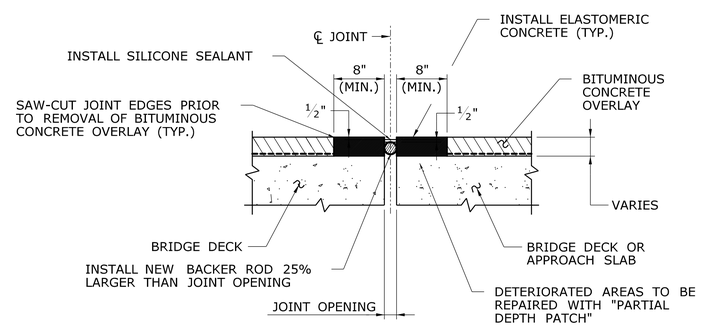

SECTION
NOT TO SCALE

SILICONE EXPANSION JOINT SYSTEM NOTES:

1. REMOVE NEW HMA OVERLAY AND MEBRANE WATERPROOFING. REPLACE WITH SILICONE EXPANSION JOINT SYSTEM. TO BE PAID FOR UNDER THE ITEM "SILICONE EXPANSION JOINT SYSTEM".
2. THE CLOSED CELL BACKER ROD SHALL BE PLACED A MINIMUM OF 2" FROM THE OUTSIDE FACE OF PARAPET AND MEDIAN BARRIER.
3. THE NON-SAGGING SILICONE SEALANT SHALL BE PLACED ON THE BACKER ROD 1/2" THICK. AT THE GUTTERS, THE SILICONE SEALANT SHALL BE FLUSH WITH THE OUTSIDE FACE OF CONCRETE.
4. PRIOR TO INSTALLING THE SILICONE SEALANT, CLEAN JOINT SIDES BY SANDBLASTING. DUST SHALL BE REMOVED BY THE METHOD APPROVED BY THE ENGINEER. THIS WORK SHALL BE PAID FOR UNDER THE ITEM "SILICONE EXPANSION JOINT SYSTEM".
5. SILICONE EXPANSION JOINT SYSTEM SHALL BE INSTALLED WHEN THE AMBIENT AIR TEMPERATURE IS BETWEEN 40° F AND 80° F.
6. SILICONE SEALANT AND BACKER ROD THROUGH THE PARAPET AND MEDIAN BARRIER IS INCLUDED IN THE ITEM "SILICONE EXPANSION JOINT SYSTEM".

SILICONE EXPANSION JOINT SYSTEM

REV.	DATE	REVISION DESCRIPTION	SHEET NO.

THE INFORMATION, INCLUDING ESTIMATED QUANTITIES OF WORK, SHOWN ON THESE SHEETS IS BASED ON LIMITED INVESTIGATIONS BY THE STATE AND IS IN NO WAY WARRANTED TO INDICATE THE CONDITIONS OF ACTUAL QUANTITIES OF WORK WHICH WILL BE REQUIRED.

Plotted Date: 12/23/2013

DESIGNER/DRAFTER: CY
CHECKED BY: CW
SCALE AS NOTED

STATE OF CONNECTICUT
DEPARTMENT OF TRANSPORTATION

Filename: ...\S-36_RepairDetails-Joints2_NB.dgn

SIGNATURE/BLOCK:
Stantec Consulting Services Inc.
2321 Whitney Ave.
Hamden, CT 06518

PROJECT TITLE:
REHABILITATION OF BRIDGE I-91 NB & SB OVER US 5, AMTRAK & FERRY STREET

TOWN: NEW HAVEN

DRAWING TITLE: NB: JOINT REPAIR DETAILS - 2

PROJECT NO. 092-0612
DRAWING NO. S-36
SHEET NO. 04.36

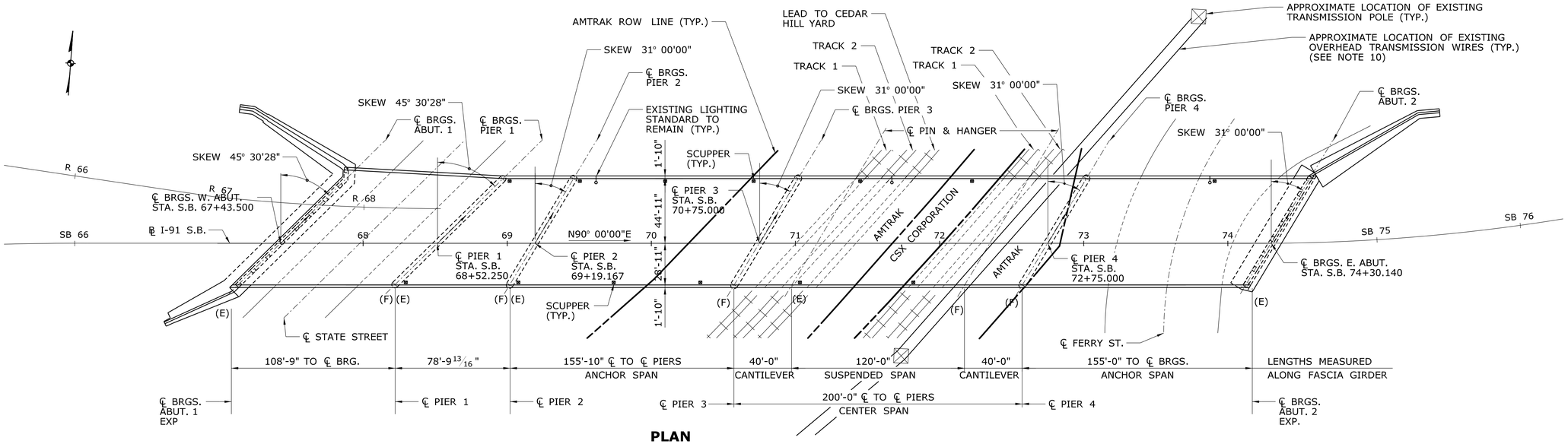

PLAN

SCALE: 1"=40'

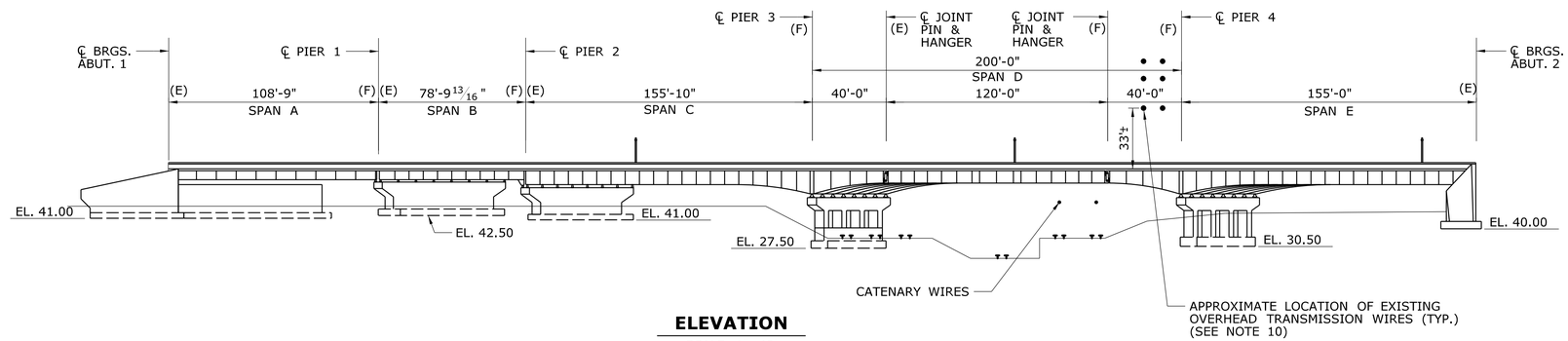

ELEVATION

SCALE: 1"=40'

NOTES:

1. BLAST CLEAN ALL STEEL SUPERSTRUCTURE MEMBERS AND FIELD PAINT. EMPLOY CLASS 1 CONTAINMENT SYSTEM FOR CLEANING AND PAINTING OPERATIONS.
2. REMOVE OVERLAY AND WATERPROOF MEMBRANE SYSTEM, REPLACE WITH NEW WEARING SURFACE AND MEMBRANE WATERPROOFING AFTER PERFORMING DECK REPAIRS.
3. JOINTS AT ABUTMENT 1, PIER 1 AND 2, WEST PIN AND HANGER, EAST PIN AND HANGER, AND ABUTMENT 2 TO BE REPLACED WITH SILICONE EXPANSION JOINT SYSTEM.
4. ALL EXPANSION BEARINGS AND SOLE PLATES IN SPANS A, B, C AND E TO BE REPLACED WITH ELASTOMERIC BEARINGS.
5. INSTALL CONCRETE KEEPER BLOCK AT ABUTMENTS AND PIERS 1 AND 2.
6. HAUNCHES OVERHANG IN SPANS A, D AND E TO BE REMOVED FOR THE ENTIRE LENGTH OF THE SPAN.
7. ONLY ONE SIDEWALK MAY BE CLOSED TO PEDESTRIAN ACCESS ON STATE STREET AND FERRY STREET AT ANY GIVEN TIME DURING OVERHEAD CONSTRUCTION OPERATIONS. SEE MAINTENANCE AND PROTECTION OF TRAFFIC SUBSET FOR SIDEWALK CLOSURE DETAILS. THIS WORK TO BE INCLUDED IN THE ITEM "MAINTENANCE AND PROTECTION OF TRAFFIC."
8. MAINTAIN 10' MINIMUM CLEARANCE FROM CATENARY WIRES OVER AMTRAK.
9. CLEAN ENTIRE BRIDGE DRAINAGE SYSTEM AND SCUPPERS.
10. THE CONTRACTOR SHALL MAINTAIN A MINIMUM OF 20 FEET CLEARANCE FROM THE OVERHEAD TRANSMISSION WIRE AT ALL TIMES.

REV.	DATE	REVISION DESCRIPTION	SHEET NO.

THE INFORMATION, INCLUDING ESTIMATED QUANTITIES OF WORK, SHOWN ON THESE SHEETS IS BASED ON LIMITED INVESTIGATIONS BY THE STATE AND IS IN NO WAY WARRANTED TO INDICATE THE CONDITIONS OF ACTUAL QUANTITIES OF WORK WHICH WILL BE REQUIRED.

Plotted: 12/23/2013

DESIGNER/DRAFTER: EW
CHECKED BY: CW
SCALE AS NOTED

STATE OF CONNECTICUT
DEPARTMENT OF TRANSPORTATION

Filename: $FILE$

SIGNATURE/BLOCK:

Stantec Consulting Services Inc.
2321 Whitney Ave.
Hamden, CT 06518

PROJECT TITLE:
REHABILITATION OF BRIDGE I-91 NB & SB OVER US 5, AMTRAK & FERRY STREET

TOWN: **NEW HAVEN**

DRAWING TITLE: **SB: GENERAL PLAN & ELEVATION**

PROJECT NO. **092-0612**
DRAWING NO. **S-37**
SHEET NO. **04.37**

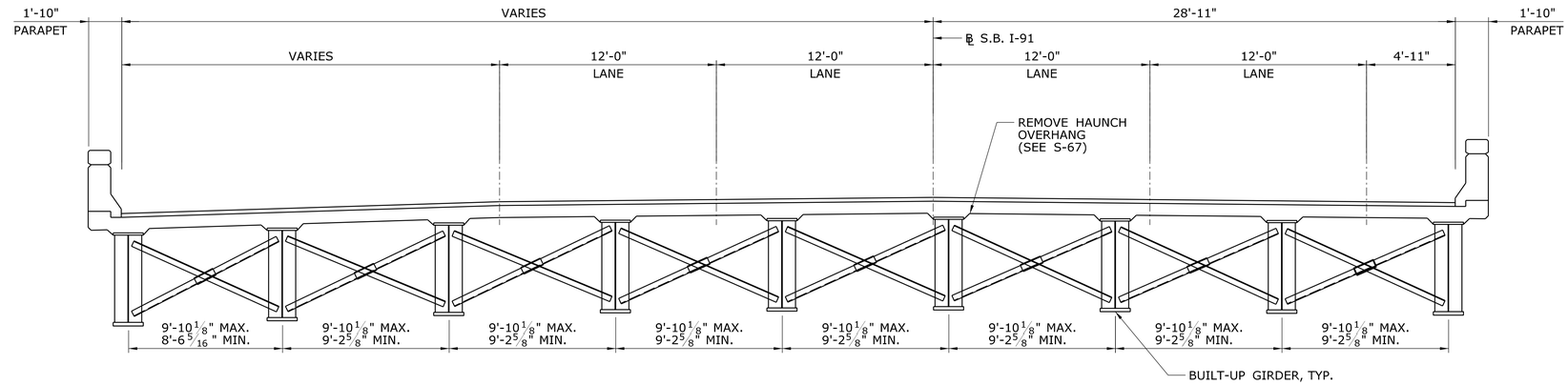

SPAN A

SCALE : 1/4" = 1'-0"

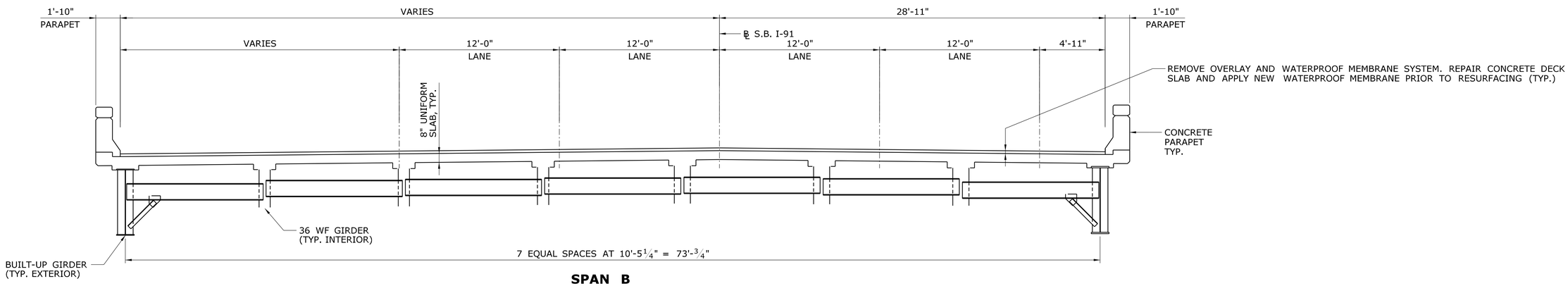

SPAN B

SCALE : 1/4" = 1'-0"

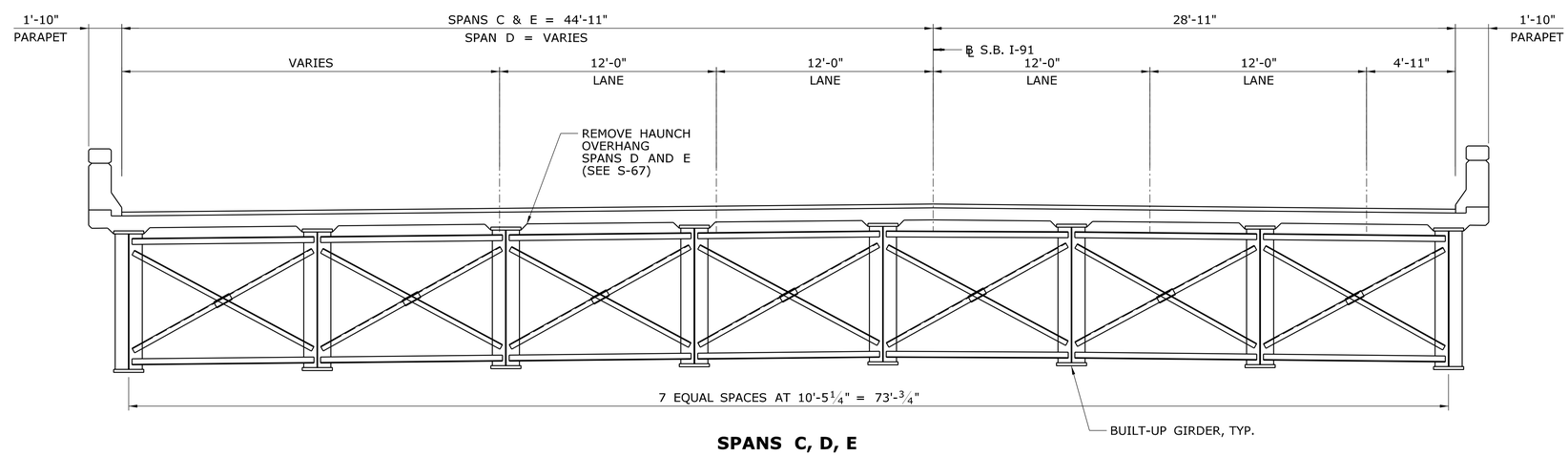

SPANS C, D, E
MAIN STRUCTURE

SCALE : 1/4" = 1'-0"

NOTES:

1. BLAST CLEAN ALL STEEL SUPERSTRUCTURE MEMBERS AND FIELD PAINT. EMPLOY CLASS 1 CONTAINMENT SYSTEM FOR CLEANING AND PAINTING OPERATIONS.
2. REMOVE OVERLAY AND WATERPROOF MEMBRANE SYSTEM, REPLACE WITH NEW WEARING SURFACE AND MEMBRANE WATERPROOFING.
3. REPAIR AREAS OF DETERIORATED CONCRETE DECK ENCOUNTERED AFTER MILLING OPERATIONS HAVE BEEN COMPLETED PRIOR TO RESURFACING.

REV.	DATE	REVISION DESCRIPTION	SHEET NO.

THE INFORMATION, INCLUDING ESTIMATED QUANTITIES OF WORK, SHOWN ON THESE SHEETS IS BASED ON LIMITED INVESTIGATIONS BY THE STATE AND IS IN NO WAY WARRANTED TO INDICATE THE CONDITIONS OF ACTUAL QUANTITIES OF WORK WHICH WILL BE REQUIRED.

Plotted: 12/23/2013

DESIGNER/DRAFTER: CY
CHECKED BY: CW
SCALE AS NOTED

STATE OF CONNECTICUT
DEPARTMENT OF TRANSPORTATION

Filename: $FILE$

SIGNATURE/BLOCK:
Stantec Consulting Services Inc.
2321 Whitney Ave.
Hamden, CT 06518

PROJECT TITLE:
REHABILITATION OF BRIDGE I-91 NB & SB OVER US 5, AMTRAK & FERRY STREET

TOWN: **NEW HAVEN**

DRAWING TITLE: **SB: TYPICAL BRIDGE SECTIONS**

PROJECT NO. **092-0612**
DRAWING NO. **S-38**
SHEET NO. **04.38**

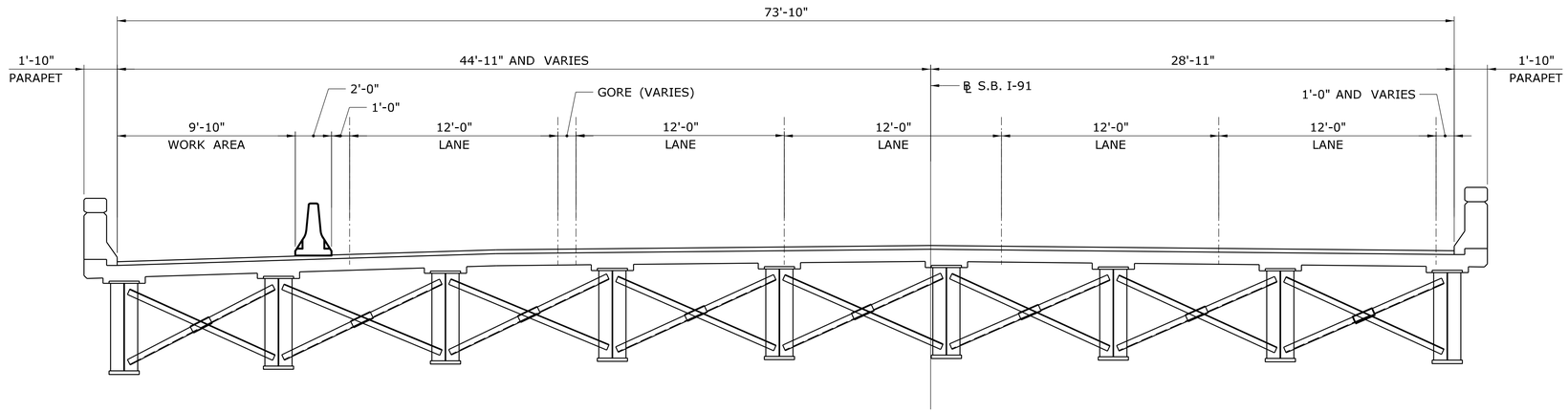

SOUTHBOUND RIGHT SHOULDER CLOSURE

SCALE : 1/4" = 1'-0"

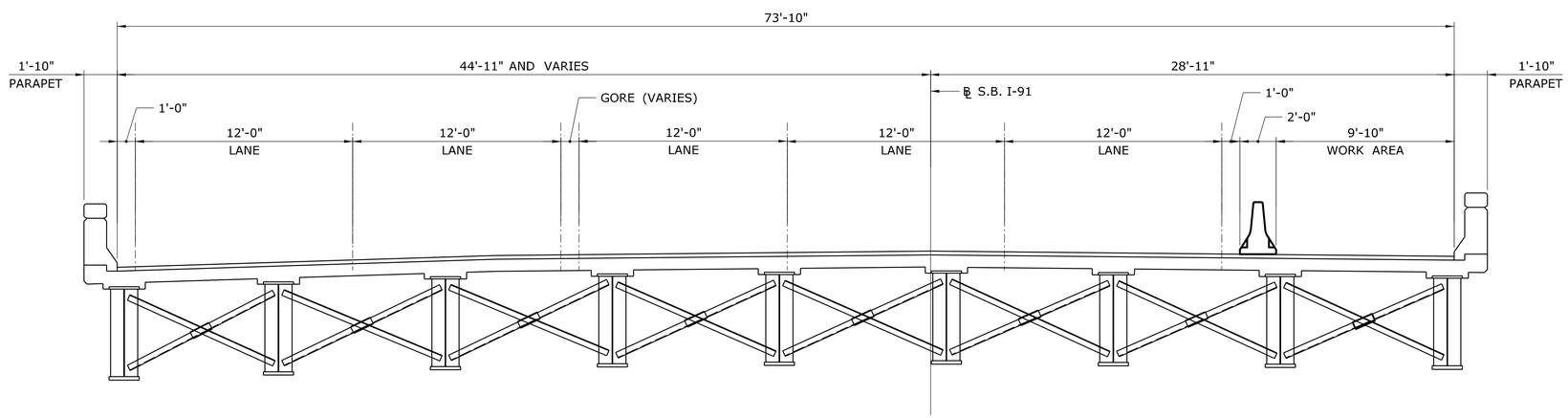

SOUTHBOUND LEFT SHOULDER CLOSURE

SCALE : 1/4" = 1'-0"

REV.	DATE	REVISION DESCRIPTION	SHEET NO.

THE INFORMATION, INCLUDING ESTIMATED QUANTITIES OF WORK, SHOWN ON THESE SHEETS IS BASED ON LIMITED INVESTIGATIONS BY THE STATE AND IS IN NO WAY WARRANTED TO INDICATE THE CONDITIONS OF ACTUAL QUANTITIES OF WORK WHICH WILL BE REQUIRED.

Plotted: 12/23/2013

DESIGNER/DRAFTER: **JRA**

CHECKED BY: **AML**

SCALE AS NOTED

STATE OF CONNECTICUT
DEPARTMENT OF TRANSPORTATION

Filename: $FILE$

SIGNATURE/ BLOCK:

Stantec Consulting Services Inc.
2321 Whitney Ave.
Hamden, CT 06518

PROJECT TITLE:
REHABILITATION OF BRIDGE I-91 NB & SB OVER US 5, AMTRAK & FERRY STREET

TOWN: **NEW HAVEN**

DRAWING TITLE: **SB: CONSTRUCTION STAGING**

PROJECT NO. **092-0612**

DRAWING NO. **S-39**

SHEET NO. **04.39**

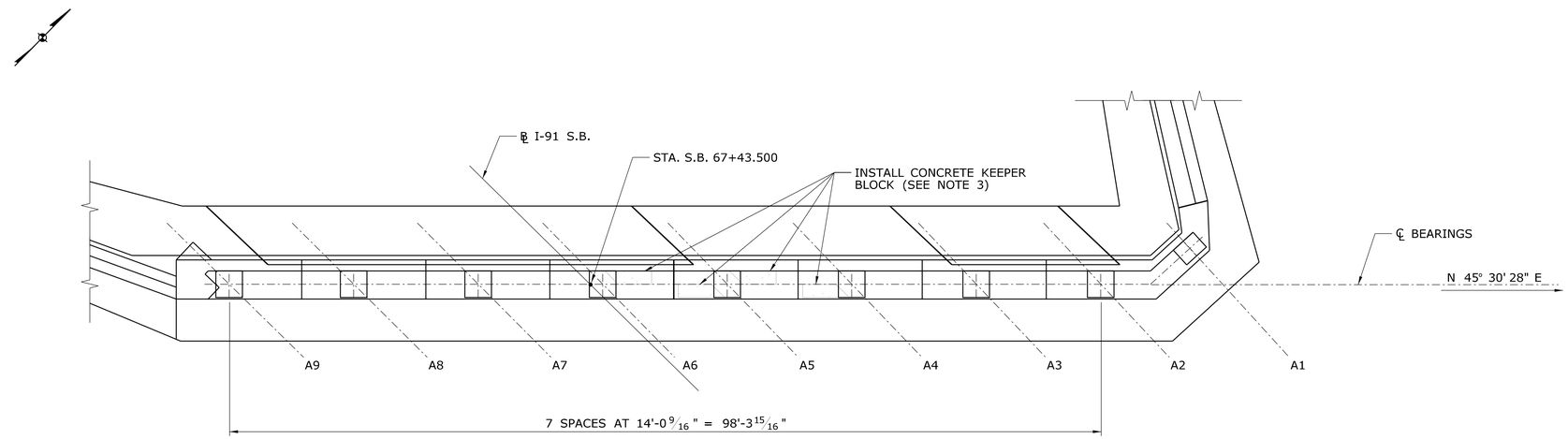

ABUTMENT 1 PLAN

SCALE : 1/8" = 1'-0"

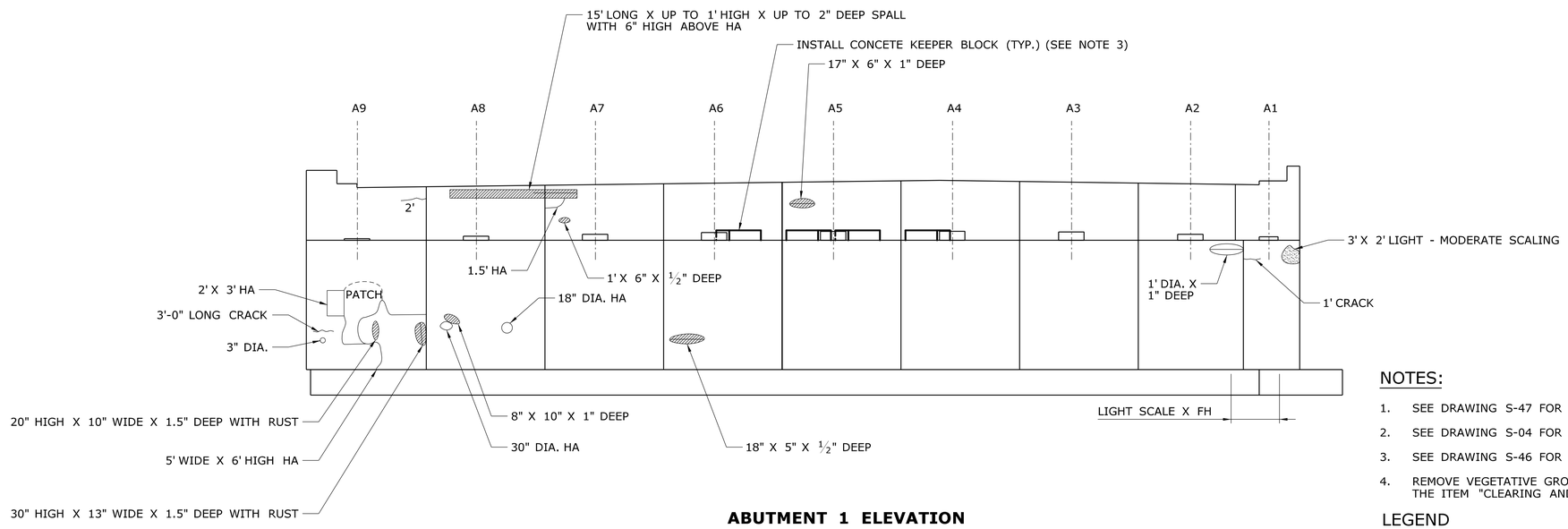

ABUTMENT 1 ELEVATION

SCALE : 1/8" = 1'-0"

NOTES:

1. SEE DRAWING S-47 FOR REPAIR DETAILS.
2. SEE DRAWING S-04 FOR CONCRETE REPAIR NOTES.
3. SEE DRAWING S-46 FOR KEEPER BLOCK DETAILS.
4. REMOVE VEGETATIVE GROWTH. TO BE PAID FOR UNDER THE ITEM "CLEARING AND GRUBBING."

LEGEND

- CRACK
- HOLLOW AREA
- SPALL AREA
- SPALL AREA WITH EXPOSED REBAR

DIA. = DIAMETER

HA = HOLLOW AREA

REV.	DATE	REVISION DESCRIPTION	SHEET NO.

THE INFORMATION, INCLUDING ESTIMATED QUANTITIES OF WORK, SHOWN ON THESE SHEETS IS BASED ON LIMITED INVESTIGATIONS BY THE STATE AND IS IN NO WAY WARRANTED TO INDICATE THE CONDITIONS OF ACTUAL QUANTITIES OF WORK WHICH WILL BE REQUIRED.

Plotted: 12/23/2013

DESIGNER/DRAFTER: CY

CHECKED BY: CW

SCALE AS NOTED

STATE OF CONNECTICUT
DEPARTMENT OF TRANSPORTATION

Filename: $FILE$

SIGNATURE/BLOCK:

Stantec Consulting Services Inc.
2321 Whitney Ave.
Hamden, CT 06518

PROJECT TITLE:
REHABILITATION OF BRIDGE I-91 NB & SB OVER US 5, AMTRAK & FERRY STREET

TOWN: **NEW HAVEN**

DRAWING TITLE: **SB: ABUTMENT 1**

PROJECT NO. **092-0612**

DRAWING NO. **S-40**

SHEET NO. **04.40**

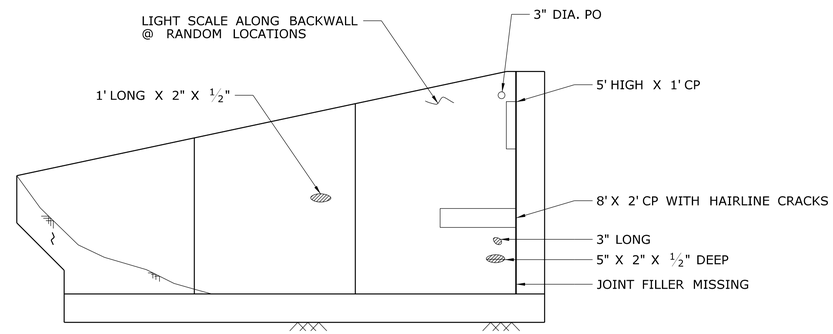

SW WINGWALL ELEVATION

SCALE : 1/8" = 1'-0"

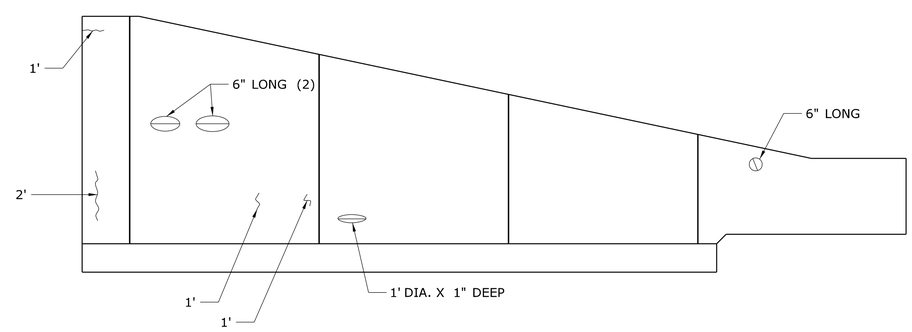

NW WINGWALL ELEVATION

SCALE : 1/8" = 1'-0"

NOTES:

1. SEE DRAWING S-47 FOR REPAIR DETAILS.
2. SEE DRAWING S-04 FOR CONCRETE REPAIR NOTES.
3. REMOVE VEGETATIVE GROWTH. TO BE PAID FOR UNDER THE ITEM "CLEARING AND GRUBBING."

LEGEND

- CRACK
- HOLLOW AREA
- SPALL AREA
- SPALL AREA WITH EXPOSED REBAR

CP = CONCRETE PATCH

DIA. = DIAMETER

REV.	DATE	REVISION DESCRIPTION	SHEET NO.

THE INFORMATION, INCLUDING ESTIMATED QUANTITIES OF WORK, SHOWN ON THESE SHEETS IS BASED ON LIMITED INVESTIGATIONS BY THE STATE AND IS IN NO WAY WARRANTED TO INDICATE THE CONDITIONS OF ACTUAL QUANTITIES OF WORK WHICH WILL BE REQUIRED.

Plotted: 12/23/2013

DESIGNER/DRAFTER: CY

CHECKED BY: CW

SCALE AS NOTED

STATE OF CONNECTICUT
DEPARTMENT OF TRANSPORTATION

Filename: $FILE$

SIGNATURE/ BLOCK:

Stantec Consulting Services Inc.
2321 Whitney Ave.
Hamden, CT 06518

PROJECT TITLE:

REHABILITATION OF BRIDGE I-91 NB & SB OVER US 5, AMTRAK & FERRY STREET

TOWN: **NEW HAVEN**

DRAWING TITLE: **SB: ABUTMENT 1 WINGWALLS**

PROJECT NO. **092-0612**

DRAWING NO. **S-41**

SHEET NO. **04.41**

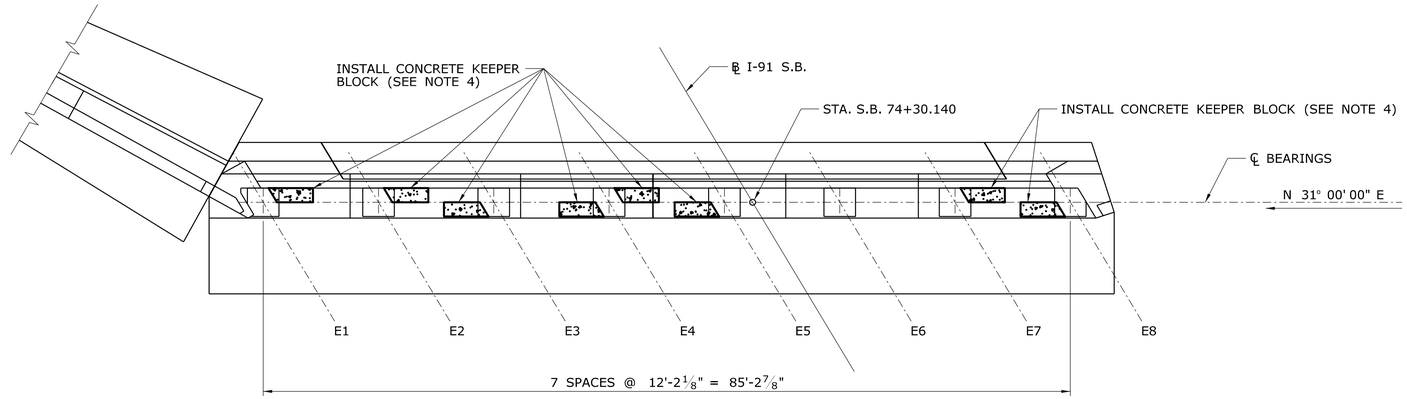

ABUTMENT 2 PLAN

SCALE : 1/8" = 1'-0"

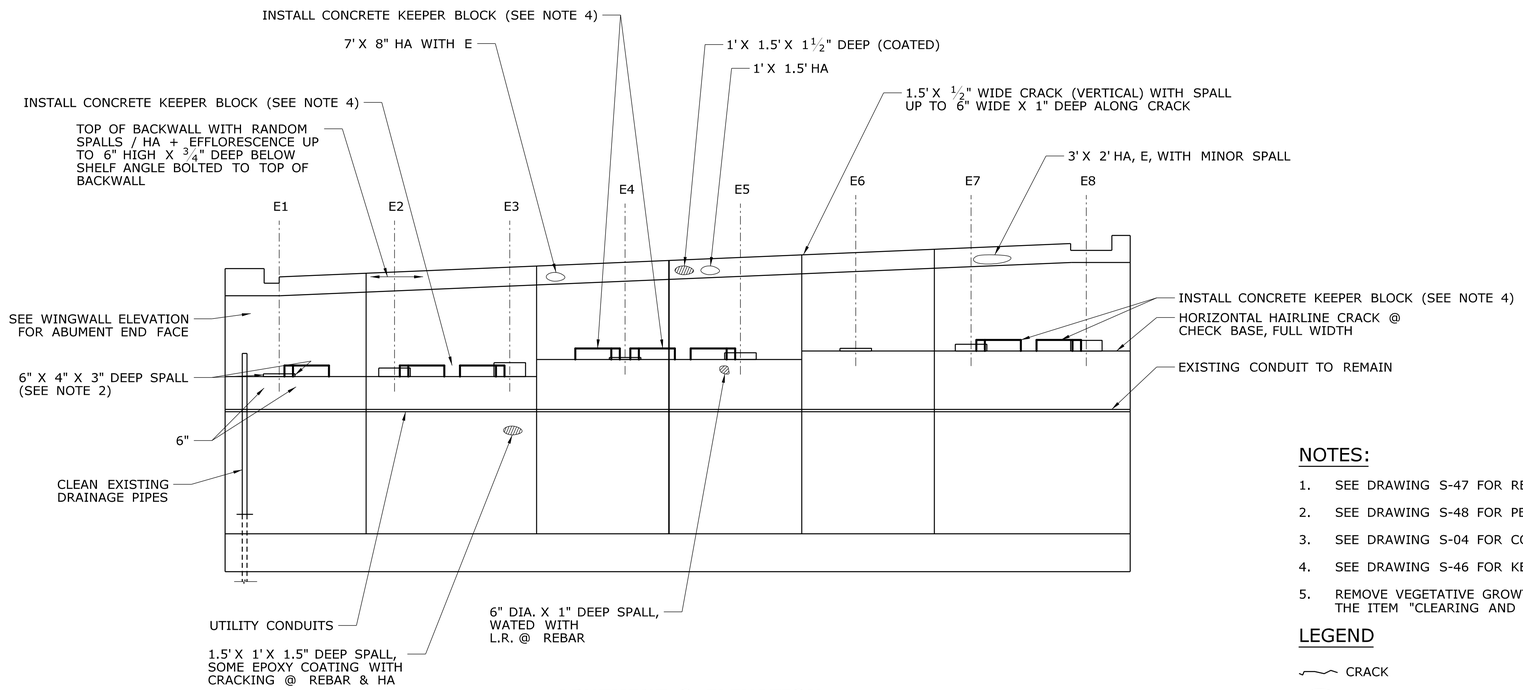

ABUTMENT 2 ELEVATION

SCALE : 1/8" = 1'-0"

NOTES:

1. SEE DRAWING S-47 FOR REPAIR DETAILS.
2. SEE DRAWING S-48 FOR PEDESTAL REPAIR DETAILS.
3. SEE DRAWING S-04 FOR CONCRETE REPAIR NOTES.
4. SEE DRAWING S-46 FOR KEEPER BLOCK DETAILS.
5. REMOVE VEGETATIVE GROWTH. TO BE PAID FOR UNDER THE ITEM "CLEARING AND GRUBBING."

LEGEND

- CRACK
- HOLLOW AREA
- MAP CRACKING
- SPALL AREA
- SPALL AREA WITH EXPOSED REBAR

DIA. = DIAMETER
E = EFFLORESCENCE
HA = HOLLOW AREA

REV.	DATE	REVISION DESCRIPTION	SHEET NO.

THE INFORMATION, INCLUDING ESTIMATED QUANTITIES OF WORK, SHOWN ON THESE SHEETS IS BASED ON LIMITED INVESTIGATIONS BY THE STATE AND IS IN NO WAY WARRANTED TO INDICATE THE CONDITIONS OF ACTUAL QUANTITIES OF WORK WHICH WILL BE REQUIRED.

Plotted: 12/23/2013

DESIGNER/DRAFTER: CY
CHECKED BY: CW
SCALE AS NOTED

STATE OF CONNECTICUT
DEPARTMENT OF TRANSPORTATION

Filename: $FILE$

SIGNATURE/BLOCK:
Stantec Consulting Services Inc.
2321 Whitney Ave.
Hamden, CT 06518

PROJECT TITLE:
REHABILITATION OF BRIDGE I-91 NB & SB OVER US 5, AMTRAK & FERRY STREET

TOWN: **NEW HAVEN**

DRAWING TITLE: **SB: ABUTMENT 2**

PROJECT NO. 092-0612
DRAWING NO. S-42
SHEET NO. 04.42

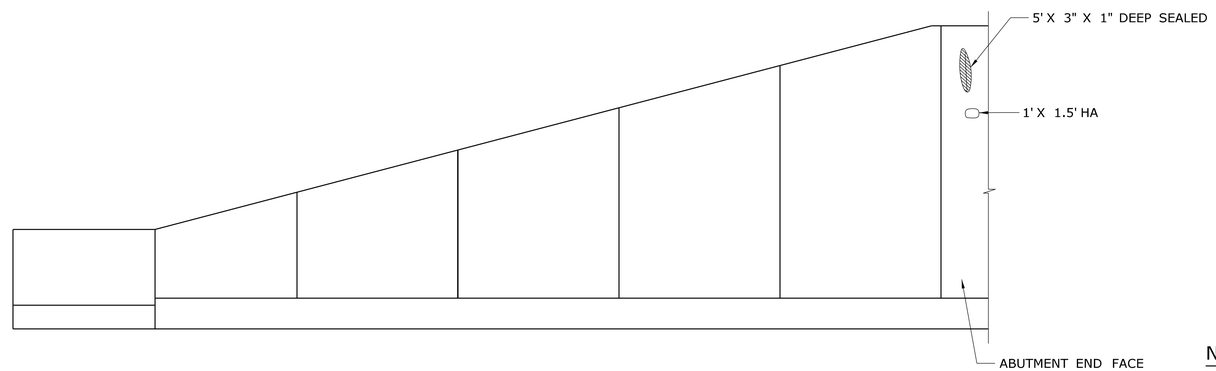

NE WINGWALL ELEVATION

SCALE : $^{1}/_{8}$" = 1'-0"

NOTES:

1. SEE DRAWING S-47 FOR REPAIR DETAILS.
2. SEE DRAWING S-04 FOR CONCRETE REPAIR DETAILS.
3. REMOVE VEGETATIVE GROWTH. TO BE PAID FOR UNDER THE ITEM "CLEARING AND GRUBBING."

LEGEND

CRACK

HOLLOW AREA

SPALL AREA

HA = HOLLOW AREA

REV.	DATE	REVISION DESCRIPTION	SHEET NO.

THE INFORMATION, INCLUDING ESTIMATED QUANTITIES OF WORK, SHOWN ON THESE SHEETS IS BASED ON LIMITED INVESTIGATIONS BY THE STATE AND IS IN NO WAY WARRANTED TO INDICATE THE CONDITIONS OF ACTUAL QUANTITIES OF WORK WHICH WILL BE REQUIRED.

Plotted: 12/23/2013

DESIGNER/DRAFTER: CY

CHECKED BY: CW

SCALE AS NOTED

STATE OF CONNECTICUT
DEPARTMENT OF TRANSPORTATION

Filename: $FILE$

SIGNATURE/ BLOCK:

Stantec Consulting Services Inc.
2321 Whitney Ave.
Hamden, CT 06518

PROJECT TITLE:

REHABILITATION OF BRIDGE I-91 NB & SB OVER US 5, AMTRAK & FERRY STREET

TOWN: **NEW HAVEN**

DRAWING TITLE: **SB: ABUTMENT 2 WINGWALL**

PROJECT NO. **092-0612**

DRAWING NO. **S-43**

SHEET NO. **04.43**

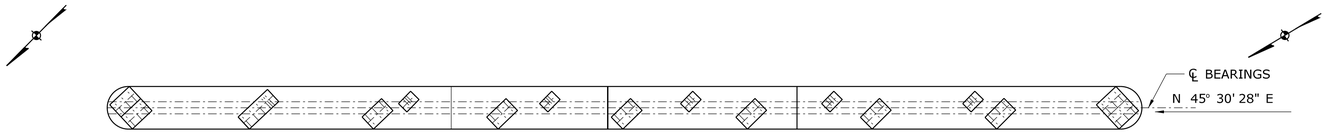

PIER 1 PLAN

SCALE : 1/8" = 1'-0"

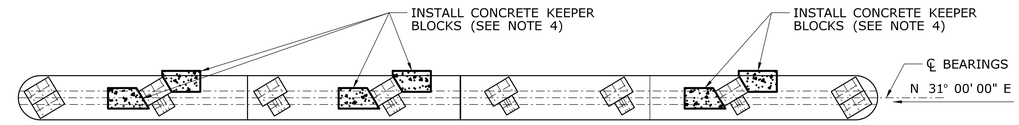

PIER 2 PLAN

SCALE : 1/8" = 1'-0"

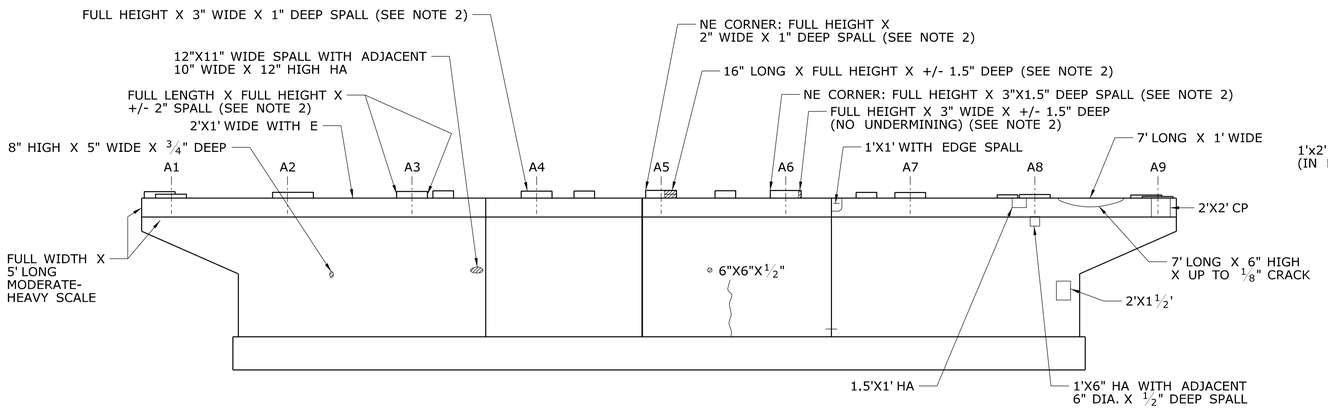

PIER 1 WEST ELEVATION

SCALE : 1/8" = 1'-0"

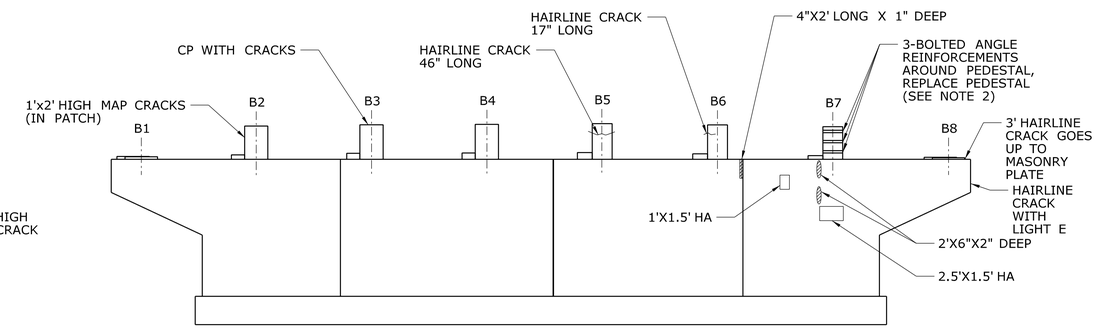

PIER 2 WEST ELEVATION

SCALE : 1/8" = 1'-0"

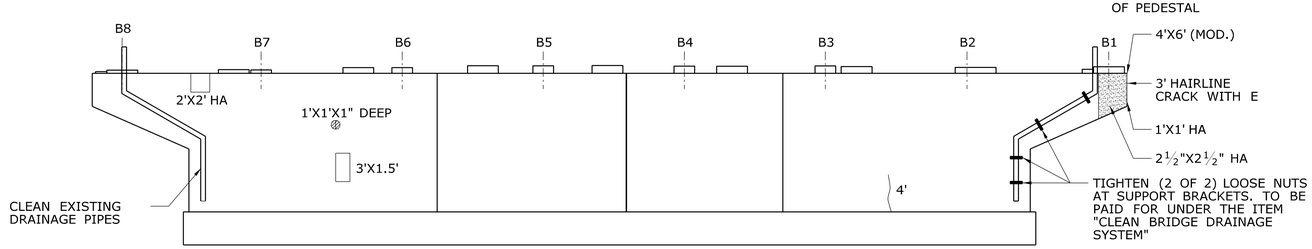

PIER 1 EAST ELEVATION

SCALE : 1/8" = 1'-0"

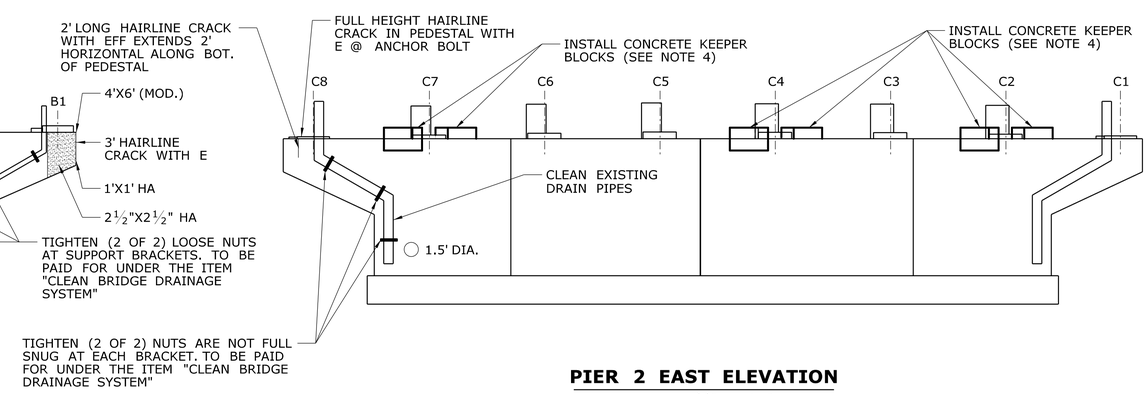

PIER 2 EAST ELEVATION

SCALE : 1/8" = 1'-0"

NOTES:

1. SEE DRAWING S-47 FOR REPAIR DETAILS.
2. SEE DRAWING S-48 FOR PEDESTAL REPAIR DETAILS.
3. SEE DRAWING S-04 FOR CONCRETE REPAIR NOTES.
4. SEE DRAWING S-46 FOR KEEPER BLOCK DETAILS.
5. REMOVE VEGETATIVE GROWTH. TO BE PAID FOR UNDER THE ITEM "CLEARING AND GRUBBING."

LEGEND

- CRACK
- HOLLOW AREA
- SPALL AREA
- SPALL AREA WITH EXPOSED REBAR

CP = CONCRETE PATCH
DIA. = DIAMETER
E = EFFLORSCENCE
HA = HOLLOW AREA

REV.	DATE	REVISION DESCRIPTION	SHEET NO.

THE INFORMATION, INCLUDING ESTIMATED QUANTITIES OF WORK, SHOWN ON THESE SHEETS IS BASED ON LIMITED INVESTIGATIONS BY THE STATE AND IS IN NO WAY WARRANTED TO INDICATE THE CONDITIONS OF ACTUAL QUANTITIES OF WORK WHICH WILL BE REQUIRED.

Plotted: 12/23/2013

DESIGNER/DRAFTER: CY
CHECKED BY: CW
SCALE AS NOTED

STATE OF CONNECTICUT
DEPARTMENT OF TRANSPORTATION

Filename: $FILE$

SIGNATURE/BLOCK:
Stantec Consulting Services Inc.
2321 Whitney Ave.
Hamden, CT 06518

PROJECT TITLE:
REHABILITATION OF BRIDGE I-91 NB & SB OVER US 5, AMTRAK & FERRY STREET

TOWN: **NEW HAVEN**

DRAWING TITLE: **SB: PIERS 1 & 2**

PROJECT NO. 092-0612
DRAWING NO. S-44
SHEET NO. 04.44

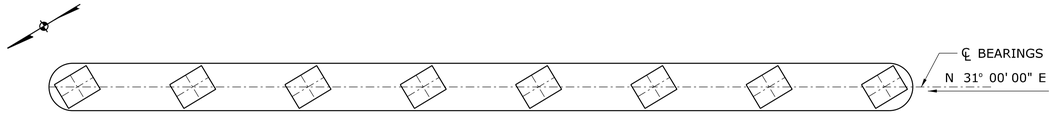

PIER 3 PLAN

SCALE : 1/8" = 1'-0"

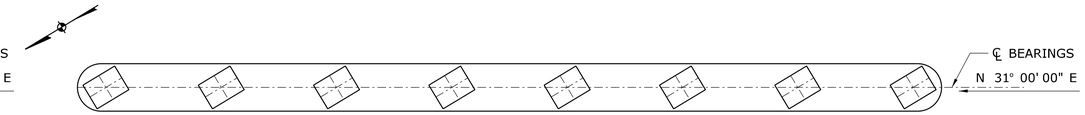

PIER 4 PLAN

SCALE : 1/8" = 1'-0"

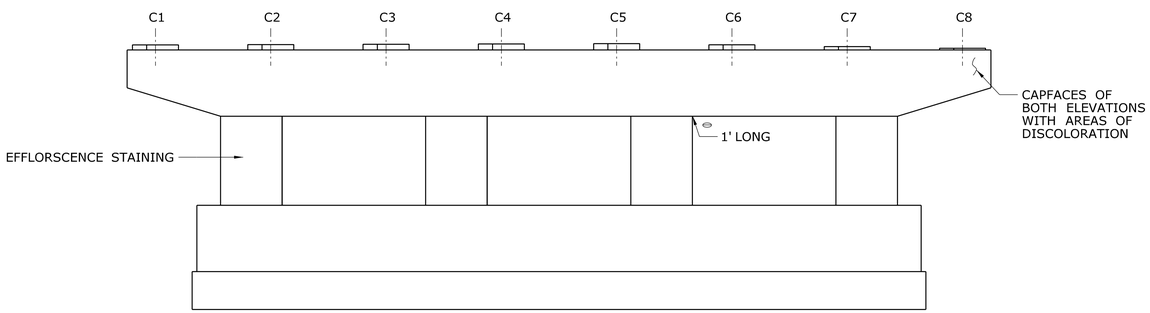

GENERAL NOTE: LIGHT GRAFFITI ALONG PIER BASES

PIER 3 WEST ELEVATION

SCALE : 1/8" = 1'-0"

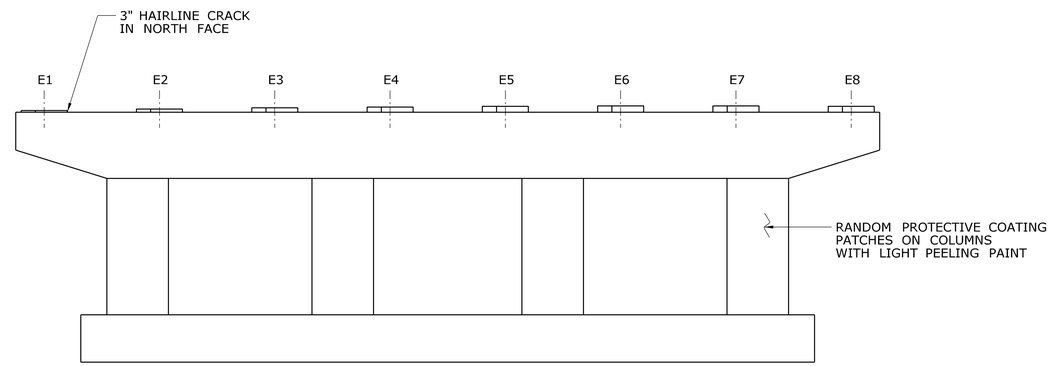

GENERAL NOTE: EVIDENCE OF WATER LEAKAGE @ PIER CAP & COLUMNS @ RANDOM LOCATIONS

PIER 4 WEST ELEVATION

SCALE : 1/8" = 1'-0"

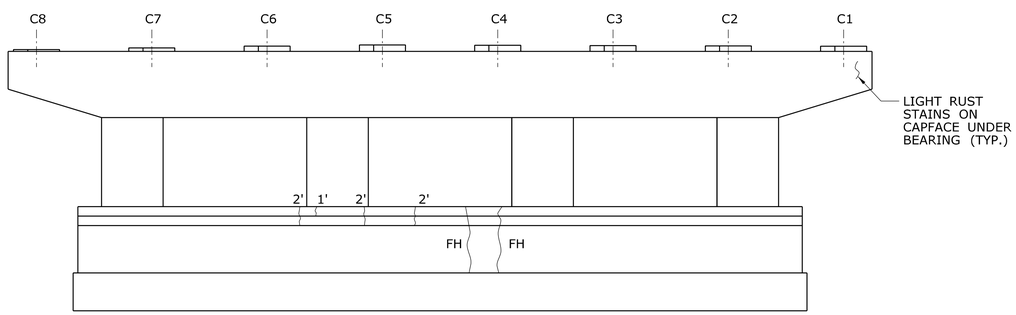

PIER 3 EAST ELEVATION

SCALE : 1/8" = 1'-0"

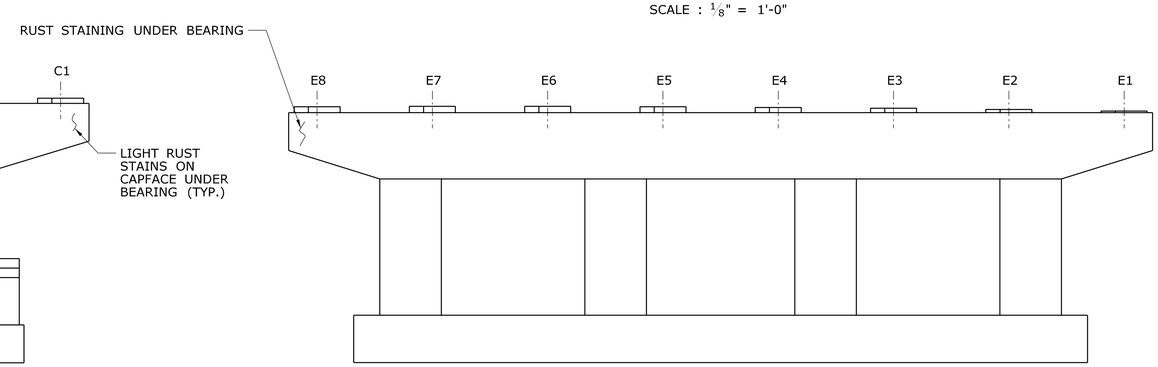

PIER 4 EAST ELEVATION

SCALE : 1/8" = 1'-0"

NOTES:

1. SEE DRAWING S-47 FOR REPAIR DETAILS.
2. SEE DRAWING S-04 FOR CONCRETE REPAIR NOTES.
3. REMOVE VEGETATIVE GROWTH. TO BE PAID FOR UNDER THE ITEM "CLEARING AND GRUBBING."
4. PIER 3 AND 4 ARE LOCATED WITHIN AMTRAK RIGHT-OF-WAY. SEE GENERAL PLAN.

LEGEND

- CRACK
- HOLLOW AREA
- SPALL AREA WITH EXPOSED REBAR

FH = FULL HEIGHT

REV.	DATE	REVISION DESCRIPTION	SHEET NO.

THE INFORMATION, INCLUDING ESTIMATED QUANTITIES OF WORK, SHOWN ON THESE SHEETS IS BASED ON LIMITED INVESTIGATIONS BY THE STATE AND IS IN NO WAY WARRANTED TO INDICATE THE CONDITIONS OF ACTUAL QUANTITIES OF WORK WHICH WILL BE REQUIRED.

Plotted: 12/23/2013

DESIGNER/DRAFTER: CY

CHECKED BY: CW

SCALE AS NOTED

STATE OF CONNECTICUT
DEPARTMENT OF TRANSPORTATION

Filename: $FILE$

SIGNATURE/BLOCK:

Stantec Consulting Services Inc.
2321 Whitney Ave.
Hamden, CT 06518

PROJECT TITLE:

REHABILITATION OF BRIDGE I-91 NB & SB OVER US 5, AMTRAK & FERRY STREET

TOWN: **NEW HAVEN**

DRAWING TITLE: **SB: PIERS 3 & 4**

PROJECT NO. **092-0612**

DRAWING NO. **S-45**

SHEET NO. **04.45**

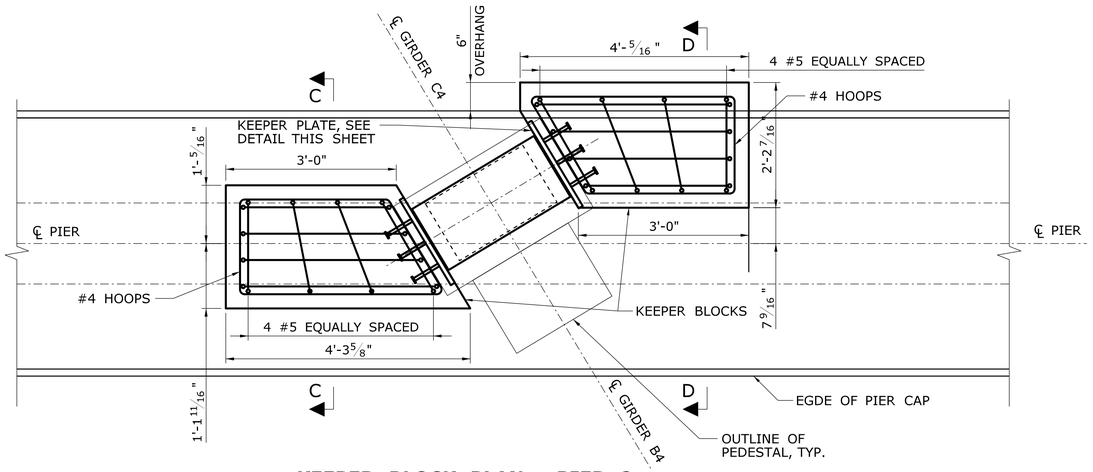

KEEPER BLOCK PLAN - PIER 2

SCALE: 3/4" = 1'-0"

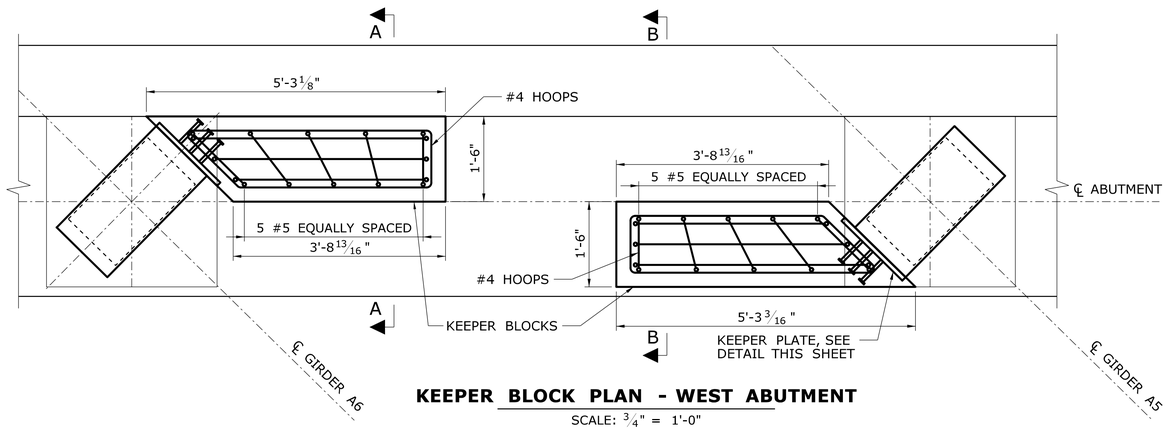

KEEPER BLOCK PLAN - WEST ABUTMENT

SCALE: 3/4" = 1'-0"

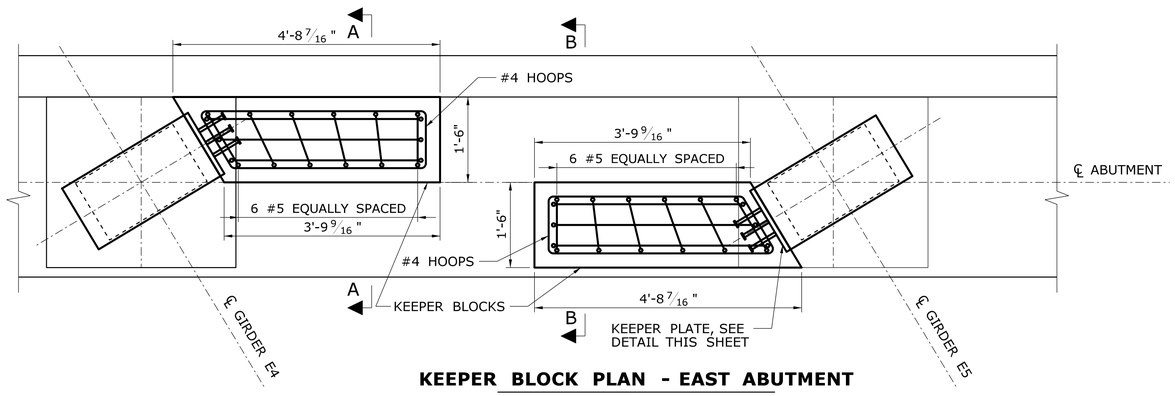

KEEPER BLOCK PLAN - EAST ABUTMENT

SCALE: 3/4" = 1'-0"

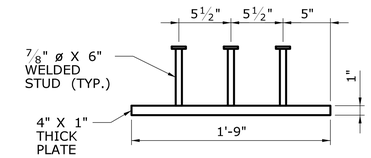

PIER 1 KEEPER PLATE

SCALE: 1 1/2" = 1'-0"

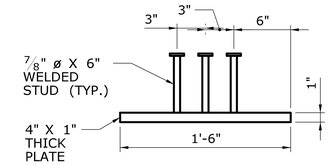

W. ABUTMENT KEEPER PLATE

SCALE: 1 1/2" = 1'-0"

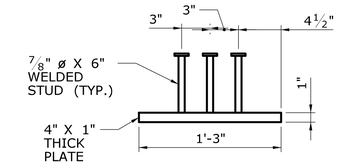

E. ABUTMENT KEEPER PLATE

SCALE: 1 1/2" = 1'-0"

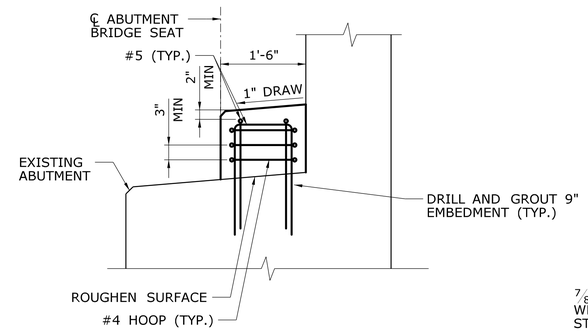

SECTION A-A

SCALE: 3/4" = 1'-0"

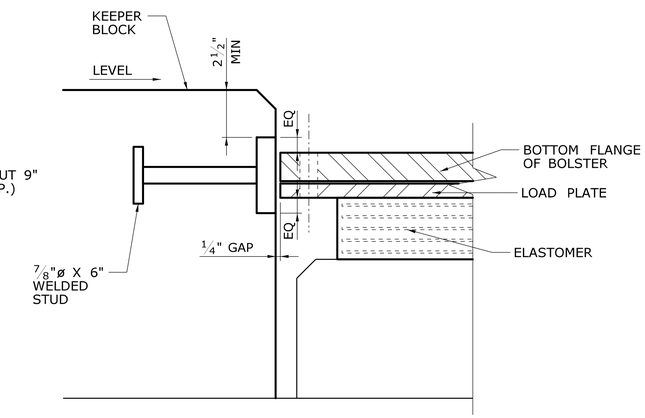

KEEPER BLOCK DETAIL

SCALE: 3" = 1'-0"

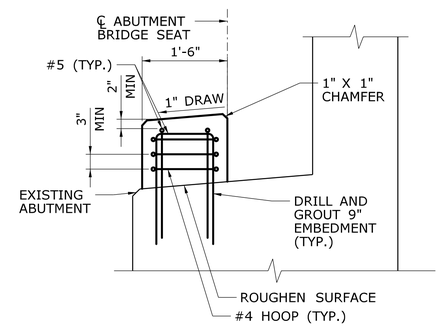

SECTION B-B

SCALE: 3/4" = 1'-0"

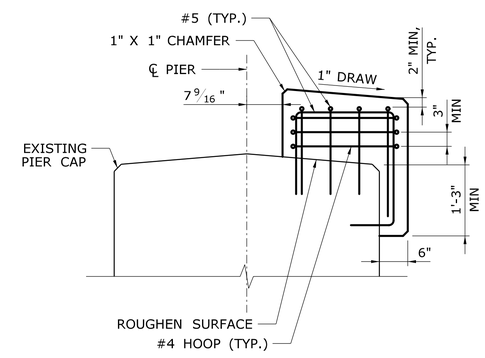

SECTION D-D

SCALE: 3/4" = 1'-0"

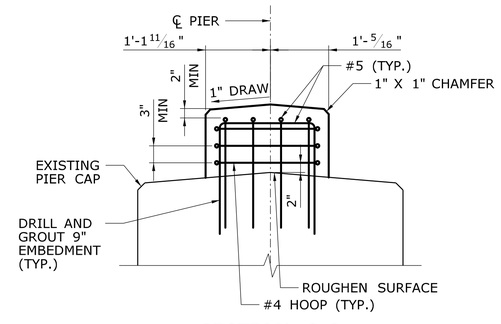

SECTION C-C

SCALE: 3/4" = 1'-0"

CONCRETE KEEPER BLOCK NOTES:

1. KEEPER BLOCK DETAILS ARE TYPICAL FOR EACH ABUTMENT AND PIER AND SHALL BE USED AT ALL KEEPER BLOCK LOCATIONS AT EACH ABUTMENT AND PIER.
2. FOR ADDITIONAL NOTES, REFER TO CONCRETE KEEPER BLOCK NOTES ON DRAWING S-13.

REV.	DATE	REVISION DESCRIPTION	SHEET NO.

THE INFORMATION, INCLUDING ESTIMATED QUANTITIES OF WORK, SHOWN ON THESE SHEETS IS BASED ON LIMITED INVESTIGATIONS BY THE STATE AND IS IN NO WAY WARRANTED TO INDICATE THE CONDITIONS OF ACTUAL QUANTITIES OF WORK WHICH WILL BE REQUIRED.

Plotted: 12/23/2013

DESIGNER/DRAFTER: EW
CHECKED BY: CW
SCALE AS NOTED

STATE OF CONNECTICUT
DEPARTMENT OF TRANSPORTATION

Filename: $FILE$

SIGNATURE/BLOCK:
Stantec Consulting Services Inc.
2321 Whitney Ave.
Hamden, CT 06518

PROJECT TITLE:
REHABILITATION OF BRIDGE I-91 NB & SB OVER US 5, AMTRAK & FERRY STREET

TOWN: **NEW HAVEN**

DRAWING TITLE: **SB: KEEPER BLOCK DETAILS**

PROJECT NO. 092-0612
DRAWING NO. S-46
SHEET NO. 04.46

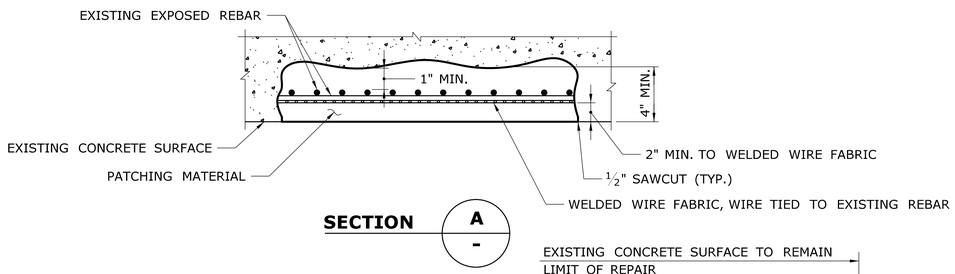

SECTION A/-

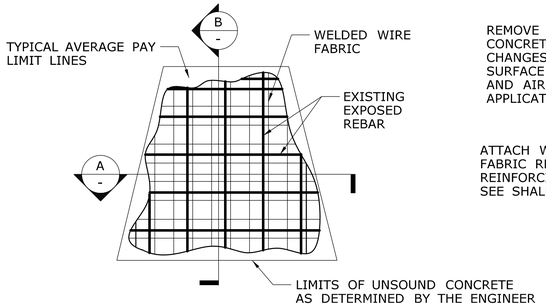

ELEVATION

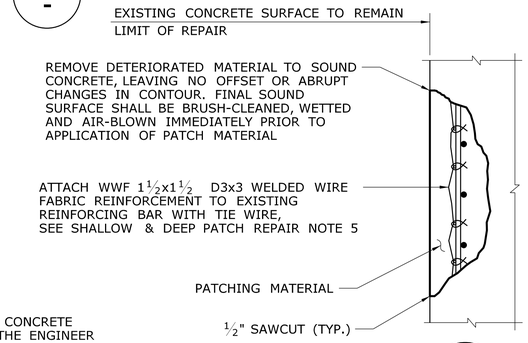

SECTION B/-

DEEP PATCH REPAIR DETAIL - WITHOUT BUILD-OUT

NOT TO SCALE

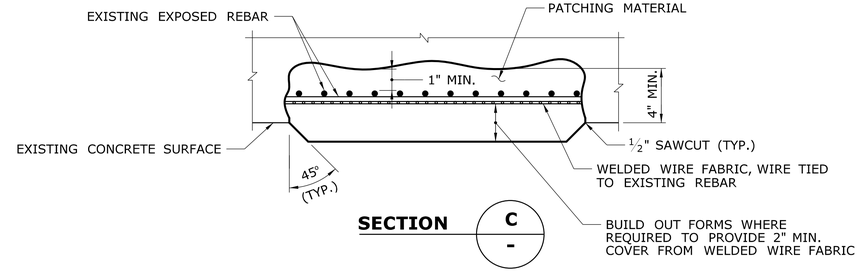

SECTION C/-

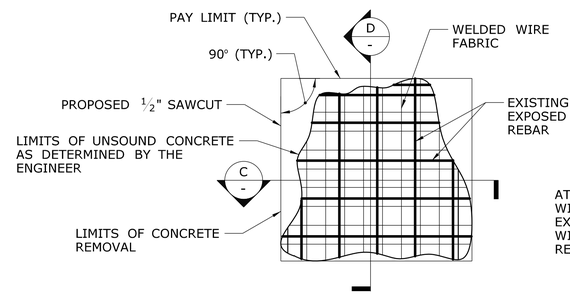

ELEVATION

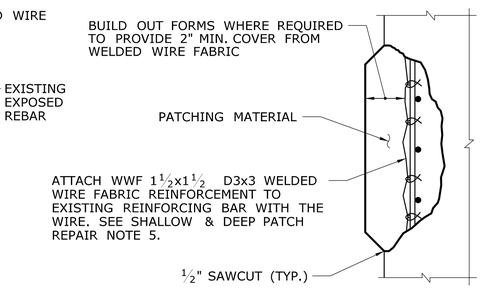

SECTION D/-

DEEP PATCH REPAIR DETAIL - WITH BUILD-OUT

NOT TO SCALE

DEEP PATCH REPAIR PROCEDURE:

1. DEEP PATCH REPAIR DETAIL APPLIES TO DETERIORATED AREAS OF REINFORCED CONCRETE WHERE REINFORCING IS EXPOSED.
2. REMOVE DETERIORATED MATERIAL TO SOUND CONCRETE LEAVING NO OFFSET OR ABRUPT CHANGES IN CONTOUR.
3. CLEAN EXISTING REINFORCING STEEL AND CONCRETE (NEWLY EXPOSED), SEE SPECIFICATIONS. MISSING OR DETERIORATED REINFORCING STEEL SHALL BE REPLACED AND SPLICED AS SHOWN IN DETAIL OR AS DIRECTED BY THE ENGINEER. COST OF SPLICING TO BE PAID UNDER THE COST FOR PATCHING MATERIAL.
4. INSTALL WELDED WIRE FABRIC AND APPLY ZINC RICH PRIMER TO EXISTING AND NEW REINFORCING STEEL IMMEDIATELY PRIOR TO PLACING PATCHING CONCRETE. COST OF WELDED WIRE FABRIC AND PRIMER TO BE PAID UNDER THE COST FOR PATCHING MATERIAL.
5. FORM AND PATCH SURFACE.
6. A MINIMUM OF 72 HOURS SHALL ELAPSE BETWEEN PLACING OF CONCRETE AND START OF NEXT ADJACENT PATCH.
7. ALL NEW EXPOSED CONCRETE SURFACES WITHIN AREA TO BE REPAIRED SHALL BE RUBBED TO PRODUCE A SMOOTH FINISH.

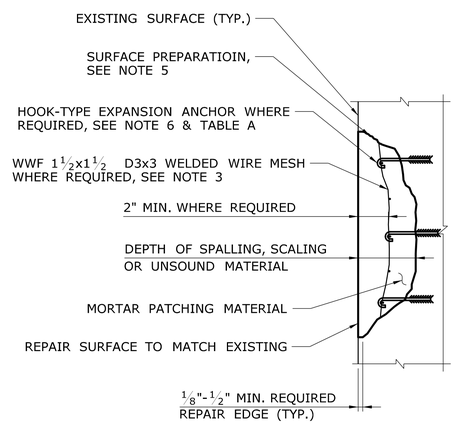

TABLE A	
SIZE AND SPACING OF HOOK-TYPE BOLTS	
THICKNESS OF PATCH MAT'L	SIZE AND SPACING
4" ±	½" DIA. AT 24" ± CTRS.
5" ±	½" DIA. AT 22" ± CTRS.
6" ±	½" DIA. AT 20" ± CTRS.

SHALLOW PATCH REPAIR PROCEDURE:

1. SHALLOW PATCH REPAIR DETAIL APPLIES TO DETERIORATED AREAS OF UNREINFORCED CONCRETE OR REPAIR AREAS WHERE NO REINFORCING IS EXPOSED.
2. REPAIR DEPTH SHALL BE ½" (MIN.) OR GREATER. REPAIR DEPTHS LESS THAN ½" NEED NOT BE REPAIRED.
3. FOR AREAS WHERE THE CONCRETE REPAIR EXCEED 4" IN DEPTH, A SINGLE LAYER OF WIRE MESH SHALL BE USED TO REINFORCE EACH 2" THICKNESS OF PATCHING MATERIAL. THE COST OF WELDED WIRE FABRIC SHALL BE INCLUDED IN THE COST OF PATCHING MATERIAL.
4. THE PERIMETER OF EACH DETERIORATED AREA SHALL BE SQUARED-OFF BY CHISELING OR SAWCUTTING.
5. SURFACE PREPARATION:

   REMOVE LOOSE AND DETERIORATED CONCRETE, INCLUDING DIRT, OIL, GREASE, AND ALL BOND-INHIBITING MATERIALS FROM SURFACE, LEAVING NO OFFSET OR ABRUPT CHANGES IN CONTOUR. SURFACE PREPARATION SHALL BE DONE BY SCABBLER, CHISELING, WIRE BRUSHING OR OTHER APPROPRIATE MECHANICAL MEANS.

   ROUGHEN CONTACT SURFACE WITH A MINIMUM PROFILE OF APPROXIMATELY 1/16" FOR BONDING WITH PATCHING MATERIAL.

   SATURATE WITH CLEAN WATER PRIOR TO APPLYING MORTAR. SUBSTRATE SHOULD BE SATURATED SURFACE DRY (SSD) WITH NO STANDING WATER DURING APPLICATION OF PATCHING MORTAR.
6. HOOK-TYPE EXPANSION ANCHOR BOLTS SHALL BE MECHANICALLY GALVANIZED IN ACCORDANCE WITH ASTM B695, CLASS 50, TYPE 1. COST OF HOOK-TYPE BOLTS, INCLUDING MATERIAL AND INSTALLATION, SHALL BE INCLUDED IN THE COST OF PATCHING MATERIAL.
7. NEW CONCRETE SHALL MATCH SHAPE AND COLOR OF EXISTING CONRETE SURFACE AS CLOSELY AS POSSIBLE.

SHALLOW PATCH REPAIR DETAIL

NOT TO SCALE

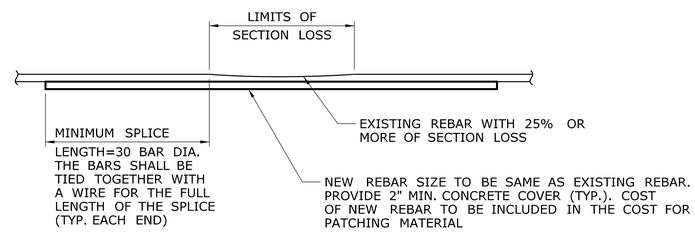

LAPPED TIED SPLICE BAR

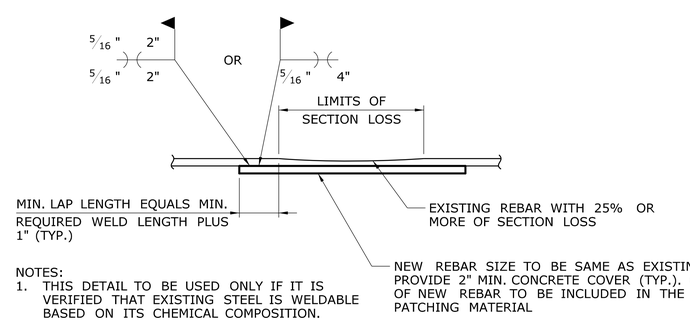

NOTES:
1. THIS DETAIL TO BE USED ONLY IF IT IS VERIFIED THAT EXISTING STEEL IS WELDABLE BASED ON ITS CHEMICAL COMPOSITION.
2. WELDING SHALL BE DONE IN ACCORDANCE AWS D1.4 STRUCTURAL WELDING CODE - REINFORCING STEEL.

LAPPED WELDED SPLICE BAR

REINFORCEMENT SPLICE DETAIL

NOT TO SCALE

SHALLOW AND DEEP PATCH REPAIR NOTES:

1. ALL WORK SHOWN ON THIS DRAWING SHALL BE PERFORMED WHERE DIRECTED BY THE ENGINEER.
2. DEEP PATCH REPAIRS SHALL BE PAID UNDER ITEM CLASS "S" CONCRETE. SHALLOW PATCH REPAIRS SHALL BE PAID UNDER ITEM "VARIABLE DEPTH PATCH." SEE SPECIAL PROVISIONS.
3. SURFACE PREPARATION, PROPORTIONING AND MIXING OF MATERIALS, APPLICATION OF MATERIALS AND REPAIR PROCEDURES SHALL BE IN ACCORDANCE WITH THE MANUFACTURER'S RECOMMENDATIONS.
4. NEW CONCRETE PATCHES SHALL MATCH SHAPE OF EXISTING CONCRETE SURFACE. COLOR OF NEW PATCH CONCRETE SHALL MATCH COLOR OF THE ADJACENT SURFACES AS CLOSELY AS POSSIBLE.
5. EXPOSED REINFORCING BARS SHALL BE BLAST CLEANED AND COATED WITH A ZINC RICH PRIMER THAT CONFORMS TO FEDERAL SPECIFICATION TT-P-641, TYPE 1, BEFORE APPLYING THE PATCHING MATERIAL. COST OF PRIMER SHALL BE INCLUDED IN THE COST OF THE PATCHING MATERIAL ITEM.
6. SPLICED REINFORCING BARS SHALL BE COATED WITH A ZINC RICH PRIMER THAT CONFORMS TO FERERAL SPECIFICATIONS TT-P-641, TYPE 1, BEFORE APPLYING PATCHING MATERIAL. COST OF PRIMER SHALL BE INCLUDED IN THE COST OF THE PATCHING MATERIAL.
7. THE REMOVAL OF DETERIORATED CONCRETE SHALL PROCEED AS DIRECTED BY THE ENGINEER. IF THE REMOVAL OF DETERIORATED CONCRETE BECOMES EXCESSIVE, THE REMOVAL WORK SHALL BE STOPPED AT THAT LOCATION AND THE ENGINEER NOTIFIED IMMEDIATELY. COST OF REMOVAL OF DETERIORATED CONCRETE AND SURFACE PREPARATION OF THE REPAIR AREA SHALL BE INCLUDED IN THE APPROPRIATE PAY ITEM OF THE PATCHING MATERIAL.
8. THE CONTRACTOR SHALL NOT REMOVE CONCRETE EXCEPT IN THE PRESENCE OF THE ENGINEER OR HIS APPOINTED REPRESENTATIVE. IF THE AREA REMOVED EXCEEDS THE AREAS SHOWN ON THE PLANS BY 25%, OR IF THE REMOVAL DEPTH EXTENDS MORE THAN 1½" BEHIND THE MAIN REINFORCING BARS, THE CONTRACTOR SHALL CEASE REMOVAL OPERATIONS AND NOTIFY THE ENGINEER IMMEDIATELY. THE ENGINEER SHALL DETERMINE IF THE REMOVAL OPERATIONS REDUCE THE STRUCTURAL CAPACITY OF THE ELEMENT.
9. AREAS DISTURBED BY CONSTRUCTION SHALL BE RESTORED TO THEIR ORIGINAL CONDITION UNLESS OTHERWISE NOTED OR AS ORDERED BY THE ENGINEER.
10. REPAIR DETAILS APPLY TO SPALLED, SCALED AND HOLLOW AREAS IN ABUTMENTS AND PIERS WHERE REQUIRED AND NOTED ON DRAWINGS, AND AS ORDERED BY THE ENGINEER.

REV.	DATE	REVISION DESCRIPTION	SHEET NO.

THE INFORMATION, INCLUDING ESTIMATED QUANTITIES OF WORK, SHOWN ON THESE SHEETS IS BASED ON LIMITED INVESTIGATIONS BY THE STATE AND IS IN NO WAY WARRANTED TO INDICATE THE CONDITIONS OF ACTUAL QUANTITIES OF WORK WHICH WILL BE REQUIRED.

Plotted Date: 12/23/2013

DESIGNER/DRAFTER: EW
CHECKED BY: CW
SCALE AS NOTED

STATE OF CONNECTICUT
DEPARTMENT OF TRANSPORTATION

Filename: ...\S-47_Substructure Repair Details1_SB.dgn

SIGNATURE/BLOCK:
Stantec Consulting Services Inc.
2321 Whitney Ave.
Hamden, CT 06518

PROJECT TITLE:
REHABILITATION OF BRIDGE I-91 NB & SB OVER US 5, AMTRAK & FERRY STREET

TOWN: **NEW HAVEN**

DRAWING TITLE: **SB: SUBSTRUCTURE REPAIR DETAILS - 1**

PROJECT NO. 092-0612
DRAWING NO. S-47
SHEET NO. 04.47

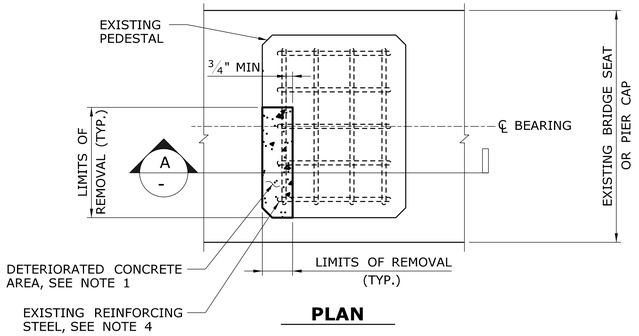

PLAN

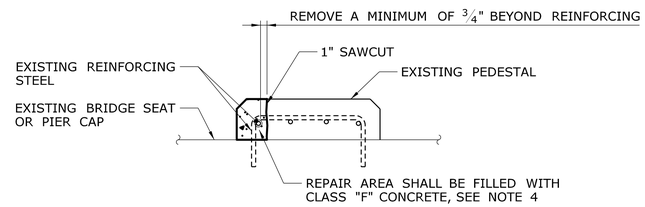

SECTION A - -

PEDESTAL REPAIR DETAIL

NOT TO SCALE

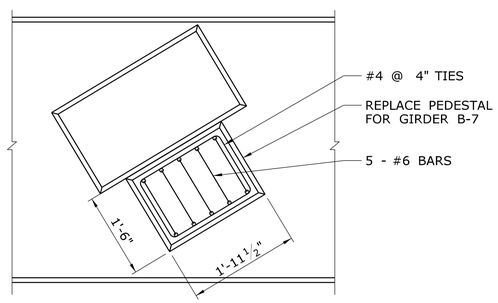

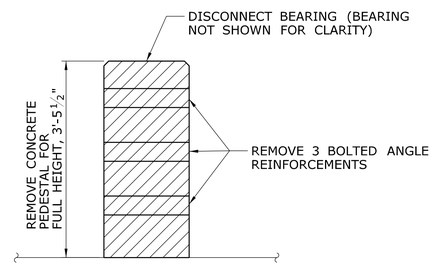

DEMOLITION

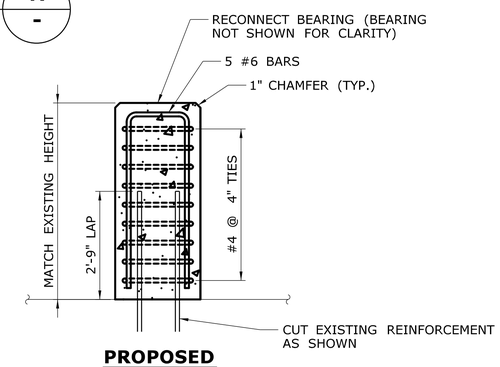

PROPOSED

PEDESTAL REPLACEMENT DETAIL (GIRDER B-7 AT PIER 2)

NOT TO SCALE

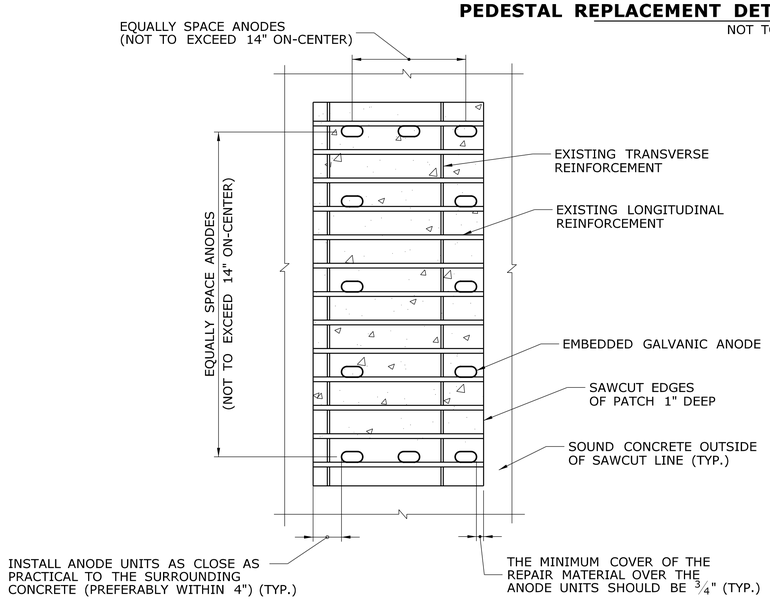

ANODE PLACEMENT - LARGE RECTANGULAR-TYPE PATCH

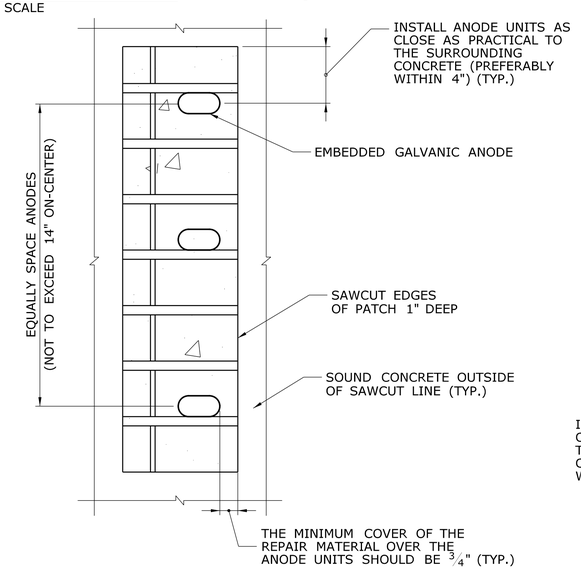

ANODE PLACEMENT - NARROW-TYPE PATCH

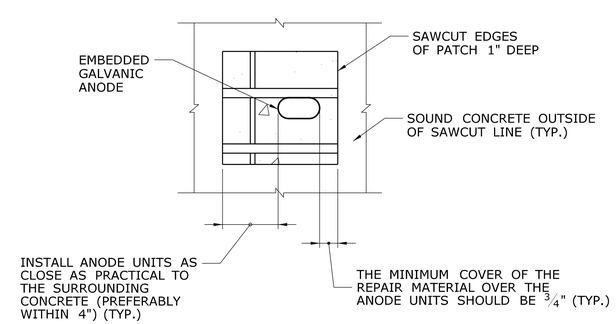

ANODE PLACEMENT - SMALL PATCH

INSTALLATION OF EMBEDDED GALVANIC ANODES

NOTE TO SCALE

PEDESTAL REPAIR NOTES:

1. ALL DETERIORATED, SPALLED, LOOSE, HOLLOW AND HONEYCOMBED CONCRETE AREAS SHALL BE REMOVED A MINIMUM OF 3/4" BEYOND REINFORCING TO PROVIDE ADEQUATE ANCHORAGE OF NEW CONCRETE OR AS DIRECTED BY THE ENGINEER. PROVIDE A 1" SAWCUT ALONG THE PERIMETER OF THE REPAIR AREA. EXTREME CARE SHALL BE TAKEN WHERE REINFORCING STEEL IS UNCOVERED NOT TO DAMAGE THE STEEL OR ITS BOND IN THE SURROUNDING CONCRETE, SEE SPECIAL PROVISIONS.
2. ALL EXPOSED REINFORCING STEEL SHALL BE THOROUGHLY CLEANED, SEE SPECIAL PROVISIONS.
3. THE REMOVAL AREAS SHALL BE FILLED AND FINISHED WITH CLASS "F" CONCRETE IN A MANNER SUITABLE TO THE ENGINEER SUCH THAT THE ORIGINAL DIMENSIONS ARE RESTORED, SEE SPECIAL PROVISION FOR "REPAIR OF BEARING PAD".
4. PEDESTAL REPAIR TO BE PAID FOR UNDER THE ITEM "REPAIR OF BEARING PAD", SEE SPECIAL PROVISIONS.
5. JACKING OF EXISTING BEAMS MAY BE REQUIRED TO FACILITATE THE REPAIR OF CERTAIN BEARING PEDESTALS, THE NEED FOR WHICH SHALL BE DETERMINED BY THE ENGINEER. JACKING OF EXISTING BEAMS SHALL BE INCLUDED IN THE PAY ITEM "JACKING EXISTING SUPERSTRUCTURE (SITE NO. 2)."

PEDESTAL REPLACEMENT PROCEDURE:

1. INSTALL JACKING SUPPORT SYSTEM TO TEMPORARILY SUPPORT GIRDER B-7. FOR JACKING LOCATION, REFER TO DRAWING S-49.
2. DISCONNECT BEARING FROM PEDESTAL.
3. REMOVE ANGLE REINFORCEMENTS FROM PEDESTAL.
4. DEMOLISH CONCRETE PEDESTAL. EXISTING DOWEL TO REMAIN AS SHOWN. PLACE NEW REINFORCEMENT AS SHOWN.
5. POUR NEW CONCRETE PEDESTAL TO SAME DIMENSIONS AS EXISTING PEDESTAL. CONTRACTOR TO FIELD VERIFY EXISTING DIMENSIONS.
6. REMOVE JACKING SUPPORT SYSTEM.
7. THE PROPOSED REBAR, PROPOSED CONCRETE AND THE DEMOLITION OF THE EXISTING BEARING PEDESTAL WILL NOT BE MEASURED FOR PAYMENT AND SHALL BE INCLUDED IN THE PAY ITEM "REPAIR OF BEARING PAD."
8. JACKING OF EXISTING BEAMS MAY BE REQUIRED TO FACILITATE THE REPAIR OF CERTAIN BEARING PEDESTALS, THE NEED FOR WHICH SHALL BE DETERMINED BY THE ENGINEER. JACKING OF EXISTING BEAMS SHALL BE INCLUDED IN THE PAY ITEM "JACKING EXISTING SUPERSTRUCTURE (SITE NO. 2)."

EMBEDDED GALVANIC ANODES:

ANODES ARE TO BE INSTALLED IN "CLASS 'S' CONCRETE" CONCRETE REPAIRS. THEIR PRIME PURPOSE IS TO PROTECT REINFORCING BARS THAT CROSS THE EDGES OF THE PATCH.

INSTALLATION OF ANODES SHALL BE AS DETAILED ON THIS PLAN AND PER THE RECOMMENDATIONS OF THE ANODE MANUFACTURER'S REPRESENTATIVE AND AS DIRECTED BY THE ENGINEER.

REV.	DATE	REVISION DESCRIPTION	SHEET NO.
-	-	-	-
-	-	-	-
-	-	-	-
-	-	-	-
-	-	-	-
-	-	-	-

THE INFORMATION, INCLUDING ESTIMATED QUANTITIES OF WORK, SHOWN ON THESE SHEETS IS BASED ON LIMITED INVESTIGATIONS BY THE STATE AND IS IN NO WAY WARRANTED TO INDICATE THE CONDITIONS OF ACTUAL QUANTITIES OF WORK WHICH WILL BE REQUIRED.

Plotted Date: 12/23/2013

DESIGNER/DRAFTER: EW

CHECKED BY: CW

SCALE AS NOTED

STATE OF CONNECTICUT
DEPARTMENT OF TRANSPORTATION

Filename: ...\S-48_Substructure_Repair Details2_SB.dgn

SIGNATURE/BLOCK:

Stantec Consulting Services Inc.
2321 Whitney Ave.
Hamden, CT 06518

PROJECT TITLE:

REHABILITATION OF BRIDGE I-91 NB & SB OVER US 5, AMTRAK & FERRY STREET

TOWN: **NEW HAVEN**

DRAWING TITLE: **SB: SUBSTRUCTURE REPAIR DETAILS - 2**

PROJECT NO. **092-0612**

DRAWING NO. **S-48**

SHEET NO. **04.48**

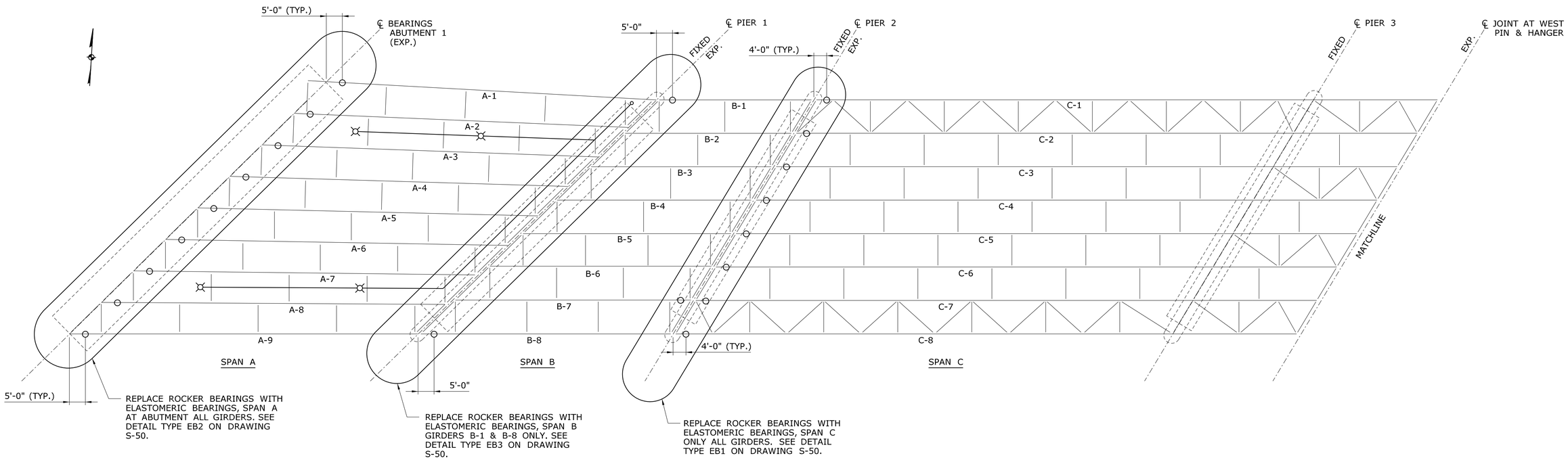

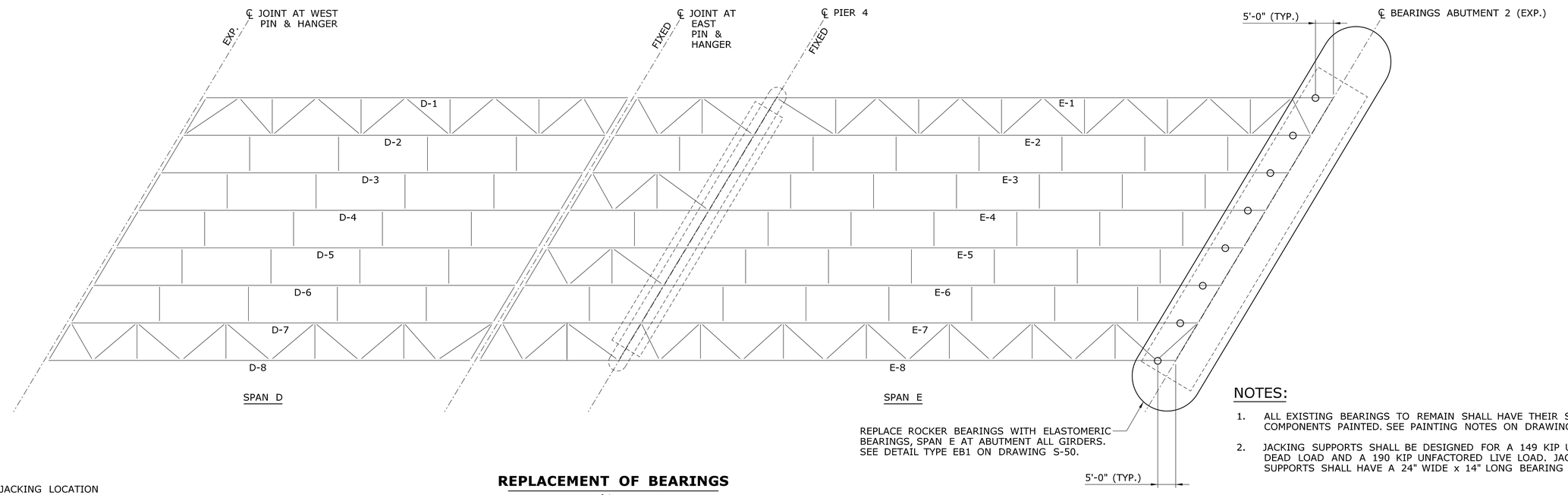

NOTES:

1. ALL EXISTING BEARINGS TO REMAIN SHALL HAVE THEIR STRUCTURAL COMPONENTS PAINTED. SEE PAINTING NOTES ON DRAWING S-04.
2. JACKING SUPPORTS SHALL BE DESIGNED FOR A 149 KIP UNFACTORED DEAD LOAD AND A 190 KIP UNFACTORED LIVE LOAD. JACKING SUPPORTS SHALL HAVE A 24" WIDE x 14" LONG BEARING AREA.

LEGEND

○ PROPOSED JACKING LOCATION

REPLACEMENT OF BEARINGS

SCALE: $^{1}/_{16}$" = 1'-0"

REV.	DATE	REVISION DESCRIPTION	SHEET NO.

THE INFORMATION, INCLUDING ESTIMATED QUANTITIES OF WORK, SHOWN ON THESE SHEETS IS BASED ON LIMITED INVESTIGATIONS BY THE STATE AND IS IN NO WAY WARRANTED TO INDICATE THE CONDITIONS OF ACTUAL QUANTITIES OF WORK WHICH WILL BE REQUIRED.

Plotted: 12/23/2013

DESIGNER/DRAFTER: EW

CHECKED BY: CW

SCALE AS NOTED

STATE OF CONNECTICUT
DEPARTMENT OF TRANSPORTATION

Filename: $FILE$

SIGNATURE/ BLOCK:

Stantec Consulting Services Inc.
2321 Whitney Ave.
Hamden, CT 06518

PROJECT TITLE:
REHABILITATION OF BRIDGE I-91 NB & SB OVER US 5, AMTRAK & FERRY STREET

TOWN: **NEW HAVEN**

DRAWING TITLE: **SB: BEARING REPLACEMENT PLAN**

PROJECT NO. **092-0612**

DRAWING NO. **S-49**

SHEET NO. **04.49**

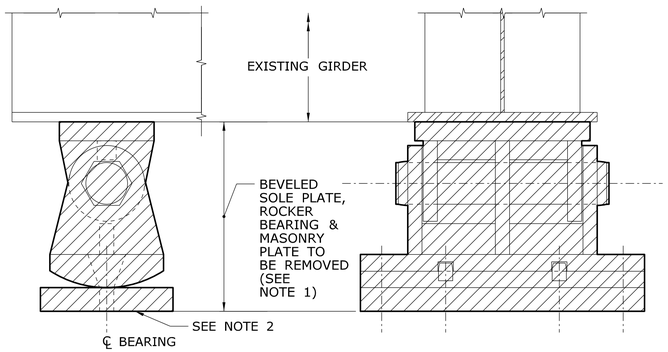

EXISTING CONDITION
EXPANSION BEARING - TYPE EB1
(SPANS C & E)

SCALE: $1\frac{1}{2}$" = 1'-0"

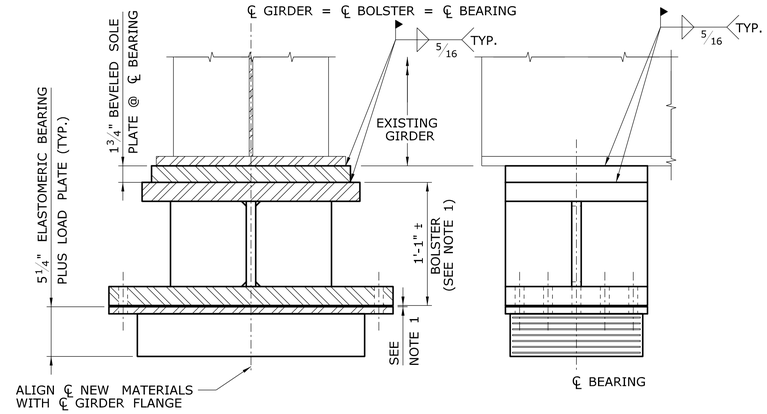

PROPOSED ELASTOMERIC BEARING
WITH BOLSTER - TYPE EB1
(SPANS C & E)

SCALE: $1\frac{1}{2}$" = 1'-0"

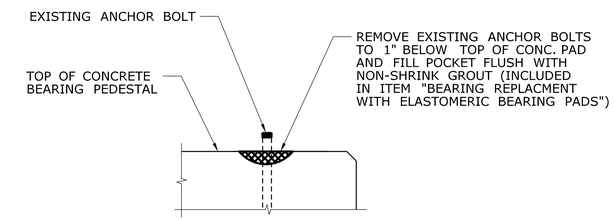

SURFACE PREPARATION DETAIL

NOT TO SCALE

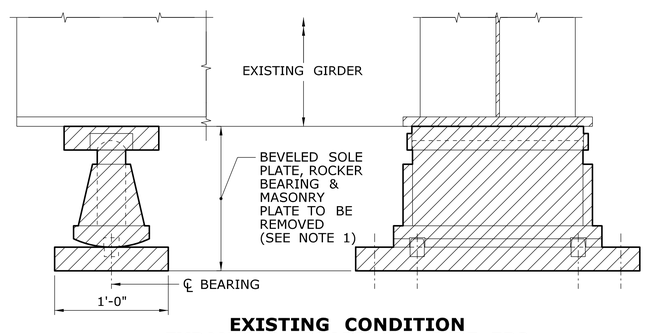

EXISTING CONDITION
EXPANSION BEARING - TYPE EB2
(SPAN A)

SCALE: $1\frac{1}{2}$" = 1'-0"

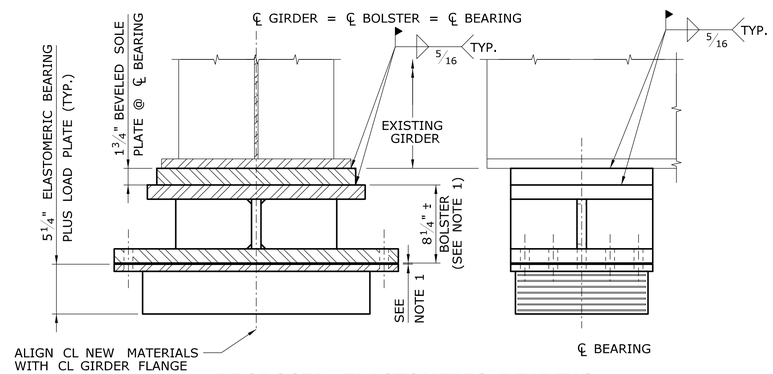

PROPOSED ELASTOMERIC BEARING
WITH BOLSTER - TYPE EB2
(SPAN A)

SCALE: $1\frac{1}{2}$" = 1'-0"

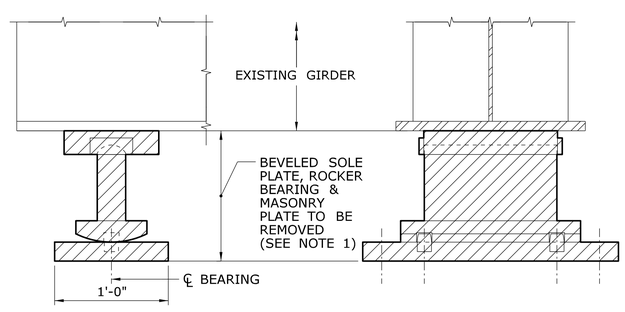

EXISTING CONDITION
EXPANSION BEARING - TYPE EB3
(SPAN B, GIRDERS B-1 & B-8)

SCALE: $1\frac{1}{2}$" = 1'-0"

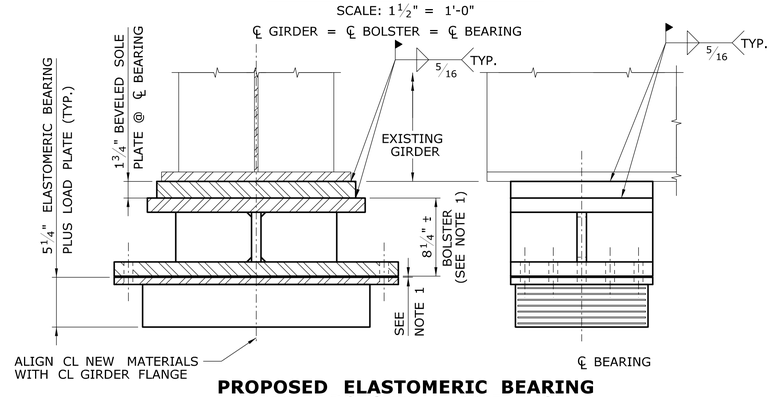

PROPOSED ELASTOMERIC BEARING
WITH BOLSTER - TYPE EB3
(SPAN B, GIRDERS B-1 & B-8)

SCALE: $1\frac{1}{2}$" = 1'-0"

NOTES:

1. THE CONTRACTOR SHALL TAKE FIELD MEASUREMENTS AT ALL EXISTING ROCKER BEARINGS IN ORDER TO DETERMINE THE DISTANCES BETWEEN BOTTOM OF GIRDER AND THE CONCRETE BEARING PAD. INCLUDE COST OF THESE MEASUREMENTS UNDER ITEM "BEARING REPLACEMENT WITH ELASTOMERIC BEARING PADS." THESE MEASUREMENTS SHALL BE USED TO FABRICATE THE NEW BOLSTERS (SEE DRAWING S-50). THE MEASUREMENTS SHALL ALSO BE USED TO DETERMINE THE HEIGHT AT CENTER LINE OF BEARING AS INDICATED ON THIS SHEET. NOTE THAT THE GIRDERS MAY HAVE LIFTED UP DUE TO CORROSION IN THE ROCKER BEARINGS SO THAT THE "AS BUILT" HEIGHT IS NOW GREATER. FOR THE FINAL CONDITION THE TOTAL HEIGHT OF THE REPLACEMENT MATERIALS SHALL MATCH THE EXISTING HEIGHT AT CENTER LINE OF BEARING.
2. CONTRACTOR IS HEREBY NOTIFIED OF THE PRESENCE OF LEAD UNDER THE EXISTING MASONRY PLATES.
3. CENTER LINE OF SOLE PLATE THICKNESS ($1\frac{3}{4}$") IS BASED ON ASSUMED EXISTING CONDITIONS. IN NO CASE SHALL THE BEVELING OF THE SOLE PLATE CAUSE THE THICKNESS AT THE THIN EDGE TO BE LESS THAN $1\frac{1}{4}$".
4. THE BOLSTERS AND BEVELED SOLE PLATE WILL NOT BE MEASURED FOR PAYMENT, AND SHALL BE INCLUDED IN THE PAY ITEM "STRUCTURAL STEEL (SITE NO. 1)."
5. THE LOAD PLATE AND ELASTOMERIC BEARING PADS WILL NOT BE MEASURED FOR PAYMENT, AND SHALL BE INCLUDED IN THE PAY ITEM "BEARING REPLACEMENT WITH ELASTOMERIC BEARING PADS."

REV.	DATE	REVISION DESCRIPTION	SHEET NO.

THE INFORMATION, INCLUDING ESTIMATED QUANTITIES OF WORK, SHOWN ON THESE SHEETS IS BASED ON LIMITED INVESTIGATIONS BY THE STATE AND IS IN NO WAY WARRANTED TO INDICATE THE CONDITIONS OF ACTUAL QUANTITIES OF WORK WHICH WILL BE REQUIRED.

Plotted: 12/23/2013

DESIGNER/DRAFTER: EW
CHECKED BY: CW
SCALE AS NOTED

STATE OF CONNECTICUT
DEPARTMENT OF TRANSPORTATION

Filename: $FILE$

SIGNATURE/BLOCK:
Stantec Consulting Services Inc.
2321 Whitney Ave.
Hamden, CT 06518

PROJECT TITLE:
REHABILITATION OF BRIDGE I-91 NB & SB OVER US 5, AMTRAK & FERRY STREET

TOWN: **NEW HAVEN**

DRAWING TITLE:
SB: EXPANSION BEARING REPLACEMENT

PROJECT NO. **092-0612**
DRAWING NO. **S-50**
SHEET NO. **04.50**

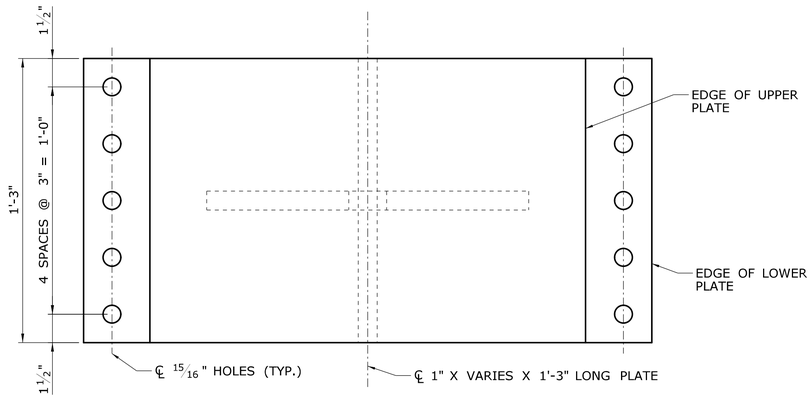

PLAN VIEW

SCALE: 3" = 1'-0"

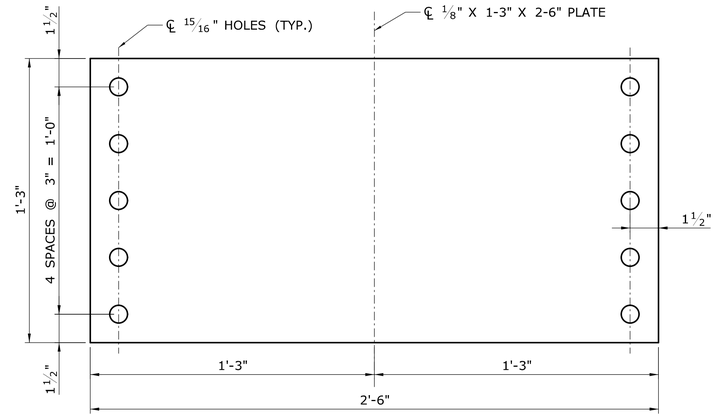

PLAN VIEW SPACER PLATES DETERMINE NUMBER IN THE FIELD

SCALE: 3" = 1'-0"

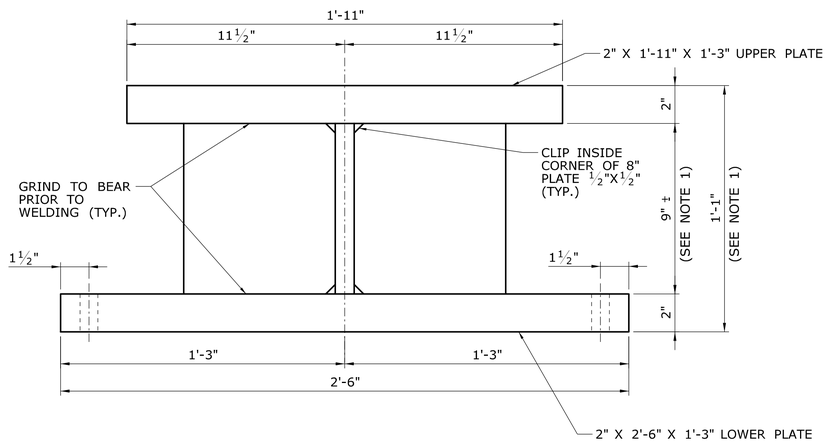

VIEW OF TYPE "A" BOLSTER

SCALE: 3" = 1'-0"

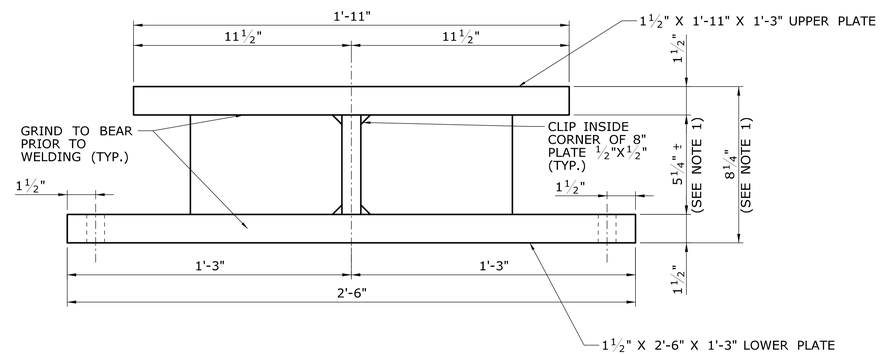

VIEW OF TYPE "B" BOLSTER

SCALE: 3" = 1'-0"

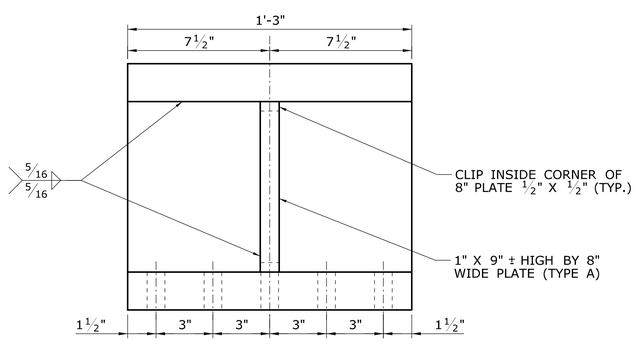

END VIEW OF TYPE "A" BOLSTER

SCALE: 3" = 1'-0"

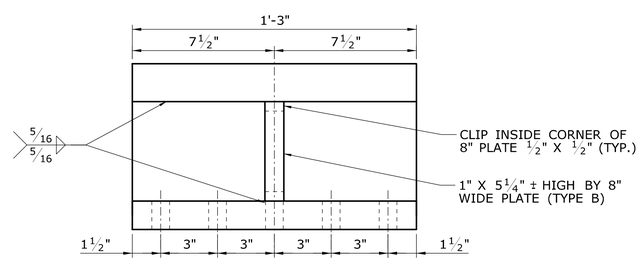

END VIEW OF TYPE "B" BOLSTER

SCALE: 3" = 1'-0"

NOTES:

1. THE CONTRACTOR SHALL TAKE FIELD MEASUREMENTS AT ALL EXISTING ROCKER BEARINGS IN ORDER TO DETERMINE THE DISTANCES BETWEEN BOTTOM OF GIRDER AND THE CONCRETE BEARING PAD. INCLUDE COST OF THESE MEASUREMENTS UNDER ITEM "BEARING REPLACEMENT WITH ELASTOMERIC BEARING PADS." THESE MEASUREMENTS SHALL BE USED TO FABRICATE THE NEW BOLSTERS. THE MEASUREMENTS SHALL ALSO BE USED TO DETERMINE THE HEIGHT AT CENTER LINE OF BEARING AS INDICATED ON THIS SHEET. NOTE THAT GIRDERS MAY HAVE LIFTED UP DUE TO CORROSION IN THE ROCKER BEARINGS SO THAT THE "AS BUILT" HEIGHT IS NOW GREATER. FOR THE FINAL CONDITION THE TOTAL HEIGHT OF THE REPLACEMENT MATERIALS SHALL MATCH THE EXISTING HEIGHT AT CENTER LINE OF BEARING.
2. THE BOLSTERS AND BEVELED SOLE PLATE WILL NOT BE MEASURED FOR PAYMENT, AND SHALL BE INCLUDED IN THE PAY ITEM "STRUCTURAL STEEL (SITE NO. 2)."

REV.	DATE	REVISION DESCRIPTION	SHEET NO.

THE INFORMATION, INCLUDING ESTIMATED QUANTITIES OF WORK, SHOWN ON THESE SHEETS IS BASED ON LIMITED INVESTIGATIONS BY THE STATE AND IS IN NO WAY WARRANTED TO INDICATE THE CONDITIONS OF ACTUAL QUANTITIES OF WORK WHICH WILL BE REQUIRED.

Plotted: 12/23/2013

DESIGNER/DRAFTER: EW

CHECKED BY: CW

SCALE AS NOTED

STATE OF CONNECTICUT
DEPARTMENT OF TRANSPORTATION

Filename: $FILE$

SIGNATURE/BLOCK:

Stantec Consulting Services Inc.
2321 Whitney Ave.
Hamden, CT 06518

PROJECT TITLE:

REHABILITATION OF BRIDGE I-91 NB & SB OVER US 5, AMTRAK & FERRY STREET

TOWN: **NEW HAVEN**

DRAWING TITLE: **SB: EXPANSION BEARING BOLSTER DETAILS**

PROJECT NO. **092-0612**

DRAWING NO. **S-51**

SHEET NO. **04.51**

BEARING NOTES

1. THE ELASTOMERIC BEARINGS ARE DESIGNED USING METHOD A OF THE AASHTO LRFD BRIDGE DESIGN SPECIFICATIONS.
2. THE CONTRACTOR SHALL RECORD THE GRADE OF THE EXISTING GIRDERS (BOTH LONGITUDINALLY AND CROSS SECTIONALLY) TO ACCURATELY FABRICATE THE NEW BEVELED SOLE PLATES IN TWO DIMENSIONS.
3. THE ELASTOMER SHALL CONTAIN ONLY VIRGIN POLYCHLOROPRENE (NEOPRENE) AS THE RAW POLYMER AND HAVE A SHEAR MODULUS BETWEEN 0.110 KSI AND 0.175 KSI.
4. THE INTERNAL STEEL LAMINAE SHALL CONFORM TO ASTM A1011, GRADE 36 OR 40.
5. THE STEEL FOR THE BEVELED SOLE PLATE AND LOAD PLATE SHALL CONFORM TO THE REQUIREMENTS OF AASHTO M270, GRADE 50T2.
6. ANCHOR BOLTS SHALL BE $^{7}/_{8}$" DIAMETER AND SHALL CONFORM TO ASTM F1554.
7. THE LOAD PLATE SHALL BE HOT BONDED TO THE ELASTOMERIC BEARING DURING VULCANIZATION AS DESCRIBED BELOW.
8. WELDING DETAILS, PROCEDURES AND TESTING METHODS SHALL CONFORM TO THE LATEST ANSI/AASHTO/AWS D1.5 - BRIDGE WELDING CODE, UNLESS OTHERWISE NOTED ON THE PLANS.
9. THE EXPOSED SURFACES OF THE ELASTOMER SHALL NOT BE PAINTED.
10. THE ELASTOMERIC BEARINGS SHALL BE INSTALLED WHEN THE AMBIENT AIR AND BEARING TEMPERATURES ARE BETWEEN 40° F AND 80° F AND HAVE BEEN WITHIN THIS RANGE FOR AT LEAST TWO HOURS.
11. THE COST OF REMOVING THE EXISTING BEARINGS, AND FURNISHING AND INSTALLING THE ELASTOMERIC BEARINGS, INCLUDING THE LOAD PLATES, SHALL BE PAID FOR UNDER ITEM "BEARING REPLACEMENT WITH ELASTOMERIC BEARING PADS".
12. JACKING OF GIRDERS FOR REPLACING BEARINGS SHALL BE PAID FOR UNDER ITEM "JACKING EXISTING SUPERSTRUCTURE (SITE NO. 2)."
13. REMOVAL OF EXISTING PAINT, SURFACE PREPERATION, AND NEW PAINT: SEE SPECIAL PROVISIONS.
14. THE MAXIMUM DESIGN LOAD (DL + LL WITHOUT IMPACT) FOR EACH BEARING IS 339 KIPS. THIS INFORMATION IS PROVIDED FOR THE PROOF LOAD TEST DESCRIBED IN THE SPECIAL PROVISION "BEARING REPLACEMENT WITH ELASTOMERIC BEARING PADS."

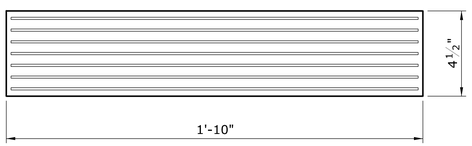

ELEVATION OF ELASTOMERIC BEARING

SCALE: 3" = 1'-0"

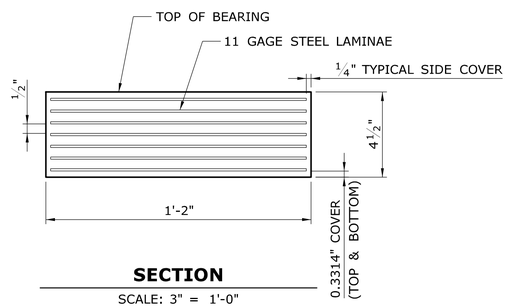

SECTION

SCALE: 3" = 1'-0"

NOTE: TOP OF REINFORCED ELASTOMERIC BEARING SHALL BE SHOP VULCANIZED TO THE EXTERNAL LOAD PLATE. (LOAD PLATE NOT SHOWN FOR CLARITY)

EXPANSION BEARING NOTES

THE STEEL-LAMINATED ELASTOMERIC BEARING SHALL BE FABRICATED AS FOLLOWS:

2- 0.3314" COVER ELASTOMER LAYER	=	0.6628"
6- 0.5" INTERNAL ELASTOMER LAYERS	=	3.00"
7- 0.1196" 11 GAUGE STEEL LAMINAE	=	0.8372"
TOTAL BEARING PAD THICKNESS	=	4.50"

NOTE:

CENTER LINE OF SOLE PLATE THICKNESS ($1^{3}/_{4}$") IS BASED ON ASSUMED EXISTING CONDITIONS. IN NO CASE SHALL THE BEVELING OF THE SOLE PLATE CAUSE THE THICKNESS AT THE THIN EDGE TO BE LESS THAN $1^{1}/_{4}$".

BEARING LOADS

DEAD LOAD	=	149 KIPS
LIVE LOAD	=	190 KIPS
TOTAL LOAD	=	339 KIPS

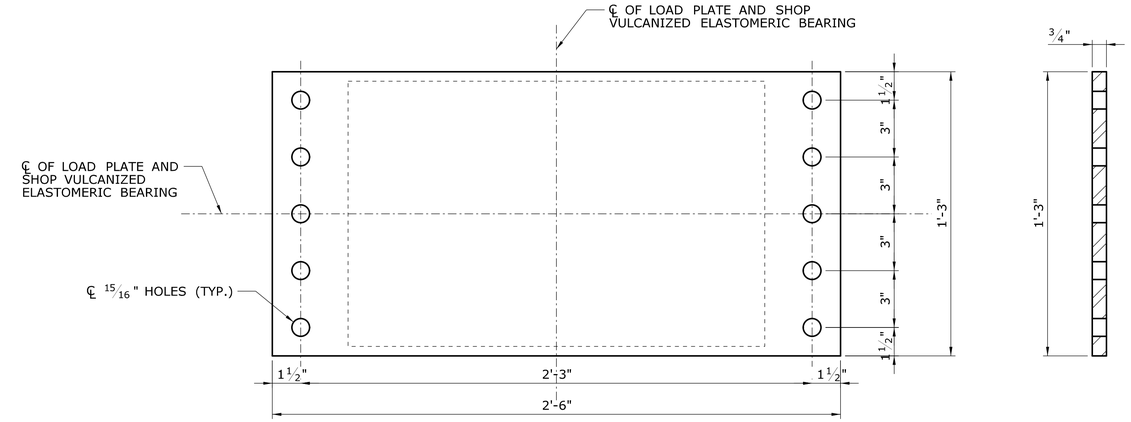

PLAN VIEW OF BEARING

SCALE: 3" = 1'-0"

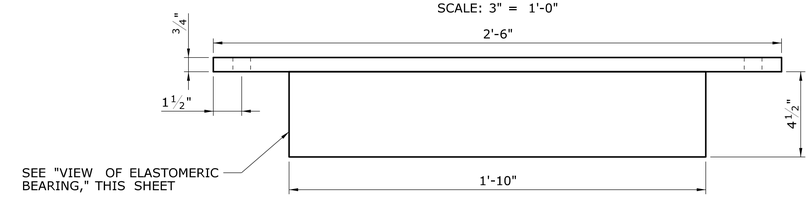

ELEVATION VIEW OF BEARING

SCALE: 3" = 1'-0"

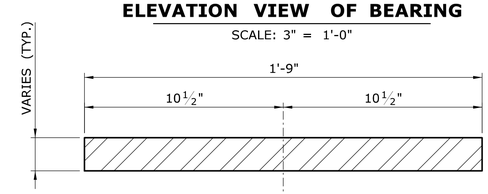

SECTION

SCALE: 3" = 1'-0"

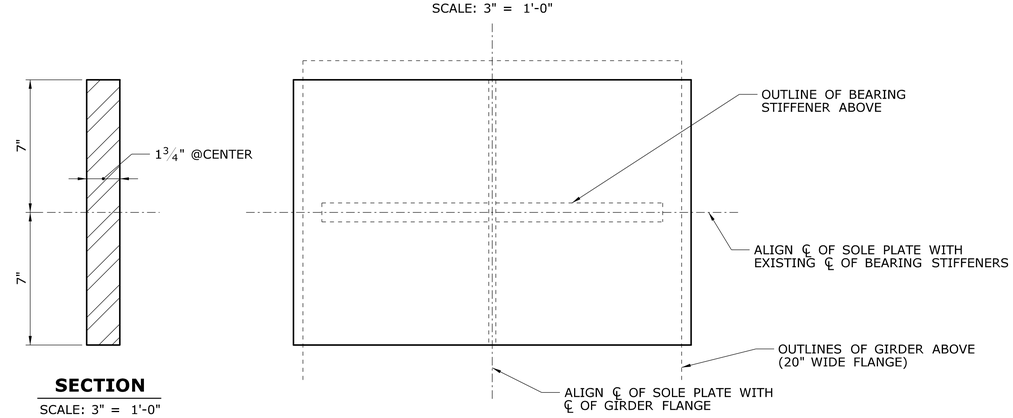

SECTION

SCALE: 3" = 1'-0"

PLAN VIEW OF TYPICAL BEVELED SOLE PLATE (BR. NO. 03022)

SCALE: 3" = 1'-0"

REV.	DATE	REVISION DESCRIPTION	SHEET NO.

THE INFORMATION, INCLUDING ESTIMATED QUANTITIES OF WORK, SHOWN ON THESE SHEETS IS BASED ON LIMITED INVESTIGATIONS BY THE STATE AND IS IN NO WAY WARRANTED TO INDICATE THE CONDITIONS OF ACTUAL QUANTITIES OF WORK WHICH WILL BE REQUIRED.

Plotted: 12/23/2013

DESIGNER/DRAFTER: EW
CHECKED BY: CW
SCALE AS NOTED

STATE OF CONNECTICUT
DEPARTMENT OF TRANSPORTATION

Filename: $FILE$

SIGNATURE/BLOCK:
Stantec Consulting Services Inc.
2321 Whitney Ave.
Hamden, CT 06518

PROJECT TITLE:
REHABILITATION OF BRIDGE I-91 NB & SB OVER US 5, AMTRAK & FERRY STREET

TOWN: NEW HAVEN

DRAWING TITLE: SB: EXPANSION BEARING DETAILS

PROJECT NO. 092-0612
DRAWING NO. S-52
SHEET NO. 04.52

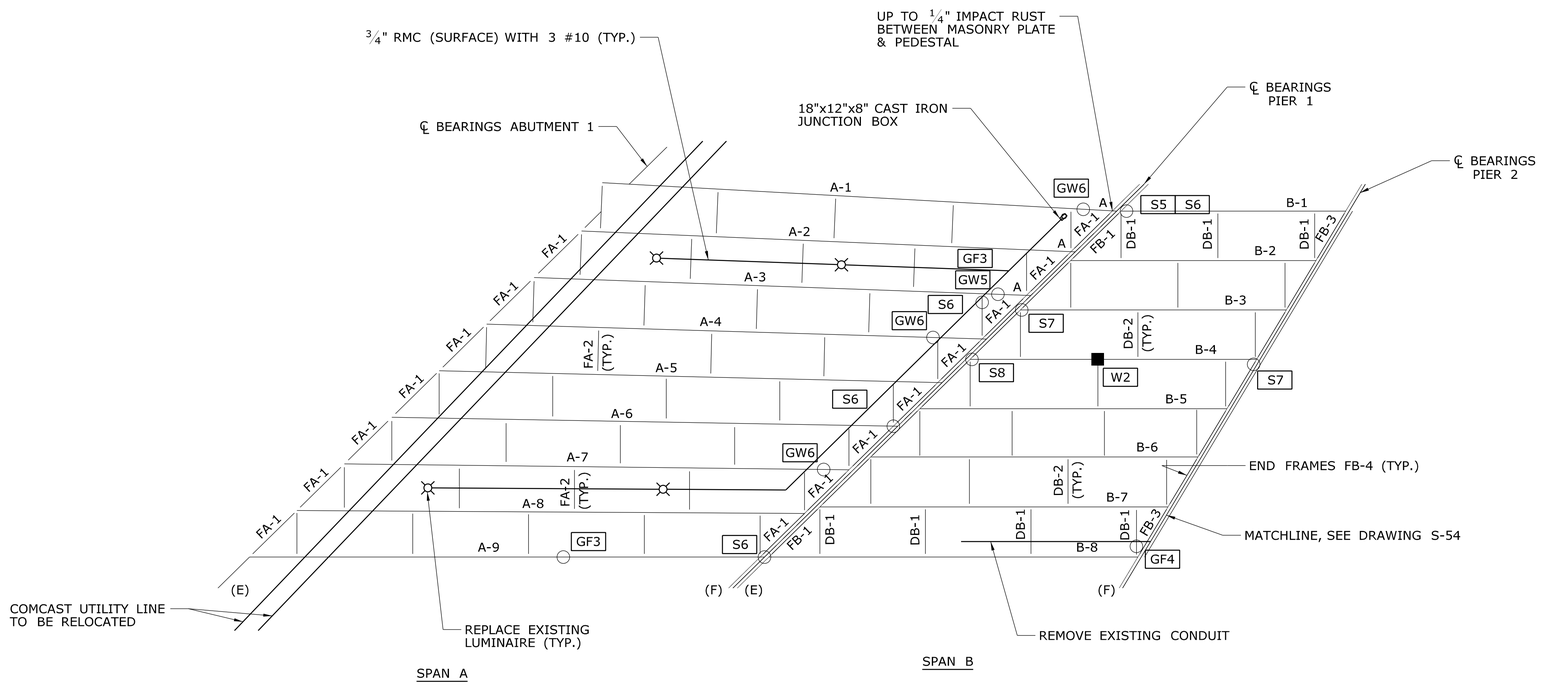

PLAN

SCALE : 1/16" = 1'-0"

REPAIR TYPE LEGEND

- GFX — GIRDER FLANGE REPAIR
- GWX — GIRDER WEB REPAIR
- WX — WELD REPAIR
- SX — STIFFENER REPAIR
- (X) — REPAIR LOCATION FOR MULTIPLE REPAIRS AT SAME MEMBER

LEGEND

- ■ MISSING WELD
- ○ STEEL SECTION LOSS

NOTES:

1. FOR REPAIR DETAILS, SEE DRAWINGS S-56 THRU S-61.
2. BLAST CLEAN ALL STEEL SUPERSTRUCTURE MEMBERS AND FIELD PAINT. EMPLOY CLASS 1 CONTAINMENT SYSTEM FOR CLEANING AND PAINTING OPERATIONS.
3. CLEAN NOTED SPLICE PLATES AND DETERMINE SECTION LOSS, IF ANY.
4. PLUG ALL UNNECESSARY EXISTING WEEP PIPES. WEEP PIPES LOCATED AT LOW END OF EACH DECK JOINT TO REMAIN. SEE S-67 FOR WEEPHOLE DETAIL.
5. REMOVE ABANDONED TROUGHS. THIS WORK NOT MEASURED FOR PAYMENT AND SHALL BE INCLUDED IN THE PAY ITEM "STRUCTURAL STEEL."
6. TIGHTEN ALL LOOSE NUTS AND BOLTS. THIS WORK NOT MEASURED FOR PAYMENT AND SHALL BE INCLUDED IN THE ITEM "STRUCTURAL STEEL."

REV.	DATE	REVISION DESCRIPTION	SHEET NO.

THE INFORMATION, INCLUDING ESTIMATED QUANTITIES OF WORK, SHOWN ON THESE SHEETS IS BASED ON LIMITED INVESTIGATIONS BY THE STATE AND IS IN NO WAY WARRANTED TO INDICATE THE CONDITIONS OF ACTUAL QUANTITIES OF WORK WHICH WILL BE REQUIRED.

Plotted: 12/23/2013

DESIGNER/DRAFTER: CY

CHECKED BY: CW

SCALE AS NOTED

STATE OF CONNECTICUT
DEPARTMENT OF TRANSPORTATION

Filename: $FILE$

SIGNATURE/BLOCK:

Stantec Consulting Services Inc.
2321 Whitney Ave.
Hamden, CT 06518

PROJECT TITLE:

REHABILITATION OF BRIDGE I-91 NB & SB OVER US 5, AMTRAK & FERRY STREET

TOWN: **NEW HAVEN**

DRAWING TITLE: **SB: FRAMING PLAN 1 OF 2**

PROJECT NO. **092-0612**

DRAWING NO. **S-53**

SHEET NO. **04.53**

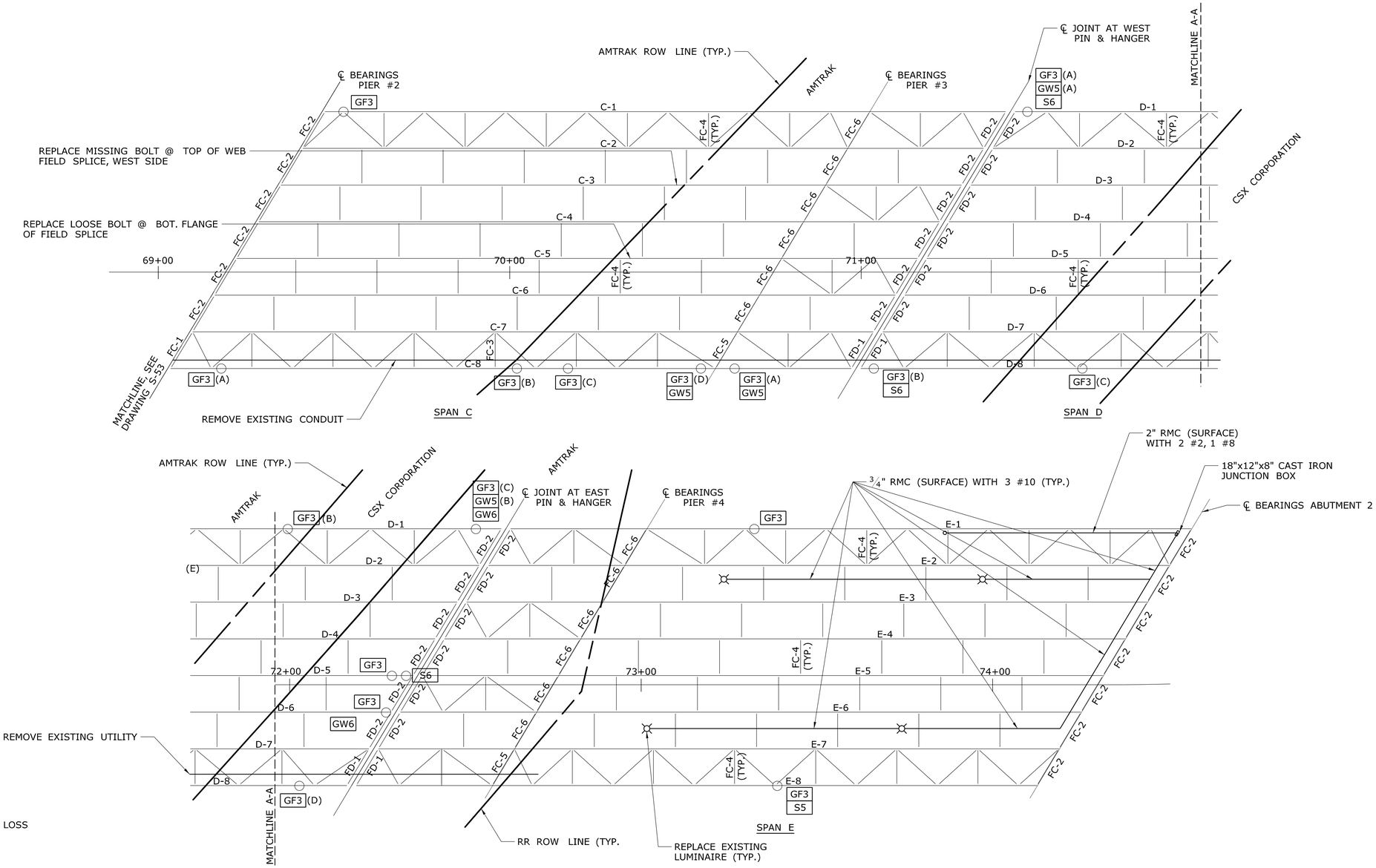

LEGEND

○ STEEL SECTION LOSS

NOTES:

1. FOR REPAIR DETAILS, SEE DRAWINGS S-56 THRU S-61.
2. BLAST CLEAN ALL STEEL SUPERSTRUCTURE MEMBERS AND FIELD PAINT. EMPLOY CLASS 1 CONTAINMENT SYSTEM FOR CLEANING AND PAINTING OPERATIONS.
3. CLEAN NOTED SPLICE PLATES AND DETERMINE SECTION LOSS, IF ANY.
4. PLUG ALL UNNECESSARY EXISTING WEEP PIPES. WEEP PIPES LOCATED AT LOW END OF EACH DECK JOINT TO REMAIN. SEE S-67 FOR WEEPHOLE DETAIL.
5. REMOVE ABANDONED TROUGHS. THIS WORK NOT MEASURED FOR PAYMENT AND SHALL BE INCLUDED IN THE PAY ITEM "STRUCTURAL STEEL."
6. TIGHTEN ALL LOOSE NUTS AND BOLTS. THIS WORK NOT MEASURED FOR PAYMENT AND SHALL BE INCLUDED IN THE PAY ITEM "STRUCTURAL STEEL."

REPAIR TYPE LEGEND

GFX	GIRDER FLANGE REPAIR
GWX	GIRDER WEB REPAIR
WX	WELD REPAIR
SX	STIFFENER REPAIR
(X)	REPAIR LOCATION FOR MULTIPLE REPAIRS AT SAME MEMBER

PLAN

SCALE : 1/16" = 1'-0"

REV.	DATE	REVISION DESCRIPTION	SHEET NO.

THE INFORMATION, INCLUDING ESTIMATED QUANTITIES OF WORK, SHOWN ON THESE SHEETS IS BASED ON LIMITED INVESTIGATIONS BY THE STATE AND IS IN NO WAY WARRANTED TO INDICATE THE CONDITIONS OF ACTUAL QUANTITIES OF WORK WHICH WILL BE REQUIRED.

Plotted: 12/23/2013

DESIGNER/DRAFTER: CY

CHECKED BY: CW

SCALE AS NOTED

STATE OF CONNECTICUT
DEPARTMENT OF TRANSPORTATION

Filename: $FILE$

SIGNATURE/BLOCK:

Stantec Consulting Services Inc.
2321 Whitney Ave.
Hamden, CT 06518

PROJECT TITLE:

REHABILITATION OF BRIDGE I-91 NB & SB OVER US 5, AMTRAK & FERRY STREET

TOWN: **NEW HAVEN**

DRAWING TITLE: **SB: FRAMING PLAN 2 OF 2**

PROJECT NO. 092-0612

DRAWING NO. S-54

SHEET NO. 04.54

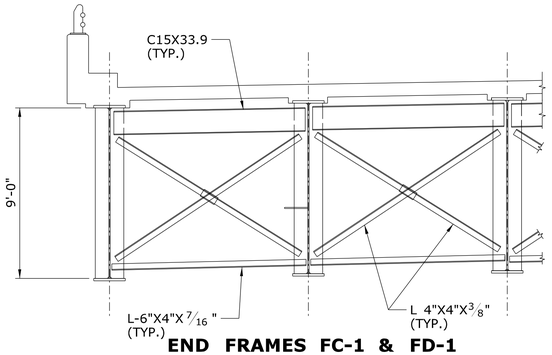

END FRAMES FC-1 & FD-1
(SPAN C&D)
SCALE : 1/4" = 1'-0"

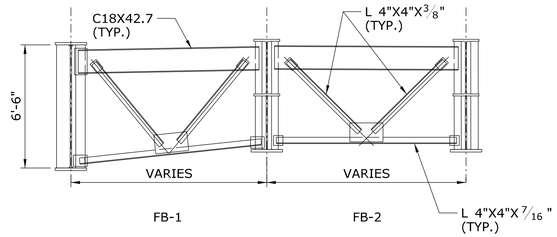

END FRAMES
(SPAN B)
SCALE : 1/4" = 1'-0"

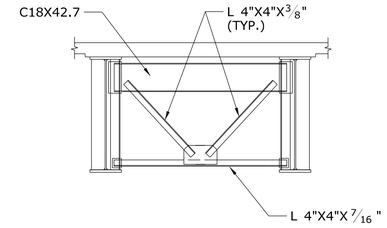

END FRAME FA-1
(SPAN F)
SCALE : 1/4" = 1'-0"

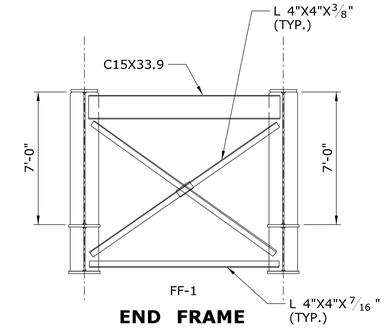

END FRAME
(SPAN F)
SCALE : 1/4" = 1'-0"

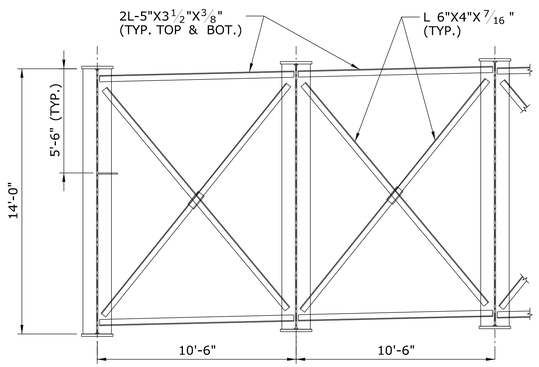

SWAY FRAMES FC-4
(SPAN C)
SCALE : 1/4" = 1'-0"

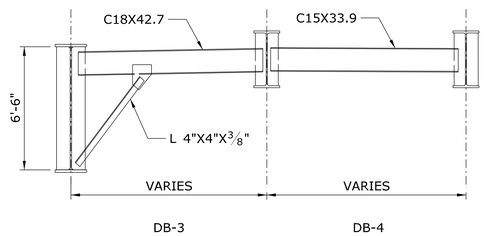

INTERMEDIATE DIAPHRAGM
(SPAN B)
SCALE : 1/4" = 1'-0"

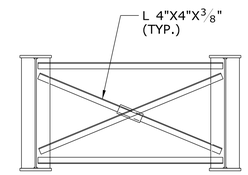

INTERMEDIATE CROSS FRAME FA-2
(SPAN A)
SCALE : 1/4" = 1'-0"

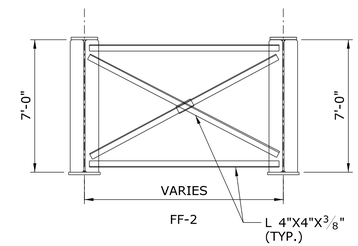

INTERMEDIATE CROSS FRAME
(SPAN F)
SCALE : 1/4" = 1'-0"

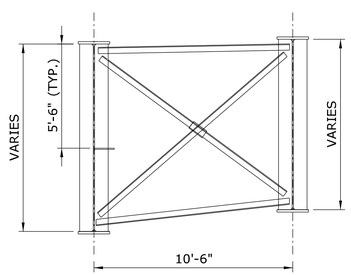

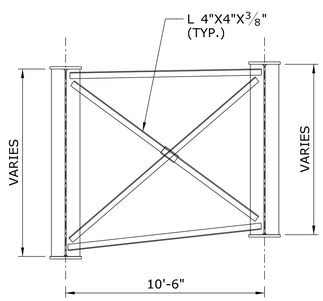

INTERMEDIATE CROSS FRAMES
(SPAN C)
SCALE : 1/4" = 1'-0"

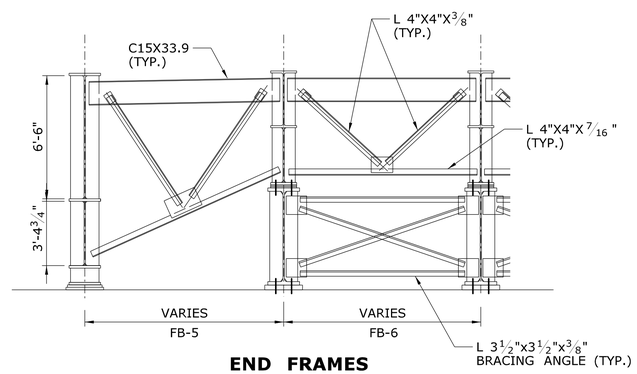

END FRAMES
(SPAN B)
SCALE : 1/4" = 1'-0"

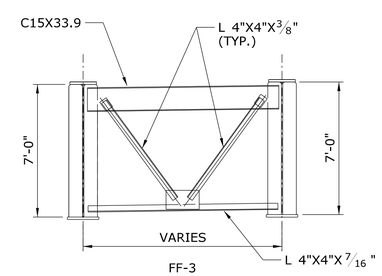

END FRAME
(SPAN F)
SCALE : 1/4" = 1'-0"

THIS SHEET PROVIDED FOR INFORMATION PURPOSES ONLY

REV.	DATE	REVISION DESCRIPTION	SHEET NO.

THE INFORMATION, INCLUDING ESTIMATED QUANTITIES OF WORK, SHOWN ON THESE SHEETS IS BASED ON LIMITED INVESTIGATIONS BY THE STATE AND IS IN NO WAY WARRANTED TO INDICATE THE CONDITIONS OF ACTUAL QUANTITIES OF WORK WHICH WILL BE REQUIRED.

Plotted: 12/23/2013

DESIGNER/DRAFTER: EW
CHECKED BY: CW
SCALE AS NOTED

STATE OF CONNECTICUT
DEPARTMENT OF TRANSPORTATION

Filename: $FILE$

SIGNATURE/BLOCK:
Stantec Consulting Services Inc.
2321 Whitney Ave.
Hamden, CT 06518

PROJECT TITLE:
REHABILITATION OF BRIDGE I-91 NB & SB OVER US 5, AMTRAK & FERRY STREET

TOWN: **NEW HAVEN**

DRAWING TITLE: **SB: SUPERSTRUCTURE DETAILS**

PROJECT NO. **092-0612**
DRAWING NO. **S-55**
SHEET NO. **04.55**

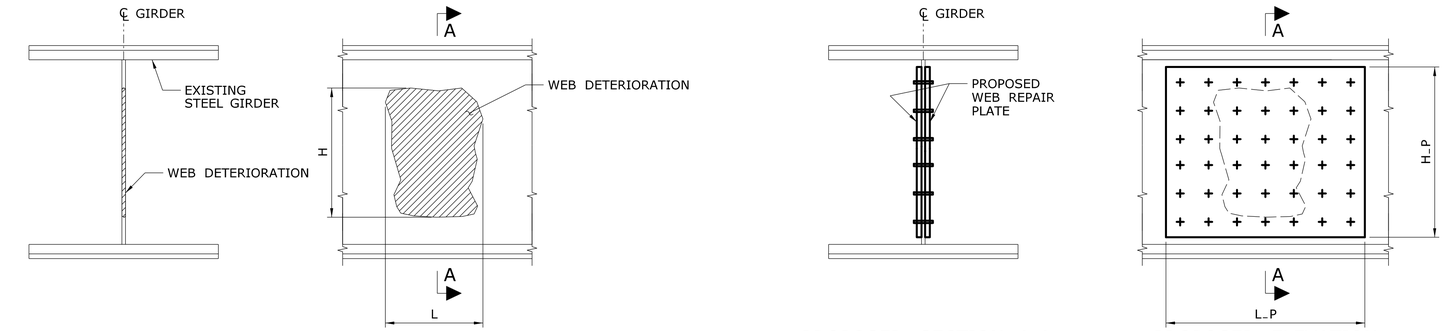

EXISTING SECTION A-A EXISTING ELEVATION PROPOSED SECTION A-A PROPOSED ELEVATION

REPAIR DETAIL - TYPE GW5

SCALE: $1\frac{1}{2}$" = 1'-0"

REPAIR TABLE - TYPE GW5					
LOCATION	'H' (IN)	'L' (IN)	'H_P' (IN)	'L_P' (IN)	PLATE THICKNESS (IN)
A-3	44	24	51	37	$\frac{3}{8}$
C-8	2	24	9	37	$\frac{5}{8}$
D-1A	$4\frac{1}{2}$	36	$11\frac{1}{2}$	43	$\frac{3}{4}$
D-1B	3	96	10	109	$\frac{3}{4}$
D-8	2	24	9	37	$\frac{5}{8}$

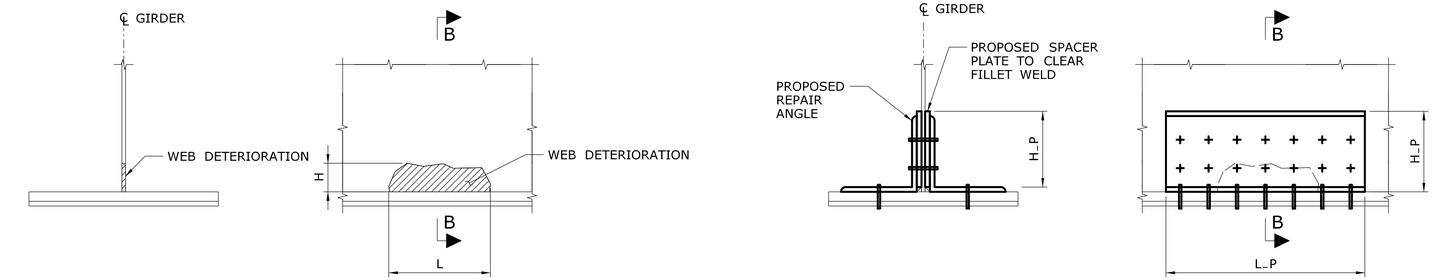

EXISTING SECTION B-B EXISTING ELEVATION PROPOSED SECTION B-B PROPOSED ELEVATION

REPAIR DETAIL - TYPE GW6

SCALE: $1\frac{1}{2}$" = 1'-0"

REPAIR TABLE - TYPE GW6						
LOCATION	'H' (IN)	'L' (IN)	REPAIR ANGLE	'H_P' (IN)	'L_P' (IN)	PLATE THICKNESS (IN)
A-1	$4\frac{1}{2}$	24	$6x6x\frac{3}{8}$	7	31	$\frac{3}{8}$
A-4	3	14	$4x4x\frac{3}{8}$	5	21	$\frac{3}{8}$
A-7	8	3	$8x8x\frac{3}{8}$	9	10	$\frac{3}{8}$
D-1	7	84	$8x8x\frac{3}{4}$	9	97	$\frac{3}{4}$
D-6	3	36	$4x4x\frac{3}{8}$	5	43	$\frac{3}{4}$

GENERAL NOTES:

1. THE CONTRACTOR SHALL EXAMINE AND VERIFY IN THE FIELD ALL EXISTING AND GIVEN CONDITIONS AND DIMENSIONS WITH THOSE SHOWN ON THE PLANS. IF THE FIELD CONDITIONS AND DIMENSIONS DIFFER FROM THOSE SHOWN ON THE PLANS, THE CONTRACTOR SHALL USE THE FIELD CONDITIONS AND DIMENSIONS, AND MAKE THE APPROPRIATE CHANGES TO THOSE SHOWN ON THE PLANS, AS APPROVED BY ENGINEER. THE RESULT OF THIS CHECK OF CONDITIONS SHALL BE NOTED ON THE DRAWINGS SUBMITTED FOR APPROVAL.
2. ALL NEW STRUCTURAL STEEL SHALL CONFROM TO ASTM A709 GRADE 36 UNLESS NOTED OTHERWISE, WITH A SPECIFIED MINIMUM YIELD STRENGTH Fy OF 36,000 psi.
3. ALL BOLTED CONNECTIONS FOR STRUCUTRAL STEEL ELEMENTS SHALL BE MADE WITH $\frac{7}{8}$" DIAMETER HIGH-STRENGTH BOLTS UNLESS OTHERWISE NOTED. ALL HIGH-STRENGTH BOLTS IN STRUCTURAL CONNECTIONS SHALL BE ASTM A325 TYPE 1, UNLESS OTHERWISE NOTED. ALL NUTS SHALL BE A563 GR. DH AND WASHERS SHALL BE F436, TYPE 1.

SUGGESTED WORK SEQUENCE FOR WEB DETERIORATION:

1. PREPARE AND CLEAN THE EXISTING STEEL SURFACE AREA WITHIN THE WORK LIMITS TO BARE METAL IN ACCORDANCE WITH SPECIAL PROVISIONS.
2. USING PROPOSED SHOP DRILLED REPAIR PLATES AND ANGLES AS A TEMPLATE, FIELD DRILL ALL $\frac{15}{16}$" DIAMETER HOLES IN THE WEB AND THE WEB FILL PLATE.
3. CONNECT THE EXISTING STRINGER WEB TO REPAIR PLATES AND ANGLES USING $\frac{7}{8}$" DIAMETER ASTM A325 (TYPE 1) HIGH STRENGTH BOLTS.
4. PAINT THE NEW AND/OR EXISTING STEEL.

REV.	DATE	REVISION DESCRIPTION	SHEET NO.

THE INFORMATION, INCLUDING ESTIMATED QUANTITIES OF WORK, SHOWN ON THESE SHEETS IS BASED ON LIMITED INVESTIGATIONS BY THE STATE AND IS IN NO WAY WARRANTED TO INDICATE THE CONDITIONS OF ACTUAL QUANTITIES OF WORK WHICH WILL BE REQUIRED.

Plotted: 12/23/2013

DESIGNER/DRAFTER: EW
CHECKED BY: CW
SCALE AS NOTED

STATE OF CONNECTICUT
DEPARTMENT OF TRANSPORTATION

Filename: $FILE$

SIGNATURE/BLOCK:

Stantec Consulting Services Inc.
2321 Whitney Ave.
Hamden, CT 06518

PROJECT TITLE:
REHABILITATION OF BRIDGE I-91 NB & SB OVER US 5, AMTRAK & FERRY STREET

TOWN: **NEW HAVEN**

DRAWING TITLE: **SB: REPAIR DETAILS BUILT UP GIRDERS - 1**

PROJECT NO. **092-0612**
DRAWING NO. **S-56**
SHEET NO. **04.56**

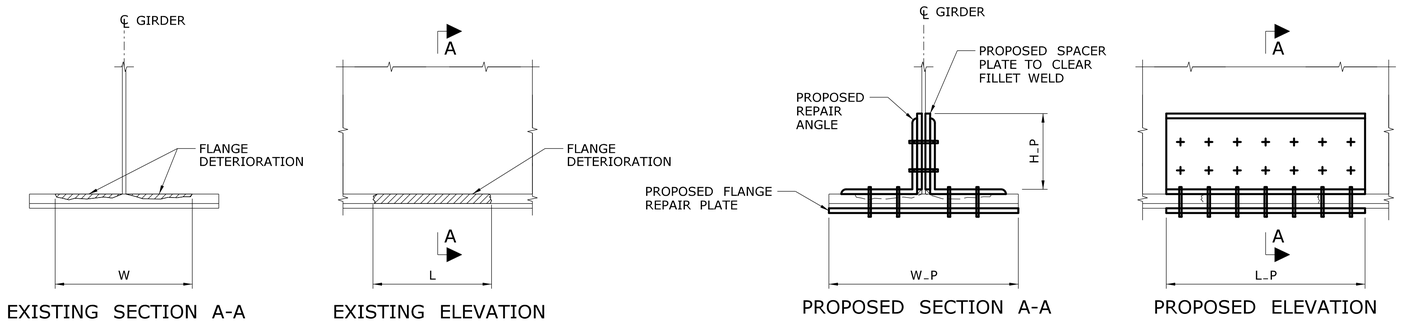

REPAIR DETAIL - TYPE GF3

SCALE: $1\frac{1}{2}$" = 1'-0"

GENERAL NOTES:

1. REFER TO GENERAL NOTES ON DRAWING S-56.

REPAIR TABLE - TYPE GF3

LOCATION	'W' (IN)	'L' (IN)	REPAIR ANGLE	'H_P' (IN)	'W_P' (IN)	'L_P' (IN)	PLATE THICKNESS (IN)
A-3	15	36	8x8x1	9	20	49	$1\frac{1}{2}$
A-9	15	24	8x8x1	9	20	37	2
B-8	16	24	8x8x1	9	16	37	$1\frac{3}{4}$
C-1	10	24	8x8x1	9	20	37	1
C-8A	7	6	6x6x1	7	20	19	1
C-8B	15	204	8x8x1	9	20	217	$1\frac{3}{4}$
C-8C	12	36	8x8x1	9	20	49	$1\frac{3}{4}$
C-8D	8	24	6x6x1	7	20	37	$1\frac{3}{4}$
D-1A	6	30	6x6x1	7	20	43	$1\frac{3}{4}$
D-1B	3	4	6x6x1	7	20	17	2
D-1C	15	24	8x8x1	9	20	37	1
D-5	10	102	8x8x1	9	20	115	1
D-6	10	96	8x8x1	9	20	109	1
D-8A	8	24	6x6x1	7	20	37	$1\frac{3}{4}$
D-8B	6	24	6x6x1	7	20	37	1
D-8C	3	4	6x6x1	7	20	17	2
D-8D	10	102	8x8x1	9	20	115	$1\frac{3}{4}$
E-1	6	5	6x6x1	7	20	18	$1\frac{3}{4}$
E-8	20	1860	8x8x1	9	20	1873	2

EXISTING SECTION A-A EXISTING ELEVATION PROPOSED SECTION A-A PROPOSED ELEVATION

REPAIR DETAIL - TYPE GW7

SCALE: 1½" = 1'-0"

REPAIR TABLE - TYPE GW7		
LOCATION	'H' (IN)	'L' (IN)
-	-	-

GENERAL NOTES:

1. REFER TO GENERAL NOTES ON DRAWING S-56.
2. THE DETAILS ON THIS SHEET ARE PROVIDED FOR REFERENCE AND SHALL BE USED SHOULD ANY ROLLED BEAM DETERIORATION BE IDENTIFIED AFTER BLAST CLEANING OPERATIONS ARE COMPLETED. THE ENGINEER SHALL DETERMINE THE NEED FOR THESE REPAIRS AND DIMENSIONS OF REPAIR PIECES.

SUGGESTED WORK SEQUENCE FOR WEB DETERIORATION:

1. PREPARE AND CLEAN THE EXISTING STEEL SURFACE AREA WITHIN THE WORK LIMITS TO BARE METAL IN ACCORDANCE WITH SPECIAL PROVISIONS.
2. USING PROPOSED SHOP DRILLED REPAIR PLATES AND ANGLES AS A TEMPLATE, FIELD DRILL ALL 15/16" DIAMETER HOLES IN THE WEB AND THE WEB FILL PLATE.
3. CONNECT THE EXISTING STRINGER WEB TO REPAIR PLATES AND ANGLES USING 7/8" DIAMETER ASTM A325 (TYPE 1) HIGH STRENGTH BOLTS.
4. PAINT THE NEW AND/OR EXISTING STEEL.

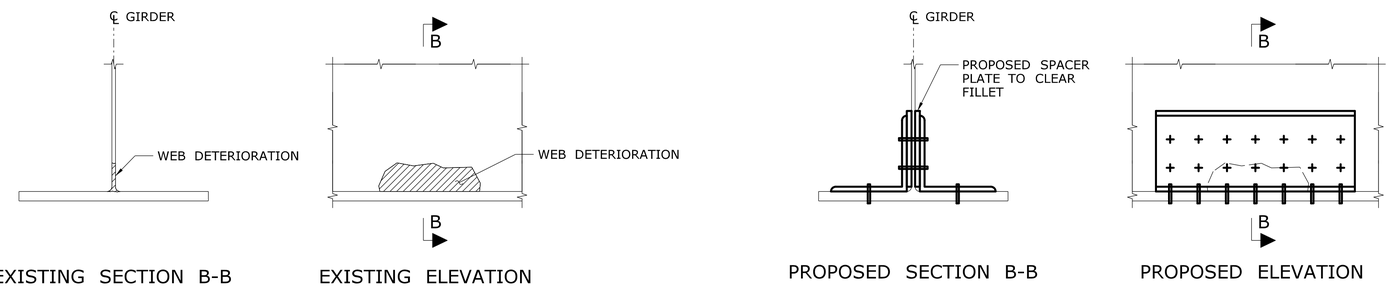

EXISTING SECTION B-B EXISTING ELEVATION PROPOSED SECTION B-B PROPOSED ELEVATION

REPAIR DETAIL - TYPE GW8

SCALE: 1½" = 1'-0"

REPAIR TABLE - TYPE GW8		
LOCATION	'H' (IN)	'L' (IN)
-	-	-

REV.	DATE	REVISION DESCRIPTION	SHEET NO.

THE INFORMATION, INCLUDING ESTIMATED QUANTITIES OF WORK, SHOWN ON THESE SHEETS IS BASED ON LIMITED INVESTIGATIONS BY THE STATE AND IS IN NO WAY WARRANTED TO INDICATE THE CONDITIONS OF ACTUAL QUANTITIES OF WORK WHICH WILL BE REQUIRED.

Plotted: 12/23/2013

DESIGNER/DRAFTER: EW
CHECKED BY: CW
SCALE AS NOTED

STATE OF CONNECTICUT
DEPARTMENT OF TRANSPORTATION

Filename: $FILE$

SIGNATURE/BLOCK:
Stantec Consulting Services Inc.
2321 Whitney Ave.
Hamden, CT 06518

PROJECT TITLE:
REHABILITATION OF BRIDGE I-91 NB & SB OVER US 5, AMTRAK & FERRY STREET

TOWN: NEW HAVEN

DRAWING TITLE:
SB: REPAIR DETAILS ROLLED GIRDERS - 1

PROJECT NO. 092-0612
DRAWING NO. S-58
SHEET NO. 04.58

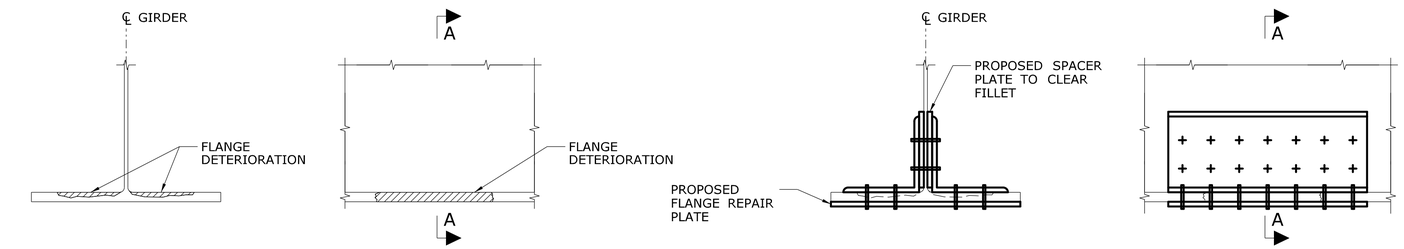

REPAIR DETAIL - TYPE GF4

SCALE: $1\frac{1}{2}$" = 1'-0"

REPAIR TABLE - TYPE GF4		
LOCATION	'W' (IN)	'L' (IN)
-	-	-

GENERAL NOTES:

1. REFER TO GENERAL NOTES ON DRAWING S-56.
2. THE DETAILS ON THIS SHEET ARE PROVIDED FOR REFERENCE AND SHALL BE USED SHOULD ANY ROLLED BEAM DETERIORATION BE IDENTIFIED AFTER BLAST CLEANING OPERATIONS ARE COMPLETED. THE ENGINEER SHALL DETERMINE THE NEED FOR THESE REPAIRS AND DIMENSIONS OF REPAIR PIECES.

REV.	DATE	REVISION DESCRIPTION	SHEET NO.

THE INFORMATION, INCLUDING ESTIMATED QUANTITIES OF WORK, SHOWN ON THESE SHEETS IS BASED ON LIMITED INVESTIGATIONS BY THE STATE AND IS IN NO WAY WARRANTED TO INDICATE THE CONDITIONS OF ACTUAL QUANTITIES OF WORK WHICH WILL BE REQUIRED.

Plotted: 12/23/2013

DESIGNER/DRAFTER: EW

CHECKED BY: CW

SCALE AS NOTED

STATE OF CONNECTICUT
DEPARTMENT OF TRANSPORTATION

Filename: $FILE$

SIGNATURE/ BLOCK:

Stantec Consulting Services Inc.
2321 Whitney Ave.
Hamden, CT 06518

PROJECT TITLE:

REHABILITATION OF BRIDGE I-91 NB & SB OVER US 5, AMTRAK & FERRY STREET

TOWN: **NEW HAVEN**

DRAWING TITLE: **SB: REPAIR DETAILS ROLLED GIRDERS - 2**

PROJECT NO. **092-0612**

DRAWING NO. **S-59**

SHEET NO. **04.59**

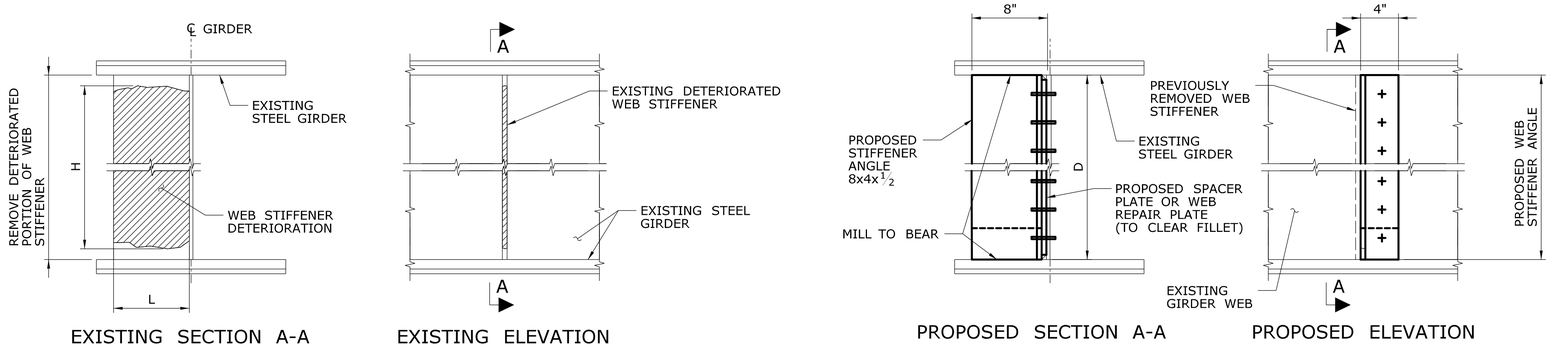

EXISTING SECTION A-A

EXISTING ELEVATION

PROPOSED SECTION A-A

PROPOSED ELEVATION

REPAIR DETAIL - TYPE S5

SCALE: 1½" = 1'-0"

REPAIR TABLE - TYPE S5				
LOCATION	'H' (IN)	'L' (IN)	APPROX. REPAIR ANGLE HEIGHT 'D' (IN)	PROPOSED STIFFENER ANGLE
B-1	3	7	58	7x4x1/2
E-8	6	5	90	8x4x1/2

GENERAL NOTES:

1. CARE SHALL BE TAKEN WHEN CUTTING THE EXISTING CONNECTION PLATE SO THE EXISTING GIRDER WEB IS NOT DAMAGED.
2. PROPOSED STIFFENER ANGLES SHALL BE SIZED TO MATCH THE EXISTING STIFFENERS BOTH IN THICKNESS AND WIDTH.
3. AT LOCATIONS WERE DIAPHRAGMS OR CROSS-FRAMES COINCIDE WITH STIFFENER REPAIRS, THE DIAPHRAGM OR CROSS-FRAME SHALL BE DISCONNECTED AT THE REPAIR END OF THE MEMBER. THE CONTRACTOR SHALL PROVIDE ADEQUATE SUPPORT WHILE THE DIAPHRAGM IS PARTIALLY DISCONNECTED. HOLES SHALL BE DRILLED AS REQUIRED TO FACILITATE RECONNECTION TO THE EXISTING DIAPHRAGM. OMIT NEW SPLICE BOLTS THAT CONFLICT WITH THE DIAPHRAGM INSTALLATION.
4. REFER TO GENERAL NOTES ON DRAWING S-56.

SUGGESTED WORK SEQUENCE:

1. CUT AND REMOVE PORTION OF STIFFENER AS SHOWN. IF 50% OR MORE OF THE STIFFENER MUST BE REMOVED, CUT AND REMOVE THE ENTIRE SIFFENER AND REPLACE IT WITH A NEW ANGLE. IF LESS THAN 50% OF THE STIFFENER MUST BE REMOVED, CUT THE STIFFENER AND BOLT THE PROPOSED ANGLE TO THE REMAINING PORTION OF THE PARTIAL STIFFENER IN ADDITION TO THE EXISTING GIRDER WEB. STIFFENERS SHALL BE CUT BACK 1" CLEAR OF ALL DETERIORATION.
2. GRIND SMOOTH, PREPARE, AND CLEAN ALL SURFACES AND EXISTING WELDS BEFORE CONNECTING PROPOSED STIFFENER ANGLES.
3. USING SHOP DRILLED REPAIR PLATES AS A TEMPLATE, FIELD DRILL 15/16" DIAMETER HOLES IN THE WEB AND PARTIAL STIFFENERS.
4. CONNECT THE EXISTING GIRDER WEB TO THE REPAIR STIFFENER ANGLES USING 7/8" DIAMETER ASTM A325 (TYPE 1) HIGH STRENGTH BOLTS.
5. PAINT THE NEW AND/OR EXISTING STEEL.

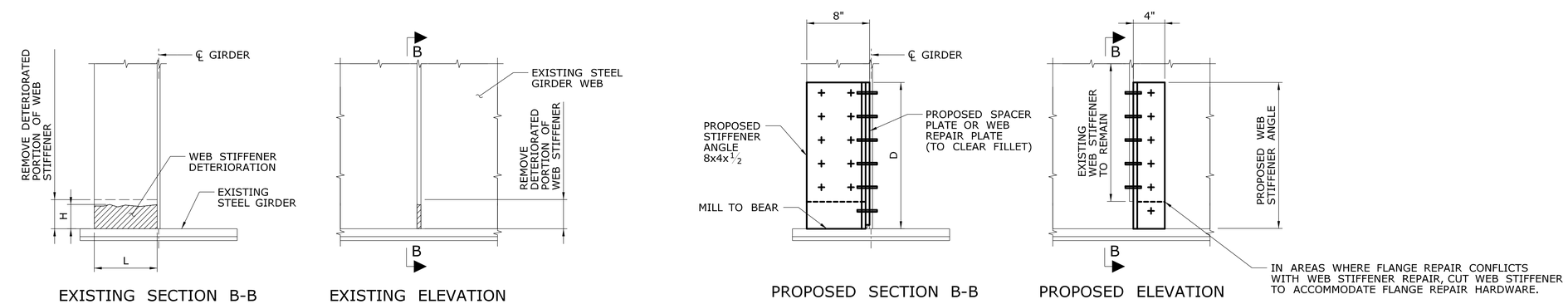

EXISTING SECTION B-B

EXISTING ELEVATION

PROPOSED SECTION B-B

PROPOSED ELEVATION

REPAIR DETAIL - TYPE S6

SCALE: 1½" = 1'-0"

REPAIR TABLE - TYPE S6				
LOCATION	'H' (IN)	'L' (IN)	APPROX. REPAIR ANGLE HEIGHT 'D' (IN)	PROPOSED STIFFENER ANGLE
A-3	8	8	25	8x4x1/2
A-6	5	6	22	8x4x1/2
A-9	8	6	25	8x4x1/2
B-1	2	2	19	7x4x1/2
D-1	3	8	20	8x4x1/2
D-5	6	8	23	8x4x1/2
D-8	3	6	20	8x4x1/2

REV.	DATE	REVISION DESCRIPTION	SHEET NO.

THE INFORMATION, INCLUDING ESTIMATED QUANTITIES OF WORK, SHOWN ON THESE SHEETS IS BASED ON LIMITED INVESTIGATIONS BY THE STATE AND IS IN NO WAY WARRANTED TO INDICATE THE CONDITIONS OF ACTUAL QUANTITIES OF WORK WHICH WILL BE REQUIRED.

Plotted: 12/23/2013

DESIGNER/DRAFTER: EW

CHECKED BY: CW

SCALE AS NOTED

STATE OF CONNECTICUT
DEPARTMENT OF TRANSPORTATION

Filename: $FILE$

SIGNATURE/BLOCK:

Stantec Consulting Services Inc.
2321 Whitney Ave.
Hamden, CT 06518

PROJECT TITLE:
REHABILITATION OF BRIDGE I-91 NB & SB OVER US 5, AMTRAK & FERRY STREET

TOWN: **NEW HAVEN**

DRAWING TITLE:
SB: REPAIR DETAILS WEB STIFFENERS - 1

PROJECT NO. 092-0612

DRAWING NO. S-60

SHEET NO. 04.60

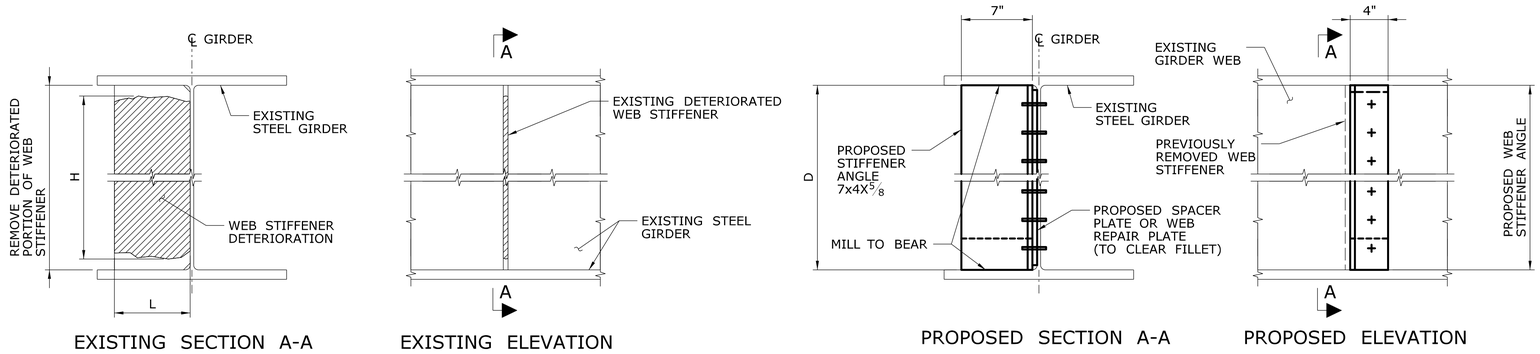

REPAIR DETAIL - TYPE S7

SCALE: 1½" = 1'-0"

REPAIR TABLE - TYPE S7			
LOCATION	'H' (IN)	'L' (IN)	APPROX. REPAIR ANGLE HEIGHT 'D' (IN)
B-3	3	7	34
B-4	25	7	34

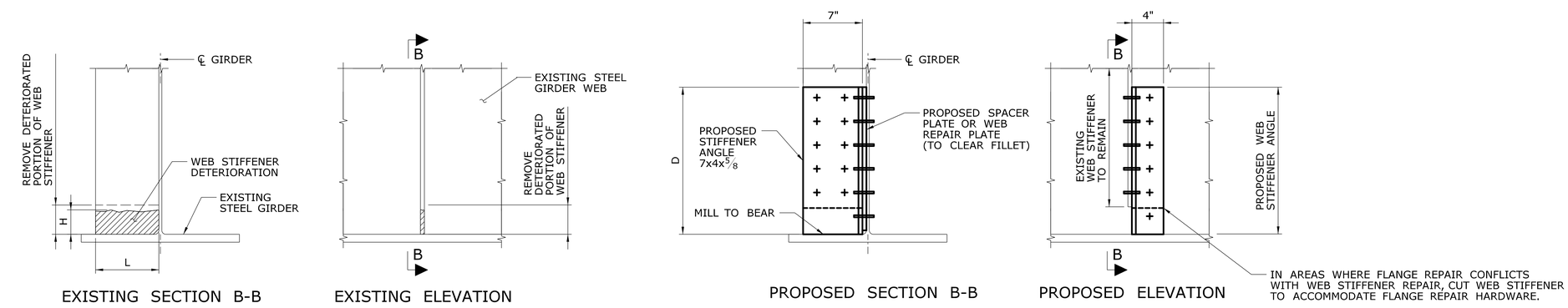

REPAIR DETAIL - TYPE S8

SCALE: 1½" = 1'-0"

REPAIR TABLE - TYPE S8			
LOCATION	'H' (IN)	'L' (IN)	APPROX. REPAIR ANGLE HEIGHT 'D' (IN)
B-4	1	1	18

GENERAL NOTES:

1. REFER TO GENERAL NOTES ON DRAWING S-56.
2. REFER TO GENERAL NOTES ON DRAWING S-60.

SUGGESTED WORK SEQUENCE:

1. REFER TO SUGGEST WORK SEQUENCE ON DRAWING S-60.

REV.	DATE	REVISION DESCRIPTION	SHEET NO.

THE INFORMATION, INCLUDING ESTIMATED QUANTITIES OF WORK, SHOWN ON THESE SHEETS IS BASED ON LIMITED INVESTIGATIONS BY THE STATE AND IS IN NO WAY WARRANTED TO INDICATE THE CONDITIONS OF ACTUAL QUANTITIES OF WORK WHICH WILL BE REQUIRED.

Plotted: 12/23/2013

DESIGNER/DRAFTER: EW
CHECKED BY: CW
SCALE AS NOTED

STATE OF CONNECTICUT
DEPARTMENT OF TRANSPORTATION

Filename: $FILE$

SIGNATURE/BLOCK:
Stantec Consulting Services Inc.
2321 Whitney Ave.
Hamden, CT 06518

PROJECT TITLE:
REHABILITATION OF BRIDGE I-91 NB & SB OVER US 5, AMTRAK & FERRY STREET

TOWN: NEW HAVEN

DRAWING TITLE:
SB: REPAIR DETAILS WEB STIFFENERS - 2

PROJECT NO. 092-0612
DRAWING NO. S-61
SHEET NO. 04.61

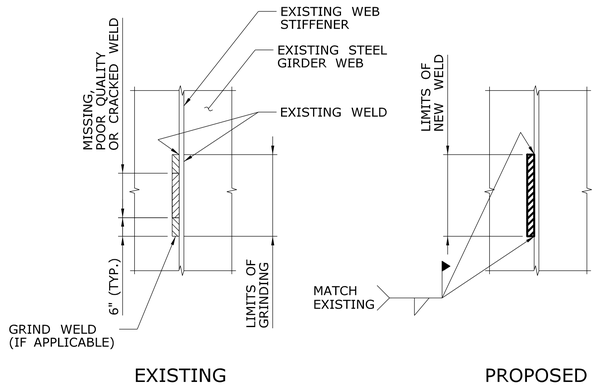

REPAIR DETAIL - TYPE W2

SCALE: $1\frac{1}{2}$" = 1'-0"

REPAIR TABLE - TYPE W2			
LOCATION	'L' (IN)	TYPE	LIMIT OF NEW WELD (IN)
B-4	34	MISSING	34

GENERAL NOTE:

1. REFER TO GENERAL NOTE 1 ON DRAWING S-56.
2. FOR LOCATION B-4, WELD IS MISSING FOR FULL LENGTH OF WEB STIFFENER TO GIRDER WEB CONNECTION. PROVIDE NEW WELD FOR FULL LENGTH OF CONNECTION.

REV.	DATE	REVISION DESCRIPTION	SHEET NO.

THE INFORMATION, INCLUDING ESTIMATED QUANTITIES OF WORK, SHOWN ON THESE SHEETS IS BASED ON LIMITED INVESTIGATIONS BY THE STATE AND IS IN NO WAY WARRANTED TO INDICATE THE CONDITIONS OF ACTUAL QUANTITIES OF WORK WHICH WILL BE REQUIRED.

Plotted: 12/23/2013

DESIGNER/DRAFTER: EW

CHECKED BY: CW

SCALE AS NOTED

STATE OF CONNECTICUT
DEPARTMENT OF TRANSPORTATION

Filename: $FILE$

SIGNATURE/ BLOCK:

Stantec Consulting Services Inc.
2321 Whitney Ave.
Hamden, CT 06518

PROJECT TITLE:
REHABILITATION OF BRIDGE I-91 NB & SB OVER US 5, AMTRAK & FERRY STREET

TOWN: NEW HAVEN

DRAWING TITLE: SB: REPAIR DETAILS WELDS

PROJECT NO. 092-0612

DRAWING NO. S-62

SHEET NO. 04.62

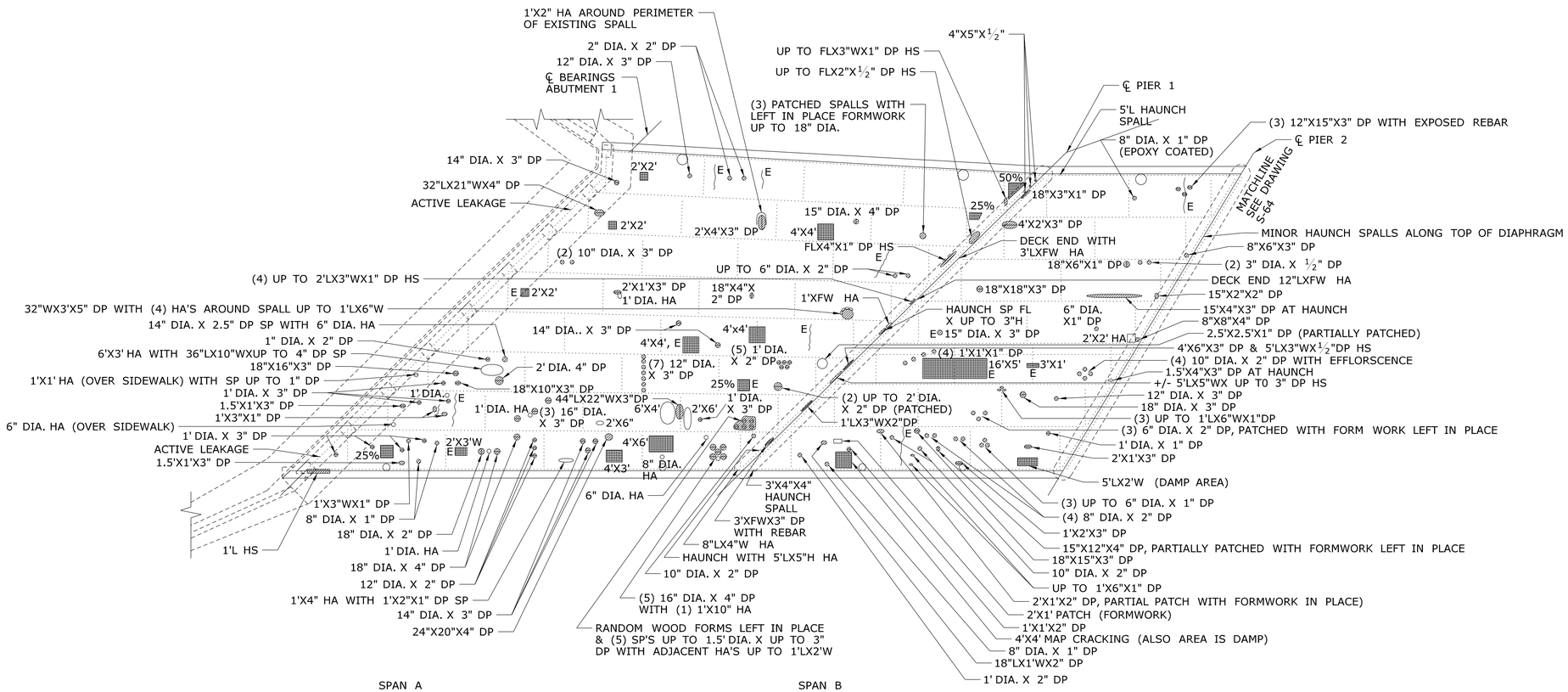

UNDERDECK PLAN (SPANS A AND B) (REFLECTED)

SCALE: 1/16"=1'-0"

LEGEND

CRACK	SHORT WEEP HOLE PIPE	FW = FULL WIDTH	FL = FULL LENGTH
E EFFLORESCENCE	SPALL AREA	DP = DEEP	L = LENGTH
HOLLOW AREA	SPALL AREA WITH EXPOSED REBAR	HA = HOLLOW AREA	W = WIDTH
MAP CRACKING	WEEP HOLE PIPE	HS = HOLLOW SOUNDING	TF = TIMBER FORM

NOTES:

1. ALL DETERIORATED CONCRETE AT THE UNDERSIDE OF DECK SHALL BE REPAIRED WITH "SURFACE PATCH." SEE DETAIL ON S-67.
2. PLUG ALL UNNECESSARY EXISTING WEEP PIPES. WEEP PIPES LOCATED AT LOW END OF EACH DECK JOINT TO REMAIN. SEE S-67 FOR WEEPHOLE DETAIL.
3. CLEAN ALL SCUPPERS AND DRAINAGE PIPES.
4. SEE GENERAL PLAN FOR AMTRAK RIGHT-OF-WAY LINES.

REV.	DATE	REVISION DESCRIPTION	SHEET NO.

THE INFORMATION, INCLUDING ESTIMATED QUANTITIES OF WORK, SHOWN ON THESE SHEETS IS BASED ON LIMITED INVESTIGATIONS BY THE STATE AND IS IN NO WAY WARRANTED TO INDICATE THE CONDITIONS OF ACTUAL QUANTITIES OF WORK WHICH WILL BE REQUIRED.

Plotted: 12/23/2013

DESIGNER/DRAFTER: CY
CHECKED BY: CW
SCALE AS NOTED

STATE OF CONNECTICUT
DEPARTMENT OF TRANSPORTATION

Filename: $FILE$

SIGNATURE/BLOCK:

Stantec Consulting Services Inc.
2321 Whitney Ave.
Hamden, CT 06518

PROJECT TITLE:
REHABILITATION OF BRIDGE I-91 NB & SB OVER US 5, AMTRAK & FERRY STREET

TOWN: **NEW HAVEN**

DRAWING TITLE: **SB: REFLECTED DECK PLAN 1 OF 2**

PROJECT NO. **092-0612**
DRAWING NO. **S-63**
SHEET NO. **04.63**

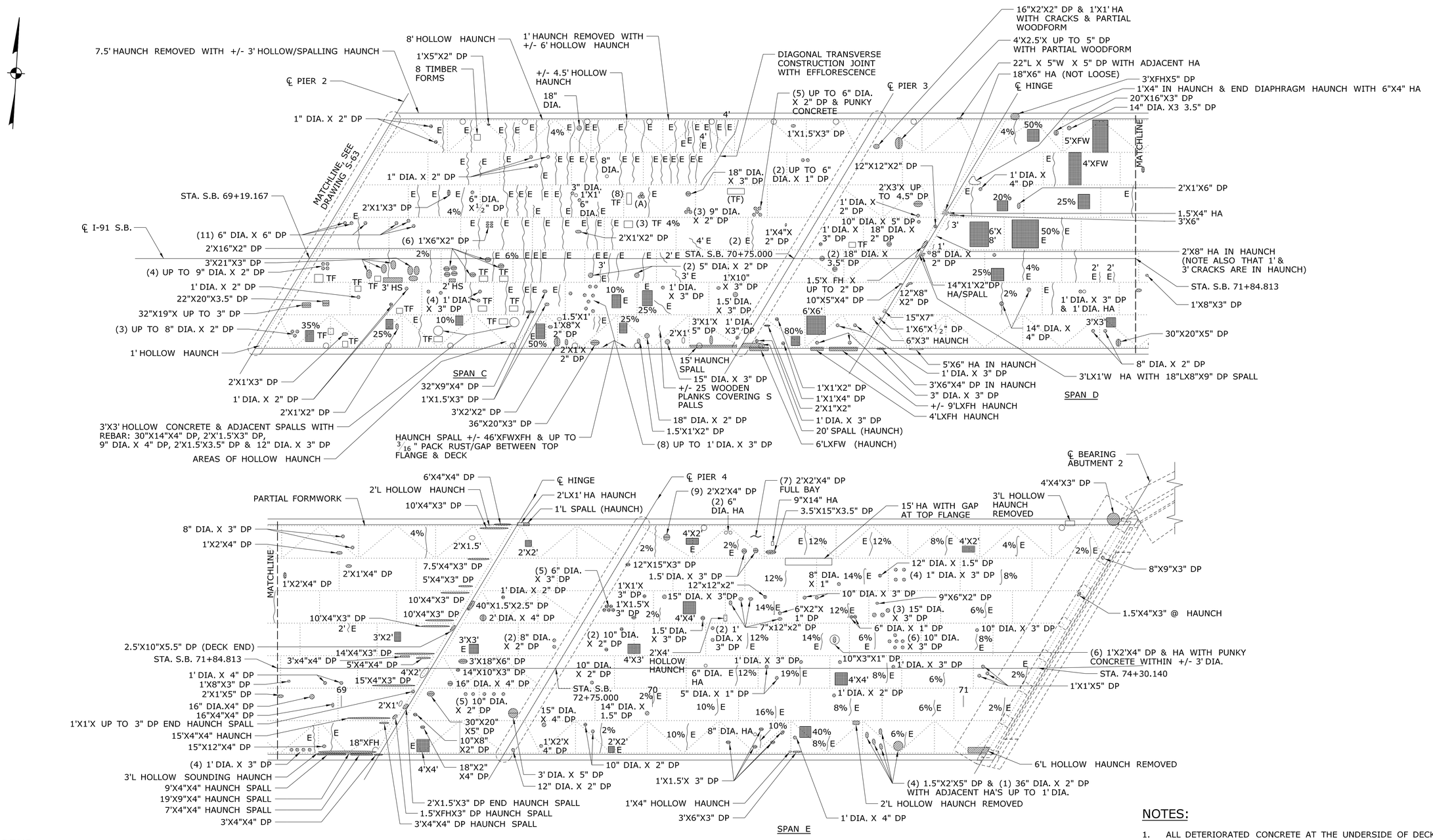

LEGEND

CRACK	SHORT WEEP HOLE PIPE	FW = FULL WIDTH	L = LENGTH
E EFFLORESCENCE	SPALL AREA	DP = DEEP	W = WIDTH
HOLLOW AREA	SPALL AREA WITH EXPOSED REBAR	HA = HOLLOW AREA	TF = TIMBER FORM
MAP CRACKING	WEEP HOLE PIPE	HS = HOLLOW SOUNDING	(A) = (2) 12" DIA. X 2" DP & (1) 8" DIA. BY 2" DP SPALL

UNDERDECK PLAN (SPANS C, D AND E) (REFLECTED)

SCALE: 1/16"=1'-0"

NOTES:

1. ALL DETERIORATED CONCRETE AT THE UNDERSIDE OF DECK SHALL BE REPAIRED WITH "SURFACE PATCH." SEE DETAIL ON S-67.
2. PLUG ALL UNNECESSARY EXISTING WEEP PIPES. WEEP PIPES LOCATED AT LOW END OF EACH DECK JOINT TO REMAIN. SEE S-67 FOR WEEPHOLE DETAIL.
3. CLEAN ALL SCUPPERS AND DRAINAGE PIPES.
4. SEE GENERAL PLAN FOR AMTRAK RIGHT-OF-WAY LINES.

REV.	DATE	REVISION DESCRIPTION	SHEET NO.

THE INFORMATION, INCLUDING ESTIMATED QUANTITIES OF WORK, SHOWN ON THESE SHEETS IS BASED ON LIMITED INVESTIGATIONS BY THE STATE AND IS IN NO WAY WARRANTED TO INDICATE THE CONDITIONS OF ACTUAL QUANTITIES OF WORK WHICH WILL BE REQUIRED.

Plotted: 12/23/2013

DESIGNER/DRAFTER: CY
CHECKED BY: CW
SCALE AS NOTED

STATE OF CONNECTICUT
DEPARTMENT OF TRANSPORTATION

Filename: $FILE$

SIGNATURE/BLOCK:

Stantec Consulting Services Inc.
2321 Whitney Ave.
Hamden, CT 06518

PROJECT TITLE:
REHABILITATION OF BRIDGE I-91 NB & SB OVER US 5, AMTRAK & FERRY STREET

TOWN: **NEW HAVEN**

DRAWING TITLE: **SB: REFLECTED DECK PLAN 2 OF 2**

PROJECT NO. **092-0612**
DRAWING NO. **S-64**
SHEET NO. **04.64**

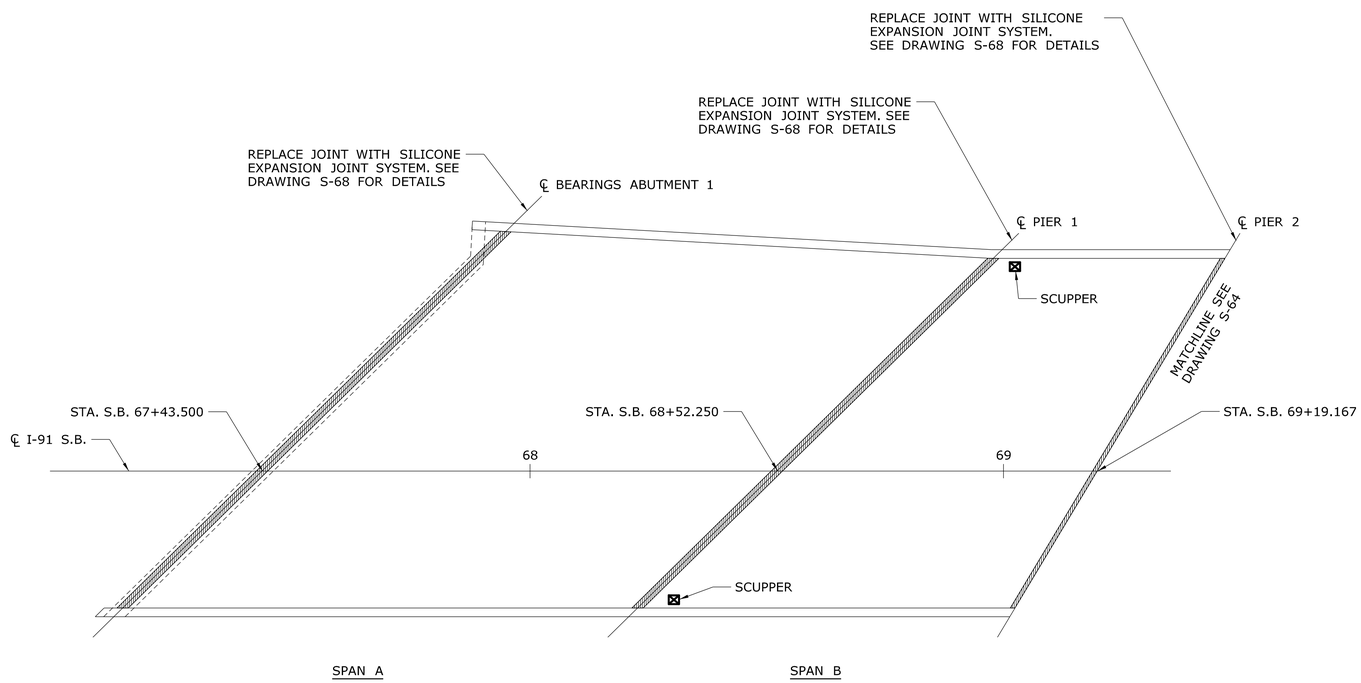

DECK PLAN (SPANS A AND B)

SCALE: $^{1}/_{16}$"=1'-0"

NOTES:

1. REMOVE OVERLAY AND WATERPROOF MEMBRANE SYSTEM, REPLACE WITH NEW WEARING SURFACE AND MEMBRANE WATERPROOFING.
2. REPAIR AREAS OF DETERIORATED CONCRETE DECK ENCOUNTERED AFTER MILLING OPERATIONS HAVE BEEN COMPLETED PRIOR TO RESURFACING.
3. CLEAN ALL SCUPPERS AND DRAINAGE PIPES.

REV.	DATE	REVISION DESCRIPTION	SHEET NO.

THE INFORMATION, INCLUDING ESTIMATED QUANTITIES OF WORK, SHOWN ON THESE SHEETS IS BASED ON LIMITED INVESTIGATIONS BY THE STATE AND IS IN NO WAY WARRANTED TO INDICATE THE CONDITIONS OF ACTUAL QUANTITIES OF WORK WHICH WILL BE REQUIRED.

Plotted: 12/23/2013

DESIGNER/DRAFTER: CY

CHECKED BY: CW

SCALE AS NOTED

STATE OF CONNECTICUT
DEPARTMENT OF TRANSPORTATION

Filename: $FILE$

SIGNATURE/BLOCK:

Stantec Consulting Services Inc.
2321 Whitney Ave.
Hamden, CT 06518

PROJECT TITLE:

REHABILITATION OF BRIDGE I-91 NB & SB OVER US 5, AMTRAK & FERRY STREET

TOWN: **NEW HAVEN**

DRAWING TITLE: **SB: DECK PLAN 1 OF 2**

PROJECT NO. **092-0612**

DRAWING NO. **S-65**

SHEET NO. **04.65**

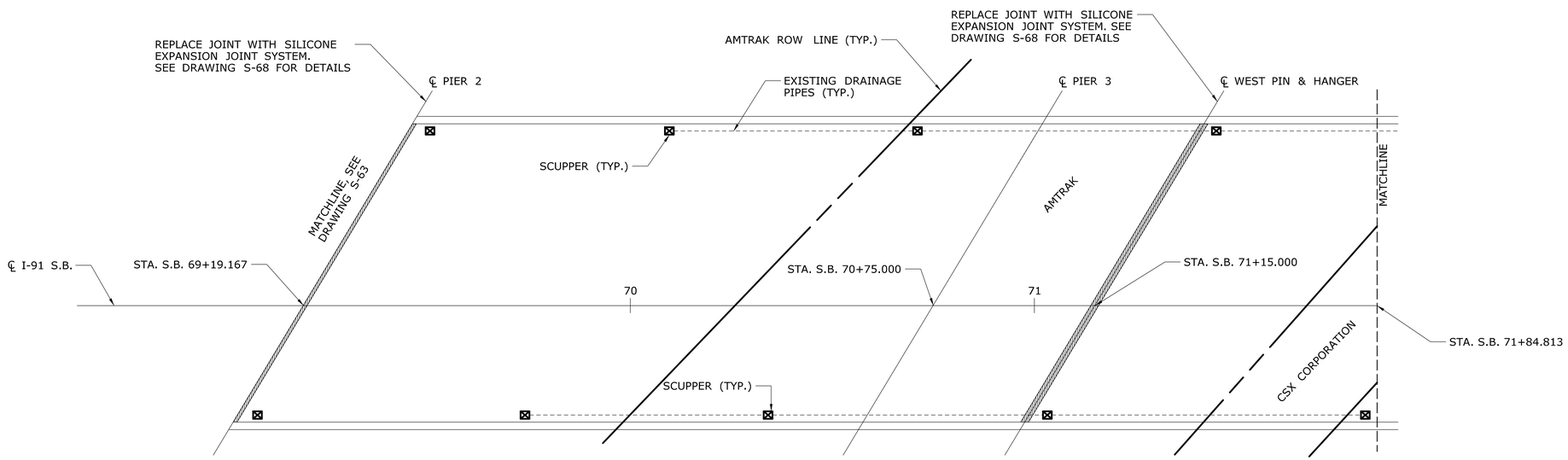

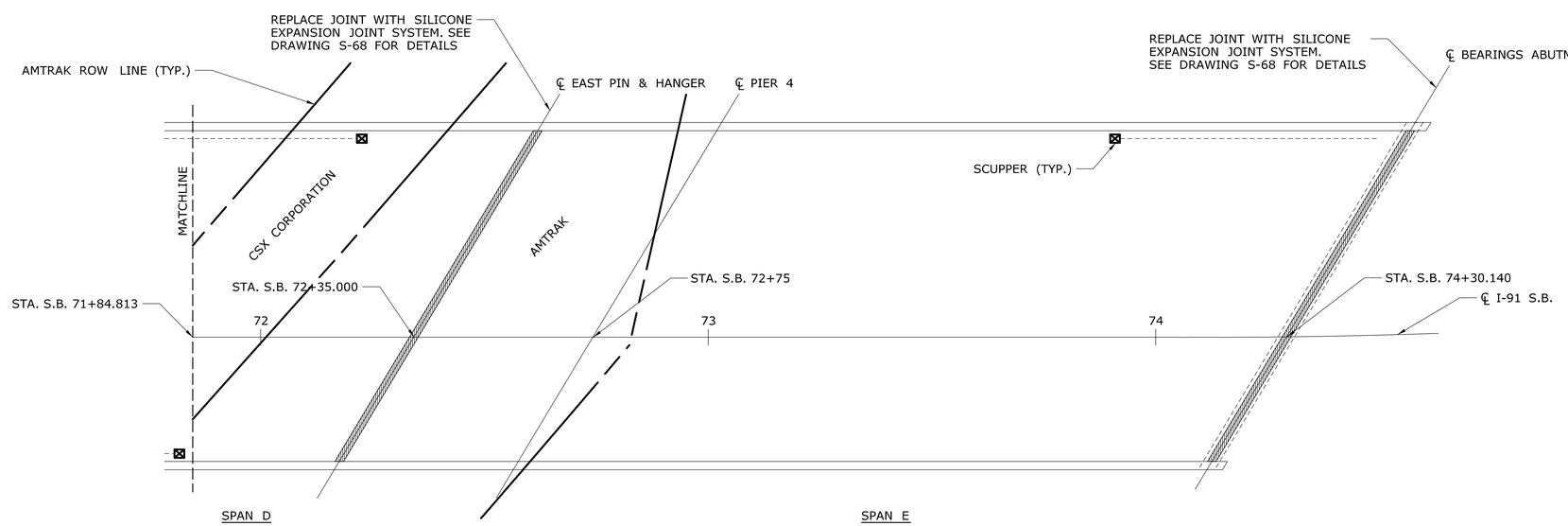

DECK PLAN (SPANS C, D AND E)

SCALE: $^{1}/_{16}$"=1'-0"

NOTES:

1. REMOVE OVERLAY AND WATERPROOF MEMBRANE SYSTEM, REPLACE WITH NEW WEARING SURFACE AND MEMBRANE WATERPROOFING.
2. REPAIR AREAS OF DETERIORATED CONCRETE DECK ENCOUNTERED AFTER MILLING OPERATIONS HAVE BEEN COMPLETED PRIOR TO RESURFACING.
3. CLEAN ALL SCUPPERS AND DRAIN PIPES.

REV.	DATE	REVISION DESCRIPTION	SHEET NO.

THE INFORMATION, INCLUDING ESTIMATED QUANTITIES OF WORK, SHOWN ON THESE SHEETS IS BASED ON LIMITED INVESTIGATIONS BY THE STATE AND IS IN NO WAY WARRANTED TO INDICATE THE CONDITIONS OF ACTUAL QUANTITIES OF WORK WHICH WILL BE REQUIRED.

Plotted: 12/23/2013

DESIGNER/DRAFTER: CY

CHECKED BY: CW

SCALE AS NOTED

STATE OF CONNECTICUT
DEPARTMENT OF TRANSPORTATION

Filename: $FILE$

SIGNATURE/BLOCK:

Stantec Consulting Services Inc.
2321 Whitney Ave.
Hamden, CT 06518

PROJECT TITLE:
REHABILITATION OF BRIDGE I-91 NB & SB OVER US 5, AMTRAK & FERRY STREET

TOWN: **NEW HAVEN**

DRAWING TITLE: **SB: DECK PLAN 2 OF 2**

PROJECT NO. **092-0612**

DRAWING NO. **S-66**

SHEET NO. **04.66**

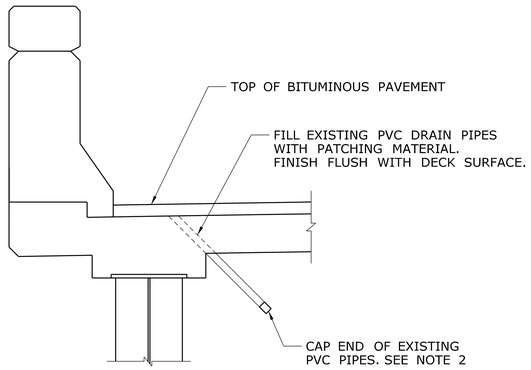

PLUG WEEPHOLE DETAIL

NOT TO SCALE

WEEPHOLE NOTES:

1. FOR APPROXIMATE LOCATIONS OF THE WEEP PIPES, SEE REFLECTED DECK PLAN DRAWINGS.
2. ALL UNNECESSARY WEEP PIPES WILL BE PLUGGED WITH PATCHING MATERIAL AND SHALL BE PAID FOR UNDER THE ITEM "PARTIAL DEPTH PATCH." END CAPS SHALL CONFORM TO THE REQUIREMENTS OF ASTM D2467. SOLVENT CEMENT USED FOR JOINING THE END CAP TO THE EXISTING PIPE SHALL CONFORM TO ASTM 2564. THE END CAPS SHALL MATCH THE EXISTING PIPES IN COLOR.
3. WEEP PIPES LOCATED AT LOW END OF EACH DECK JOINT TO REMAIN.

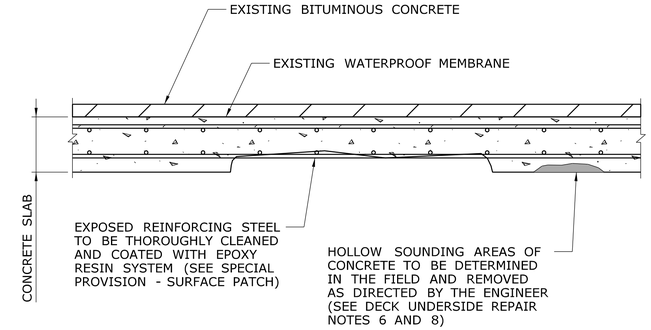

SURFACE PATCH REPAIR DETAILS

NOT TO SCALE

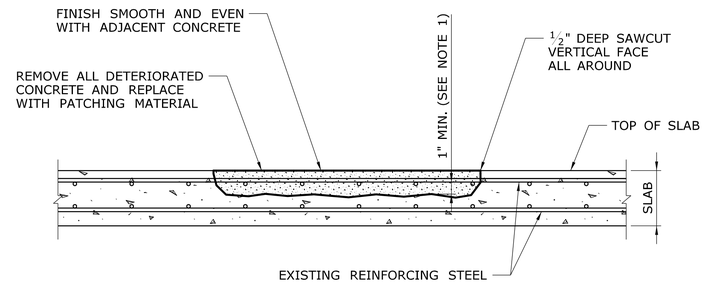

PATCH BELOW TOP REINFORCING STEEL

PARTIAL DEPTH PATCH REPAIR DETAILS

NOT TO SCALE

DECK UNDERSIDE REPAIR NOTES:

1. EPOXY COATING THE DECK UNDERSIDE REINFORCEMENT SHALL BE PERFORMED IN ACCORDANCE WITH DETAILS SHOWN ON THIS SHEET AND THE SPECIAL PROVISIONS. THIS WORK SHALL PAID UNDER THE ITEM "SURFACE PATCH" (SEE SPECIAL PROVISIONS).
2. ALL WORK SHALL BE CONTAINED BY A TEMPORARY DEBRIS SHIELD INACCORDANCE WITH THE PERMIT REQUIREMENTS CONTAINED ELSEWHERE IN THE CONTRACT DOCUMENTS. THE COST OF THIS SHALL BE INCLUDED IN THE GENERAL COST OF CONSTRUCTION.
3. THE EXISTING SLAB UNDERSIDE SHALL BE SOUNDED FOR HOLLOW AREAS OF CONCRETE TO THE SATISFACTION OF THE ENGINEER. THE CONTRACTOR SHALL PROVIDE SAFE ACCESS TO THE ENGINEER FOR DELINEATION AND INSPECTION OF THE DECK UNDERSIDE, AND THE REPAIR WORK. THE COST OF PROVIDING ACCESS FOR THE INSPECTION SHALL BE INCLUDED IN THE COST OF THE ITEM "SURFACE PATCH."
4. ALL EXPOSED REINFORCING STEEL SHALL BE THOROUGHLY CLEANED TO REMOVE ANY DEBRIS OR RESIDUE BEFORE APPLYING THE EPOXY RESIN COATING (SEE SPECIAL PROVISION).
5. ANY EXPOSED REINFORCING STEEL IN THE AREAS OF POP-OUTS CAUSED BY THE REMOVAL OF DETERIORATED CONCRETE SHALL BE CLEANED AND COATED WITH EPOXY RESIN COATING.
6. THE DECK UNDERSIDE DETERIORATION AND REPAIR ESTIMATES ARE BASED ON LIMITED FIELD OBSERVATIONS AND BRIDGE SAFETY INSPECTION REPORTS. THE EXACT LOCATION AND LIMITS OF EXPOSED REINFORCEMENT AND HOLLOW AREAS OF CONCRETE IN THE DECK UNDERSIDE SHALL BE DETERMINED BY THE ENGINEER DURING CONSTRUCTION (SEE SPECIAL PROVISIONS).
7. THE CONTRACTOR SHALL NOT PERFORM ANY REPAIR WORK WITHOUT PRIOR APPROVAL FROM THE ENGINEER. THE REMOVAL OF DETERIORATED CONCRETE SHALL PROCEED AS DIRECTED BY THE ENGINEER.
8. THE PRIMARY INTENDED REPAIR IS TO APPLY EPOXY RESIN COATING TO THE UNDERSIDE OF THE DETERIORATED DECK SURFACE. IF THE REMOVAL OF DETERIORATED CONCRETE EXTENDS GREATER THAN 3 INCHES IN DEPTH, OR IF THE REMOVAL EXPOSES THE FULL CIRCUMFERENCE OF THE REINFORCING STEEL BAR FOR A LENGTH EXCEEDING 12 INCHES, THE WORK SHALL BE STOPPED AND THE ENGINEER SHALL BE NOTIFIED IMMEDIATELY. THESE AREAS SHALL BE REPAIRED BY "FULL DEPTH PATCHING" AS DIRECTED BY THE ENGINEER.

CONCRETE PATCHING NOTES:

1. IF THE REINFORCING STEEL HAS AT LEAST ONE HALF OF ITS SURFACE AREA EXPOSED AFTER CONCRETE REMOVAL, THE CONCRETE SHALL BE FURTHER REMOVED TO A DEPTH OF 1" BELOW THE STEEL. IN AREAS WHERE REINFORCING STEEL IS ONLY PARTIALLY EXPOSED AFTER REMOVAL OF DETERIORATED CONCRETE, THE REINFORCEMENT SHALL BE COATED WITH EPOXY BONDING COMPOUND (SEE SPECIAL PROVISIONS) BEFORE PLACING "PARTIAL DEPTH PATCH" MATERIAL.
2. EXPOSED REINFORCING STEEL IN POP-OUTS CAUSED BY REMOVAL OF DETERIORATED CONCRETE SHALL BE PROTECTED WITH EPOXY COATING.
3. IF REMOVAL OF DETERIORATED CONCRETE FOR "PARTIAL DEPTH PATCH" EXCEEDS TWO-THIRDS OF THE TOTAL THICKNESS OF THE SLAB, REMOVE THE REMAINDER OF THE CONCRETE TO THE BOTTOM OF THE SLAB AND PERFORM "FULL DEPTH PATCH." FINAL PAYMENT SHALL BE MADE AS "FULL DEPTH PATCH" ONLY (SEE SPECIAL PROVISIONS).
4. ADDITIONAL CONCRETE REMOVAL REQUIRED FOR THE REPAIR OF THE REINFORCING STEEL SHALL BE PAID FOR UNDER THE ITEM "FULL DEPTH PATCH" OR " PARTIAL DEPTH PATCH", WHICHEVER CONDITION APPLIES.

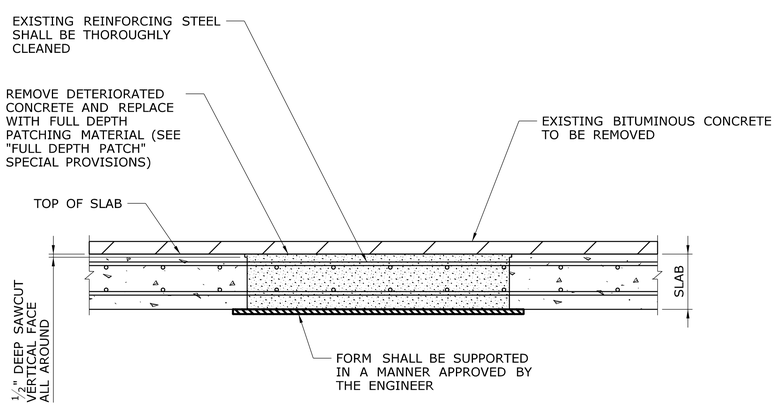

FULL DEPTH PATCH REPAIR DETAIL

NOT TO SCALE

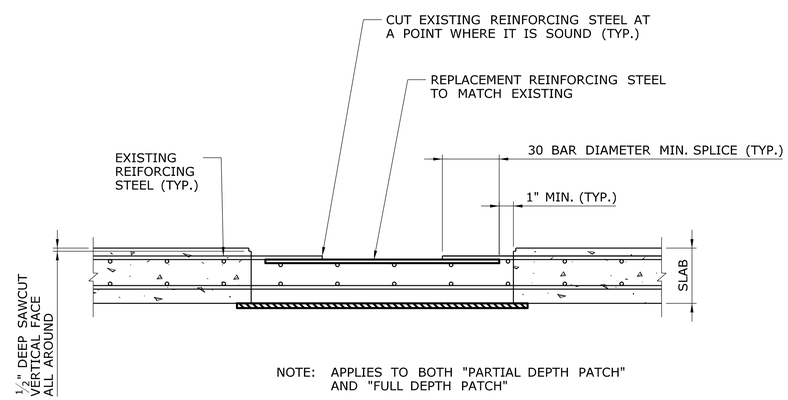

NOTE: APPLIES TO BOTH "PARTIAL DEPTH PATCH" AND "FULL DEPTH PATCH"

DEFECTIVE REINFORCING STEEL REPAIR

NOT TO SCALE

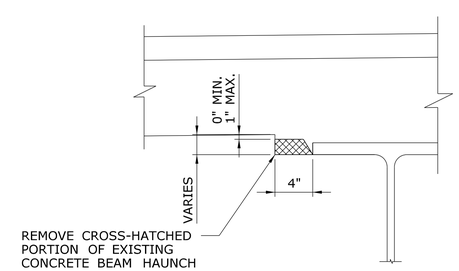

HAUNCH REMOVAL

SCALE: 1 1/2" = 1'-0"

REV.	DATE	REVISION DESCRIPTION	SHEET NO.

THE INFORMATION, INCLUDING ESTIMATED QUANTITIES OF WORK, SHOWN ON THESE SHEETS IS BASED ON LIMITED INVESTIGATIONS BY THE STATE AND IS IN NO WAY WARRANTED TO INDICATE THE CONDITIONS OF ACTUAL QUANTITIES OF WORK WHICH WILL BE REQUIRED.

Plotted Date: 12/23/2013

DESIGNER/DRAFTER: CY
CHECKED BY: CW
SCALE AS NOTED

STATE OF CONNECTICUT
DEPARTMENT OF TRANSPORTATION

Filename: ...\S-67_Deck_Rehab_Patch_Details_SB.dgn

SIGNATURE/BLOCK:
Stantec Consulting Services Inc.
2321 Whitney Ave.
Hamden, CT 06518

PROJECT TITLE:
REHABILITATION OF BRIDGE I-91 NB & SB OVER US 5, AMTRAK & FERRY STREET

TOWN: NEW HAVEN

DRAWING TITLE:
SB: DECK REHABILITATION PATCH DETAILS

PROJECT NO. 092-0612
DRAWING NO. S-67
SHEET NO. 04.67

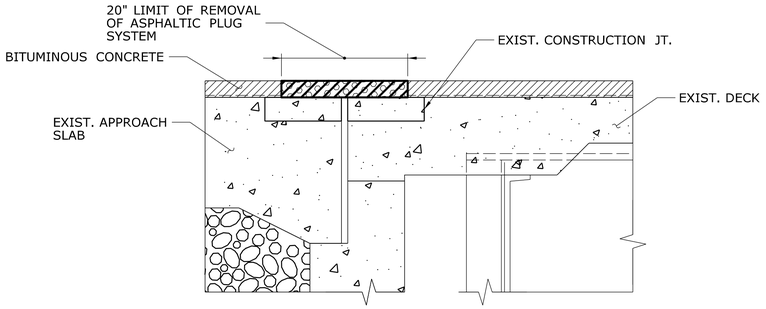

EXISTING CONDITION
ABUTMENTS 1 AND 2
SCALE : 1" = 1'-0"

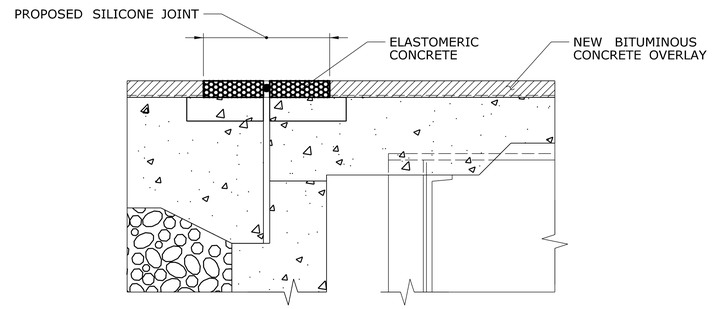

PROPOSED REPAIR - SILICONE JOINT
ABUTMENT 1 & 2
SCALE : 1" = 1'-0"

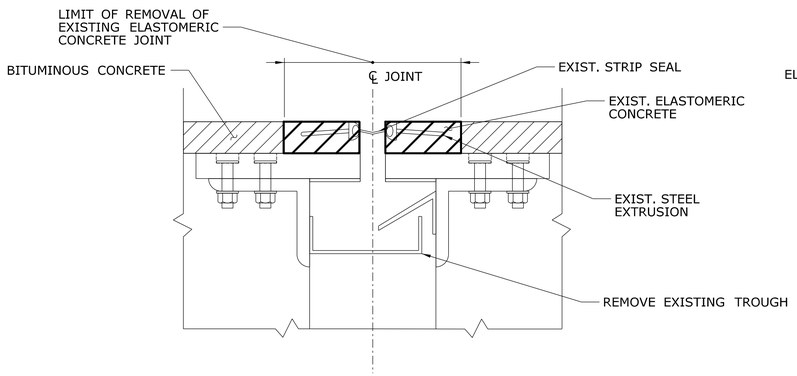

EXISTING CONDITION
PIERS 1, 2 AND WEST PIN & HANGER
SCALE : 3" = 1'-0"

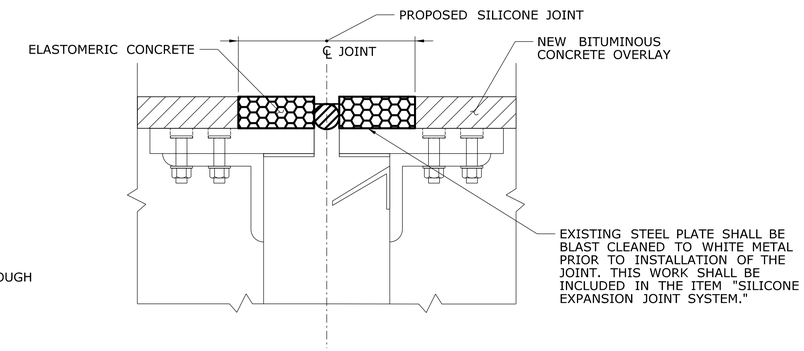

PROPOSED REPAIR - SILICONE JOINT
PIER 1, 2 AND WEST PIN & HANGER
SCALE : 3" = 1'-0"

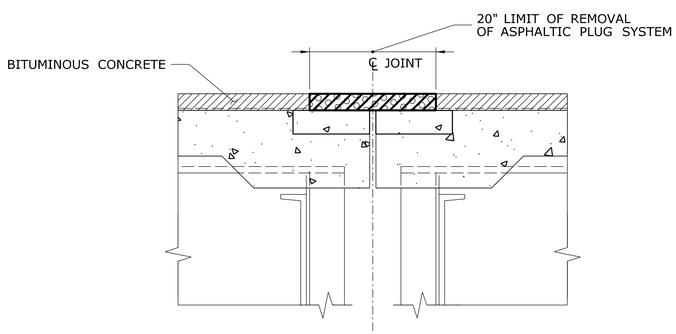

EXISTING CONDITION
EAST PIN & HANGER
SCALE : 1" = 1'-0"

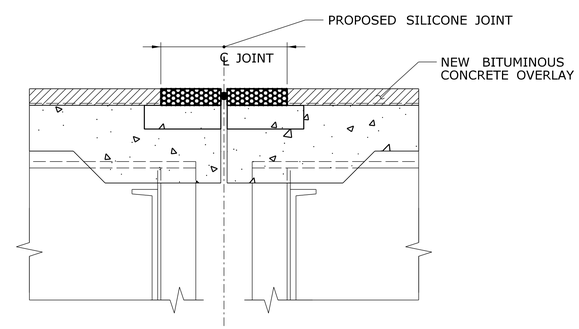

PROPOSED REPAIR - SILICONE JOINT
EAST PIN & HANGER
SCALE : 1" = 1'-0"

REV.	DATE	REVISION DESCRIPTION	SHEET NO.

THE INFORMATION, INCLUDING ESTIMATED QUANTITIES OF WORK, SHOWN ON THESE SHEETS IS BASED ON LIMITED INVESTIGATIONS BY THE STATE AND IS IN NO WAY WARRANTED TO INDICATE THE CONDITIONS OF ACTUAL QUANTITIES OF WORK WHICH WILL BE REQUIRED.

Plotted: 12/23/2013

DESIGNER/DRAFTER: **EW**
CHECKED BY: **CW**
SCALE AS NOTED

STATE OF CONNECTICUT
DEPARTMENT OF TRANSPORTATION

Filename: $FILE$

SIGNATURE/BLOCK:
Stantec Consulting Services Inc.
2321 Whitney Ave.
Hamden, CT 06518

PROJECT TITLE:
REHABILITATION OF BRIDGE I-91 NB & SB OVER US 5, AMTRAK & FERRY STREET

TOWN: **NEW HAVEN**

DRAWING TITLE: **SB: JOINT REPAIR DETAILS - 1**

PROJECT NO. **092-0612**
DRAWING NO. **S-68**
SHEET NO. **04.68**

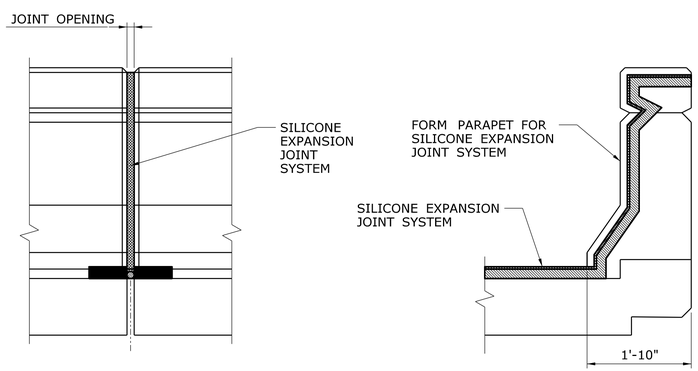

AT PARAPET
SCALE: 1" = 1'-0"

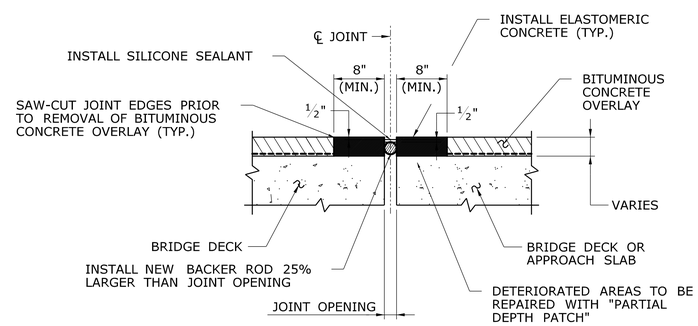

SECTION
NOT TO SCALE

SILICONE EXPANSION JOINT SYSTEM NOTES:

1. REMOVE NEW HMA OVERLAY AND MEBRANE WATERPROOFING. REPLACE WITH SILICONE EXPANSION JOINT SYSTEM. TO BE PAID FOR UNDER THE ITEM "SILICONE EXPANSION JOINT SYSTEM".
2. THE CLOSED CELL BACKER ROD SHALL BE PLACED A MINIMUM OF 2" FROM THE OUTSIDE FACE OF PARAPET AND MEDIAN BARRIER.
3. THE NON-SAGGING SILICONE SEALANT SHALL BE PLACED ON THE BACKER ROD ½" THICK. AT THE GUTTERS, THE SILICONE SEALANT SHALL BE FLUSH WITH THE OUTSIDE FACE OF CONCRETE.
4. PRIOR TO INSTALLING THE SILICONE SEALANT, CLEAN JOINT SIDES BY SANDBLASTING. DUST SHALL BE REMOVED BY THE METHOD APPROVED BY THE ENGINEER. THIS WORK SHALL BE PAID FOR UNDER THE ITEM "SILICONE EXPANSION JOINT SYSTEM".
5. SILICONE EXPANSION JOINT SYSTEM SHALL BE INSTALLED WHEN THE AMBIENT AIR TEMPERATURE IS BETWEEN 40° F AND 80° F.
6. SILICONE SEALANT AND BACKER ROD THROUGH THE PARAPET AND MEDIAN BARRIER IS INCLUDED IN THE ITEM "SILICONE EXPANSION JOINT SYSTEM".

SILICONE EXPANSION JOINT SYSTEM

REV.	DATE	REVISION DESCRIPTION	SHEET NO.

THE INFORMATION, INCLUDING ESTIMATED QUANTITIES OF WORK, SHOWN ON THESE SHEETS IS BASED ON LIMITED INVESTIGATIONS BY THE STATE AND IS IN NO WAY WARRANTED TO INDICATE THE CONDITIONS OF ACTUAL QUANTITIES OF WORK WHICH WILL BE REQUIRED.

Plotted Date: 12/23/2013

DESIGNER/DRAFTER: CY
CHECKED BY: CW
SCALE AS NOTED

STATE OF CONNECTICUT
DEPARTMENT OF TRANSPORTATION

Filename: ...\S-69_RepairDetails-Joints2_SB.dgn

SIGNATURE/BLOCK:
Stantec Consulting Services Inc.
2321 Whitney Ave.
Hamden, CT 06518

PROJECT TITLE:
REHABILITATION OF BRIDGE I-91 NB & SB OVER US 5, AMTRAK & FERRY STREET

TOWN: **NEW HAVEN**

DRAWING TITLE: **SB: JOINT REPAIR DETAILS - 2**

PROJECT NO. **092-0612**
DRAWING NO. **S-69**
SHEET NO. **04.69**

NOTE:

STEEL PLATE TO BE ATTACHED TO BRIDGE DECK USING CONNECTICUT D.O.T. APPROVED MECHANICAL ANCHOR (2). THREADED ROD SHALL BE ½" (13) IN DIAMETER, HOT DIP GALVANIZED PER A.S.T.M. - A123. MECHANICAL ANCHOR SHALL BE INSTALLED IN STRICT CONFORMANCE WITH MANUFACTURER'S SPECIFICATIONS.

NOTE:

ENTIRE PLATE ASSEMBLY TO BE HOT DIP GALVANIZED PER A.S.T.M. A123 AFTER FABRICATION

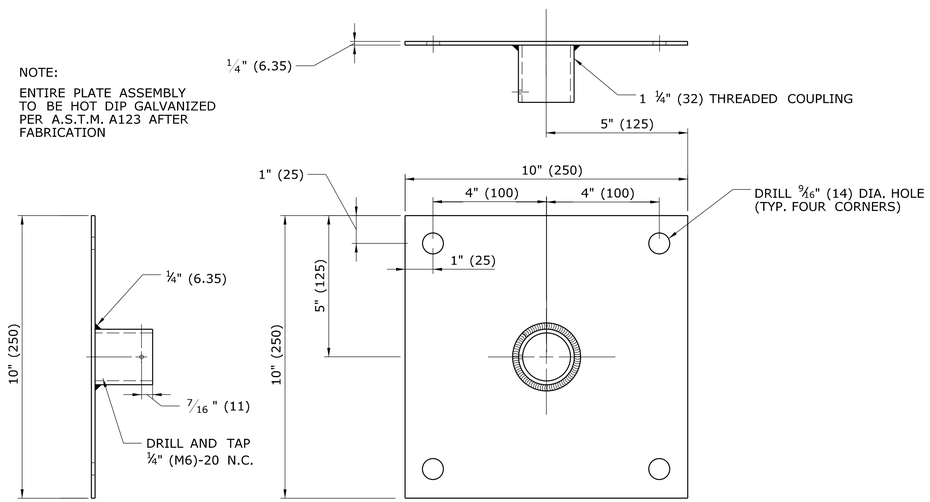

STEEL PLATE FOR PENDANT LUMINAIRE

NOTES:

1. THE CONTRACTOR SHALL COORDINATE WITH THE ENGINEER TO DETERMINE THE MAXIMUM AMOUNT OF MOVEMENT BETWEEN THE BRIDGE SUPERSTRUCTURE AND THE ABUTMENT/PIER. AN APPROPRIATE LENGTH OF FLEXIBLE CONDUIT SHALL BE INSTALLED TO ACCOMODATE THIS MOVEMENT.
2. SURFACE MOUNTED C.I.J.B. SHALL BE PAID FOR UNDER A SEPARATE ITEM AND NOT AS PART OF THE UNDERBRIDGE LIGHT ITEM. 2" (50) RMC (SURFACE), 2" (50) FLEXIBLE CONDUIT, NO. 2 CONDUCTORS, AND NO. 8 GROUNDING CONDUCTOR TO BE INCLUDED AS PART OF UNDERBRIDGE LIGHT ITEM.

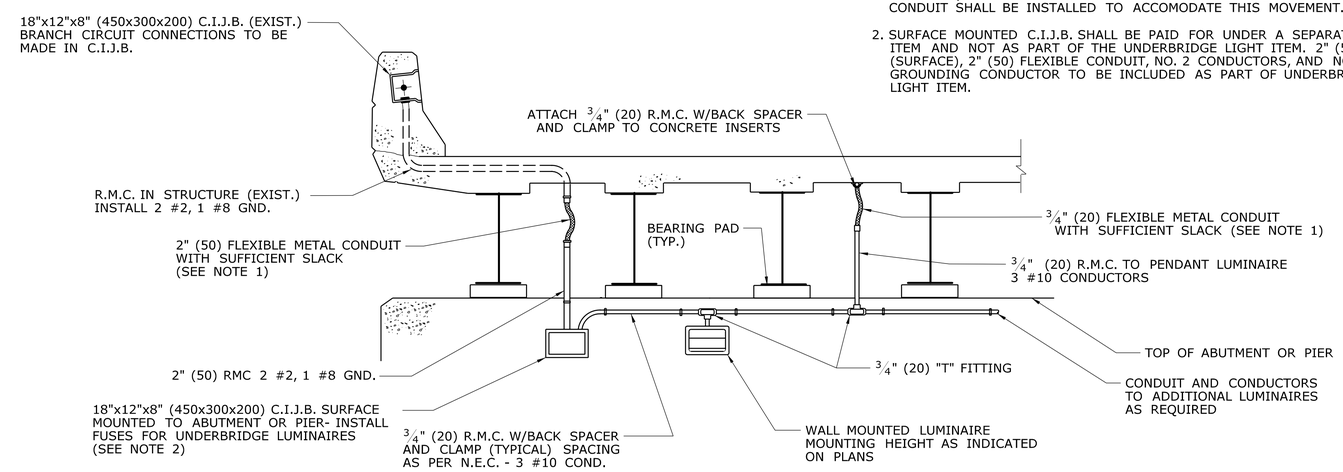

TYPICAL LAYOUT AND FEED FOR UNDERBRIDGE LUMINAIRE, WALL OR PENDANT MOUNTED

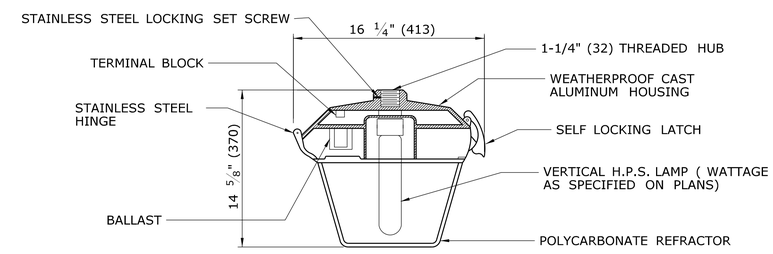

UNDERBRIDGE LUMINAIRE (PENDANT MOUNTED)

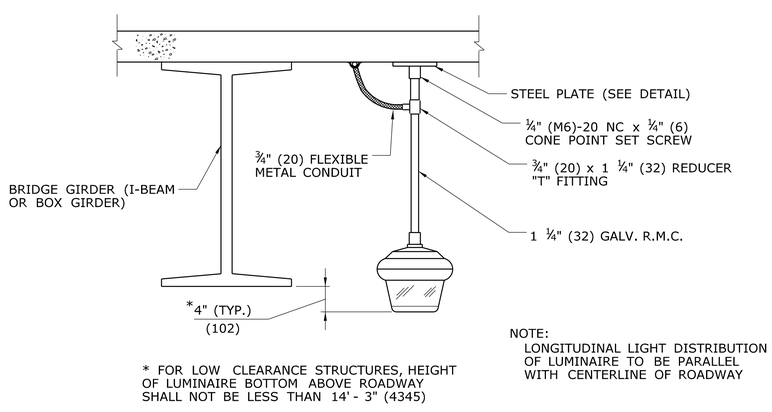

NOTE:
LONGITUDINAL LIGHT DISTRIBUTION OF LUMINAIRE TO BE PARALLEL WITH CENTERLINE OF ROADWAY

* FOR LOW CLEARANCE STRUCTURES, HEIGHT OF LUMINAIRE BOTTOM ABOVE ROADWAY SHALL NOT BE LESS THAN 14' - 3" (4345)

UNDERBRIDGE LUMINAIRE - PENDENT MOUNTING

ILLUMINATION NOTES:

1. EXISTING LIGHTING CIRCUITRY IS 480V, 3ø, 3W.
2. THE EXISTING LIGHTING CONTROL CABINET IS LOCATED AT THE INTERSECTION OF CLINTON AVENUE AND MIDDLETOWN AVENUE IN NEW HAVEN.
3. ALL ELECTRICAL WORK SHALL CONFORM TO THE NATIONAL ELECTRIC CODE, CONNECTICUT STANDARD SPECIFICATIONS, AND WHERE APPLICABLE, UTILITY REGULATIONS.
4. NO. 2 AWG CONDUCTORS SHALL BE COPPER, INSULATION TYPE XHHW AND RATED FOR 600 VOLTS. INSULATION SHALL BE COLORED CROSS LINKED POLYETHYLENE (XLP). THREE PHASE CIRCUIT COLORS SHALL BE AS FOLLOWS: BLUE BLACK, RED. NO. 10 AWG SHALL BE THHN/THWN, 600 VOLTS.
5. INSTALL ONE NUMBER 8 BARE COPPER GROUNDING CONDUCTOR IN ALL CONDUITS CONTAINING NO. 2 LIGHTING CIRCUIT CONDUCTORS.
6. TAPE ALL UNUSED CONDUCTORS.
7. FOR EXISTING ILLUMINATION SEE STATE PROJECT 92-474.
8. THE CONTRACTOR SHALL ABIDE BY THE CONNDOT LOCKOUT/TAGOUT PROCEDURES. THE CONTRACTOR SHALL CONTACT THE DISTRICT ELECTRICAL SUPERVISOR AT TELEPHONE (203) 878-1869, WHEN ACCESS TO A CIRCUIT IS REQUIRED.
9. INSTALL NEW UNDERBRIDGE LUMINAIRES AT THE SAME LOCATION AS EXISTING UNDERBRIDGE LUMINAIRES TO BE REMOVED.

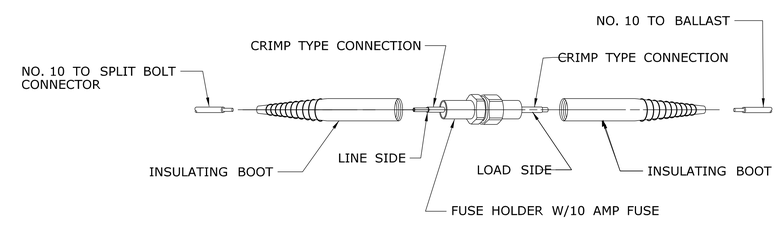

INSULATED FUSE CONNECTOR

REV.	DATE	REVISION DESCRIPTION	SHEET NO.

THE INFORMATION, INCLUDING ESTIMATED QUANTITIES OF WORK, SHOWN ON THESE SHEETS IS BASED ON LIMITED INVESTIGATIONS BY THE STATE AND IS IN NO WAY WARRANTED TO INDICATE THE CONDITIONS OF ACTUAL QUANTITIES OF WORK WHICH WILL BE REQUIRED.

Plotted: 12/23/2013

DESIGNER/DRAFTER: EW
CHECKED BY: CW
SCALE AS NOTED

STATE OF CONNECTICUT
DEPARTMENT OF TRANSPORTATION

Filename: $FILE$

SIGNATURE/BLOCK:
Stantec Consulting Services Inc.
2321 Whitney Ave.
Hamden, CT 06518

PROJECT TITLE:
REHABILITATION OF BRIDGE I-91 NB & SB OVER US 5, AMTRAK & FERRY STREET

TOWN: NEW HAVEN

DRAWING TITLE: NB & SB: UNDERBRIDGE LUMINAIRE

PROJECT NO. 092-0612
DRAWING NO. S-70
SHEET NO. 04.70

FORM NO. ENG. 19 ED. 11-52

PUB. ROAD DIV. NO.	STATE	TOWN	FED. AID PROJ. NO.	PROJ. NO.	YEAR	ROUTE NO.	SHEET NO.	TOTAL SHEETS
1	CONN.	NEW HAVEN	I-IG-91-1(181)	92-117	1962	I-91	24	165

VERTICAL CLEARANCES
TOP OF RAIL TO UNDERSIDE OF STRUCTURE

SOUTH BOUND		NORTH BOUND	
A	29.93	G	33.84
B	31.31	H	35.77
C	31.62	J	35.98
D	41.71	K	45.35
E	32.72	L	36.95
F	32.34	M	36.58

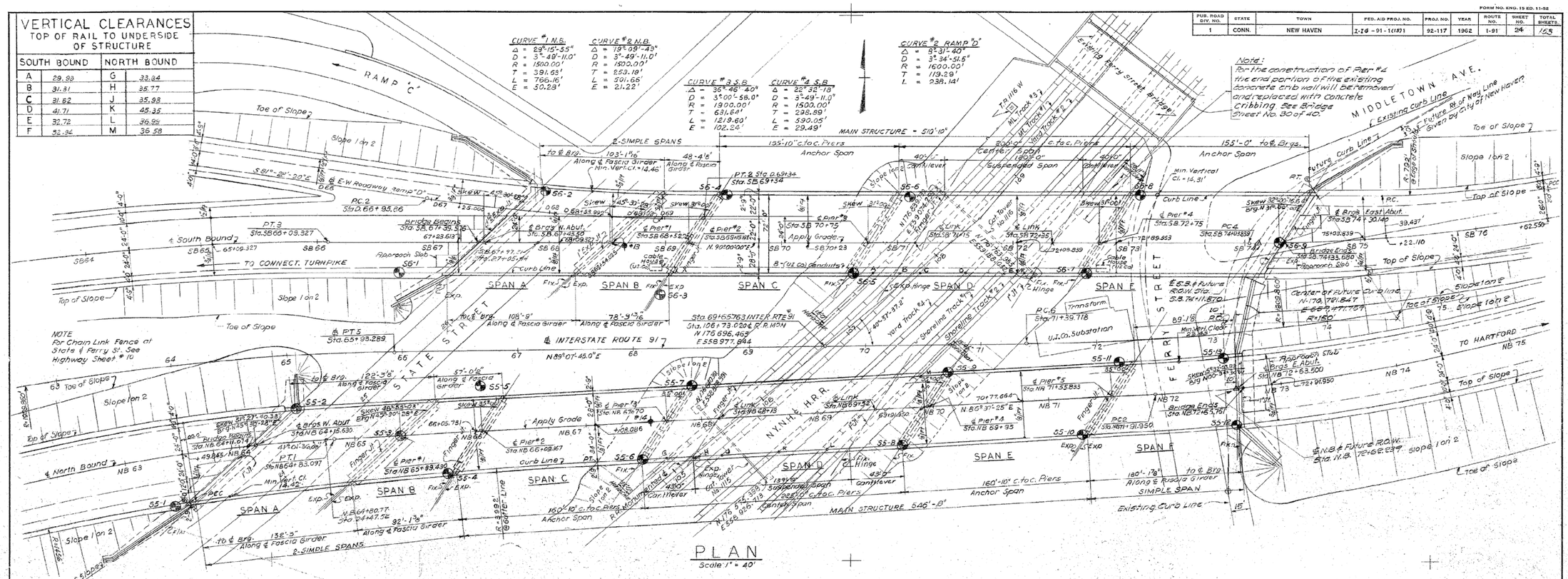

GENERAL NOTES

SPECIFICATIONS: Conn. State Highway Department Form 808 (Jan.1955) and Special Provisions.

DESIGN SPECIFICATIONS: Sta. Spec. for Hwy. Bridges (AASHO 1957) except as modified by the Bureau of Public Roads "Policy on Interstate System Projects" (Aug.1956) and as supplemented by the Conn. State Highway Dept. Bridge Manual July 1961.

LIVE LOAD: H20-S16-44. Alt. 24000# dual axle at 4'-0" o.c.

FUTURE PAVING ALLOWANCE: 25# p.s.f.

COMPOSITE CONSTRUCTION: No temporary intermediate supports shall be used during pouring and setting of the concrete deck slab. Temporary supports may be used for structural steel erection only. Live and superimposed dead loads shall be permitted when directed by the Engineer but not less than 10 days after the slab has been poured.

CLASS "A" CONCRETE: Class "A" Concrete shall be used for the entire substructure. See Special Provisions.

CLASS "C" CONCRETE: Class "C" Concrete shall be used for bridge decks including concrete safety walks, sidewalks, and parapets. See Special Provisions.

JOINT SEAL: See Special Provisions.

PARAFFIN: The cost of furnishing and applying paraffin is included in the item for Class "C" Concrete.

EXPOSED EDGES: Exposed edges shall be beveled 1" x 1" unless dimensioned otherwise.

STRUCTURAL STEEL: See Bridge sheet Nos. 6, 8, 12, 23 for ASTM designations.

PAINTING: See Special Provisions for STRUCTURAL STEEL AND METAL BRIDGE RAIL.

REINFORCING STEEL: See Special Provisions for DEFORMED STEEL BARS.

FELT: The cost of furnishing and placing 15# felt is included in the item for Class "A" Concrete.

WELDING & WELD INSPECTION: See Special Provisions for STRUCTURAL STEEL.

FOUNDATION PRESSURES AND PILE LOADS: THE various Group Loadings noted on the substructure plan sheets refer to the Group Loads as given in subsection 1.4.1 of the AASHO Standard Specifications for Highway Bridges.

GRAVEL FILL: Provide 12" of Gravel Fill under all footings if called for by the Engineer.

LIST OF DRAWINGS

NO.	TITLE	NO.	TITLE	NO.	TITLE
1.	GENERAL PLAN	16.	METAL BRIDGE RAIL (1'-0" HIGH)	29.	PIERS 1 & 2
2.	GENERAL ELEVATIONS	17.	METAL BRIDGE RAIL (5'-0" HIGH)	30.	PIERS 3 & 4
3.	BORINGS		NORTHBOUND		NORTHBOUND
4.	BORINGS & QUANTITIES	18.	FRAMING & STRESSES-MAIN STRUCTURE	31.	WEST ABUTMENT
5.	BORINGS & PROFILES	19.	FRAMING & DETAILS-SIMPLE SPANS	32.	WEST ABUTMENT WINGWALLS
	SUPERSTRUCTURES	20.	CROSS-FRAMES	33.	EAST ABUTMENT
	SOUTHBOUND	21.	GIRDER DETAILS-FASCIA	34.	EAST ABUTMENT WINGWALLS
6.	FRAMING & STRESSES-MAIN STRUCTURE	22.	GIRDER DETAILS-INTERIOR	35.	PIERS 1 & 2
7.	FRAMING & DETAILS-SIMPLE SPANS	23.	HINGE & BRACING DETAILS	36.	PIERS 3, 4 & 5
8.	CROSS FRAMES	24.	SLAB PLAN & RAILING		MISCELLANEOUS
9.	GIRDER DETAILS-FASCIA		SUBSTRUCTURES	37.	LIGHTING & DRAINAGE PLAN
10.	GIRDER DETAILS-INTERIOR		SOUTHBOUND	38.	DRAINAGE DETAILS
11.	HINGE & BRACING DETAILS	25.	WEST ABUTMENT	39.	ELECTRICAL DETAILS
12.	SHOE DETAILS	26.	WEST ABUTMENT WINGWALLS	40.	UTILITY
13.	EXPANSION JOINT DETAILS	27.	EAST ABUTMENT		
14.	SLAB PLAN & RAILING - 1	28.	EAST ABUTMENT WINGWALLS		
15.	SLAB PLAN & RAILING - 2				

PROPOSED SEQUENCE OF CONSTRUCTION

1. Erection of abutment at both ends of the viaducts.
2. Erection of intermediate piers.
3. Install underground communication cables and provide necessary protection. (N.H.R.R.)
4. Erection of railroad piers on both sides of the railroad with permanent steel sheet piling to be left in place near the tracks and the United Illuminating Company Substation.
5. Erection of foundations and transmission towers and modify existing structures for temporary route. (N.H.R.R.)
6. Erection of simple steel girders in the approach spans.
7. Erection of steel girders in the anchor spans of the main structures by tractor crane from the ground with or without temporary supports for splicing the haunched sections of the cantilever girder in the anchor spans.
8. Secure all steel girders erected thus far by connecting all necessary cross-frames and horizontal bracings temporarily or permanently in order to provide a working deck for the erection of the suspended spans.
9. Erection of steel girders in the suspended spans over the railroad with the traveler positioned on the cantilever on the north side of the tracks only. Because of limited space available on the south side of the railroad at the intersection of Middletown Avenue and Ferry Street Bridge, as well as the presence of the United Illuminating Company Substation, it is proposed that the steel girders for the southbound viaduct be erected first and the space between the State Street and the Railroad be used as storage or sorting area for steel erection.
10. Erection of foundations and transmission poles for permanent route on north side of right of way. (N.H.R.R.)
11. Complete field connections for all steel work.
12. Construction of concrete bridge deck according to pouring sequence as indicated on the slab plans.

NO REVISIONS ENTITLED FOR THIS

REVISIONS		
NO.	DATE	DESCRIPTION

FED. AID PROJ. I-IG-91-1(181)1

CONNECTICUT
STATE HIGHWAY DEPARTMENT
TOWN OF NEW HAVEN
INTERSTATE ROUTE 91
VIADUCTS OVER N.H.R.R.
STATE ST. & FERRY ST.
GENERAL PLAN

DESIGNED BY FREDERIC R. HARRIS ASSOCIATES
SCALES 1" = 40'
MADE BY W. Chamula DATE 4-10-61
CHECKED BY P. Backerich DATE 5-31-61
APPROVED K. K. Chen DATE 6-15-61
PROJECT NO. 92-117
BRIDGE SHEET NO. 1 of 40

24

THE INFORMATION, INCLUDING ESTIMATED QUANTITIES OF WORK, SHOWN ON THESE SHEETS IS BASED ON LIMITED INVESTIGATIONS BY THE STATE AND IS IN NO WAY WARRANTED TO INDICATE THE TRUE CONDITIONS OR ACTUAL QUANTITIES OR DISTRIBUTION OF QUANTITIES OF WORK WHICH WILL BE REQUIRED.

FOR INFORMATION ONLY NOT TO SCALE

REV.	DATE	REVISION DESCRIPTION	SHEET NO.
-	-	-	-
-	-	-	-
-	-	-	-
-	-	-	-
-	-	-	-
-	-	-	-

THE INFORMATION, INCLUDING ESTIMATED QUANTITIES OF WORK, SHOWN ON THESE SHEETS IS BASED ON LIMITED INVESTIGATIONS BY THE STATE AND IS IN NO WAY WARRANTED TO INDICATE THE CONDITIONS OF ACTUAL QUANTITIES OF WORK WHICH WILL BE REQUIRED.

Plotted Date: 12/23/2013

DESIGNER/DRAFTER: JRA
CHECKED BY: AML

STATE OF CONNECTICUT
DEPARTMENT OF TRANSPORTATION

Filename: ...\S-71_Original Boring Logs - 1 .dgn

SIGNATURE/BLOCK:
Stantec Consulting Services Inc.
2321 Whitney Ave.
Hamden, CT 06518

PROJECT TITLE:
REHABILITATION OF BRIDGE I-91 NB & SB OVER US 5, AMTRAK & FERRY STREET

TOWN: **NEW HAVEN**

DRAWING TITLE: **ORIGINAL BORING LOGS - 1**

PROJECT NO. 092-0612
DRAWING NO. S-71
SHEET NO. 04.71

FORM NO. ENG. 19 ED. 11-62

PUB. ROAD DIV. NO.	STATE	TOWN	FED. AID PROJ. NO.	PROJ. NO.	YEAR	ROUTE NO.	SHEET NO.	TOTAL SHEETS
1	CONN.	NEW HAVEN	I-18-91-1 (18) 1	92-117	1962	I-91	26	153

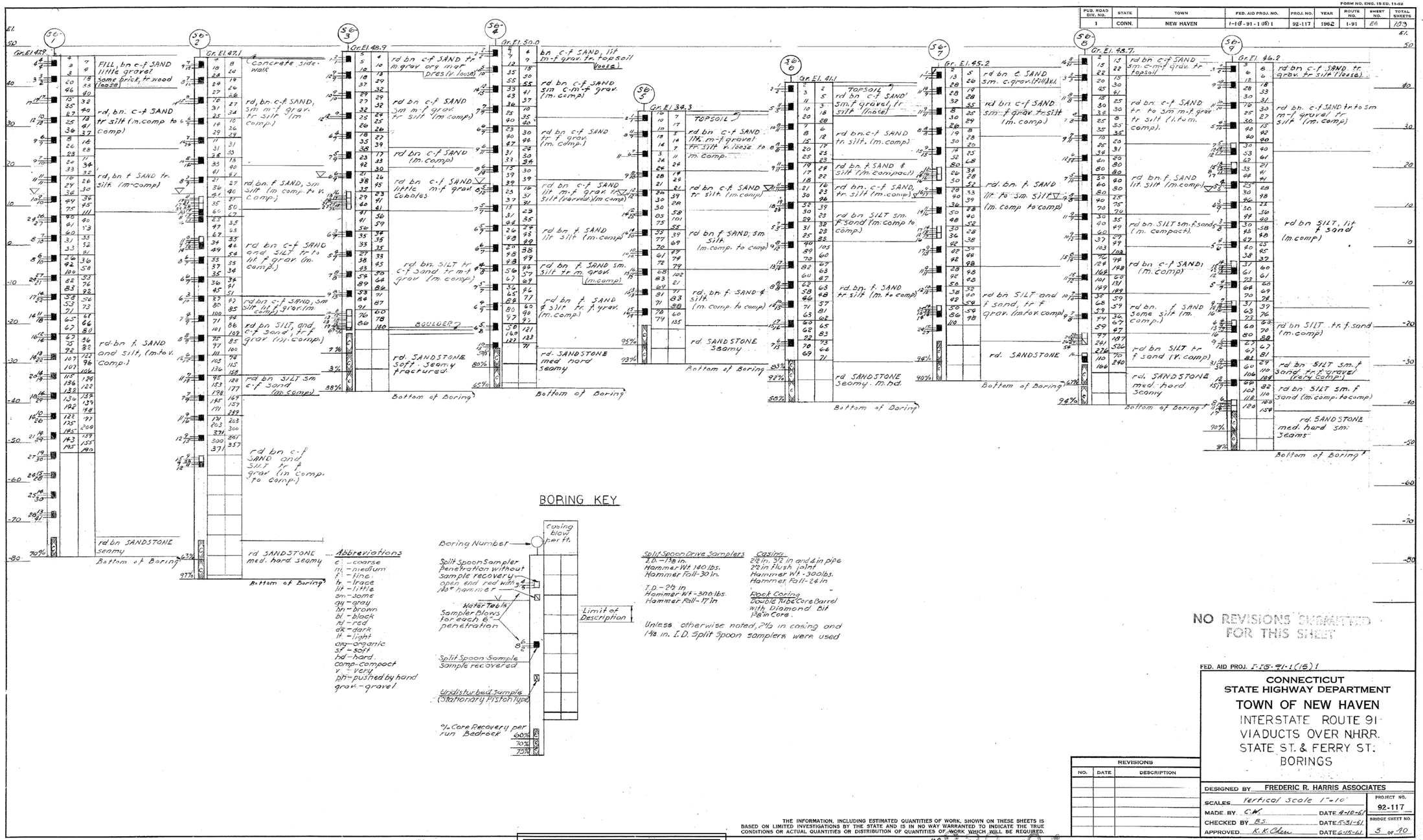

NO REVISIONS SUBMITTED FOR THIS SHEET

FED. AID PROJ. I-18-91-1(18)1

CONNECTICUT
STATE HIGHWAY DEPARTMENT

TOWN OF NEW HAVEN
INTERSTATE ROUTE 91
VIADUCTS OVER NHRR.
STATE ST. & FERRY ST.
BORINGS

REVISIONS		
NO.	DATE	DESCRIPTION

DESIGNED BY FREDERIC R. HARRIS ASSOCIATES
SCALES Vertical Scale 1"=10'
MADE BY C.W. DATE 4-10-61
CHECKED BY B.S. DATE 5-31-61
APPROVED K.K. Chen DATE 6-15-61
PROJECT NO. 92-117
BRIDGE SHEET NO. 5 OF 10

THE INFORMATION, INCLUDING ESTIMATED QUANTITIES OF WORK, SHOWN ON THESE SHEETS IS BASED ON LIMITED INVESTIGATIONS BY THE STATE AND IS IN NO WAY WARRANTED TO INDICATE THE TRUE CONDITIONS OR ACTUAL QUANTITIES OR DISTRIBUTION OF QUANTITIES OF WORK WHICH WILL BE REQUIRED.

92 117

M2.59 01

FOR INFORMATION ONLY NOT TO SCALE

REV.	DATE	REVISION DESCRIPTION	SHEET NO.
-	-	-	-
-	-	-	-
-	-	-	-
-	-	-	-
-	-	-	-
-	-	-	-

THE INFORMATION, INCLUDING ESTIMATED QUANTITIES OF WORK, SHOWN ON THESE SHEETS IS BASED ON LIMITED INVESTIGATIONS BY THE STATE AND IS IN NO WAY WARRANTED TO INDICATE THE CONDITIONS OF ACTUAL QUANTITIES OF WORK WHICH WILL BE REQUIRED.

Plotted Date: 12/23/2013

DESIGNER/DRAFTER: JRA
CHECKED BY: AML

STATE OF CONNECTICUT
DEPARTMENT OF TRANSPORTATION

Filename: ...\S-72..Original Boring Logs - 2 .dgn

SIGNATURE/BLOCK:
Stantec Consulting Services Inc.
2321 Whitney Ave.
Hamden, CT 06518

PROJECT TITLE:
REHABILITATION OF BRIDGE I-91 NB & SB OVER US 5, AMTRAK & FERRY STREET

TOWN: **NEW HAVEN**

DRAWING TITLE: **ORIGINAL BORING LOGS - 2**

PROJECT NO. 092-0612
DRAWING NO. S-72
SHEET NO. 04.72

FORM NO. ENG. 15 ED. 11-62

PUB. ROAD DIV. NO.	STATE	TOWN	FED. AID PROJ. NO.	PROJ. NO.	YEAR	ROUTE NO.	SHEET NO.	TOTAL SHEETS
1	CONN.	NEW HAVEN	I-IG-91-1 (15) 1	92-117	1962	I-91	27	153

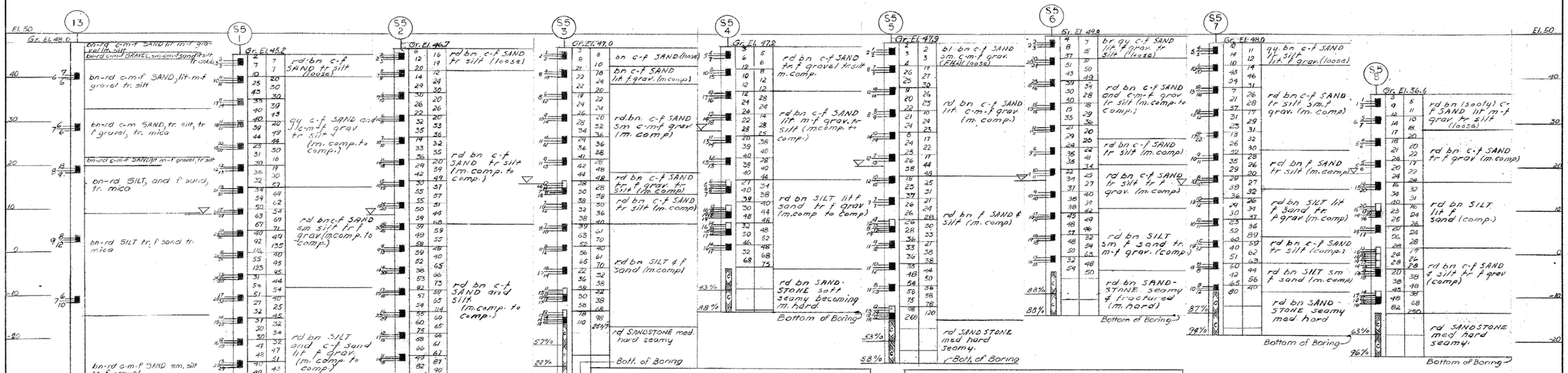

QUANTITIES - NORTH B.

Structure Excavation - Earth (Complete)	cy	3,007
6" Perf. A.C.C.M. Pipe	lf	438
Test Pile Steel 12BP53 60' Long	ea	1
Test Pile Steel 12BP53 75' Long	ea	2
Test Pile Steel 12BP53 100' Long	ea	1
Pile Loading Test	ea	1
Furnishing Steel Piles	lb	416,000
Driving Steel Piles	lf	7,835
Splicing Steel Piles	ea	8
Steel Sheet Piles	lb	40,000
Class "A" Concrete	cy	3,794
Class "C" Concrete	cy	1,906
1" Pref. Exp. Jt. Filler for Bridges	sf	938
1" Pref. Exp. Jt. Filler for Bridges	sf	172
Deformed Steel Bars	lb	932,000
Structural Steel	lb	2,394,000
Woven Wire Fabric	sy	228
Dampproofing	sy	2,139
Metal Bridge Rail (1'-9" High)	lf	1,208
Metal Bridge Rail (5'-0" High)	lf	527
Pervious Structure Backfill	cy	6,775
6"x 9½" Granite Stone Curbing for Bridges	lf	1,735
6" Cast Iron Pipe for Bridge Drainage	lf	62
8" Cast Iron Pipe for Bridge Drainage	lf	256
10" Cast Iron Pipe for Bridge Drainage	lf	366
12" Cast Iron Pipe for Bridge Drainage	lf	202
Bridge Scupper	ea	11
Point Reinforcement for Steel Piles	ea	8
Soil Loading Test	ea	1
Gravel Fill	cy	480
Neoprene Plate for Bridge Expansion Joint	lf	84
18"x 18"x 10" Cast Iron Junction Box	ea	3
2" Rigid Steel Conduit in Structures	lf	970
Shear Connectors	lf	1,240
Compacted Gravel Fill	cy	240
Structure Excavation - Rock (Complete)	cy	10

QUANTITIES - SOUTH B.

Structure Excavation - Earth (Complete)	cy	3,319
6" Perf. A.C.C.M. Pipe	lf	440
Test Pile Steel 12BP53 90' Long	ea	2
Test Pile Steel 12BP53 100' Long	ea	1
Test Pile Steel 12BP53 110' Long	ea	1
Pile Loading Test	ea	1
Furnishing Steel Piles	lb	663,000
Driving Steel Piles	lf	12,500
Splicing Steel Piles	ea	10
Steel Sheet Piles	lb	25,000
Class "A" Concrete	cy	3,938
Class "C" Concrete	cy	1,693
1" Pref. Exp. Jt. Filler for Bridges	sf	823
Bridge Scupper	ea	14
Deformed Steel Bars	lb	756,000
Structural Steel	lb	2,654,000
Woven Wire Fabric	sy	300
Dampproofing	sy	968
Metal Bridge Rail (1'-9" High)	lf	766
Metal Bridge Rail (5'-0" High)	lf	620
Pervious Structure Backfill	cy	4,949
6"x 9½" Granite stone curbing for Bridges	lf	1,386
6" Cast Iron Pipe for Bridge Drainage	lf	178
8" Cast Iron Pipe for Bridge Drainage	lf	314
10" Cast Iron Pipe for Bridge Drainage	lf	160
12" Cast Iron Pipe for Bridge Drainage	lf	162
Point Reinforcement for Steel Piles	ea	10
Soil Loading Test	ea	1
Gravel Fill	cy	520
Neoprene Plate for Bridge Expansion Joint	lf	282
18"x 18"x 10" Cast Iron Junction Box	ea	4
2" Rigid Steel Conduit in Structures	lf	725
Eight Bank Duct Line	ls	1
Concrete Block Cable House	ea	2
Shear Connectors	lf	1,370
Compacted Gravel Fill	cy	200
Structure Excavation - Rock (Complete)	cy	10

INSPECTION OF FIELD WELD

METHOD	UNIT	QUANTITY
RADIOGRAPHIC	IN.	0
MAGNETIC PARTICLE	L.F.	0

NORTHBOUND VIADUCT CONCRETE DISTRIBUTION

SUPERSTRUCTURE	1,906 C.Y.
SUBSTRUCTURE	2,438 C.Y.
FOOTINGS	1,356 C.Y.
TOTAL	5,700 C.Y.

SOUTHBOUND VIADUCT CONCRETE DISTRIBUTION

SUPERSTRUCTURE	1,693 C.Y.
SUBSTRUCTURE	1,899 C.Y.
FOOTINGS	1,093 C.Y.
TOTAL	4,685 C.Y.

NO REVISIONS SUBMITTED FOR THIS SHEET

FED. AID PROJ. I-IG-91-1(15)1

CONNECTICUT
STATE HIGHWAY DEPARTMENT

TOWN OF NEW HAVEN
INTERSTATE ROUTE 91
VIADUCTS OVER NHRR.
STATE ST. & FERRY ST.
BORINGS & QUANTITIES

REVISIONS		
NO.	DATE	DESCRIPTION

DESIGNED BY FREDERIC R. HARRIS ASSOCIATES
SCALES Vertical Scale 1"=10'
MADE BY C.N.-J.N. DATE 4-10-61
CHECKED BY B.S. DATE 5-31-61
APPROVED K. K. Chen DATE 6-15-61
PROJECT NO. 92-117
BRIDGE SHEET NO. 4 OF 40

THE INFORMATION, INCLUDING ESTIMATED QUANTITIES OF WORK, SHOWN ON THESE SHEETS IS BASED ON LIMITED INVESTIGATIONS BY THE STATE AND IS IN NO WAY WARRANTED TO INDICATE THE TRUE CONDITIONS OR ACTUAL QUANTITIES OR DISTRIBUTION OF QUANTITIES OF WORK WHICH WILL BE REQUIRED.

C. R. CO. 14867

92 117

M289 07

27

FOR INFORMATION ONLY NOT TO SCALE

REV.	DATE	REVISION DESCRIPTION	SHEET NO.
-	-	-	-
-	-	-	-
-	-	-	-
-	-	-	-
-	-	-	-
-	-	-	-

THE INFORMATION, INCLUDING ESTIMATED QUANTITIES OF WORK, SHOWN ON THESE SHEETS IS BASED ON LIMITED INVESTIGATIONS BY THE STATE AND IS IN NO WAY WARRANTED TO INDICATE THE CONDITIONS OF ACTUAL QUANTITIES OF WORK WHICH WILL BE REQUIRED.

Plotted Date: 12/23/2013

DESIGNER/DRAFTER: JRA
CHECKED BY: AML

STATE OF CONNECTICUT
DEPARTMENT OF TRANSPORTATION

Filename: ...\S-73_Original Boring Logs - 3 .dgn

SIGNATURE/BLOCK:

Stantec Consulting Services Inc.
2321 Whitney Ave.
Hamden, CT 06518

PROJECT TITLE:
REHABILITATION OF BRIDGE I-91 NB & SB OVER US 5, AMTRAK & FERRY STREET

TOWN: **NEW HAVEN**

DRAWING TITLE:
ORIGINAL BORING LOGS - 3

PROJECT NO. 092-0612
DRAWING NO. S-73
SHEET NO. 04.73

FORM NO. ENG. 15 ED. 11-62

PUB. ROAD DIV. NO.	STATE	TOWN	FED. AID PROJ. NO.	PROJ. NO.	YEAR	ROUTE NO.	SHEET NO.	TOTAL SHEETS
1	CONN.	NEW HAVEN	I-IS-91-1(151)	92-117	1962	I-91	28	153

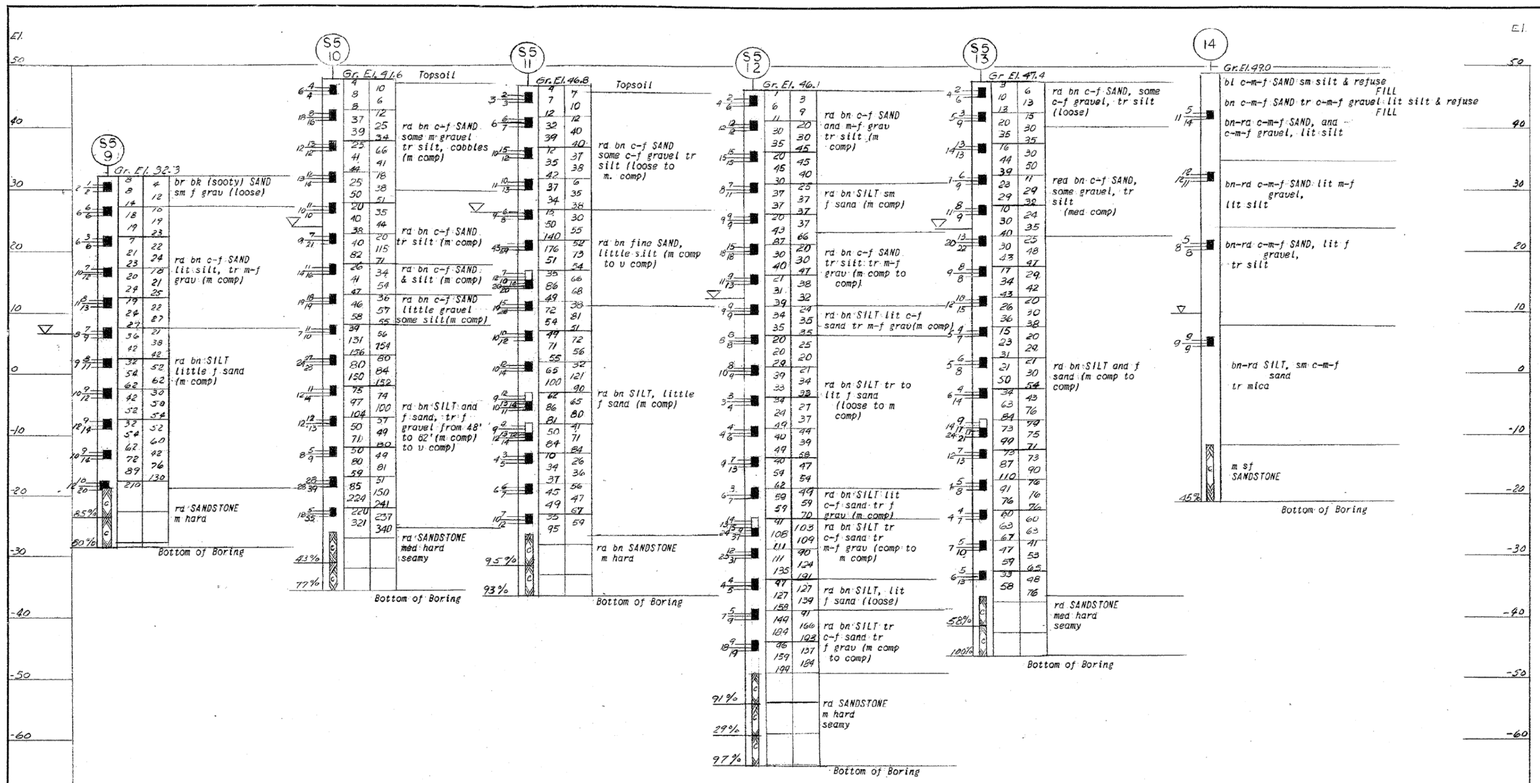

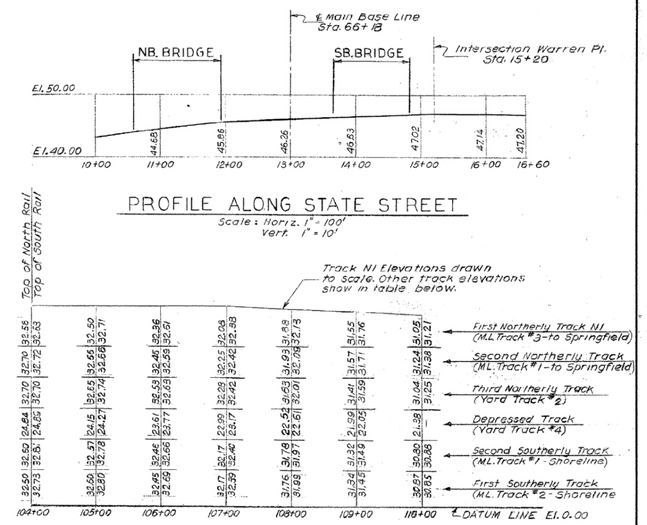

Sections along Base for R.R. Cross Sections Track Elevations are field measurements as furnished by the Connecticut State Highway Dept.

PROFILE ALONG STATE STREET

Scale: Horiz. 1" = 100'
Vert. 1" = 10'

PROFILE NEW HAVEN R.R.

Scale: Horiz. 1" = 100'
Vert. 1" = 10'

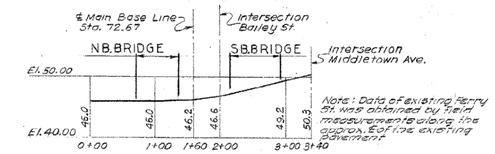

PROFILE ALONG FERRY STREET (EXISTING)

Scale: Horiz. 1" = 100'
Vert. 1" = 10'

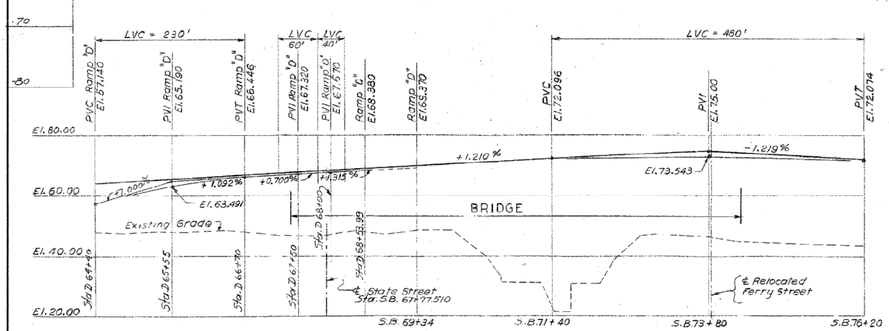

SOUTHBOUND PROFILE

Scale: Horiz. 1" = 100'
Vert. 1" = 20'

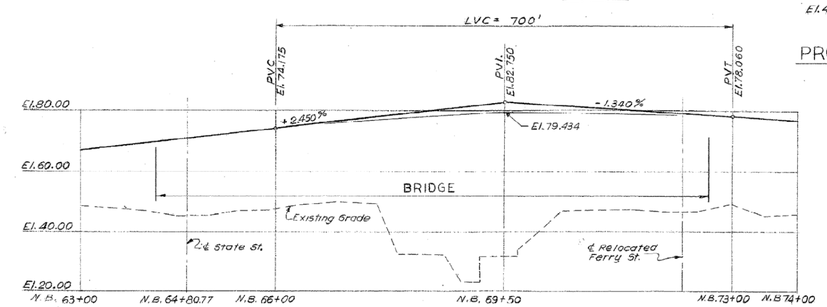

NORTHBOUND PROFILE

Scale: Horiz. 1" = 100'
Vert. 1" = 20'

NO REVISIONS SUBMITTED FOR THIS SHEET

FED. AID PROJ. I-IS-91-1(151)

CONNECTICUT STATE HIGHWAY DEPARTMENT

TOWN OF NEW HAVEN

INTERSTATE ROUTE 91
VIADUCTS OVER NHRR.
STATE ST. & FERRY ST.
BORINGS & PROFILES

REVISIONS		
NO.	DATE	DESCRIPTION

DESIGNED BY FREDERIC R. HARRIS ASSOCIATES
SCALES Vertical Scale 1"=10'
MADE BY CW - JN DATE 4-10-61
CHECKED BY B.S DATE 5-31-61
APPROVED K.K. Chen DATE 6-15-61
PROJECT NO. 92-117
BRIDGE SHEET NO. 5 OF 40

THE INFORMATION, INCLUDING ESTIMATED QUANTITIES OF WORK, SHOWN ON THESE SHEETS IS BASED ON LIMITED INVESTIGATIONS BY THE STATE AND IS IN NO WAY WARRANTED TO INDICATE THE TRUE CONDITIONS OR ACTUAL QUANTITIES OR DISTRIBUTION OF QUANTITIES OF WORK WHICH WILL BE REQUIRED.

92 117

N259 01

28

FOR INFORMATION ONLY NOT TO SCALE

REV.	DATE	REVISION DESCRIPTION	SHEET NO.
-	-	-	-
-	-	-	-
-	-	-	-
-	-	-	-
-	-	-	-
-	-	-	-

THE INFORMATION, INCLUDING ESTIMATED QUANTITIES OF WORK, SHOWN ON THESE SHEETS IS BASED ON LIMITED INVESTIGATIONS BY THE STATE AND IS IN NO WAY WARRANTED TO INDICATE THE CONDITIONS OF ACTUAL QUANTITIES OF WORK WHICH WILL BE REQUIRED.

Plotted Date: 12/23/2013

DESIGNER/DRAFTER: JRA
CHECKED BY: AML

STATE OF CONNECTICUT
DEPARTMENT OF TRANSPORTATION

Filename: ...\S-74 .Original Boring Logs - 4 .dgn

SIGNATURE/BLOCK:

Stantec Consulting Services Inc.
2321 Whitney Ave.
Hamden, CT 06518

PROJECT TITLE:
REHABILITATION OF BRIDGE I-91 NB & SB OVER US 5, AMTRAK & FERRY STREET

TOWN: **NEW HAVEN**

DRAWING TITLE: **ORIGINAL BORING LOGS - 4**

PROJECT NO. **092-0612**
DRAWING NO. **S-74**
SHEET NO. **04.74**

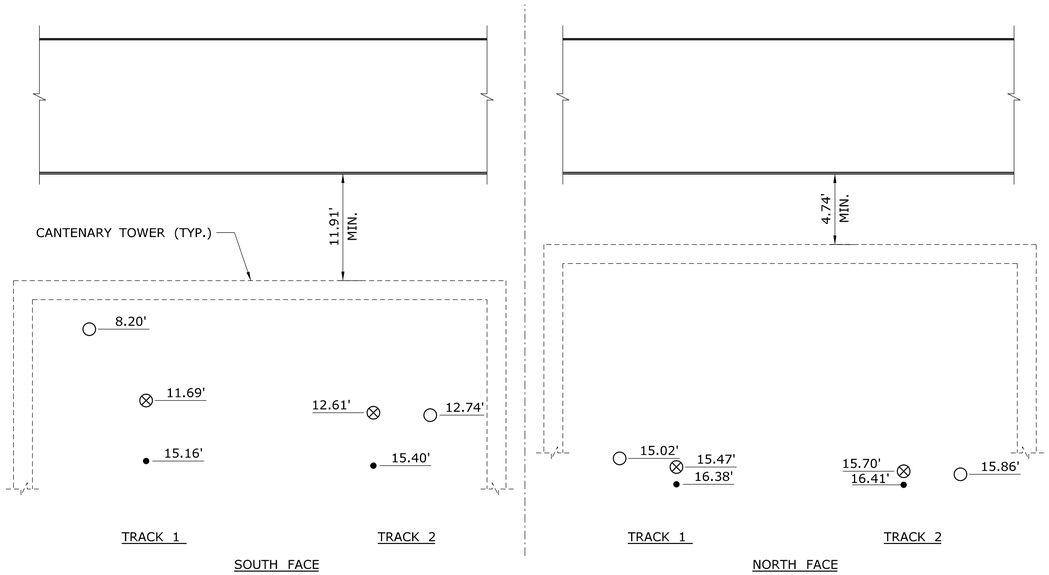

SOUTHBOUND BRIDGE 03022 - LOOKING NORTH

NOT TO SCALE

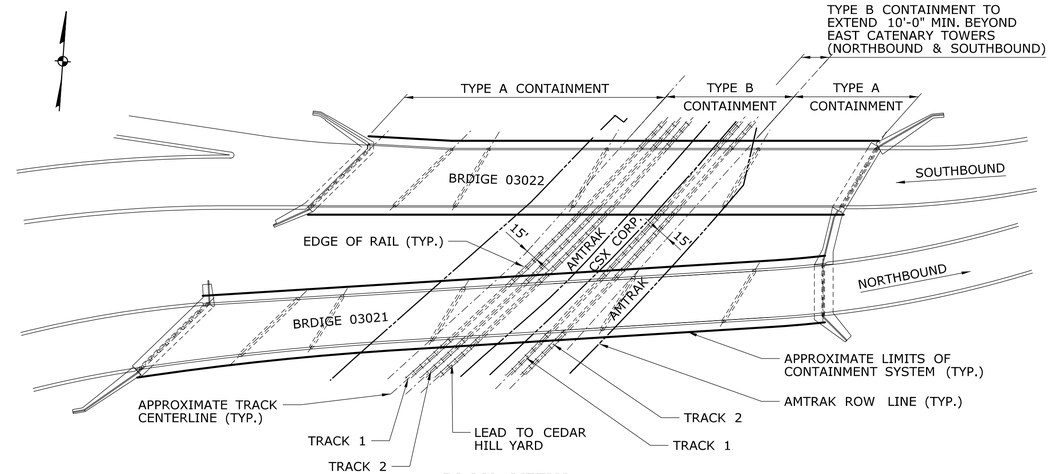

PLAN VIEW

NOT TO SCALE

LEGEND:

- ○ = OTHER WIRE
- ⊗ = MESSENGER WIRE
- • = TROLLEY WIRE
- XX.XX' = MINIMUM DISTANCE BETWEEN BOTTOM OF FASCIA BEAM AND WIRE

NOTES:

1. REFER TO SPECIAL PROVISIONS FOR REQUIREMENTS RELATING TO WORK WITHIN AMTRAK RIGHT OF WAY AND OVER THE RAILROAD.
2. THE CONTRACTOR SHALL DESIGN, INSTALL MAINTAIN AND REMOVE THE TEMPORARY WORK PLATFORM AND CONTAINMENT SYSTEM. THE PLATFORM SHALL NOT EXTEND BELOW THE TOP OF THE EXISTING CATENARY TOWERS. SEE DRAWING ET-1447-D "E.T. STANDARD, ELECTRIFIED TERRITORY O.H. BRIDGES, TEMPORARY PROTECTION SHIELD & BARRIERS" CONTAINED WITHIN THE SPECIAL PROVISIONS FOR REQUIREMENTS.
3. ALL EXISTING BRIDGE BONDING AND GROUNDING MUST BE MAINTAINED DURING OR REPLACED AFTER CONSTRUCTION. IF GROUNDING CANNOT BE MAINTAINED DURING CONSTRUCTION, THE TEMPORARY PROTECTIVE BARRIER MUST BE INSTALLED AND GROUNDED PRIOR TO THE REMOVAL OF EXISTING BRIDGE GROUNDING COMPONENTS. THE BRIDGE BONDING AND GROUTING SHALL BE RESTORED OR REPLACED IN-KIND PRIOR TO REMOVAL OF THE PROTECTIVE BARRIER. SEE DRAWINGS JVCG74-15/16 AND JVCG74-21/22 CONTAINED WITHIN THE SPECIAL PROVISIONS FOR EXISTING BONDING AND GROUTING CONDITIONS. NOTE THAT ONE EXISTING 2" DIAMETER RIGID METAL CONDUIT TIED TO EXISTING BRIDGE GROUNDING IS NOT SHOWN ON THESE DRAWINGS. THIS GROUNDING SHALL BE MAINTAINED AS WELL.
4. EXISTING BONDING AND GROUNDING MUST BE RELOCATED DURING BLAST CLEANING AND PAINTING OPERATIONS.
5. ALL WATER COLLECTED BY TEMPORARY WORK PLATFORMS SHALL BE DIVERTED FROM LANDING ON THE RAILROAD AND SUPPORTING EMBANKMENTS.
6. A DETAILED SITE SPECIFIC WORK PLAN SHALL BE PREPARED BY THE CONTRACTOR AND SUBMITTED FOR APPROVAL PRIOR TO COMMENCEMENT OF ANY WORK WITHIN THE RAILROAD R.O.W. TRACK OUTAGES AND DE-ENERGIZING PERMISSIONS AND DURATIONS ARE AT THE DISCRETION OF AMTRAK.
7. DURING ALL OPERATIONS, THE CONTRACTOR SHALL MAINTAIN A MINIMUM OF 10' OF CLEARANCE IN ANY DIRECTION FROM ELECTRIFIED WIRES, UNLESS OTHERWISE NOTED.
8. THE CONTRACTOR SHALL UTILIZE RAILROAD PROTECTION DURING ALL OPERATIONS THAT ENCROACH UPON THE AMTRAK RIGHT OF WAY, AND AS DIRECTED BY THE ENGINEER. SEE SPECIAL PROVISIONS.
9. NO DIRECT PAYMENT WILL BE MADE FOR ADHERENCE TO AMTRAK REQUIREMENTS AS NOTED ON THE PLANS AND IN THE SPECIAL PROVISIONS, THE COST OF WHICH SHALL BE INCLUDED IN THE OVERALL COST OF THE PROJECT.

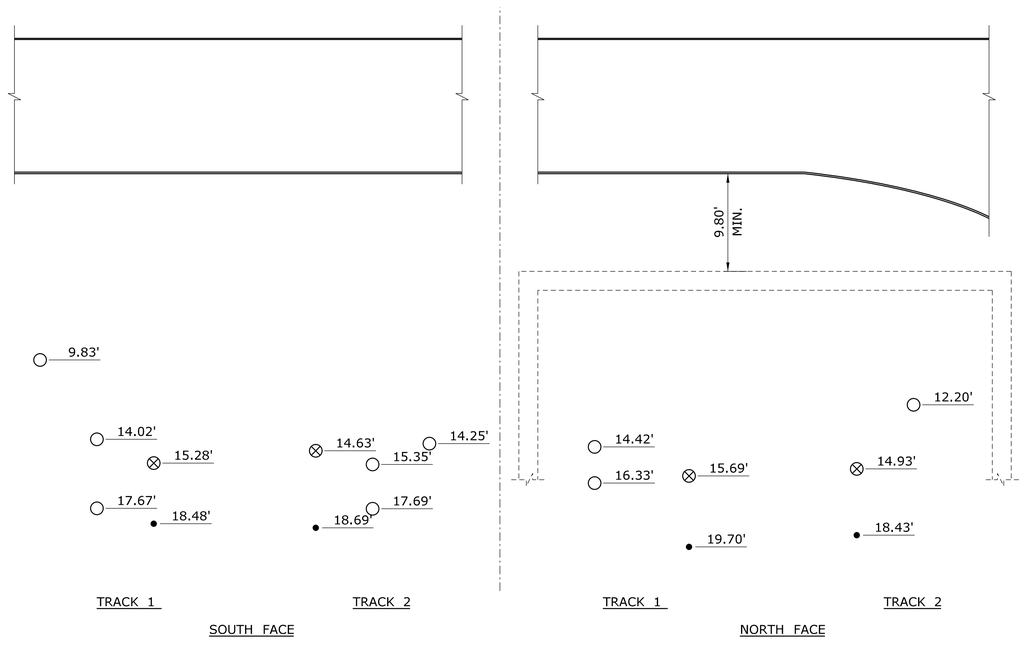

NORTHBOUND BRIDGE 03021 - LOOKING NORTH

NOT TO SCALE

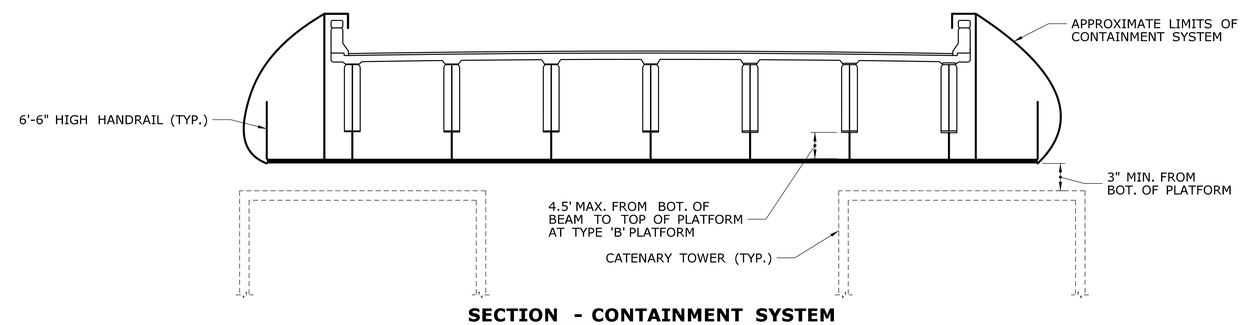

SECTION - CONTAINMENT SYSTEM

NOT TO SCALE

REV.	DATE	REVISION DESCRIPTION	SHEET NO.

THE INFORMATION, INCLUDING ESTIMATED QUANTITIES OF WORK, SHOWN ON THESE SHEETS IS BASED ON LIMITED INVESTIGATIONS BY THE STATE AND IS IN NO WAY WARRANTED TO INDICATE THE CONDITIONS OF ACTUAL QUANTITIES OF WORK WHICH WILL BE REQUIRED.

Plotted: 12/23/2013

DESIGNER/DRAFTER: JRA
CHECKED BY: AML
SCALE AS NOTED

STATE OF CONNECTICUT
DEPARTMENT OF TRANSPORTATION

Filename: $FILE$

SIGNATURE/BLOCK:
Stantec Consulting Services Inc.
2321 Whitney Ave.
Hamden, CT 06518

PROJECT TITLE:
REHABILITATION OF BRIDGE I-91 NB & SB OVER US 5, AMTRAK & FERRY STREET

TOWN: **NEW HAVEN**

DRAWING TITLE: **CLEARANCE AND CONTAINMENT DIAGRAM**

PROJECT NO. 092-0612
DRAWING NO. S-75
SHEET NO. 04.75