VOLUME 5 - UTILITIES
INDEX OF DRAWINGS

DRAWING NUMBER	DRAWING TITLE	DRAWING NUMBER	DRAWING TITLE
IND-5.01	UTILITIES INDEX OF DRAWINGS		
UTL-5.01	UTILITY TYPICAL SECTION		
UTL-5.02 THRU UTL-5.04	UTILITY PLANS		
UTL-5.05	UTILITY DETAILS AT&T DUCTBANK DETAILS		
UTL-5.06 THRU UTL-5.07	UTILITY DETAILS UI ELECTRICAL DETAILS		
UTL-5.08	UTILITY DETAILS CABLEVISION DETAILS		
SFM-5.01 THRU SFM-5.03	14" SANITARY FORCE MAIN PLAN & PROFILE		
SFM-5.04	SANITARY SEWER DETAILS		
WTR-1 THRU WTR-3	WATER RELOCATION PLAN		
WTR-4 THRU WTR-7	WATER DETAILS		
GAS-5.01 THRU GAS-5.03	GAS RELOCATION PLAN		

DESIGNED BY:

URS
URS CORPORATION AES
500 ENTERPRISE DRIVE
ROCKY HILL, CT 06067

STATE OF CONNECTICUT RONALD G. SACCHI No. 18588 LICENSED PROFESSIONAL ENGINEER

Ronald Sacchi
2014.02.04
16:54:45
-05'00'

FINAL DESIGN PLANS

REV.	DATE	REVISION DESCRIPTION	SHEET NO.

Plotted: 12/17/2013

DESIGNER/DRAFTER: JGR

CHECKED BY: RIF

STATE OF CONNECTICUT
DEPARTMENT OF TRANSPORTATION

Filename: ...\Sheets\V5-cover.dgn

SIGNATURE/BLOCK:

STATE OF CONNECTICUT RONALD G. SACCHI No. 18588 LICENSED PROFESSIONAL ENGINEER

URS CORPORATION AES
500 ENTERPRISE DRIVE
ROCKY HILL, CT 06067

PROJECT TITLE:
RUNWAY SAFETY AREA PROJECT
IGOR I. SIKORSKY MEMORIAL AIRPORT

TOWN: STRATFORD

DRAWING TITLE:
VOLUME 5 - UTILITIES
INDEX OF DRAWINGS

PROJECT NO. 15-336

DRAWING NO. IND-5.01

SHEET NO. 05.001

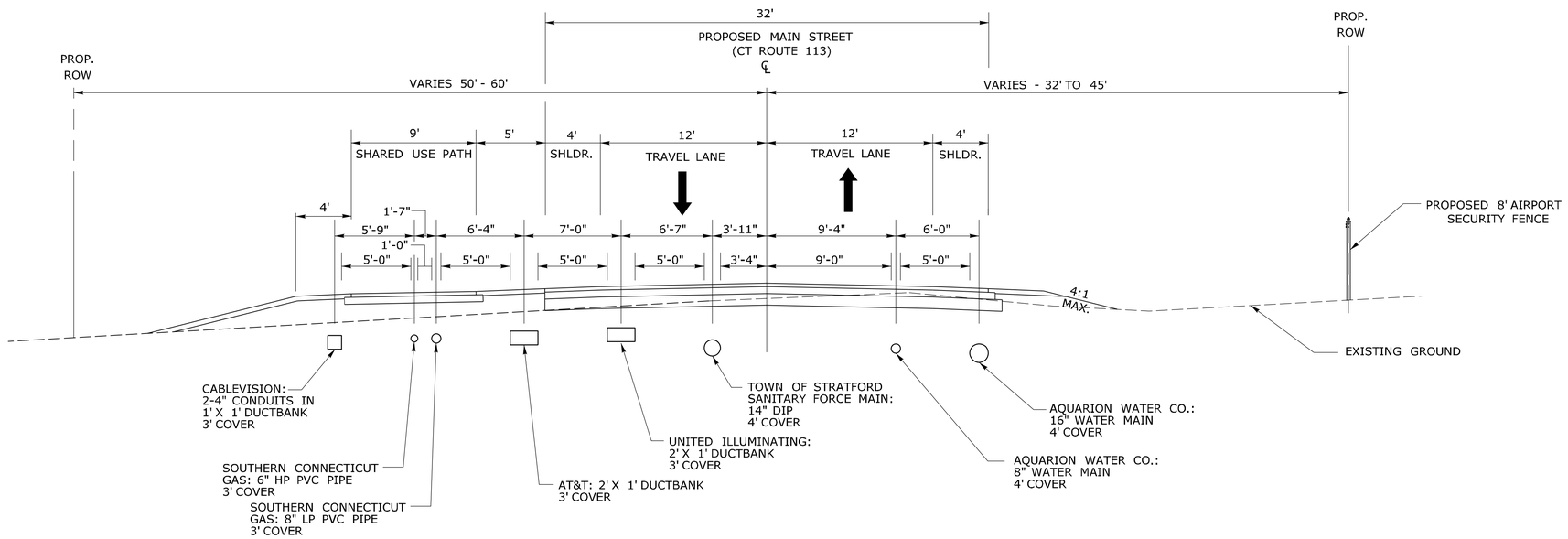

UTILITY TYPICAL SECTION
RELOCATED MAIN STREET (CT ROUTE 113)

REV.	DATE	REVISION DESCRIPTION	SHEET NO.

Plotted: 10/28/2013

DESIGNER/DRAFTER: S. HARLEY
CHECKED BY: S. MITCHELL
NOT TO SCALE

STATE OF CONNECTICUT
DEPARTMENT OF TRANSPORTATION

Filename: ...\HW_MSH_015-336_UTL-01.dgn

SIGNATURE/ BLOCK:
STATE OF CONNECTICUT · DONALD G. SICCARDI · No. 18589 · LICENSED · PROFESSIONAL ENGINEER
URS CORPORATION AES
500 ENTERPRISE DRIVE
ROCKY HILL, CT 06067

PROJECT TITLE:
RUNWAY SAFETY AREA PROJECT
IGOR I. SIKORSKY MEMORIAL AIRPORT

TOWN: STRATFORD

DRAWING TITLE: UTILITY TYPICAL SECTION

PROJECT NO. 15-336
DRAWING NO. UTL-5.01
SHEET NO. 05.002

NOTES:

1. AT&T WILL CONSTRUCT APPROX. 25' OF PROPOSED AT&T DUCTBANK AND MAKE ALL CONNECTIONS INTO MANHOLE #31. THE CONTRACTOR IS TO BEGIN THE PROPOSED AT&T DUCTBANK AT THE LOCATION SHOWN ON THE PLANS. THE CONTRACTOR SHALL COORDINATE TIE-IN WITH AT&T PRIOR TO DUCTBANK CONSTRUCTED BY CONTRACTOR

2. ALL SOUTHERN CONNECTICUT GAS UTILITY RELOCATIONS TO BE PERFORMED BY SOUTHERN CONNECTICUT GAS.

3. REMOVAL OF ALL EXISTING UTILITY CONDUITS WITHIN THE ABANDONED ROADWAY TO BE PERFORMED BY THE CONTRACTOR AFTER PROPOSED UTILITIES ARE RELOCATED AND ACTIVE, AND ONLY AFTER RECEIVING APPROVAL BY THE ENGINEER.

4. CABLEVISION WILL RELOCATE THEIR AERIAL LINES TO EXISTING UTILITY POLE #3385 AND MAKE ALL CONNECTIONS TO THE PROPOSED DUCTBANK

5. ALL CONCRETE MANHOLES, HANDHOLES, AND PVC CONDUIT WILL BE PROVIDED BY AND DELIVERED TO THE SITE BY AT&T, UI, AND CABLEVISION PRIOR TO INSTALLATION BY THE CONTRACTOR.

6. FOR AT&T VAULT CONTRACTOR SHALL EXCAVATE AND PLACE NEW PRECAST SPLIT BOTTOM CONCRETE MANHOLE (10'X5'X7'). EXCAVATE TO 11' BELOW PROPOSED ROADWAY FINISH ELEVATION. PLACE 12" COMPACTED PROCESS. SEAL CONDUITS INTO PLACE BY USING GROUT. PLACE NEW FRAME AND COVER AND ADJUST TO NEW ROAD ELEVATION. FOR DETAIL SEE DRAWING UTL-5.05.

7. THE CONTRACTOR SHALL REMOVE ALL LIGHT POLES, LIGHT STANDARDS, FOUNDATIONS, CABLE AND CONDUIT, AND LUMINAIRES WITHIN THE PARKING AREA THAT IS BEING DEEDED TO THE CITY OF BRIDGEPORT FROM THE FORMER ARMY ENGINE PLANT. THE LIGHT POLES, LIGHT STANDARDS, FOUNDATIONS, AND LUMINAIRES SHALL BE RETURNED TO THE ARMY ENGINE PLANT. COORDINATE THIS WORK WITH PETER SZYMANSKI, INSTALLATION MANAGER AT (203) 385-6600 OR (203) 395-7178 AT LEAST 2 WEEKS PRIOR TO BEGINNING THE WORK, FOR LOCATIONS OF DELIVERY AND FOR COORDINATING THE DE-ENERGIZING OF THE LIGHTING CIRCUITS. THE CONTRACTOR SHALL REPLACE THE CONDUIT AND CABLING NECESSARY TO COMPLETE ANY CIRCUITS CUT OFF BY THE REMOVAL OF THE LIGHTS.

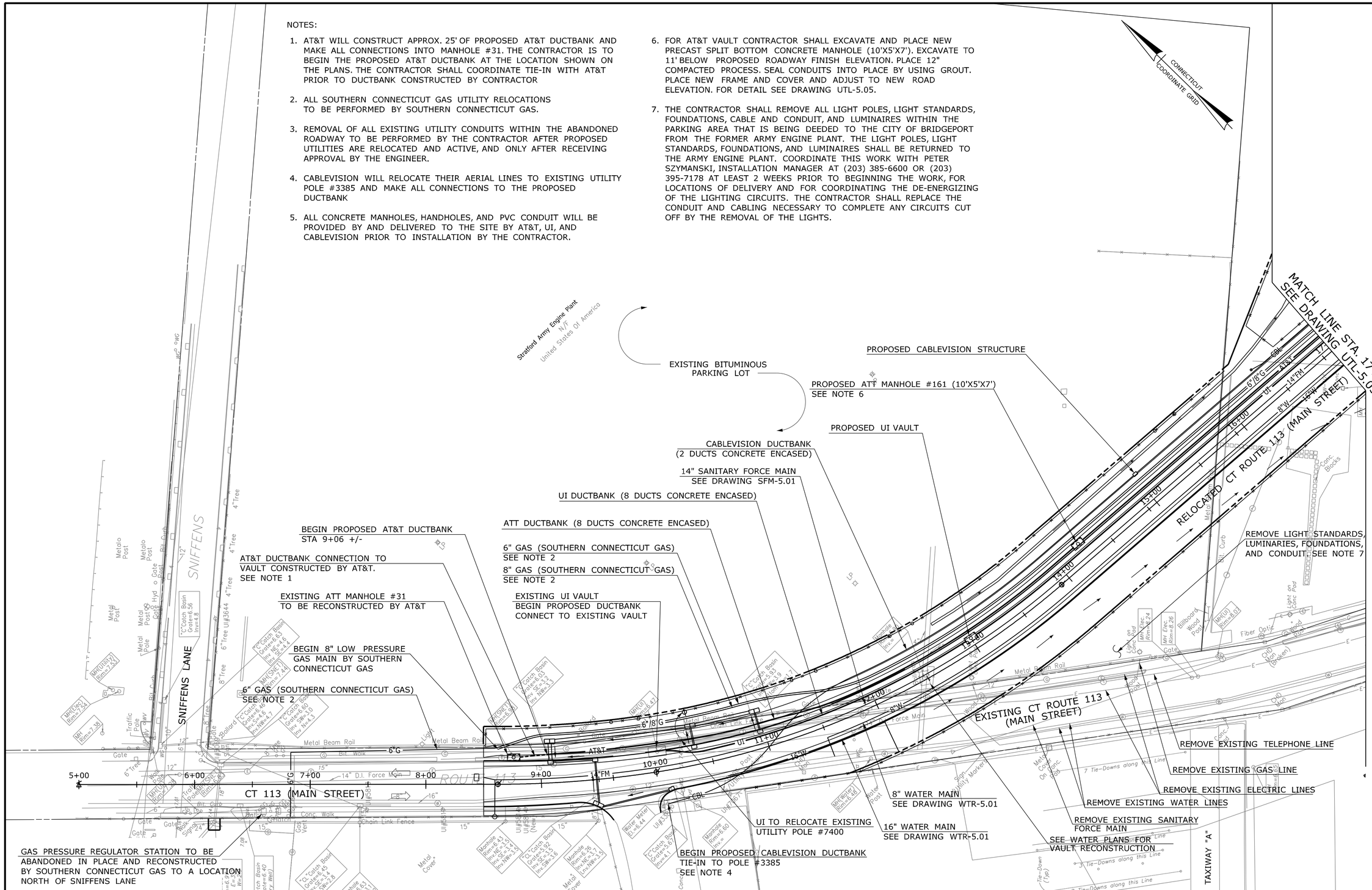

REV.	DATE	REVISION DESCRIPTION	SHEET NO.

Plotted: 11/1/2013

DESIGNER/DRAFTER: S. HARLEY
CHECKED BY: S. MITCHELL
SCALE IN FEET 0 40 80
SCALE 1"=40'

STATE OF CONNECTICUT
DEPARTMENT OF TRANSPORTATION

Filename: ...\HW_MSH_015-336_UTL-02.dgn

SIGNATURE/BLOCK: STATE OF CONNECTICUT DONALD G. SACCO No. 18589 LICENSED PROFESSIONAL ENGINEER
URS CORPORATION AES
500 ENTERPRISE DRIVE
ROCKY HILL, CT 06067

PROJECT TITLE:
RUNWAY SAFETY AREA PROJECT
IGOR. I. SIKORSKY MEMORIAL AIRPORT

TOWN: STRATFORD

DRAWING TITLE: UTILITY PLAN - 1

PROJECT NO. 15-336
DRAWING NO. UTL-5.02
SHEET NO. 05.003

NOTES:

1. ALL SOUTHERN CONNECTICUT GAS UTILITY RELOCATIONS TO BE PERFORMED BY SOUTHERN CONNECTICUT GAS.
2. REMOVAL OF ALL EXISTING UTILITY LINES TO BE PERFORMED BY THE CONTRACTOR AFTER PROPOSED UTILITIES ARERELOCATED AND ACTIVE, AND ONLY AFTER RECEIVING APPROVAL BY THE ENGINEER.
3. REMOVE EXISTING CABLEVISION VAULT ONCE THE PROPOSED LINE IS ACTIVE AND THE EXISTING CABLE HAS BEEN REMOVED.
4. FOR AT&T MANHOLE CONTRACTOR SHALL EXCAVATE AND PLACE NEW PRECAST SPLIT BOTTOM CONCRETE MANHOLE (10'X5'X7'). EXCAVATE TO 11' BELOW PROPOSED ROADWAY FINISH ELEVATION. PLACE 12" COMPACTED PROCESS. SEAL CONDUITS INTO PLACE BY USING GROUT. PLACE NEW FRAME AND COVER AND ADJUST TO NEW ROAD ELEVATION. FOR DETAIL SEE DRAWING UTL-5.05.

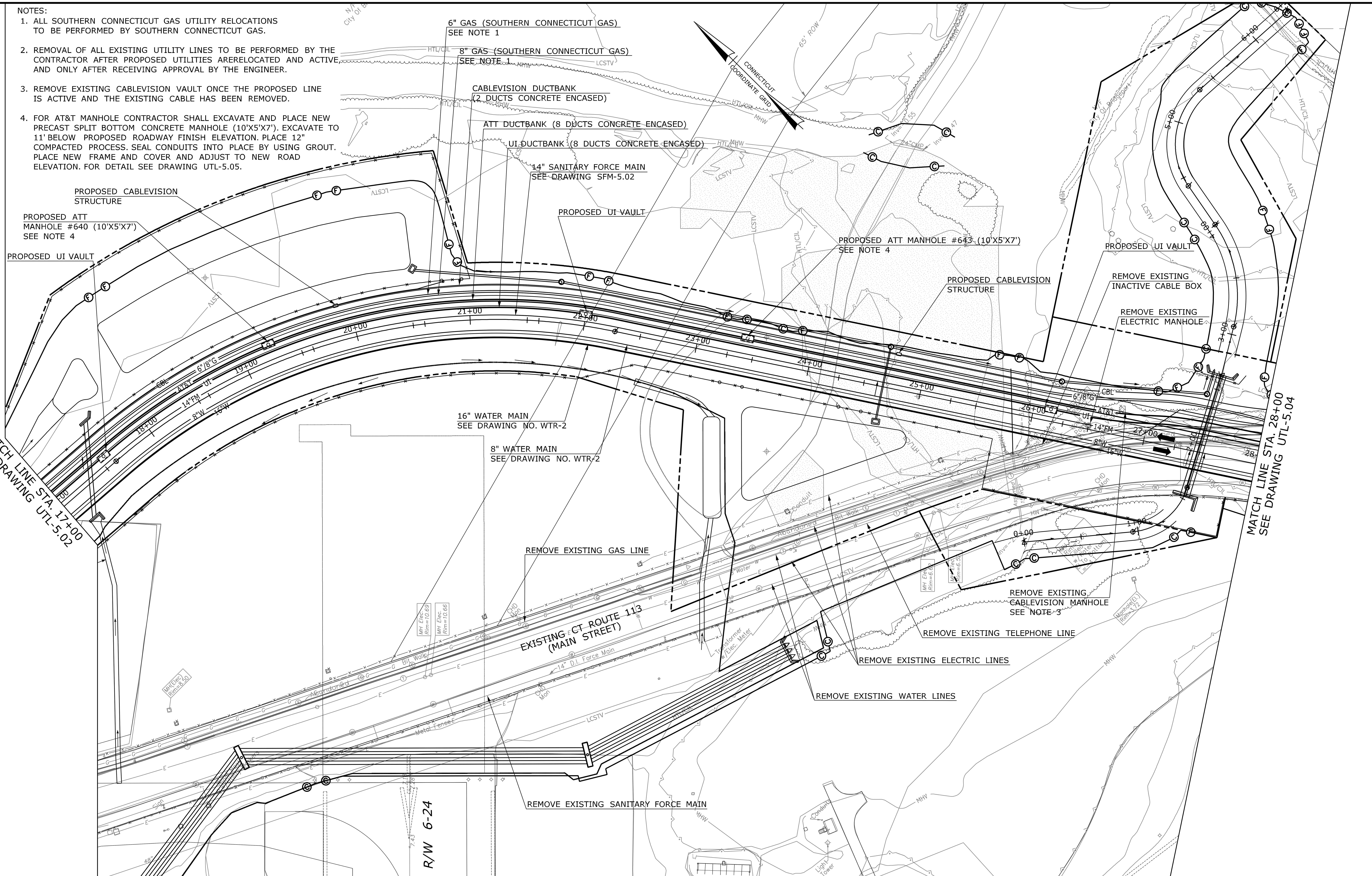

REV.	DATE	REVISION DESCRIPTION	SHEET NO.

Plotted: 2/4/2014

DESIGNER/DRAFTER: S. HARLEY

CHECKED BY: S. MITCHELL

SCALE IN FEET 0 40 80

SCALE 1"=40'

STATE OF CONNECTICUT
DEPARTMENT OF TRANSPORTATION

Filename: ...\HW_MSH_015-336_UTL-03.dgn

SIGNATURE/ BLOCK:

STATE OF CONNECTICUT RONALD G. SACCHI No. 18588 LICENSED PROFESSIONAL ENGINEER

URS CORPORATION AES
500 ENTERPRISE DRIVE
ROCKY HILL, CT 06067

PROJECT TITLE:

RUNWAY SAFETY AREA PROJECT
IGOR. I. SIKORSKY MEMORIAL AIRPORT

TOWN: STRATFORD

DRAWING TITLE: UTILITY PLAN - 2

PROJECT NO. 15-336

DRAWING NO. UTL-5.03

SHEET NO. 05.004

HW_MSH_015-336_UTL-03.dgn 2/4/2014 9:26:29 AM

NOTES:

1. AT&T WILL CONSTRUCT APPROX. 25' OF PROPOSED AT&T DUCTBANK AND MAKE ALL CONNECTIONS INTO AT&T MANHOLE #32. THE CONTRACTOR IS TO BEGIN THE PROPOSED AT&T DUCTBANK AT THE LOCATION SHOWN ON THE PLANS. THE CONTRACTOR SHALL COORDINATE TIE-IN WITH AT&T PRIOR TO DUCTBANK CONSTRUCTED BY CONTRACTOR
2. ALL SOUTHERN CONNECTICUT GAS UTILITY RELOCATIONS TO BE PERFORMED BY SOUTHERN CONNECTICUT GAS.
3. REMOVAL OF ALL EXISTING UTILITY CONDUIT WITHIN THE ABANDONED ROADWAY TO BE PERFORMED BY THE CONTRACTOR AFTER PROPOSED UTILITIES ARE RELOCATED AND ACTIVE, AND ONLY AFTER RECEIVING APPROVAL BY THE ENGINEER.

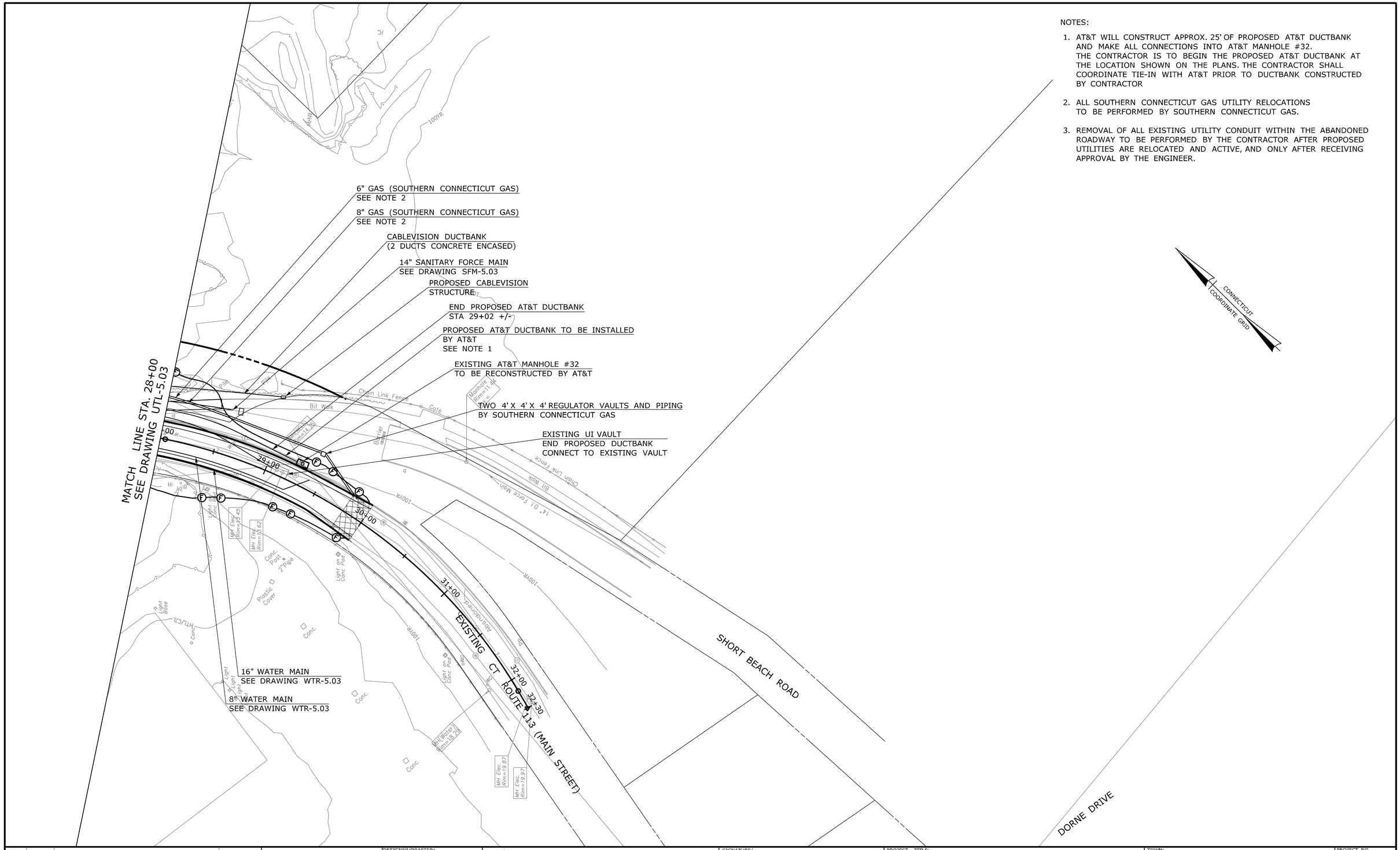

REV.	DATE	REVISION DESCRIPTION	SHEET NO.

Plotted: 10/28/2013

DESIGNER/DRAFTER: S. HARLEY
CHECKED BY: S. MITCHELL
SCALE IN FEET
0 40 80
SCALE 1"=40'

STATE OF CONNECTICUT
DEPARTMENT OF TRANSPORTATION

Filename: ...\HW_MSH_015-336_UTL-04.dgn

SIGNATURE/BLOCK:
STATE OF CONNECTICUT DONALD G. BACON No. 18586 LICENSED PROFESSIONAL ENGINEER
URS CORPORATION AES
500 ENTERPRISE DRIVE
ROCKY HILL, CT 06067

PROJECT TITLE:
RUNWAY SAFETY AREA PROJECT
IGOR. I. SIKORSKY MEMORIAL AIRPORT

TOWN: STRATFORD

DRAWING TITLE: UTILITY PLAN - 3

PROJECT NO. 15-336
DRAWING NO. UTL-5.04
SHEET NO. 05.005

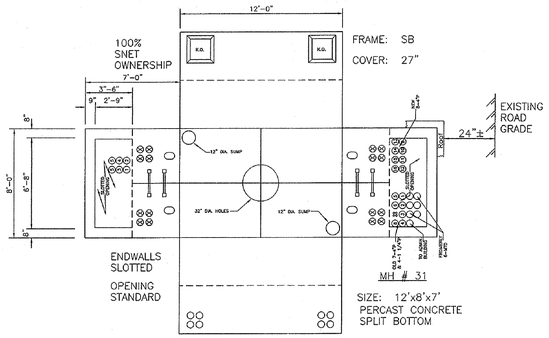

PRECAST 12'X8'X7' MANHOLE - #31
N.T.S.

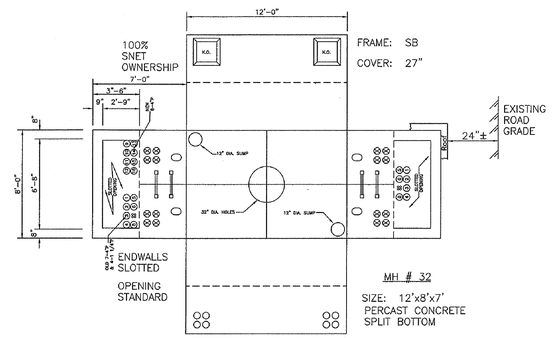

PRECAST 12'X8'X7' MANHOLE - #32
N.T.S.

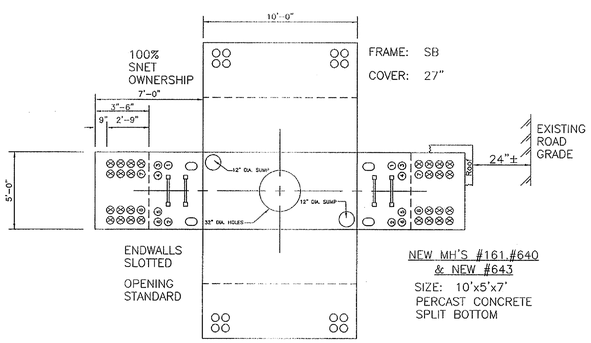

PRECAST 10'X5'X7' MANHOLE - NEW #161, #640, #643
N.T.S.

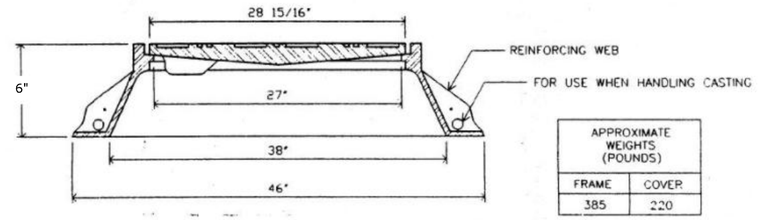

APPROXIMATE WEIGHTS (POUNDS)	
FRAME	COVER
385	220

SB - TYPE FRAME
N.T.S.

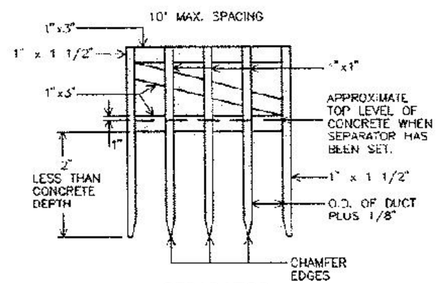

SEPARATOR
N.T.S.

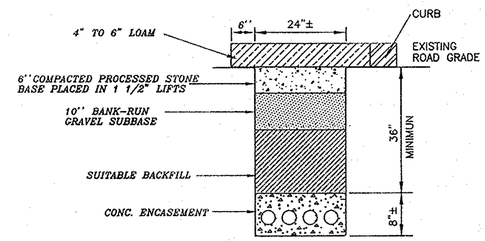

TYPICAL GRASS TRENCH DETAIL
N.T.S.

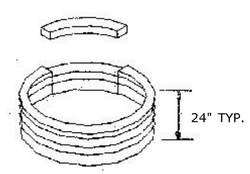

PRECAST CONCRETE RISER SEGMENTS
N.T.S.

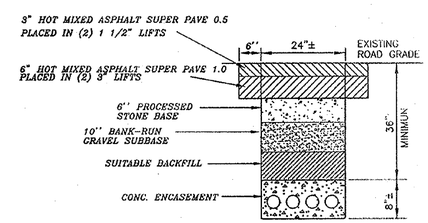

TYPICAL ROADWAY TRENCH DETAIL
N.T.S.

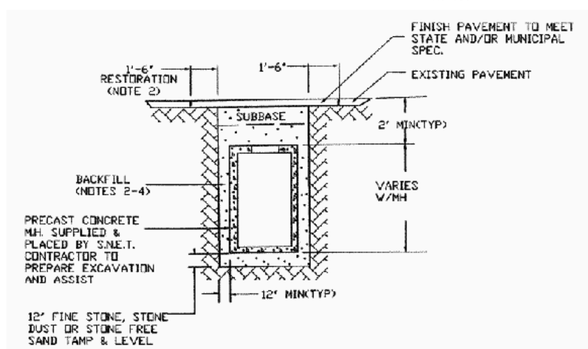

MANHOLE INSTALLATION
N.T.S.

AT&T DUCTBANK NOTES:

1. ALL MEASUREMENTS ARE APPROXIMATE. CONDUIT INSPECTOR TO VERIFY AND RECORD MEASUREMENTS REQUIRED FOR RECORDS.
2. THE LOCATIONS OF UNDERGROUND STRUCTURES SHOWN HEREIN ARE ACCORDING TO THE BEST AVAILABLE INFORMATION. THEY ARE NOT GUARANTEED TO BE CORRECT OR COMPLETE.
3. DO NOT DEVIATE FROM THESE PLANS WITHOUT FIRST CONTACTING THE AREA CONDUIT ENGINEERING GROUP: KENNETH L. SHERMAN @ (203)-238-0020
4. CONTRACTOR TO ARRANGE TO HAVE ALL UTILITIES VERIFY THEIR POSITIONS IN THE FIELD BEFORE STARTING EXCAVATIONS. UTILITY SERVICES TO PROPERTIES ARE NOT SHOWN ON THESE PLANS.
5. CONNECTICUT BUREAU OF HIGHWAYS PERMIT APPLIED FOR BY AREA CONDUIT ENGINEERING GROUP ON / / . CONDUIT INSPECTOR TO NOTIFY BUREAU OF HIGHWAYS 48 HOURS PRIOR TO START OF CONSTRUCTION. REFER TO PERMIT #
6. CONTRACTOR TO OBTAIN MUNICIPAL EXCAVATION PERMITS WHERE APPLICABLE.
7. PROTECT ALL TOWN, STATE, AND FEDERAL MONUMENTS AND BENCH MARKS. CONDUIT INSPECTOR TO CONTACT RESPECTIVE ENGINEERING DEPARTMENTS FOR TYPES AND LOCATIONS BEFORE STARTING WORK.
8. PROTECT ALL PLANTS AND TREES AND THEIR ROOT SYSTEMS FROM MECHANICAL AND ENVIRONMENTAL DAMAGE DURING EXCAVATION. BACK FILL ROOT AREAS WITH SOIL HAVING TEXTURE AND FERTILITY TO SUSTAIN PLANT LIKE. CONTRACTOR TO REMOVE ALL ROOTS OF DEAD STUMPS FROM TRENCH PRIOR TO PLACING CONDUIT.
9. THE FOLLOWING MINIMUM CLEARANCES SHALL BE MAINTAINED UNLESS OTHERWISE NOTED:

UTILITY	CROSSING	PARALLEL
GAS MAIN	12"	30"
GAS SERVICE	12"	12"
WATER MAIN	12"	18"
WATER SERVICE	12"	12"
ELECTRIC FACILITIES	12"	12"
STM & SAN. SEWERS	12"	12"

10. CONDUIT TO BE PLACED AT A MINIMUM OF 36" BELOW ELEVATION OF THE NEAREST PORTION OF THE ROAD PAVEMENT UNLESS OTHERWISE NOTED. MANHOLES TO HAVE A MINIMUM OF 24" COVER FROM NEAREST ROAD PAVEMENT UNLESS OTHERWISE NOTED.
11. CONDUIT INSPECTOR/CONSTRUCTION FOREMAN TO COMPLETE FORM 56 FOR ALL 4C AND/OR 4X WORK. REF TO BSP 004-517-010SN.
12. AT BENDS HAVING RADII OF 80 FEET OR LESS, OR AT GRADE CHANGES OF 20 PERCENT (11.3 DEGREES) OR MORE, PERMANENT SPACERS ARE REQUIRED TO PROVIDE A MINIMUM, HORIZONTAL AND VERTICAL SEPARATION OF 1 INCH BETWEEN ADJACENT DUCTS AND $1\frac{1}{2}$ INCHES MINIMUM CLEARANCE BETWEEN THE FIRST TIER OF DUCTS AND THE TRENCH BOTTOM.
13. ALL WORK IS TO CONFORM WITH APPLICABLE PROVISIONS OF THE NATIONAL ELECTRICAL SAFETY CODE, PUC DOCKET 8950 PUC DOCKET 9000, PUC DOCKET L0300, O.S.H.A. AND ANY AND ALL OTHER FEDERAL, STATE OR MUNICIPAL CODES OR LAWS THAT MAY APPLY. IN ADDITION, ALL WORK WITHIN THE LIMITS OF FEDERAL AND STATE HIGHWAY SHALL CONFORM TO CONNECTICUT BUREAU OF HIGHWAYS PERMITTEE MANUAL AND ALL PROVISIONS OF THE PERMIT(S) ISSUED BY THE CONNECTICUT BUREAU OF HIGHWAYS.
14. ALL CONDUIT AND MANHOLES SHALL BE INSTALLED IN ACCORDANCE WITH THE FOLLOWING SPECIFICATIONS (BELL SYSTEM PRACTICES) UNLESS OTHERWISE NOTED:

TESTING & VENTILATION OF MANHOLES	620-140-501SN
CONCRETE AND MANHOLE CONSTRUCTION	622-020-020
CONDUIT & MANHOLE-PRECAUTIONS	622-100-010
MAIN CONDUIT-STEEL PIPE	622-315-200
MAIN CONDUIT-TYPE 1 FIBER CONDUIT	622-325-200
MAIN CONDUIT-TYPE 11 FIBER CONDUIT	622-325-201
MAIN CONDUIT-B PLASTIC	622-340-200
MAIN CONDUIT-C PLASTIC	622-340-201
MANHOLE-IDENTIFICATION	622-500-020
MANHOLE-EQUIPPING	622-520-100
B FISHING KIT	649-325-101
SEALING DUCTS-CONDITIONS REQUIRING SEALS	628-220-200
16 FEET C.E.V. DESCRIPTION	622-506-050
16 FEET C.E.V.-INSTALLATION	622-506-225
16 FEET C.E.V.-OPERATION & MAINTENANCE	622-506-226

15. IN AREAS WHERE EXCAVATION IS IN ROCK LEDGE PROVIDE 6 INCH MINIMUM SELECT FILL CUSHION AROUND CONDUIT AND 12 INCH CUSHION AROUND MANHOLES. IT SHALL BE THE RESPONSIBILITY OF THE CONTRACTOR TO OBTAIN ANY AND ALL BLASTING PERMITS.
16. "UNUSEABLE" CONDUIT SCRAP SUCH AS CUT OFF ENDS, BROKEN OR SPLIT STOCK SHALL BE THE RESPONSIBILITY OF THE CONTRACTOR TO DISPOSE OF IN AN ENVIRONMENTALLY SAFE MANNER.
17. AT&T CONTRACTOR WILL BE RESPONSIBLE FOR THE FOLLOWING WORK ONLY. REBUILDING OF MANHOLES 31 & 32 AND CONNECTION ALL ASSOCIATED PIPING FROM 25' FROM MANHOLES (EXISTING STRUCTURES AND NEW.)
18. ALL DISTURBED AREAS OUTSIDE THE AT&T WORK AREA WILL BE RESTORED TO ITS ORIGINAL CONDITION OR BETTER.
19. CONTRACTOR MUST CONTACT "CALL BEFORE YOU DIG" (800)-922-4455 A MINIMUM OF 72 HOURS PRIOR TO ANY CONSTRUCTION.
20. ALL STATE AND AT&T CONTRACTS WILL BE PROVIDED AFTER PROJECT HAS BEEN AWARDED.

REV.	DATE	REVISION DESCRIPTION	SHEET NO.

Plotted: 10/28/2013

DESIGNER/DRAFTER: S. HARLEY
CHECKED BY: S. MITCHELL
SCALE AS NOTED

STATE OF CONNECTICUT
DEPARTMENT OF TRANSPORTATION

Filename: ...\HW_MSH_015-336_UTL-05.dgn

SIGNATURE/BLOCK:
STATE OF CONNECTICUT DONALD G. SACKOS No. 18586 LICENSED PROFESSIONAL ENGINEER
URS CORPORATION AES
500 ENTERPRISE DRIVE
ROCKY HILL, CT 06067

PROJECT TITLE:
RUNWAY SAFETY AREA PROJECT
IGOR I. SIKORSKY MEMORIAL AIRPORT

TOWN: STRATFORD

DRAWING TITLE:
UTILITY DETAILS
AT&T DUCTBANK DETAILS

PROJECT NO. 15-336
DRAWING NO. UTL-5.05
SHEET NO. 05.006

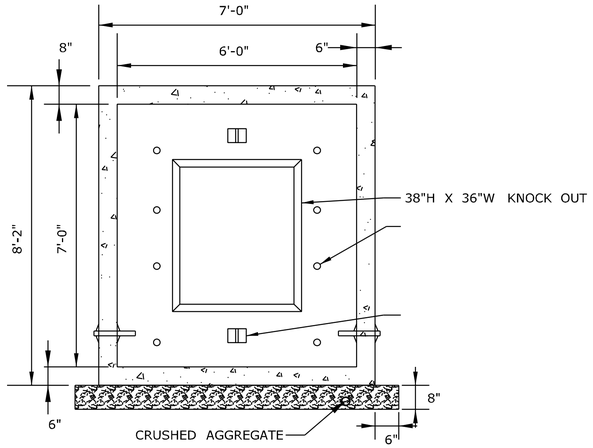

NOTES:

1. CONCRETE - 28 DAY MINIMUM 500 PSI STRENGTH PER ACI 318.
2. MANHOLE DESIGNED FOR AASHTO HS20 LIVE LOADING.
3. REINFORCING BARS PER ASTM A615, GRADE 40/60. WIRE MESH PER ASTM A185/A497.
4. MANUFACTURER'S NAME CLEARLY MARKED AND VISIBLE.
5. WEIGHT - 9 TONS PER SECTIONS.
6. APPROVED SUPPLIERS - ARROW, UNITED.
7. SUMP GRATES SHALL BE SUPPLIED WITH ALL UI SPICE CHAMBERS: SIZED AT $12\frac{5}{8}$" DIAMETER FOR A #10 PIPE SIZE, OR EQUAL.
8. THERE IS A GROUND TESTING REQUIREMENT OF 5 OHMS. THE RESULTS OF THIS TEST AT EACH MANHOLE ARE TO BE PROVIDED TO UI.

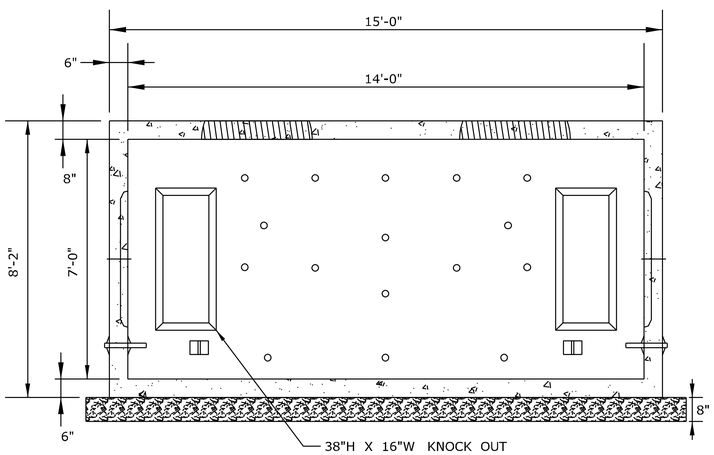

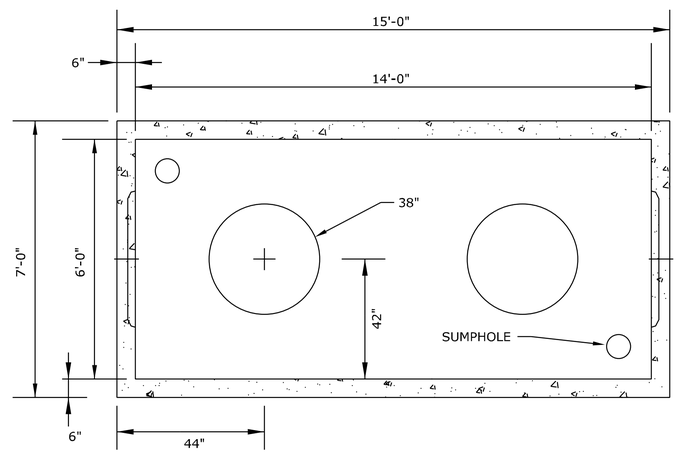

UI PRECAST CONCRETE ELECTRIC VAULT 6'x14'
N.T.S.

UI ELECTRICAL DUCTBANK GENERAL NOTES:

1. UI TEMPORARY POLE LINE AND TEMPORARY AERIAL CABLES SHALL BE PROVIDED, INSTALLED AND REMOVED BY UI.
2. ALL TEMPORARY OVERHEAD CONSTRUCTION TO BE REMOVED ONCE MANHOLE AND CONDUIT SYSTEM ALONG MAIN STREET ARE IN SERVICE.
3. UI DUCTBANK AND MANHOLES SHALL BE PROVIDED AND INSTALLED BY CONTRACTOR.
4. UI CABLE, CABLE CONNECTIONS, AND CABLE SPLICING TO BE PROVIDED AND INSTALLED BY UI.
5. CONTRACTOR SHALL COORDINATE ALL ACTIVITIES WITH UI.
6. ALL DUCT BANKS SHALL BE FORMED ON SIDES WITH $\frac{3}{4}$" PLYWOOD.
7. DUCT BANKS SHALL BE PITCHED TOWARD MANHOLES, TO THE EXTENT POSSIBLE.
8. WHERE EXISTING UTILITIES ARE LIKELY TO BE ENCOUNTERED, CONTRACTOR SHALL HAND DIG AND PROTECT EXISTING UTILITIES.
9. FILL UNDER PAVED AREAS, SIDEWALKS, WALLS, ETC. TO BE COMPACTED TO 95% MAXIMUM DENSITY (ASTM D1557).
10. ALL COUNDUIT IN DUCTBANKS SHALL BE NEMA TC-6&8, ASTM F-512 FOR USE WITH 90° CONDUCTORS, TYPE DB-60. ALL FITTINGS TO BE FROM THE SAME MANUFACTURER AS THE CONDUIT AND BE NEMA TC-9.
11. ALL SWEEPS AND RISER CONDUITS SHALL BE NEMA TC-6&8, ASTM F-512 FOR USE WITH 90° CONDUCTORS, TYPE DB-60. ALLFITTINGS TO BE FROM THE SAME MANUFACTURER AS THE CONDUIT AND BE NEMA TC-9.
12. ALL DUCTBANKS SHALL BE CONCRETE ENCASED.
13. ALL "SPARE" OR UNUSED CONDUITS SHALL BE PROVIDED WITH A$\frac{3}{8}$" NYLON DRAG LINE.
14. CONTRACTOR SHALL TERMINATE DUCTBANK AT UTILITY POLES WITH CAPPED RISERS 18" ABOVE GRADE. UI SHALL INSTALL RISERS UP UTILITY POLES.
15. ALL UI CONDUIT ENTERING UI MANHOLES/SPLICING CHAMBERS SHALL ENTER THE STRUCTURE STRAIGHT FOR A MINIMUM OF 20' AND PARALLEL TO THE STRUCTURE SIDE WALLS.

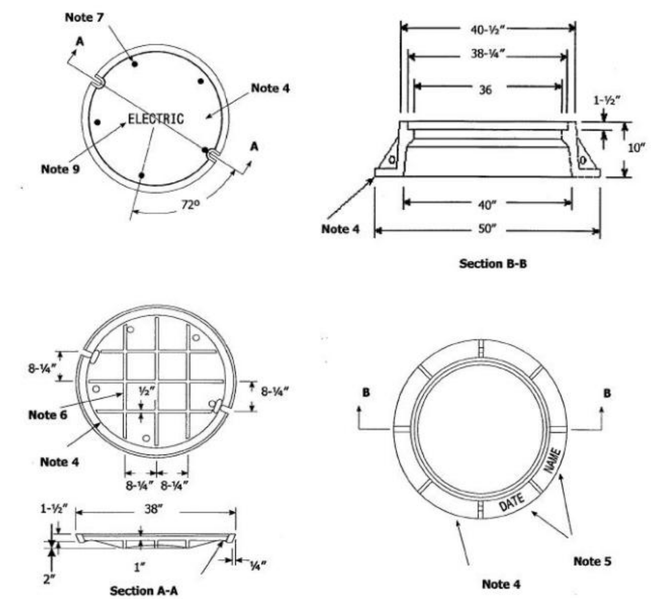

Notes:

1. Meets AASHTO HS20 loading requirements.
2. For use with 38" cover.
3. Cast iron in accordance with ASTM A48, Class 30B.
4. Approximate weights: Frame 550 lbs., Cover 365 lbs.
5. Company name & year of manufacture on frame and underside of cover.
6. Ribs of cover tapered from ½" to ¾".
7. Five 1-¼" holes, 5" from edge and 72° apart.
8. Lifting notch adjacent to pick holes.
9. "ELECTRIC" letters to be 2-½" high.

UI MANHOLE FRAME & COVER
N.T.S.

REV.	DATE	REVISION DESCRIPTION	SHEET NO.

Plotted: 11/1/2013

DESIGNER/DRAFTER: S. HARLEY
CHECKED BY: S. MITCHELL
SCALE AS NOTED

STATE OF CONNECTICUT
DEPARTMENT OF TRANSPORTATION

Filename: ...\HW_MSH_015-336_UTL-06.dgn

SIGNATURE/BLOCK:
STATE OF CONNECTICUT DONALD G. BACON No. 18599 LICENSED PROFESSIONAL ENGINEER
URS CORPORATION AES
500 ENTERPRISE DRIVE
ROCKY HILL, CT 06067

PROJECT TITLE:
RUNWAY SAFETY AREA PROJECT
IGOR I. SIKORSKY MEMORIAL AIRPORT

TOWN: STRATFORD

DRAWING TITLE:
UTILITY DETAILS
UI ELECTRICAL DETAILS

PROJECT NO. 15-336
DRAWING NO. UTL-5.06
SHEET NO. 05.007

HW_MSH_015-336_UTL-06.dgn 11/1/2013 12:43:38 PM

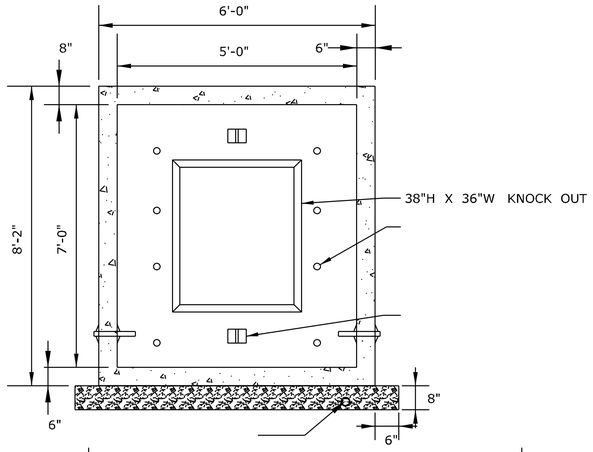

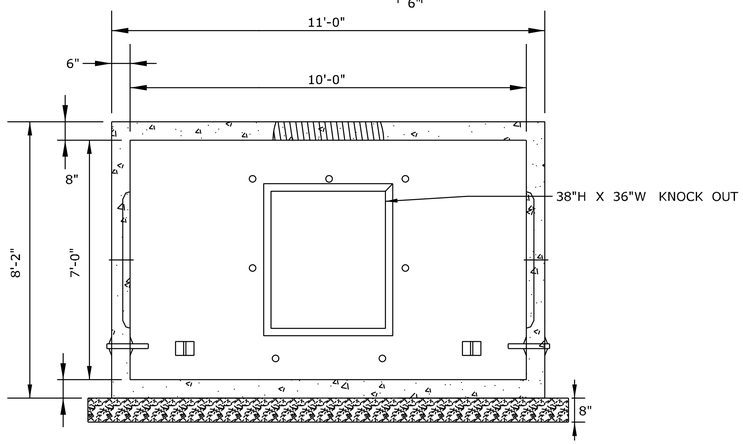

NOTES:

1. CONCRETE - 28 DAY MINIMUM 500 PSI STRENGTH PER ACI 318.
2. MANHOLE DESIGNED FOR AASHTO HS20 LIVE LOADING.
3. REINFORCING BARS PER ASTM A615, GRADE 40/60. WIRE MESH PER ASTM A185/A497.
4. MANUFACTURER'S NAME CLEARLY MARKED AND VISIBLE.
5. WEIGHT - 9 TONS PER SECTIONS.
6. APPROVED SUPPLIERS - ARROW, UNITED.
7. SUMP GRATES SHALL BE SUPPLIED WITH ALL UI SPICE CHAMBERS: SIZED AT $12\frac{5}{8}$" DIAMETER FOR A #10 PIPE SIZE, OR EQUAL.
8. THERE IS A GROUND TESTING REQUIREMENT OF 5 OHMS. THE RESULTS OF THIS TEST AT EACH MANHOLE ARE TO BE PROVIDED TO UI.

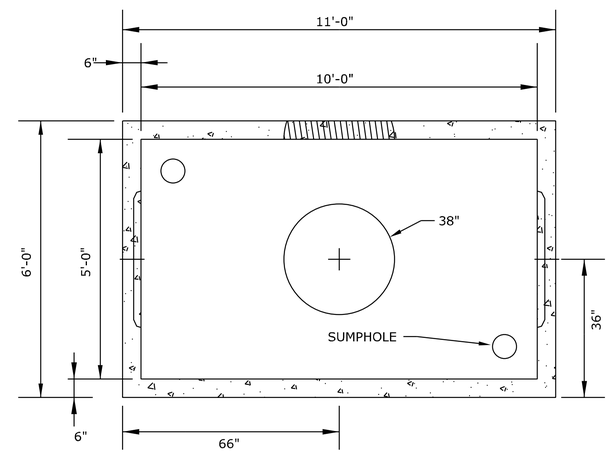

UI PRECAST CONCRETE ELECTRIC MANHOLE 5'x10'
N.T.S.

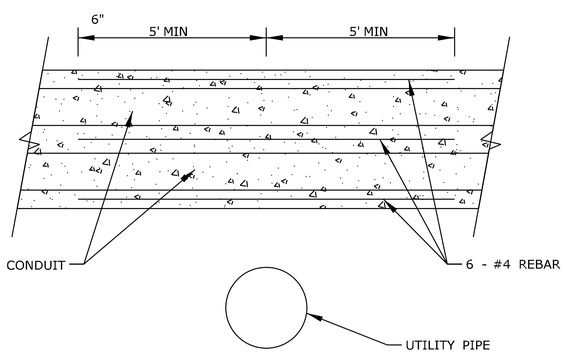

NOTE:
UTILIZE UI DUCTBANK UTILITY CROSSING DETAIL WHENEVER CROSSING OVER A WATER MAIN OR A UTILITY PIPE GREATER THAN 6" DIAMETER.

UI DUCTBANK UTILITY CROSSING
N.T.S.

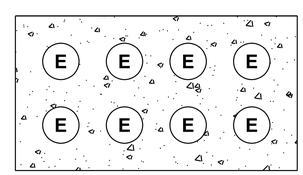

4x2 PRIMARY ELECTRICAL DUCTBANK
N.T.S.

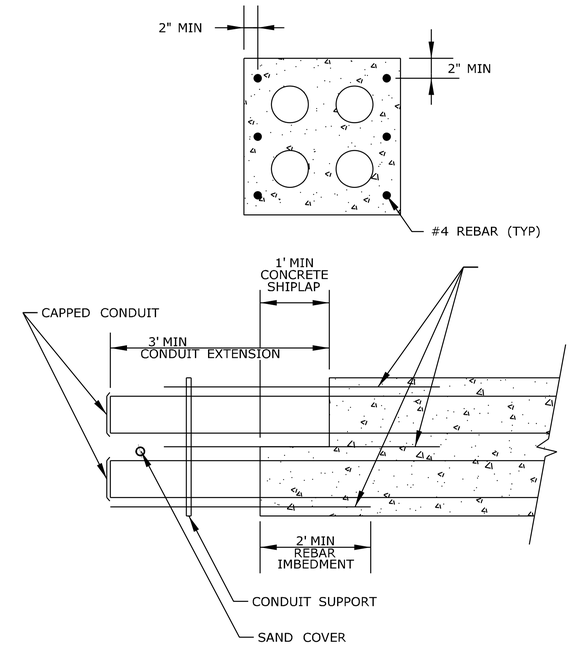

NOTE:
UTILIZE UI DUCTBANK CONCRETE TERMINATION DETAIL WHENEVER A COLD JOINT IN THE CONCRETE ENCASEMENT IS ANTICIPATED.

UI DUCTBANK CONCRETE TERMINATION
N.T.S.

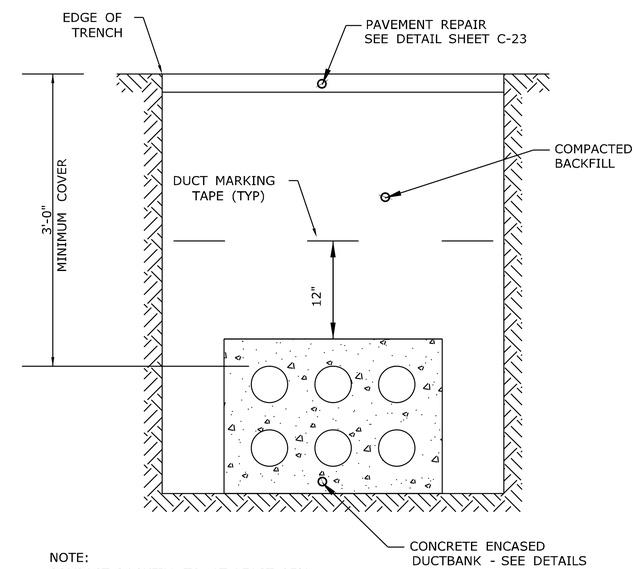

NOTE:
COMPACT BACKFILL TO AT LEAST 95% OF MAXIMUM DENSITY PER ASTM D-1557

TYPICAL UI DUCTBANK TRENCH SECTION
N.T.S.

REV.	DATE	REVISION DESCRIPTION	SHEET NO.

Plotted: 10/28/2013

DESIGNER/DRAFTER: S. HARLEY
CHECKED BY: S. MITCHELL
SCALE AS NOTED

STATE OF CONNECTICUT
DEPARTMENT OF TRANSPORTATION

Filename: ...\HW_MSH_015-336_UTL-07.dgn

SIGNATURE/BLOCK:
STATE OF CONNECTICUT · DAVID B. SCHAFER · No. 18598 · LICENSED · PROFESSIONAL ENGINEER
URS CORPORATION AES
500 ENTERPRISE DRIVE
ROCKY HILL, CT 06067

PROJECT TITLE:
RUNWAY SAFETY AREA PROJECT
IGOR I. SIKORSKY MEMORIAL AIRPORT

TOWN: STRATFORD

DRAWING TITLE:
UTILITY DETAILS
UI ELECTRICAL DETAILS

PROJECT NO. 15-336
DRAWING NO. UTL-5.07
SHEET NO. 05.008

FCA304818T-00006

FIBERGLASS / POLYMER CONCRETE ASSEMBLY

30" x 48" x 18"
(For actual dimensions see drawing)

Fiberglass / Polymer Concrete Assembly, Tapered Sides, No Floor, WUC 3.6-"20K," 3/8" Hex Bolts, Standard Nameplate (Specify at time of order) Installed

LOAD RATINGS
Incidental Traffic - Parking Lot, Sidewalk
Conforms to:
- WUC 3.6
- ASTM C 857
- ANSI/SCTE 77

FEATURES:
- USDA/RUS Approved
- Drop-In nameplate
- Shipped assembled
- Skid resistant cover
- Stainless steel bolts
- Cast-in floating nut box
  - Integral drain holes

Additional product information continued on the reverse

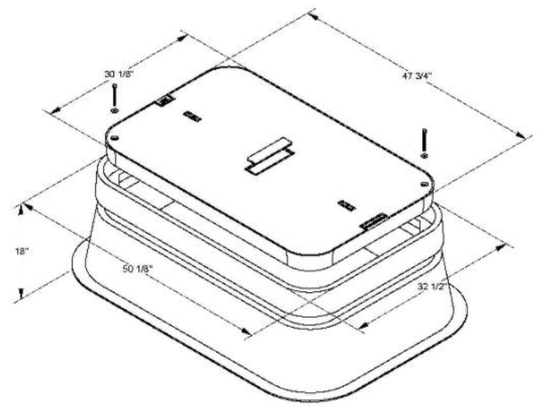

newbasis
Composites for Infrastructure
2628 Kansas Avenue
Riverside, California 92507
951.787.0600
951.787.0632 (fax)
info@newbasis.com
newbasis.com

Inside Dimensions

Length	Width	Depth
45 1/2"	27 7/8"	15"
54 1/8"	37"	

REV: A

FCA304818T-00006 FIBERGLASS / POLYMER CONCRETE ASSEMBLY

newbasis

Fiberglass / Polymer Concrete Assembly, Tapered Sides, No Floor, WUC 3.6-"20K," 3/8" Hex Bolts, 1 Piece Cover, Standard Nameplate (Specify at time of order) Installed

AVAILABLE OPTIONS

- ☑ Tapered Sides
- ☐ Penta Bolts
- ☐ Telephone EMS
- ☐ Power EMS
- ☐ Racks (2)
- ☐ Knockouts
- ☐ Floor
- ☐ 2 Piece Cover
- ☐ Custom Nameplate Installed
- ☐ Custom Nameplate Shipped Separately
- ☑ Standard Nameplate Installed
- ☐ Standard Nameplate Shipped Seperately

☑ - Indicates a selected option

MATERIAL PROPERTIES AND ATTRIBUTES

Compressive Strength
Polymer Concrete - **87 MPa**
FRP - **134 MPa**
Per ASTM D695/D3410

Flexural Strength
Polymer Concrete - **29 MPa**
FRP - **116 MPa**
Per ASTM D790

Coefficient of Friction (Dry)
1.085
Per ASTM C1028

Polymer Concrete
- Advanced composite: Very high strength to weight ratio
- Non-metallic
- Non-conductive
- UV Resistant
- High impact resistant
- Impervious to chemicals and moisture

Materials tested in accordance with ASTM D-543 and ASTM D-570

NAMEPLATES

One standard nameplate included with each assembly, installed at the factory or easily installed in the field. Custom nameplates are available. Contact customer service.

Standard Nameplates
- Electric
- Telephone
- Fiber Optic
- Water
- Irrigation Control Valve
- Broadband
- Traffic
- CATV
- Traffic Signal
- Communications

WEIGHTS AND SHIPPING

COVER WEIGHT: 203 lbs.

BOX WEIGHT: 218 lbs.

ASSEMBLY WEIGHT: 421 lbs.

LOADED PALLET WEIGHT: 2290 lbs.

Standard shipping includes van delivery of pallet quantities to the lower 48 states. Partial pallet quantities and flat bed shipping available at an additional cost.

30" x 48" x 18" For actual dimensions, see drawing on front side.

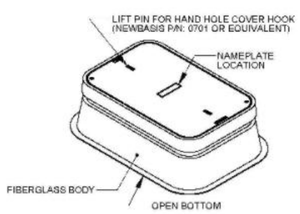

Rev: A

PACKAGING (Steel Banding, Edge Protection)

PALLET QUANTITY: 5

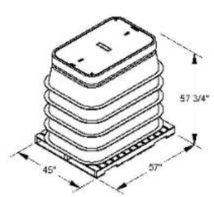

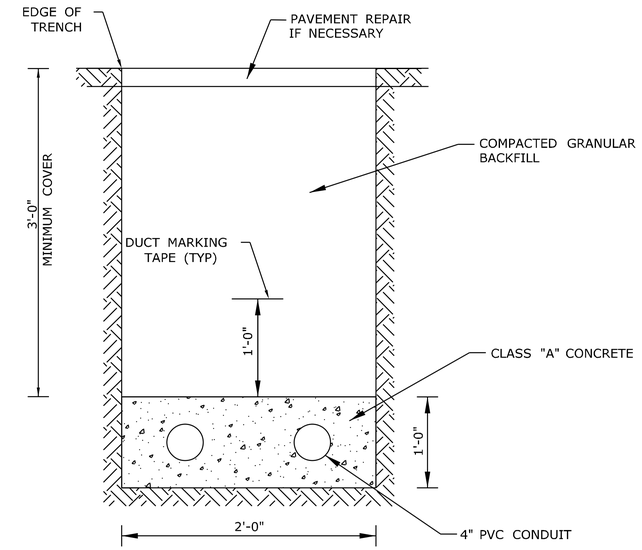

NOTE:
COMPACT BACKFILL TO AT LEAST 95% OF MAXIMUM DENSITY PER ASTM D-1557

TYPICAL CABLEVISION DUCTBANK TRENCH SECTION
N.T.S.

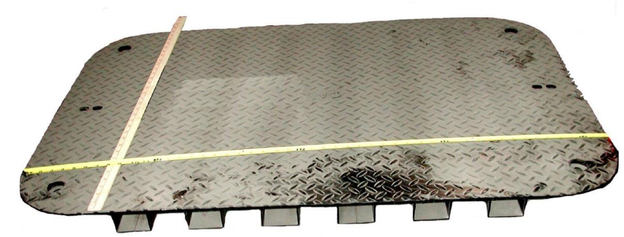

ITEM # 15265

VAULT COVER STEEL FOR 30" X 48"
4 BOLT MARKED CATV, 2 OK LOADING
(STC304801B04)

U/M EA

NOTE:
ALL PVC CONDUIT, VAULT STRUCTURES, AND STEEL VAULT COVER LIDS WILL BE SUPPLIED ON SITE BY CABLEVISION.

REV.	DATE	REVISION DESCRIPTION	SHEET NO.

Plotted: 10/28/2013

DESIGNER/DRAFTER: S. HARLEY
CHECKED BY: S. MITCHELL
SCALE AS NOTED

STATE OF CONNECTICUT
DEPARTMENT OF TRANSPORTATION

Filename: ...\HW_MSH_015-336_UTL-08.dgn

SIGNATURE/BLOCK:
STATE OF CONNECTICUT · RONALD G. BACON · No. 18589 · LICENSED · PROFESSIONAL ENGINEER
URS CORPORATION AES
500 ENTERPRISE DRIVE
ROCKY HILL, CT 06067

PROJECT TITLE:
RUNWAY SAFETY AREA PROJECT
IGOR I. SIKORSKY MEMORIAL AIRPORT

TOWN: STRATFORD

DRAWING TITLE:
UTILITY DETAILS
CABLEVISION DETAILS

PROJECT NO. 15-336
DRAWING NO. UTL-5.08
SHEET NO. 05.009

NOTES:

1. SEE SFM-5.04 FOR SEQUENCE OF CONSTRUCTION.

LEGEND

6"G	PROPOSED 6" GAS
AT&T	PROPOSED AT&T DUCTBANK
UI	PROPOSED UI DUCTBANK
14"FM	PROPOSED 14" FORCE MAIN
8"W	PROPOSED 8" WATER MAIN
16"W	PROPOSED 16" WATER MAIN
CBL	PROPOSED CABLE TV
X	ABANDON PIPE IN PLACE
X	REMOVE EXISTING PIPE

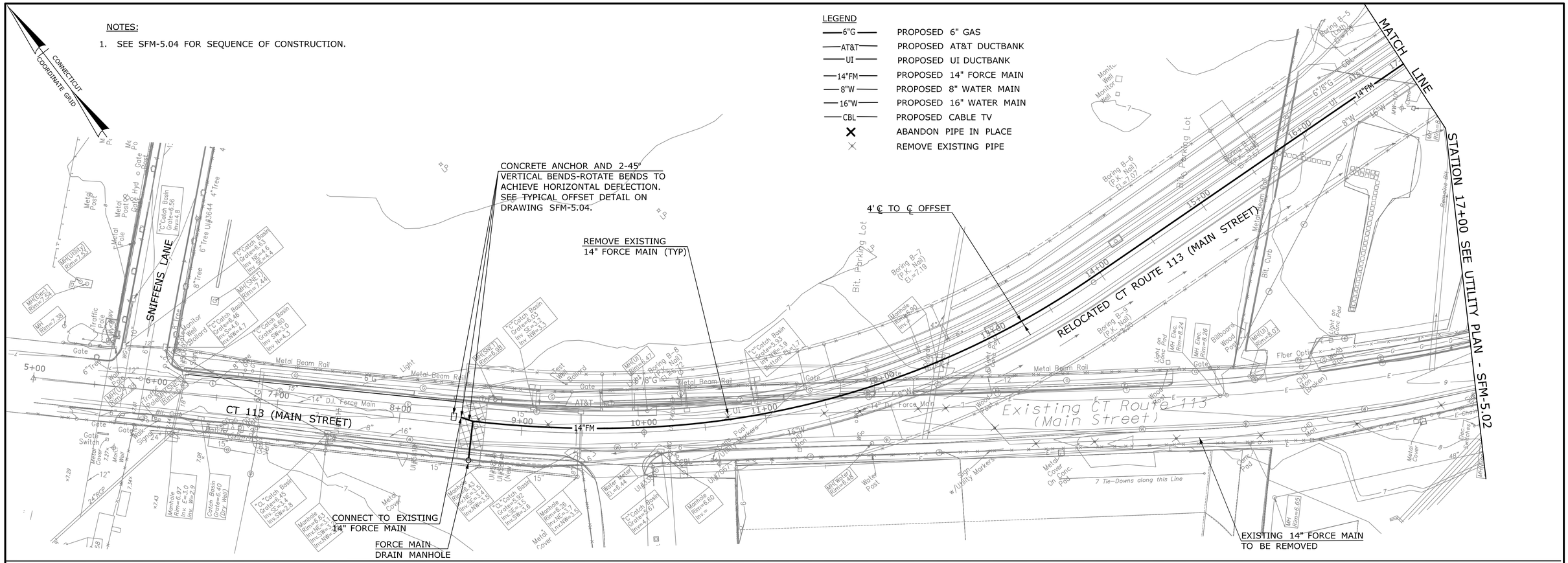

NOTES:

1. PROVIDE A MAXIMUM OF 2° DEFLECTION AT EACH PIPE JOINT TO ACHIEVE HORIZONTAL ALIGNMENT.
2. PROVIDE CONSTANT SLOPE DOWN FROM STATION 28+55 TO LOW POINT AT STATION 8+60.
3. PROFILE STATIONING REFERS TO THE CENTERLINE OF PROPOSED ROADWAY. FORCEMAIN IS OFFSET LEFT OF THE ROADWAY CENTERLINE.
4. ALL PIPE AND FITTINGS SHALL BE DUCTILE IRON CLASS 52, DOUBLE CEMENT LINED AND POLY WRAPPED.
5. ALL PIPE AND FITTINGS SHALL HAVE RESTRAINED JOINTS.

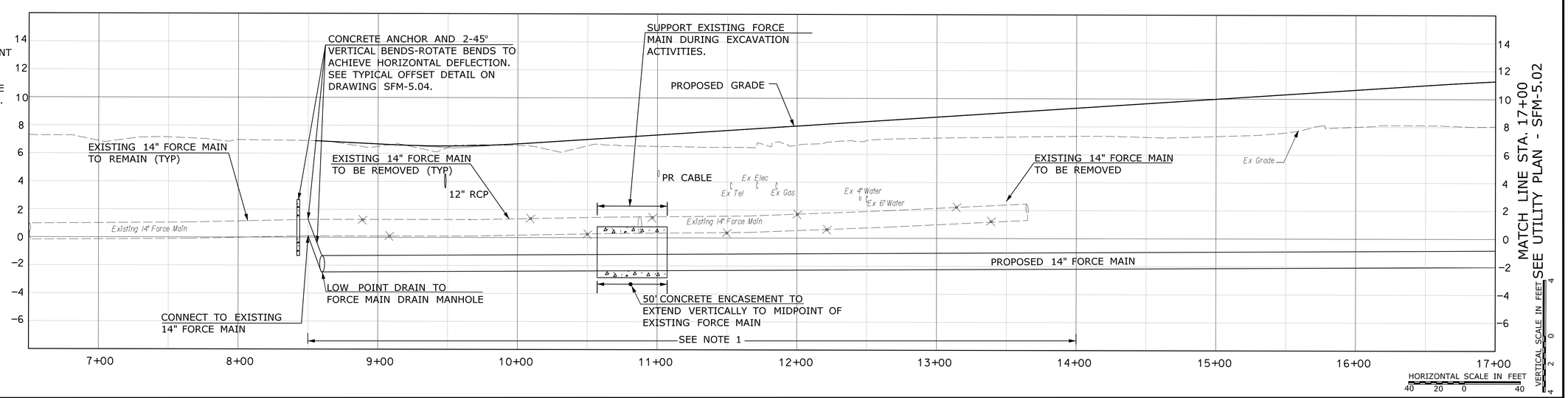

REV.	DATE	REVISION DESCRIPTION	SHEET NO.

Plotted: 12/16/2013

DESIGNER/DRAFTER: B.ANNU
CHECKED BY: P.SAMMIS
SCALE IN FEET 0 40 80
SCALE 1"=40'

STATE OF CONNECTICUT
DEPARTMENT OF TRANSPORTATION

Filename: ...\V-05..Utilities\Sheets\C-01.dgn

SIGNATURE/BLOCK:
STATE OF CONNECTICUT DONALD G. SACCO No. 18589 LICENSED PROFESSIONAL ENGINEER
URS CORPORATION AES
500 ENTERPRISE DRIVE
ROCKY HILL, CT 06067

PROJECT TITLE:
RUNWAY SAFETY AREA PROJECT
IGOR. I. SIKORSKY MEMORIAL AIRPORT

TOWN: STRATFORD

DRAWING TITLE: 14" FORCE MAIN PLAN & PROFILE - 1

PROJECT NO. 15-336
DRAWING NO. SFM-5.01
SHEET NO. 05.010

Border Version: 10/19/07

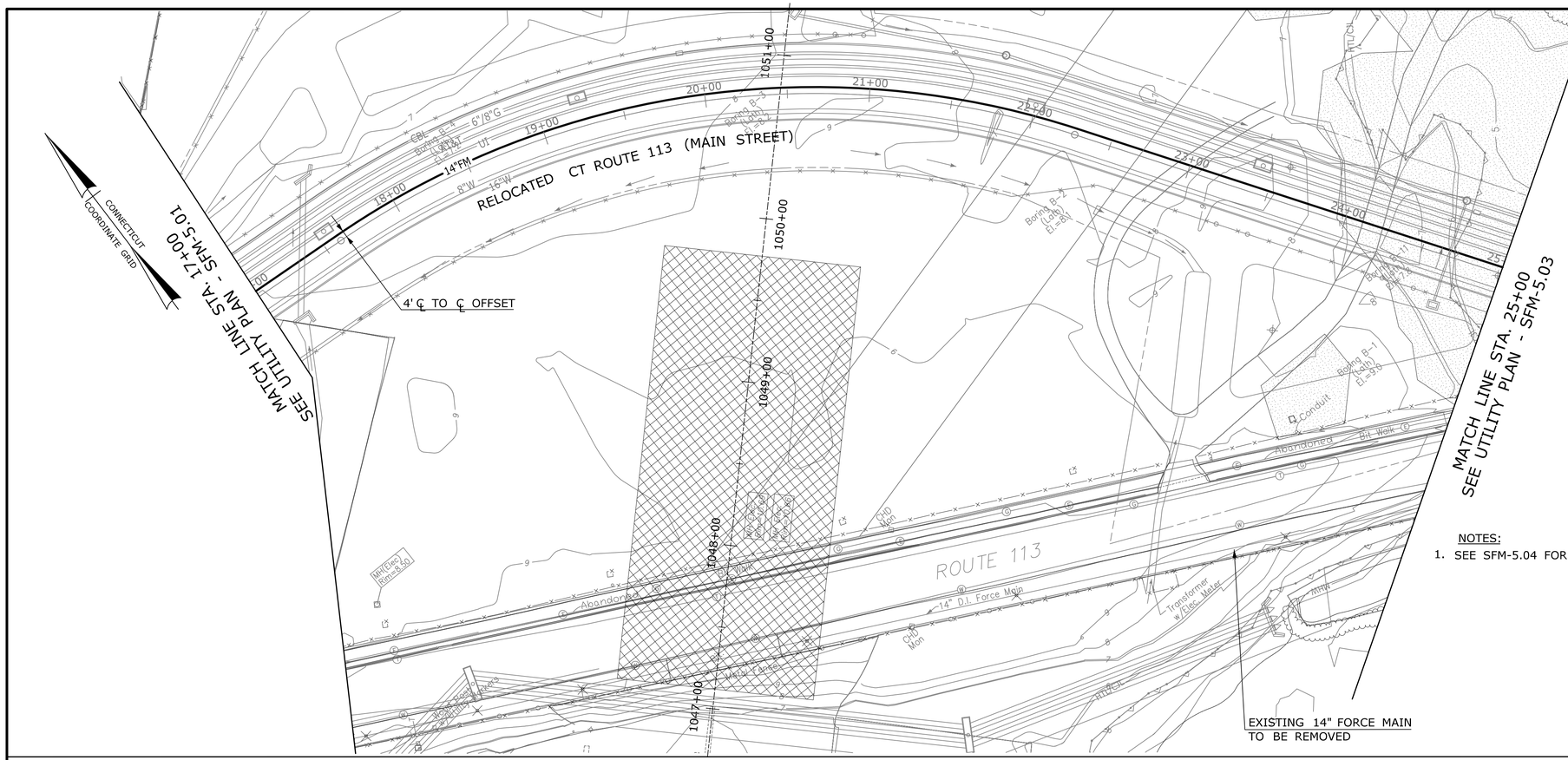

LEGEND

6"G	PROPOSED 6" GAS
AT&T	PROPOSED AT&T DUCTBANK
UI	PROPOSED UI DUCTBANK
14"FM	PROPOSED 14" FORCE MAIN
8"W	PROPOSED 8" WATER MAIN
16"W	PROPOSED 16" WATER MAIN
CBL	PROPOSED CABLE TV
X	ABANDON PIPE IN PLACE
X	REMOVE EXISTING PIPE

NOTES:

1. SEE SFM-5.04 FOR SEQUENCE OF CONSTRUCTION.

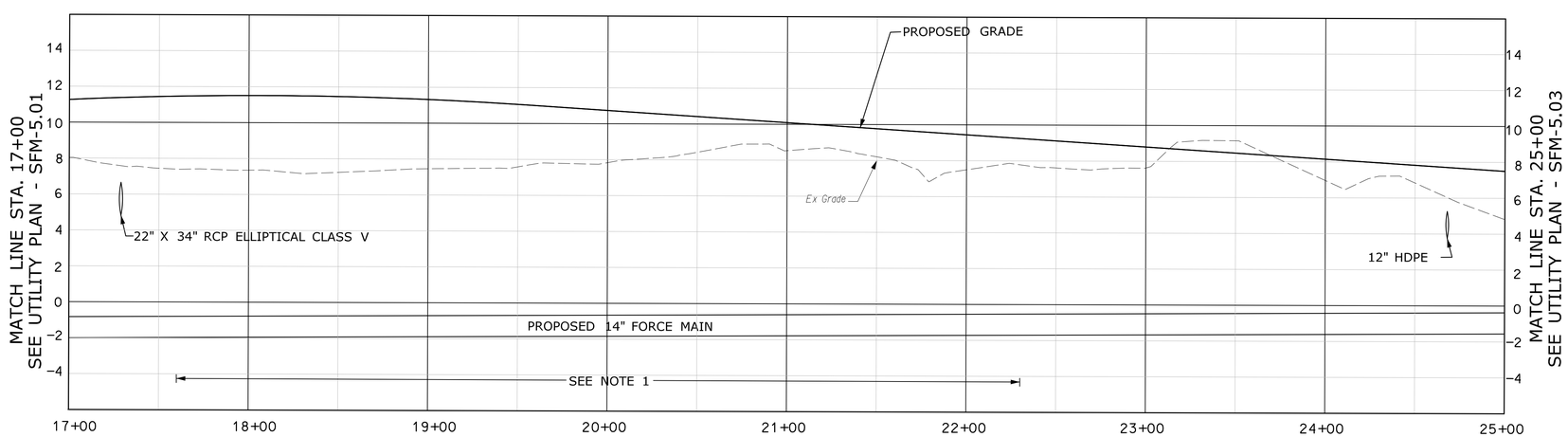

NOTES:

1. PROVIDE A MAXIMUM OF 2° DEFLECTION AT EACH PIPE JOINT TO ACHIEVE HORIZONTAL ALIGNMENT.
2. PROVIDE CONSTANT SLOPE DOWN FROM STATION 28+55 TO LOW POINT AT STATION 8+60.
3. PROFILE STATIONING REFERS TO THE CENTERLINE OF PROPOSED ROADWAY. FORCEMAIN IS OFFSET LEFT OF THE ROADWAY CENTERLINE.
4. ALL PIPE AND FITTINGS SHALL BE DUCTILE IRON CLASS 52, DOUBLE CEMENT LINED AND POLY WRAPPED.
5. ALL PIPE AND FITTINGS SHALL HAVE RESTRAINED JOINTS.

HORIZONTAL SCALE IN FEET
40 20 0 40

VERTICAL SCALE IN FEET
4 2 0 4

REV.	DATE	REVISION DESCRIPTION	SHEET NO.

Plotted: 12/18/2013

DESIGNER/DRAFTER: B.ANNU
CHECKED BY: P.SAMMIS
SCALE IN FEET 0 40 80
SCALE 1"=40'

STATE OF CONNECTICUT
DEPARTMENT OF TRANSPORTATION

Filename: ...\V-05..Utilities\Sheets\C-02.dgn

SIGNATURE/BLOCK:
STATE OF CONNECTICUT DONALD G. BACON No. 18586 LICENSED PROFESSIONAL ENGINEER
URS CORPORATION AES
500 ENTERPRISE DRIVE
ROCKY HILL, CT 06067

PROJECT TITLE:
RUNWAY SAFETY AREA PROJECT
IGOR. I. SIKORSKY MEMORIAL AIRPORT

TOWN: STRATFORD

DRAWING TITLE: 14" FORCE MAIN PLAN & PROFILE-2

PROJECT NO. 15-336
DRAWING NO. SFM-5.02
SHEET NO. 05.011

Border Version: 10/19/07

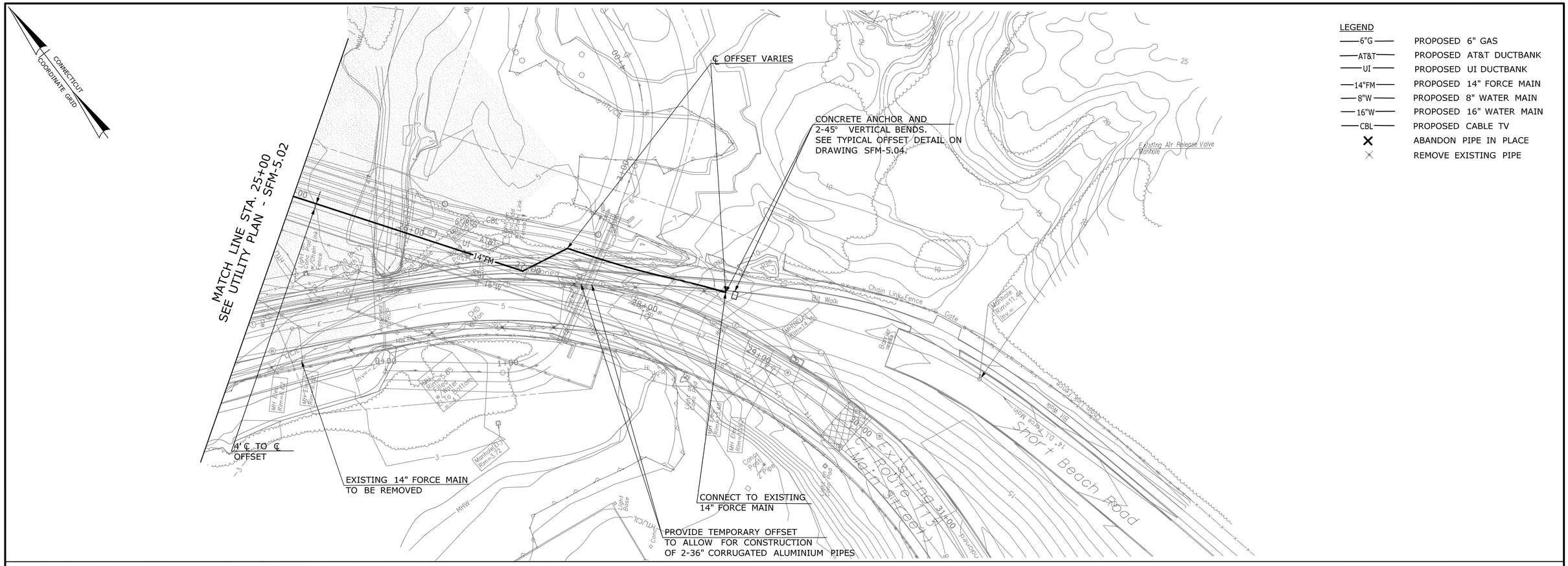

NOTES:

1. PROVIDE A MAXIMUM OF 2° DEFLECTION AT EACH PIPE JOINT TO ACHIEVE HORIZONTAL ALIGNMENT.
2. PROVIDE CONSTANT SLOPE DOWN FROM STATION 28+55 TO LOW POINT AT STATION 8+60.
3. PROFILE STATIONING REFERS TO THE CENTERLINE OF PROPOSED ROADWAY. FORCEMAIN IS OFFSET LEFT OF THE ROADWAY CENTERLINE.
4. ALL PIPE AND FITTINGS SHALL BE DUCTILE IRON CLASS 52, DOUBLE CEMENT LINED AND POLY WRAPPED.
5. ALL PIPE AND FITTINGS SHALL HAVE RESTRAINED JOINTS.

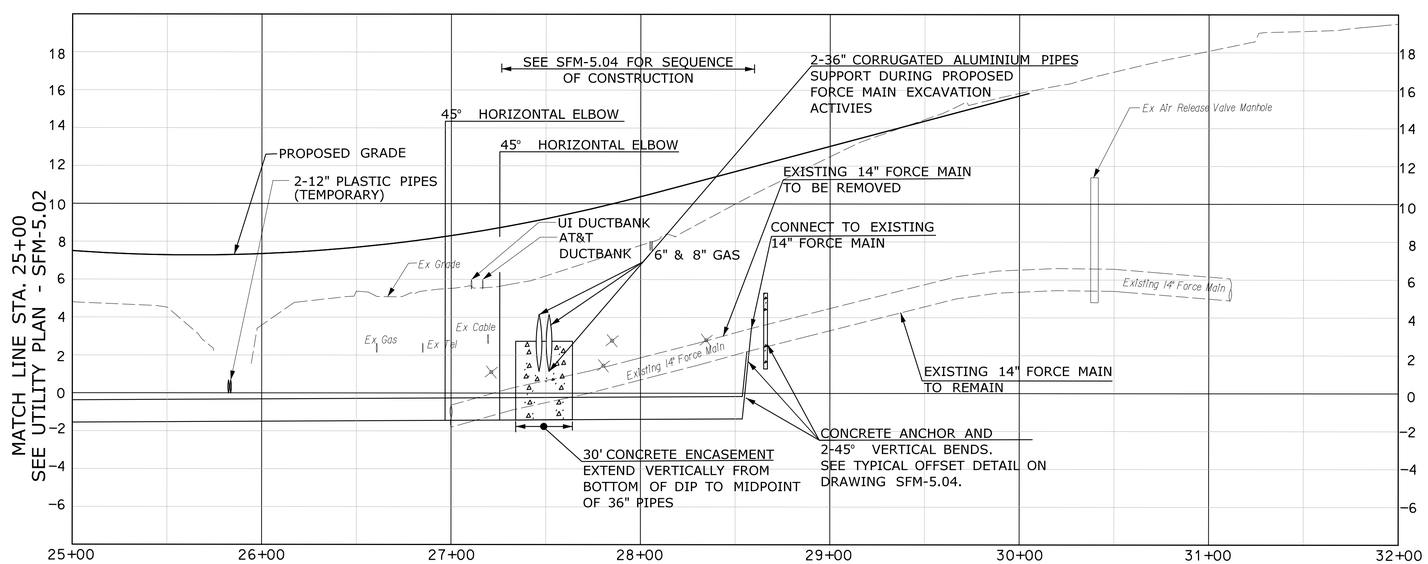

TEMPORARY FORCE MAIN OFFSET
STATION 27+50 -10'±L

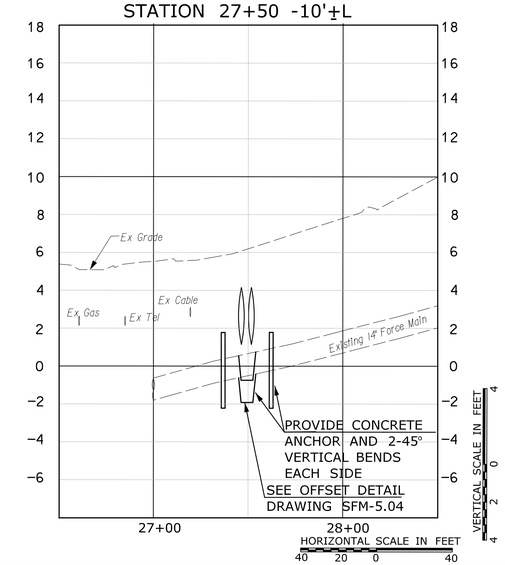

REV.	DATE	REVISION DESCRIPTION	SHEET NO.

Plotted: 12/18/2013

DESIGNER/DRAFTER: B.ANNU
CHECKED BY: P.SAMMIS
SCALE IN FEET 0 40 80
SCALE 1"=40'

STATE OF CONNECTICUT
DEPARTMENT OF TRANSPORTATION

Filename: ...\V-05..Utilities\Sheets\C-03.dgn

SIGNATURE/BLOCK: STATE OF CONNECTICUT DONALD G. SICCARDI No. 18589 LICENSED PROFESSIONAL ENGINEER
URS CORPORATION AES
500 ENTERPRISE DRIVE
ROCKY HILL, CT 06067

PROJECT TITLE:
RUNWAY SAFETY AREA PROJECT
IGOR. I. SIKORSKY MEMORIAL AIRPORT

TOWN: STRATFORD

DRAWING TITLE: 14" FORCE MAIN PLAN & PROFILE-3

PROJECT NO. 15-336
DRAWING NO. SFM-5.03
SHEET NO. 05.012

Border Version: 10/19/07

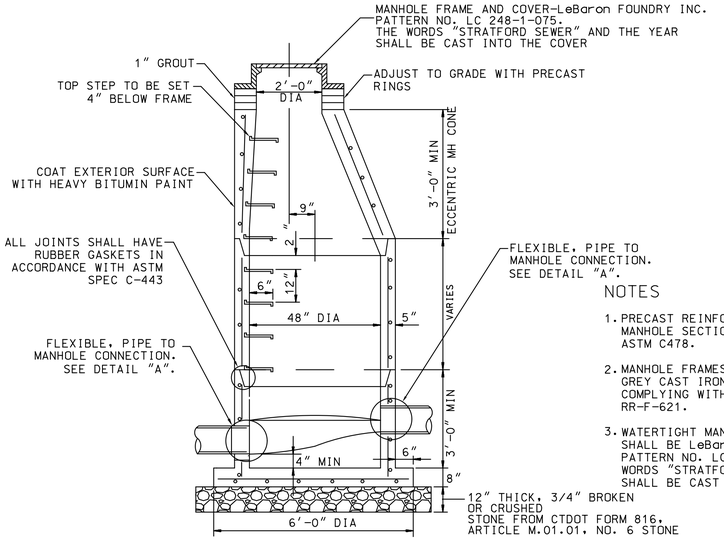

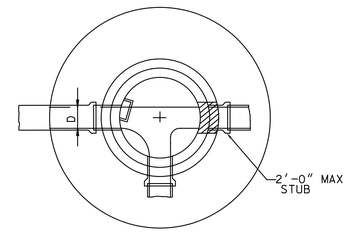

NOTES

1. PRECAST REINFORCED CONCRETE MANHOLE SECTIONS SHALL CONFORM TO ASTM C478.
2. MANHOLE FRAMES AND COVERS SHALL BE GREY CAST IRON, ASTM A48, CLASS 30B COMPLYING WITH REQUIREMENTS OF FS RR-F-621.
3. WATERTIGHT MANHOLE FRAMES AND COVERS SHALL BE LeBaron FOUNDRY INC., PATTERN NO. LC 248-1-075 WITH THE WORDS "STRATFORD SEWER" AND THE YEAR SHALL BE CAST ON INTO THE COVER.

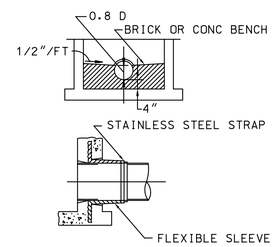

DETAIL "A"

SANITARY SEWER MANHOLE
NTS

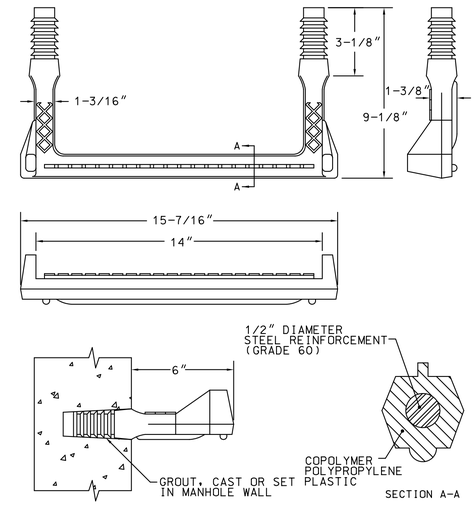

COPOLYMER POLYPROPYLENE PLASTIC STEEL REINFORCED MANHOLE STEP
NTS

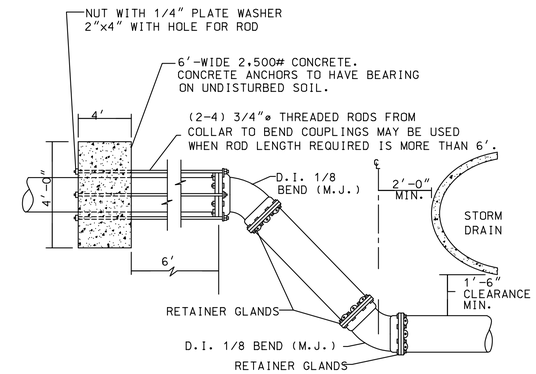

TYPICAL OFFSET
NTS

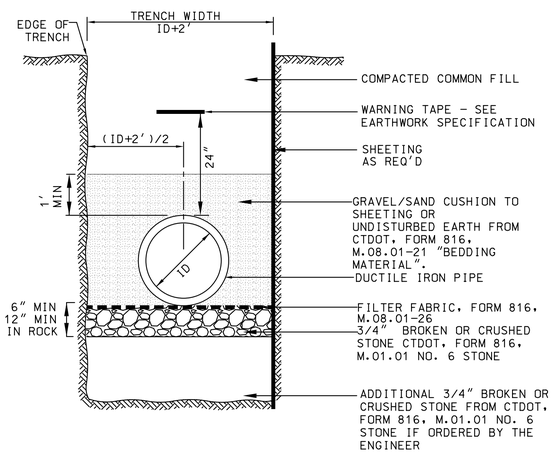

NOTE

COMPACT BACKFILL TO AT LEAST 95% OF MAXIMUM DENSITY PER ASTM D-1557

DIP SANITARY SEWER TRENCH SECTION
NTS

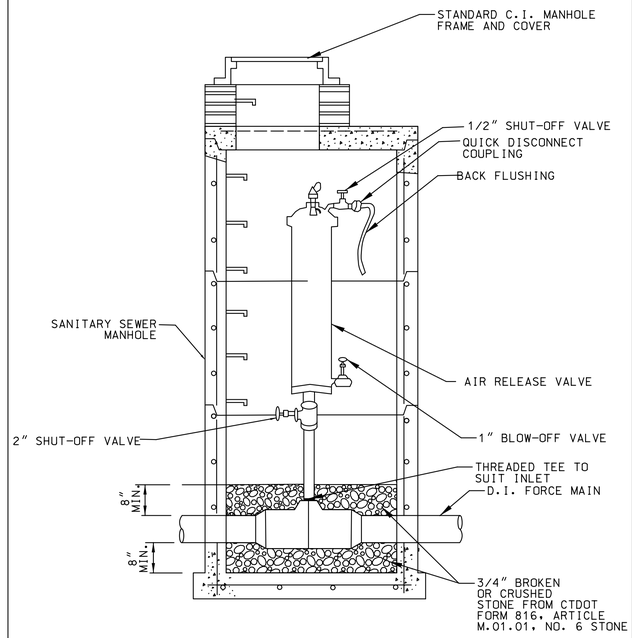

AIR RELEASE ASSEMBLY AND MANHOLE
NTS

SANITARY SEWER FORCE MAIN RELOCATION CONSTRUCTION SEQUENCE

1. SUBMIT AND OBTAIN APPROVAL OF SHOP DRAWINGS FOR ALL MATERIALS USED IN THE FORCE MAIN RELOCATION.
2. COORDINATE WITH THE TOWN OF STRATFORD FOR THE SHUTDOWN OF THE SHORT BEACH PUMP STATION. THE CONTRACTOR SHALL PROVIDE TEMPORARY HAULING AND DISPOSAL OF SEWAGE AT THE PUMP STATION DURING THE ENTIRE SHUTDOWN. THE CONTRACTOR SHALL DRAIN AND DISPOSE OF SEWAGE IN THE EXISTING FORCE MAIN.
3. INSTALL TEMPORARY FORCE MAIN OFFSET AT STATION 27+50-10'L TO ALLOW FOR THE CONSTRUCTION OF THE 2-36" ALUMINUM PIPES.
4. INSTALL THE 2-36" CORRUGATED ALUMINUM PIPES AT STATION 27+50.
5. INSTALL THE RELOCATED FORCE MAIN BETWEEN STATION 8+60± AND 28+50±.
6. CLEAN. PROVIDE CCTV INSPECTION AND TEST THE RELOCATED FORCE MAIN BETWEEN STATIONS 8+60± AND 28+50±.
7. REPEAT ITEM # 2 IN THIS CONSTRUCTION SEQUENCE.
8. MAKE CONNECTIONS TO THE EXISTING FORCE MAIN AT STATIONS 8+50± AND 28+60±.
9. RESUME OPERATIONS OF THE SHORT BEACH PUMP STATION UTILIZING THE RELOCATED FORCE MAIN.
10. REMOVE EXISTING FORCE MAIN BETWEEN STATIONS 8+50± AND 28+60±.

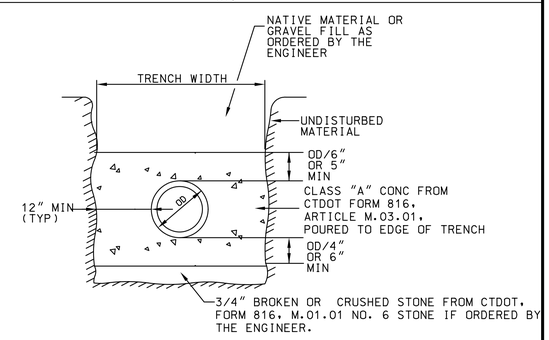

CONCRETE ENCASEMENT
NTS

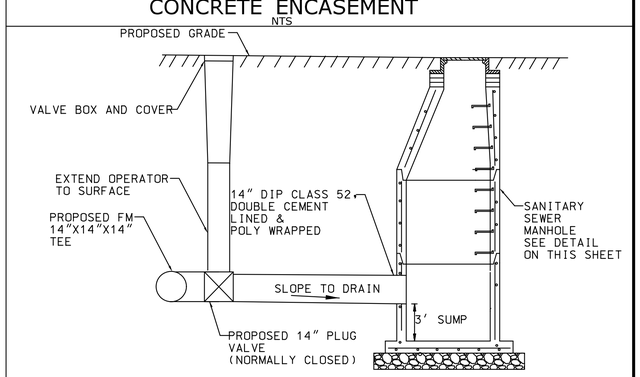

FORCE MAIN DRAIN MANHOLE
NTS

REV.	DATE	REVISION DESCRIPTION	SHEET NO.

Plotted: 12/16/2013

DESIGNER/DRAFTER: B.ANNU
CHECKED BY: P.SAMMIS
SCALE AS NOTED

STATE OF CONNECTICUT
DEPARTMENT OF TRANSPORTATION

SIGNATURE/BLOCK: STATE OF CONNECTICUT DONALD G. SICCARD No. 18589 LICENSED PROFESSIONAL ENGINEER
URS CORPORATION AES
500 ENTERPRISE DRIVE
ROCKY HILL, CT 06067

PROJECT TITLE:
RUNWAY SAFETY AREA PROJECT
IGOR. I. SIKORSKY MEMORIAL AIRPORT

TOWN: STRATFORD
DRAWING TITLE: SANITARY SEWER DETAILS

PROJECT NO. 15-336
DRAWING NO. SFM-5.04
SHEET NO. 05.013

Border Version: 10/19/07

AQUARION NOTES:

1. THE WATER/METER VAULT AT STATION 12+50 ON THE ARMY ENGINE PLANT PROPERTY IS TO BE REPLACED WITH A STANDARD 2" METER PIT.

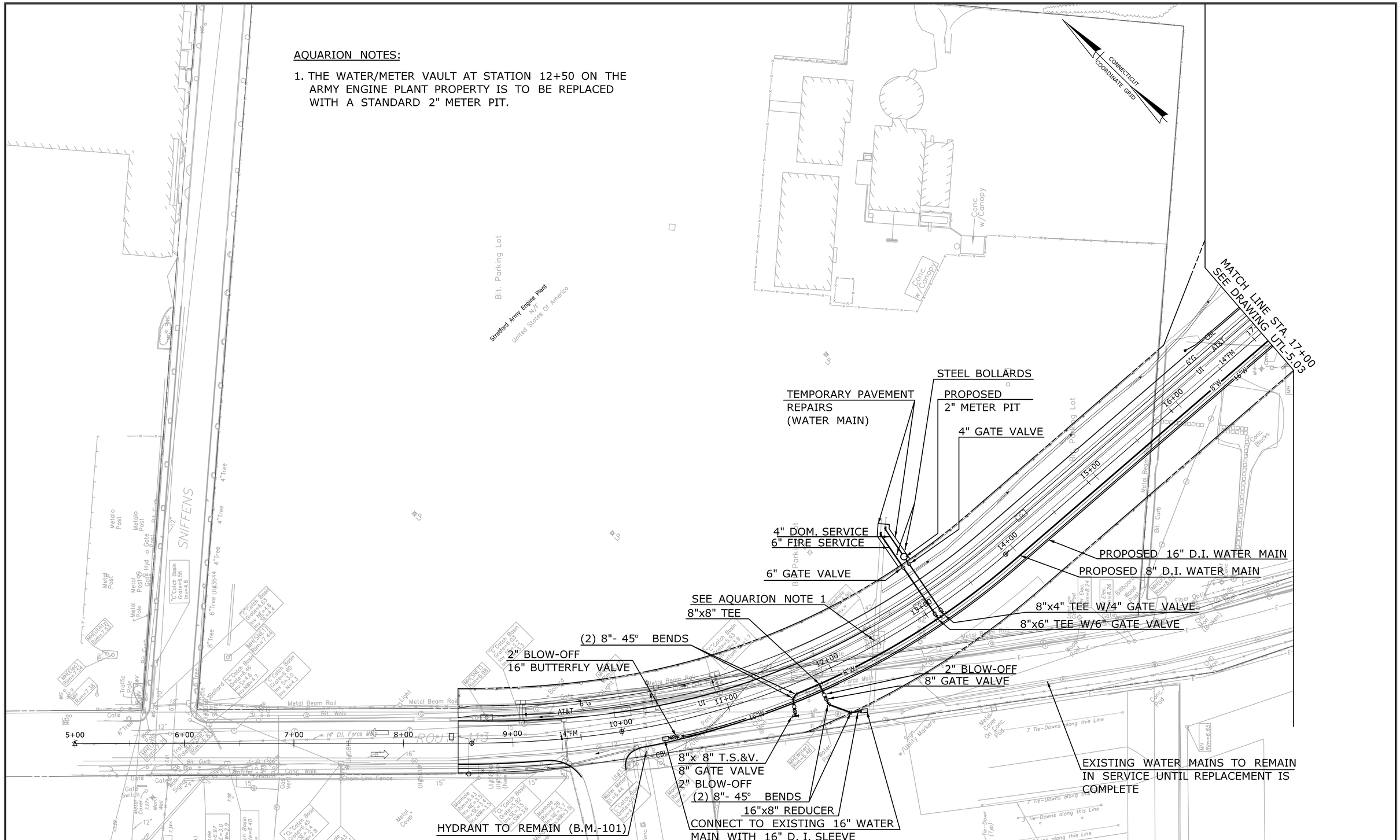

REV.	DATE	REVISION DESCRIPTION	SHEET NO.

Plotted: 11/1/2013

DESIGNER/DRAFTER: S. HARLEY
CHECKED BY: S. MITCHELL
SCALE IN FEET 0 40 80
SCALE 1"=40'

STATE OF CONNECTICUT
DEPARTMENT OF TRANSPORTATION

Filename: ...\AWC PLANS\AWC-01.dgn

SIGNATURE/BLOCK:
STATE OF CONNECTICUT DONALD G. SCOTT No. 18589 LICENSED PROFESSIONAL ENGINEER
URS CORPORATION AES
500 ENTERPRISE DRIVE
ROCKY HILL, CT 06067

PROJECT TITLE:
RUNWAY SAFETY AREA PROJECT
IGOR. I. SIKORSKY MEMORIAL AIRPORT

TOWN: STRATFORD

DRAWING TITLE: WATER RELOCATION PLAN

PROJECT NO. 15-336
DRAWING NO. WTR-1
SHEET NO. 05.014

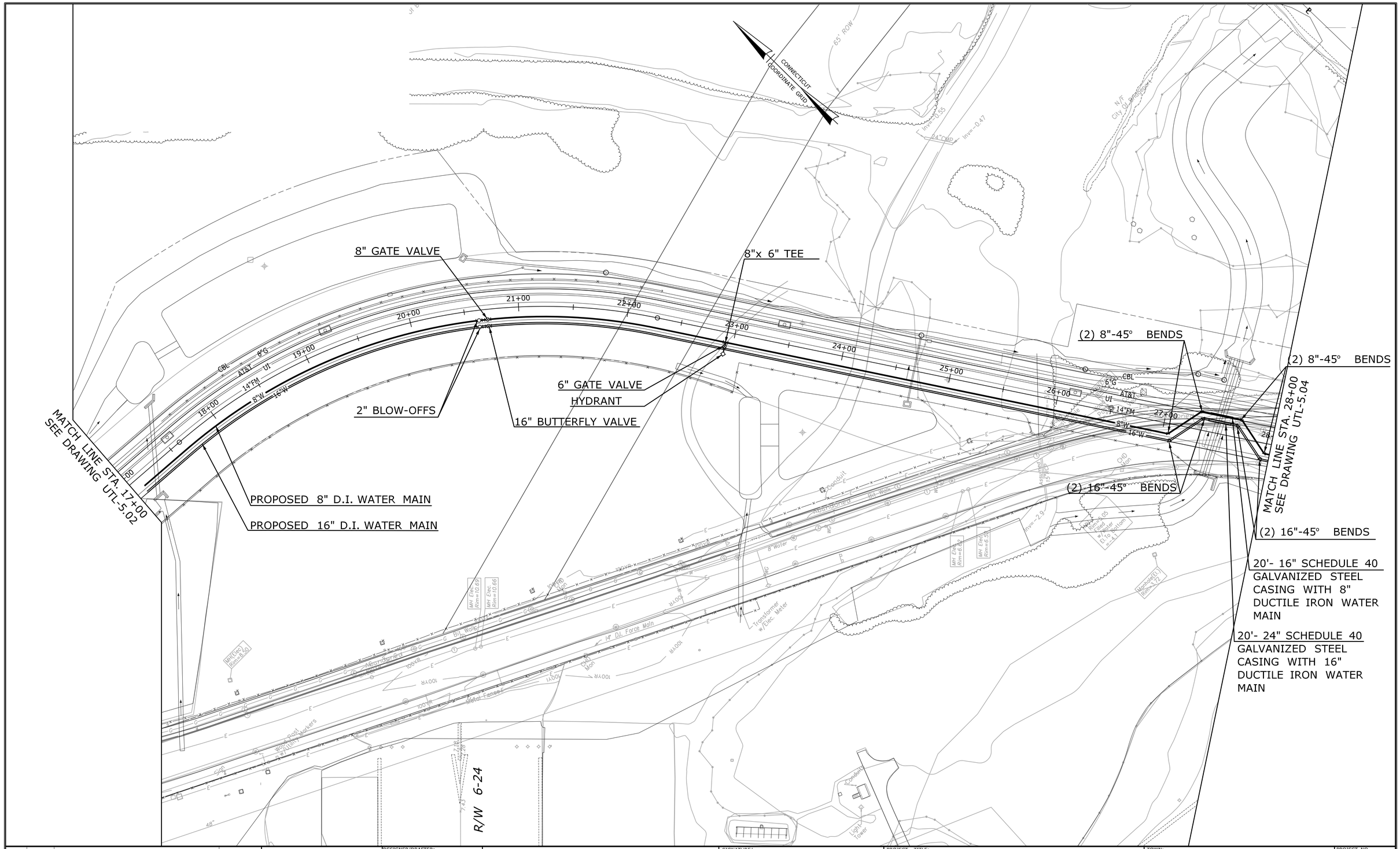

REV.	DATE	REVISION DESCRIPTION	SHEET NO.

Plotted: 11/1/2013

DESIGNER/DRAFTER: S. HARLEY

CHECKED BY: S. MITCHELL

SCALE IN FEET 0 40 80

SCALE 1"=40'

STATE OF CONNECTICUT
DEPARTMENT OF TRANSPORTATION

Filename: ...\AWC PLANS\AWC-02.dgn

SIGNATURE/BLOCK:

STATE OF CONNECTICUT DONALD G. BACON No. 18598 LICENSED PROFESSIONAL ENGINEER

URS CORPORATION AES
500 ENTERPRISE DRIVE
ROCKY HILL, CT 06067

PROJECT TITLE:

RUNWAY SAFETY AREA PROJECT
IGOR. I. SIKORSKY MEMORIAL AIRPORT

TOWN: STRATFORD

DRAWING TITLE: WATER RELOCATION PLAN

PROJECT NO. 15-336

DRAWING NO. WTR-2

SHEET NO. 05.015

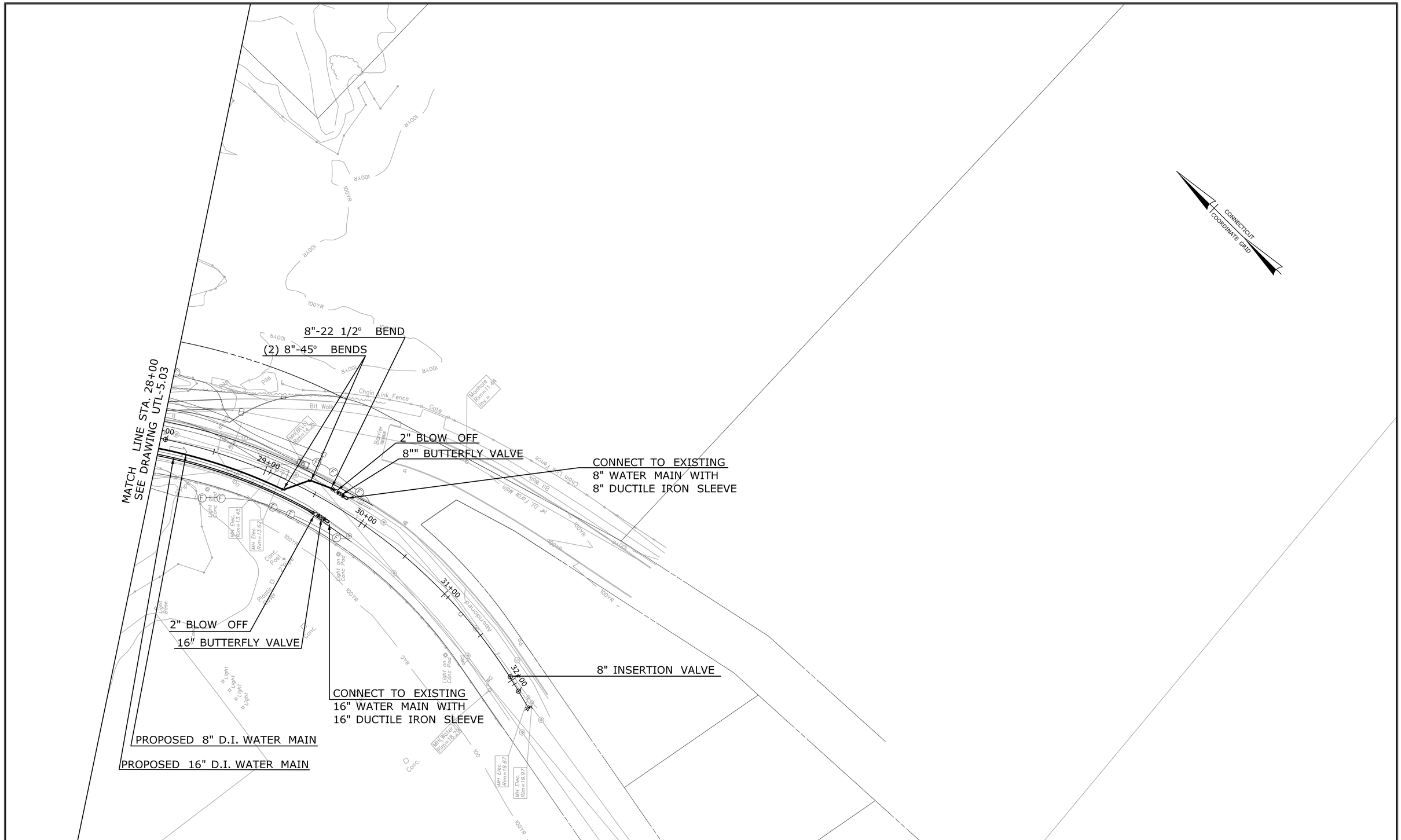

REV.	DATE	REVISION DESCRIPTION	SHEET NO.

Plotted: 11/1/2013

DESIGNER/DRAFTER: S. HARLEY

CHECKED BY: S. MITCHELL

SCALE IN FEET 0 40 80

SCALE 1"=40'

STATE OF CONNECTICUT
DEPARTMENT OF TRANSPORTATION

Filename: ...\AWC PLANS\AWC-03.dgn

SIGNATURE/ BLOCK:

STATE OF CONNECTICUT DONALD B. SACKSTEDER No. 15566 LICENSED PROFESSIONAL ENGINEER

URS CORPORATION AES
500 ENTERPRISE DRIVE
ROCKY HILL, CT 06067

PROJECT TITLE:

RUNWAY SAFETY AREA PROJECT
IGOR. I. SIKORSKY MEMORIAL AIRPORT

TOWN: STRATFORD

DRAWING TITLE: WATER RELOCATION PLAN

PROJECT NO. 15-336

DRAWING NO. WTR-3

SHEET NO. 05.016

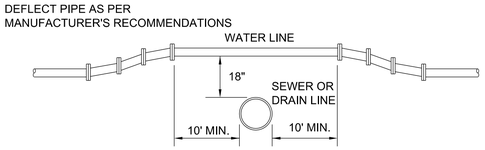

NOTE:
FOR ANY CONDITIONS OTHER THAN SHOWN ABOVE THE FOLLOWING REQUIREMENTS SHALL BE MET. THE JOINTS OF THE SANITARY SEWER OR STORM DRAIN SHALL BE A MINIMUM OF 10' FROM THE POINT OF CROSSING.

CROSSING OF WATER LINE OVER SANITARY SEWER OR STORM DRAIN

N.T.S.

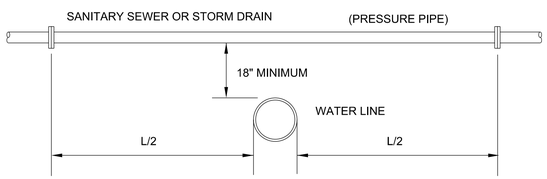

NOTE :

WHERE WATER LINE PASSES BENEATH SEWER LINE OR STORM DRAIN, THE JOINTS OF THE PIPE SHALL BE A MIN. OF 10' FROM THE POINT OF CROSSING

CROSSING OF WATER LINE UNDER SANITARY SEWER OR STORM DRAIN

N.T.S.

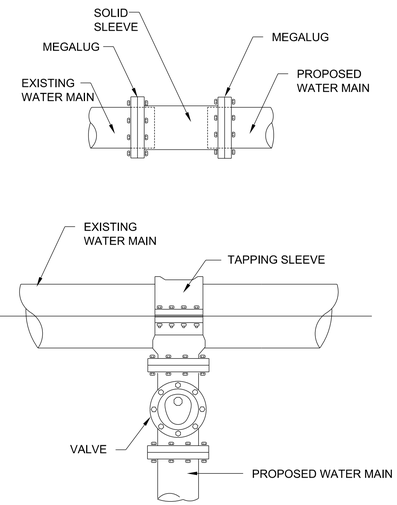

CONNECTION TO EXIST. WATER MAIN

N.T.S.

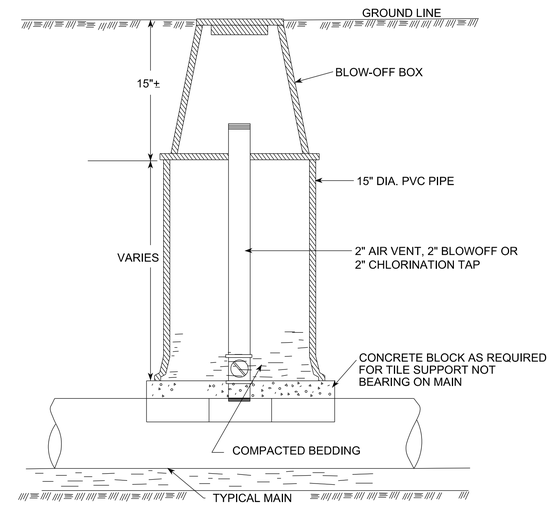

ENCLOSURE FOR 2" AIR VENT, 2" BLOWOFF AND 2" CHLORINATION TAP

N.T.S.

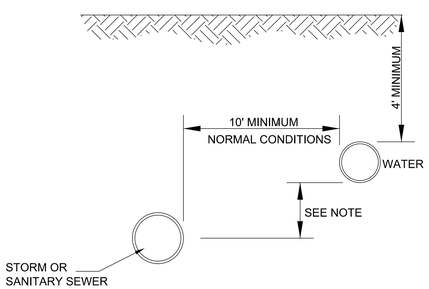

NOTE:
WHERE A 10' HORIZONTAL SEPARATION CANNOT BE OBTAINED DUE TO FIELD CONDITIONS, THE VERTICAL CLEAR DISTANCE SHALL BE A MINIMUM OF 18" HOWEVER, AN EXCEPTION TO THE 10' MINIMUM HORIZONTAL SEPARATION REQUIRES SEPARATE APPROVAL OF THE HEALTH DEPT.

SEPARATION OF WATER MAINS AND SEWERS - PARALLEL INSTALLATION

N.T.S.

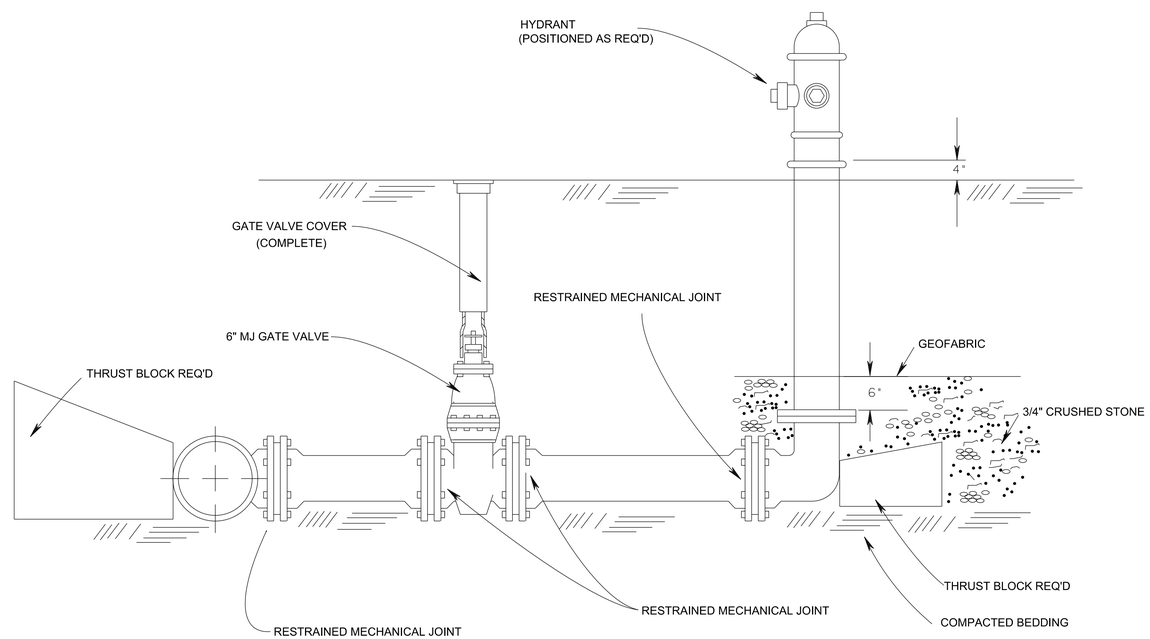

TYPICAL HYDRANT INSTALLATION

N.T.S.

WEDGE MANUFACTURING

78 Thomson Road
Bethlehem, CT 06751
Phone: 203.266.7175 / Fax: 203.266.7297

WEDGE Air Vent / Blow Off System Details.

NOTE:
ANY SUBSTITUTION SHALL BE APPROVED BY THE AQUARION WATER COMPANY.

2" AIR VENT, 2" BLOWOFF AND 2" CHLORINATION TAP

N.T.S.

REV.	DATE	REVISION DESCRIPTION	SHEET NO.

THE INFORMATION, INCLUDING ESTIMATED QUANTITIES OF WORK, SHOWN ON THESE SHEETS IS BASED ON LIMITED INVESTIGATIONS BY THE STATE AND IS IN NO WAY WARRANTED TO INDICATE THE CONDITIONS OF ACTUAL QUANTITIES OF WORK WHICH WILL BE REQUIRED.

Plotted: 10/15/2013

DESIGNER/DRAFTER:

CHECKED BY:

SCALE IN FEET
0 40 80
SCALE 1"=40'

AQUARION

Filename: ...\AWC PLANS\AWC-04.dgn

SIGNATURE/
BLOCK:

PROJECT TITLE:
RUNWAY SAFETY AREA PROJECT
IGOR. I. SIKORSKY MEMORIAL AIRPORT

TOWN:
STRATFORD

DRAWING TITLE:
WATER DETAILS

PROJECT NO.
15-336

DRAWING NO.
WTR-4

SHEET NO.
05.017

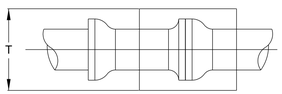

PLAN

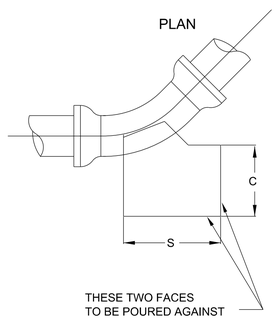

ELEVATION

PIPE DIAM. IN	BLOCK DIMENSIONS				CONCRETE VOLUME CU. FT.
	BEND	S IN.	T IN.	U IN.	
16	90	48	48	48	640
	45	48	34	20	189
	22 1/2	42	20	18	88
	11 1/4				(3)
12	90	36	36	36	270
	45	36	24	18	90
	22 1/2	28	18	12	35
	11 1/4				(3)
10	90	30	30	30	156
	45	30	20	18	63
	22 1/2	22	16	12	24
	11 1/4				(3)
8	90	24	24	24	80
	45	24	16	12	27
	22 1/2	18	12	12	15
	11 1/4				(3)
6	90	18	18	18	34
	45	18	12	12	15
	22 1/2	12	12	12	10
	11 1/4				(3)

NOTES:

1. 2500 psi CONCRETE TO BE USED
2. BLOCK DIMENSIONS ARE BASED UPON SOIL BEARING PRESSURE OF 2000 psi AND WATER PRESSURE OF 150 psi. WHERE SOIL BEARING IS LESS OR WATER PRESSURE IS GREATER, A SPECIAL DESIGN WILL BE REQUIRED.
3. BEND TO BE SET AGAINST UNDISTURBED EARTH, BACKFILL TO BE FIRMLY TAMPED, OR BLOCK TO BE FURNISHED AS DIRECTED BY THE ENGINEER.

SAG VERTICAL BENDS

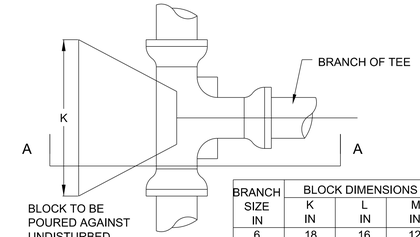

BLOCK TO BE POURED AGAINST UNDISTURBED EARTH

PLAN

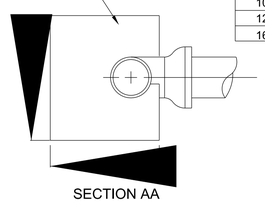

SECTION AA

BRANCH SIZE IN	BLOCK DIMENSIONS			CONCRETE VOLUME CU. FT.
	K IN	L IN	M IN	
6	18	16	12	24
8	30	18	12	40
10	42	20	12	63
12	50	24	16	113
16	60	36	24	300

NOTES:

1. 2500 psi CONCRETE TO BE USED
2. BLOCK DIMENSIONS ARE BASED UPON SOIL BEARING PRESSURE OF 2000 psi AND WATER PRESSURE OF 150 psi. WHERE SOIL BEARING IS LESS OR WATER PRESSURE IS GREATER, A SPECIAL DESIGN WILL BE REQUIRED.

TEES

ANY ALTERATIONS OR REVISIONS OF THESE PLANS, UNLESS DONE BY OR UNDER THE DIRECTION OF THE NYS LICENSED AND REGISTERED ENGINEER THAT PREPARED THEM, IS A VIOLATION OF THE NYS EDUCATION LAW.

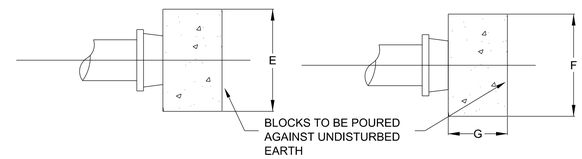

PLAN ELEVATION

NOTES:

1. 2500 psi CONCRETE TO BE USED
2. BLOCK DIMENSIONS ARE BASED UPON SOIL BEARING PRESSURE OF 2000 psi AND WATER PRESSURE OF 150 psi. WHERE SOIL BEARING IS LESS OR WATER PRESSURE IS GREATER, A SPECIAL DESIGN WILL BE REQUIRED.
3. FOR USE ON ABANDONED LINES AND DEAD ENDS WHERE NO EXTENSION IS CONTEMPLATED.

PIPE DIAM. IN	BLOCK DIMENSIONS			CONCRETE VOLUME FT.
	E IN	F IN	G IN	
6	20	16	12	22
8	28	20	12	39
10	30	24	12	50
12	42	30	14	102
16	52	42	18	227

CAPS, PLUGS AND VALVES

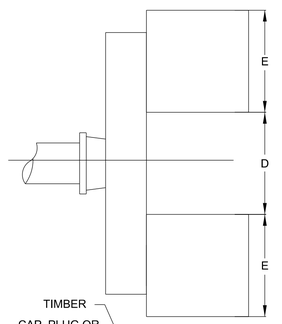

PLAN

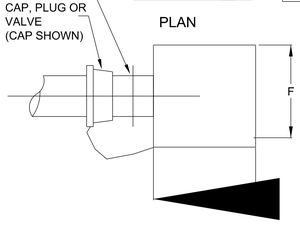

ELEVATION

PIPE DIAM. IN	BLOCK DIMENSIONS			CONCRETE VOLUME FT.
	E IN	F IN	G IN	
4	NONE REQUIRED			
6	12	12	12	20
8	16	16	16	46
10	20	20	20	93
12	24	24	24	160
16	32	32	32	380

PIPE DIAM. IN	TIMBER			CLEARANCE D IN.
	NO. BEAMS	NOM. SIZE	LENGTH IN	
4	NONE REQUIRED			
6	1	6"x6"	34	18
8	1	8"x8"	42	20
10	1	10"x10"	48	22
12	1	12"x12"	56	24
16	2	10"x10"	72	30

NOTES:

1. 2500 psi CONCRETE TO BE USED
2. BLOCK DIMENSIONS ARE BASED UPON SOIL BEARING PRESSURE OF 2000 psi AND WATER PRESSURE OF 150 psi. WHERE SOIL BEARING IS LESS OR WATER PRESSURE IS GREATER, A SPECIAL DESIGN WILL BE REQUIRED.
3. TIMBER TO BE DOUGLAS FIR CONSTRUCTION GRADE OR BETTER HORIZONTAL SHEAR 120 psi.
4. PROVIDE TAMPED BACKFILL AND/OR BLOCKING TO SUPPORT TIMBER.

DEAD ENDS

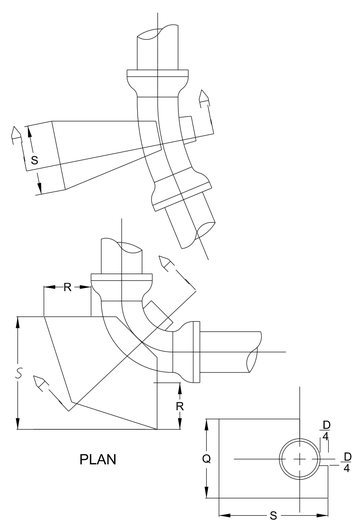

PLAN

SECTION AA

PIPE DIAM. IN	BLOCK DIMENSIONS				CONCRETE VOLUME CU. FT.
	BEND	S IN.	Q IN.	R IN.	
16	90	48	48	48	640
	45	48	34	20	189
	22 1/2	42	20	18	88
	11 1/4				(3)
12	90	36	36	36	270
	45	36	24	18	90
	22 1/2	28	18	12	35
	11 1/4				(3)
10	90	30	30	30	156
	45	30	20	18	63
	22 1/2	22	16	12	24
	11 1/4				(3)
8	90	24	24	24	80
	45	24	16	12	27
	22 1/2	18	12	12	15
	11 1/4				(3)
6	90	18	18	18	34
	45	18	12	12	15
	22 1/2	12	12	12	10
	11 1/4				(3)

NOTES:

1. 2500 psi CONCRETE TO BE USED
2. BLOCK DIMENSIONS ARE BASED UPON SOIL BEARING PRESSURE OF 2000 psi AND WATER PRESSURE OF 150 psi. WHERE SOIL BEARING IS LESS OR WATER PRESSURE IS GREATER, A SPECIAL DESIGN WILL BE REQUIRED.

HORIZONTAL BENDS

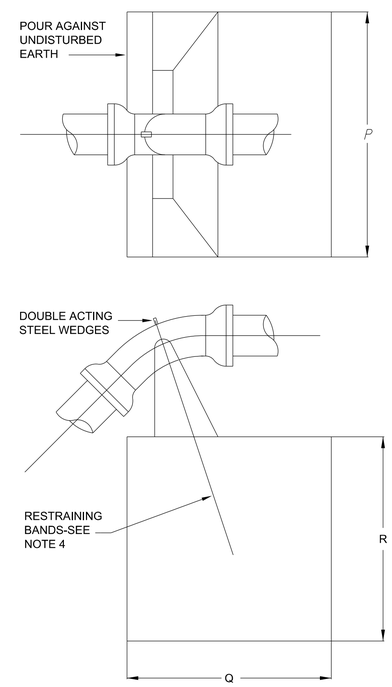

ELEVATION

PIPE DIAM. IN	BLOCK DIMENSIONS				CONCRETE VOLUME CU. YD.
	BEND	P IN.	Q IN.	R IN.	
16	45	72	60	56	52
	22 1/2	60	48	44	27
	11 1/4	60	36	36	14
12	45	60	48	48	3.0
	22 1/2	42	42	40	15
	11 1/4	34	34	34	0.84
10	45	54	42	42	2.0
	22 1/2	36	36	36	1.0
	11 1/4	30	30	30	0.58
8	45	48	36	36	1.3
	22 1/2	32	32	32	0.71
	11 1/4	26	26	26	0.38
6	45	42	30	28	0.76
	22 1/2	26	26	26	0.38
	11 1/4	24	24	24	0.30

NOTES:

1. 2500 psi CONCRETE TO BE USED
2. BLOCK DIMENSIONS ARE BASED UPON SOIL BEARING PRESSURE OF 2000 psi AND WATER PRESSURE OF 150 psi. WHERE SOIL BEARING IS LESS OR WATER PRESSURE IS GREATER, A SPECIAL DESIGN WILL BE REQUIRED.
3. WHERE 90^ CREST VERTICAL BEND IS REQUIRED APPROVAL MUST FIRST BE OBTAINED FROM THE ENGINEER. A SPECIAL DESIGN WILL BE REQUIRED.
4. 2-#6 REINFORCING RODS REQUIRED FOR 16" 45^ BEND; 1#6 REINFORCING ROD REQUIRED FOR ALL OTHER BENDS. EXPOSED BARS TO BE PROVIDED WITH PROTECTIVE COATING.

CREST VERTICAL BENDS

NOTE:

IN ADDITION TO THE CONCRETE THRUST BLOCKS, ALL FITTINGS TO BE TIED TOGETHER WITH 3/4" GALVANIZED THREADED RODS, AND ANY OTHER SPECIALS AS DIRECTED BY THE WATER DISTRICT.

REV.	DATE	REVISION DESCRIPTION	SHEET NO.

THE INFORMATION, INCLUDING ESTIMATED QUANTITIES OF WORK, SHOWN ON THESE SHEETS IS BASED ON LIMITED INVESTIGATIONS BY THE STATE AND IS IN NO WAY WARRANTED TO INDICATE THE CONDITIONS OF ACTUAL QUANTITIES OF WORK WHICH WILL BE REQUIRED.

Plotted: 10/15/2013

DESIGNER/DRAFTER:

CHECKED BY:

SCALE IN FEET 0 40 80

SCALE 1"=40'

AQUARION

Filename: ...\AWC PLANS\AWC-05.dgn

SIGNATURE/ BLOCK:

PROJECT TITLE:

RUNWAY SAFETY AREA PROJECT
IGOR. I. SIKORSKY MEMORIAL AIRPORT

TOWN: STRATFORD

DRAWING TITLE: WATER DETAILS

PROJECT NO. 15-336

DRAWING NO. WTR-5

SHEET NO. 05.018

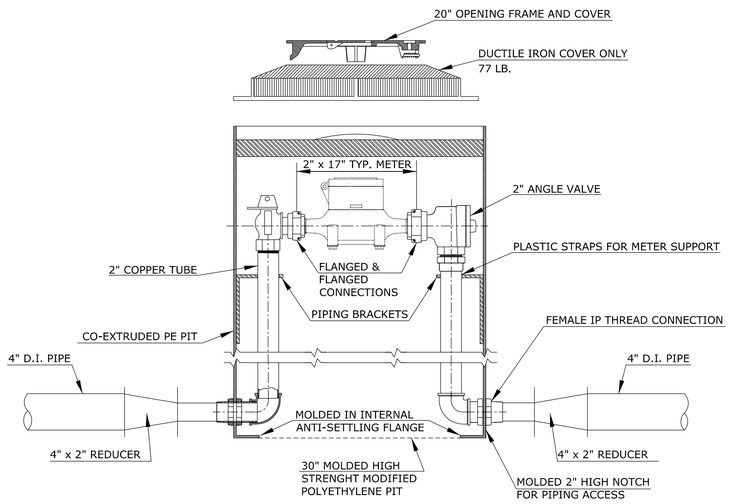

METER PIT
N.T.S.

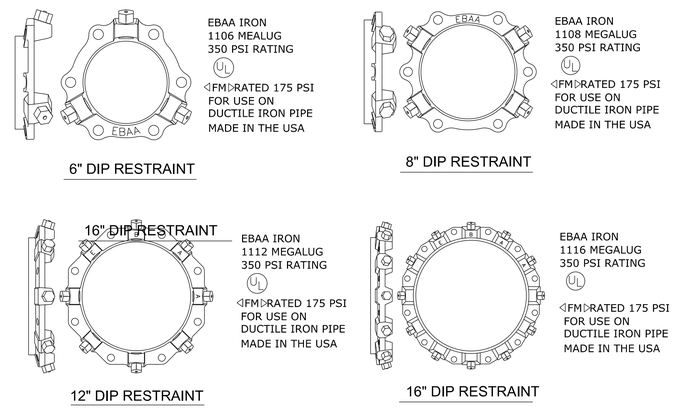

"MEGALUG" D.I.P. PIPE RESTRAINTS
N.T.S.

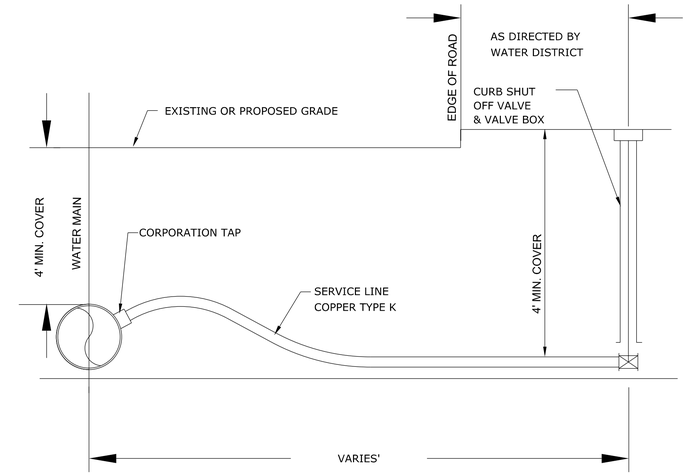

NOTES:

1. CONTRACTOR TO FURNISH AND INSTALL CORPORATION TAP, SERVICE LINE, AND CURB SHUT OFF VALVE AND VALVE BOX.
2. CONTRACTOR TO EXCAVATE, MAINTAIN, BACKFILL, AND RESTORE TRENCH FOR THE TAP, SERVICE LINE, AND CURB SHUT OFF VALVE.
3. CONTRACTOR TO TAKE OUT PERMIT, PAY FEE, AND TO FOLLOW ALL RULES AND REGULATIONS OF THE LOCAL UTILITY AGENCY.

WATER SERVICE LINE LATERAL
N.T.S.

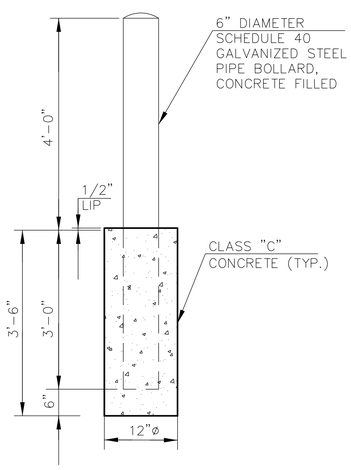

STEEL BOLLARD
N.T.S.

TRENCH WIDTH		
PIPE SIZE	"A"	"A"(IN ROCK)
6"	30"	31"
8"	30"	33"
12"	36"	37"
16"	36"	43"
24"	48"	50"

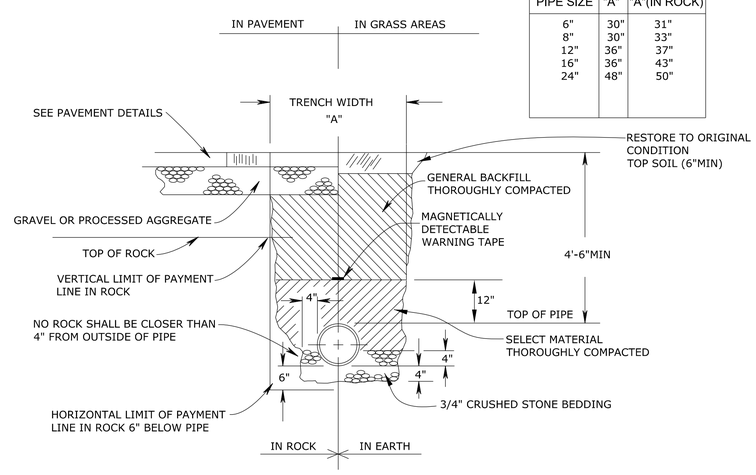

TYPICAL TRENCH DETAIL
N.T.S.

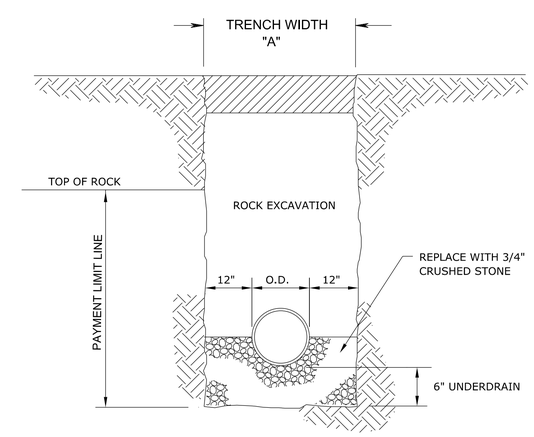

ROCK EXCAVATION TRENCH
(FOR ALL PIPES)
N.T.S.

REV.	DATE	REVISION DESCRIPTION	SHEET NO.

THE INFORMATION, INCLUDING ESTIMATED QUANTITIES OF WORK, SHOWN ON THESE SHEETS IS BASED ON LIMITED INVESTIGATIONS BY THE STATE AND IS IN NO WAY WARRANTED TO INDICATE THE CONDITIONS OF ACTUAL QUANTITIES OF WORK WHICH WILL BE REQUIRED.

Plotted: 10/31/2013

DESIGNER/DRAFTER:

CHECKED BY:

SCALE IN FEET
0 40 80
SCALE 1"=40'

AQUARION

Filename: ...\AWC PLANS\AWC-06.dgn

SIGNATURE/
BLOCK:

PROJECT TITLE:
RUNWAY SAFETY AREA PROJECT
IGOR. I. SIKORSKY MEMORIAL AIRPORT

TOWN: STRATFORD

DRAWING TITLE: WATER DETAILS

PROJECT NO. 15-336

DRAWING NO. WTR-6

SHEET NO. 05.019

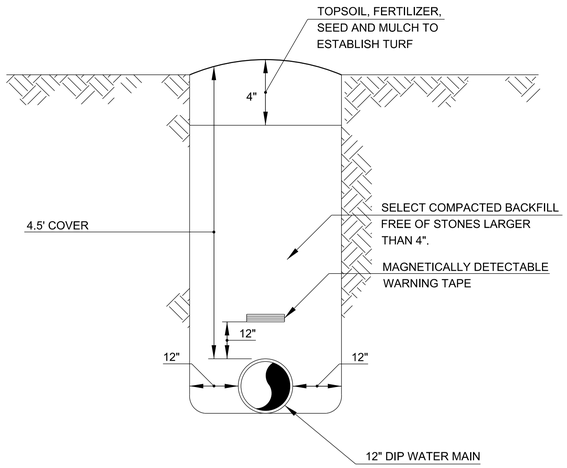

STANDARD TRENCH
OFF-PAVEMENT RESTORATION
NOT TO SCALE

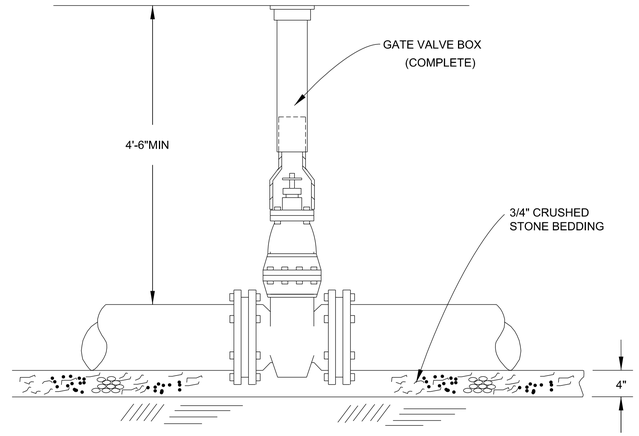

TYPICAL MJ GATE VALVE INSTALLATION
NOT TO SCALE

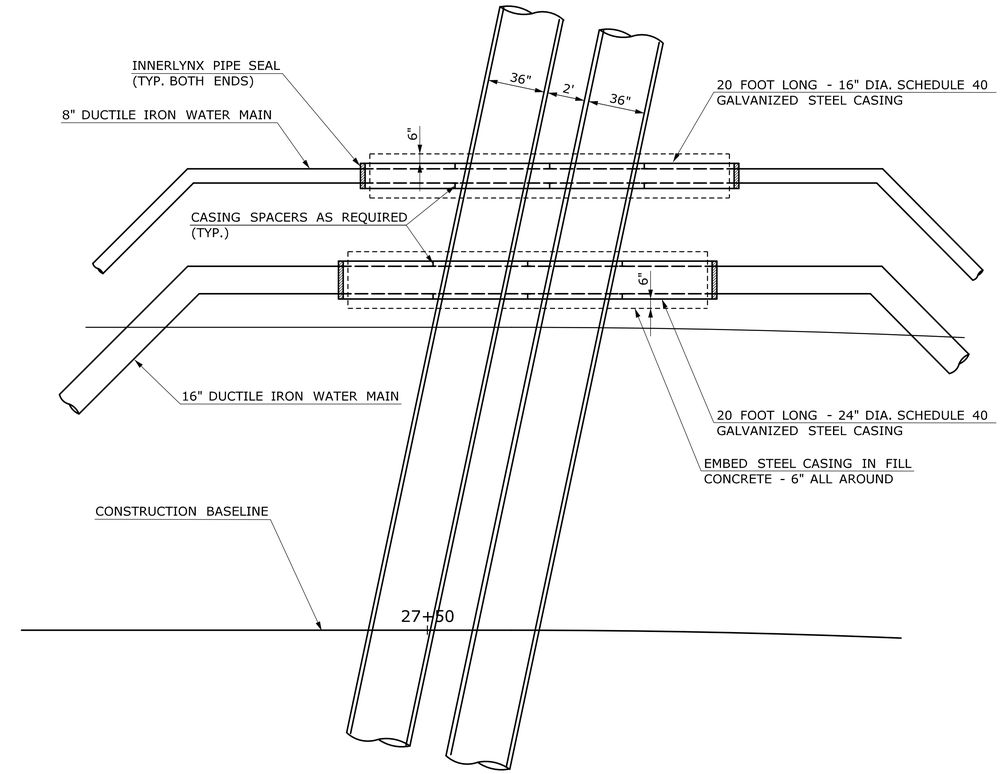

PLAN

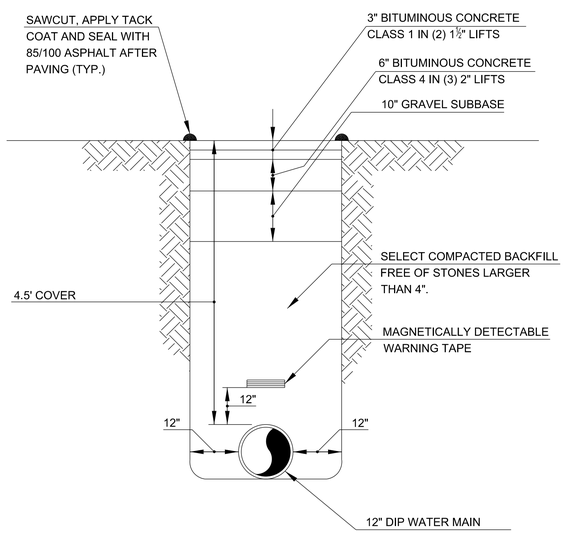

STANDARD TRENCH WITH
PERMANENT PAVEMENT RESTORATION
NOT TO SCALE

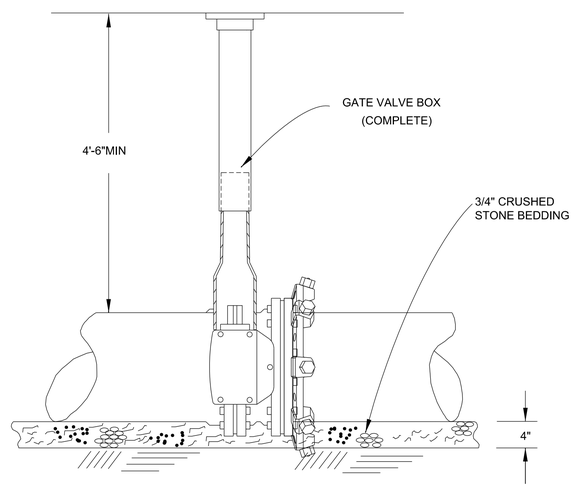

TYPICAL MJ BUTTERFLY VALVE INSTALLATION
NOT TO SCALE

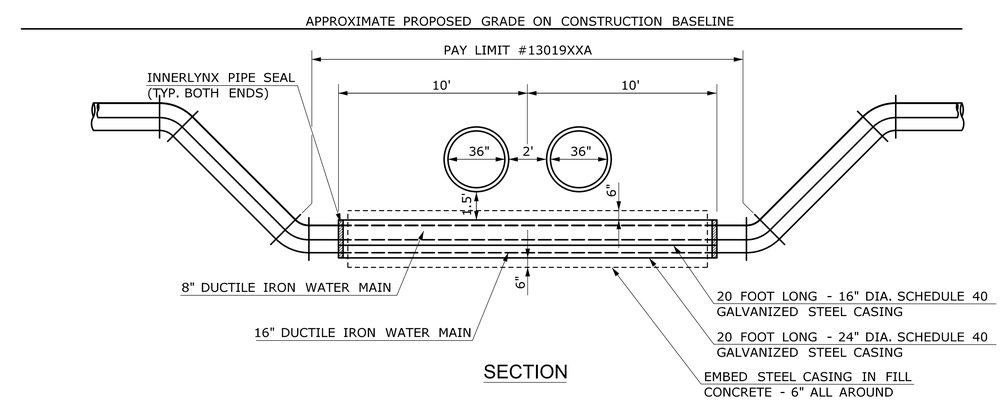

SECTION

WATER MAIN INSTALLATION BELOW
TWIN 36" STORM PIPES
NOT TO SCALE

REV.	DATE	REVISION DESCRIPTION	SHEET NO.

THE INFORMATION, INCLUDING ESTIMATED QUANTITIES OF WORK, SHOWN ON THESE SHEETS IS BASED ON LIMITED INVESTIGATIONS BY THE STATE AND IS IN NO WAY WARRANTED TO INDICATE THE CONDITIONS OF ACTUAL QUANTITIES OF WORK WHICH WILL BE REQUIRED.

Plotted: 10/31/2013

DESIGNER/DRAFTER:
CHECKED BY:
SCALE IN FEET
0 40 80
SCALE 1"=40'

AQUARION

Filename: ...\AWC PLANS\AWC-07.dgn

SIGNATURE/ BLOCK:

PROJECT TITLE:
RUNWAY SAFETY AREA PROJECT
IGOR. I. SIKORSKY MEMORIAL AIRPORT

TOWN: STRATFORD

DRAWING TITLE: WATER DETAILS

PROJECT NO. 15-336
DRAWING NO. WTR-7
SHEET NO. 05.020

NOTES:

1. THE REMOVAL OF THE OBSTRUCTION LIGHTS SHALL BE PAID FOR AS "REMOVAL OF RUNWAY LIGHTS". THE ITEM SHALL INCLUDE REMOVING AND DISPOSING OF THE LIGHT STANDARDS AND FIXTURES. ITEM SHALL INCLUDE REMOVING ALL ASSOCIATED UNDERGROUND LIGHTING CONDUCTORS, CONDUIT, HANDHOLES AND ASSOCIATED EXCAVATION. CAPPING/CLOSING CONNECTION TO THE OTHER ELECTRICAL CIRCUITS SHALL BE COMPLETED BY A LICENSED ELECTRICAL CONTRACTOR.
2. SEE UTILITY PLANS VOLUME 05 AND TYPICAL SECTIONS VOLUME 01 DRAWINGS FOR ANTICIPATED REMOVAL AND RELOCATION OF EXISTING UTILITY FACILITIES.
3. SEE DRAINAGE PLANS FOR ALL STORM WATER CONSTRUCTION DETAILS.
4. PROPOSED AIRPORT SECURITY FENCE IS TO BE LOCATED ALONG THE PROPOSED DEFINED EASEMENT ON THE RIGHT (WEST) SIDE OF PROPOSED RTE 113.
5. REMOVE EXISTING VIDEO SURVEILLANCE EQUIPMENT FROM PARKING LOT LIGHT STANDARDS AND RETURN TO STRATFORD ARMY PLANT.

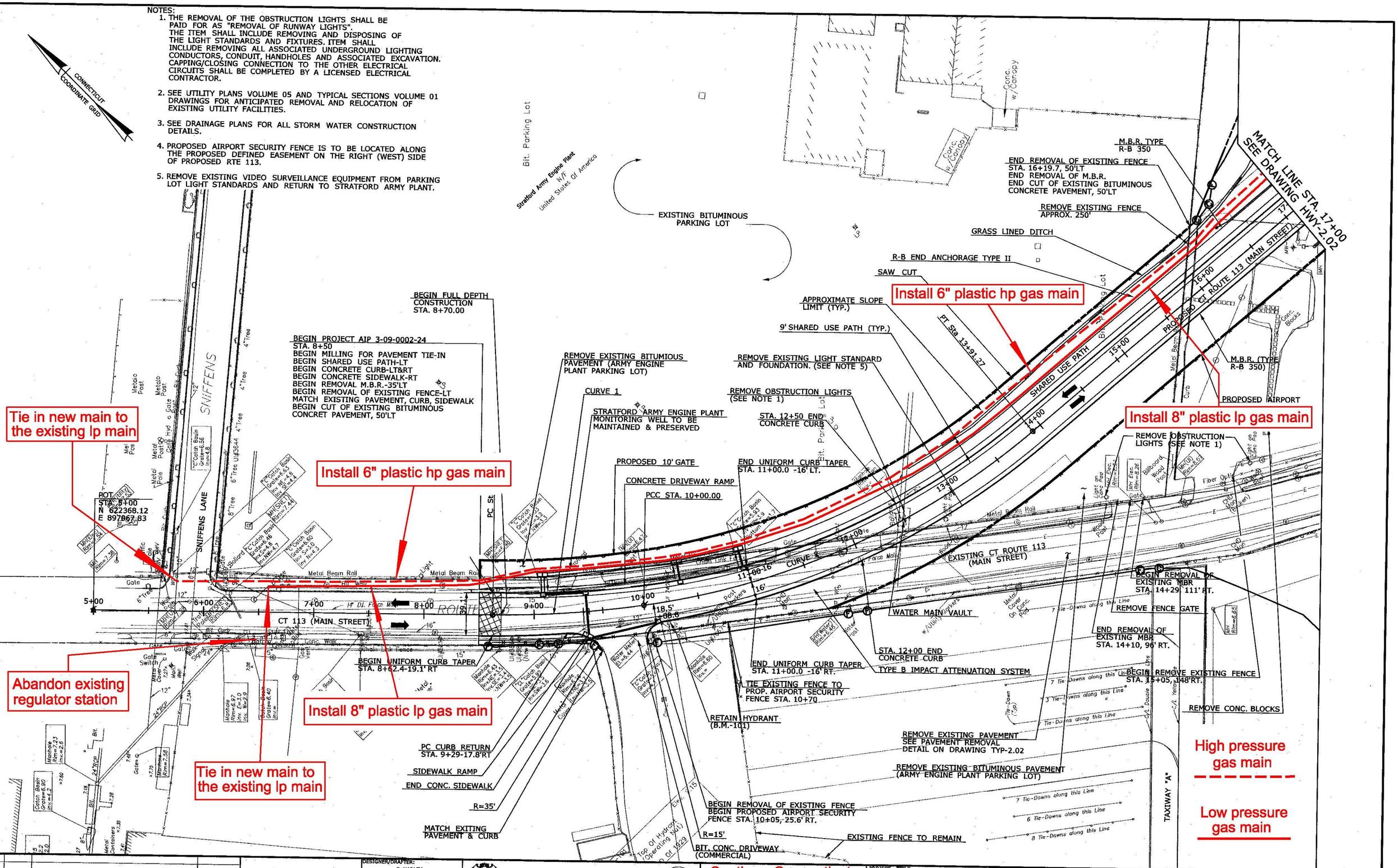

REV.	DATE	REVISION DESCRIPTION	SHEET NO.

Plotted: 1/31/2013

DESIGNER/DRAFTER: S. HARLEY
CHECKED BY: S. MITCHELL
SCALE IN FEET 0 40 80
SCALE 1"=40'

STATE OF CONNECTICUT
DEPARTMENT OF TRANSPORTATION

Filename: ...\HW_MSH_015-336_HWY-01.dgn

Southern Connecticut Gas Company
Proposed Facility Relocations

PROJECT TITLE: RUNWAY SAFETY AREA PROJECT
IGOR. I. SIKORSKY MEMORIAL AIRPORT

TOWN: STRATFORD

DRAWING TITLE: GAS RELOCATION PLAN - 1

PROJECT NO. 15-336
DRAWING NO. GAS-5.01
SHEET NO. 05.021

Border Version: 10/19/07

Install 6" plastic hp gas main

Install 8" plastic lp gas main

Install 6" plastic hp gas main

WATER QUALITY BASIN #2
SEE DRAWING DRG-2.05

APPROXIMATE LIMITS OF
RAYMARK WASTE AREA
TO BE REMOVED
SEE VOLUME 05

TIDAL CHANNEL
SEE DRAWING DRG-2.06

R-B END ANCHORAGE TYPE I

BOTTOM OF BASIN
LIMIT OF PAVERS

STA. 20+45.46 (℄ PROP.MAIN STREET) =
STA. 1050+76.21 (RUNWAY SAFETY AREA ℄)

℄ PROP. MAIN STREET (CT. ROUTE 113)

APPROXIMATE SLOPE
LIMITS (TYP.)

SEE NOTE 4

GRASS LINED DITCH

9' SHARED USE PATH (TYP.)

M.B.R. TYPE
R-B 350

BEGIN PATH TAPER
STA. 27+62

REMOVE 15" CULVERT
UNDER EXISTING ROADWAY

REMOVE
OBSTRUCTION
LIGHT

CURVE 3

PROPOSED ROUTE 113 (MAIN STREET)

M.B.R. TYPE R-B 350

GRASS LINED
DITCH

AIRPORT
SECURITY FENCE

5' TYP.

WATER QUALITY BASIN #1
SEE DRAWING DRG-2.04

REMOVE DRIVEWAY

APPROXIMATE LIMITS OF
RAYMARK WASTE AREA
SEE VOLUME 05

GRASS LINED DITCH

REMOVE OBSTRUCTION
LIGHTS

CURVE 5

MATCH LINE STA. 28+00
SEE DRAWING HWY-2.03

MATCH LINE STA. 17+00
SEE DRAWING HWY-2.01

PC
STA 17+60.23

PC
Sta 27+54.43

GRASS LINED DITCH

REMOVE
OBSTRUCTION LIGHTS

B.M.-110

EXISTING CT ROUTE 113
(MAIN STREET)

14" DI. Force Main

Transformer
w/Elec. Meter

12' AIRPORT
SECURITY GATE

REMOVE EXISTING
CHAIN LINK FENCE

REGRADE TIDAL CHANNEL
SEE DRAWING DRG-2.06

REMOVE EXISTING OBSTRUCTION LIGHTS

SEE NOTE 2

12' AIRPORT
SECURITY GATE

12' AIRPORT
SECURITY GATE

AIRPORT SECURITY FENCE

REMOVE CHAIN LINK FENCE

END REMOVAL OF
METAL BLAST FENCE
BEGIN REMOVAL OF
CHAIN LINK FENCE
STA.1047+89-195' RT.

BOTTOM OF BASIN
LIMIT OF PAVERS

ELECTRICAL EQUIPMENT FOR
LOCALIZER TO BE RELOCATED
REMOVE FENCE AND GATE

LOCALIZER
SHELTER
TO REMAIN

High pressure
gas main

Low pressure
gas main

END REMOVAL OF CHAIN LINK FENCE
BEGIN REMOVAL OF METAL BLAST FENCE
R/W STA.1046+64-180' LT.

RUNWAY 6-24

THRESHOLD LIGHTS

LOCALIZER ANTENNA
TO REMAIN

MATCH LINE THIS SHEET

NOTES:

1. SEE UTILITY PLAN AND TYPICAL SECTION DRAWINGS FOR ANTICIPATED REMOVAL AND RELOCATION OF EXISTING UTILITY FACILITIES.
2. SEE DRAWING DRG-2.06 FOR DETAILS OF CULVERT CONSTRUCTION AT STA. 27+51.
3. SEE NOTE 1 ON DRAWING HWY-2.01 REGARDING REMOVAL OF OBSTRUCTION LIGHTS.
4. NO DRIVEWAY APRON REQUIRED. REPLACEMENT ACCESS DRIVE SHALL BE CONSTRUCTED BY OTHERS PRIOR TO CONSTRUCTION OF PROJECT NO. 015-336.

REV.	DATE	REVISION DESCRIPTION	SHEET NO.
-	-	-	-
-	-	-	-
-	-	-	-
-	-	-	-
-	-	-	-
-	-	-	-
-	-	-	-

THE INFORMATION, INCLUDING ESTIMATED QUANTITIES OF WORK, SHOWN ON THESE SHEETS IS BASED ON LIMITED INVESTIGATIONS BY THE STATE AND IS IN NO WAY WARRANTED TO INDICATE THE CONDITIONS OF ACTUAL QUANTITIES OF WORK WHICH WILL BE REQUIRED.

Plotted: 1/31/2013

DESIGNER/DRAFTER: S. HARLEY
CHECKED BY: S. MITCHELL

SCALE IN FEET
0 40 80
SCALE 1"=40'

STATE OF CONNECTICUT
DEPARTMENT OF TRANSPORTATION

Filename: ...\HW_MSH_015-336_HWY-02.dgn

Southern Connecticut
Gas Company
Proposed Facility
Relocations

PROJECT TITLE:
RUNWAY SAFETY AREA PROJECT
IGOR I. SIKORSKY MEMORIAL AIRPORT

TOWN: STRATFORD

DRAWING TITLE: GAS RELOCATION PLAN - 2

PROJECT NO. 15-336

DRAWING NO. GAS-5.02

SHEET NO. 05.022

Border Version: 10/19/07

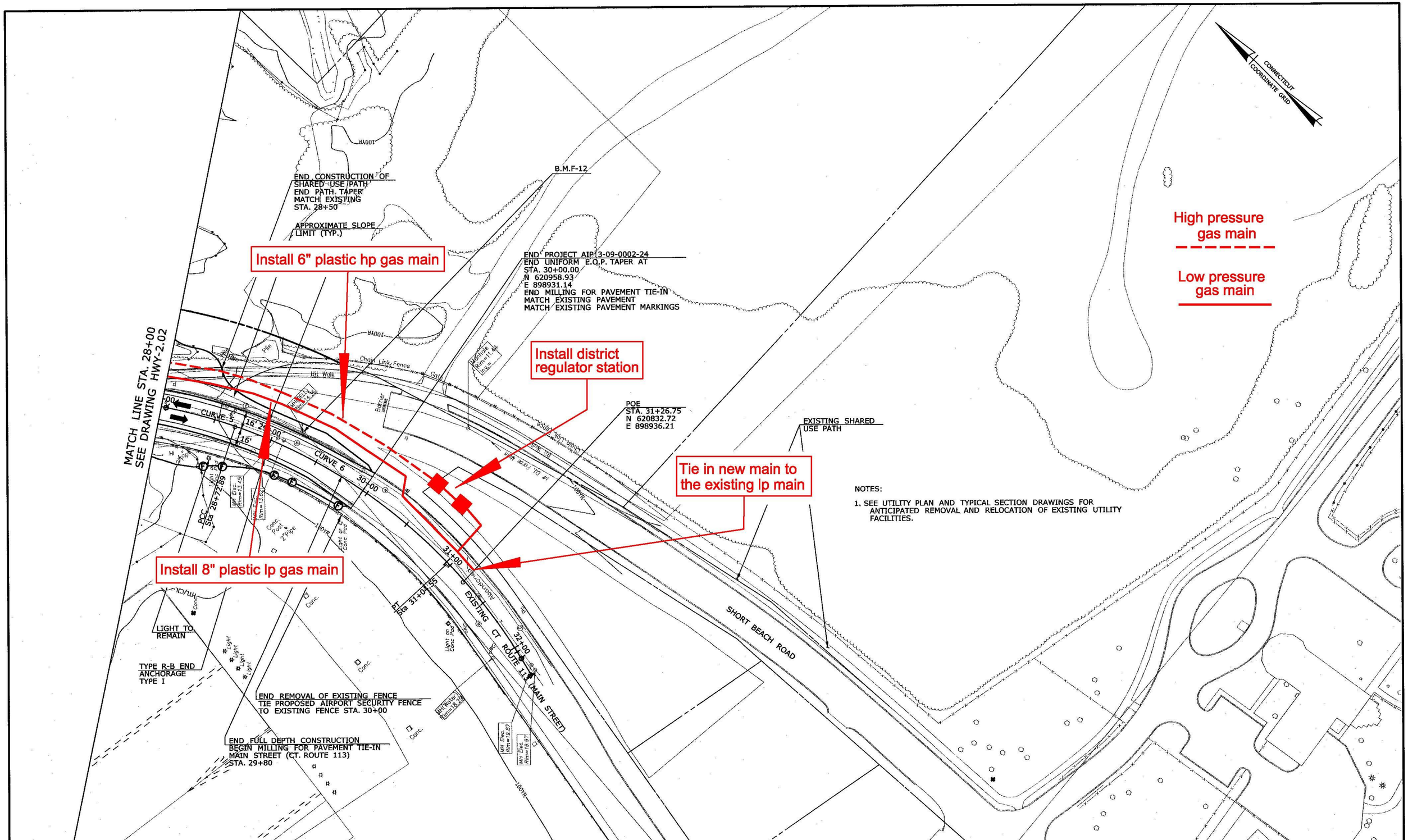

NOTES:

1. SEE UTILITY PLAN AND TYPICAL SECTION DRAWINGS FOR ANTICIPATED REMOVAL AND RELOCATION OF EXISTING UTILITY FACILITIES.

REV.	DATE	REVISION DESCRIPTION	SHEET NO.

Plotted: 1/31/2013

DESIGNER/DRAFTER: S. HARLEY
CHECKED BY: S. MITCHELL
SCALE IN FEET 0 40 80
SCALE 1"=40'

STATE OF CONNECTICUT
DEPARTMENT OF TRANSPORTATION

Filename: ...\HW_MSH_015-336_HWY-03.dgn

Southern Connecticut Gas Company Proposed Facility Relocations

PROJECT TITLE:
RUNWAY SAFETY AREA PROJECT
IGOR I. SIKORSKY MEMORIAL AIRPORT

TOWN: STRATFORD

DRAWING TITLE: GAS RELOCATION PLAN - 3

PROJECT NO. 15-336
DRAWING NO. GAS-5.03
SHEET NO. 05.023