STATE OF CONNECTICUT
DEPARTMENT OF TRANSPORTATION

RECONSTRUCTION OF I-95 OVER WEST RIVER
IN THE TOWNS OF
NEW HAVEN AND WEST HAVEN
STATE PROJECT NUMBER 092-522

VOLUME 3 : SUBSET 4

WALL 101

PRINCIPAL ENGINEER (SEALED AND CERTIFIED) *

* THIS SIGNATURE BLOCK IS DEDICATED TO THE PRIME DISCIPLINE PRINCIPAL ENGINEER/ARCHITECT THAT IS RESPONSIBLE FOR CERTIFYING PLANS

8:59:49 PM
11/13/2012
T:\V8CADD\Projects\PB18735\FD\Highway\Contract_Sheets\ssc-03-04-092522.dgn

REV.	DATE	DESCRIPTION	SHEET. NO
		REVISIONS	

DESIGNER: R. P. TALBOT
DRAFTER: M.C. DEEGAN
CHECKED BY:
DATE CHECKED:

STATE OF CONNECTICUT
DEPARTMENT OF TRANSPORTATION
ENGINEER: PB AMERICAS, INC.
APPROVED BY: DATE:

PROJECT TITLE: RECONSTRUCTION OF I-95 OVER WEST RIVER
CADD ssc-03-04-092522.dgn PLOTTED 11/13/2012

TOWN: NEW HAVEN / WEST HAVEN
DRAWING TITLE: SUBSET COVER WALL 101

PROJECT NO.: 92-522
DRAWING NO.: SSC-03.04
SHEET NO.:

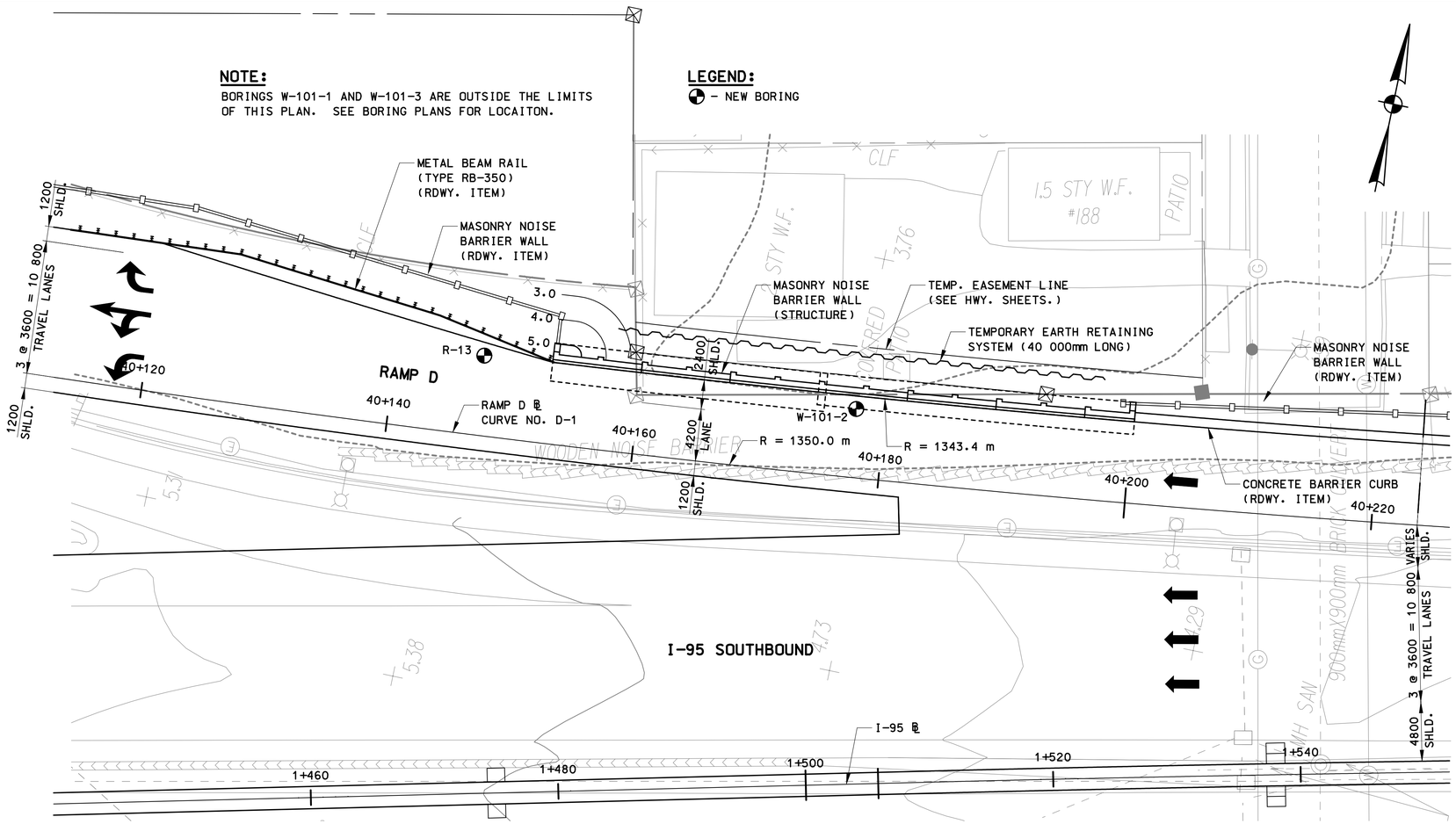

PLAN

SCALE: 1:200

RAMP D . CURVE NO. D-1	
P.C. STA.	40+058.902
N	202519.659
E	289400.877
P.T. STA.	40+314.194
N	202547.789
E	289654.232
Δ	10°-50′-05.769″
T (m)	128.028
L (m)	255.292
R (m)	1350.000

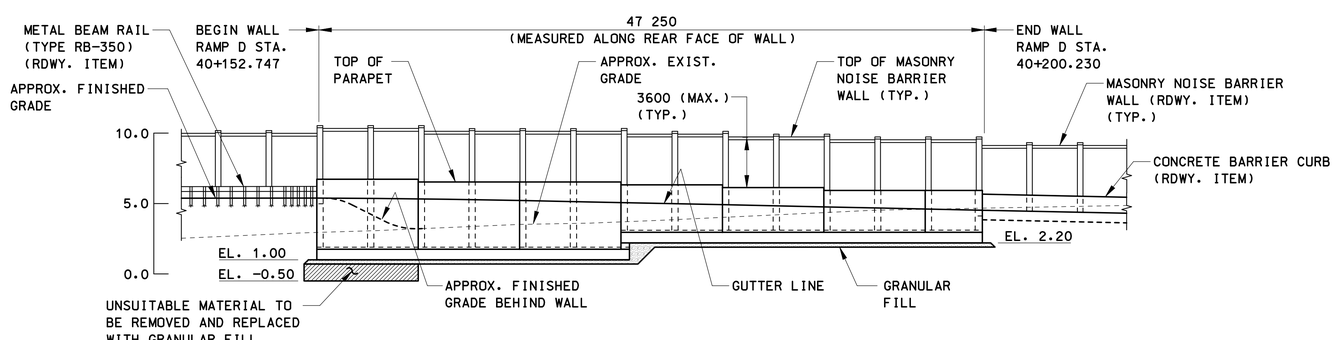

ELEVATION

SCALE: 1:200

GENERAL NOTES

SPECIFICATIONS: CONNECTICUT DEPARTMENT OF TRANSPORTATION FORM 816 (2004), INCLUDING SUPPLEMENTAL SPECIFICATION DATED JULY 2007 AND SPECIAL PROVISIONS.

DESIGN SPECIFICATIONS: AASHTO LRFD BRIDGE DESIGN SPECIFICATIONS, SECOND EDITION, 1998 WITH INTERIM SPECIFICATIONS UP TO AND INCLUDING 2002 AS SUPPLEMENTED BY THE CONNECTICUT DEPARTMENT OF TRANSPORTATION BRIDGE DESIGN MANUAL (1997).

ALLOWABLE DESIGN STRESSES:

CLASS "A" CONCRETE..... BASED ON f'c = 21 MPa
REINFORCEMENT (ASTM A615M GRADE 420)..... fy = 414 MPa

LIVE LOAD: HL-93

WIND LOAD: WIND PRESSURE EQUAL TO 1.34 kPa BASED ON WIND VELOCITY OF 137 km/hr. SEE DESIGN DATA FROM STANDARD DRAWING "MASONRY NOISE BARRIER WALL", SHEET NO. M916-F2.

FOUNDATION PRESSURES AND PILE LOADS: THE VARIOUS GROUP LOADINGS NOTED ON THE SUBSTRUCTURE PLAN SHEETS REFER TO THE GROUP LOADS AS GIVEN IN THE AASHTO LRFD BRIDGE DESIGN SPECIFICATIONS.

DIMENSIONS: ALL DIMENSIONS SHOWN ON THE PLANS ARE GIVEN IN MILLIMETERS (mm) EXCEPT IF NOTED OTHERWISE. ALL ELEVATIONS ARE GIVEN IN METERS. WHEN ELEVATIONS ARE GIVEN TO LESS THAN THREE DECIMAL PLACES, THE OMITTED DIGITS SHALL BE ASSUMED TO BE ZERO.

STATIONING: STATIONS ARE GIVEN IN METERS (m).

CONCRETE NOTES

CLASS "A" CONCRETE: CLASS "A" CONCRETE SHALL BE USED FOR THE ENTIRE SUBSTRUCTURE

JOINT SEAL: SEE SPECIAL PROVISIONS.

EXPOSED EDGES: EXPOSED EDGES OF CONCRETE SHALL BE BEVELED 25 mm X 25 mm UNLESS DIMENSIONED OTHERWISE.

CONCRETE COVER: ALL REINFORCEMENT SHALL HAVE 50 mm COVER UNLESS DIMENSIONED OTHERWISE.

REINFORCEMENT: ALL REINFORCEMENT SHALL BE ASTM A615M GRADE 420.

PREFORMED EXPANSION JOINT FILLER: THE COST OF FURNISHING AND INSTALLING PREFORMED EXPANSION JOINT FILLER SHALL BE INCLUDED IN THE COST OF THE ITEM "CLASS 'A' CONCRETE".

CONSTRUCTION JOINTS: CONSTRUCTION JOINTS, OTHER THAN THOSE SHOWN ON THE PLANS, WILL NOT BE PERMITTED WITHOUT THE PRIOR APPROVAL OF THE ENGINEER.

TABLE OF QUANTITIES

ITEM	UNIT	QUANTITY
STRUCTURE EXCAVATION - EARTH (COMPLETE)	CU.M	800
GRANULAR FILL	CU.M	150
PERVIOUS STRUCTURE BACKFILL	CU.M	550
CLASS "A" CONCRETE	CU.M	250
DEFORMED STEEL BARS	kg	12,000
DAMPPROOFING	SQ.M	140
TEMPORARY EARTH RETAINING SYSTEM	SQ.M	140

REV.	DATE	DESCRIPTION	SHEET. NO

REVISIONS

DESIGNER: D. BAGDASARIAN
DRAFTER: D. BAGDASARIAN
CHECKED BY: B. SZYMANSKI
DATE CHECKED: 10-11-07

STATE OF CONNECTICUT
DEPARTMENT OF TRANSPORTATION

ENGINEER: PB AMERICAS, INC.
APPROVED BY: DATE:

PROJECT TITLE: RECONSTRUCTION OF I-95 OVER WEST RIVER RETAINING WALL 101

CADD PLOTTED 11/13/2012

TOWN: NEW HAVEN / WEST HAVEN

DRAWING TITLE: GENERAL PLAN

PROJECT NO.: 92-522
DRAWING NO.: STR-01
SHEET NO.:

2:09:21 PM
11/13/2012
T:\VBCADD\Projects\PB\87735\FD\Structures\Contract_Sheets\Wall 101\str-01-092522-101.dgn

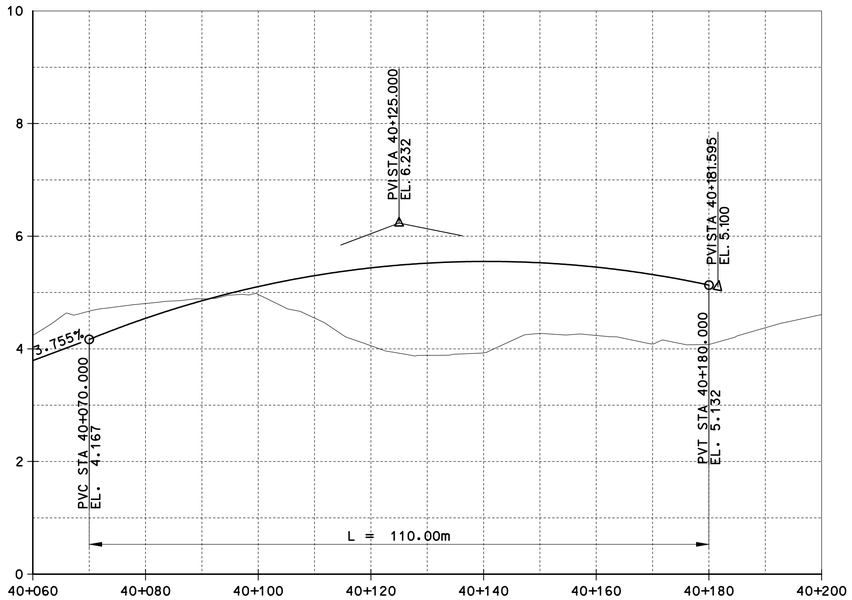

RAMP D PROFILE

VERTICAL SCALE: 1:50
HORIZONTAL SCALE: 1:500

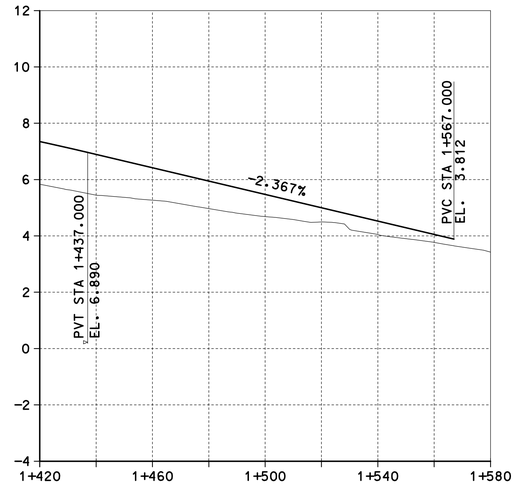

I-95 PROFILE

VERTICAL SCALE :1:100
HORIZONTAL SCALE: 1:1000

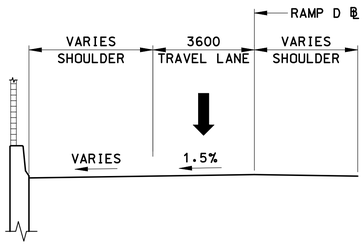

RAMP D SECTION

SCALE: 1:10

REV.	DATE	DESCRIPTION	SHEET. NO

REVISIONS

DESIGNER: D. BAGDASARIAN
DRAFTER: G. LEE
CHECKED BY: B. SZYMANSKI
DATE CHECKED: 10-11-07

STATE OF CONNECTICUT
DEPARTMENT OF TRANSPORTATION

ENGINEER: PB AMERICAS, INC.
APPROVED BY:
DATE:

PROJECT TITLE:
RECONSTRUCTION OF I-95
OVER WEST RIVER
RETAINING WALL 101

CADD
PLOTTED 11/13/2012

TOWN:
NEW HAVEN / WEST HAVEN

DRAWING TITLE:
PROFILES

PROJECT NO.: 92-522
DRAWING NO.: STR-02
SHEET NO.:

2:0:09 PM
11/13/2012
T:\VBCADD\Projects\PB\8735\FD\Structures\Contract_Sheets\Wall 101\str-02-092522-101.dgn

NOTE:

SEE HIGHWAY PLANS FOR BORING LOCATION.

Boring Report – Sheet 1 of 3

E. Del Priore	SM - 001 - M REV. 1/94 BORING REPORT	Hole No. W101-1
DRILLER	STATE OF CONNECTICUT	Line & Station I-95 1+436.4
R. Sharp / E. Fulton	DEPARTMENT OF TRANSPORTATION	Offset 43.0 LT
INSPECTOR	TOWN: New Haven / West Haven, CT	N. Coordinate 202529.1
Parsons Brinckerhoff Quade & Douglas, Inc.	PROJECT NAME: Reconstruction I-95 Over West River	E. Coordinate 289449.3
SOILS ENGINEER	PROJECT NUMBER: 92-533	Parsons Brinckerhoff Quade & Douglas, Inc.
	BORING CONTRACTOR: General Borings, Inc.	PRIME DESIGNER

		Casing				Auger		Mud	Sampler		Core Barrel			
Surface Elevation: 1.47														
Date Started: 07/23/2002	Utilized			X			X	X	X	X				
Date Finished: 07/24/2002	Type	BW	NW	HW	Pipe	Solid	Hollow	Bentonite	SS	UP	B (st)	B (dt)	NX (st)	NV II (dt)
Groundwater Observations	Size I.D. (mm)	60	76	100	64		150	X	36		35	35	55	55
@ ~2.59 m after ____ hours	Hammer (kg)	136	136	136	136			Bit	63.5		Type		Diamond	
@ m after hours	Fall (m)	0.6	0.6	0.6	0.6			0.80 mm	0.76		of Bit		Carbide	

DEPTH	Casing blows per half meter	SAMPLE DEPTH IN METERS FROM - TO	NO.	PEN. m	REC. m	Type	BLOWS PER 0.15 METERS ON SAMPLER 0 - 0.15	0.15 - 0.30	0.30 - 0.45	0.45 - 0.60	STRATA CHANGE: DEPTH, ELEV.	FIELD IDENTIFICATION OF SOIL, REMARKS (INCL. COLOR, LOSS OF WASH WATER, ETC.)
		0.00 - 0.60	1	0.60	0.05	D	2	2	3	2		Brown f SAND, little silt, trace f-c gravel, trace roots, trace wood, dry.
											1.07	
		1.52 - 2.12	2	0.60	0.05	D	1	1	1	2	0.40	Gray organic SILT, trace f sand.
		3.05 - 3.65	3	0.60	0.58	D	WOH	WOH	WOH	WOH		Gray organic SILT.
		3.96 - 4.56	1	0.60	0.60	UP						Piston.
5		4.57 - 5.17	4	0.60	0.41	D	3	5	13	17		Gray organic SILT, little f sand, trace shells.
											5.64	
		6.10 - 6.70	5	0.60	0.60	D	7	5	5	6	-4.17	Brown gray f SAND, trace silt, wet.
		7.62 - 8.22	6	0.60	0.60	D	2	2	7	8		Brown / red brown, little silt, saturated.
		9.14 - 9.74	7	0.60	0.30	D	6	10	13	17		Red brown / orange brown f SAND, trace silt, trace c sand, wet.
10												
		10.67 - 11.27	8	0.60	0.51	D	7	10	10	13		Orange brown f SAND, trace silt, trace c sand, wet.
		12.19 - 12.79	9	0.60	0.51	D	6	11	13	15		Red brown f SAND, little silt.
		13.72 - 14.32	10	0.60	0.46	D	5	7	8	10		Red brown f SAND, some silt, saturated, medium dilatancy.
15												

Casing			Meters of	
Size	From	To	Earth	Rock
100 mm	0	4.57	31.08	
			No. of Samples	
			21D/1UP	

NOTES: Bombardier Rig - Raising and dropping of the 140-lb (63.5kg) weight was accomplished with an automatic safety hammer.

SAMPLE TYPE CODING: D=Driven C=Core A=Auger UP=Undisturbed Piston V=Vane Test

PROPORTIONS USED: Trace = 1 -10%, Little = 10 - 20%, Some = 20 - 35%, And = 35 - 50%

Hole No. W101-1 Sheet 1 of 3

Boring Report – Sheet 2 of 3

E. Del Priore	SM - 001 - M REV. 1/94 BORING REPORT	Hole No. W101-1
DRILLER	STATE OF CONNECTICUT	Line & Station I-95 1+436.4
R. Sharp / E. Fulton	DEPARTMENT OF TRANSPORTATION	Offset 43.0 LT
INSPECTOR	TOWN: New Haven / West Haven, CT	N. Coordinate 202529.1
Parsons Brinckerhoff Quade & Douglas, Inc.	PROJECT NAME: Reconstruction I-95 Over West River	E. Coordinate 289449.3
SOILS ENGINEER	PROJECT NUMBER: 92-533	Parsons Brinckerhoff Quade & Douglas, Inc.
	BORING CONTRACTOR: General Borings, Inc.	PRIME DESIGNER

		Casing				Auger		Mud	Sampler		Core Barrel			
Surface Elevation: 1.47														
Date Started: 07/23/2002	Utilized			X			X	X	X	X				
Date Finished: 07/24/2002	Type	BW	NW	HW	Pipe	Solid	Hollow	Bentonite	SS	UP	B (st)	B (dt)	NX (st)	NV II (dt)
Groundwater Observations	Size I.D. (mm)	60	76	100	64		150	X	36		35	35	55	55
@ ~2.59 m after ____ hours	Hammer (kg)	136	136	136	136			Bit	63.5		Type		Diamond	
@ m after hours	Fall (m)	0.6	0.6	0.6	0.6			0.80 mm	0.76		of Bit		Carbide	

DEPTH	Casing blows per half meter	SAMPLE DEPTH IN METERS FROM - TO	NO.	PEN. m	REC. m	Type	BLOWS PER 0.15 METERS ON SAMPLER 0 - 0.15	0.15 - 0.30	0.30 - 0.45	0.45 - 0.60	STRATA CHANGE: DEPTH, ELEV.	FIELD IDENTIFICATION OF SOIL, REMARKS (INCL. COLOR, LOSS OF WASH WATER, ETC.)
		15.24 - 15.84	11	0.60	0.51	D	6	8	9	12		Red brown f SAND, some silt, rapid dilatancy.
		16.76 - 17.36	12	0.60	0.51	D	10	14	14	16		Red brown f SAND, trace to little silt, wet.
		18.29 - 18.89	13	0.60	0.51	D	9	14	15	19		Red brown f SAND, trace to little silt, wet.
20		19.81 - 20.41	14	0.60	0.41	D	16	15	16	21		Red brown f SAND, little silt, wet.
		21.34 - 21.94	15	0.60	0.46	D	14	17	17	22		Red brown f SAND, little silt, wet.
		22.86 - 23.46	16	0.60	0.25	D	21	23	24	32		Red brown f SAND, some silt, wet.
											23.93	
		24.38 - 24.98	17	0.60	0.41	D	14	23	28	33	-22.46	Red brown SILT and f SAND, trace clayey silt seams (~0.79 - 1.59 mm).
25												
		25.91 - 26.51	18	0.60	0.51	D	37	36	33	35		Red brown f SAND, some silt, wet.
		27.43 - 28.03	19	0.60	0.41	D	17	24	27	32		Red brown SILT and f SAND, wet.
		28.96 - 29.56	20	0.60	0.46	D	16	23	23	33		Red brown SILT and f SAND, wet.
30												

Casing			Meters of	
Size	From	To	Earth	Rock
100 mm	0	4.57	31.08	
			No. of Samples	
			21D/1UP	

NOTES: Bombardier Rig - Raising and dropping of the 140-lb (63.5kg) weight was accomplished with an automatic safety hammer.

SAMPLE TYPE CODING: D=Driven C=Core A=Auger UP=Undisturbed Piston V=Vane Test

PROPORTIONS USED: Trace = 1 -10%, Little = 10 - 20%, Some = 20 - 35%, And = 35 - 50%

Hole No. W101-1 Sheet 2 of 3

Boring Report – Sheet 3 of 3

E. Del Priore	SM - 001 - M REV. 1/94 BORING REPORT	Hole No. W101-1
DRILLER	STATE OF CONNECTICUT	Line & Station I-95 1+436.4
R. Sharp / E. Fulton	DEPARTMENT OF TRANSPORTATION	Offset 43.0 LT
INSPECTOR	TOWN: New Haven / West Haven, CT	N. Coordinate 202529.1
Parsons Brinckerhoff Quade & Douglas, Inc.	PROJECT NAME: Reconstruction I-95 Over West River	E. Coordinate 289449.3
SOILS ENGINEER	PROJECT NUMBER: 92-533	Parsons Brinckerhoff Quade & Douglas, Inc.
	BORING CONTRACTOR: General Borings, Inc.	PRIME DESIGNER

		Casing				Auger		Mud	Sampler		Core Barrel			
Surface Elevation: 1.47														
Date Started: 07/23/2002	Utilized			X			X	X	X	X				
Date Finished: 07/24/2002	Type	BW	NW	HW	Pipe	Solid	Hollow	Bentonite	SS	UP	B (st)	B (dt)	NX (st)	NV II (dt)
Groundwater Observations	Size I.D. (mm)	60	76	100	64		150	X	36		35	35	55	55
@ ~2.59 m after ____ hours	Hammer (kg)	136	136	136	136			Bit	63.5		Type		Diamond	
@ m after hours	Fall (m)	0.6	0.6	0.6	0.6			0.80 mm	0.76		of Bit		Carbide	

DEPTH	Casing blows per half meter	SAMPLE DEPTH IN METERS FROM - TO	NO.	PEN. m	REC. m	Type	BLOWS PER 0.15 METERS ON SAMPLER 0 - 0.15	0.15 - 0.30	0.30 - 0.45	0.45 - 0.60	STRATA CHANGE: DEPTH, ELEV.	FIELD IDENTIFICATION OF SOIL, REMARKS (INCL. COLOR, LOSS OF WASH WATER, ETC.)
		30.48 - 31.08	21	0.60	0.41	D	18	24	25	32		Red brown SILT and f SAND, wet.
											31.08	
											-29.61	Bottom of Boring 31.08 m.
35												
40												
45												

Casing			Meters of	
Size	From	To	Earth	Rock
100 mm	0	4.57	31.08	
			No. of Samples	
			21D/1UP	

NOTES: Bombardier Rig - Raising and dropping of the 140-lb (63.5kg) weight was accomplished with an automatic safety hammer.

SAMPLE TYPE CODING: D=Driven C=Core A=Auger UP=Undisturbed Piston V=Vane Test

PROPORTIONS USED: Trace = 1 -10%, Little = 10 - 20%, Some = 20 - 35%, And = 35 - 50%

Hole No. W101-1 Sheet 3 of 3

REV.	DATE	DESCRIPTION	SHEET. NO
		REVISIONS	

DESIGNER: T. P. NGUYEN
DRAFTER: C. MARQUES
CHECKED BY: R. BORJESON
DATE CHECKED: 9–11–06

STATE OF CONNECTICUT
DEPARTMENT OF TRANSPORTATION

ENGINEER: PB AMERICAS, INC.
APPROVED BY: DATE:

PROJECT TITLE: RECONSTRUCTION OF I–95 OVER WEST RIVER RETAINING WALL 101

CADD PLOTTED 11/13/2012

TOWN: NEW HAVEN / WEST HAVEN

DRAWING TITLE: BORINGS – W101–1

PROJECT NO.: 92–522
DRAWING NO.: STR–03
SHEET NO.:

2:10:52 PM
11/13/2012
T:\V8CADD\Projects\PBI8735\FD\Structures\Contract_Sheets\Wall 101\str-03-092522-101.dgn

E. Del Priore	SM - 001 - M REV. 1/94 BORING REPORT	Hole No. R-13
DRILLER	STATE OF CONNECTICUT	Line & Station I-95 1+474.9
R. Sharp	DEPARTMENT OF TRANSPORTATION	Offset 35.3 LT
INSPECTOR	TOWN: New Haven / West Haven, CT	N. Coordinate 202530.4
Parsons Brinckerhoff Quade & Douglas, Inc.	PROJECT NAME: Reconstruction I-95 Over West River	E. Coordinate 289488.5
SOILS ENGINEER	PROJECT NUMBER: 92-533	Parsons Brinckerhoff Quade & Douglas, Inc.
	BORING CONTRACTOR: General Borings, Inc.	PRIME DESIGNER

Surface Elevation: 2.36		Casing				Auger		Mud	Sampler		Core Barrel				
Date Started: 07/26/2002	Utilized			X			X	X	X						
Date Finished: 07/26/2002	Type	BW	NW	HW	Pipe	Solid	Hollow	Bentonite	SS	UP	B (st)	B (dt)	NX (st)	NV II (dt)
Groundwater Observations	Size I.D. (mm)	60	76	100	64		150	X	36		35	35	55	55
@ ~2.13 m after ____ hours	Hammer (kg)	136	136	136	136			Bit	63.5		Type		Diamond	
@ ____ m after ____ hours	Fall (m)	0.6	0.6	0.6	0.6			0.80 mm	0.76		of Bit		Carbide	

DEPTH (Casing blows per half meter)	SAMPLE DEPTH IN METERS FROM - TO	NO.	PEN. m	REC. m	Type	BLOWS PER 0.15 METERS ON SAMPLER 0 - 0.15	0.15 - 0.30	0.30 - 0.45	0.45 - 0.60	STRATA CHANGE: DEPTH, ELEV.	FIELD IDENTIFICATION OF SOIL, REMARKS (INCL. COLOR, LOSS OF WASH WATER, ETC.)
	0.00 - 0.60	1	0.60	0.20	D	2	4	6	7		Brown f SAND, some silt, roots.
	1.52 - 2.12	2	0.60	0.25	D	3	4	5	3	2.12	Gray f SAND, some silt, trace fibers.
										0.24 3.20	(Gray organic SILT between samples 2 and 3.)
	3.05 - 3.65	3	0.60	0.56	D	2	2	9	7	-0.84	Gray f SAND, some silt, trace fibers.
5	4.57 - 5.17	4	0.60	0.60	D	3	5	7	10		Red brown f SAND, little silt.
	6.10 - 6.70	5	0.60	0.36	D	5	7	9	8		Red brown f SAND, little silt.
	7.62 - 8.22	6	0.60	0.41	D	6	8	8	10		Red brown f SAND, little silt.
	9.14 - 9.74	7	0.60	0.30	D	9	13	17	18		Red brown f SAND, some silt.
10											
	10.67 - 11.27	8	0.60	0.30	D	10	14	16	20		Red brown f SAND, some silt.
	12.19 - 12.79	9	0.60	0.25	D	7	8	11	13		Red brown f SAND, some silt, trace f gravel.
	13.72 - 14.32	10	0.60	0.25	D	8	9	12	12		Red brown f SAND, some silt.
15											

Casing Size	From	To	Meters of Earth	Rock
100 mm	0	4.57	15.84	
			No. of Samples	
			11D	

NOTES: Bombardier Rig - Raising and dropping of the 140-lb (63.5kg) safety hammer was accomplished using a wire winch.

SAMPLE TYPE CODING: D=Driven C=Core A=Auger UP=Undisturbed Piston V=Vane Test

PROPORTIONS USED: Trace = 1 -10%, Little = 10 - 20%, Some = 20 - 35%, And = 35 - 50%

Hole No. R-13

Sheet 1 of 2

E. Del Priore	SM - 001 - M REV. 1/94 BORING REPORT	Hole No. R-13
DRILLER	STATE OF CONNECTICUT	Line & Station I-95 1+474.9
R. Sharp	DEPARTMENT OF TRANSPORTATION	Offset 35.3 LT
INSPECTOR	TOWN: New Haven / West Haven, CT	N. Coordinate 202530.4
Parsons Brinckerhoff Quade & Douglas, Inc.	PROJECT NAME: Reconstruction I-95 Over West River	E. Coordinate 289488.5
SOILS ENGINEER	PROJECT NUMBER: 92-533	Parsons Brinckerhoff Quade & Douglas, Inc.
	BORING CONTRACTOR: General Borings, Inc.	PRIME DESIGNER

Surface Elevation: 2.36		Casing				Auger		Mud	Sampler		Core Barrel				
Date Started: 07/26/2002	Utilized			X			X	X	X						
Date Finished: 07/26/2002	Type	BW	NW	HW	Pipe	Solid	Hollow	Bentonite	SS	UP	B (st)	B (dt)	NX (st)	NV II (dt)
Groundwater Observations	Size I.D. (mm)	60	76	100	64		150	X	36		35	35	55	55
@ ~2.13 m after ____ hours	Hammer (kg)	136	136	136	136			Bit	63.5		Type		Diamond	
@ ____ m after ____ hours	Fall (m)	0.6	0.6	0.6	0.6			0.80 mm	0.76		of Bit		Carbide	

DEPTH (Casing blows per half meter)	SAMPLE DEPTH IN METERS FROM - TO	NO.	PEN. m	REC. m	Type	BLOWS PER 0.15 METERS ON SAMPLER 0 - 0.15	0.15 - 0.30	0.30 - 0.45	0.45 - 0.60	STRATA CHANGE: DEPTH, ELEV.	FIELD IDENTIFICATION OF SOIL, REMARKS (INCL. COLOR, LOSS OF WASH WATER, ETC.)
	15.24 - 15.84	11	0.60	0.33	D	7	6	9	11		Red brown f SAND, little to some silt.
										15.84 -13.48	Bottom of Boring 15.84 m.
20											
25											
30											

Casing Size	From	To	Meters of Earth	Rock
100 mm	0	4.57	15.84	
			No. of Samples	
			11D	

NOTES: Bombardier Rig - Raising and dropping of the 140-lb (63.5kg) safety hammer was accomplished using a wire winch.

SAMPLE TYPE CODING: D=Driven C=Core A=Auger UP=Undisturbed Piston V=Vane Test

PROPORTIONS USED: Trace = 1 -10%, Little = 10 - 20%, Some = 20 - 35%, And = 35 - 50%

Hole No. R-13

Sheet 2 of 2

REV.	DATE	DESCRIPTION	SHEET. NO
		REVISIONS	

DESIGNER: T. P. NGUYEN

DRAFTER: C. MARQUES

CHECKED BY: R. BORJESON

DATE CHECKED: 9–11–06

STATE OF CONNECTICUT
DEPARTMENT OF TRANSPORTATION

ENGINEER: PB AMERICAS, INC.

APPROVED BY: DATE:

PROJECT TITLE: RECONSTRUCTION OF I–95 OVER WEST RIVER RETAINING WALL 101

CADD PLOTTED 11/13/2012

TOWN: NEW HAVEN / WEST HAVEN

DRAWING TITLE: BORINGS – R–13

PROJECT NO.: 92–522

DRAWING NO.: STR–04

SHEET NO.:

2/1/43 PM
11/13/2012
T:\WBCADD\Projects\PB\8735FD\Structures\Contract_Sheets\Wall 101\str-04-092522-101.dgn

E. Del Priore	SM - 001 - M REV. 1/94 BORING REPORT	Hole No. W101-2
DRILLER	STATE OF CONNECTICUT	Line & Station I-95 1+504.8
E. Fulton	DEPARTMENT OF TRANSPORTATION	Offset 30.3 LT
INSPECTOR	TOWN: New Haven / West Haven, CT	N. Coordinate 202532.3
Parsons Brinckerhoff Quade & Douglas, Inc.	PROJECT NAME: Reconstruction I-95 Over West River	E. Coordinate 289518.8
SOILS ENGINEER	PROJECT NUMBER: 92-533	Parsons Brinckerhoff Quade & Douglas, Inc.
	BORING CONTRACTOR: General Borings, Inc.	PRIME DESIGNER

Surface Elevation: 3.65			Casing				Auger		Mud	Sampler		Core Barrel			
Date Started: 07/25/2002	Utilized			X			X	X	X						
Date Finished: 07/25/2002	Type	BW	NW	HW	Pipe	Solid	Hollow	Bentonite	SS	UP	B (st)	B (dt)	NX (st)	NV II (dt)
Groundwater Observations	Size I.D. (mm)	60	76	100	64		150	X	36		35	35	55	55
@ ~2.59 m after ____ hours	Hammer (kg)	136	136	136	136			Bit	63.5		Type		Diamond	
@ ____ m after ____ hours	Fall (m)	0.6	0.6	0.6	0.6			0.80 mm	0.76		of Bit		Carbide	

D E P T H	Casing blows per half meter	SAMPLE DEPTH IN METERS FROM - TO	NO.	PEN. m	REC. m	Type	BLOWS PER 0.15 METERS ON SAMPLER 0 - 0.15	0.15 - 0.30	0.30 - 0.45	0.45 - 0.60	STRATA CHANGE: DEPTH, ELEV.	FIELD IDENTIFICATION OF SOIL, REMARKS (INCL. COLOR, LOSS OF WASH WATER, ETC.)
		0.00 - 0.60	1	0.60	0.20	D	1	2	4	4		Top 0.10m: Dark brown / black SILT, trace leaf detrius, trace roots, little f sand. Bottom 0.10m: Light brown f SAND, trace c sand.
		1.52 - 2.12	2	0.60	0.41	D	8	10	11	15		Brown f SAND, trace c sand.
		3.05 - 3.65	3	0.60	0.51	D	12	15	14	12		Red brown f SAND, trace silt, wet.
5		4.57 - 5.17	4	0.60	0.51	D	8	13	16	18		Red brown f SAND, little silt, wet.
		6.10 - 6.70	5	0.60	0.36	D	4	6	8	10		Red brown f SAND, little silt, saturated, rapid dilatancy.
		7.62 - 8.22	6	0.60	0.41	D	10	11	14	13		Red brown f SAND, little silt, saturated, rapid dilatancy.
		9.14 - 9.74	7	0.60	0.51	D	10	14	12	13		Red brown f SAND, trace to little silt, wet.
10												
		10.67 - 11.27	8	0.60	0.46	D	12	15	14	17		Red brown f SAND, little silt, wet.
		12.19 - 12.79	9	0.60	0.20	D	5	7	7	9		Red brown f SAND, little silt, wet.
		13.72 - 14.32	10	0.60	0.25	D	6	8	10	14		Red brown f SAND, little silt, wet.
15												

Casing Size	From	To	Meters of Earth	Rock
100 mm	0	4.57	31.08	
			No. of Samples	
			21D/1UP	

NOTES: Bombardier Rig - Raising and dropping of the 140-lb (63.5kg) weight was accomplished with an automatic safety hammer.

SAMPLE TYPE CODING: D=Driven C=Core A=Auger UP=Undisturbed Piston V=Vane Test
PROPORTIONS USED: Trace = 1 -10%, Little = 10 - 20%, Some = 20 - 35%, And = 35 - 50%

Hole No. W101-2
Sheet 1 of 3

E. Del Priore	SM - 001 - M REV. 1/94 BORING REPORT	Hole No. W101-2
DRILLER	STATE OF CONNECTICUT	Line & Station I-95 1+504.8
E. Fulton	DEPARTMENT OF TRANSPORTATION	Offset 30.3 LT
INSPECTOR	TOWN: New Haven / West Haven, CT	N. Coordinate 202532.3
Parsons Brinckerhoff Quade & Douglas, Inc.	PROJECT NAME: Reconstruction I-95 Over West River	E. Coordinate 289518.8
SOILS ENGINEER	PROJECT NUMBER: 92-533	Parsons Brinckerhoff Quade & Douglas, Inc.
	BORING CONTRACTOR: General Borings, Inc.	PRIME DESIGNER

Surface Elevation: 3.65			Casing				Auger		Mud	Sampler		Core Barrel			
Date Started: 07/25/2002	Utilized			X			X	X	X						
Date Finished: 07/25/2002	Type	BW	NW	HW	Pipe	Solid	Hollow	Bentonite	SS	UP	B (st)	B (dt)	NX (st)	NV II (dt)
Groundwater Observations	Size I.D. (mm)	60	76	100	64		150	X	36		35	35	55	55
@ ~2.59 m after ____ hours	Hammer (kg)	136	136	136	136			Bit	63.5		Type		Diamond	
@ ____ m after ____ hours	Fall (m)	0.6	0.6	0.6	0.6			0.80 mm	0.76		of Bit		Carbide	

D E P T H	Casing blows per half meter	SAMPLE DEPTH IN METERS FROM - TO	NO.	PEN. m	REC. m	Type	BLOWS PER 0.15 METERS ON SAMPLER 0 - 0.15	0.15 - 0.30	0.30 - 0.45	0.45 - 0.60	STRATA CHANGE: DEPTH, ELEV.	FIELD IDENTIFICATION OF SOIL, REMARKS (INCL. COLOR, LOSS OF WASH WATER, ETC.)
		15.24 - 15.84	11	0.60	0.46	D	11	12	14	16		Red brown f SAND, little silt, wet.
		16.76 - 17.36	12	0.60	0.46	D	10	13	14	17		Red brown f SAND, some silt, wet.
		18.29 - 18.89	13	0.60	0.36	D	15	16	17	21		Red brown f SAND and SILT, wet.
20		19.81 - 20.41	14	0.60	0.46	D	16	15	17	24		Red brown SILT and f SAND, saturated, rapid dilatancy.
		21.34 - 21.94	15	0.60	0.25	D	15	19	26	32		Red brown f SAND, some silt.
		22.86 - 23.46	16	0.60	0.30	D	17	22	29	36		Red brown f SAND, some silt.
		24.38 - 24.98	17	0.60	0.41	D	16	17	19	26		Red brown SILT, some f sand.
25												
		25.91 - 26.51	18	0.60	0.36	D	15	16	20	27		Red brown f SAND and SILT.
		27.43 - 28.03	19	0.60	0.46	D	14	17	17	24		Red brown f SAND and SILT.
		28.96 - 29.56	20	0.60	0.46	D	15	19	19	26		Red brown SILT and f SAND.
30												

Casing Size	From	To	Meters of Earth	Rock
100 mm	0	4.57	31.08	
			No. of Samples	
			21D/1UP	

NOTES: Bombardier Rig - Raising and dropping of the 140-lb (63.5kg) weight was accomplished with an automatic safety hammer.

SAMPLE TYPE CODING: D=Driven C=Core A=Auger UP=Undisturbed Piston V=Vane Test
PROPORTIONS USED: Trace = 1 -10%, Little = 10 - 20%, Some = 20 - 35%, And = 35 - 50%

Hole No. W101-2
Sheet 2 of 3

E. Del Priore	SM - 001 - M REV. 1/94 BORING REPORT	Hole No. W101-2
DRILLER	STATE OF CONNECTICUT	Line & Station I-95 1+504.8
E. Fulton	DEPARTMENT OF TRANSPORTATION	Offset 30.3 LT
INSPECTOR	TOWN: New Haven / West Haven, CT	N. Coordinate 202532.3
Parsons Brinckerhoff Quade & Douglas, Inc.	PROJECT NAME: Reconstruction I-95 Over West River	E. Coordinate 289518.8
SOILS ENGINEER	PROJECT NUMBER: 92-533	Parsons Brinckerhoff Quade & Douglas, Inc.
	BORING CONTRACTOR: General Borings, Inc.	PRIME DESIGNER

Surface Elevation: 3.65			Casing				Auger		Mud	Sampler		Core Barrel			
Date Started: 07/25/2002	Utilized			X			X	X	X						
Date Finished: 07/25/2002	Type	BW	NW	HW	Pipe	Solid	Hollow	Bentonite	SS	UP	B (st)	B (dt)	NX (st)	NV II (dt)
Groundwater Observations	Size I.D. (mm)	60	76	100	64		150	X	36		35	35	55	55
@ ~2.59 m after ____ hours	Hammer (kg)	136	136	136	136			Bit	63.5		Type		Diamond	
@ ____ m after ____ hours	Fall (m)	0.6	0.6	0.6	0.6			0.80 mm	0.76		of Bit		Carbide	

D E P T H	Casing blows per half meter	SAMPLE DEPTH IN METERS FROM - TO	NO.	PEN. m	REC. m	Type	BLOWS PER 0.15 METERS ON SAMPLER 0 - 0.15	0.15 - 0.30	0.30 - 0.45	0.45 - 0.60	STRATA CHANGE: DEPTH, ELEV.	FIELD IDENTIFICATION OF SOIL, REMARKS (INCL. COLOR, LOSS OF WASH WATER, ETC.)
		30.48 - 31.08	21	0.60	0.46	D	13	16	17	21	31.08	Red brown SILT and f SAND.
												Bottom of Boring 31.08 m.
35												
40												
45												

Casing Size	From	To	Meters of Earth	Rock
100 mm	0	4.57	31.08	
			No. of Samples	
			21D/1UP	

NOTES: Bombardier Rig - Raising and dropping of the 140-lb (63.5kg) weight was accomplished with an automatic safety hammer.

SAMPLE TYPE CODING: D=Driven C=Core A=Auger UP=Undisturbed Piston V=Vane Test
PROPORTIONS USED: Trace = 1 -10%, Little = 10 - 20%, Some = 20 - 35%, And = 35 - 50%

Hole No. W101-2
Sheet 3 of 3

REV.	DATE	DESCRIPTION	SHEET. NO
		REVISIONS	

DESIGNER: T. P. NGUYEN
DRAFTER: C. MARQUES
CHECKED BY: R. BORJESON
DATE CHECKED: 9–11–06

STATE OF CONNECTICUT
DEPARTMENT OF TRANSPORTATION

ENGINEER: PB AMERICAS, INC.
APPROVED BY:
DATE:

PROJECT TITLE: RECONSTRUCTION OF I–95 OVER WEST RIVER RETAINING WALL 101

CADD
PLOTTED 11/13/2012

TOWN: NEW HAVEN / WEST HAVEN

DRAWING TITLE: BORINGS – W101–2

PROJECT NO.: 92–522
DRAWING NO.: STR–05
SHEET NO.:

2:12:30 PM
11/13/2012
T:\WCADD\Projects\PB\8735\FD\Structures\Contract_Sheets\Wall 101\str-05-092522-101.dgn

NOTE:

SEE HIGHWAY PLANS FOR BORING LOCATION.

M. Jennett	SM - 001 - M REV. 1/94 BORING REPORT	Hole No.	W101-3
DRILLER	STATE OF CONNECTICUT	Line & Station	I-95 1+590.4
R. Sharp	DEPARTMENT OF TRANSPORTATION	Offset	13.1 LT
INSPECTOR	TOWN: New Haven / West Haven, CT	N. Coordinate	202534.4
Parsons Brinckerhoff Quade & Douglas, Inc.	PROJECT NAME: Reconstruction I-95 Over West River	E. Coordinate	289606.5
SOILS ENGINEER	PROJECT NUMBER: 92-533	Parsons Brinckerhoff Quade & Douglas, Inc.	
	BORING CONTRACTOR: General Borings, Inc.	PRIME DESIGNER	

Surface Elevation: 3.17			Casing				Auger		Mud	Sampler		Core Barrel			
Date Started: 08/12/2002	Utilized			X				X	X	X					
Date Finished: 08/12/2002	Type	BW	NW	HW	Pipe	Solid	Hollow	Bentonite	SS	UP	B (st)	B (dt)	NX (st)	NV II (dt)
Groundwater Observations	Size I.D. (mm)	60	76	100	64		150	X	36		35	35	55	55
@ ~4.11 m after ____ hours	Hammer (kg)	136	136	136	136			Bit	63.5		Type		Diamond	
@ m after ____ hours	Fall (m)	0.6	0.6	0.6	0.6			0.80 mm	0.76		of Bit		Carbide	

DEPTH (Casing blows per half meter)	DEPTH IN METERS FROM - TO	SAMPLE NO.	PEN. m	REC. m	Type	BLOWS PER 0.15 METERS ON SAMPLER 0 - 0.15	0.15 - 0.30	0.30 - 0.45	0.45 - 0.60	STRATA CHANGE: DEPTH, ELEV.	FIELD IDENTIFICATION OF SOIL, REMARKS (INCL. COLOR, LOSS OF WASH WATER, ETC.)
											0.00 - 0.31: Asphalt
	0.31 - 0.91	1	0.60	0.51	D	41	58	52	55		Light brown f SAND, little c sand, little f-c gravel, trace silt.
	1.52 - 2.12	2	0.60	0.30	D	4	10	11	14		Brown f SAND, trace silt.
	3.05 - 3.65	3	0.60	0.46	D	5	4	4	7		Brown f SAND, little silt, moist.
5	4.57 - 5.17	4	0.60	0.30	D	4	4	6	7		Brown f SAND, trace silt, wet.
	6.10 - 6.70	5	0.60	0.36	D	6	8	8	8		Brown f SAND, trace silt, wet.
	7.62 - 8.22	6	0.60	0.28	D	5	8	9	11		Brown f SAND, trace silt, wet.
	9.14 - 9.74	7	0.60	0.33	D	7	8	10	11		Brown f SAND, trace silt, wet.
10											
	10.67 - 11.27	8	0.60	0.36	D	12	12	13	15		Brown f SAND, trace c sand, trace silt.
										11.73	
	12.19 - 12.79	9	0.60	0.33	D	6	6	8	15	-8.56	Red brown SILT, some f sand.
	13.72 - 14.32	10	0.60	0.41	D	5	9	10	20		Red brown SILT, some f sand.
15											

Casing Size	From	To	Meters of Earth	Rock
100 mm	0	4.57	31.08	
			No. of Samples	
			21D	

NOTES: Raising and dropping of the 140-lb (63.5kg) hammer was accomplished using a trip lever.

SAMPLE TYPE CODING: D=Driven C=Core A=Auger UP=Undisturbed Piston V=Vane Test

PROPORTIONS USED: Trace = 1 -10%, Little = 10 - 20%, Some = 20 - 35%, And = 35 - 50%

Hole No. W101-3 Sheet 1 of 3

M. Jennett	SM - 001 - M REV. 1/94 BORING REPORT	Hole No.	W101-3
DRILLER	STATE OF CONNECTICUT	Line & Station	I-95 1+590.4
R. Sharp	DEPARTMENT OF TRANSPORTATION	Offset	13.1 LT
INSPECTOR	TOWN: New Haven / West Haven, CT	N. Coordinate	202534.4
Parsons Brinckerhoff Quade & Douglas, Inc.	PROJECT NAME: Reconstruction I-95 Over West River	E. Coordinate	289606.5
SOILS ENGINEER	PROJECT NUMBER: 92-533	Parsons Brinckerhoff Quade & Douglas, Inc.	
	BORING CONTRACTOR: General Borings, Inc.	PRIME DESIGNER	

Surface Elevation: 3.17			Casing				Auger		Mud	Sampler		Core Barrel			
Date Started: 08/12/2002	Utilized			X				X	X	X					
Date Finished: 08/12/2002	Type	BW	NW	HW	Pipe	Solid	Hollow	Bentonite	SS	UP	B (st)	B (dt)	NX (st)	NV II (dt)
Groundwater Observations	Size I.D. (mm)	60	76	100	64		150	X	36		35	35	55	55
@ ~4.11 m after ____ hours	Hammer (kg)	136	136	136	136			Bit	63.5		Type		Diamond	
@ m after ____ hours	Fall (m)	0.6	0.6	0.6	0.6			0.80 mm	0.76		of Bit		Carbide	

DEPTH (Casing blows per half meter)	DEPTH IN METERS FROM - TO	SAMPLE NO.	PEN. m	REC. m	Type	BLOWS PER 0.15 METERS ON SAMPLER 0 - 0.15	0.15 - 0.30	0.30 - 0.45	0.45 - 0.60	STRATA CHANGE: DEPTH, ELEV.	FIELD IDENTIFICATION OF SOIL, REMARKS (INCL. COLOR, LOSS OF WASH WATER, ETC.)
	15.24 - 15.84	11	0.60	0.60	D	6	7	12	14		Red brown SILT.
	16.76 - 17.36	12	0.60	0.60	D	5	7	13	19		Red brown SILT.
	18.29 - 18.89	13	0.60	0.46	D	6	9	11	20		Red brown SILT.
20	19.81 - 20.41	14	0.60	0.43	D	7	11	15	23		Red brown SILT.
	21.34 - 21.94	15	0.60	0.48	D	7	9	13	18		Red brown SILT, trace f sand, trace light gray silt seams (~1mm).
	22.86 - 23.46	16	0.60	0.51	D	8	12	18	26		Red brown SILT, trace f sand, trace light gray silt seams (~1-5mm).
	24.38 - 24.98	17	0.60	0.41	D	7	8	14	21		Red brown SILT, trace light gray silt seams (~5-10mm).
25											
	25.91 - 26.51	18	0.60	0.48	D	9	15	22	25		Red brown SILT, trace light gray silt seams (~5-10mm).
	27.43 - 28.03	19	0.60	0.56	D	6	10	13	19		Red brown SILT, trace light gray silt seams (~5-10mm).
	28.96 - 29.56	20	0.60	0.60	D	9	10	15	25		Red brown SILT, trace light gray silt seams (~5-10mm).
30											

Casing Size	From	To	Meters of Earth	Rock
100 mm	0	4.57	31.08	
			No. of Samples	
			21D	

NOTES: Raising and dropping of the 140-lb (63.5kg) hammer was accomplished using a trip lever.

SAMPLE TYPE CODING: D=Driven C=Core A=Auger UP=Undisturbed Piston V=Vane Test

PROPORTIONS USED: Trace = 1 -10%, Little = 10 - 20%, Some = 20 - 35%, And = 35 - 50%

Hole No. W101-3 Sheet 2 of 3

M. Jennett	SM - 001 - M REV. 1/94 BORING REPORT	Hole No.	W101-3
DRILLER	STATE OF CONNECTICUT	Line & Station	I-95 1+590.4
R. Sharp	DEPARTMENT OF TRANSPORTATION	Offset	13.1 LT
INSPECTOR	TOWN: New Haven / West Haven, CT	N. Coordinate	202534.4
Parsons Brinckerhoff Quade & Douglas, Inc.	PROJECT NAME: Reconstruction I-95 Over West River	E. Coordinate	289606.5
SOILS ENGINEER	PROJECT NUMBER: 92-533	Parsons Brinckerhoff Quade & Douglas, Inc.	
	BORING CONTRACTOR: General Borings, Inc.	PRIME DESIGNER	

Surface Elevation: 3.17			Casing				Auger		Mud	Sampler		Core Barrel			
Date Started: 08/12/2002	Utilized			X			X	X	X						
Date Finished: 08/12/2002	Type	BW	NW	HW	Pipe	Solid	Hollow	Bentonite	SS	UP	B (st)	B (dt)	NX (st)	NV II (dt)
Groundwater Observations	Size I.D. (mm)	60	76	100	64		150	X	36		35	35	55	55
@ ~4.11 m after ____ hours	Hammer (kg)	136	136	136	136			Bit	63.5		Type		Diamond	
@ m after ____ hours	Fall (m)	0.6	0.6	0.6	0.6			0.80 mm	0.76		of Bit		Carbide	

DEPTH (Casing blows per half meter)	DEPTH IN METERS FROM - TO	SAMPLE NO.	PEN. m	REC. m	Type	BLOWS PER 0.15 METERS ON SAMPLER 0 - 0.15	0.15 - 0.30	0.30 - 0.45	0.45 - 0.60	STRATA CHANGE: DEPTH, ELEV.	FIELD IDENTIFICATION OF SOIL, REMARKS (INCL. COLOR, LOSS OF WASH WATER, ETC.)
	30.48 - 31.08	21	0.60	0.60	D	8	14	18	31		Red brown SILT, trace light gray silt seams (~5-10mm).
										31.08	
										-27.91	Bottom of Boring 31.08 m.
35											
40											
45											

Casing Size	From	To	Meters of Earth	Rock
100 mm	0	4.57	31.08	
			No. of Samples	
			21D	

NOTES: Raising and dropping of the 140-lb (63.5kg) safety hammer was accomplished using a wire winch.

SAMPLE TYPE CODING: D=Driven C=Core A=Auger UP=Undisturbed Piston V=Vane Test

PROPORTIONS USED: Trace = 1 -10%, Little = 10 - 20%, Some = 20 - 35%, And = 35 - 50%

Hole No. W101-3 Sheet 3 of 3

REV.	DATE	DESCRIPTION	SHEET. NO
		REVISIONS	

DESIGNER: T. P. NGUYEN
DRAFTER: C. MARQUES
CHECKED BY: R. BORJESON
DATE CHECKED: 9-11-06

STATE OF CONNECTICUT
DEPARTMENT OF TRANSPORTATION

ENGINEER: PB AMERICAS, INC.
APPROVED BY: DATE:

PROJECT TITLE: RECONSTRUCTION OF I-95 OVER WEST RIVER RETAINING WALL 101

TOWN: NEW HAVEN / WEST HAVEN

DRAWING TITLE: BORINGS – W101-3

PROJECT NO.: 92-522
DRAWING NO.: STR-06
SHEET NO.:

CADD PLOTTED 11/13/2012

2:15:27 PM
11/13/2012
T:\WCADD\Projects\PB\8735\FD\Structures\Contract_Sheets\Wall 101\str-06-092522-101.dgn

NOTE:

WORKING POINTS ARE LOCATED AT FRONT FACE OF RETAINING WALL.

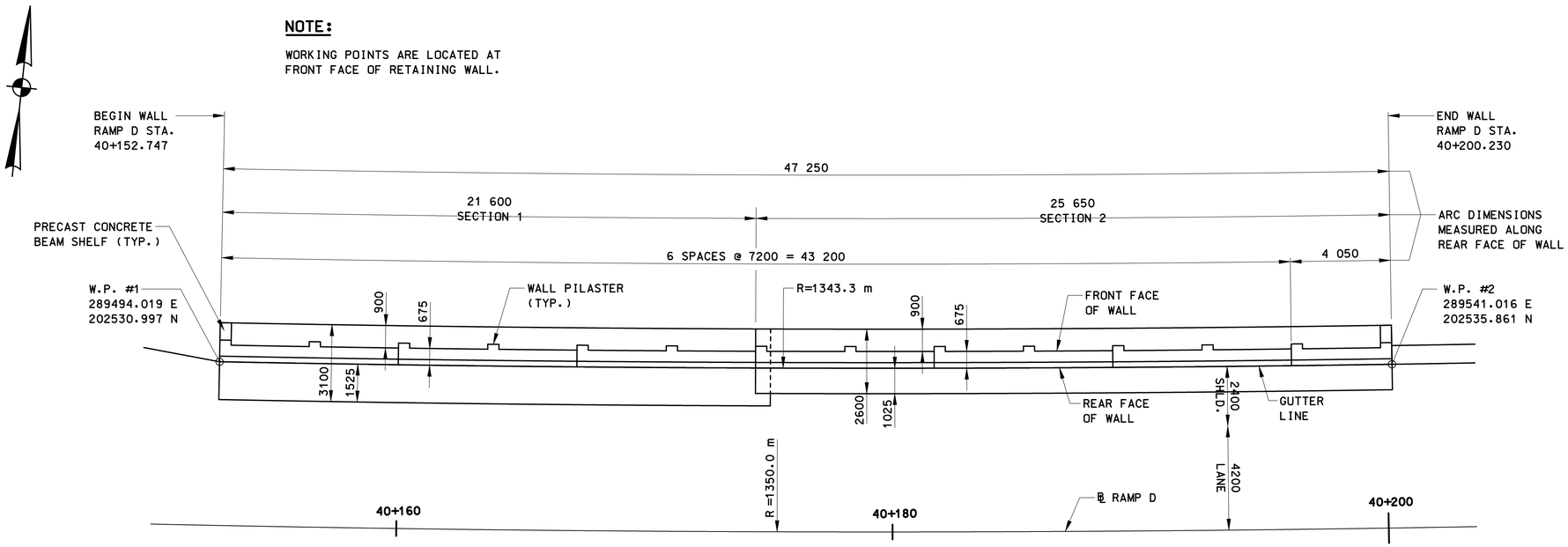

PLAN

SCALE: 1:100

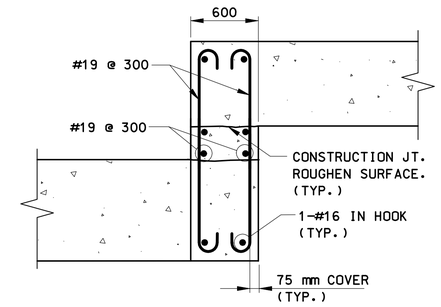

FOOTING STEP REINFORCEMENT DETAIL

SCALE: 1:25

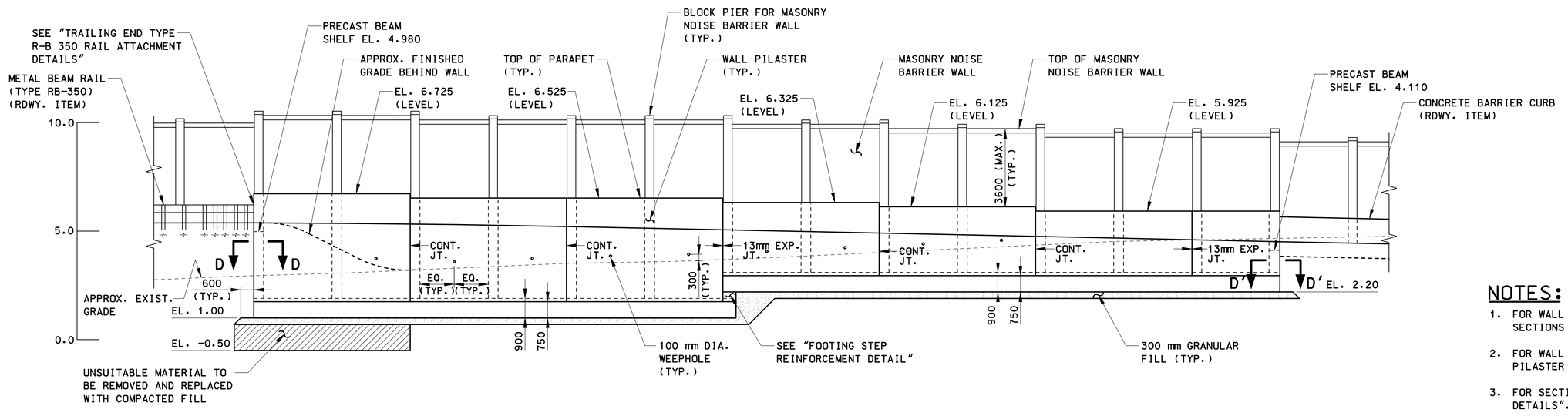

ELEVATION

SCALE: 1:100

NOTES:

1. FOR WALL SECTIONS AND DETAILS, SEE SHEET "WALL SECTIONS AND DETAILS".
2. FOR WALL PILASTER DETAILS, SEE SHEET "WALL PILASTER DETAILS".
3. FOR SECTION D-D & D'-D', SEE SHEET "WALL PILASTER DETAILS".

REV.	DATE	DESCRIPTION	SHEET. NO
		REVISIONS	

DESIGNER: D. BAGDASARIAN
DRAFTER: G. LEE
CHECKED BY: T. LALIBERTE
DATE CHECKED: 9-11-06

STATE OF CONNECTICUT
DEPARTMENT OF TRANSPORTATION

ENGINEER: PB AMERICAS, INC.
APPROVED BY: DATE:

PROJECT TITLE: RECONSTRUCTION OF I-95 OVER WEST RIVER RETAINING WALL 101

CADD | PLOTTED 11/13/2012

TOWN: NEW HAVEN / WEST HAVEN

DRAWING TITLE: WALL PLAN & ELEVATION

PROJECT NO.: 92-522
DRAWING NO.: STR-07
SHEET NO.:

2/4/10 PM
11/13/2012
T:\V8CADD\Projects\PB18735\FD\Structures\Contract_Sheets\Wall 101\str-07-092522-101.dgn

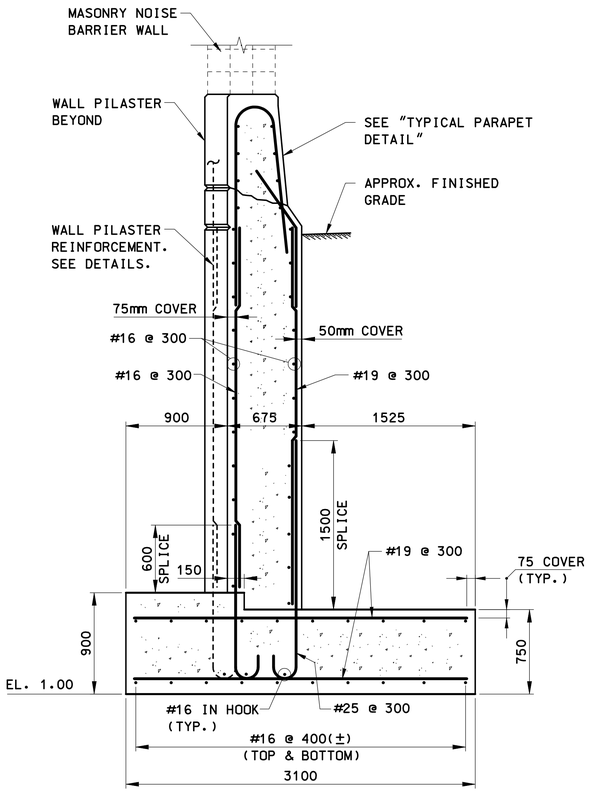

SECTION 1

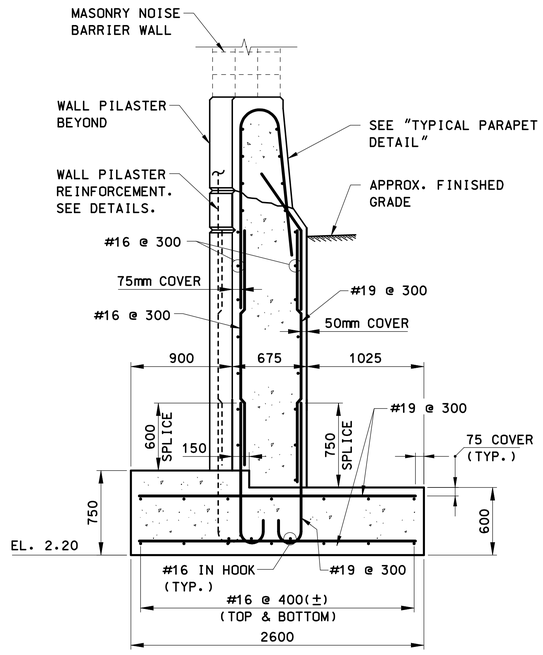

SECTION 2

TYPICAL WALL SECTIONS

SCALE: 1:25

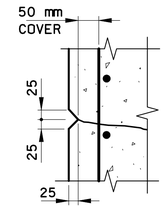

RUSTICATION DETAIL

NOT TO SCALE

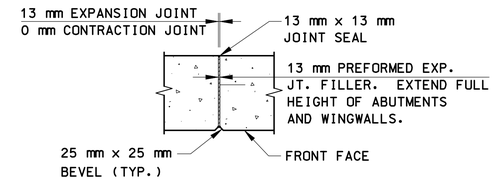

VERTICAL STEM JOINT DETAIL

SCALE: 1:20

JOINT NOTES

1. JOINT SEAL AND 13 mm PREFORMED EXPANSION JOINT FILLER SHALL BE INCLUDED IN THE ITEM "CLASS 'A' CONCRETE".
2. ABUTMENTS – JOINT SEAL TO EXTEND FROM TOP OF FOOTING TO TOP OF BACKWALL AND HORIZONTALLY ALONG TOP OF BACKWALL.
3. WINGWALLS – JOINT SEAL TO EXTEND FROM TOP OF FOOTING TO TOP OF PARAPET AND HORIZONTALLY ALONG THIS JOINT TO OUTSIDE FACE OF PARAPET.
4. REINFORCEMENT: NO REINFORCEMENT SHALL PASS THROUGH EXPANSION OR CONTRACTION JOINTS. REINFORCEMENT SHALL PASS THROUGH CONSTRUCTION JOINTS.

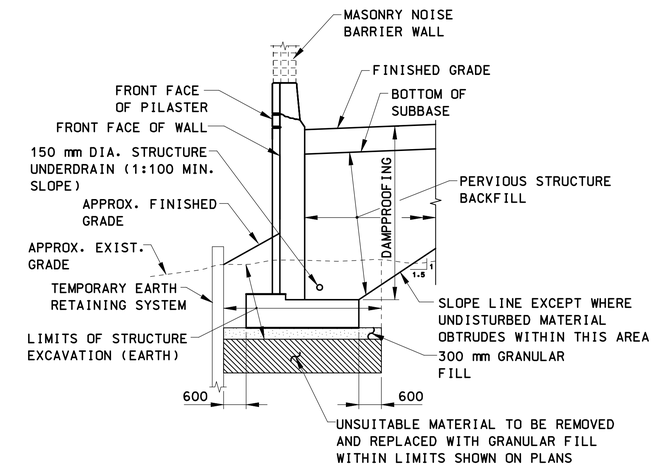

TYPICAL BACKFILL & DRAINAGE SECTION

SCALE: 1:75

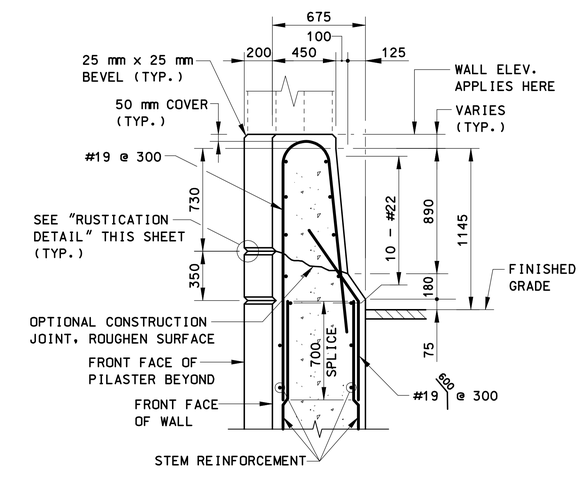

TYPICAL PARAPET DETAIL

SCALE: 1:20

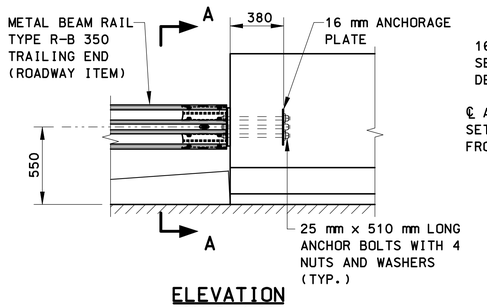

ELEVATION

SCALE: 1:20

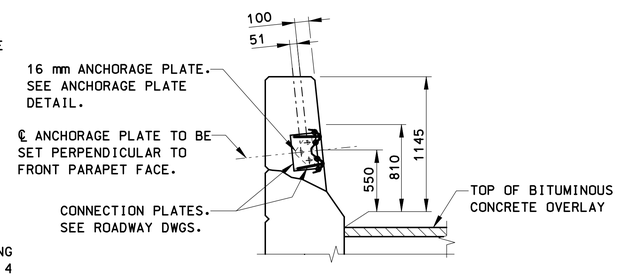

VIEW A–A

SCALE: 1:20

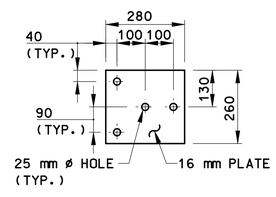

ANCHOR PLATE DETAIL

SCALE: 1:10

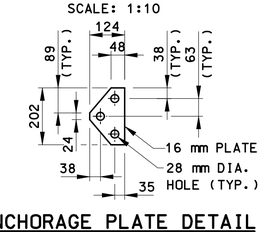

ANCHORAGE PLATE DETAIL

SCALE: 1:10

TRAILING END ATTACHMENT NOTES:

1. STEEL PLATES SHALL CONFORM TO THE REQUIREMENTS OF ASTM A36M. THE STEEL PLATES SHALL BE HOT-DIP GALVANIZED IN ACCORDANCE WITH THE REQUIREMENTS OF ASTM A123.
2. ANCHOR BOLTS SHALL CONFORM TO THE REQUIREMENTS OF ASTM A325, MECHANICALLY GALVANIZED.
3. 25 mm DIAMETER PIPE SHALL CONFORM TO ASTM A53, GRADE B OR ASTM A501 AND SHALL BE GALVANIZED IN ACCORDANCE WITH THE REQUIREMENTS OF ASTM A123.
4. RAILWAY ELEMENTS SHALL BE PAID FOR UNDER THE APPLICABLE ROADWAY ITEMS.
5. ALL RAIL ANCHORAGE MATERIAL REQUIRED FOR END ATTACHMENTS SHALL BE PAID FOR UNDER THE APPLICABLE ROADWAY ITEMS.

TRAILING END R-B 350 RAIL ATTACHMENT DETAILS

REV.	DATE	DESCRIPTION	SHEET. NO
		REVISIONS	

DESIGNER: B. SZYMANSKI
DRAFTER: G. LEE
CHECKED BY: D. BAGDASARIAN
DATE CHECKED: 10-11-07

STATE OF CONNECTICUT
DEPARTMENT OF TRANSPORTATION

ENGINEER: PB AMERICAS, INC.
APPROVED BY:
DATE:

PROJECT TITLE: RECONSTRUCTION OF I-95 OVER WEST RIVER RETAINING WALL 101
CADD
PLOTTED 11/13/2012

TOWN: NEW HAVEN / WEST HAVEN
DRAWING TITLE: WALL SECTIONS & DETAILS

PROJECT NO.: 92-522
DRAWING NO.: STR-08
SHEET NO.:

2/4458 PM
11/13/2012
T:\WBCADD\Projects\PB\8735\FD\Structures\Contract_Sheets\Wall 101\str-08-092522-101.dgn

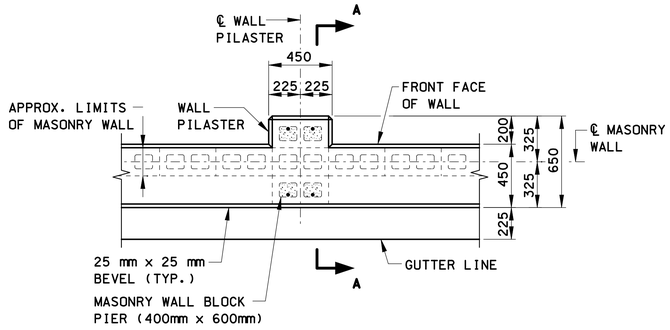

PLAN

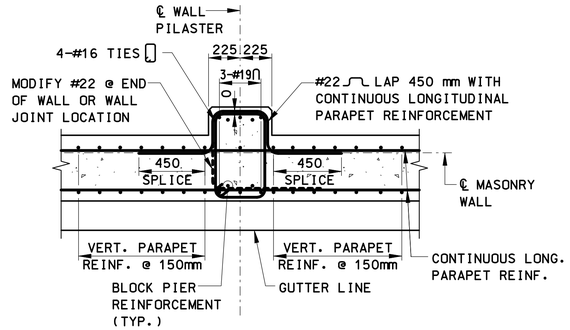

SECTION B-B

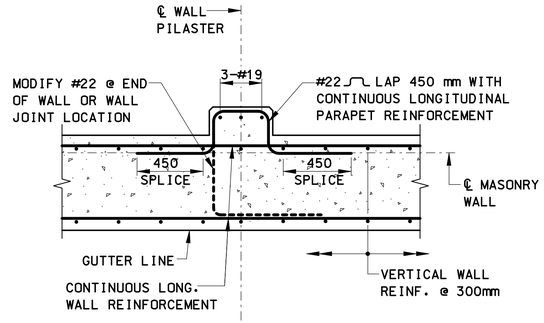

SECTION C-C

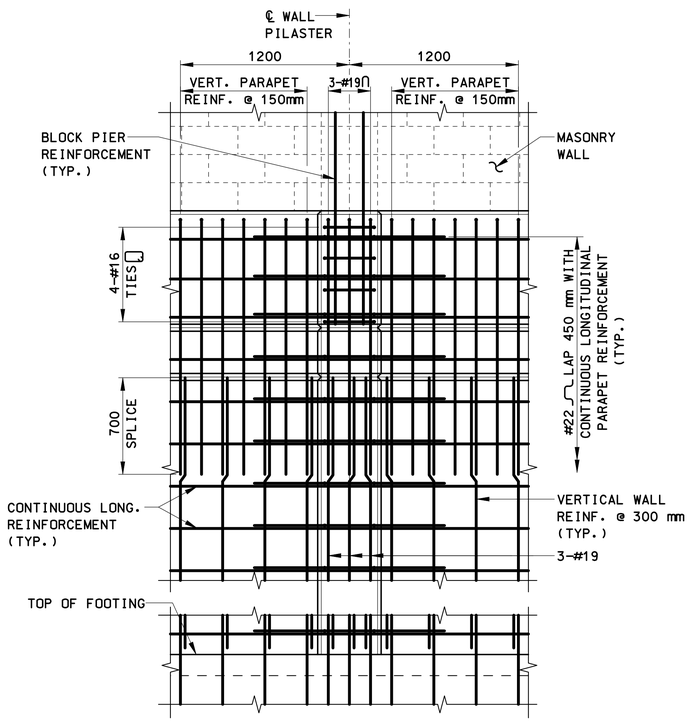

ELEVATION

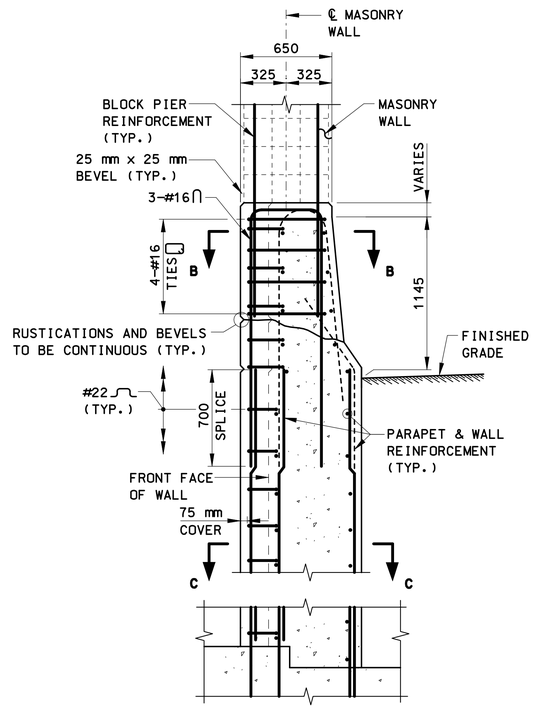

SECTION A-A

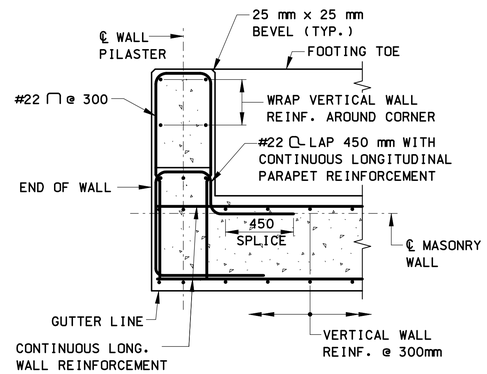

SECTION D-D (SHOWN)
(SECTION D'-D' (OPPOSITE HAND))

NOTES:

1. DETAILS SHOWN AT INTERIOR WALL PILASTER LOCATION. WALL PILASTER AT END OF WALL AND AT WALL JOINT LOCATION SHALL BE SIMILAR WITH MODIFICATION TO #22 BAR AS SHOWN.
2. FOR MASONRY WALL DETAILS, SEE "MASONRY NOISE BARRIER WALL" DETAIL SHEETS.
3. FOR ADDITIONAL INFORMATION, SEE SPECIAL PROVISION "MASONRY NOISE BARRIER WALL".
4. WALL PILASTER HAS BEEN DESIGNED TO SUPPORT A 400mm x 600mm BLOCK PIER.
5. FOR SECTION D-D AND D'-D', SEE "WALL PLAN AND ELEVATION" SHEET.

WALL PILASTER DETAILS

SCALE: 1:20

REV.	DATE	DESCRIPTION	SHEET. NO
		REVISIONS	

DESIGNER: D. BAGDASARIAN
DRAFTER: G. LEE
CHECKED BY: B. SZYMANSKI
DATE CHECKED: 10-11-07

STATE OF CONNECTICUT
DEPARTMENT OF TRANSPORTATION

ENGINEER: PB AMERICAS, INC.
APPROVED BY: DATE:

PROJECT TITLE: RECONSTRUCTION OF I-95 OVER WEST RIVER RETAINING WALL 101
CADD PLOTTED 11/13/2012

TOWN: NEW HAVEN / WEST HAVEN
DRAWING TITLE: WALL PILASTER DETAILS

PROJECT NO.: 92-522
DRAWING NO.: STR-09
SHEET NO.:

2/5:36 PM
11/13/2012
T:\V8CADD\Projects\PB18735\FD\Structures\Contract_Sheets\Wall 101\str-09-092522-101.dgn