04 - STRUCTURES
INDEX OF DRAWINGS

DRAWING NUMBER	DRAWING TITLE	DRAWING NUMBER	DRAWING TITLE
S-01	STRUCTURE INDEX	S-22	STRUCTURAL STEEL DETAILS - 4
S-02	GENERAL PLAN	S-23	DECK PLAN - 1
S-03	GENERAL NOTES AND QUANTITIES	S-24	DECK PLAN - 2
S-04	CONSTRUCTION STAGING ALONG I-84 EASTBOUND	S-25	DECK DETAILS - 1
S-05	EXISTING ABUTMENT 1	S-26	DECK DETAILS - 2
S-06	EXISTING ABUTMENT 2	S-27	MISCELLANEOUS DETAILS
S-07	EXISTING ABUTMENT SECTIONS	S-28	BRIDGE RELATED ELECTRICAL DETAILS
S-08	EXISTING PIER PLAN	S-29	CONDUIT EXPANSION FITTINGS
S-09	ABUTMENT 1	S-30	CONSTRUCTION STAGING AND ERECTION DETAILS
S-10	ABUTMENT 2	S-31	BEAM ERECTION DATA
S-11	ABUTMENT DETAILS - 1	S-32	ORIGINAL BRIDGE DRAWING - 1
S-12	ABUTMENT DETAILS - 2	S-33	ORIGINAL BRIDGE DRAWING - 2
S-13	PIER PLAN	S-34	ORIGINAL BRIDGE DRAWING - 3
S-14	PIER DETAILS	S-35	ORIGINAL BRIDGE DRAWING - 4
S-15	PAY LIMITS	S-36	ORIGINAL BRIDGE DRAWING - 5
S-16	BEARING DETAILS - 1	S-37	ORIGINAL BRIDGE DRAWING - 6
S-17	BEARING DETAILS - 2	S-38	ORIGINAL BRIDGE DRAWING - 7
S-18	FRAMING PLAN	S-39	ORIGINAL BRIDGE DRAWING - 8
S-19	STRUCTURAL STEEL DETAILS - 1	S-40	ORIGINAL BRIDGE DRAWING - 9
S-20	STRUCTURAL STEEL DETAILS - 2	S-41	ORIGINAL BRIDGE DRAWING - 10
S-21	STRUCTURAL STEEL DETAILS - 3	S-42	ORIGINAL BRIDGE DRAWING - 11

DESIGNED BY:
Stantec
STANTEC CONSULTING SERVICES INC.
2321 WHITNEY AVENUE
HAMDEN, CT 06518

Andrew M Lessard
2014.11.21
08:14:15 -05'00'

REV.	DATE	REVISION DESCRIPTION	SHEET NO.
-	-	-	-
-	-	-	-
-	-	-	-
-	-	-	-
-	-	-	-
-	-	-	-

THE INFORMATION, INCLUDING ESTIMATED QUANTITIES OF WORK, SHOWN ON THESE SHEETS IS BASED ON LIMITED INVESTIGATIONS BY THE STATE AND IS IN NO WAY WARRANTED TO INDICATE THE CONDITIONS OF ACTUAL QUANTITIES OF WORK WHICH WILL BE REQUIRED.

Plotted Date: 11/18/2014

DESIGNER/DRAFTER: JRA
CHECKED BY: AML

STATE OF CONNECTICUT
DEPARTMENT OF TRANSPORTATION

Filename: ...\S-01 INDEX OF DRAWINGS.dgn

SIGNATURE/BLOCK:
Stantec Consulting Services Inc.
2321 Whitney Ave.
Hamden, CT 06518

PROJECT TITLE:
REHABILITATION OF BRIDGE NO. 02376
I-84 T.R. 831 OVER I-84 EB

TOWN: EAST HARTFORD

DRAWING TITLE: STRUCTURE INDEX

PROJECT NO. 042-316
DRAWING NO. S-01
SHEET NO. 03.04.01

Connecticut Department of Transportation
QA/QC Format Check

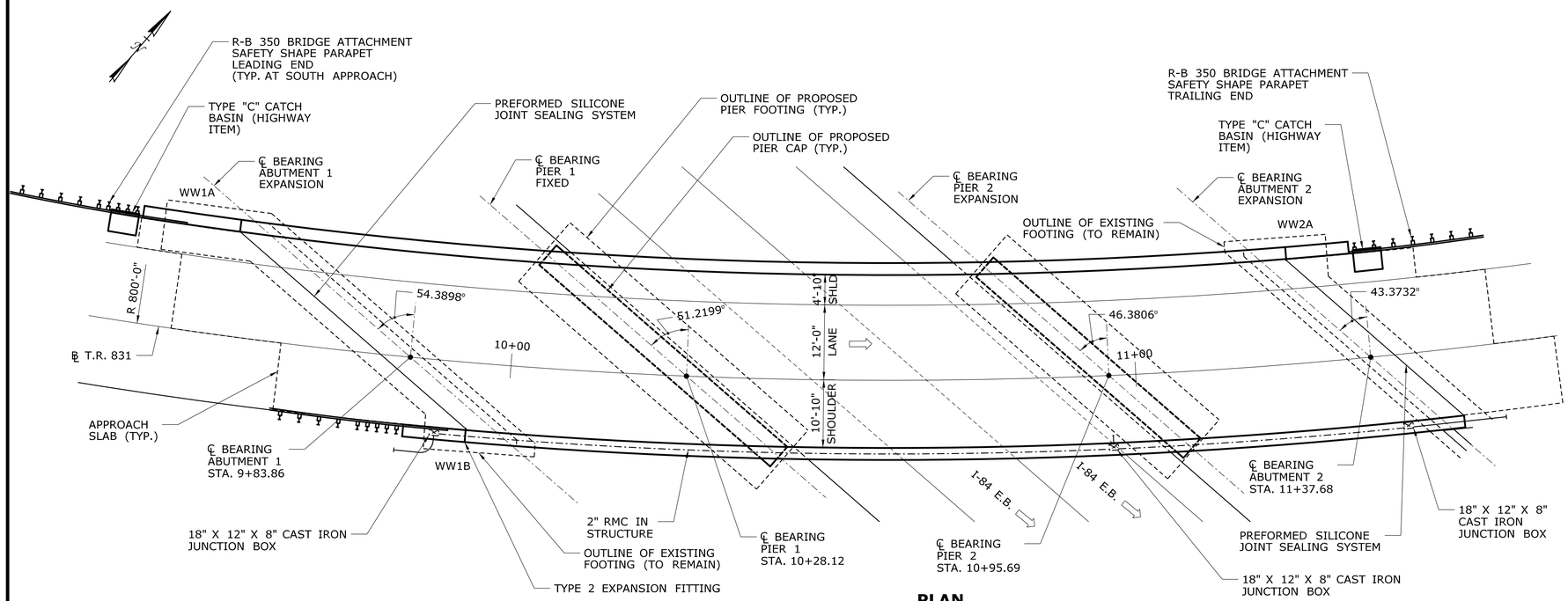

PLAN

SCALE: 3/32" = 1'-0"

BRIDGE PARAPET CONDUIT EXPANSION FITTING SCHEDULE	
LOCATION	EXP. FITTING TYPE
ABUTMENT 1	TYPE 2
ABUTMENT 2	TYPE 2

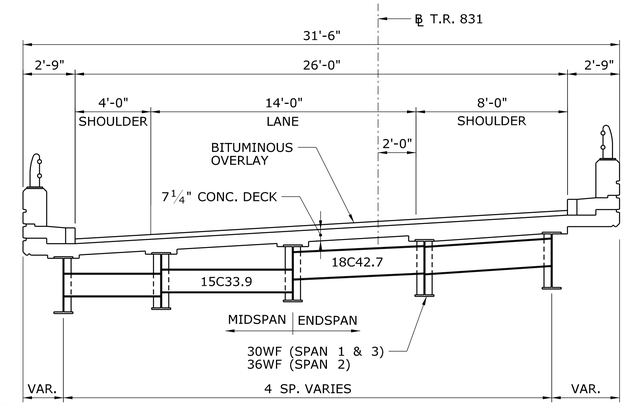

EXISTING SECTION

SCALE: 1/4" = 1'-0"

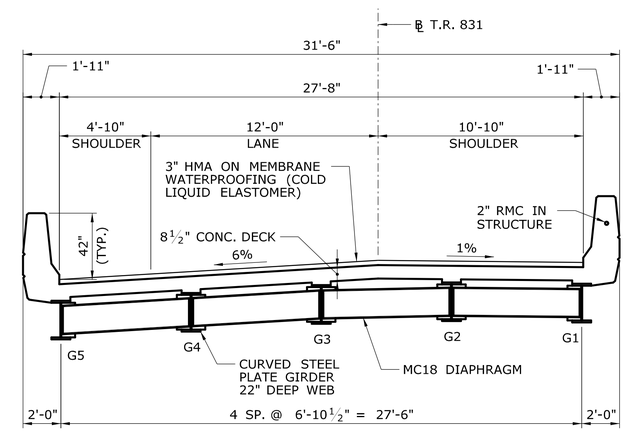

PROPOSED SECTION

SCALE: 1/4" = 1'-0"

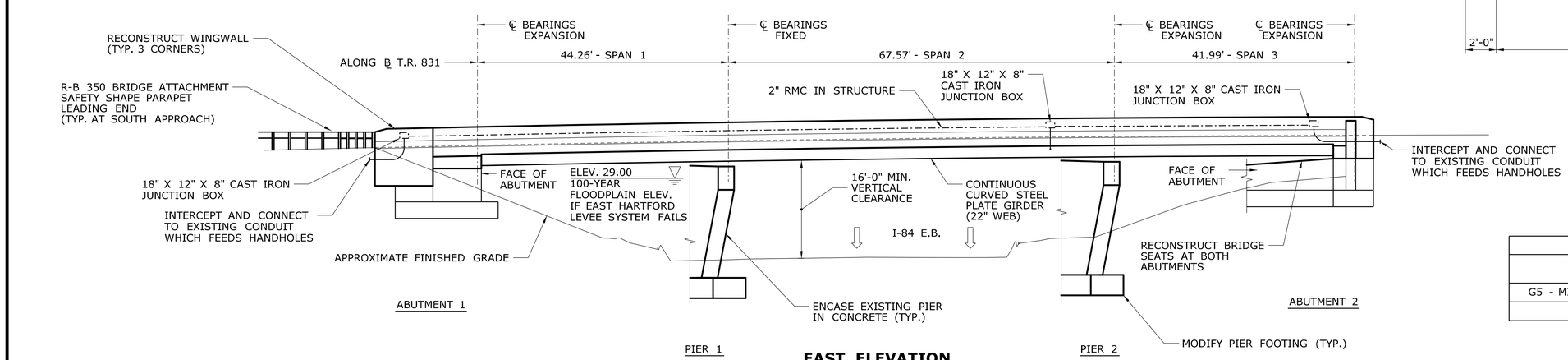

EAST ELEVATION

SCALE: 3/32" = 1'-0"

ESTIMATED SHIPPING DATA				
MEMBER	SHIPPING LENGTH	SHIPPING HEIGHT	SHIPPING WIDTH	SHIPPING WEIGHT
G5 - MIDDLE SECTION	95'	2'	2.5'	13.0 KIPS

REV.	DATE	REVISION DESCRIPTION	SHEET NO.
-	-	-	-
-	-	-	-
-	-	-	-
-	-	-	-
-	-	-	-
-	-	-	-

THE INFORMATION, INCLUDING ESTIMATED QUANTITIES OF WORK, SHOWN ON THESE SHEETS IS BASED ON LIMITED INVESTIGATIONS BY THE STATE AND IS IN NO WAY WARRANTED TO INDICATE THE CONDITIONS OF ACTUAL QUANTITIES OF WORK WHICH WILL BE REQUIRED.

Plotted Date: 11/20/2014

DESIGNER/DRAFTER: JRA
CHECKED BY: AML
SCALE AS NOTED

STATE OF CONNECTICUT
DEPARTMENT OF TRANSPORTATION

Filename: ...\S-02 GENERAL PLAN.dgn

SIGNATURE/BLOCK:

Stantec Consulting Services Inc.
2321 Whitney Ave.
Hamden, CT 06518

PROJECT TITLE:
REHABILITATION OF BRIDGE NO. 02376
I-84 T.R. 831 OVER I-84 EB

TOWN: **EAST HARTFORD**

DRAWING TITLE: **GENERAL PLAN**

PROJECT NO. 042-316
DRAWING NO. S-02
SHEET NO. 03.04.02

TABLE OF BRIDGE QUANTITIES

ITEM	UNIT	QUANTITY
ASBESTOS ABATEMENT	LS	LS
REMOVAL OF ASBESTOS	SF	1300
LEAD COMPLIANCE FOR MISCELLANEOUS EXTERIOR TASKS	LS	LS
STRUCTURE EXCAVATION - EARTH (COMPLETE)	CY	563
PERVIOUS STRUCTURE BACKFILL	CY	529
HMA S0.5	TON	77
HMA S0.25	TON	39
REMOVAL OF SUPERSTRUCTURE (SITE NO. 3)	LS	LS
SHEAR CONNECTORS (SITE NO. 3)	LS	LS
1-1/2" POLYVINYL CHLORIDE PLASTIC PIPE	LF	50
ELASTOMERIC CONCRETE HEADER	CF	33
PREFORMED SILICONE JOINT SEALING SYSTEM	LF	87
STEEL-LAMINATED ELASTOMERIC BEARINGS	EA	20
CLASS "A" CONCRETE	CY	123
CLASS "F" CONCRETE	CY	548
1/2" PREFORMED EXPANSION JOINT FILLER FOR BRIDGES	SF	30
1" PREFORMED EXPANSION JOINT FILLER FOR BRIDGES	SF	182
DEFORMED STEEL BARS	LB	28400
DEFORMED STEEL BARS - EPOXY COATED	LB	64200
DRILLING HOLES AND GROUTING DOWELS	EA	1400
STRUCTURAL STEEL (SITE NO. 3)	LS	LS
MEMBRANE WATERPROOFING (COLD LIQUID ELASTOMERIC)	SY	677
DAMPPROOFING	SY	64
TEMPORARY EARTH RETAINING SYSTEM	SF	2445
EARTH RETAINING SYSTEM LEFT IN PLACE	SF	525
REMOVAL OF EXISTING MASONRY	CY	52
REMOVAL OF DETERIORATED CONCRETE	CF	200
2" RIGID METAL CONDUIT IN STRUCTURE	LF	200
18" X 12" X 8" CAST IRON JUNCTION BOX	EA	3

WORKING POINTS

POINT	LOCATION	NORTH	EAST
WP-1	℄ BEARING ABUTMENT 1 - ⅊ ROAD	839538.8783	1026590.4264
WP-2	℄ BEARING PIER 1 - ⅊ ROAD	839565.4922	1026625.7831
WP-3	℄ BEARING PIER 2 - ⅊ ROAD	839609.7856	1026676.7847
WP-4	℄ BEARING ABUTMENT 2 - ⅊ ROAD	839639.4206	1026706.5258
WP-5	℄ BEARING - FACE OF PARAPET	839539.0085	1026557.4330
WP-6	℄ BEARING - FACE OF PARAPET	839538.7932	1026611.9975
WP-7	℄ BEARING - FACE OF PARAPET	839639.5235	1026680.4490
WP-8	℄ BEARING - FACE OF PARAPET	839639.3518	1026723.9449
WP-9	END OF WINGWALL 1A	839529.3656	1026542.4489
WP-10	END OF WINGWALL 1B	839528.4252	1026597.7264
WP-11	END OF WINGWALL 2A	839650.9876	1026691.6462
WP-12	END OF PARAPET	839640.7530	1026725.2374
WP-13	℄ BEARING PIER 1 - FACE OF PIER	839565.6084	1026596.3354
WP-14	℄ BEARING PIER 1 - FACE OF PIER	839565.4163	1026645.0225
WP-15	℄ BEARING PIER 2 - FACE OF PIER	839609.8914	1026649.9614
WP-16	℄ BEARING PIER 2 - FACE OF PIER	839609.7157	1026694.5027

INSPECTION OF FIELD WELDS		
METHODS	UNIT	QUANTITY
ULTRASONIC	INCH	NONE
MAGNETIC PARTICLE	FEET	NONE

CONCRETE DISTRIBUTION		
SUPERSTRUCTURE	C.Y.	543
SUBSTRUCTURE	C.Y.	70
FOOTINGS	C.Y.	58
TOTAL	C.Y.	671

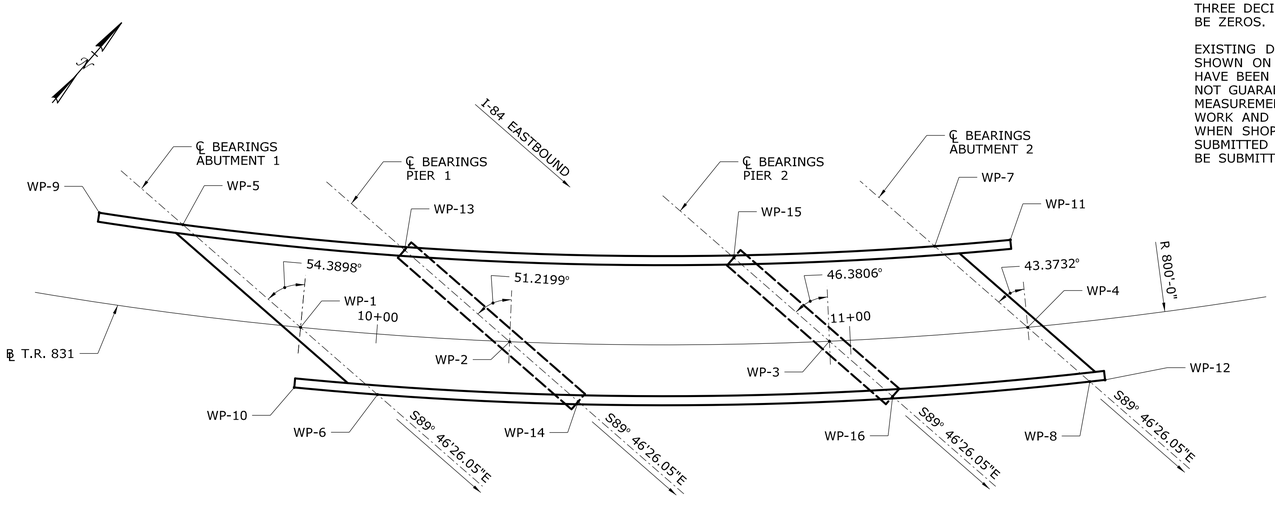

LAYOUT PLAN

SCALE: 1/16" = 1'-0"

GENERAL NOTES

SPECIFICATIONS: CONNECTICUT DEPARTMENT OF TRANSPORTATION FORM 816 (2004), SUPPLEMENTAL SPECIFICATIONS DATED JULY 2014 AND SPECIAL PROVISIONS.

DESIGN SPECIFICATIONS: LRFD BRIDGE DESIGN SPECIFICATIONS (AASHTO - 2012), WITH INTERIM SPECIFICATIONS UP TO AND INCLUDING 2013, AS SUPPLEMENTED BY THE CONNECTICUT DEPARTMENT OF TRANSPORTATION BRIDGE DESIGN MANUAL (2003).

ALLOWABLE DESIGN STRESSES:

CLASS "A" CONCRETE: BASED ON f'c = 3,000 psi

CLASS "F" CONCRETE: BASED ON f'c = 4,000 psi

THE SPECIFIED CONCRETE STRENGTH USED IN DESIGN, f'c, OF THE CONCRETE COMPONENTS IS NOTED ABOVE. THE MINIMUM COMPRESSIVE STRENGTH OF THE CONCRETE IN THE CONSTRUCTED COMPONENTS SHALL CONFORM TO THE REQUIREMENTS OF "SECTION 6.01 CONCRETE FOR STRUCTURES".

REINFORCEMENT:
ASTM A615 GRADE 60
Fy = 60,000 psi

STRUCTURAL STEEL:
AASHTO M270 GRADE HPS 70W
Fy = 70,000 psi

LIVE LOAD: HL-93 DESIGN VEHICLE
CT-L73.0 LEGAL VEHICLE
CT-L3S2 LEGAL VEHICLE
CT-P76.5 PERMIT VEHICLE
CT-P204 PERMIT VEHICLE
CT-P380 PERMIT VEHICLE
CT-TLC PERMIT VEHICLE

FUTURE PAVING ALLOWANCE: NONE

STRUCTURAL STEEL: SEE STRUCTURE NOTES FOR DESIGNATIONS AND REQUIREMENTS.

PAINT: NO PAINTING OF STRUCTURAL STEEL IS REQUIRED. STEEL SURFACES ARE TO BE PREPARED FOR WEATHERING IN ACCORDANCE WITH THE SPECIFICATIONS.

BITUMINOUS CONCRETE OVERLAY: THIS SHALL CONSIST OF TWO LIFTS. THE FIRST SHALL BE HMA S0.25 (1" THICK) AND THE SECOND SHALL BE HMA S0.5 (2" THICK).

FOUNDATION PRESSURES: THE VARIOUS GROUP LOADINGS NOTED ON THE SUBSTRUCTURE PLAN SHEETS REFER TO THE GROUP LOADS AS GIVEN IN THE AASHTO LRFD GUIDE SPECIFICATIONS.

DIMENSIONS: WHEN DECIMAL DIMENSIONS ARE GIVEN TO LESS THAN THREE DECIMAL PLACES, THE OMITTED DIGITS SHALL BE ASSUMED TO BE ZEROS.

EXISTING DIMENSIONS: DIMENSIONS OF THE EXISTING STRUCTURE SHOWN ON THESE PLANS ARE FOR GENERAL REFERENCE ONLY. THEY HAVE BEEN TAKEN FROM THE ORIGINAL DESIGN DRAWINGS AND ARE NOT GUARANTEED. THE CONTRACTOR SHALL TAKE ALL FIELD MEASUREMENTS NECESSARY TO ASSURE PROPER FIT OF THE FINISHED WORK AND SHALL ASSUME FULL RESPONSIBILITY FOR THEIR ACCURACY. WHEN SHOP DRAWINGS BASED ON FIELD MEASUREMENTS ARE SUBMITTED FOR APPROVAL, THE FIELD MEASUREMENTS SHALL ALSO BE SUBMITTED FOR REFERENCE BY THE REVIEWER.

REMAIN-IN-PLACE FORMS: THE USE OF REMAIN-IN-PLACE FORMS SHALL BE ALLOWED AT INTERIOR BAYS ONLY. THE PLATE GIRDERS HAVE BEEN DESIGNED FOR THE ADDITIONAL WEIGHT OF 15 POUNDS PER SQUARE FOOT FOR THE REMAIN-IN-PLACE FORMS.

COMPOSITE CONSTRUCTION: NO TEMPORARY INTERMEDIATE SUPPORTS SHALL BE USED DURING THE PLACING AND SETTING OF THE CONCRETE DECK SLAB. TEMPORARY SUPPORTS MAY BE USED FOR STRUCTURAL STEEL ERECTION ONLY. CONSTRUCTION LOADS AND DEAD LOADS WILL BE PERMITTED WHEN DIRECTED BY THE ENGINEER BUT ONLY WHEN THE CONCRETE HAS REACHED A STRENGTH OF f'c = 3,500 psi. LIVE LOADS (TRAFFIC) WILL BE PERMITTED ON THE STRUCTURE AFTER THE CONCRETE HAS REACHED A STRENGTH OF f'c = 4,000 psi.

CLASS "A" CONCRETE: CLASS "A" CONCRETE SHALL BE USED FOR THE ENTIRE SUBSTRUCTURE WITH THE EXCEPTION OF CLASS 'F' CONCRETE USED IN THE PIER STEMS, PIER CAPS AND ALL PEDESTALS.

CLASS "F" CONCRETE: CLASS "F" CONCRETE SHALL BE USED FOR BRIDGE DECKS INCLUDING PARAPETS AND APPROACH SLABS, AND PIER STEMS, PIER CAPS AND PEDESTALS.

JOINT SEAL: SEE SPECIAL PROVISIONS.

EXPOSED EDGES: EXPOSED EDGES OF CONCRETE SHALL BE BEVELED 1" x 1" UNLESS DIMENSIONED OTHERWISE.

CONCRETE COVER: ALL REINFORCEMENT SHALL HAVE TWO INCHES COVER UNLESS DIMENSIONED OTHERWISE.

REINFORCEMENT: ALL REINFORCEMENT SHALL BE ASTM A615 GRADE 60.

EPOXY COATED REINFORCING BARS:

ALL REINFORCEMENT IN THE SUPERSTRUCTURE INCLUDING THE CONCRETE DECK SLAB AND THE PARAPETS SHALL BE EPOXY COATED UNLESS OTHERWISE NOTED. THESE BARS SHALL BE INCLUDED IN THE PAY ITEM FOR "DEFORMED STEEL BARS (EPOXY COATED)."

ALL REINFORCEMENT IN THE TOP MAT OF THE CONCRETE APPROACH SLABS SHALL BE EPOXY COATED. THESE BARS SHALL BE INCLUDED IN THE ITEM "DEFORMED STEEL BARS (EPOXY COATED)."

FELT: THE COST OF FURNISHING AND PLACING 15-POUND ROOFING FELT IS INCLUDED IN THE ITEM FOR "CLASS 'A' CONCRETE".

PREFORMED EXPANSION JOINT FILLER: THE COST OF FURNISHING AND INSTALLING PREFORMED EXPANSION JOINT FILLER SHALL BE INCLUDED IN THE COST OF THE ITEM "CLASS 'A' CONCRETE."

CLOSED CELL ELASTOMER: THE COST OF FURNISHING AND INSTALLING CLOSED CELL ELASTOMER SHALL BE INCLUDED IN THE COST OF THE ITEM "CLASS 'A' CONCRETE".

CONSTRUCTION JOINTS: CONSTRUCTION JOINTS, OTHER THAN THOSE SHOWN ON THE PLANS, WILL NOT BE PERMITTED WITHOUT THE PRIOR APPROVAL OF THE ENGINEER.

NOTICE TO BRIDGE INSPECTORS

THE DEPARTMENT'S BRIDGE SAFETY PROCEDURES REQUIRE THIS BRIDGE TO BE INSPECTED FOR, BUT NOT LIMITED TO, ALL APPROPRIATE COMPONENTS INDICATED IN THE GOVERNING MANUALS FOR BRIDGE INSPECTION. ATTENTION MUST BE GIVEN TO INSPECTING THE FOLLOWING SPECIAL COMPONENTS AND DETAILS. (THE LISTING FOR COMPONENTS FOR SPECIFIC ATTENTION SHALL NOT BE CONSTRUED TO REDUCE THE IMPORTANCE OF INSPECTION OF ANY OTHER COMPONENT OF THE STRUCTURE). THE FREQUENCY OF INSPECTION OF THIS STRUCTURE SHALL BE IN ACCORDANCE WITH THE GOVERNING MANUALS FOR BRIDGE INSPECTION, UNLESS OTHERWISE DIRECTED BY THE MANAGER OF BRIDGE SAFETY AND EVALUATION.

COMPONENT OR DETAIL	STRUCTURE SHEET REFERENCE
-	-
-	-

REV.	DATE	REVISION DESCRIPTION	SHEET NO.
-	-	-	-
-	-	-	-
-	-	-	-
-	-	-	-
-	-	-	-
-	-	-	-

THE INFORMATION, INCLUDING ESTIMATED QUANTITIES OF WORK, SHOWN ON THESE SHEETS IS BASED ON LIMITED INVESTIGATIONS BY THE STATE AND IS IN NO WAY WARRANTED TO INDICATE THE CONDITIONS OF ACTUAL QUANTITIES OF WORK WHICH WILL BE REQUIRED.

Plotted Date: 11/19/2014

DESIGNER/DRAFTER: JRA
CHECKED BY: AML
SCALE AS NOTED

STATE OF CONNECTICUT
DEPARTMENT OF TRANSPORTATION

Filename: ...\S-03 GENERAL NOTES.dgn

SIGNATURE/BLOCK:
Stantec Consulting Services Inc.
2321 Whitney Ave.
Hamden, CT 06518

PROJECT TITLE:
REHABILITATION OF BRIDGE NO. 02376
I-84 T.R. 831 OVER I-84 EB

TOWN: EAST HARTFORD

DRAWING TITLE: GENERAL NOTES AND QUANTITIES

PROJECT NO. 042-316
DRAWING NO. S-03
SHEET NO. 03.04.03

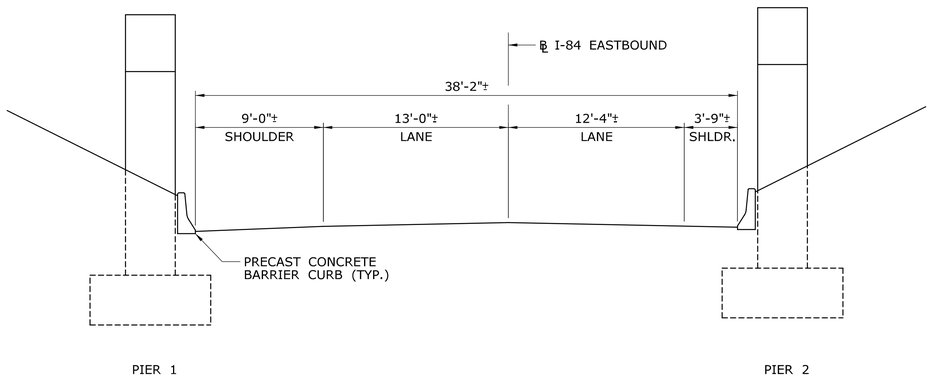

EXISTING

SCALE: 3/16" = 1'-0"

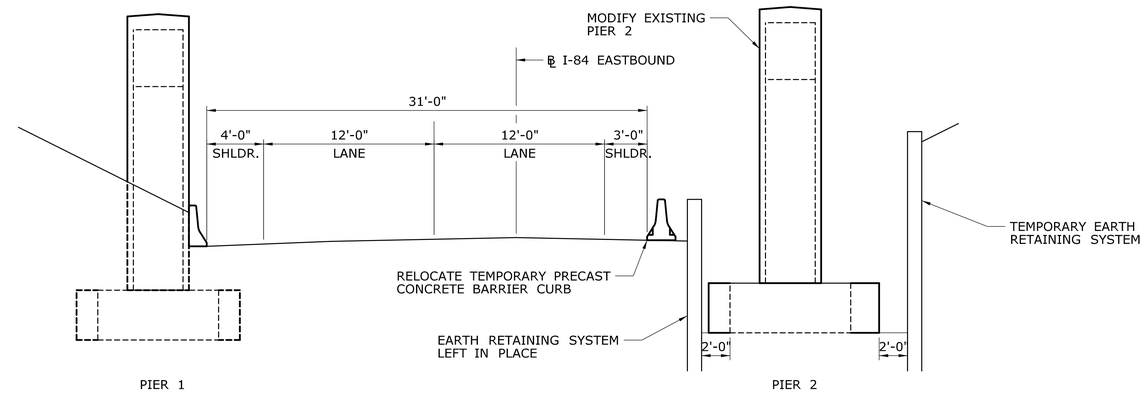

STAGE 1B

SCALE: 3/16" = 1'-0"

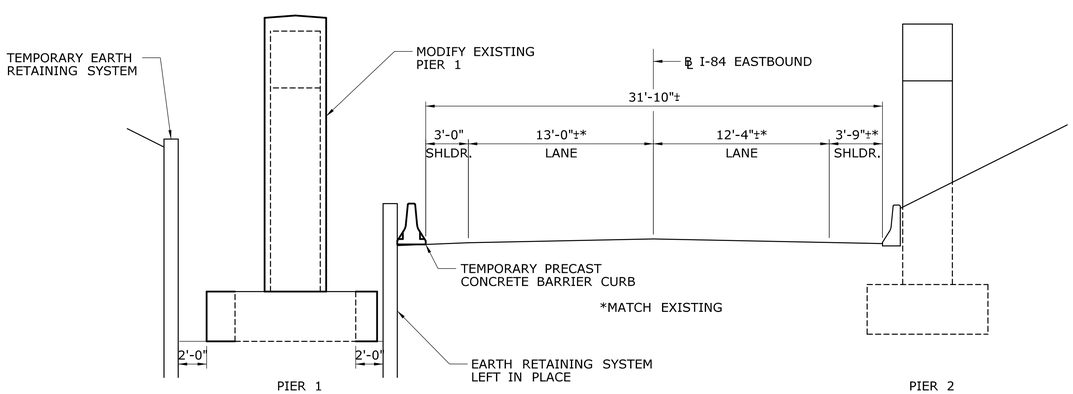

STAGE 1A

SCALE: 3/16" = 1'-0"

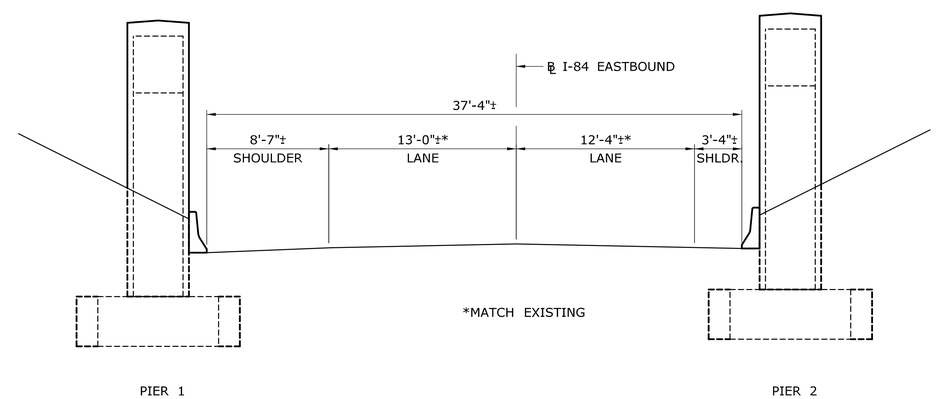

STAGE 1C-1E AND PROPOSED

SCALE: 3/16" = 1'-0"

REV.	DATE	REVISION DESCRIPTION	SHEET NO.
-	-	-	-
-	-	-	-
-	-	-	-
-	-	-	-
-	-	-	-
-	-	-	-

THE INFORMATION, INCLUDING ESTIMATED QUANTITIES OF WORK, SHOWN ON THESE SHEETS IS BASED ON LIMITED INVESTIGATIONS BY THE STATE AND IS IN NO WAY WARRANTED TO INDICATE THE CONDITIONS OF ACTUAL QUANTITIES OF WORK WHICH WILL BE REQUIRED.

Plotted Date: 11/18/2014

DESIGNER/DRAFTER: **JRA**

CHECKED BY: **AML**

SCALE AS NOTED

STATE OF CONNECTICUT
DEPARTMENT OF TRANSPORTATION

Filename: ...\Struct_Bridge\S-04_STAGING.dgn

SIGNATURE/BLOCK:

Stantec Consulting Services Inc.
2321 Whitney Ave.
Hamden, CT 06518

PROJECT TITLE:

REHABILITATION OF BRIDGE NO. 02376 I-84 T.R. 831 OVER I-84 EB

TOWN: **EAST HARTFORD**

DRAWING TITLE: **CONSTRUCTION STAGING ALONG I-84 EASTBOUND**

PROJECT NO. **042-316**

DRAWING NO. **S-04**

SHEET NO. **03.04.04**

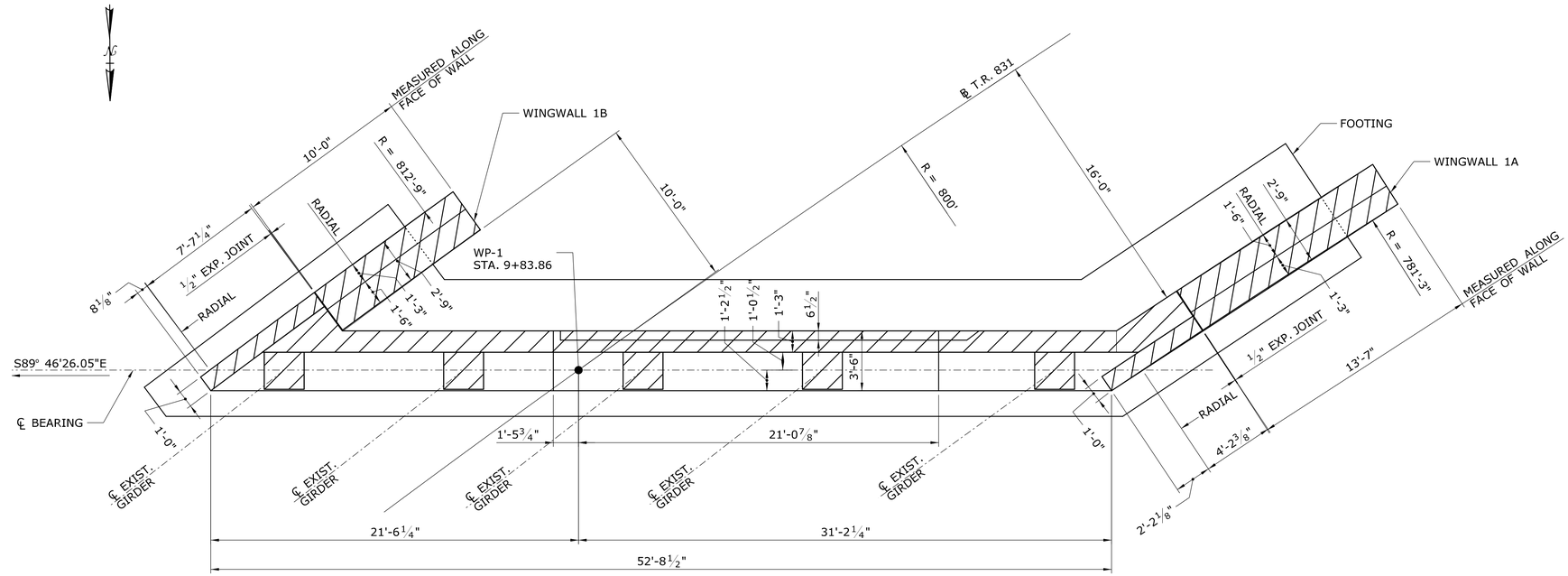

PLAN

SCALE: ¼" = 1'-0"

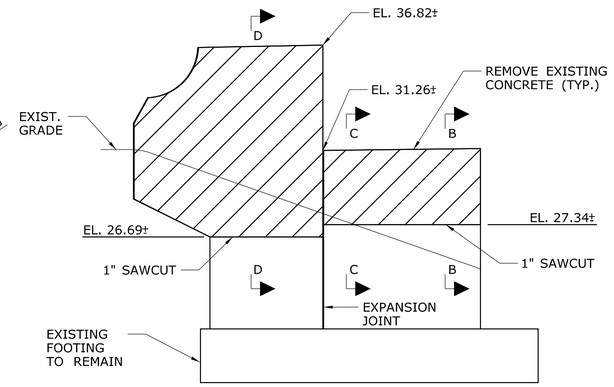

WINGWALL 1B - DEVELOPED ELEVATION

SCALE: ¼" = 1'-0"

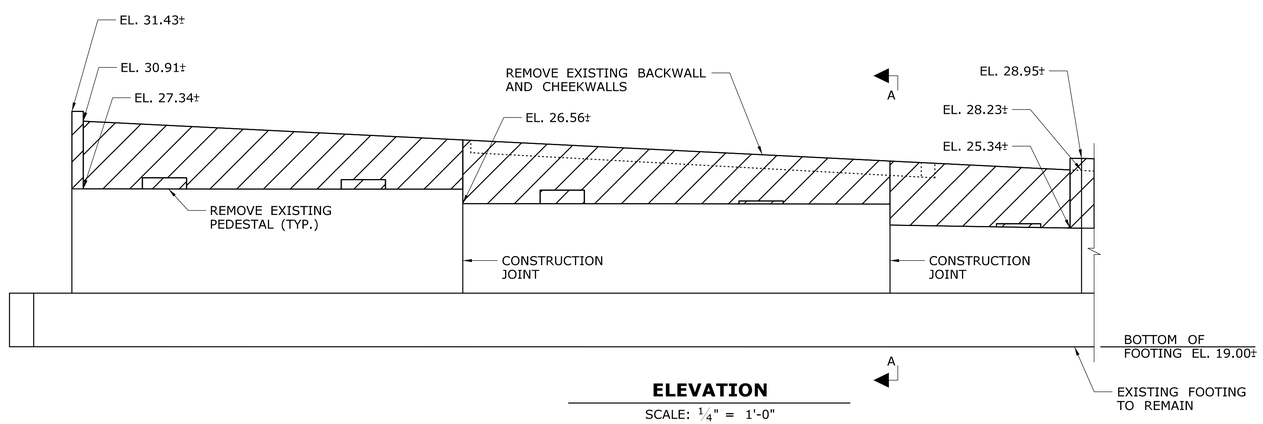

ELEVATION

SCALE: ¼" = 1'-0"

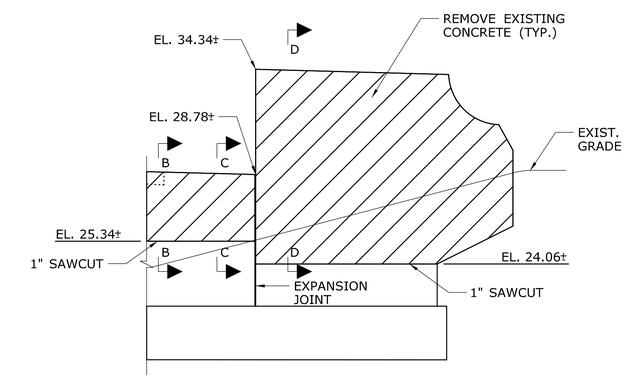

WINGWALL 1A - DEVELOPED ELEVATION

SCALE: ¼" = 1'-0"

NOTES

1. SEE REFERENCE 1 FOR SECTIONS.
2. ALL DIMENSIONS AND ELEVATIONS ARE BASED ON ORIGINAL DESIGN DRAWINGS AND SHALL BE CONSIDERED APPROXIMATE. ALL DIMENSIONS AND ELEVATIONS SHALL BE FIELD VERIFIED BY THE CONTRACTOR.
3. SAWCUTTING OF EXISTING CONCRETE SUBSTRUCTURE SHALL NOT BE MEASURED FOR PAYMENT, THE COST OF WHICH SHALL BE INCLUDED IN THE ITEM "REMOVAL OF EXISTING MASONRY."

REFERENCE	SHEET NO.
1. EXISTING ABUTMENT SECTIONS	S-07

REV.	DATE	REVISION DESCRIPTION	SHEET NO.
-	-	-	-
-	-	-	-
-	-	-	-
-	-	-	-
-	-	-	-
-	-	-	-

THE INFORMATION, INCLUDING ESTIMATED QUANTITIES OF WORK, SHOWN ON THESE SHEETS IS BASED ON LIMITED INVESTIGATIONS BY THE STATE AND IS IN NO WAY WARRANTED TO INDICATE THE CONDITIONS OF ACTUAL QUANTITIES OF WORK WHICH WILL BE REQUIRED.

Plotted Date: 11/18/2014

DESIGNER/DRAFTER: AP
CHECKED BY: SSY
SCALE AS NOTED

STATE OF CONNECTICUT
DEPARTMENT OF TRANSPORTATION

Filename: ...\S-05 EXISTING ABUTMENT 1.dgn

SIGNATURE/BLOCK:
Stantec Consulting Services Inc.
2321 Whitney Ave.
Hamden, CT 06518

PROJECT TITLE:
REHABILITATION OF BRIDGE NO. 02376
I-84 T.R. 831 OVER I-84 EB

TOWN: EAST HARTFORD

DRAWING TITLE: EXISTING ABUTMENT 1

PROJECT NO. 042-316
DRAWING NO. S-05
SHEET NO. 03.04.05

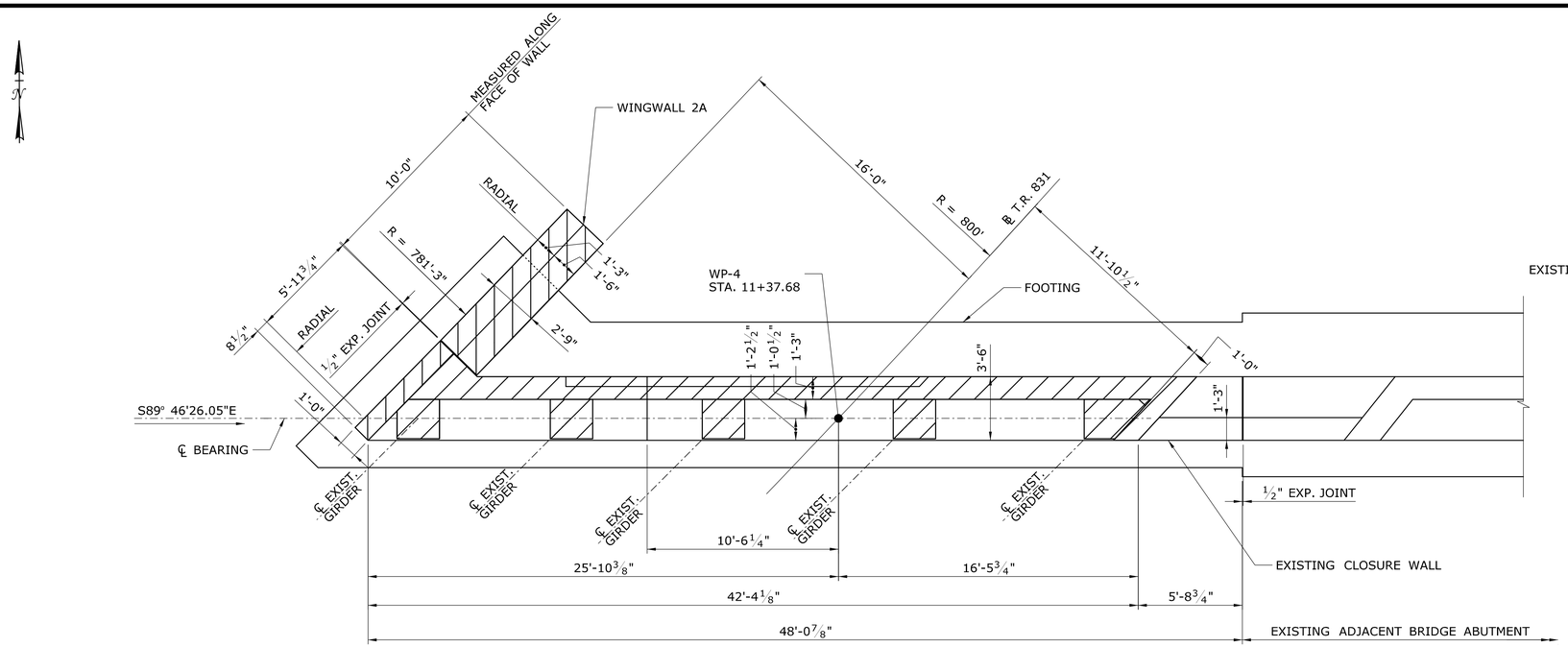

PLAN

SCALE: ¼" = 1'-0"

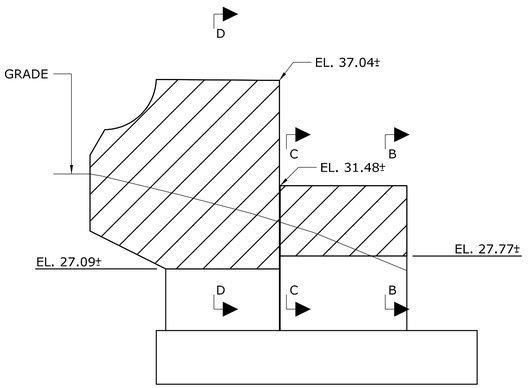

WINGWALL 2A - DEVELOPED ELEVATION

SCALE: ¼" = 1'-0"

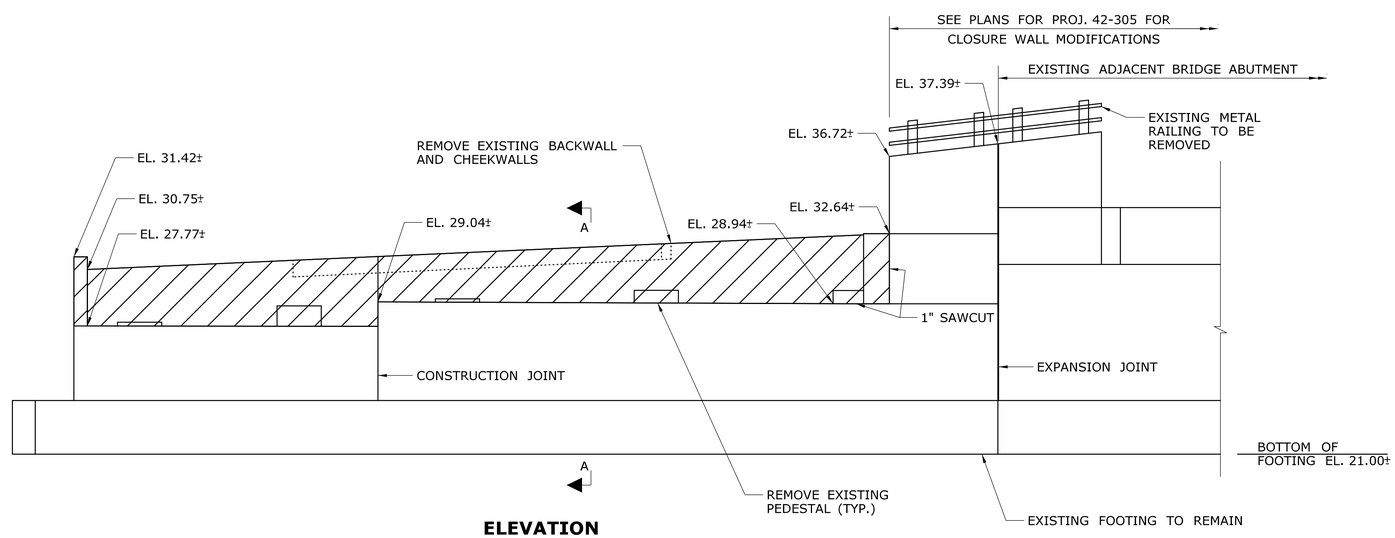

ELEVATION

SCALE: ¼" = 1'-0"

NOTES

1. SEE REFERENCE 1 FOR SECTIONS.
2. ALL DIMENSIONS AND ELEVATIONS ARE BASED ON ORIGINAL DESIGN DRAWINGS AND SHALL BE CONSIDERED APPROXIMATE. AL DIMENSIONS AND ELEVATIONS SHALL BE FIELD VERIFIED BY THE CONTRACTOR.
3. SAWCUTTING OF EXISTING CONCRETE SUBSTRUCTURE SHALL NOT BE MEASURED FOR PAYMENT, THE COST OF WHICH SHALL BE INCLUDED IN THE ITEM "REMOVAL OF EXISTING MASONRY."

REFERENCE	SHEET NO.
1. EXISTING ABUTMENT SECTIONS	S-07

REV.	DATE	REVISION DESCRIPTION	SHEET NO.
-	-	-	-
-	-	-	-
-	-	-	-
-	-	-	-
-	-	-	-
-	-	-	-

THE INFORMATION, INCLUDING ESTIMATED QUANTITIES OF WORK, SHOWN ON THESE SHEETS IS BASED ON LIMITED INVESTIGATIONS BY THE STATE AND IS IN NO WAY WARRANTED TO INDICATE THE CONDITIONS OF ACTUAL QUANTITIES OF WORK WHICH WILL BE REQUIRED.

Plotted Date: 11/18/2014

DESIGNER/DRAFTER: AP
CHECKED BY: SSY
SCALE AS NOTED

STATE OF CONNECTICUT
DEPARTMENT OF TRANSPORTATION

Filename: ...\S-06 EXISTING ABUTMENT 2.dgn

SIGNATURE/BLOCK:
Stantec Consulting Services Inc.
2321 Whitney Ave.
Hamden, CT 06518

PROJECT TITLE:
REHABILITATION OF BRIDGE NO. 02376
I-84 T.R. 831 OVER I-84 EB

TOWN: EAST HARTFORD

DRAWING TITLE: EXISTING ABUTMENT 2

PROJECT NO. 042-316
DRAWING NO. S-06
SHEET NO. 03.04.06

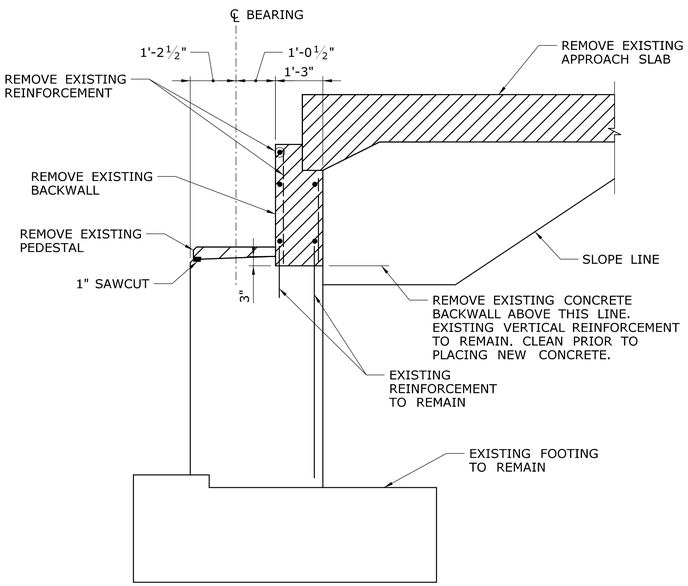

SECTION A-A

SCALE: ½" = 1'-0"

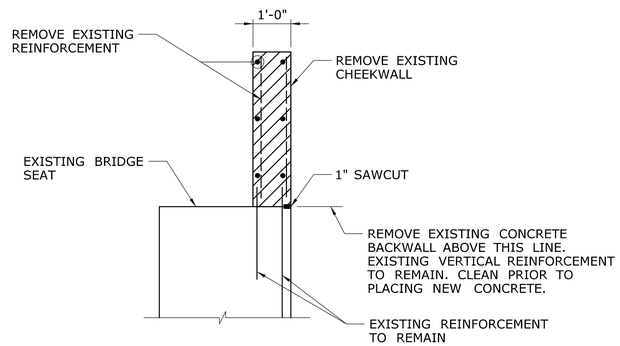

SECTION B-B

SCALE: ½" = 1'-0"

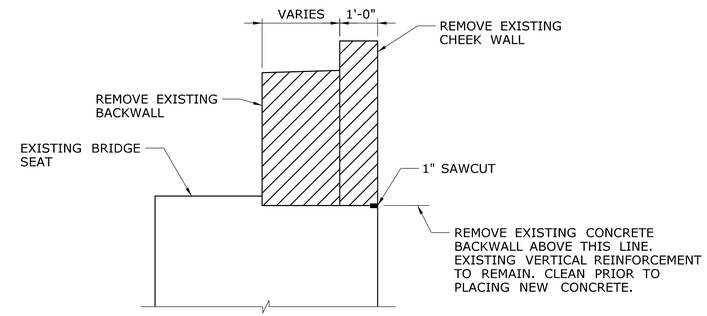

SECTION C-C

SCALE: ½" = 1'-0"

NOTE: REINFORCEMENT NOT SHOWN.

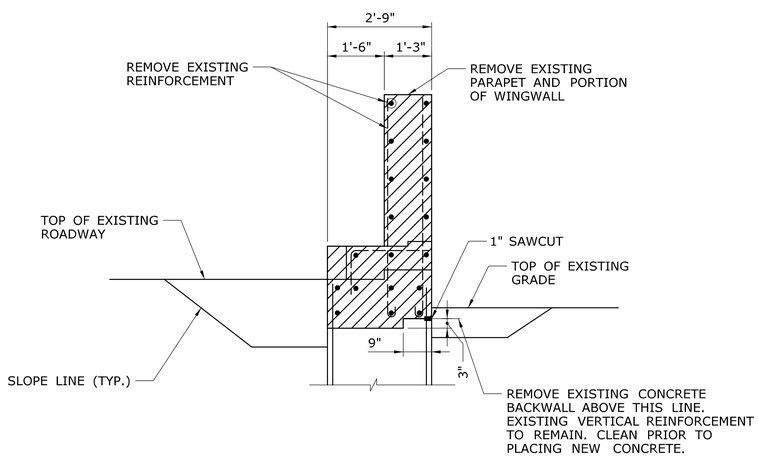

SECTION D-D

SCALE: ½" = 1'-0"

NOTES

1. SAWCUTTING OF EXISTING CONCRETE SUBSTRUCTURE SHALL NOT BE MEASURED FOR PAYMENT, THE COST OF WHICH SHALL BE INCLUDED IN THE ITEM "REMOVAL OF EXISTING MASONRY."
2. REMOVAL OF EXISTING APPROACH SLAB SHALL BE INCLUDED IN THE ITEM "REMOVAL OF CONCRETE PAVEMENT" (ROADWAY ITEM).

REV.	DATE	REVISION DESCRIPTION	SHEET NO.
-	-	-	-
-	-	-	-
-	-	-	-
-	-	-	-
-	-	-	-
-	-	-	-

THE INFORMATION, INCLUDING ESTIMATED QUANTITIES OF WORK, SHOWN ON THESE SHEETS IS BASED ON LIMITED INVESTIGATIONS BY THE STATE AND IS IN NO WAY WARRANTED TO INDICATE THE CONDITIONS OF ACTUAL QUANTITIES OF WORK WHICH WILL BE REQUIRED.

Plotted Date: 11/18/2014

DESIGNER/DRAFTER: **AP**

CHECKED BY: **SSY**

SCALE AS NOTED

STATE OF CONNECTICUT
DEPARTMENT OF TRANSPORTATION

Filename: ...\S-07 EXISTING ABUTMENT SECTIONS.dgn

SIGNATURE/BLOCK:

Stantec Consulting Services Inc.
2321 Whitney Ave.
Hamden, CT 06518

PROJECT TITLE:

REHABILITATION OF BRIDGE NO. 02376
I-84 T.R. 831 OVER I-84 EB

TOWN: **EAST HARTFORD**

DRAWING TITLE: **EXISTING ABUTMENT SECTIONS**

PROJECT NO. **042-316**

DRAWING NO. **S-07**

SHEET NO. **03.04.07**

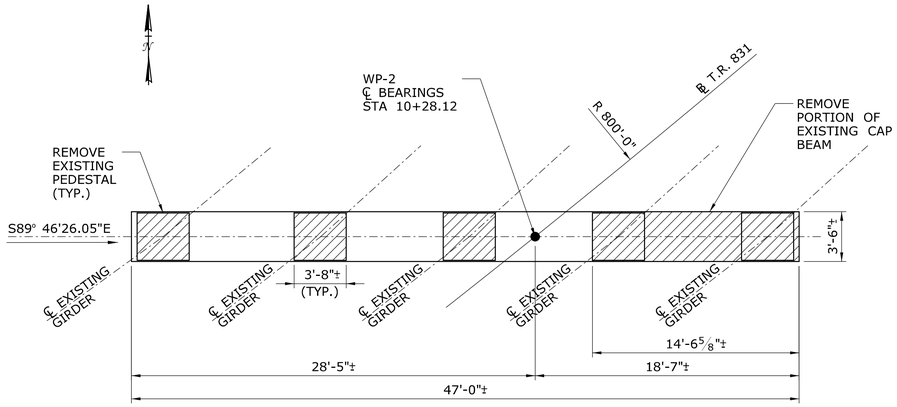

PIER 1 - PLAN

SCALE: 3/16" = 1'-0"

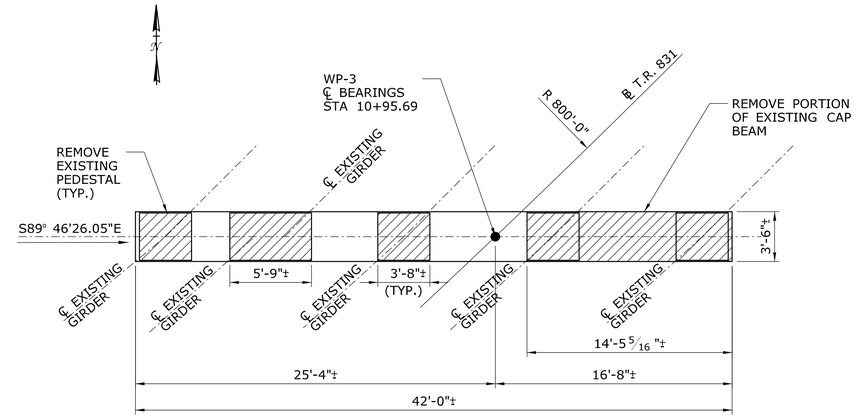

PIER 2 - PLAN

SCALE: 3/16" = 1'-0"

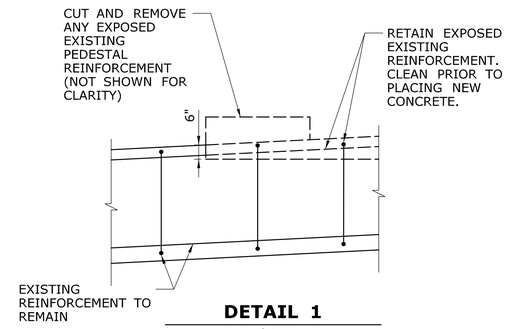

DETAIL 1

SCALE: 3/8" = 1'-0"

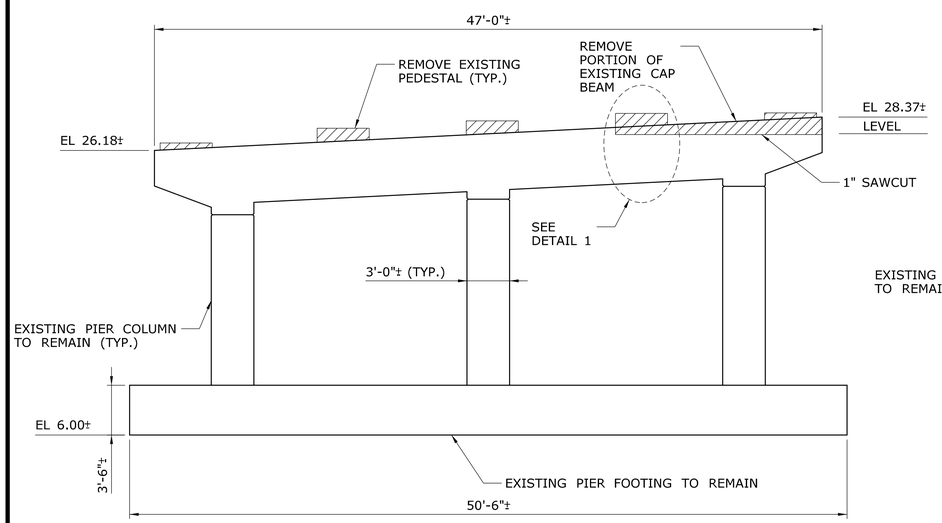

PIER 1 - SOUTH ELEVATION

SCALE: 3/16" = 1'-0"

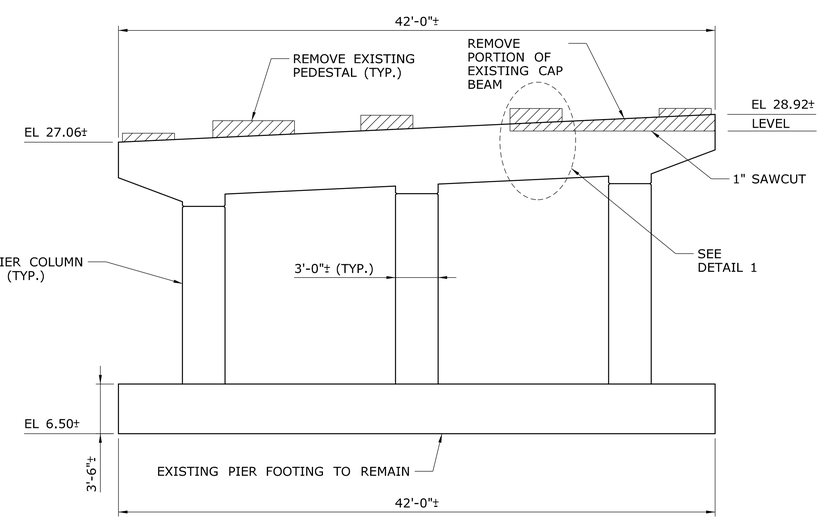

PIER 2 - SOUTH ELEVATION

SCALE: 3/16" = 1'-0"

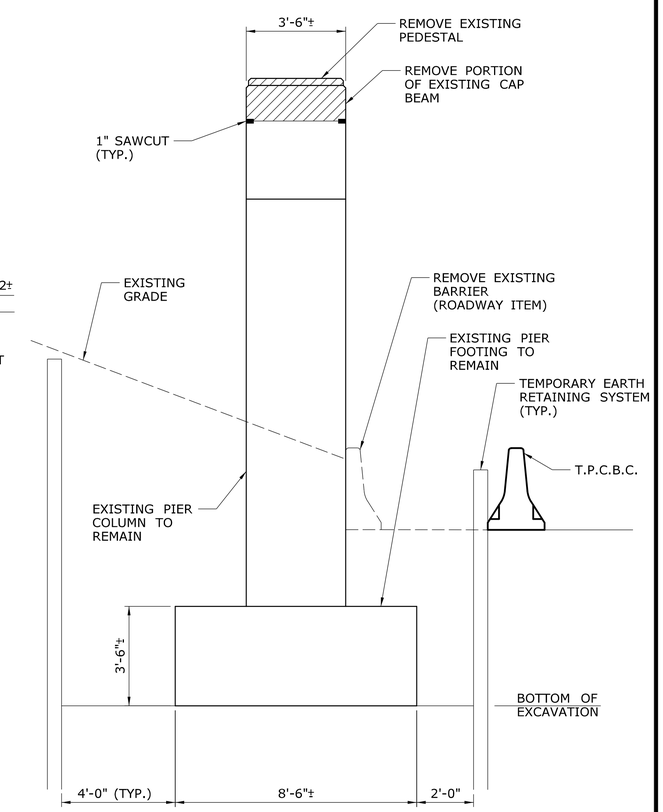

TYPICAL PIER SECTION

SCALE: 3/8" = 1'-0"

NOTES

1. ALL DIMENSIONS AND ELEVATIONS ARE BASED ON ORIGINAL DESIGN DRAWINGS AND SHALL BE CONSIDERED APPROXIMATE. ALL DIMENSIONS AND ELEVATIONS SHALL BE FIELD VERIFIED BY THE CONTRACTOR.
2. SAWCUTTING OF EXISTING CONCRETE SUBSTRUCTURE SHALL NOT BE MEASURED FOR PAYMENT, THE COST OF WHICH SHALL BE INCLUDED IN THE ITEM "REMOVAL OF EXISTING MASONRY."

REV.	DATE	REVISION DESCRIPTION	SHEET NO.
-	-	-	-
-	-	-	-
-	-	-	-
-	-	-	-
-	-	-	-
-	-	-	-

THE INFORMATION, INCLUDING ESTIMATED QUANTITIES OF WORK, SHOWN ON THESE SHEETS IS BASED ON LIMITED INVESTIGATIONS BY THE STATE AND IS IN NO WAY WARRANTED TO INDICATE THE CONDITIONS OF ACTUAL QUANTITIES OF WORK WHICH WILL BE REQUIRED.

Plotted Date: 11/18/2014

DESIGNER/DRAFTER: AP
CHECKED BY: SSY
SCALE AS NOTED

STATE OF CONNECTICUT
DEPARTMENT OF TRANSPORTATION

Filename: ..\S-08 EXISTING PIER.dgn

SIGNATURE/BLOCK:
Stantec Consulting Services Inc.
2321 Whitney Ave.
Hamden, CT 06518

PROJECT TITLE:
REHABILITATION OF BRIDGE NO. 02376
I-84 T.R. 831 OVER I-84 EB

TOWN: EAST HARTFORD

DRAWING TITLE: EXISTING PIER PLAN

PROJECT NO. 042-316
DRAWING NO. S-08
SHEET NO. 03.04.08

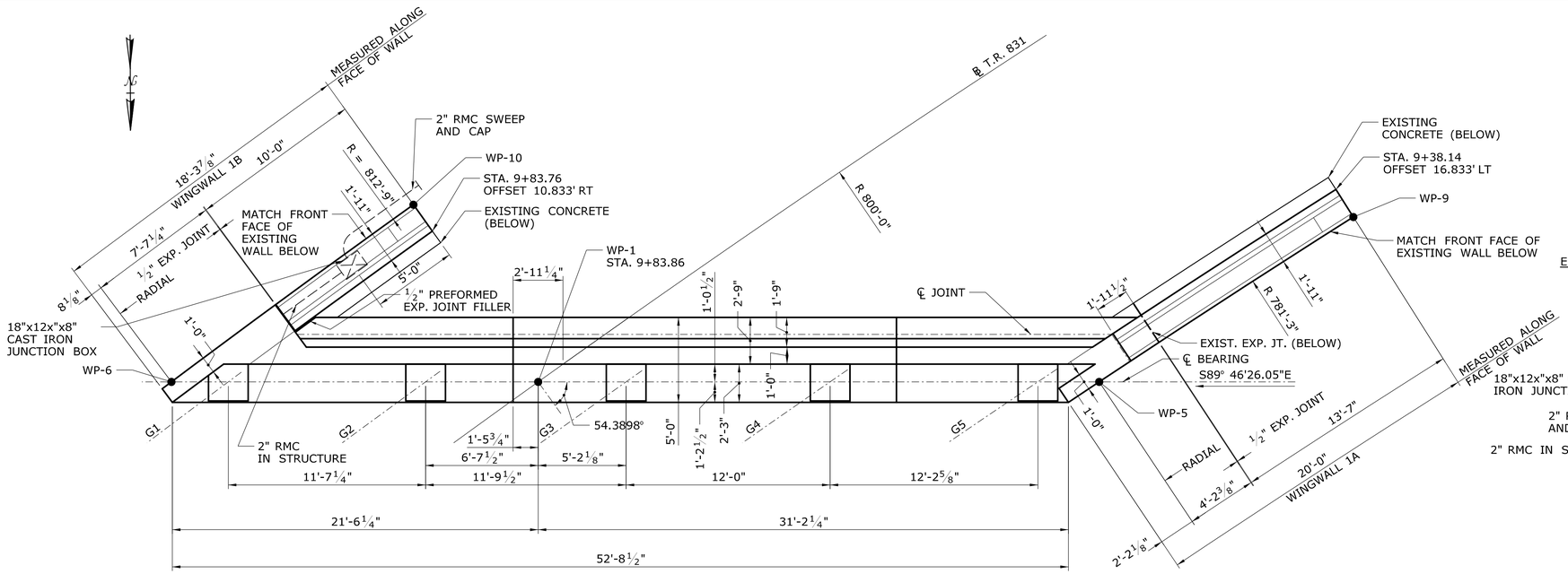

PLAN

SCALE: 1/4" = 1'-0"

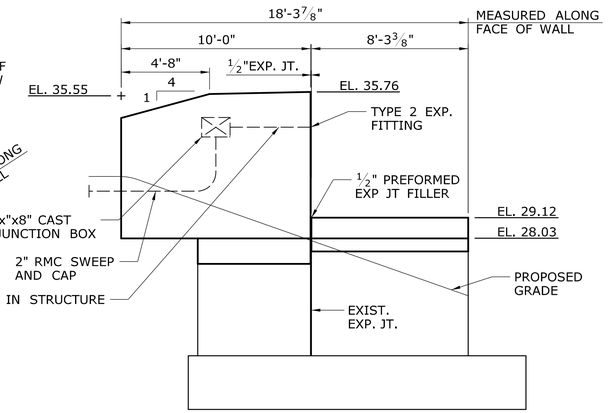

WINGWALL 1B - DEVELOPED ELEVATION

SCALE: 1/4" = 1'-0"

PEDESTAL ELEVATIONS	
LOCATION	ELEVATION
G1	28.66
G2	28.53
G3	28.17
G4	27.53
G5	26.86

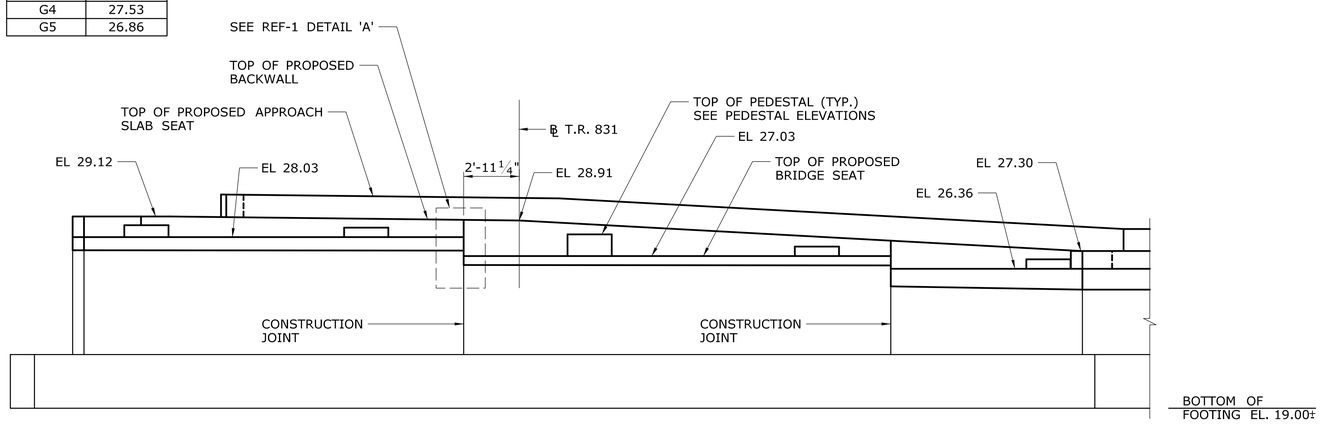

ELEVATION

SCALE: 1/4" = 1'-0"

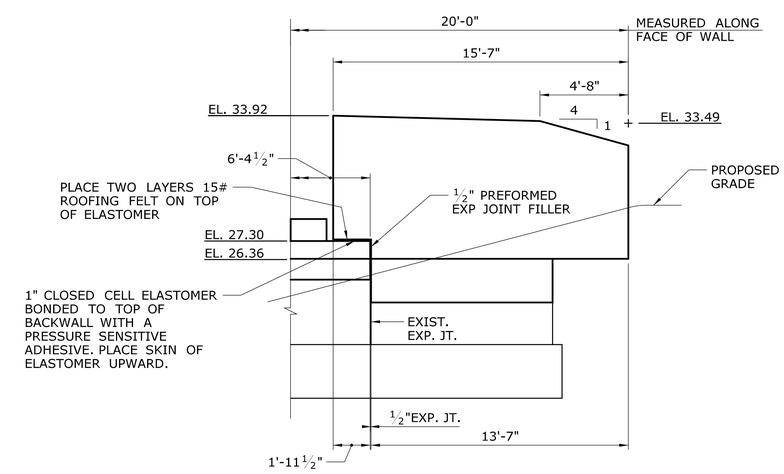

WINGWALL 1A - DEVELOPED ELEVATION

SCALE: 1/4" = 1'-0"

MAXIMUM DESIGN FOUNDATION PRESSURE = 2.60 TSF (STRENGTH 1)
(SEE NOTE 3) 1.91 TSF (SERVICE 1)

REFERENCE	SHEET NO.
1. ABUTMENT DETAILS - 1	S-11
2. ABUTMENT DETAILS - 2	S-12

NOTES

1. SEE REFERENCE 1 AND 2 FOR SECTIONS AND DETAILS.
2. THE CONTRACTOR SHALL SURVEY THE NEW PEDESTAL MEASUREMENTS AFTER CONSTRUCTION OF NEW PEDESTALS AND SUBMIT TO THE ENGINEER FOR REVIEW PRIOR TO STEEL ERECTION. THE CONTRACTOR SHALL BE RESPONSIBLE FOR CORRECTING PEDESTALS THAT ARE NOT CONSTUCTED TO THE CORRECT ELEVATION AND/OR DIMENSIONS, AS DIRECTED BY THE ENGINEER.
3. MAXIMUM DESIGN FOUNDATION PRESSURE DETERMINED BASED ON EFFECTIVE FOOTING DIMENSIONS AS PER AASHTO LRFD ARTICLE 10.6.1.3.

REV.	DATE	REVISION DESCRIPTION	SHEET NO.
-	-	-	-
-	-	-	-
-	-	-	-
-	-	-	-
-	-	-	-
-	-	-	-

THE INFORMATION, INCLUDING ESTIMATED QUANTITIES OF WORK, SHOWN ON THESE SHEETS IS BASED ON LIMITED INVESTIGATIONS BY THE STATE AND IS IN NO WAY WARRANTED TO INDICATE THE CONDITIONS OF ACTUAL QUANTITIES OF WORK WHICH WILL BE REQUIRED.

Plotted Date: 11/18/2014

DESIGNER/DRAFTER: AP
CHECKED BY: SSY
SCALE AS NOTED

STATE OF CONNECTICUT
DEPARTMENT OF TRANSPORTATION

Filename: ...\S-09 PROPOSED ABUTMENT 1.dgn

SIGNATURE/BLOCK:
Stantec Consulting Services Inc.
2321 Whitney Ave.
Hamden, CT 06518

PROJECT TITLE:
REHABILITATION OF BRIDGE NO. 02376
I-84 T.R. 831 OVER I-84 EB

TOWN: EAST HARTFORD

DRAWING TITLE: ABUTMENT 1

PROJECT NO. 042-316
DRAWING NO. S-09
SHEET NO. 03.04.09

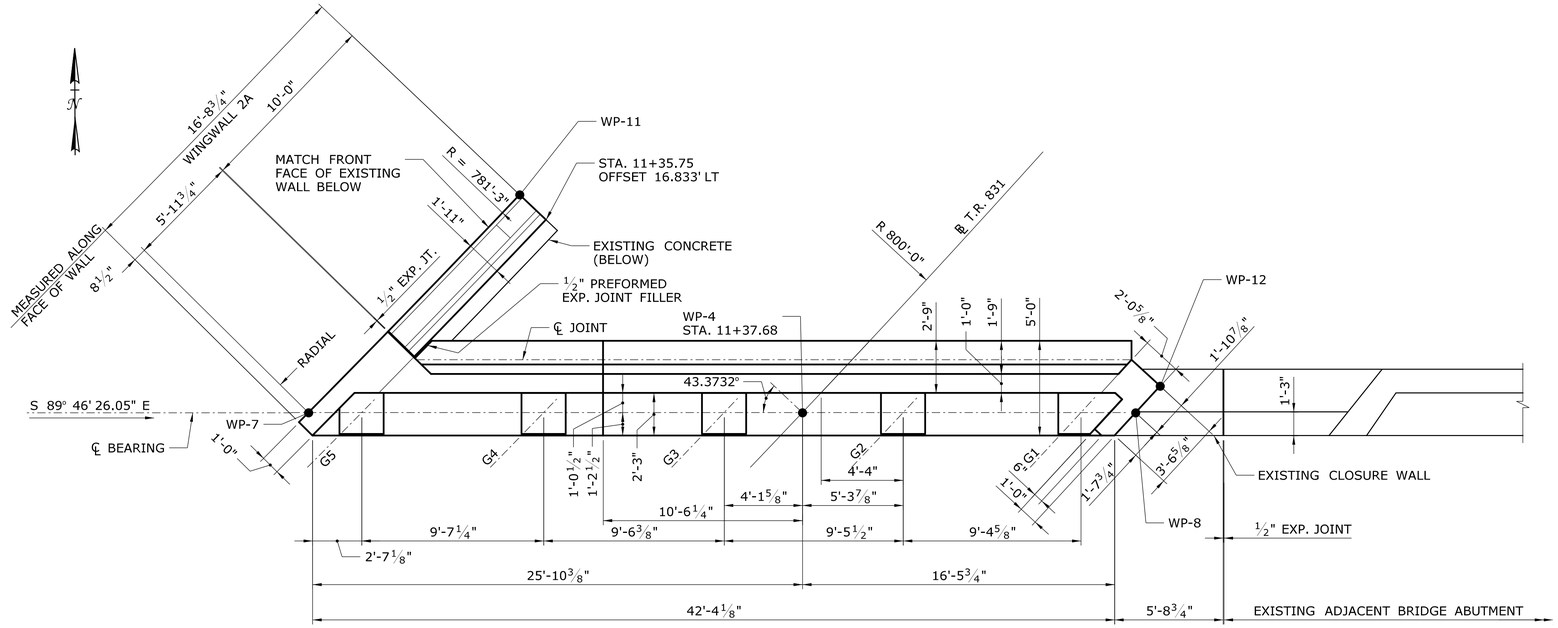

PLAN

SCALE: ¼" = 1'-0"

PEDESTAL ELEVATIONS	
LOCATION	ELEVATION
G1	30.44
G2	30.49
G3	30.32
G4	29.88
G5	29.42

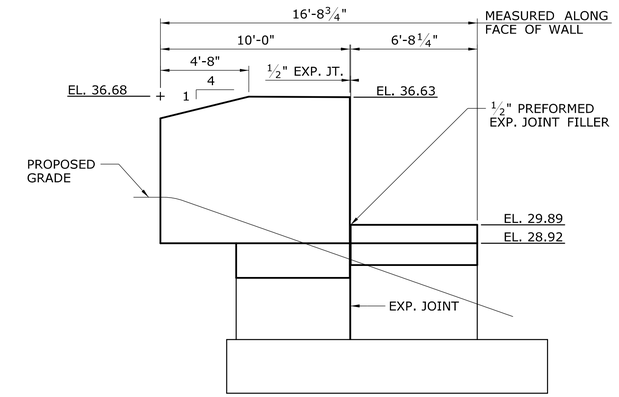

WINGWALL 2A - DEVELOPED ELEVATION

SCALE: ¼" = 1'-0"

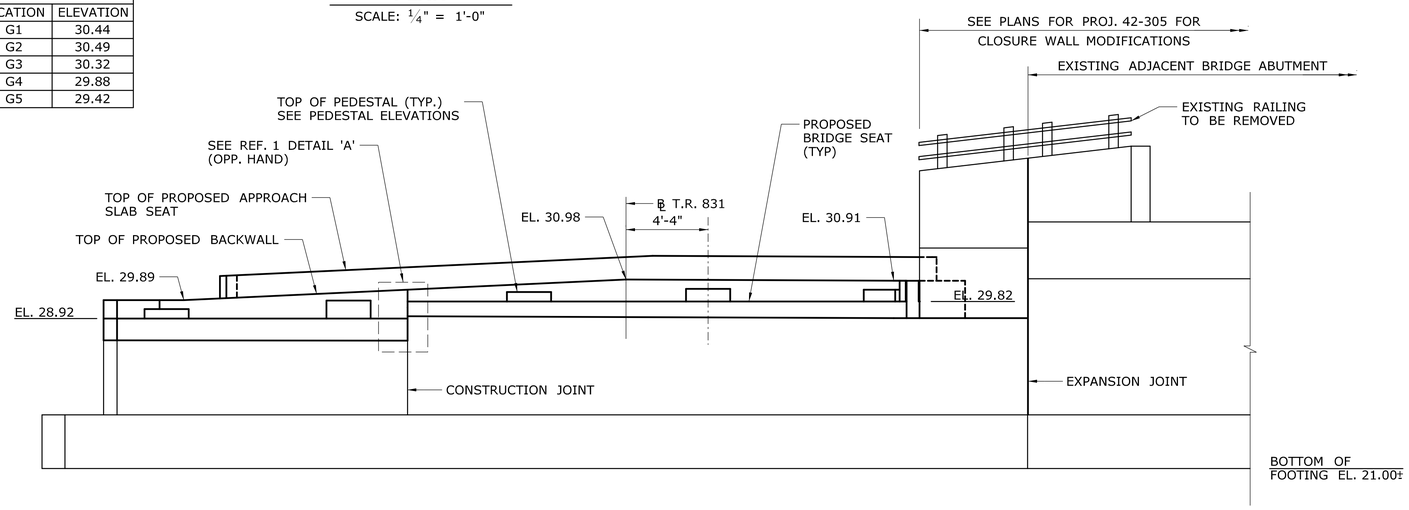

ELEVATION

SCALE: ¼" = 1'-0"

MAXIMUM DESIGN FOUNDATION PRESSURE = 2.60 TSF (STRENGTH 1)
(SEE NOTE 3) 1.91 TSF (SERVICE 1)

NOTES

1. SEE REFERENCE 1 AND 2 FOR SECTIONS AND DETAILS.
2. THE CONTRACTOR SHALL SURVEY THE NEW PEDESTAL MEASUREMENTS AFTER CONSTRUCTION OF NEW PEDESTALS AND SUBMIT TO THE ENGINEER FOR REVIEW PRIOR TO STEEL ERECTION. THE CONTRACTOR SHALL BE RESPONISBLE FOR CORRECTING PEDESTALS THAT ARE NOT CONSTRUCTED TO THE CORRECT ELEVATION AND/OR DIMENSIONS, AS DIRECTED BY THE ENGINEER.
3. MAXIMUM DESIGN FOUNDATION PRESSURE DETERMINED BASED ON EFFECTIVE FOOTING DIMENSIONS AS PER AASHTO LRFD ARTICLE 10.6.1.3.

REFERENCE	SHEET NO.
1. ABUTMENT DETAILS - 1	S-11
2. ABUTMENT DETAILS - 2	S-12

REV.	DATE	REVISION DESCRIPTION	SHEET NO.
-	-	-	-
-	-	-	-
-	-	-	-
-	-	-	-
-	-	-	-
-	-	-	-

THE INFORMATION, INCLUDING ESTIMATED QUANTITIES OF WORK, SHOWN ON THESE SHEETS IS BASED ON LIMITED INVESTIGATIONS BY THE STATE AND IS IN NO WAY WARRANTED TO INDICATE THE CONDITIONS OF ACTUAL QUANTITIES OF WORK WHICH WILL BE REQUIRED.

Plotted Date: 11/18/2014

DESIGNER/DRAFTER: AP
CHECKED BY: SSY
SCALE AS NOTED

STATE OF CONNECTICUT
DEPARTMENT OF TRANSPORTATION

Filename: ...\S-10 PROPOSED ABUTMENT 2.dgn

SIGNATURE/BLOCK:
Stantec Consulting Services Inc.
2321 Whitney Ave.
Hamden, CT 06518

PROJECT TITLE:
REHABILITATION OF BRIDGE NO. 02376
I-84 T.R. 831 OVER I-84 EB

TOWN: EAST HARTFORD

DRAWING TITLE: ABUTMENT 2

PROJECT NO. 042-316
DRAWING NO. S-10
SHEET NO. 03.04.10

* MEASURED ALONG ROADWAY BASELINE

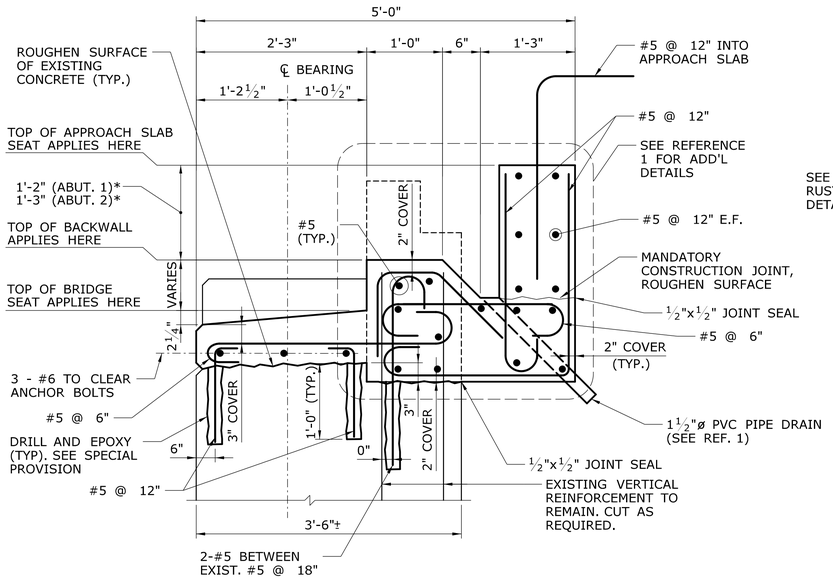

BRIDGE SEAT AND BACKWALL SECTION

SCALE: 1" = 1'-0"

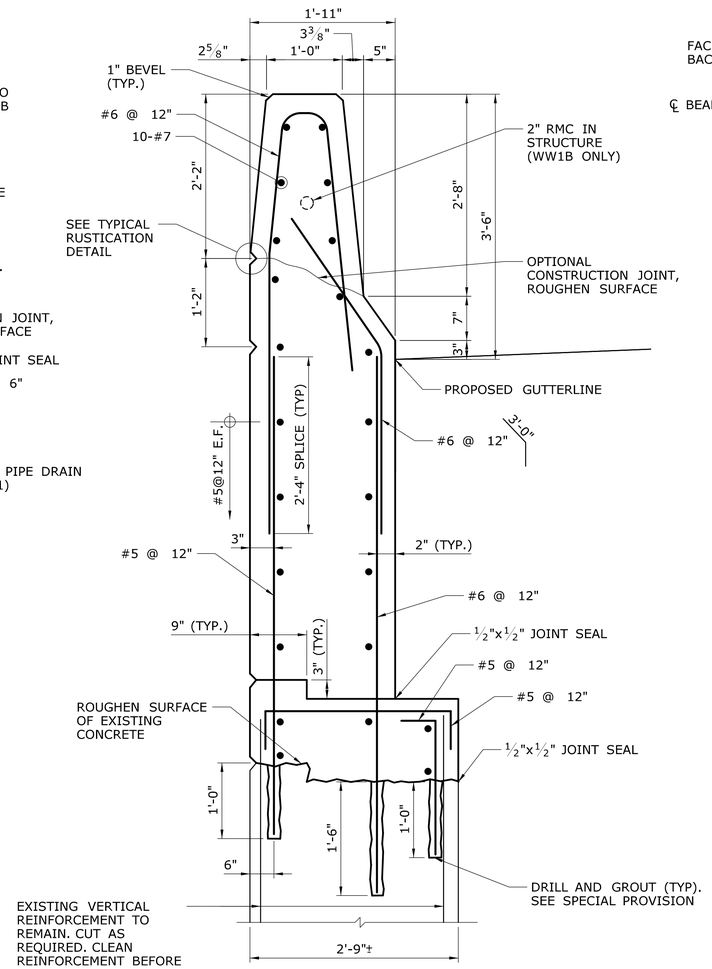

WINGWALL SECTION

SCALE: 1" = 1'-0"

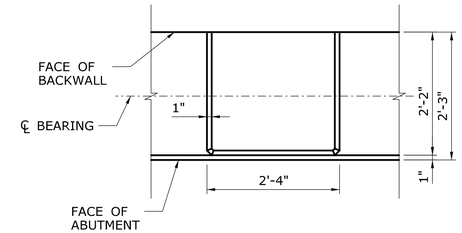

PEDESTAL PLAN

SCALE: ¾" = 1'-0"

PEDESTAL REINFORCEMENT SCHEDULE	
PEDESTAL HEIGHT	NUMBER OF HOOPS
< 5"	0
5"-8"	1
8"-11"	2
11"-14"	3

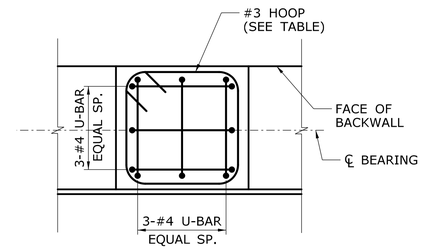

PEDESTAL REINFORCEMENT

SCALE: ¾" = 1'-0"

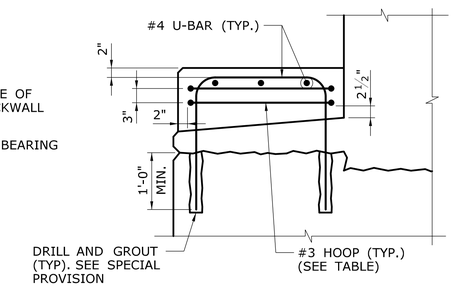

PEDESTAL SECTION

SCALE: ¾" = 1'-0"

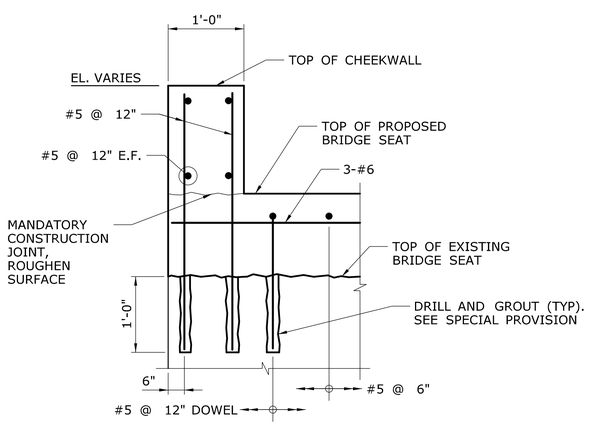

CHEEKWALL SECTION

SCALE: 1" = 1'-0"

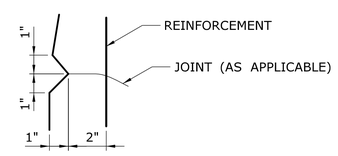

TYPICAL RUSTICATION DETAIL

NOT TO SCALE

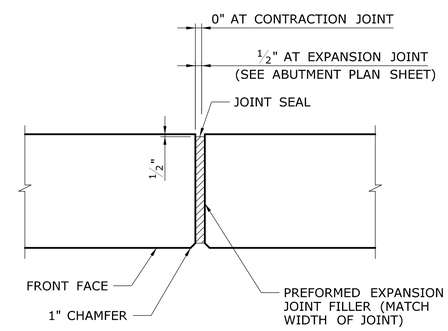

JOINT DETAILS

SCALE: ¾" = 1'-0"

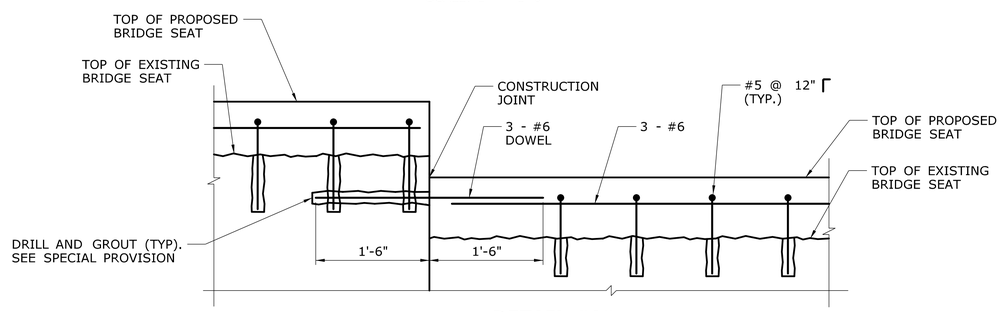

DETAIL "A"

SCALE: 1" = 1'-0"

JOINT NOTES

1. AT ABUTMENTS, JOINT SEAL TO EXTEND FROM TOP OF FOOTING TO TOP OF BACKWALL AND HORIZONTALLY ALONG TOP OF BACKWALL.
2. NO REINFORCEMENT SHALL PASS THROUGH EXPANSION OR CONTRACTION JOINTS.

REFERENCE	SHEET NO.
1. DECK DETAILS - 1	S-25

REV.	DATE	REVISION DESCRIPTION	SHEET NO.
-	-	-	-
-	-	-	-
-	-	-	-
-	-	-	-
-	-	-	-
-	-	-	-

THE INFORMATION, INCLUDING ESTIMATED QUANTITIES OF WORK, SHOWN ON THESE SHEETS IS BASED ON LIMITED INVESTIGATIONS BY THE STATE AND IS IN NO WAY WARRANTED TO INDICATE THE CONDITIONS OF ACTUAL QUANTITIES OF WORK WHICH WILL BE REQUIRED.

Plotted Date: 11/18/2014

DESIGNER/DRAFTER: AP
CHECKED BY: SSY
SCALE AS NOTED

STATE OF CONNECTICUT
DEPARTMENT OF TRANSPORTATION

Filename: ...\S-11 PROPOSED ABUTMENT DETAILS - 1.dgn

SIGNATURE/BLOCK:
Stantec Consulting Services Inc.
2321 Whitney Ave.
Hamden, CT 06518

PROJECT TITLE:
REHABILITATION OF BRIDGE NO. 02376
I-84 T.R. 831 OVER I-84 EB

TOWN: EAST HARTFORD

DRAWING TITLE: ABUTMENT DETAILS - 1

PROJECT NO. 042-316
DRAWING NO. S-11
SHEET NO. 03.04.11

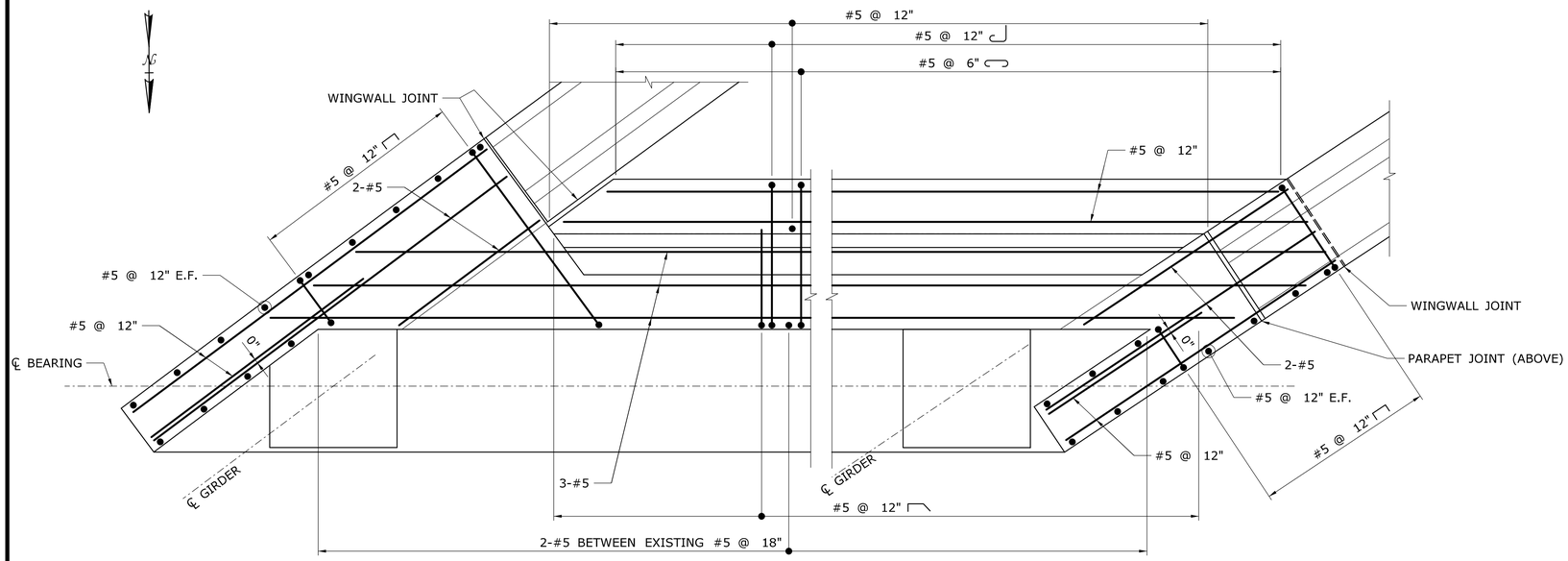

ABUTMENT 1 - BACKWALL PLAN

SCALE: 3/4" = 1'-0"

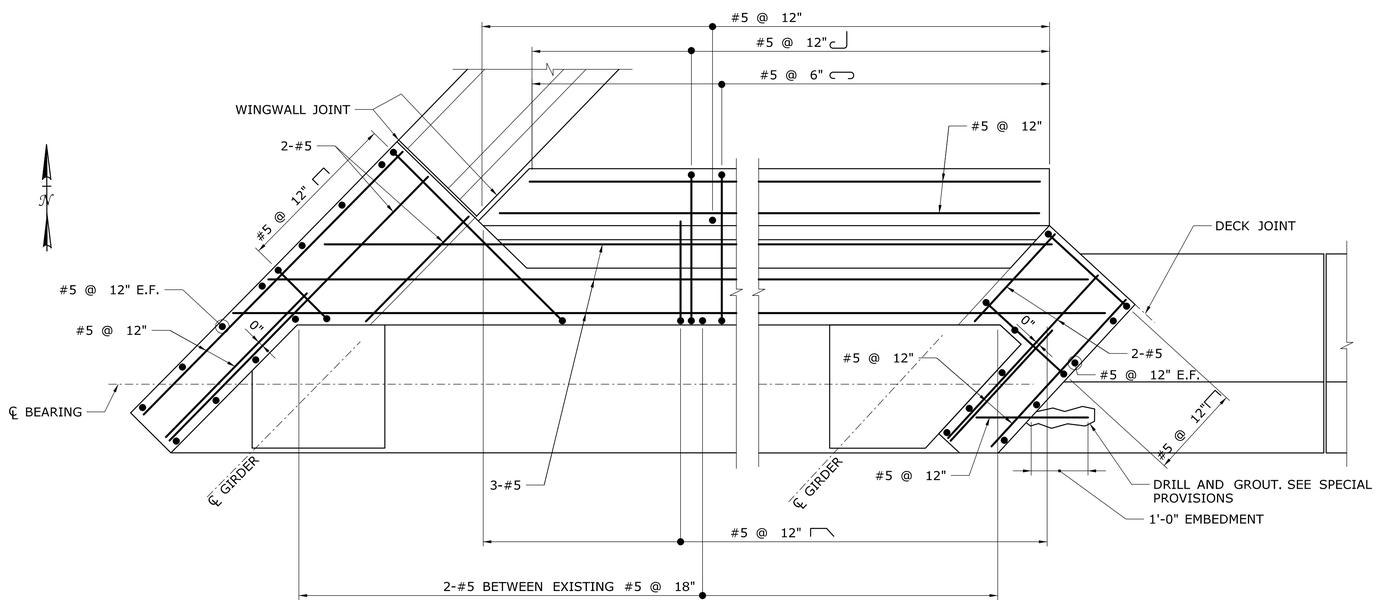

ABUTMENT 2 - BACKWALL PLAN

SCALE: 3/4" = 1'-0"

REV.	DATE	REVISION DESCRIPTION	SHEET NO.
-	-	-	-
-	-	-	-
-	-	-	-
-	-	-	-
-	-	-	-
-	-	-	-

THE INFORMATION, INCLUDING ESTIMATED QUANTITIES OF WORK, SHOWN ON THESE SHEETS IS BASED ON LIMITED INVESTIGATIONS BY THE STATE AND IS IN NO WAY WARRANTED TO INDICATE THE CONDITIONS OF ACTUAL QUANTITIES OF WORK WHICH WILL BE REQUIRED.

Plotted Date: 11/18/2014

DESIGNER/DRAFTER: AP

CHECKED BY: SSY

SCALE AS NOTED

STATE OF CONNECTICUT
DEPARTMENT OF TRANSPORTATION

Filename: ..\S-12 PROPOSED ABUTMENT DETAILS - 2.dgn

SIGNATURE/BLOCK:

Stantec Consulting Services Inc.
2321 Whitney Ave.
Hamden, CT 06518

PROJECT TITLE:

REHABILITATION OF BRIDGE NO. 02376
I-84 T.R. 831 OVER I-84 EB

TOWN: **EAST HARTFORD**

DRAWING TITLE: **ABUTMENT DETAILS - 2**

PROJECT NO. **042-316**

DRAWING NO. **S-12**

SHEET NO. **03.04.12**

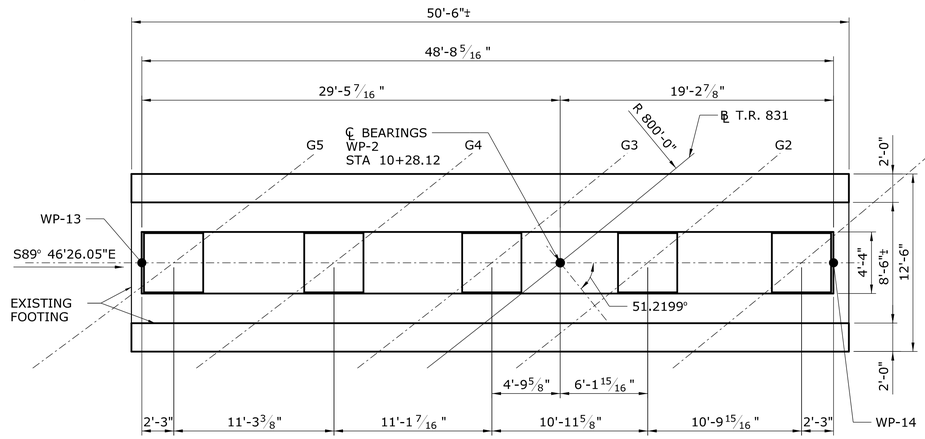

PIER 1 - PLAN

SCALE: 3/16" = 1'-0"

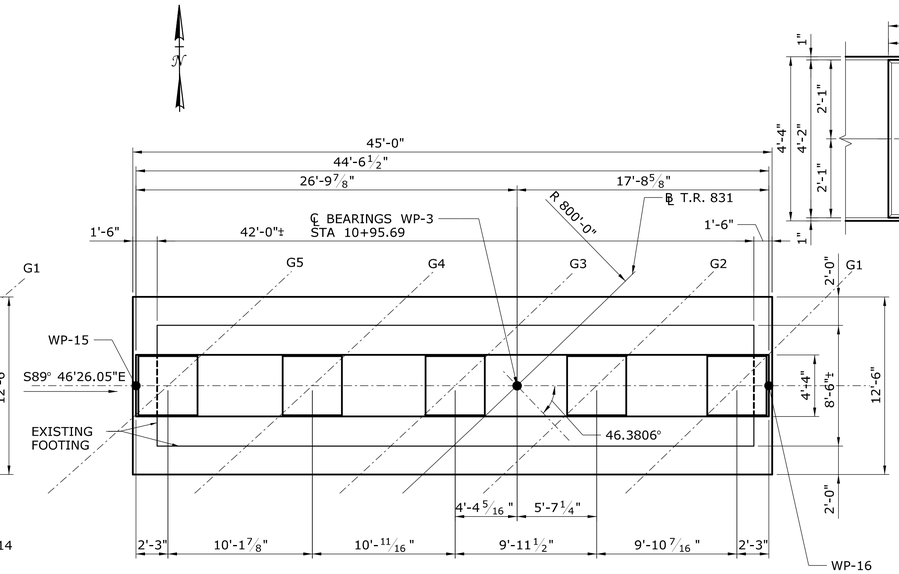

PIER 2 - PLAN

SCALE: 3/16" = 1'-0"

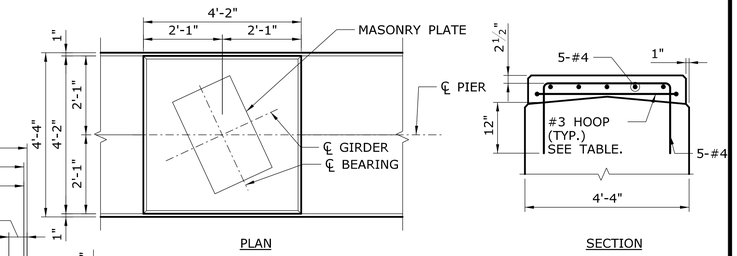

PEDESTAL DETAILS

SCALE: 1/2" = 1'-0"

PEDESTAL REINFORCEMENT SCHEDULE	
PEDESTAL HEIGHT	NUMBER OF HOOPS
< 5"	0
5"-8"	1
8"-11"	2
11"-14"	3

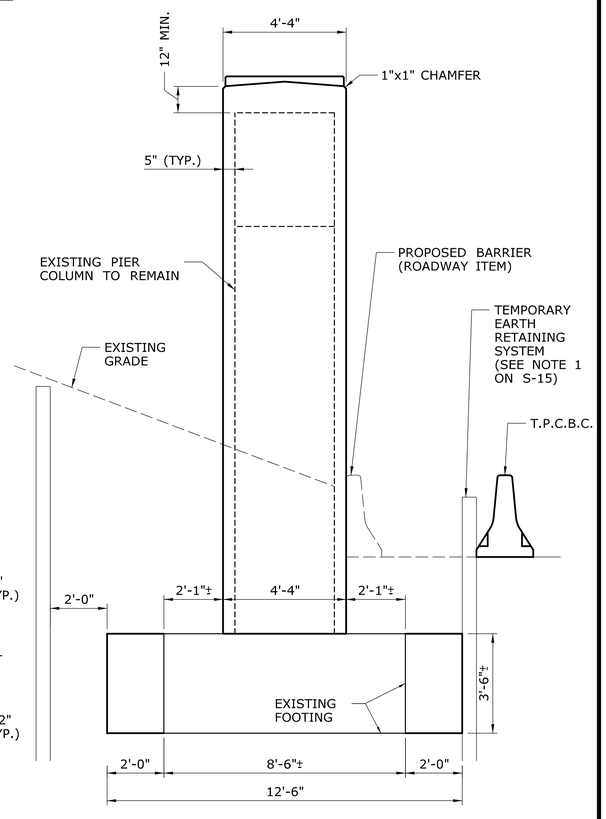

TYPICAL PIER SECTION

SCALE: 3/8" = 1'-0"

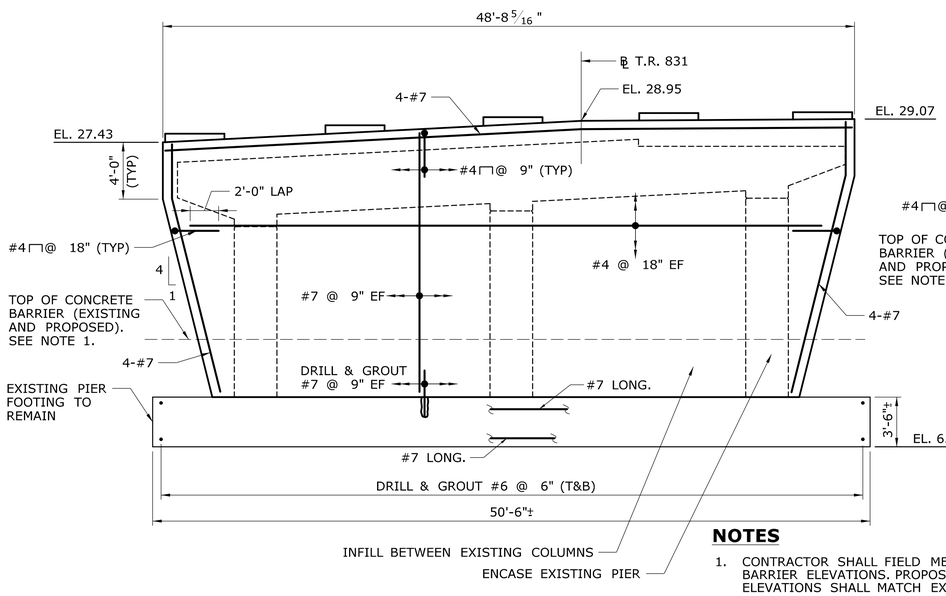

PIER 1 - SOUTH ELEVATION

SCALE: 3/16" = 1'-0"

MAXIMUM DESIGN FOUNDATION PRESSURE = 2.91 TSF (STRENGTH 1)
(SEE NOTE 3) 1.94 TSF (SERVICE 1)

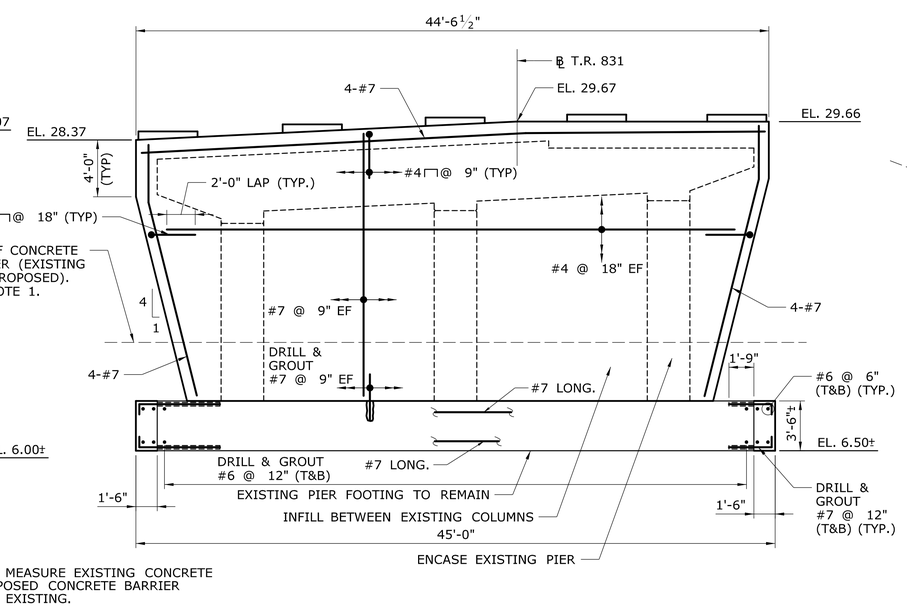

PIER 2 - SOUTH ELEVATION

SCALE: 3/16" = 1'-0"

MAXIMUM DESIGN FOUNDATION PRESSURE = 3.03 TSF (STRENGTH 1)
(SEE NOTE 3) 2.00 TSF (SERVICE 1)

PEDESTAL ELEVATIONS		
LOCATION	PIER 1	PIER 2
G1	29.55	30.15
G2	29.49	30.16
G3	29.20	29.95
G4	28.63	29.47
G5	28.04	28.97

NOTES

1. CONTRACTOR SHALL FIELD MEASURE EXISTING CONCRETE BARRIER ELEVATIONS. PROPOSED CONCRETE BARRIER ELEVATIONS SHALL MATCH EXISTING.
2. THE CONTRACTOR SHALL SURVEY THE NEW PEDESTAL MEASUREMENTS AFTER CONSTRUCTION OF NEW PEDESTALS AND SUBMIT TO THE ENGINEER FOR REVIEW PRIOR TO STEEL ERECTION. THE CONTRACTOR SHALL BE RESPONSIBLE FOR CORRECTING PEDESTALS THAT ARE NOT CONSTRUCTED TO THE CORRECT ELEVATION AND/OR DIMENSIONS, AS DIRECTED BY THE ENGINEER.
3. MAXIMUM DESIGN FOUNDATION PRESSURE DETERMINED BASED ON EFFECTIVE FOOTING DIMENSIONS AS PER AASHTO LRFD ARTICLE 10.6.1.3.

REV.	DATE	REVISION DESCRIPTION	SHEET NO.
-	-	-	-
-	-	-	-
-	-	-	-
-	-	-	-
-	-	-	-
-	-	-	-

THE INFORMATION, INCLUDING ESTIMATED QUANTITIES OF WORK, SHOWN ON THESE SHEETS IS BASED ON LIMITED INVESTIGATIONS BY THE STATE AND IS IN NO WAY WARRANTED TO INDICATE THE CONDITIONS OF ACTUAL QUANTITIES OF WORK WHICH WILL BE REQUIRED.

Plotted Date: 11/18/2014

DESIGNER/DRAFTER: AP
CHECKED BY: SSY
SCALE AS NOTED

STATE OF CONNECTICUT
DEPARTMENT OF TRANSPORTATION

Filename: ...\S-13 PROPOSED PIER PLAN.dgn

SIGNATURE/BLOCK:
Stantec Consulting Services Inc.
2321 Whitney Ave.
Hamden, CT 06518

PROJECT TITLE:
REHABILITATION OF BRIDGE NO. 02376
I-84 T.R. 831 OVER I-84 EB

TOWN: EAST HARTFORD

DRAWING TITLE: PIER PLAN

PROJECT NO. 042-316
DRAWING NO. S-13
SHEET NO. 03.04.13

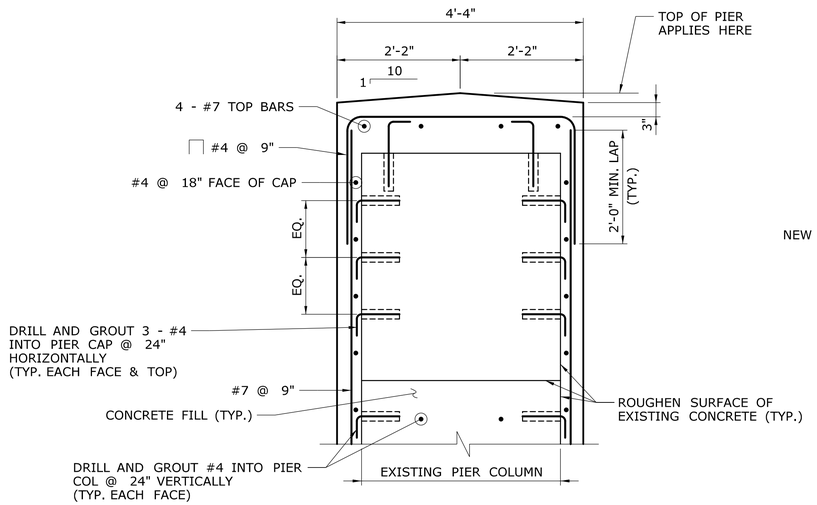

TYPICAL PIER CAP SECTION

SCALE: $^{3}/_{4}$" = 1'-0"

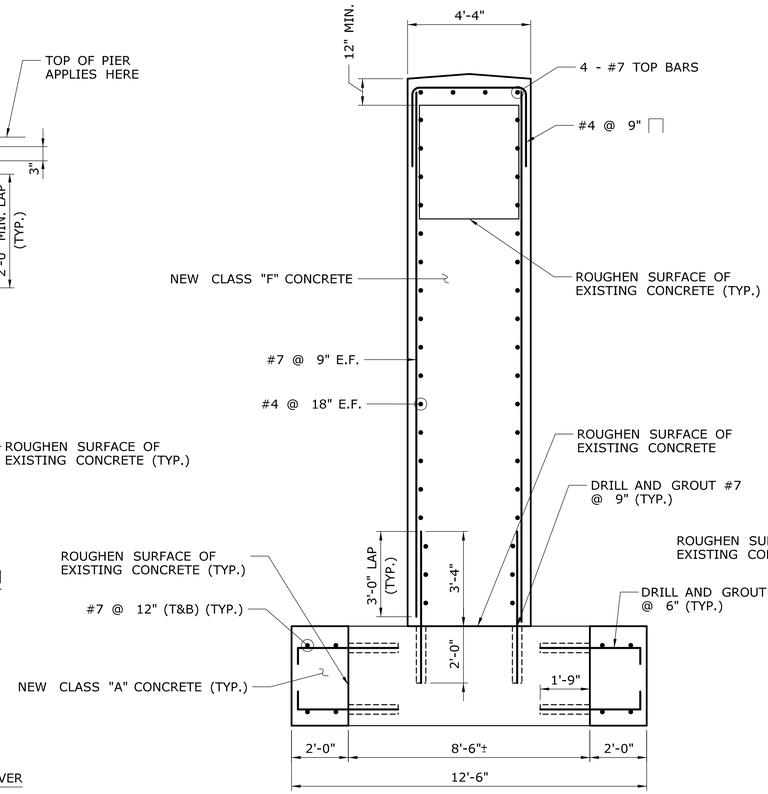

TYPICAL PIER REINFORCEMENT SECTION

SCALE: $^{3}/_{8}$" = 1'-0"

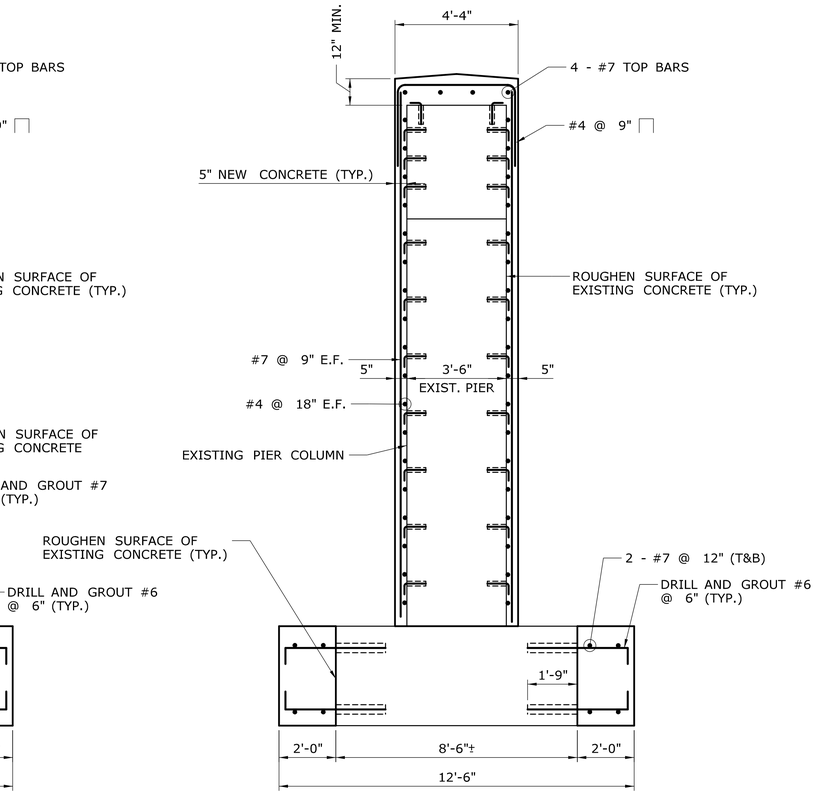

TYPICAL PIER SECTION AT COLUMN

SCALE: $^{3}/_{8}$" = 1'-0"

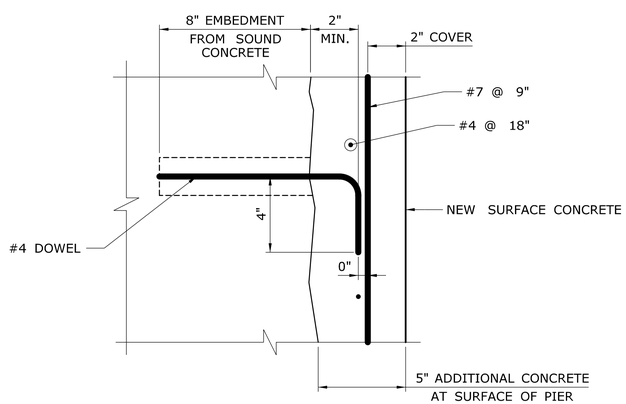

TYPICAL PIER MODIFICATION DETAIL

SCALE: 3" = 1'-0"

NOTES

1. REFER TO REFERENCE 1 FOR STAGING REQUIREMENTS.
2. ALL VISIBLE DETERIORATED PIER CONCRETE SHALL BE REMOVED IN ACCORDANCE WITH THE ITEM "REMOVAL OF DETERIORATED CONCRETE".
3. IF EXISTING REINFORCEMENT IS EXPOSED UPON REMOVAL OF DETERIORATED CONCRETE, CONCRETE SHALL BE FURTHER REMOVED TO PROVIDE A MINIMUM DEPTH OF $^{3}/_{4}$" AROUND THE REINFORCEMENT.
4. IF THE DEPTH OF CONCRETE REMOVAL EXCEEDS 4", THE CONTRACTOR SHALL NOTIFY THE ENGINEER IMMEDIATELY BEFORE CONTINUING REMOVAL OF DETERIORATED CONCRETE.
5. ALL PIER STEM CONCRETE SHALL BE CLASS "F" CONCRETE.
6. DRILLING AND GROUTING OF REINFORCEMENT SHALL BE INCLUDED IN THE ITEM "DRILLING HOLES AND GROUTING DOWELS".
7. ALL PIER FOOTING CONCRETE SHALL BE CLASS "A" CONCRETE.

REFERENCE	SHEET NO.
1. STAGING	S-04

REV.	DATE	REVISION DESCRIPTION	SHEET NO.
-	-	-	-
-	-	-	-
-	-	-	-
-	-	-	-
-	-	-	-
-	-	-	-

THE INFORMATION, INCLUDING ESTIMATED QUANTITIES OF WORK, SHOWN ON THESE SHEETS IS BASED ON LIMITED INVESTIGATIONS BY THE STATE AND IS IN NO WAY WARRANTED TO INDICATE THE CONDITIONS OF ACTUAL QUANTITIES OF WORK WHICH WILL BE REQUIRED.

Plotted Date: 11/18/2014

DESIGNER/DRAFTER: CRH

CHECKED BY: SSY

SCALE AS NOTED

STATE OF CONNECTICUT
DEPARTMENT OF TRANSPORTATION

Filename: ...\S-14 PIER DETAILS.dgn

SIGNATURE/ BLOCK:

Stantec Consulting Services Inc.
2321 Whitney Ave.
Hamden, CT 06518

PROJECT TITLE:

REHABILITATION OF BRIDGE NO. 02376
I-84 T.R. 831 OVER I-84 EB

TOWN: **EAST HARTFORD**

DRAWING TITLE: **PIER DETAILS**

PROJECT NO. **042-316**

DRAWING NO. **S-14**

SHEET NO. **03.04.14**

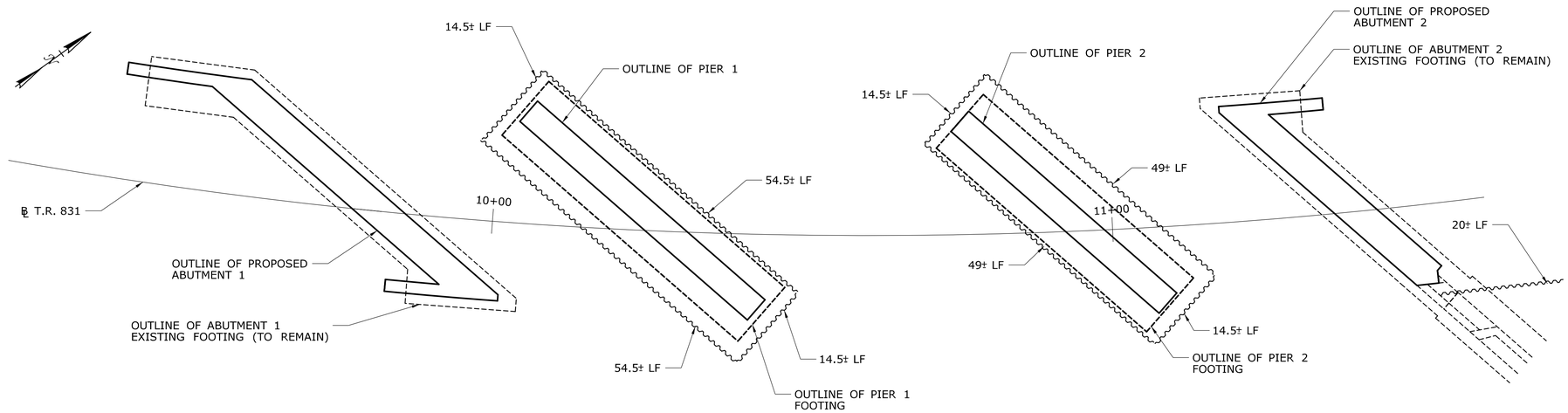

TEMPORARY EARTH RETAINING SYSTEM PLAN

NOT TO SCALE

NOTES

1. TEMPORARY EARTH RETAINING SYSTEM SHALL BE DESIGNED TO RESIST IMPACT LOADS (TL-3 MINIMUM) FROM T.P.C.B.C AS APPLICABLE.
2. TEMPORARY EARTH RETAINING SYSTEMS SHALL BE DESIGNED BY THE CONTRACTOR IN ACCORDANCE WITH THE SPECIAL PROVISION "TEMPORARY EARTH RETAINING SYSTEM".
3. TEMPORARY EARTH RETAINING SYSTEM SHALL BE CUT OFF AND LEFT IN PLACE AS SHOWN ON THE PAY LIMITS AT PIER SECTION, IN ACCORDANCE WITH THE SPECIAL PROVISION "EARTH RETAINING SYSTEM LEFT IN PLACE".
4. REMOVAL OF THE EXISTING SUPERSTRUCTURE, INCLUDING CONCRETE DECK, BITUMINOUS OVERLAY, PARAPETS, STEEL RAILING, STEEL GIRDERS AND DIAPHRAGMS, AND BEARINGS SHALL BE PAID FOR UNDER THE ITEM "REMOVAL OF SUPERSTRUCTURE (SITE NO. 3)". THIS ITEM SHALL ALSO INCLUDE REMOVAL OF EXISTING CONDUITS ATTACHED TO THE BRIDGE.
5. REMOVAL OF EXISTING APPROACH SLABS SHALL BE PAID FOR UNDER THE ITEM "REMOVAL OF CONCRETE PAVEMENT" (ROADWAY ITEM).

LEGEND

= LIMIT FOR "STRUCTURE EXCAVATION - EARTH (COMPLETE)"

= TEMPORARY EARTH RETAINING SYSTEM

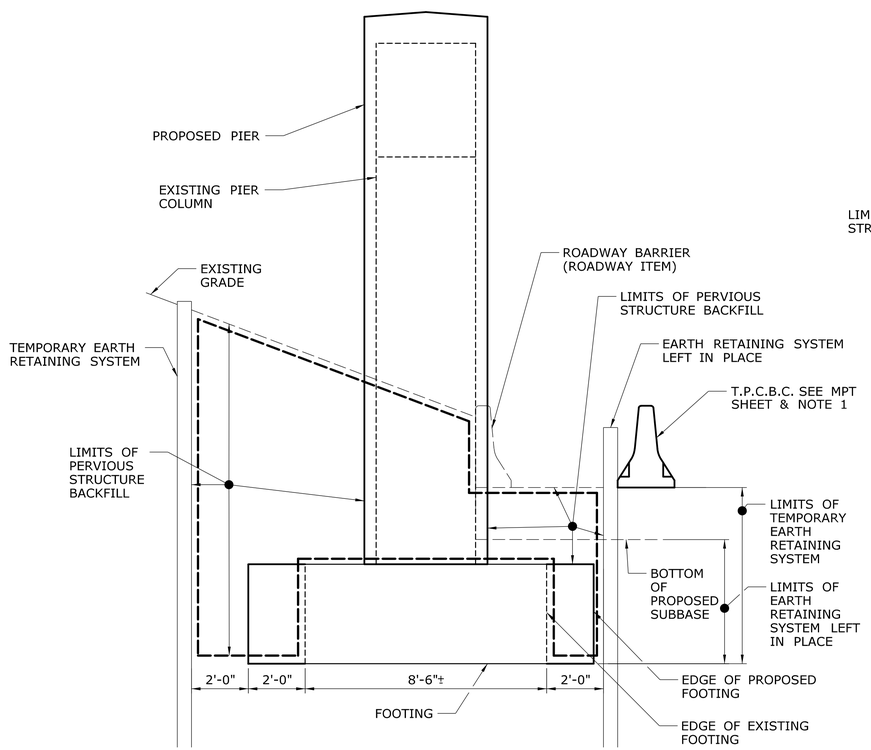

PAY LIMITS AT PIER - SECTION

NOT TO SCALE

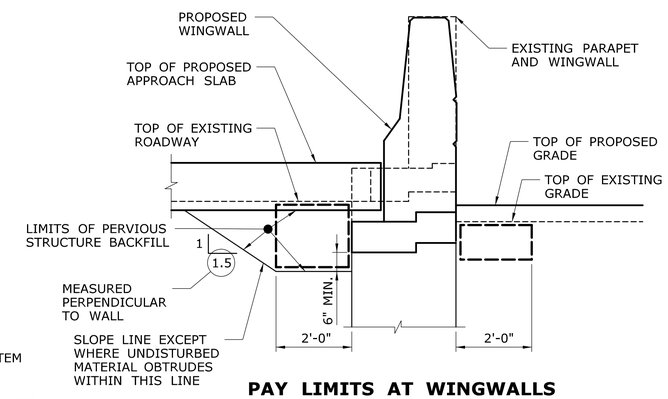

PAY LIMITS AT WINGWALLS

NOT TO SCALE

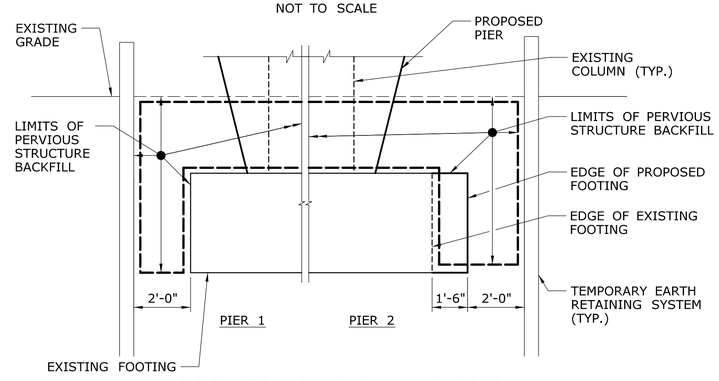

PAY LIMITS AT PIER - ELEVATION

NOT TO SCALE

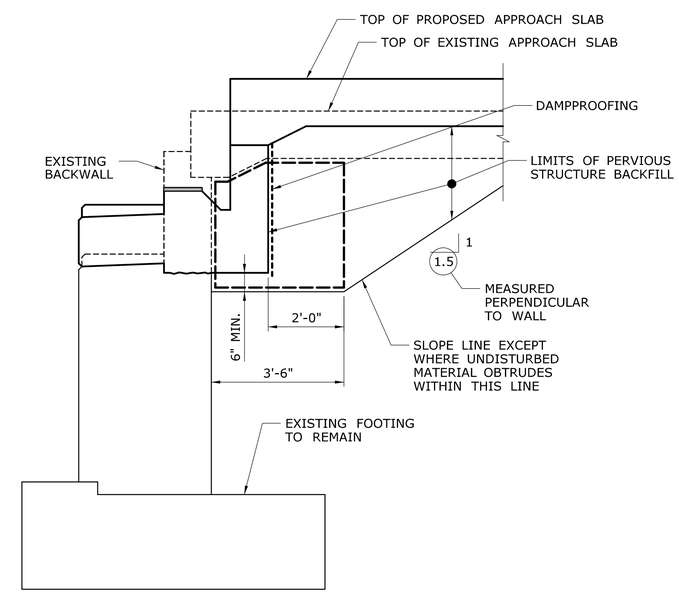

PAY LIMITS AT ABUTMENTS

NOT TO SCALE

REV.	DATE	REVISION DESCRIPTION	SHEET NO.
-	-	-	-
-	-	-	-
-	-	-	-
-	-	-	-
-	-	-	-
-	-	-	-

THE INFORMATION, INCLUDING ESTIMATED QUANTITIES OF WORK, SHOWN ON THESE SHEETS IS BASED ON LIMITED INVESTIGATIONS BY THE STATE AND IS IN NO WAY WARRANTED TO INDICATE THE CONDITIONS OF ACTUAL QUANTITIES OF WORK WHICH WILL BE REQUIRED.

Plotted Date: 11/18/2014

DESIGNER/DRAFTER: JRA

CHECKED BY: AML

SCALE AS NOTED

STATE OF CONNECTICUT
DEPARTMENT OF TRANSPORTATION

Filename: ...\S-15 PAY LIMITS.dgn

SIGNATURE/BLOCK:

Stantec Consulting Services Inc.
2321 Whitney Ave.
Hamden, CT 06518

PROJECT TITLE:

REHABILITATION OF BRIDGE NO. 02376
I-84 T.R. 831 OVER I-84 EB

TOWN: **EAST HARTFORD**

DRAWING TITLE: **PAY LIMITS**

PROJECT NO. 042-316

DRAWING NO. S-15

SHEET NO. 03.04.15

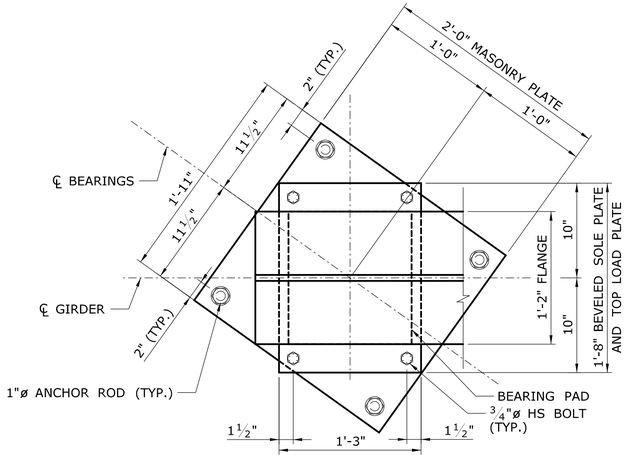

BEARING A1-1, A1-2, A1-3, A1-4, A1-5

BEARING A2-1, A2-2, A2-3, A2-4, A2-5 (OPP)

SCALE: 1½" = 1'-0"

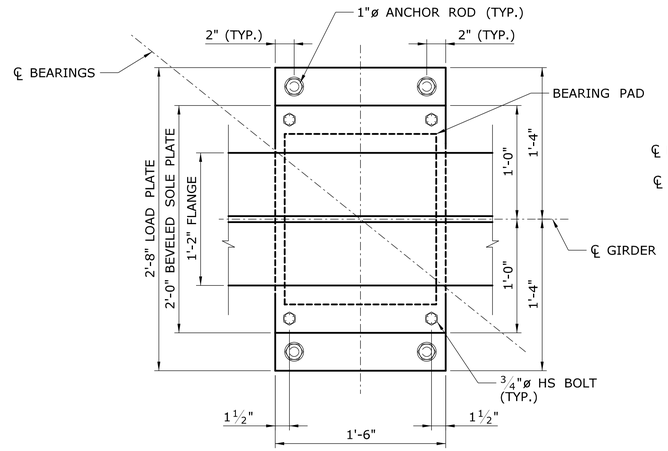

BEARING P1-1, P1-2, P1-3, P1-4, P1-5

SCALE: 1½" = 1'-0"

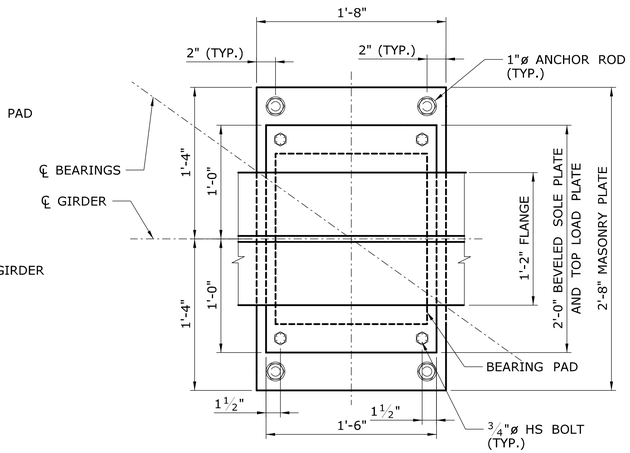

BEARING P2-1, P2-2, P2-3, P2-4, P2-5

SCALE: 1½" = 1'-0"

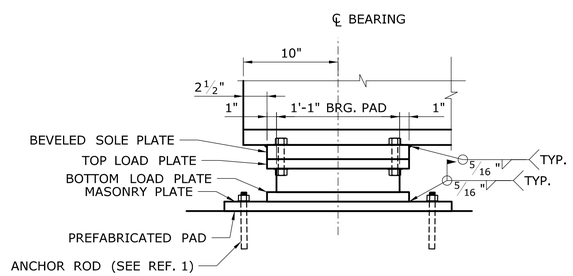

ELEVATION - ABUTMENT 1 & 2 (EXPANSION)

SCALE: 1½" = 1'-0"

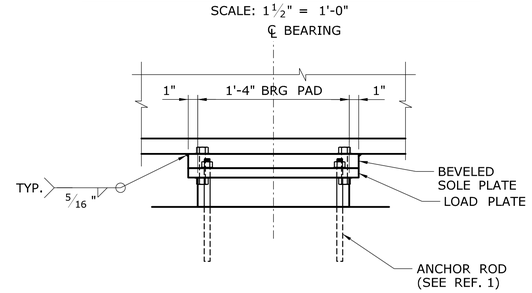

ELEVATION - PIER 1 (FIXED)

SCALE: 1½" = 1'-0"

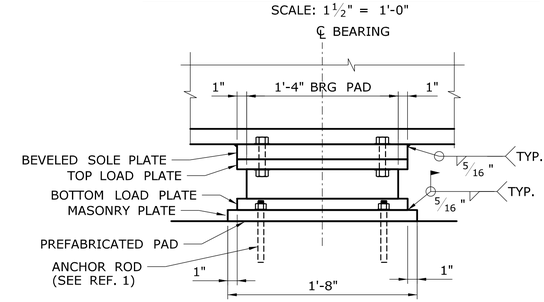

ELEVATION - PIER 2 (EXPANSION)

SCALE: 1½" = 1'-0"

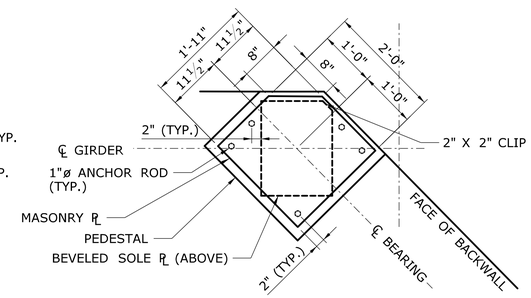

BEARING A2-5 (EXPANSION)

SCALE: ¾" = 1'-0"

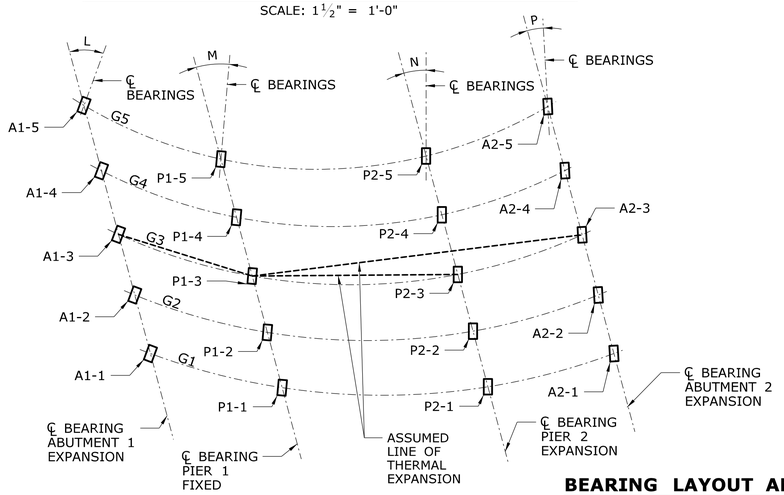

BEARING LAYOUT AND ORIENTATION PLAN

NOT TO SCALE

GIRDER	L	M	N	P
G1	53.34°	50.28°	45.59°	42.66°
G2	54.01°	50.88°	46.09°	43.11°
G3	54.69°	51.49°	46.61°	43.57°
G4	55.40°	52.12°	47.14°	44.05°
G5	56.14°	52.77°	47.68°	44.54°

NOTES

1. SEE REFERENCE 1 FOR NOTES

REFERENCE	SHEET NO.
1. BEARING DETAILS - 2	S-17

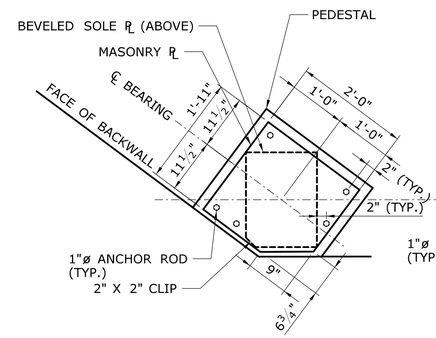

BEARING A1-1

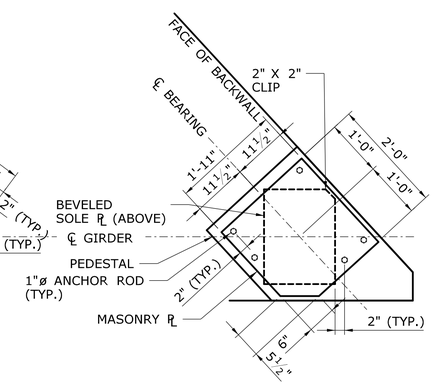

BEARING A2-1

MASONRY PLATE

SCALE: 3/4" = 1'-0"

REV.	DATE	REVISION DESCRIPTION	SHEET NO.

THE INFORMATION, INCLUDING ESTIMATED QUANTITIES OF WORK, SHOWN ON THESE SHEETS IS BASED ON LIMITED INVESTIGATIONS BY THE STATE AND IS IN NO WAY WARRANTED TO INDICATE THE CONDITIONS OF ACTUAL QUANTITIES OF WORK WHICH WILL BE REQUIRED.

Plotted Date: 11/18/2014

DESIGNER/DRAFTER: **JLS**

CHECKED BY: **SSY**

SCALE AS NOTED

STATE OF CONNECTICUT
DEPARTMENT OF TRANSPORTATION

Filename: ...\S-16 BEARING DETAILS - 1.dgn

SIGNATURE/BLOCK:

Stantec Consulting Services Inc.
2321 Whitney Ave.
Hamden, CT 06518

PROJECT TITLE:

REHABILITATION OF BRIDGE NO. 02376
I-84 T.R. 831 OVER I-84 EB

TOWN: **EAST HARTFORD**

DRAWING TITLE: **BEARING DETAILS - 1**

PROJECT NO. **042-316**

DRAWING NO. **S-16**

SHEET NO. **03.04.16**

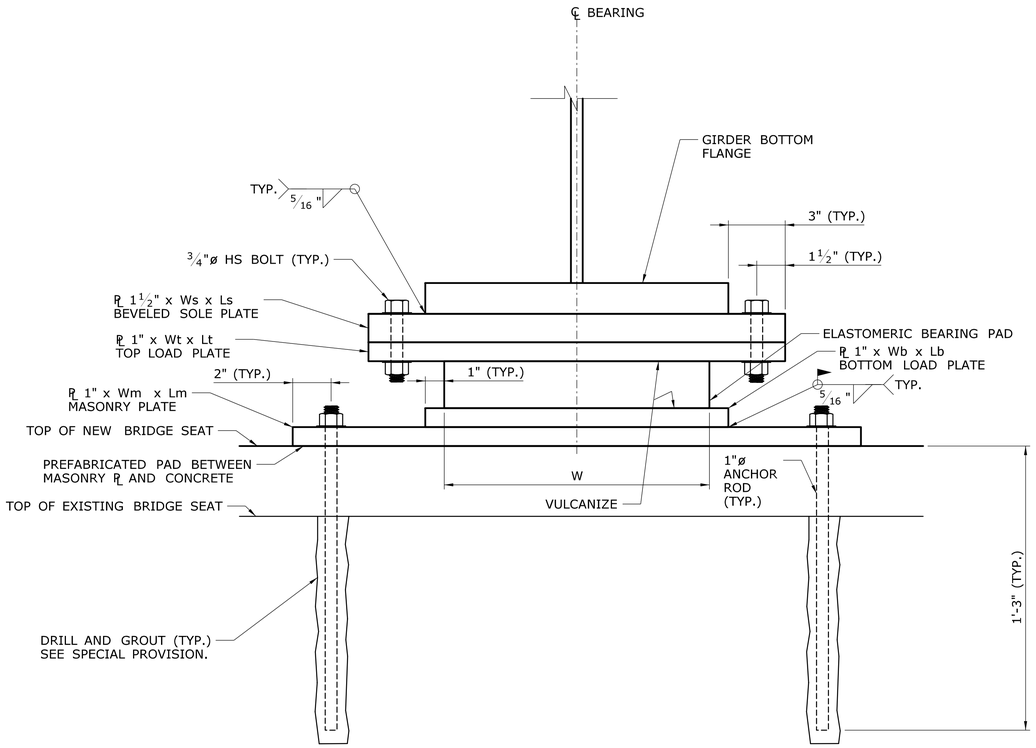

TYPICAL EXPANSION BEARING

SCALE: 3" = 1'-0"

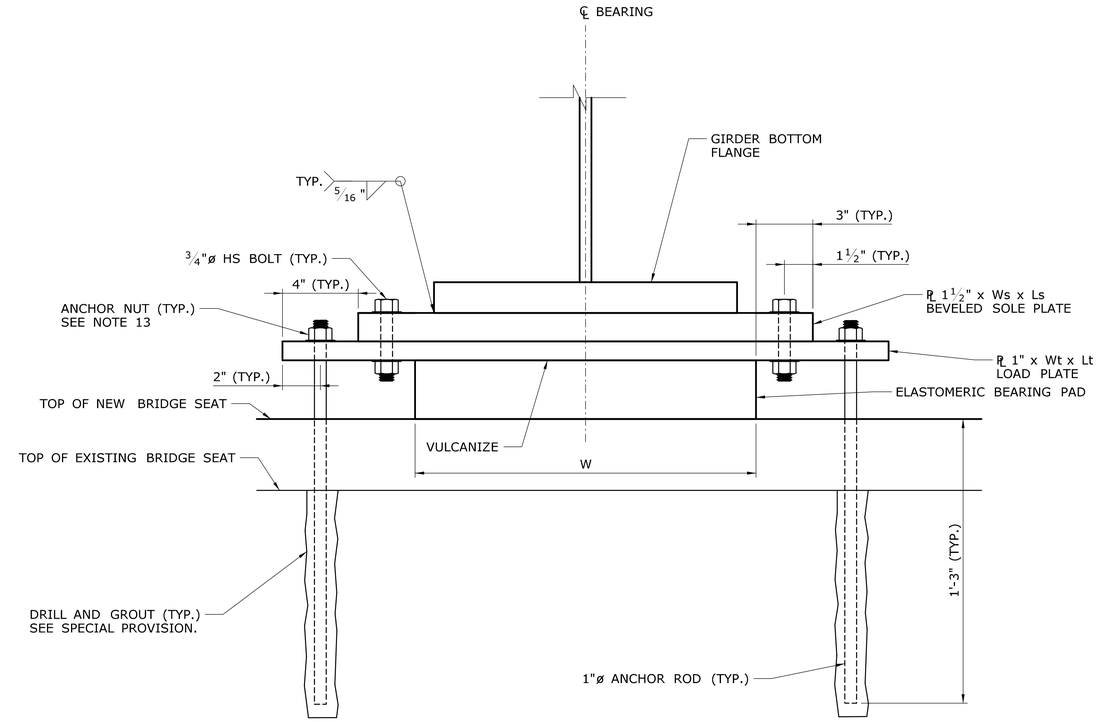

TYPICAL FIXED BEARING

SCALE: 3" = 1'-0"

LOCATION	TYPE	QUANTITY REQUIRED	DL (KIPS)	LL W/O IMP. (KIPS)	TOTAL DESIGN REACTION	ELASTOMER LAYERS				SOLE PLATE		TOP LOAD PL		BOTTOM LOAD PL		MASONRY PL	
						n LAYERS	L (IN.)	W (IN.)	H (IN.)	Ls (IN.)	Ws (IN.)	Lt (IN.)	Wt (IN.)	Lb (IN.)	Wb (IN.)	Lm (IN.)	Wm (IN.)
ABUTMENT 1	EXPANSION	5	48	74	122	3	13	14	2.48	15	20	15	20	15	16	23	24
PIER 1	FIXED	5	102	138	240	4	16	18	3.10	18	24	18	32	-	-	-	-
PIER 2	EXPANSION	5	102	138	240	4	16	18	3.10	18	24	18	24	18	20	20	32
ABUTMENT 2	EXPANSION	5	48	74	122	3	13	14	2.48	15	20	15	20	15	16	23	24

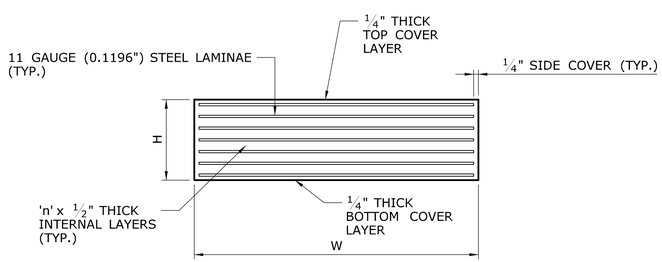

PAD SECTION

SCALE: 3" = 1'-0"

ELASTOMERIC BEARING NOTES

1. THE ELASTOMERIC BEARINGS ARE DESIGNED USING "METHOD A" OF THE AASHTO LRFD BRIDGE DESIGN SPECIFICATIONS.
2. THE CONTRACTOR SHALL SURVEY THE NEW PEDESTAL MEASUREMENTS AFTER CONSTRUCTION OF NEW PEDESTALS AND SUBMIT TO THE ENGINEER FOR REVIEW PRIOR TO STEEL ERECTION. THE CONTRACTOR SHALL BE RESPONSIBLE FOR CORRECTING PEDESTALS THAT ARE NOT CONSTRUCTED TO THE CORRECT ELEVATION AND/OR DIMENSIONS, AS DIRECTED BY THE ENGINEER.
3. THE ELASTOMER SHALL CONTAIN ONLY VIRGIN POLYCHLOROPRENE (NEOPRENE) AS THE RAW POLYMER AND HAVE A SPECIFIED SHEAR MODULUS BETWEEN 0.095 KSI AND 0.130 KSI.
4. THE INTERNAL STEEL LAMINAE SHALL CONFORM TO THE REQUIREMENTS OF ASTM A1011, GRADE 36 OR 40.
5. THE STEEL FOR THE BEVELED SOLE PLATE, TOP AND BOTTOM LOAD PLATE, AND MASONRY PLATE SHALL CONFORM TO THE REQUIREMENTS OF AASHTO M270, GRADE 50WT2 (WEATHERING STEEL) AS SPECIFIED WITHIN THE ITEM "STRUCTURAL STEEL (SITE NO. 3)".
6. THE BOLTS SHALL CONFORM TO THE REQUIREMENTS OF ASTM A325 TYPE 3.
7. ANCHOR RODS SHALL CONFORM TO THE REQUIREMENTS OF ASTM F1554 GR 36.
8. WELDING DETAILS, PROCEDURES AND TESTING METHODS SHALL CONFORM TO THE LATEST ANSI/AASHTO/AWS D1.5 - BRIDGE WELDING CODE, UNLESS OTHERWISE NOTED ON THE PLANS.
9. BEVELED SOLE PLATE THICKNESS SHALL VARY, WITH A THICKNESS OF 1½" AS MEASURED AT THE CENTERLINE OF BEARINGS. BEVELED SOLE PLATES SHALL BE DETAILED AND FABRICATED SUCH THAT THE BOTTOM OF THE BEVELED SOLE PLATE IS LEVEL UPON FULL APPLICATION OF DEAD LOADS.
10. THE ELASTOMERIC BEARINGS SHALL BE INSTALLED WHEN THE AMBIENT AIR AND BEARING TEMPERATURES ARE BETWEEN 40° F AND 85° F AND HAVE BEEN WITHIN THIS RANGE FOR AT LEAST TWO HOURS.
11. THE COST OF FURNISHING AND INSTALLING THE ELASTOMERIC BEARINGS, INCLUDING THE LOAD PLATES, SHALL BE PAID FOR UNDER THE ITEM "STEEL-LAMINATED ELASTOMERIC BEARINGS." THE COST OF THE BEVELED SOLE PLATE AND MASONRY PLATE SHALL BE PAID FOR UNDER THE ITEM "STRUCTURAL STEEL (SITE NO. 3)." THE COST OF THE ANCHOR RODS SHALL BE PAID FOR UNDER THE ITEM "STRUCTURAL STEEL (SITE NO. 3)."
12. THE MAXIMUM UNFACTORED DESIGN LOAD (DL + LL WITHOUT IMPACT) FOR EACH BEARINGS PAD IS SHOWN IN THE BEARING TABLE. THIS INFORMATION IS PROVIDED FOR THE PROOF LOAD TEST DESCRIBED IN THE SPECIAL PROVISIONS "STEEL-LAMINATED ELASTOMERIC BEARINGS."
13. AT ALL FIXED POINTS OF SUPPORT, NUTS FOR ANCHOR BOLTS ARE TO BE TIGHTENED FINGER TIGHT AND THEN BACKED OFF ½ TURN. THE THREAD OF THE NUT AND BOLT SHALL THEN BE BURRED WITH A SHARP POINTED TOOL.

REV.	DATE	REVISION DESCRIPTION	SHEET NO.

THE INFORMATION, INCLUDING ESTIMATED QUANTITIES OF WORK, SHOWN ON THESE SHEETS IS BASED ON LIMITED INVESTIGATIONS BY THE STATE AND IS IN NO WAY WARRANTED TO INDICATE THE CONDITIONS OF ACTUAL QUANTITIES OF WORK WHICH WILL BE REQUIRED.

Plotted Date: 11/18/2014

DESIGNER/DRAFTER: JLS
CHECKED BY: SSY
SCALE AS NOTED

STATE OF CONNECTICUT
DEPARTMENT OF TRANSPORTATION

Filename: ...\S-17 BEARING DETAILS - 2.dgn

SIGNATURE/BLOCK:
Stantec Consulting Services Inc.
2321 Whitney Ave.
Hamden, CT 06518

PROJECT TITLE:
REHABILITATION OF BRIDGE NO. 02376
I-84 T.R. 831 OVER I-84 EB

TOWN: EAST HARTFORD

DRAWING TITLE: BEARING DETAILS - 2

PROJECT NO. 042-316
DRAWING NO. S-17
SHEET NO. 03.04.17

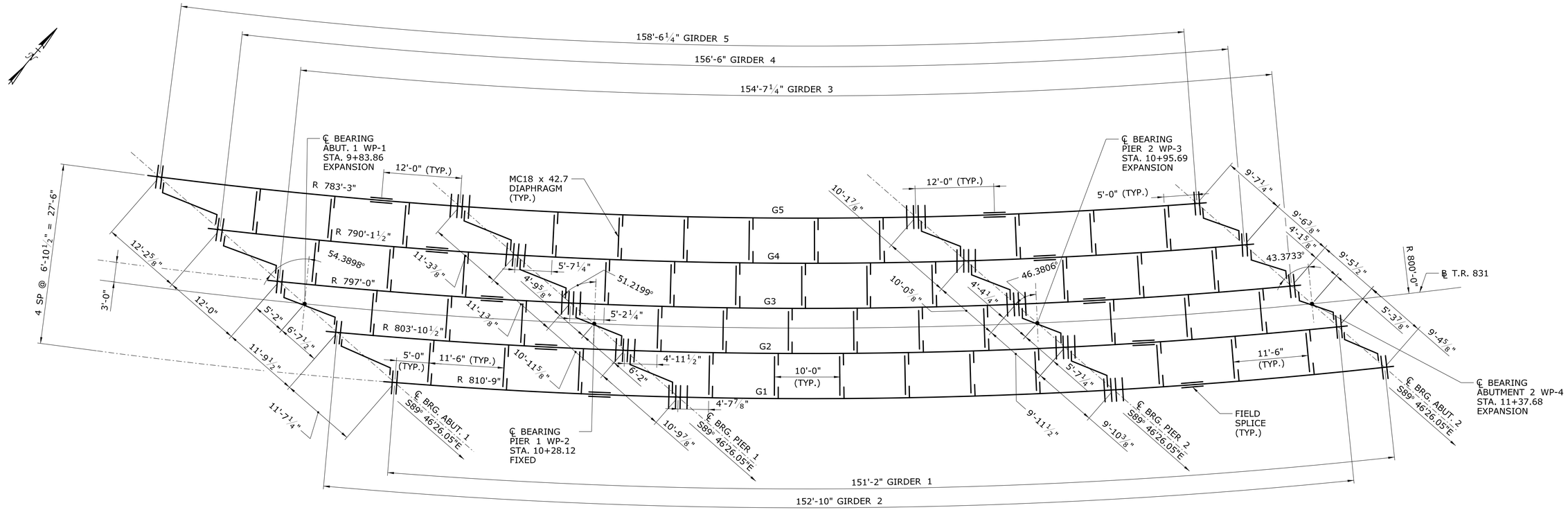

FRAMING PLAN

SCALE: ⅛" = 1'-0"

STRUCTURAL STEEL NOTES

1. STRUCTURAL STEEL (LOW ALLOY) FOR WEBS, FLANGES, STIFFENERS, SPLICE PLATES, AND CONNECTION PLATES SHALL CONFORM TO AASHTO M270, GRADE 70 WT2. STRUCTURAL STEEL (LOW ALLOY) FOR DIAPHRAGMS SHALL CONFORM TO AASHTO M270, GRADE 50 WT2.
2. WELDING DETAILS, PROCEDURES AND TESTING METHODS SHALL CONFORM TO THE ANSI/AASHTO/AWS D1.5 (LATEST EDITION) - BRIDGE WELDING CODE, UNLESS OTHERWISE NOTED ON THE PLANS. WELD ELECTRODE SHALL CONFORM TO E90.XX.
3. FIELD SPLICES, OTHER THAN THOSE INDICATED ON THE PLANS, WILL NOT BE ALLOWED EXCEPT WITH THE WRITTEN PERMISSION OF THE ENGINEER PRIOR TO THE SUBMISSION OF SHOP PLANS. IF ALLOWED, THESE SPLICES SHALL BE DESIGNED BY THE CONTRACTOR AND APPROVED BY THE ENGINEER. THE COST OF THESE SPLICES, INCLUDING THE COST OF DESIGN, SHALL BE AT NO EXTRA COST TO THE STATE.
4. ALL WELDED GIRDERS SHALL BE FABRICATED TO THE REQUIRED HORIZONTAL CURVATURE BY CUTTING THE FLANGES FROM LARGER SIZE PLATES. HEAT CURVING WILL NOT BE ALLOWED. THE CONTRACTOR SHALL INDICATE ON HIS SHOP DRAWINGS THE LOCATION OF ANY ADDITIONAL SHOP SPLICES REQUIRED.
5. ALL WEB TO FLANGE, WEB TO BEARING STIFFENER AND BEARING STIFFENER TO FLANGE FILLET WELDS SHALL BE INSPECTED IN THEIR ENTIRETY BY THE MAGNETIC PARTICLE METHOD.
6. MULTIPLE PASS WELDS, INSPECTED BY THE MAGNETIC PARTICLE METHOD SHALL HAVE EACH PASS OR LAYER INSPECTED AND ACCEPTED BEFORE PROCEEDING TO THE NEXT PASS OR LAYER, AS DETERMINED BY THE ENGINEER.
7. SHOP WEB SPLICES SHALL BE LOCATED WITHIN THE MIDDLE THIRD OF THE SPAN.
8. SHOP FLANGE SPLICES SHALL BE LOCATED A MINIMUM OF SIX INCHES FROM WEB SPLICES.
9. FLANGE OR WEB SPLICES SHALL BE LOCATED A MINIMUM OF SIX INCHES FROM STIFFENERS AND CONNECTION PLATES.
10. BEARING STIFFENERS, JACKING STIFFENERS, AND ENDS OF BEAMS SHALL BE VERTICAL AFTER THE APPLICATION OF FULL DEAD LOADS.
11. STRUCTURAL STEEL FABRICATORS SHALL BE CERTIFIED UNDER THE AISC QUALITY CONTROL PROGRAM AS NOTED BELOW:

    CATEGORY MBr - MAJOR STEEL BRIDGES
12. THE CONTRACTOR SHALL TAKE THE PROPER PRECAUTIONS TO ENSURE THE STABILITY OF ALL STRUCTURAL ELEMENTS UNTIL THE TOTAL STRUCTURE IS IN BEING.
13. IT SHALL BE THE CONTRACTOR'S RESPONSIBILITY TO PROVIDE ANY ADDITIONAL TEMPORARY BRACING REQUIRED TO MAINTAIN THE GEOMETRY OF THE INDIVIDUAL PLATE GIRDERS, AS WELL AS THE TOTAL STEEL STRUCTURE, THROUGHOUT ALL PHASES OF CONSTRUCTION INCLUDING PLACEMENT OF THE CONCRETE DECK.
14. NO WELDS SHALL BE PERMITTED AT TOP AND BOTTOM FLANGE TENSION ZONES, AS INDICATED ON DRAWING S-19, UNLESS OTHERWISE INDICATED ON THE PLANS.

REV.	DATE	REVISION DESCRIPTION	SHEET NO.
-	-	-	-
-	-	-	-
-	-	-	-
-	-	-	-
-	-	-	-
-	-	-	-

THE INFORMATION, INCLUDING ESTIMATED QUANTITIES OF WORK, SHOWN ON THESE SHEETS IS BASED ON LIMITED INVESTIGATIONS BY THE STATE AND IS IN NO WAY WARRANTED TO INDICATE THE CONDITIONS OF ACTUAL QUANTITIES OF WORK WHICH WILL BE REQUIRED.

Plotted Date: 11/18/2014

DESIGNER/DRAFTER: MDK
CHECKED BY: SSY
SCALE AS NOTED

STATE OF CONNECTICUT
DEPARTMENT OF TRANSPORTATION

Filename: ...\S-18 FRAMING PLAN.dgn

SIGNATURE/BLOCK:
Stantec Consulting Services Inc.
2321 Whitney Ave.
Hamden, CT 06518

PROJECT TITLE:
REHABILITATION OF BRIDGE NO. 02376
I-84 T.R. 831 OVER I-84 EB

TOWN: EAST HARTFORD

DRAWING TITLE: FRAMING PLAN

PROJECT NO. 042-316
DRAWING NO. S-18
SHEET NO. 03.04.18

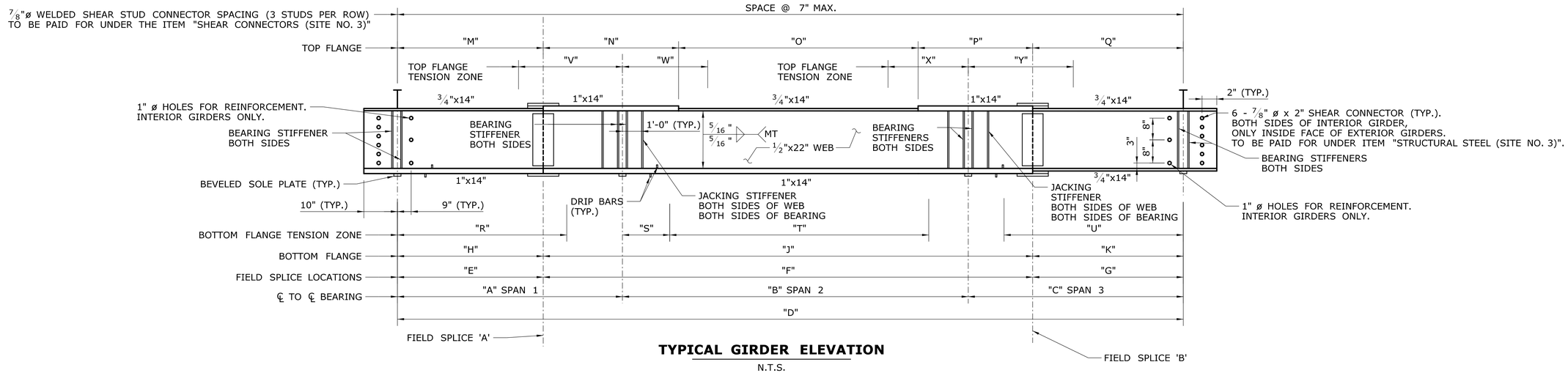

TYPICAL GIRDER ELEVATION

N.T.S.

	℄ TO ℄ BRG. (FT.)				FIELD SPLICE LOCATIONS (FT.)			BOTTOM FLANGE (FT.)			TOP FLANGE (FT.)					BOTTOM FLANGE TENSION ZONES (FT.)				TOP FLANGE TENSION ZONE (FT.)				RADIUS (FT.)
GIRDER	A	B	C	D	E	F	G	H	J	K	M	N	O	P	Q	R	S	T	U	V	W	X	Y	
G1	43.279	66.432	41.451	151.162	31.279	90.432	29.451	31.279	90.432	29.451	31.279	21.000	48.432	21.000	29.451	36.040	6.811	51.850	34.360	30.299	17.761	19.451	28.939	810.750
G2	43.894	67.148	41.791	152.833	31.894	91.148	29.791	31.894	91.148	29.791	31.894	21.000	49.148	21.000	29.791	35.120	8.166	51.180	33.980	24.514	16.306	17.652	25.078	803.875
G3	44.553	67.907	42.148	154.608	32.553	91.907	30.148	32.553	91.907	30.148	32.553	21.000	49.907	21.000	30.148	36.710	8.017	52.880	34.410	23.363	16.667	17.160	25.290	797.000
G4	45.262	68.713	42.524	156.499	33.262	92.713	30.524	33.262	92.713	30.524	33.262	21.000	50.713	21.000	30.524	37.850	8.178	52.800	33.880	22.632	17.838	16.895	25.515	790.125
G5	46.026	69.572	42.921	158.519	34.026	93.572	30.921	34.026	93.572	30.921	34.026	21.000	51.572	21.000	30.921	39.180	7.454	54.650	34.340	26.176	20.874	17.888	30.042	783.250

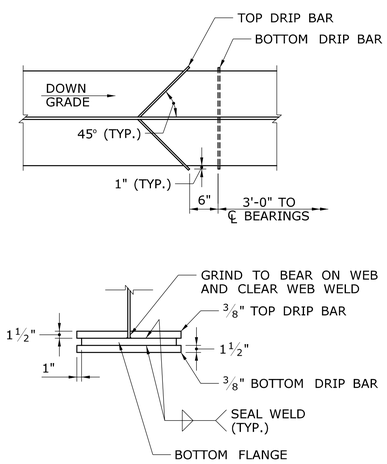

DRIP BAR DETAILS

NOT TO SCALE

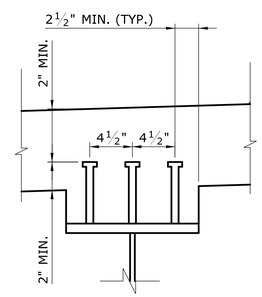

SHEAR STUDS SHALL BE INSTALLED AFTER ERECTION OF ALL GIRDERS IS COMPLETE AND THE TOP OF STEEL ELEVATIONS HAVE BEEN SURVEYED. SEE HAUNCH NOTES ON REFERENCE 2. REQUIRED SHEAR STUD LENGTHS SHALL BE DETERMINED BY THE CONTRACTOR BASED ON AS ERECTED INFORMATION AND THE ABOVE SHEAR CONNECTOR DETAIL.

SHEAR CONNECTOR DETAIL

NOT TO SCALE

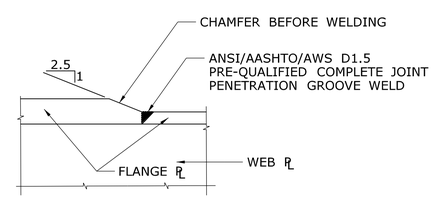

FLANGE SPLICE WELD DETAIL

NOT TO SCALE

REFERENCE	SHEET NO.
1. FRAMING PLAN	S-18
2. DECK PLAN - 1	S-23

REV.	DATE	REVISION DESCRIPTION	SHEET NO.
-	-	-	-
-	-	-	-
-	-	-	-
-	-	-	-
-	-	-	-
-	-	-	-

THE INFORMATION, INCLUDING ESTIMATED QUANTITIES OF WORK, SHOWN ON THESE SHEETS IS BASED ON LIMITED INVESTIGATIONS BY THE STATE AND IS IN NO WAY WARRANTED TO INDICATE THE CONDITIONS OF ACTUAL QUANTITIES OF WORK WHICH WILL BE REQUIRED.

Plotted Date: 11/18/2014

DESIGNER/DRAFTER: MDK
CHECKED BY: SSY
SCALE AS NOTED

STATE OF CONNECTICUT
DEPARTMENT OF TRANSPORTATION

Filename: ...\S-19 STRUCTURAL STEEL DETAILS - 1.dgn

SIGNATURE/BLOCK:
Stantec Consulting Services Inc.
2321 Whitney Ave.
Hamden, CT 06518

PROJECT TITLE:
REHABILITATION OF BRIDGE NO. 02376
I-84 T.R. 831 OVER I-84 EB

TOWN: EAST HARTFORD

DRAWING TITLE: STRUCTURAL STEEL DETAILS - 1

PROJECT NO. 042-316
DRAWING NO. S-19
SHEET NO. 03.04.19

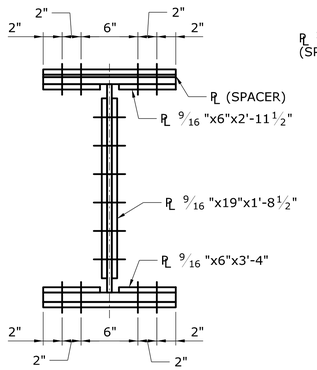

SECTION

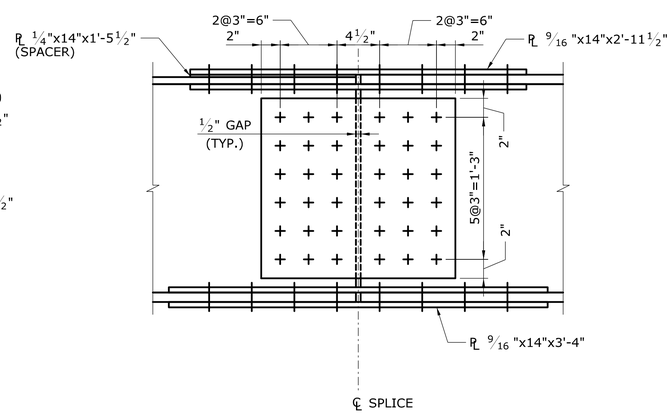

ELEVATION

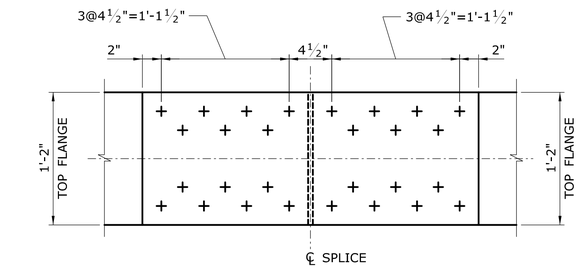

TOP FLANGE

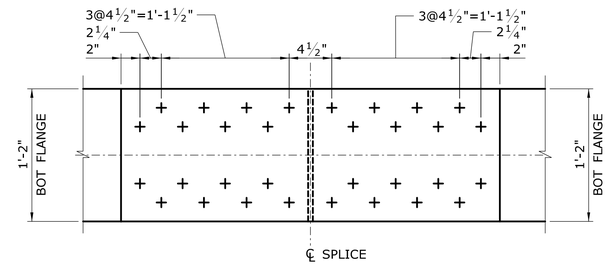

BOTTOM FLANGE

SPAN 1 FIELD SPLICE "A"

SCALE: 1 1/2" = 1'-0"

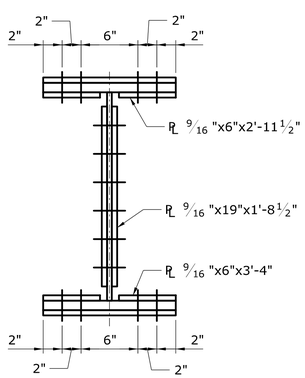

SECTION

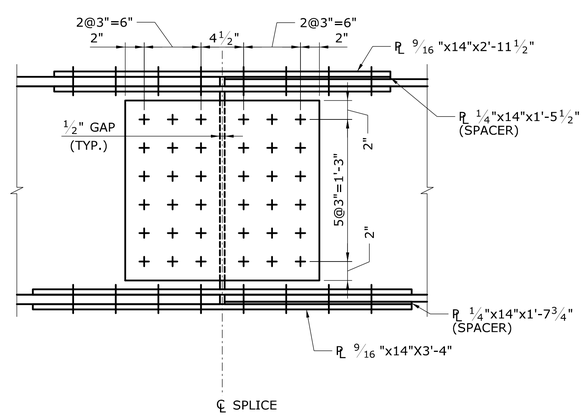

ELEVATION

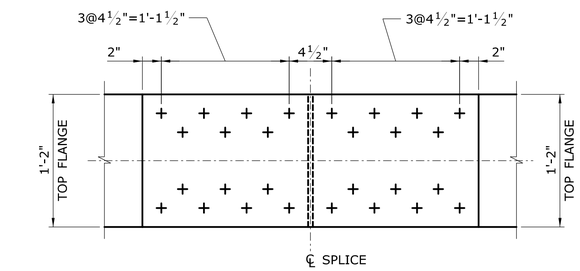

TOP FLANGE

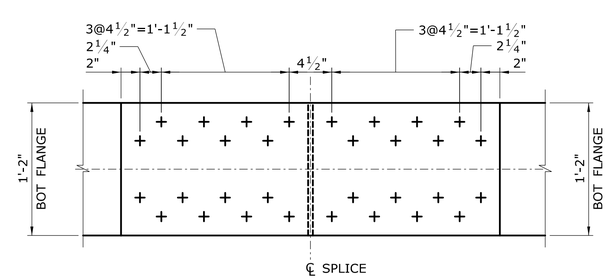

BOTTOM FLANGE

SPAN 3 FIELD SPLICE "B"

SCALE: 1 1/2" = 1'-0"

FIELD SPLICE NOTES

1. ALL SPLICE BOLTS TO BE A490 TYPE 3, 7/8"ø.
2. ALL SPLICE HOLES TO BE 15/16"ø.
3. SHEAR CONNECTORS TO BE INSTALLED AT TOP FLANGE SPLICE PLATE WHERE REQUIRED.
4. ALL SPLICE BOLTS AT FASCIA SPLICES SHALL BE INSTALLED WITH THE BOLT HEAD SHOWING TO PUBLIC.
5. ADJUST SPACING OF SHEAR STUDS TO AVOID FIELD SPLICE BOLTS.

REV.	DATE	REVISION DESCRIPTION	SHEET NO.

THE INFORMATION, INCLUDING ESTIMATED QUANTITIES OF WORK, SHOWN ON THESE SHEETS IS BASED ON LIMITED INVESTIGATIONS BY THE STATE AND IS IN NO WAY WARRANTED TO INDICATE THE CONDITIONS OF ACTUAL QUANTITIES OF WORK WHICH WILL BE REQUIRED.

Plotted Date: 11/18/2014

DESIGNER/DRAFTER: SSY
CHECKED BY: AML
SCALE AS NOTED

STATE OF CONNECTICUT
DEPARTMENT OF TRANSPORTATION

Filename: ...\S-20 STRUCTURAL STEEL DETAILS - 2.dgn

SIGNATURE/BLOCK:

Stantec Consulting Services Inc.
2321 Whitney Ave.
Hamden, CT 06518

PROJECT TITLE:
REHABILITATION OF BRIDGE NO. 02376
I-84 T.R. 831 OVER I-84 EB

TOWN: EAST HARTFORD

DRAWING TITLE: STRUCTURAL STEEL DETAILS - 2

PROJECT NO. 042-316
DRAWING NO. S-20
SHEET NO. 03.04.20

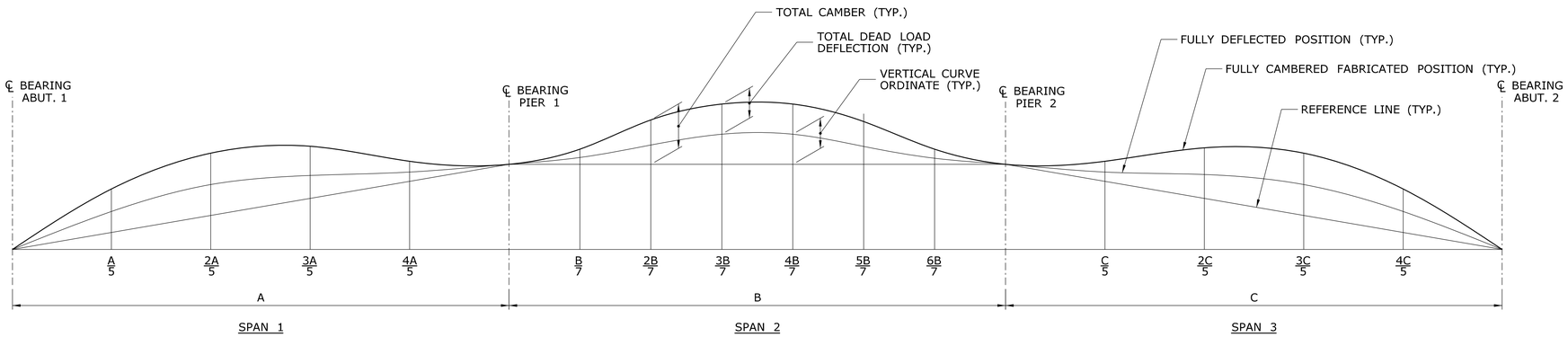

CAMBER DIAGRAM

NOT TO SCALE

CAMBER DATA NOTES

1. THE TABULATED DEFLECTIONS ARE GIVEN IN INCHES AND MEASURED AT VARIOUS POINTS ALONG THE GIRDER SPAN FROM ℄ OF BEARING TO ℄ OF BEARING. NEGATIVE VALUES INDICATE UPWARD DEFLECTION.
2. CAMBER DUE TO "STEEL DEFLECTION" IS THE CAMBER REQUIRED TO OFFSET DEFLECTIONS CAUSED BY THE STRUCTURAL STEEL INCLUDING GIRDERS, DIAPHRAGMS AND BRACING ELEMENTS.
3. CAMBER DUE TO "ADD'L DL DEFLECTION" IS THE CAMBER REQUIRED TO OFFSET THE DEFLECTIONS CAUSED BY THE UNCURED CONCRETE DECK SLAB AND, IF APPLICABLE, THE S.I.P. (STAY-IN-PLACE) FORMS.
4. CAMBER DUE TO "COMPOSITE DL DEFLECTION" IS THE CAMBER REQUIRED TO OFFSET DEFLECTIONS CAUSED BY THE PARAPETS, BITUMINOUS CONCRETE OVERLAY AND ANY OTHER DEAD LOADS APPLIED AFTER THE CONCRETE DECK SLAB HAS CURED.
5. CAMBER DUE TO "VERTICAL CURVE ORDINATE" IS THE CAMBER REQUIRED FOR THE GIRDER TO FOLLOW THE ROADWAY VERTICAL CURVE.
6. "TOTAL CAMBER" IS ASSUMED TO BE MEASURED VERTICALLY TO THE TOP OF WEB OF THE FULLY CAMBERED BEAM AT THE INTERVALS INDICATED, AND IS MEASURED FROM A REFERENCE LINE DRAWN FROM THE INTERSECTION OF THE TOP OF WEB AND THE CENTERLINE OF BEARING AT EACH ABUTMENT AND PIER.
7. S.I.P. FORMS ASSUMED TO WEIGH 15 PSF.

G1 CAMBER TABLE (WITH S.I.P. FORMS)

ORDINATES	℄ BRG. ABUT. 1	A/5	2A/5	3A/5	4A/5	℄ BRG. PIER 1	B/7	2B/7	3B/7	4B/7	5B/7	6B/7	℄ BRG. PIER 2	C/5	2C/5	3C/5	4C/5	℄ BRG. ABUT 2
STEEL DEFLECTION	0.00	0.01	0.02	0.01	0.00	0.00	0.06	0.13	0.17	0.17	0.13	0.06	0.00	-0.01	-0.01	0.00	0.01	0.00
ADD'L DL DEFLECTION	0.00	0.06	0.07	0.03	0.01	0.00	0.13	0.29	0.40	0.39	0.27	0.12	0.00	0.01	0.08	0.13	0.12	0.00
COMPOSITE DL DEFLECTION	0.00	0.03	0.03	0.01	-0.01	0.00	0.12	0.25	0.34	0.33	0.24	0.11	0.00	-0.01	0.01	0.04	0.03	0.00
VERTICAL CURVE ORDINATE	0.00	0.21	0.32	0.32	0.21	0.00	0.38	0.63	0.76	0.76	0.63	0.38	0.00	0.19	0.28	0.27	0.16	0.00
TOTAL CAMBER	0.00	0.31	0.44	0.37	0.21	0.00	0.69	1.30	1.67	1.65	1.27	0.67	0.00	0.18	0.36	0.44	0.32	0.00

G1 CAMBER TABLE (WITHOUT S.I.P. FORMS)

ORDINATES	℄ BRG. ABUT. 1	A/5	2A/5	3A/5	4A/5	℄ BRG. PIER 1	B/7	2B/7	3B/7	4B/7	5B/7	6B/7	℄ BRG. PIER 2	C/5	2C/5	3C/5	4C/5	℄ BRG. ABUT 2
STEEL DEFLECTION	0.00	0.01	0.02	0.01	0.00	0.00	0.06	0.13	0.17	0.17	0.13	0.06	0.00	-0.01	-0.01	0.00	0.01	0.00
ADD'L DL DEFLECTION	0.00	0.05	0.06	0.03	0.01	0.00	0.10	0.23	0.32	0.31	0.21	0.09	0.00	0.01	0.07	0.12	0.11	0.00
COMPOSITE DL DEFLECTION	0.00	0.03	0.03	0.01	-0.01	0.00	0.12	0.25	0.34	0.33	0.24	0.11	0.00	-0.01	0.01	0.04	0.03	0.00
VERTICAL CURVE ORDINATE	0.00	0.21	0.32	0.32	0.21	0.00	0.38	0.63	0.76	0.76	0.63	0.38	0.00	0.19	0.28	0.27	0.16	0.00
TOTAL CAMBER	0.00	0.30	0.43	0.37	0.21	0.00	0.66	1.24	1.59	1.57	1.21	0.64	0.00	0.18	0.35	0.43	0.31	0.00

G2 CAMBER TABLE (WITH S.I.P. FORMS)

ORDINATES	℄ BRG. ABUT. 1	A/5	2A/5	3A/5	4A/5	℄ BRG. PIER 1	B/7	2B/7	3B/7	4B/7	5B/7	6B/7	℄ BRG. PIER 2	C/5	2C/5	3C/5	4C/5	℄ BRG. ABUT 2
STEEL DEFLECTION	0.00	0.02	0.02	0.01	-0.01	0.00	0.06	0.13	0.18	0.18	0.13	0.06	0.00	-0.01	0.00	0.01	0.01	0.00
ADD'L DL DEFLECTION	0.00	0.24	0.34	0.24	0.07	0.00	0.20	0.50	0.71	0.72	0.52	0.23	0.00	0.01	0.13	0.22	0.18	0.00
COMPOSITE DL DEFLECTION	0.00	0.02	0.03	0.01	-0.01	0.00	0.10	0.21	0.28	0.29	0.22	0.10	0.00	-0.02	0.01	0.03	0.03	0.00
VERTICAL CURVE ORDINATE	0.00	0.22	0.33	0.33	0.22	0.00	0.39	0.66	0.79	0.79	0.66	0.39	0.00	0.20	0.30	0.30	0.20	0.00
TOTAL CAMBER	0.00	0.50	0.72	0.59	0.27	0.00	0.75	1.50	1.96	1.98	1.53	0.78	0.00	0.18	0.44	0.56	0.42	0.00

G2 CAMBER TABLE (WITHOUT S.I.P. FORMS)

ORDINATES	℄ BRG. ABUT. 1	A/5	2A/5	3A/5	4A/5	℄ BRG. PIER 1	B/7	2B/7	3B/7	4B/7	5B/7	6B/7	℄ BRG. PIER 2	C/5	2C/5	3C/5	4C/5	℄ BRG. ABUT 2
STEEL DEFLECTION	0.00	0.02	0.02	0.01	-0.01	0.00	0.06	0.13	0.18	0.18	0.13	0.06	0.00	-0.01	0.00	0.01	0.01	0.00
ADD'L DL DEFLECTION	0.00	0.22	0.31	0.23	0.07	0.00	0.17	0.42	0.60	0.61	0.44	0.19	0.00	0.01	0.12	0.21	0.16	0.00
COMPOSITE DL DEFLECTION	0.00	0.02	0.03	0.01	-0.01	0.00	0.10	0.21	0.28	0.29	0.22	0.10	0.00	-0.02	0.01	0.03	0.03	0.00
VERTICAL CURVE ORDINATE	0.00	0.22	0.33	0.33	0.22	0.00	0.39	0.66	0.79	0.79	0.66	0.39	0.00	0.20	0.30	0.30	0.20	0.00
TOTAL CAMBER	0.00	0.48	0.69	0.58	0.27	0.00	0.72	1.42	1.85	1.87	1.45	0.74	0.00	0.18	0.43	0.55	0.40	0.00

G3 CAMBER TABLE (WITH S.I.P. FORMS)

ORDINATES	℄ BRG. ABUT. 1	A/5	2A/5	3A/5	4A/5	℄ BRG. PIER 1	B/7	2B/7	3B/7	4B/7	5B/7	6B/7	℄ BRG. PIER 2	C/5	2C/5	3C/5	4C/5	℄ BRG. ABUT 2
STEEL DEFLECTION	0.00	0.02	0.02	0.01	-0.01	0.00	0.06	0.14	0.19	0.19	0.14	0.07	0.00	-0.01	0.00	0.01	0.01	0.00
ADD'L DL DEFLECTION	0.00	0.29	0.41	0.30	0.10	0.00	0.20	0.52	0.74	0.74	0.53	0.22	0.00	0.05	0.21	0.31	0.23	0.00
COMPOSITE DL DEFLECTION	0.00	0.03	0.03	0.01	-0.01	0.00	0.09	0.21	0.28	0.28	0.21	0.10	0.00	-0.01	0.01	0.03	0.02	0.00
VERTICAL CURVE ORDINATE	0.00	0.23	0.35	0.35	0.23	0.00	0.41	0.68	0.82	0.82	0.68	0.41	0.00	0.21	0.31	0.31	0.21	0.00
TOTAL CAMBER	0.00	0.57	0.81	0.67	0.31	0.00	0.76	1.55	2.03	2.03	1.56	0.80	0.00	0.24	0.53	0.66	0.47	0.00

G3 CAMBER TABLE (WITHOUT S.I.P. FORMS)

ORDINATES	℄ BRG. ABUT. 1	A/5	2A/5	3A/5	4A/5	℄ BRG. PIER 1	B/7	2B/7	3B/7	4B/7	5B/7	6B/7	℄ BRG. PIER 2	C/5	2C/5	3C/5	4C/5	℄ BRG. ABUT 2
STEEL DEFLECTION	0.00	0.02	0.02	0.01	-0.01	0.00	0.06	0.14	0.19	0.19	0.14	0.07	0.00	-0.01	0.00	0.01	0.01	0.00
ADD'L DL DEFLECTION	0.00	0.27	0.38	0.28	0.10	0.00	0.17	0.44	0.62	0.63	0.45	0.19	0.00	0.05	0.20	0.28	0.21	0.00
COMPOSITE DL DEFLECTION	0.00	0.03	0.03	0.01	-0.01	0.00	0.09	0.21	0.28	0.28	0.21	0.10	0.00	-0.01	0.01	0.03	0.02	0.00
VERTICAL CURVE ORDINATE	0.00	0.23	0.35	0.35	0.23	0.00	0.41	0.68	0.82	0.82	0.68	0.41	0.00	0.21	0.31	0.31	0.21	0.00
TOTAL CAMBER	0.00	0.55	0.78	0.65	0.31	0.00	0.73	1.47	1.91	1.92	1.48	0.77	0.00	0.24	0.52	0.63	0.45	0.00

G4 CAMBER TABLE (WITH S.I.P. FORMS)

ORDINATES	℄ BRG. ABUT. 1	A/5	2A/5	3A/5	4A/5	℄ BRG. PIER 1	B/7	2B/7	3B/7	4B/7	5B/7	6B/7	℄ BRG. PIER 2	C/5	2C/5	3C/5	4C/5	℄ BRG. ABUT 2
STEEL DEFLECTION	0.00	0.02	0.03	0.01	-0.01	0.00	0.06	0.15	0.20	0.20	0.15	0.07	0.00	-0.01	0.00	0.01	0.01	0.00
ADD'L DL DEFLECTION	0.00	0.32	0.45	0.34	0.12	0.00	0.18	0.48	0.69	0.71	0.51	0.21	0.00	0.06	0.23	0.32	0.24	0.00
COMPOSITE DL DEFLECTION	0.00	0.03	0.04	0.02	-0.01	0.00	0.10	0.23	0.30	0.30	0.23	0.10	0.00	-0.02	0.01	0.03	0.03	0.00
VERTICAL CURVE ORDINATE	0.00	0.24	0.36	0.36	0.24	0.00	0.43	0.71	0.85	0.85	0.71	0.43	0.00	0.21	0.32	0.32	0.21	0.00
TOTAL CAMBER	0.00	0.61	0.88	0.73	0.34	0.00	0.77	1.57	2.04	2.06	1.60	0.81	0.00	0.24	0.56	0.68	0.49	0.00

G4 CAMBER TABLE (WITHOUT S.I.P. FORMS)

ORDINATES	℄ BRG. ABUT. 1	A/5	2A/5	3A/5	4A/5	℄ BRG. PIER 1	B/7	2B/7	3B/7	4B/7	5B/7	6B/7	℄ BRG. PIER 2	C/5	2C/5	3C/5	4C/5	℄ BRG. ABUT 2
STEEL DEFLECTION	0.00	0.02	0.03	0.01	-0.01	0.00	0.06	0.15	0.20	0.20	0.15	0.07	0.00	-0.01	0.00	0.01	0.01	0.00
ADD'L DL DEFLECTION	0.00	0.30	0.42	0.32	0.12	0.00	0.15	0.40	0.58	0.59	0.43	0.17	0.00	0.06	0.21	0.29	0.22	0.00
COMPOSITE DL DEFLECTION	0.00	0.03	0.04	0.02	-0.01	0.00	0.10	0.23	0.30	0.30	0.23	0.10	0.00	-0.02	0.01	0.03	0.03	0.00
VERTICAL CURVE ORDINATE	0.00	0.24	0.36	0.36	0.24	0.00	0.43	0.71	0.85	0.85	0.71	0.43	0.00	0.21	0.32	0.32	0.21	0.00
TOTAL CAMBER	0.00	0.59	0.85	0.71	0.34	0.00	0.74	1.49	1.93	1.94	1.52	0.77	0.00	0.24	0.54	0.65	0.47	0.00

G5 CAMBER TABLE (WITH S.I.P. FORMS)

ORDINATES	℄ BRG. ABUT. 1	A/5	2A/5	3A/5	4A/5	℄ BRG. PIER 1	B/7	2B/7	3B/7	4B/7	5B/7	6B/7	℄ BRG. PIER 2	C/5	2C/5	3C/5	4C/5	℄ BRG. ABUT 2
STEEL DEFLECTION	0.00	0.02	0.03	0.01	0.00	0.00	0.06	0.13	0.19	0.19	0.14	0.07	0.00	-0.02	0.00	0.01	0.01	0.00
ADD'L DL DEFLECTION	0.00	0.35	0.48	0.38	0.17	0.00	0.04	0.20	0.36	0.40	0.31	0.14	0.00	0.00	0.09	0.14	0.11	0.00
COMPOSITE DL DEFLECTION	0.00	0.06	0.07	0.05	0.01	0.00	0.10	0.25	0.35	0.37	0.28	0.13	0.00	-0.03	0.00	0.03	0.03	0.00
VERTICAL CURVE ORDINATE	0.00	0.26	0.38	0.38	0.26	0.00	0.45	0.74	0.89	0.89	0.74	0.45	0.00	0.22	0.33	0.33	0.22	0.00
TOTAL CAMBER	0.00	0.69	0.96	0.82	0.44	0.00	0.65	1.32	1.79	1.85	1.47	0.79	0.00	0.17	0.42	0.51	0.37	0.00

G5 CAMBER TABLE (WITHOUT S.I.P. FORMS)

ORDINATES	℄ BRG. ABUT. 1	A/5	2A/5	3A/5	4A/5	℄ BRG. PIER 1	B/7	2B/7	3B/7	4B/7	5B/7	6B/7	℄ BRG. PIER 2	C/5	2C/5	3C/5	4C/5	℄ BRG. ABUT 2
STEEL DEFLECTION	0.00	0.02	0.03	0.01	0.00	0.00	0.06	0.13	0.19	0.19	0.14	0.07	0.00	-0.02	0.00	0.01	0.01	0.00
ADD'L DL DEFLECTION	0.00	0.33	0.45	0.36	0.17	0.00	0.02	0.14	0.27	0.30	0.24	0.10	0.00	0.01	0.08	0.12	0.09	0.00
COMPOSITE DL DEFLECTION	0.00	0.06	0.07	0.05	0.01	0.00	0.10	0.25	0.35	0.37	0.28	0.13	0.00	-0.03	0.00	0.03	0.03	0.00
VERTICAL CURVE ORDINATE	0.00	0.26	0.38	0.38	0.26	0.00	0.45	0.74	0.89	0.89	0.74	0.45	0.00	0.22	0.33	0.33	0.22	0.00
TOTAL CAMBER	0.00	0.67	0.93	0.80	0.44	0.00	0.63	1.26	1.70	1.75	1.40	0.75	0.00	0.18	0.41	0.49	0.35	0.00

REV.	DATE	REVISION DESCRIPTION	SHEET NO.

THE INFORMATION, INCLUDING ESTIMATED QUANTITIES OF WORK, SHOWN ON THESE SHEETS IS BASED ON LIMITED INVESTIGATIONS BY THE STATE AND IS IN NO WAY WARRANTED TO INDICATE THE CONDITIONS OF ACTUAL QUANTITIES OF WORK WHICH WILL BE REQUIRED.

Plotted Date: 11/18/2014

DESIGNER/DRAFTER: AP
CHECKED BY: SSY
SCALE AS NOTED

STATE OF CONNECTICUT
DEPARTMENT OF TRANSPORTATION

Filename: ...\S-21 STRUCTURAL STEEL DETAILS - 3.dgn

SIGNATURE/BLOCK:

Stantec Consulting Services Inc.
2321 Whitney Ave.
Hamden, CT 06518

PROJECT TITLE:
REHABILITATION OF BRIDGE NO. 02376
I-84 T.R. 831 OVER I-84 EB

TOWN: EAST HARTFORD

DRAWING TITLE: STRUCTURAL STEEL DETAILS - 3

PROJECT NO. 042-316
DRAWING NO. S-21
SHEET NO. 03.04.21

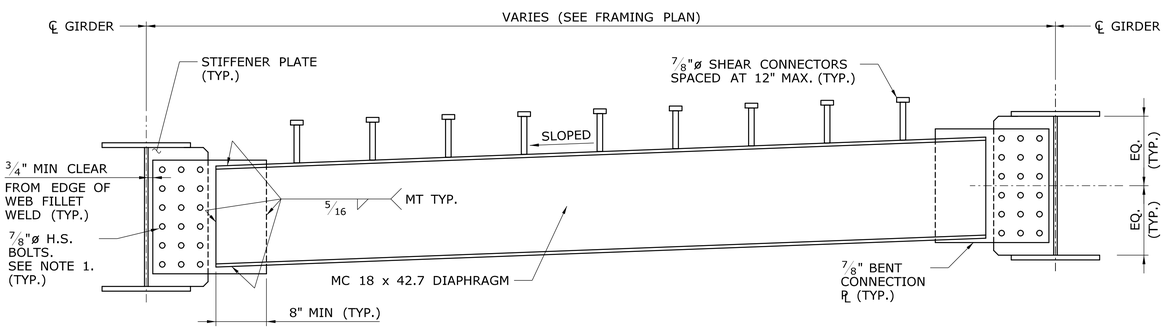

TYPICAL END DIAPHRAGM

SCALE: 1" = 1'-0"

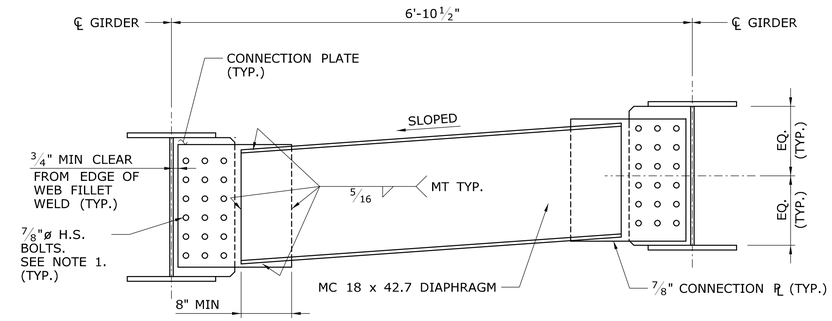

TYPICAL INTERMEDIATE DIAPHRAGM

SCALE: 1"= 1'-0"

NOTES:

1. ALL HS BOLTS SHALL CONFORM TO AASHTO M253 (ASTM A490).
2. BOLT HOLES IN CHANNELS, CONNECTION PLATES, AND STIFFENER PLATES SHALL BE 15/16"ø (STANDARD) FOR 7/8"ø BOLTS.

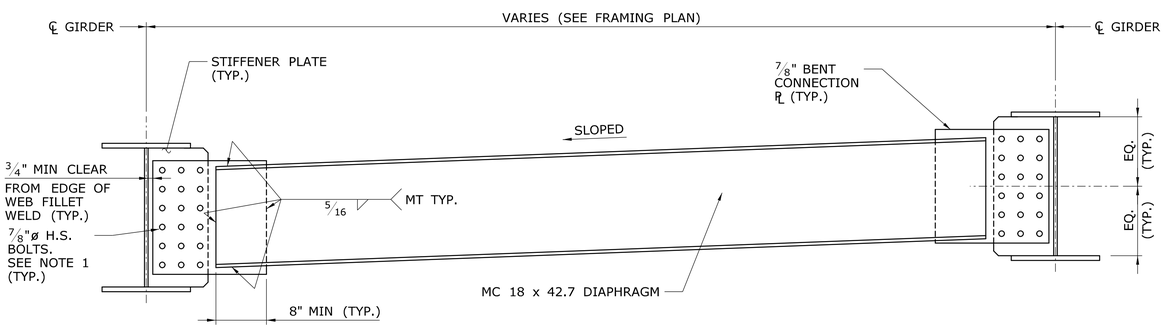

TYPICAL PIER DIAPHRAGM

SCALE: 1" = 1'-0"

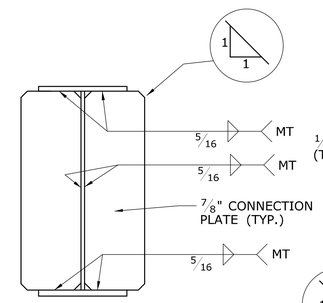

DIAPHRAGM CONNECTION PLATE

NOT TO SCALE

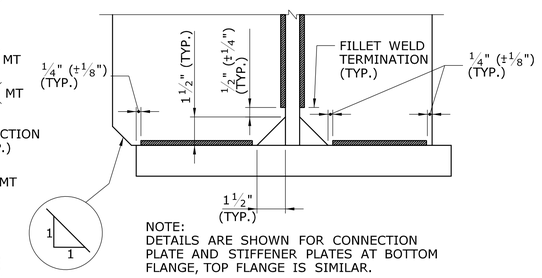

NOTE:
DETAILS ARE SHOWN FOR CONNECTION PLATE AND STIFFENER PLATES AT BOTTOM FLANGE, TOP FLANGE IS SIMILAR.

CLIP AND WELD TERMINATION DETAILS

NOT TO SCALE

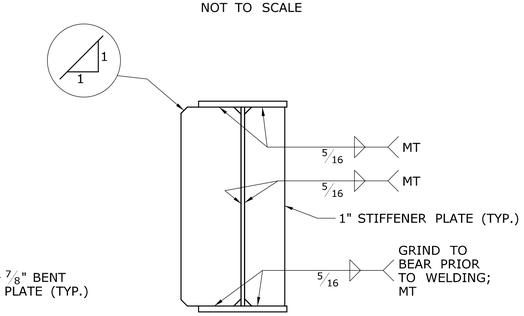

BEARING STIFFENER

NOT TO SCALE

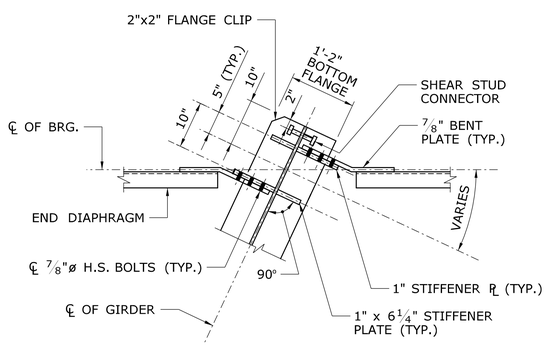

SECTION AT ABUTMENT

SCALE: 3/4" = 1'-0"

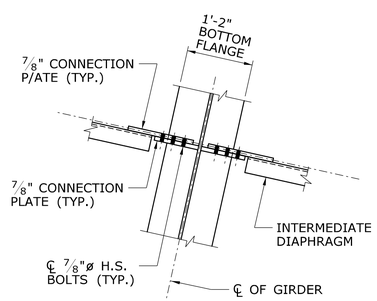

SECTION AT TYPICAL INTERMEDIATE DIAPHRAGM

SCALE: 3/4" = 1'-0"

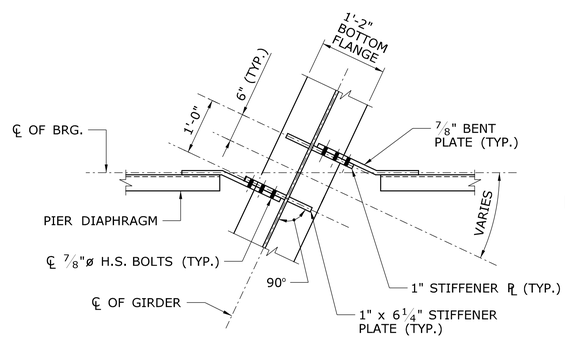

SECTION AT PIER

SCALE: 3/4" = 1'-0"

REV.	DATE	REVISION DESCRIPTION	SHEET NO.

THE INFORMATION, INCLUDING ESTIMATED QUANTITIES OF WORK, SHOWN ON THESE SHEETS IS BASED ON LIMITED INVESTIGATIONS BY THE STATE AND IS IN NO WAY WARRANTED TO INDICATE THE CONDITIONS OF ACTUAL QUANTITIES OF WORK WHICH WILL BE REQUIRED.

Plotted Date: 11/18/2014

DESIGNER/DRAFTER: SSY
CHECKED BY: AML
SCALE AS NOTED

STATE OF CONNECTICUT
DEPARTMENT OF TRANSPORTATION

Filename: ...\S-22 STRUCTURAL STEEL DETAILS - 4.dgn

SIGNATURE/BLOCK:
STATE OF CONNECTICUT ANDREW M. LEGGIO 30394 LICENSED PROFESSIONAL ENGINEER
Stantec Consulting Services Inc.
2321 Whitney Ave.
Hamden, CT 06518

PROJECT TITLE:
REHABILITATION OF BRIDGE NO. 02376
I-84 T.R. 831 OVER I-84 EB

TOWN: EAST HARTFORD

DRAWING TITLE: STRUCTURAL STEEL DETAILS - 4

PROJECT NO. 042-316
DRAWING NO. S-22
SHEET NO. 03.04.22

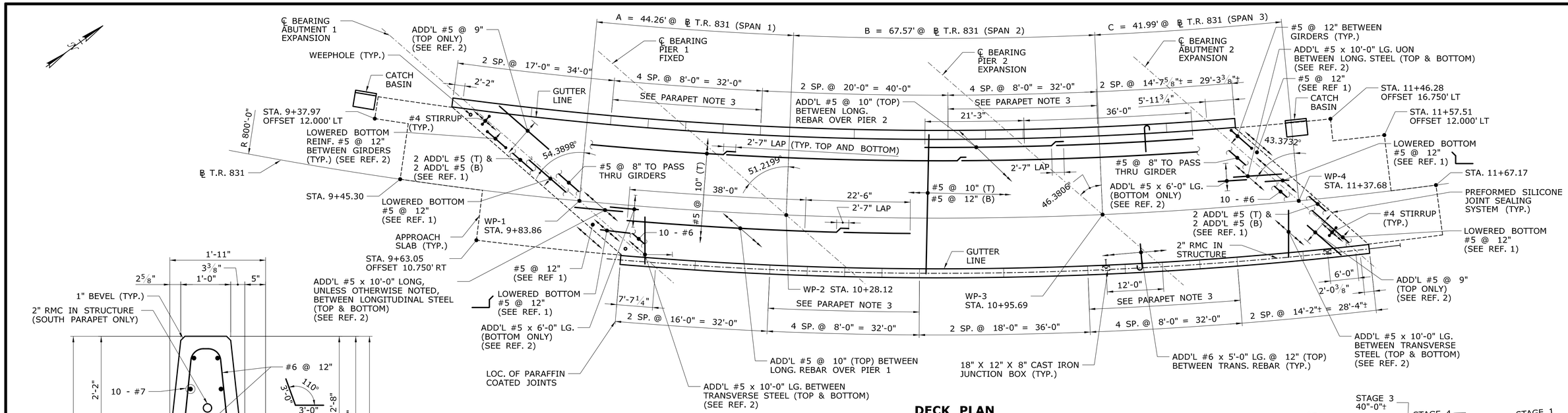

DECK PLAN

SCALE: 3/32" = 1'-0"

ALL MEASUREMENTS AND ELEVATIONS IN FEET

	SPAN LENGTH			TOP OF SLAB ELEVATIONS																	
GIRDER	A	B	C	ABUT 1	A/5	2A/5	3A/5	4A/5	PIER 1	B/7	2B/7	3B/7	4B/7	5B/7	6B/7	PIER 2	C/5	2C/5	3C/5	4C/5	ABUT 2
G1	43.279	66.432	41.451	32.11	32.29	32.45	32.61	32.75	32.89	33.03	33.16	33.28	33.39	33.49	33.58	33.66	33.72	33.77	33.81	33.85	33.88
G2	43.894	67.148	41.791	31.99	32.17	32.35	32.52	32.68	32.83	32.98	33.12	33.25	33.37	33.48	33.58	33.67	33.74	33.80	33.85	33.89	33.92
G3	44.553	67.907	42.148	31.63	31.83	32.02	32.20	32.38	32.54	32.71	32.86	33.00	33.14	33.26	33.37	33.46	33.54	33.61	33.66	33.71	33.76
G4	45.262	68.713	42.524	30.98	31.20	31.41	31.60	31.79	31.97	32.15	32.31	32.47	32.62	32.75	32.87	32.98	33.06	33.14	33.20	33.26	33.31
G5	46.026	69.572	42.921	30.32	30.55	30.77	30.99	31.19	31.38	31.57	31.76	31.93	32.08	32.23	32.36	32.48	32.58	32.66	32.74	32.80	32.86

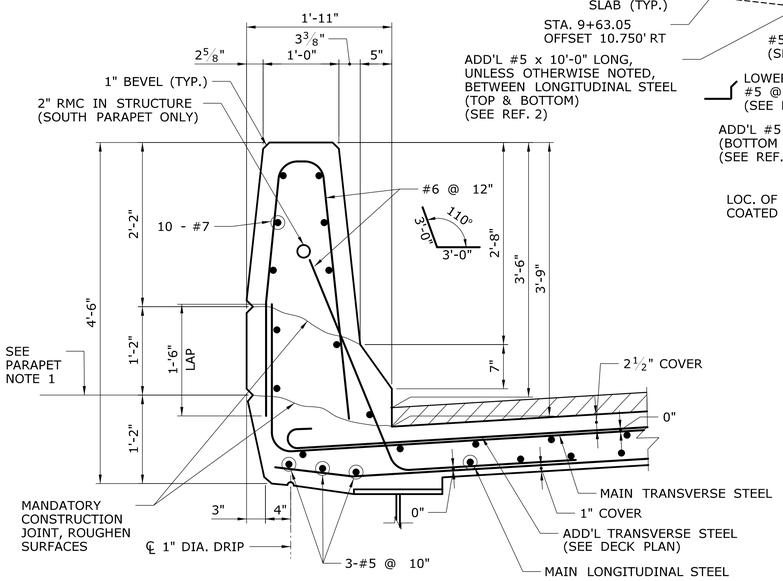

PARAPET SECTION

SCALE: 1" = 1'-0"

PARAPET NOTES

1. CONCRETE ABOVE THIS LINE TO BE POURED AFTER THE CONCRETE IN THE DECK SLAB HAS REACHED A STRENGTH OF f'=3,500 PSI.
2. THE PARAPET SHALL BE CAST CONTINUOUS WITHOUT JOINTS EXCEPT PARAFFIN COATED JOINTS AS NOTED ON THE PLANS. LONGITUDINAL REINFORCEMENT SHALL BE CONTINUOUS WITH MINIMUM LAP SPLICES OF 3'-0".
3. REPRESENTS PARAFFIN COATED JOINTS IN NEGATIVE MOMENT REGIONS.

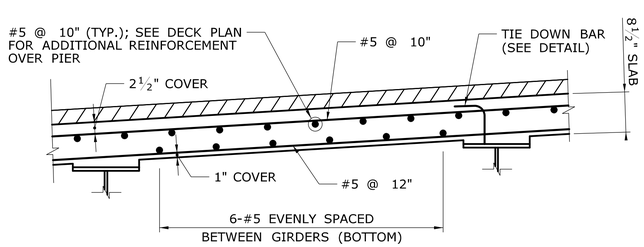

TYPICAL SLAB SECTION

SCALE: ¾" = 1'-0"

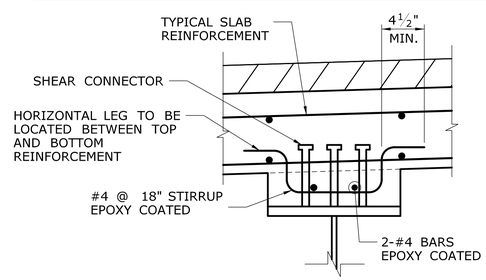

HAUNCH DETAIL

SCALE: 1½" = 1'-0"

HAUNCH NOTES

1. PRIOR TO PLACING SLAB FORMS, THE CONTRACTOR SHALL TAKE ELEVATIONS ALONG THE TOP OF THE BEAMS AT POINTS SHOWN IN THE TABLE.
2. THE HAUNCH THICKNESS SHALL BE MEASURED ALONG THE CENTERLINE OF THE GIRDER AND SHALL BE DETERMINED AS FOLLOWS:

FINISHED SLAB ELEVATION	= A
SLAB THICKNESS	= B
TOP OF BEAM ELEVATION	= C (FIELD MEASURED)
ADDITIONAL DEAD LOAD DEFLECTION	= D
COMPOSITE DEAD LOAD DEFLECTION	= E
HAUNCH THICKNESS	= (A-B) + D + E - C

3. THE MINIMUM HAUNCH THICKNESS SHALL BE 1" MEASURED AT THE EDGE OF THE FLANGE. IF IT IS DETERMINED THAT THE HAUNCH CANNOT BE MAINTAINED, THE ENGINEER SHALL BE NOTIFIED IMMEDIATELY.
4. IF THE HAUNCH EXCEEDS 4" AT THE CENTERLINE OF THE GIRDER, INSTALL ADDITIONAL HAUNCH REINFORCEMENT. SEE HAUNCH DETAIL THIS SHEET.

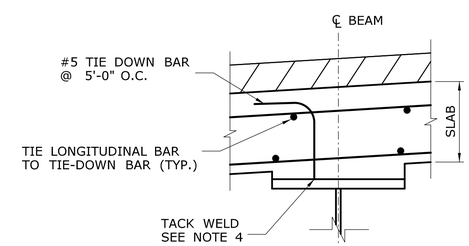

TIE DOWN BAR DETAIL

SCALE: 1½" = 1'-0"

TIE DOWN NOTES

1. TIE-DOWN BARS DO NOT EXCLUDE THE USE OF CHAIRS FOR SUPPORTING THE REINFORCEMENT MAT.
2. THE COST OF FURNISHING AND PLACING TIE-DOWN BARS TO BE INCLUDED IN THE CONTRACT ITEM "DEFORMED STEEL BARS (EPOXY COATED)."
3. TIE-DOWN BARS AND LONGITUDINAL BARS SHALL CLEAR SHEAR CONNECTORS.
4. NO ATTACHMENT, INCLUDING S.I.P. FORMWORK, SHALL BE FILLET WELDED, PLUG WELDED OR TACK WELDED TO THE TENSION FLANGE WITHIN THE LIMITS SHOWN ON REF 3.

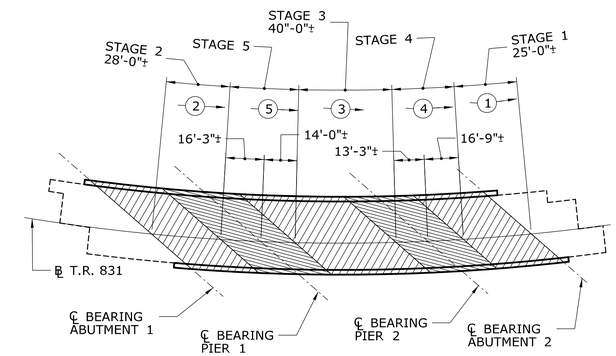

DECK POURING SEQUENCE PLAN

SCALE: NONE

DECK POURING SEQUENCE NOTES

1. POURING SEQUENCE IS AS NUMERICALLY SHOWN ON POURING SEQUENCE PLAN, AND POURED IN THE DIRECTION SHOWN.
2. SLABS OF THE SAME NUMBER SHALL BE PLACED SIMULTANEOUSLY OR CONSECUTIVELY WITH THE CONCRETE REMAINING PLASTIC THROUGHOUT THE PLACEMENT.
3. ONCE THE PLACING OF A SLAB HAS BEEN STARTED, IT SHALL BE COMPLETED WITHOUT INTERRUPTION.
4. AN ALTERNATE SEQUENCE MAY BE SUBMITTED TO THE ENGINEER FOR APPROVAL PRIOR TO THE CONCRETE PLACEMENT.
5. POURS MUST BE MADE AT A MINIMUM OF 72 HOURS APART.

REFERENCE	SHEET NO.
1. DECK DETAILS - 1	S-25
2. DECK PLAN - 2	S-24
3. STRUCTURAL STEEL DETAILS - 1	S-19

REV.	DATE	REVISION DESCRIPTION	SHEET NO.

THE INFORMATION, INCLUDING ESTIMATED QUANTITIES OF WORK, SHOWN ON THESE SHEETS IS BASED ON LIMITED INVESTIGATIONS BY THE STATE AND IS IN NO WAY WARRANTED TO INDICATE THE CONDITIONS OF ACTUAL QUANTITIES OF WORK WHICH WILL BE REQUIRED.

Plotted Date: 11/18/2014

DESIGNER/DRAFTER: JLS
CHECKED BY: SSY
SCALE AS NOTED

STATE OF CONNECTICUT
DEPARTMENT OF TRANSPORTATION

Filename: ...\S-23 DECK PLAN - 1.dgn

SIGNATURE/BLOCK:

Stantec Consulting Services Inc.
2321 Whitney Ave.
Hamden, CT 06518

PROJECT TITLE:
REHABILITATION OF BRIDGE NO. 02376
I-84 T.R. 831 OVER I-84 EB

TOWN: EAST HARTFORD

DRAWING TITLE: DECK PLAN - 1

PROJECT NO. 042-316
DRAWING NO. S-23
SHEET NO. 03.04.23

NOTES

1. BALANCE OF REINFORCEMENT SHOWN ON REFERENCE 2.
2. STEEL JACKING PLATES SHALL CONFORM TO THE REQUIREMENTS OF AASHTO M270, GRADE 50 AND BE HOT-DIP GALVANIZED ACCORDING TO THE REQUIREMENTS OF ASTM A123 AFTER STUDS HAVE BEEN ATTACHED, AND SHALL BE PAID FOR UNDER THE ITEM "STRUCTURAL STEEL (SITE NO. 3)." SHEAR STUDS SHALL BE PAID FOR UNDER THE ITEM "STRUCTURAL STEEL (SITE NO. 3)."
3. 1" CLOSED CELL ELASTOMER BONDED TO TOP OF BACKWALL WITH A PRESSURE SENSITIVE ADHESIVE. PLACE SKIN OF ELASTOMER UPWARD.

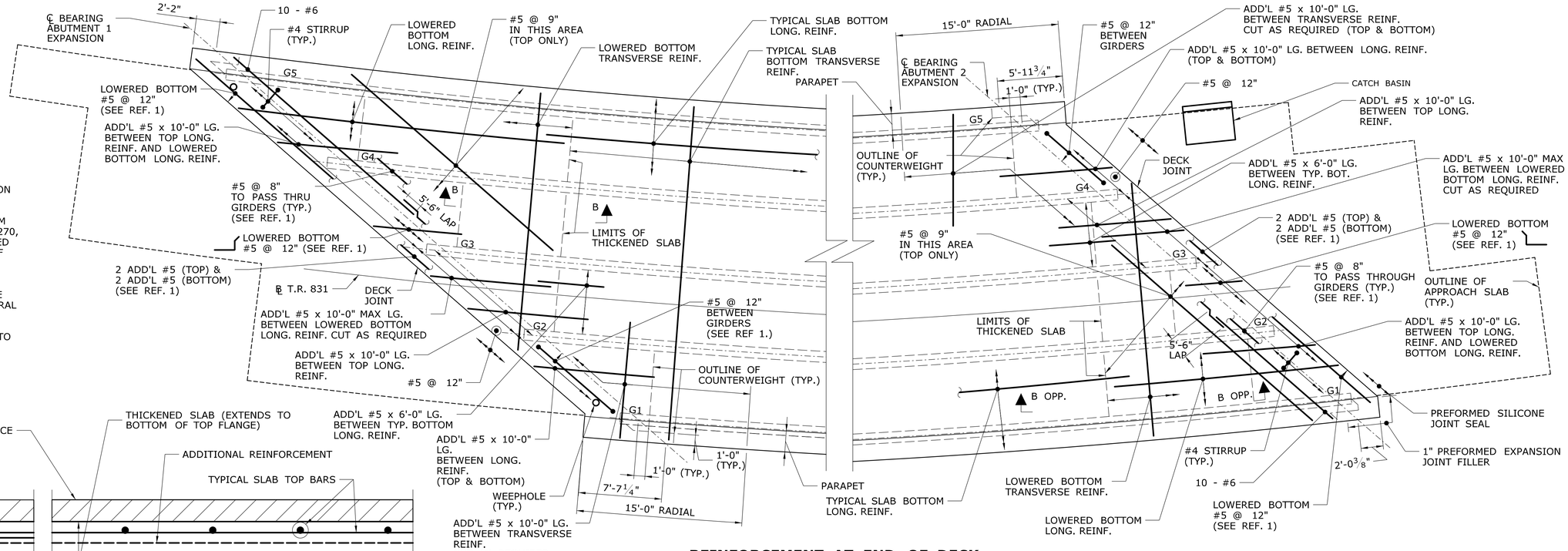

REINFORCEMENT AT END OF DECK

SCALE: 3/16" = 1'-0"

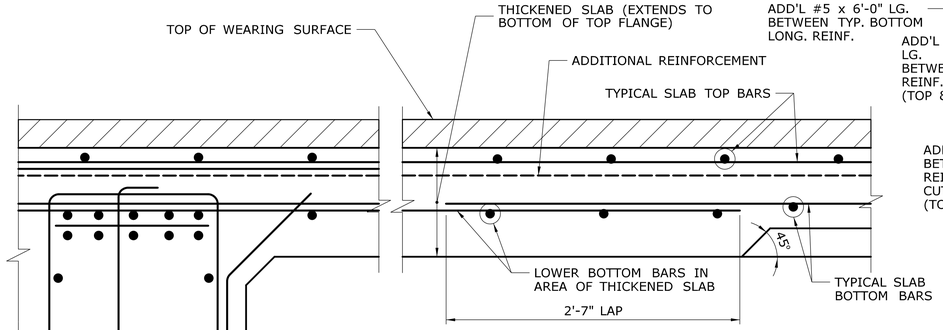

SECTION B-B

SCALE: 1½" = 1'-0"

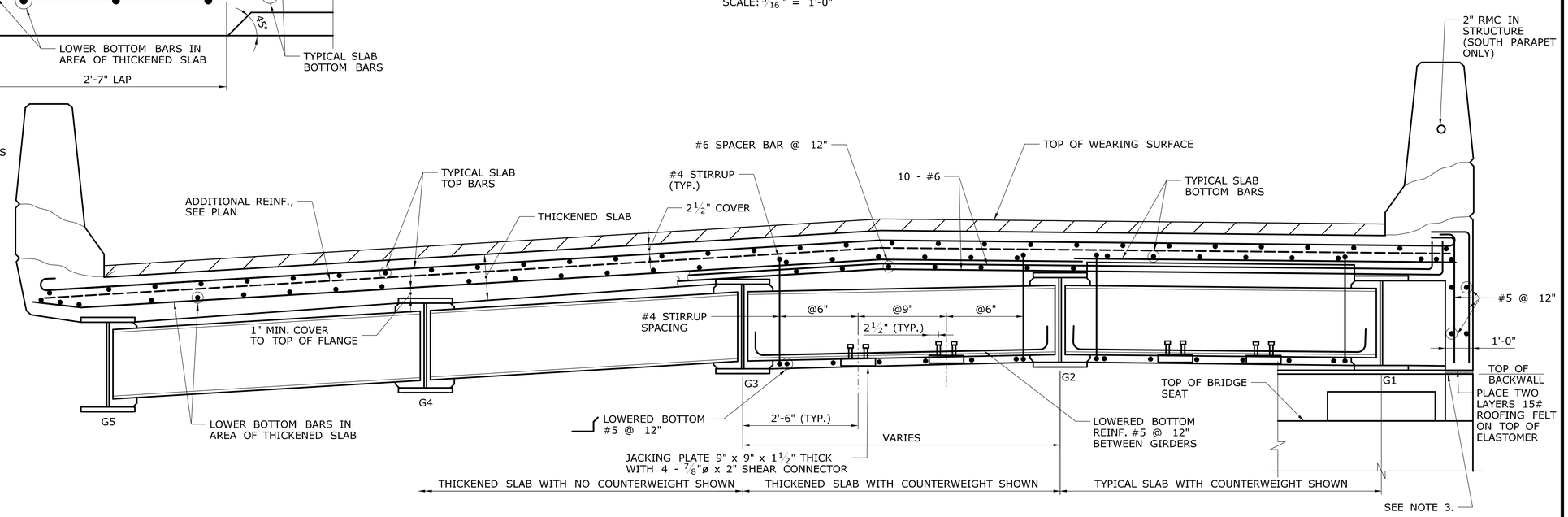

TYPICAL SECTION

SCALE: ¾" = 1'-0"

REFERENCE	SHEET NO.
1. DECK DETAILS - 1	S-25
2. DECK PLAN - 1	S-23

REV.	DATE	REVISION DESCRIPTION	SHEET NO.

THE INFORMATION, INCLUDING ESTIMATED QUANTITIES OF WORK, SHOWN ON THESE SHEETS IS BASED ON LIMITED INVESTIGATIONS BY THE STATE AND IS IN NO WAY WARRANTED TO INDICATE THE CONDITIONS OF ACTUAL QUANTITIES OF WORK WHICH WILL BE REQUIRED.

Plotted Date: 11/18/2014

DESIGNER/DRAFTER: JLS
CHECKED BY: SSY
SCALE AS NOTED

STATE OF CONNECTICUT
DEPARTMENT OF TRANSPORTATION

Filename: ...\S-24 DECK PLAN - 2.dgn

SIGNATURE/BLOCK:
Stantec Consulting Services Inc.
2321 Whitney Ave.
Hamden, CT 06518

PROJECT TITLE:
REHABILITATION OF BRIDGE NO. 02376
I-84 T.R. 831 OVER I-84 EB

TOWN: **EAST HARTFORD**

DRAWING TITLE: **DECK PLAN - 2**

PROJECT NO. **042-316**
DRAWING NO. **S-24**
SHEET NO. **03.04.24**

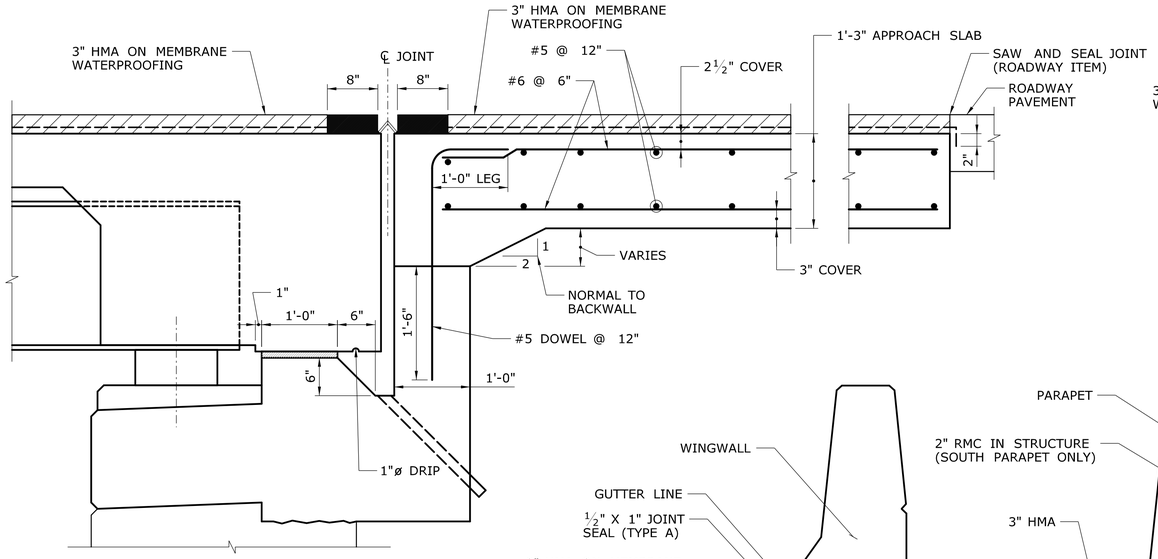

APPROACH SLAB SECTION

SCALE: 1" = 1'-0"

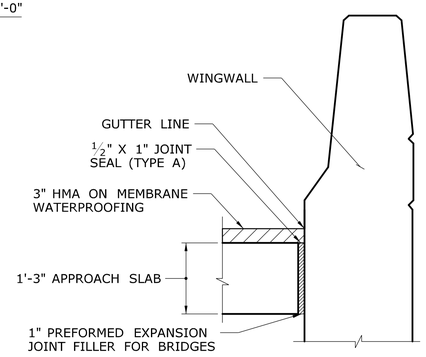

APPROACH SLAB AT GUTTERLINE

SCALE: ¾" = 1'-0"

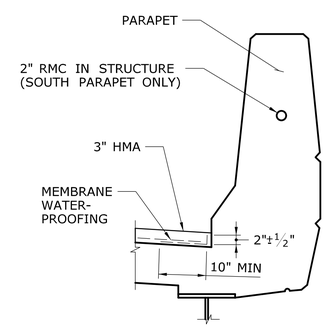

MEMBRANE WATERPROOFING AT GUTTERLINE

SCALE: ¾" = 1'-0"

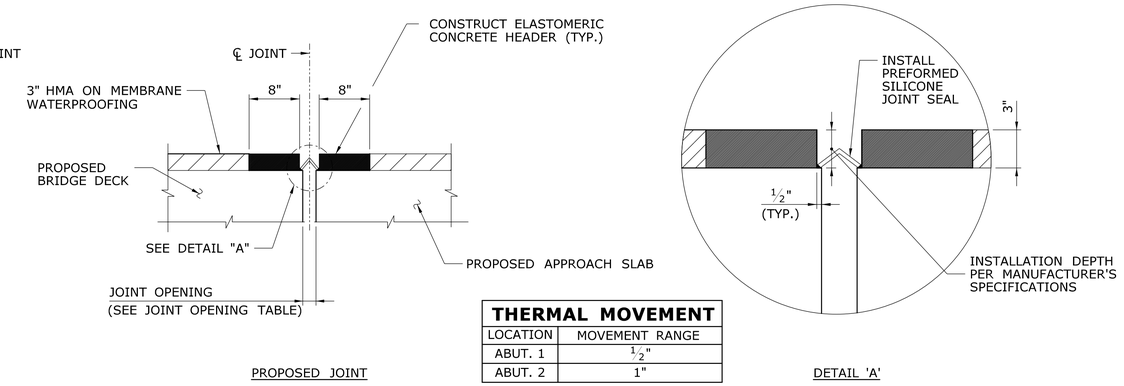

PROPOSED JOINT

DETAIL 'A'

THERMAL MOVEMENT	
LOCATION	MOVEMENT RANGE
ABUT. 1	½"
ABUT. 2	1"

PREFORMED SILICONE JOINT SEALING SYSTEM

NOT TO SCALE

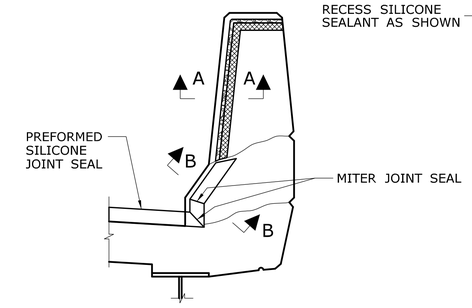

PARAPET SECTION

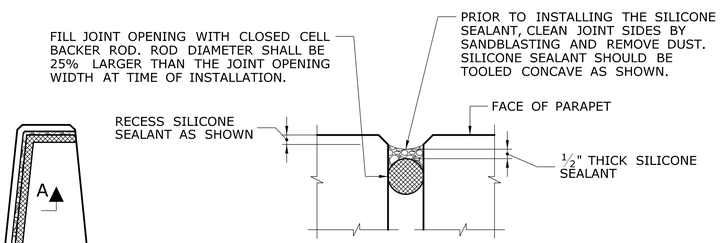

SECTION A-A

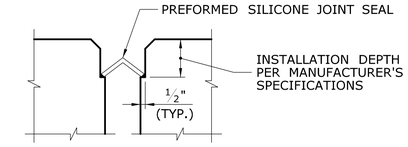

SECTION B-B

PREFORMED SILICONE JOINT SEALING SYSTEM AT PARAPET

NOT TO SCALE

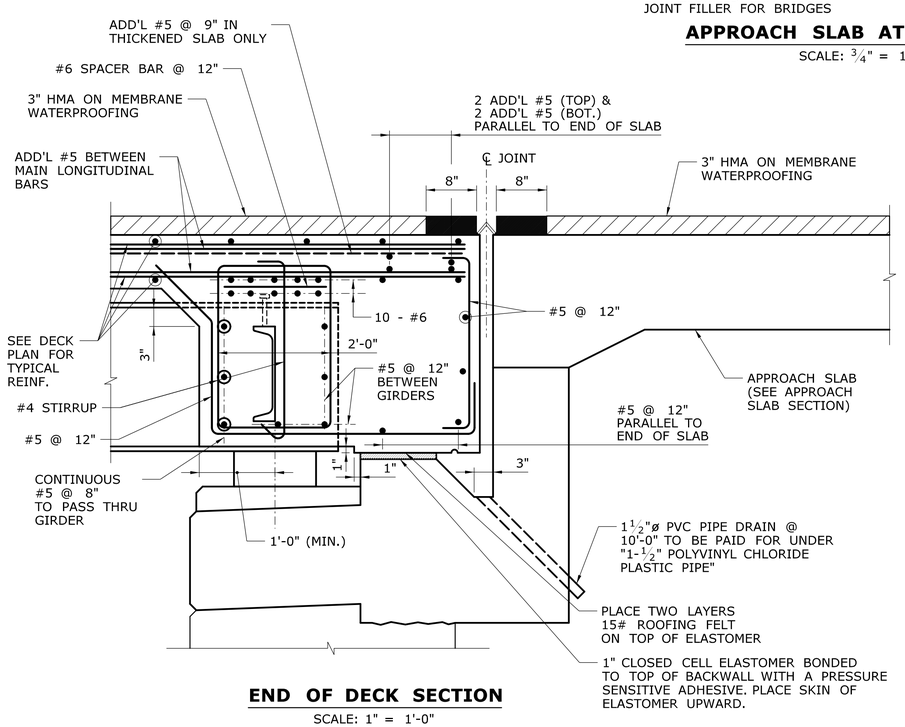

END OF DECK SECTION

SCALE: 1" = 1'-0"

PREFORMED SILICONE JOINT SEALING SYSTEM

1. CONSTRUCT PROPOSED ELASTOMERIC CONCRETE HEADER PER THE MANUFACTURER'S SPECIFICATIONS, TO BE PAID FOR UNDER THE ITEM "ELASTOMERIC CONCRETE HEADER."
2. PRIOR TO INSTALLING THE ELASTOMERIC CONCRETE, CLEAN SUBSTRATE BY SANDBLASTING. DUST SHALL BE REMOVED BY THE METHOD APPROVED BY THE ENGINEER. THIS WORK SHALL BE PAID FOR UNDER THE ITEM "ELASTOMERIC CONCRETE HEADER."
3. THE SURFACES OF THE SUBSTRATE AGAINST WHICH THE ELASTOMERIC CONCRETE IS TO BE PLACED SHALL BE COATED WITH A PRIMER RECOMMENDED BY THE MANUFACTURER. THIS WORK SHALL BE PAID FOR UNDER THE ITEM "ELASTOMERIC CONCRETE HEADER."
4. ELASTOMERIC CONCRETE SHALL BE INSTALLED WITHIN 15 MINUTES OF MIXING AND MUST BE THOROUGHLY CONSOLIDATED BEFORE THE PRIMER HAS SET.
5. ELASTOMERIC CONCRETE HEADER SHALL BE INSTALLED WHEN THE AMBIENT AIR TEMPERATURE IS 45° F AND RISING.
6. CONSTRUCT PREFORMED SILICONE JOINT SEALANT PER MANUFACTURER'S SPECIFICATIONS. THIS WORK SHALL BE PAID FOR UNDER THE ITEM "PREFORMED SILICONE JOINT SEALING SYSTEM."
7. PRIOR TO INSTALLING THE PREFORMED SILICONE JOINT SEALANT, PREPARE JOINT SURFACE BY SANDBLASTING. THIS WORK SHALL BE PAID FOR UNDER THE ITEM "PREFORMED SILICONE JOINT SEALING SYSTEM."
8. INSTALL PREFORMED SILICONE JOINT SEALANT. THIS WORK SHALL BE PAID FOR UNDER THE ITEM "PREFORMED SILICONE JOINT SEALING SYSTEM."
9. PREFORMED SILICONE JOINT SEALING SYSTEM SHALL BE INSTALLED WHEN THE AMBIENT AIR TEMPERATURE IS 40° F AND RISING.
10. JOINT PREPARATION AND INSTALLATION OF THE PREFORMED SILICONE JOINT SEALANT MUST BE DONE DURING THE SAME DAY. TRAFFIC WILL NOT BE ALLOWED TO PASS OVER THE JOINT AFTER SANDBLASTING HAS OCCURRED.

JOINT OPENING TABLE		
	JOINT WIDTH (IN.)	
TEMP. (° F)	ABUTMENT 1	ABUTMENT 2
-10	1.12"	1.36"
10	1.08"	1.24"
30	1.04"	1.12"
50	1.00"	1.00"
70	0.96"	0.88"
90	0.92"	0.76"
110	0.88"	0.64"

JOINT OPENING MEASURED PERPENDICULAR TO SKEW

REV.	DATE	REVISION DESCRIPTION	SHEET NO.

THE INFORMATION, INCLUDING ESTIMATED QUANTITIES OF WORK, SHOWN ON THESE SHEETS IS BASED ON LIMITED INVESTIGATIONS BY THE STATE AND IS IN NO WAY WARRANTED TO INDICATE THE CONDITIONS OF ACTUAL QUANTITIES OF WORK WHICH WILL BE REQUIRED.

Plotted Date: 11/18/2014

DESIGNER/DRAFTER: JLS
CHECKED BY: SSY
SCALE AS NOTED

STATE OF CONNECTICUT
DEPARTMENT OF TRANSPORTATION

Filename: ...\S-25 DECK DETAILS - 1.dgn

SIGNATURE/BLOCK:
Stantec Consulting Services Inc.
2321 Whitney Ave.
Hamden, CT 06518

PROJECT TITLE:
REHABILITATION OF BRIDGE NO. 02376
I-84 T.R. 831 OVER I-84 EB

TOWN: EAST HARTFORD

DRAWING TITLE: DECK DETAILS - 1

PROJECT NO. 042-316
DRAWING NO. S-25
SHEET NO. 03.04.25

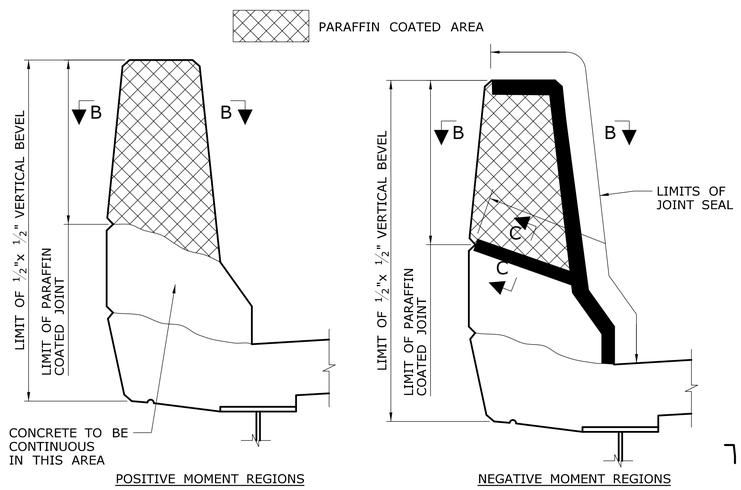

POSITIVE MOMENT REGIONS

NEGATIVE MOMENT REGIONS

PARAFFIN COATED JOINT DETAILS

SCALE: 1" = 1'-0"

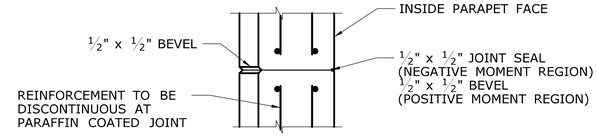

SECTION B-B

SCALE: 1" = 1'-0"

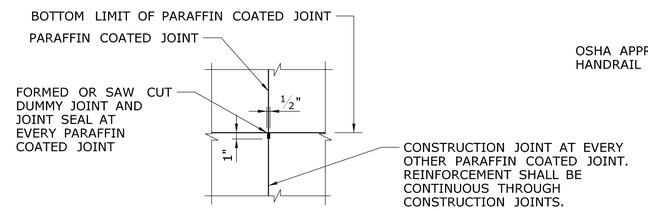

SECTION C-C

SCALE: 1" = 1'-0"

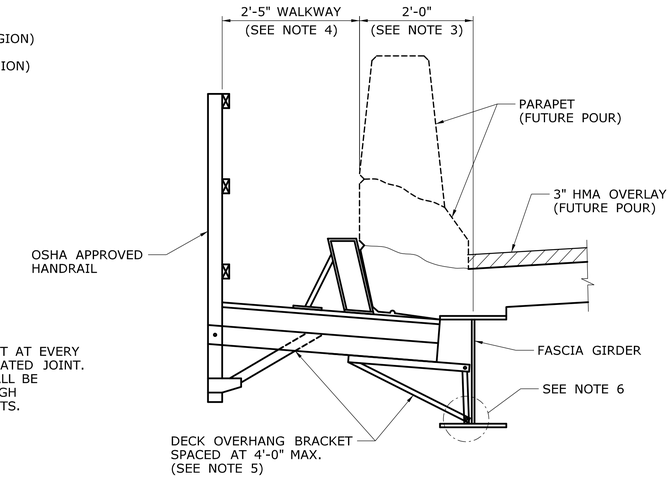

CONCEPTUAL TEMPORARY OVERHANG SUPPORT

SCALE: 3/4" = 1'-0"

OVERHANG SUPPORT NOTES

1. THE FASCIA GIRDER AND SUPERSTRUCTURE HAVE BEEN EVALUATED BASED ON THE ASSUMPTIONS AND LOADINGS AS SHOWN. A CONSTRUCTION METHOD THAT IS DIFFERENT FROM WHAT IS SHOWN WILL REQUIRE AN EVALUATION BY THE CONTRACTOR INCLUDING FULL SUPERSTRUCTURE STABILITY ANALYSIS.
2. THE CONTRACTOR IS RESPONSIBLE FOR THE DESIGN OF THE FORMWORK SYSTEM AND OVERHANG BRACKETS.
3. DECK DEAD LOAD = 125 LB/S.F.
   CONSTRUCTION LIVE LOAD = 50 LB/S.F.
4. WALKWAY LIVE LOAD = 75 LB/FT
5. WEIGHT OF FORMWORK INCLUDING DECK OVERHANG BRACKETS = 10 LB/S.F.
6. THE OVERHANG BRACKET HEEL PLATE SHALL EXTEND TO THE INTERSECTION OF THE WEB AND BOTTOM FLANGE AS SHOWN.
7. SCREED RAIL SUPPORTS FOR DECK PLACEMENT SHALL BE LOCATED AT THE CENTERLINE OF THE FASCIA GIRDER AND NOT ON THE OVERHANG BRACKETS.

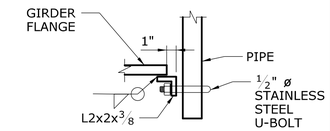

WEEPHOLE CONNECTION DETAIL

SCALE: 1 1/2"=1'-0"

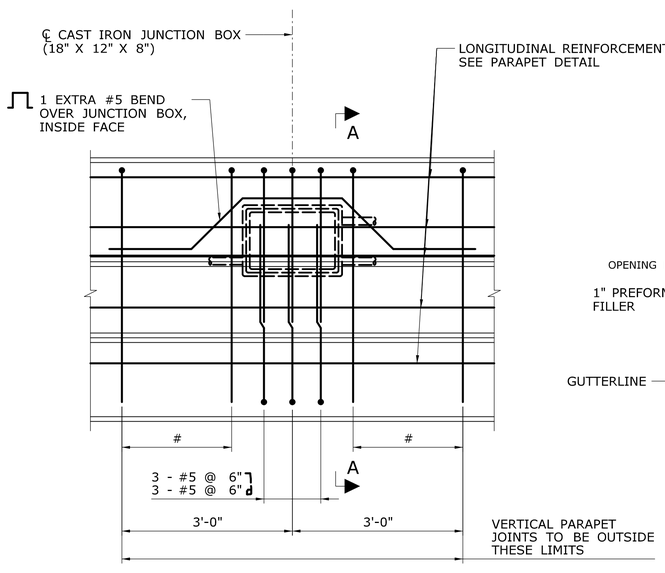

= THE VERTICAL PARAPET REINFORCEMENT IS TO BE DOUBLED (@ 6") WITHIN THESE LIMITS.

PARAPET REINFORCEMENT AT JUNCTION BOX

SCALE: 3/4" = 1'-0"

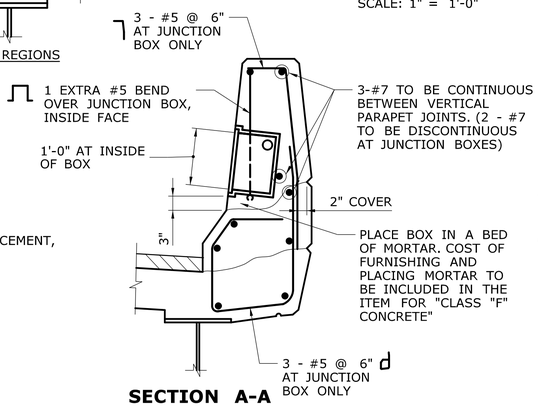

SECTION A-A

SCALE: 3/4" = 1'-0"

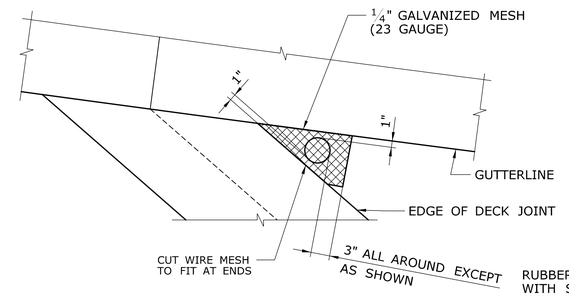

TYPICAL DRAIN DETAIL - PLAN

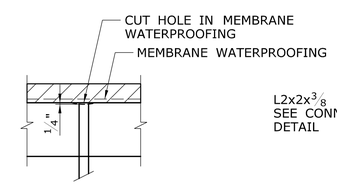

TYPICAL DRAIN DETAIL - SECTION

NOTE: THE COST OF FURNISHING AND INSTALLING 1/4" GALVANIZED WIRE MESH SHALL BE INCLUDED IN THE ITEM "HMA S0.25".

OVERLAY INTERFACE DRAINAGE DETAILS

SCALE: 1" = 1'-0"

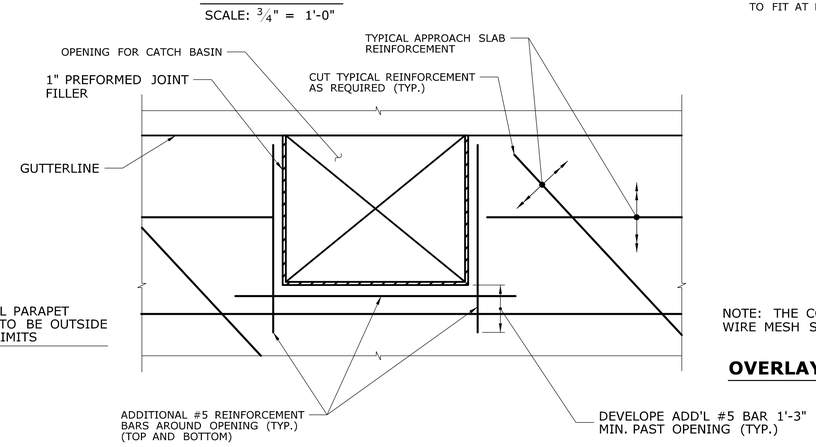

APPROACH SLAB CATCH BASIN & OPENING

SCALE: 1/2" = 1'-0"

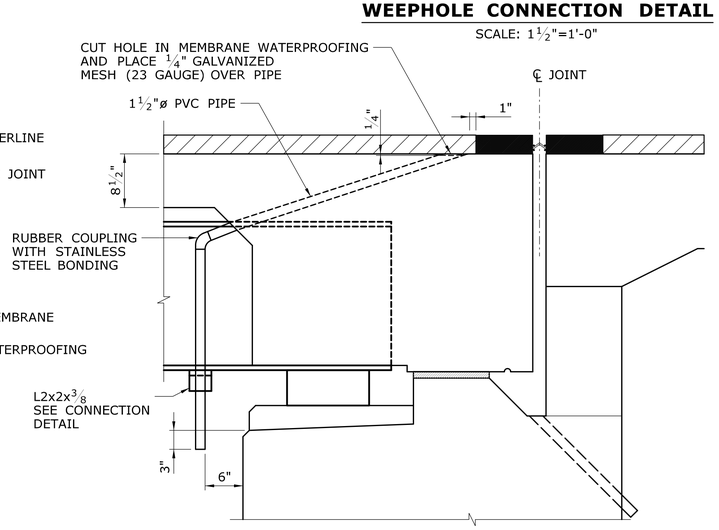

WEEPHOLE DETAIL AT END OF DECK

SCALE: 1" = 1'-0"

REFERENCE	SHEET NO.
1. DECK DETAILS - 1	S-25
2. DECK PLAN - 2	S-24
3. FRAMING PLAN	S-18

REV.	DATE	REVISION DESCRIPTION	SHEET NO.

THE INFORMATION, INCLUDING ESTIMATED QUANTITIES OF WORK, SHOWN ON THESE SHEETS IS BASED ON LIMITED INVESTIGATIONS BY THE STATE AND IS IN NO WAY WARRANTED TO INDICATE THE CONDITIONS OF ACTUAL QUANTITIES OF WORK WHICH WILL BE REQUIRED.

Plotted Date: 11/18/2014

DESIGNER/DRAFTER: JLS
CHECKED BY: SSY
SCALE AS NOTED

STATE OF CONNECTICUT
DEPARTMENT OF TRANSPORTATION

Filename: ...\S-26 DECK DETAILS - 2.dgn

SIGNATURE/BLOCK:
Stantec Consulting Services Inc.
2321 Whitney Ave.
Hamden, CT 06518

PROJECT TITLE:
REHABILITATION OF BRIDGE NO. 02376
I-84 T.R. 831 OVER I-84 EB

TOWN: EAST HARTFORD

DRAWING TITLE: DECK DETAILS - 2

PROJECT NO. 042-316
DRAWING NO. S-26
SHEET NO. 03.04.26

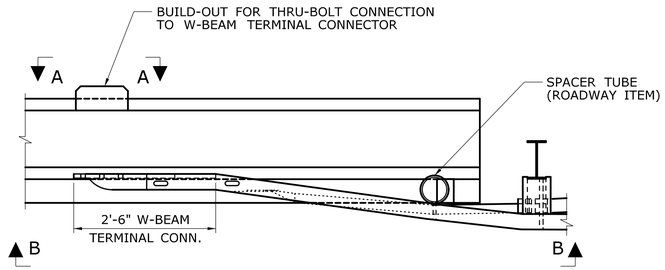

ATTACHMENT PLAN AT LEADING END

SCALE: 3/4" = 1'-0"

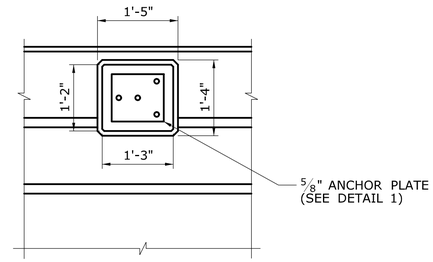

ELEVATION A-A

SCALE: 3/4" = 1'-0"

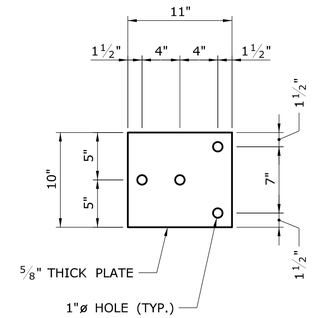

ANCHOR PLATE DETAIL 1

SCALE: 1 1/2" = 1'-0"

METAL BEAM RAIL NOTES

1. STEEL PLATES SHALL CONFORM TO THE REQUIREMENTS OF ASTM A36 AND BE HOT-DIP GALVANIZED IN ACCORDANCE WITH ASTM A123.
2. ANCHOR BOLTS SHALL CONFORM TO THE REQUIREMENTS OF ASTM A325, MECHANICALLY GALVANIZED.
3. 1"ø PIPE SHALL CONFORM TO THE REQUIREMENTS OF ASTM A53 GRADE B OR ASTM A501 AND SHALL BE GALVANIZED IN ACCORDANCE WITH ASTM A123.
4. RAILWAY ELEMENTS SHALL BE PAID FOR UNDER THE APPLICABLE ROADWAY ITEMS.
5. ALL RAIL ANCHORAGE MATERIAL REQUIRED FOR END ATTACHMENTS SHALL BE PAID FOR UNDER THE APPLICABLE ROADWAY ITEMS.

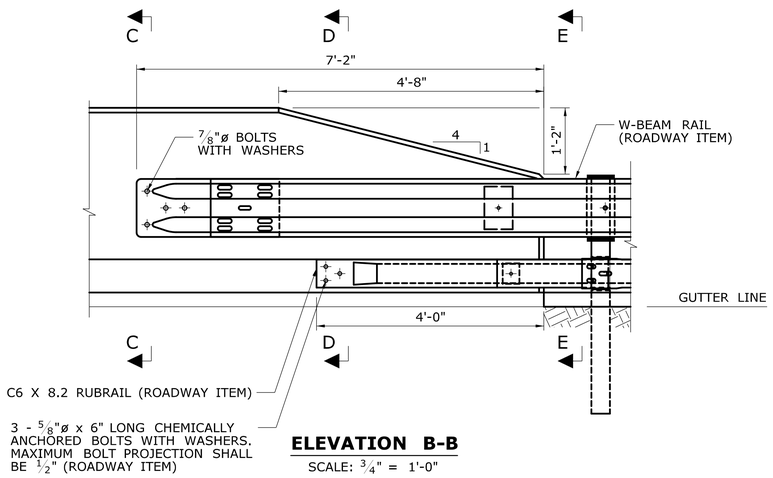

ELEVATION B-B

SCALE: 3/4" = 1'-0"

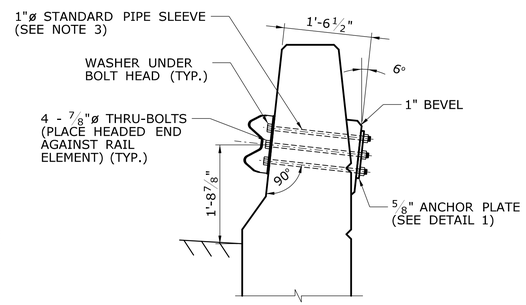

SECTION C-C

SCALE: 3/4" = 1'-0"

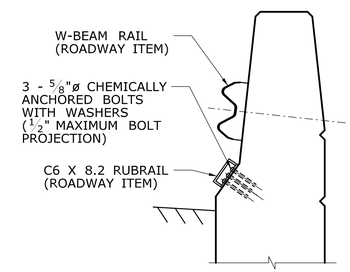

SECTION D-D

SCALE: 3/4" = 1'-0"

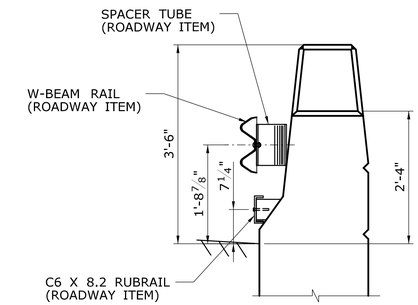

SECTION E-E

SCALE: 3/4" = 1'-0"

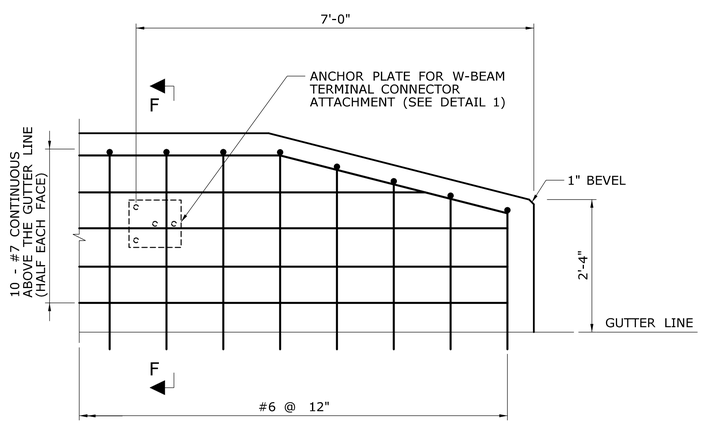

PARAPET REINFORCING AT LEADING END

SCALE: 3/4" = 1'-0"

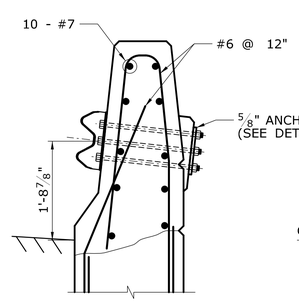

SECTION F-F

SCALE: 3/4" = 1'-0"

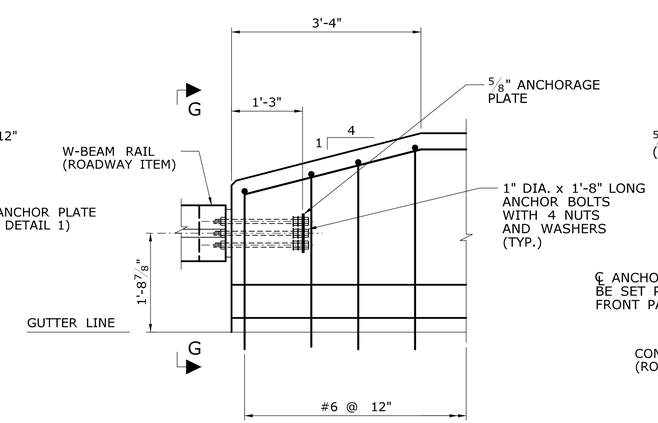

PARAPET REINFORCING AT TRAILING END

SCALE: 3/4" = 1'-0"

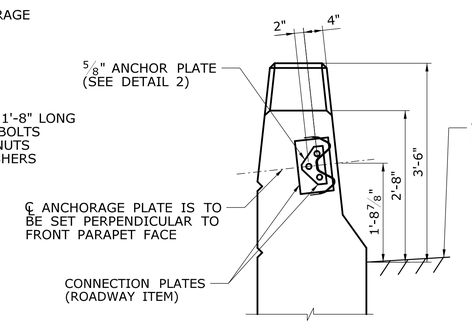

SECTION G-G

SCALE: 3/4" = 1'-0"

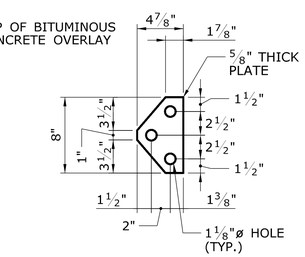

ANCHOR PLATE DETAIL 2

SCALE: 3/4" = 1'-0"

REV.	DATE	REVISION DESCRIPTION	SHEET NO.

THE INFORMATION, INCLUDING ESTIMATED QUANTITIES OF WORK, SHOWN ON THESE SHEETS IS BASED ON LIMITED INVESTIGATIONS BY THE STATE AND IS IN NO WAY WARRANTED TO INDICATE THE CONDITIONS OF ACTUAL QUANTITIES OF WORK WHICH WILL BE REQUIRED.

Plotted Date: 11/18/2014

DESIGNER/DRAFTER: JLS

CHECKED BY: SSY

SCALE AS NOTED

STATE OF CONNECTICUT
DEPARTMENT OF TRANSPORTATION

Filename: ...\S-27 MISCELLANEOUS DETAILS.dgn

SIGNATURE/BLOCK:

Stantec Consulting Services Inc.
2321 Whitney Ave.
Hamden, CT 06518

PROJECT TITLE:
REHABILITATION OF BRIDGE NO. 02376
I-84 T.R. 831 OVER I-84 EB

TOWN: EAST HARTFORD

DRAWING TITLE: MISCELLANEOUS DETAILS

PROJECT NO. 042-316

DRAWING NO. S-27

SHEET NO. 03.04.27

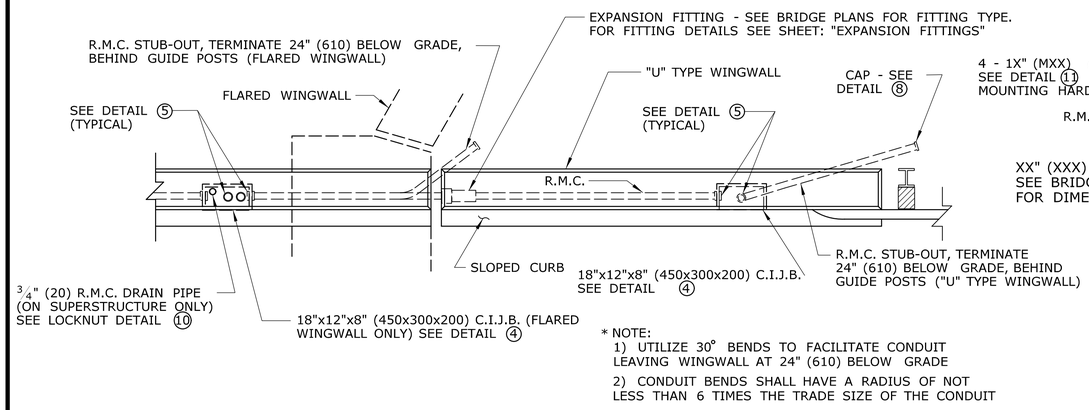

* NOTE:
1) UTILIZE 30° BENDS TO FACILITATE CONDUIT LEAVING WINGWALL AT 24" (610) BELOW GRADE
2) CONDUIT BENDS SHALL HAVE A RADIUS OF NOT LESS THAN 6 TIMES THE TRADE SIZE OF THE CONDUIT

TOP VIEW

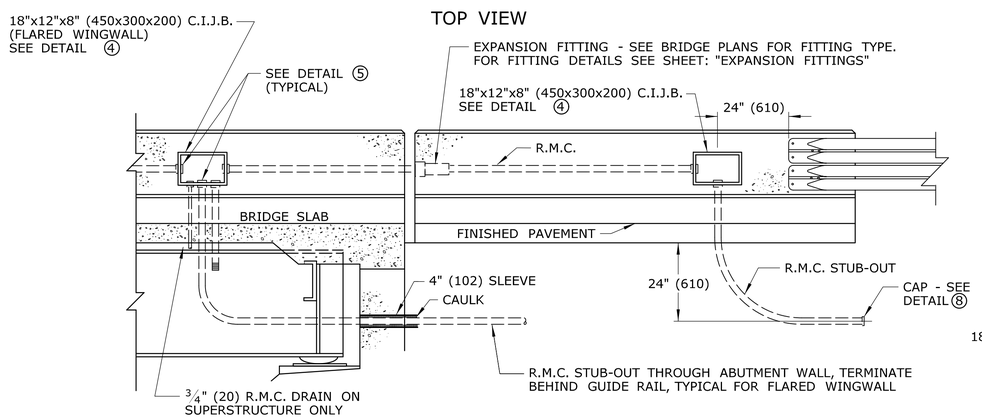

1 CONDUIT PARAPET TO FILL

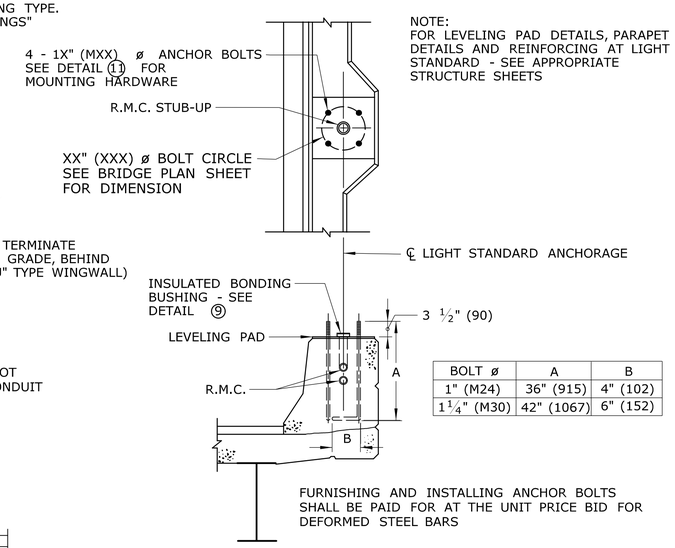

NOTE:
FOR LEVELING PAD DETAILS, PARAPET DETAILS AND REINFORCING AT LIGHT STANDARD - SEE APPROPRIATE STRUCTURE SHEETS

BOLT ø	A	B
1" (M24)	36" (915)	4" (102)
1 1/4" (M30)	42" (1067)	6" (152)

3 PARAPET TREATMENT AT LIGHT STANDARD

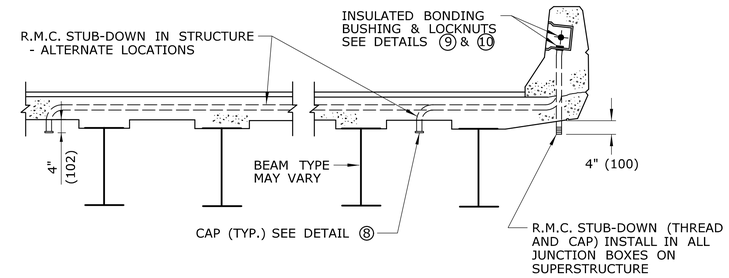

6 SERVICE TO LUMINAIRE UNDER STRUCTURE

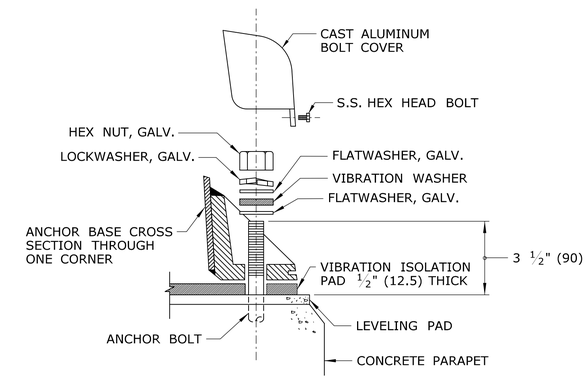

11 ANCHOR BASE LIGHT STANDARD MOUNTING HARDWARE

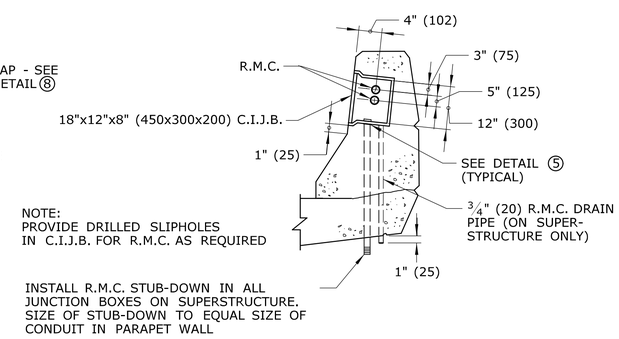

NOTE:
PROVIDE DRILLED SLIPHOLES IN C.I.J.B. FOR R.M.C. AS REQUIRED

INSTALL R.M.C. STUB-DOWN IN ALL JUNCTION BOXES ON SUPERSTRUCTURE. SIZE OF STUB-DOWN TO EQUAL SIZE OF CONDUIT IN PARAPET WALL

4 JUNCTION BOX INSTALLATION

8 MALLEABLE IRON CAP

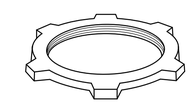

10 LOCKNUT

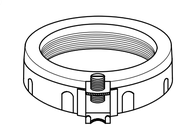

9 INSULATED BONDING BUSHING WITH GROUND LUG

*NOTE:
FOR LEVELING PAD DETAILS, PARAPET STANDARD AND C.I.J.B. - SEE APPROPRIATE STRUCTURE SHEETS

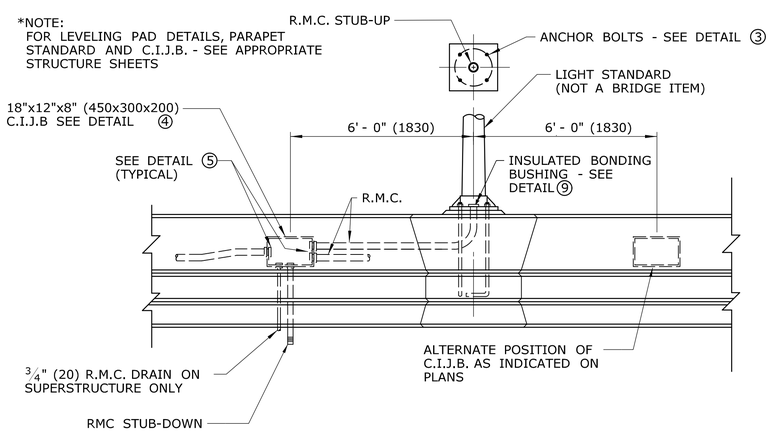

2 LIGHT STANDARD ON PARAPET WALL

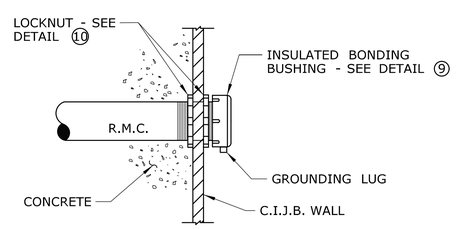

5 CONDUIT ENTRY INTO CAST IRON JUNCTION BOX

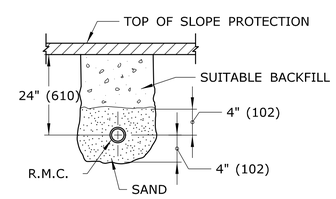

7 RIGID METAL CONDUIT UNDER SLOPE PROTECTION

NOTES:

1) SEE BRIDGE PLANS FOR SPECIFIC CONSTRUCTION DETAILS AND LOCATIONS.
2) DIAMETER OF RIGID METAL CONDUIT SHALL BE AS CALLED FOR ON BRIDGE PLANS.
3) R.M.C. STUB-UPS TO LIGHT STANDARDS, STUB-OUTS TO FILL, AND STUB-DOWNS TO UNDERBRIDGE LUMINAIRES, SHALL BE OF THE SAME DIAMETER AS THE R.M.C. CAST IN THE PARAPET WALL.
4) INSTALL ONE R.M.C. STUB-DOWN IN ALL JUNCTION BOXES ON SUPERSTRUCTURE. ADDITIONAL STUB-DOWNS SHALL BE INSTALLED WHERE INDICATED ON THE PLANS.
5) USE APPLICABLE DETAILS.

REV.	DATE	REVISION DESCRIPTION	SHEET NO.

THE INFORMATION, INCLUDING ESTIMATED QUANTITIES OF WORK, SHOWN ON THESE SHEETS IS BASED ON LIMITED INVESTIGATIONS BY THE STATE AND IS IN NO WAY WARRANTED TO INDICATE THE CONDITIONS OF ACTUAL QUANTITIES OF WORK WHICH WILL BE REQUIRED.

Plotted Date: 11/18/2014

DESIGNER/DRAFTER: JRA
CHECKED BY: AML
NOT TO SCALE

STATE OF CONNECTICUT
DEPARTMENT OF TRANSPORTATION

Filename: ...\S-28 BRIDGE RELATED ELECTRICAL DETAILS.dgn

SIGNATURE/BLOCK:
Stantec Consulting Services Inc.
2321 Whitney Ave.
Hamden, CT 06518

PROJECT TITLE:
REHABILITATION OF BRIDGE NO. 02376
I-84 T.R. 831 OVER I-84 EB

TOWN: EAST HARTFORD

DRAWING TITLE: BRIDGE RELATED ELECTRICAL DETAILS

PROJECT NO. 042-316
DRAWING NO. S-28
SHEET NO. 03.04.28

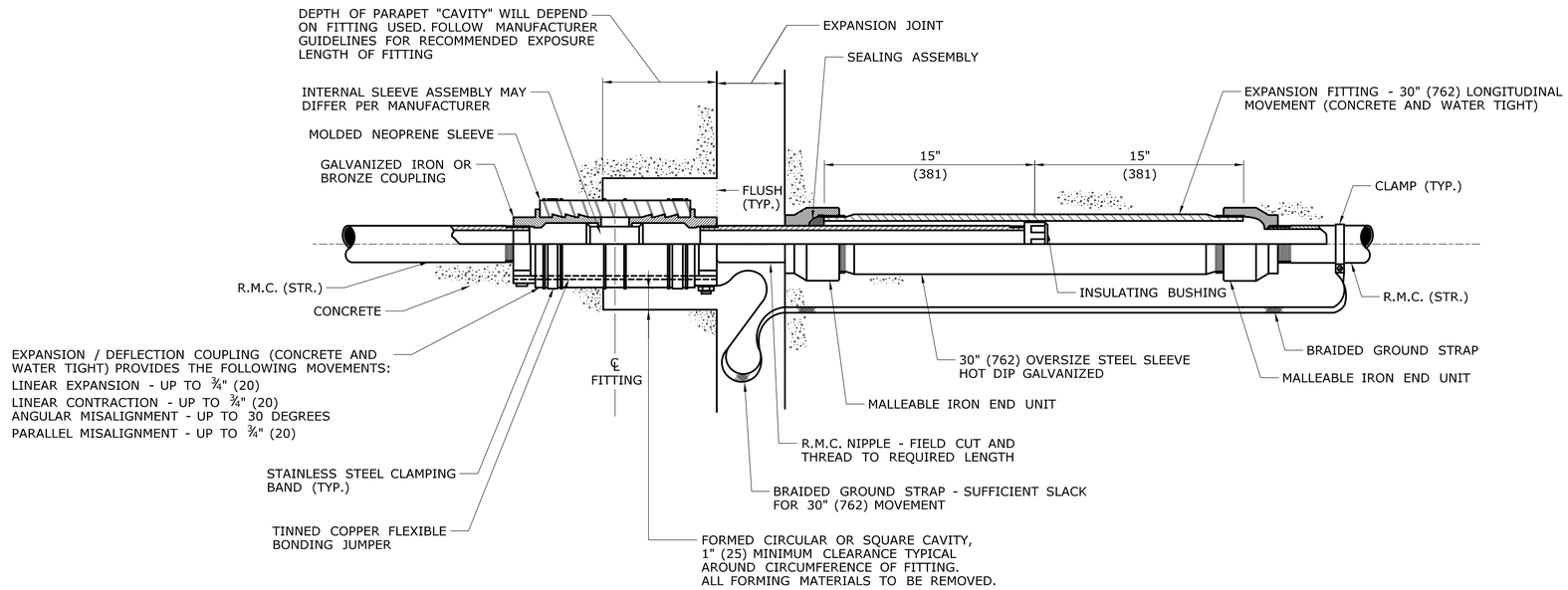

EXPANSION FITTING TYPE 3

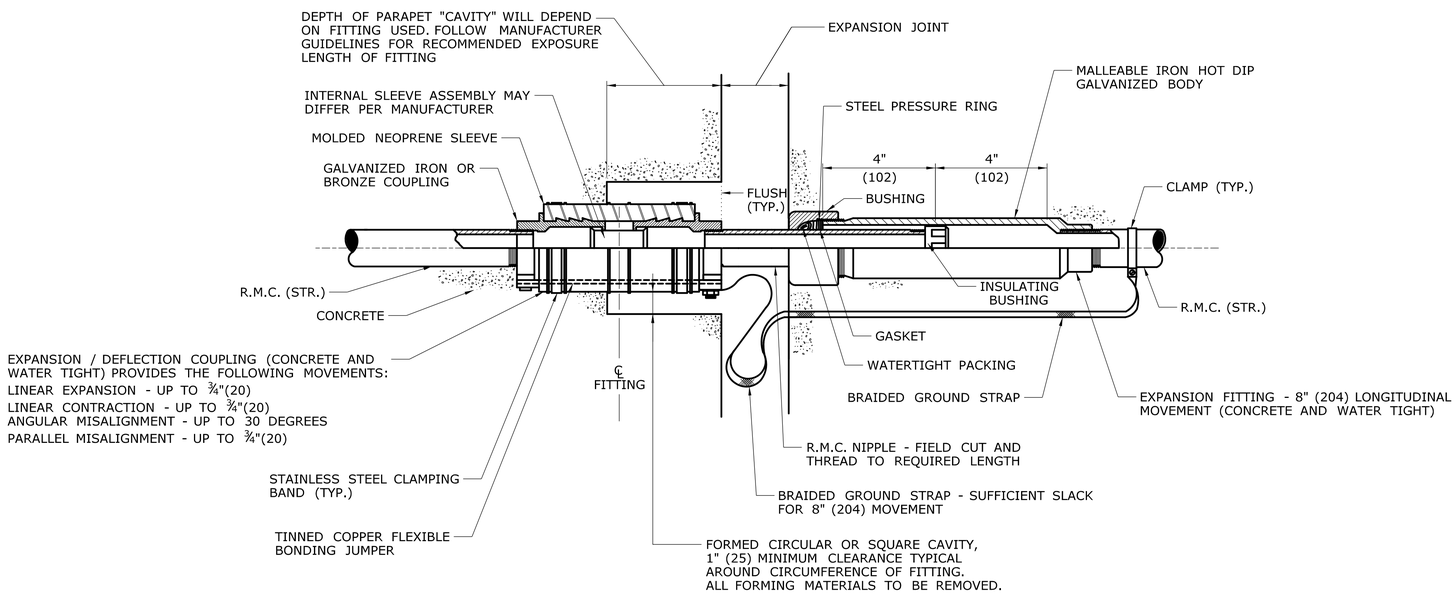

EXPANSION FITTING TYPE 2

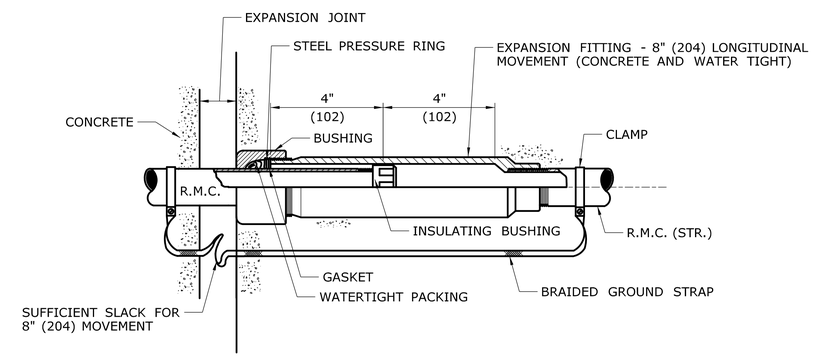

EXPANSION FITTING TYPE 1

NOTES:

1) SEE BRIDGE PLANS FOR SPECIFIC FITTING TYPE TO BE USED AT EACH BRIDGE EXPANSION JOINT.

2) ORIENTATION OF FITTING TO BE FIELD DETERMINED.

REV.	DATE	REVISION DESCRIPTION	SHEET NO.

THE INFORMATION, INCLUDING ESTIMATED QUANTITIES OF WORK, SHOWN ON THESE SHEETS IS BASED ON LIMITED INVESTIGATIONS BY THE STATE AND IS IN NO WAY WARRANTED TO INDICATE THE CONDITIONS OF ACTUAL QUANTITIES OF WORK WHICH WILL BE REQUIRED.

Plotted Date: 11/18/2014

DESIGNER/DRAFTER: JRA

CHECKED BY: AML

NOT TO SCALE

STATE OF CONNECTICUT
DEPARTMENT OF TRANSPORTATION

Filename: ...\S-29 CONDUIT EXPANSION FITTINGS.dgn

SIGNATURE/BLOCK:

Stantec Consulting Services Inc.
2321 Whitney Ave.
Hamden, CT 06518

PROJECT TITLE:
REHABILITATION OF BRIDGE NO. 02376
I-84 T.R. 831 OVER I-84 EB

TOWN: EAST HARTFORD

DRAWING TITLE: CONDUIT EXPANSION FITTINGS

PROJECT NO. 042-316

DRAWING NO. S-29

SHEET NO. 03.04.29

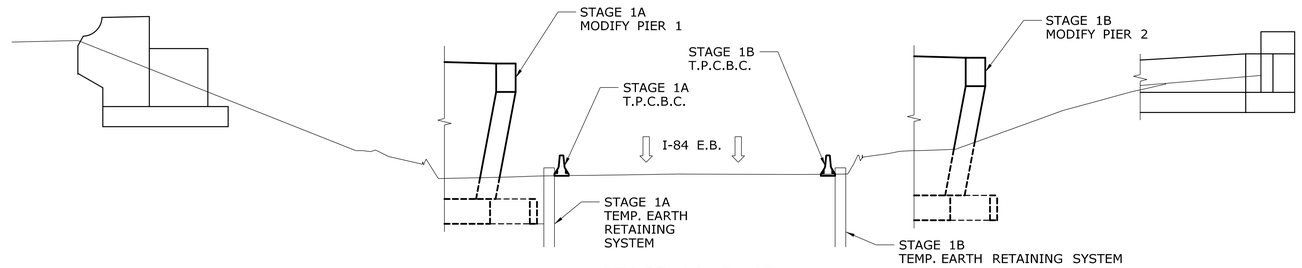

STAGE 1A & 1B

SCALE: $^{3}/_{32}$" = 1'-0"

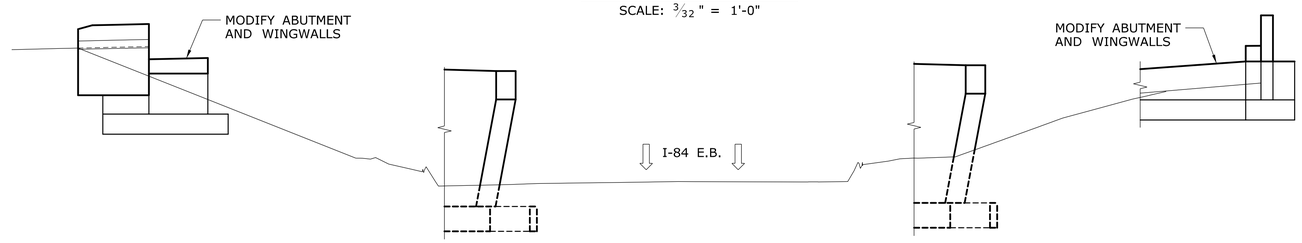

STAGE 1C

SCALE: $^{3}/_{32}$" = 1'-0"

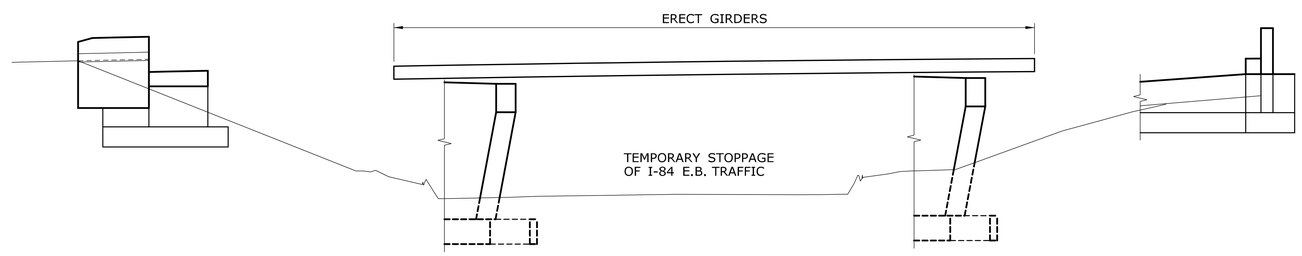

STAGE 1D

SCALE: $^{3}/_{32}$" = 1'-0"

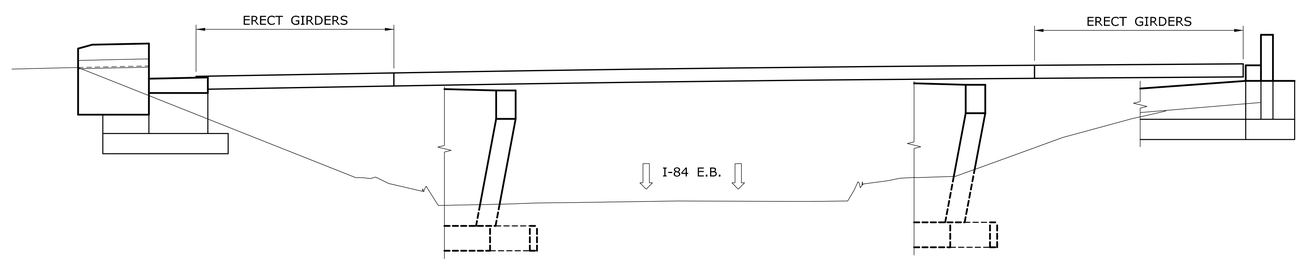

STAGE 1E

SCALE: $^{3}/_{32}$" = 1'-0"

SUGGESTED SEQUENCE OF CONSTRUCTION:

SEE TRAFFIC SUBSET FOR ADDITIONAL MAINTENANCE AND PROTECTION OF TRAFFIC DETAILS AND REQUIREMENTS.

STAGE 1A:
1. ESTABLISH DETOUR AND CLOSE T.R. 831.
2. REMOVE CONCRETE DECK OF EXISTING BRIDGE. SEE THE SPECIAL PROVISION "MAINTENANCE AND PROTECTION OF TRAFFIC" AND "PROSECUTION AND PROGRESS" FOR I-84 LANE CLOSURE DETAILS AND ALLOWABLE TIMES.
3. REMOVE EXISTING GIRDERS. TRAFFIC ON I-84 EASTBOUND SHALL BE TEMPORARILY HALTED DURING CRANE PICKS REMOVING SPAN 2 GIRDERS DURING NIGHT TIME OPERATIONS.
4. INSTALL T.P.C.B.C. ALONG RIGHT (SOUTH) SHOULDER OF I-84 EASTBOUND.
5. INSTALL TEMPORARY EARTH RETAINING SYSTEM ALONG I-84 EASTBOUND ADJACENT TO PIER 1.
6. MODIFY EXISTING PIER 1.
7. REMOVE TEMPORARY EARTH RETAINING SYSTEM.

STAGE 1B:
1. SHIFT TRAFFIC ON I-84 EASTBOUND PER M.P.T. PLANS.
2. RELOCATE T.P.C.B.C. TO LEFT (NORTH) SHOULDER OF I-84 EASTBOUND.
3. INSTALL TEMPORARY EARTH RETAINING SYSTEM ALONG I-84 EASTBOUND ADJACENT TO PIER 2.
4. MODIFY EXISTING PIER 2.
5. REMOVE TEMPORARY EARTH RETAINING SYSTEM.
6. REMOVE T.P.C.B.C. AND RE-ESTABLISH EXISTING TRAFFIC PATTERN.

STAGE 1C: (STAGE 1C CAN OCCUR CONCURRENTLY WITH STAGE 1A & 1B)
1. MODIFY EXISTING ABUTMENTS AND WINGWALLS.
2. RECONSTRUCT APPROACH ROADWAY ON T.R. 831 TO NEW GRADES. SEE HIGHWAY PLANS.

STAGE 1D (NIGHT TIME WORK):
1. ERECT NEW GIRDERS AS SHOWN. I-84 EASTBOUND TRAFFIC TO BE HALTED DURING GIRDER PICKS.
2. RESUME TRAFFIC ON I-84 EASTBOUND AFTER GIRDERS ARE STABLE.

STAGE 1E:
1. ERECT NEW GIRDERS AS SHOWN. MAINTAIN TRAFFIC ON I-84 EASTBOUND.

STAGE 1F (NOT SHOWN):
1. CONSTRUCT CONCRETE DECK, PARAPETS, AND APPROACH SLABS.
2. ESTABLISH FINAL PAVING AND PAVEMENT MARKINGS ON T.R. 831.
3. ESTABLISH FINAL GRADING.
4. REOPEN T.R. 831.

NOTES:

1. ALL CONSTRUCTION ACTIVITIES SHALL BE PERFORMED TO PROVIDE FOR TRAFFIC OPERATIONS AS SPECIFIED IN THE SPECIAL PROVISIONS "MAINTENANCE AND PROTECTION" AND "PROSECUTION AND PROGRESS".
2. THE CONTRACTOR SHALL PREPARE AND SUBMIT WORKING DRAWINGS AND COMPUTATIONS FOR REVIEW, SIGNED AND SEALED BY A CONNECTICUT PROFESSIONAL ENGINEER, DEPICTING THE CONTRACTOR'S PROPOSED METHODS AND SEQUENCING OF THE WORK. THE DRAWINGS SHALL INCLUDE COMPLETE DETAILS OF THE PROPOSED METHODS, MATERIALS, AND EQUIPMENT.
3. THE CONTRACTOR SHALL FIELD VERIFY ALL GEOMETRY, DIMENSIONS, AND CONDITIONS PRIOR TO COMMENCING WORK.
4. GIRDERS SHALL NEITHER BE ERECTED NOR REMOVED OVER LIVE TRAFFIC ON I-84.
5. STAGES 1A & 1D SHALL UTILIZE SHORT DURATION FULL CLOSURE ON I-84 EASTBOUND DURING THE ALLOWABLE PERIODS.
6. SEE TRAFFIC SUBSET FOR ADDITIONAL MAINTENANCE AND PROTECTION OF TRAFFIC DETAILS.

REV.	DATE	REVISION DESCRIPTION	SHEET NO.
-	-	-	-
-	-	-	-
-	-	-	-
-	-	-	-
-	-	-	-
-	-	-	-

THE INFORMATION, INCLUDING ESTIMATED QUANTITIES OF WORK, SHOWN ON THESE SHEETS IS BASED ON LIMITED INVESTIGATIONS BY THE STATE AND IS IN NO WAY WARRANTED TO INDICATE THE CONDITIONS OF ACTUAL QUANTITIES OF WORK WHICH WILL BE REQUIRED.

Plotted Date: 11/18/2014

DESIGNER/DRAFTER: JRA
CHECKED BY: AML
SCALE AS NOTED

STATE OF CONNECTICUT
DEPARTMENT OF TRANSPORTATION

Filename: ...\S-30 CONSTRUCTION STAGING AND ERECTION DETAILS.dgn

SIGNATURE/BLOCK:

Stantec Consulting Services Inc.
2321 Whitney Ave.
Hamden, CT 06518

PROJECT TITLE:
REHABILITATION OF BRIDGE NO. 02376
I-84 T.R. 831 OVER I-84 EB

TOWN: EAST HARTFORD

DRAWING TITLE: CONSTRUCTION STAGING AND ERECTION DETAILS

PROJECT NO. 042-316
DRAWING NO. S-30
SHEET NO. 03.04.30

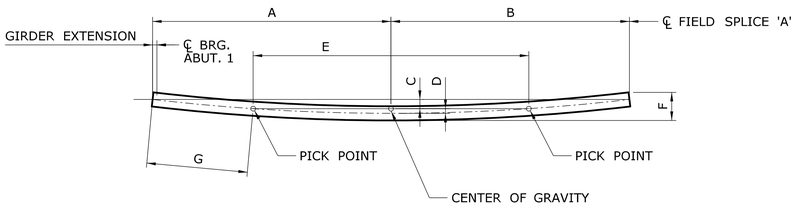

GIRDER PLAN - ABUTMENT 1 TO FIELD SPLICE 'A'

NOT TO SCALE

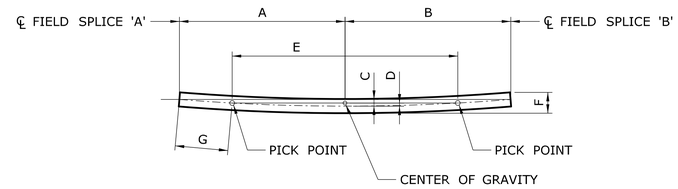

GIRDER PLAN - FIELD SPLICE 'A' TO FIELD SPLICE 'B'

NOT TO SCALE

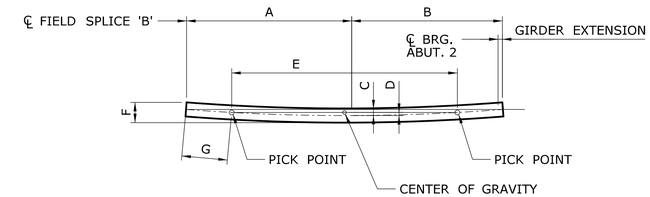

GIRDER PLAN - FIELD SPLICE 'B' TO ABUTMENT 2

NOT TO SCALE

GIRDER DATA - ABUTMENT 1 TO FIELD SPLICE 'A'

GIRDER NUMBER	GIRDER WEIGHT (K)	PLAN DIMENSIONS (FT)						
		A	B	C	D	E	F	G
G1	4.1	16.055	16.055	0.159	0.053	18.540	1.326	6.786
G2	4.2	16.363	16.363	0.167	0.056	18.895	1.333	6.916
G3	4.2	16.692	16.692	0.175	0.058	19.275	1.341	7.055
G4	4.3	17.046	17.046	0.184	0.061	19.684	1.350	7.205
G5	4.4	17.428	17.428	0.194	0.065	20.125	1.360	7.367

TABLE LEGEND

A = DISTANCE FROM THE GIRDER END AT ABUTMENT 1 TO THE CENTER OF GRAVITY OF THE GIRDER MEASURED ALONG A CHORD CONNECTING THE PIECE ENDS AT THE ℄ OF WEB.

B = DISTANCE FROM THE CENTER OF GRAVITY OF THE GIRDER TO THE GIRDER END AT THE FIELD SPLICE MEASURED ALONG A CHORD CONNECTING THE PIECE ENDS AT THE ℄ WEB.

C = SQUARE DISTANCE FROM A CHORD CONNECTING THE PIECE ENDS AT THE ℄ OF WEB TO THE CENTER OF GRAVITY OF THE GIRDER.

D = SQUARE DISTANCE FROM THE CENTER OF GRAVITY OF THE GIRDER TO THE ℄ OF WEB.

E = DISTANCE BETWEEN TOP FLANGE PICK POINTS THAT WILL HOLD THE BEAM PLUM WHEN LIFTED.

F = APPROXIMATE TOTAL SWEEP OF THE BEAM FROM EXTREME FLANGE TIP TO EXTREME FLANGE TIP (FOR SHIPPING)

G = DISTANCE FROM BEAM END TO FIRST PICK POINT MEASURED ALONG THE CURVE OF THE WEB.

GIRDER DATA - FIELD SPLICE 'A' TO FIELD SPLICE 'B'

GIRDER NUMBER	GIRDER WEIGHT (K)	PLAN DIMENSIONS (FT)						
		A	B	C	D	E	F	G
G1	12.6	45.193	45.193	1.261	0.420	52.200	2.426	19.111
G2	12.7	45.550	45.550	1.292	0.431	52.613	2.457	19.263
G3	12.8	45.928	45.928	1.324	0.442	53.051	2.490	19.423
G4	12.9	46.330	46.330	1.359	0.453	53.516	2.525	19.594
G5	13.0	46.758	46.758	1.397	0.466	54.011	2.563	19.775

TABLE LEGEND

A = DISTANCE FROM THE GIRDER END AT THE FIELD SPLICE TO THE CENTER OF GRAVITY OF THE GIRDER MEASURED ALONG A CHORD CONNECTING THE PIECE ENDS AT THE ℄ OF WEB.

B = DISTANCE FROM THE CENTER OF GRAVITY OF THE GIRDER TO THE GIRDER END AT THE FIELD SPLICE MEASURED ALONG A CHORD CONNECTING THE PIECE ENDS AT THE ℄ WEB.

C = SQUARE DISTANCE FROM A CHORD CONNECTING THE PIECE ENDS AT THE ℄ OF WEB TO THE CENTER OF GRAVITY OF THE GIRDER.

D = SQUARE DISTANCE FROM THE CENTER OF GRAVITY OF THE GIRDER TO THE ℄ OF WEB.

E = DISTANCE BETWEEN TOP FLANGE PICK POINTS THAT WILL HOLD THE BEAM PLUM WHEN LIFTED.

F = APPROXIMATE TOTAL SWEEP OF THE BEAM FROM EXTREME FLANGE TIP TO EXTREME FLANGE TIP (FOR SHIPPING)

G = DISTANCE FROM BEAM END TO FIRST PICK POINT MEASURED ALONG THE CURVE OF THE WEB.

GIRDER DATA - FIELD SPLICE 'B' TO ABUTMENT 2

GIRDER NUMBER	GIRDER WEIGHT (K)	PLAN DIMENSIONS (FT)						
		A	B	C	D	E	F	G
G1	3.5	15.141	15.141	0.141	0.047	17.484	1.308	6.400
G2	3.5	15.311	15.311	0.146	0.049	17.681	1.312	6.472
G3	3.5	15.490	15.490	0.151	0.050	17.887	1.317	6.547
G4	3.6	15.678	15.678	0.156	0.052	18.104	1.322	6.627
G5	3.6	15.876	15.876	0.161	0.054	18.333	1.327	6.711

TABLE LEGEND

A = DISTANCE FORM THE GIRDER END AT THE FIELD SPLICE TO THE CENTER OF GRAVITY OF THE GIRDER MEASURED ALONG A CHORD CONNECTING THE BEAM ENDS AT THE ℄ OF WEB.

B = DISTANCE FROM THE CENTER OF GRAVITY OF THE GIRDER TO THE GIRDER END AT ABUTMENT 2 MEASURED ALONG A CHORD CONNECTING THE BEAMS ENDS AT THE ℄ OF WEB.

C = SQUARE DISTANCE FROM A CHORD CONNECTING THE PIECE ENDS AT THE ℄ OF WEB TO THE CENTER OF GRAVITY OF THE GIRDER.

D = SQUARE DISTANCE FROM THE CENTER OF GRAVITY OF THE GIRDER TO THE ℄ OF WEB.

E = DISTANCE BETWEEN TOP FLANGE PICK POINTS THAT WILL HOLD THE BEAM PLUM WHEN LIFTED.

F = APPROXIMATE TOTAL SWEEP OF THE BEAM FROM EXTREME FLANGE TIP TO EXTREME FLANGE TIP (FOR SHIPPING)

G = DISTANCE FROM BEAM END TO FIRST PICK POINT MEASURED ALONG THE CURVE OF THE WEB.

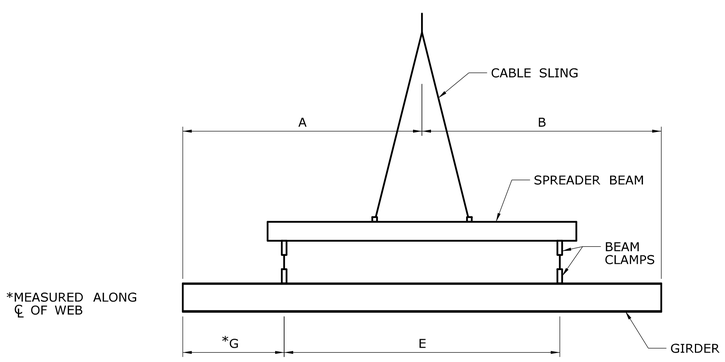

TYPICAL ELEVATION - GIRDER LIFTING HARDWARE

NOT TO SCALE

BEAM DATA NOTES:

1. THE INFORMATION SHOWN IS APPROXIMATE. ACTUAL GIRDER WEIGHTS, DISTRIBUTION OF GIRDER WEIGHTS AND LIFTING DIMENSIONS MAY VARY FROM THESE VALUES DUE TO SEVERAL FACTORS INCLUDING TOLERANCES. THE VALUES GIVEN ARE FOR INFORMATION ONLY. THE CONTRACTOR SHALL PROVIDE THIS INFORMATION AS PART OF THE DETAILED ERECTION CALCULATIONS AND PLANS, AND SHALL BE SUBMITTED TO THE ENGINEER FOR REVIEW.
2. GIRDER WEIGHTS ARE BASED ON THE FLANGE AND WEB PLATE SIZES PLUS 5 PERCENT FOR CONNECTION PLATES AND BEARING STIFFENERS.
3. FOR THE DATA TABLES SHOWN ON THIS SHEET, THE GIRDER ENDS AT THE ABUTMENTS ARE DEFINED AS THE ℄ OF WEB AT THE END OF THE BEAM, INCLUDING THE BEAM EXTENSION BEYOND THE ℄ OF BEARING. THE GIRDER END EXTENSIONS WERE INCLUDED IN THE TABULATED VALUES. THE GIRDER ENDS AT THE FIELD SPLICES ARE DEFINED AS THE ℄ OF WEB AT THE ℄ OF THE FIELD SPLICE.
4. LIFTING HARDWARE SHOWN IN THE TYPICAL ELEVATION IS CONCEPTUAL. ACTUAL LIFTING HARDWARE MAY VARY AND SHALL BE DETERMINED BY THE CONTRACTOR.

REV.	DATE	REVISION DESCRIPTION	SHEET NO.

THE INFORMATION, INCLUDING ESTIMATED QUANTITIES OF WORK, SHOWN ON THESE SHEETS IS BASED ON LIMITED INVESTIGATIONS BY THE STATE AND IS IN NO WAY WARRANTED TO INDICATE THE CONDITIONS OF ACTUAL QUANTITIES OF WORK WHICH WILL BE REQUIRED.

Plotted Date: 11/20/2014

DESIGNER/DRAFTER: CRH

CHECKED BY: SSY

SCALE AS NOTED

STATE OF CONNECTICUT
DEPARTMENT OF TRANSPORTATION

Filename: ...\S-31 BEAM ERECTION DATA.dgn

SIGNATURE/BLOCK:

Stantec Consulting Services Inc.
2321 Whitney Ave.
Hamden, CT 06518

PROJECT TITLE:
REHABILITATION OF BRIDGE NO. 02376
I-84 T.R. 831 OVER I-84 EB

TOWN: EAST HARTFORD

DRAWING TITLE: BEAM ERECTION DATA

PROJECT NO. 042-316

DRAWING NO. S-31

SHEET NO. 03.04.31

PUB. ROAD DIV. NO.	STATE	TOWN	FED. AID PROJ. NO.	PROJ. NO.	YEAR	ROUTE NO.	SHEET NO.	TOTAL SHEETS
1	CONN.	EAST HARTFORD	I-84 4(43)63	42-135	1962	I-84	39	140

FORM NO. ENG. 18 ED 11-52

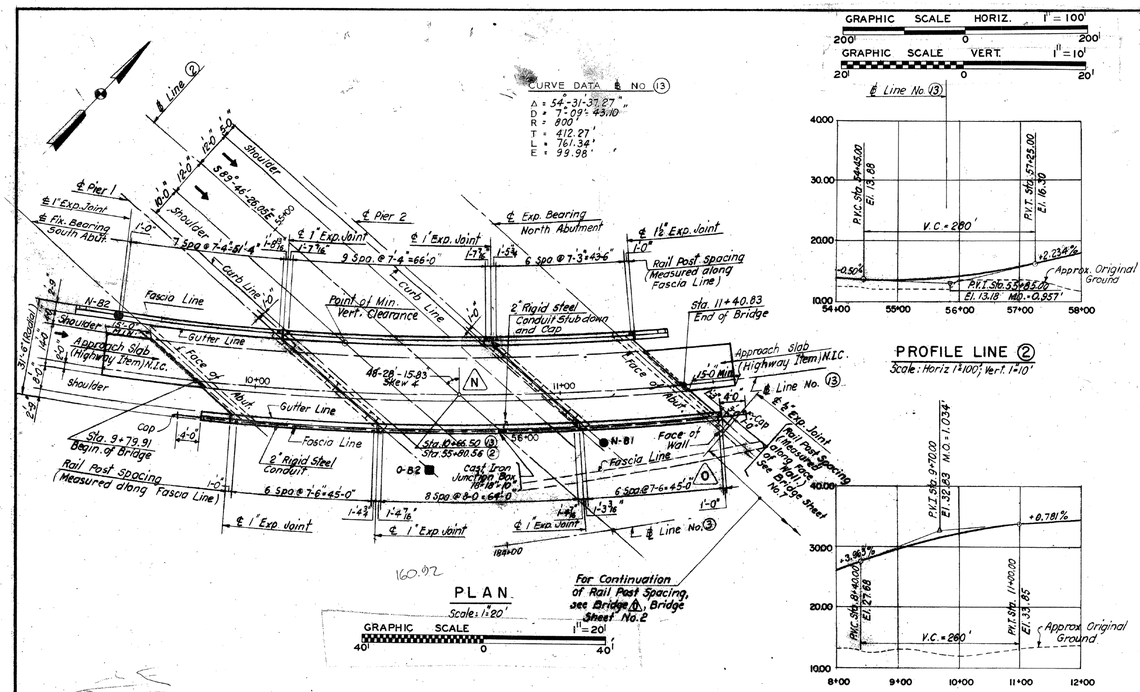

GENERAL NOTES

SPECIFICATIONS: CONNECTICUT STATE HIGHWAY DEPARTMENT FORM 808 (JAN. 1955) AND SPECIAL PROVISIONS.
DESIGN SPECIFICATIONS: STANDARD SPECIFICATIONS FOR HIGHWAY BRIDGES (AASHO 1957) EXCEPT AS MODIFIED BY BUREAU OF PUBLIC ROAD "POLICY ON INTERSTATE SYSTEM PROJECTS" (AUGUST 1956) AND AS SUPPLEMENTED BY THE CONNECTICUT STATE HIGHWAY DEPARTMENT BRIDGE MANUAL JULY 1960
LIVE LOAD: H-20-S16-44 ALTERNATE 24000# DUAL AXLE AT 4'-0" O.C. SLAB DESIGN AS PER TENTATIVE AASHO SPECIFICATION T-8-(59).
FUTURE PAVING ALLOWANCE: 25P.S.F.
COMPOSITE CONSTRUCTION: NO TEMPORARY INTERMEDIATE SUPPORTS SHALL BE USED DURING CONSTRUCTION. SUPERIMPOSED LOADS SHALL BE PLACED WHEN DIRECTED BY THE ENGINEER, BUT NOT LESS THAN 10 DAYS AFTER THE SLAB HAS BEEN POURED.
CLASS "A" CONCRETE: CLASS "A" CONCRETE SHALL BE USED THROUGHOUT. SEE SPECIAL PROVISIONS.
DEFORMED STEEL BARS: FOR GRADES OF DEFORMED STEEL BARS, SEE SPECIAL PROVISIONS.
EXPOSED EDGES: EXPOSED EDGES SHALL BE BEVELED 1" x 1" UNLESS DIMENSIONED OTHERWISE.
STRUCTURAL STEEL: ALL MATERIAL FOR NON-PLATED ROLLED BEAMS SHALL CONFORM TO A.S.T.M. A-7. ALL MATERIAL FOR PLATED ROLLED BEAMS AND SOLE PLATES SHALL CONFORM TO A.S.T.M. A-373. Masonry Plates shall conform to ASTM. A-242 (modified) steel. See Special Provision "For Structural Steel." ALL OTHER STEEL SHALL CONFORM TO A.S.T.M. A-7 UNLESS NOTED OTHERWISE.
PAINTING: FOR SHOP AND FIELD PAINTING OF STRUCTURAL STEEL AND METAL BRIDGE RAIL. SEE SPECIAL PROVISIONS.
JOINT SEAL: JOINT SEAL SHALL BE INCLUDED IN THE ITEM FOR CLASS "A" CONCRETE. SEE SPECIAL PROVISIONS.
FELT: THE COST OF FURNISHING AND PLACING 2 LAYERS OF 15# ROOFING FELT ON TOP OF BACKWALLS SHALL BE INCLUDED IN THE ITEM FOR CLASS "A" CONCRETE.
PARAFFIN: THE COST OF FURNISHING AND APPLYING PARAFFIN TO THE PARAPET JOINTS SHALL BE INCLUDED IN THE ITEM FOR CLASS "A" CONCRETE.
SPREAD FOOTINGS:
DESIGN SOIL PRESSURES SHOWN ON SHEETS NO. 5, 6 AND 7.
WELDING: FOR INSPECTION OF WELDING, SEE SPECIAL PROVISIONS.
N.I.C. MEANS NOT INCLUDED IN CONTRACT.
REINFORCING BARS TO HAVE 2" COVER EXCEPT WHERE SHOWN OTHERWISE.
VERTICAL CLEARANCE SHALL BE ESTABLISHED AT THE TIME OF SUBSTRUCTURE CONSTRUCTION TO COMPENSATE FOR FUTURE SETTLEMENT. THIS SHALL BE DONE BY RAISING THE ELEVATION OF THE BOTTOM OF FOOTINGS BY AN AMOUNT EQUAL TO THE ANTICIPATED SUBSEQUENT SETTLEMENT, AS DIRECTED BY THE ENGINEER.

ESTIMATE OF QUANTITIES

ITEM	UNIT	QUANTITY
Earth Excavation	c.y.	7000
Structure Excavation (complete)	c.y.	315
Soil Loading Test	ea.	1
Class "A" Concrete	c.y.	600
½" Preformed Expansion Joint Filler for Bridges	s.f.	110
1" Preformed Expansion Joint Filler for Bridges	s.f.	25
1½" Preformed Expansion Joint Filler for Bridges	s.f.	10
Shear Connectors	l.f.	758
Deformed Steel Bars	lb.	96000
Structural Steel	lb.	142000
Dampproofing	s.y.	115
Metal Bridge Rail	l.f.	335
Pervious Structure Backfill	c.y.	255
Compacted Gravel Fill	c.y.	*
Neoprene Plate for Bridge Expansion Joint	l.f.	95
6"x9½" Granite Stone Curbing for Bridges	l.f.	370
2" Rigid Steel Conduit in Structure	l.f.	190
Cast Iron Junction Box (18"x18"x10")	ea.	1
Crushed Stone for Slope Protection	ton	135

NOTES:
All quantities shown above are for Bridge 1 (up to Expansion Joint between Bridge 1 & Bridge 0).
* For "Compacted Gravel Fill" quantity, see Bridge 0.

CONCRETE DISTRIBUTION

SUPERSTRUCTURE	200 c.y.
SUBSTRUCTURE	205 c.y.
FOOTINGS	195 c.y.
TOTAL	600 c.y.

W36x160
⅜" cover PL
22" TOTAL
DECK 7½" 8"
36.75"
NOW
22" 8" 30
8"x15"
36.75" + 7.75 DECK
44"
Spread to Slope Ratio = 66'/12'

REVISIONS

NO.	DATE	DESCRIPTION

THE INFORMATION, INCLUDING ESTIMATED QUANTITIES OF WORK, SHOWN ON THESE SHEETS IS BASED ON LIMITED INVESTIGATIONS BY THE STATE AND IS IN NO WAY WARRANTED TO INDICATE THE TRUE CONDITIONS OR ACTUAL QUANTITIES OR DISTRIBUTION OF QUANTITIES OF WORK WHICH WILL BE REQUIRED.

CONNECTICUT
STATE HIGHWAY DEPARTMENT
TOWN OF EAST HARTFORD
INTERSTATE ROUTE NO. 84
BRIDGE N-13
OVER LINE 2
GENERAL PLAN & ELEVATION

DESIGNED BY E.L. PAVLO, CONSULTING ENGINEER
SCALES AS SHOWN
MADE BY E.W. DATE 5-8-61
CHECKED BY H.M.M. DATE 6-14-61
APPROVED [signature] DATE 6-15-61
PROJECT NO. 42-135
BRIDGE SHEET NO. 1 of 11

39

42 135

M 831 02

FOR INFORMATION ONLY
NOT TO SCALE

REV.	DATE	REVISION DESCRIPTION	SHEET NO.
-	-	-	-
-	-	-	-
-	-	-	-
-	-	-	-
-	-	-	-
-	-	-	-

THE INFORMATION, INCLUDING ESTIMATED QUANTITIES OF WORK, SHOWN ON THESE SHEETS IS BASED ON LIMITED INVESTIGATIONS BY THE STATE AND IS IN NO WAY WARRANTED TO INDICATE THE CONDITIONS OF ACTUAL QUANTITIES OF WORK WHICH WILL BE REQUIRED.

Plotted Date: 11/18/2014

DESIGNER/DRAFTER: CRH
CHECKED BY: SSY

STATE OF CONNECTICUT
DEPARTMENT OF TRANSPORTATION

Filename: ...\S-32 ORIGINAL BRIDGE DRAWING - 1.dgn

SIGNATURE/BLOCK:
Stantec Consulting Services Inc.
2321 Whitney Ave.
Hamden, CT 06518

PROJECT TITLE:
REHABILITATION OF BRIDGE NO. 02376
I-84 T.R. 831 OVER I-84 EB

TOWN: EAST HARTFORD

DRAWING TITLE: ORIGINAL BRIDGE DRAWING - 1

PROJECT NO. 042-316
DRAWING NO. S-32
SHEET NO. 03.04.32

FORM NO. ENG. 15 ED 11-55

PUB. ROAD DIV. NO.	STATE	TOWN	FED. AID PROJ. NO.	PROJ. NO.	YEAR	ROUTE NO.	SHEET NO.	TOTAL SHEETS
1	CONN.	EAST HARTFORD	I-84 4(43)63	42-135	1962	I-84	40	140

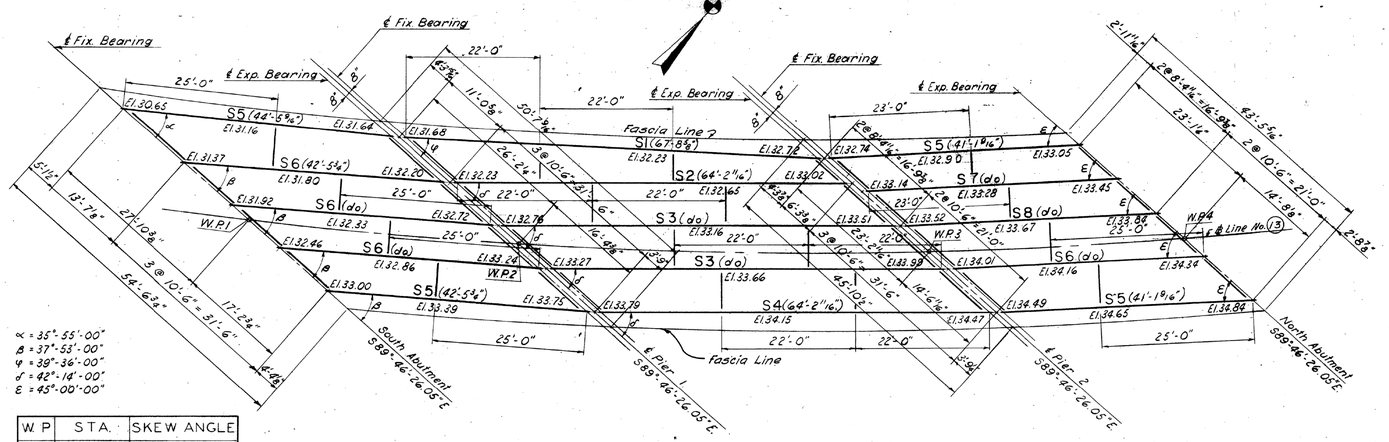

W.P.	STA.	SKEW ANGLE
1	9+83.86	54°-23'-22.88"
2	10+28.12	51°-13'-12.61"
3	10+95.69	46°-22'-48.72"
4	11+37.68	43°-22'-23.07"

FRAMING PLAN

Scale: 1" = 10'

GRAPHIC SCALE 1" = 10'

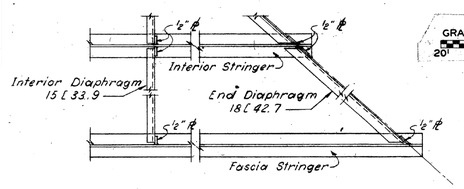

DIAPHRAGM CONNECTION DETAIL

Not to Scale

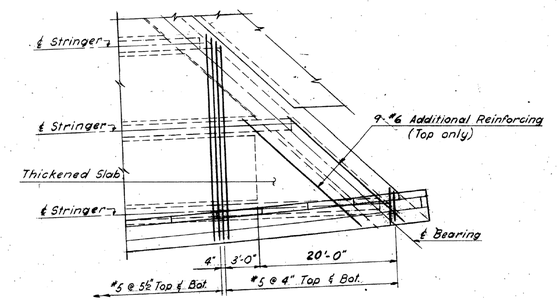

SLAB REINFORCEMENT AT ACUTE CORNERS

No scale

NOTES: Longitudinal Reinforcement not shown. Detail shown is at Abutment; similar detail at Piers.

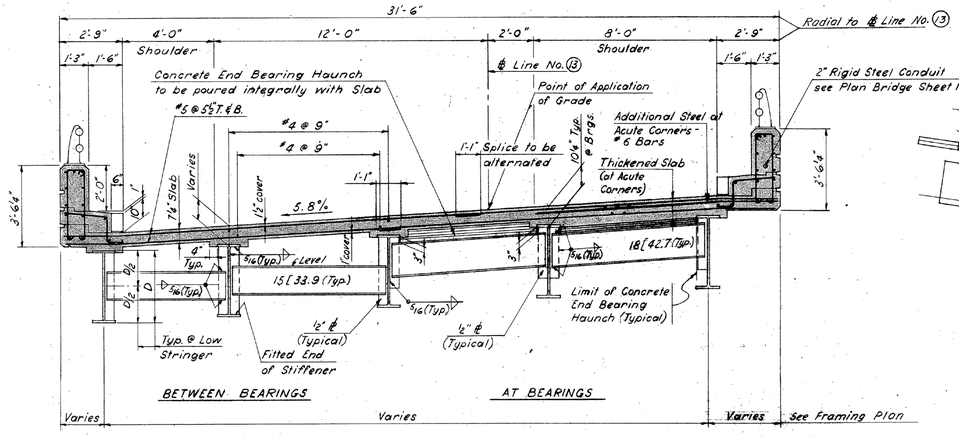

NOTES:
Shear Connectors not shown.
Main reinforcement to be placed perpendicular to stringers.

CROSS SECTION

Scale: 3/8" = 1'-0"

GRAPHIC SCALE 3/8" = 1'

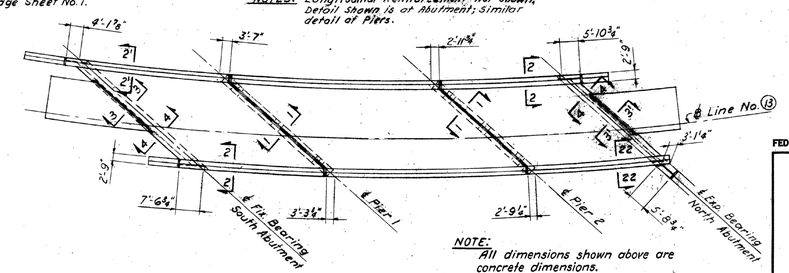

NOTE: All dimensions shown above are concrete dimensions.

SLAB PLAN

Scale: 1" = 20'

GRAPHIC SCALE 1" = 20'

STRINGER SCHEDULE

MARK	STRINGER SIZE	COVER PLATE SIZE	COVER PLATE LENGTH	SHEAR CONNECTORS SPIRAL PITCH A1	A2	A3	A4	STUD PITCH B1	B2	B3	B4	DEAD LOAD DEFLECTION STRUCT. STEEL	SLAB	FUTURE WEARING SURFACE	SAFETY CURB & PARAPET	TOTAL	VERTICAL CURVE	TOTAL CAMBER REQUIRED
S1	36WF160	10"x¾"	46'-0"	*7"	4"	5½"	7"	5½"	6½"	8½"	11½"	5/16"	¾"	⅛"	1/4"	1⅞"	⅜"	1 9/16"
S2	36WF160	10"x¾"	43'-0"	*6"	*7"	8"	6½"	4½"	5½"	7½"	10"	1/4"	11/16"	⅛"	3/16"	1/4"	5/16"	1 9/16"
S3	36WF160	10"x1"	45'-6"	*5½"	6½"	4½"	6"	4"	5"	7"	9½"	1/4"	¾"	1/16"	3/16"	1/4"	5/16"	1 9/16"
S4	36WF160	10"x⅞"	44'-6"	*5½"	*7"	4½"	6"	4½"	5½"	7"	10"	1/4"	⅝"	⅛"	3/16"	1⅝"	1/4"	1 9/16"
S5	36WF150	—	—	*6½"	4"	-	6½"	5"	6½"	-	10"	1/16"	3/16"	—	1/16"	5/16"	3/16"	1/2"
S6	30WF132	—	—	*5"	*7"	-	5½"	4"	5½"	-	8½"	1/16"	5/16"	1/16"	1/16"	1/2"	1/8"	5/8"
S7	30WF108	—	—	*5½"	4"	-	6½"	4½"	6"	-	10"	1/16"	5/16"	1/16"	1/16"	1/2"	-	1/2"
S8	30WF116	—	—	*5"	7½"	-	6"	4"	6"	-	9"	1/16"	5/16"	1/16"	1/16"	1/2"	-	1/2"

* Denotes double spiral.

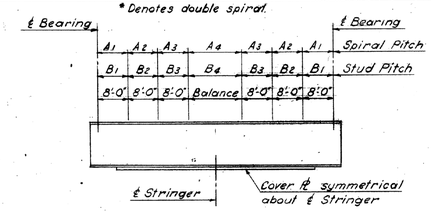

STRINGER ELEVATION

Not to Scale

NOTES:
For General Plan & Elevation, see Bridge Sheet No. 1.
For General Notes, see Bridge Sheet No. 1.
Elevations shown in Framing Plan are top of pavement elevations over stringers at ℄ Bearing or mid-span.
When necessary cut top flange of stringers to clear Expansion Joint at Piers.
Stringer spacings at Piers are measured along ℄ of Pier between ℄ of stringers extended.
For Sections 1-1, 3-3, 3'-3' & 4-4, see Bridge Sheet No. 3.
For Sections 2-2 & 2'-2', see Bridge Sheet No. 4.
For Section 22-22, see Bridge Sheet No. 8.
For additional details, see Bridge Sheet Nos. 3 & 4.
Lengths of stringers shown in Framing Plan are measured from ℄ to ℄ Bearings.
For all none welded connections use ⅞" ø rivets or ⅞" ø H.S. Bolts.

FED. AID PROJ. NO. I-84-4(43)63

CONNECTICUT
STATE HIGHWAY DEPARTMENT
TOWN OF EAST HARTFORD
INTERSTATE ROUTE NO. 84
BRIDGE N-13
OVER LINE 2
FRAMING PLAN & CROSS SECTION

DESIGNED BY E.L. PAVLO CONSULTING ENGINEER
SCALES As Shown
MADE BY D.G.S. DATE 5-19-61
CHECKED BY H.M.M. DATE 6-14-61
APPROVED DATE 6-16-61
PROJECT NO. 42-135
BRIDGE SHEET NO. 2 OF 11

REVISIONS

NO.	DATE	DESCRIPTION

42 135 M 271 02 40

FOR INFORMATION ONLY
NOT TO SCALE

REV.	DATE	REVISION DESCRIPTION	SHEET NO.
-	-	-	-
-	-	-	-
-	-	-	-
-	-	-	-
-	-	-	-
-	-	-	-

THE INFORMATION, INCLUDING ESTIMATED QUANTITIES OF WORK, SHOWN ON THESE SHEETS IS BASED ON LIMITED INVESTIGATIONS BY THE STATE AND IS IN NO WAY WARRANTED TO INDICATE THE CONDITIONS OF ACTUAL QUANTITIES OF WORK WHICH WILL BE REQUIRED.

Plotted Date: 11/18/2014

DESIGNER/DRAFTER: CRH
CHECKED BY: SSY

STATE OF CONNECTICUT
DEPARTMENT OF TRANSPORTATION

Filename: ...\S-33 ORIGINAL BRIDGE DRAWING - 2.dgn

SIGNATURE/BLOCK:

Stantec Consulting Services Inc.
2321 Whitney Ave.
Hamden, CT 06518

PROJECT TITLE:
REHABILITATION OF BRIDGE NO. 02376
I-84 T.R. 831 OVER I-84 EB

TOWN: EAST HARTFORD

DRAWING TITLE: ORIGINAL BRIDGE DRAWING - 2

PROJECT NO. 042-316
DRAWING NO. S-33
SHEET NO. 03.04.33

FORM NO. ENG. 18 ED 11-62

PUB. ROAD DIV. NO.	STATE	TOWN	FED. AID PROJ. NO.	PROJ. NO.	YEAR	ROUTE NO.	SHEET NO.	TOTAL SHEETS
1	CONN.	EAST HARTFORD	I-84 (43)63	42-135	1962	I-84	41	140

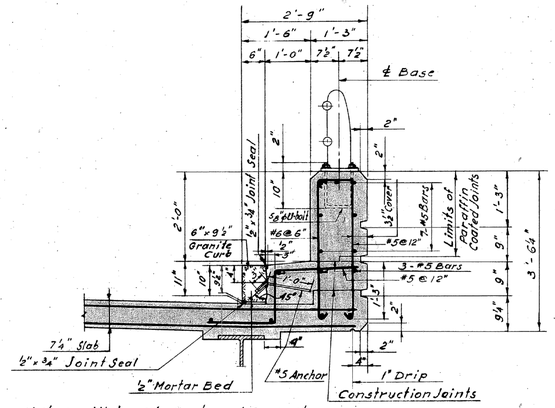

Note: All bars in Curb and Parapet to have 2" cover except where noted otherwise.

SAFETY CURB AND PARAPET DETAIL

Scale: ¾"=1'-0"

GRAPHIC SCALE 3/4"=1'

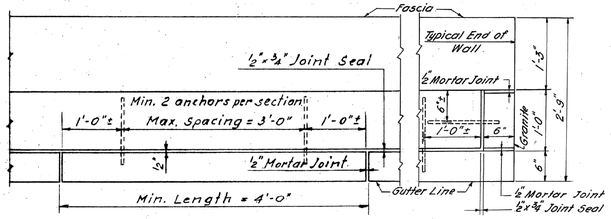

PLAN OF GRANITE CURB

Scale: 1"=1'-0"

GRAPHIC SCALE 1"=1'

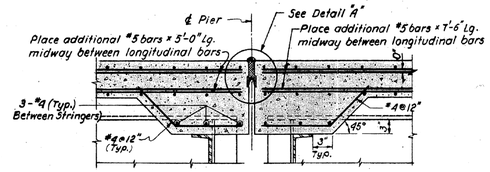

SECTION 1-1

Scale: 1"=1'-0"

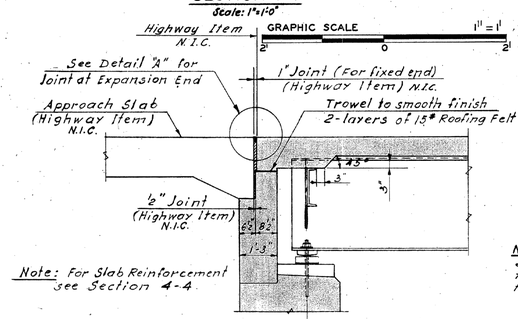

Note: For Slab Reinforcement see Section 4-4.

SECTION 3-3

(Section 3'-3' similar except for Detail "A")

Scale: ½"=1'-0"

GRAPHIC SCALE 1/2"=1'

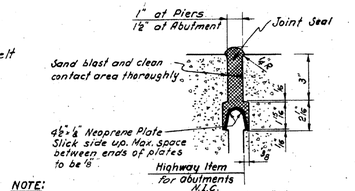

NOTE:
See Bridge Sheet No. 4 for "Typical Limits for Joint Seal."

DETAIL "A"

Scale: 3"=1'-0"

GRAPHIC SCALE 3"=1'

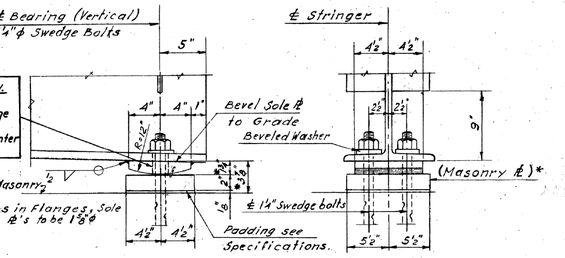

SIDE ELEVATION END ELEVATION

FIXED BEARING SHOE DETAILS (ALL STRINGERS)

EXPANSION BEARING SHOE DETAILS (S5 TO S8 INCL.)

Scale: 1½"=1'-0"

NOTES:* These dimensions vary for Stringers S1 & S4 at fix. bearing. S5, S6 etc. are Stringer designations.

GRAPHIC SCALE 1 1/2"=1'

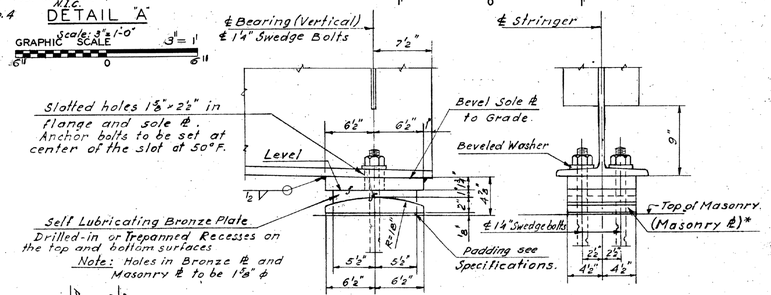

SIDE ELEVATION END ELEVATION

EXPANSION BEARING SHOE DETAILS (S1 TO S4 INCL.)

Scale: 1½"=1'-0"

NOTE: S1, S2 etc. are Stringer designations.

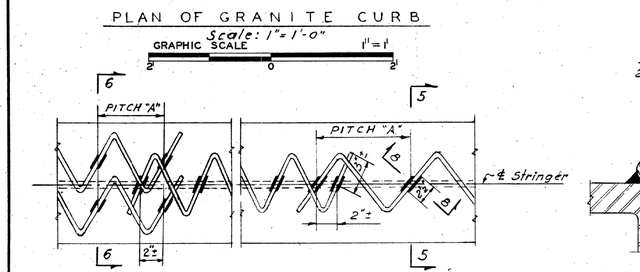

PLAN-DOUBLE SPIRAL Not to Scale.

PLAN-SINGLE SPIRAL Not to Scale.

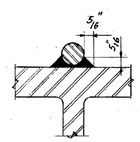

SECTION 8-8 Not to Scale.

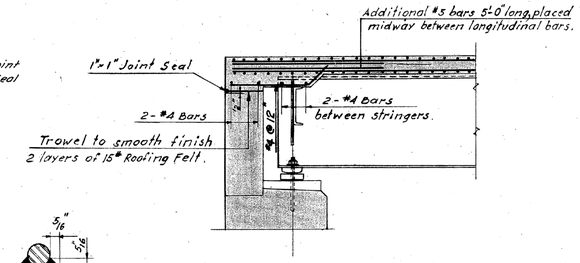

SECTION 4-4

Scale: ½"=1'-0"

GRAPHIC SCALE 1/2"=1'

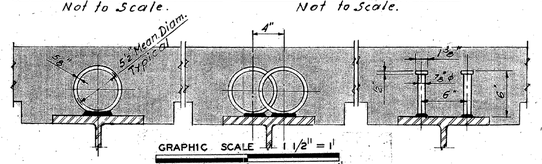

SECTION 5-5 Scale: 1½"=1'-0" Estimated Wt. of Spiral Bars = 4300 lbs.

SECTION 6-6 Scale: 1½"=1'-0"

SECTION 7-7 Scale: 1½"=1'-0" Estimated No. of 6" Studs = 3,150 lbs.

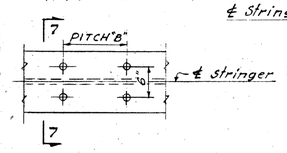

PLAN-WELDED STUDS Not to Scale.

SHEAR CONNECTOR DETAILS.

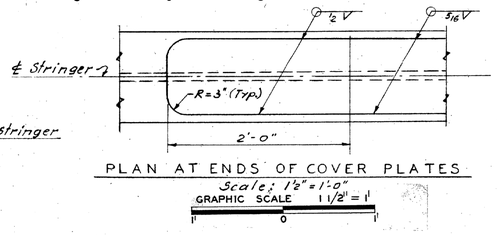

PLAN AT ENDS OF COVER PLATES

Scale: 1½"=1'-0"

GRAPHIC SCALE 1 1/2"=1'

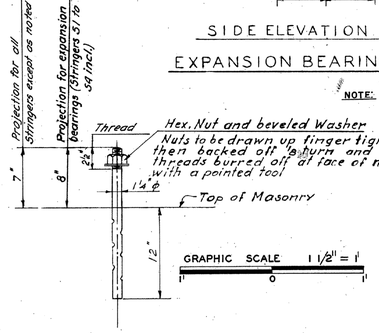

SWEDGE ANCHOR BOLT DETAIL

Scale: 1½"=1'-0"

GRAPHIC SCALE 1 1/2"=1'

NOTE:
For General Plan & Elevation, see Bridge Sheet No. 1
For General Notes, see Bridge Sheet No. 1
For Location of Sections 1-1, 3-3, 3'-3' & 4-4, see Slab Plan Bridge Sheet No. 2.
*Shall conform to ASTM A-242 (modified) steel. See Special Provision for "Structural Steel."

FED. AID PROJ. NO. I-84-4(43)63

CONNECTICUT
STATE HIGHWAY DEPARTMENT
TOWN OF EAST HARTFORD
INTERSTATE ROUTE NO. 84
BRIDGE N-13
OVER LINE 2
DETAILS I

REVISIONS		
NO.	DATE	DESCRIPTION

DESIGNED BY E. L. PAVLO, CONSULTING ENGINEER
SCALES As shown
MADE BY M.S. & S.G. DATE 5-22-61
CHECKED BY S.H.M. & H.M.M. DATE 5-23-61
APPROVED DATE 6-18-61
PROJECT NO. 42-135
BRIDGE SHEET NO. 3 OF 11

THE INFORMATION, INCLUDING ESTIMATED QUANTITIES OF WORK, SHOWN ON THESE SHEETS IS BASED ON LIMITED INVESTIGATIONS BY THE STATE AND IS IN NO WAY WARRANTED TO INDICATE THE TRUE CONDITIONS OR ACTUAL QUANTITIES OR DISTRIBUTION OF QUANTITIES OF WORK WHICH WILL BE REQUIRED.

M271 02

42 135

41

FOR INFORMATION ONLY
NOT TO SCALE

REV.	DATE	REVISION DESCRIPTION	SHEET NO.
-	-	-	-
-	-	-	-
-	-	-	-
-	-	-	-
-	-	-	-
-	-	-	-

THE INFORMATION, INCLUDING ESTIMATED QUANTITIES OF WORK, SHOWN ON THESE SHEETS IS BASED ON LIMITED INVESTIGATIONS BY THE STATE AND IS IN NO WAY WARRANTED TO INDICATE THE CONDITIONS OF ACTUAL QUANTITIES OF WORK WHICH WILL BE REQUIRED.

Plotted Date: 11/18/2014

DESIGNER/DRAFTER: CRH
CHECKED BY: SSY

STATE OF CONNECTICUT
DEPARTMENT OF TRANSPORTATION

Filename: ...\S-34 ORIGINAL BRIDGE DRAWING - 3.dgn

SIGNATURE/BLOCK:
Stantec Consulting Services Inc.
2321 Whitney Ave.
Hamden, CT 06518

PROJECT TITLE:
REHABILITATION OF BRIDGE NO. 02376
I-84 T.R. 831 OVER I-84 EB

TOWN: EAST HARTFORD

DRAWING TITLE: ORIGINAL BRIDGE DRAWING - 3

PROJECT NO. 042-316
DRAWING NO. S-34
SHEET NO. 03.04.34

FORM NO. ENG. 19 ED 11-88

FUN. ROAD DIV. NO.	STATE	TOWN	FED. AID PROJ. NO.	PROJ. NO.	YEAR	ROUTE NO.	SHEET NO.	TOTAL SHEETS
1	CONN.	EAST HARTFORD	I-84 & I43163	42-135	1962	I-84	42	140

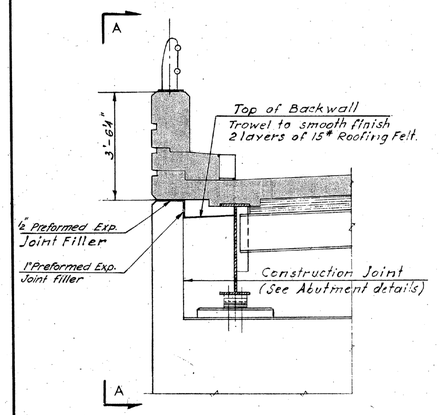

SECTION 2-2
(Section 2'-2' similar, opposite hand)
Scale: ½" = 1'-0"

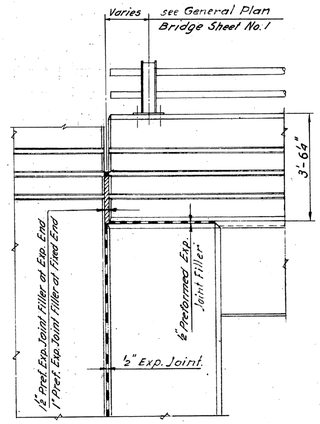

ELEVATION A-A
Scale: ½" = 1'-0"

GRAPHIC SCALE 1/2" = 1' (3' 0 3')

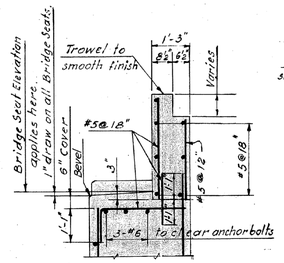

SECTION 9-9
Scale: ½" = 1'-0"

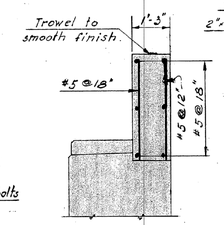

Note: For details not shown see Section 9-9

SECTION 10-10
Scale: ½" = 1'-0"

GRAPHIC SCALE 1/2" = 1' (3' 0 3')

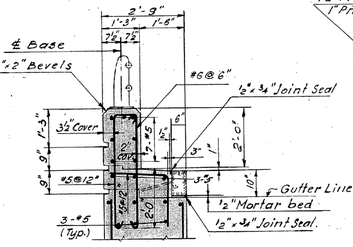

Notes:
For Granite Curb details see Bridge Sheet No. 3
For Rail Post Spacing and details, see Bridge Sheet Nos. 1 & 10 respectively.

WINGWALL DETAIL
Scale: ½" = 1'-0"

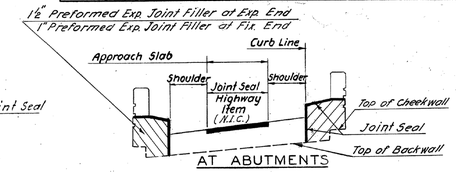

AT ABUTMENTS

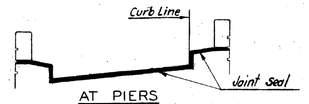

AT PIERS

TYPICAL LIMITS FOR JOINT SEAL
Not to scale

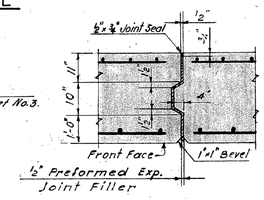

EXPANSION JOINT
Not to Scale.

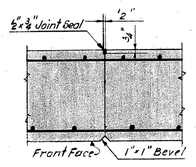

CONSTRUCTION JOINT
Not to Scale.

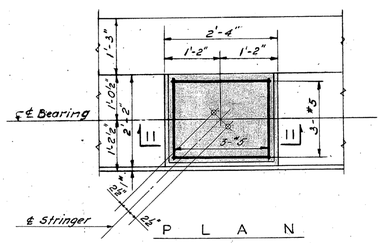

PLAN

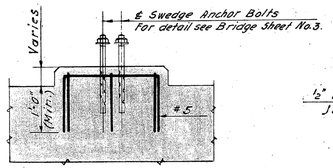

SECTION 11-11

ABUTMENT PAD DETAIL
Scale: ¾" = 1'-0"
GRAPHIC SCALE 3/4" = 1' (2' 0 2')

Joint Notes:
Abutments: Keys to extend from top of footing to within 1'-0" of the bridge seat. (In backwall no key required).
Joint Seal to extend from top of footing to top of backwall except as shown above.

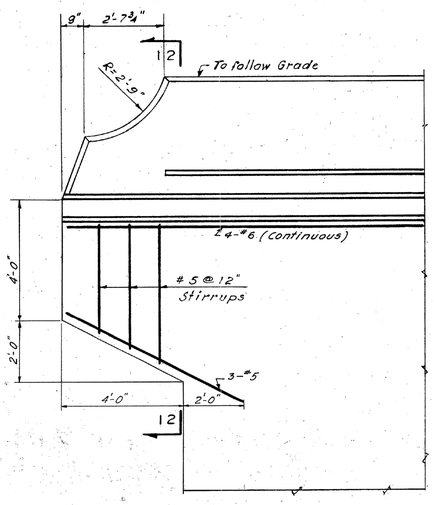

END POST DETAIL
Scale: ½" = 1'-0"

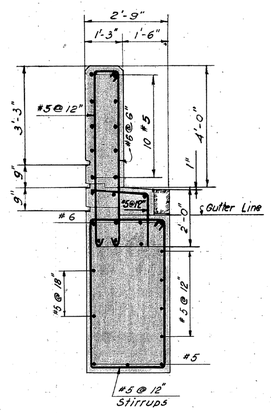

Note: For additional details see Wingwall Detail

SECTION 12-12
Scale: ½" = 1'-0"

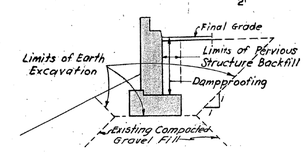

BACKFILL DETAIL OF WINGWALL
No Scale

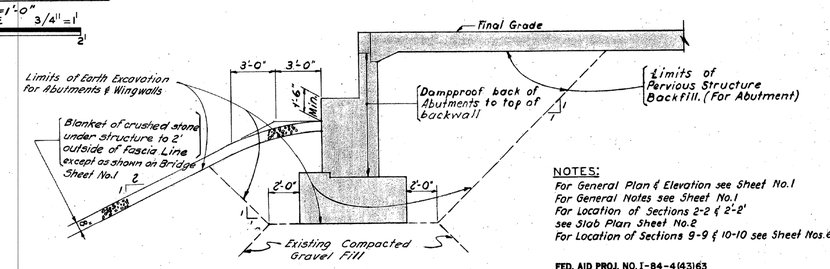

EXCAVATION AND BACKFILL DETAIL
No Scale

NOTES:
For General Plan & Elevation see Sheet No. 1
For General Notes see Sheet No. 1
For Location of Sections 2-2 & 2'-2' see Slab Plan Sheet No. 2
For Location of Sections 9-9 & 10-10 see Sheet Nos. 6 & 7

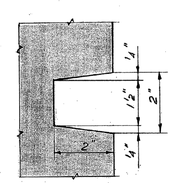

RUSTICATION DETAIL
Scale: 6" = 1'-0"
GRAPHIC SCALE 6" = 1' (1' 0 1')

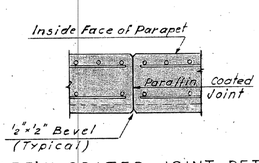

PARAFFIN COATED JOINT DETAIL
Scale: ¾" = 1'-0"
GRAPHIC SCALE 3/4" = 1' (2' 0 2')

FED. AID PROJ. NO. I-84-4(43)63

CONNECTICUT
STATE HIGHWAY DEPARTMENT
TOWN OF EAST HARTFORD
INTERSTATE ROUTE NO. 84
BRIDGE N-13
OVER LINE 2
DETAILS II

REVISIONS		
NO.	DATE	DESCRIPTION

DESIGNED BY E.L. PAVLO, CONSULTING ENGINEER
SCALES As shown
MADE BY M.S. & S.G. DATE 5-25-61
CHECKED BY S.H.M. & H.M.M. DATE 5-24-61
APPROVED [signature] DATE 6-15-61
PROJECT NO. 42-135
BRIDGE SHEET NO. 4 OF 11

42 135 M 271 02 42

FOR INFORMATION ONLY
NOT TO SCALE

REV.	DATE	REVISION DESCRIPTION	SHEET NO.
-	-	-	-
-	-	-	-
-	-	-	-
-	-	-	-
-	-	-	-
-	-	-	-

THE INFORMATION, INCLUDING ESTIMATED QUANTITIES OF WORK, SHOWN ON THESE SHEETS IS BASED ON LIMITED INVESTIGATIONS BY THE STATE AND IS IN NO WAY WARRANTED TO INDICATE THE CONDITIONS OF ACTUAL QUANTITIES OF WORK WHICH WILL BE REQUIRED.

Plotted Date: 11/18/2014

DESIGNER/DRAFTER: CRH
CHECKED BY: SSY

STATE OF CONNECTICUT
DEPARTMENT OF TRANSPORTATION

Filename: ...\S-35 ORIGINAL BRIDGE DRAWING - 4.dgn

SIGNATURE/BLOCK: STATE OF CONNECTICUT ANDREW M. LEPANTO NO. 20,000 LICENSED PROFESSIONAL ENGINEER

Stantec Consulting Services Inc.
2321 Whitney Ave.
Hamden, CT 06518

PROJECT TITLE:
REHABILITATION OF BRIDGE NO. 02376
I-84 T.R. 831 OVER I-84 EB

TOWN: EAST HARTFORD

DRAWING TITLE: ORIGINAL BRIDGE DRAWING - 4

PROJECT NO. 042-316
DRAWING NO. S-35
SHEET NO. 03.04.35

FORM NO. ENG. 15 ED 11-52

PUB. ROAD DIV. NO.	STATE	TOWN	FED. AID PROJ. NO.	PROJ. NO.	YEAR	ROUTE NO.	SHEET NO.	TOTAL SHEETS
1	CONN.	EAST HARTFORD	I-84 4(43)63	42-135	1962	I-84	43	140

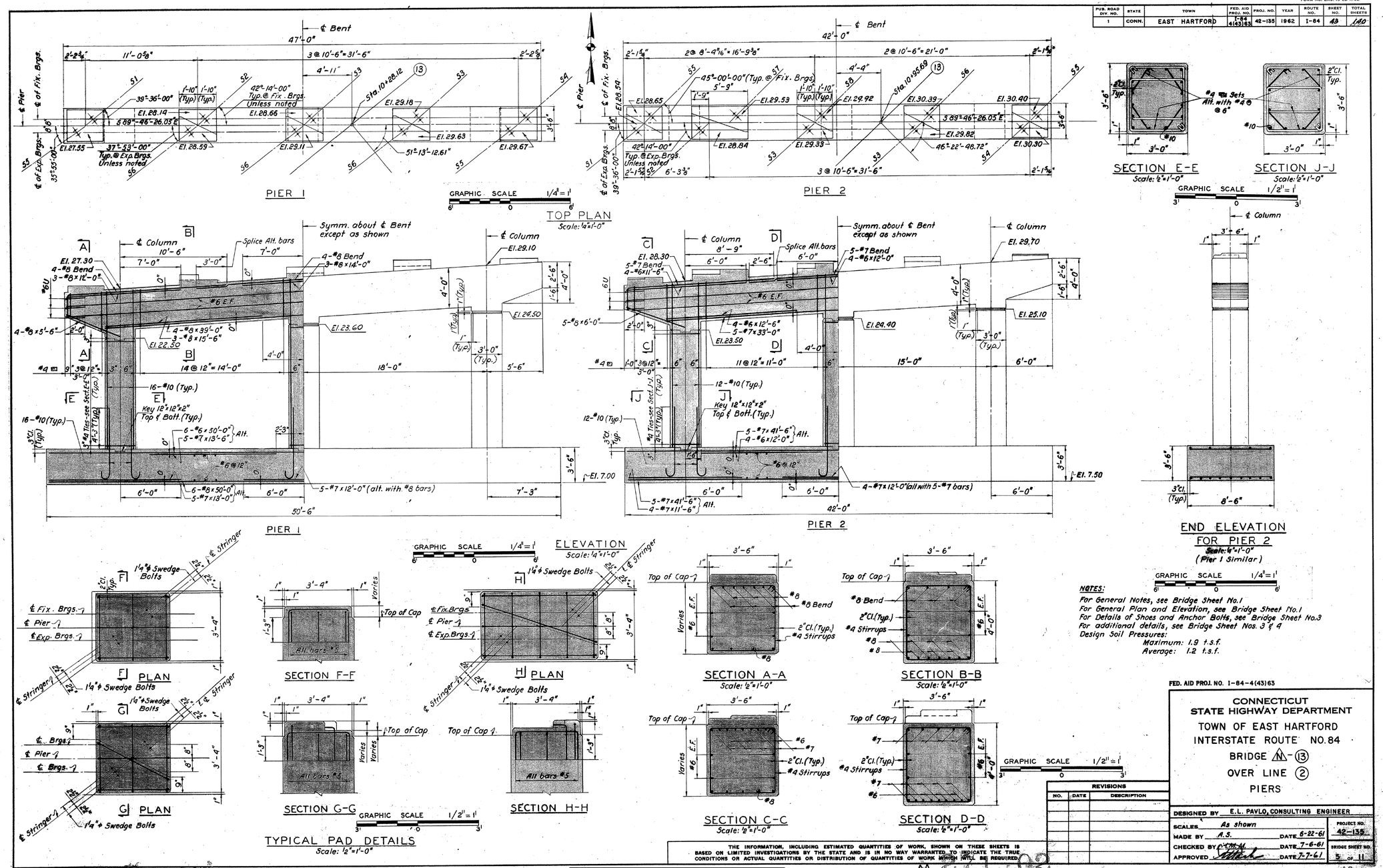

NOTES:
For General Notes, see Bridge Sheet No.1
For General Plan and Elevation, see Bridge Sheet No.1
For Details of Shoes and Anchor Bolts, see Bridge Sheet No.3
For additional details, see Bridge Sheet Nos. 3 & 4
Design Soil Pressures:
Maximum: 1.9 t.s.f.
Average: 1.2 t.s.f.

FED. AID PROJ. NO. I-84-4(43)63

CONNECTICUT
STATE HIGHWAY DEPARTMENT
TOWN OF EAST HARTFORD
INTERSTATE ROUTE NO. 84
BRIDGE N-13
OVER LINE 2
PIERS

REVISIONS		
NO.	DATE	DESCRIPTION

DESIGNED BY E.L. PAVLO, CONSULTING ENGINEER
SCALES As shown
MADE BY A.S. DATE 6-22-61
CHECKED BY C.M.M. DATE 7-6-61
APPROVED [signature] DATE 7-7-61
PROJECT NO. 42-135
BRIDGE SHEET NO. 5 OF 11

THE INFORMATION, INCLUDING ESTIMATED QUANTITIES OF WORK, SHOWN ON THESE SHEETS IS BASED ON LIMITED INVESTIGATIONS BY THE STATE AND IS IN NO WAY WARRANTED TO INDICATE THE TRUE CONDITIONS OR ACTUAL QUANTITIES OR DISTRIBUTION OF QUANTITIES OF WORK WHICH WILL BE REQUIRED.

DIETZGEN 198M Agaproof Tracing Vellum 6054

42 135 44.26 M 271-62 43

FOR INFORMATION ONLY
NOT TO SCALE

REV.	DATE	REVISION DESCRIPTION	SHEET NO.
-	-	-	-
-	-	-	-
-	-	-	-
-	-	-	-
-	-	-	-
-	-	-	-

THE INFORMATION, INCLUDING ESTIMATED QUANTITIES OF WORK, SHOWN ON THESE SHEETS IS BASED ON LIMITED INVESTIGATIONS BY THE STATE AND IS IN NO WAY WARRANTED TO INDICATE THE CONDITIONS OF ACTUAL QUANTITIES OF WORK WHICH WILL BE REQUIRED.

Plotted Date: 11/18/2014

DESIGNER/DRAFTER: CRH
CHECKED BY: SSY

STATE OF CONNECTICUT
DEPARTMENT OF TRANSPORTATION

Filename: ...\S-36 ORIGINAL BRIDGE DRAWING - 5.dgn

SIGNATURE/BLOCK:
Stantec Consulting Services Inc.
2321 Whitney Ave.
Hamden, CT 06518

PROJECT TITLE:
REHABILITATION OF BRIDGE NO. 02376 I-84 T.R. 831 OVER I-84 EB

TOWN: **EAST HARTFORD**

DRAWING TITLE: **ORIGINAL BRIDGE DRAWING - 5**

PROJECT NO. 042-316
DRAWING NO. S-36
SHEET NO. 03.04.36

PUB. ROAD DIV. NO.	STATE	TOWN	FED. AID PROJ. NO.	PROJ. NO.	YEAR	ROUTE NO.	SHEET NO.	TOTAL SHEETS
1	CONN.	EAST HARTFORD	I-84 4(43)63	42-135	1962	I-84	44	140

FORM NO. ENG. 15 ED 11-52

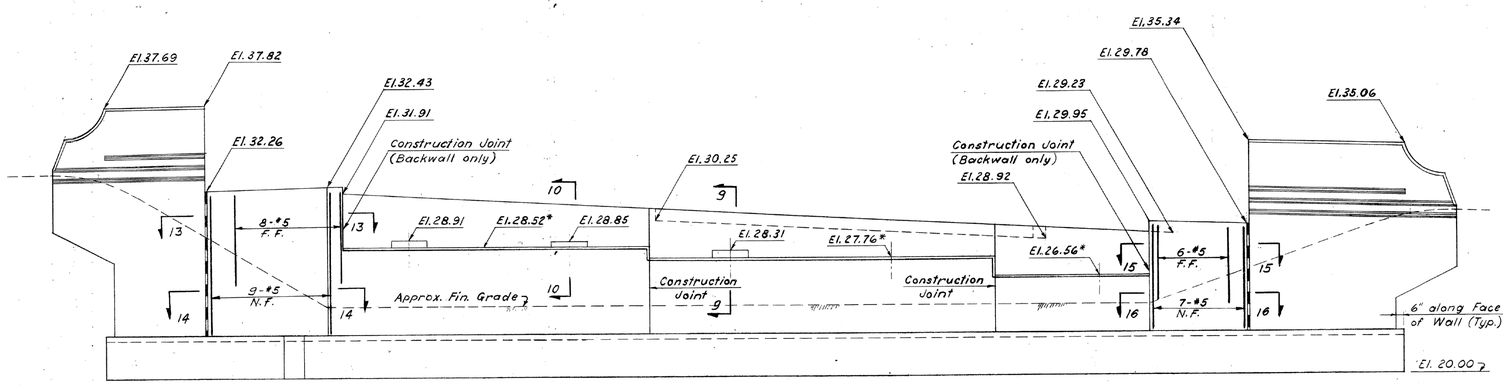

DEVELOPED ELEVATION

Scale: 1/4" = 1'-0"

GRAPHIC SCALE 1/4" = 1'

NOTES: Maximum design bearing pressure of Abutment & Wingwall spread footing = 1.9 T.S.F.
Average design bearing pressure of Abutment & Wingwall spread footing = 1.0 T.S.F.
N.F. means - Near Face
F.F. means - Far Face
* - Indicates Bridge Seat Elevation

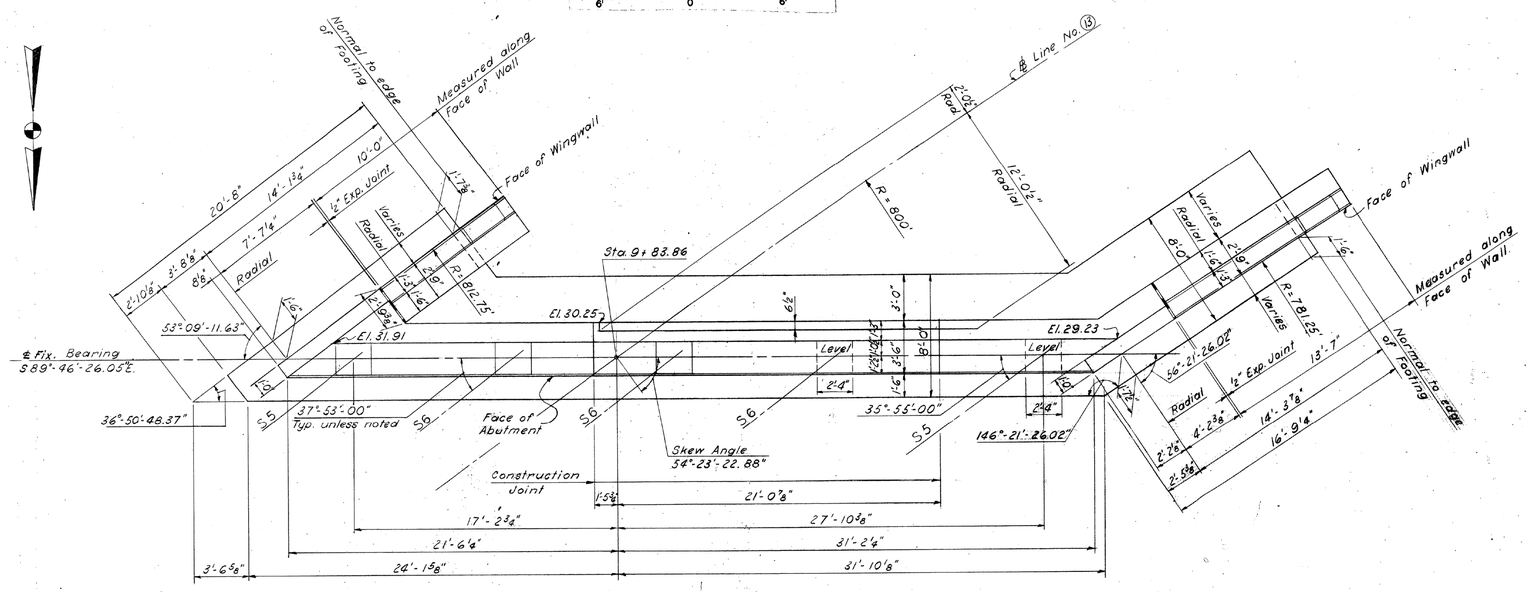

PLAN

Scale: 1/4" = 1'-0"

GRAPHIC SCALE 1/4" = 1'

NOTES:
For General Plan and Elevation, see Bridge Sheet No. 1.
For General Notes, see Bridge Sheet No. 1.
For Sections 13-13, 14-14, 15-15 & 16-16 see Bridge Sheet No. 8
For Typical Sections of Abutments and Wingwalls, see Bridge Sheet No. 8.
For Additional details, see Bridge Sheet Nos. 3 & 4
For Footing Reinforcement at corners, see Bridge Sheet No. 8
For Sections 9-9 & 10-10, see Bridge Sheet No. 4
For Stringer Spacing see Bridge Sheet No. 2

FED. AID PROJ. NO. I-84-4(43)63

CONNECTICUT
STATE HIGHWAY DEPARTMENT
TOWN OF EAST HARTFORD
INTERSTATE ROUTE NO. 84
BRIDGE N-13
OVER LINE 2
SOUTH ABUTMENT

REVISIONS		
NO.	DATE	DESCRIPTION

DESIGNED BY E.L. PAVLO CONSULTING ENGINEER
SCALES AS SHOWN
MADE BY D.G.S. DATE 6-8-61
CHECKED BY H.M.M. DATE 7-6-61
APPROVED [signature] DATE 7-7-61
PROJECT NO. 42-135
BRIDGE SHEET NO. 6 OF 11

THE INFORMATION, INCLUDING ESTIMATED QUANTITIES OF WORK, SHOWN ON THESE SHEETS IS BASED ON LIMITED INVESTIGATIONS BY THE STATE AND IS IN NO WAY WARRANTED TO INDICATE THE TRUE CONDITIONS OR ACTUAL QUANTITIES OR DISTRIBUTION OF QUANTITIES OF WORK WHICH WILL BE REQUIRED.

DIETZGEN 1984 Approved Tracing Vellum 6854

42 135

M 271 62

44

FOR INFORMATION ONLY
NOT TO SCALE

REV.	DATE	REVISION DESCRIPTION	SHEET NO.
-	-	-	-
-	-	-	-
-	-	-	-
-	-	-	-
-	-	-	-
-	-	-	-

THE INFORMATION, INCLUDING ESTIMATED QUANTITIES OF WORK, SHOWN ON THESE SHEETS IS BASED ON LIMITED INVESTIGATIONS BY THE STATE AND IS IN NO WAY WARRANTED TO INDICATE THE CONDITIONS OF ACTUAL QUANTITIES OF WORK WHICH WILL BE REQUIRED.

Plotted Date: 11/18/2014

DESIGNER/DRAFTER: CRH
CHECKED BY: SSY

STATE OF CONNECTICUT
DEPARTMENT OF TRANSPORTATION

Filename: ...\S-37 ORIGINAL BRIDGE DRAWING - 6.dgn

SIGNATURE/BLOCK:
Stantec Consulting Services Inc.
2321 Whitney Ave.
Hamden, CT 06518

PROJECT TITLE:
REHABILITATION OF BRIDGE NO. 02376 I-84 T.R. 831 OVER I-84 EB

TOWN: **EAST HARTFORD**

DRAWING TITLE: **ORIGINAL BRIDGE DRAWING - 6**

PROJECT NO. 042-316
DRAWING NO. S-37
SHEET NO. 03.04.37

PUB. ROAD DIV. NO.	STATE	TOWN	FED. AID PROJ. NO.	PROJ. NO.	YEAR	ROUTE NO.	SHEET NO.	TOTAL SHEETS
1	CONN.	EAST HARTFORD	I-84 4(43)63	42-135	1962	I-84	45	140

FORM NO. 206-A-19 RD 11-62

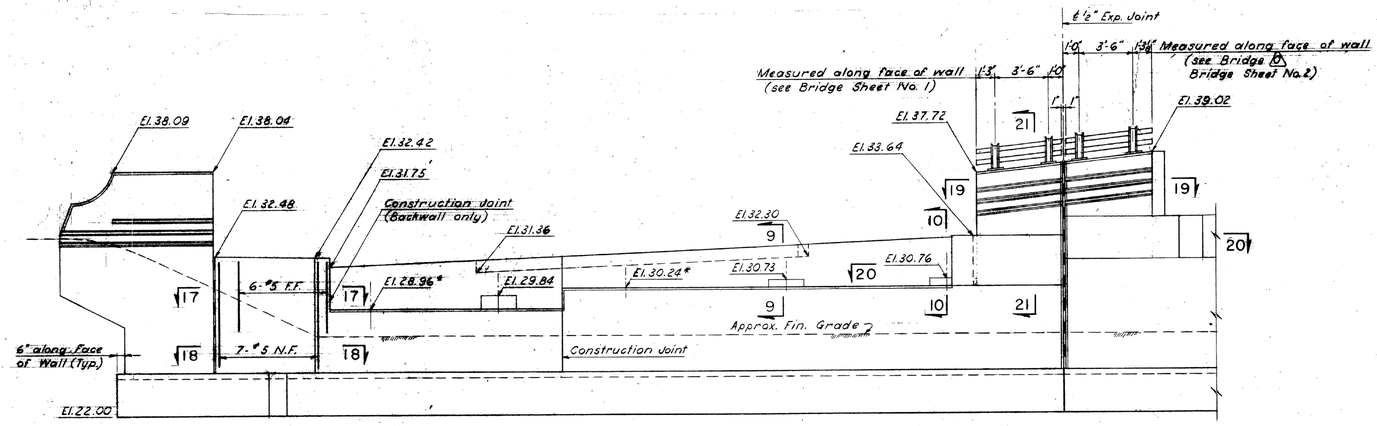

DEVELOPED ELEVATION

Scale: ¼" = 1'-0"

GRAPHIC SCALE 1/4" = 1'

NOTES: Maximum design bearing pressure of Abutment & Wingwall spread footing = 1.9 T.S.F.
Average design bearing pressure of Abutment & Wingwall spread footing = 1.0 T.S.F.
N.F. means - Near Face
F.F. means - Far Face
* - Indicates Bridge Seat Elevation

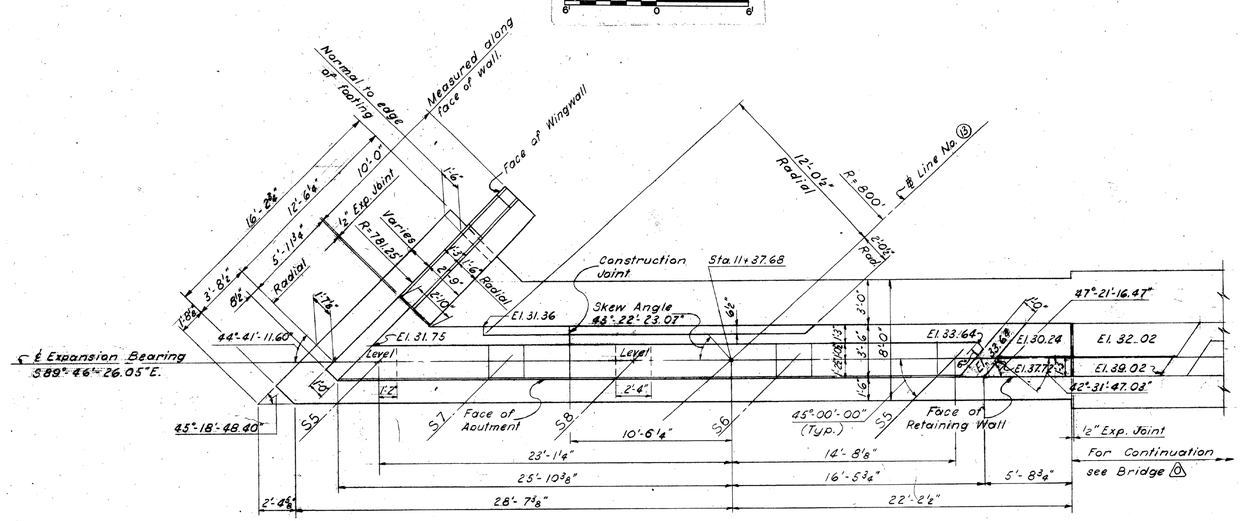

PLAN

Scale: ¼" = 1'-0"

GRAPHIC SCALE 1/4" = 1'

NOTES:
For General Plan and Elevation, see Bridge Sheet No. 1.
For General Notes; see Bridge Sheet No. 1.
For Sections 17-17, 18-18, 19-19, 20-20 & 21-21, see Bridge Sheet No. 8.
For Typical Sections of Wingwalls and Abutments, see Bridge Sheet No. 8.
For Rail Post Details, see Bridge Sheet No. 16.
For additional details, see Bridge Sheet Nos. 3 & 4.
For Footing Reinforcement at corners, see Bridge Sheet No. 8.
For Sections 9-9 & 10-10, see Bridge Sheet No. 4
For Stringer Spacing see Bridge Sheet No. 2

FED. AID PROJ. NO. I-84-4(43)63

CONNECTICUT
STATE HIGHWAY DEPARTMENT
TOWN OF EAST HARTFORD
INTERSTATE ROUTE NO. 84
BRIDGE Ⓝ-13
OVER LINE 2
NORTH ABUTMENT

REVISIONS		
NO.	DATE	DESCRIPTION

DESIGNED BY E. L. PAVLO, CONSULTING ENGINEER
SCALES AS SHOWN
MADE BY D. G. S. DATE 6-6-61
CHECKED BY L. D. S. DATE 7-6-61
APPROVED DATE 7-7-61
PROJECT NO. 42-135
BRIDGE SHEET NO. 7 OF 11

THE INFORMATION, INCLUDING ESTIMATED QUANTITIES OF WORK, SHOWN ON THESE SHEETS IS BASED ON LIMITED INVESTIGATIONS BY THE STATE AND IS IN NO WAY WARRANTED TO INDICATE THE TRUE CONDITIONS OR ACTUAL QUANTITIES OR DISTRIBUTION OF QUANTITIES OF WORK WHICH WILL BE REQUIRED.

42 135 M 371 02 45

FOR INFORMATION ONLY
NOT TO SCALE

REV.	DATE	REVISION DESCRIPTION	SHEET NO.
-	-	-	-
-	-	-	-
-	-	-	-
-	-	-	-
-	-	-	-
-	-	-	-

THE INFORMATION, INCLUDING ESTIMATED QUANTITIES OF WORK, SHOWN ON THESE SHEETS IS BASED ON LIMITED INVESTIGATIONS BY THE STATE AND IS IN NO WAY WARRANTED TO INDICATE THE CONDITIONS OF ACTUAL QUANTITIES OF WORK WHICH WILL BE REQUIRED.

Plotted Date: 11/18/2014

DESIGNER/DRAFTER: CRH
CHECKED BY: SSY

STATE OF CONNECTICUT
DEPARTMENT OF TRANSPORTATION

Filename: ...\S-38 ORIGINAL BRIDGE DRAWING - 7.dgn

SIGNATURE/BLOCK:
Stantec Consulting Services Inc.
2321 Whitney Ave.
Hamden, CT 06518

PROJECT TITLE:
REHABILITATION OF BRIDGE NO. 02376
I-84 T.R. 831 OVER I-84 EB

TOWN: EAST HARTFORD

DRAWING TITLE: ORIGINAL BRIDGE DRAWING - 7

PROJECT NO. 042-316
DRAWING NO. S-38
SHEET NO. 03.04.38

FORM NO. ENG. 15 ED 11-52

PUB. ROAD DIV. NO.	STATE	TOWN	FED. AID PROJ. NO.	PROJ. NO.	YEAR	ROUTE NO.	SHEET NO.	TOTAL SHEETS
1	CONN.	EAST HARTFORD	I-84 4(43)63	42-135	1962	I-84	46	140

GRAPHIC SCALE 3/8"=1'

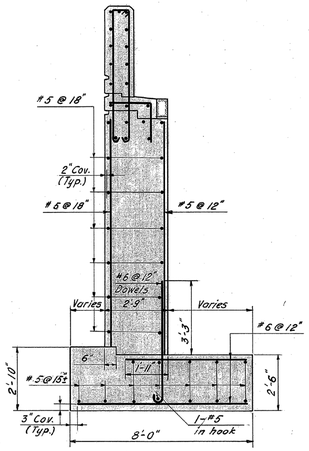

TYPICAL SECTION OF WINGWALLS

NOTE:
For details not shown above, see Wingwall Detail, Bridge Sheet No. 4.

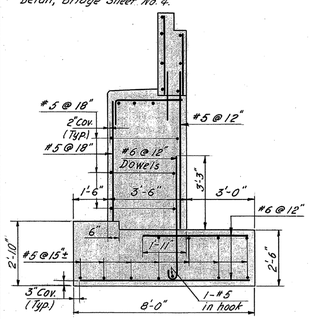

TYPICAL SECTION OF ABUTMENTS

NOTE:
For details not shown above, See Sections 9-9 & 10-10, Bridge Sheet No. 4.

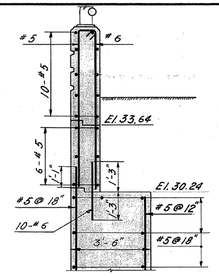

SECTION 21-21

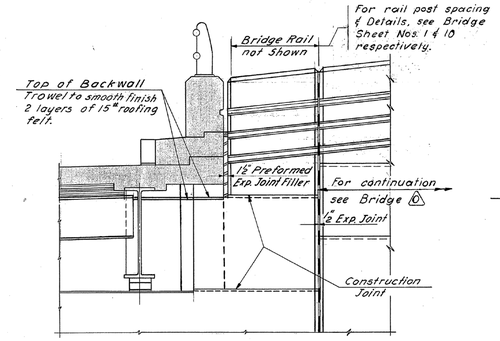

SECTION 22-22
Scale: 1/2"=1'-0"

GRAPHIC SCALE 1/2"=1'

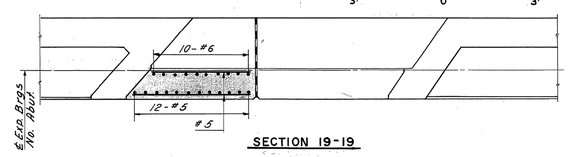

SECTION 19-19

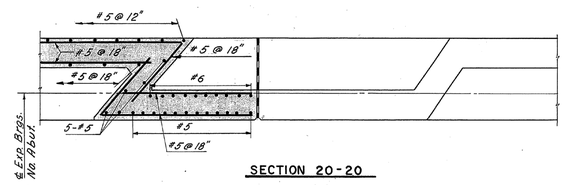

SECTION 20-20

RETAINING WALL DETAILS
(NORTHEAST CORNER)

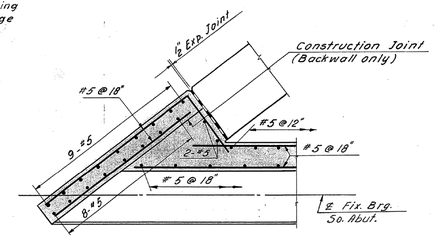

SECTION 13-13

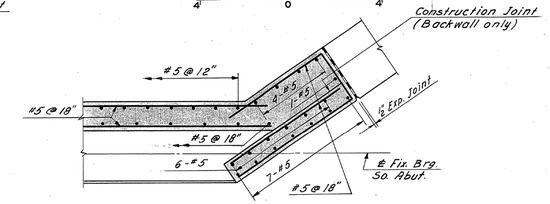

SECTION 15-15

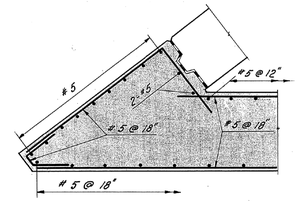

SECTION 14-14
SOUTHEAST CORNER

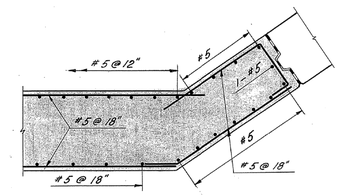

SECTION 16-16
SOUTHWEST CORNER

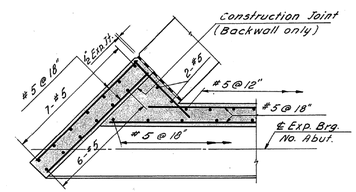

SECTION 17-17

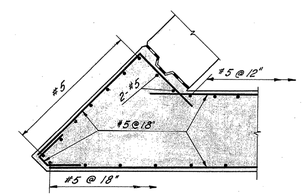

SECTION 18-18

NORTHWEST CORNER
CORNER DETAILS

NOTES:
For General Plan and Elevation, See Bridge Sheet No. 1.
For General Notes, See Bridge Sheet No. 1.
For location of Sections 17-17, 18-18, 19-19, 20-20 & 21-21, See North Abutment, Bridge Sheet No. 7
For location of Sections 13-13, 14-14, 15-15 & 16-16 see South Abutment Bridge Sheet No. 6.
For location of Section 22-22, See Bridge Sheet No. 2.
For Abutment Pad Details, See Bridge Sheet No. 4.

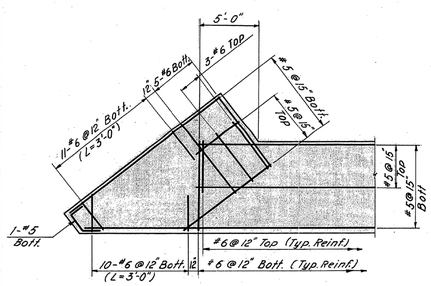

SOUTHEAST

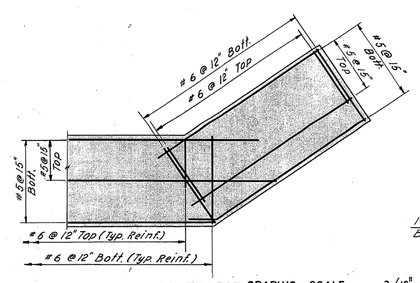

SOUTHWEST

GRAPHIC SCALE 3/16"=1'

CORNER FOOTING REINFORCEMENT
Scale: 3/16"=1'-0"

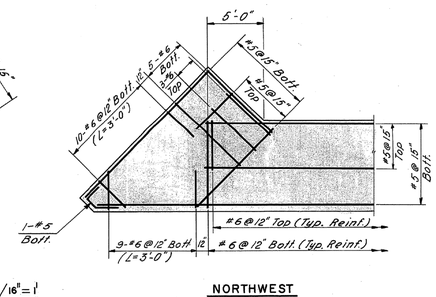

NORTHWEST

The information, including estimated quantities of work, shown on these sheets is based on limited investigations by the State and is in no way warranted to indicate the true conditions or actual quantities or distribution of quantities of work which will be required.

REVISIONS		
NO.	DATE	DESCRIPTION

FED. AID PROJ. NO. I-84-4(43)63

CONNECTICUT
STATE HIGHWAY DEPARTMENT
TOWN OF EAST HARTFORD
INTERSTATE ROUTE NO. 84
BRIDGE N-13
OVER LINE 2
ABUTMENT, WINGWALL & RETAINING WALL DETAILS

DESIGNED BY E. L. PAVLO, CONSULTING ENGINEER
SCALES 3/8"=1'-0" UNLESS NOTED
MADE BY S.G. DATE 6-2-61
CHECKED BY H.M.M. DATE
APPROVED DATE 6-15-61
PROJECT NO. 42-135
BRIDGE SHEET NO. 8 OF 11

"ABERDEEN" TRACING CLOTH JOSEPH MERRITT & CO. 14691

42 135

M271 02

46

FOR INFORMATION ONLY
NOT TO SCALE

REV.	DATE	REVISION DESCRIPTION	SHEET NO.
-	-	-	-
-	-	-	-
-	-	-	-
-	-	-	-
-	-	-	-
-	-	-	-

THE INFORMATION, INCLUDING ESTIMATED QUANTITIES OF WORK, SHOWN ON THESE SHEETS IS BASED ON LIMITED INVESTIGATIONS BY THE STATE AND IS IN NO WAY WARRANTED TO INDICATE THE CONDITIONS OF ACTUAL QUANTITIES OF WORK WHICH WILL BE REQUIRED.

Plotted Date: 11/18/2014

DESIGNER/DRAFTER: CRH
CHECKED BY: SSY

STATE OF CONNECTICUT
DEPARTMENT OF TRANSPORTATION

Filename: ...\S-39 ORIGINAL BRIDGE DRAWING - 8.dgn

SIGNATURE/BLOCK:
Stantec Consulting Services Inc.
2321 Whitney Ave.
Hamden, CT 06518

PROJECT TITLE:
REHABILITATION OF BRIDGE NO. 02376
I-84 T.R. 831 OVER I-84 EB

TOWN: EAST HARTFORD

DRAWING TITLE:
ORIGINAL BRIDGE DRAWING - 8

PROJECT NO. 042-316
DRAWING NO. S-39
SHEET NO. 03.04.39

PUB. ROAD DIV. NO.	STATE	TOWN	FED. AID PROJ. NO.	PROJ. NO.	YEAR	ROUTE NO.	SHEET NO.	TOTAL SHEETS
1	CONN.	EAST HARTFORD	I-84-4 (43)63	42-135	1962	I-84	47	140

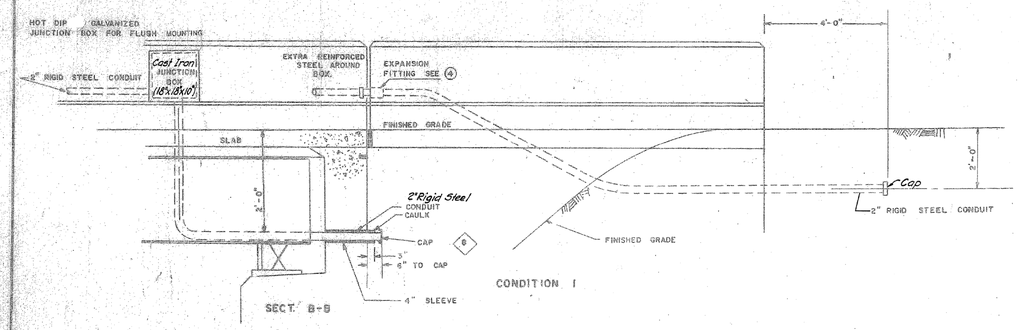

CONDUIT PARAPET TO FILL 3

SCALE 1/2" = 1'-0"

GRAPHIC SCALE 1/2" = 1'

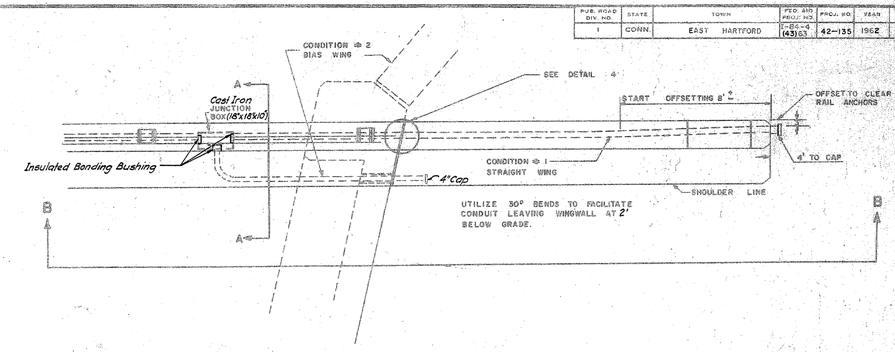

CONDUIT PARAPET TO FILL 1

NOT TO SCALE

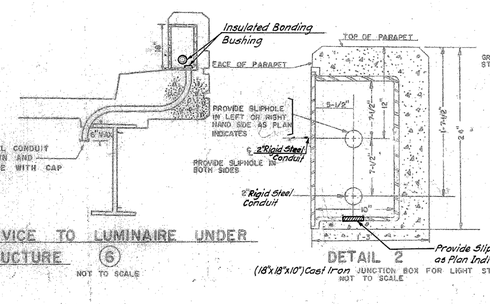

SERVICE TO LUMINAIRE UNDER STRUCTURE 6

NOT TO SCALE

DETAIL 2

(18"x18"x10") Cast Iron JUNCTION BOX FOR LIGHT STANDARD

NOT TO SCALE

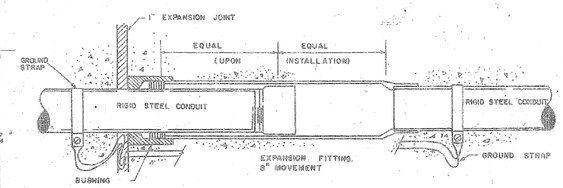

DETAIL OF EXPANSION FITTING 4

USE AT ALL EXPANSION JOINTS

NOT TO SCALE

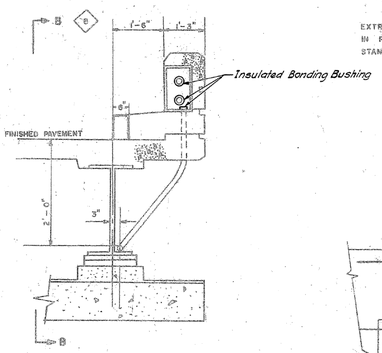

SECT A-A

NOT TO SCALE

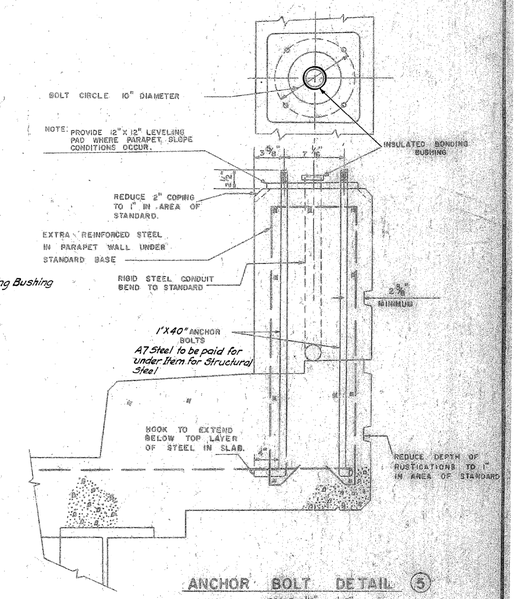

ANCHOR BOLT DETAIL 5

SCALE 1 1/2" = 1'-0"

GRAPHIC SCALE 1 1/2" = 1'

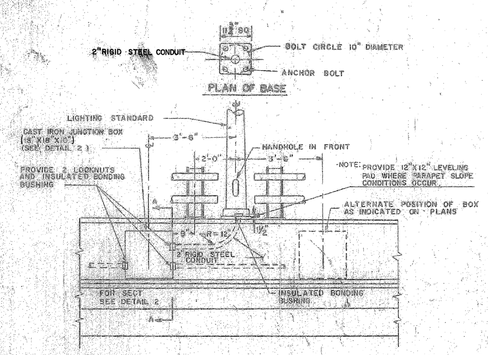

DETAIL 1

LIGHTING STANDARD ON PARAPET WALL, TYPICAL

NOT TO SCALE

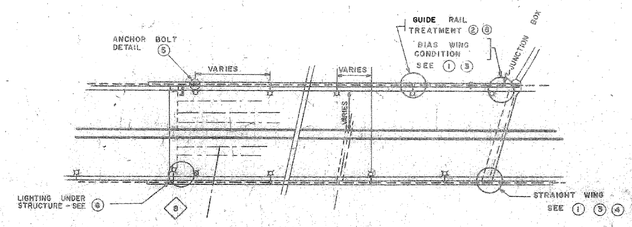

INDEX TO DETAILS

NOT TO SCALE

REVISIONS		
NO.	DATE	DESCRIPTION

FEDERAL AID PROJECT NO. I-84-4(43)63

CONNECTICUT
STATE HIGHWAY DEPARTMENT
TRAFFIC DIVISION
TOWN OF EAST HARTFORD
INTERSTATE ROUTE NO. 84
BRIDGE N - 13 OVER LINE 2

ELECTRICAL DETAILS

SCALE AS NOTED	ELECTRICAL		PROJECT NO. 42-135
DESIGNED BY	C. W. JOHNSON	3/1/61	
MADE BY	R.E. WENTWORTH	3/1/61	
SUBMITTED BY	H.A. KERR	3/1/61	BRIDGE SH. NO. 9 OF 11
APPROVED BY	[signature]	3/1/61	

42 135

M 271 02

C-196

47

FOR INFORMATION ONLY
NOT TO SCALE

REV.	DATE	REVISION DESCRIPTION	SHEET NO.
-	-	-	-
-	-	-	-
-	-	-	-
-	-	-	-
-	-	-	-
-	-	-	-

THE INFORMATION, INCLUDING ESTIMATED QUANTITIES OF WORK, SHOWN ON THESE SHEETS IS BASED ON LIMITED INVESTIGATIONS BY THE STATE AND IS IN NO WAY WARRANTED TO INDICATE THE CONDITIONS OF ACTUAL QUANTITIES OF WORK WHICH WILL BE REQUIRED.

Plotted Date: 11/18/2014

DESIGNER/DRAFTER: **CRH**

CHECKED BY: **SSY**

STATE OF CONNECTICUT
DEPARTMENT OF TRANSPORTATION

Filename: ...\S-40 ORIGINAL BRIDGE DRAWING - 9.dgn

SIGNATURE/BLOCK:

Stantec Consulting Services Inc.
2321 Whitney Ave.
Hamden, CT 06518

PROJECT TITLE:

REHABILITATION OF BRIDGE NO. 02376
I-84 T.R. 831 OVER I-84 EB

TOWN: **EAST HARTFORD**

DRAWING TITLE: **ORIGINAL BRIDGE DRAWING - 9**

PROJECT NO. **042-316**

DRAWING NO. **S-40**

SHEET NO. **03.04.40**

PUB. ROAD DIV. NO.	STATE	TOWN	FED. AID PROJ. NO.	PROJ. NO.	YEAR	ROUTE NO.	SHEET NO.	TOTAL SHEETS
1	CONN.	EAST HARTFORD	I-84 4-143163	42-135	1962	I-84	48	140

FORM NO. 214 NO. 25 P.O.

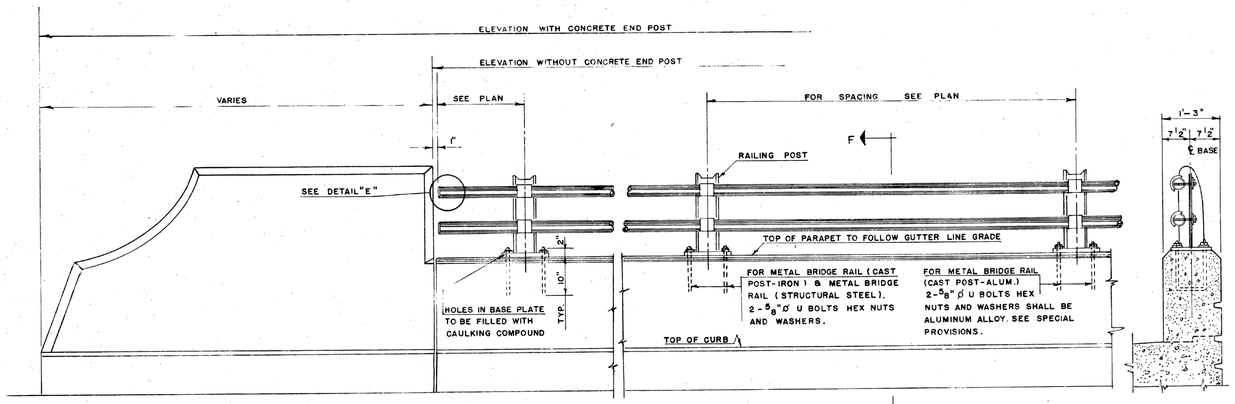

METAL BRIDGE RAIL
(STRUCTURAL STEEL)

ALL POSTS TO BE 6 WF 20 STRUCTURAL STEEL.
ALL RAILS TO BE 2 1/2"ø STANDARD STEEL PIPE.
RAILING POSTS SHALL BE VERTICAL.
IF NECESSARY SHIM WITH LEAD WOOL AND CAULK. COST TO BE INCLUDED IN ITEM METAL BRIDGE RAIL.(STRUCTURAL STEEL.)
FOR PAINTING SEE SPECIAL PROVISIONS.
ALL POSTS & BASE PLATES TO BE OF STRUCTURAL STEEL CONFORMING TO A.S.T.M. A-7.

METAL BRIDGE RAIL
(CAST POST - IRON)

ALL POSTS TO BE MALLEABLE IRON CASTING CONFORMING TO A.S.T.M. A-47 GRADE 35018 OR DUCTILE IRON CASTING CONFORMING TO A.S.T.M. A-339.
ALL RAILS TO BE 2 1/2"ø STANDARD STEEL PIPE.
RAILING POSTS SHALL BE VERTICAL.
IF NECESSARY SHIM WITH LEAD WOOL AND CAULK. COST TO BE INCLUDED IN ITEM METAL BRIDGE RAIL (CAST POST-IRON.)
FOR PAINTING SEE SPECIAL PROVISIONS.

METAL BRIDGE RAIL
(CAST POST - ALUMINUM)

ALL POSTS TO BE CAST OF ALUMINUM. SEE SPECIAL PROVISION.
ALL RAILS TO BE 3" O.D. X 2.625" I.D. ALUMINUM TUBING. SEE SPECIAL PROVISIONS.
RAILING POSTS SHALL BE VERTICAL.
IF NECESSARY SHIM WITH ALUMINUM SHEETS AND CAULK.
COST TO BE INCLUDED IN ITEM METAL BRIDGE RAIL (CAST POST-ALUM.)
ALUMINUM RAILING AND POSTS SHALL NOT BE PAINTED.

ELEVATION
CONC. END POST AND RAIL
SCALE 3/4" = 1'-0"
GRAPHIC SCALE 3/4" = 1'

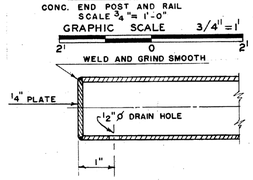

DETAIL "E"
NOT TO SCALE

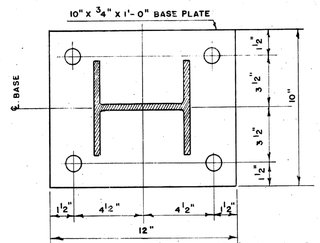

SECTION B-B
SCALE 3" = 1'-0"
GRAPHIC SCALE 3" = 1'

SECTION F-F
SCALE 3/4" = 1'-0"
GRAPHIC SCALE 3/4" = 1'

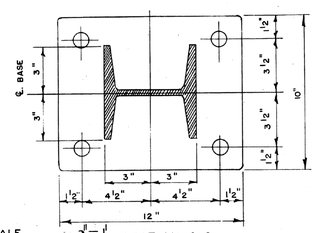

GRAPHIC SCALE 3" = 1'
SECTION C-C
SCALE 3" = 1'-0"

GENERAL NOTES:

UNLESS OTHERWISE SPECIFIED ON THE PLANS OR IN THE SPECIAL PROVISIONS METAL BRIDGE RAIL MAY BE: METAL BRIDGE RAIL (STRUCTURAL STEEL). METAL BRIDGE RAIL (CAST POST-IRON) OR METAL BRIDGE RAIL (CAST POST-ALUMINUM).
COST OF FURNISHING AND SETTING 5/8"ø U BOLTS, HEX NUTS AND WASHERS TO BE INCLUDED IN ITEM "METAL BRIDGE RAIL."

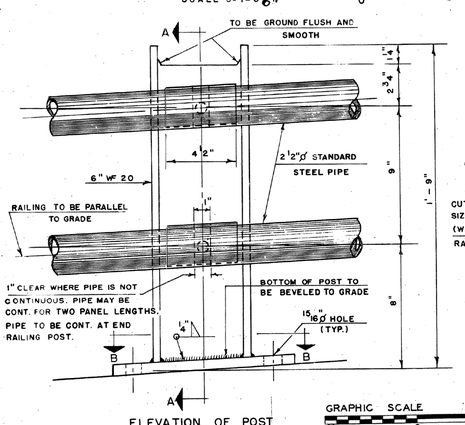

ELEVATION OF POST
SCALE 3" = 1'-0"

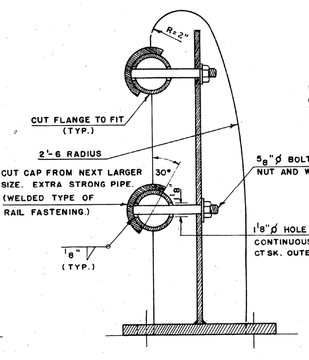

SECTION A-A
SCALE 3" = 1'-0"

GRAPHIC SCALE 3" = 1'
DETAILS
STRUCTURAL STEEL POST
FOR METAL BRIDGE RAIL (STUCTURAL STEEL)

FOR METAL BRIDGE RAIL (CAST POST-ALUMINUM) 3" O.D. X 2.625" I.D. ALUMINUM TUBING

FOR METAL BRIDGE RAIL (CAST POST-IRON) 2 1/2"ø STD. STEEL PIPE.

1" CLEAR WHERE PIPE IS NOT CONTINUOUS. PIPE MAY BE CONT. FOR TWO PANEL LENGTHS. PIPE TO BE CONT. AT END RAILING POST.

3/8" MIN. 1/2" MAX.

RAILING TO BE PARALLEL TO GRADE

15/16"ø HOLE (TYP.)

7/8" AT ℄

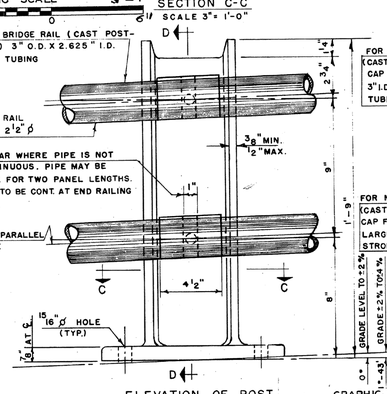

ELEVATION OF POST
SCALE 3" = 1'-0"

NOTE

DETAILS OF METAL BRIDGE RAILING AND FASTENING SIMILAR TO DETAILS SHOWN FOR METAL BRIDGE RAILING. (STRUCTURAL STEEL.)

FOR METAL BRIDGE RAIL (CAST POST-ALUM.) CUT CAP FROM 3 1/2" O.D. X 3" I.D. ALUMINUM TUBING.

FOR METAL BRIDGE RAIL (CAST POST-IRON) CUT CAP FROM NEXT LARGER SIZE EXTRA STRONG PIPE.

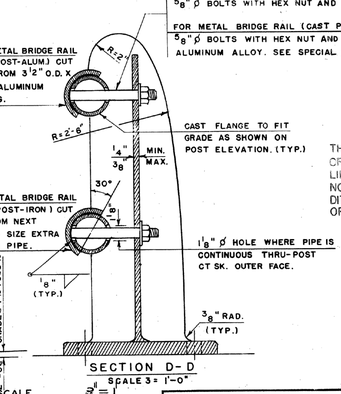

SECTION D-D
SCALE 3" = 1'-0"

GRAPHIC SCALE 3" = 1'
DETAILS
CAST POST
FOR METAL BRIDGE RAIL (CAST POST-IRON) AND FOR METAL BRIDGE RAIL (CAST POST-ALUMINUM)

FOR METAL BRIDGE RAIL (CAST POST-IRON)
5/8"ø BOLTS WITH HEX NUT AND WASHERS

FOR METAL BRIDGE RAIL (CAST POST-ALUMINUM)
5/8"ø BOLTS WITH HEX NUT AND WASHERS OF ALUMINUM ALLOY. SEE SPECIAL PROVISIONS.

CAST FLANGE TO FIT GRADE AS SHOWN ON POST ELEVATION. (TYP.)

1 1/8"ø HOLE WHERE PIPE IS CONTINUOUS THRU-POST CT SK. OUTER FACE.

THE INFORMATION INCLUDING ESTIMATED QUANTITIES OF WORK SHOWN ON THESE SHEETS IS BASED ON LIMITED INVESTIGATIONS BY THE STATE AND IS IN NO WAY WARRANTED TO INDICATE THE TRUE CONDITIONS OR ACTUAL QUANTITIES OR DISTRIBUTION OF QUANTITIES OF WORK WHICH WILL BE REQUIRED.

FED. AID PROJ. NO. I-84-4(43)63

CONNECTICUT
STATE HIGHWAY DEPARTMENT
TOWN OF EAST HARTFORD
INTERSTATE ROUTE NO. 84
BRIDGE N-13
OVER LINE 2
METAL BRIDGE RAIL

REVISIONS		
NO.	DATE	DESCRIPTION

DESIGNED BY C.H.D.
SCALES AS NOTED
MADE BY G.M.K. & G.J.Z. DATE 4-29-60
CHECKED BY DATE
APPROVED DATE
PROJECT NO. 42-135
BRIDGE SHEET NO. 10 OF 11

"ARCHRIGHT" TRACING CLOTH. JOSEPH MERRITT & CO. 11210

42 135

M 271 02

48

FOR INFORMATION ONLY
NOT TO SCALE

REV.	DATE	REVISION DESCRIPTION	SHEET NO.
-	-	-	-
-	-	-	-
-	-	-	-
-	-	-	-
-	-	-	-
-	-	-	-

THE INFORMATION, INCLUDING ESTIMATED QUANTITIES OF WORK, SHOWN ON THESE SHEETS IS BASED ON LIMITED INVESTIGATIONS BY THE STATE AND IS IN NO WAY WARRANTED TO INDICATE THE CONDITIONS OF ACTUAL QUANTITIES OF WORK WHICH WILL BE REQUIRED.

Plotted Date: 11/18/2014

DESIGNER/DRAFTER: CRH
CHECKED BY: SSY

STATE OF CONNECTICUT
DEPARTMENT OF TRANSPORTATION

Filename: ...\S-41 ORIGINAL BRIDGE DRAWING - 10.dgn

SIGNATURE/BLOCK:
Stantec Consulting Services Inc.
2321 Whitney Ave.
Hamden, CT 06518

PROJECT TITLE:
REHABILITATION OF BRIDGE NO. 02376
I-84 T.R. 831 OVER I-84 EB

TOWN: EAST HARTFORD

DRAWING TITLE:
ORIGINAL BRIDGE DRAWING - 10

PROJECT NO. 042-316
DRAWING NO. S-41
SHEET NO. 03.04.41

FORM NO. ENG. 15 ED 11 62

PUB. ROAD DIV. NO.	STATE	TOWN	FED. AID PROJ. NO.	PROJ. NO.	YEAR	ROUTE NO.	SHEET NO.	TOTAL SHEETS
1	CONN.	EAST HARTFORD	I-84 4(43)63	42-135	1962	I-84	49	140

GRAPHIC SCALE VERT. 1" = 5'

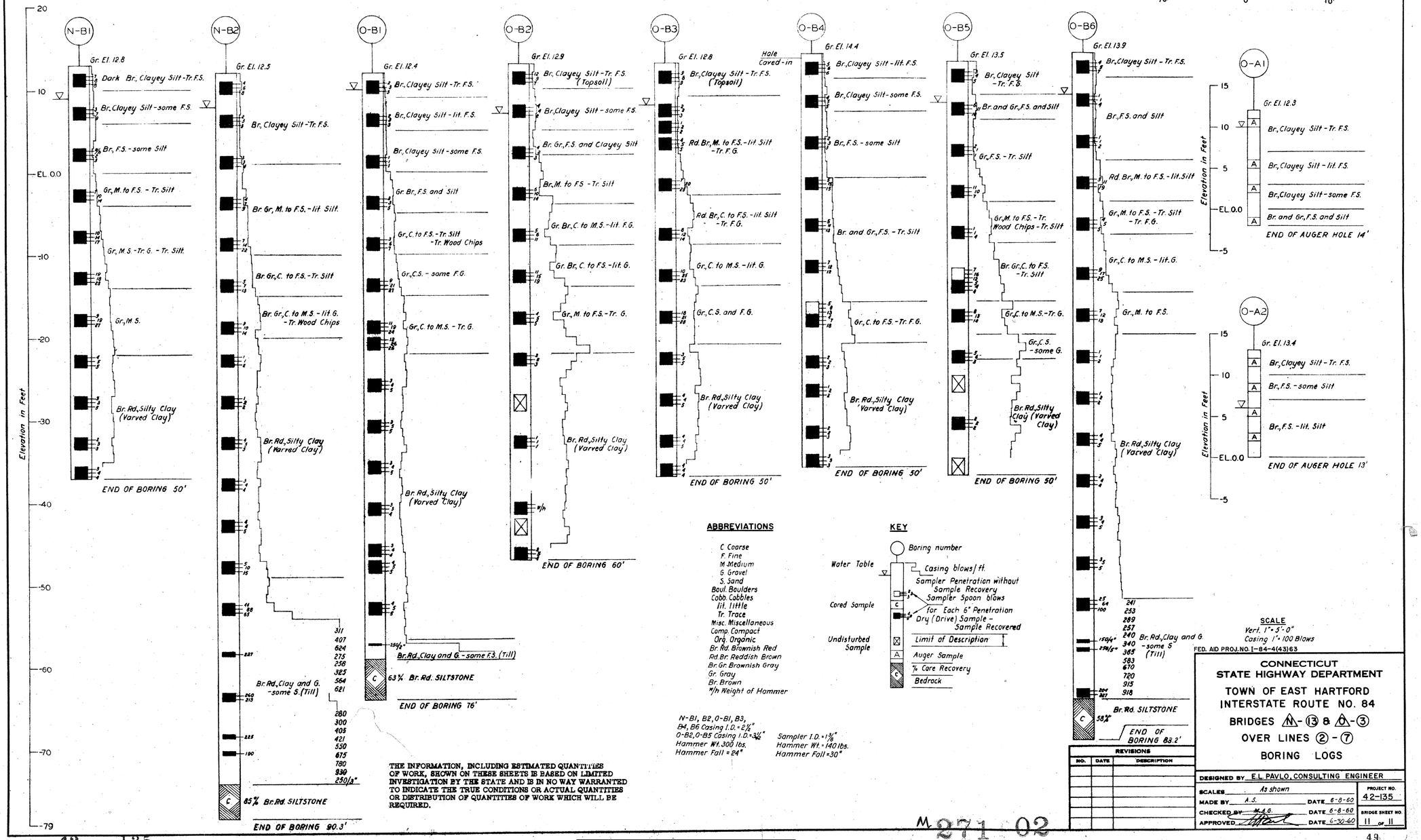

THE INFORMATION, INCLUDING ESTIMATED QUANTITIES OF WORK, SHOWN ON THESE SHEETS IS BASED ON LIMITED INVESTIGATION BY THE STATE AND IS IN NO WAY WARRANTED TO INDICATE THE TRUE CONDITIONS OR ACTUAL QUANTITIES OR DISTRIBUTION OF QUANTITIES OF WORK WHICH WILL BE REQUIRED.

M 271 02

42 135

49

CONNECTICUT
STATE HIGHWAY DEPARTMENT
TOWN OF EAST HARTFORD
INTERSTATE ROUTE NO. 84
BRIDGES N-13 & O-3
OVER LINES 2-7
BORING LOGS

REVISIONS		
NO.	DATE	DESCRIPTION

DESIGNED BY E.L. PAVLO, CONSULTING ENGINEER
SCALES As shown
MADE BY A.S. DATE 6-8-60
CHECKED BY M.A.G. DATE 6-8-60
APPROVED DATE 6-30-60
PROJECT NO. 42-135
BRIDGE SHEET NO. 11 OF 11

FOR INFORMATION ONLY NOT TO SCALE

REV.	DATE	REVISION DESCRIPTION	SHEET NO.
-	-	-	-
-	-	-	-
-	-	-	-
-	-	-	-
-	-	-	-
-	-	-	-

THE INFORMATION, INCLUDING ESTIMATED QUANTITIES OF WORK, SHOWN ON THESE SHEETS IS BASED ON LIMITED INVESTIGATIONS BY THE STATE AND IS IN NO WAY WARRANTED TO INDICATE THE CONDITIONS OF ACTUAL QUANTITIES OF WORK WHICH WILL BE REQUIRED.

Plotted Date: 11/18/2014

DESIGNER/DRAFTER: CRH
CHECKED BY: SSY

STATE OF CONNECTICUT
DEPARTMENT OF TRANSPORTATION

Filename: ...\S-42 ORIGINAL BRIDGE DRAWING - 11.dgn

SIGNATURE/BLOCK:
Stantec Consulting Services Inc.
2321 Whitney Ave.
Hamden, CT 06518

PROJECT TITLE:
REHABILITATION OF BRIDGE NO. 02376
I-84 T.R. 831 OVER I-84 EB

TOWN: EAST HARTFORD

DRAWING TITLE:
ORIGINAL BRIDGE DRAWING - 11

PROJECT NO. 042-316
DRAWING NO. S-42
SHEET NO. 03.04.42