STATE OF CONNECTICUT
DEPARTMENT OF TRANSPORTATION

RECONSTRUCTION OF I-95 OVER WEST RIVER
IN THE TOWNS OF
NEW HAVEN AND WEST HAVEN
STATE PROJECT NUMBER 092-522

VOLUME 3 : SUBSET 2

BRIDGE 00163

PRINCIPAL ENGINEER (SEALED AND CERTIFIED) *

* THIS SIGNATURE BLOCK IS DEDICATED TO THE PRIME DISCIPLINE PRINCIPAL ENGINEER/ARCHITECT THAT IS RESPONSIBLE FOR CERTIFYING PLANS

8:58:42 PM
11/13/2012
T:\V8CADD\Projects\PB18735\FD\Highway\Contract_Sheets\ssc-03-02-092522.dgn

REV.	DATE	DESCRIPTION	SHEET. NO
		REVISIONS	

DESIGNER: R. P. TALBOT
DRAFTER: M.C. DEEGAN
CHECKED BY:
DATE CHECKED:

STATE OF CONNECTICUT
DEPARTMENT OF TRANSPORTATION
ENGINEER: PB AMERICAS, INC.
APPROVED BY: DATE:

PROJECT TITLE: RECONSTRUCTION OF I-95 OVER WEST RIVER
CADD ssc-03-02-092522.dgn PLOTTED 11/13/2012

TOWN: NEW HAVEN / WEST HAVEN
DRAWING TITLE: SUBSET COVER BRIDGE 00163

PROJECT NO.: 92-522
DRAWING NO.: SSC-03.02
SHEET NO.:

LIST OF STRUCTURE DRAWINGS

DWG. NO.	DRAWING TITLE
STR-1	LIST OF DRAWINGS
STR-2	GENERAL PLAN
STR-3	GENERAL NOTES & QUANTITIES
STR-4	TYPICAL BRIDGE CROSS SECTIONS - EXISTING SUPERSTRUCTURE AND STA. 0+752 TO STA. 0+881
STR-5	TYPICAL BRIDGE CROSS SECTIONS - STA. 0+881 TO STA. 1+069
STR-6	PROFILES
STR-7	BANKING DIAGRAMS
STR-8	LAYOUT PLAN & COORDINATES - ABUTMENT 1 TO PIER 3
STR-9	LAYOUT PLAN & COORDINATES - PIER 3 TO ABUTMENT 2
STR-10	EXISTING BORINGS
STR-11	BORINGS - A1-1
STR-12	BORINGS - A1-2
STR-13	BORINGS - P1-1
STR-14	BORINGS - P1-2
STR-15	BORINGS - P1-3
STR-16	BORINGS - P2-1
STR-17	BORINGS - P2-2
STR-18	BORINGS - P2-3
STR-19	BORINGS - P3-1
STR-20	BORINGS - P3-2
STR-21	BORINGS - P3-3
STR-22	BORINGS - P4-1
STR-23	BORINGS - P4-2
STR-24	BORINGS - P4-3
STR-25	BORINGS - P5-1
STR-26	BORINGS - P5-2
STR-27	BORINGS - P5-3
STR-28	BORINGS - A2-1
STR-29	BORINGS - A2-2
STR-30	BORINGS - A2-3
STR-31	RIVER SOUNDINGS CONTOUR PLAN
STR-32	RIVER PROBES
STR-33	STAGE CONSTRUCTION PLANS - STAGE 1A
STR-34	STAGE CONSTRUCTION PLANS - STAGE 1C
STR-35	STAGE CONSTRUCTION PLANS - STAGE 2
STR-36	STAGE CONSTRUCTION PLANS - STAGE 3A
STR-37	TYPICAL STAGING SECTIONS - EXISTING TO STAGE 2
STR-38	TYPICAL STAGING SECTIONS - STAGES 3A TO PROPOSED
STR-39	STAGE CONSTRUCTION DETAILS - TEMPORARY SLAB DETAILS
STR-40	STAGE CONSTRUCTION DETAILS - TEMPORARY PARAPET DETAILS
STR-41	TEMPORARY PRECAST CONCRETE BARRIER CURB (STRUCTURE)
STR-42	TEMPORARY TRESTLE LAYOUT
STR-43	TEMPORARY TRESTLE DETAILS - SECTIONS
STR-44	TEMPORARY TRESTLE DETAILS - FLOATING DOCK
STR-45	PILE PLAN - ABUTMENT 1

DWG. NO.	DRAWING TITLE
STR-46	PILE PLAN - ABUTMENT 2
STR-47	PILE DETAILS
STR-48	ABUTMENT 1
STR-49	ABUTMENT 2
STR-50	WINGWALLS
STR-51	TYPICAL SECTIONS
STR-52	ABUTMENT DETAILS - SHEET 1 OF 3
STR-53	ABUTMENT DETAILS - SHEET 2 OF 3
STR-54	ABUTMENT DETAILS - SHEET 3 OF 3
STR-55	SUBSTRUCTURE DETAILS
STR-56	PIER 1
STR-57	PIER 2
STR-58	PIER 3
STR-59	PIER 4
STR-60	PIER 5
STR-61	PIER DETAILS - SHEET 1 OF 3
STR-62	PIER DETAILS - SHEET 2 OF 3
STR-63	PIER DETAILS - SHEET 3 OF 3
STR-64	KEEPER BLOCK DETAILS
STR-65	CONC. BEARING PAD DETAILS
STR-66	FRAMING PLAN - ABUTMENT 1 TO PIER 3
STR-67	FRAMING PLAN - PIER 3 TO ABUTMENT 2
STR-68	GIRDER SCHEDULE - G1 THROUGH G8
STR-69	GIRDER SCHEDULE - G9 THROUGH G15
STR-70	GIRDER SCHEDULE - G11A THROUGH G13A
STR-71	STRUCTURAL STEEL DETAILS - CROSS FRAME DETAILS
STR-72	STRUCTURAL STEEL DETAILS - STIFFENER DETAILS
STR-73	STRUCTURAL STEEL DETAILS - DIAPHRAGM & MISC. DETAILS
STR-74	STRUCTURAL STEEL DETAILS - UTILITY SUPPORT DETAILS
STR-75	STRUCTURAL STEEL DETAILS - BOLTED FIELD SPLICES
STR-76	DEFLECTIONS & CAMBERS - SPAN A1
STR-77	DEFLECTIONS & CAMBERS - SPAN P1
STR-78	DEFLECTIONS & CAMBERS - SPAN P2
STR-79	DEFLECTIONS & CAMBERS - SPAN P3
STR-80	DEFLECTIONS & CAMBERS - SPAN P4 (G1-G8)
STR-81	DEFLECTIONS & CAMBERS - SPAN P4 (G9-G15)
STR-82	DEFLECTIONS & CAMBERS - SPAN P5
STR-83	BEARING LAYOUT
STR-84	BEARING DETAILS - 1
STR-85	BEARING DETAILS - 2
STR-86	BEARING FORCES & MOVEMENT - SOUTHBOUND
STR-87	BEARING FORCES & MOVEMENT - NORTHBOUND
STR-88	SLAB PLAN - ABUTMENT 1 TO PIER 3
STR-89	SLAB PLAN - PIER 3 TO ABUTMENT 2
STR-90	SLAB ELEVATIONS - SPANS A1, P1 & P2

DWG. NO.	DRAWING TITLE
STR-91	SLAB ELEVATIONS - SPANS P3, P4 & P5
STR-92	SLAB SECTIONS - SOUTHBOUND
STR-93	SLAB SECTIONS - NORTHBOUND
STR-94	SLAB DETAILS - TYPICAL DETAILS AND SECTIONS
STR-95	SLAB DETAILS - MISCELLANEOUS DETAILS
STR-96	SLAB DETAILS - PARAPET DETAILS
STR-97	SLAB DETAILS - PARAPET ELECTRICAL DETAILS
STR-98	SLAB DETAILS - POURING SEQUENCE
STR-99	APPROACH SLABS & DETAILS
STR-100	FINGER JOINT LAYOUT - ABUTMENT 1
STR-101	FINGER JOINT LAYOUT - ABUTMENT 2
STR-102	FINGER JOINT - PROPOSED SECTIONS AND DETAILS
STR-103	FINGER JOINT - PARAPET AND SPLICE DETAILS
STR-104	FINGER JOINT - SHIPPING DEVICES
STR-105	BRIDGE DRAINAGE - SCUPPER DETAILS
STR-106	BRIDGE DRAINAGE - LAYOUT AT STA 0+0788
STR-107	BRIDGE DRAINAGE - LAYOUT AT STA 1+033
STR-108	SIGN SUPPORT DETAILS - SHEET 1 OF 3
STR-109	SIGN SUPPORT DETAILS - SHEET 2 OF 3
STR-110	SIGN SUPPORT DETAILS - SHEET 3 OF 3
STR-111	ELECTRICAL DETAILS - EXPANSION FITTINGS
STR-112	ELECTRICAL DETAILS - PARAPET
STR-113	ELECTRICAL DETAILS - MEDIAN
STR-114	ERECTION AND DEMOLITION NOTES
STR-115	SUPERSTRUCTURE ERECTION/DEMOLITION - SHEET 1 OF 2
STR-116	SUPERSTRUCTURE ERECTION/DEMOLITION - SHEET 2 OF 2
STR-117	DEMOLITION DETAILS - WEST ABUTMENT
STR-118	DEMOLITION DETAILS - PIER 1
STR-119	DEMOLITION DETAILS - PIERS 2, 3, 6 & 7
STR-120	DEMOLITION DETAILS - PIERS 4 & 5
STR-121	DEMOLITION DETAILS - PIERS 8 & 22
STR-122	DEMOLITION DETAILS - PIER 9
STR-123	DEMOLITION DETAILS - PIER 10
STR-124	DEMOLITION DETAILS - PIER 11
STR-125	DEMOLITION DETAILS - EAST ABUTMENT
STR-126	DEMOLITION DETAILS - RAMP ABUTMENT
STR-127	DEMOLITION DETAILS - PIERS 12, 13 & 14
STR-128	DEMOLITION DETAILS - PIERS 15 THRU 21

REV.	DATE	DESCRIPTION	SHEET. NO
		REVISIONS	

SCALE AS NOTED

DESIGNER: D. BAGDASARIAN
DRAFTER: G. LEE
CHECKED BY: T. YOUNG
DATE CHECKED: 12-11-03

STATE OF CONNECTICUT
DEPARTMENT OF TRANSPORTATION

ENGINEER: PB AMERICAS, INC.
APPROVED BY: DATE:

PROJECT TITLE: RECONSTRUCTION OF I-95 OVER WEST RIVER (BRIDGE NO. 00163)
CADD PLOTTED 11/13/2012

TOWN: NEW HAVEN / WEST HAVEN
DRAWING TITLE: LIST OF DRAWINGS

PROJECT NO.: 92-522
DRAWING NO.: STR-1
SHEET NO.:

9:58:58 AM
11/13/2012
T:\V8CADD\Projects\PB\B735\FD\Structures\Contract_Sheets\Br00163\str-01-092522-00163.dgn

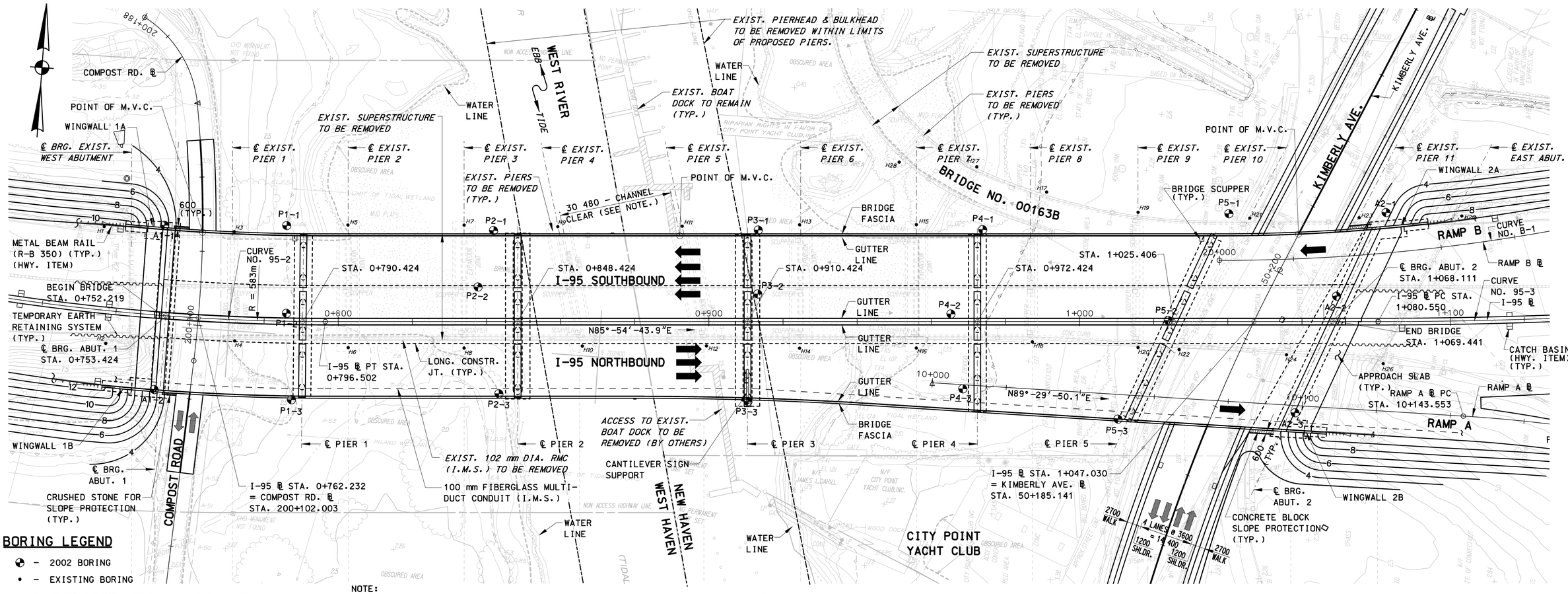

BORING LEGEND

- ◕ – 2002 BORING
- • – EXISTING BORING

EXISTING BORING INFORMATION IS REFERENCED FROM ORIGINAL CONTRACT PLANS FOR STATE PROJECT NO. 316A-01, DATED 1955.

NOTE:
THIS DIMENSION IS THE CLEAR DISTANCE BETWEEN EXISTING PIERS AND REPRESENTS THE EXISTING NAVIGATION CHANNEL.

PLAN

SCALE: 1:500

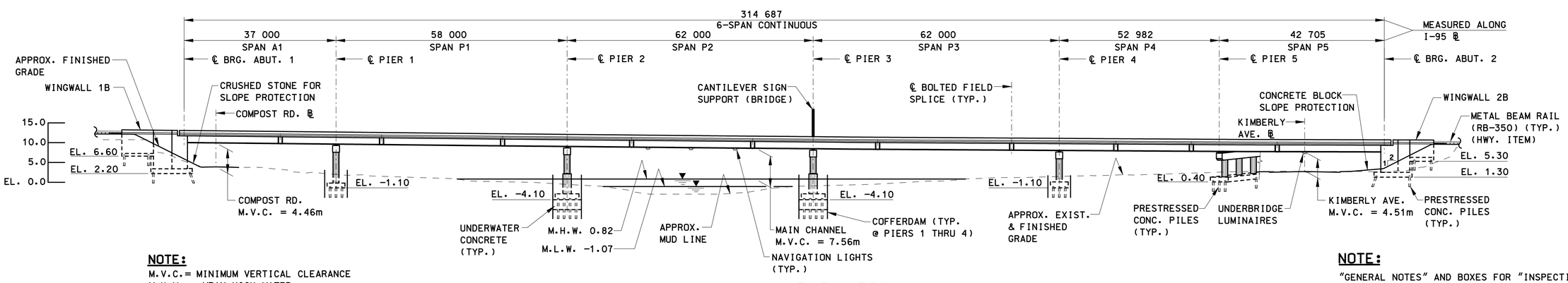

NOTE:
M.V.C. = MINIMUM VERTICAL CLEARANCE
M.H.W. = MEAN HIGH WATER
M.L.W. = MEAN LOW WATER

ELEVATION

SCALE: 1:500

NOTE:
"GENERAL NOTES" AND BOXES FOR "INSPECTION OF FIELD WELDS", "CONCRETE DISTRIBUTION" AND "NOTICE TO BRIDGE INSPECTORS" ARE LOCATED ON DWG. "GENERAL NOTES AND QUANTITIES".

REV.	DATE	DESCRIPTION	SHEET. NO
		REVISIONS	

THE INFORMATION, INCLUDING ESTIMATED QUANTITIES OF WORK, SHOWN ON THESE SHEETS IS BASED ON LIMITED INVESTIGATIONS BY THE STATE AND IS IN NO WAY WARRANTED TO INDICATE THE CONDITIONS OR ACTUAL QUANTITIES OF WORK WHICH WILL BE REQUIRED.

DESIGNER: T. LALIBERTE
DRAFTER: G. LEE
CHECKED BY: O. JAMBOTKAR
DATE CHECKED: 11-12-12

STATE OF CONNECTICUT
DEPARTMENT OF TRANSPORTATION

ENGINEER: PB AMERICAS, INC.
APPROVED BY: DATE:

PROJECT TITLE: RECONSTRUCTION OF I-95 OVER WEST RIVER (BRIDGE NO. 00163)

CADD | PLOTTED 11/13/2012

TOWN: NEW HAVEN / WEST HAVEN

DRAWING TITLE: GENERAL PLAN

PROJECT NO.: 92-522
DRAWING NO.: STR-2
SHEET NO.:

10:02:20 AM
11/13/2012
T:\WCADD\Projects\PB\BT35\FDS\Structures\Contract_Sheets\Br00163\str-02-092522-00163.dgn

GENERAL NOTES

SPECIFICATIONS: CONNECTICUT DEPARTMENT OF TRANSPORTATION FORM 816 (2004), SUPPLEMENTAL SPECIFICATION DATED JANUARY 2012 AND SPECIAL PROVISIONS.

DESIGN SPECIFICATIONS: AASHTO LRFD BRIDGE DESIGN SPECIFICATIONS, FITH EDITION, 2010 WITH AS SUPPLEMENTED BY THE CONNECTICUT DEPARTMENT OF TRANSPORTATION BRIDGE DESIGN MANUAL (2003) WITH REVISIONS THROUGH 2011.

ALLOWABLE DESIGN STRESSES:

CLASS "A" CONCRETE.................................. BASED ON f'c = 21 MPa
CLASS "F" CONCRETE.................................. BASED ON f'c = 28 MPa
CLASS "40" CONCRETE................................. BASED ON f'c = 28 MPa
UNDERWATER CONCRETE................................. BASED ON f'c = 21 MPa
REINFORCEMENT (ASTM A615M GRADE 420)................ fy = 414 MPa
STRUCTURAL STEEL (AASHTO M270 GRADE 345)............ Fy = 345 MPa
STRUCTURAL STEEL (AASHTO M270 GRADE 485)............ Fy = 485 MPa

LIVE LOAD: HL-93

FUTURE PAVING ALLOWANCE: NONE

STRUCTURAL STEEL: SEE STRUCTURE SHEET NOTES FOR DESIGNATIONS AND REQUIREMENTS.

PAINT: PAINT SHALL CONFORM TO THE REQUIREMENTS OF THE SPECIAL PROVISION, "STRUCTURAL STEEL (SITE NO. 1)." THE COLOR OF THE TOPCOAT MATERIAL ON THE STRUCTURAL STEEL SHALL CONFORM TO THE FEDERAL STANDARD COLOR NO. 24172 (GREEN).

BITUMINOUS CONCRETE OVERLAY: THIS SHALL CONSIST OF TWO LIFTS. THE FIRST SHALL BE 25 mm HMA S0.25 AND THE SECOND SHALL BE 50 mm HMA S0.5.

FOUNDATION PRESSURES AND PILE LOADS: THE VARIOUS GROUP LOADINGS NOTED ON THE SUBSTRUCTURE PLAN SHEETS REFER TO THE GROUP LOADS AS GIVEN IN THE AASHTO LRFD BRIDGE DESIGN SPECIFICATIONS.

DIMENSIONS: ALL DIMENSIONS SHOWN ON THE PLANS ARE GIVEN IN MILLIMETERS (mm) EXCEPT IF NOTED OTHERWISE. ALL ELEVATIONS ARE GIVEN IN METERS. WHEN ELEVATIONS ARE GIVEN TO LESS THAN THREE DECIMAL PLACES, THE OMITTED DIGITS SHALL BE ASSUMED TO BE ZERO.

STATIONING: STATIONS ARE GIVEN IN METERS (m).

EXISTING DIMENSIONS AND ELEVATIONS: DIMENSIONS AND ELEVATIONS OF THE EXISTING STRUCTURE SHOWN ON THESE PLANS ARE FOR GENERAL REFERENCE ONLY. THEY HAVE BEEN TAKEN FROM THE ORIGINAL DESIGN DRAWINGS AND LIMITED FIELD SURVEY AND ARE NOT GUARANTEED. THE EXISTING DIMENSIONS AND ELEVATIONS HAVE BEEN CONVERTED FROM ENGLISH UNITS TO ITS METRIC EQUIVALENT AND ROUNDED TO THE NEAREST MILLIMETER. THE CONTRACTOR SHALL TAKE ALL FIELD MEASUREMENTS NECESSARY TO ASSURE PROPER FIT OF THE FINISHED WORK AND SHALL ASSUME FULL RESPONSIBILITY FOR THEIR ACCURACY. WHEN SHOP DRAWINGS BASED ON FIELD MEASUREMENTS ARE SUBMITTED FOR APPROVAL, THE FIELD MEASUREMENTS SHALL ALSO BE SUBMITTED FOR REFERENCE BY THE REVIEWER.

EXISTING PLAN NOTE: BRIDGE NOS. 00163A & 00163B WERE ORIGINALLY CONSTRUCTED UNDER CONTRACT NO. 316A-01 DATED 1955. SUBSEQUENT REPAIRS AND MODIFICATIONS TO THE EXISTING BRIDGES HAVE BEEN PERFORMED UNDER SEPARATE CONTRACTS. PLANS FOR THESE PROJECTS ARE AVAILABLE TO THE CONTRACTOR AT THE CONNECTICUT DEPARTMENT OF TRANSPORTATION MAP ROOM, 160 PASCONE PLACE, NEWINGTON, CT, 06111.

CONCRETE NOTES

REMAIN-IN-PLACE FORMS: THE USE OF REMAIN-IN-PLACE FORMS ON THIS STRUCTURE SHALL BE ALLOWED FOR BRIDGE DECK CONSTRUCTION IN ALL BUT THE FOLLOWING LOCATIONS:

- UNDER CANTILEVER SLABS AT DECK OVERHANGS
- UNDER LONGITUDINAL DECK JOINTS FOR STAGE CONSTRUCTION.

THE GIRDERS HAVE BEEN DESIGNED FOR THE ADDITIONAL WEIGHT OF 70 kg/m FOR THE REMAIN-IN-PLACE FORMS.

COMPOSITE CONSTRUCTION: NO TEMPORARY INTERMEDIATE SUPPORTS SHALL BE USED DURING THE PLACING AND SETTING OF THE CONCRETE DECK SLAB. TEMPORARY SUPPORTS MAY BE USED FOR STRUCTURAL STEEL ERECTION ONLY. CONSTRUCTION LOADS AND DEAD LOADS WILL BE PERMITTED WHEN DIRECTED BY THE ENGINEER BUT ONLY WHEN THE CONCRETE HAS REACHED A STRENGTH OF f'c = 24 MPa. LIVE LOADS (TRAFFIC) WILL BE PERMITTED ON THE STRUCTURE AFTER THE CONCRETE HAS REACHED A STRENGTH OF f'c = 28 MPa.

CLASS "A" CONCRETE: CLASS "A" CONCRETE SHALL BE USED FOR THE ENTIRE SUBSTRUCTURE AND THE PARAPETS OF U-TYPE WINGS.

CLASS "F" CONCRETE: CLASS "F" CONCRETE SHALL BE USED FOR BRIDGE DECKS INCLUDING PARAPETS, APPROACH SLABS AND FINGER JOINT HEADERS, BEARING PADS, AND KEEPER BLOCKS.

CLASS "40" CONCRETE: CLASS "40" CONCRETE SHALL BE USED FOR THE PIER PLINTHS, COLUMNS AND CAPS. CLASS "40" CONCRETE SHALL ALSO BE USED AT "KEEPER BLOCKS" & "BEARING PADS" AT PIERS.

UNDERWATER CONCRETE: UNDERWATER CONCRETE SHALL BE USED FOR THE TREMIE SEALS AT PIERS 2 & 3.

MASS CONCRETE: ALL PIER CONCRETE WITH THE EXCEPTION OF THE FOOTINGS SHALL BE CLASSIFIED AS MASS CONCRETE. SEE SPECIAL PROVISION SECTION 6.01 - "CONCRETE FOR STRUCTURES" FOR REQUIREMENTS.

JOINT SEAL: SEE SPECIAL PROVISIONS.

PARAFFIN: THE COST OF FURNISHING AND APPLYING PARAFFIN IS INCLUDED IN THE ITEM CLASS 'F' CONCRETE.

EXPOSED EDGES: EXPOSED EDGES OF CONCRETE SHALL BE BEVELED 25 mm X 25 mm UNLESS DIMENSIONED OTHERWISE.

CONCRETE COVER: ALL REINFORCEMENT SHALL HAVE 50 mm COVER UNLESS DIMENSIONED OTHERWISE.

REINFORCEMENT: ALL REINFORCEMENT SHALL BE ASTM A615M GRADE 420.

EPOXY COATED REINFORCING BARS: ALL REINFORCEMENT IN THE SUPERSTRUCTURE INCLUDING THE CONCRETE DECK SLAB AND PARAPETS SHALL BE EPOXY COATED UNLESS OTHERWISE NOTED. THESE BARS SHALL BE INCLUDED IN THE ITEM "DEFORMED STEEL BARS (EPOXY COATED)". ALL REINFORCEMENT IN THE CONCRETE APPROACH SLABS SHALL BE EPOXY COATED. THESE BARS SHALL BE INCLUDED IN THE ITEM "DEFORMED STEEL BARS (EPOXY COATED)".

PREFORMED EXPANSION JOINT FILLER: THE COST OF FURNISHING AND INSTALLING PREFORMED EXPANSION JOINT FILLER SHALL BE INCLUDED IN THE COST OF THE ITEM "CLASS 'A' CONCRETE".

CLOSED CELL ELASTOMER: THE COST OF FURNISHING AND INSTALLING CLOSED CELL ELASTOMER SHALL BE INCLUDED IN THE COST OF THE ITEM "CLASS 'A' CONCRETE".

CONSTRUCTION JOINTS: CONSTRUCTION JOINTS, OTHER THAN THOSE SHOWN ON THE PLANS, WILL NOT BE PERMITTED WITHOUT THE PRIOR APPROVAL OF THE ENGINEER.

CURVE DATA

I-95 ℄ CURVE NO. 95-2	
P.C.	STA. 0+585.004
	N 202427.345
	E 288616.777
P.T.	STA. 0+796.502
	N 202404.245
	E 288825.845
△	20°-47'-07.6"
R (m)	583.000
T (m)	106.924
L (m)	211.498

I-95 ℄ CURVE NO. 95-3	
P.C.	STA. 1+080.550
	N 202424.494
	E 289109.170
P.T.	STA. 1+247.804
	N 202447.526
	E 289274.705
△	7°-39'-58.9"
R (m)	1250.000
T (m)	83.752
L (m)	167.254

RAMP B ℄ CURVE NO. B-1	
P.C.	STA. 20+000.000
	N 202437.901
	E 289065.275
P.T.	STA. 20+268.776
	N 202525.640
	E 289316.001
△	30°-23'-53.6"
R (m)	506.600
T (m)	137.632
L (m)	268.776

HYDRAULIC DATA

MEAN HIGH WATER (MHW)	0.82 m	
MEAN LOW WATER (MLW)	-1.07 m	
HIGH TIDE LINE (HTL)	1.56 m	
10-YEAR TIDE	2.57 m	
100-YEAR TIDE	3.221 m	
DESIGN FREQUENCY/EVENT	TIDAL: 100-YEAR	RIVERINE: 100-YEAR
DESIGN DISCHARGE	220 cms	136 cms
DESIGN WATER SURFACE ELEVATION - EBB DIRECTION	-0.26 m (Pier 4)	1.14 m (Pier 4)
DESIGN WATER SURFACE ELEVATION - FLOOD DIRECTION	3.05 m (Pier 4)	1.29 m (Pier 4)
MAXIMUM SCOUR ELEVATION	-7.24 m (Pier 2)	-4.46 m (Pier 2)
FREQUENCY/EVENT	TIDAL: 500-YEAR	RIVERINE: 500-YEAR
DISCHARGE	290 cms	178 cms
WORST CASE SCOUR SUB-STRUCTURE UNIT	-7.24 m (PIER 2)	

NOTE: ELEVATIONS BASED ON NAVD 1988 DATUM

CONCRETE DISTRIBUTION

SUPERSTRUCTURE	5000 m^3
SUBSTRUCTURE	3800 m^3
FOOTINGS	3000 m^3
UNDERWATER	1800 m^3
TOTAL	13,500 m^3

NOTE: SUBSTRUCTURE QUANTITY INCLUDES CONCRETE FOR PLINTHS

INSPECTION OF FIELD WELDS

METHOD	UNITS	QUANTITY
ULTRASONIC	mm	0
MAGNETIC PARTICLE	m	0

NOTICE TO BRIDGE INSPECTORS

THE DEPARTMENT'S BRIDGE SAFETY PROCEDURES REQUIRE THIS BRIDGE TO BE INSPECTED FOR, BUT NOT LIMITED TO, ALL APPROPRIATE COMPONENTS INDICATED IN THE GOVERNING MANUALS FOR BRIDGE INSPECTION. ATTENTION MUST BE GIVEN TO INSPECTING THE FOLLOWING SPECIAL COMPONENTS AND DETAILS. (THE LISTING FOR COMPONENTS FOR SPECIFIC ATTENTION SHALL NOT BE CONSTRUED TO REDUCE THE IMPORTANCE OF ANY OTHER COMPONENT OF THE STRUCTURE.)
THE FREQUENCY OF INSPECTION OF THIS STRUCTURE SHALL BE IN ACCORDANCE WITH THE GOVERNING MANUALS FOR BRIDGE INSPECTION, UNLESS OTHERWISE DIRECTED BY THE MANAGER OF BRIDGE SAFETY AND EVALUATION.

COMPONENT OR DETAIL	STRUCTURE REFERENCE SHEET
STIFFENERS AND CONNECTION PLATE ATTACHMENTS TO TENSION FLANGES	"STRUCTURAL STEEL DETAILS - STIFFENER DETAILS"
GIRDER FLANGE TRANSITION WELDS	"GIRDER SCHEDULE - G11A THROUGH G13A"
END CONNECTIONS @ G11A-G13A (SPAN P3)	"STRUCTURAL STEEL DETAILS - DIAPHRAGM & MISC. DETAILS"
BOLTED FIELD SPLICES	"STRUCTURAL STEEL DETAILS - BOLTED FIELD SPLICES"
FINGER JOINT ASSEMBLIES	"FINGER JOINT" DRAWINGS

GIRDER SHIPPING DATA (MAXIMUM)

	SHIPPING LENGTH (mm)	SHIPPING HEIGHT (mm)	SHIPPING WIDTH (mm)	SHIPPING WEIGHT (kg)
NORTHBOUND	33 809	1780	450	16 200
SOUTHBOUND	33 407	1780	450	16 000

TABLE OF QUANTITIES (CONTINUED)

ITEM	UNIT	QUANTITY
50mm RIGID METAL CONDUIT IN STRUCTURE	M	775
65mm RIGID METAL CONDUIT IN STRUCTURE	M	650
100 mm FIBERGLASS MULTI-DUCT CONDUIT - EXTRA HEAVY WALL	M	325
450 mm x 300 mm x 200 mm CAST IRON JUNCTION BOX	EA.	33
MILE MARKER SIGN SUPPORT	EA.	2
PARAPET MOUNTED SIGN SUPPORT	EA.	2
TUBULAR ARCH CANTILEVER SIGN SUPPORT (BRIDGE)	EA.	1

TABLE OF QUANTITIES

ITEM	UNIT	QUANTITY
WATER TRANSPORTATION FOR INSPECTION PERSONNEL	DAY	1,000
WATER TRANSPORTATION FOR RESCUE OPERATIONS	DAY	1,000
CONSTRUCTION ACCESS	L.S.	L.S.
DISPOSAL OF CONTROLLED MATERIALS	MET. T	10150
DISPOSAL OF HAZARDOUS MATERIALS	MET. T	23
REMOVAL OF HMA WEARING SURFACE	SQ.M	490
STRUCTURE EXCAVATION - EARTH (COMPLETE)	CU.M	2,900
STRUCTURE EXCAVATION - EARTH (EXCL. COFFERDAM & DEWATERING)	CU. M	7,500
CONFINED IN-WATER EXCAVATION	CU. M	5,400
COFFERDAM AND DEWATERING - PIER 1	M	120
COFFERDAM AND DEWATERING - PIER 2	M	140
COFFERDAM AND DEWATERING - PIER 3	M	140
COFFERDAM AND DEWATERING - PIER 4	M	130
LIGHTWEIGHT FILL	CU. M	6,900
GRANULAR FILL	CU. M	1,150
BACKFILL MATERIAL	CU. M	2570
HMA S0.25	MET.T	852
HMA S0.5	MET.T	1704
REMOVAL OF SUPERSTRUCTURE (SITE NO. 1)	L.S.	L.S.
SHEAR CONNECTORS (SITE NO. 1)	L.S.	L.S.
BRIDGE SCUPPER - TYPE B	EA.	2
300 mm PIPE FOR BRIDGE DRAINAGE (FIBERGLASS)	M	100
38 mm POLYVINYL CHLORIDE PLASTIC PIPE	M	40
INSTALLATION OF FINGER JOINTS	M	103
REMOVE AND REPLACE FINGER JOINT	M	4
HIGH LOAD MULTI-ROTATIONAL BEARINGS (1335KN)	EA.	33
HIGH LOAD MULTI-ROTATIONAL BEARINGS (2670KN)	EA.	17
HIGH LOAD MULTI-ROTATIONAL BEARINGS (3115KN)	EA.	26
HIGH LOAD MULTI-ROTATIONAL BEARINGS (3560KN)	EA.	38
CLASS "A" CONCRETE	CU. M	4,700
CLASS "40" CONCRETE	CU. M	2,100
CLASS "F" CONCRETE	CU. M	5,000
UNDERWATER CONCRETE	CU. M	1,800
DEFORMED STEEL BARS	kg	457,000
DEFORMED STEEL BARS - EPOXY COATED	kg	865,000
DOWEL BAR SPLICER SYSTEM	EA.	730
DOWEL BAR SPLICER SYSTEM - EPOXY COATED	EA.	8,900
STRUCTURAL STEEL (SITE NO. 1)	L.S.	L.S.
MATERIALS FOR STRUCTURAL STEEL (SITE NO. 1)	EST.	EST.
TEMPORARY SLAB SUPPORT (SITE NO. 1)	L.S.	L.S.
CONCRETE CYLINDER CURING BOX	EA.	2
OBSTRUCTION DRILLING AND REMOVAL FOR PILES	HR.	8
DRIVING PRESTRESSED CONCRETE PILES	M	21,000
DYNAMIC PILE DRIVING ANALYSIS (P.D.A.) TEST	EA.	7
PILE LOADING TEST	EA.	7
REMOVAL OF EXISTING TIMBER PILES	EA.	350
FURNISHING 406 mm SQUARE PRESTRESSED CONCRETE PILES (PRETENSIONED)	M	21,000
TEST PILE 406 mm SQ. PRESTRESSED CONC. PILES (PRETENSIONED) (26m LONG)	EA.	12
TEST PILE 406 mm SQ. PRESTRESSED CONC. PILES (PRETENSIONED) (27.5m LONG)	EA.	13
TEST PILE 406 mm SQ. PRESTRESSED CONC. PILES (PRETENSIONED) (29m LONG)	EA.	4
MEMBRANE WATERPROOFING (WOVEN GLASS FABRIC)	SQ.M	15,000
DAMPPROOFING	SQ.M	1,000
TEMPORARY EARTH RETAINING SYSTEM	SQ.M	150
TEMPORARY LATERAL SUPPORT	SQ.M	330
MONITORING STRUCTURE	L.S.	L.S.
CRUSHED STONE FOR SLOPE PROTECTION	MET.T	60
CONCRETE BLOCK SLOPE PROTECTION	SQ.M	440
150 mm CCMP STRUCTURE UNDERDRAIN	M	180
150 mm CCMP OUTLET FOR UNDERDRAIN	M	6
GEOTEXTILE (SEPARATION - MEDIUM SURVIVABILITY)	SQ.M	1,700
EPOXY PROTECTIVE COATING	SQ.M	150
TEMPORARY PRECAST CONCRETE BARRIER CURB (STR.)	M	1,300
TEMPORARY PROTECTIVE BARRIER (EXISTING BRIDGE)	EA.	6
STRUCTURAL SOIL	CU. M	530
REMOVAL OF WEST ABUTMENT	L.S.	L.S.
REMOVAL OF EAST ABUTMENT	L.S.	L.S.
REMOVAL OF RAMP ABUTMENT	L.S.	L.S.
REMOVAL OF PIER 1	L.S.	L.S.
REMOVAL OF PIER 2	L.S.	L.S.
REMOVAL OF PIER 3	L.S.	L.S.
REMOVAL OF PIER 4	L.S.	L.S.
REMOVAL OF PIER 5	L.S.	L.S.
REMOVAL OF PIER 6	L.S.	L.S.
REMOVAL OF PIER 7	L.S.	L.S.
REMOVAL OF PIER 8	L.S.	L.S.
REMOVAL OF PIER 9	L.S.	L.S.
REMOVAL OF PIER 10	L.S.	L.S.
REMOVAL OF PIER 11	L.S.	L.S.
REMOVAL OF PIER 12	L.S.	L.S.
REMOVAL OF PIER 13	L.S.	L.S.
REMOVAL OF PIER 14	L.S.	L.S.
REMOVAL OF PIER 15	L.S.	L.S.
REMOVAL OF PIER 16	L.S.	L.S.
REMOVAL OF PIER 17	L.S.	L.S.
REMOVAL OF PIER 18	L.S.	L.S.
REMOVAL OF PIER 19	L.S.	L.S.
REMOVAL OF PIER 20	L.S.	L.S.
REMOVAL OF PIER 21	L.S.	L.S.
REMOVAL OF PIER 22	L.S.	L.S.
25mm RIGID METAL CONDUIT IN STRUCTURE	M	1

REV.	DATE	DESCRIPTION	SHEET. NO
		REVISIONS	

THE INFORMATION, INCLUDING ESTIMATED QUANTITIES OF WORK, SHOWN ON THESE SHEETS IS BASED ON LIMITED INVESTIGATIONS BY THE STATE AND IS IN NO WAY WARRANTED TO INDICATE THE CONDITIONS OR ACTUAL QUANTITIES OF WORK WHICH WILL BE REQUIRED.

DESIGNER: T. LALIBERTE
DRAFTER: G. LEE
CHECKED BY: O. JAMBOTKAR
DATE CHECKED: 11-12-12

STATE OF CONNECTICUT
DEPARTMENT OF TRANSPORTATION

ENGINEER: PB AMERICAS, INC.
APPROVED BY: DATE:

PROJECT TITLE: RECONSTRUCTION OF I-95 OVER WEST RIVER (BRIDGE NO. 00163)
CADD PLOTTED 11/13/2012

TOWN: NEW HAVEN / WEST HAVEN
DRAWING TITLE: GENERAL NOTES & QUANTITIES

PROJECT NO.: 92-522
DRAWING NO.: STR-3
SHEET NO.:

10:04:06 AM
11/13/2012
T:\V8CADD\Projects\PBI8735\FD\Structures\Contract_Sheets\Br00163\str-03-092522-00163.dgn

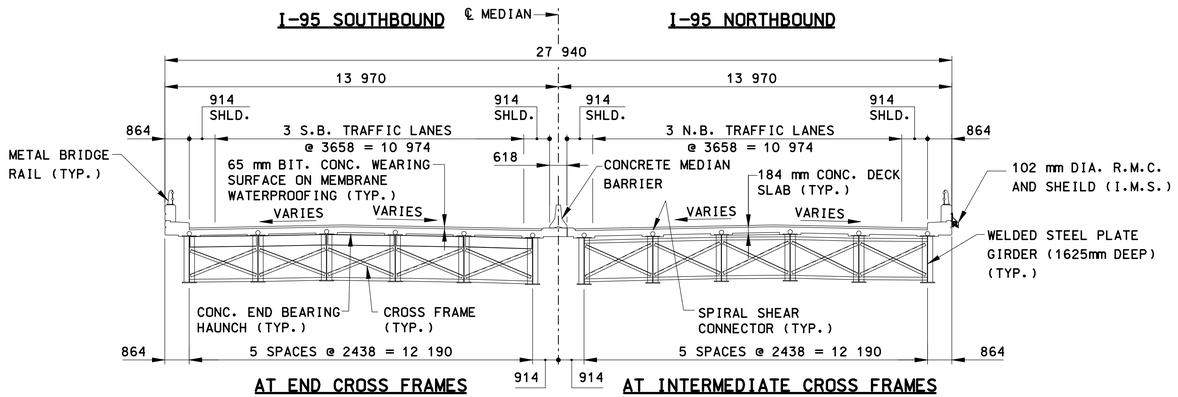

AT END CROSS FRAMES

AT INTERMEDIATE CROSS FRAMES

SPANS 1 THRU 8

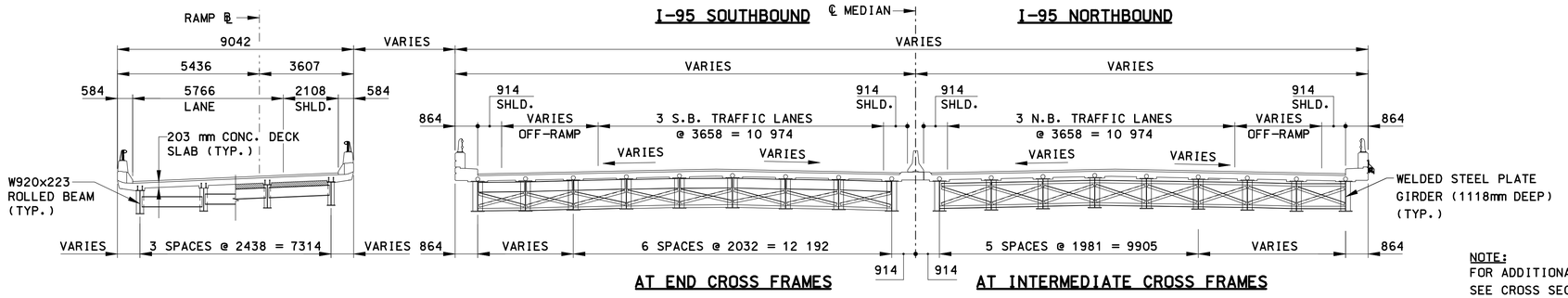

AT END CROSS FRAMES

AT INTERMEDIATE CROSS FRAMES

SPANS 9 THRU 12

EXISTING SUPERSTRUCTURE

RAMP

NOTE:
FOR ADDITIONAL INFORMATION NOT SHOWN, SEE CROSS SECTION FOR "SPANS 1 THRU 8".

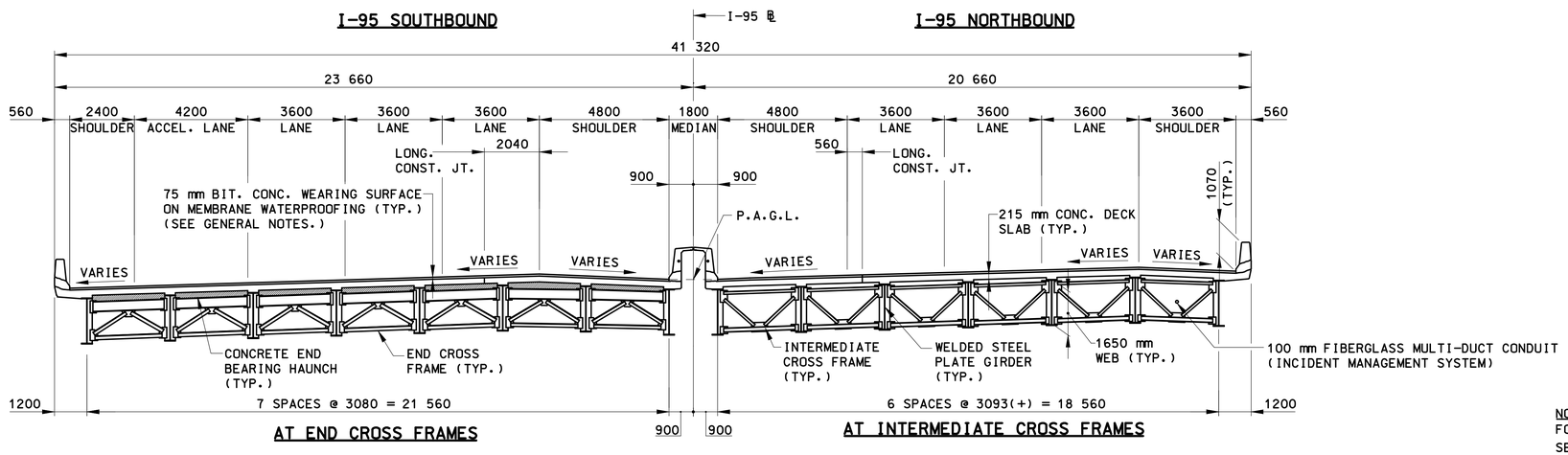

AT END CROSS FRAMES

AT INTERMEDIATE CROSS FRAMES

STA. 0+752(±) TO STA. 0+881(±)

PROPOSED SUPERSTRUCTURE

NOTE:
FOR VARYING CROSS SLOPES SEE "BANKING DIAGRAMS".

P.A.G.L. = POINT OF APPLICATION OF GRADE LINE

TYPICAL BRIDGE CROSS SECTIONS

SCALE: 1:100

REV.	DATE	DESCRIPTION	SHEET. NO
		REVISIONS	

SCALE AS NOTED

DESIGNER: D. BAGDASARIAN
DRAFTER: G. LEE
CHECKED BY: T. LALIBERTE
DATE CHECKED: 11-12-12

STATE OF CONNECTICUT
DEPARTMENT OF TRANSPORTATION

ENGINEER: PB AMERICAS, INC.
APPROVED BY:
DATE:

PROJECT TITLE: RECONSTRUCTION OF I-95 OVER WEST RIVER (BRIDGE NO. 00163)

CADD
PLOTTED 11/13/2012

TOWN: NEW HAVEN / WEST HAVEN

DRAWING TITLE: TYPICAL BRIDGE CROSS SECTIONS - EXISTING SUPERSTRUCTURE AND STA. 0+752 TO STA. 0+881

PROJECT NO.: 92-522
DRAWING NO.: STR-4
SHEET NO.:

10:06:33 AM
11/13/2012
T:\VBCADD\Projects\PB\8735\FD\Structures\Contract_Sheets\Br00163-dtr-04-092522-00163.dgn

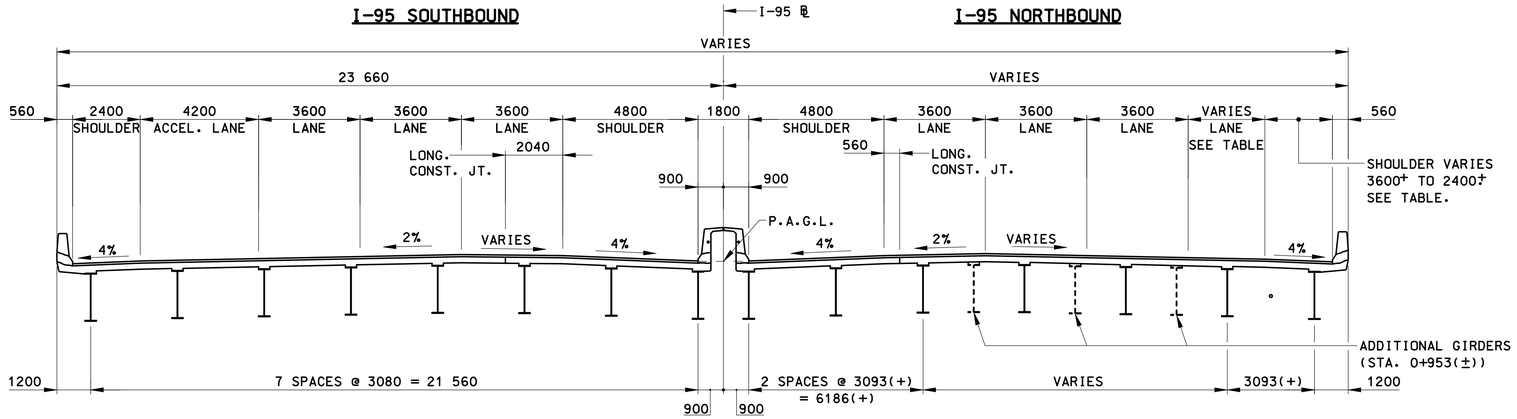

STA. 0+881(±) TO STA. 0+960(±)

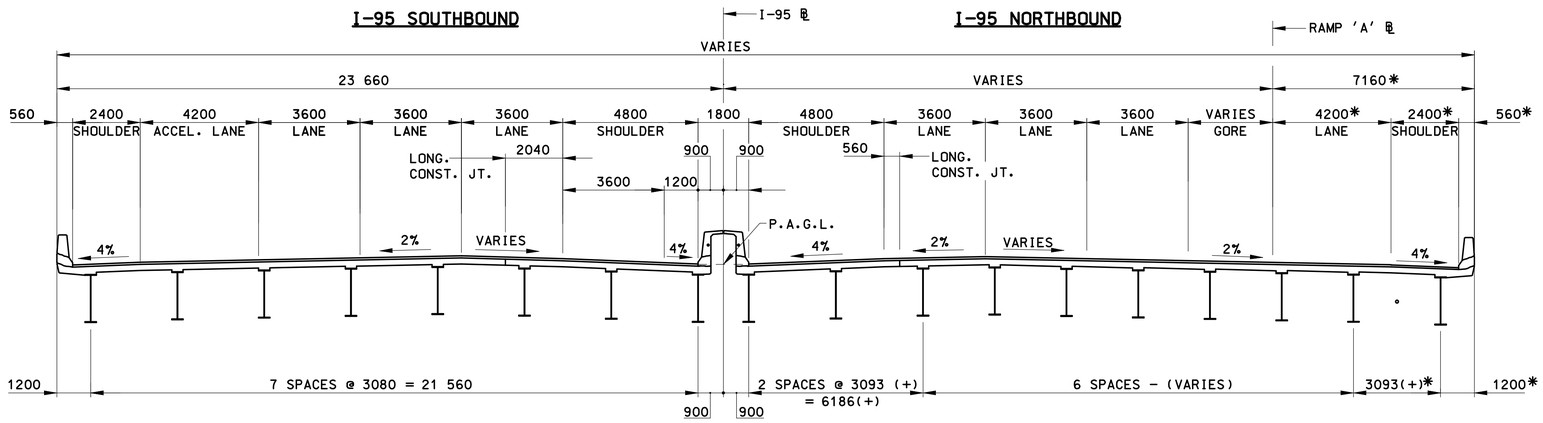

STA. 0+960(±) TO STA. 1+037(±)

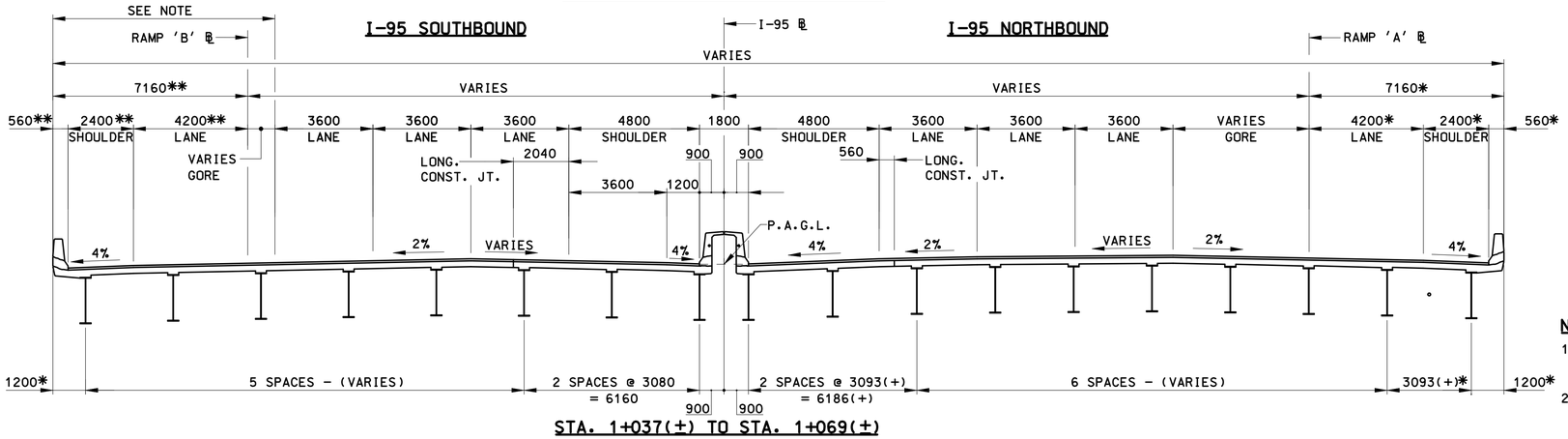

STA. 1+037(±) TO STA. 1+069(±)

PROPOSED SUPERSTRUCTURE

TYPICAL BRIDGE CROSS SECTIONS

SCALE: 1:100

CROSS SLOPE TRANSITION DATA						
	STATION		WIDTH *		X-SLOPE(%)	
	BEGIN	END	BEGIN	END	BEGIN	END
LANE	0+880.882	0+912.191	0	1200	0.430	1.550
LANE	0+912.191	0+920.000	1200	1685	1.550	2.000
LANE	0+920.000	0+960.266	1685	4200	2.000	2.000
SHLDR	0+893.104	0+912.191	3600+	2400+	4.000	4.000
SHLDR	0+912.191	0+960.266	2400+	2400	4.000	4.000

* DIMENSION MEASURED PERPENDICULAR TO RAMP 'A' ℄.

NOTE: GUTTERLINE IS ALONG A CURVE BETWEEN STA 0+880.882 AND STA 0+943.412. PORTION OF WIDTH SHOWN AS A PLUS (+) ABOVE FOLLOWS CONSTANT SHOULDER X-SLOPE (4.0%).

* DIMENSION MEASURED PERPENDICULAR TO RAMP 'A' ℄.

** DIMENSION MEASURED PERPENDICULAR TO RAMP 'B' ℄.

NOTE: FOR ROADWAY WIDTH AND CROSS SLOPE INFORMATION BEYOND THE BRIDGE LIMITS AND NOT COVERED WITHIN THE BANKING DIAGRAMS, SEE THE ROADWAY PLANS (PROPOSED I-95 CROSS SECTIONS).

* DIMENSION MEASURED PERPENDICULAR TO RAMP 'A' ℄.

NOTES

1. FOR VARYING CROSS SLOPES, SEE "BANKING DIAGRAMS".
2. FOR ADDITIONAL INFORMATION NOT SHOWN SEE "PROPOSED SUPERSTRUCTURE" SECTION ON DWG. "TYPICAL BRIDGE CROSS SECTIONS - EXISTING SUPERSTRUCTURE AND STA 0+751 TO STA 0+893".
3. P.A.G.L. = POINT OF APPLICATION OF GRADE LINE.

REV.	DATE	DESCRIPTION	SHEET. NO
		REVISIONS	

SCALE AS NOTED

DESIGNER: D. BAGDASARIAN
DRAFTER: G. LEE
CHECKED BY: T. LALIBERTE
DATE CHECKED: 11-12-12

STATE OF CONNECTICUT
DEPARTMENT OF TRANSPORTATION

ENGINEER: PB AMERICAS, INC.
APPROVED BY:
DATE:

PROJECT TITLE: RECONSTRUCTION OF I-95 OVER WEST RIVER (BRIDGE NO. 00163)
CADD
PLOTTED 11/13/2012

TOWN: NEW HAVEN / WEST HAVEN
DRAWING TITLE: TYPICAL BRIDGE CROSS SECTIONS - STA. 0+881 TO STA. 1+069

PROJECT NO.: 92-522
DRAWING NO.: STR-5
SHEET NO.:

10:07:26 AM
11/13/2012
T:\V8CADD\Projects\PB8735\FD\Structures\Contract_Sheets\Br00163\str-05-092522-00163.dgn

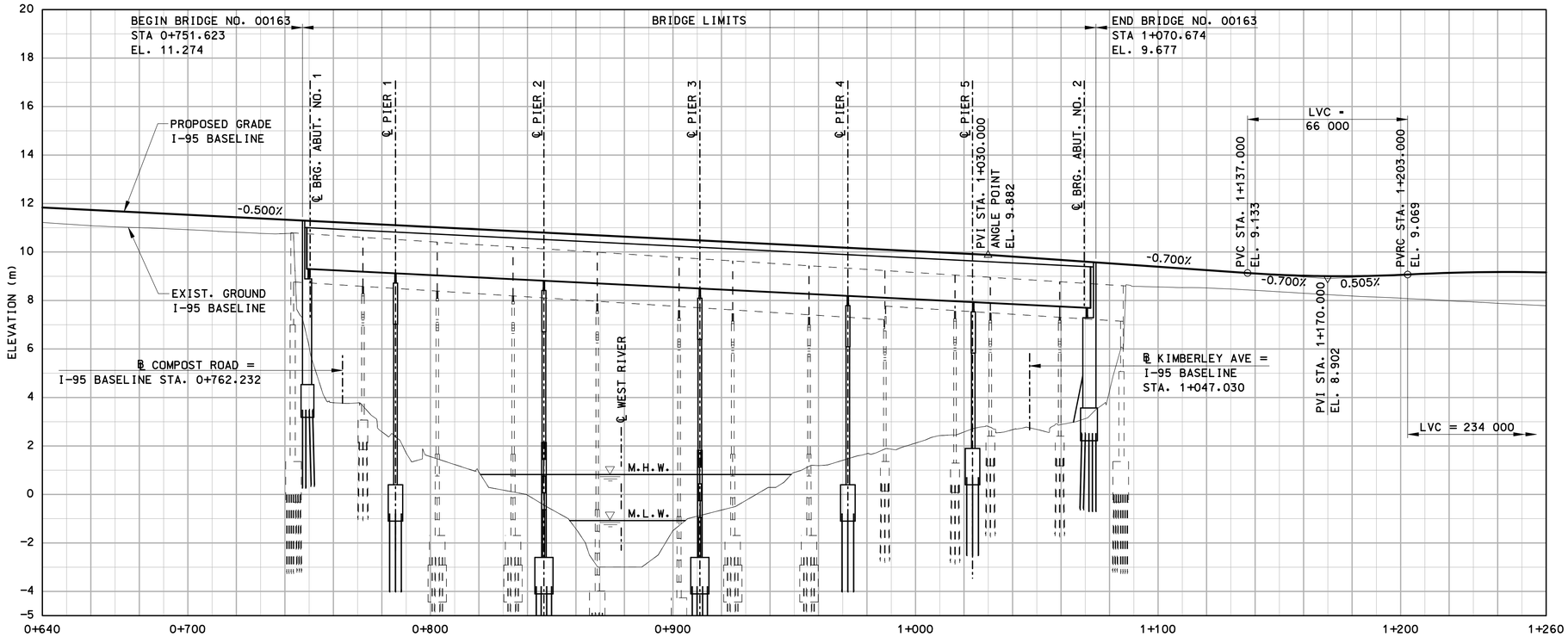

I-95 BASELINE PROFILE

SCALE: HORIZ. 1:1000
VERT. 1:100

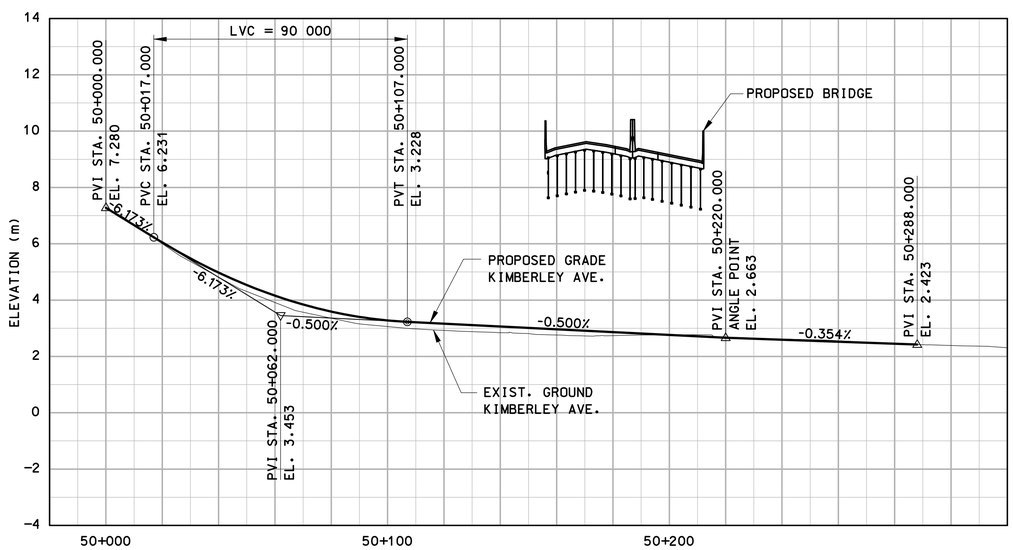

KIMBERLY AVENUE BASELINE PROFILE

SCALE: HORIZ. 1:1000
VERT. 1:100

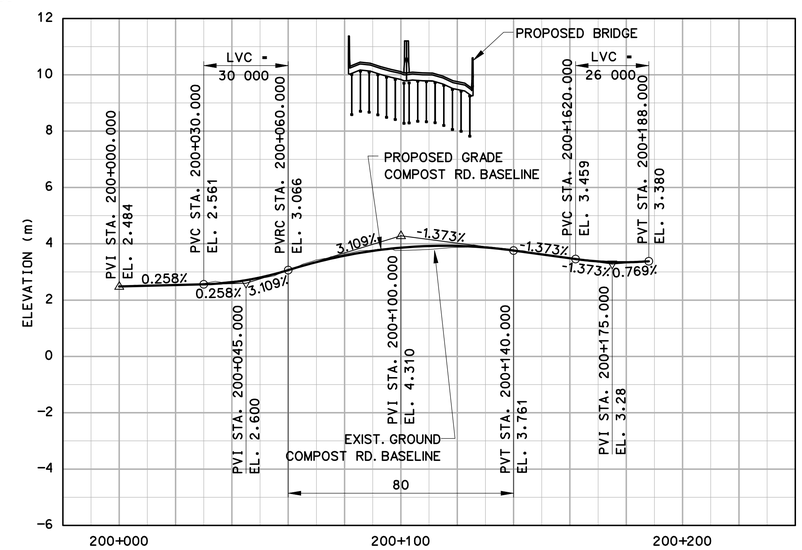

COMPOST ROAD BASELINE PROFILE

SCALE: HORIZ. 1:1000
VERT. 1:100

REV.	DATE	DESCRIPTION	SHEET. NO
		REVISIONS	

SCALE AS NOTED

DESIGNER: T. LALIBERTE
DRAFTER: T. LALIBERTE /G. LEE
CHECKED BY: B. BURKE
DATE CHECKED: 11-12-12

STATE OF CONNECTICUT
DEPARTMENT OF TRANSPORTATION

ENGINEER: PB AMERICAS, INC.
APPROVED BY:
DATE:

PROJECT TITLE: RECONSTRUCTION OF I-95 OVER WEST RIVER (BRIDGE NO. 00163)
CADD
PLOTTED 11/13/2012

TOWN: NEW HAVEN / WEST HAVEN
DRAWING TITLE: PROFILES

PROJECT NO.: 92-522
DRAWING NO.: STR-6
SHEET NO.:

10:08:55 AM
11/13/2012
T:\HBCADD\Projects\PB\8735\FD\Structures\Contract_Sheets\Br0163\dr-06-092522-00163.dgn

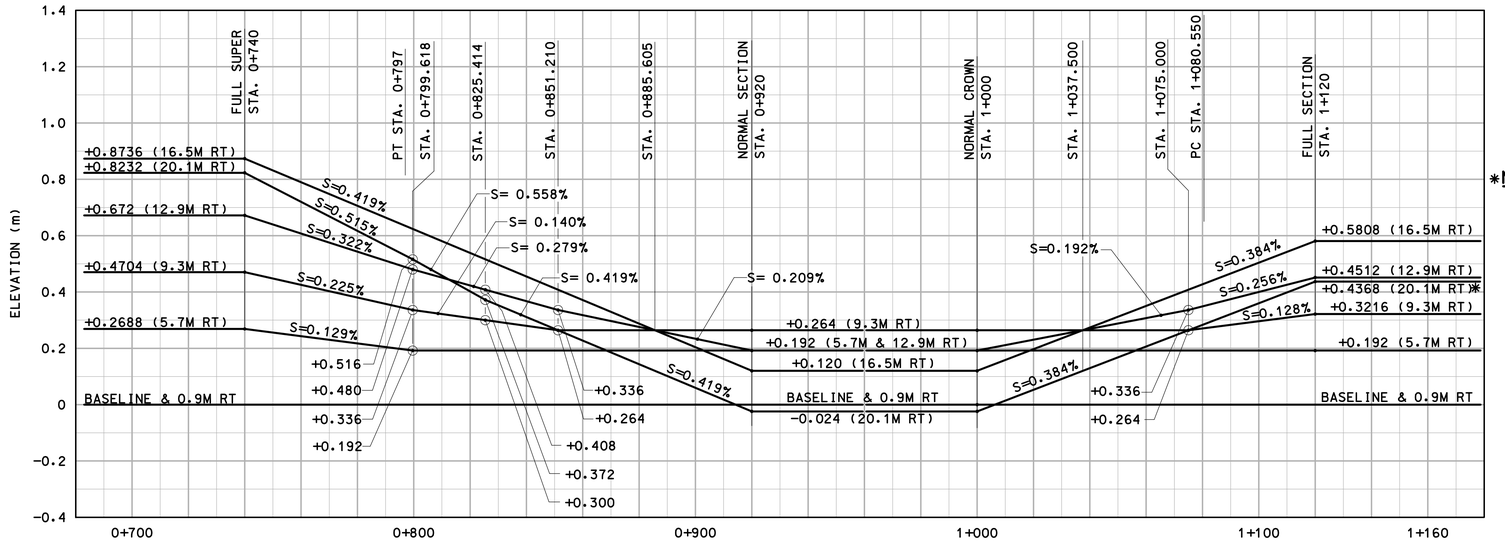

I-95 NORTHBOUND

***NORTHBOUND NOTE:**

NORTHBOUND BANKING DIAGRAM IS VALID FOR THE ENTIRE BRIDGE WIDTH TO STA. 0+912.191. BEYOND STA 0+912.191 BANKING DIAGRAM IS VALID TO LINE 16.5m RIGHT OF ℄. FOR AREA NOT SHOWN, THE WIDTH AND/OR CROSS SLOPE VARIES. FOR ADDITIONAL DETAILS OF UNDEFINED LOCATIONS, SEE SLAB PLANS, SLAB ELEVATIONS AND/OR ROADWAY PLANS (PROPOSED I-95 CROSS SECTIONS AND GRADING PLANS.

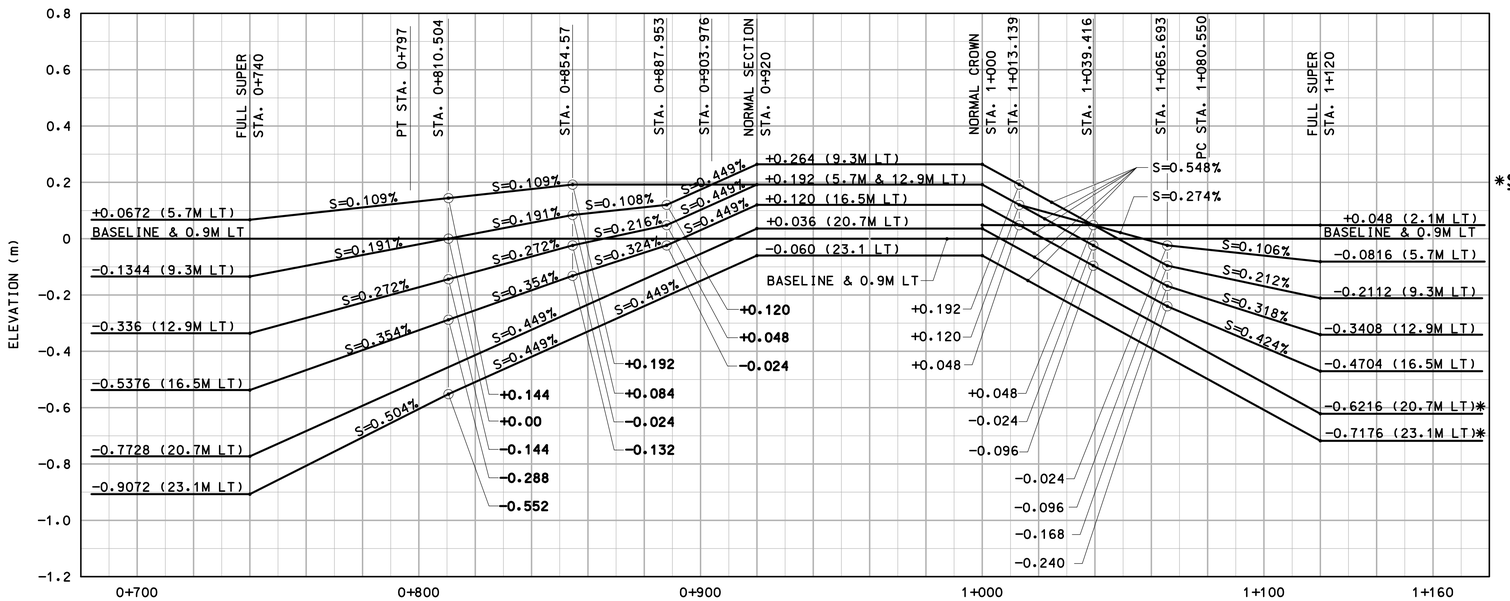

I-95 SOUTHBOUND

***SOUTHBOUND NOTE:**

SOUTHBOUND BANKING DIAGRAM IS VALID FOR THE ENTIRE BRIDGE WIDTH TO STA. 1+037.722. BEYOND STA 1+037.722 BANKING DIAGRAM IS VALID TO LINE 16.5m LEFT OF ℄. FOR AREA NOT SHOWN, THE WIDTH AND/OR CROSS SLOPE VARIES. FOR ADDITIONAL DETAILS OF UNDEFINED LOCATIONS, SEE SLAB PLANS, SLAB ELEVATIONS AND/OR ROADWAY PLANS (PROPOSED I-95 CROSS SECTIONS AND GRADING PLANS.

BANKING DIAGRAM

SCALE: HORIZ. 1:1000
VERT. 1:10

10:09:48 AM
11/13/2012
T:\V8CADD\Projects\PB187350FD\Structures\Contract_Sheets\Br00163\str-07-092522-00163.dgn

REV.	DATE	DESCRIPTION	SHEET. NO
		REVISIONS	

SCALE AS NOTED

DESIGNER: R. TALBOT
DRAFTER: T. LALIBERTE
CHECKED BY: T. LALIBERTE
DATE CHECKED: 11-12-12

STATE OF CONNECTICUT
DEPARTMENT OF TRANSPORTATION

ENGINEER: PB AMERICAS, INC.
APPROVED BY:
DATE:

PROJECT TITLE: RECONSTRUCTION OF I-95 OVER WEST RIVER (BRIDGE NO. 00163)
CADD
PLOTTED 11/13/2012

TOWN: NEW HAVEN / WEST HAVEN
DRAWING TITLE: BANKING DIAGRAMS

PROJECT NO.: 92-522
DRAWING NO.: STR-7
SHEET NO.:

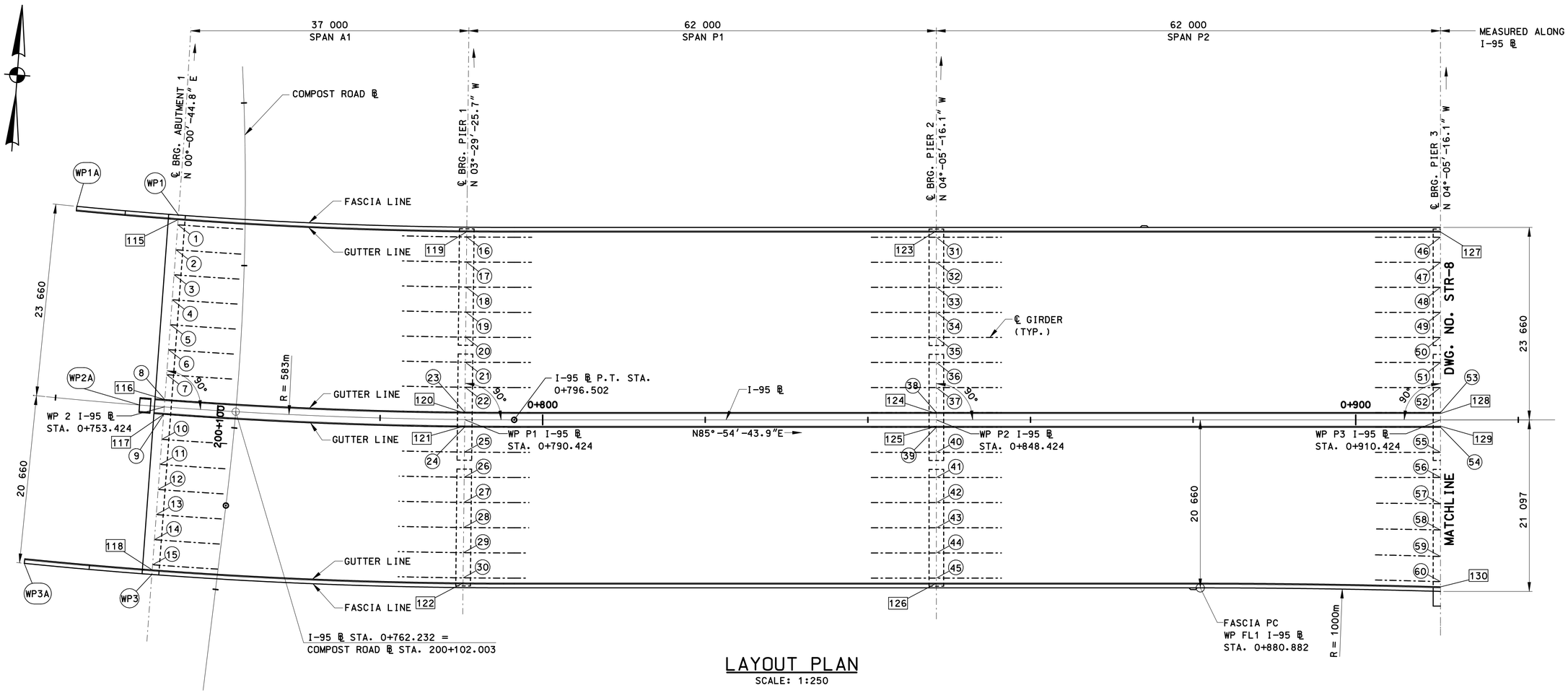

LAYOUT PLAN

SCALE: 1:250

WORKING POINTS COORDINATES

LOCATION	W.P.	NORTH	EAST
ABUT. 1	1	202426.424	288782.862
	1A	202426.597	288770.314
	2	202402.764	288782.802
	2A	202402.779	288779.753
	3	202382.104	288782.750
	3A	202382.350	288767.020
PIER 1	P1	202403.844	288819.780
PIER 2	P2	202407.947	288877.635
PIER 3	P3	202412.366	288939.477
FASCIA LINE	FL1	202389.653	288911.483

GUTTER LINE COORDINATES

LOCATION	NO.	NORTH	EAST
C.L. BRG. ABUTMENT 1			
I-95 S.B. NORTH G.L.	115	202425.864	288782.861
I-95 S.B. SOUTH G.L.	116	202403.664	288782.805
I-95 N.B. NORTH G.L.	117	202401.864	288782.800
I-95 N.B. SOUTH G.L.	118	202382.664	288782.751
C.L. BRG. PIER 1			
I-95 S.B. NORTH G.L.	119	202426.901	288818.374
I-95 S.B. SOUTH G.L.	120	202404.742	288819.726
I-95 N.B. NORTH G.L.	121	202402.945	288819.835
I-95 N.B. SOUTH G.L.	122	202383.781	288821.004
C.L. BRG. PIER 2			
I-95 S.B. NORTH G.L.	123	202430.988	288875.988
I-95 S.B. SOUTH G.L.	124	202408.844	288877.571
I-95 N.B. NORTH G.L.	125	202407.049	288877.699
I-95 N.B. SOUTH G.L.	126	202387.898	288879.068
C.L. BRG. PIER 3			
I-95 S.B. NORTH G.L.	127	202435.408	288937.830
I-95 S.B. SOUTH G.L.	128	202413.264	288939.413
I-95 N.B. NORTH G.L.	129	202411.469	288939.541
I-95 N.B. SOUTH G.L.	130	202391.882	288940.941

GIRDER COORDINATES

LOCATION	NO.	GIRDER NO.	NORTH	EAST
ABUT. 1	1	G1	202425.224	288782.859
	2	G2	202422.144	288782.852
	3	G3	202419.064	288782.844
	4	G4	202415.984	288782.836
	5	G5	202412.904	288782.828
	6	G6	202409.824	288782.820
	7	G7	202406.744	288782.812
	8	G8	202403.664	288782.805
	9	G9	202401.864	288782.800
	10	G10	202398.771	288782.792
	11	G11	202395.677	288782.784
	12	G12	202392.584	288782.776
	13	G13	202389.491	288782.769
	14	G14	202386.397	288782.761
	15	G15	202383.304	288782.753

GIRDER COORDINATES

LOCATION	NO.	GIRDER NO.	NORTH	EAST
PIER 1	16	G1	202426.262	288818.413
	17	G2	202423.188	288818.600
	18	G3	202420.114	288818.788
	19	G4	202417.039	288818.975
	20	G5	202413.965	288819.163
	21	G6	202410.891	288819.350
	22	G7	202407.816	288819.538
	23	G8	202404.742	288819.726
	24	G9	202402.945	288819.835
	25	G10	202399.858	288820.023
	26	G11	202396.770	288820.212
	27	G12	202393.683	288820.400
	28	G13	202390.595	288820.588
	29	G14	202387.507	288820.777
	30	G15	202384.420	288820.965

GIRDER COORDINATES

LOCATION	NO.	GIRDER NO.	NORTH	EAST
PIER 2	31	G1	202430.350	288876.034
	32	G2	202427.277	288876.253
	33	G3	202424.205	288876.473
	34	G4	202421.133	288876.693
	35	G5	202418.061	288876.912
	36	G6	202414.989	288877.132
	37	G7	202411.917	288877.351
	38	G8	202408.844	288877.571
	39	G9	202407.049	288877.699
	40	G10	202403.964	288877.920
	41	G11	202400.878	288878.140
	42	G12	202397.793	288878.361
	43	G13	202394.707	288878.581
	44	G14	202391.621	288878.802
	45	G15	202388.536	288879.022

GIRDER COORDINATES

LOCATION	NO.	GIRDER NO.	NORTH	EAST
PIER 3	46	G1	202434.769	288937.876
	47	G2	202431.697	288938.096
	48	G3	202428.625	288938.315
	49	G4	202425.553	288938.535
	50	G5	202422.481	288938.754
	51	G6	202419.408	288938.974
	52	G7	202416.336	288939.193
	53	G8	202413.264	288939.413
	54	G9	202411.469	288939.541
	55	G10	202408.384	288939.762
	56	G11	202405.297	288939.982
	57	G12	202402.070	288940.213
	58	G13	202398.843	288940.444
	59	G14	202395.608	288940.675
	60	G15	202392.521	288940.895

REV.	DATE	DESCRIPTION	SHEET. NO
		REVISIONS	

SCALE AS NOTED

DESIGNER: B. SULLIVAN
DRAFTER: G. LEE
CHECKED BY: T. LALIBERTE
DATE CHECKED: 11-12-12

STATE OF CONNECTICUT
DEPARTMENT OF TRANSPORTATION

ENGINEER: PB AMERICAS, INC.
APPROVED BY:
DATE:

PROJECT TITLE: RECONSTRUCTION OF I-95 OVER WEST RIVER (BRIDGE NO. 00163)

CADD
PLOTTED 11/13/2012

TOWN: NEW HAVEN / WEST HAVEN

DRAWING TITLE: LAYOUT PLAN & COORDINATES - ABUTMENT 1 TO PIER 3

PROJECT NO.: 92-522
DRAWING NO.: STR-8
SHEET NO.:

10:04:49 AM
11/13/2012
T:\VBCADD\Projects\PB87351FD\Structures\Contract_Sheets\Br00163\str-08-092522-00163.dgn

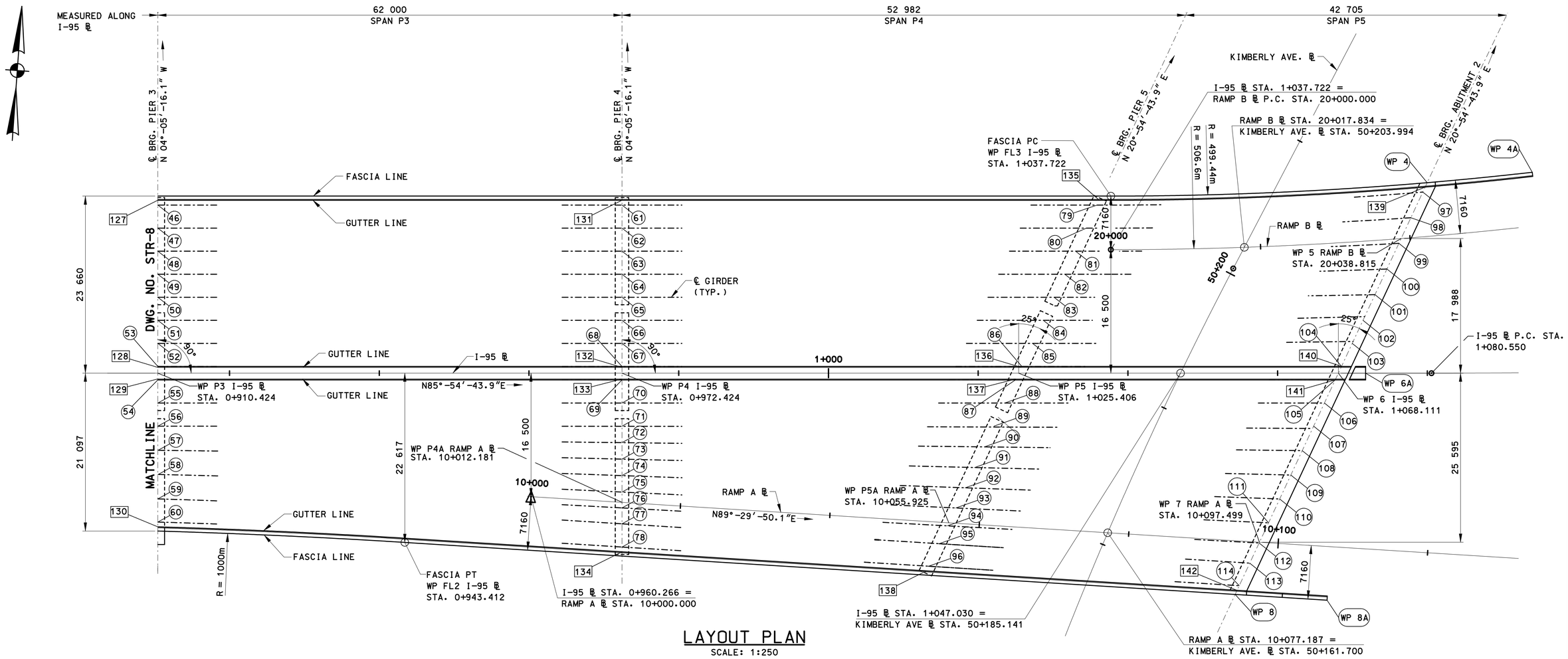

LAYOUT PLAN

SCALE: 1:250

WORKING POINTS COORDINATES

LOCATION	W.P.	NORTH	EAST
PIER 4	P4	202416.786	289001.319
PIER 4 & RAMP A	P4A	202399.569	289002.550
PIER 5	P5	202420.563	289054.167
PIER 5 & RAMP A	P5A	202399.953	289046.292
ABUTMENT 2	4	202449.841	289106.787
	4A	202452.229	289120.683
	5	202442.147	289103.847
	6	202423.607	289096.763
	6A	202423.867	289100.399
	7	202400.318	289087.864
	8	202393.134	289085.119
	8A	202393.242	289097.406
FASCIA LINE	FL2	202392.159	288973.994
	FL3	202445.042	289064.765

GUTTER LINE COORDINATES

LOCATION	NO.	NORTH	EAST
C.L. BRG. PIER 4			
I-95 S.B. NORTH G.L.	131	202439.829	288999.673
I-95 S.B. SOUTH G.L.	132	202417.684	289001.255
I-95 N.B. NORTH G.L.	133	202415.888	289001.384
I-95 N.B. SOUTH G.L.	134	202392.973	289003.021
C.L. BRG. PIER 5			
I-95 S.B. NORTH G.L.	135	202444.374	289063.265
I-95 S.B. SOUTH G.L.	136	202421.491	289054.521
I-95 N.B. NORTH G.L.	137	202419.635	289053.812
I-95 N.B. SOUTH G.L.	138	202393.331	289043.761
C.L. ABUTMENT 2			
I-95 S.B. NORTH G.L.	139	202449.238	289106.557
I-95 S.B. SOUTH G.L.	140	202424.535	289097.117
I-95 N.B. NORTH G.L.	141	202422.680	289096.409
I-95 N.B. SOUTH G.L.	142	202393.696	289085.334

GIRDER COORDINATES

LOCATION	NO.	GIRDER NO.	NORTH	EAST
PIER 4	61	G1	202439.189	288999.718
	62	G2	202436.117	288999.938
	63	G3	202433.045	289000.158
	64	G4	202429.972	289000.377
	65	G5	202426.900	289000.597
	66	G6	202423.828	289000.816
	67	G7	202420.756	289001.036
	68	G8	202417.684	289001.255
	69	G9	202415.888	289001.384
	70	G10	202412.803	289001.604
	71	G11	202409.717	289001.825
	72	G11a	202407.525	289001.981
	73	G12	202405.326	289002.138
	74	G12a	202403.133	289002.295
	75	G13	202400.934	289002.452
	76	G13a	202398.821	289002.603
	77	G14	202396.704	289002.755
	78	G15	202393.613	289002.976

GIRDER COORDINATES

LOCATION	NO.	GIRDER NO.	NORTH	EAST
PIER 5	79	G1	202443.712	289063.012
	80	G2	202440.538	289061.799
	81	G3	202437.363	289060.586
	82	G4	202434.189	289059.373
	83	G5	202431.014	289058.160
	84	G6	202427.840	289056.947
	85	G7	202424.665	289055.734
	86	G8	202421.491	289054.521
	87	G9	202419.635	289053.812
	88	G10	202416.447	289052.594
	89	G11	202413.258	289051.376
	90	G11a	202410.409	289050.287
	91	G12	202407.568	289049.201
	92	G12a	202404.778	289048.135
	93	G13	202401.997	289047.073
	94	G13a	202399.535	289046.132
	95	G14	202397.077	289045.192
	96	G15	202393.973	289044.006

GIRDER COORDINATES

LOCATION	NO.	GIRDER NO.	NORTH	EAST
ABUTMENT 2	97	G1	202448.549	289106.294
	98	G2	202445.015	289104.943
	99	G3	202441.482	289103.593
	100	G4	202437.949	289102.243
	101	G5	202434.416	289100.893
	102	G6	202430.883	289099.543
	103	G7	202427.709	289098.330
	104	G8	202424.535	289097.117
	105	G9	202422.680	289096.409
	106	G10	202419.491	289095.190
	107	G11	202416.303	289093.972
	108	G11a	202412.940	289092.687
	109	G12	202409.577	289091.402
	110	G12a	202406.286	289090.144
	111	G13	202402.995	289088.887
	112	G13a	202400.218	289087.826
	113	G14	202397.442	289086.765
	114	G15	202394.339	289085.579

REV.	DATE	DESCRIPTION	SHEET. NO.
		REVISIONS	

THE INFORMATION, INCLUDING ESTIMATED QUANTITIES OF WORK, SHOWN ON THESE SHEETS IS BASED ON LIMITED INVESTIGATIONS BY THE STATE AND IS IN NO WAY WARRANTED TO INDICATE THE CONDITIONS OR ACTUAL QUANTITIES OF WORK WHICH WILL BE REQUIRED.

DESIGNER: B. SULLIVAN
DRAFTER: G. LEE
CHECKED BY: T. LALIBERTE
DATE CHECKED: 11-12-12

STATE OF CONNECTICUT
DEPARTMENT OF TRANSPORTATION

ENGINEER: PB AMERICAS, INC.
APPROVED BY:
DATE:

PROJECT TITLE: RECONSTRUCTION OF I-95 OVER WEST RIVER (BRIDGE NO. 00163)

CADD
PLOTTED 11/13/2012

TOWN: NEW HAVEN / WEST HAVEN

DRAWING TITLE: LAYOUT PLAN & COORDINATES – PIER 3 TO ABUTMENT 2

PROJECT NO.: 92-522
DRAWING NO.: STR-9
SHEET NO.:

10:59 AM
11/13/2012
T:\#CADD\Projects\PB\87135\FD\Structures\Contract_Sheets\Br0163\dr-09-092522-00163.dgn

CONNECTICUT TURNPIKE

FORM NO. ENG. 10 ED. 11-52

PUB. ROAD DIV. NO.	STATE	TOWN	FED. AID PROJ. NO.	PROJ. NO.	YEAR	ROUTE NO.	SHEET NO.	TOTAL SHEETS
1	CONN.	West Haven & New Haven		316A-01	1955		20	73

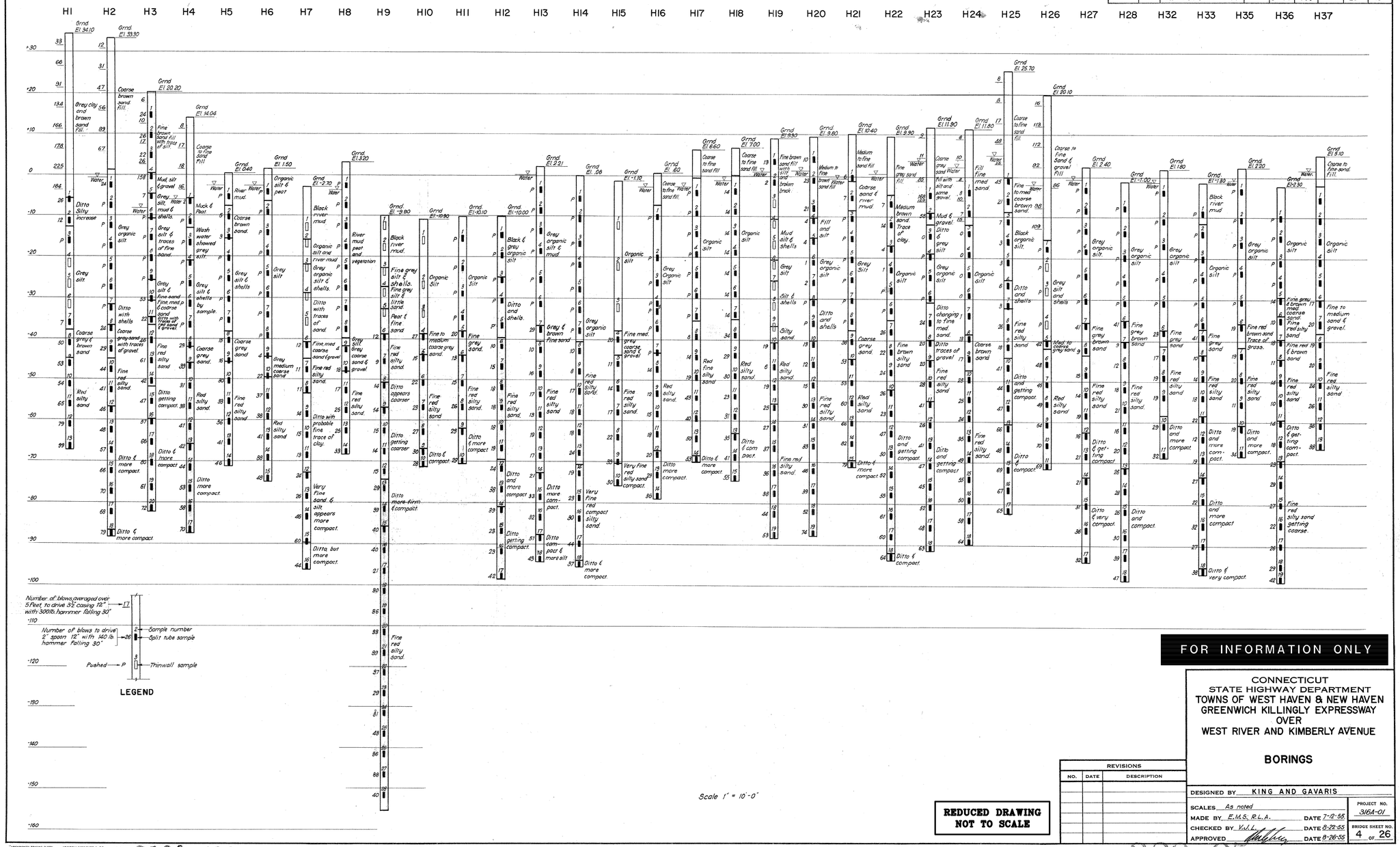

FOR INFORMATION ONLY

CONNECTICUT
STATE HIGHWAY DEPARTMENT
TOWNS OF WEST HAVEN & NEW HAVEN
GREENWICH KILLINGLY EXPRESSWAY
OVER
WEST RIVER AND KIMBERLY AVENUE

BORINGS

REVISIONS		
NO.	DATE	DESCRIPTION

DESIGNED BY KING AND GAVARIS
SCALES As noted
MADE BY E.M.S. R.L.A. DATE 7-12-55
CHECKED BY V.J.L. DATE 8-22-55
APPROVED DATE 8-26-55
PROJECT NO. 316A-01
BRIDGE SHEET NO. 4 OF 26

REDUCED DRAWING NOT TO SCALE

"ARCHWHITE" TRACING CLOTH JOSEPH MERRITT & CO. 11210

316A 01

M 320 05

20

NOTE:
THE "BORINGS" DRAWING SHOWN ON THIS SHEET HAS BEEN REPRODUCED FROM THE ORIGINAL DESIGN DRAWINGS OF STATE PROJECT NO. 316A-01, DATED 1955. ELEVATIONS ARE BASED ON NGVD 1929 VERTICAL DATUM.

REV.	DATE	DESCRIPTION	SHEET. NO.
		REVISIONS	

THE INFORMATION, INCLUDING ESTIMATED QUANTITIES OF WORK, SHOWN ON THESE SHEETS IS BASED ON LIMITED INVESTIGATIONS BY THE STATE AND IS IN NO WAY WARRANTED TO INDICATE THE CONDITIONS OR ACTUAL QUANTITIES OF WORK WHICH WILL BE REQUIRED.

DESIGNER: R. BORJESON
DRAFTER: T. LALIBERTE
CHECKED BY: T. LALIBERTE
DATE CHECKED: 10-11-02

STATE OF CONNECTICUT
DEPARTMENT OF TRANSPORTATION

ENGINEER: PB AMERICAS, INC.
APPROVED BY: DATE:

PROJECT TITLE: RECONSTRUCTION OF I-95 OVER WEST RIVER (BRIDGE NO. 00163)
CADD PLOTTED 11/13/2012

TOWN: NEW HAVEN / WEST HAVEN
DRAWING TITLE: EXISTING BORINGS

PROJECT NO.: 92-522
DRAWING NO.: STR-10
SHEET NO.:

10:34:46 AM
11/13/2012
T:\WORKDIR\Projects\PB\87135\FD\Structures\Contract_Sheets\Br00163\dr-1009252200163.dgn

BORING A1-1 (1 OF 3)

R. Posa	SM - 001 - M REV. 1/94	BORING REPORT	Hole No.	A1-1
DRILLER	STATE OF CONNECTICUT		Line & Station	I-95 0+751.2
R. Sharp / E. Fulton	DEPARTMENT OF TRANSPORTATION		Offset	24.3 LT
INSPECTOR	TOWN:	New Haven / West Haven, CT	N. Coordinate	202427.1
Parsons Brinckerhoff Quade & Douglas, Inc.	PROJECT NAME:	Reconstruction I-95 Over West River	E. Coordinate	288780.7
SOILS ENGINEER	PROJECT NUMBER:	92-533	Parsons Brinckerhoff Quade & Douglas, Inc.	
	BORING CONTRACTOR:	General Borings, Inc.	PRIME DESIGNER	

		Casing				Auger		Mud	Sampler		Core Barrel			
Surface Elevation: 4.73														
Date Started: 7/17/2002	Utilized			X			X	X	X	X				
Date Finished: 7/18/2002	Type	BW	NW	HW	Pipe	Solid	Hollow	Bentonite	SS	UP	B (st)	B (dt)	NX (st)	NV II (dt)
Groundwater Observations	Size I.D. (mm)	60	76	100	64		150	X	36		35	35	55	55
@ ~3.53 m after hours	Hammer (kg)	136	136	136	136			Bit	63.5		Type		Diamond	
@ m after hours	Fall (m)	0.6	0.6	0.6	0.6			0.80 mm	0.76		of Bit		Carbide	

DEPTH	Casing blows per half meter	SAMPLE DEPTH IN METERS FROM - TO	NO.	PEN. m	REC. m	Type	BLOWS PER 0.15 METERS ON SAMPLER 0 - 0.15	0.15 - 0.30	0.30 - 0.45	0.45 - 0.60	STRATA CHANGE: DEPTH, ELEV.	FIELD IDENTIFICATION OF SOIL, REMARKS (INCL. COLOR, LOSS OF WASH WATER, ETC.)
		0.00 - 0.60	1	0.60	0.41	D	3	4	7	10		Top 0.08m: Topsoil. Bottom 0.33m: Red brown f SAND and (gray) SILT.
		1.52 - 2.12	2	0.60	0.23	D	4	4	7	3		Red brown f SAND, trace shells, trace f-c gravel.
		3.05 - 3.65	3	0.60	0.33	D	5	5	5	5		Red brown f-c SAND, trace f-c gravel, trace shells.
5		4.57 - 5.17	4	0.60	0.33	D	5	17	20	27		Brown gray f-c SAND, trace f-c gravel.
		6.10 - 6.70	5	0.60	0.38	D	5	6	6	6		Red brown f-c SAND, trace silt.
											6.71 -1.98	
		7.62 - 8.22	6	0.60	0.60	D	2	2	2	3		Gray organic SILT interlayered with black PEAT, trace f sand lenses (~0.16 cm), trace to little shells.
		9.14 - 9.74	7	0.60	0.60	D	1	2	2	2		Dark gray / olive organic SILT, trace shells, trace wood.
10												
		10.06 - 10.66	1	0.60	0.00	UP						Piston - No Recovery, too much sand.
		10.67 - 11.27	8	0.60	0.25	D	10	11	11	10		Top 0.13m: Dark gray organic SILT, some f sand, little shells. Bottom 0.13m: Red brown f SAND, trace silt.
		12.19 - 12.79	9	0.60	0.60	D	1/0.30m		3	5		Gray organic SILT, little shells, little clay. pp = 1.0, 0.75, 1.0 tons / ft^2
		13.11 - 13.71	2	0.60	0.60	UP						Piston.
		13.72 - 14.32	10	0.60	0.60	D	1/0.30m		1	1		Gray organic SILT, trace shells, trace f sand.
15												

Casing			Meters of	
Size	From	To	Earth	Rock
100 mm	0	4.57	35.66	
			No. of Samples	
			24D/3UP	

NOTES: Raising and dropping of the 140-lb (63.5kg) safety hammer was accomplished using a wire winch.

SAMPLE TYPE CODING: D=Driven C=Core A=Auger UP=Undisturbed Piston V=Vane Test
PROPORTIONS USED: Trace = 1 -10%, Little = 10 - 20%, Some = 20 - 35%, And = 35 - 50%

Hole No. A1-1
Sheet 1 of 3

BORING A1-1 (2 OF 3)

R. Posa	SM - 001 - M REV. 1/94	BORING REPORT	Hole No.	A1-1
DRILLER	STATE OF CONNECTICUT		Line & Station	I-95 0+751.2
R. Sharp / E. Fulton	DEPARTMENT OF TRANSPORTATION		Offset	24.3 LT
INSPECTOR	TOWN:	New Haven / West Haven, CT	N. Coordinate	202427.1
Parsons Brinckerhoff Quade & Douglas, Inc.	PROJECT NAME:	Reconstruction I-95 Over West River	E. Coordinate	288780.7
SOILS ENGINEER	PROJECT NUMBER:	92-533	Parsons Brinckerhoff Quade & Douglas, Inc.	
	BORING CONTRACTOR:	General Borings, Inc.	PRIME DESIGNER	

		Casing				Auger		Mud	Sampler		Core Barrel			
Surface Elevation: 4.73														
Date Started: 7/17/2002	Utilized			X			X	X	X	X				
Date Finished: 7/18/2002	Type	BW	NW	HW	Pipe	Solid	Hollow	Bentonite	SS	UP	B (st)	B (dt)	NX (st)	NV II (dt)
Groundwater Observations	Size I.D. (mm)	60	76	100	64		150	X	36		35	35	55	55
@ ~3.53 m after hours	Hammer (kg)	136	136	136	136			Bit	63.5		Type	X	Diamond	
@ m after hours	Fall (m)	0.6	0.6	0.6	0.6			0.80 mm	0.76		of Bit		Carbide	

DEPTH	Casing blows per half meter	SAMPLE DEPTH IN METERS FROM - TO	NO.	PEN. m	REC. m	Type	BLOWS PER 0.15 METERS ON SAMPLER 0 - 0.15	0.15 - 0.30	0.30 - 0.45	0.45 - 0.60	STRATA CHANGE: DEPTH, ELEV.	FIELD IDENTIFICATION OF SOIL, REMARKS (INCL. COLOR, LOSS OF WASH WATER, ETC.)
		15.24 - 15.84	11	0.60	0.60	D	1	1/0.30m		1		Gray organic SILT, trace shells, trace f sand.
		16.15 - 16.75	3	0.60	0.00	UP					16.00	Piston - No Recovery, silty SAND.
		16.76 - 17.36	12	0.60	0.30	D	7	13	13	15	-15.27	Dark gray f SAND, little silt.
		18.29 - 18.89	13	0.60	0.20	D	10	12	14	14		Dark gray f SAND, little silt.
20		19.81 - 20.41	14	0.60	0.51	D	12	12	12	14		Red brown f SAND, some silt.
		21.34 - 21.94	15	0.60	0.46	D	11	12	14	15		Red brown f SAND, some silt.
		22.86 - 23.46	16	0.60	0.30	D	10	12	13	15		Red brown f SAND, some silt.
		24.38 - 24.98	17	0.60	0.00	D	9	14	15	18		No Recovery.
25												
											25.45	
		25.91 - 26.51	18	0.60	0.41	D	9	9	9	13	-20.72	Red brown SILT and f SAND, rapid dilatancy.
		27.43 - 28.03	19	0.60	0.30	D	8	9	10	12		Red brown SILT, little f sand.
		28.96 - 29.56	20	0.60	0.60	D	13	18	19	22		Red brown SILT, little f sand.
30												

Casing			Meters of	
Size	From	To	Earth	Rock
100 mm	0	4.57	35.66	
			No. of Samples	
			24D/3UP	

NOTES: Raising and dropping of the 140-lb (63.5kg) safety hammer was accomplished using a wire winch.

SAMPLE TYPE CODING: D=Driven C=Core A=Auger UP=Undisturbed Piston V=Vane Test
PROPORTIONS USED: Trace = 1 -10%, Little = 10 - 20%, Some = 20 - 35%, And = 35 - 50%

Hole No. A1-1
Sheet 2 of 3

BORING A1-1 (3 OF 3)

R. Posa	SM - 001 - M REV. 1/94	BORING REPORT	Hole No.	A1-1
DRILLER	STATE OF CONNECTICUT		Line & Station	I-95 0+751.2
R. Sharp / E. Fulton	DEPARTMENT OF TRANSPORTATION		Offset	24.3 LT
INSPECTOR	TOWN:	New Haven / West Haven, CT	N. Coordinate	202427.1
Parsons Brinckerhoff Quade & Douglas, Inc.	PROJECT NAME:	Reconstruction I-95 Over West River	E. Coordinate	288780.7
SOILS ENGINEER	PROJECT NUMBER:	92-533	Parsons Brinckerhoff Quade & Douglas, Inc.	
	BORING CONTRACTOR:	General Borings, Inc.	PRIME DESIGNER	

		Casing				Auger		Mud	Sampler		Core Barrel			
Surface Elevation: 4.73														
Date Started: 7/17/2002	Utilized			X			X	X	X	X				
Date Finished: 7/18/2002	Type	BW	NW	HW	Pipe	Solid	Hollow	Bentonite	SS	UP	B (st)	B (dt)	NX (st)	NV II (dt)
Groundwater Observations	Size I.D. (mm)	60	76	100	64		150	X	36		35	35	55	55
@ ~3.53 m after hours	Hammer (kg)	136	136	136	136			Bit	63.5		Type		Diamond	
@ m after hours	Fall (m)	0.6	0.6	0.6	0.6			0.80 mm	0.76		of Bit		Carbide	

DEPTH	Casing blows per half meter	SAMPLE DEPTH IN METERS FROM - TO	NO.	PEN. m	REC. m	Type	BLOWS PER 0.15 METERS ON SAMPLER 0 - 0.15	0.15 - 0.30	0.30 - 0.45	0.45 - 0.60	STRATA CHANGE: DEPTH, ELEV.	FIELD IDENTIFICATION OF SOIL, REMARKS (INCL. COLOR, LOSS OF WASH WATER, ETC.)
		30.48 - 31.08	21	0.60	0.46	D	16	18	20	20		Red brown SILT, some f sand.
		32.00 - 32.60	22	0.60	0.15	D	17	20	20	23		Red brown SILT, some f sand.
		33.53 - 34.13	23	0.60	0.46	D	9	12	16	18		Red brown SILT and f SAND.
35												
		35.05 - 35.65	24	0.60	0.51	D	10	11	14	17		Red brown SILT and f SAND.
											35.65 -30.92	Bottom of Boring 35.65 m.
40												
45												

Casing			Meters of	
Size	From	To	Earth	Rock
100 mm	0	4.57	35.66	
			No. of Samples	
			24D/3UP	

NOTES: Raising and dropping of the 140-lb (63.5kg) safety hammer was accomplished using a wire winch.

SAMPLE TYPE CODING: D=Driven C=Core A=Auger UP=Undisturbed Piston V=Vane Test
PROPORTIONS USED: Trace = 1 -10%, Little = 10 - 20%, Some = 20 - 35%, And = 35 - 50%

Hole No. A1-1
Sheet 3 of 3

REV.	DATE	DESCRIPTION	SHEET. NO
		REVISIONS	

THE INFORMATION, INCLUDING ESTIMATED QUANTITIES OF WORK, SHOWN ON THESE SHEETS IS BASED ON LIMITED INVESTIGATIONS BY THE STATE AND IS IN NO WAY WARRANTED TO INDICATE THE CONDITIONS OR ACTUAL QUANTITIES OF WORK WHICH WILL BE REQUIRED.

DESIGNER: R. BORJESON
DRAFTER: G. LEE
CHECKED BY: T. LALIBERTE
DATE CHECKED: 10–11–02

STATE OF CONNECTICUT
DEPARTMENT OF TRANSPORTATION

ENGINEER: PB AMERICAS, INC.
APPROVED BY: DATE:

PROJECT TITLE: RECONSTRUCTION OF I–95 OVER WEST RIVER (BRIDGE NO. 00163)
CADD
PLOTTED 11/13/2012

TOWN: NEW HAVEN / WEST HAVEN
DRAWING TITLE: BORINGS – A1–1
PROJECT NO.: 92–522
DRAWING NO.: STR–11
SHEET NO.:

10:15:08 AM
11/13/2012
T:\V8CADD\Projects\PBI8735\FD\Structures\Contract_Sheets\Br00163\str-11-092522-00163.dgn

BORING A1-2 (1 OF 3)

M. Jennett	SM - 001 - M REV. 1/94 BORING REPORT	Hole No.	A1-2
DRILLER	STATE OF CONNECTICUT	Line & Station	I-95 0+751.8
E. Fulton / E. Guven	DEPARTMENT OF TRANSPORTATION	Offset	20.1 RT
INSPECTOR	TOWN: New Haven / West Haven, CT	N. Coordinate	202382.7
Parsons Brinckerhoff Quade & Douglas, Inc.	PROJECT NAME: Reconstruction I-95 Over West River	E. Coordinate	288781.1
SOILS ENGINEER	PROJECT NUMBER: 92-533		Parsons Brinckerhoff Quade & Douglas, Inc.
	BORING CONTRACTOR: General Borings, Inc.		PRIME DESIGNER

Surface Elevation: 4.63			Casing			Auger		Mud	Sampler		Core Barrel					
Date Started: 7/17/2002		Utilized			X			X	X	X	X					
Date Finished: 7/19/2002		Type	BW	NW	HW	Pipe	Solid	Hollow	Bentonite	SS	UP	B (st)	B (dt)	NX (st)	NV II (dt)	
Groundwater Observations		Size I.D. (mm)	60	76	100	64		150	X	36		35	35	55	55	
@ ~2.59 m after hours		Hammer (kg)	136	136	136	136			Bit	63.5		Type		Diamond		
@ m after hours		Fall (m)	0.6	0.6	0.6	0.6			0.80 mm	0.76		of Bit		Carbide		

DEPTH (m)	Casing blows per half meter	DEPTH IN METERS FROM - TO	NO.	PEN. m	REC. m	Type	BLOWS PER 0.15 METERS ON SAMPLER 0 - 0.15	0.15 - 0.30	0.30 - 0.45	0.45 - 0.60	STRATA CHANGE: DEPTH, ELEV.	FIELD IDENTIFICATION OF SOIL, REMARKS (INCL. COLOR, LOSS OF WASH WATER, ETC.)
		0.00 - 0.60	1	0.60	0.36	D	5	10	14	15		Top 0.10m: Topsoil. Bottom 0.25m: Brown f SAND, trace c sand, trace f gravel, trace silt, trace roots, dry.
		1.52 - 2.12	2	0.60	0.36	D	10	10	9	10		Light brown f-c SAND, trace f gravel, trace silt, moist.
		3.05 - 3.65	3	0.60	0.30	D	6	9	10	11		Light brown f-c SAND, trace f gravel, trace silt, wet.
5		4.57 - 5.17	4	0.60	0.25	D	9	10	9	10		Red brown f SAND, trace c sand, trace silt, trace shells. (5.49m: Rollerbit through obstruction - possibly metal.)
											5.79	
		6.10 - 6.70	5	0.60	0.56	D	1	2	2	3	-1.16	Black organic SILT, trace fibers, trace clay.
		7.62 - 8.22	6	0.60	0.60	D	1	2	1	2		Gray organic SILT interlayered with (olive brown) PEAT, little clay.
		9.14 - 9.74	1	0.60	0.60	UP						Piston.
10		9.75 - 10.35	7	0.60	0.46	D	WOR	1	1	2		Gray organic SILT, trace f sand, trace clay, trace shells, stiff.
		10.67 - 11.27	8	0.60	0.51	D	1	2	2	2		Gray organic SILT, trace f sand, trace clay, trace shells, stiff.
		12.19 - 12.79	2	0.60	0.60	UP						Piston.
		12.80 - 13.40	9	0.60	0.60	D	1/0.30m		1	2		Gray organic SILT, trace clay, trace shells, trace f sand lenses, (very thin).
		13.72 - 14.32	10	0.60	0.60	D	WOR	WOR	5	6		Gray organic SILT, trace clay, trace shells, trace f sand lenses (very thin).
15												

Casing Size	From	To	Meters of Earth	Rock
100 mm	0	3.05	35.66	
			No. of Samples	
			24D/2UP	

NOTES: Raising and dropping of the 140-lb (63.5kg) safety hammer was accomplished using a wire winch.

SAMPLE TYPE CODING: D=Driven C=Core A=Auger UP=Undisturbed Piston V=Vane Test
PROPORTIONS USED: Trace = 1 -10%, Little = 10 - 20%, Some = 20 - 35%, And = 35 - 50%

Hole No. A1-2 Sheet 1 of 3

BORING A1-2 (2 OF 3)

M. Jennett	SM - 001 - M REV. 1/94 BORING REPORT	Hole No.	A1-2
DRILLER	STATE OF CONNECTICUT	Line & Station	I-95 0+751.8
E. Fulton / E. Guven	DEPARTMENT OF TRANSPORTATION	Offset	20.1 RT
INSPECTOR	TOWN: New Haven / West Haven, CT	N. Coordinate	202382.7
Parsons Brinckerhoff Quade & Douglas, Inc.	PROJECT NAME: Reconstruction I-95 Over West River	E. Coordinate	288781.1
SOILS ENGINEER	PROJECT NUMBER: 92-533		Parsons Brinckerhoff Quade & Douglas, Inc.
	BORING CONTRACTOR: General Borings, Inc.		PRIME DESIGNER

Surface Elevation: 4.63			Casing			Auger		Mud	Sampler		Core Barrel					
Date Started: 7/17/2002		Utilized			X			X	X	X	X					
Date Finished: 7/19/2002		Type	BW	NW	HW	Pipe	Solid	Hollow	Bentonite	SS	UP	B (st)	B (dt)	NX (st)	NV II (dt)	
Groundwater Observations		Size I.D. (mm)	60	76	100	64		150	X	36		35	35	55	55	
@ ~2.59 m after hours		Hammer (kg)	136	136	136	136			Bit	63.5		Type	X	Diamond		
@ m after hours		Fall (m)	0.6	0.6	0.6	0.6			0.80 mm	0.76		of Bit		Carbide		

DEPTH (m)	Casing blows per half meter	DEPTH IN METERS FROM - TO	NO.	PEN. m	REC. m	Type	BLOWS PER 0.15 METERS ON SAMPLER 0 - 0.15	0.15 - 0.30	0.30 - 0.45	0.45 - 0.60	STRATA CHANGE: DEPTH, ELEV.	FIELD IDENTIFICATION OF SOIL, REMARKS (INCL. COLOR, LOSS OF WASH WATER, ETC.)
		15.24 - 15.84	11	0.60	0.60	D	3	3	4	4		Gray organic SILT, trace clay, little f sand, trace shell fragments, trace fibers.
											16.31	
		16.76 - 17.36	12	0.60	0.36	D	8	4	7	12	-11.68	Red brown f SAND, trace silt.
		18.29 - 18.89	13	0.60	0.25	D	8	11	11	8		Red brown f SAND, little silt.
20		19.81 - 20.41	14	0.60	0.15	D	10	11	15	19		Red brown f SAND, some silt, trace shells.
		21.34 - 21.94	15	0.60	0.36	D	15	20	15	17		Red brown f SAND and SILT.
		22.86 - 23.46	16	0.60	0.46	D	10	14	17	21		Red brown f SAND and SILT.
		24.38 - 24.98	17	0.60	0.30	D	14	18	21	27		Red brown f SAND, some silt.
25												
		25.91 - 26.51	18	0.60	0.36	D	14	20	21	24		Red brown f SAND, some silt, trace shells.
		27.43 - 28.03	19	0.60	0.05	D	2	3	3	4		Red brown f SAND, some silt.
		28.96 - 29.56	20	0.60	0.30	D	4	14	9	11		Red brown f SAND and SILT, trace clay.
30											30.02	

Casing Size	From	To	Meters of Earth	Rock
100 mm	0	3.05	35.66	
			No. of Samples	
			24D/2UP	

NOTES: Raising and dropping of the 140-lb (63.5kg) safety hammer was accomplished using a wire winch.

SAMPLE TYPE CODING: D=Driven C=Core A=Auger UP=Undisturbed Piston V=Vane Test
PROPORTIONS USED: Trace = 1 -10%, Little = 10 - 20%, Some = 20 - 35%, And = 35 - 50%

Hole No. A1-2 Sheet 2 of 3

BORING A1-2 (3 OF 3)

M. Jennett	SM - 001 - M REV. 1/94 BORING REPORT	Hole No.	A1-2
DRILLER	STATE OF CONNECTICUT	Line & Station	I-95 0+751.8
E. Fulton / E. Guven	DEPARTMENT OF TRANSPORTATION	Offset	20.1 RT
INSPECTOR	TOWN: New Haven / West Haven, CT	N. Coordinate	202382.7
Parsons Brinckerhoff Quade & Douglas, Inc.	PROJECT NAME: Reconstruction I-95 Over West River	E. Coordinate	288781.1
SOILS ENGINEER	PROJECT NUMBER: 92-533		Parsons Brinckerhoff Quade & Douglas, Inc.
	BORING CONTRACTOR: General Borings, Inc.		PRIME DESIGNER

Surface Elevation: 4.63			Casing			Auger		Mud	Sampler		Core Barrel					
Date Started: 7/17/2002		Utilized			X			X	X	X	X					
Date Finished: 7/19/2002		Type	BW	NW	HW	Pipe	Solid	Hollow	Bentonite	SS	UP	B (st)	B (dt)	NX (st)	NV II (dt)	
Groundwater Observations		Size I.D. (mm)	60	76	100	64		150	X	36		35	35	55	55	
@ ~2.59 m after hours		Hammer (kg)	136	136	136	136			Bit	63.5		Type		Diamond		
@ m after hours		Fall (m)	0.6	0.6	0.6				0.80 mm	0.76		of Bit		Carbide		

DEPTH (m)	Casing blows per half meter	DEPTH IN METERS FROM - TO	NO.	PEN. m	REC. m	Type	BLOWS PER 0.15 METERS ON SAMPLER 0 - 0.15	0.15 - 0.30	0.30 - 0.45	0.45 - 0.60	STRATA CHANGE: ELEV.	FIELD IDENTIFICATION OF SOIL, REMARKS (INCL. COLOR, LOSS OF WASH WATER, ETC.)
		30.48 - 31.08	21	0.60	0.30	D	12	15	23	23	-25.39	Red brown SILT, little clay, trace to little f sand.
		32.00 - 32.60	22	0.60	0.46	D	6	10	18	25		Red brown SILT, some f sand, trace clay.
		33.53 - 34.13	23	0.60	0.60	D	6	9	14	26		Red brown SILT and f SAND, trace clay.
35												
		35.05 - 35.65	24	0.60	0.53	D	15	6	4	22		Red brown SILT and f SAND, trace clay.
											35.65	
											-31.02	Bottom of boring 35.65 m.
40												
45												

Casing Size	From	To	Meters of Earth	Rock
100 mm	0	3.05	35.66	
			No. of Samples	
			24D/2UP	

NOTES: Raising and dropping of the 140-lb (63.5kg) safety hammer was accomplished using a wire winch.

SAMPLE TYPE CODING: D=Driven C=Core A=Auger UP=Undisturbed Piston V=Vane Test
PROPORTIONS USED: Trace = 1 -10%, Little = 10 - 20%, Some = 20 - 35%, And = 35 - 50%

Hole No. A1-2 Sheet 3 of 3

REV.	DATE	DESCRIPTION	SHEET. NO.
		REVISIONS	

THE INFORMATION, INCLUDING ESTIMATED QUANTITIES OF WORK, SHOWN ON THESE SHEETS IS BASED ON LIMITED INVESTIGATIONS BY THE STATE AND IS IN NO WAY WARRANTED TO INDICATE THE CONDITIONS OR ACTUAL QUANTITIES OF WORK WHICH WILL BE REQUIRED.

DESIGNER: R. BORJESON
DRAFTER: G. LEE
CHECKED BY: T. LALIBERTE
DATE CHECKED: 10-11-02

STATE OF CONNECTICUT
DEPARTMENT OF TRANSPORTATION

ENGINEER: PB AMERICAS, INC.
APPROVED BY: DATE:

PROJECT TITLE: RECONSTRUCTION OF I-95 OVER WEST RIVER (BRIDGE NO. 00163)
CADD PLOTTED 11/13/2012

TOWN: NEW HAVEN / WEST HAVEN
DRAWING TITLE: BORINGS – A1-2

PROJECT NO.: 92-522
DRAWING NO.: STR-12
SHEET NO.:

10:47:45 AM
11/13/2012
T:\WBCADD\Projects\PB\87735\FD\Structures\Contract_Sheets\Br00163.dgn

10:18:52 AM
11/13/2012
T:\V8CADD\Projects\PB18735\FD\Structures\Contract_Sheets\Br00163\str-13-092522-00163.dgn

BORING P1-1 (1 OF 3)

E. Del Priore	SM - 001 - M REV. 1/94 BORING REPORT	Hole No.	P1-1
DRILLER	STATE OF CONNECTICUT	Line & Station	I-95 0+785.6
R. Sharp	DEPARTMENT OF TRANSPORTATION	Offset	25.8 LT
INSPECTOR	TOWN: New Haven / West Haven, CT	N. Coordinate	202429.3
Parsons Brinckerhoff Quade & Douglas, Inc.	PROJECT NAME: Reconstruction I-95 Over West River	E. Coordinate	288813.6
SOILS ENGINEER	PROJECT NUMBER: 92-533	Parsons Brinckerhoff Quade & Douglas, Inc.	
	BORING CONTRACTOR: General Borings, Inc.	PRIME DESIGNER	

Surface Elevation: 0.97		Casing				Auger		Mud	Sampler		Core Barrel			
Date Started: 7/17/2002	Utilized			X			X	X	X	X				
Date Finished: 7/18/2002	Type	BW	NW	HW	Pipe	Solid	Hollow	Bentonite	SS	UP	B (st)	B (dt)	NX (st)	NV II (dt)
Groundwater Observations	Size I.D. (mm)	60	76	100	64		150	X	36		35	35	55	55
@ ~2.59 m after ___ hours	Hammer (kg)	136	136	136	136			Bit	63.5		Type		Diamond	
@ ___ m after ___ hours	Fall (m)	0.6	0.6	0.6	0.6			0.80 mm	0.76		of Bit		Carbide	

DEPTH	Casing blows per half meter	SAMPLE DEPTH IN METERS FROM - TO	NO.	PEN. m	REC. m	Type	BLOWS PER 0.15 METERS ON SAMPLER 0 - 0.15	0.15 - 0.30	0.30 - 0.45	0.45 - 0.60	STRATA CHANGE: DEPTH, ELEV.	FIELD IDENTIFICATION OF SOIL, REMARKS (INCL. COLOR, LOSS OF WASH WATER, ETC.)
		0.00 - 0.60	1	0.60	0.15	D	5	6	1	1		Brown f SAND, little silt, trace organics, trace f-m gravel.
		1.52 - 2.12	2	0.60	0.15	D	7	9	8	5		Olive brown f SAND, little silt, little c sand.
		3.05 - 3.65	3	0.60	0.08	D	2	2	3	2		Olive brown f SAND, little silt, little c sand, with organics..
5		4.57 - 5.17	4	0.60	0.00	D	2	2	2	2		No Recovery.
											5.64 -4.67	
		6.10 - 6.70	5	0.60	0.15	D	4	12	12	10		Olive brown SILT, little f-c sand, trace f-m gravel, with organic fibers.
		7.62 - 8.22	6	0.60	0.36	D	10	9	10	8		Olive brown SILT, little f sand, little f-c gravel.
		9.14 - 9.74	7	0.60	0.33	D	40	17	11	10		Top 0.30m: Olive brown SILT, little f sand, little f-c gravel.
10												Bottom 0.03m: Dark gray / black organic SILT, trace f sand.
		10.67 - 11.27	8	0.60	0.08	D	9	5	4	7		Dark gray organic SILT, some f-c sand, trace f-c gravel.
											11.73 -10.76	
		12.19 - 12.79	9	0.60	0.00	UP						Piston - No Recovery.
		13.72 - 14.32	10	0.60	0.60	D	5	11	12	12		Top 0.51m: Gray f SAND, trace f-m gravel. Bottom 0.10m: Red brown f SAND, little silt.
15												

Casing Size	From	To	Meters of Earth	Rock
100 mm	0	10.67m	40.23	
			No. of Samples	
			26D/1UP	

NOTES: Bombardier Rig - Raising and dropping of the 140-lb (63.5kg) weight was accomplished with an automatic safety hammer.

SAMPLE TYPE CODING: D=Driven C=Core A=Auger UP=Undisturbed Piston V=Vane Test
PROPORTIONS USED: Trace = 1 -10%, Little = 10 - 20%, Some = 20 - 35%, And = 35 - 50%

Hole No. P1-1 Sheet 1 of 3

BORING P1-1 (2 OF 3)

E. Del Priore	SM - 001 - M REV. 1/94 BORING REPORT	Hole No.	P1-1
DRILLER	STATE OF CONNECTICUT	Line & Station	I-95 0+785.6
R. Sharp	DEPARTMENT OF TRANSPORTATION	Offset	25.8 LT
INSPECTOR	TOWN: New Haven / West Haven, CT	N. Coordinate	202429.3
Parsons Brinckerhoff Quade & Douglas, Inc.	PROJECT NAME: Reconstruction I-95 Over West River	E. Coordinate	288813.6
SOILS ENGINEER	PROJECT NUMBER: 92-533	Parsons Brinckerhoff Quade & Douglas, Inc.	
	BORING CONTRACTOR: General Borings, Inc.	PRIME DESIGNER	

Surface Elevation: 0.97		Casing				Auger		Mud	Sampler		Core Barrel			
Date Started: 7/17/2002	Utilized			X			X	X	X	X				
Date Finished: 7/18/2002	Type	BW	NW	HW	Pipe	Solid	Hollow	Bentonite	SS	UP	B (st)	B (dt)	NX (st)	NV II (dt)
Groundwater Observations	Size I.D. (mm)	60	76	100	64		150	X	36		35	35	55	55
@ ~2.59 m after ___ hours	Hammer (kg)	136	136	136	136			Bit	63.5		Type	X	Diamond	
@ ___ m after ___ hours	Fall (m)	0.6	0.6	0.6	0.6			0.80 mm	0.76		of Bit		Carbide	

DEPTH	Casing blows per half meter	SAMPLE DEPTH IN METERS FROM - TO	NO.	PEN. m	REC. m	Type	BLOWS PER 0.15 METERS ON SAMPLER 0 - 0.15	0.15 - 0.30	0.30 - 0.45	0.45 - 0.60	STRATA CHANGE: DEPTH, ELEV.	FIELD IDENTIFICATION OF SOIL, REMARKS (INCL. COLOR, LOSS OF WASH WATER, ETC.)
		15.24 - 15.84	11	0.60	0.36	D	6	11	13	15		Red brown f SAND, little silt.
		16.76 - 17.36	11	0.60	0.30	D	5	9	13	16		Red brown f SAND, trace silt.
		18.29 - 18.89	12	0.6	0.41	D	8	15	19	25		Red brown f SAND, trace silt.
20		19.81 - 20.41	13	0.6	0.36	D	11	15	15	20		Red brown f SAND, trace silt.
		21.34 - 21.94	14	0.6	0.46	D	11	12	13	22		Red brown f SAND, trace silt.
											22.40 -21.43	
		22.86 - 23.46	15	0.60	0.36	D	11	10	17	25		Red brown SILT and f SAND.
		24.38 - 24.98	16	0.60	0.48	D	11	13	17	28		Red brown SILT and f SAND.
25												
		25.91 - 26.51	17	0.60	0.46	D	11	14	18	20		Red brown SILT and f SAND.
		27.43 - 28.03	18	0.60	0.38	D	18	17	22	28		Red brown SILT, trace f sand.
		28.96 - 29.56	19	0.60	0.36	D	12	22	24	30		Red brown SILT, little f sand.
30												

Casing Size	From	To	Meters of Earth	Rock
100 mm	0	10.67m	40.23	
			No. of Samples	
			26D/1UP	

NOTES: Bombardier Rig - Raising and dropping of the 140-lb (63.5kg) weight was accomplished with an automatic safety hammer.

SAMPLE TYPE CODING: D=Driven C=Core A=Auger UP=Undisturbed Piston V=Vane Test
PROPORTIONS USED: Trace = 1 -10%, Little = 10 - 20%, Some = 20 - 35%, And = 35 - 50%

Hole No. P1-1 Sheet 2 of 3

BORING P1-1 (3 OF 3)

E. Del Priore	SM - 001 - M REV. 1/94 BORING REPORT	Hole No.	P1-1
DRILLER	STATE OF CONNECTICUT	Line & Station	I-95 0+785.6
R. Sharp	DEPARTMENT OF TRANSPORTATION	Offset	25.8 LT
INSPECTOR	TOWN: New Haven / West Haven, CT	N. Coordinate	202429.3
Parsons Brinckerhoff Quade & Douglas, Inc.	PROJECT NAME: Reconstruction I-95 Over West River	E. Coordinate	288813.6
SOILS ENGINEER	PROJECT NUMBER: 92-533	Parsons Brinckerhoff Quade & Douglas, Inc.	
	BORING CONTRACTOR: General Borings, Inc.	PRIME DESIGNER	

Surface Elevation: 0.97		Casing				Auger		Mud	Sampler		Core Barrel			
Date Started: 7/17/2002	Utilized			X			X	X	X	X				
Date Finished: 7/18/2002	Type	BW	NW	HW	Pipe	Solid	Hollow	Bentonite	SS	UP	B (st)	B (dt)	NX (st)	NV II (dt)
Groundwater Observations	Size I.D. (mm)	60	76	100	64		150	X	36		35	35	55	55
@ ~2.59 m after ___ hours	Hammer (kg)	136	136	136	136			Bit	63.5		Type		Diamond	
@ ___ m after ___ hours	Fall (m)	0.6	0.6	0.6	0.6			0.80 mm	0.76		of Bit		Carbide	

DEPTH	Casing blows per half meter	SAMPLE DEPTH IN METERS FROM - TO	NO.	PEN. m	REC. m	Type	BLOWS PER 0.15 METERS ON SAMPLER 0 - 0.15	0.15 - 0.30	0.30 - 0.45	0.45 - 0.60	STRATA CHANGE: DEPTH, ELEV.	FIELD IDENTIFICATION OF SOIL, REMARKS (INCL. COLOR, LOSS OF WASH WATER, ETC.)
		30.48 - 31.09	20	0.60	0.38	D	14	19	27	40		Red brown SILT, little f sand.
		32.00 - 32.60	21	0.60	0.33	D	12	15	22	21		Red brown SILT, little f sand.
		33.53 - 34.13	22	0.60	0.41	D	19	31	30	39		Red brown SILT.
35												
		35.05 - 35.65	23	0.60	0.46	D	21	27	32	42		Red brown SILT.
		36.58 - 37.18	24	0.60	0.38	D	11	19	30	37		Red brown SILT.
		38.10 - 38.70	25	0.60	0.38	D	14	20	32	35		Red brown SILT.
40		39.62 - 40.22	26	0.60	0.43	D	20	19	25	31		Red brown SILT.
											40.22 -39.25	Bottom of Boring 40.22 m.
45												

Casing Size	From	To	Meters of Earth	Rock
100 mm	0.00	10.67m	40.22	
			No. of Samples	
			26D/1UP	

NOTES: Bombardier Rig - Raising and dropping of the 140-lb (63.5kg) weight was accomplished with an automatic safety hammer.

SAMPLE TYPE CODING: D=Driven C=Core A=Auger UP=Undisturbed Piston V=Vane Test
PROPORTIONS USED: Trace = 1 -10%, Little = 10 - 20%, Some = 20 - 35%, And = 35 - 50%

Hole No. P1-1 Sheet 3 of 3

REV.	DATE	DESCRIPTION	SHEET. NO

REVISIONS

THE INFORMATION, INCLUDING ESTIMATED QUANTITIES OF WORK, SHOWN ON THESE SHEETS IS BASED ON LIMITED INVESTIGATIONS BY THE STATE AND IS IN NO WAY WARRANTED TO INDICATE THE CONDITIONS OR ACTUAL QUANTITIES OF WORK WHICH WILL BE REQUIRED.

DESIGNER: R. BORJESON
DRAFTER: G. LEE
CHECKED BY: T. LALIBERTE
DATE CHECKED: 10-11-02

STATE OF CONNECTICUT
DEPARTMENT OF TRANSPORTATION

ENGINEER: PB AMERICAS, INC.
APPROVED BY: DATE:

PROJECT TITLE: RECONSTRUCTION OF I-95 OVER WEST RIVER (BRIDGE NO. 00163)
CADD
PLOTTED 11/13/2012

TOWN: NEW HAVEN / WEST HAVEN
DRAWING TITLE: BORINGS - P1-1

PROJECT NO.: 92-522
DRAWING NO.: STR-13
SHEET NO.:

BORING P1-2 (1 OF 3)

E. Del Priore	SM - 001 - M REV. 1/94 BORING REPORT	Hole No.	P1-2
DRILLER	STATE OF CONNECTICUT	Line & Station	I-95 0+786.0
R. Sharp	DEPARTMENT OF TRANSPORTATION	Offset	2.1 LT
INSPECTOR	TOWN: New Haven / West Haven, CT	N. Coordinate	202405.7
Parsons Brinckerhoff Quade & Douglas, Inc.	PROJECT NAME: Reconstruction I-95 Over West River	E. Coordinate	288815.2
SOILS ENGINEER	PROJECT NUMBER: 92-533		Parsons Brinckerhoff Quade & Douglas, Inc.
	BORING CONTRACTOR: General Borings, Inc.		PRIME DESIGNER

Surface Elevation: 1.67
Date Started: 7/17/2002
Date Finished: 7/19/2002
Groundwater Observations
@ ~2.59 m after hours
@ m after hours

	Casing						Auger	Mud	Sampler		Core Barrel			
Utilized			X			X	X	X						
Type	BW	NW	HW	Pipe	Solid	Hollow	Bentonite	SS	UP	B (st)	B (dt)	NX (st)	NV II (dt)
Size I.D. (mm)	60	76	100	64		150	X	36		35	35	55	55
Hammer (kg)	136	136	136	136			Bit	63.5		Type		Diamond	
Fall (m)	0.6	0.6	0.6	0.6			0.80 mm	0.76		of Bit		Carbide	

DEPTH (m)	Casing blows per half meter	DEPTH IN METERS FROM - TO	NO.	PEN. m	REC. m	Type	BLOWS PER 0.15 METERS ON SAMPLER 0 - 0.15	0.15 - 0.30	0.30 - 0.45	0.45 - 0.60	STRATA CHANGE: DEPTH, ELEV.	FIELD IDENTIFICATION OF SOIL, REMARKS (INCL. COLOR, LOSS OF WASH WATER, ETC.)
		0.00 - 0.60	1	0.60	0.25	D	2	2	4	2		Brown f SAND, little silt.
		1.52 - 2.12	2	0.60	0.46	D	3	2	2	2		Top 0.30m: Brown f SAND, little silt. Bottom 0.30m: Brown SILT, some f sand.
		3.05 - 3.65	3	0.60	0.18	D	2	2	2	3		Brown SILT, some f sand, trace gravel.
5		4.57 - 5.17	4	0.60	0.36	D	2	2	3	2		Top 0.20m: Brown SILT, some f sand, trace f-c gravel. Bottom 0.20m: Brown gray SILT, some f sand, trace gravel.
		6.10 - 6.70	5	0.60	0.15	D	6	8	12	8		Brown / light gray SILT, some f sand, some c gravel.
		7.62 - 8.22	6	0.60	0.20	D	10	11	14	16		Brown SILT, some f sand, little c gravel.
10		9.14 - 9.74	7	0.60	0.23	D	21	15	15	11		Top 0.13m: Brown sandy SILT and c GRAVEL. Bottom 0.10m: Brown SILT and f SAND.
											10.21	
		10.67 - 11.27	8	0.60	0.46	D	8	9	12	13	-8.54	Dark gray organic SILT, trace shells.
		12.19 - 12.79	9	0.60	0.56	D	5	5	8	7		Dark gray organic SILT, some f sand, little shells.
											13.26	
		13.72 - 14.32	10	0.60	0.36	D	11	15	15	17	-11.59	Dark gray f SAND, little silt.
15												

Casing Size	From	To	Meters of Earth	Rock
100 mm	0	4.57	40.23	
			No. of Samples	
			27D	

NOTES: Bombardier Rig - Raising and dropping of the 140-lb (63.5kg) weight was accomplished with an automatic safety hammer.

SAMPLE TYPE CODING: D=Driven C=Core A=Auger UP=Undisturbed Piston V=Vane Test
PROPORTIONS USED: Trace = 1 -10%, Little = 10 - 20%, Some = 20 - 35%, And = 35 - 50%

Hole No. P1-2
Sheet 1 of 3

BORING P1-2 (2 OF 3)

E. Del Priore	SM - 001 - M REV. 1/94 BORING REPORT	Hole No.	P1-2
DRILLER	STATE OF CONNECTICUT	Line & Station	I-95 0+786.0
R. Sharp	DEPARTMENT OF TRANSPORTATION	Offset	2.1 LT
INSPECTOR	TOWN: New Haven / West Haven, CT	N. Coordinate	202405.7
Parsons Brinckerhoff Quade & Douglas, Inc.	PROJECT NAME: Reconstruction I-95 Over West River	E. Coordinate	288815.2
SOILS ENGINEER	PROJECT NUMBER: 92-533		Parsons Brinckerhoff Quade & Douglas, Inc.
	BORING CONTRACTOR: General Borings, Inc.		PRIME DESIGNER

Surface Elevation: 1.67
Date Started: 7/17/2002
Date Finished: 7/19/2002
Groundwater Observations
@ ~2.59 m after hours
@ m after hours

	Casing						Auger	Mud	Sampler		Core Barrel			
Utilized			X			X	X	X						
Type	BW	NW	HW	Pipe	Solid	Hollow	Bentonite	SS	UP	B (st)	B (dt)	NX (st)	NV II (dt)
Size I.D. (mm)	60	76	100	64		150	X	36		35	35	55	55
Hammer (kg)	136	136	136	136			Bit	63.5		Type	X	Diamond	
Fall (m)	0.6	0.6	0.6	0.6			0.80 mm	0.76		of Bit		Carbide	

DEPTH (m)	Casing blows per half meter	DEPTH IN METERS FROM - TO	NO.	PEN. m	REC. m	Type	BLOWS PER 0.15 METERS ON SAMPLER 0 - 0.15	0.15 - 0.30	0.30 - 0.45	0.45 - 0.60	STRATA CHANGE: DEPTH, ELEV.	FIELD IDENTIFICATION OF SOIL, REMARKS (INCL. COLOR, LOSS OF WASH WATER, ETC.)
		15.24 - 15.84	11	0.60	0.38	D	12	12	12	16		Top 0.25m: Light gray f SAND, some silt. Bottom 0.13m: Light gray f SAND, some silt.
		16.76 - 17.36	12	0.60	0.46	D	10	15	16	18		Red brown SILT, little f sand.
		18.29 - 18.89	13	0.60	0.15	D	9	12	13	16		Red brown SILT, little f sand.
											19.35	
20		19.81 - 20.41	14	0.60	0.30	D	11	18	20	24	-17.68	Red brown SILT.
		21.34 - 21.94	15	0.60	0.08	D	15	19	19	19		Red brown SILT.
		22.86 - 23.46	16	0.60	0.05	D	22	23	29	35		Red brown SILT.
25		24.38 - 24.98	17	0.60	0.43	D	14	15	23	24		Red brown SILT.
		25.91 - 26.51	18	0.60	0.46	D	15	17	24	26		Red brown SILT.
		27.43 - 28.03	19	0.60	0.46	D	29	31	31	39		Red brown SILT, little to trace f sand.
		28.96 - 29.56	20	0.60	0.41	D	26	29	29	33		Red brown SILT, little to trace f sand.
30												

Casing Size	From	To	Meters of Earth	Rock
100 mm	0	4.57	40.23	
			No. of Samples	
			27D	

NOTES: Bombardier Rig - Raising and dropping of the 140-lb (63.5kg) weight was accomplished with an automatic safety hammer.

SAMPLE TYPE CODING: D=Driven C=Core A=Auger UP=Undisturbed Piston V=Vane Test
PROPORTIONS USED: Trace = 1 -10%, Little = 10 - 20%, Some = 20 - 35%, And = 35 - 50%

Hole No. P1-2
Sheet 2 of 3

BORING P1-2 (3 OF 3)

E. Del Priore	SM - 001 - M REV. 1/94 BORING REPORT	Hole No.	P1-2
DRILLER	STATE OF CONNECTICUT	Line & Station	I-95 0+786.0
R. Sharp	DEPARTMENT OF TRANSPORTATION	Offset	2.1 LT
INSPECTOR	TOWN: New Haven / West Haven, CT	N. Coordinate	202405.7
Parsons Brinckerhoff Quade & Douglas, Inc.	PROJECT NAME: Reconstruction I-95 Over West River	E. Coordinate	288815.2
SOILS ENGINEER	PROJECT NUMBER: 92-533		Parsons Brinckerhoff Quade & Douglas, Inc.
	BORING CONTRACTOR: General Borings, Inc.		PRIME DESIGNER

Surface Elevation: 1.67
Date Started: 7/17/2002
Date Finished: 7/19/2002
Groundwater Observations
@ ~2.59 m after hours
@ m after hours

	Casing						Auger	Mud	Sampler		Core Barrel			
Utilized			X			X	X	X						
Type	BW	NW	HW	Pipe	Solid	Hollow	Bentonite	SS	UP	B (st)	B (dt)	NX (st)	NV II (dt)
Size I.D. (mm)	60	76	100	64		150	X	36		35	35	55	55
Hammer (kg)	136	136	136	136			Bit	63.5		Type		Diamond	
Fall (m)	0.6	0.6	0.6				0.80 mm	0.76		of Bit		Carbide	

DEPTH (m)	Casing blows per half meter	DEPTH IN METERS FROM - TO	NO.	PEN. m	REC. m	Type	BLOWS PER 0.15 METERS ON SAMPLER 0 - 0.15	0.15 - 0.30	0.30 - 0.45	0.45 - 0.60	STRATA CHANGE: DEPTH, ELEV.	FIELD IDENTIFICATION OF SOIL, REMARKS (INCL. COLOR, LOSS OF WASH WATER, ETC.)
		30.48 - 31.08	21	0.60	0.41	D	18	26	32	44		Red brown SILT, little to trace f sand.
		32.00 - 32.60	22	0.60	0.46	D	20	25	31	40		Red brown SILT.
		33.53 - 34.13	23	0.60	0.41	D	16	26	34	36		Red brown SILT.
35		35.05 - 35.65	24	0.60	0.46	D	17	27	27	34		Red brown SILT.
		36.58 - 37.18	25	0.60	0.46	D	18	26	32	40		Red brown SILT, trace f sand.
		38.10 - 38.70	26	0.60	0.41	D	17	23	25	30		Red brown SILT, trace f sand.
40		39.62 - 40.22	27	0.60	0.46	D	19	24	27	24		Red brown SILT, trace f sand interlayered with brown gray
											40.22	clayey silt.
											-38.55	Bottom of Boring 40.22 m.
45												

Casing Size	From	To	Meters of Earth	Rock
100 mm	0	4.57	40.22	
			No. of Samples	
			27D	

NOTES: Bombardier Rig - Raising and dropping of the 140-lb (63.5kg) weight was accomplished with an automatic safety hammer.

SAMPLE TYPE CODING: D=Driven C=Core A=Auger UP=Undisturbed Piston V=Vane Test
PROPORTIONS USED: Trace = 1 -10%, Little = 10 - 20%, Some = 20 - 35%, And = 35 - 50%

Hole No. P1-2
Sheet 3 of 3

10:9:55 AM
11/13/2012
T:\V8CADD\Projects\PB\6735\FD\Structures\Contract_Sheets\B00163.dgn-14-092522-00163.dgn

REV.	DATE	DESCRIPTION	SHEET. NO.
		REVISIONS	

THE INFORMATION, INCLUDING ESTIMATED QUANTITIES OF WORK, SHOWN ON THESE SHEETS IS BASED ON LIMITED INVESTIGATIONS BY THE STATE AND IS IN NO WAY WARRANTED TO INDICATE THE CONDITIONS OR ACTUAL QUANTITIES OF WORK WHICH WILL BE REQUIRED.

DESIGNER: R. BORJESON
DRAFTER: G. LEE
CHECKED BY: T. LALIBERTE
DATE CHECKED: 10–11–02

STATE OF CONNECTICUT
DEPARTMENT OF TRANSPORTATION

ENGINEER: PB AMERICAS, INC.
APPROVED BY: DATE:

PROJECT TITLE: RECONSTRUCTION OF I–95 OVER WEST RIVER (BRIDGE NO. 00163)
CADD PLOTTED 11/13/2012

TOWN: NEW HAVEN / WEST HAVEN
DRAWING TITLE: BORINGS – P1–2

PROJECT NO.: 92–522
DRAWING NO.: STR–14
SHEET NO.:

BORING P1-3 (1 OF 3)

M. Jennett	SM - 001 - M REV. 1/94 BORING REPORT	Hole No.	P1-3
DRILLER	STATE OF CONNECTICUT	Line & Station	I-95 0+787.7
E. Guven / E. Fulton	DEPARTMENT OF TRANSPORTATION	Offset	21.1 RT
INSPECTOR	TOWN: New Haven / West Haven, CT	N. Coordinate	202382.6
Parsons Brinckerhoff Quade & Douglas, Inc.	PROJECT NAME: Reconstruction I-95 Over West River	E. Coordinate	288818.2
SOILS ENGINEER	PROJECT NUMBER: 92-533	Parsons Brinckerhoff Quade & Douglas, Inc.	
	BORING CONTRACTOR: General Borings, Inc.	PRIME DESIGNER	

			Casing				Auger		Mud	Sampler		Core Barrel			
Surface Elevation: 2.32															
Date Started: 7/19/2002	Utilized			X				X	X	X	X				
Date Finished: 7/23/2002	Type	BW	NW	HW	Pipe	Solid	Hollow		Bentonite	SS	UP	B (st)	B (dt)	NX (st)	NV II (dt)
Groundwater Observations	Size I.D. (mm)	60	76	100	64		150		X	36		35	35	55	55
@ ~2.59 m after ____ hours	Hammer (kg)	136	136	136	136				Bit	63.5		Type		Diamond	
@ ____ m after ____ hours	Fall (m)	0.6	0.6	0.6	0.6				0.80 mm	0.76		of Bit		Carbide	

DEPTH	Casing blows per half meter	SAMPLE DEPTH IN METERS FROM - TO	NO.	PEN. m	REC. m	Type	BLOWS PER 0.15 METERS ON SAMPLER 0 - 0.15	0.15 - 0.30	0.30 - 0.45	0.45 - 0.60	STRATA CHANGE: DEPTH, ELEV.	FIELD IDENTIFICATION OF SOIL, REMARKS (INCL. COLOR, LOSS OF WASH WATER, ETC.)
		0.00 - 0.60	1	0.60	0.25	D	7	9	14	16		Brown f-c SAND, trace f gravel, trace silt, trace organics, dry (topsoil).
		1.52 - 2.12	2	0.60	0.46	D	32	23	27	23		Brown f-c SAND, trace f gravel, trace silt, moist.
		3.05 - 3.65	3	0.60	0.25	D	2	2	1	1		Light brown f SAND, trace c sand, trace silt, wet.
											4.57	
5		4.57 - 5.17	4	0.03	0.46	D	1	1	2	2	-2.25	Light brown gray organic SILT interlayered with PEAT, trace clay, wet.
		5.49 - 6.09	1	0.60	0.60	UP						Piston.
		6.10 - 6.70	5	0.60	0.60	D	WOH	WOH	1	1		Gray organic SILT, trace clay, trace shells, wet.
		7.62 - 8.22	6	0.60	0.60	D	WOH	WOH	WOH	WOH		Gray organic SILT, trace clay, trace shells, wet.
		8.53 - 9.13	2	0.60	0.60	UP						Piston.
		9.14 - 9.74	7	0.60	0.60	D	WOR	WOR	WOR	WOR		Gray organic SILT, trace clay, trace shells, wet.
10												
		10.67 - 11.27	8	0.60	0.60	D	WOH	1	1	1		Gray organic SILT, trace clay, trace shells, wet.
		12.19 - 12.79	9	0.60	0.60	D	1	1	1	2		Gray organic SILT, little f sand, trace clay, trace shells, wet.
											13.26	
		13.72 - 14.32	10	0.60	0.60	D	4	4	4	5	-10.94	Top 0.45m: Gray f-c SAND, some silt. Bottom 0.15m: Brown PEAT with f sand.
15												

Casing			Meters of		NOTES:
Size	From	To	Earth	Rock	Bombardier rig - Raising and dropping of the 140-lb (63.5kg) safety hammer was accomplished using a wire winch.
100 mm	0	4.57	40.23m		
			No. of Samples		
			27D/2UP		

SAMPLE TYPE CODING: D=Driven C=Core A=Auger UP=Undisturbed Piston V=Vane Test
PROPORTIONS USED: Trace = 1 -10%, Little = 10 - 20%, Some = 20 - 35%, And = 35 - 50%

Hole No. P1-3 Sheet 1 of 3

BORING P1-3 (2 OF 3)

M. Jennett	SM - 001 - M REV. 1/94 BORING REPORT	Hole No.	P1-3
DRILLER	STATE OF CONNECTICUT	Line & Station	I-95 0+787.7
E. Guven / E. Fulton	DEPARTMENT OF TRANSPORTATION	Offset	21.1 RT
INSPECTOR	TOWN: New Haven / West Haven, CT	N. Coordinate	202382.6
Parsons Brinckerhoff Quade & Douglas, Inc.	PROJECT NAME: Reconstruction I-95 Over West River	E. Coordinate	288818.2
SOILS ENGINEER	PROJECT NUMBER: 92-533	Parsons Brinckerhoff Quade & Douglas, Inc.	
	BORING CONTRACTOR: General Borings, Inc.	PRIME DESIGNER	

			Casing				Auger		Mud	Sampler		Core Barrel			
Surface Elevation: 2.32															
Date Started: 7/19/2002	Utilized			X				X	X	X	X				
Date Finished: 7/23/2002	Type	BW	NW	HW	Pipe	Solid	Hollow		Bentonite	SS	UP	B (st)	B (dt)	NX (st)	NV II (dt)
Groundwater Observations	Size I.D. (mm)	60	76	100	64		150		X	36		35	35	55	55
@ ~2.59 m after ____ hours	Hammer (kg)	136	136	136	136				Bit	63.5		Type	X	Diamond	
@ ____ m after ____ hours	Fall (m)	0.6	0.6	0.6	0.6				0.80 mm	0.76		of Bit		Carbide	

DEPTH	Casing blows per half meter	SAMPLE DEPTH IN METERS FROM - TO	NO.	PEN. m	REC. m	Type	BLOWS PER 0.15 METERS ON SAMPLER 0 - 0.15	0.15 - 0.30	0.30 - 0.45	0.45 - 0.60	STRATA CHANGE: DEPTH, ELEV.	FIELD IDENTIFICATION OF SOIL, REMARKS (INCL. COLOR, LOSS OF WASH WATER, ETC.)
		15.24 - 15.84	11	0.60	0.46	D	6	13	13	14		Gray f-c SAND, trace f gravel, trace silt, wet.
		16.76 - 17.36	12	0.60	0.56	D	1	1	6	12		Red brown f SAND, trace c sand, trace silt, wet.
		18.29 - 18.89	13	0.60	0.51	D	8	3	4	12		Red brown f SAND, little silt, saturated.
20		19.81 - 20.41	14	0.60	0.38	D	11	4	3	5		Red brown f SAND, little silt, saturated.
		21.34 - 21.94	15	0.60	0.41	D	8	5	6	14		Red brown f SAND, little silt, saturated.
		22.86 - 23.46	16	0.60	0.46	D	4	1/0.30m		4		Red brown f SAND, little silt, saturated.
		24.38 - 24.98	17	0.60	0.38	D	19	25	25	37		Red brown f SAND, trace silt, dense, saturated.
25												
											25.45	
		25.91 - 26.51	18	0.60	0.46	D	14	16	17	26	-23.18	Red brown SILT, some f sand, wet.
		27.43 - 28.03	19	0.60	0.48	D	17	20	25	28		Red brown SILT, some f sand, wet.
		28.96 - 29.56	20	0.60	0.30	D	15	23	27	31		Red brown SILT, some f sand, wet.
30												

Casing			Meters of		NOTES:
Size	From	To	Earth	Rock	Bombardier rig - Raising and dropping of the 140-lb (63.5kg) safety hammer was accomplished using a wire winch.
100 mm	0	4.57	40.23m		
			No. of Samples		
			27D/2UP		

SAMPLE TYPE CODING: D=Driven C=Core A=Auger UP=Undisturbed Piston V=Vane Test
PROPORTIONS USED: Trace = 1 -10%, Little = 10 - 20%, Some = 20 - 35%, And = 35 - 50%

Hole No. P1-3 Sheet 2 of 3

BORING P1-3 (3 OF 3)

M. Jennett	SM - 001 - M REV. 1/94 BORING REPORT	Hole No.	P1-3
DRILLER	STATE OF CONNECTICUT	Line & Station	I-95 0+787.7
E. Guven / E. Fulton	DEPARTMENT OF TRANSPORTATION	Offset	21.1 RT
INSPECTOR	TOWN: New Haven / West Haven, CT	N. Coordinate	202382.6
Parsons Brinckerhoff Quade & Douglas, Inc.	PROJECT NAME: Reconstruction I-95 Over West River	E. Coordinate	288818.2
SOILS ENGINEER	PROJECT NUMBER: 92-533	Parsons Brinckerhoff Quade & Douglas, Inc.	
	BORING CONTRACTOR: General Borings, Inc.	PRIME DESIGNER	

			Casing				Auger		Mud	Sampler		Core Barrel			
Surface Elevation: 2.32															
Date Started: 7/19/2002	Utilized			X				X	X	X	X				
Date Finished: 7/23/2002	Type	BW	NW	HW	Pipe	Solid	Hollow		Bentonite	SS	UP	B (st)	B (dt)	NX (st)	NV II (dt)
Groundwater Observations	Size I.D. (mm)	60	76	100	64		150		X	36		35	35	55	55
@ ~2.59 m after ____ hours	Hammer (kg)	136	136	136	136				Bit	63.5		Type		Diamond	
@ ____ m after ____ hours	Fall (m)	0.6	0.6	0.6	0.6				0.80 mm	0.76		of Bit		Carbide	

DEPTH	Casing blows per half meter	SAMPLE DEPTH IN METERS FROM - TO	NO.	PEN. m	REC. m	Type	BLOWS PER 0.15 METERS ON SAMPLER 0 - 0.15	0.15 - 0.30	0.30 - 0.45	0.45 - 0.60	STRATA CHANGE: DEPTH, ELEV.	FIELD IDENTIFICATION OF SOIL, REMARKS (INCL. COLOR, LOSS OF WASH WATER, ETC.)
		30.48 - 31.09	21	0.60	0.51	D	12	13	22	24		Red brown f SILT, some f sand, with trace f sand lense (~0.16-0.08cm), trace clayey silt seams (~0.16-0.08cm), wet.
		32.00-32.60	22	0.60	0.60	D	15	7	4	24		Red brown SILT, some f sand, trace f sand lense (~0.16-0.08cm), wet.
		33.53-34.13	23	0.60	0.60	D	11	10	5	16		Top 0.20m: Red brown SILT, little f sand, saturated, Bottom 0.40m: Red brown f SAND and SILT, wet, dense. rapid dilatancy.
35												
		35.05 - 35.65	24	0.60	0.51	D	7	11	14	24		Red brown SILT, some f sand.
		36.58 - 37.18	25	0.60	0.60	D	6	8	10	25		Red brown SILT, little f sand.
		38.10 - 38.70	26	0.60	0.41	D	5	7	14	15		Red brown SILT, trace f sand, trace c sand.
40		39.62 - 40.22	27	0.60	0.56	D	14	15	23	24		Red brown SILT, trace f sand.
											40.22	
											-37.90	Bottom of Boring 40.22 m.
45												

Casing			Meters of		NOTES:
Size	From	To	Earth	Rock	Bombardier rig - Raising and dropping of the 140-lb (63.5kg) safety hammer was accomplished using a wire winch.
100 mm	0	4.57	40.22m		
			No. of Samples		
			27D/2UP		

SAMPLE TYPE CODING: D=Driven C=Core A=Auger UP=Undisturbed Piston V=Vane Test
PROPORTIONS USED: Trace = 1 -10%, Little = 10 - 20%, Some = 20 - 35%, And = 35 - 50%

Hole No. P1-3 Sheet 3 of 3

REV.	DATE	DESCRIPTION	SHEET. NO
		REVISIONS	

THE INFORMATION, INCLUDING ESTIMATED QUANTITIES OF WORK, SHOWN ON THESE SHEETS IS BASED ON LIMITED INVESTIGATIONS BY THE STATE AND IS IN NO WAY WARRANTED TO INDICATE THE CONDITIONS OR ACTUAL QUANTITIES OF WORK WHICH WILL BE REQUIRED.

DESIGNER: R. BORJESON
DRAFTER: G. LEE
CHECKED BY: T. LALIBERTE
DATE CHECKED: 10-11-02

STATE OF CONNECTICUT
DEPARTMENT OF TRANSPORTATION

ENGINEER: PB AMERICAS, INC.
APPROVED BY: DATE:

PROJECT TITLE: RECONSTRUCTION OF I-95 OVER WEST RIVER (BRIDGE NO. 00163)
CADD PLOTTED 11/13/2012

TOWN: NEW HAVEN / WEST HAVEN
DRAWING TITLE: BORINGS - P1-3

PROJECT NO.: 92-522
DRAWING NO.: STR-15
SHEET NO.:

10:21:12 AM
11/13/2012
T:\V8CADD\Projects\PB18735\FD\Structures\Contract_Sheets\Br00163\str-15-092522-00163.dgn

BORING P2-1 (1 OF 3)

R. Posa	SM - 001 - M REV. 1/94	BORING REPORT	Hole No.	P2-1
DRILLER	STATE OF CONNECTICUT		Line & Station	I-95 0+842.0
E. Fulton	DEPARTMENT OF TRANSPORTATION		Offset	24.7 LT
INSPECTOR	TOWN:	New Haven / West Haven, CT	N. Coordinate	202432.1
Parsons Brinckerhoff Quade & Douglas, Inc.	PROJECT NAME:	Reconstruction I-95 Over West River	E. Coordinate	288869.5
SOILS ENGINEER	PROJECT NUMBER:	92-533	Parsons Brinckerhoff Quade & Douglas, Inc.	
	BORING CONTRACTOR:	General Borings, Inc.	PRIME DESIGNER	

			Casing				Auger		Mud	Sampler		Core Barrel			
Surface Elevation: -0.48															
Date Started: 8/21/2002	Utilized			X				X	X	X	X				
Date Finished: 8/26/2002	Type	BW	NW	HW	Pipe	Solid		Hollow	Bentonite	SS	UP	B (st)	B (dt)	NX (st)	NV II (dt)
Groundwater Observations	Size I.D. (mm)	60	76	100	64			150	X	36		35	35	55	55
@ In River m after ___ hours	Hammer (kg)	136	136	136	136				Bit	63.5		Type		Diamond	
@ Tidal m after ___ hours	Fall (m)	0.6	0.6	0.6	0.6				0.80 mm	0.76		of Bit		Carbide	

DEPTH	Casing blows per half meter	SAMPLE DEPTH IN METERS FROM - TO	NO.	PEN. m	REC. m	Type	BLOWS PER 0.15 METERS ON SAMPLER 0 - 0.15	0.15 - 0.30	0.30 - 0.45	0.45 - 0.60	STRATA CHANGE: DEPTH, ELEV.	FIELD IDENTIFICATION OF SOIL, REMARKS (INCL. COLOR, LOSS OF WASH WATER, ETC.)
		0.00 - 0.60	1	0.60	0.15	D	WOR	WOR	WOR	WOR		Top 0.10m: Dark gray / black organic SILT, little f sand, trace shells. Bottom 0.05m: Brown SILT, some f SAND, trace clay.
		1.52 - 2.12	2	0.60	0.60	D	WOR	WOR	WOR	WOR		Dark gray organic SILT, trace shells, soft.
		3.05 - 3.65	3	0.60	0.56	D	WOR	WOR	WOR	WOR		Dark gray organic SILT, trace shells, soft.
5		4.57 - 5.17	1	0.03	0.60	UP						Piston.
		5.18 - 5.78	4	0.60	0.60	D	WOR	WOR	WOR	WOR		Gray organic SILT, trace shells, very soft.
		6.10 - 6.70	5	0.60	0.60	D	WOR	WOR	WOR	WOR		Gray organic SILT, trace shells, soft.
		7.62 - 8.22	2	0.60	0.60	UP						Piston.
		8.23 - 8.83	6	0.60	0.51	D	WOR	WOR	WOR	WOR		Gray organic SILT, trace shells, soft.
		9.14 - 9.74	7	0.60	0.56	D	WOH	WOH	2	3	9.39	Top 0.25m: Gray organic SILT, trace shells, soft.
10											-9.87	Bottom 0.30m: Gray f SAND and SILT, trace shells, trace f gravel.
		10.67 - 11.27	8	0.60	0.46	D	5	2	2	4		Gray brown f SAND, some silt, trace f gravel, trace shells.
		12.19 - 12.79	9	0.60	0.46	D	6	7	9	11		Red brown f SAND, little silt, little c sand, trace f gravel, trace shells.
		13.72 - 14.32	10	0.60	0.30	D	5	8	9	11		Red brown f SAND, little silt, trace c sand, trace f gravel.
15												

Casing			Meters of	
Size	From	To	Earth	Rock
100 mm	0	15.24	46.32	
			No. of Samples	
			31D/2UP	

NOTES: Barge / Skid Rig - Raising and dropping of the 140-lb (63.5kg) safety hammer accomplished using a rope and cathead.

SAMPLE TYPE CODING: D=Driven C=Core A=Auger UP=Undisturbed Piston V=Vane Test

PROPORTIONS USED: Trace = 1 -10%, Little = 10 - 20%, Some = 20 - 35%, And = 35 - 50%

Hole No. P2-1 Sheet 1 of 3

BORING P2-1 (2 OF 3)

R. Posa	SM - 001 - M REV. 1/94	BORING REPORT	Hole No.	P2-1
DRILLER	STATE OF CONNECTICUT		Line & Station	I-95 0+842.0
E. Fulton	DEPARTMENT OF TRANSPORTATION		Offset	24.7 LT
INSPECTOR	TOWN:	New Haven / West Haven, CT	N. Coordinate	202432.1
Parsons Brinckerhoff Quade & Douglas, Inc.	PROJECT NAME:	Reconstruction I-95 Over West River	E. Coordinate	288869.5
SOILS ENGINEER	PROJECT NUMBER:	92-533	Parsons Brinckerhoff Quade & Douglas, Inc.	
	BORING CONTRACTOR:	General Borings, Inc.	PRIME DESIGNER	

			Casing				Auger		Mud	Sampler		Core Barrel			
Surface Elevation: -0.48															
Date Started: 8/21/2002	Utilized			X				X	X	X	X				
Date Finished: 8/26/2002	Type	BW	NW	HW	Pipe	Solid		Hollow	Bentonite	SS	UP	B (st)	B (dt)	NX (st)	NV II (dt)
Groundwater Observations	Size I.D. (mm)	60	76	100	64			150	X	36		35	35	55	55
@ In River m after ___ hours	Hammer (kg)	136	136	136	136				Bit	63.5		Type		Diamond	
@ Tidal m after ___ hours	Fall (m)	0.6	0.6	0.6	0.6				0.80 mm	0.76		of Bit		Carbide	

DEPTH	Casing blows per half meter	SAMPLE DEPTH IN METERS FROM - TO	NO.	PEN. m	REC. m	Type	BLOWS PER 0.15 METERS ON SAMPLER 0 - 0.15	0.15 - 0.30	0.30 - 0.45	0.45 - 0.60	STRATA CHANGE: DEPTH, ELEV.	FIELD IDENTIFICATION OF SOIL, REMARKS (INCL. COLOR, LOSS OF WASH WATER, ETC.)
		15.24 - 15.84	11	0.60	0.51	D	5	7	10	12		Red brown f SAND, little silt.
		16.76 - 17.36	12	0.60	0.60	D	6	9	11	10		Red brown f SAND, little silt, trace f gravel.
		18.29 - 18.89	13	0.60	0..30	D	4	6	10	13		Red brown f SAND, some silt.
20		19.81 - 20.41	14	0.60	0.60	D	10	10	11	14		Red brown f SAND, some silt.
											20.88	
		21.34 - 21.94	15	0.60	0.60	D	12	14	15	18	-21.36	Red brown SILT, little f sand, trace clayey silt seams (very thin, ~0.08cm), saturated, rapid dilatancy.
		22.86 - 23.46	16	0.60	0.00	D	12	15	16	18		No Recovery.
		24.38 - 24.98	17	0.60	0.51	D	14	16	19	22		Red brown SILT, trace f sand.
25												
		25.91 - 26.51	18	0.60	0.60	D	15	15	17	24		Red brown SILT.
		27.43 - 28.03	19	0.60	0.08	D	14	18	20	23		Red brown SILT, little f sand, saturated, rapid dilatancy.
		28.96 - 29.56	20	0.60	0.51	D	9	14	17	19		Red brown SILT, little f sand, trace clayey silt seams (very thin, ~0.08cm), saturated, rapid dilatancy.
30												

Casing			Meters of	
Size	From	To	Earth	Rock
100 mm	0	15.24	46.32	
			No. of Samples	
			31D/2UP	

NOTES: Barge / Skid Rig - Raising and dropping of the 140-lb (63.5kg) hammer was accomplished using a rope and pulley system.

SAMPLE TYPE CODING: D=Driven C=Core A=Auger UP=Undisturbed Piston V=Vane Test

PROPORTIONS USED: Trace = 1 -10%, Little = 10 - 20%, Some = 20 - 35%, And = 35 - 50%

Hole No. P2-1 Sheet 2 of 3

BORING P2-1 (3 OF 3)

R. Posa	SM - 001 - M REV. 1/94	BORING REPORT	Hole No.	P2-1
DRILLER	STATE OF CONNECTICUT		Line & Station	I-95 0+842.0
E. Fulton	DEPARTMENT OF TRANSPORTATION		Offset	24.7 LT
INSPECTOR	TOWN:	New Haven / West Haven, CT	N. Coordinate	202432.1
Parsons Brinckerhoff Quade & Douglas, Inc.	PROJECT NAME:	Reconstruction I-95 Over West River	E. Coordinate	288869.5
SOILS ENGINEER	PROJECT NUMBER:	92-533	Parsons Brinckerhoff Quade & Douglas, Inc.	
	BORING CONTRACTOR:	General Borings, Inc.	PRIME DESIGNER	

			Casing				Auger		Mud	Sampler		Core Barrel			
Surface Elevation: -0.48															
Date Started: 8/21/2002	Utilized			X				X	X	X	X				
Date Finished: 8/26/2002	Type	BW	NW	HW	Pipe	Solid		Hollow	Bentonite	SS	UP	B (st)	B (dt)	NX (st)	NV II (dt)
Groundwater Observations	Size I.D. (mm)	60	76	100	64			150	X	36		35	35	55	55
@ In River m after ___ hours	Hammer (kg)	136	136	136	136				Bit	63.5		Type		Diamond	
@ Tidal m after ___ hours	Fall (m)	0.6	0.6	0.6	0.6				0.80 mm	0.76		of Bit		Carbide	

DEPTH	Casing blows per half meter	SAMPLE DEPTH IN METERS FROM - TO	NO.	PEN. m	REC. m	Type	BLOWS PER 0.15 METERS ON SAMPLER 0 - 0.15	0.15 - 0.30	0.30 - 0.45	0.45 - 0.60	STRATA CHANGE: DEPTH, ELEV.	FIELD IDENTIFICATION OF SOIL, REMARKS (INCL. COLOR, LOSS OF WASH WATER, ETC.)
		30.48 - 31.09	21	0.60	0.41	D	13	19	23	27		Red brown SILT, saturated.
		32.00 - 32.60	22	0.60	0.56	D	14	18	22	27		Red brown SILT, saturated.
		33.53 - 34.13	23	0.60	0.51	D	18	22	25	30		Red brown SILT, little f sand, saturated.
35												
		35.05 - 35.65	24	0.60	0.60	D	12	16	23	26		Red brown SILT, little f sand, saturated.
		36.58 - 37.18	25	0.60	0.15	D	14	16	21	18		Red brown SILT, trace clayey silt seams (~0.16-0.08cm).
		38.10 - 38.70	26	0.60	0.30	D	14	15	18	24		Red brown SILT, trace clayey silt seams (~0.16-0.08cm).
40		39.62 - 40.22	27	0.60	0.46	D	11	17	22	26		Red brown SILT, trace clayey silt seams (~0.16-0.08cm).
		41.15 - 41.75	28	0.60	0.60	D	18	22	24	20		Red brown SILT, trace clayey silt seams (~0.16-0.08cm).
											42.21	
		42.67 - 43.27	29	0.60	0.08	D	11	15	19	27	-42.69	Red brown SILT, little to some clay.
		44.19 - 44.79	30	0.60	0.46	D	16	22	24	27		Red brown SILT, little to some clay, trace clayey silt seams (~0.79 mm).
45												
		45.72 - 46.32	31	0.60	0.51	D	21	24	25	29		Red brown SILT, little to some clay, trace clayey silt seams (~0.79 mm).
											46.32	
											-46.80	Bottom of Boring 46.32 m.
50												

Casing			Meters of	
Size	From	To	Earth	Rock
100 mm	0	15.24	46.32	
			No. of Samples	
			31D/2UP	

NOTES: Barge / Skid Rig - Raising and dropping of the 140-lb (63.5kg) hammer was accomplished using a rope and pulley system.

SAMPLE TYPE CODING: D=Driven C=Core A=Auger UP=Undisturbed Piston V=Vane Test

PROPORTIONS USED: Trace = 1 -10%, Little = 10 - 20%, Some = 20 - 35%, And = 35 - 50%

Hole No. P2-1 Sheet 3 of 3

REV.	DATE	DESCRIPTION	SHEET. NO
		REVISIONS	

THE INFORMATION, INCLUDING ESTIMATED QUANTITIES OF WORK, SHOWN ON THESE SHEETS IS BASED ON LIMITED INVESTIGATIONS BY THE STATE AND IS IN NO WAY WARRANTED TO INDICATE THE CONDITIONS OR ACTUAL QUANTITIES OF WORK WHICH WILL BE REQUIRED.

DESIGNER: R. BORJESON
DRAFTER: G. LEE
CHECKED BY: T. LALIBERTE
DATE CHECKED: 10–11–02

STATE OF CONNECTICUT
DEPARTMENT OF TRANSPORTATION

ENGINEER: PB AMERICAS, INC.
APPROVED BY: DATE:

PROJECT TITLE: RECONSTRUCTION OF I–95 OVER WEST RIVER (BRIDGE NO. 00163)
CADD
PLOTTED 11/13/2012

TOWN: NEW HAVEN / WEST HAVEN
DRAWING TITLE: BORINGS – P2–1
PROJECT NO.: 92–522
DRAWING NO.: STR–16
SHEET NO.:

10:22:23 AM
11/13/2012
T:\V8CADD\Projects\PB18735\FD\Structures\Contract_Sheets\Br00163\str-16-092522-00163.dgn

BORING P2-2 (1 OF 3)

R. Posa	SM - 001 - M REV. 1/94	BORING REPORT	Hole No. P2-2
DRILLER	STATE OF CONNECTICUT		Line & Station I-95 0+837.7
R. Sharp / E. Fulton	DEPARTMENT OF TRANSPORTATION		Offset 9.3 LT
INSPECTOR	TOWN: New Haven / West Haven, CT		N. Coordinate 202416.5
Parsons Brinckerhoff Quade & Douglas, Inc.	PROJECT NAME: Reconstruction I-95 Over West River		E. Coordinate 288866.3
SOILS ENGINEER	PROJECT NUMBER: 92-533		Parsons Brinckerhoff Quade & Douglas, Inc.
	BORING CONTRACTOR: General Borings, Inc.		PRIME DESIGNER

Surface Elevation: -0.77
Date Started: 8/15/2002
Date Finished: 8/21/2002
Groundwater Observations
@ In River m after ____ hours
@ Tidal m after ____ hours

	Casing	Auger	Mud	Sampler		Core Barrel			
Utilized		X	X	X					
Type	BW	NW	HW	Pipe	Solid	Hollow	Bentonite	SS	UP	B (st)	B (dt)	NX (st)	NV II (dt)
Size I.D. (mm)	60	76	100	64		150	X	36		35	35	55	55
Hammer (kg)	136	136	136	136			Bit	63.5		Type		Diamond	
Fall (m)	0.6	0.6	0.6	0.6			0.80 mm	0.76		of Bit		Carbide	

DEPTH (m)	Casing blows per half meter	DEPTH IN METERS FROM - TO	SAMPLE NO.	PEN. m	REC. m	Type	BLOWS PER 0.15 METERS ON SAMPLER 0 - 0.15	0.15 - 0.30	0.30 - 0.45	0.45 - 0.60	STRATA CHANGE: DEPTH, ELEV.	FIELD IDENTIFICATION OF SOIL, REMARKS (INCL. COLOR, LOSS OF WASH WATER, ETC.)
		0.00 - 0.60	1	0.60	0.51	D	WOR	WOR	WOR	WOR		Dark gray organic SILT, trace f sand, some shells, trace fibers.
		1.52 - 2.12	2	0.60	0.60	D	WOR	WOR	WOR	WOR		Gray organic SILT, trace shells, trace fibers.
		3.05 - 3.65	3	0.60	0.60	D	WOR	WOR	WOR	WOR		Gray organic SILT, trace shells, trace fibers.
5		4.57 - 5.17	4	0.60	0.53	D	WOR	WOR	WOR	WOR		Gray organic SILT, trace f sand, trace shells.
		6.10 - 6.70	5	0.60	0.53	D	WOR	WOR	WOR	WOR		Gray organic SILT, trace f sand, trace shells.
		7.62 - 8.22	6	0.60	0.38	D	WOR	WOR	WOR	WOR		Gray organic SILT, little f sand, trace shells.
											8.69	
		9.14 - 9.74	7	0.60	0.00	D	16	16	17	14	-9.46	No Recovery.
10												
		10.67 - 11.27	8	0.60	0.56	D	10	11	12	14		Gray brown f-c SAND, little silt, trace f gravel.
		12.19 - 12.79	9	0.60	0.58	D	8	7	11	14		Top 0.18m: Gray f SAND, trace c sand, little silt. Bottom 0.40m: Gray f-c SAND, trace f gravel, little silt.
		13.72 - 14.32	10	0.60	0.46	D	8	9	9	8		Red brown f SAND, some silt, wet.
15												

Casing Size	From	To	Meters of Earth	Rock
100 mm	0	18.29	46.32	
			No. of Samples	
			31D	

NOTES: Barge / Skid Rig - Raising and dropping of the 140-lb (63.5kg) safety hammer accomplished using a rope and cathead.

SAMPLE TYPE CODING: D=Driven C=Core A=Auger UP=Undisturbed Piston V=Vane Test
PROPORTIONS USED: Trace = 1 -10%, Little = 10 - 20%, Some = 20 - 35%, And = 35 - 50%

Hole No. P2-2
Sheet 1 of 3

BORING P2-2 (2 OF 3)

R. Posa	SM - 001 - M REV. 1/94	BORING REPORT	Hole No. P2-2
DRILLER	STATE OF CONNECTICUT		Line & Station I-95 0+837.7
R. Sharp / E. Fulton	DEPARTMENT OF TRANSPORTATION		Offset 9.3 LT
INSPECTOR	TOWN: New Haven / West Haven, CT		N. Coordinate 202416.5
Parsons Brinckerhoff Quade & Douglas, Inc.	PROJECT NAME: Reconstruction I-95 Over West River		E. Coordinate 288866.3
SOILS ENGINEER	PROJECT NUMBER: 92-533		Parsons Brinckerhoff Quade & Douglas, Inc.
	BORING CONTRACTOR: General Borings, Inc.		PRIME DESIGNER

Surface Elevation: -0.77
Date Started: 8/15/2002
Date Finished: 8/21/2002
Groundwater Observations
@ In River m after ____ hours
@ Tidal m after ____ hours

	Casing	Auger	Mud	Sampler		Core Barrel			
Utilized		X	X	X					
Type	BW	NW	HW	Pipe	Solid	Hollow	Bentonite	SS	UP	B (st)	B (dt)	NX (st)	NV II (dt)
Size I.D. (mm)	60	76	100	64		150	X	36		35	35	55	55
Hammer (kg)	136	136	136	136			Bit	63.5		Type		Diamond	
Fall (m)	0.6	0.6	0.6	0.6			0.80 mm	0.76		of Bit		Carbide	

DEPTH (m)	Casing blows per half meter	DEPTH IN METERS FROM - TO	SAMPLE NO.	PEN. m	REC. m	Type	BLOWS PER 0.15 METERS ON SAMPLER 0 - 0.15	0.15 - 0.30	0.30 - 0.45	0.45 - 0.60	STRATA CHANGE: DEPTH, ELEV.	FIELD IDENTIFICATION OF SOIL, REMARKS (INCL. COLOR, LOSS OF WASH WATER, ETC.)
		15.24 - 15.84	11	0.60	0.60	D	8	9	10	10		Red brown f SAND, little silt, saturated.
		16.76 - 17.36	12	0.60	0.51	D	7	9	10	13		Red brown f SAND, some silt, wet.
		18.29 - 18.89	13	0.60	0.46	D	9	11	11	13		Red brown f SAND, little silt, wet.
20		19.81 - 20.41	14	0.60	0.51	D	10	12	12	12		Red brown f SAND, little silt, wet.
		21.34 - 21.94	15	0.60	0.30	D	9	10	11	13		Red brown f SAND, little silt, wet.
		22.86 - 23.46	16	0.60	0.46	D	10	10	10	12		Red brown f SAND, some silt, wet.
											22.40	
		24.38 - 24.98	17	0.60	0.46	D	10	13	17	19	-23.17	Top 0.25m: Red brown SILT and f SAND, few clayey silt seams (very thin). Bottom 0.20m: Red brown SILT, little f sand, few clayey silt seams.
25												
		25.91 - 26.51	18	0.60	0.41	D	11	18	19	23		Top 0.30m: Red brown SILT, little f sand, few clayey silt seams (very thin). Bottom 0.10m: Red brown SILT and f SAND, saturated, rapid dilatancy.
		27.43 - 28.03	19	0.60	0.30	D	11	13	17	20		Top 0.12m: Red brown SILT and f SAND, rapid dilatancy. Bottom 0.18m: Red brown SILT, some f sand, few clayey silt seams (very thin).
30		28.96 - 29.56	20	0.60	0.46	D	12	17	19	22		Red brown SILT, some f sand, rapid dilatancy.

Casing Size	From	To	Meters of Earth	Rock
100 mm	0	18.29	46.32	
			No. of Samples	
			31D	

NOTES: Barge / Skid Rig - Raising and dropping of the 140-lb (63.5kg) safety hammer accomplished using a rope and cathead.

SAMPLE TYPE CODING: D=Driven C=Core A=Auger UP=Undisturbed Piston V=Vane Test
PROPORTIONS USED: Trace = 1 -10%, Little = 10 - 20%, Some = 20 - 35%, And = 35 - 50%

Hole No. P2-2
Sheet 2 of 3

BORING P2-2 (3 OF 3)

R. Posa	SM - 001 - M REV. 1/94	BORING REPORT	Hole No. P2-2
DRILLER	STATE OF CONNECTICUT		Line & Station I-95 0+837.7
R. Sharp / E. Fulton	DEPARTMENT OF TRANSPORTATION		Offset 9.3 LT
INSPECTOR	TOWN: New Haven / West Haven, CT		N. Coordinate 202416.5
Parsons Brinckerhoff Quade & Douglas, Inc.	PROJECT NAME: Reconstruction I-95 Over West River		E. Coordinate 288866.3
SOILS ENGINEER	PROJECT NUMBER: 92-533		Parsons Brinckerhoff Quade & Douglas, Inc.
	BORING CONTRACTOR: General Borings, Inc.		PRIME DESIGNER

Surface Elevation: -0.77
Date Started: 8/15/2002
Date Finished: 8/21/2002
Groundwater Observations
@ In River m after ____ hours
@ Tidal m after ____ hours

	Casing	Auger	Mud	Sampler		Core Barrel			
Utilized		X	X	X					
Type	BW	NW	HW	Pipe	Solid	Hollow	Bentonite	SS	UP	B (st)	B (dt)	NX (st)	NV II (dt)
Size I.D. (mm)	60	76	100	64		150	X	36		35	35	55	55
Hammer (kg)	136	136	136	136			Bit	63.5		Type		Diamond	
Fall (m)	0.6	0.6	0.6	0.6			0.80 mm	0.76		of Bit		Carbide	

DEPTH (m)	Casing blows per half meter	DEPTH IN METERS FROM - TO	SAMPLE NO.	PEN. m	REC. m	Type	BLOWS PER 0.15 METERS ON SAMPLER 0 - 0.15	0.15 - 0.30	0.30 - 0.45	0.45 - 0.60	STRATA CHANGE: DEPTH, ELEV.	FIELD IDENTIFICATION OF SOIL, REMARKS (INCL. COLOR, LOSS OF WASH WATER, ETC.)
		30.48 - 31.09	21	0.60	0.00	D	8	15	19	21		No Recovery.
		32.00 - 32.60	22	0.60	0.46	D	14	16	20	22		Red brown SILT.
		33.53 - 34.13	23	0.60	0.46	D	12	16	18	27		Red brown SILT, little f sand, trace clay.
35												
		35.05 - 35.65	24	0.60	0.51	D	8	12	15	19		Red brown SILT, trace clayey silt seams (very thin), rapid dilatancy.
		36.58 - 37.18	25	0.60	0.51	D	12	15	17	21		Red brown SILT, little f sand.
		38.10 - 38.70	26	0.60	0.46	D	15	16	18	24		Red brown SILT, trace to little f sand, rapid dilatancy, saturated.
40		39.62 - 40.22	27	0.60	0.08	D	19	21	26	29		Red brown SILT, trace to little f sand, rapid dilatancy, saturated.
		41.15 - 41.75	28	0.60	0.60	D	10	16	19	23		Red brown SILT, trace to little f sand, rapid dilatancy.
		42.67 - 43.27	29	0.60	0.15	D	13	18	21	27		Red brown SILT, little f sand, trace clayey silt seams (very thin).
		44.19 - 44.79	30	0.60	0.60	D	17	23	25	29		Red brown SILT, little f sand, trace clayey silt seams (very thin).
45												
		45.72 - 46.32	31	0.60	0.60	D	15	21	27	31		Red brown SILT, trace clayey silt seams (very thin).
											46.32	
											-47.09	Bottom of Boring 46.32 m.
50												

Casing Size	From	To	Meters of Earth	Rock
100 mm	0	18.29	46.32	
			No. of Samples	
			31D	

NOTES: Barge / Skid Rig - Raising and dropping of the 140-lb (63.5kg) safety hammer accomplished using a rope and cathead.

SAMPLE TYPE CODING: D=Driven C=Core A=Auger UP=Undisturbed Piston V=Vane Test
PROPORTIONS USED: Trace = 1 -10%, Little = 10 - 20%, Some = 20 - 35%, And = 35 - 50%

Hole No. P2-2
Sheet 3 of 3

REV.	DATE	DESCRIPTION	SHEET. NO.
		REVISIONS	

THE INFORMATION, INCLUDING ESTIMATED QUANTITIES OF WORK, SHOWN ON THESE SHEETS IS BASED ON LIMITED INVESTIGATIONS BY THE STATE AND IS IN NO WAY WARRANTED TO INDICATE THE CONDITIONS OR ACTUAL QUANTITIES OF WORK WHICH WILL BE REQUIRED.

DESIGNER: R. BORJESON
DRAFTER: G. LEE
CHECKED BY: T. LALIBERTE
DATE CHECKED: 10–11–02

STATE OF CONNECTICUT
DEPARTMENT OF TRANSPORTATION

ENGINEER: PB AMERICAS, INC.
APPROVED BY:
DATE:

PROJECT TITLE: RECONSTRUCTION OF I–95 OVER WEST RIVER (BRIDGE NO. 00163)
CADD
PLOTTED 11/13/2012

TOWN: NEW HAVEN / WEST HAVEN
DRAWING TITLE: BORINGS – P2–2

PROJECT NO.: 92–522
DRAWING NO.: STR–17
SHEET NO.:

10:23:57 AM
11/13/2012
T:\V8CADD\Projects\PB\6735\FD\Structures\Contract_Sheets\B00163.dgn

BORING P2-3 (1 OF 3)

E. Del Priore	SM - 001 - M REV. 1/94 BORING REPORT	Hole No.	P2-3
DRILLER	STATE OF CONNECTICUT	Line & Station	I-95 0+843.3
R. Sharp	DEPARTMENT OF TRANSPORTATION	Offset	19.4 RT
INSPECTOR	TOWN: New Haven / West Haven, CT	N. Coordinate	202388.2
Parsons Brinckerhoff Quade & Douglas, Inc.	PROJECT NAME: Reconstruction I-95 Over West River	E. Coordinate	288874.0
SOILS ENGINEER	PROJECT NUMBER: 92-533		Parsons Brinckerhoff Quade & Douglas, Inc.
	BORING CONTRACTOR: General Borings, Inc.		PRIME DESIGNER

Surface Elevation: 0.68			Casing			Auger		Mud	Sampler		Core Barrel					
Date Started: 7/19/2002		Utilized			X			X	X	X	X					
Date Finished: 7/23/2002		Type	BW	NW	HW	Pipe	Solid	Hollow	Bentonite	SS	UP	B (st)	B (dt)	NX (st)	NV II (dt)	
Groundwater Observations		Size I.D. (mm)	60	76	100	64		150	X	36		35	35	55	55	
@ ~0.0 m after hours		Hammer (kg)	136	136	136	136			Bit	63.5		Type		Diamond		
@ m after hours		Fall (m)	0.6	0.6	0.6	0.6			0.80 mm	0.76		of Bit		Carbide		

DEPTH (m)	Casing blows per half meter	SAMPLE DEPTH IN METERS FROM - TO	NO.	PEN. m	REC. m	Type	BLOWS PER 0.15 METERS ON SAMPLER 0 - 0.15	0.15 - 0.30	0.30 - 0.45	0.45 - 0.60	STRATA CHANGE: DEPTH, ELEV.	FIELD IDENTIFICATION OF SOIL, REMARKS (INCL. COLOR, LOSS OF WASH WATER, ETC.)
		0.00 - 0.60	1	0.60	0.08	D	1	1	2	1		Gray SILT, little f sand, roots, fibers, wood.
		1.52 - 2.12	2	0.60	0.05	D	1/0.30m		1/0.30m			PEAT
											3.05	
		3.05 - 3.65	3	0.60	0.60	D	WOH	WOH	WOH	WOH	-2.37	Gray organic SILT, trace f sand.
5		4.57 - 5.17	4	0.60	0.00	D	1	WOH	WOH	WOH		No Recovery.
		6.10 - 6.70	5	0.60	0.60	D	WOH	WOH	WOH	WOH		Gray organic SILT, trace f sand.
		7.62 - 8.22	6	0.60	0.60	D	WOH	WOH	1	1		Gray organic SILT, trace f sand.
		9.14 - 9.74	1	0.60	0.60	UP						Piston.
10		10.67 - 11.27	7	0.60	0.60	D	1	WOH	WOH	1		Gray organic SILT, trace f sand.
		12.19 - 12.79	2	0.60	0.60	UP						Piston.
		13.72 - 14.32	8	0.60	0.51	D	1	1	1	1		Gray organic SILT, trace f sand.
15											15.24	

Casing Size	From	To	Meters of Earth	Rock
100 mm	0		46.32	
			No. of Samples	
			31D/2UP	

NOTES: Bombardier Rig - Raising and dropping of the 140-lb (63.5kg) weight was accomplished with an automatic safety hammer.

SAMPLE TYPE CODING: D=Driven C=Core A=Auger UP=Undisturbed Piston V=Vane Test

PROPORTIONS USED: Trace = 1 -10%, Little = 10 - 20%, Some = 20 - 35%, And = 35 - 50%

Hole No. P2-3 Sheet 1 of 3

BORING P2-3 (2 OF 3)

E. Del Priore	SM - 001 - M REV. 1/94 BORING REPORT	Hole No.	P2-3
DRILLER	STATE OF CONNECTICUT	Line & Station	I-95 0+843.3
R. Sharp	DEPARTMENT OF TRANSPORTATION	Offset	19.4 RT
INSPECTOR	TOWN: New Haven / West Haven, CT	N. Coordinate	202388.2
Parsons Brinckerhoff Quade & Douglas, Inc.	PROJECT NAME: Reconstruction I-95 Over West River	E. Coordinate	288874.0
SOILS ENGINEER	PROJECT NUMBER: 92-533		Parsons Brinckerhoff Quade & Douglas, Inc.
	BORING CONTRACTOR: General Borings, Inc.		PRIME DESIGNER

Surface Elevation: 0.68			Casing			Auger		Mud	Sampler		Core Barrel					
Date Started: 7/19/2002		Utilized			X			X	X	X	X					
Date Finished: 7/23/2002		Type	BW	NW	HW	Pipe	Solid	Hollow	Bentonite	SS	UP	B (st)	B (dt)	NX (st)	NV II (dt)	
Groundwater Observations		Size I.D. (mm)	60	76	100	64		150	X	36		35	35	55	55	
@ ~0.0 m after hours		Hammer (kg)	136	136	136	136			Bit	63.5		Type		Diamond		
@ m after hours		Fall (m)	0.6	0.6	0.6	0.6			0.80 mm	0.76		of Bit		Carbide		

DEPTH (m)	Casing blows per half meter	SAMPLE DEPTH IN METERS FROM - TO	NO.	PEN. m	REC. m	Type	BLOWS PER 0.15 METERS ON SAMPLER 0 - 0.15	0.15 - 0.30	0.30 - 0.45	0.45 - 0.60	STRATA CHANGE: DEPTH, ELEV.	FIELD IDENTIFICATION OF SOIL, REMARKS (INCL. COLOR, LOSS OF WASH WATER, ETC.)
		15.24 - 15.84	9	0.60	0.30	D	8	11	12	14	-14.56	Red brown f SAND, trace silt.
		16.76 - 17.36	10	0.60	0.00	D	4	2	3	3		No Recovery.
		18.29 - 18.89	11	0.60	0.25	D	4	4	5	7		Red brown f SAND, trace silt.
20		19.81 - 20.41	12	0.60	0.36	D	3	6	5	8		Red brown f SAND, trace silt.
		21.34 - 21.94	13	0.60	0.10	D	10	11	10	13		Red brown f SAND, some silt.
		22.86 - 23.46	14	0.60	0.41	D	12	15	13	17		Red brown f SAND and SILT.
		24.38 - 24.98	15	0.60	0.15	D	14	16	17	21		Red brown f SAND and SILT.
25												
		25.91 - 26.51	16	0.60	0.08	D	9	13	15	18		Red brown f SAND and SILT.
											26.97	
		27.43 - 28.03	17	0.60	0.30	D	23	28	26	32	-26.29	Red brown SILT, some f sand.
		28.96 - 29.56	18	0.60	0.38	D	19	23	27	34		Red brown SILT, some f sand.
30												

Casing Size	From	To	Meters of Earth	Rock
100 mm	0		46.32	
			No. of Samples	
			31D/2UP	

NOTES: Bombardier Rig - Raising and dropping of the 140-lb (63.5kg) weight was accomplished with an automatic safety hammer.

SAMPLE TYPE CODING: D=Driven C=Core A=Auger UP=Undisturbed Piston V=Vane Test

PROPORTIONS USED: Trace = 1 -10%, Little = 10 - 20%, Some = 20 - 35%, And = 35 - 50%

Hole No. P2-3 Sheet 2 of 3

BORING P2-3 (3 OF 3)

E. Del Priore	SM - 001 - M REV. 1/94 BORING REPORT	Hole No.	P2-3
DRILLER	STATE OF CONNECTICUT	Line & Station	I-95 0+843.3
R. Sharp	DEPARTMENT OF TRANSPORTATION	Offset	19.4 RT
INSPECTOR	TOWN: New Haven / West Haven, CT	N. Coordinate	202388.2
Parsons Brinckerhoff Quade & Douglas, Inc.	PROJECT NAME: Reconstruction I-95 Over West River	E. Coordinate	288874.0
SOILS ENGINEER	PROJECT NUMBER: 92-533		Parsons Brinckerhoff Quade & Douglas, Inc.
	BORING CONTRACTOR: General Borings, Inc.		PRIME DESIGNER

Surface Elevation: 0.68			Casing			Auger		Mud	Sampler		Core Barrel					
Date Started: 7/19/2002		Utilized			X			X	X	X	X					
Date Finished: 7/23/2002		Type	BW	NW	HW	Pipe	Solid	Hollow	Bentonite	SS	UP	B (st)	B (dt)	NX (st)	NV II (dt)	
Groundwater Observations		Size I.D. (mm)	60	76	100	64		150	X	36		35	35	55	55	
@ ~0.0 m after hours		Hammer (kg)	136	136	136	136			Bit	63.5		Type		Diamond		
@ m after hours		Fall (m)	0.6	0.6	0.6	0.6			0.80 mm	0.76		of Bit		Carbide		

DEPTH (m)	Casing blows per half meter	SAMPLE DEPTH IN METERS FROM - TO	NO.	PEN. m	REC. m	Type	BLOWS PER 0.15 METERS ON SAMPLER 0 - 0.15	0.15 - 0.30	0.30 - 0.45	0.45 - 0.60	STRATA CHANGE: DEPTH, ELEV.	FIELD IDENTIFICATION OF SOIL, REMARKS (INCL. COLOR, LOSS OF WASH WATER, ETC.)
		30.48 - 31.09	19	0.60	0.23	D	9	3	11	23		Red brown SILT, some f sand, trace f gravel. Note: Starting to lose drilling mud at 30.48m.
		32.00 - 32.60	20	0.60	0.38	D	22	33	34	37		Red brown SILT, some f sand, trace (gray) clayey silt seams ~1mm thick, trace clay, trace organics, trace shells, trace fibers.
		33.53 - 34.13	21	0.60	0.41	D	26	36	39	39		Red brown SILT, some f sand, trace (gray) silt seams (~1mm).
35												
		35.05 - 35.65	22	0.60	0.46	D	22	31	36	38		Red brown SILT, some f sand, trace (gray) silt seams (~1mm).
		36.58 - 37.18	23	0.60	0.53	D	23	32	35	50		Red brown SILT, some f sand, trace (gray) silt seams (~1mm).
											37.64	
		38.10 - 38.70	24	0.60	0.48	D	25	33	36	47	-36.96	Red brown SILT, little to some clay, trace gray clayey silt seams (~1mm). Note: Lost whole tub of mud between 36.58m - 39.62m.
40		39.62 - 40.22	25	0.60	0.48	D	25	34	48	48		Red brown SILT, little to some clay, trace gray clayey silt seams (~1mm).
		41.15 - 41.75	26	0.60	0.43	D	23	31	37	45		Red brown SILT, little to some clay, trace gray clayey silt seams (~1mm).
		42.67 - 43.27	27	0.60	0.56	D	21	30	34	32		Red brown SILT, little clay, trace gray silt seams (~1-5mm).
		44.19 - 44.79	28	0.60	0.51	D	25	35	34	40		Red brown SILT, little clay, trace gray silt seams (~1-5mm).
45												
		45.72 - 46.32	29	0.60	0.56	D	42	45	56	60		Red brown SILT, little to some clay, trace gray silt seams (~5-10mm).
											46.32	
											-45.64	Bottom of Boring 46.32m.
50												

Casing Size	From	To	Meters of Earth	Rock
100 mm	0		46.32	
			No. of Samples	
			31D/2UP	

NOTES: Bombardier Rig - Raising and dropping of the 140-lb (63.5kg) weight was accomplished with an automatic safety hammer.

SAMPLE TYPE CODING: D=Driven C=Core A=Auger UP=Undisturbed Piston V=Vane Test

PROPORTIONS USED: Trace = 1 -10%, Little = 10 - 20%, Some = 20 - 35%, And = 35 - 50%

Hole No. P2-3 Sheet 3 of 3

REV.	DATE	DESCRIPTION	SHEET. NO.
		REVISIONS	

THE INFORMATION, INCLUDING ESTIMATED QUANTITIES OF WORK, SHOWN ON THESE SHEETS IS BASED ON LIMITED INVESTIGATIONS BY THE STATE AND IS IN NO WAY WARRANTED TO INDICATE THE CONDITIONS OR ACTUAL QUANTITIES OF WORK WHICH WILL BE REQUIRED.

DESIGNER: R. BORJESON
DRAFTER: G. LEE
CHECKED BY: T. LALIBERTE
DATE CHECKED: 10-11-02

STATE OF CONNECTICUT
DEPARTMENT OF TRANSPORTATION

ENGINEER: PB AMERICAS, INC.
APPROVED BY: DATE:

PROJECT TITLE: RECONSTRUCTION OF I-95 OVER WEST RIVER (BRIDGE NO. 00163)

TOWN: NEW HAVEN / WEST HAVEN

DRAWING TITLE: BORINGS – P2-3

PROJECT NO.: 92-522
DRAWING NO.: STR-18
SHEET NO.:

CADD PLOTTED 11/13/2012

10:25:03 AM
11/13/2012
T:\V8CADD\Projects\PB\6735\FD\Structures\Contract_Sheets\Br00163.dgn-18-092522-00163.dgn

BORING P3-1 (1 OF 3)

R. Posa	SM - 001 - M REV. 1/94 BORING REPORT	Hole No.	P3-1
DRILLER	STATE OF CONNECTICUT	Line & Station	I-95 0+913.3
R. Sharp / E. Fulton	DEPARTMENT OF TRANSPORTATION	Offset	24.7 LT
INSPECTOR	TOWN: New Haven / West Haven, CT	N. Coordinate	202437.2
Parsons Brinckerhoff Quade & Douglas, Inc.	PROJECT NAME: Reconstruction I-95 Over West River	E. Coordinate	288940.6
SOILS ENGINEER	PROJECT NUMBER: 92-533		Parsons Brinckerhoff Quade & Douglas, Inc.
	BORING CONTRACTOR: General Borings, Inc.		PRIME DESIGNER

Surface Elevation: -0.72			Casing			Auger		Mud		Sampler		Core Barrel				
Date Started: 8/9/2002	Utilized			X			X	X		X	X					
Date Finished: 8/14/2002	Type	BW	NW	HW	Pipe	Solid	Hollow	Bentonite		SS	UP	B (st)	B (dt)	NX (st)	NV II (dt)	
Groundwater Observations	Size I.D. (mm)	60	76	100	64		150	X		36		35	35	55	55	
@ In River m after hours	Hammer (kg)	136	136	136	136			Bit		63.5		Type		Diamond		
@ Tidal m after hours	Fall (m)	0.6	0.6	0.6	0.6			0.80 mm		0.76		of Bit		Carbide		

DEPTH IN METERS FROM - TO	Casing blows per half meter	SAMPLE NO.	PEN. m	REC. m	Type	BLOWS PER 0.15 METERS ON SAMPLER 0 - 0.15	0.15 - 0.30	0.30 - 0.45	0.45 - 0.60	STRATA CHANGE: DEPTH, ELEV.	FIELD IDENTIFICATION OF SOIL, REMARKS (INCL. COLOR, LOSS OF WASH WATER, ETC.)
0.00 - 0.60		1	0.60	0.15	D	WOR	WOR	WOR	WOR		Top 0.03m: Black organic SILT, little shells.
											Bottom 0.13m: Gray organic SILT, trace f sand, trace shells.
1.52 - 2.12		2	0.60	0.43	D	1	1	1	1		Gray organic SILT, little f sand, trace f gravel, trace shells.
3.05 - 3.65		1	0.60	0.60	UP						Piston.
3.65 - 4.27		3	0.60	0.60	D	1	1	1	1		Gray organic SILT, trace f sand, trace shells.
4.57 - 5.17	5	4	0.60	0.30	D	WOR	WOR	WOR	WOR		Gray organic SILT, trace f sand, trace shells.
6.10 - 6.70		2	0.60	0.60	UP						Piston.
6.70 - 7.31		5	0.60	0.00	D	WOH	WOH	WOH	WOH		No Recovery.
7.62 - 8.22		6	0.60	0.60	D	WOH	WOH	WOH	WOH		Dark gray organic SILT, trace shells, trace f sand.
9.14 - 9.74		7	0.60	0.15	D	WOH	WOH	WOH	WOH		Dark gray organic SILT, trace f sand.
10.67 - 11.27	10	8	0.60	0.41	D	WOH	WOH	6	7		Top 0.18m: Dark brown / gray organic SILT, trace shells, trace f
										11.73	sand.
										-12.55	Bottom 0.20m: Red brown / brown f SAND, little silt.
12.19 - 12.79		9	0.60	0.51	D	2	3	4	6		Top 0.30m: Red brown f SAND, little silt, saturated, rapid
											dilatancy.
											Middle 0.05m: Red brown f SAND, some silt, little shells.
											Bottom 0.15m: Red brown f SAND, some silt, saturated, rapid
											dilatancy.
13.72 - 14.32	15	10	0.60	0.38	D	5	7	9	9		Red brown f SAND, some silt, saturated.

Casing			Meters of	
Size	From	To	Earth	Rock
100 mm	0	18.29	46.32	
			No. of Samples	
			31D/2UP	

NOTES: Barge / Skid Rig - Raising and dropping of the 140-lb (63.5kg) safety hammer accomplished using a rope and cathead.

SAMPLE TYPE CODING: D=Driven C=Core A=Auger UP=Undisturbed Piston V=Vane Test

PROPORTIONS USED: Trace = 1 -10%, Little = 10 - 20%, Some = 20 - 35%, And = 35 - 50%

Hole No. P3-1 Sheet 1 of 3

BORING P3-1 (2 OF 3)

R. Posa	SM - 001 - M REV. 1/94 BORING REPORT	Hole No.	P3-1
DRILLER	STATE OF CONNECTICUT	Line & Station	I-95 0+913.3
R. Sharp / E. Fulton	DEPARTMENT OF TRANSPORTATION	Offset	24.7 LT
INSPECTOR	TOWN: New Haven / West Haven, CT	N. Coordinate	202437.2
Parsons Brinckerhoff Quade & Douglas, Inc.	PROJECT NAME: Reconstruction I-95 Over West River	E. Coordinate	288940.6
SOILS ENGINEER	PROJECT NUMBER: 92-533		Parsons Brinckerhoff Quade & Douglas, Inc.
	BORING CONTRACTOR: General Borings, Inc.		PRIME DESIGNER

Surface Elevation: -0.72			Casing			Auger		Mud		Sampler		Core Barrel				
Date Started: 8/9/2002	Utilized			X			X	X		X	X					
Date Finished: 8/14/2002	Type	BW	NW	HW	Pipe	Solid	Hollow	Bentonite		SS	UP	B (st)	B (dt)	NX (st)	NV II (dt)	
Groundwater Observations	Size I.D. (mm)	60	76	100	64		150	X		36		35	35	55	55	
@ In River m after hours	Hammer (kg)	136	136	136	136			Bit		63.5		Type		Diamond		
@ Tidal m after hours	Fall (m)	0.6	0.6	0.6	0.6			0.80 mm		0.76		of Bit		Carbide		

DEPTH IN METERS FROM - TO	Casing blows per half meter	SAMPLE NO.	PEN. m	REC. m	Type	BLOWS PER 0.15 METERS ON SAMPLER 0 - 0.15	0.15 - 0.30	0.30 - 0.45	0.45 - 0.60	STRATA CHANGE: DEPTH, ELEV.	FIELD IDENTIFICATION OF SOIL, REMARKS (INCL. COLOR, LOSS OF WASH WATER, ETC.)
15.24 - 15.84		11	0.60	0.56	D	3	3	3	6		Red brown f SAND, little silt, trace shells, saturated, rapid
											dilatancy.
16.76 - 17.36		12	0.60	0.30	D	8	10	10	11		Red brown f SAND, trace silt, wet.
18.29 - 18.89		13	0.60	0.51	D	8	9	11	13		Red brown f SAND, trace silt, wet.
19.81 - 20.41	20	14	0.60	0.46	D	10	10	13	14		Red brown f SAND, some silt, saturated, med to rapid dilatancy.
										20.88	
21.34 - 21.94		15	0.60	0.51	D	10	12	12	16	-21.60	Red brown SILT, some f sand, saturated, rapid dilatancy.
22.86 - 23.46		16	0.60	0.56	D	9	11	13	15		Red brown SILT, some f sand, saturated, rapid dilatancy.
24.38 - 24.98		17	0.60	0.56	D	12	14	19	22		Top 0.46m: Red brown SILT, little f sand, trace clayey silt seams
	25										(~0.79mm), one f sand lense (~0.79mm), saturated, rapid dilatancy.
											Bottom 0.10m: Red brown SILT and f sand, saturated.
25.91 - 26.51		18	0.60	0.51	D	14	19	21	24		Red brown SILT, little f sand, saturated, rapid dilatancy.
27.43 - 28.03		19	0.60	0.60	D	14	14	15	18		Red brown SILT, little f sand, trace clayey silt seams (~0.79-
											1.59 mm) saturated, rapid dilatancy.
28.96 - 29.56		20	0.60	0.56	D	12	14	16	17		Red brown SILT, little f sand, saturated.
	30										

Casing			Meters of	
Size	From	To	Earth	Rock
100 mm	0	18.29	46.32	
			No. of Samples	
			31D/2UP	

NOTES: Barge / Skid Rig - Raising and dropping of the 140-lb (63.5kg) safety hammer accomplished using a rope and cathead.

SAMPLE TYPE CODING: D=Driven C=Core A=Auger UP=Undisturbed Piston V=Vane Test

PROPORTIONS USED: Trace = 1 -10%, Little = 10 - 20%, Some = 20 - 35%, And = 35 - 50%

Hole No. P3-1 Sheet 2 of 3

BORING P3-1 (3 OF 3)

R. Posa	SM - 001 - M REV. 1/94 BORING REPORT	Hole No.	P3-1
DRILLER	STATE OF CONNECTICUT	Line & Station	I-95 0+913.3
R. Sharp / E. Fulton	DEPARTMENT OF TRANSPORTATION	Offset	24.7 LT
INSPECTOR	TOWN: New Haven / West Haven, CT	N. Coordinate	202437.2
Parsons Brinckerhoff Quade & Douglas, Inc.	PROJECT NAME: Reconstruction I-95 Over West River	E. Coordinate	288940.6
SOILS ENGINEER	PROJECT NUMBER: 92-533		Parsons Brinckerhoff Quade & Douglas, Inc.
	BORING CONTRACTOR: General Borings, Inc.		PRIME DESIGNER

Surface Elevation: -0.72			Casing			Auger		Mud		Sampler		Core Barrel				
Date Started: 8/9/2002	Utilized			X			X	X		X	X					
Date Finished: 8/14/2002	Type	BW	NW	HW	Pipe	Solid	Hollow	Bentonite		SS	UP	B (st)	B (dt)	NX (st)	NV II (dt)	
Groundwater Observations	Size I.D. (mm)	60	76	100	64		150	X		36		35	35	55	55	
@ In River m after hours	Hammer (kg)	136	136	136	136			Bit		63.5		Type		Diamond		
@ Tidal m after hours	Fall (m)	0.6	0.6	0.6	0.6			0.80 mm		0.76		of Bit		Carbide		

DEPTH IN METERS FROM - TO	Casing blows per half meter	SAMPLE NO.	PEN. m	REC. m	Type	BLOWS PER 0.15 METERS ON SAMPLER 0 - 0.15	0.15 - 0.30	0.30 - 0.45	0.45 - 0.60	STRATA CHANGE: DEPTH, ELEV.	FIELD IDENTIFICATION OF SOIL, REMARKS (INCL. COLOR, LOSS OF WASH WATER, ETC.)
30.48 - 31.09		21	0.60	0.41	D	14	18	24	20		Red brown SILT, little f sand, one clayey silt seam (~0.16cm),
											saturated.
32.00 - 32.60		22	0.60	0.48	D	12	15	19	20		Red brown SILT, little f sand, trace clayey silt seam (~0.16cm),
											saturated.
33.53 - 34.13		23	0.60	0.51	D	13	19	18	21		Red brown SILT and f SAND.
	35										
35.05 - 35.65		24	0.60	0.51	D	12	14	17	21		Red brown SILT, some f sand, trace clayey silt seams (~0.08 cm),
											saturated, rapid dilatancy.
36.58 - 37.18		25	0.60	0.30	D	8	14	17	20		Red brown SILT, little f sand.
38.10 - 38.70		26	0.60	0.46	D	12	13	23	26		Red brown SILT, some f sand.
	40										
39.62 - 40.22		27	0.60	0.46	D	14	17	22	27		Red brown SILT, little f sand, trace clay, trace (light gray) clay
											seams (~1-5mm).
41.15 - 41.75		28	0.60	0.51	D	15	16	17	21		Red brown SILT, little clay, trace f sand, trace (light gray) clay
											seams (~1-5mm).
										42.20	
42.67 - 43.27		29	0.60	0.56	D	15	18	28	23	-42.92	Red brown SILT, little to some clay, trace (light gray) clay
											seams (~1-5mm).
44.19 - 44.79		30	0.60	0.56	D	16	16	21	28		Red brown SILT, little to some clay, trace (light gray) clay
	45										seams (~1-10 mm).
45.72 - 46.32		31	0.60	0.48	D	18	20	22	25		Red brown SILT, little to some clay, trace (light gray) clay
											seams (~1-10 mm).
										46.32	
										-47.04	Bottom of Boring 46.32 m.
	50										

Casing			Meters of	
Size	From	To	Earth	Rock
100 mm	0	18.29	46.32	
			No. of Samples	
			31D/2UP	

NOTES: Barge / Skid Rig - Raising and dropping of the 140-lb (63.5kg) safety hammer accomplished using a rope and cathead.

SAMPLE TYPE CODING: D=Driven C=Core A=Auger UP=Undisturbed Piston V=Vane Test

PROPORTIONS USED: Trace = 1 -10%, Little = 10 - 20%, Some = 20 - 35%, And = 35 - 50%

Hole No. P3-1 Sheet 3 of 3

REV.	DATE	DESCRIPTION	SHEET. NO.
		REVISIONS	

THE INFORMATION, INCLUDING ESTIMATED QUANTITIES OF WORK, SHOWN ON THESE SHEETS IS BASED ON LIMITED INVESTIGATIONS BY THE STATE AND IS IN NO WAY WARRANTED TO INDICATE THE CONDITIONS OR ACTUAL QUANTITIES OF WORK WHICH WILL BE REQUIRED.

DESIGNER: R. BORJESON
DRAFTER: G. LEE
CHECKED BY: T. LALIBERTE
DATE CHECKED: 10–11–02

STATE OF CONNECTICUT
DEPARTMENT OF TRANSPORTATION

ENGINEER: PB AMERICAS, INC.
APPROVED BY: DATE:

PROJECT TITLE: RECONSTRUCTION OF I–95 OVER WEST RIVER (BRIDGE NO. 00163)

TOWN: NEW HAVEN / WEST HAVEN

DRAWING TITLE: BORINGS – P3–1

PROJECT NO.: 92–522
DRAWING NO.: STR–19
SHEET NO.:

CADD PLOTTED 11/13/2012

10:26:20 AM
11/13/2012
T:\V8CADD\Projects\PB\6735\FD\Structures\Contract_Sheets\Br00163.dgn

BORING P3-2 (1 OF 3)

R. Posa	SM - 001 - M REV. 1/94	BORING REPORT	Hole No. P3-2
DRILLER	STATE OF CONNECTICUT		Line & Station I-95 0+913.2
R. Sharp	DEPARTMENT OF TRANSPORTATION		Offset 7.5 LT
INSPECTOR	TOWN: New Haven / West Haven, CT		N. Coordinate 202420.0
Parsons Brinckerhoff Quade & Douglas, Inc.	PROJECT NAME: Reconstruction I-95 Over West River		E. Coordinate 288941.7
SOILS ENGINEER	PROJECT NUMBER: 92-533		Parsons Brinckerhoff Quade & Douglas, Inc.
	BORING CONTRACTOR: General Borings, Inc.		PRIME DESIGNER

Surface Elevation: -0.75
Date Started: 8/5/2002
Date Finished: 8/8/2002
Groundwater Observations
@ In River m after hours
@ Tidal m after hours

	Casing	Auger	Mud	Sampler		Core Barrel			
Utilized			X		X	X	X				
Type	BW	NW	HW	Pipe	Solid	Hollow	Bentonite	SS	UP	B (st)	B (dt)	NX (st)	NV II (dt)
Size I.D. (mm)	60	76	100	64		150	X	36		35	35	55	55
Hammer (kg)	136	136	136	136			Bit	63.5		Type		Diamond	
Fall (m)	0.6	0.6	0.6	0.6			0.80 mm	0.76		of Bit		Carbide	

DEPTH (Casing blows per half meter)	DEPTH IN METERS FROM - TO	NO.	PEN. m	REC. m	Type	BLOWS PER 0.15 METERS ON SAMPLER 0 - 0.15	0.15 - 0.30	0.30 - 0.45	0.45 - 0.60	STRATA CHANGE: DEPTH, ELEV.	FIELD IDENTIFICATION OF SOIL, REMARKS (INCL. COLOR, LOSS OF WASH WATER, ETC.)
	0.00 - 0.60	1	0.60	0.60	D	WOR	WOR	WOR	WOR		Top 0.03m: Dark gray / black organic SILT and shells Bottom 0.58m: Gray organic SILT, trace f sand, trace shells, trace fibers.
	1.52 - 2.12	2	0.60	0.60	D	WOR	WOR	WOR	WOR		Gray organic SILT, trace f sand, trace shells.
	3.05 - 3.65	3	0.60	0.53	D	WOR	WOR	WOR	WOR		Gray organic SILT, trace f sand, trace shells.
5	4.57 - 5.17	4	0.60	0.10	D	WOR	WOR	WOR	WOR		Gray organic SILT, trace f sand, trace shells.
	6.10 - 6.70	5	0.60	0.10	D	WOR	WOR	WOR	WOR		Gray organic SILT, trace f sand, trace shells.
	7.62 - 8.22	6	0.60	0.60	D	WOH	WOH	WOH	WOH		Gray organic SILT, little f sand, trace shells.
10	9.14 - 9.74	7	0.60	0.46	D	WOH	WOH	WOH	WOH		Gray organic SILT, some f sand, trace shells, fibers and wood.
										10.66	
	10.67 - 11.27	8	0.60	0.15	D	WOR	WOR	9	6	-11.41	Gray f SAND, some silt, trace fibers.
	12.19 - 12.79	9	0.60	0.41	D	7	8	24	39		Gray / red brown f SAND, trace silt.
15	13.72 - 14.32	10	0.60	0.30	D	6	7	8	11		Red brown f SAND, little silt.

Casing Size	From	To	Meters of Earth	Rock
100 mm	0	21.34	46.33	
			No. of Samples	
			31D	

NOTES: Barge / Skid Rig - Raising and dropping of the 140-lb (63.5kg) safety hammer accomplished using a rope and cathead.

SAMPLE TYPE CODING: D=Driven C=Core A=Auger UP=Undisturbed Piston V=Vane Test
PROPORTIONS USED: Trace = 1 -10%, Little = 10 - 20%, Some = 20 - 35%, And = 35 - 50%

Hole No. P3-2
Sheet 1 of 3

BORING P3-2 (2 OF 3)

R. Posa	SM - 001 - M REV. 1/94	BORING REPORT	Hole No. P3-2
DRILLER	STATE OF CONNECTICUT		Line & Station I-95 0+913.2
R. Sharp	DEPARTMENT OF TRANSPORTATION		Offset 7.5 LT
INSPECTOR	TOWN: New Haven / West Haven, CT		N. Coordinate 202420.0
Parsons Brinckerhoff Quade & Douglas, Inc.	PROJECT NAME: Reconstruction I-95 Over West River		E. Coordinate 288941.7
SOILS ENGINEER	PROJECT NUMBER: 92-533		Parsons Brinckerhoff Quade & Douglas, Inc.
	BORING CONTRACTOR: General Borings, Inc.		PRIME DESIGNER

Surface Elevation: -0.75
Date Started: 8/5/2002
Date Finished: 8/8/2002
Groundwater Observations
@ In River m after hours
@ Tidal m after hours

	Casing	Auger	Mud	Sampler		Core Barrel			
Utilized			X		X	X	X				
Type	BW	NW	HW	Pipe	Solid	Hollow	Bentonite	SS	UP	B (st)	B (dt)	NX (st)	NV II (dt)
Size I.D. (mm)	60	76	100	64		150	X	36		35	35	55	55
Hammer (kg)	136	136	136	136			Bit	63.5		Type		Diamond	
Fall (m)	0.6	0.6	0.6	0.6			0.80 mm	0.76		of Bit		Carbide	

DEPTH (Casing blows per half meter)	DEPTH IN METERS FROM - TO	NO.	PEN. m	REC. m	Type	BLOWS PER 0.15 METERS ON SAMPLER 0 - 0.15	0.15 - 0.30	0.30 - 0.45	0.45 - 0.60	STRATA CHANGE: DEPTH, ELEV.	FIELD IDENTIFICATION OF SOIL, REMARKS (INCL. COLOR, LOSS OF WASH WATER, ETC.)
	15.24 - 15.84	11	0.60	0.30	D	7	7	8	11		Red brown f SAND, little to some silt, trace f gravel.
	16.76 - 17.36	12	0.60	0.43	D	15	14	16	16		Red brown f SAND, little to some silt.
	18.29 - 18.89	13	0.60	0.51	D	16	18	15	16		Red brown f SAND, little to some silt.
20	19.81 - 20.41	14	0.60	0.58	D	19	20	22	18		Red brown f SAND, little to some silt.
	21.34 - 21.94	15	0.60	0.53	D	15	17	22	26		Red brown f SAND, little to some silt.
	22.86 - 23.46	16	0.60	0.46	D	13	19	24	21		Red brown f SAND, little to some silt.
25	24.38 - 24.98	17	0.60	0.51	D	18	19	19	25		Red brown f SAND, little to some silt, trace (light gray) silt seams (~1mm).
										25.45	
	25.91 - 26.51	18	0.60	0.41	D	20	26	24	29	-26.20	Red brown SILT, trace f sand, trace gray silt seams (~1mm).
	27.43 - 28.03	19	0.60	0.46	D	21	25	27	32		Red brown SILT, little f-c gravel, trace f sand.
30	28.96 - 29.56	20	0.60	0.41	D	17	24	32	36		Red brown SILT, trace f sand, trace gray silt seams (~1mm).

Casing Size	From	To	Meters of Earth	Rock
100 mm	0	21.34	46.33	
			No. of Samples	
			31D	

NOTES: Barge / Skid Rig - Raising and dropping of the 140-lb (63.5kg) safety hammer accomplished using a rope and cathead.

SAMPLE TYPE CODING: D=Driven C=Core A=Auger UP=Undisturbed Piston V=Vane Test
PROPORTIONS USED: Trace = 1 -10%, Little = 10 - 20%, Some = 20 - 35%, And = 35 - 50%

Hole No. P3-2
Sheet 2 of 3

BORING P3-2 (3 OF 3)

R. Posa	SM - 001 - M REV. 1/94	BORING REPORT	Hole No. P3-2
DRILLER	STATE OF CONNECTICUT		Line & Station I-95 0+913.2
R. Sharp	DEPARTMENT OF TRANSPORTATION		Offset 7.5 LT
INSPECTOR	TOWN: New Haven / West Haven, CT		N. Coordinate 202420.0
Parsons Brinckerhoff Quade & Douglas, Inc.	PROJECT NAME: Reconstruction I-95 Over West River		E. Coordinate 288941.7
SOILS ENGINEER	PROJECT NUMBER: 92-533		Parsons Brinckerhoff Quade & Douglas, Inc.
	BORING CONTRACTOR: General Borings, Inc.		PRIME DESIGNER

Surface Elevation: -0.75
Date Started: 8/5/2002
Date Finished: 8/8/2002
Groundwater Observations
@ In River m after hours
@ Tidal m after hours

	Casing	Auger	Mud	Sampler		Core Barrel			
Utilized			X		X	X	X				
Type	BW	NW	HW	Pipe	Solid	Hollow	Bentonite	SS	UP	B (st)	B (dt)	NX (st)	NV II (dt)
Size I.D. (mm)	60	76	100	64		150	X	36		35	35	55	55
Hammer (kg)	136	136	136	136			Bit	63.5		Type		Diamond	
Fall (m)	0.6	0.6	0.6	0.6			0.80 mm	0.76		of Bit		Carbide	

DEPTH (Casing blows per half meter)	DEPTH IN METERS FROM - TO	NO.	PEN. m	REC. m	Type	BLOWS PER 0.15 METERS ON SAMPLER 0 - 0.15	0.15 - 0.30	0.30 - 0.45	0.45 - 0.60	STRATA CHANGE: DEPTH, ELEV.	FIELD IDENTIFICATION OF SOIL, REMARKS (INCL. COLOR, LOSS OF WASH WATER, ETC.)
	30.48 - 31.09	21	0.60	0.38	D	21	25	29	35		Red brown SILT, trace f sand, trace f-c gravel.
	32.00 - 32.60	22	0.60	0.33	D	17	18	27	36		Red brown SILT, trace f sand. Note: Hole collapsed, casing starting to sink, drillers advancing casing to 21.34m.
	33.53 - 34.13	23	0.60	0.15	D	19	22	24	25		Red brown SILT, trace f sand. Note: Barge shifted, casing is at an angle. Drillers are having trouble getting samples. The is hole collapsing. There is a problem with transmission / rig.
35	35.05 - 35.65	24	0.60	0.05	D	17	19	13	27		Red brown SILT, trace f sand.
	36.58 - 37.18	25	0.60	0.05	D	21	24	27	30		Red brown SILT, trace f sand.
	38.10 - 38.70	26	0.60	0.00	D	20	25	28	32		No Recovery.
40	39.62 - 40.22	27	0.60	0.00	D	22	22	26	30		No Recovery. Note: Lost whole tub of mud.
										40.69	
	41.15 - 41.75	28	0.60	0.30	D	20	23	27	32	-41.44	Red brown SILT, little to some clay, trace (light gray) silt (~1.5 mm) seams.
	42.67 - 43.27	29	0.60	0.38	D	22	26	29	35		Red brown SILT, little to some clay, trace (light gray) silt (~1.5 mm) seams.
45	44.19 - 44.79	30	0.60	0.46	D	15	20	23	32		Red brown SILT, little to some clay, trace (light gray) silt (~1.5 mm) seams.
	45.72 - 46.32	31	0.60	0.30	D	25	29	33	37		Red brown SILT, little to some clay, trace (light gray) silt (~1.5 mm) seams.
										46.32	
										-47.09	Bottom of Boring 46.32 m.
50											

Casing Size	From	To	Meters of Earth	Rock
100 mm	0	21.34	46.33	
			No. of Samples	
			31D	

NOTES: Barge / Skid Rig - Raising and dropping of the 140-lb (63.5kg) safety hammer accomplished using a rope and cathead.

SAMPLE TYPE CODING: D=Driven C=Core A=Auger UP=Undisturbed Piston V=Vane Test
PROPORTIONS USED: Trace = 1 -10%, Little = 10 - 20%, Some = 20 - 35%, And = 35 - 50%

Hole No. P3-2
Sheet 3 of 3

REV.	DATE	DESCRIPTION	SHEET. NO.
		REVISIONS	

THE INFORMATION, INCLUDING ESTIMATED QUANTITIES OF WORK, SHOWN ON THESE SHEETS IS BASED ON LIMITED INVESTIGATIONS BY THE STATE AND IS IN NO WAY WARRANTED TO INDICATE THE CONDITIONS OR ACTUAL QUANTITIES OF WORK WHICH WILL BE REQUIRED.

DESIGNER: R. BORJESON
DRAFTER: G. LEE
CHECKED BY: T. LALIBERTE
DATE CHECKED: 10–11–02

STATE OF CONNECTICUT
DEPARTMENT OF TRANSPORTATION

ENGINEER: PB AMERICAS, INC.
APPROVED BY:
DATE:

PROJECT TITLE: RECONSTRUCTION OF I–95 OVER WEST RIVER (BRIDGE NO. 00163)
CADD
PLOTTED 11/13/2012

TOWN: NEW HAVEN / WEST HAVEN
DRAWING TITLE: BORINGS – P3–2

PROJECT NO.: 92–522
DRAWING NO.: STR–20
SHEET NO.:

10:57:07 AM
11/13/2012
T:\V8CADD\Projects\PB\6735\FD\Structures\Contract_Sheets\Br00163.dgn

BORING P3-3 (1 OF 3)

R. Posa	SM - 001 - M REV. 1/94	BORING REPORT	Hole No. P3-3
DRILLER	STATE OF CONNECTICUT		Line & Station I-95 0+910.5
R. Sharp	DEPARTMENT OF TRANSPORTATION		Offset 21.5 RT
INSPECTOR	TOWN: New Haven / West Haven, CT		N. Coordinate 202390.9
Parsons Brinckerhoff Quade & Douglas, Inc.	PROJECT NAME: Reconstruction I-95 Over West River		E. Coordinate 288941.1
SOILS ENGINEER	PROJECT NUMBER: 92-533		Parsons Brinckerhoff Quade & Douglas, Inc.
	BORING CONTRACTOR: General Borings, Inc.		PRIME DESIGNER

		Casing				Auger		Mud	Sampler		Core Barrel			
Surface Elevation: -0.94														
Date Started: 7/30/2002	Utilized			X			X	X	X	X				
Date Finished: 8/2/2002	Type	BW	NW	HW	Pipe	Solid	Hollow	Bentonite	SS	UP	B (st)	B (dt)	NX (st)	NV II (dt)
Groundwater Observations	Size I.D. (mm)	60	76	100	64		150	X	36		35	35	55	55
@ In River m after ____ hours	Hammer (kg)	136	136	136	136			Bit	63.5		Type		Diamond	
@ Tidal m after ____ hours	Fall (m)	0.6	0.6	0.6	0.6			0.80 mm	0.76		of Bit		Carbide	

DEPTH	Casing blows per half meter	SAMPLE DEPTH IN METERS FROM - TO	NO.	PEN. m	REC. m	Type	BLOWS PER 0.15 METERS ON SAMPLER 0 - 0.15	0.15 - 0.30	0.30 - 0.45	0.45 - 0.60	STRATA CHANGE: DEPTH, ELEV.	FIELD IDENTIFICATION OF SOIL, REMARKS (INCL. COLOR, LOSS OF WASH WATER, ETC.)
		0.00 - 0.60	1	0.60	0.05	D	WOH	WOH	WOH	WOH		Black organic SILT, little f sand.
		1.52 - 2.12	2	0.60	0.18	D	WOH	WOH	WOH	WOH		Gray organic SILT, little f sand, trace shells.
		3.05 - 3.65	1	0.60	0.00	UP						Piston - No Recovery.
		3.65 - 4.27	2	0.60	0.60	UP						Piston
5		4.57 - 5.17	3	0.60	0.60	D	WOH	WOH	WOH	WOH		Gray organic SILT, little f sand, trace shells.
		6.10 - 6.70	4	0.60	0.60	D	WOH	WOH	WOH	WOH		Gray organic SILT, little f sand, trace shells.
		7.62 - 8.22	3	0.60	0.15	UP						Piston.
		8.23 - 8.84	5	0.60	0.60	D	WOH	WOH	WOH	WOH		Gray organic SILT, little f sand, trace shells.
		9.14 - 9.74	4	0.60	0.60	UP					10.06	Piston.
10		9.75 - 10.36	6	0.60	0.51	D	WOH	3	5	7	-11.00	Gray f-m SAND, trace silt.
		10.67 - 11.27	7	0.60	0.36	D	3	5	5	8		Gray f-c SAND, some f-c gravel, trace silt, trace red brown f sand lenses, trace shells.
		12.19 - 12.79	8	0.60	0.36	D	5	7	7	9		Gray f-c SAND, some f-c gravel, trace silt, trace red brown f sand lenses, trace shells.
		13.72 - 14.32	9	0.60	0.05	D	8	11	13	12		Gray / red brown f SAND, little silt.
15												

Casing			Meters of	
Size	From	To	Earth	Rock
100 mm	0	21.34	46.32	
			No. of Samples	
			31D/4UP	

NOTES: Barge / Skid Rig - Raising and dropping of the 140-lb (63.5kg) safety hammer accomplished using a rope and cathead.

SAMPLE TYPE CODING: D=Driven C=Core A=Auger UP=Undisturbed Piston V=Vane Test
PROPORTIONS USED: Trace = 1 -10%, Little = 10 - 20%, Some = 20 - 35%, And = 35 - 50%

Hole No. P3-3 Sheet 1 of 3

BORING P3-3 (2 OF 3)

R. Posa	SM - 001 - M REV. 1/94	BORING REPORT	Hole No. P3-3
DRILLER	STATE OF CONNECTICUT		Line & Station I-95 0+910.5
R. Sharp	DEPARTMENT OF TRANSPORTATION		Offset 21.5 RT
INSPECTOR	TOWN: New Haven / West Haven, CT		N. Coordinate 202390.9
Parsons Brinckerhoff Quade & Douglas, Inc.	PROJECT NAME: Reconstruction I-95 Over West River		E. Coordinate 288941.1
SOILS ENGINEER	PROJECT NUMBER: 92-533		Parsons Brinckerhoff Quade & Douglas, Inc.
	BORING CONTRACTOR: General Borings, Inc.		PRIME DESIGNER

		Casing				Auger		Mud	Sampler		Core Barrel			
Surface Elevation: -0.94														
Date Started: 7/30/2002	Utilized			X			X	X	X	X				
Date Finished: 8/2/2002	Type	BW	NW	HW	Pipe	Solid	Hollow	Bentonite	SS	UP	B (st)	B (dt)	NX (st)	NV II (dt)
Groundwater Observations	Size I.D. (mm)	60	76	100	64		150	X	36		35	35	55	55
@ In River m after ____ hours	Hammer (kg)	136	136	136	136			Bit	63.5		Type		Diamond	
@ Tidal m after ____ hours	Fall (m)	0.6	0.6	0.6	0.6			0.80 mm	0.76		of Bit		Carbide	

DEPTH	Casing blows per half meter	SAMPLE DEPTH IN METERS FROM - TO	NO.	PEN. m	REC. m	Type	BLOWS PER 0.15 METERS ON SAMPLER 0 - 0.15	0.15 - 0.30	0.30 - 0.45	0.45 - 0.60	STRATA CHANGE: DEPTH, ELEV.	FIELD IDENTIFICATION OF SOIL, REMARKS (INCL. COLOR, LOSS OF WASH WATER, ETC.)
		15.24 - 15.84	10	0.60	0.46	D	10	12	14	14		Red brown f SAND, little silt, trace f gravel.
		16.76 - 17.36	11	0.60	0.20	D	9	11	10	13		Red brown f SAND, little silt.
		18.29 - 18.89	12	0.60	0.30	D	10	12	12	14		Red brown f SAND, little silt.
20		19.81 - 20.41	13	0.60	0.28	D	12	12	14	16		Red brown f SAND, little silt.
		21.34 - 21.94	14	0.60	0.38	D	11	13	12	14		Red brown f SAND, little silt.
		22.86 - 23.46	15	0.60	0.41	D	9	13	22	24		Red brown f SAND, little silt, trace light gray silt seams (~1 mm).
		24.38 - 24.98	16	0.60	0.36	D	16	14	19	21		Red brown f SAND, little silt, trace c sand.
25												
		25.91 - 26.51	17	0.60	0.41	D	13	18	21	23		Red brown f SAND, little silt.
		27.43 - 28.03	18	0.60	0.30	D	10	15	13	19		Red brown f SAND, little silt, trace c sand.
		28.96 - 29.56	19	0.60	0.30	D	17	18	24	26		Red brown f SAND, little silt.
30											30.02	

Casing			Meters of	
Size	From	To	Earth	Rock
100 mm	0	21.34	46.32	
			No. of Samples	
			31D/4UP	

NOTES: Barge / Skid Rig - Raising and dropping of the 140-lb (63.5kg) safety hammer accomplished using a rope and cathead.

SAMPLE TYPE CODING: D=Driven C=Core A=Auger UP=Undisturbed Piston V=Vane Test
PROPORTIONS USED: Trace = 1 -10%, Little = 10 - 20%, Some = 20 - 35%, And = 35 - 50%

Hole No. P3-3 Sheet 2 of 3

BORING P3-3 (3 OF 3)

R. Posa	SM - 001 - M REV. 1/94	BORING REPORT	Hole No. P3-3
DRILLER	STATE OF CONNECTICUT		Line & Station I-95 0+910.5
R. Sharp	DEPARTMENT OF TRANSPORTATION		Offset 21.5 RT
INSPECTOR	TOWN: New Haven / West Haven, CT		N. Coordinate 202390.9
Parsons Brinckerhoff Quade & Douglas, Inc.	PROJECT NAME: Reconstruction I-95 Over West River		E. Coordinate 288941.1
SOILS ENGINEER	PROJECT NUMBER: 92-533		Parsons Brinckerhoff Quade & Douglas, Inc.
	BORING CONTRACTOR: General Borings, Inc.		PRIME DESIGNER

		Casing				Auger		Mud	Sampler		Core Barrel			
Surface Elevation: -0.94														
Date Started: 7/30/2002	Utilized			X			X	X	X	X				
Date Finished: 8/2/2002	Type	BW	NW	HW	Pipe	Solid	Hollow	Bentonite	SS	UP	B (st)	B (dt)	NX (st)	NV II (dt)
Groundwater Observations	Size I.D. (mm)	60	76	100	64		150	X	36		35	35	55	55
@ In River m after ____ hours	Hammer (kg)	136	136	136	136			Bit	63.5		Type		Diamond	
@ Tidal m after ____ hours	Fall (m)	0.6	0.6	0.6	0.6			0.80 mm	0.76		of Bit		Carbide	

DEPTH	Casing blows per half meter	SAMPLE DEPTH IN METERS FROM - TO	NO.	PEN. m	REC. m	Type	BLOWS PER 0.15 METERS ON SAMPLER 0 - 0.15	0.15 - 0.30	0.30 - 0.45	0.45 - 0.60	STRATA CHANGE: DEPTH, ELEV.	FIELD IDENTIFICATION OF SOIL, REMARKS (INCL. COLOR, LOSS OF WASH WATER, ETC.)
		30.48 - 31.09	20	0.60	0.36	D	12	15	17	21	-32.96	Red brown SILT, trace f sand, trace gray silt seams (~1-5 mm).
		32.00 - 32.60	21	0.60	0.51	D	14	18	24	24		Red brown SILT, trace f sand.
											33.07	
		33.53 - 34.13	22	0.60	0.30	D	17	19	19	23	-34.01	Red brown SILT, little clay, trace light gray silt seams (~1-5 mm).
35												
		35.05 - 35.65	23	0.60		D	12	17	22	26		Red brown SILT, little clay, trace light gray silt seams (~1-5 mm).
		36.58 - 37.18	24	0.60	0.48	D	21	25	26	32		Red brown SILT, little clay, trace light gray silt seams (~1-5 mm).
		38.10 - 38.70	25	0.60	0.56	D	29	27	31	37		Red brown SILT, little to some clay, trace light gray silt seams (~1-5 mm).
40		39.62 - 40.22	26	0.60	0.08	D	23	25	29	31		Red brown SILT, trace clay.
		41.15 - 41.75	27	0.60	0.51	D	25	19	23	34		Red brown SILT, little to some clay, trace light gray silt seams (~1-10 mm).
		42.67 - 43.27	28	0.60	0.51	D	23	24	20	27		Red brown SILT, little to some clay, trace light gray silt seams (~1-10 mm).
		44.19 - 44.79	29	0.60	0.56	D	17	21	25	34		Red brown SILT, little to some clay, trace light gray silt seams (~1-10 mm).
45												
		45.72 - 46.32	31	0.60	0.51	D	18	19	20	23	46.32	Red brown SILT, little to some clay, trace light gray silt seams (~1-10 mm).
											-47.26	Bottom of Boring 46.32 m.
50												

Casing			Meters of	
Size	From	To	Earth	Rock
100 mm	0	21.34	46.32	
			No. of Samples	
			31D/4UP	

NOTES: Barge / Skid Rig - Raising and dropping of the 140-lb (63.5kg) safety hammer accomplished using a rope and cathead.

SAMPLE TYPE CODING: D=Driven C=Core A=Auger UP=Undisturbed Piston V=Vane Test
PROPORTIONS USED: Trace = 1 -10%, Little = 10 - 20%, Some = 20 - 35%, And = 35 - 50%

Hole No. P3-3 Sheet 3 of 3

REV.	DATE	DESCRIPTION	SHEET. NO
		REVISIONS	

THE INFORMATION, INCLUDING ESTIMATED QUANTITIES OF WORK, SHOWN ON THESE SHEETS IS BASED ON LIMITED INVESTIGATIONS BY THE STATE AND IS IN NO WAY WARRANTED TO INDICATE THE CONDITIONS OR ACTUAL QUANTITIES OF WORK WHICH WILL BE REQUIRED.

DESIGNER: R. BORJESON
DRAFTER: G. LEE
CHECKED BY: T. LALIBERTE
DATE CHECKED: 10-11-02

STATE OF CONNECTICUT
DEPARTMENT OF TRANSPORTATION

ENGINEER: PB AMERICAS, INC.
APPROVED BY: DATE:

PROJECT TITLE: RECONSTRUCTION OF I-95 OVER WEST RIVER (BRIDGE NO. 00163)
CADD PLOTTED 11/13/2012

TOWN: NEW HAVEN / WEST HAVEN
DRAWING TITLE: BORINGS - P3-3

PROJECT NO.: 92-522
DRAWING NO.: STR-21
SHEET NO.:

10:28:23 AM
11/13/2012
T:\V8CADD\Projects\PB18735\FD\Structures\Contract_Sheets\Br00163\str-21-092522-00163.dgn

BORING P4-1 (1 OF 3)

R. Posa	SM - 001 - M REV. 1/94	BORING REPORT	Hole No.	P4-1
DRILLER	STATE OF CONNECTICUT		Line & Station	I-95 0+973.9
E. Fulton	DEPARTMENT OF TRANSPORTATION		Offset	24.8 LT
INSPECTOR	TOWN:	New Haven / West Haven, CT	N. Coordinate	202441.6
Parsons Brinckerhoff Quade & Douglas, Inc.	PROJECT NAME:	Reconstruction I-95 Over West River	E. Coordinate	289001.0
SOILS ENGINEER	PROJECT NUMBER:	92-533	Parsons Brinckerhoff Quade & Douglas, Inc.	
	BORING CONTRACTOR:	General Borings, Inc.	PRIME DESIGNER	
Surface Elevation:	1.05			
Date Started:	7/15/2002			
Date Finished:	7/16/2002			
Groundwater Observations				
@ ~2.59 m after ____ hours				
@ ____ m after ____ hours				

	Casing				Auger		Mud	Sampler		Core Barrel			
Type	BW	NW	HW	Pipe	Solid	Hollow	Bentonite	SS	UP	B (st)	B (dt)	NX (st)	NV II (dt)
Utilized			X			X	X	X	X				
Size I.D. (mm)	60	76	100	64		150	X	36		35	35	55	55
Hammer (kg)	136	136	136	136			Bit	63.5		Type		Diamond	
Fall (m)	0.6	0.6	0.6	0.6			0.80 mm	0.76		of Bit		Carbide	

DEPTH	Casing blows per half meter	SAMPLE DEPTH IN METERS FROM - TO	NO.	PEN. m	REC. m	Type	BLOWS PER 0.15 METERS ON SAMPLER 0 - 0.15	0.15 - 0.30	0.30 - 0.45	0.45 - 0.60	STRATA CHANGE: DEPTH, ELEV.	FIELD IDENTIFICATION OF SOIL, REMARKS (INCL. COLOR, LOSS OF WASH WATER, ETC.)
		0.00 - 0.60	1	0.60	0.36	D	6	14	14	19		Brown black f SAND, trace f-m gravel, trace silt, trace c sand.
		1.52 - 2.12	2	0.60	0.00	D	1/0.30m		1	1		No Recovery.
		3.05 - 3.65	3	0.60	0.05	D	1	1	1	1		Black f SAND, little silt, trace wood.
5		4.57 - 5.17	4	0.60	0.60	D	3	1	2	1		Top 0.30m: Gray f SAND, trace to little silt.
												Middle 0.20m: Gray organic SILT, trace clay, trace f sand, trace shells.
											5.64	Bottom 0.10m: Gray f SAND, little silt.
		6.10 - 6.70	5	0.60	0.60	D	1	1/0.30m		1	-4.59	Gray organic SILT, trace f sand, little shells.
		7.01 - 7.61	1	0.60	0.56	UP						Piston.
		7.62 - 8.22	6	0.60	0.60	D	1	1/0.30m		1		Gray organic SILT, few f sand lenses (~0.16cm), trace shells, trace leaves.
		9.14 - 9.74	7	0.60	0.60	D	1	1	1	1		Gray organic SILT, trace f sand, little shells, trace leaves.
10												
		10.06 - 10.66	2	0.60	0.60	UP						Piston.
		10.67 - 11.27	8	0.60	0.60	D	1/0.30m		1/0.30m			Gray organic SILT, trace f sand, trace clay, little shells, 0.05m lense of brachiopods in top of spoon.
											11.73	
		12.19 - 12.79	9	0.60	0.25	D	6	6	9	11	-10.68	Red brown f SAND, trace silt.
		13.72 - 14.32	10	0.60	0.15	D	6	7	7	9		Red brown f SAND, some silt, trace f-c gravel.
15												

Casing Size	From	To	Meters of Earth	Rock
100 mm	0	4.57	38.71	
			No. of Samples	
			26D/2UP	

NOTES: Raising and dropping of the 140-lb (63.5kg) safety hammer was accomplished using a wire winch.

SAMPLE TYPE CODING: D=Driven C=Core A=Auger UP=Undisturbed Piston V=Vane Test
PROPORTIONS USED: Trace = 1 -10%, Little = 10 - 20%, Some = 20 - 35%, And = 35 - 50%

Hole No. P4-1
Sheet 1 of 3

BORING P4-1 (2 OF 3)

R. Posa	SM - 001 - M REV. 1/94	BORING REPORT	Hole No.	P4-1
DRILLER	STATE OF CONNECTICUT		Line & Station	I-95 0+973.9
E. Fulton	DEPARTMENT OF TRANSPORTATION		Offset	24.8 LT
INSPECTOR	TOWN:	New Haven / West Haven, CT	N. Coordinate	202441.6
Parsons Brinckerhoff Quade & Douglas, Inc.	PROJECT NAME:	Reconstruction I-95 Over West River	E. Coordinate	289001.0
SOILS ENGINEER	PROJECT NUMBER:	92-533	Parsons Brinckerhoff Quade & Douglas, Inc.	
	BORING CONTRACTOR:	General Borings, Inc.	PRIME DESIGNER	
Surface Elevation:	1.05			
Date Started:	7/15/2002			
Date Finished:	7/16/2002			
Groundwater Observations				
@ ~2.59 m after ____ hours				
@ ____ m after ____ hours				

	Casing				Auger		Mud	Sampler		Core Barrel			
Type	BW	NW	HW	Pipe	Solid	Hollow	Bentonite	SS	UP	B (st)	B (dt)	NX (st)	NV II (dt)
Utilized			X			X	X	X	X				
Size I.D. (mm)	60	76	100	64		150	X	36		35	35	55	55
Hammer (kg)	136	136	136	136			Bit	63.5		Type	X	Diamond	
Fall (m)	0.6	0.6	0.6	0.6			0.80 mm	0.76		of Bit		Carbide	

DEPTH	Casing blows per half meter	SAMPLE DEPTH IN METERS FROM - TO	NO.	PEN. m	REC. m	Type	BLOWS PER 0.15 METERS ON SAMPLER 0 - 0.15	0.15 - 0.30	0.30 - 0.45	0.45 - 0.60	STRATA CHANGE: DEPTH, ELEV.	FIELD IDENTIFICATION OF SOIL, REMARKS (INCL. COLOR, LOSS OF WASH WATER, ETC.)
		15.24 - 15.84	11	0.60	0.00	D	10	12	12	13		No Recovery.
		16.76 - 17.36	12	0.60	0.00	D	11	12	12	12		No Recovery.
		18.29 - 18.89	13	0.60	0.13	D	8	10	12	15		Red brown f SAND, little to some silt.
20		19.81 - 20.41	14	0.60	0.30	D	7	9	11	13		Red brown f SAND and SILT.
		21.34 - 21.94	15	0.60	0.00	D	4	5	5	4		No Recovery.
		22.86 - 23.46	16	0.60	0.46	D	4	5	6	12		Red brown f SAND, trace silt.
											23.93	
		24.38 - 24.98	17	0.60	0.46	D	10	11	14	16	-22.88	Red brown f SILT, some f sand, rapid dilatancy.
25												
		25.91 - 26.51	18	0.60	0.30	D	10	13	15	18		Red brown SILT, some f sand, low dilatancy.
		27.43 - 28.03	19	0.60	0.30	D	16	16	18	18		Red brown SILT, some f sand, medium dilatancy.
		28.96 - 29.56	20	0.60	0.30	D	18	19	21	24		Red brown SILT, some f sand, rapid dilatancy, trace clayey silt seams (~0.16 cm), trace sand lenses (~0.16 cm).
30												

Casing Size	From	To	Meters of Earth	Rock
100 mm	0		38.71	
			No. of Samples	
			26D/2UP	

NOTES: Raising and dropping of the 140-lb (63.5kg) safety hammer was accomplished using a wire winch.

SAMPLE TYPE CODING: D=Driven C=Core A=Auger UP=Undisturbed Piston V=Vane Test
PROPORTIONS USED: Trace = 1 -10%, Little = 10 - 20%, Some = 20 - 35%, And = 35 - 50%

Hole No. P4-1
Sheet 2 of 3

BORING P4-1 (3 OF 3)

R. Posa	SM - 001 - M REV. 1/94	BORING REPORT	Hole No.	P4-1
DRILLER	STATE OF CONNECTICUT		Line & Station	I-95 0+973.9
E. Fulton	DEPARTMENT OF TRANSPORTATION		Offset	24.8 LT
INSPECTOR	TOWN:	New Haven / West Haven, CT	N. Coordinate	202441.6
Parsons Brinckerhoff Quade & Douglas, Inc.	PROJECT NAME:	Reconstruction I-95 Over West River	E. Coordinate	289001.0
SOILS ENGINEER	PROJECT NUMBER:	92-533	Parsons Brinckerhoff Quade & Douglas, Inc.	
	BORING CONTRACTOR:	General Borings, Inc.	PRIME DESIGNER	
Surface Elevation:	1.05			
Date Started:	7/15/2002			
Date Finished:	7/16/2002			
Groundwater Observations				
@ ~2.59 m after ____ hours				
@ ____ m after ____ hours				

	Casing				Auger		Mud	Sampler		Core Barrel			
Type	BW	NW	HW	Pipe	Solid	Hollow	Bentonite	SS	UP	B (st)	B (dt)	NX (st)	NV II (dt)
Utilized			X			X	X	X	X				
Size I.D. (mm)	60	76	100	64		150	X	36		35	35	55	55
Hammer (kg)	136	136	136	136			Bit	63.5		Type		Diamond	
Fall (m)	0.6	0.6	0.6	0.6			0.80 mm	0.76		of Bit		Carbide	

DEPTH	Casing blows per half meter	SAMPLE DEPTH IN METERS FROM - TO	NO.	PEN. m	REC. m	Type	BLOWS PER 0.15 METERS ON SAMPLER 0 - 0.15	0.15 - 0.30	0.30 - 0.45	0.45 - 0.60	STRATA CHANGE: DEPTH, ELEV.	FIELD IDENTIFICATION OF SOIL, REMARKS (INCL. COLOR, LOSS OF WASH WATER, ETC.)
		30.48 - 31.08	21	0.60	0.10	D	12	14	15	19		Red brown SILT, some f sand, medium to rapid dilatancy.
		32.00 - 32.60	22	0.60	0.23	D	11	14	19	23		Red brown SILT, some to little f sand, medium to rapid dilatancy.
		33.53 - 34.13	23	0.60	0.38	D	10	13	17	19		Red brown SILT, some f sand, rapid dilatancy.
35												
		35.05 - 35.65	24	0.60	0.60	D	17	18	21	27		Red brown SILT, some f sand, medium dilatancy.
		36.58 - 37.18	25	0.60	0.30	D	16	9	19	23		Red brown SILT, little to some f sand, rapid dilatancy.
		38.10 - 38.70	26	0.60	0.41	D	14	18	21	21		Red brown SILT, trace f sand, trace (~0.16 cm) clayey silt seams.
											38.70	
40											-37.65	Bottom of Boring 38.70 m.
45												

Casing Size	From	To	Meters of Earth	Rock
100 mm	0	4.57	38.70	
			No. of Samples	
			26D/2UP	

NOTES: Raising and dropping of the 140-lb (63.5kg) safety hammer was accomplished using a wire winch.

SAMPLE TYPE CODING: D=Driven C=Core A=Auger UP=Undisturbed Piston V=Vane Test
PROPORTIONS USED: Trace = 1 -10%, Little = 10 - 20%, Some = 20 - 35%, And = 35 - 50%

Hole No. P4-1
Sheet 3 of 3

REV.	DATE	DESCRIPTION	SHEET. NO
		REVISIONS	

THE INFORMATION, INCLUDING ESTIMATED QUANTITIES OF WORK, SHOWN ON THESE SHEETS IS BASED ON LIMITED INVESTIGATIONS BY THE STATE AND IS IN NO WAY WARRANTED TO INDICATE THE CONDITIONS OR ACTUAL QUANTITIES OF WORK WHICH WILL BE REQUIRED.

DESIGNER: R. BORJESON
DRAFTER: G. LEE
CHECKED BY: T. LALIBERTE
DATE CHECKED: 10–11–02

STATE OF CONNECTICUT
DEPARTMENT OF TRANSPORTATION

ENGINEER: PB AMERICAS, INC.
APPROVED BY: DATE:

PROJECT TITLE: RECONSTRUCTION OF I–95 OVER WEST RIVER (BRIDGE NO. 00163)
CADD
PLOTTED 11/13/2012

TOWN: NEW HAVEN / WEST HAVEN
DRAWING TITLE: BORINGS – P4–1
PROJECT NO.: 92–522
DRAWING NO.: STR–22
SHEET NO.:

10:30:06 AM
11/13/2012
T:\V8CADD\Projects\PBI8735\FD\Structures\Contract_Sheets\Br00163\str-22-092522-00163.dgn

BORING P4-2 (1 OF 3)

R. Posa	SM - 001 - M REV. 1/94	BORING REPORT	Hole No. P4-2
DRILLER	STATE OF CONNECTICUT		Line & Station I-95 0+965.3
E. Fulton	DEPARTMENT OF TRANSPORTATION		Offset 2.1 LT
INSPECTOR	TOWN: New Haven / West Haven, CT		N. Coordinate 202418.3
Parsons Brinckerhoff Quade & Douglas, Inc.	PROJECT NAME: Reconstruction I-95 Over West River		E. Coordinate 288994.1
SOILS ENGINEER	PROJECT NUMBER: 92-533		Parsons Brinckerhoff Quade & Douglas, Inc.
	BORING CONTRACTOR: General Borings, Inc.		PRIME DESIGNER

Surface Elevation: 1.20			Casing			Auger		Mud	Sampler		Core Barrel					
Date Started: 7/10/2002		Utilized			X			X	X	X						
Date Finished: 7/12/2002		Type	BW	NW	HW	Pipe	Solid	Hollow	Bentonite	SS	UP	B (st)	B (dt)	NX (st)	NV II (dt)	
Groundwater Observations		Size I.D. (mm)	60	76	100	64		150	X	36		35	35	55	55	
@ ~2.59 m after hours		Hammer (kg)	136	136	136	136			Bit	63.5		Type		Diamond		
@ m after hours		Fall (m)	0.6	0.6	0.6	0.6			0.80 mm	0.76		of Bit		Carbide		

DEPTH	Casing blows per half meter	DEPTH IN METERS FROM - TO	SAMPLE NO.	PEN. m	REC. m	Type	BLOWS PER 0.15 METERS ON SAMPLER 0 - 0.15	0.15 - 0.30	0.30 - 0.45	0.45 - 0.60	STRATA CHANGE: DEPTH, ELEV.	FIELD IDENTIFICATION OF SOIL, REMARKS (INCL. COLOR, LOSS OF WASH WATER, ETC.)
		0.00 - 0.60	1	0.60	0.03	D	3	6	5	6		Brown black f SAND, little silt, little c sand, trace f-c gravel.
		1.52 - 2.12	2	0.60	0.46	D	12	19	22	28		Top 0.30m: Black f-c SAND, little silt. Bottom 0.15m: Wood.
		3.05 - 3.65	3	0.60	0.03	D	1/0.30m		1	1		Black/dark gray SILT, trace f-c sand, trace f gravel.
5		4.57 - 5.17	4	0.60	0.30	D	1	1	2	3		Dark gray / black f SAND, trace to little silt, trace c sand, trace f gravel, trace wood.
		6.10 - 6.70	5	0.60	0.10	D	2	2	1	6		Dark gray black f-c SAND, little silt, trace f gravel, trace wood.
											7.16	
		7.62 - 8.22	6	0.60	0.13	D	1	1/0.30m		2	-6.40	Dark gray organic SILT, trace fibers, trace shells.
10		9.14 - 9.74	7	0.60	0.60	D	1/0.30m		1	1		Dark gray organic SILT, trace fibers, trace shells.
		10.67 - 11.27	8	0.60	0.60	D	1/0.30m		1	1		Dark gray organic SILT, trace fibers, trace shells.
											11.73	
		12.19 - 12.79	8	0.60	0.60	D	1/0.30m		1	1	-10.53	Gray f SAND, little silt.
15		13.72 - 14.32	9	0.60	0.60	D	1	2	2	2		Gray f SAND, little silt, trace shells.

Casing Size	From	To	Meters of Earth	Rock
100 mm	0	4.57	38.71	
			No. of Samples	
			26D	

NOTES: Pump broke 7/11/02, installed another one 7/12/02. Raising and dropping of the 140-lb (63.5kg) safety hammer was accomplished using a wire winch.

SAMPLE TYPE CODING: D=Driven C=Core A=Auger UP=Undisturbed Piston V=Vane Test
PROPORTIONS USED: Trace = 1 -10%, Little = 10 - 20%, Some = 20 - 35%, And = 35 - 50%

Hole No. P4-2 Sheet 1 of 3

BORING P4-2 (2 OF 3)

R. Posa	SM - 001 - M REV. 1/94	BORING REPORT	Hole No. P4-2
DRILLER	STATE OF CONNECTICUT		Line & Station I-95 0+965.3
E. Fulton	DEPARTMENT OF TRANSPORTATION		Offset 2.1 LT
INSPECTOR	TOWN: New Haven / West Haven, CT		N. Coordinate 202418.3
Parsons Brinckerhoff Quade & Douglas, Inc.	PROJECT NAME: Reconstruction I-95 Over West River		E. Coordinate 288994.1
SOILS ENGINEER	PROJECT NUMBER: 92-533		Parsons Brinckerhoff Quade & Douglas, Inc.
	BORING CONTRACTOR: General Borings, Inc.		PRIME DESIGNER

Surface Elevation: 1.20			Casing			Auger		Mud	Sampler		Core Barrel					
Date Started: 7/10/2002		Utilized			X			X	X	X						
Date Finished: 7/12/2002		Type	BW	NW	HW	Pipe	Solid	Hollow	Bentonite	SS	UP	B (st)	B (dt)	NX (st)	NV II (dt)	
Groundwater Observations		Size I.D. (mm)	60	76	100	64		150	X	36		35	35	55	55	
@ ~2.59 m after hours		Hammer (kg)	136	136	136	136			Bit	63.5		Type	X	Diamond		
@ m after hours		Fall (m)	0.6	0.6	0.6	0.6			0.80 mm	0.76		of Bit		Carbide		

DEPTH	Casing blows per half meter	DEPTH IN METERS FROM - TO	SAMPLE NO.	PEN. m	REC. m	Type	BLOWS PER 0.15 METERS ON SAMPLER 0 - 0.15	0.15 - 0.30	0.30 - 0.45	0.45 - 0.60	STRATA CHANGE: DEPTH, ELEV.	FIELD IDENTIFICATION OF SOIL, REMARKS (INCL. COLOR, LOSS OF WASH WATER, ETC.)
		15.24 - 15.84	11	0.60	0.00	D	6	9	11	14		Brown gray f-c SAND (WASH).
		16.76 - 17.36	12	0.60	0.46	D	7	8	8	9		Top 0.25m: Red brown f SAND, trace silt. Middle 0.10m: Red brown f-c SAND, trace silt, trace f gravel. Bottom 0.10m: Red brown f SAND, some silt.
		18.29 - 18.89	13	0.60	0.46	D	11	12	12	14		Red brown f SAND, some silt, saturated.
											19.35	
20		19.81 - 20.41	14	0.60	0.30	D	10	10	13	17	-18.15	Red brwon SILT and f SAND.
		21.34 - 21.94	15	0.60	0.38	D	12	14	15	23		Red brown SILT and f SAND.
		22.86 - 23.46	16	0.60	0.41	D	12	17	17	22		Red brown SILT and f SAND.
25		24.38 - 24.98	17	0.60	0.38	D	10	14	20	24		Red brown SILT, little f sand, trace clayey silt seams, medium dilatancy.
		25.91 - 26.51	18	0.60	0.51	D	17	19	22	25		Red brown SILT, little f sand, trace clayey silt seams, medium dilatancy.
		27.43 - 28.03	19	0.60	0.30	D	12	17	19	23		Red brown SILT, little f sand, trace clayey silt seams, medium dilatancy.
30		28.96 - 29.56	20	0.60	0.41	D	11	14	21	23		Red brown SILT, some f sand.

Casing Size	From	To	Meters of Earth	Rock
100 mm	0	4.57	38.71	
			No. of Samples	
			26D	

NOTES: Pump broke 7/11/02, installed another one 7/12/02. Raising and dropping of the 140-lb (63.5kg) safety hammer was accomplished using a wire winch.

SAMPLE TYPE CODING: D=Driven C=Core A=Auger UP=Undisturbed Piston V=Vane Test
PROPORTIONS USED: Trace = 1 -10%, Little = 10 - 20%, Some = 20 - 35%, And = 35 - 50%

Hole No. P4-2 Sheet 2 of 3

BORING P4-2 (3 OF 3)

R. Posa	SM - 001 - M REV. 1/94	BORING REPORT	Hole No. P4-2
DRILLER	STATE OF CONNECTICUT		Line & Station I-95 0+965.3
E. Fulton	DEPARTMENT OF TRANSPORTATION		Offset 2.1 LT
INSPECTOR	TOWN: New Haven / West Haven, CT		N. Coordinate 202418.3
Parsons Brinckerhoff Quade & Douglas, Inc.	PROJECT NAME: Reconstruction I-95 Over West River		E. Coordinate 288994.1
SOILS ENGINEER	PROJECT NUMBER: 92-533		Parsons Brinckerhoff Quade & Douglas, Inc.
	BORING CONTRACTOR: General Borings, Inc.		PRIME DESIGNER

Surface Elevation: 1.20			Casing			Auger		Mud	Sampler		Core Barrel					
Date Started: 7/10/2002		Utilized			X		X	X	X							
Date Finished: 7/12/2002		Type	BW	NW	HW	Pipe	Solid	Hollow	Bentonite	SS	UP	B (st)	B (dt)	NX (st)	NV II (dt)	
Groundwater Observations		Size I.D. (mm)	60	76	100	64		150	X	36		35	35	55	55	
@ ~2.59 m after hours		Hammer (kg)	136	136	136	136			Bit	63.5		Type		Diamond		
@ m after hours		Fall (m)	0.6	0.6	0.6	0.6			0.80 mm	0.76		of Bit		Carbide		

DEPTH	Casing blows per half meter	DEPTH IN METERS FROM - TO	SAMPLE NO.	PEN. m	REC. m	Type	BLOWS PER 0.15 METERS ON SAMPLER 0 - 0.15	0.15 - 0.30	0.30 - 0.45	0.45 - 0.60	STRATA CHANGE: DEPTH, ELEV.	FIELD IDENTIFICATION OF SOIL, REMARKS (INCL. COLOR, LOSS OF WASH WATER, ETC.)
		30.48 - 31.08	21	0.60	0.46	D	13	15	17	19		Red brown SILT, trace f sand, f sand lenses (~0.32 cm).
		32.00 - 32.60	22	0.60	0.36	D	16	21	28	33		Red brown SILT, little f SAND, saturated rapid dilatancy.
		33.53 - 34.13	23	0.60	0.38	D	12	14	17	21		Top 0.13m: Red brown SILT, some f sand. Bottom 0.25m: Red brown SILT, little f sand.
35		35.05 - 35.65	24	0.60	0.60	D	14	19	21	24		Red brown SILT, little f sand.
		36.58 - 37.18	25	0.60	0.56	D	21	18	17	20		Red brown SILT.
		38.10 - 38.70	26	0.60	0.51	D	19	21	17	18		Red brown SILT, trace clayey silt seams, saturated.
											38.70	
40											-37.50	Bottom of Boring 38.70 m.

Casing Size	From	To	Meters of Earth	Rock
100 mm	0	4.57	38.70	
			No. of Samples	
			26D	

NOTES: Pump broke 7/11/02, installed another one 7/12/02. Raising and dropping of the 140-lb (63.5kg) safety hammer was accomplished using a wire winch.

SAMPLE TYPE CODING: D=Driven C=Core A=Auger UP=Undisturbed Piston V=Vane Test
PROPORTIONS USED: Trace = 1 -10%, Little = 10 - 20%, Some = 20 - 35%, And = 35 - 50%

Hole No. P4-2 Sheet 3 of 3

REV.	DATE	DESCRIPTION	SHEET. NO.
		REVISIONS	

THE INFORMATION, INCLUDING ESTIMATED QUANTITIES OF WORK, SHOWN ON THESE SHEETS IS BASED ON LIMITED INVESTIGATIONS BY THE STATE AND IS IN NO WAY WARRANTED TO INDICATE THE CONDITIONS OR ACTUAL QUANTITIES OF WORK WHICH WILL BE REQUIRED.

DESIGNER: R. BORJESON
DRAFTER: G. LEE
CHECKED BY: T. LALIBERTE
DATE CHECKED: 10-11-02

STATE OF CONNECTICUT
DEPARTMENT OF TRANSPORTATION

ENGINEER: PB AMERICAS, INC.
APPROVED BY: DATE:

PROJECT TITLE: RECONSTRUCTION OF I-95 OVER WEST RIVER (BRIDGE NO. 00163)
CADD PLOTTED 11/13/2012

TOWN: NEW HAVEN / WEST HAVEN
DRAWING TITLE: BORINGS – P4-2

PROJECT NO.: 92-522
DRAWING NO.: STR-23
SHEET NO.:

10:31:11 AM
11/13/2012
T:\V8CADD Projects\PB\8735\FD\Structures\Contract_Sheets\Br00163-str-23-092522-00163.dgn

BORING P4-3 (1 OF 3)

M. Jennett	SM - 001 - M REV. 1/94 BORING REPORT	Hole No.	P4-3
DRILLER	STATE OF CONNECTICUT	Line & Station	I-95 0+968.5
E. Fulton	DEPARTMENT OF TRANSPORTATION	Offset	18.1 RT
INSPECTOR	TOWN: New Haven / West Haven, CT	N. Coordinate	202398.4
Parsons Brinckerhoff Quade & Douglas, Inc.	PROJECT NAME: Reconstruction I-95 Over West River	E. Coordinate	288998.7
SOILS ENGINEER	PROJECT NUMBER: 92-533		Parsons Brinckerhoff Quade & Douglas, Inc.
	BORING CONTRACTOR: General Borings, Inc.		PRIME DESIGNER

Surface Elevation: 1.38			Casing			Auger		Mud	Sampler		Core Barrel				
Date Started: 7/15/2002	Utilized			X			X	X	X	X					
Date Finished: 7/17/2002	Type	BW	NW	HW	Pipe	Solid	Hollow	Bentonite	SS	UP	B (st)	B (dt)	NX (st)	NV II (dt)	
Groundwater Observations	Size I.D. (mm)	60	76	100	64		150	X	36		35	35	55	55	
@ ~2.59 m after hours	Hammer (kg)	136	136	136	136			Bit	63.5		Type		Diamond		
@ m after hours	Fall (m)	0.6	0.6	0.6	0.6			0.80 mm	0.76		of Bit		Carbide		

DEPTH (m)	Casing blows per half meter	DEPTH IN METERS FROM - TO	SAMPLE NO.	PEN. m	REC. m	Type	BLOWS PER 0.15 METERS ON SAMPLER 0 - 0.15	0.15 - 0.30	0.30 - 0.45	0.45 - 0.60	STRATA CHANGE: DEPTH, ELEV.	FIELD IDENTIFICATION OF SOIL, REMARKS (INCL. COLOR, LOSS OF WASH WATER, ETC.)
		0.00 - 0.60	1	0.60	0.25	D	16	10	20	25		Top 0.10m: Brown f-c SAND, mostly c, little silt. Bottom 0.15m: Dark brown f SAND, little c sand, little silt, trace to little f gravel.
		1.52 - 2.12	2	0.60	0.23	D	5	3	13	11		Brown black f SAND, little c sand, little silt, trace f gravel.
		3.05 - 3.65	3	0.60	0.30	D	1	1	2	2		Gray organic SILT, trace f sand, trace clay, trace shells.
5		4.57 - 4.70	4	0.13	0.13	D	20/0.13m					Gray black f-c SAND, trace silt (WASH from fill layer). (See note below.)
											6.25	
		6.71 - 7.32	5	0.60	0.60	D	1	1	1	1	-4.87	Gray organic SILT, trace shells.
		7.62 - 8.22	1	0.60	0.05	UP						Piston - did not keep recovery, made 2 attempts.
		8.23 - 8.83	6	0.60	0.51	D	1/0.30m		1	1		Gray organic SILT, trace shells.
		9.14 - 9.74	2	0.60	0.58	UP						Piston.
10		9.75 - 10.35	7	0.60	0.60	D	1/0.30m		1/0.30m			Gray organic SILT, little f sand, trace shells.
		10.67 - 11.27	3	0.60	0.60	UP						Piston.
		11.28 - 11.88	8	0.60	0.60	D	1/0.30m		1/0.30m			Gray organic SILT, trace clay, little shells, trace f sand.
		12.19 - 12.79	9	0.60	0.51	D	WOR	WOR	WOR	WOR		Top 0.33m: Gray organic SILT, some f sand, trace shells. Bottom 0.18m: Gray organic SILT, trace f sand, little shells. pp = 1.0 (bottom 0.13m), 0.0 (top 0.38m), 0.5 (top 0.38m) tons/ft
		13.72 - 14.32	10	0.60	0.36	D	9	12	10	12		Top 0.10m: Gray organic SILT, little shells, soft. Bottom 0.25m: Red brown f sand, trace c sand, trace silt.
15												

Casing Size	From	To	Meters of Earth	Rock
100 mm	0	6.71	38.71	
			No. of Samples	
			26D/3UP	

NOTES: Casing kept slipping down while attempting to wash out at 4.57m. While washing out c gravel from fill area, forced casing past 4.57m, unable to sample at 4.57m, drove casing to 6.10m, gravel continued to be a problem, drove casing to 6.71m. Raising and dropping of the 140 lb. (63.5 kg) safety hammer was accomplished using a wire winch.

SAMPLE TYPE CODING: D=Driven C=Core A=Auger UP=Undisturbed Piston V=Vane Test
PROPORTIONS USED: Trace = 1 -10%, Little = 10 - 20%, Some = 20 - 35%, And = 35 - 50%

Hole No. P4-3 Sheet 1 of 3

BORING P4-3 (2 OF 3)

M. Jennett	SM - 001 - M REV. 1/94 BORING REPORT	Hole No.	P4-3
DRILLER	STATE OF CONNECTICUT	Line & Station	I-95 0+968.5
E. Fulton	DEPARTMENT OF TRANSPORTATION	Offset	18.1 RT
INSPECTOR	TOWN: New Haven / West Haven, CT	N. Coordinate	202398.4
Parsons Brinckerhoff Quade & Douglas, Inc.	PROJECT NAME: Reconstruction I-95 Over West River	E. Coordinate	288998.7
SOILS ENGINEER	PROJECT NUMBER: 92-533		Parsons Brinckerhoff Quade & Douglas, Inc.
	BORING CONTRACTOR: General Borings, Inc.		PRIME DESIGNER

Surface Elevation: 1.38			Casing			Auger		Mud	Sampler		Core Barrel				
Date Started: 7/15/2002	Utilized			X			X	X	X	X					
Date Finished: 7/17/2002	Type	BW	NW	HW	Pipe	Solid	Hollow	Bentonite	SS	UP	B (st)	B (dt)	NX (st)	NV II (dt)	
Groundwater Observations	Size I.D. (mm)	60	76	100	64		150	X	36		35	35	55	55	
@ ~2.59 m after hours	Hammer (kg)	136	136	136	136			Bit	63.5		Type	X	Diamond		
@ m after hours	Fall (m)	0.6	0.6	0.6	0.6			0.80 mm	0.76		of Bit		Carbide		

DEPTH (m)	Casing blows per half meter	DEPTH IN METERS FROM - TO	SAMPLE NO.	PEN. m	REC. m	Type	BLOWS PER 0.15 METERS ON SAMPLER 0 - 0.15	0.15 - 0.30	0.30 - 0.45	0.45 - 0.60	STRATA CHANGE: DEPTH, ELEV.	FIELD IDENTIFICATION OF SOIL, REMARKS (INCL. COLOR, LOSS OF WASH WATER, ETC.)
		15.24 - 15.84	11	0.60	0.56	D	10	10	10	12	15.39	Top 0.15m: Gray organic SILT, little shells, soft.
											-14.01	Bottom 0.41m: Red brown f SAND, little to some silt, medium dilatancy.
		16.76 - 17.36	12	0.60	0.25	D	7	11	15	16		Red brown f SAND, little silt, medium dilatancy.
		18.29 - 18.89	13	0.60	0.30	D	13	13	15	17		Red brown f SAND, little silt, medium dilatancy.
20		19.81 - 20.41	14	0.60	0.30	D	15	16	19	20		Red brown f SAND, some silt.
		21.34 - 21.94	15	0.60	0.30	D	15	16	16	19		Red brown f SAND, some silt.
											22.40	
		22.86 - 23.46	16	0.60	0.41	D	13	15	19	20	-21.02	Red brown SILT, some f sand, rapid dilatancy.
		24.38 - 24.98	17	0.60	0.36	D	15	18	21	24		Red brown SILT, little f sand.
25												
		25.91 - 26.51	18	0.60	0.20	D	12	16	6	16		Red brown SILT, some f sand.
		27.43 - 28.03	19	0.60	0.41	D	13	15	19	17		Red brown SILT, some f sand, rapid dilatancy, dense.
		28.96 - 29.56	20	0.60	0.30	D	10	14	17	9		Red brown SILT, some f sand, rapid dilatancy, dense.
30												

Casing Size	From	To	Meters of Earth	Rock
100 mm	0	4.57	38.71	
			No. of Samples	
			26D/3UP	

NOTES: Raising and dropping of the 140-lb (63.5kg) safety hammer was accomplished using a wire winch.

SAMPLE TYPE CODING: D=Driven C=Core A=Auger UP=Undisturbed Piston V=Vane Test
PROPORTIONS USED: Trace = 1 -10%, Little = 10 - 20%, Some = 20 - 35%, And = 35 - 50%

Hole No. P4-3 Sheet 2 of 3

BORING P4-3 (3 OF 3)

M. Jennett	SM - 001 - M REV. 1/94 BORING REPORT	Hole No.	P4-3
DRILLER	STATE OF CONNECTICUT	Line & Station	I-95 0+968.5
E. Fulton	DEPARTMENT OF TRANSPORTATION	Offset	18.1 RT
INSPECTOR	TOWN: New Haven / West Haven, CT	N. Coordinate	202398.4
Parsons Brinckerhoff Quade & Douglas, Inc.	PROJECT NAME: Reconstruction I-95 Over West River	E. Coordinate	288998.7
SOILS ENGINEER	PROJECT NUMBER: 92-533		Parsons Brinckerhoff Quade & Douglas, Inc.
	BORING CONTRACTOR: General Borings, Inc.		PRIME DESIGNER

Surface Elevation: 1.38			Casing			Auger		Mud	Sampler		Core Barrel				
Date Started: 7/15/2002	Utilized			X			X	X	X	X					
Date Finished: 7/17/2002	Type	BW	NW	HW	Pipe	Solid	Hollow	Bentonite	SS	UP	B (st)	B (dt)	NX (st)	NV II (dt)	
Groundwater Observations	Size I.D. (mm)	60	76	100	64		150	X	36		35	35	55	55	
@ ~2.59 m after hours	Hammer (kg)	136	136	136	136			Bit	63.5		Type		Diamond		
@ m after hours	Fall (m)	0.6	0.6	0.6	0.6			0.80 mm	0.76		of Bit		Carbide		

DEPTH (m)	Casing blows per half meter	DEPTH IN METERS FROM - TO	SAMPLE NO.	PEN. m	REC. m	Type	BLOWS PER 0.15 METERS ON SAMPLER 0 - 0.15	0.15 - 0.30	0.30 - 0.45	0.45 - 0.60	STRATA CHANGE: DEPTH, ELEV.	FIELD IDENTIFICATION OF SOIL, REMARKS (INCL. COLOR, LOSS OF WASH WATER, ETC.)
		30.48 - 31.08	21	0.60	0.30	D	17	24	30	31		Red brown SILT, little f sand, rapid dilatancy, very dense.
		32.00 - 32.60	22	0.60	0.51	D	18	24	33	30		Red brown SILT, some f sand, medium dilatancy, very dense.
		33.53 - 34.13	23	0.60	0.25	D	18	22	31	31		Red brown SILT, little f sand, medium dilatancy, very dense, trace clayey silt seams (~0.16 cm).
35												
		35.05 - 35.65	24	0.60	0.51	D	10	13	16	20		Red brown SILT, little clayey silt seams (~0.08 - 0.16 cm).
		36.58 - 37.18	25	0.60	0.51	D	8	8	9	13		Red brown SILT, little clayey silt seams (~0.08 - 0.16 cm), medium dilatancy.
		38.10 - 38.70	26	0.60	0.46	D	9	15	21	25		Red brown SILT, little clayey silt seams (~0.08 - 0.16 cm), medium dilatancy.
											38.70	
40											-37.32	Bottom of Boring 38.70 m.
45												

Casing Size	From	To	Meters of Earth	Rock
100 mm	0	4.57	38.70	
			No. of Samples	
			26D/3UP	

NOTES: Raising and dropping of the 140-lb (63.5kg) safety hammer was accomplished using a wire winch.

SAMPLE TYPE CODING: D=Driven C=Core A=Auger UP=Undisturbed Piston V=Vane Test
PROPORTIONS USED: Trace = 1 -10%, Little = 10 - 20%, Some = 20 - 35%, And = 35 - 50%

Hole No. P4-3 Sheet 3 of 3

REV.	DATE	DESCRIPTION	SHEET. NO.
		REVISIONS	

THE INFORMATION, INCLUDING ESTIMATED QUANTITIES OF WORK, SHOWN ON THESE SHEETS IS BASED ON LIMITED INVESTIGATIONS BY THE STATE AND IS IN NO WAY WARRANTED TO INDICATE THE CONDITIONS OR ACTUAL QUANTITIES OF WORK WHICH WILL BE REQUIRED.

DESIGNER: R. BORJESON
DRAFTER: G. LEE
CHECKED BY: T. LALIBERTE
DATE CHECKED: 10–11–02

STATE OF CONNECTICUT
DEPARTMENT OF TRANSPORTATION

ENGINEER: PB AMERICAS, INC.
APPROVED BY: DATE:

PROJECT TITLE: RECONSTRUCTION OF I–95 OVER WEST RIVER (BRIDGE NO. 00163)
CADD PLOTTED 11/13/2012

TOWN: NEW HAVEN / WEST HAVEN
DRAWING TITLE: BORINGS – P4–3

PROJECT NO.: 92–522
DRAWING NO.: STR–24
SHEET NO.:

10:32:31 AM
11/13/2012
T:\V8CADD\Projects\PB\6735\FD\Structures\Contract_Sheets\Br00163.dgn

BORING P5-1 (1 OF 3)

M. Jennett	SM - 001 - M REV. 1/94 — BORING REPORT	Hole No.	P5-1
DRILLER	STATE OF CONNECTICUT	Line & Station	I-95 1+040.3
E. Fulton	DEPARTMENT OF TRANSPORTATION	Offset	29.1 LT
INSPECTOR	TOWN: New Haven / West Haven, CT	N. Coordinate	202450.7
Parsons Brinckerhoff Quade & Douglas, Inc.	PROJECT NAME: Reconstruction I-95 Over West River	E. Coordinate	289066.9
SOILS ENGINEER	PROJECT NUMBER: 92-533	Parsons Brinckerhoff Quade & Douglas, Inc.	
	BORING CONTRACTOR: General Borings, Inc.	PRIME DESIGNER	

			Casing				Auger		Mud	Sampler		Core Barrel			
Surface Elevation:	2.61														
Date Started:	7/10/2002	Utilized			X			X	X	X	X				
Date Finished:	7/11/2002	Type	BW	NW	HW	Pipe	Solid	Hollow	Bentonite	SS	UP	B (st)	B (dt)	NX (st)	NV II (dt)
Groundwater Observations		Size I.D. (mm)	60	76	100	64		150	X	36		35	35	55	55
@ ~2.59 m after	hours	Hammer (kg)	136	136	136	136			Bit	63.5		Type		Diamond	
@ m after	hours	Fall (m)	0.6	0.6	0.6	0.6			0.80 mm	0.76		of Bit		Carbide	

DEPTH	Casing blows per half meter	SAMPLE DEPTH IN METERS FROM - TO	NO.	PEN. m	REC. m	Type	BLOWS PER 0.15 METERS ON SAMPLER 0 - 0.15	0.15 - 0.30	0.30 - 0.45	0.45 - 0.60	STRATA CHANGE: DEPTH, ELEV.	FIELD IDENTIFICATION OF SOIL, REMARKS (INCL. COLOR, LOSS OF WASH WATER, ETC.)
		0.00 - 0.60	1	0.60	0.43	D	5	20	24	18		Light brown / brown f SAND, little silt, trace c sand, trace brick, trace f gravel.
		1.52 - 2.12	2	0.60	0.23	D	15	15	15	24		Red brown f SAND, trace c sand, trace f gravel.
		3.05 - 3.65	3	0.60	0.46	D	2	3	3	5		Red brown f SAND, little to trace silt, little c sand, brick and wood, wet.
5		4.57 - 4.72	4	0.60	0.41	D	3	5	5	5		Brown f SAND, trace silt, trace c sand, trace f gravel.
		6.10 - 6.71	5	0.60	0.23	D	21	4	3	3	6.18	Top 0.08m: Gray brown c GRAVEL.
											-3.57	Bottom 0.15: Gray organic SILT, trace shells, trace f sand.
		7.01 - 7.61	1	0.60	0.60	UP						Piston.
		7.62 - 8.22	6	0.60	0.20	D	1/0.30m		1/0.30m			Gray organic SILT, trace shells, trace f sand, trace clay.
		9.14 -9.74	7	0.60	0.60	D	1	1	2	2		Gray organic SILT, trace f sand, trace clay, trace shells.
10												
		10.06 - 10.66	2	0.60	0.60	UP						Piston.
		10.67 - 11.27	8	0.60	0.46	D	2	3	2	4		Gray organic SILT, trace f sand, trace shells.
		12.19 - 12.79	9	0.60	0.51	D	2	2	3	4		Gray organic SILT, trace clay, trace shells.
											13.26	
		13.72 - 14.32	10	0.60	0.60	D	2	2	2	4	-10.65	Gray f SAND, little silt, trace shells.
15												

Casing			Meters of	
Size	From	To	Earth	Rock
100 mm	0	4.57	35.66	
			No. of Samples	
			24D/2UP	

NOTES: Raising and dropping of the 140-lb (63.5kg) safety hammer was accomplished using a wire winch.

SAMPLE TYPE CODING: D=Driven C=Core A=Auger UP=Undisturbed Piston V=Vane Test
PROPORTIONS USED: Trace = 1 -10%, Little = 10 - 20%, Some = 20 - 35%, And = 35 - 50%

Hole No. P5-1 Sheet 1 of 3

BORING P5-1 (2 OF 3)

M. Jennett	SM - 001 - M REV. 1/94 — BORING REPORT	Hole No.	P5-1
DRILLER	STATE OF CONNECTICUT	Line & Station	I-95 1+040.3
E. Fulton	DEPARTMENT OF TRANSPORTATION	Offset	29.1 LT
INSPECTOR	TOWN: New Haven / West Haven, CT	N. Coordinate	202450.7
Parsons Brinckerhoff Quade & Douglas, Inc.	PROJECT NAME: Reconstruction I-95 Over West River	E. Coordinate	289066.9
SOILS ENGINEER	PROJECT NUMBER: 92-533	Parsons Brinckerhoff Quade & Douglas, Inc.	
	BORING CONTRACTOR: General Borings, Inc.	PRIME DESIGNER	

			Casing				Auger		Mud	Sampler		Core Barrel			
Surface Elevation:	2.61														
Date Started:	7/10/2002	Utilized			X			X	X	X	X				
Date Finished:	7/11/2002	Type	BW	NW	HW	Pipe	Solid	Hollow	Bentonite	SS	UP	B (st)	B (dt)	NX (st)	NV II (dt)
Groundwater Observations		Size I.D. (mm)	60	76	100	64		150	X	36		35	35	55	55
@ ~2.59 m after	hours	Hammer (kg)	136	136	136	136			Bit	63.5		Type	X	Diamond	
@ m after	hours	Fall (m)	0.6	0.6	0.6	0.6			0.80 mm	0.76		of Bit		Carbide	

DEPTH	Casing blows per half meter	SAMPLE DEPTH IN METERS FROM - TO	NO.	PEN. m	REC. m	Type	BLOWS PER 0.15 METERS ON SAMPLER 0 - 0.15	0.15 - 0.30	0.30 - 0.45	0.45 - 0.60	STRATA CHANGE: DEPTH, ELEV.	FIELD IDENTIFICATION OF SOIL, REMARKS (INCL. COLOR, LOSS OF WASH WATER, ETC.)
		15.24 - 15.84	11	0.60	0.51	D	3	3	5	7		Gray f SAND, little silt, trace shells.
		16.76 - 17.36	12	0.60	0.46	D	5	11	11	16		Red brown f SAND, little silt.
		18.29 - 18.89	13	0.60	0.51	D	6	13	16	17		Red brown f SAND, some silt.
											19.35	
20		19.81 - 20.41	14	0.60	0.41	D	WOR	WOR	2	5	-16.74	Red brown SILT, little f sand, saturated.
		21.34 - 21.94	15	0.60	0.46	D	WOR	1	3	5		Red brown SILT, little f sand, saturated.
		22.86 - 23.46	16	0.60	0.51	D	8	9	8	9		Red brown SILT and f SAND, saturated.
		24.38 - 24.98	17	0.60	0.30	D	5	7	9	9		Red brown SILT and f SAND, rapid dilatancy, saturated.
25												
		25.91 - 26.51	18	0.60	0.03	D	WOR	WOR	WOR	3		Red brown SILT and f SAND, rapid dilatancy, saturated.
		27.43 - 28.03	19	0.60	0.20	D	10	12	15	17		Red brown SILT and f SAND, rapid dilatancy, saturated.
		28.96 - 29.56	20	0.60	0.25	D	1	5	6	8		Red brown SILT and f SAND, rapid dilatancy, saturated.
30												

Casing			Meters of	
Size	From	To	Earth	Rock
100 mm	0	4.57	35.66	
			No. of Samples	
			24D/2UP	

NOTES: Raising and dropping of the 140-lb (63.5kg) safety hammer was accomplished using a wire winch.

SAMPLE TYPE CODING: D=Driven C=Core A=Auger UP=Undisturbed Piston V=Vane Test
PROPORTIONS USED: Trace = 1 -10%, Little = 10 - 20%, Some = 20 - 35%, And = 35 - 50%

Hole No. P5-1 Sheet 2 of 3

BORING P5-1 (3 OF 3)

M. Jennett	SM - 001 - M REV. 1/94 — BORING REPORT	Hole No.	P5-1
DRILLER	STATE OF CONNECTICUT	Line & Station	I-95 1+040.3
E. Fulton	DEPARTMENT OF TRANSPORTATION	Offset	29.1 LT
INSPECTOR	TOWN: New Haven / West Haven, CT	N. Coordinate	202450.7
Parsons Brinckerhoff Quade & Douglas, Inc.	PROJECT NAME: Reconstruction I-95 Over West River	E. Coordinate	289066.9
SOILS ENGINEER	PROJECT NUMBER: 92-533	Parsons Brinckerhoff Quade & Douglas, Inc.	
	BORING CONTRACTOR: General Borings, Inc.	PRIME DESIGNER	

			Casing				Auger		Mud	Sampler		Core Barrel			
Surface Elevation:	2.61														
Date Started:	7/10/2002	Utilized			X			X	X	X	X				
Date Finished:	7/11/2002	Type	BW	NW	HW	Pipe	Solid	Hollow	Bentonite	SS	UP	B (st)	B (dt)	NX (st)	NV II (dt)
Groundwater Observations		Size I.D. (mm)	60	76	100	64		150	X	36		35	35	55	55
@ ~2.59 m after	hours	Hammer (kg)	136	136	136	136			Bit	63.5		Type		Diamond	
@ m after	hours	Fall (m)	0.6	0.6	0.6	0.6			0.80 mm	0.76		of Bit		Carbide	

DEPTH	Casing blows per half meter	SAMPLE DEPTH IN METERS FROM - TO	NO.	PEN. m	REC. m	Type	BLOWS PER 0.15 METERS ON SAMPLER 0 - 0.15	0.15 - 0.30	0.30 - 0.45	0.45 - 0.60	STRATA CHANGE: DEPTH, ELEV.	FIELD IDENTIFICATION OF SOIL, REMARKS (INCL. COLOR, LOSS OF WASH WATER, ETC.)
		30.48 - 31.08	21	0.60	0.46	D	20	26	31	31		Red brown SILT and f SAND, rapid dilatancy.
		32.00 - 32.60	22	0.60	0.36	D	12	16	21	27		Red brown SILT and f SAND, saturated.
		33.53 - 34.13	23	0.60	0.46	D	14	19	23	37		Red brown SILT, some f sand, trace f sand lenses, trace clayey silt seams (~0.08 - 0.32 cm).
35												
		35.05 - 35.65	24	0.60	0.20	D	20	31	37	46		Red brown SILT and f SAND, trace clayey silt seams (~0.16 cm).
											35.65	
											-33.04	Bottom of Boring 35.65 m.
40												
45												

Casing			Meters of	
Size	From	To	Earth	Rock
100 mm	0	4.57	35.65	
			No. of Samples	
			24D/2UP	

NOTES: Raising and dropping of the 140-lb (63.5kg) safety hammer was accomplished using a wire winch.

SAMPLE TYPE CODING: D=Driven C=Core A=Auger UP=Undisturbed Piston V=Vane Test
PROPORTIONS USED: Trace = 1 -10%, Little = 10 - 20%, Some = 20 - 35%, And = 35 - 50%

Hole No. P5-1 Sheet 3 of 3

REV.	DATE	DESCRIPTION	SHEET. NO
REVISIONS			

THE INFORMATION, INCLUDING ESTIMATED QUANTITIES OF WORK, SHOWN ON THESE SHEETS IS BASED ON LIMITED INVESTIGATIONS BY THE STATE AND IS IN NO WAY WARRANTED TO INDICATE THE CONDITIONS OR ACTUAL QUANTITIES OF WORK WHICH WILL BE REQUIRED.

DESIGNER: R. BORJESON
DRAFTER: G. LEE
CHECKED BY: T. LALIBERTE
DATE CHECKED: 10-11-02

STATE OF CONNECTICUT
DEPARTMENT OF TRANSPORTATION

ENGINEER: PB AMERICAS, INC.
APPROVED BY: DATE:

PROJECT TITLE: RECONSTRUCTION OF I-95 OVER WEST RIVER (BRIDGE NO. 00163)
CADD
PLOTTED 11/13/2012

TOWN: NEW HAVEN / WEST HAVEN
DRAWING TITLE: BORINGS - P5-1

PROJECT NO.: 92-522
DRAWING NO.: STR-25
SHEET NO.:

10:33:36 AM
11/13/2012
T:\V8CADD\Projects\PB\8735\FD\Structures\Contract_Sheets\Br00163\str-25-092522-00163.dgn

BORING P5-2 (1 OF 3)

J. Maccino	SM - 001 - M REV. 1/94	BORING REPORT	Hole No. P5-2
DRILLER	STATE OF CONNECTICUT		Line & Station I-95 1+023.9
R. Sharp	DEPARTMENT OF TRANSPORTATION		Offset 0.3 LT
INSPECTOR	TOWN: New Haven / West Haven, CT		N. Coordinate 202420.8
Parsons Brinckerhoff Quade & Douglas, Inc.	PROJECT NAME: Reconstruction I-95 Over West River		E. Coordinate 289052.7
SOILS ENGINEER	PROJECT NUMBER: 92-533		Parsons Brinckerhoff Quade & Douglas, Inc.
	BORING CONTRACTOR: General Borings, Inc.		PRIME DESIGNER

Surface Elevation: 2.61
Date Started: 7/29/2002
Date Finished: 7/30/2002
Groundwater Observations
@ ~2.59 m after ____ hours
@ m after hours

	Casing					Auger	Mud	Sampler		Core Barrel			
Utilized			X			X	X	X					
Type	BW	NW	HW	Pipe	Solid	Hollow	Bentonite	SS	UP	B (st)	B (dt)	NX (st)	NV II (dt)
Size I.D. (mm)	60	76	100	64		150	X	36		35	35	55	55
Hammer (kg)	136	136	136	136			Bit	63.5		Type		Diamond	
Fall (m)	0.6	0.6	0.6	0.6			0.80 mm	0.76		of Bit		Carbide	

DEPTH (m)	Casing blows per half meter	Sample DEPTH IN METERS FROM - TO	NO.	PEN. m	REC. m	Type	Blows per 0.15 meters on sampler 0 - 0.15	0.15 - 0.30	0.30 - 0.45	0.45 - 0.60	Strata change: DEPTH, ELEV.	FIELD IDENTIFICATION OF SOIL, REMARKS (INCL. COLOR, LOSS OF WASH WATER, ETC.)
		0.00 - 0.60	1	0.60	0.30	D	7	20	32	50		Light / medium brown f SAND, some c sand, little f-c gravel, trace silt.
		1.52 - 2.12	2	0.60	0.41	D	21	16	14	11		Top 0.05m: CONCRETE Bottom 0.36m: Red brown f SAND, some silt, trace c sand.
		3.05 - 3.65	3	0.60	0.46	D	6	5	4	6		Dark gray f SAND, some silt, trace c sand, trace f-c gravel, 0.03m of conrete in middle of sample, moist.
5		4.57 - 4.72	4	0.60	0.51	D	7	3	5	4		Top 0.40m: Dark gray c SAND, little f sand, little silt. Bottom 0.10m: Gray organic SILT, trace shells and fibers.
											5.64	
		6.10 - 6.71	5	0.60	0.60	D	3	2	1	3	-3.03	Gray organic SILT, little f sand, trace c sand, trace f gravel, trace fibers.
		7.62 - 8.22	6	0.60	0.60	D	WOH	WOH	WOH	WOH		Gray organic SILT, trace f sand, trace shells, trace fibers.
		9.14 - 9.74	7	0.60	0.60	D	WOH	WOH	WOH	WOH		Gray organic SILT, trace f sand, trace shells, trace fibers.
10												
		10.67 - 11.27	8	0.60	0.60	D	WOR	WOR	WOR	WOR		Gray organic SILT, trace f sand, trace shells, trace fibers.
		12.19 - 12.79	9	0.60	0.56	D	2	1	2	1		Gray organic SILT, trace f sand, trace shells, trace fibers.
		13.72 - 14.32	10	0.60	0.60	D	6	7	13	15	14.13	Top 0.40m: Gray organic SILT and f SAND.
15											-11.52	Bottom 0.20m: Gray red brown f SAND, little silt.

Casing Size	From	To	Meters of Earth	Rock
100 mm	0	4.57	35.66	
			No. of Samples	
			24D	

NOTES: Bombardier rig - Raising and dropping of the 140-lb (63.5kg) safety hammer was accomplished using a wire winch.

SAMPLE TYPE CODING: D=Driven C=Core A=Auger UP=Undisturbed Piston V=Vane Test
PROPORTIONS USED: Trace = 1 -10%, Little = 10 - 20%, Some = 20 - 35%, And = 35 - 50%

Hole No. P5-2
Sheet 1 of 3

BORING P5-2 (2 OF 3)

J. Maccino	SM - 001 - M REV. 1/94	BORING REPORT	Hole No. P5-2
DRILLER	STATE OF CONNECTICUT		Line & Station I-95 1+023.9
R. Sharp	DEPARTMENT OF TRANSPORTATION		Offset 0.3 LT
INSPECTOR	TOWN: New Haven / West Haven, CT		N. Coordinate 202420.8
Parsons Brinckerhoff Quade & Douglas, Inc.	PROJECT NAME: Reconstruction I-95 Over West River		E. Coordinate 289052.7
SOILS ENGINEER	PROJECT NUMBER: 92-533		Parsons Brinckerhoff Quade & Douglas, Inc.
	BORING CONTRACTOR: General Borings, Inc.		PRIME DESIGNER

Surface Elevation: 2.61
Date Started: 7/29/2002
Date Finished: 7/30/2002
Groundwater Observations
@ ~2.59 m after ____ hours
@ m after hours

	Casing					Auger	Mud	Sampler		Core Barrel			
Utilized			X			X	X	X					
Type	BW	NW	HW	Pipe	Solid	Hollow	Bentonite	SS	UP	B (st)	B (dt)	NX (st)	NV II (dt)
Size I.D. (mm)	60	76	100	64		150	X	36		35	35	55	55
Hammer (kg)	136	136	136	136			Bit	63.5		Type	X	Diamond	
Fall (m)	0.6	0.6	0.6	0.6			0.80 mm	0.76		of Bit		Carbide	

DEPTH (m)	Casing blows per half meter	Sample DEPTH IN METERS FROM - TO	NO.	PEN. m	REC. m	Type	Blows per 0.15 meters on sampler 0 - 0.15	0.15 - 0.30	0.30 - 0.45	0.45 - 0.60	Strata change: DEPTH, ELEV.	FIELD IDENTIFICATION OF SOIL, REMARKS (INCL. COLOR, LOSS OF WASH WATER, ETC.)
		15.24 - 15.84	11	0.60	0.30	D	9	14	15	11		Gray f-c SAND, little f-c gravel, little silt, trace f sand lense.
		16.76 - 17.36	12	0.60	0.08	D	16	14	14	15		Red brown f SAND, little silt, trace c sand, trace f gravel.
		18.29 - 18.89	13	0.60	0.36	D	14	11	12	9		Red brown f SAND, little silt, trace c gravel.
20		19.81 - 20.41	14	0.60	0.53	D	12	12	14	16		Red brown f SAND, little silt, trace c gravel.
		21.34 - 21.94	15	0.60	0.48	D	17	17	14	17		Red brown f SAND, trace silt.
		22.86 - 23.46	16	0.60	0.41	D	14	19	19	22		Red brown f SAND, some silt.
		24.38 - 24.98	17	0.60	0.36	D	16	23	24	19		Red brown f SAND, some silt.
25												
											25.45	
		25.91 - 26.51	18								-22.85	(Hole collapsed, driller had to wash it out, ended up 0.60m ahead, so he skipped the sample and went to 27.43m. Inspector was not there when it happened.)
		27.43 - 28.03	19	0.60	0.25	D	31	30	30	29		Red brown SILT, little to some f sand, trace clayey silt seams (~0.08 - 0.16cm).
		28.96 - 29.56	20	0.60	0.36	D	22	24	31	30		Red brown SILT, little f sand, saturated, rapid dilatancy, trace clayey silt seams. (~0.08cm).
30												

Casing Size	From	To	Meters of Earth	Rock
100 mm	0	4.57	35.66	
			No. of Samples	
			24D	

NOTES: Bombardier rig - Raising and dropping of the 140-lb (63.5kg) safety hammer was accomplished using a wire winch.

SAMPLE TYPE CODING: D=Driven C=Core A=Auger UP=Undisturbed Piston V=Vane Test
PROPORTIONS USED: Trace = 1 -10%, Little = 10 - 20%, Some = 20 - 35%, And = 35 - 50%

Hole No. P5-2
Sheet 2 of 3

BORING P5-2 (3 OF 3)

J. Maccino	SM - 001 - M REV. 1/94	BORING REPORT	Hole No. P5-2
DRILLER	STATE OF CONNECTICUT		Line & Station I-95 1+023.9
R. Sharp	DEPARTMENT OF TRANSPORTATION		Offset 0.3 LT
INSPECTOR	TOWN: New Haven / West Haven, CT		N. Coordinate 202420.8
Parsons Brinckerhoff Quade & Douglas, Inc.	PROJECT NAME: Reconstruction I-95 Over West River		E. Coordinate 289052.7
SOILS ENGINEER	PROJECT NUMBER: 92-533		Parsons Brinckerhoff Quade & Douglas, Inc.
	BORING CONTRACTOR: General Borings, Inc.		PRIME DESIGNER

Surface Elevation: 2.61
Date Started: 7/29/2002
Date Finished: 7/30/2002
Groundwater Observations
@ ~2.59 m after ____ hours
@ m after hours

	Casing					Auger	Mud	Sampler		Core Barrel			
Utilized			X			X	X	X					
Type	BW	NW	HW	Pipe	Solid	Hollow	Bentonite	SS	UP	B (st)	B (dt)	NX (st)	NV II (dt)
Size I.D. (mm)	60	76	100	64		150	X	36		35	35	55	55
Hammer (kg)	136	136	136	136			Bit	63.5		Type		Diamond	
Fall (m)	0.6	0.6	0.6				0.80 mm	0.76		of Bit		Carbide	

DEPTH (m)	Casing blows per half meter	Sample DEPTH IN METERS FROM - TO	NO.	PEN. m	REC. m	Type	Blows per 0.15 meters on sampler 0 - 0.15	0.15 - 0.30	0.30 - 0.45	0.45 - 0.60	Strata change: DEPTH, ELEV.	FIELD IDENTIFICATION OF SOIL, REMARKS (INCL. COLOR, LOSS OF WASH WATER, ETC.)
		30.48 - 31.08	21	0.60	0.30	D	21	25	30	29		Red brown SILT, little f sand, saturated, rapid dilatancy, trace clayey silt seams. (~0.08cm).
		32.00 - 32.60	22	0.60	0.41	D	19	22	29	28		Red brown SILT, some f sandD.
		33.53 - 34.13	23	0.60	0.38	D	23	22	29	32		Red brown SILT, little to some f sand.
35												
		35.05 - 35.65	24	0.60	0.46	D	17	21	28	23		Red brown SILT, little f sand, little clayey silt seams (~0.08-0.16 cm).
											35.65	
												Bottom of Boring 35.65 m.
40												
45												

Casing Size	From	To	Meters of Earth	Rock
100 mm	0	4.57	35.65	
			No. of Samples	
			24D	

NOTES: Bombardier rig - Raising and dropping of the 140-lb (63.5kg) safety hammer was accomplished using a wire winch.

SAMPLE TYPE CODING: D=Driven C=Core A=Auger UP=Undisturbed Piston V=Vane Test
PROPORTIONS USED: Trace = 1 -10%, Little = 10 - 20%, Some = 20 - 35%, And = 35 - 50%

Hole No. P5-2
Sheet 3 of 3

REV.	DATE	DESCRIPTION	SHEET. NO.
		REVISIONS	

THE INFORMATION, INCLUDING ESTIMATED QUANTITIES OF WORK, SHOWN ON THESE SHEETS IS BASED ON LIMITED INVESTIGATIONS BY THE STATE AND IS IN NO WAY WARRANTED TO INDICATE THE CONDITIONS OR ACTUAL QUANTITIES OF WORK WHICH WILL BE REQUIRED.

DESIGNER: R. BORJESON
DRAFTER: G. LEE
CHECKED BY: T. LALIBERTE
DATE CHECKED: 10-11-02

STATE OF CONNECTICUT
DEPARTMENT OF TRANSPORTATION

ENGINEER: PB AMERICAS, INC.
APPROVED BY:
DATE:

PROJECT TITLE: RECONSTRUCTION OF I-95 OVER WEST RIVER (BRIDGE NO. 00163)
CADD
PLOTTED 11/13/2012

TOWN: NEW HAVEN / WEST HAVEN
DRAWING TITLE: BORINGS – P5-2

PROJECT NO.: 92-522
DRAWING NO.: STR-26
SHEET NO.:

10:35:46 AM
11/13/2012
T:\WBCADD\Projects\PB\87735\FD\Structures\Contract_Sheets\Br00163.dgn-26-092522-00163.dgn

BORING P5-3 (1 OF 3)

M. Jennett	SM - 001 - M REV. 1/94 BORING REPORT	Hole No.	P5-3
DRILLER	STATE OF CONNECTICUT	Line & Station	I-95 1+010.4
E. Fulton	DEPARTMENT OF TRANSPORTATION	Offset	26.3 RT
INSPECTOR	TOWN: New Haven / West Haven, CT	N. Coordinate	202393.3
Parsons Brinckerhoff Quade & Douglas, Inc.	PROJECT NAME: Reconstruction I-95 Over West River	E. Coordinate	289041.0
SOILS ENGINEER	PROJECT NUMBER: 92-533	Parsons Brinckerhoff Quade & Douglas, Inc.	
	BORING CONTRACTOR: General Borings, Inc.	PRIME DESIGNER	

			Casing				Auger		Mud	Sampler		Core Barrel			
Surface Elevation:	2.59														
Date Started:	7/12/2002	Utilized			X			X	X	X	X				
Date Finished:	7/15/2002	Type	BW	NW	HW	Pipe	Solid	Hollow	Bentonite	SS	UP	B (st)	B (dt)	NX (st)	NV II (dt)
Groundwater Observations		Size I.D. (mm)	60	76	100	64		150	X	36		35	35	55	55
@ ~2.59 m after	hours	Hammer (kg)	136	136	136	136			Bit	63.5		Type		Diamond	
@ m after	hours	Fall (m)	0.6	0.6	0.6	0.6			0.80 mm	0.76		of Bit		Carbide	

DEPTH	Casing blows per half meter	SAMPLE DEPTH IN METERS FROM - TO	NO.	PEN. m	REC. m	Type	BLOWS PER 0.15 METERS ON SAMPLER 0 - 0.15	0.15 - 0.30	0.30 - 0.45	0.45 - 0.60	STRATA CHANGE: DEPTH, ELEV.	FIELD IDENTIFICATION OF SOIL, REMARKS (INCL. COLOR, LOSS OF WASH WATER, ETC.)
		0.00 - 0.60	1	0.60	0.20	D	3	10	17	20		Dark brown f SAND, trace c sand, little silt, trace brick,
												trace wood fibers.
		1.52 - 2.12	2	0.60	0.18	D	7	5	6	8		Top 0.10m: Brown f SAND, little silt, trace brick.
												Middle 0.03m: CONCRETE.
												Bottom 0.05m: Red BRICK fragments.
		3.05 - 3.65	3	0.60	0.25	D	4	5	3	3	3.35	Top 0.05m: Brown black f SAND, trace silt, trace wood.
											-0.76	Bottom 0.20m: Gray organic SILT, trace clay, trace shells.
5		4.57 - 5.17	1	0.60	0.36	UP						Piston.
		5.18 - 5.78	4	0.60	0.60	D	1	1	1	2		Gray organic SILT, trace clay, trace f sand, trace shells.
		6.10 - 6.70	5	0.60	0.60	D	1	1	2	1		Gray organic SILT, trace f sand, trace shells, trace clay.
		7.62 - 8.22	2	0.60	0.60	UP						Piston.
		8.22 - 8.84	6	0.60	0.46	D	1	1	2	3		Gray organic SILT, trace f sand, trace shells.
		9.14 - 9.74	7	0.60	0.60	D	1/0.30m		1/0.30m			Gray organic SILT, trace shells.
10												
		10.67 - 11.27	8	0.60	0.60	D	1/0.30m		1/0.30m			Gray organic SILT, trace shells.
		12.19 - 12.79	9	0.60	0.60	D	1	1	1	1		Gray organic SILT, little shells, trace clay.
											13.26	
		13.72 - 14.32	10	0.60	0.60	D	1	2	2	2	-10.67	Top 0.50m: Gray f SAND, little silt.
												Bottom 0.10m: Brown black PEAT, little silt.
15												

Casing			Meters of	
Size	From	To	Earth	Rock
100 mm	0	4.57	35.66	
			No. of Samples	
			24D/2UP	

NOTES: Raising and dropping of the 140-lb (63.5kg) safety hammer was accomplished using a wire winch.

SAMPLE TYPE CODING: D=Driven C=Core A=Auger UP=Undisturbed Piston V=Vane Test
PROPORTIONS USED: Trace = 1 -10%, Little = 10 - 20%, Some = 20 - 35%, And = 35 - 50%

Hole No. P5-3   Sheet 1 of 3

BORING P5-3 (2 OF 3)

M. Jennett	SM - 001 - M REV. 1/94 BORING REPORT	Hole No.	P5-3
DRILLER	STATE OF CONNECTICUT	Line & Station	I-95 1+010.4
E. Fulton	DEPARTMENT OF TRANSPORTATION	Offset	26.3 RT
INSPECTOR	TOWN: New Haven / West Haven, CT	N. Coordinate	202393.3
Parsons Brinckerhoff Quade & Douglas, Inc.	PROJECT NAME: Reconstruction I-95 Over West River	E. Coordinate	289041.0
SOILS ENGINEER	PROJECT NUMBER: 92-533	Parsons Brinckerhoff Quade & Douglas, Inc.	
	BORING CONTRACTOR: General Borings, Inc.	PRIME DESIGNER	

			Casing				Auger		Mud	Sampler		Core Barrel			
Surface Elevation:	2.59														
Date Started:	7/12/2002	Utilized			X			X	X	X	X				
Date Finished:	7/15/2002	Type	BW	NW	HW	Pipe	Solid	Hollow	Bentonite	SS	UP	B (st)	B (dt)	NX (st)	NV II (dt)
Groundwater Observations		Size I.D. (mm)	60	76	100	64		150	X	36		35	35	55	55
@ ~2.59 m after	hours	Hammer (kg)	136	136	136	136			Bit	63.5		Type	X	Diamond	
@ m after	hours	Fall (m)	0.6	0.6	0.6	0.6			0.80 mm	0.76		of Bit		Carbide	

DEPTH	Casing blows per half meter	SAMPLE DEPTH IN METERS FROM - TO	NO.	PEN. m	REC. m	Type	BLOWS PER 0.15 METERS ON SAMPLER 0 - 0.15	0.15 - 0.30	0.30 - 0.45	0.45 - 0.60	STRATA CHANGE: DEPTH, ELEV.	FIELD IDENTIFICATION OF SOIL, REMARKS (INCL. COLOR, LOSS OF WASH WATER, ETC.)
		15.24 - 15.84	11	0.60	0.30	D	3	5	6	6		Top 0.10m: Brown f-c SAND.
												Bottom 0.20m: Red brown f SAND, little silt.
		16.76 - 17.36	12	0.60	0.30	D	3	5	6	6		Red brown f SAND, trace to little silt.
		18.29 - 18.89	13	0.60	0.51	D	5	5	5	7		Red brown f SAND, little silt, saturated, rapid dilatancy.
											19.35	
20		19.81 - 20.41	14	0.60	0.36	D	5	8	15	16	-16.76	Red brown SILT, trace f sand, trace clayey silt seams,
												saturated, rapid dilatancy.
		21.34 - 21.94	15	0.60	0.00	D	4	6	8	8		No Recovery.
		22.86 - 23.46	16	0.60	0.30	D	6	6	12	14		Red brown SILT, little f sand, rapid dilatancy.
		24.38 - 24.98	17	0.60	0.00	D	13	6	2	7		No Recovery.
25												
		25.91 - 26.51	18	0.60	0.36	D	WOR	WOR	5	10		Red brown SILT, trace to little f sand, rapid dilatancy.
		27.43 - 28.03	19	0.60	0.60	D	6	9	10	16		Red brown SILT, trace to little f sand, rapid dilatancy.
		28.96 - 29.56	20	0.60	0.51	D	WOR	4	9	14		Red brown SILT, little f SAND, rapid dilatancy, saturated.
30												

Casing			Meters of	
Size	From	To	Earth	Rock
100 mm	0	4.57	35.66	
			No. of Samples	
			24D/2UP	

NOTES: Raising and dropping of the 140-lb (63.5kg) safety hammer was accomplished using a wire winch.

SAMPLE TYPE CODING: D=Driven C=Core A=Auger UP=Undisturbed Piston V=Vane Test
PROPORTIONS USED: Trace = 1 -10%, Little = 10 - 20%, Some = 20 - 35%, And = 35 - 50%

Hole No. P5-3   Sheet 2 of 3

BORING P5-3 (3 OF 3)

M. Jennett	SM - 001 - M REV. 1/94 BORING REPORT	Hole No.	P5-3
DRILLER	STATE OF CONNECTICUT	Line & Station	I-95 1+010.4
E. Fulton	DEPARTMENT OF TRANSPORTATION	Offset	26.3 RT
INSPECTOR	TOWN: New Haven / West Haven, CT	N. Coordinate	202393.3
Parsons Brinckerhoff Quade & Douglas, Inc.	PROJECT NAME: Reconstruction I-95 Over West River	E. Coordinate	289041.0
SOILS ENGINEER	PROJECT NUMBER: 92-533	Parsons Brinckerhoff Quade & Douglas, Inc.	
	BORING CONTRACTOR: General Borings, Inc.	PRIME DESIGNER	

			Casing				Auger		Mud	Sampler		Core Barrel			
Surface Elevation:	2.59														
Date Started:	7/12/2002	Utilized			X			X	X	X	X				
Date Finished:	7/15/2002	Type	BW	NW	HW	Pipe	Solid	Hollow	Bentonite	SS	UP	B (st)	B (dt)	NX (st)	NV II (dt)
Groundwater Observations		Size I.D. (mm)	60	76	100	64		150	X	36		35	35	55	55
@ ~2.59 m after	hours	Hammer (kg)	136	136	136	136			Bit	63.5		Type		Diamond	
@ m after	hours	Fall (m)	0.6	0.6	0.6	0.6			0.80 mm	0.76		of Bit		Carbide	

DEPTH	Casing blows per half meter	SAMPLE DEPTH IN METERS FROM - TO	NO.	PEN. m	REC. m	Type	BLOWS PER 0.15 METERS ON SAMPLER 0 - 0.15	0.15 - 0.30	0.30 - 0.45	0.45 - 0.60	STRATA CHANGE: DEPTH, ELEV.	FIELD IDENTIFICATION OF SOIL, REMARKS (INCL. COLOR, LOSS OF WASH WATER, ETC.)
		30.48 - 31.08	21	0.60	0.46	D	WOR	WOR	11	24		Red brown SILT, little f sand, trace clayey silt seams.
		32.00 - 32.60	22	0.60	0.56	D	5	10	21	24		Red brown SILT, some f sand, trace clayey silt seams,
												rapid dilatancy.
		33.53 - 34.13	23	0.60	0.30	D	4	11	19	20		Red brown SILT, trace f sand, trace clayey silt seams,
												saturated
35												
		35.05 - 35.65	24	0.60	0.41	D	11	13	27	27		Red brown SILT.
											35.65	
												Bottom of Boring 35.65 m.
40												
45												

Casing			Meters of	
Size	From	To	Earth	Rock
100 mm	0	4.57	35.65	
			No. of Samples	
			24D/2UP	

NOTES: Raising and dropping of the 140-lb (63.5kg) safety hammer was accomplished using a wire winch.

SAMPLE TYPE CODING: D=Driven C=Core A=Auger UP=Undisturbed Piston V=Vane Test
PROPORTIONS USED: Trace = 1 -10%, Little = 10 - 20%, Some = 20 - 35%, And = 35 - 50%

Hole No. P5-3   Sheet 3 of 3

REV.	DATE	DESCRIPTION	SHEET. NO
		REVISIONS	

THE INFORMATION, INCLUDING ESTIMATED QUANTITIES OF WORK, SHOWN ON THESE SHEETS IS BASED ON LIMITED INVESTIGATIONS BY THE STATE AND IS IN NO WAY WARRANTED TO INDICATE THE CONDITIONS OR ACTUAL QUANTITIES OF WORK WHICH WILL BE REQUIRED.

DESIGNER: R. BORJESON
DRAFTER: G. LEE
CHECKED BY: T. LALIBERTE
DATE CHECKED: 10–11–02

STATE OF CONNECTICUT
DEPARTMENT OF TRANSPORTATION

ENGINEER: PB AMERICAS, INC.
APPROVED BY: DATE:

PROJECT TITLE: RECONSTRUCTION OF I–95 OVER WEST RIVER (BRIDGE NO. 00163)
CADD   PLOTTED 11/13/2012

TOWN: NEW HAVEN / WEST HAVEN
DRAWING TITLE: BORINGS – P5–3

PROJECT NO.: 92–522
DRAWING NO.: STR–27
SHEET NO.:

10:36:25 AM
11/13/2012
T:\V8CADD\Projects\PBI8735\FD\Structures\Contract_Sheets\Br00163\str-27-092522-00163.dgn

BORING A2-1 (1 OF 3)

R. Posa	SM - 001 - M REV. 1/94	BORING REPORT	Hole No. A2-1
DRILLER	STATE OF CONNECTICUT		Line & Station I-95 1+082.7
E. Fulton	DEPARTMENT OF TRANSPORTATION		Offset 29.4 LT
INSPECTOR	TOWN: New Haven / West Haven, CT		N. Coordinate 202454.0
Parsons Brinckerhoff Quade & Douglas, Inc.	PROJECT NAME: Reconstruction I-95 Over West River		E. Coordinate 289109.2
SOILS ENGINEER	PROJECT NUMBER: 92-533		Parsons Brinckerhoff Quade & Douglas, Inc.
	BORING CONTRACTOR: General Borings, Inc.		PRIME DESIGNER

Surface Elevation: 2.91
Date Started: 7/8/2002
Date Finished: 7/9/2002
Groundwater Observations
@ ~2.13 m after hours
@ m after hours

	Casing						Auger		Mud	Sampler		Core Barrel			
Utilized			X			X	X	X							
Type	BW	NW	HW	Pipe	Solid	Hollow	Bentonite	SS	UP	B (st)	B (dt)	NX (st)	NV II (dt)		
Size I.D. (mm)	60	76	100	64		150	X	36		35	35	55	55		
Hammer (kg)	136	136	136	136			Bit	63.5		Type		Diamond			
Fall (m)	0.6	0.6	0.6	0.6			0.80 mm	0.76		of Bit		Carbide			

DEPTH (Casing blows per half meter)	SAMPLE NO.	PEN. m	REC. m	Type	BLOWS PER 0.15 METERS ON SAMPLER 0 - 0.15	0.15 - 0.30	0.30 - 0.45	0.45 - 0.60	STRATA CHANGE: DEPTH, ELEV.	FIELD IDENTIFICATION OF SOIL, REMARKS (INCL. COLOR, LOSS OF WASH WATER, ETC.)
0.00 - 0.60	1	0.60	0.25	D	6	20	24	31		Brown SILT, little f-c sand, trace f gravel, roots.
1.52 - 2.12	2	0.60	0.46	D	13	12	10	9		Red brown f SAND, trace silt, moist.
3.05 - 3.65	3	0.60	0.30	D	5	8	12	14		Brown f SAND, trace silt, trace c sand, trace shells.
4.57 - 5.17	4	0.03	0.00	D	50/0.03m					Rods bouncing, pulled up SS to roller bit past obstruction, ~0.30m.
6.10 - 6.70	5	0.60	0.30	D	31	37	24	7		Black SILT, little f-c sand, trace f gravel, creosote soaked.
									7.16	
7.62 - 8.22	6	0.60	0.60	D	2	1/0.30m		1	-4.25	Top 0.53m: Gray organic SILT, trace clay, little fibers. Bottom 0.08m: Gray organic SILT, little shells.
9.14 - 9.74	1	0.60	0.60	D	1	1/0.30m		1		Gray organic SILT, trace fibers, trace shells, little clay.
10.67 - 11.27	8	0.60	0.60	D	1	1/0.30m		1		Gray organic SILT, trace fibers, trace shells, little clay.
12.19 - 12.79	9	0.60	0.60	D	1	1/0.30m		1		Gray organic SILT, trace fibers, trace shells, trace f sand lenses (~1.59 mm).
									13.26	
13.72 - 14.32	10	0.60	0.60	D	4	6	11	12	-10.35	Red brown f SAND, trace c sand, little silt.

Casing Size	From	To	Meters of Earth	Rock
100 mm	0	3.05	35.66	
			No. of Samples	
			24D	

NOTES: Raising and dropping of the 140-lb (63.5kg) safety hammer was accomplished using a wire winch.

SAMPLE TYPE CODING: D=Driven C=Core A=Auger UP=Undisturbed Piston V=Vane Test
PROPORTIONS USED: Trace = 1 -10%, Little = 10 - 20%, Some = 20 - 35%, And = 35 - 50%

Hole No. A2-1 Sheet 1 of 3

BORING A2-1 (2 OF 3)

R. Posa	SM - 001 - M REV. 1/94	BORING REPORT	Hole No. A2-1
DRILLER	STATE OF CONNECTICUT		Line & Station I-95 1+082.7
E. Fulton	DEPARTMENT OF TRANSPORTATION		Offset 29.4 LT
INSPECTOR	TOWN: New Haven / West Haven, CT		N. Coordinate 202454.0
Parsons Brinckerhoff Quade & Douglas, Inc.	PROJECT NAME: Reconstruction I-95 Over West River		E. Coordinate 289109.2
SOILS ENGINEER	PROJECT NUMBER: 92-533		Parsons Brinckerhoff Quade & Douglas, Inc.
	BORING CONTRACTOR: General Borings, Inc.		PRIME DESIGNER

Surface Elevation: 2.91
Date Started: 7/8/2002
Date Finished: 7/9/2002
Groundwater Observations
@ ~2.13 m after hours
@ m after hours

	Casing						Auger		Mud	Sampler		Core Barrel			
Utilized			X			X	X	X	X						
Type	BW	NW	HW	Pipe	Solid	Hollow	Bentonite	SS	UP	B (st)	B (dt)	NX (st)	NV II (dt)		
Size I.D. (mm)	60	76	100	64		150	X	36		35	35	55	55		
Hammer (kg)	136	136	136	136			Bit	63.5		Type	X	Diamond			
Fall (m)	0.6	0.6	0.6	0.6			0.80 mm	0.76		of Bit		Carbide			

DEPTH (Casing blows per half meter)	SAMPLE NO.	PEN. m	REC. m	Type	BLOWS PER 0.15 METERS ON SAMPLER 0 - 0.15	0.15 - 0.30	0.30 - 0.45	0.45 - 0.60	STRATA CHANGE: DEPTH, ELEV.	FIELD IDENTIFICATION OF SOIL, REMARKS (INCL. COLOR, LOSS OF WASH WATER, ETC.)
15.24 - 15.84	11	0.60	0.15	D	11	12	12	13		Top 0.10m: Red brown / brown f-c SAND, trace f gravel, trace silt. Bottom 0.05m: Red brown f SAND, some silt.
16.76 - 17.36	12	0.60	0.30	D	10	12	13	16		Red brown f SAND, little silt, trace m-c gravel.
18.29 - 18.89	13	0.60	0.30	D	7	13	15	18		Red brown f SAND, some silt.
19.81 - 20.41	14	0.60	0.46	D	12	14	14	20		Red brown f SAND, some silt.
21.34 - 21.94	15	0.60	0.38	D	12	15	21	23		Red brown f SAND, some silt.
									22.40	
22.86 - 23.46	16	0.60	0.30	D	14	16	19	24	-19.49	Red brown SILT, some f sand, trace clayey silt seams.
24.38 - 24.98	17	0.60	0.51	D	7	10	11	14		Red brown SILT and f SAND.
25.91 - 26.51	18	0.60	0.25	D	11	14	19	23		Red brown SILT and f SAND.
27.43 - 28.03	19	0.60	0.25	D	12	13	17	21		Red brown SILT, little to some f sand, saturated.
28.96 - 29.56	20	0.60	0.30	D	11	19	20	26		Red brown SILT, little to some f sand, saturated.

Casing Size	From	To	Meters of Earth	Rock
100 mm	0	3.05	35.66	
			No. of Samples	
			24D	

NOTES: Raising and dropping of the 140-lb (63.5kg) safety hammer was accomplished using a wire winch.

SAMPLE TYPE CODING: D=Driven C=Core A=Auger UP=Undisturbed Piston V=Vane Test
PROPORTIONS USED: Trace = 1 -10%, Little = 10 - 20%, Some = 20 - 35%, And = 35 - 50%

Hole No. A2-1 Sheet 2 of 3

BORING A2-1 (3 OF 3)

R. Posa	SM - 001 - M REV. 1/94	BORING REPORT	Hole No. A2-1
DRILLER	STATE OF CONNECTICUT		Line & Station I-95 1+082.7
E. Fulton	DEPARTMENT OF TRANSPORTATION		Offset 29.4 LT
INSPECTOR	TOWN: New Haven / West Haven, CT		N. Coordinate 202454.0
Parsons Brinckerhoff Quade & Douglas, Inc.	PROJECT NAME: Reconstruction I-95 Over West River		E. Coordinate 289109.2
SOILS ENGINEER	PROJECT NUMBER: 92-533		Parsons Brinckerhoff Quade & Douglas, Inc.
	BORING CONTRACTOR: General Borings, Inc.		PRIME DESIGNER

Surface Elevation: 2.91
Date Started: 7/8/2002
Date Finished: 7/9/2002
Groundwater Observations
@ ~2.13 m after hours
@ m after hours

	Casing						Auger		Mud	Sampler		Core Barrel			
Utilized			X			X	X	X							
Type	BW	NW	HW	Pipe	Solid	Hollow	Bentonite	SS	UP	B (st)	B (dt)	NX (st)	NV II (dt)		
Size I.D. (mm)	60	76	100	64		150	X	36		35	35	55	55		
Hammer (kg)	136	136	136	136			Bit	63.5		Type		Diamond			
Fall (m)	0.6	0.6	0.6				0.80 mm	0.76		of Bit		Carbide			

DEPTH (Casing blows per half meter)	SAMPLE NO.	PEN. m	REC. m	Type	BLOWS PER 0.15 METERS ON SAMPLER 0 - 0.15	0.15 - 0.30	0.30 - 0.45	0.45 - 0.60	STRATA CHANGE: DEPTH, ELEV.	FIELD IDENTIFICATION OF SOIL, REMARKS (INCL. COLOR, LOSS OF WASH WATER, ETC.)
30.48 - 31.08	21	0.60	0.30	D	7	8	9	22		Top 0.15m: Red brown SILT and f SAND, rapid dilatancy. Bottom 0.15m: F-m gravelly c SAND wash.
32.00 - 32.60	22	0.60	0.25	D	18	25	31	36		Red brown SILT and f SAND, trace f sand seams (~1.59 mm).
33.53 - 34.13	23	0.60	0.18	D	17	24	20	23		Red brown SILT and f SAND, rapid dilatancy.
35.05 - 35.65	24	0.60	0.30	D	15	19	21	25		Red brown SILT and f SAND. Note: Every rod being pulled up is covered in black creosote.
									35.65	
									-32.74	Bottom of boring 35.656 m.

Casing Size	From	To	Meters of Earth	Rock
100 mm	0	3.05	35.66	
			No. of Samples	
			24D	

NOTES: Raising and dropping of the 140-lb (63.5kg) safety hammer was accomplished using a wire winch.

SAMPLE TYPE CODING: D=Driven C=Core A=Auger UP=Undisturbed Piston V=Vane Test
PROPORTIONS USED: Trace = 1 -10%, Little = 10 - 20%, Some = 20 - 35%, And = 35 - 50%

Hole No. A2-1 Sheet 3 of 3

REV.	DATE	DESCRIPTION	SHEET. NO.
		REVISIONS	

THE INFORMATION, INCLUDING ESTIMATED QUANTITIES OF WORK, SHOWN ON THESE SHEETS IS BASED ON LIMITED INVESTIGATIONS BY THE STATE AND IS IN NO WAY WARRANTED TO INDICATE THE CONDITIONS OR ACTUAL QUANTITIES OF WORK WHICH WILL BE REQUIRED.

DESIGNER: R. BORJESON
DRAFTER: G. LEE
CHECKED BY: T. LALIBERTE
DATE CHECKED: 10-11-02

STATE OF CONNECTICUT
DEPARTMENT OF TRANSPORTATION

ENGINEER: PB AMERICAS, INC.
APPROVED BY: DATE:

PROJECT TITLE: RECONSTRUCTION OF I-95 OVER WEST RIVER (BRIDGE NO. 00163)
CADD PLOTTED 11/13/2012

TOWN: NEW HAVEN / WEST HAVEN
DRAWING TITLE: BORINGS – A2-1

PROJECT NO.: 92-522
DRAWING NO.: STR-28
SHEET NO.:

10:37:28 AM
11/13/2012
T:\V8CADD Projects\PB\8735\FD\Structures\Contract_Sheets\Br00163-str-28-092522-00163.dgn

BORING A2-2 (1 OF 3)

M. Jennett	SM - 001 - M REV. 1/94	BORING REPORT	Hole No.	A2-2
DRILLER	STATE OF CONNECTICUT		Line & Station	I-95 1+1069.3
E. Fulton	DEPARTMENT OF TRANSPORTATION		Offset	6.8 LT
INSPECTOR	TOWN:	New Haven / West Haven, CT	N. Coordinate	202430.5
Parsons Brinckerhoff Quade & Douglas, Inc.	PROJECT NAME:	Reconstruction I-95 Over West River	E. Coordinate	289097.5
SOILS ENGINEER	PROJECT NUMBER:	92-533	Parsons Brinckerhoff Quade & Douglas, Inc.	
	BORING CONTRACTOR:	General Borings, Inc.	PRIME DESIGNER	

			Casing				Auger		Mud	Sampler		Core Barrel			
Surface Elevation:	2.92														
Date Started:	8/22/2002	Utilized			X			X	X	X	X				
Date Finished:	8/23/2002	Type	BW	NW	HW	Pipe	Solid	Hollow	Bentonite	SS	UP	B (st)	B (dt)	NX (st)	NV II (dt)
Groundwater Observations		Size I.D. (mm)	60	76	100	64		150	X	36		35	35	55	55
@ ~2.44 m after	hours	Hammer (kg)	136	136	136	136			Bit	63.5		Type		Diamond	
@ m after	hours	Fall (m)	0.6	0.6	0.6	0.6			0.80 mm	0.76		of Bit		Carbide	

DEPTH	Casing blows per half meter	SAMPLE DEPTH IN METERS FROM - TO	NO.	PEN. m	REC. m	Type	BLOWS PER 0.15 METERS ON SAMPLER 0 - 0.15	0.15 - 0.30	0.30 - 0.45	0.45 - 0.60	STRATA CHANGE: DEPTH, ELEV.	FIELD IDENTIFICATION OF SOIL, REMARKS (INCL. COLOR, LOSS OF WASH WATER, ETC.)
		0.00 - 0.60	1	0.60	0.30	D	5	7	9	13		Brown gray f SAND, little silt, trace c sand, moist.
		1.52 - 2.12	2	0.60	0.36	D	11	13	13	12		Brown gray, trace silt, trace c sand.
		2.44 - 3.04	3	0.60	0.46	D	2	15	10	14		Top 0.08m: Brown f SAND, little silt. Bottom 0.38m: Black f SAND, little silt, trace c sand, trace f gravel, trace glass shards, trace metal, covered in creosote, wet.
5		4.57 - 5.17	4	0.60	0.05	D	14	4	3	5		Black / dark gray c SAND and f GRAVEL, trace silt, trace f sand, wet.
											5.64	
		6.10 - 6.70	5	0.60	0.13	D	1	1	1	2	-2.72	Dark gray organic SILT, trace f sand, trace clay, trace shells, soft. pp = 0.00, 0.00, 0.00 tons / ft ^{2}
		7.62 - 8.22	6	0.60	0.41	D	1	2	1	1		Dark gray organic SILT, trace clay, trace shells, soft. pp = 0.00, 0.00, 0.00 tons / ft ^{2}
		8.23 - 8.83	1	0.60	0.60	D						Piston
		9.14 - 9.74	7	0.60	0.46	D	1	2	2	2		Gray organic SILT, trace clay, little shells, very soft. pp = 0.00, 0.00, 0.00 tons / ft ^{2}
10												
		10.67 - 11.27	8	0.60	0.51	D	1/0.30m		1	1		Gray organic SILT, trace clay, little shells, very soft.
		11.28 - 11.88	2	0.60	0.60	UP						Piston
		12.19 - 12.79	9	0.60	0.51	D	1	2	2	2		Gray organic SILT, trace clay, little shells, very soft.
		13.72 - 14.32	10	0.60	0.38	D	1	2	2	3		Gray organic SILT, trace to little clay, little shells. pp = 0.25, 0.25, 0.25 tons / ft ^{2}
15											14.78	

Casing			Meters of	
Size	From	To	Earth	Rock
100 mm	0	3.05	35.66	
			No. of Samples	
			24D/2UP	

NOTES: Raising and dropping of the 140-lb (63.5kg) safety hammer was accomplished using a wire winch.

SAMPLE TYPE CODING: D=Driven C=Core A=Auger UP=Undisturbed Piston V=Vane Test
PROPORTIONS USED: Trace = 1 -10%, Little = 10 - 20%, Some = 20 - 35%, And = 35 - 50%

Hole No. A2-2
Sheet 1 of 3

BORING A2-2 (2 OF 3)

M. Jennett	SM - 001 - M REV. 1/94	BORING REPORT	Hole No.	A2-2
DRILLER	STATE OF CONNECTICUT		Line & Station	I-95 1+1069.3
E. Fulton	DEPARTMENT OF TRANSPORTATION		Offset	6.8 LT
INSPECTOR	TOWN:	New Haven / West Haven, CT	N. Coordinate	202430.5
Parsons Brinckerhoff Quade & Douglas, Inc.	PROJECT NAME:	Reconstruction I-95 Over West River	E. Coordinate	289097.5
SOILS ENGINEER	PROJECT NUMBER:	92-533	Parsons Brinckerhoff Quade & Douglas, Inc.	
	BORING CONTRACTOR:	General Borings, Inc.	PRIME DESIGNER	

			Casing				Auger		Mud	Sampler		Core Barrel			
Surface Elevation:	2.92														
Date Started:	8/22/2002	Utilized			X			X	X	X	X				
Date Finished:	8/23/2002	Type	BW	NW	HW	Pipe	Solid	Hollow	Bentonite	SS	UP	B (st)	B (dt)	NX (st)	NV II (dt)
Groundwater Observations		Size I.D. (mm)	60	76	100	64		150	X	36		35	35	55	55
@ ~2.44 m after	hours	Hammer (kg)	136	136	136	136			Bit	63.5		Type	X	Diamond	
@ m after	hours	Fall (m)	0.6	0.6	0.6	0.6			0.80 mm	0.76		of Bit		Carbide	

DEPTH	Casing blows per half meter	SAMPLE DEPTH IN METERS FROM - TO	NO.	PEN. m	REC. m	Type	BLOWS PER 0.15 METERS ON SAMPLER 0 - 0.15	0.15 - 0.30	0.30 - 0.45	0.45 - 0.60	STRATA CHANGE: DEPTH, ELEV.	FIELD IDENTIFICATION OF SOIL, REMARKS (INCL. COLOR, LOSS OF WASH WATER, ETC.)
		15.24 - 15.84	11	0.60	0.25	D	WOR	WOR	6	7	-11.86	Gray brown f SAND, trace silt, trace f gravel.
		16.76 - 17.36	12	0.60	0.00	D	11	10	12	13		No Recovery.
		18.29 - 18.89	13	0.60	0.08	D	3	7	4	8		Red brown f SAND and SILT, saturated. (Sample slipped out of spoon and on to ground. None of sample made it to jar.)
											19.35	
20		19.81 - 20.41	14	0.60	0.51	D	4	5	6	9	-16.43	Red brown SILT, little to some f sand, saturated, rapid dilatancy.
		21.34 - 21.94	15	0.60	0.43	D	6	9	11	11		Red brown SILT, little to some f sand, saturated, rapid dilatancy.
		22.86 - 23.46	16	0.60	0.30	D	5	5	7	9		Red brown SILT and f SAND, saturated.
		24.38 - 24.98	17	0.60	0.36	D	13	9	18	15		Red brown SILT, some f sand.
25												
		25.91 - 26.51	18	0.60	0.41	D	12	11	12	19		Red brown SILT, some f sand.
		27.43 - 28.03	19	0.60	0.30	D	6	3	5	8		Red brown SILT, little to some f sand, saturated.
		28.96 - 29.56	20	0.60	0.38	D	7	6	7	7		Red brown SILT, some f sand.
30												

Casing			Meters of	
Size	From	To	Earth	Rock
100 mm	0	3.05	35.66	
			No. of Samples	
			24D/2UP	

NOTES: Raising and dropping of the 140-lb (63.5kg) safety hammer was accomplished using a wire winch.

SAMPLE TYPE CODING: D=Driven C=Core A=Auger UP=Undisturbed Piston V=Vane Test
PROPORTIONS USED: Trace = 1 -10%, Little = 10 - 20%, Some = 20 - 35%, And = 35 - 50%

Hole No. A2-2
Sheet 2 of 3

BORING A2-2 (3 OF 3)

M. Jennett	SM - 001 - M REV. 1/94	BORING REPORT	Hole No.	A2-2
DRILLER	STATE OF CONNECTICUT		Line & Station	I-95 1+1069.3
E. Fulton	DEPARTMENT OF TRANSPORTATION		Offset	6.8 LT
INSPECTOR	TOWN:	New Haven / West Haven, CT	N. Coordinate	202430.5
Parsons Brinckerhoff Quade & Douglas, Inc.	PROJECT NAME:	Reconstruction I-95 Over West River	E. Coordinate	289097.5
SOILS ENGINEER	PROJECT NUMBER:	92-533	Parsons Brinckerhoff Quade & Douglas, Inc.	
	BORING CONTRACTOR:	General Borings, Inc.	PRIME DESIGNER	

			Casing				Auger		Mud	Sampler		Core Barrel			
Surface Elevation:	2.92														
Date Started:	8/22/2002	Utilized			X			X	X	X	X				
Date Finished:	8/23/2002	Type	BW	NW	HW	Pipe	Solid	Hollow	Bentonite	SS	UP	B (st)	B (dt)	NX (st)	NV II (dt)
Groundwater Observations		Size I.D. (mm)	60	76	100	64		150	X	36		35	35	55	55
@ ~2.44 m after	hours	Hammer (kg)	136	136	136	136			Bit	63.5		Type		Diamond	
@ m after	hours	Fall (m)	0.6	0.6	0.6	0.6			0.80 mm	0.76		of Bit		Carbide	

DEPTH	Casing blows per half meter	SAMPLE DEPTH IN METERS FROM - TO	NO.	PEN. m	REC. m	Type	BLOWS PER 0.15 METERS ON SAMPLER 0 - 0.15	0.15 - 0.30	0.30 - 0.45	0.45 - 0.60	STRATA CHANGE: DEPTH, ELEV.	FIELD IDENTIFICATION OF SOIL, REMARKS (INCL. COLOR, LOSS OF WASH WATER, ETC.)
		30.48 - 31.08	21	0.60	0.30	D	4	3	2	8		Red brown SILT, trace f sand, saturated, rapid dilatancy.
		32.00 - 32.60	22	0.60	0.41	D	14	14	18	29		Red brown SILT, little f sand, trace clayey silt seams (~0.79 mm).
		33.53 - 34.13	23	0.60	0.36	D	15	17	16	21		Red brown SILT, little f sand, trace clayey silt seams (~0.79 mm).
35												
		35.05 - 35.65	24	0.60	0.05	D	5	2	5	5		Red brown SILT, trace f sand, saturated.
											35.65	
											-32.73	Bottom of Boring 35.65 m.
40												
45												

Casing			Meters of	
Size	From	To	Earth	Rock
100 mm	0	3.05	35.66	
			No. of Samples	
			24D/2UP	

NOTES: Raising and dropping of the 140-lb (63.5kg) safety hammer was accomplished using a wire winch.

SAMPLE TYPE CODING: D=Driven C=Core A=Auger UP=Undisturbed Piston V=Vane Test
PROPORTIONS USED: Trace = 1 -10%, Little = 10 - 20%, Some = 20 - 35%, And = 35 - 50%

Hole No. A2-2
Sheet 3 of 3

REV.	DATE	DESCRIPTION	SHEET. NO
		REVISIONS	

THE INFORMATION, INCLUDING ESTIMATED QUANTITIES OF WORK, SHOWN ON THESE SHEETS IS BASED ON LIMITED INVESTIGATIONS BY THE STATE AND IS IN NO WAY WARRANTED TO INDICATE THE CONDITIONS OR ACTUAL QUANTITIES OF WORK WHICH WILL BE REQUIRED.

DESIGNER: R. BORJESON
DRAFTER: G. LEE
CHECKED BY: T. LALIBERTE
DATE CHECKED: 10-11-02

STATE OF CONNECTICUT
DEPARTMENT OF TRANSPORTATION

ENGINEER: PB AMERICAS, INC.
APPROVED BY: DATE:

PROJECT TITLE: RECONSTRUCTION OF I-95 OVER WEST RIVER (BRIDGE NO. 00163)
CADD
PLOTTED 11/13/2012

TOWN: NEW HAVEN / WEST HAVEN
DRAWING TITLE: BORINGS – A2-2

PROJECT NO.: 92-522
DRAWING NO.: STR-29
SHEET NO.:

10:38:30 AM
11/13/2012
T:\V8CADD\Projects\PB\8735\FD\Structures\Contract_Sheets\Br00163\str-29-092522-00163.dgn

BORING A2-3 (1 OF 3)

M. Jennett	SM - 001 - M REV. 1/94 BORING REPORT	Hole No.	A2-3
DRILLER	STATE OF CONNECTICUT	Line & Station	I-95 1+058.1
E. Fulton	DEPARTMENT OF TRANSPORTATION	Offset	24.6 RT
INSPECTOR	TOWN: New Haven / West Haven, CT	N. Coordinate	202398.4
Parsons Brinckerhoff Quade & Douglas, Inc.	PROJECT NAME: Reconstruction I-95 Over West River	E. Coordinate	289088.6
SOILS ENGINEER	PROJECT NUMBER: 92-533		Parsons Brinckerhoff Quade & Douglas, Inc.
	BORING CONTRACTOR: General Borings, Inc.		PRIME DESIGNER

Surface Elevation: 2.94			Casing			Auger		Mud	Sampler		Core Barrel					
Date Started: 7/8/2002		Utilized			X			X	X	X						
Date Finished: 7/9/2002		Type	BW	NW	HW	Pipe	Solid	Hollow	Bentonite	SS	UP	B (st)	B (dt)	NX (st)	NV II (dt)
Groundwater Observations		Size I.D. (mm)	60	76	100	64		150	X	36		35	35	55	55
@ ~2.29 m after hours		Hammer (kg)	136	136	136	136			Bit	63.5		Type		Diamond	
@ m after hours		Fall (m)	0.6	0.6	0.6	0.6			0.80 mm	0.76		of Bit		Carbide	

DEPTH (meter)	Casing blows per half meter	DEPTH IN METERS FROM - TO	SAMPLE NO.	PEN. m	REC. m	Type	BLOWS PER 0.15 METERS ON SAMPLER 0 - 0.15	0.15 - 0.30	0.30 - 0.45	0.45 - 0.60	STRATA CHANGE: DEPTH, ELEV.	FIELD IDENTIFICATION OF SOIL, REMARKS (INCL. COLOR, LOSS OF WASH WATER, ETC.)
		0.00 - 0.60	1	0.60	0.41	D	6	9	10	11		Top 0.20m: Brown SILT, some to little f sand, trace f-c gravel. Bottom 0.20m: Light brown f SAND, trace c sand.
		1.52 - 2.12	2	0.60	0.20	D	3	4	7	20		Top 0.05m: Light brown f SAND, trace c sand. Middle 0.08m: Light brown f SAND, trace c sand. Bottom 0.08m: Dark brown / black, ASH / CINDERS, trace f-c gravel.
		2.44 - 3.04	3	0.60	0.08	D	6	8	8	12		Brown f SAND, trace f-c gravel, trace c sand, trace silt, wet.
5		4.57 - 5.17	4	0.30	0.15	D	34	17	50			Gray f-c SAND, little f-c gravel, trace silt, gravel lodged in tip.
		6.10 - 6.70	5	0.30	0.15	D	27	10				Black f-c SAND, trace to little f-c gravel, trace silt, wet. Note: Gravel wedged between rods and casing, while driving spoon casing was being pulled down. Driller stopped after 0.30m.
		7.62 - 8.22	6	0.60	0.15	D	9	6	9	10		Dark brown / black f SAND, little silt, trace f gravel.
10		9.14 - 9.74	7	0.60	0.03	D	13	5	5	5		Dark gray / black f SAND, little to trace silt, piece of c gravel in tip.
											10.21	
		10.67 - 11.27	8	0.60	0.51	D	3	2	3	3	-7.27	Gray organic SILT, trace shells, little f sand, trace clay.
		12.19 - 12.79	9	0.60	0.20	D	3	3	3	4		Gray organic SILT, trace shells, little f sand, trace clay.
											13.26	
		13.72 - 14.32	10	0.60	0.46	D	2	3	2	7	-10.32	Gray f SAND, little silt, trace organics.
15												

Casing Size	From	To	Meters of Earth	Rock
100 mm	0	3.05	34.13	
			No. of Samples	
			23D	

NOTES: Raising and dropping of the 140-lb (63.5kg) safety hammer was accomplished using a wire winch.

SAMPLE TYPE CODING: D=Driven C=Core A=Auger UP=Undisturbed Piston V=Vane Test
PROPORTIONS USED: Trace = 1 -10%, Little = 10 - 20%, Some = 20 - 35%, And = 35 - 50%

Hole No. A2-3 Sheet 1 of 3

BORING A2-3 (2 OF 3)

M. Jennett	SM - 001 - M REV. 1/94 BORING REPORT	Hole No.	A2-3
DRILLER	STATE OF CONNECTICUT	Line & Station	I-95 1+058.1
E. Fulton	DEPARTMENT OF TRANSPORTATION	Offset	24.6 RT
INSPECTOR	TOWN: New Haven / West Haven, CT	N. Coordinate	202398.4
Parsons Brinckerhoff Quade & Douglas, Inc.	PROJECT NAME: Reconstruction I-95 Over West River	E. Coordinate	289088.6
SOILS ENGINEER	PROJECT NUMBER: 92-533		Parsons Brinckerhoff Quade & Douglas, Inc.
	BORING CONTRACTOR: General Borings, Inc.		PRIME DESIGNER

Surface Elevation: 2.94			Casing			Auger		Mud	Sampler		Core Barrel					
Date Started: 7/8/2002		Utilized			X			X	X	X	X					
Date Finished: 7/9/2002		Type	BW	NW	HW	Pipe	Solid	Hollow	Bentonite	SS	UP	B (st)	B (dt)	NX (st)	NV II (dt)
Groundwater Observations		Size I.D. (mm)	60	76	100	64		150	X	36		35	35	55	55
@ ~2.29 m after hours		Hammer (kg)	136	136	136	136			Bit	63.5		Type	X	Diamond	
@ m after hours		Fall (m)	0.6	0.6	0.6	0.6			0.80 mm	0.76		of Bit		Carbide	

DEPTH (meter)	Casing blows per half meter	DEPTH IN METERS FROM - TO	SAMPLE NO.	PEN. m	REC. m	Type	BLOWS PER 0.15 METERS ON SAMPLER 0 - 0.15	0.15 - 0.30	0.30 - 0.45	0.45 - 0.60	STRATA CHANGE: DEPTH, ELEV.	FIELD IDENTIFICATION OF SOIL, REMARKS (INCL. COLOR, LOSS OF WASH WATER, ETC.)
		15.24 - 15.84	11	0.60	0.25	D	9	11	12	7		Red brown f SAND, little silt.
		16.76 - 17.36	12	0.60	0.23	D	7	10	11	15		Bottom 0.05m: Brown f-c SAND, f-m gravel, trace silt. hole, running out of water and betonite. Red brown f SAND, little silt.
		18.29 - 18.89	13	0.60	0.51	D	2	2	3	5		Red brown f SAND, little silt, saturated.
20		19.81 - 20.41	14	0.60	0.25	D	3	5	7	9		Red brown f SAND, some silt.
		21.34 - 21.94	15	0.60	0.51	D	1	1	2	8		Top 0.41m: Red brown f SAND, some silt. Bottom 0.10m: Red brown f SAND, little silt.
											22.40	
		22.86 - 23.46	16	0.60	0.30	D	12	15	17	17	-19.46	Red brown SILT, little to some f sand.
25		24.38 - 24.98	17	0.60	0.25	D	6	12	16	19		Red brown SILT, some f sand.
		25.91 - 26.51	18	0.60	0.30	D	11	18	19	20		Red brown SILT and f SAND, saturated.
		27.43 - 28.03	19	0.60	0.60	D	6	2	2	8		Top 0.20m: Red brown SILT and f SAND, rapid dilatancy. Middle 0.15m: Red brown f SAND, some silt. Bottom 0.25m: Red brown SILT and f SAND, rapid dilatancy.
30		28.96 - 29.56	20	0.60	0.00	D	3	3	5	9		No Recovery - lost mud.

Casing Size	From	To	Meters of Earth	Rock
			34.13	
			No. of Samples	
			23D	

NOTES: Raising and dropping of the 140-lb (63.5kg) safety hammer was accomplished using a wire winch.

SAMPLE TYPE CODING: D=Driven C=Core A=Auger UP=Undisturbed Piston V=Vane Test
PROPORTIONS USED: Trace = 1 -10%, Little = 10 - 20%, Some = 20 - 35%, And = 35 - 50%

Hole No. A2-3 Sheet 2 of 3

BORING A2-3 (3 OF 3)

M. Jennett	SM - 001 - M REV. 1/94 BORING REPORT	Hole No.	A2-3
DRILLER	STATE OF CONNECTICUT	Line & Station	I-95 1+058.1
E. Fulton	DEPARTMENT OF TRANSPORTATION	Offset	24.6 RT
INSPECTOR	TOWN: New Haven / West Haven, CT	N. Coordinate	202398.4
Parsons Brinckerhoff Quade & Douglas, Inc.	PROJECT NAME: Reconstruction I-95 Over West River	E. Coordinate	289088.6
SOILS ENGINEER	PROJECT NUMBER: 92-533		Parsons Brinckerhoff Quade & Douglas, Inc.
	BORING CONTRACTOR: General Borings, Inc.		PRIME DESIGNER

Surface Elevation: 2.94			Casing			Auger		Mud	Sampler		Core Barrel					
Date Started: 7/8/2002		Utilized			X			X	X	X						
Date Finished: 7/9/2002		Type	BW	NW	HW	Pipe	Solid	Hollow	Bentonite	SS	UP	B (st)	B (dt)	NX (st)	NV II (dt)
Groundwater Observations		Size I.D. (mm)	60	76	100	64		150	X	36		35	35	55	55
@ ~2.29 m after hours		Hammer (kg)	136	136	136	136			Bit	63.5		Type		Diamond	
@ m after hours		Fall (m)	0.6	0.6	0.6				0.80 mm	0.76		of Bit		Carbide	

DEPTH (meter)	Casing blows per half meter	DEPTH IN METERS FROM - TO	SAMPLE NO.	PEN. m	REC. m	Type	BLOWS PER 0.15 METERS ON SAMPLER 0 - 0.15	0.15 - 0.30	0.30 - 0.45	0.45 - 0.60	STRATA CHANGE: DEPTH, ELEV.	FIELD IDENTIFICATION OF SOIL, REMARKS (INCL. COLOR, LOSS OF WASH WATER, ETC.)
		30.48 - 31.08	21	0.60	0.51	D	6	3	9	14		Red brown SILT and f SAND, rapid dilatancy. Note: From 24.38m - 30.48m drillers lost 4 tubs of mud down hole, running out of water and bentonite.
		32.00 - 32.60	22	0.60	0.51	D	7	2	3	9		Red brown SILT and f SAND, trace clayey silt seams (very thin), saturated, rapid dilatancy.
		33.53 - 34.13	23	0.60	0.61	D	8	2	1	13		Red brown SILT and f SAND, trace clayey silt seams (very thin), saturated, rapid dilatancy.
35											34.13	Drillers out of mud and water, unable to continue to 35.66m.
											-31.19	Bottom of Boring 34.13 m.
40												
45												

Casing Size	From	To	Meters of Earth	Rock
			34.13	
			No. of Samples	
			23D	

NOTES: Raising and dropping of the 140-lb (63.5kg) safety hammer was accomplished using a wire winch.

SAMPLE TYPE CODING: D=Driven C=Core A=Auger UP=Undisturbed Piston V=Vane Test
PROPORTIONS USED: Trace = 1 -10%, Little = 10 - 20%, Some = 20 - 35%, And = 35 - 50%

Hole No. A2-3 Sheet 3 of 3

REV.	DATE	DESCRIPTION	SHEET. NO.
		REVISIONS	

THE INFORMATION, INCLUDING ESTIMATED QUANTITIES OF WORK, SHOWN ON THESE SHEETS IS BASED ON LIMITED INVESTIGATIONS BY THE STATE AND IS IN NO WAY WARRANTED TO INDICATE THE CONDITIONS OR ACTUAL QUANTITIES OF WORK WHICH WILL BE REQUIRED.

DESIGNER: R. BORJESON
DRAFTER: G. LEE
CHECKED BY: T. LALIBERTE
DATE CHECKED: 10–11–02

STATE OF CONNECTICUT
DEPARTMENT OF TRANSPORTATION

ENGINEER: PB AMERICAS, INC.
APPROVED BY: DATE:

PROJECT TITLE: RECONSTRUCTION OF I–95 OVER WEST RIVER (BRIDGE NO. 00163)
CADD PLOTTED 11/13/2012

TOWN: NEW HAVEN / WEST HAVEN
DRAWING TITLE: BORINGS – A2–3

PROJECT NO.: 92–522
DRAWING NO.: STR–30
SHEET NO.:

10:41:38 AM
11/13/2012
T:\V8CADD\Projects\PB\6735\FD\Structures\Contract_Sheets\Br00163.dgn-30-092522-00163.dgn

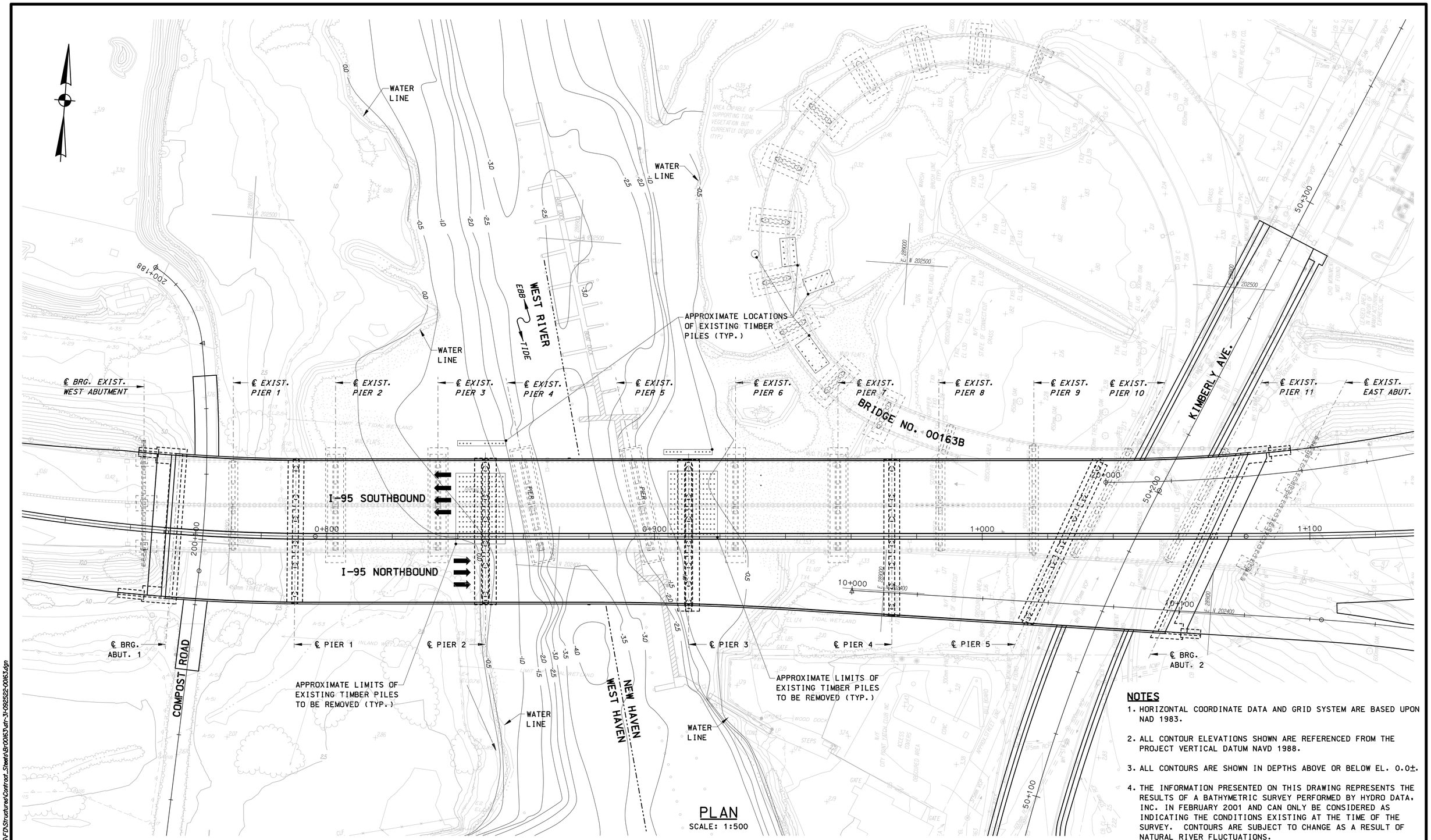

PLAN

SCALE: 1:500

NOTES

1. HORIZONTAL COORDINATE DATA AND GRID SYSTEM ARE BASED UPON NAD 1983.
2. ALL CONTOUR ELEVATIONS SHOWN ARE REFERENCED FROM THE PROJECT VERTICAL DATUM NAVD 1988.
3. ALL CONTOURS ARE SHOWN IN DEPTHS ABOVE OR BELOW EL. 0.0±.
4. THE INFORMATION PRESENTED ON THIS DRAWING REPRESENTS THE RESULTS OF A BATHYMETRIC SURVEY PERFORMED BY HYDRO DATA, INC. IN FEBRUARY 2001 AND CAN ONLY BE CONSIDERED AS INDICATING THE CONDITIONS EXISTING AT THE TIME OF THE SURVEY. CONTOURS ARE SUBJECT TO CHANGE AS A RESULT OF NATURAL RIVER FLUCTUATIONS.

REV.	DATE	DESCRIPTION	SHEET. NO.
		REVISIONS	

THE INFORMATION, INCLUDING ESTIMATED QUANTITIES OF WORK, SHOWN ON THESE SHEETS IS BASED ON LIMITED INVESTIGATIONS BY THE STATE AND IS IN NO WAY WARRANTED TO INDICATE THE CONDITIONS OR ACTUAL QUANTITIES OF WORK WHICH WILL BE REQUIRED.

DESIGNER: D. BAGDASARIAN
DRAFTER: G. LEE
CHECKED BY: T. LALIBERTE
DATE CHECKED: 11-12-12

STATE OF CONNECTICUT
DEPARTMENT OF TRANSPORTATION

ENGINEER: PB AMERICAS, INC.
APPROVED BY:
DATE:

PROJECT TITLE: RECONSTRUCTION OF I-95 OVER WEST RIVER (BRIDGE NO. 00163)
CADD
PLOTTED 11/13/2012

TOWN: NEW HAVEN / WEST HAVEN
DRAWING TITLE: RIVER SOUNDINGS CONTOUR PLAN

PROJECT NO.: 92-522
DRAWING NO.: STR-31
SHEET NO.:

10:48:42 AM
11/13/2012
T:\V8CADD\Projects\PB\BT35\FD\Structures\Contract_Sheets\Br00163.dgn-31-092522-00163.dgn

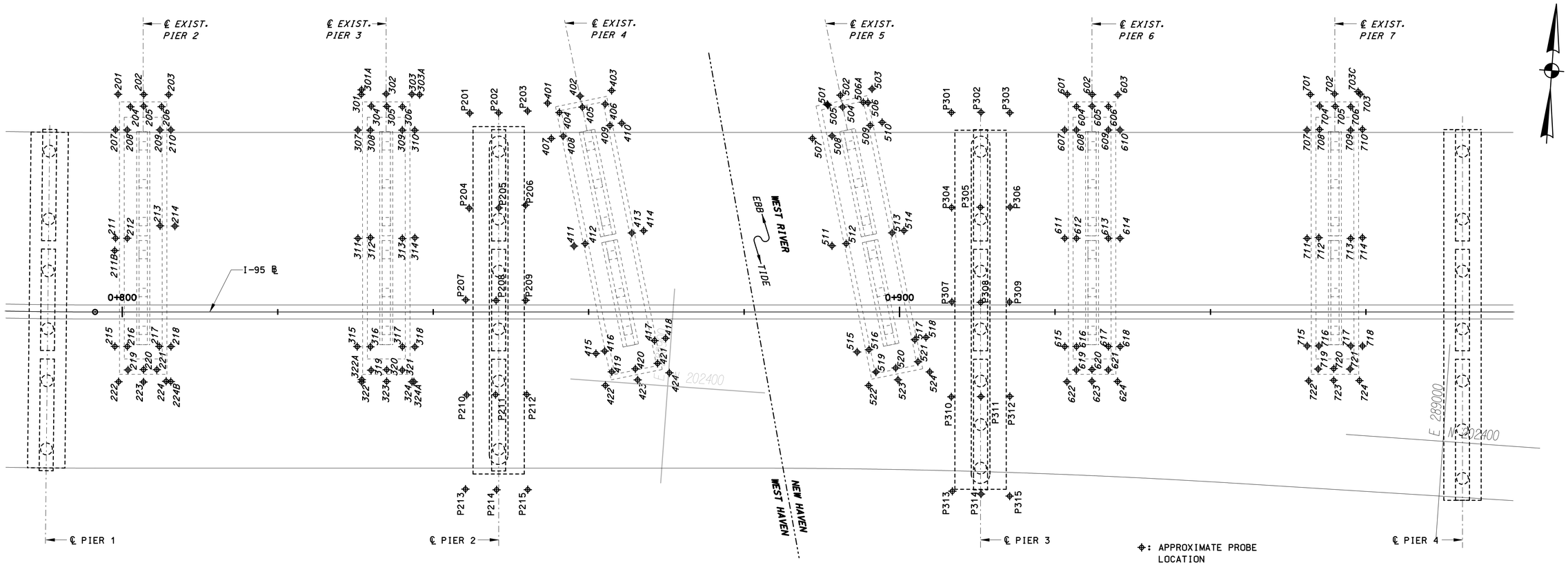

PLAN

SCALE: 1:500

RIVER PROBE DATA

PROBE NO.	MUDLINE ELEV.	BOT. OF PROBE ELEV.	REFUSAL
201	0.46	-2.58	NO
202	0.43	-2.62	NO
203	0.49	-2.55	NO
204	0.40	-2.65	NO
205	0.43	-1.64	YES
206	0.43	-2.62	NO
207	0.28	-2.77	NO
208	0.22	-1.67	YES
209	0.07	-1.70	YES
210	0.07	-2.07	YES
211	0.59	-1.61	YES
211B	0.59	-2.46	NO
212	0.59	-1.24	YES
213	0.28	-1.55	YES
214	0.22	-2.10	YES
215	1.10	-1.94	NO
216	1.10	-1.64	YES
217	1.10	-1.73	YES
218	1.10	-1.94	NO
219	1.56	-1.49	NO
220	1.56	-1.49	NO
221	1.56	0.95	YES
222	1.71	-1.34	NO
223	1.56	-0.27	YES
224	1.71	0.49	YES
224B	1.71	-1.34	NO

PROBE NO.	MUDLINE ELEV.	BOT. OF PROBE ELEV.	REFUSAL
301	-0.63	-3.56	YES
301A	-0.63	-3.68	NO
302	-0.73	-2.86	YES
303	-0.76	-3.90	NO
303A	-0.76	-2.68	YES
304	-0.63	-3.04	YES
305	-0.69	-2.74	YES
306	-0.69	-2.62	YES
307	-0.57	-3.62	NO
308	-0.57	-1.70	YES
309	-0.66	-1.58	YES
310	-0.73	-3.77	NO
311	-0.45	-3.50	NO
312	-0.36	-1.76	YES
313	-0.45	-1.64	YES
314	-0.54	-3.59	NO
315	-0.02	-3.07	NO
316	-0.02	-1.73	YES
317	0.22	-1.67	YES
318	0.16	-2.89	NO
319	0.34	-2.71	NO
320	0.62	-2.43	NO
321	1.10	0.19	YES
322	0.34	-1.03	YES
322A	0.34	-2.71	NO
323	0.80	-2.25	NO
324	1.10	0.19	YES
324A	1.10	-1.94	NO

PROBE NO.	MUDLINE ELEV.	BOT. OF PROBE ELEV.	REFUSAL
401	-1.58	-4.93	NO
402	-2.71	-4.60	YES
403	-3.13	-4.41	YES
404	-2.13	-2.74	YES
405	-2.43	-3.93	YES
406	-3.04	-3.86	YES
407	-1.76	-4.81	NO
408	-2.01	-3.29	YES
409	-3.13	-3.86	YES
410	-3.13	-4.78	YES
411	-1.30	-4.35	NO
412	-1.24	-3.93	YES
413	-2.71	-3.86	YES
414	-3.01	-6.06	NO
415	-1.88	-4.93	NO
416	-1.55	-3.04	YES
417	-2.40	-3.90	YES
418	-3.01	-2.65	YES
419	-1.85	-3.83	YES
420	-2.16	-4.54	YES
421	-2.86	-3.90	YES
422	-1.52	-2.37	YES
423	-2.13	-5.27	NO
424	-3.26	-6.30	NO

PROBE NO.	MUDLINE ELEV.	BOT. OF PROBE ELEV.	REFUSAL
501	-1.94	-4.29	YES
502	-1.73	-4.78	NO
503	-1.30	-4.35	NO
504	-2.22	-5.18	YES
505	-1.98	-3.50	YES
506	-1.55	-4.60	NO
506A	-1.55	-3.35	YES
507	-2.62	-5.72	NO
508	-2.34	-2.34	YES
509	-1.61	-3.96	YES
510	-1.24	-4.29	NO
511	-2.07	-5.11	NO
512	-1.58	-3.90	YES
513	-0.94	-3.96	YES
514	-0.97	-4.02	NO
515	-1.94	-3.96	YES
516	-1.82	-3.96	YES
517	-1.30	-4.02	YES
518	-1.30	-4.35	NO
519	-1.85	-1.85	YES
520	-1.67	-3.10	YES
521	-1.37	-3.07	YES
522	-1.76	-4.81	NO
523	-1.52	-4.63	NO
524	-1.34	-3.32	YES

PROBE NO.	MUDLINE ELEV.	BOT. OF PROBE ELEV.	REFUSAL
601	-0.45	-3.50	NO
602	-0.33	-3.38	NO
603	-0.39	-3.44	NO
604	-0.45	-2.83	YES
605	-0.39	-3.26	YES
606	-0.39	-3.01	YES
607	-0.42	-3.47	NO
608	-0.45	-1.64	YES
609	-0.42	-1.61	YES
610	-0.39	-3.44	NO
611	-0.42	-3.47	NO
612	-0.51	-1.61	YES
613	-0.21	-1.67	YES
614	-0.27	-3.32	NO
615	-0.57	-3.62	NO
616	-0.54	-1.55	YES
617	-0.48	-1.67	YES
618	-0.45	-3.50	NO
619	-0.60	-2.83	YES
620	-0.57	-1.34	YES
621	-0.45	-2.89	YES
622	-0.66	-3.71	NO
623	-0.63	-3.68	NO
624	-0.48	-3.53	NO

PROBE NO.	MUDLINE ELEV.	BOT. OF PROBE ELEV.	REFUSAL
701	0.31	-2.74	NO
702	0.49	-2.55	NO
703	0.74	0.13	YES
703C	0.74	-2.31	NO
704	0.34	-2.71	NO
705	0.62	-2.43	NO
706	0.74	-2.31	NO
707	0.22	-2.83	NO
708	0.31	-1.67	YES
709	0.59	-1.70	YES
710	0.74	-2.31	NO
711	-0.02	-3.07	NO
712	0.04	-1.70	YES
713	1.04	-0.48	YES
714	1.26	-1.79	NO
715	1.41	-0.42	YES
716	1.41	1.10	YES
717	1.47	-0.36	YES
718	1.47	0.25	YES
719	SEE NOTE No. 5		N/A
720	SEE NOTE No. 5		N/A
721	SEE NOTE No. 5		N/A
722	SEE NOTE No. 5		N/A
723	SEE NOTE No. 5		N/A
724	SEE NOTE No. 5		N/A

PROBE NO.	MUDLINE ELEV.	BOT. OF PROBE ELEV.	REFUSAL
P201	-1.03	-4.08	NO
P202	-1.15	-4.20	NO
P203	-1.21	-4.26	NO
P204	-0.76	-4.57	NO
P205	-0.91	-3.96	NO
P206	-1.09	-4.14	NO
P207	-0.54	-3.59	NO
P208	-0.66	-3.71	NO
P209	-0.73	-3.77	NO
P210	-0.24	-3.29	NO
P211	-0.39	-3.44	NO
P212	-0.54	-3.59	NO
P213	0.37	-2.68	NO
P214	0.22	-2.83	NO
P215	0.07	-2.98	NO

PROBE NO.	MUDLINE ELEV.	BOT. OF PROBE ELEV.	REFUSAL
P301	-0.76	-3.80	NO
P302	-0.69	-3.74	NO
P303	-0.57	-3.62	NO
P304	-0.76	-3.80	NO
P305	-0.76	-3.80	NO
P306	-0.66	-3.71	NO
P307	-1.00	-4.05	NO
P308	-0.36	-3.41	NO
P309	-0.18	-3.22	NO
P310	-1.55	-4.60	NO
P311	-1.06	-4.11	NO
P312	-1.03	-4.08	NO
P313	-1.49	-4.54	NO
P314	-1.09	-4.14	NO
P315	-0.97	-4.02	NO

NOTES

1. ALL ELEVATIONS ARE IN METERS AND ARE REFERENCED TO THE PROJECT VERTICAL DATUM NAVD 1988.
2. BRIDGE STRUCTURE INFORMATION PRESENTED WAS PREPARED USING DATA OBTAINED DURING THE HYDROGRAPHIC SURVEY AND FROM EXISTING PLANS.
3. THE INFORMATION PRESENTED ON THIS DRAWING REPRESENTS THE RESULTS OF PROBES PREFORMED DURING AUGUST 2004 AND CAN ONLY BE CONSIDERED AS INDICATING THE CONDITIONS EXISTING AT THAT TIME.
4. PROBES CONSISTED OF HAND ADVANCED 25 mm DIAMETER OPEN END STEEL PIPE WITH WATER JET.
5. PROBES COULD NOT BE TAKEN AT THESE LOCATIONS AS EXISTING BITUMINOUS CONCRETE DEBRIS WAS STOCKPILED IN THIS AREA.

REV.	DATE	DESCRIPTION	SHEET. NO

REVISIONS

THE INFORMATION, INCLUDING ESTIMATED QUANTITIES OF WORK, SHOWN ON THESE SHEETS IS BASED ON LIMITED INVESTIGATIONS BY THE STATE AND IS IN NO WAY WARRANTED TO INDICATE THE CONDITIONS OR ACTUAL QUANTITIES OF WORK WHICH WILL BE REQUIRED.

DESIGNER: B. SULLIVAN
DRAFTER: M. DEEGAN
CHECKED BY: O. JAMBOTKAR
DATE CHECKED: 11-12-12

STATE OF CONNECTICUT
DEPARTMENT OF TRANSPORTATION

ENGINEER: PB AMERICAS, INC.
APPROVED BY:
DATE:

PROJECT TITLE: RECONSTRUCTION OF I-95 OVER WEST RIVER (BRIDGE NO. 00163)

CADD
PLOTTED 11/13/2012

TOWN: NEW HAVEN / WEST HAVEN

DRAWING TITLE: RIVER PROBES

PROJECT NO.: 92-522
DRAWING NO.: STR-32
SHEET NO.:

10:43:50 AM
11/13/2012
T:\WBCADD-Projects\PB\B735\FD\Structures\Control_Sheets\Br00163\str-32-092522-00163.dgn

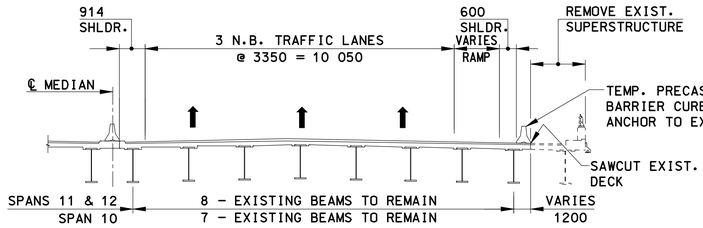

SECTION A–A

SCALE: 1:125

(SPAN 11 SHOWN, SPAN 10 & 12 SIMILAR)

NOTES:

1. DECK OVERHANG EQUALS 600 mm IN SPAN 11 AND VARIES FROM 300 mm TO 1200 mm IN SPAN 12.
2. TEMPORARY CANTILEVER SLAB SUPPORTS REQUIRED IN ALL OF SPAN 10. IN SPAN 12, SLAB SUPPORT REQUIRED FOR CANTILEVERS GREATER THAN 900 mm FROM APPROXIMATELY MIDSPAN TO EAST ABUTMENT. SEE STAGE CONSTRUCTION DETAILS.
3. PARTIALLY REMOVAL OF PARAPET IN SPAN 9.

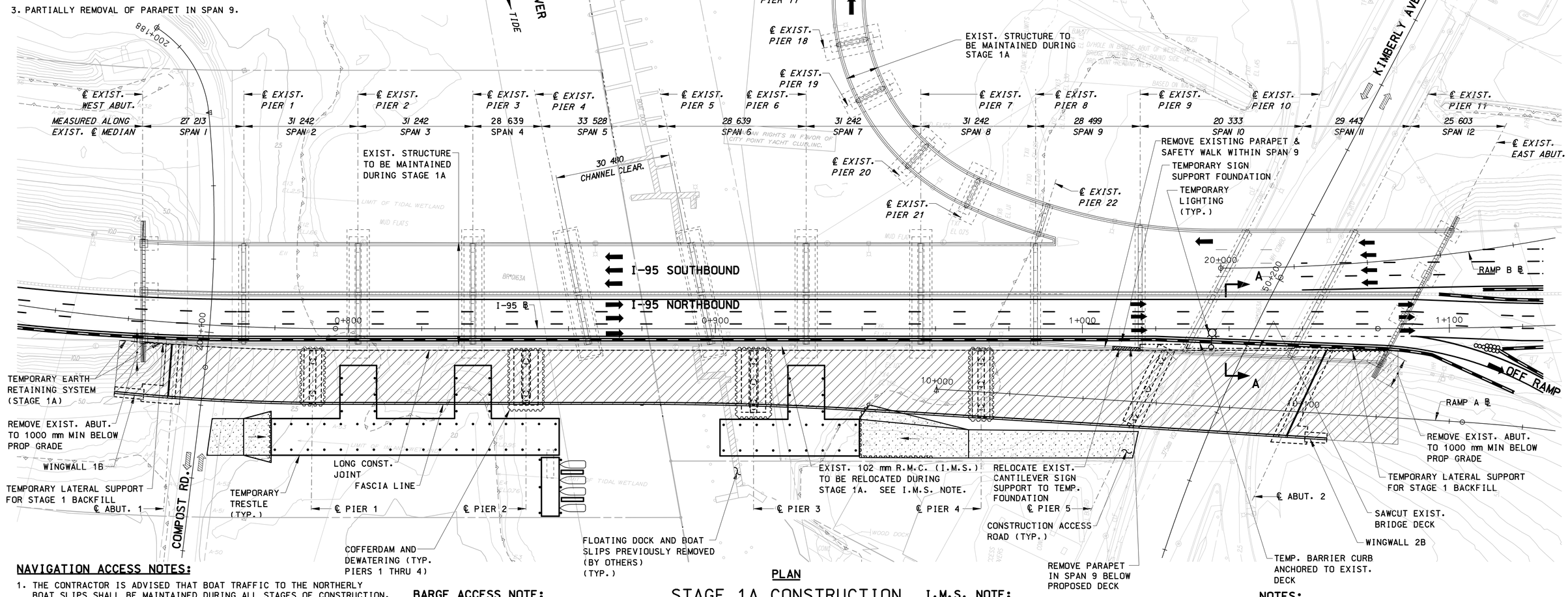

PLAN

STAGE 1A CONSTRUCTION

SCALE: 1:500

NAVIGATION ACCESS NOTES:

1. THE CONTRACTOR IS ADVISED THAT BOAT TRAFFIC TO THE NORTHERLY BOAT SLIPS SHALL BE MAINTAINED DURING ALL STAGES OF CONSTRUCTION. SEE SPECIAL PROVISIONS.
2. THE CONTRACTOR IS RESPONSIBLE FOR COORDINATING ALL CONSTRUCTION ACTIVITIES WHICH AFFECTS BOAT TRAFFIC TO THE NORTHERLY SLIPS WITH THE CITY POINT YACHT CLUB MARINA.

BARGE ACCESS NOTE:

THE CONTRACTOR IS ADVISED THAT BARGE USE IN NAVIGATION CHANNEL IS RESTRICTED SUCH THAT A MINIMUM 15m NAVIGATION CHANNEL IS MAINTAINED AT ALL TIMES. SEE SPECIAL PROVISIONS.

I.M.S. NOTE:

EXISTING I.M.S. TO BE TEMPORARILY RELOCATED DURING STAGE 1A. SEE I.M.S. PLANS FOR TEMPORARY RELOCATION DETAILS.

TEMPORARY SUPPORT NOTE:

TEMPORARY LATERAL SUPPORT INSTALLED DURING A PREVIOUS STAGE SHALL EXTEND BELOW THE BOTTOM OF EXCAVATION IN THE SUBSEQUENT STAGE.

NOTES:

1. FOR 'LEGEND', 'HYDRAULIC DATA' AND 'STAGE CONSTRUCTION NOTES', SEE DWG. "STAGE CONSTRUCTION PLANS – STAGE 3A".
2. FOR "TYPICAL STAGING SECTIONS" SEE DWGS. "TYPICAL STAGING SECTIONS".

REV.	DATE	DESCRIPTION	SHEET. NO.
		REVISIONS	

THE INFORMATION, INCLUDING ESTIMATED QUANTITIES OF WORK, SHOWN ON THESE SHEETS IS BASED ON LIMITED INVESTIGATIONS BY THE STATE AND IS IN NO WAY WARRANTED TO INDICATE THE CONDITIONS OR ACTUAL QUANTITIES OF WORK WHICH WILL BE REQUIRED.

DESIGNER: O. JAMBOTKAR
DRAFTER: G. LEE
CHECKED BY: T. LALIBERTE
DATE CHECKED: 11–12–12

STATE OF CONNECTICUT
DEPARTMENT OF TRANSPORTATION

ENGINEER: PB AMERICAS, INC.
APPROVED BY:
DATE:

PROJECT TITLE: RECONSTRUCTION OF I–95 OVER WEST RIVER (BRIDGE NO. 00163)

CADD
PLOTTED 11/13/2012

TOWN: NEW HAVEN / WEST HAVEN

DRAWING TITLE: STAGE CONSTRUCTION PLANS – STAGE 1A

PROJECT NO.: 92–522
DRAWING NO.: STR–33
SHEET NO.:

10:45:07 AM
11/13/2012
T:\V8CADD\Projects\PB\87735\FD\Structures\Contract_Sheets\Br00163\str-33-092522-00163.dgn

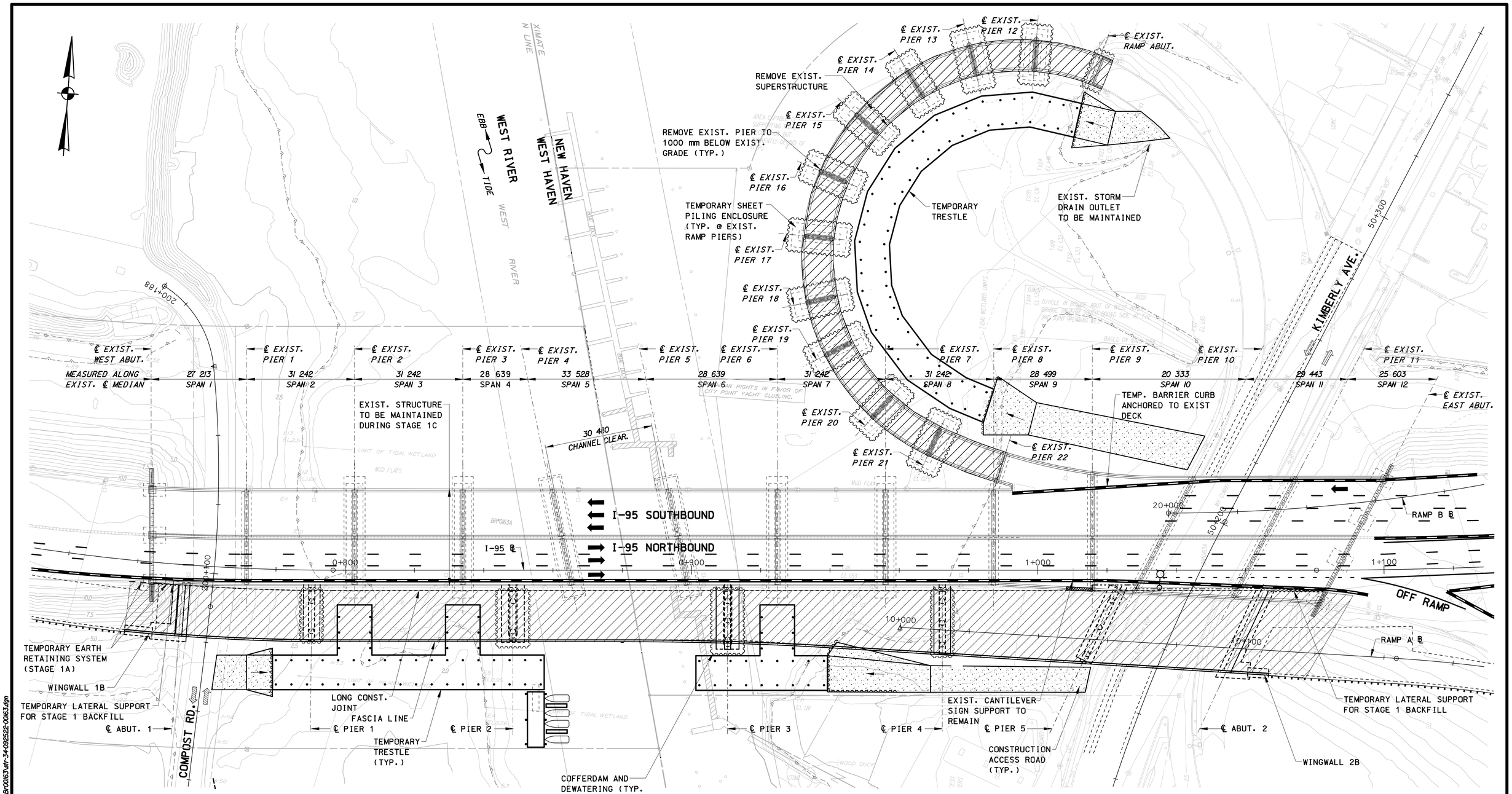

NAVIGATION ACCESS NOTES:

1. THE CONTRACTOR IS ADVISED THAT BOAT TRAFFIC TO THE NORTHERLY BOAT SLIPS SHALL BE MAINTAINED DURING ALL STAGES OF CONSTRUCTION. SEE SPECIAL PROVISIONS.
2. THE CONTRACTOR IS RESPONSIBLE FOR COORDINATING ALL CONSTRUCTION ACTIVITIES WHICH AFFECTS BOAT TRAFFIC TO THE NORTHERLY SLIPS WITH THE CITY POINT YACHT CLUB MARINA.

BARGE ACCESS NOTE:

THE CONTRACTOR IS ADVISED THAT BARGE USE IN NAVIGATION CHANNEL IS RESTRICTED SUCH THAT A MINIMUM 15m NAVIGATION CHANNEL IS MAINTAINED AT ALL TIMES. SEE SPECIAL PROVISIONS.

PLAN

STAGE 1C CONSTRUCTION

SCALE: 1:500

TEMPORARY SUPPORT NOTE:

TEMPORARY LATERAL SUPPORT INSTALLED DURING A PREVIOUS STAGE SHALL EXTEND BELOW THE BOTTOM OF EXCAVATION IN THE SUBSEQUENT STAGE.

NOTES:

1. STAGE 1B NOT SHOWN. SEE MAINTENANCE AND PROTECTION OF TRAFFIC PLANS.
2. FOR 'LEGEND', 'HYDRAULIC DATA' AND 'STAGE CONSTRUCTION NOTES', SEE DWG. "STAGE CONSTRUCTION PLANS – STAGE 3A".
3. FOR "TYPICAL STAGING SECTIONS" SEE DWGS. "TYPICAL STAGING SECTIONS".

REV.	DATE	DESCRIPTION	SHEET. NO
		REVISIONS	

THE INFORMATION, INCLUDING ESTIMATED QUANTITIES OF WORK, SHOWN ON THESE SHEETS IS BASED ON LIMITED INVESTIGATIONS BY THE STATE AND IS IN NO WAY WARRANTED TO INDICATE THE CONDITIONS OR ACTUAL QUANTITIES OF WORK WHICH WILL BE REQUIRED.

DESIGNER: O. JAMBOTKAR
DRAFTER: G. LEE
CHECKED BY: T. LALIBERTE
DATE CHECKED: 11-12-12

STATE OF CONNECTICUT
DEPARTMENT OF TRANSPORTATION

ENGINEER: PB AMERICAS, INC.
APPROVED BY:
DATE:

PROJECT TITLE: RECONSTRUCTION OF I-95 OVER WEST RIVER (BRIDGE NO. 00163)

CADD
PLOTTED 11/13/2012

TOWN: NEW HAVEN / WEST HAVEN

DRAWING TITLE: STAGE CONSTRUCTION PLANS – STAGE 1C

PROJECT NO.: 92-522
DRAWING NO.: STR-34
SHEET NO.:

10:45:53 AM
11/13/2012
T:\V8CADD\Projects\PB8735\FD\Structures\Contract_Sheets\Br00163\str-34-092522-00163.dgn

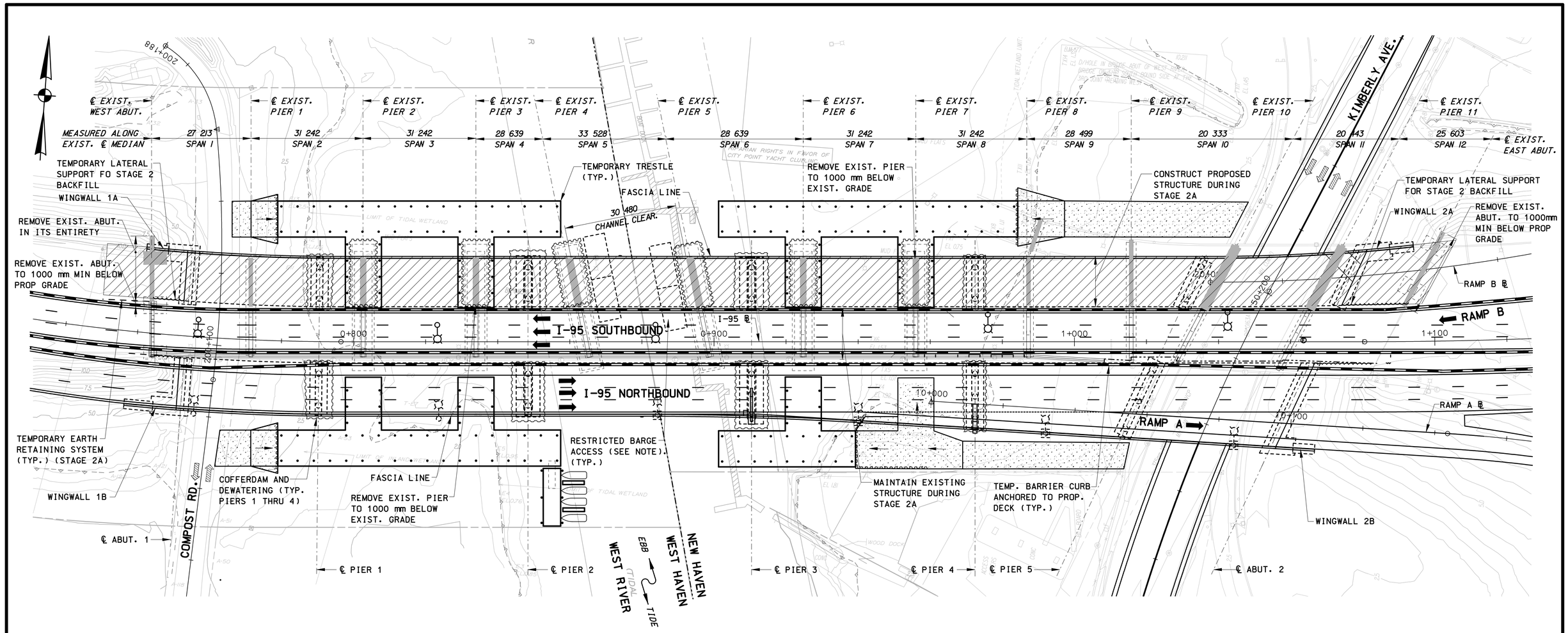

PLAN

STAGE 2A CONSTRUCTION

SCALE: 1:500

BARGE ACCESS NOTE:

THE CONTRACTOR IS ADVISED THAT BARGE USE IN NAVIGATION CHANNEL IS RESTRICTED SUCH THAT A MINIMUM 15m NAVIGATION CHANNEL IS MAINTAINED AT ALL TIMES. SEE SPECIAL PROVISIONS.

NAVIGATION ACCESS NOTES:

1. THE CONTRACTOR IS ADVISED THAT BOAT TRAFFIC TO THE NORTHERLY BOAT SLIPS SHALL BE MAINTAINED DURING ALL STAGES OF CONSTRUCTION. SEE SPECIAL PROVISIONS.
2. THE CONTRACTOR IS RESPONSIBLE FOR COORDINATING ALL CONSTRUCTION ACTIVITIES WHICH AFFECTS BOAT TRAFFIC TO THE NORTHERLY SLIPS WITH THE CITY POINT YACHT CLUB MARINA.

TEMPORARY SUPPORT NOTE:

TEMPORARY LATERAL SUPPORT INSTALLED DURING A PREVIOUS STAGE SHALL EXTEND BELOW THE BOTTOM OF EXCAVATION IN THE SUBSEQUENT STAGE.

TEMPORARY PAVEMENT WEDGE NOTE:

A TEMPORARY PAVEMENT WEDGE SHALL BE PLACED AT PROPOSED NORTHBOUND BRIDGE IN THE LIMITS 0+750.291 TO 0+880 DURING STAGE 2A.

NOTES:

1. FOR 'LEGEND', HYDRAULIC DATA' AND 'STAGE CONSTRUCTION NOTES', SEE DWG. "STAGE CONSTRUCTION PLANS – STAGE 3A".
2. FOR "TYPICAL STAGING SECTIONS" SEE DWGS. "TYPICAL STAGING SECTIONS".

REV.	DATE	DESCRIPTION	SHEET. NO
		REVISIONS	

THE INFORMATION, INCLUDING ESTIMATED QUANTITIES OF WORK, SHOWN ON THESE SHEETS IS BASED ON LIMITED INVESTIGATIONS BY THE STATE AND IS IN NO WAY WARRANTED TO INDICATE THE CONDITIONS OR ACTUAL QUANTITIES OF WORK WHICH WILL BE REQUIRED.

DESIGNER: O. JAMBOTKAR
DRAFTER: G. LEE
CHECKED BY: T. LALIBERTE
DATE CHECKED: 11-12-12

STATE OF CONNECTICUT
DEPARTMENT OF TRANSPORTATION

ENGINEER: PB AMERICAS, INC.
APPROVED BY:
DATE:

PROJECT TITLE: RECONSTRUCTION OF I-95 OVER WEST RIVER (BRIDGE NO. 00163)
CADD
PLOTTED 11/13/2012

TOWN: NEW HAVEN / WEST HAVEN
DRAWING TITLE: STAGE CONSTRUCTION PLANS – STAGE 2

PROJECT NO.: 92-522
DRAWING NO.: STR-35
SHEET NO.:

10:46:47 AM
11/13/2012
T:\VBCADD\Projects\PB\873SFD\Structures\Contract_Sheets\Br00163\str-35-092522-00163.dgn

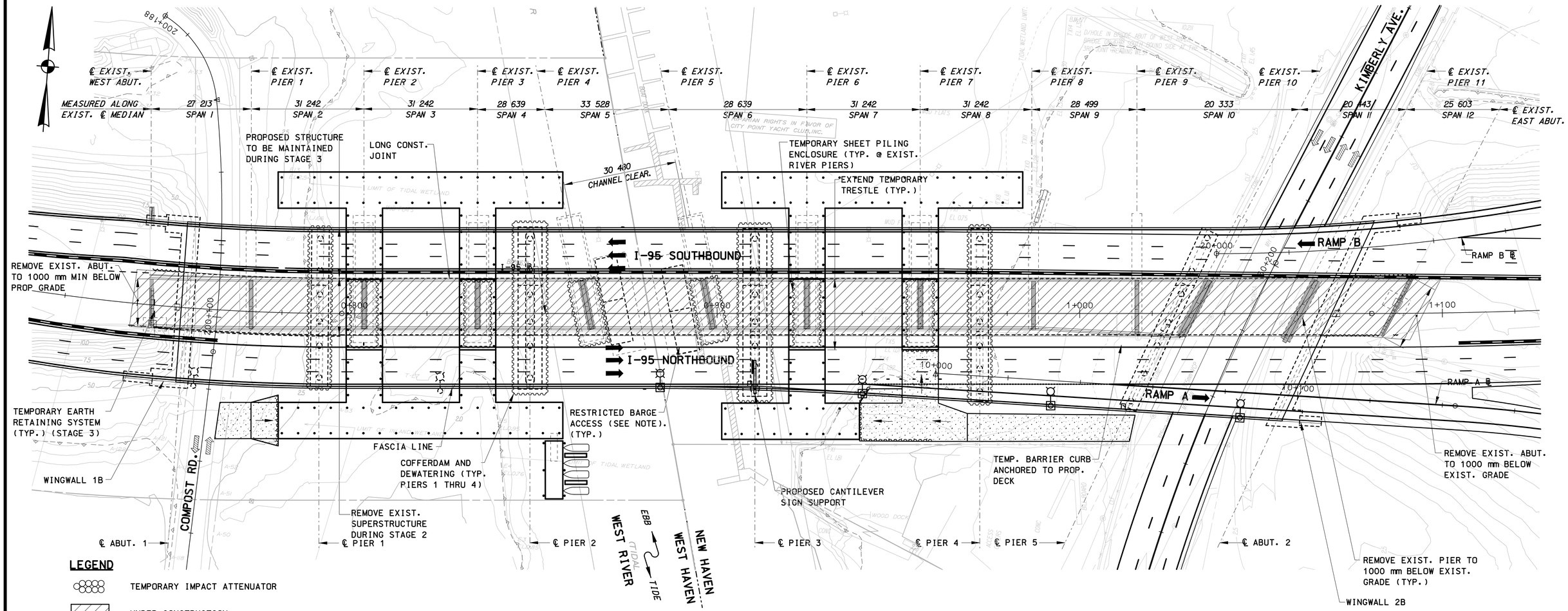

LEGEND

- TEMPORARY IMPACT ATTENUATOR
- UNDER CONSTRUCTION
- LIMITS OF EXISTING SUBSTRUCTURE REMOVAL
- TEMPORARY CONSTRUCTION ACCESS ROADWAY
- TEMPORARY PRECAST CONCRETE BARRIER CURB
- TEMPORARY SHEET PILING ENCLOSURE OR COFFERDAM & DEWATERING AS SHOWN
- TEMPORARY EARTH RETAINING SYSTEM
- TEMPORARY LATERAL SUPPORT
- TEMPORARY LIGHT STANDARD
- LIGHT STANDARD (FROM PREVIOUS STAGE)
- PROPOSED LIGHT STANDARD
- DIRECTION OF TRAVEL - MAINLINE TRAFFIC
- DIRECTION OF TRAVEL - LOCAL ROAD TRAFFIC
- PROPOSED BRIDGE SCUPPER
- TEMPORARY BRIDGE DRAINAGE
- (F) TEMPORARY DRAINAGE OUTFLOW TO FREE FALL WITH DOWNSPOUT

PLAN

STAGE 3 CONSTRUCTION

SCALE: 1:500

STAGE CONSTRUCTION NOTES:

1. THE STAGE CONSTRUCTION PLANS HAVE BEEN PREPARED TO ILLUSTRATE THE "SUGGESTED SEQUENCE OF OPERATIONS" AND SHOULD BE WORKED WITH THE MAINTENANCE AND PROTECTION OF TRAFFIC PLANS.
2. THE CONTRACTOR IS RESPONSIBLE FOR MAINTAINING THE EXISTING AND PROPOSED STRUCTURES DURING ALL STAGES OF CONSTRUCTION. SEE SPECIAL PROVISIONS FOR "MAINTAINING EXISTING STRUCTURE" AND "MAINTAINING NEW STRUCTURE", RESPECTIVELY.
3. FOR STAGE CONSTRUCTION DETAILS, SEE DWGS. "STAGE CONSTRUCTION DETAILS".
4. THE CONTRACTOR IS RESPONSIBLE FOR MAINTAINING A MINIMUM NAVIGATION CHANNEL OF 15m WIDE WITH A VERTICAL CLEARANCE NOT LESS THAN THE EXISTING CONDITION. THE CONTRACTOR SHALL ALSO MAINTAIN TEMPORARY NAVIGATION LIGHTS. SEE SPECIAL PROVISIONS.

HYDRAULIC DATA

MEAN HIGH WATER (MHW)	0.82 m	
MEAN LOW WATER (MLW)	-1.07 m	
HIGH TIDE LINE (HTL)	1.56 m	
TEMPORARY DESIGN FREQUENCY	TIDAL:25 YEAR	RIVERINE:25 YEAR
TEMPORARY DESIGN DISCHARGE	205 cms	99.4 cms
TEMPORARY DESIGN ELEVATION	2.847 m	1.274 m

NOTE: ELEVATIONS BASED ON NAVD 1988 DATUM

NAVIGATION ACCESS NOTES:

1. THE CONTRACTOR IS ADVISED THAT BOAT TRAFFIC TO THE NORTHERLY BOAT SLIPS SHALL BE MAINTAINED DURING ALL STAGES OF CONSTRUCTION. SEE SPECIAL PROVISIONS.
2. THE CONTRACTOR IS RESPONSIBLE FOR COORDINATING ALL CONSTRUCTION ACTIVITIES WHICH AFFECTS BOAT TRAFFIC TO THE NORTHERLY SLIPS WITH THE CITY POINT YACHT CLUB MARINA.

BARGE ACCESS NOTE:

THE CONTRACTOR IS ADVISED THAT BARGE USE IN NAVIGATION CHANNEL IS RESTRICTED SUCH THAT A MINIMUM 15m NAVIGATION CHANNEL IS MAINTAINED AT ALL TIMES. SEE SPECIAL PROVISIONS.

TEMPORARY LIGHTING NOTE:

LIGHTING SHOWN ON PROPOSED SOUTH FASCIA PREVIOUSLY INSTALLED FOR STAGE 1D TRAFFIC. SEE MAINTENANCE AND PROTECTION OF TRAFFIC PLANS.

TEMPORARY SUPPORT NOTE:

TEMPORARY LATERAL SUPPORT INSTALLED DURING A PREVIOUS STAGE SHALL EXTEND BELOW THE BOTTOM OF EXCAVATION IN THE SUBSEQUENT STAGE.

NOTES:

1. FOR "TYPICAL STAGING SECTIONS" SEE DWGS. "TYPICAL STAGING SECTIONS".

REV.	DATE	DESCRIPTION	SHEET. NO
		REVISIONS	

THE INFORMATION, INCLUDING ESTIMATED QUANTITIES OF WORK, SHOWN ON THESE SHEETS IS BASED ON LIMITED INVESTIGATIONS BY THE STATE AND IS IN NO WAY WARRANTED TO INDICATE THE CONDITIONS OR ACTUAL QUANTITIES OF WORK WHICH WILL BE REQUIRED.

DESIGNER: O. JAMBOTKAR
DRAFTER: G. LEE
CHECKED BY: T. LALIBERTE
DATE CHECKED: 11-12-12

STATE OF CONNECTICUT
DEPARTMENT OF TRANSPORTATION

ENGINEER: PB AMERICAS, INC.
APPROVED BY:
DATE:

PROJECT TITLE: RECONSTRUCTION OF I-95 OVER WEST RIVER (BRIDGE NO. 00163)

CADD
PLOTTED 11/13/2012

TOWN: NEW HAVEN / WEST HAVEN

DRAWING TITLE: STAGE CONSTRUCTION PLANS - STAGE 3A

PROJECT NO.: 92-522
DRAWING NO.: STR-36
SHEET NO.:

10:46:4 AM
11/13/2012
T:\WBCADD\Projects\PB\87351\FD\Structures\Contract_Sheets\Br00163\dn-36-092522-00163.dgn

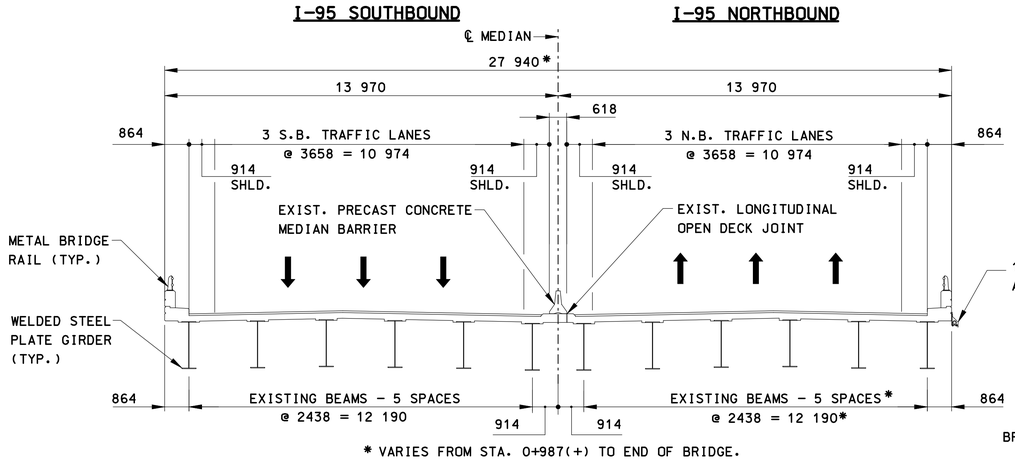

EXISTING BRIDGE CROSS SECTION

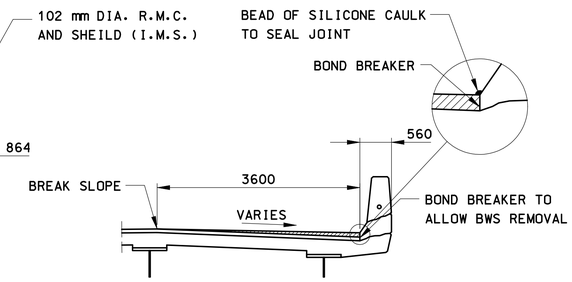

PAVEMENT WEDGE DETAIL

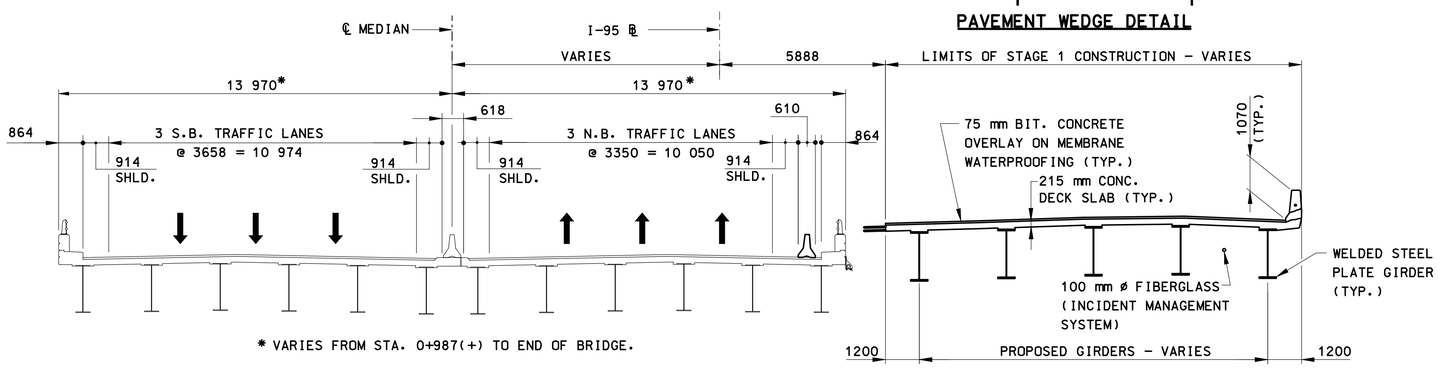

STAGE 1A THRU 1C

NOTE:
FOR INFORMATION RELATED TO STAGE 1D, SEE HIGHWAY PLANS "MAINTENANCE AND PROTECTION OF TRAFFIC STAGE 1D".

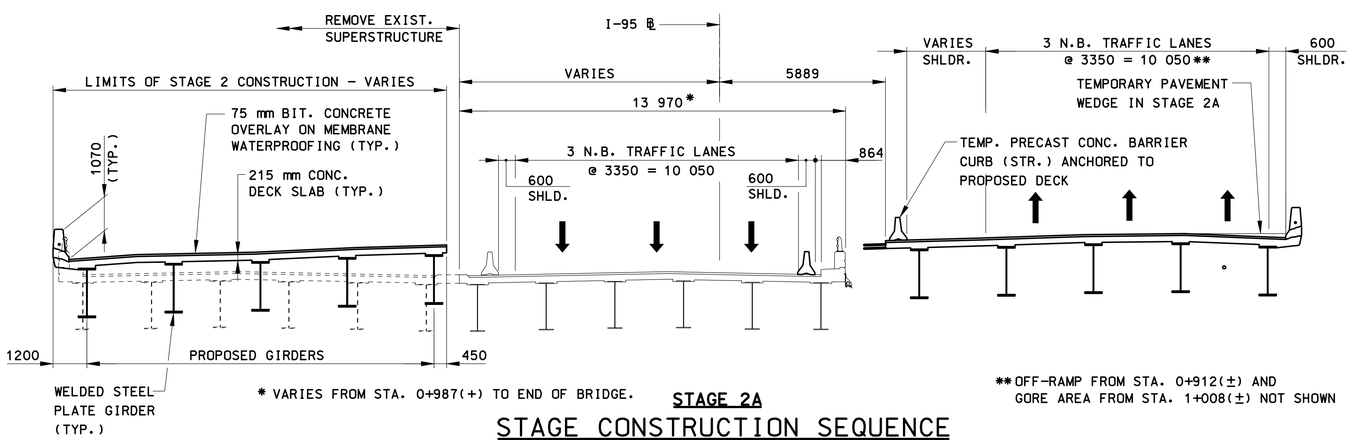

STAGE 2A

STAGE CONSTRUCTION SEQUENCE

SCALE: 1:100

SUGGESTED SEQUENCE OF OPERATIONS

IN ORDER TO PROVIDE FOR TRAFFIC OPERATIONS AS SPECIFIED IN THE SPECIAL PROVISION "MAINTENANCE AND PROTECTION OF TRAFFIC", THE CONTRACTOR SHALL FOLLOW THE SUGGESTED SEQUENCE OF OPERATIONS AS OUTLINED BELOW AND AS FURTHER DETAILED IN THE SPECIAL PROVISION "PROSECUTION AND PROGRESS".

THE CONSTRUCTION OF CRITICAL STRUCTURE ELEMENTS SHALL BE COMPLETED AS DESIGNATED IN THE SEQUENCE OF OPERATIONS UNLESS DIRECTED OTHERWISE BY THE ENGINEER.

THE CONTRACTOR MAY INITIATE ANY PORTION OF THE PROPOSED WORK, WITH APPROVAL OF THE ENGINEER, PROVIDED THAT HIS OPERATIONS DO NOT CONFLICT WITH THE INTENDED MAINTENANCE AND PROTECTION OF TRAFFIC OPERATIONS FOR THIS PROJECT OR RELATED ADJACENT PROJECTS.

STAGE 1A CONSTRUCTION

1. INSTALL "TEMPORARY PRECAST CONCRETE BARRIER CURB (STRUCTURE)" AND RELATED TRAFFIC CONTROL DEVICES AS SHOWN ON THE MAINTENANCE AND PROTECTION OF TRAFFIC PLANS. TEMPORARY BARRIERS SHALL BE ANCHORED TO THE EXISTING BRIDGE DECK. TEMPORARILY RELOCATE LIGHT STANDARDS WITHIN THE LIMITS SHOWN ON THE PLANS.
2. TEMPORARILY RELOCATE EXISTING I.M.S. BETWEEN EXISTING SPANS 10 THRU 12.
3. INSTALL TEMPORARY CANTILEVER SLAB SUPPORTS ON EXISTING BRIDGE AS SHOWN ON DWGS. "STAGE CONSTRUCTION PLANS-STAGE 1A" AND "STAGE CONSTRUCTION DETAILS - TEMPORARY SLAB DETAILS".
4. PARTIALLY REMOVE EXISTING NORTHBOUND BRIDGE DECK AND STRUCTURAL STEEL FRAMING WITHIN SPANS 10 THROUGH 12 TO THE LIMITS SHOWN ON DWG. "STAGE CONSTRUCTION PLANS - STAGE 1A". PARTIALLY REMOVE FASCIA PARAPET IN SPAN 9.
5. PREPARE CONSTRUCTION ACCESS AREA AND CONSTRUCT TEMPORARY TRESTLE ON SOUTH SIDE OF PROPOSED BRIDGE TO THE LIMITS SHOWN DWG. "STAGE CONSTRUCTION PLANS - STAGE 1A".
6. INSTALL COFFERDAM & DEWATER FOR PROPOSED SUBSTRUCTURE CONSTRUCTION IN THE LOCATIONS SHOWN ON "ABUTMENT" AND "PIER" DWGS.
7. CONSTRUCT ABUTMENTS, WINGWALLS AND PIERS TO THE LIMITS SHOWN ON "ABUTMENT" AND "PIER" DWGS. TO SUPPORT STAGE 1A SUPERSTRUCTURE CONSTRUCTION.
8. CONSTRUCT PROPOSED SUPERSTRUCTURE TO THE LIMITS SHOWN ON DWG. "STAGE CONSTRUCTION PLANS - STAGE 1A".
9. INSTALL PROPOSED CANTILEVER SIGN SUPPORT STRUCTURE AS SHOWN ON DWGS. "PIER 3" AND "SIGN SUPPORT DETAILS".

STAGE 1C CONSTRUCTION

1. INSTALL "TEMPORARY PRECAST CONCRETE BARRIER CURB (STRUCTURE)" AND RELATED TRAFFIC CONTROL DEVICES AS SHOWN ON THE MAINTENANCE AND PROTECTION OF TRAFFIC PLANS. TEMPORARY BARRIERS SHALL BE ANCHORED TO THE EXISTING BRIDGE DECK.
2. PREPARE CONSTRUCTION ACCESS AREA AND CONSTRUCT TEMPORARY TRESTLE ON EASTSIDE OF EXISTING RAMP BRIDGE TO THE LIMITS SHOWN DWG. "STAGE CONSTRUCTION PLANS - STAGE 1C".
3. REMOVE EXISTING RAMP BRIDGE DECK AND STRUCTURAL STEEL FRAMING AS SHOWN ON DWG. "STAGE CONSTRUCTION PLANS - STAGE 1C".
4. INSTALL TEMPORARY SHEET PILING ENCLOSURES ADJACENT TO THE EXISTING SUBSTRUCTURE AND REMOVE EXISTING SUBSTRUCTURE COMPONENTS TO THE LIMITS SHOWN ON "DEMOLITION DETAILS" DWGS.
5. REMOVE TEMPORARY SHEET PILING, TEMPORARY TRESTLE AND RESTORE CONSTRUCTION ACCESS AREA TO ORIGINAL GRADE AND CONDITION.

STAGE 2A CONSTRUCTION

1. INSTALL "TEMPORARY PRECAST CONCRETE BARRIER CURB (STRUCTURE)" AND RELATED TRAFFIC CONTROL DEVICES AS SHOWN ON THE MAINTENANCE AND PROTECTION OF TRAFFIC PLANS. TEMPORARY BARRIERS SHALL BE ANCHORED TO THE PROPOSED BRIDGE DECK.
2. REMOVE EXISTING SOUTHBOUND BRIDGE DECK AND STRUCTURAL STEEL FRAMING TO THE LIMITS SHOWN ON DWG. "STAGE CONSTRUCTION PLANS - STAGE 2A".
3. INSTALL TEMPORARY SHEET PILING ENCLOSURES ADJACENT TO THE EXISTING SOUTHBOUND SUBSTRUCTURE AND REMOVE EXISTING SUBSTRUCTURE COMPONENTS TO THE LIMITS SHOWN ON DWGS. "DEMOLITION DETAILS".
4. PREPARE CONSTRUCTION ACCESS AREA AND CONSTRUCT TEMPORARY TRESTLE TO THE NORTH TO THE LIMITS SHOWN ON DWG. "STAGE CONSTRUCTION PLANS - STAGE 2A".
5. INSTALL COFFERDAM & DEWATER FOR PROPOSED SUBSTRUCTURE CONSTRUCTION TO THE LIMITS SHOWN ON "ABUTMENTS" AND "PIERS" DWGS.
6. CONSTRUCT ABUTMENTS, WINGWALLS, AND PIERS TO THE LIMITS SHOWN ON "ABUTMENT" AND "PIER" DWGS. TO SUPPORT STAGE 2A SUPERSTRUCTURE CONSTRUCTION.
7. CONSTRUCT PROPOSED SUPERSTRUCTURE INCLUDING THE TEMPORARY MEDIAN CROSS FRAMES AND SLAB TO THE LIMITS SHOWN ON DWG. "STAGE CONSTRUCTION PLANS - STAGE 2A".

REV.	DATE	DESCRIPTION	SHEET. NO
		REVISIONS	

SCALE AS NOTED

DESIGNER: O. JAMBOTKAR
DRAFTER: G. LEE
CHECKED BY: T. LALIBERTE
DATE CHECKED: 11-12-12

STATE OF CONNECTICUT
DEPARTMENT OF TRANSPORTATION
ENGINEER: PB AMERICAS, INC.
APPROVED BY: DATE:

PROJECT TITLE: RECONSTRUCTION OF I-95 OVER WEST RIVER (BRIDGE NO. 00163)
CADD PLOTTED 11/13/2012

TOWN: NEW HAVEN / WEST HAVEN
DRAWING TITLE: TYPICAL STAGING SECTIONS - EXISTING TO STAGE 2

PROJECT NO.: 92-522
DRAWING NO.: STR-37
SHEET NO.:

10:49:04 AM
11/13/2012
T:\WBCADD\Projects\PB\87135\FD\Structures\Contract_Sheets\Br00163\dn-3T-092522-00163.dgn

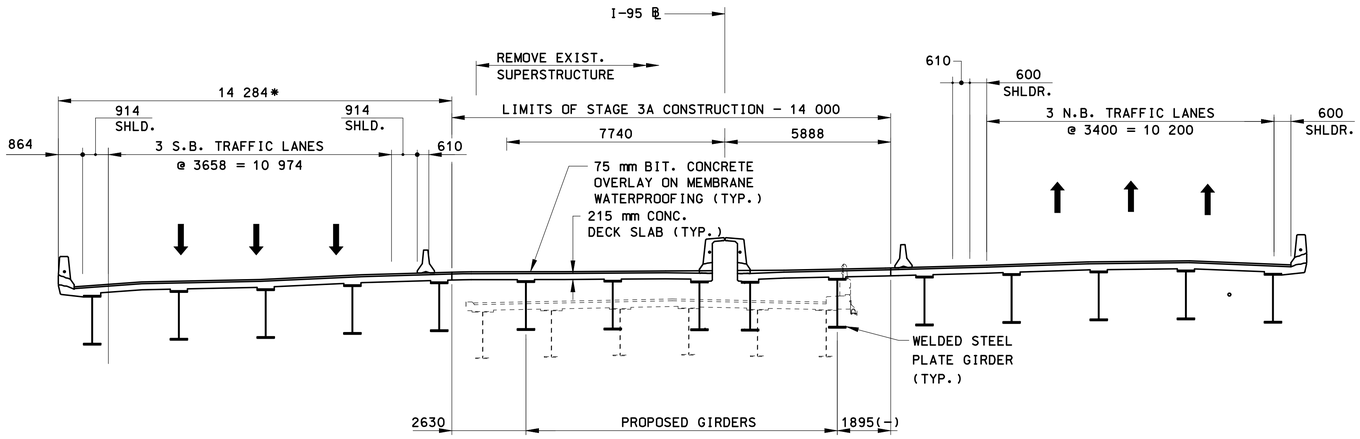

* VARIES FROM STA. 0+987(+) TO END OF BRIDGE.

STAGE 3

STAGE CONSTRUCTION SEQUENCE

SUGGESTED SEQUENCE OF OPERATIONS (CONTINUED)

STAGE 3 CONSTRUCTION

1. INSTALL "TEMPORARY PRECAST CONCRETE BARRIER CURB (STRUCTURE)" AND RELATED TRAFFIC CONTROL DEVICES AS SHOWN ON THE MAINTENANCE AND PROTECTION OF TRAFFIC PLANS. TEMPORARY BARRIERS SHALL BE ANCHORED TO THE EXISTING BRIDGE DECK. TEMPORARILY RELOCATE LIGHT STANDARDS WITHIN THE LIMITS AS SHOWN ON DWG. "STAGE CONSTRUCTION PLANS - STAGE 3".
2. REMOVE EXISTING NORTHBOUND BRIDGE DECK AND STRUCTURAL STEEL FRAMING TO THE LIMITS SHOWN ON DWG. "STAGE CONSTRUCTION PLANS - STAGE 3".
3. INSTALL TEMPORARY SHEET PILING ENCLOSURE ADJACENT TO THE EXISTING NORTHBOUND SUBSTRUCTURE AND REMOVE EXISTING SUBSTRUCTURE COMPONENTS TO "DEMOLITION DETAILS" DWGS.
4. PREPARE CONSTRUCTION ACCESS AREA AND CONSTRUCT TEMPORARY TRESTLE ON NORTH SIDE OF PROPOSED BRIDGE TO THE LIMITS SHOWN ON DWG. "STAGE CONSTRUCTION PLANS - STAGE 3".
5. INSTALL COFFERDAM & DEWATER FOR PROPOSED SUBSTRUCTURE CONSTRUCTION TO THE LIMITS SHOWN ON "ABUTMENT" AND "PIER" DWGS.
6. CONSTRUCT ABUTMENTS AND PIERS TO THE LIMITS SHOWN ON "ABUTMENT" AND "PIER" DWGS. TO SUPPORT STAGE 3 SUPERSTRUCTURE CONSTRUCTION.
7. CONSTRUCT PROPOSED SUPERSTRUCTURE TO THE LIMITS SHOWN ON DWG. "STAGE CONSTRUCTION PLANS - STAGE 3".

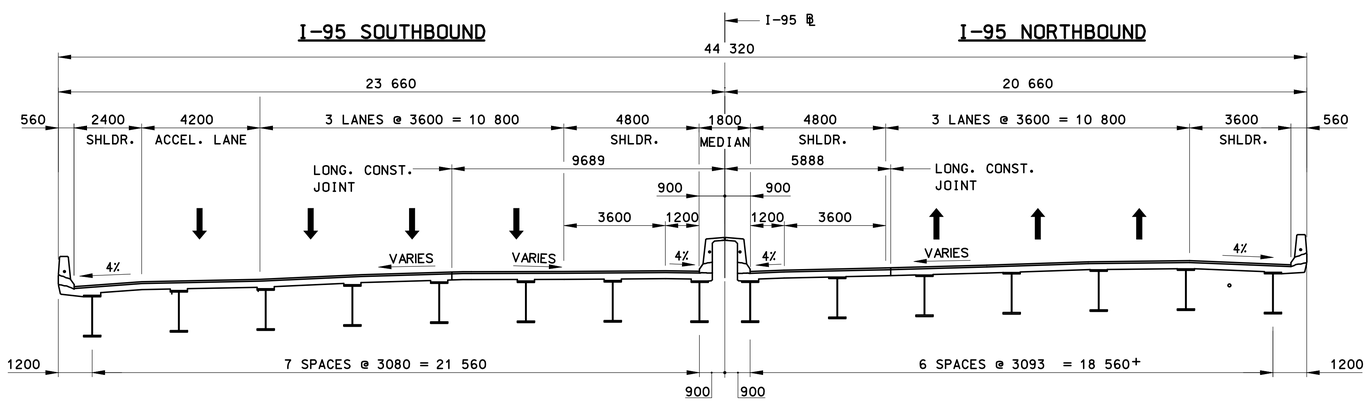

PROPOSED

STAGE CONSTRUCTION SEQUENCE

SCALE: 1:100

REV.	DATE	DESCRIPTION	SHEET. NO
		REVISIONS	

SCALE AS NOTED

DESIGNER: D. BAGDASARIAN
DRAFTER: G. LEE
CHECKED BY: T. YOUNG
DATE CHECKED: 12-11-03

STATE OF CONNECTICUT
DEPARTMENT OF TRANSPORTATION

ENGINEER: PB AMERICAS, INC.
APPROVED BY: DATE:

PROJECT TITLE: RECONSTRUCTION OF I-95 OVER WEST RIVER (BRIDGE NO. 00163)
CADD PLOTTED 11/13/2012

TOWN: NEW HAVEN / WEST HAVEN
DRAWING TITLE: TYPICAL STAGING SECTIONS - STAGES 3A TO PROPOSED

PROJECT NO.: 92-522
DRAWING NO.: STR-38
SHEET NO.:

10:49:45 AM
11/13/2012
T:\VBCADD\Projects\PB\8735\FD\Structures\Contract_Sheets\Br00163\str-38-092522-00163.dgn

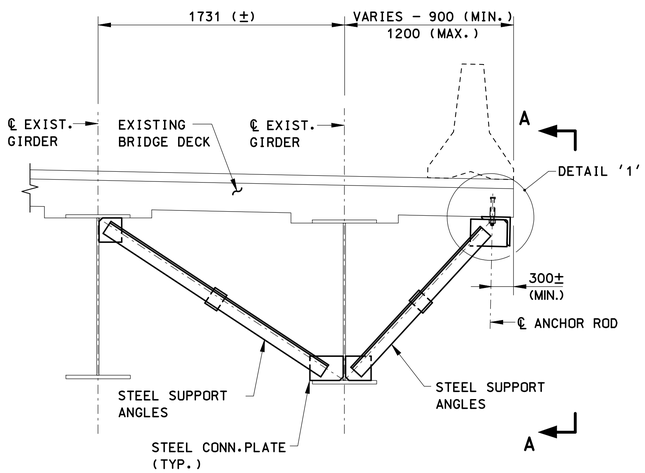

ELEVATION
SCALE: 1:20

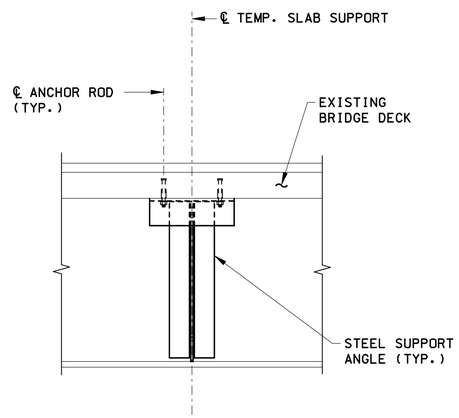

VIEW A-A
SCALE: 1:20

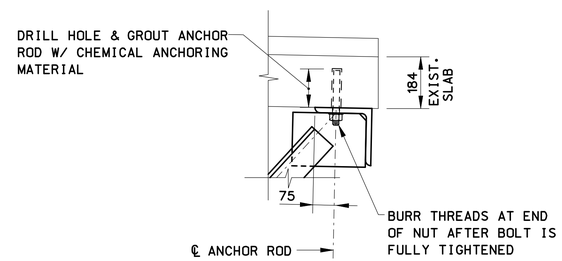

DETAIL '1'
SCALE: 1:10

TEMPORARY SLAB SUPPORTS
SCALE AS NOTED

TEMPORARY SLAB SUPPORT NOTES

1. TEMPORARY SLAB SUPPORT SHOWN IS CONCEPTUAL AND FOR INFORMATION ONLY. ACTUAL TEMPORARY SLAB SUPPORT TO BE DESIGNED BY CONTRACTOR.
2. TEMPORARY SLAB SUPPORTS SHALL BE PLACED AT EXISTING SLAB OVERHANGS WITHIN THE LIMITS SHOWN ON THE STAGE CONSTRUCTION PLANS AND AS DIRECTED BY THE ENGINEER.
3. THE CONTRACTOR SHALL TAKE ALL FIELD MEASUREMENTS NECESSARY TO DETERMINE THE FINAL LOCATION AND DIMENSIONS OF THE SLAB SUPPORTS REQUIRED.
4. TEMPORARY SLAB SUPPORTS SHALL BE IN PLACE PRIOR TO DEMOLITION OF THE EXISTING BRIDGE DECK AND ESTABLISHING CONSTRUCTION STAGE 1A TRAFFIC.
5. TEMPORARY SLAB SUPPORTS, INCLUDING FIELD MEASUREMENTS TO ASSURE PROPER FIT OF THE FINISHED WORK, SHALL BE INCLUDED UNDER THE ITEM "TEMPORARY SLAB SUPPORT (SITE NO. 1)" (SEE SPECIAL PROVISIONS).

REV.	DATE	DESCRIPTION	SHEET. NO
		REVISIONS	

SCALE AS NOTED

DESIGNER: O. JAMBOTKAR
DRAFTER: O. JAMBOTKAR
CHECKED BY: T. LALIBERTE
DATE CHECKED: 11-12-12

STATE OF CONNECTICUT
DEPARTMENT OF TRANSPORTATION
ENGINEER: PB AMERICAS, INC.
APPROVED BY: DATE:

PROJECT TITLE: RECONSTRUCTION OF I-95 OVER WEST RIVER (BRIDGE NO. 00163)
CADD PLOTTED 11/13/2012

TOWN: NEW HAVEN / WEST HAVEN
DRAWING TITLE: STAGE CONSTRUCTION DETAILS - TEMPORARY SLAB DETAILS

PROJECT NO.: 92-522
DRAWING NO.: STR-39
SHEET NO.:

10:50:24 AM
11/13/2012
T:\WORKADD\Projects\PB\87735\FD\Structures\Contract_Sheets\Br00163\dn-39-092522-00163.dgn

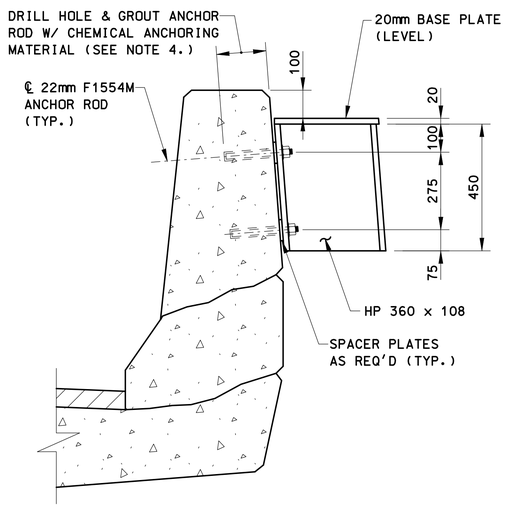

SECTION
SCALE: 1:10
(PARAPET SECTION SHOWN, TPCBC SECTION SIMILAR)

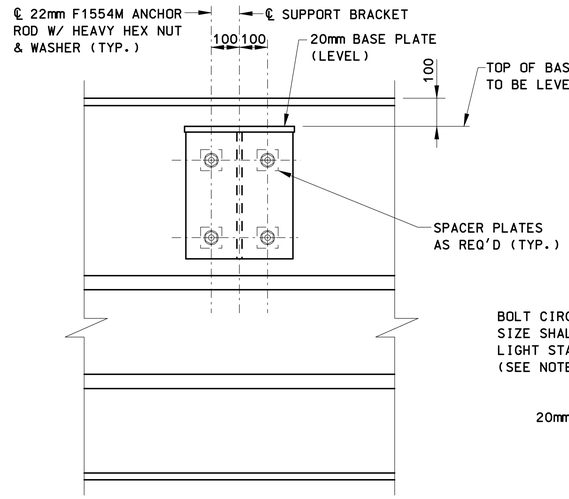

ELEVATION
SCALE: 1:10

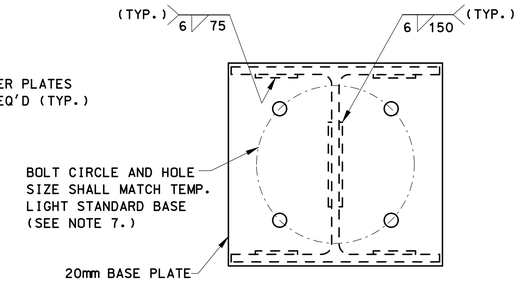

PLAN

BASE PLATE DETAIL
SCALE: 1:5

TEMPORARY LIGHT STANDARD SUPPORTS
SCALE AS NOTED

TEMPORARY ILLUMINATION NOTES

1. FOR APPROXIMATE LOCATIONS OF TEMPORARY LIGHT STANDARDS AND SUPPORT BRACKETS, SEE STAGE CONSTRUCTION PLANS.
2. PROVIDE SURFACE MOUNTED JUNCTION BOXES, AS REQUIRED, AND 65 mm R.M.C. SWEEP TO RELOCATED LIGHT STANDARD.
3. THE COST OF REMOVING EXISTING LIGHT STANDARDS SHALL BE INCLUDED UNDER THE ITEM "REMOVE LIGHT STANDARD" (RDWY. ITEM). RE-ESTABLISHING TEMPORARY LIGHT STANDARDS, INCLUDING INSTALLATION OF THE SUPPORT BRACKET, SHALL BE INCLUDED UNDER THE ITEM "TEMPORARY ILLUMINATION" (RDWY. ITEM).

LIGHT STANDARD SUPPORT BRACKET NOTES:

1. LIGHT STANDARD SUPPORT BRACKET HAS BEEN DESIGNED TO SUPPORT A STANDARD ALUMINUM LIGHT STANDARD (10m HIGH) WITH A 3m LUMINAIRE ARM BRACKET.
2. ALL STRUCTURAL STEEL SHALL CONFORM TO THE REQUIREMENTS OF ASTM A709M, GRADE 250. ALL STRUCTURAL STEEL SHALL BE GALVANIZED OR SHALL BE PAINTED WITH A SINGLE APPLICATION OF PRIMER.
3. ALL ANCHOR RODS SHALL CONFORM TO THE REQUIREMENTS OF ASTM F1554M, GRADE 380.
4. H-PILE SHALL BE CUT SUCH THAT BASE PLATE WILL BE LEVEL IN FINAL CONDITION.
5. HOLE DIAMETER AND EMBEDMENT DEPTH FOR ANCHOR ROD SHALL BE AS DETERMINED BY MANUFACTURER OF THE CHEMICAL ANCHORING MATERIAL. ANCHOR RODS PLACED IN FINAL PARAPET SHALL BE REMOVABLE OR SHALL BE CUT-OFF BELOW THE SURFACE OF THE PARAPET SUCH THAT HOLE CAN BE PROPERLY FILLED WITH NON-SHRINK GROUT FOLLOWING REMOVAL OF SUPPORT BRACKET.
6. WHEN DRILLING HOLES FOR THE ANCHOR RODS, CARE SHALL BE TAKEN NOT TO DAMAGE CONCRETE REINFORCEMENT OR RIGID METAL CONDUIT.
7. THE CONTRACTOR SHALL TAKE ALL NECESSARY MEASUREMENTS TO ASSURE PROPER FIT BETWEEN THE TEMPORARY LIGHT STANDARD BASE AND SUPPORT BRACKET BASE PLATE.

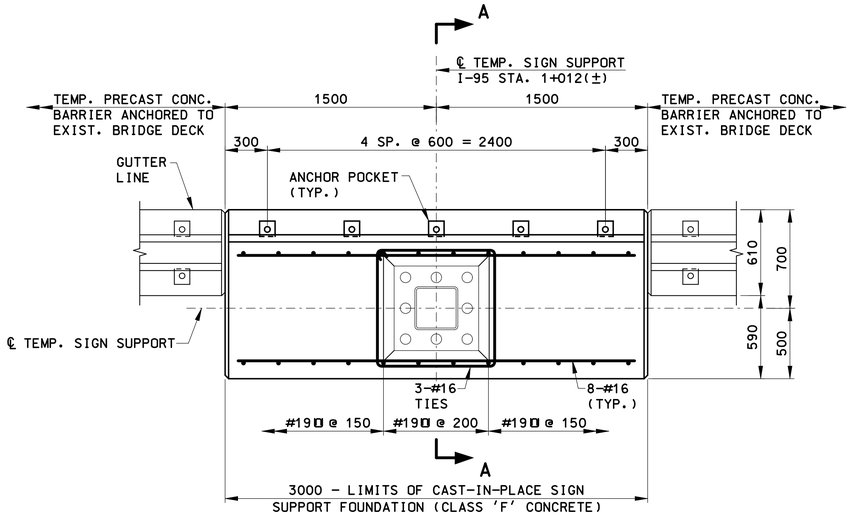

PLAN

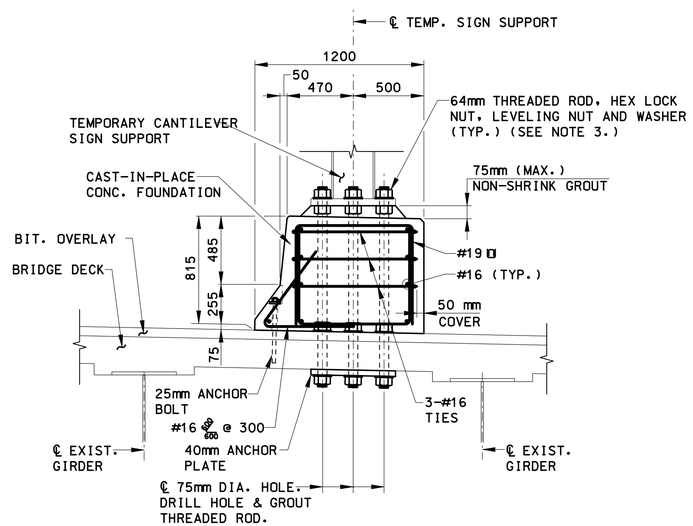

SECTION A-A

TEMPORARY SIGN SUPPORT FOUNDATION
SCALE: 1:20

TEMPORARY SIGN SUPPORT FOUNDATION NOTES

1. TEMPORARY SIGN SUPPORT FOUNDATION SHALL BE ESTABLISHED DURING STAGE 1A CONSTRUCTION TO SUPPORT THE TEMPORARY CANTILEVER SIGN SUPPORT. THE FINAL LOCATION AND LAYOUT OF THE TEMPORARY SIGN SUPPORT FOUNDATION SHALL BE DETERMINED BY THE ENGINEER. FOR APPROXIMATE LOCATION OF RELOCATED SIGN SUPPORT, SEE STAGE CONSTRUCTION PLANS.
2. EXISTING SIGN SUPPORT ANCHORAGE DETAILS AND GEOMETRY SHALL BE DETERMINED IN THE FIELD BY THE CONTRACTOR.
3. THREADED ROD SIZE AND PATTERN SHALL BE DETERMINED BY THE CONTRACTOR TO MATCH THE EXISTING ANCHORAGE. THREADED RODS SHALL CONFORM TO THE REQUIREMENTS OF ASTM F1554M, GRADE 725 AND SHALL BE HOT-DIP GALVANIZED IN ACCORDANCE WITH ASTM 153M.
4. ANCHOR BOLTS SHALL CONFORM TO ASTM A307M AND SHALL BE ANCHORED TO THE EXISTING DECK SIMILAR TO THE ADJACENT TEMPORARY PRECAST CONCRETE BARRIER.
5. ANCHOR PLATE SHALL CONFORM TO THE REQUIREMENTS OF ASTM A709, GRADE 250 AND SHALL BE GALVANIZED IN CONFORMANCE WITH ASTM A153M.
6. CONCRETE FOR THE SIGN SUPPORT FOUNDATION SHALL BE PAID FOR UNDER THE ITEM "CLASS 'F' CONCRETE". CONCRETE REINFORCING STEEL SHALL BE PAID FOR UNDER THE ITEM "DEFORMED STEEL BARS".
7. THE COST OF FURNISHING AND INSTALLING THE THREADED RODS, ANCHOR BOLTS, NUTS, WASHERS AND ANCHOR PLATE SHALL BE PAID FOR UNDER THE ITEM "DEFORMED STEEL BARS".
8. THE COST OF ALL FIELD MEASUREMENTS NECESSARY TO ASSURE PROPER FIT SHALL BE CONSIDERED AS INCLUDED IN THE GENERAL COST OF THE WORK.
9. THE COST OF REMOVING THE EXISTING CANTILEVER SIGN SUPPORT AND INSTALLING A TEMPORARY CANTILEVER SIGN SUPPORT SHALL BE INCLUDED UNDER THE ITEM "MAINTENANCE AND PROTECTION OF TRAFFIC" (RDWY. ITEM).
10. REMOVAL OF TEMPORARY SIGN SUPPORT FOUNDATIONS SHALL BE PAID FOR UNDER THE ITEM "REMOVAL OF SUPERSTRUCTURE (SITE NO. 1)".

REV.	DATE	DESCRIPTION	SHEET. NO
		REVISIONS	

SCALE AS NOTED

DESIGNER: D. BAGDASARIAN
DRAFTER: M. DEEGAN
CHECKED BY: T. LALIBERTE
DATE CHECKED: 11-12-12

STATE OF CONNECTICUT
DEPARTMENT OF TRANSPORTATION
ENGINEER: PB AMERICAS, INC.
APPROVED BY: DATE:

PROJECT TITLE: RECONSTRUCTION OF I-95 OVER WEST RIVER (BRIDGE NO. 00163)
CADD PLOTTED 11/13/2012

TOWN: NEW HAVEN / WEST HAVEN
DRAWING TITLE: STAGE CONSTRUCTION DETAILS - TEMPORARY PARAPET DETAILS

PROJECT NO.: 92-522
DRAWING NO.: STR-40
SHEET NO.:

10:50:02 AM
11/13/2012
T:\WBCADD\Projects\PB\B735\FD\Structures\Contract_Sheets\Br00163.dgn

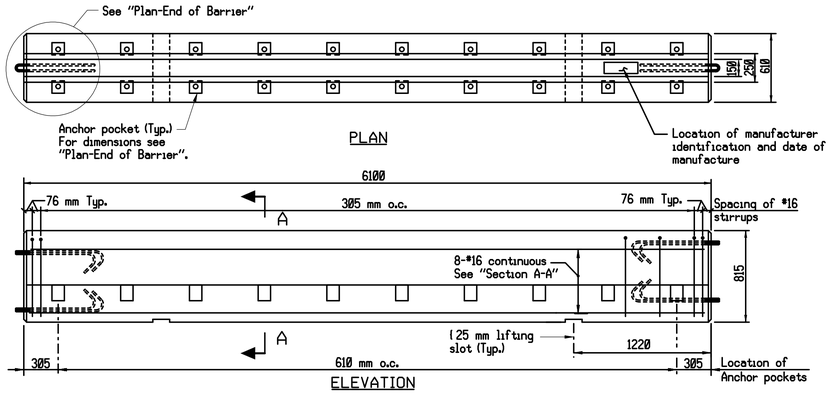

PRECAST BARRIER UNIT (STRUCTURE)

Scale: 1:25

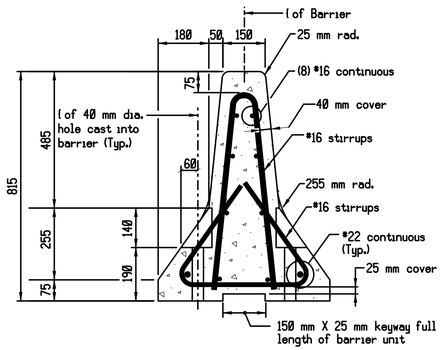

SECTION A-A

Scale: 1:10

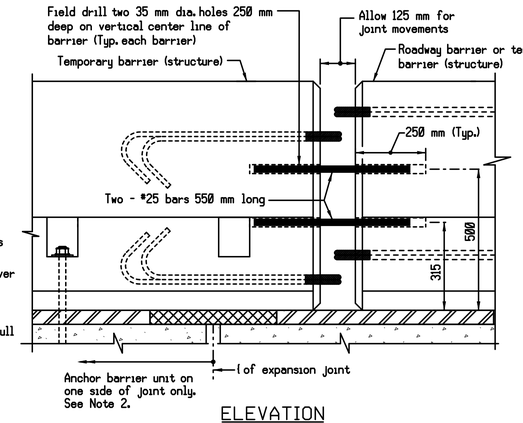

ELEVATION

BARRIER CONNECTION DETAILS

AT EXPANSION JOINTS (CASE II SHOWN)

Scale: 1:10

NOTES

1. The temporary barrier shown on this sheet shall be anchored onto bridge decks (see "Temporary Anchorage System") when it is used to protect a vertical drop-off. The temporary anchorage system shall conform to the following:

   a) Prestressed Deck Units: Threaded inserts shall be used for securing temporary barrier (structure) to prestressed deck units. The threaded inserts shall be cast into the deck units during fabrication and shall be located as required to accommodate the stage construction. See special provisions for additional information.

   b) Chemical Anchoring: This consists of drilling holes in new or existing concrete, placing threaded anchors in the holes, and securing the anchors with a pre-approved chemical anchor material which conforms to M.03.01-15 of the Standard Specifications. Hole diameter shall be determined by the manufacturer of the chemical anchoring material.

   c) Through-Bolting: This consists of drilling through deck slabs and securing removable anchors on the underside with plate washers and nuts. Through-bolting is not permitted on new construction or prestressed concrete. Maximum hole size in slab = 40 mm.

2. Number of Anchors: On the traffic side of a typical barrier, anchors shall be installed in all pockets. At barrier units which straddle bridge expansion joints the anchor and connection details shall conform to Table "A".

TABLE "A": BARRIER UNITS AT EXP. JOINTS			
Case	Span Length Contributing to Movement at the Expansion Joint.	Method of End Connection to Abutting Barrier Unit. (Where movement will occur)	Anchor Requirements for the Barrier Unit which Straddles the Bridge Joint
I.	Up to 30 meters	Use 24 mm connection rod but do not over tighten the nuts and allow room for expansion around the rod and loops.	On one side of the joint only, install as many anchors as possible on the traffic side of the barrier. On the other side of the joint do not install anchors.
II.	30 to 130 meters	Field drill holes in ends of both units and connect with 2-#25 bars. For details see "Barrier Connection Details".	On one side of the joint only, install a total of 10 anchors. Fill the pockets on the traffic side before filling the pockets on the drop-off side. If this cannot be achieved see III below.
III.	Over 130 meters and barrier layouts which do not satisfy II.	To be designed by Contractor and reviewed by Engineer. Cost of designing and furnishing special barrier units or attachments paid for under "TPCBC (Structure)".	To be designed by Contractor and reviewed by Engineer. Cost of designing and furnishing special barrier units or attachments paid for under "TPCBC (Structure)".

3. The work done on this sheet, with the exception of the delineators, shall be paid for under the item "Temporary Precast Concrete Barrier Curb (Structure)".

4. Delineators for Temporary Precast Barrier Curb shall conform to the requirements shown on DOT Standard Sheet M1205A 'Typical Delineation, Delineator and Object Marker Details'.

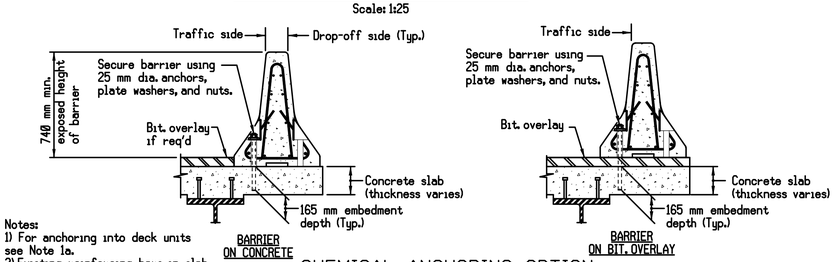

BARRIER ON CONCRETE

BARRIER ON BIT. OVERLAY

Notes:
1) For anchoring into deck units see Note 1a.
2) Existing reinforcing bars in slab not drawn for clarity. Avoid damaging the reinforcing bars in all newly constructed slabs.

CHEMICAL ANCHORING OPTION

(See Note 1b)

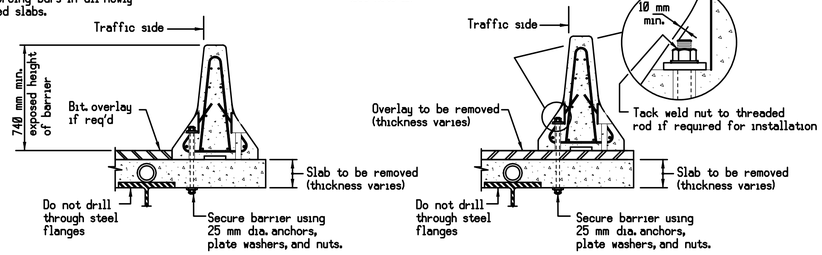

BARRIER ON CONCRETE

BARRIER ON BIT. OVERLAY

THRU-BOLTING OPTION

(See Note 1c)

TEMPORARY ANCHORAGE SYSTEM

Scale: 1:20

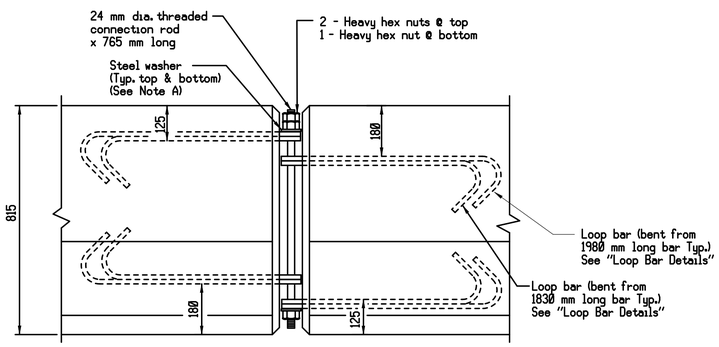

ELEVATION

BARRIER CONNECTION DETAILS

Scale: 1:10

NOTES FOR CONNECTION ROD DETAILS
(SEE "ELEVATION-BARRIER CONNECTION DETAILS")

A. Plain circular steel washers shall be manufactured with the following dimensions:

   Outside diameter = 70 mm (+6 mm, -0 mm)
   Inside diameter = 30 mm (±2 mm)
   Thickness = 5 mm

B. The nuts on the connection rod shall be turned until the bottom washer is drawn up against the loop bar. The loop bars shall not be bent due to the tightening process.

C. For ease of removal the threads on the connection rods and nuts shall be waxed.

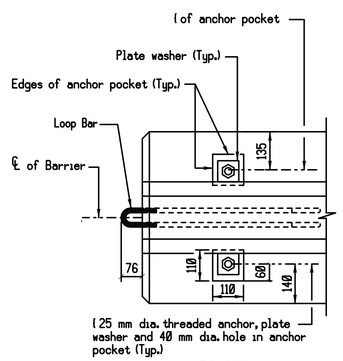

PLAN

END OF BARRIER

Scale: 1:10

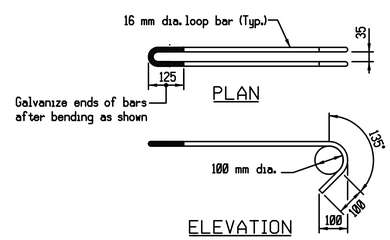

LOOP BAR DETAILS

Scale: 1:10

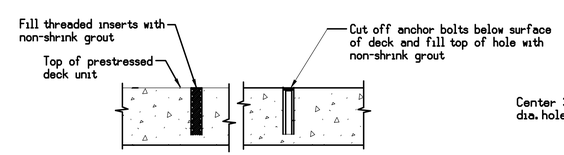

FILLING OF ANCHOR HOLES

Scale: 1:10

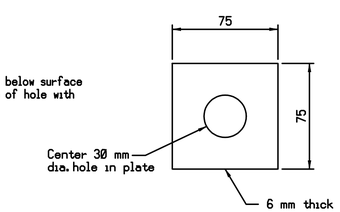

PLATE WASHER

Scale: 1:2

REV.	DATE	DESCRIPTION	SHEET. NO
		REVISIONS	

SCALE AS NOTED

DESIGNER: O. JAMBOTKAR
DRAFTER: G. LEE
CHECKED BY: T. LALIBERTE
DATE CHECKED: 11-12-12

STATE OF CONNECTICUT
DEPARTMENT OF TRANSPORTATION

ENGINEER: PB AMERICAS, INC.
APPROVED BY:
DATE:

PROJECT TITLE: RECONSTRUCTION OF I-95 OVER WEST RIVER (BRIDGE NO. 00163)

CADD
PLOTTED 11/13/2012

TOWN: NEW HAVEN / WEST HAVEN

DRAWING TITLE: TEMPORARY PRECAST CONCRETE BARRIER CURB (STRUCTURE)

PROJECT NO.: 92-522
DRAWING NO.: STR-41
SHEET NO.:

10:54:55 AM
11/13/2012
T:\V8CADD\Projects\PB\B73S\FD\Structures\Contract_Sheets\Br00163.dgn-41-092522-00163.dgn

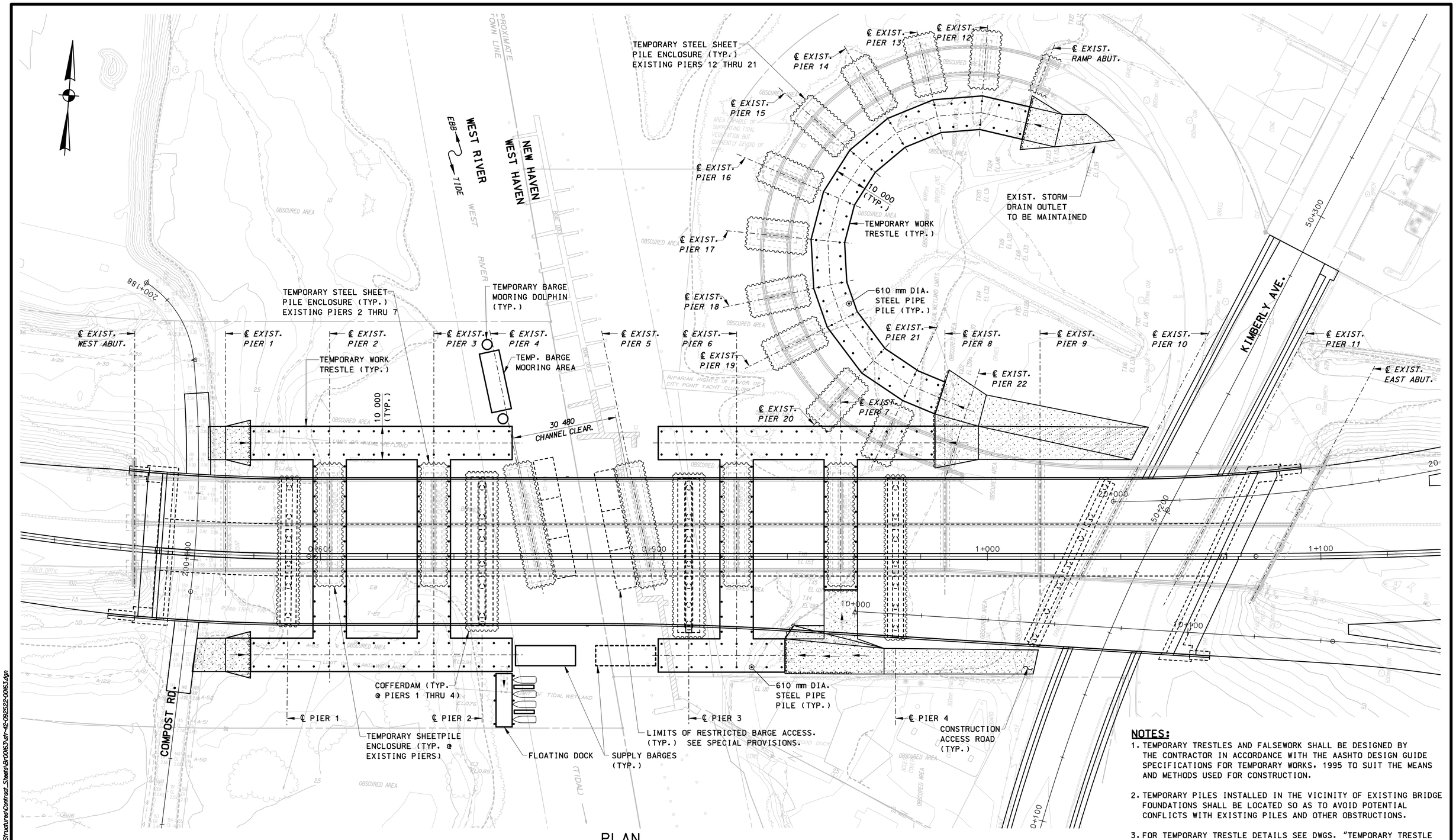

PLAN

SCALE: 1:500

NOTES:

1. TEMPORARY TRESTLES AND FALSEWORK SHALL BE DESIGNED BY THE CONTRACTOR IN ACCORDANCE WITH THE AASHTO DESIGN GUIDE SPECIFICATIONS FOR TEMPORARY WORKS, 1995 TO SUIT THE MEANS AND METHODS USED FOR CONSTRUCTION.
2. TEMPORARY PILES INSTALLED IN THE VICINITY OF EXISTING BRIDGE FOUNDATIONS SHALL BE LOCATED SO AS TO AVOID POTENTIAL CONFLICTS WITH EXISTING PILES AND OTHER OBSTRUCTIONS.
3. FOR TEMPORARY TRESTLE DETAILS SEE DWGS. "TEMPORARY TRESTLE DETAILS".

REV.	DATE	DESCRIPTION	SHEET. NO.
		REVISIONS	

THE INFORMATION, INCLUDING ESTIMATED QUANTITIES OF WORK, SHOWN ON THESE SHEETS IS BASED ON LIMITED INVESTIGATIONS BY THE STATE AND IS IN NO WAY WARRANTED TO INDICATE THE CONDITIONS OR ACTUAL QUANTITIES OF WORK WHICH WILL BE REQUIRED.

DESIGNER: L. PIPPIN
DRAFTER: A. KILPATRICK
CHECKED BY:
DATE CHECKED: 11-12-12

STATE OF CONNECTICUT
DEPARTMENT OF TRANSPORTATION

ENGINEER: PB AMERICAS, INC. /BY GM2 ASSOCIATES, INC.
APPROVED BY: DATE:

PROJECT TITLE: RECONSTRUCTION OF I-95 OVER WEST RIVER (BRIDGE NO. 00163)

CADD PLOTTED 11/13/2012

TOWN: NEW HAVEN / WEST HAVEN

DRAWING TITLE: TEMPORARY TRESTLE LAYOUT

PROJECT NO.: 92-522
DRAWING NO.: STR-42
SHEET NO.:

10:55:36 AM
11/13/2012
T:\VBCADD\Projects\PB\87135\FD\Structures\Contract_Sheets\Br00163-dr-42-092522-00163.dgn

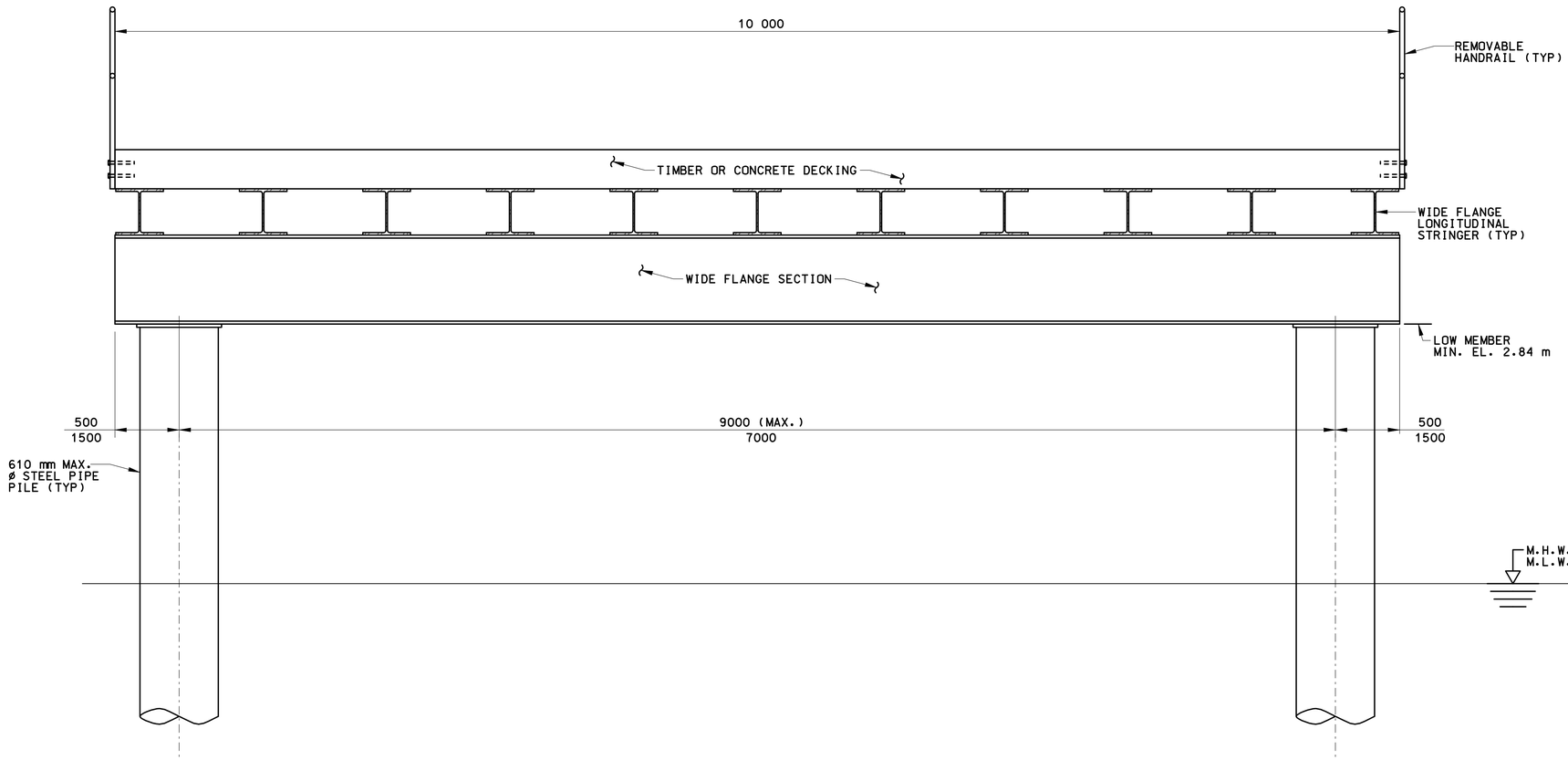

SECTION THRU TRESTLE

SCALE: 1:20

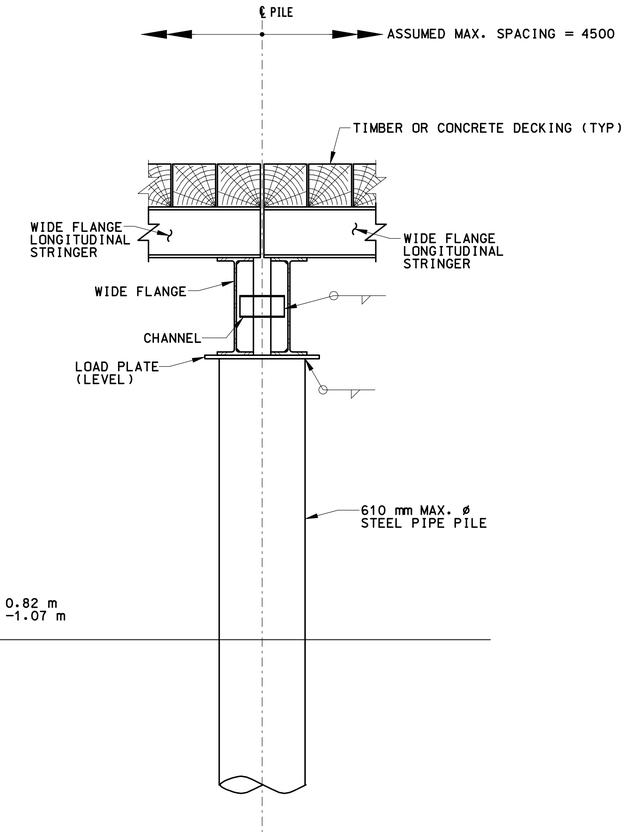

SECTION PIPE PILE BENT

SCALE: 1:20

TRESTLE DESIGN CRITERIA:

1. ASSUMED DESIGN CRANE: MANITOWOC MODEL 777 - 1555 kn LIFT CRANE
   CRAWLER TRACK LENGTH = 7.6 m
   CRAWLER TRACK WIDTH = 1.0 m
   OUT TO OUT WIDTH = 6.3 m
2. CRANE ON TRESTLE (WITH BOOM, COUNTERWEIGHTS AND A 500 kn MAX. HOIST LOAD) = 1820 kn

THE INFORMATION SHOWN ON THIS DRAWING, INCLUDING (AS APPLICABLE) SIZES OF MEMBERS, THE SEQUENCE OF CONSTRUCTION, AND ERECTION PROCEDURES CONVEYS THE ASSUMPTIONS MADE BY THE DESIGNER IN DESIGNING THE STRUCTURE, AND IS FOR INFORMATIONAL USE ONLY. THE CONTRACTOR SHALL BE RESPONSIBLE FOR SELECTING THE MEANS AND METHODS FOR CONSTRUCTION. THE CONTRACTOR SHALL ALSO SUBMIT INFORMATION INCLUDING DESIGN CALCULATIONS, CONSTRUCTION SCHEMATICS, AND CONSTRUCTION SEQUENCES AND PROCEDURES TO THE ENGINEER FOR REVIEW.

REV.	DATE	DESCRIPTION	SHEET. NO.
		REVISIONS	

THE INFORMATION, INCLUDING ESTIMATED QUANTITIES OF WORK, SHOWN ON THESE SHEETS IS BASED ON LIMITED INVESTIGATIONS BY THE STATE AND IS IN NO WAY WARRANTED TO INDICATE THE CONDITIONS OR ACTUAL QUANTITIES OF WORK WHICH WILL BE REQUIRED.

DESIGNER: L. PIPPIN
DRAFTER: A. KILPATRICK
CHECKED BY:
DATE CHECKED: 11-12-12

STATE OF CONNECTICUT
DEPARTMENT OF TRANSPORTATION

ENGINEER: PB AMERICAS, INC. /BY GM2 ASSOCIATES, INC.
APPROVED BY: DATE:

PROJECT TITLE: RECONSTRUCTION OF I-95 OVER WEST RIVER (BRIDGE NO. 00163)
CADD PLOTTED 11/13/2012

TOWN: NEW HAVEN / WEST HAVEN
DRAWING TITLE: TEMPORARY TRESTLE DETAILS - SECTIONS

PROJECT NO.: 92-522
DRAWING NO.: STR-43
SHEET NO.:

10:56:17 AM
11/13/2012
T:\VBCADD-Projects\PB\8735\FD\Structures\Contract_Sheets\Br00163.dgn-43-092522-00163.dgn

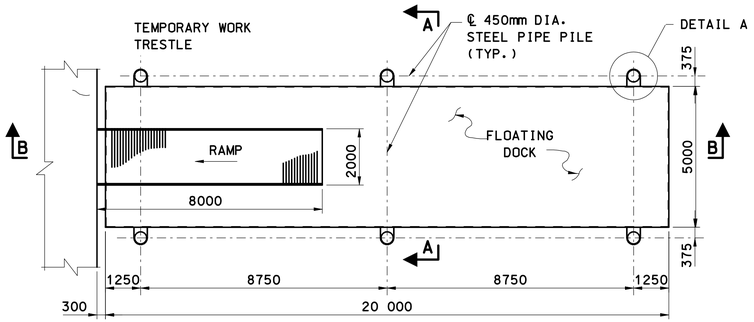

PLAN

SCALE: 1:100

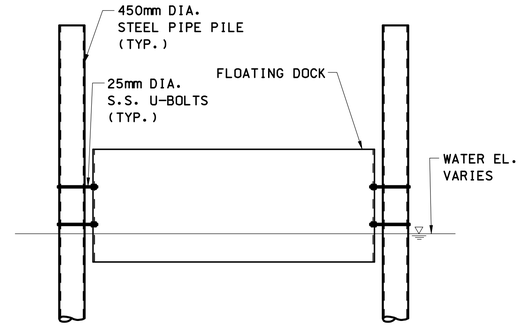

SECTION A–A

SCALE 1:50

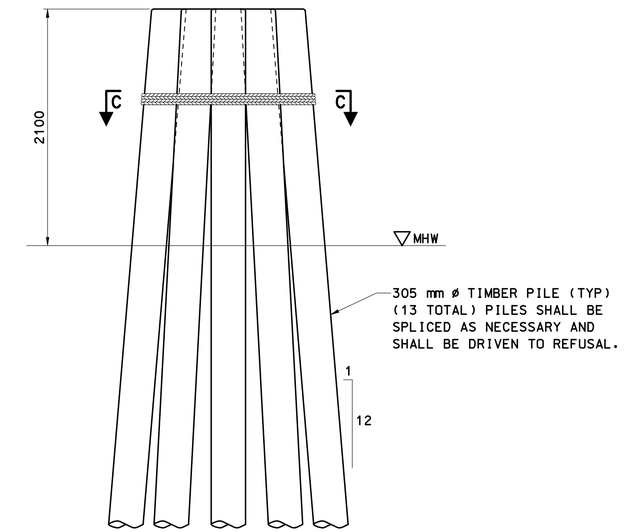

ELEVATION

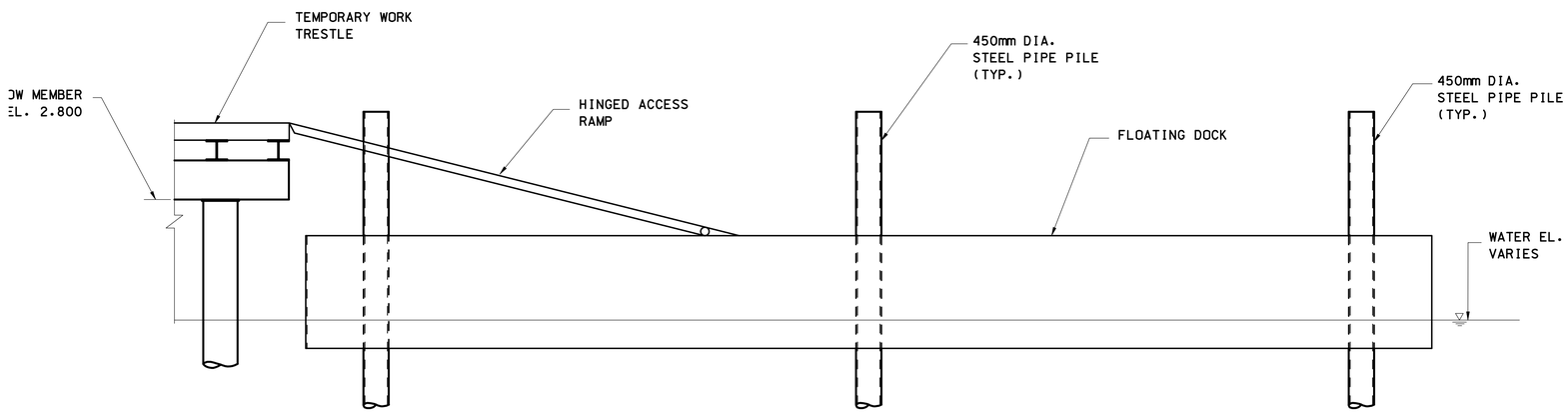

SECTION B–B

SCALE 1:50

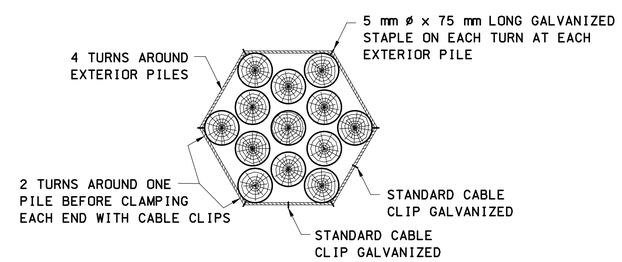

SECTION C–C

MOORING DETAILS

NOT TO SCALE

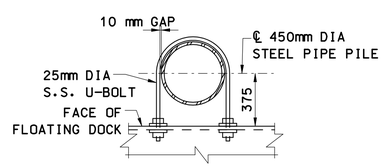

DETAIL A

SCALE: 1:20

THE INFORMATION SHOWN ON THIS DRAWING, INCLUDING (AS APPLICABLE) SIZES OF MEMBERS, THE SEQUENCE OF CONSTRUCTION, AND ERECTION PROCEDURES CONVEYS THE ASSUMPTIONS MADE BY THE DESIGNER IN DESIGNING THE STRUCTURE, AND IS FOR INFORMATIONAL USE ONLY. THE CONTRACTOR SHALL BE RESPONSIBLE FOR SELECTING THE MEANS AND METHODS FOR CONSTRUCTION. THE CONTRACTOR SHALL ALSO SUBMIT INFORMATION INCLUDING DESIGN CALCULATIONS, CONSTRUCTION SCHEMATICS, AND CONSTRUCTION SEQUENCES AND PROCEDURES TO THE ENGINEER FOR REVIEW.

REV.	DATE	DESCRIPTION	SHEET. NO
		REVISIONS	

THE INFORMATION, INCLUDING ESTIMATED QUANTITIES OF WORK, SHOWN ON THESE SHEETS IS BASED ON LIMITED INVESTIGATIONS BY THE STATE AND IS IN NO WAY WARRANTED TO INDICATE THE CONDITIONS OR ACTUAL QUANTITIES OF WORK WHICH WILL BE REQUIRED.

DESIGNER: L. PIPPIN
DRAFTER: A. KILPATRICK
CHECKED BY:
DATE CHECKED: 11-12-12

STATE OF CONNECTICUT
DEPARTMENT OF TRANSPORTATION

ENGINEER: PB AMERICAS, INC. /BY GM2 ASSOCIATES, INC.
APPROVED BY: DATE:

PROJECT TITLE: RECONSTRUCTION OF I-95 OVER WEST RIVER (BRIDGE NO. 00163)
CADD PLOTTED 11/13/2012

TOWN: NEW HAVEN / WEST HAVEN
DRAWING TITLE: TEMPORARY TRESTLE DETAILS – FLOATING DOCK

PROJECT NO.: 92-522
DRAWING NO.: STR-44
SHEET NO.:

10:57:14 AM
11/13/2012
T:\VBCADD\Projects\PB\B735\FD\Structures\Contract_Sheets\Br00163\str-44-092522-00163.dgn

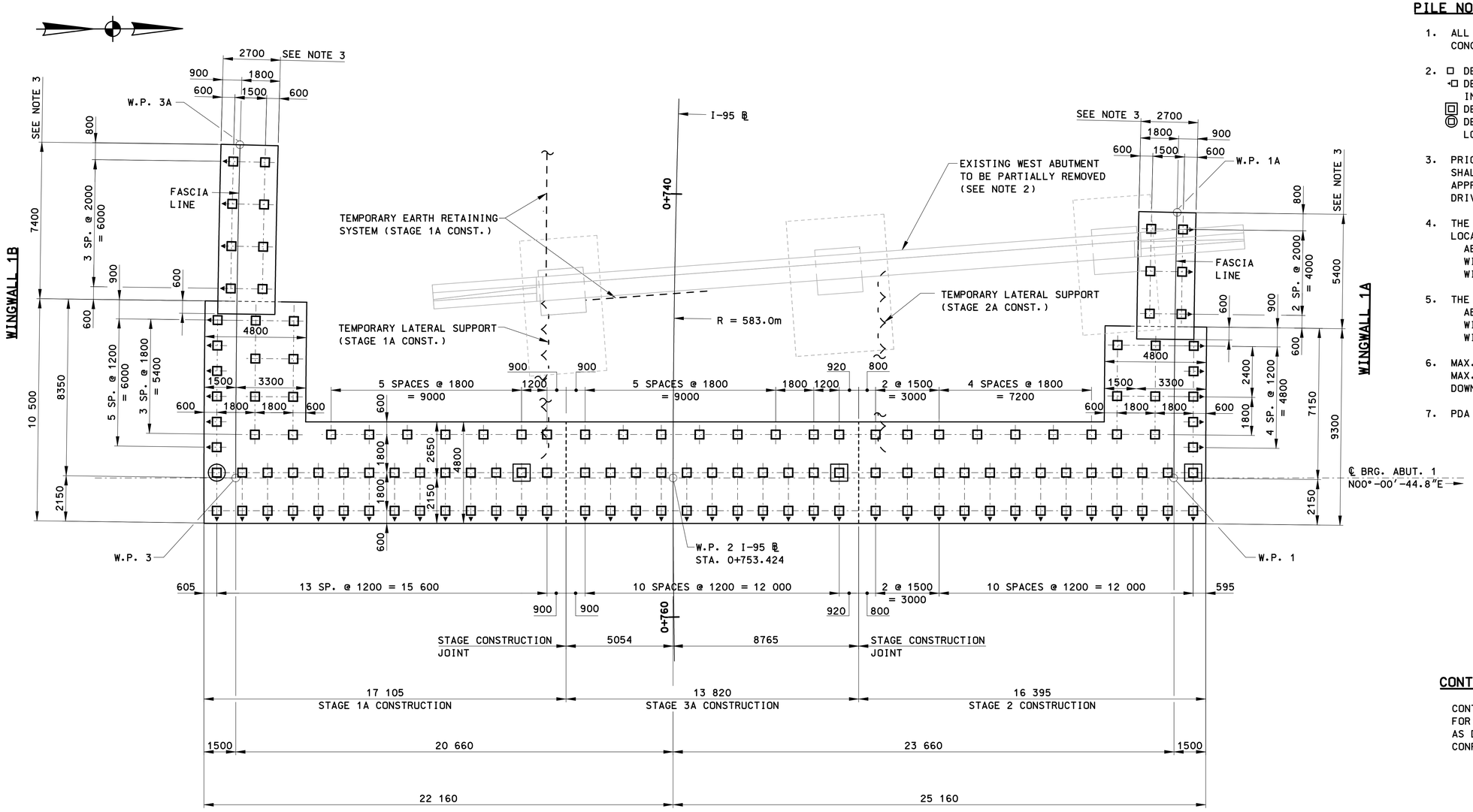

ABUTMENT 1 PILE PLAN

SCALE: 1:100

PILE NOTES:

1. ALL PILES SHALL BE 406 mm SQUARE PRESTRESSED CONCRETE PILES, SEE "PILE DETAILS".
2. □ DENOTES PROPOSED VERTICAL PILE.
   ◁□ DENOTES PROPOSED BATTERED PILE (BATTER 1:4 IN DIRECTION OF ARROW).
   ▣ DENOTES TEST PILE (29.0m LONG).
   ◎ DENOTES TEST PILE (29.0m LONG) WITH PILE LOADING TEST.
3. PRIOR TO DRIVING THE PILES, THE CONTRACTOR SHALL SUBMIT TO THE ENGINEER FOR REVIEW AND APPROVAL HIS METHOD AND SEQUENCE OF PILE DRIVING.
4. THE ESTIMATED LENGTHS OF PILES WILL VARY WITH LOCATION AND CUTOFF ELEVATION AS FOLLOWS:
   ABUTMENT NO. 1: 27.0 m (INCL. WINGWALL TYPE I).
   WINGWALL 1A: 30.5 m (WINGWALL TYPE II ONLY).
   WINGWALL 1B: 31.4 m (WINGWALL TYPE II ONLY).
5. THE NUMBER OF PILES SHALL BE AS FOLLOWS:
   ABUTMENT NO. 1: 122 (INCL. WINGWALL TYPE I).
   WINGWALL 1A: 6 (WINGWALL TYPE II ONLY).
   WINGWALL 1B: 8 (WINGWALL TYPE II ONLY).
6. MAX. DESIGN PILE LOAD = 735 KN (STRENGTH-I).
   MAX. DESIGN PILE LOAD = 760 KN (EXT. EVENT-I).
   DOWNDRAG = 347 KN/PILE.
7. PDA TESTING ON ALL TEST PILES.

CONTRACTOR NOTE:

CONTRACTOR MAY ELECT TO DRIVE SELECT PILES FOR SUBSEQUENT STAGE DURING PRESENT STAGE AS DEEMED NECESSARY TO ELIMINATE POTENTIAL CONFLICTS.

NOTES:

1. FOR WORKING POINT (W.P.) AND GIRDER COORDINATES, SEE "LAYOUT PLAN & COORDINATES" SHEETS.
2. FOR EXISTING SUBSTRUCTURE REMOVAL LIMITS AND DETAILS, SEE "DEMOLITION DETAILS".
3. ALL WINGWALL 1A AND 1B DIMENSIONS ARE EITHER CURVED OR RADIAL. ALL CURVED DIMENSIONS ARE TAKEN ALONG FASCIA LINE.

REV.	DATE	DESCRIPTION	SHEET. NO.
		REVISIONS	

THE INFORMATION, INCLUDING ESTIMATED QUANTITIES OF WORK, SHOWN ON THESE SHEETS IS BASED ON LIMITED INVESTIGATIONS BY THE STATE AND IS IN NO WAY WARRANTED TO INDICATE THE CONDITIONS OR ACTUAL QUANTITIES OF WORK WHICH WILL BE REQUIRED.

DESIGNER: T. LALIBERTE
DRAFTER: G. LEE /T. LALIBERTE
CHECKED BY: J. YANG
DATE CHECKED: 11-07-03

STATE OF CONNECTICUT
DEPARTMENT OF TRANSPORTATION
ENGINEER: PB AMERICAS, INC.
APPROVED BY: DATE:

PROJECT TITLE: RECONSTRUCTION OF I-95 OVER WEST RIVER (BRIDGE NO. 00163)
CADD
PLOTTED 11/13/2012

TOWN: NEW HAVEN / WEST HAVEN
DRAWING TITLE: PILE PLAN - ABUTMENT 1

PROJECT NO.: 92-522
DRAWING NO.: STR-45
SHEET NO.:

10:58:02 AM
11/13/2012
T:\WORKADD\Projects\PB\87735\FD\Structures\Contract_Sheets\Br00163\dn-45-092522-00163.dgn

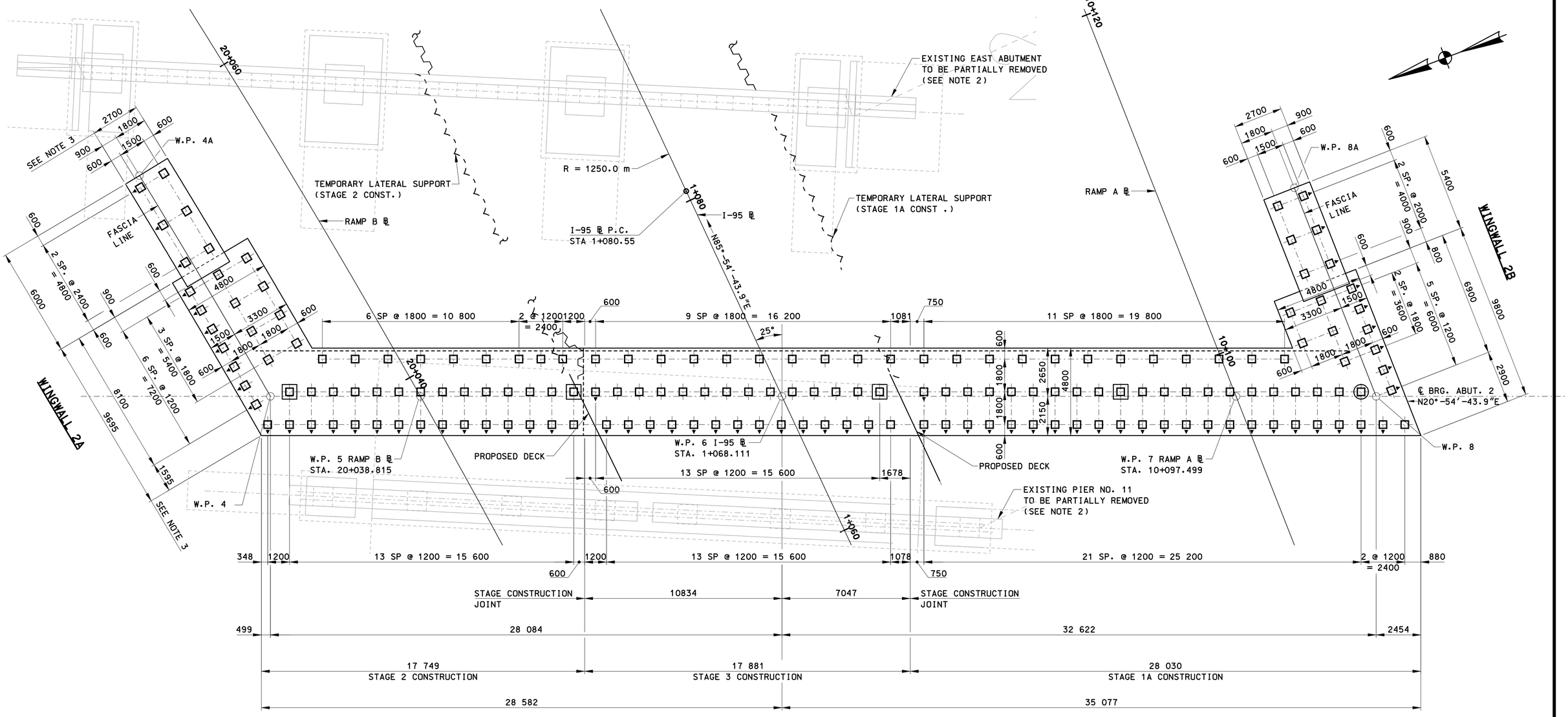

ABUTMENT 2 PILE PLAN

SCALE: 1:100

PILE NOTES:

1. ALL PILES SHALL BE 406 mm SQUARE PRESTRESSED CONCRETE PILES, SEE "PILE DETAILS".
2. □ DENOTES PROPOSED VERTICAL PILE.
   ◄□ DENOTES PROPOSED BATTERED PILE (BATTER 1:4 IN DIRECTION OF ARROW).
   ⊡ DENOTES TEST PILE (27.5m LONG).
   ⊚ DENOTES TEST PILE (27.5m LONG) WITH PILE LOADING TEST.
3. PRIOR TO DRIVING THE PILES, THE CONTRACTOR SHALL SUBMIT TO THE ENGINEER FOR REVIEW AND APPROVAL HIS METHOD AND SEQUENCE OF PILE DRIVING.
4. THE ESTIMATED LENGTHS OF PILES WILL VARY WITH LOCATION AND CUTOFF ELEVATION AS FOLLOWS:
   ABUTMENT NO. 2: 25.6 m (INCL. WINGWALL TYPE I).
   WINGWALL 2A: 28.5 m (WINGWALL TYPE II ONLY).
   WINGWALL 2B: 29.6 m (WINGWALL TYPE II ONLY).
5. THE NUMBER OF PILES SHALL BE AS FOLLOWS:
   ABUTMENT NO. 2: 156 (INCL. WINGWALL TYPE I).
   WINGWALL 2A: 6 (WINGWALL TYPE II ONLY).
   WINGWALL 2B: 6 (WINGWALL TYPE II ONLY).
6. MAX. DESIGN PILE LOAD = 600 KN (STRENGTH-I).
   MAX. DESIGN PILE LOAD = 616 KN (EXT. EVENT-I).
   DOWNDRAG = 392 KN/PILE.
7. PDA TESTING ON ALL TEST PILES.

. CONTRACTOR NOTE:

CONTRACTOR MAY ELECT TO DRIVE SELECT PILES FOR SUBSEQUENT STAGE DURING PRESENT STAGE AS DEEMED NECESSARY TO ELIMINATE POTENTIAL CONFLICTS.

NOTES:

1. FOR WORKING POINT (W.P.) AND GIRDER COORDINATES, SEE "LAYOUT PLAN & COORDINATES" SHEETS.
2. FOR EXISTING SUBSTRUCTURE REMOVAL LIMITS AND DETAILS, SEE "DEMOLITION DETAILS".
3. ALL WINGWALL 1A AND 1B DIMENSIONS ARE EITHER CURVED OR RADIAL. ALL CURVED DIMENSIONS ARE TAKEN ALONG FASCIA LINE.

REV.	DATE	DESCRIPTION	SHEET. NO.
		REVISIONS	

THE INFORMATION, INCLUDING ESTIMATED QUANTITIES OF WORK, SHOWN ON THESE SHEETS IS BASED ON LIMITED INVESTIGATIONS BY THE STATE AND IS IN NO WAY WARRANTED TO INDICATE THE CONDITIONS OR ACTUAL QUANTITIES OF WORK WHICH WILL BE REQUIRED.

DESIGNER: T. LALIBERTE
DRAFTER: G. LEE \ T.LALIBERTE
CHECKED BY: O. JAMBOTKAR
DATE CHECKED: 11-12-12

STATE OF CONNECTICUT
DEPARTMENT OF TRANSPORTATION

ENGINEER: PB AMERICAS, INC.
APPROVED BY: DATE:

PROJECT TITLE: RECONSTRUCTION OF I-95 OVER WEST RIVER (BRIDGE NO. 00163)
CADD | PLOTTED 11/13/2012

TOWN: NEW HAVEN / WEST HAVEN
DRAWING TITLE: PILE PLAN - ABUTMENT 2

PROJECT NO.: 92-522
DRAWING NO.: STR-46
SHEET NO.:

105852 AM
11/13/2012
T:\WORKDIR\Projects\PB\87135\FD\Structures\Contract_Sheets\Br00163\dr-46092522-00163.dgn

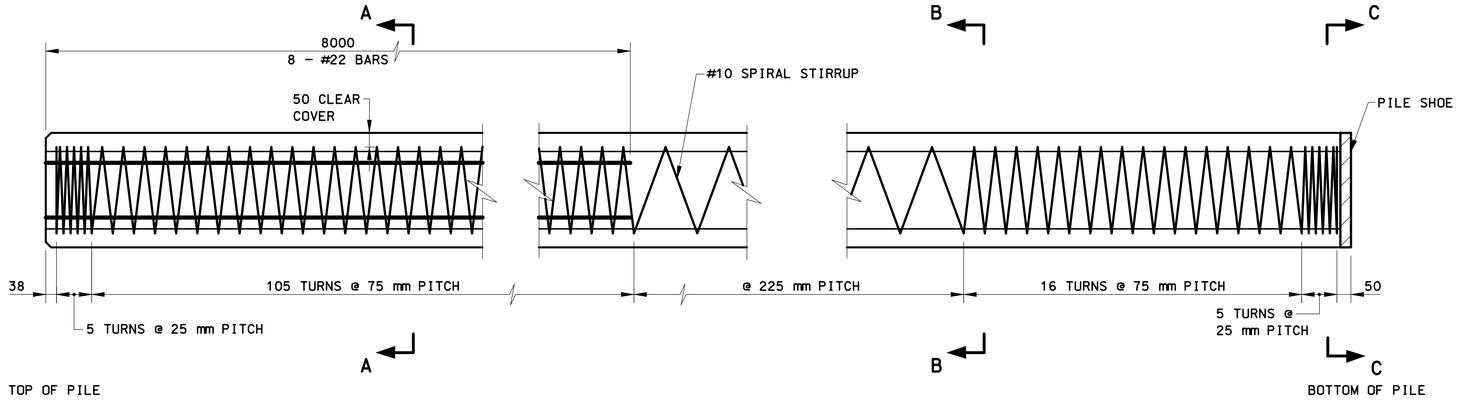

ELEVATION
SCALE: 1:10

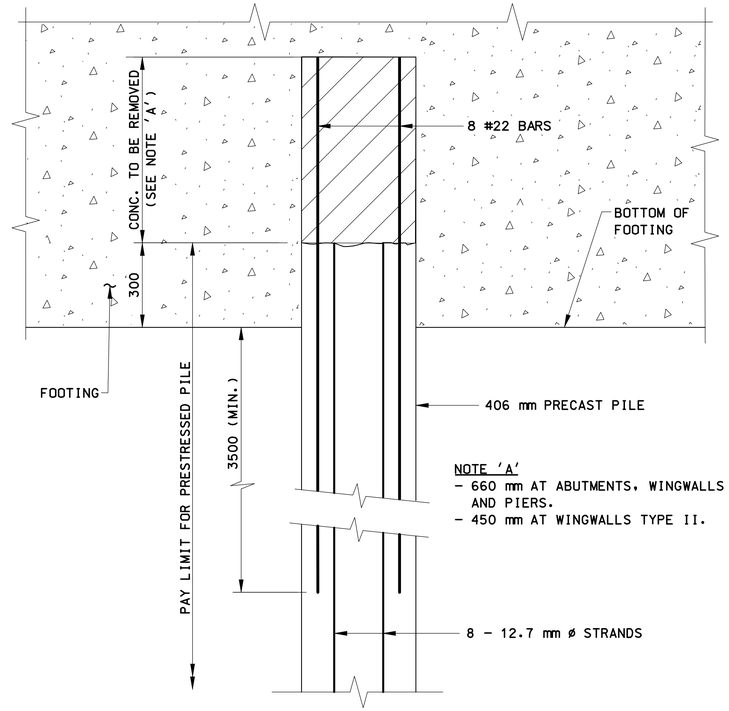

PILE CUTOFF INTO FOOTING
SCALE: 1:10

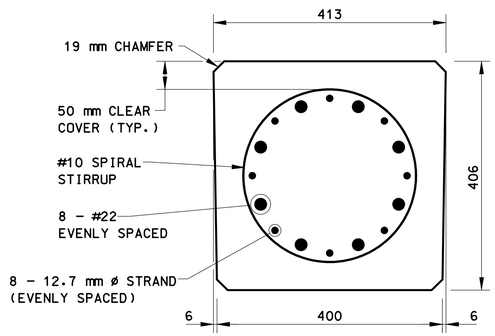

SECTION A–A
SCALE: 1:5

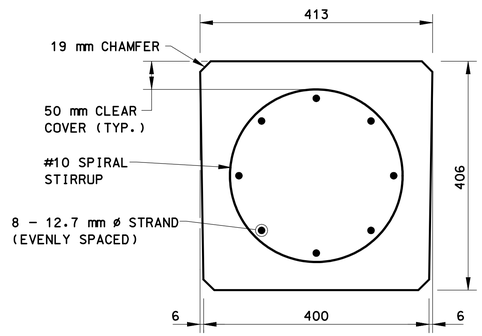

SECTION B–B
SCALE: 1:5

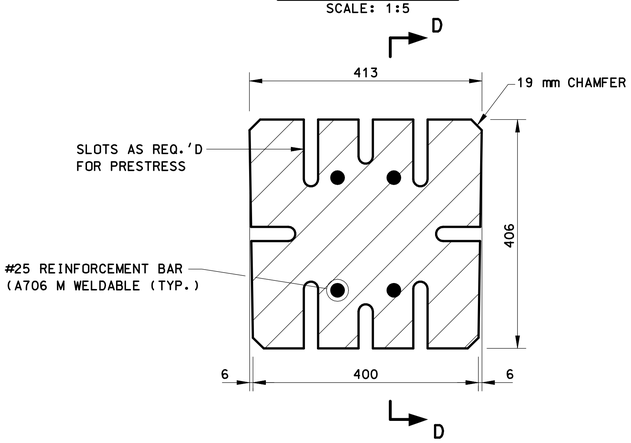

SECTION C–C
SCALE: 1:5

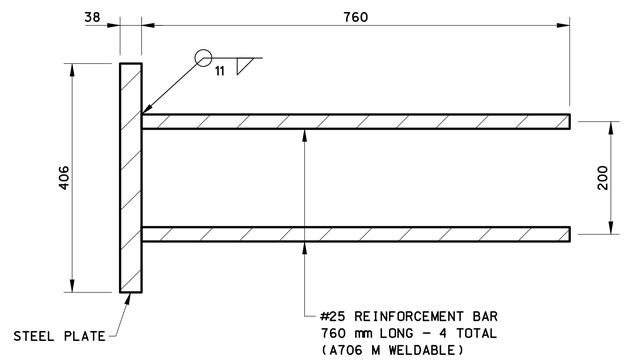

SECTION D–D
SCALE: 1:5

NOTES:

1. CONCRETE FOR PRESTRESSED CONCRETE PILES SHALL HAVE MINIMUM COMPRESSIVE STRENGTH OF:
   f'ci = 28 MPa AT TRANSFER.
   f'c = 41 MPa AT 28 DAYS.
2. PRESTRESSED STRANDS SHALL BE LOW RELAXATION 12.7 mm DIAMETER SEVEN WIRE UNCOATED STRANDS CONFORMING TO ASTM A416M, GRADE 1860.
3. ALL REINFORCING BARS SHALL CONFORM TO ASTM A615M, GRADE 420 UNLESS NOTED OTHERWISE.
4. ALL STEEL SHALL BE ASTM A709M, GRADE 250 AND ALL WELDING SHALL CONFORM TO AWS D1.5.
5. INITIAL TENSION ON 12.7 mm STRANDS SHALL BE 138 KN PER STRAND (JACKING TENSION).
6. PILES ARE DESIGNED FOR 5.2 MPa UNIFORM COMPRESSION AFTER PRESTRESS LOSSES WITHOUT ANY LOADS.
7. NO PRESTRESS SHALL BE TRANSFERRED TO THE CONCRETE UNTIL IT HAS ACHIEVED THE MINIMUM COMPRESSION STRENGTH AT TRANSFER AS SHOWN BY THE CYLINDER TEST.
8. PILE SPLICES ARE NOT ALLOWED.
9. COST OF CONCRETE REMOVAL AT TOP OF PILE SHALL BE INCLUDED UNDER THE ITEM "FURNISHING 406 mm SQUARE PRESTRESSED CONCRETE PILES (PRETENSIONED)".
10. LOAD TEST PILES SHALL BE CAST WITH A 19mm SCHEDULE 40 STEEL PIPE CONCENTRIC TO THE CENTER OF THE PILE, CAPPED ON THE BOTTOM AND EXTENDING TO WITHIN 150mm OF THE PILE TIP.

REV.	DATE	DESCRIPTION	SHEET. NO
		REVISIONS	

SCALE AS NOTED

DESIGNER: T. LALIBERTE
DRAFTER: M. DEEGAN
CHECKED BY: O. JAMBOTKAR
DATE CHECKED: 11-12-12

STATE OF CONNECTICUT
DEPARTMENT OF TRANSPORTATION

ENGINEER: PB AMERICAS, INC.
APPROVED BY:
DATE:

PROJECT TITLE: RECONSTRUCTION OF I-95 OVER WEST RIVER (BRIDGE NO. 00163)
CADD
PLOTTED 11/13/2012

TOWN: NEW HAVEN / WEST HAVEN
DRAWING TITLE: PILE DETAILS

PROJECT NO.: 92-522
DRAWING NO.: STR-47
SHEET NO.:

11/00/2 AM
11/13/2012
T:\VBCADD\Projects\PB\B735\FD\Structures\Contract_Sheets\Br00163.dgn-Pf-092522-00163.dgn

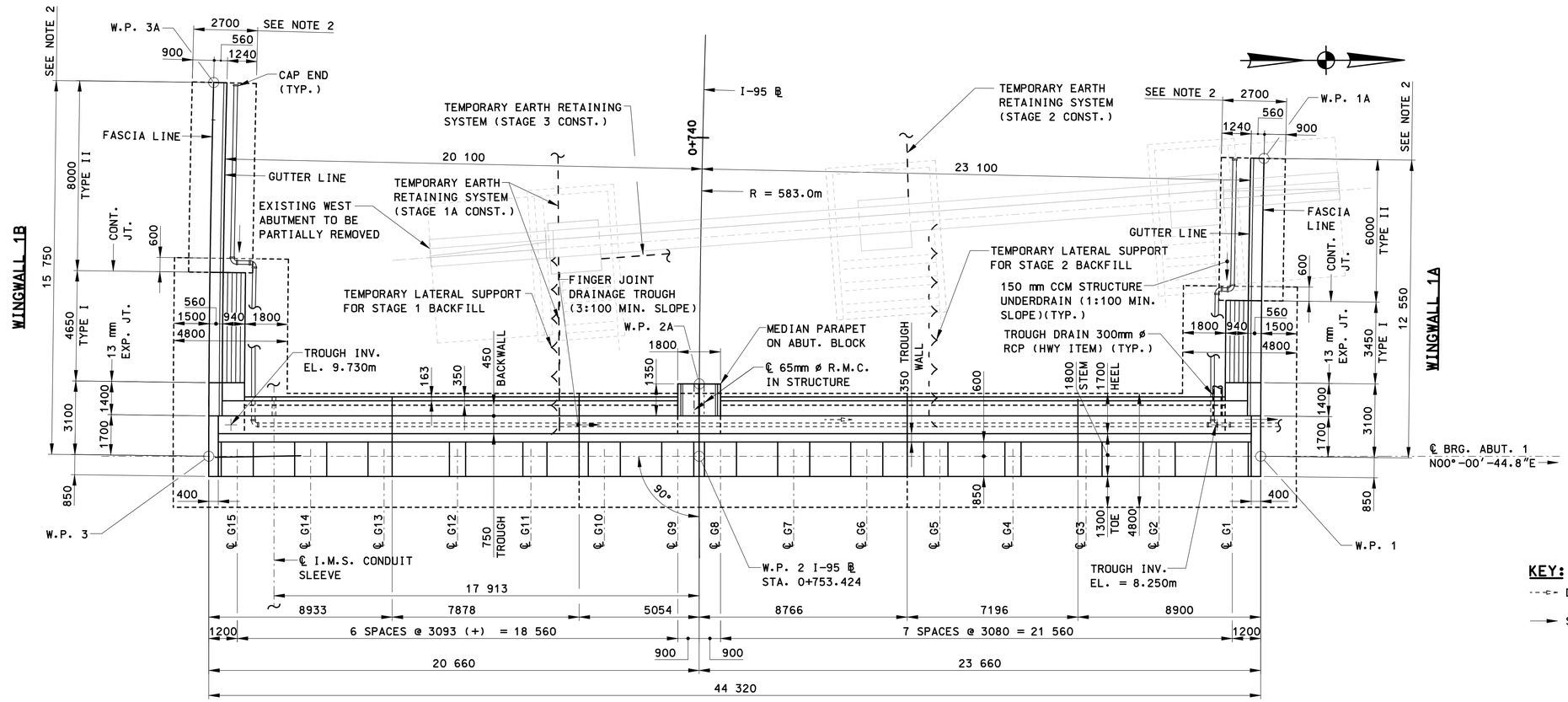

PLAN

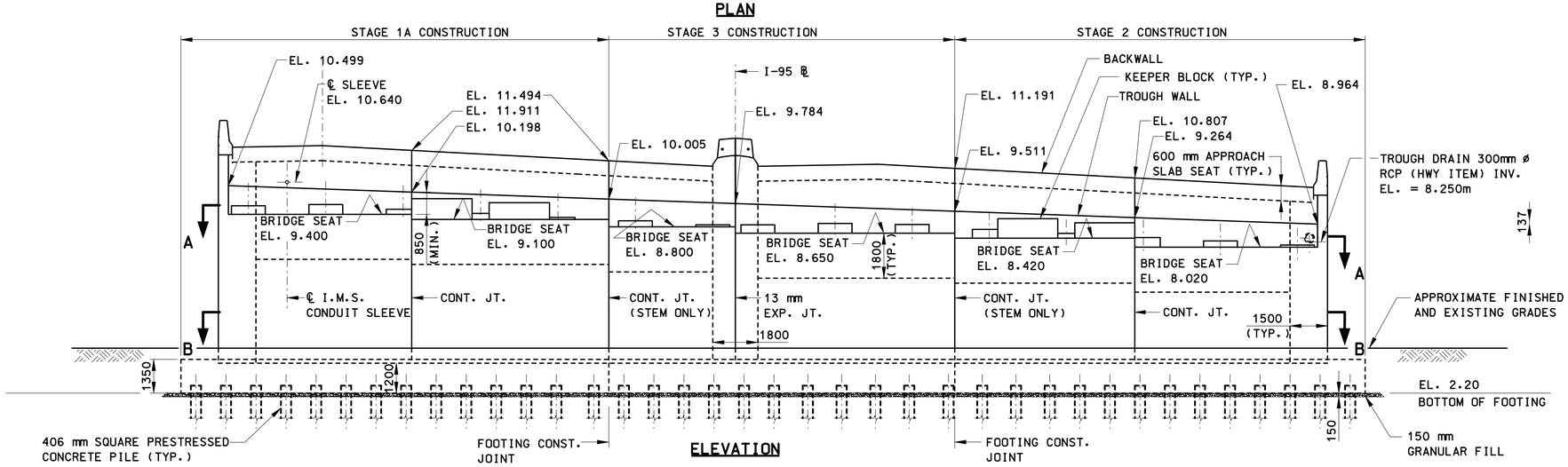

ELEVATION

ABUTMENT 1

SCALE: 1:100

CONCRETE BEARING PAD ELEVATIONS AND GIRDER ANGLES		
LOCATION	ELEVATION	ANGLE
A1SB – G1	8.122	90°-00'-00.0" *
A1SB – G2	8.290	90°-00'-00.0" *
A1SB – G3	8.425	90°-00'-00.0" *
A1SB – G4	8.589	90°-00'-00.0" *
A1SB – G5	8.752	90°-00'-00.0" *
A1SB – G6	8.943	90°-00'-00.0" *
A1SB – G7	8.986	90°-00'-00.0" *
A1SB – G8	8.933	90°-00'-00.0" *
A1NB – G9	8.933	90°-00'-00.0" *
A1NB – G10	9.095	90°-00'-00.0" *
A1NB – G11	9.229	90°-00'-00.0" *
A1NB – G12	9.391	90°-00'-00.0" *
A1NB – G13	9.553	90°-00'-00.0" *
A1NB – G14	9.744	90°-00'-00.0" *
A1NB – G15	9.693	90°-00'-00.0" *

*GIRDER ANGLE MEASURED BETWEEN ℄ BRG. AND FROM A LINE TANGENT TO ℄ GIRDER AT ℄ BRG.

KEY:

---c- DRAINAGE TROUGH FLOW DIRECTION.

→ STRUCTURE UNDERDRAIN FLOW DIRECTION.

NOTES:

1. FOR WORKING POINT COORDINATES, SEE "LAYOUT PLAN & COORDINATES" SHEETS.
2. ALL WINGWALL 1A AND 1B DIMENSIONS ARE EITHER CURVED OR RADIAL. ALL CURVED DIMENSIONS ARE TAKEN ALONG FASCIA LINE.
3. FOR WINGWALL ELEVATIONS, SEE "WINGWALLS" SHEET.
4. FOR TYPICAL ABUTMENT AND WINGWALL SECTIONS, SEE "TYPICAL SECTIONS" SHEET.
5. FOR SECTION A-A, SECTION B-B AND ABUTMENT DETAILS, SEE "ABUTMENT DETAILS" SHEETS.
6. FOR ADDITIONAL BACKWALL ELEVATIONS AT BREAK POINTS, SEE "FINGER JOINT LAYOUT" AND "APPROACH SLAB & DETAILS" SHEETS.

REV.	DATE	DESCRIPTION	SHEET. NO
		REVISIONS	

DESIGNER: T. LALIBERTE
DRAFTER: G. LEE \ T. LALIBERTE
CHECKED BY: O. JAMBOTKAR
DATE CHECKED: 11-12-12

STATE OF CONNECTICUT
DEPARTMENT OF TRANSPORTATION

ENGINEER: PB AMERICAS, INC.
APPROVED BY:
DATE:

PROJECT TITLE: RECONSTRUCTION OF I-95 OVER WEST RIVER (BRIDGE NO. 00163)
CADD
PLOTTED 11/13/2012

TOWN: NEW HAVEN / WEST HAVEN
DRAWING TITLE: ABUTMENT 1

PROJECT NO.: 92-522
DRAWING NO.: STR-48
SHEET NO.:

11:00:59 AM
11/13/2012
T:\VBCADD\Projects\PB\BT35\FD\Structures\Contract_Sheets\Br00163.dgn-49-092522-00163.dgn

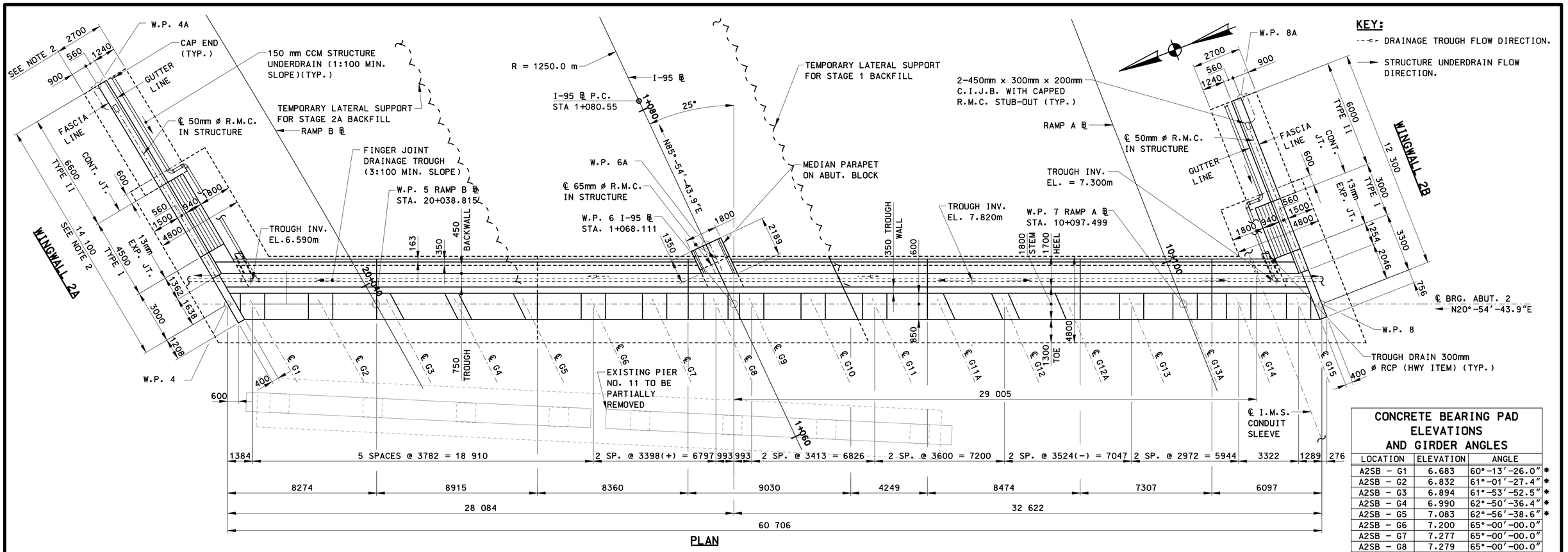

PLAN

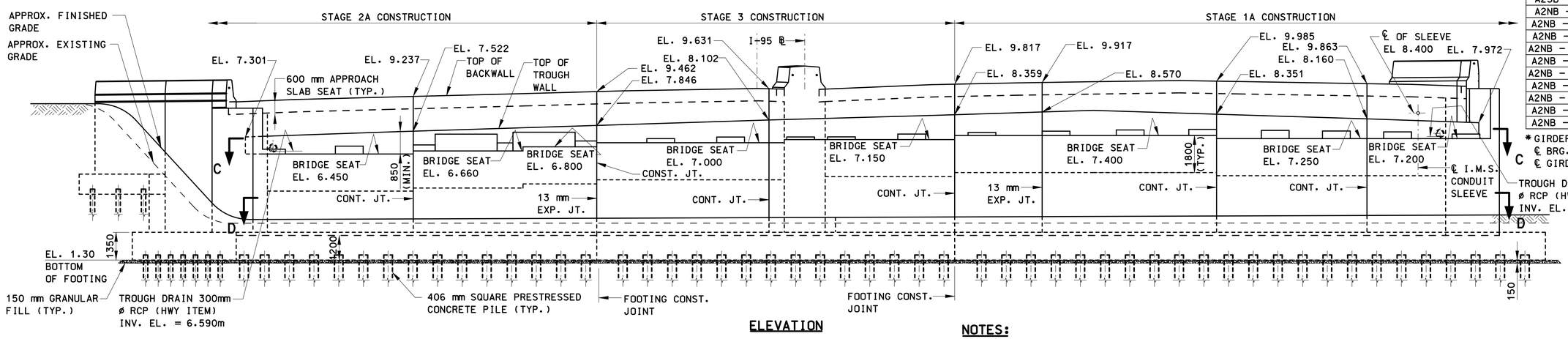

ELEVATION

ABUTMENT 2

SCALE: 1:100

CONCRETE BEARING PAD ELEVATIONS AND GIRDER ANGLES

LOCATION	ELEVATION	ANGLE
A2SB - G1	6.683	60°-13'-26.0" *
A2SB - G2	6.832	61°-01'-27.4" *
A2SB - G3	6.894	61°-53'-52.5" *
A2SB - G4	6.990	62°-50'-36.4" *
A2SB - G5	7.083	62°-56'-38.6" *
A2SB - G6	7.200	65°-00'-00.0"
A2SB - G7	7.277	65°-00'-00.0"
A2SB - G8	7.279	65°-00'-00.0"
A2NB - G9	7.285	65°-00'-00.0"
A2NB - G10	7.419	65°-00'-00.0"
A2NB - G11	7.497	65°-00'-00.0"
A2NB - G11A	7.561	65°-40'-15.6"
A2NB - G12	7.619	66°-21'-39.8"
A2NB - G12A	7.650	67°-01'-57.9"
A2NB - G13	7.596	67°-43'-22.6"
A2NB - G13A	7.569	68°-08'-54.4"
A2NB - G14	7.524	68°-34'-57.1"
A2NB - G15	7.419	68°-41'-56.1"

* GIRDER ANGLE MEASURED BETWEEN ℄ BRG. AND FROM A LINE TANGENT TO ℄ GIRDER AT ℄ BRG.

NOTES:

1. FOR WORKING POINT COORDINATES, SEE "LAYOUT PLAN & COORDINATES" SHEETS.
2. ALL WINGWALL 2A DIMENSIONS ARE EITHER CURVED OR RADIAL. ALL CURVED DIMENSIONS ARE TAKEN ALONG FASCIA LINE.
3. FOR WINGWALL ELEVATIONS, SEE "WINGWALLS" SHEET.
4. FOR SECTION C-C, SECTION D-D AND ABUTMENT DETAILS, SEE "ABUTMENT DETAILS" SHEET.
5. FOR TYPICAL ABUTMENT AND WINGWALL SECTIONS, SEE "TYPICAL SECTIONS" SHEET.
6. FOR ADDITIONAL BACKWALL ELEVATIONS AT BREAK POINTS, SEE "FINGER JOINT LAYOUT" AND "APPROACH SLAB & DETAILS" SHEETS.

REV.	DATE	DESCRIPTION	SHEET. NO.
		REVISIONS	

THE INFORMATION, INCLUDING ESTIMATED QUANTITIES OF WORK, SHOWN ON THESE SHEETS IS BASED ON LIMITED INVESTIGATIONS BY THE STATE AND IS IN NO WAY WARRANTED TO INDICATE THE CONDITIONS OR ACTUAL QUANTITIES OF WORK WHICH WILL BE REQUIRED.

DESIGNER: T. LALIBERTE
DRAFTER: G. LEE \ T. LALIBERTE
CHECKED BY: O. JAMBOTKAR
DATE CHECKED: 11-12-12

STATE OF CONNECTICUT
DEPARTMENT OF TRANSPORTATION

ENGINEER: PB AMERICAS, INC.
APPROVED BY:
DATE:

PROJECT TITLE: RECONSTRUCTION OF I-95 OVER WEST RIVER (BRIDGE NO. 00163)
CADD
PLOTTED 11/13/2012

TOWN: NEW HAVEN / WEST HAVEN
DRAWING TITLE: ABUTMENT 2

PROJECT NO.: 92-522
DRAWING NO.: STR-49
SHEET NO.:

11:01:40 AM
11/13/2012
T:\WBCADD\Projects\PB\8735\FD\Structures\Contract_Sheets\Gr00163\str-49-092522-00163.dgn

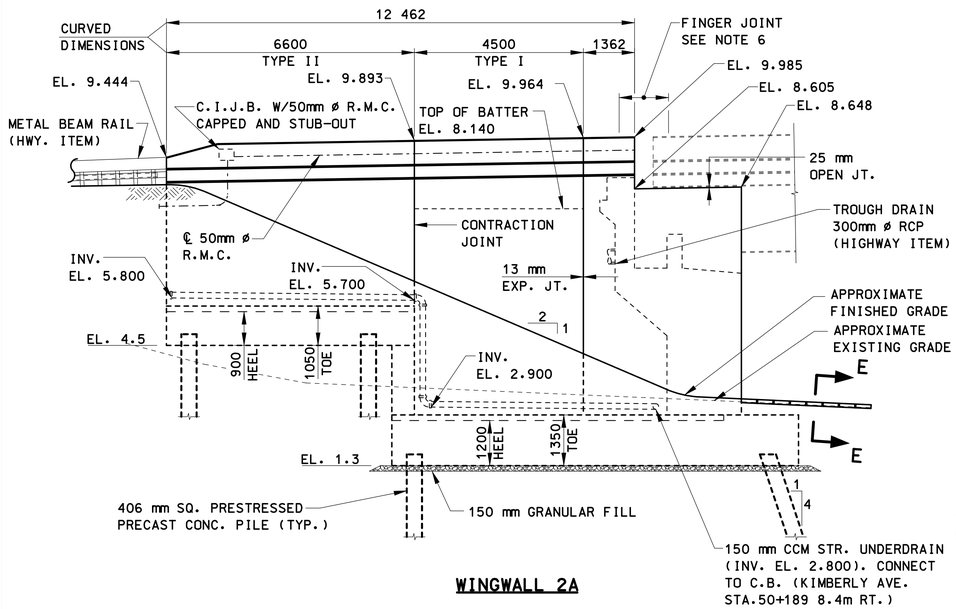

WINGWALL 2A

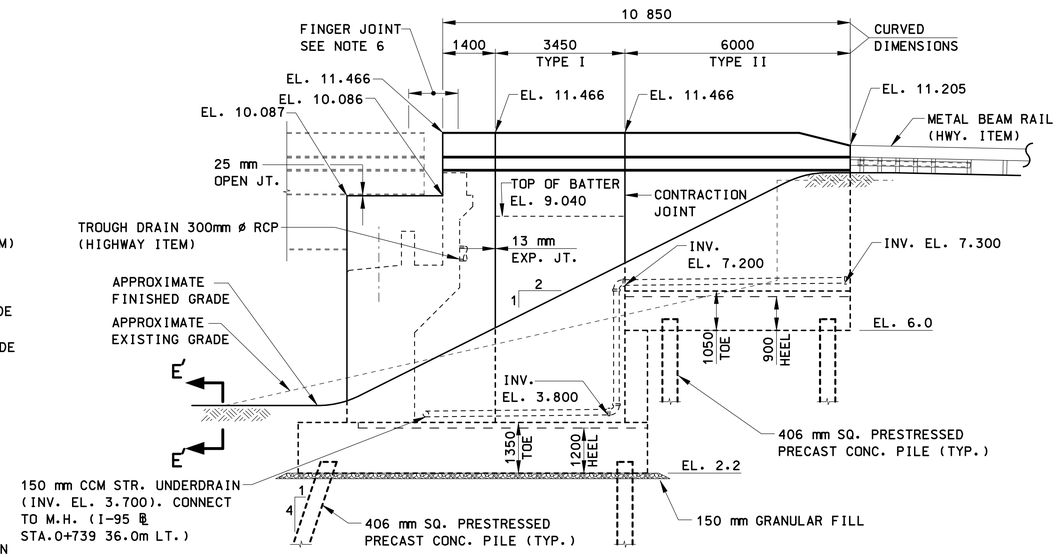

WINGWALL 1A

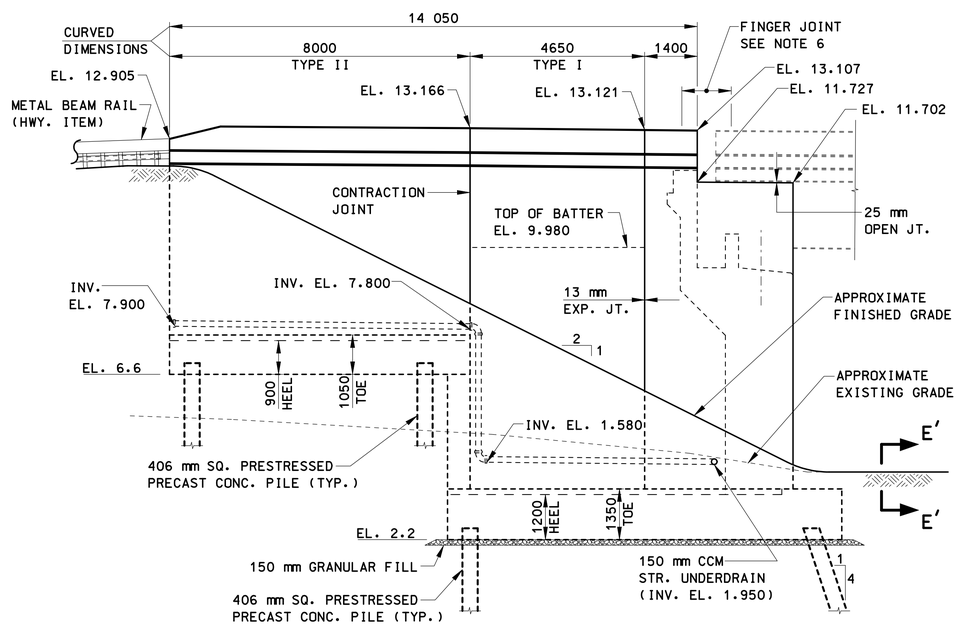

WINGWALL 1B

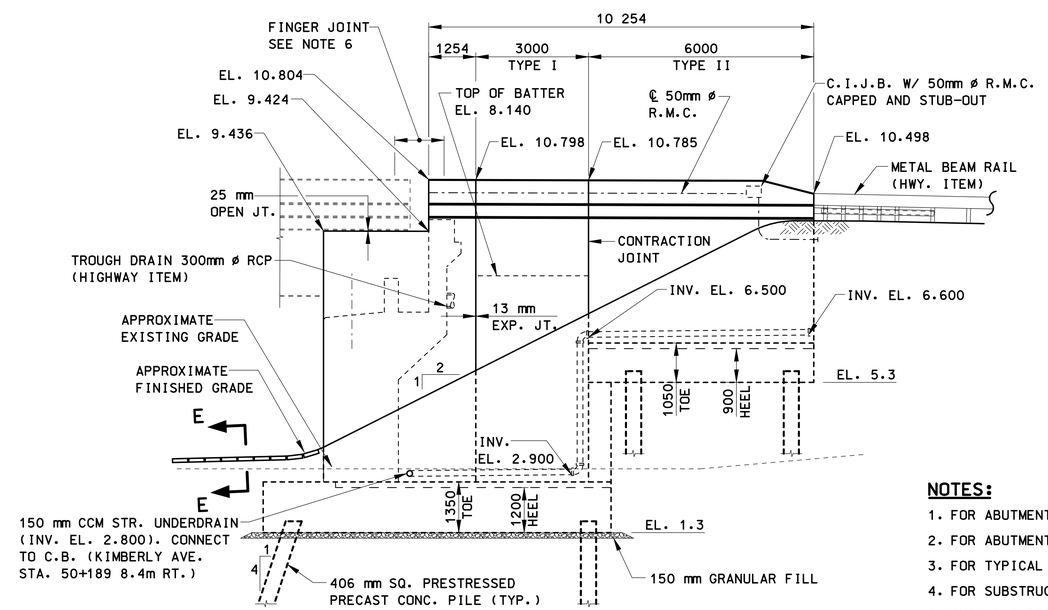

WINGWALL 2B

WINGWALL ELEVATIONS

SCALE: 1:75

NOTES:

1. FOR ABUTMENT 1 PLAN AND ELEVATION, SEE "ABUTMENT 1".
2. FOR ABUTMENT 2 PLAN AND ELEVATION, SEE "ABUTMENT 2".
3. FOR TYPICAL WINGWALL SECTIONS, SEE "TYPICAL SECTIONS".
4. FOR SUBSTRUCTURE DETAILS, SEE "SUBSTRUCTURE DETAILS".
5. TYPE R-B 350 METAL BEAM RAIL NOT SHOWN. FOR R-B 350 BRIDGE ATTACHMENT DETAILS, SEE "SUBSTRUCTURE DETAILS".
6. FOR DETAILS OF FINGER JOINT AND EMBEDDED PLATES IN WINGWALL PARAPETS, SEE FINGER JOINT DETAILS.
7. FOR SECTIONS E-E AND E'-E', SEE "ABUTMENT DETAILS - SHEET 3 OF 3".

REV.	DATE	DESCRIPTION	SHEET. NO.
		REVISIONS	

THE INFORMATION, INCLUDING ESTIMATED QUANTITIES OF WORK, SHOWN ON THESE SHEETS IS BASED ON LIMITED INVESTIGATIONS BY THE STATE AND IS IN NO WAY WARRANTED TO INDICATE THE CONDITIONS OR ACTUAL QUANTITIES OF WORK WHICH WILL BE REQUIRED.

DESIGNER: T. LALIBERTE
DRAFTER: G. LEE \ T. LALIBERTE
CHECKED BY: O. JAMBOTKAR
DATE CHECKED: 11-12-12

STATE OF CONNECTICUT
DEPARTMENT OF TRANSPORTATION

ENGINEER: PB AMERICAS, INC.
APPROVED BY: DATE:

PROJECT TITLE: RECONSTRUCTION OF I-95 OVER WEST RIVER (BRIDGE NO. 00163)
CADD | PLOTTED 11/13/2012

TOWN: NEW HAVEN / WEST HAVEN
DRAWING TITLE: WINGWALLS

PROJECT NO.: 92-522
DRAWING NO.: STR-50
SHEET NO.:

T:\V8CADD\Projects\PB1873SFD\Structures\Contract_Sheets\Br00163\str-50-092522-00163.dgn
11/13/2012 11:28:34 AM

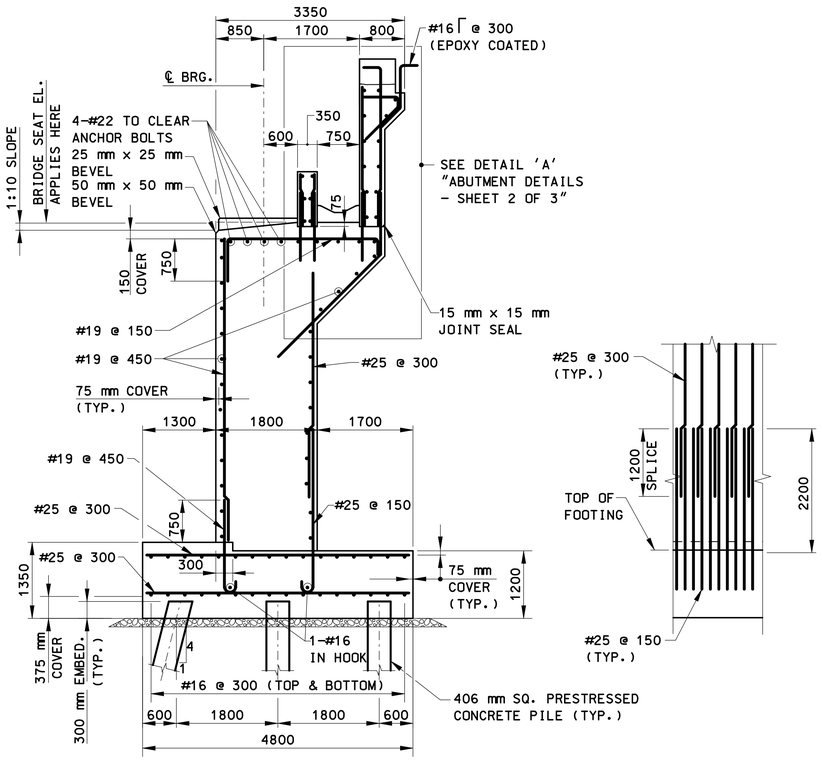

ABUTMENT SECTION

SCALE: 1:50

MAXIMUM PILE LOAD = 735 KN (STRENGTH I)
MAXIMUM PILE LOAD = 760 KN (EXTREME EVENT I)
DOWNDRAG = 392 KN

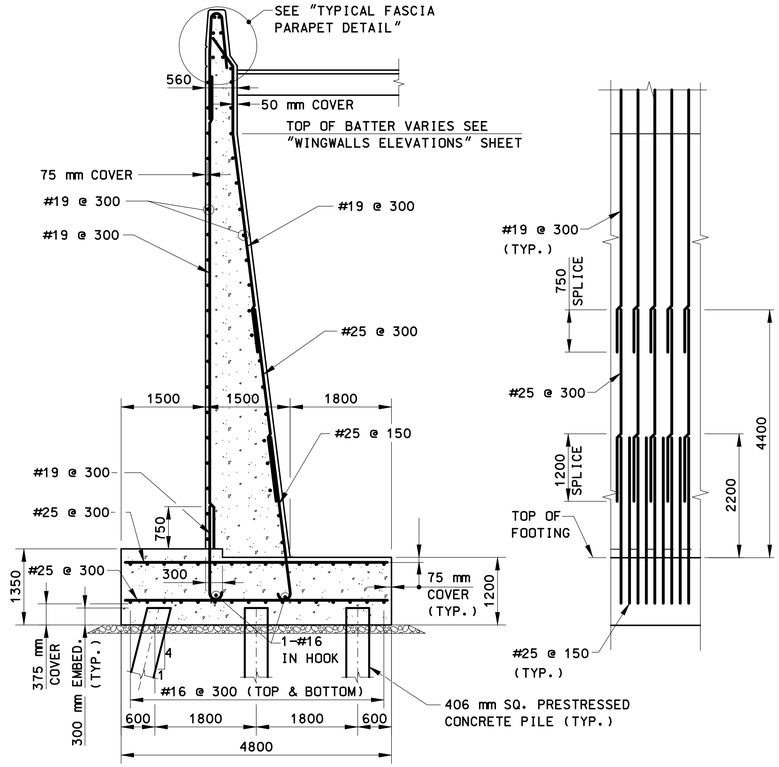

TYPE I

MAXIMUM PILE LOAD = 592 KN (STRENGTH I)
MAXIMUM PILE LOAD = 667 KN (EXTREME EVENT I)
DOWNDRAG = 392 KN

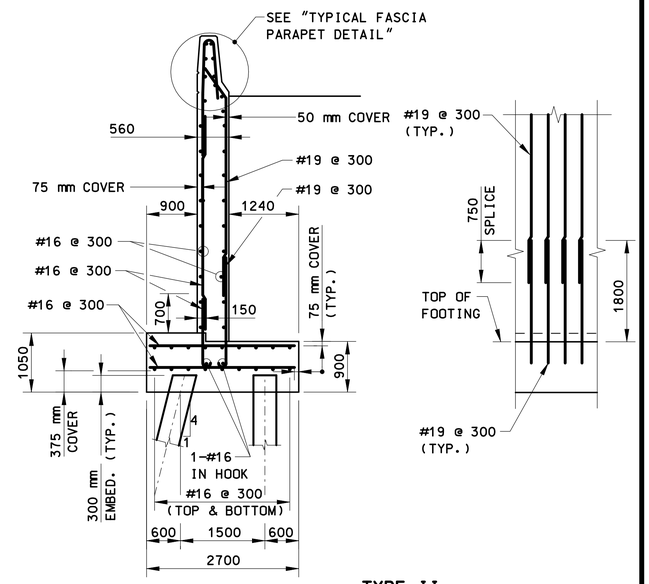

TYPE II

MAXIMUM PILE LOAD = 485 KN (STRENGTH I)
MAXIMUM PILE LOAD = 292 KN (EXTREME EVENT I)
DOWNDRAG = 392 KN

WINGWALL SECTIONS

SCALE: 1:50

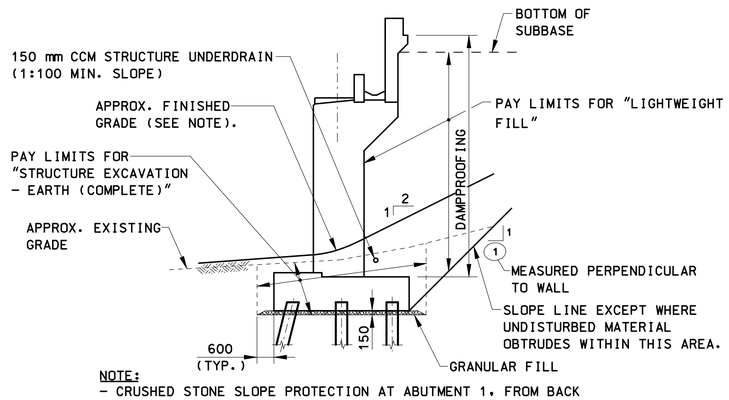

NOTE:
- CRUSHED STONE SLOPE PROTECTION AT ABUTMENT 1, FROM BACK OF CURB TO FRONT FACE OF ABUTMENT (SEE SECTION E'-E').
- CONCRETE BLOCK SLOPE PROTECTION AT ABUTMENT 2, FROM BACK OF WALK TO FRONT FACE OF ABUTMENT (SEE SECTION E-E).

@ ABUTMENT

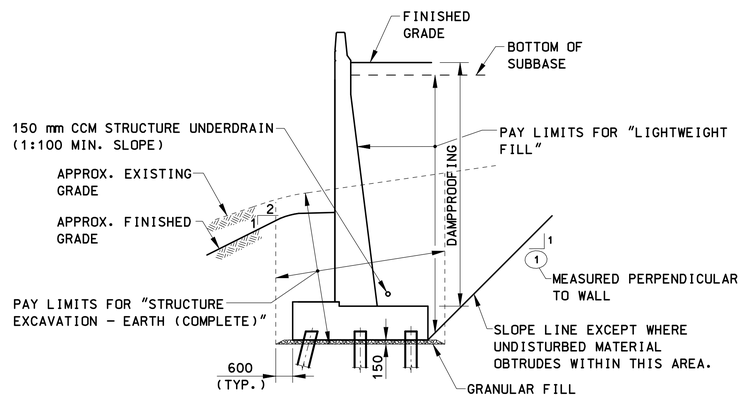

@ WINGWALL

TYPICAL BACKFILL & DRAINAGE DETAILS

SCALE: 1:100

NOTES:

1. FOR ABUTMENT 1 PLAN AND ELEVATION, SEE "ABUTMENT 1".
2. FOR ABUTMENT 2 PLAN AND ELEVATION, SEE "ABUTMENT 2".
3. FOR WINGWALL ELEVATIONS, SEE "WINGWALLS".
4. FOR ABUTMENT DETAILS SEE "ABUTMENT DETAILS" SHEETS.
5. FOR SECTION E-E AND SECTION E'-E', SEE "ABUTMENT DETAILS - SHEET 3 OF 3".
6. FOR SUBSTRUCTURE DETAILS, SEE "SUBSTRUCTURE DETAILS".

REV.	DATE	DESCRIPTION	SHEET. NO
		REVISIONS	

SCALE AS NOTED

DESIGNER: T. LALIBERTE
DRAFTER: M. DEEGAN
CHECKED BY: O.JAMBOTKAR
DATE CHECKED: 11-12-12

STATE OF CONNECTICUT
DEPARTMENT OF TRANSPORTATION

ENGINEER: PB AMERICAS, INC.
APPROVED BY: DATE:

PROJECT TITLE: RECONSTRUCTION OF I-95 OVER WEST RIVER (BRIDGE NO. 00163)
CADD PLOTTED 11/13/2012

TOWN: NEW HAVEN / WEST HAVEN
DRAWING TITLE: TYPICAL SECTIONS

PROJECT NO.: 92-522
DRAWING NO.: STR-51
SHEET NO.:

11/03/24 AM
11/13/2012
T:\WBCADD\Projects\PB\8735\FD\Structures\Contract_Sheets\Br0163\dr-51-092522-00163.dgn

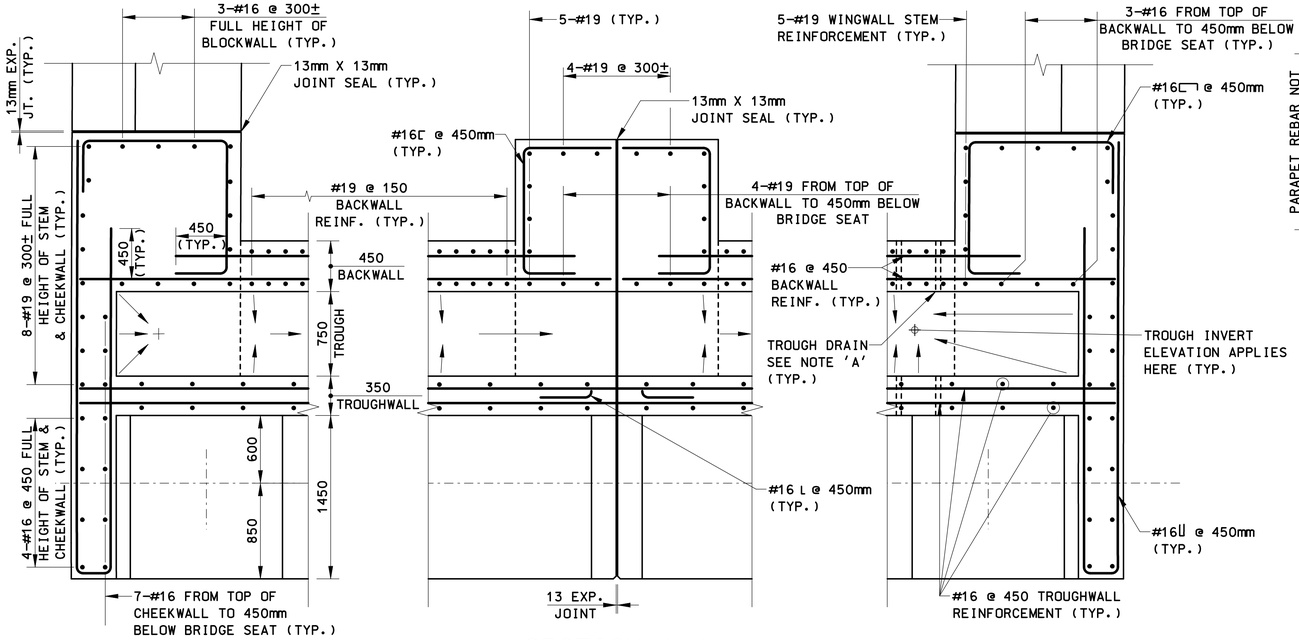

SECTION A-A

SCALE: 1:25
(APPLIES @ ABUTMENT NO. 1)

NOTE 'A': TROUGH DRAIN (HIGHWAY ITEM) TO BE 300mm ø REINFORCED CONCRETE PIPE TO ROADWAY DRAINAGE, SEE "ABUTMENT DETAILS - SHEET 3 OF 3".

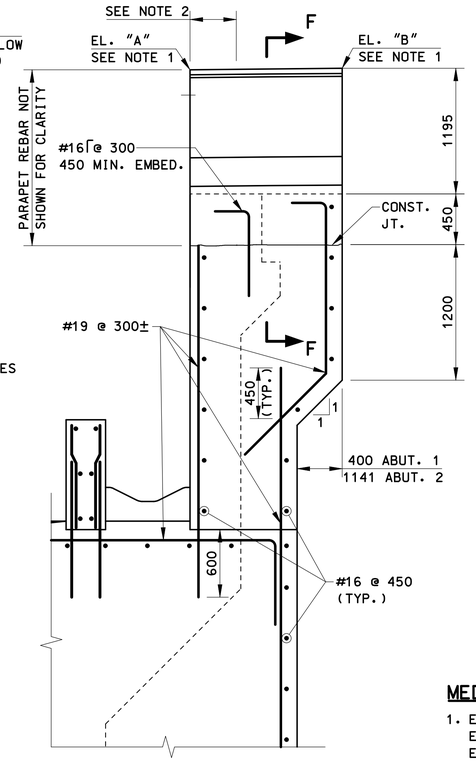

TYPICAL SECTION AT ABUTMENT MEDIAN PARAPET

SCALE: 1:25
(ABUT. 1 SHOWN, ABUT. 2 SIMILAR)

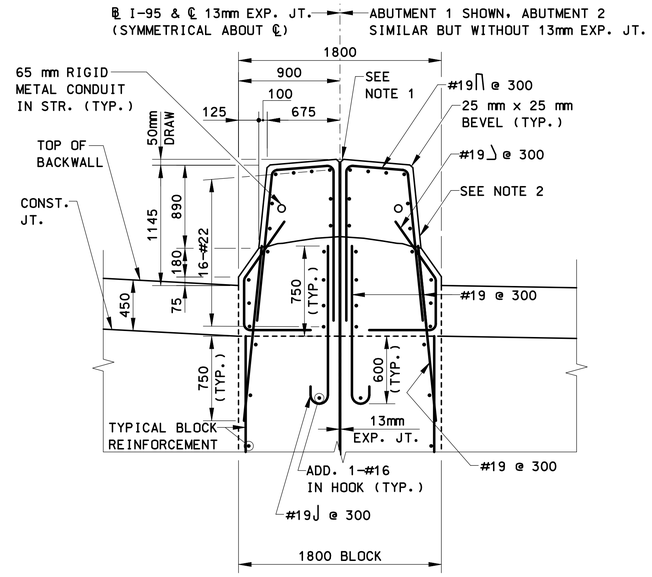

SECTION F-F

SCALE: 1:25

MEDIAN PARAPET NOTES:

1. ELEVATIONS APPLY AT LOCATION SHOWN.
   EL. "A" = 12.507 AT ABUT. 1, = 10.814 AT ABUT. 2.
   EL. "B" = 12.487 AT ABUT. 1, = 10.802 AT ABUT. 2.
2. FOR DETAILS OF EMBEDDED PLATES IN MEDIAN PARAPET, SEE FINGER JOINT DETAILS.

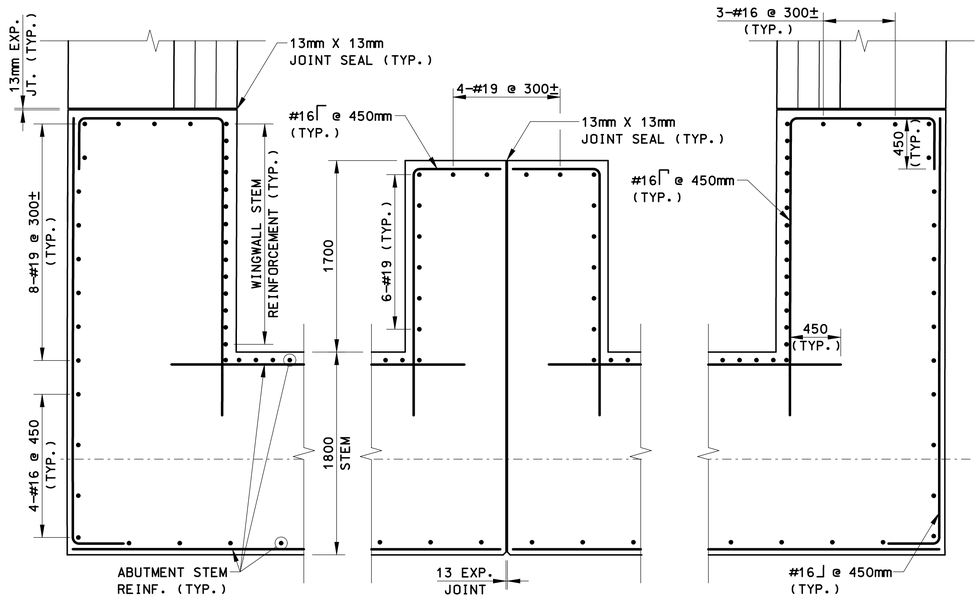

SECTION B-B

SCALE: 1:25
(APPLIES @ ABUTMENT NO. 1)

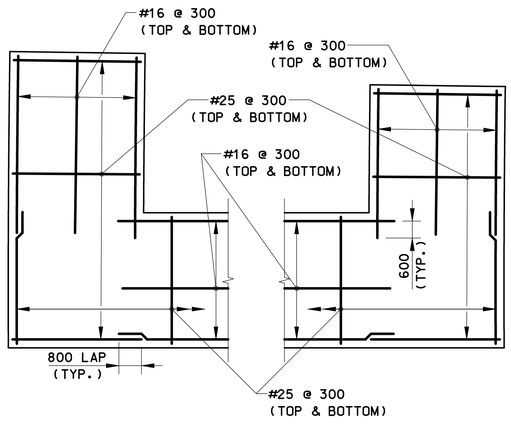

ABUTMENT 1 FOOTING REINFORCEMENT PLAN

SCALE: 1:100

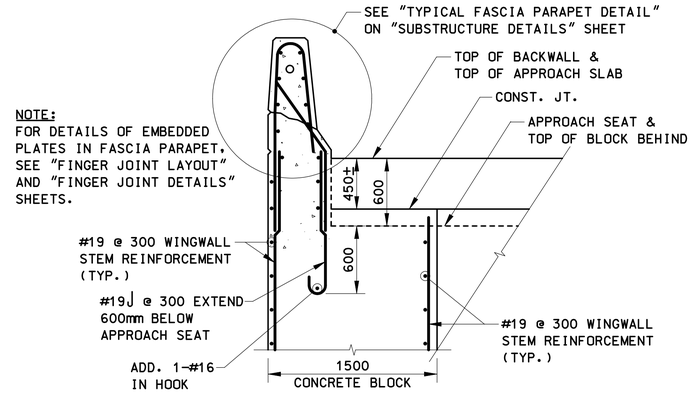

NOTE:
FOR DETAILS OF EMBEDDED PLATES IN FASCIA PARAPET, SEE "FINGER JOINT LAYOUT" AND "FINGER JOINT DETAILS" SHEETS.

TYPICAL SECTION AT ABUTMENT FASCIA PARAPET

SCALE: 1:25

REV.	DATE	DESCRIPTION	SHEET. NO
		REVISIONS	

SCALE AS NOTED

DESIGNER: T. LALIBERTE
DRAFTER: T. LALIBERTE
CHECKED BY: O.JAMBOTKAR
DATE CHECKED: 11-12-12

STATE OF CONNECTICUT
DEPARTMENT OF TRANSPORTATION

ENGINEER: PB AMERICAS, INC.
APPROVED BY:
DATE:

PROJECT TITLE: RECONSTRUCTION OF I-95 OVER WEST RIVER (BRIDGE NO. 00163)
CADD
PLOTTED 11/13/2012

TOWN: NEW HAVEN / WEST HAVEN
DRAWING TITLE: ABUTMENT DETAILS - SHEET 1 OF 3

PROJECT NO.: 92-522
DRAWING NO.: STR-52
SHEET NO.:

11/13/2012 11:04:07 AM
T:\V8CADD\Projects\PB87735\FD\Structures\Contract_Sheets\Br00163\str-52-092522-00163.dgn

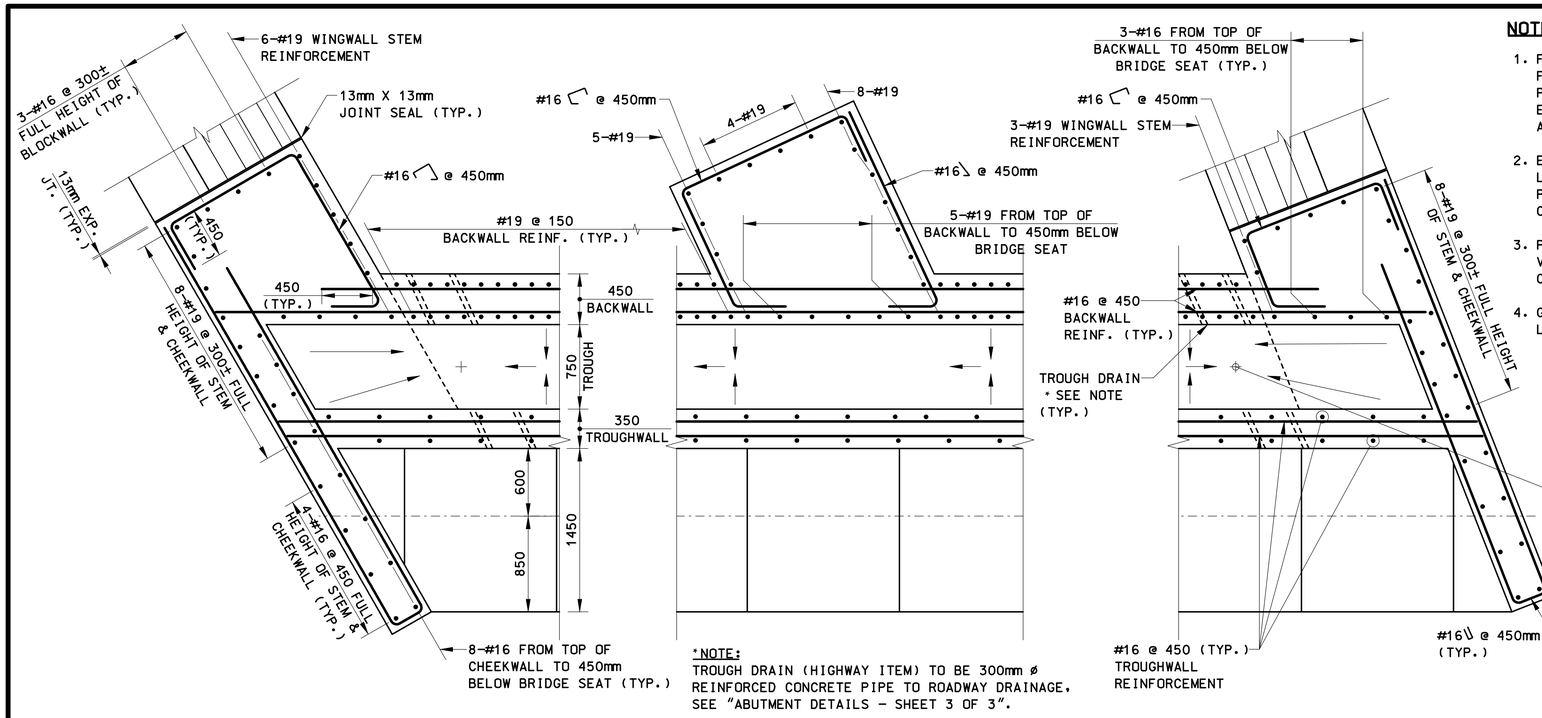

*NOTE:
TROUGH DRAIN (HIGHWAY ITEM) TO BE 300mm ø REINFORCED CONCRETE PIPE TO ROADWAY DRAINAGE, SEE "ABUTMENT DETAILS - SHEET 3 OF 3".

SECTION C-C

SCALE: 1:25
(APPLIES @ ABUTMENT NO. 2)

NOTES:

1. FILL CONCRETE SHALL BE "CLASS 'A' CONCRETE". FILL CONCRETE LIMIT VARIES (100mm MIN.) TO PROVIDE A MINIMUM OF 3% DRAINAGE SLOPE. EXPANSION & CONTRACTION JOINTS TO FOLLOW ABUTMENT JOINTS AND SHALL BE JOINT SEALED.
2. EPOXY COATING SHALL BE APPLIED TO THE ENTIRE LENGTH OF THE DRAINAGE TROUGH AND SHALL BE PAID FOR UNDER THE ITEM "EPOXY PROTECTIVE COATING".
3. PLACEMENT OF FINGER JOINT ANCHOR RODS AND VERTICAL BACKWALL REINFORCEMENT SHALL BE COORDINATED.
4. GIVEN BACKWALL ELEVATION APPLY HERE AT JOINT LOCATIONS.

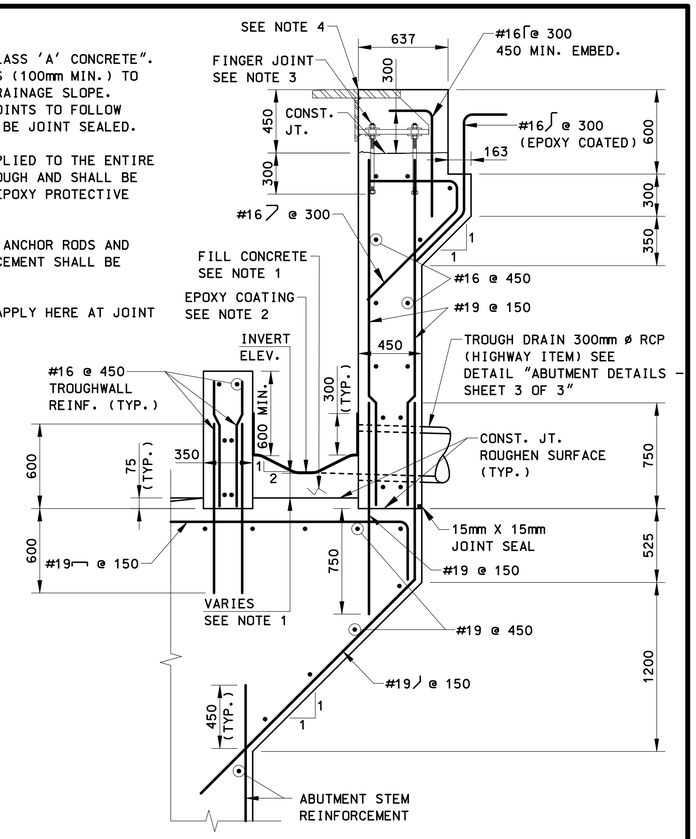

DETAIL 'A'

SCALE: 1:20

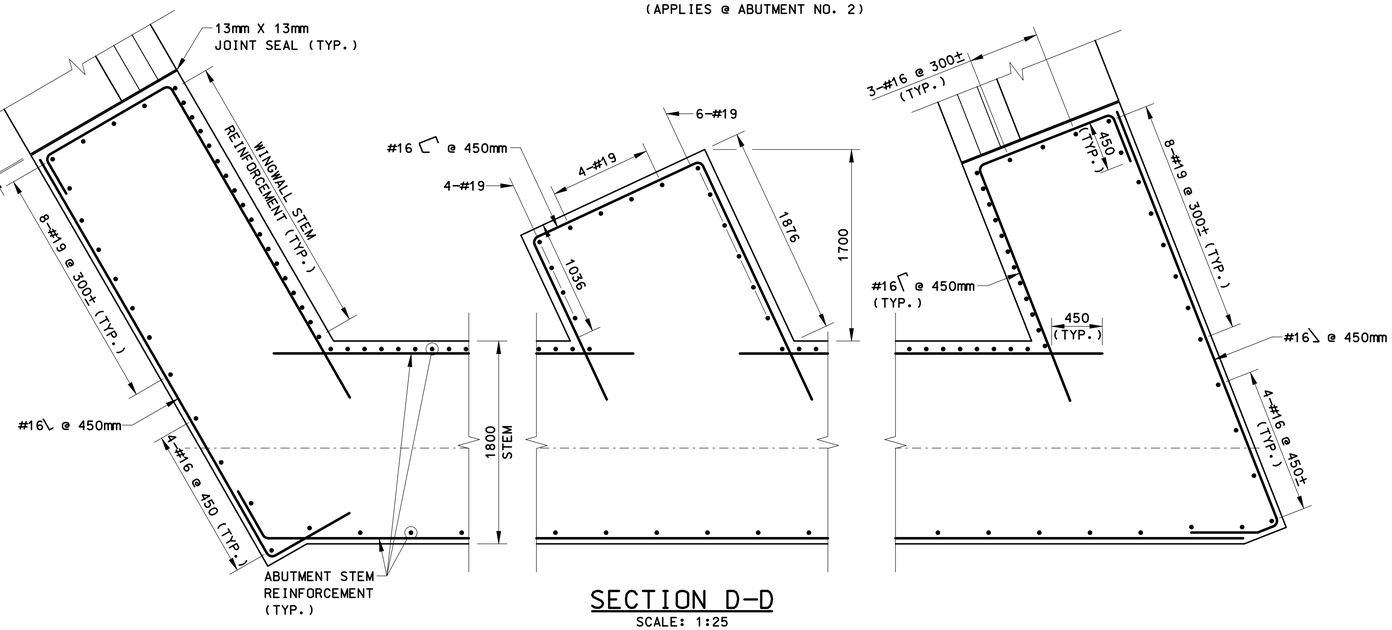

SECTION D-D

SCALE: 1:25
(APPLIES @ ABUTMENT NO. 2)

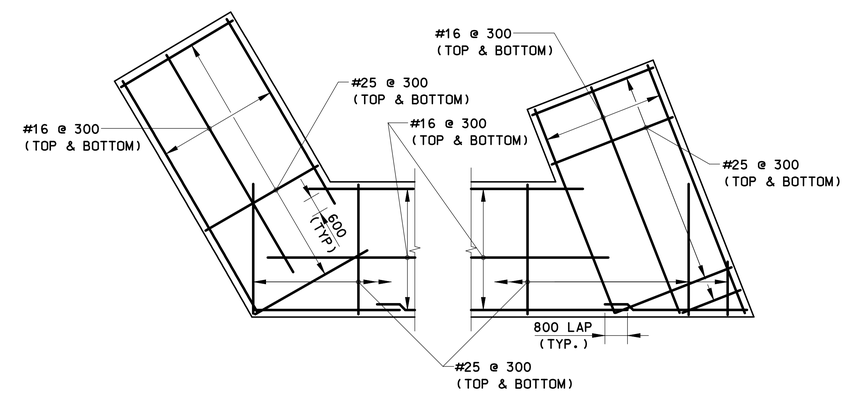

ABUTMENT 2 FOOTING REINFORCEMENT PLAN

SCALE: 1:100

NOTE:

FOR DETAILS OF FASCIA AND MEDIAN PARAPET AT ABUTMENT, SEE "ABUTMENT DETAILS - 1 OF 3".

REV.	DATE	DESCRIPTION	SHEET. NO
		REVISIONS	

SCALE AS NOTED

DESIGNER: T. LALIBERTE
DRAFTER: T. LALIBERTE
CHECKED BY: O. JAMBOTKAR
DATE CHECKED: 11-12-12

STATE OF CONNECTICUT
DEPARTMENT OF TRANSPORTATION

ENGINEER: PB AMERICAS, INC.
APPROVED BY:
DATE:

PROJECT TITLE: RECONSTRUCTION OF I-95 OVER WEST RIVER (BRIDGE NO. 00163)
CADD
PLOTTED 11/13/2012

TOWN: NEW HAVEN / WEST HAVEN
DRAWING TITLE: ABUTMENT DETAILS - SHEET 2 OF 3

PROJECT NO.: 92-522
DRAWING NO.: STR-53
SHEET NO.:

11:04:49 AM
11/13/2012
T:\WORKDD\Projects\PB\87535FD\Structures\Contract_Sheets\Br00163\dr-53-092522-00163.dgn

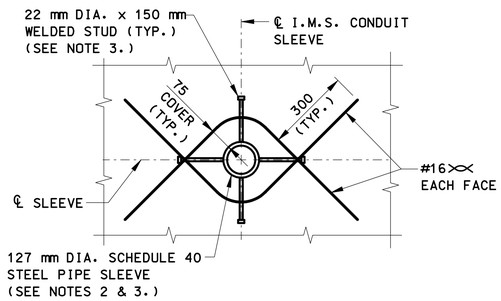

BACKWALL REINFORCEMENT DETAIL

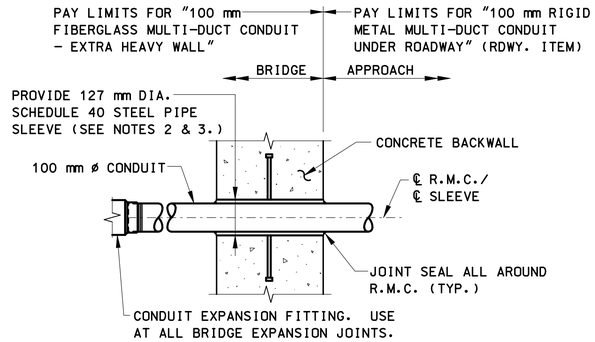

WALL PENETRATION DETAIL

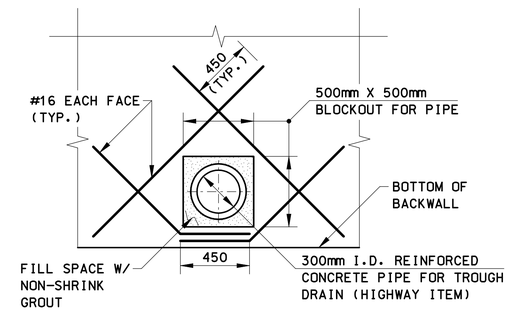

I.M.S. CONDUIT SLEEVE DETAILS

SCALE: 1:10

PIPE THROUGH BACKWALL DETAIL

SCALE: 1:20

CONDUIT SLEEVE NOTES:

1. THE STEEL PIPE SLEEVE SHALL CONFORM TO ASTM A53 SCHEDULE 40 AND SHALL BE GALVANIZED IN ACCORDANCE WITH ASTM A123 AFTER FABRICATION.
2. FASTEN NEOPRENE SHEET TO SLEEVE WITH ADHESIVE CONFORMING TO M.17.01 OF FORM 815.
3. THE COST OF THE PIPE SLEEVE AND WELDED STUDS SHALL BE INCLUDED UNDER THE ITEM "100 mm FIBERGLASS MULTI-DUCT CONDUIT - EXTRA HEAVY WALL".

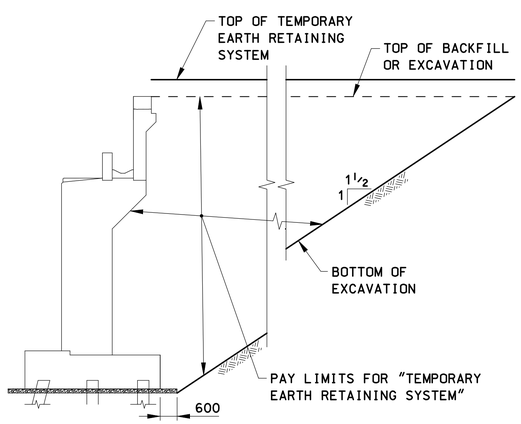

TEMPORARY EARTH RETAINING SYSTEM DETAIL

NOT TO SCALE

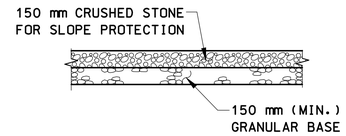

SECTION E'-E'

SCALE: 1:25
(SECTION APPLIES ABUTMENT NO. 1 ONLY)

NOTES:

1. THE COST OF FURNISHING AND PLACING GRANULAR BASE TO BE INCLUDED IN THE ITEM "CONCRETE BLOCK SLOPE PROTECTION" AND "CRUSHED STONE FOR SLOPE PROTECTION".
2. FOR LOCATIONS WHERE SECTIONS APPLY, SEE DWG. "WINGWALLS".

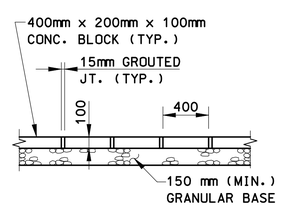

SECTION E-E

SCALE: 1:25
(SECTION APPLIES ABUTMENT NO. 2 ONLY)

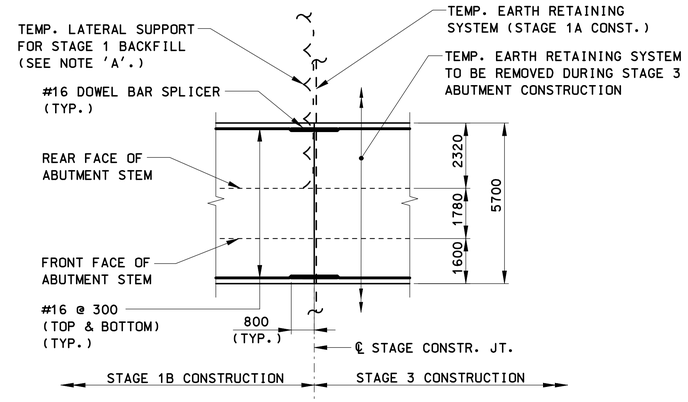

FOOTING CONSTRUCTION JOINT DETAIL

SCALE: 1:100
STAGE 1B / STAGE 3 CONST. JOINT SHOWN
STAGE 2A / STAGE 3 CONST. JOINT SIMILAR

NOTE 'A'
PLACE PRIOR TO REMOVING PORTION OF STAGE 1A SHEET PILING. TERMINATE AT TOP OF FOOTING AND PROVIDE TIGHT FIT TO REAR FACE OF ABUTMENT STEM. TEMPORARY LATERAL SUPPORT SHALL BE INSTALLED BELOW BOTTOM OF EXCAVATION GRADE IN SUBSEQUENT STAGES.

REV.	DATE	DESCRIPTION	SHEET. NO
		REVISIONS	

SCALE AS NOTED

DESIGNER: T. LALIBERTE
DRAFTER: T. LALIBERTE \ G. LEE
CHECKED BY: O. JAMBOTKAR
DATE CHECKED: 11-12-12

STATE OF CONNECTICUT
DEPARTMENT OF TRANSPORTATION

ENGINEER: PB AMERICAS, INC.
APPROVED BY: DATE:

PROJECT TITLE: RECONSTRUCTION OF I-95 OVER WEST RIVER (BRIDGE NO. 00163)
CADD PLOTTED 11/13/2012

TOWN: NEW HAVEN / WEST HAVEN
DRAWING TITLE: ABUTMENT DETAILS - SHEET 3 OF 3

PROJECT NO.: 92-522
DRAWING NO.: STR-54
SHEET NO.:

11/13/2012 11:05:39 AM
T:\V8CADD\Projects\PB\8735\FD\Structures\Contract_Sheets\Br00163\str-54-092522-00163.dgn

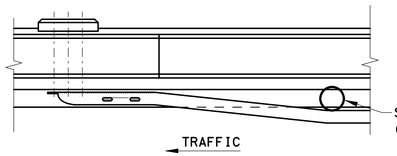

PLAN
SCALE: 1:20

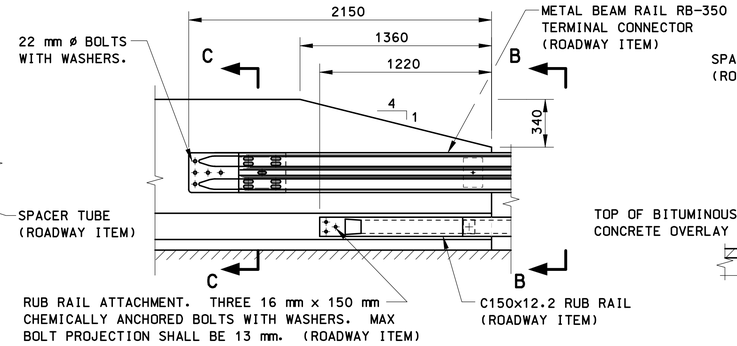

ELEVATION
SCALE: 1:20

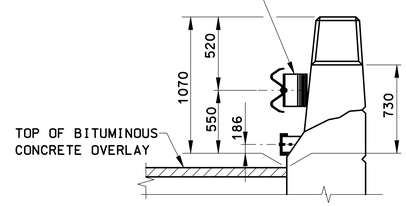

VIEW B-B
SCALE: 1:20

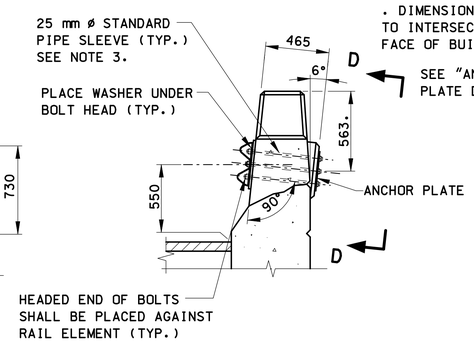

SECTION C-C
SCALE: 1:20

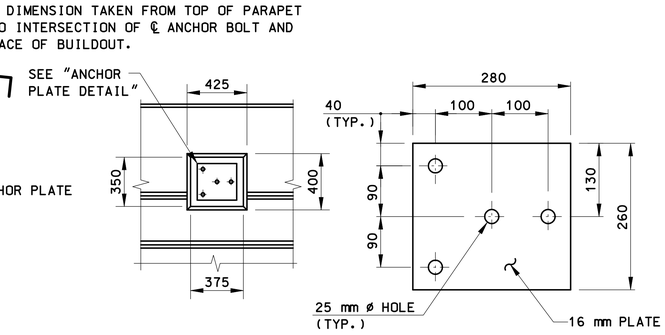

VIEW D-D
SCALE: 1:20

ANCHOR PLATE DETAIL
SCALE: 1:5

LEADING END R-B 350 RAIL ATTACHMENT DETAILS

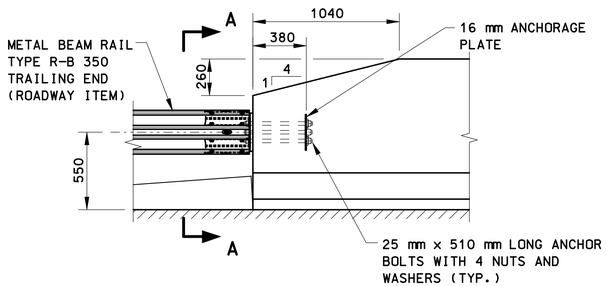

ELEVATION
SCALE: 1:20

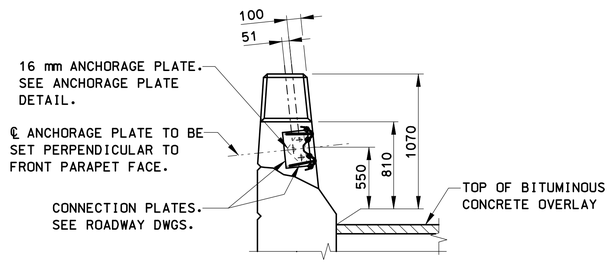

VIEW A-A
SCALE: 1:20

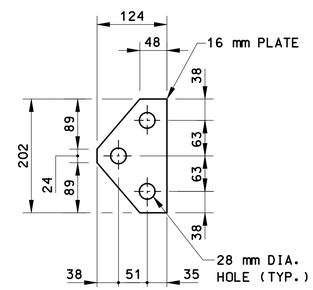

ANCHORAGE PLATE DETAIL
SCALE: 1:5

R-B 350 RAIL NOTES:

1. STEEL PLATES SHALL CONFORM TO THE REQUIREMENTS OF ASTM A36M. THE STEEL PLATES SHALL BE HOT-DIP GALVANIZED IN ACCORDANCE WITH THE REQUIREMENTS OF ASTM A123.
2. ANCHOR BOLTS SHALL CONFORM TO THE REQUIREMENTS OF ASTM A449, MECHANICALLY GALVANIZED.
3. 25 mm DIAMETER PIPE SHALL CONFORM TO ASTM A53, GRADE B OR ASTM A501 AND SHALL BE GALVANIZED IN ACCORDANCE WITH THE REQUIREMENTS OF ASTM A123.
4. RAILWAY ELEMENTS SHALL BE PAID FOR UNDER THE APPLICABLE ROADWAY ITEMS.
5. ALL RAIL ANCHORAGE MATERIAL REQUIRED FOR END ATTACHMENTS SHALL BE PAID FOR UNDER THE APPLICABLE ROADWAY ITEMS.

TRAILING END R-B 350 RAIL ATTACHMENT DETAILS

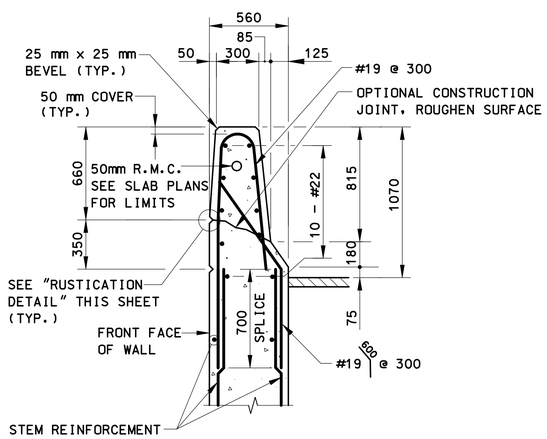

TYPICAL FASCIA PARAPET DETAIL
SCALE: 1:20

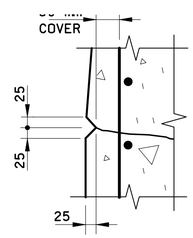

RUSTICATION DETAIL
NOT TO SCALE

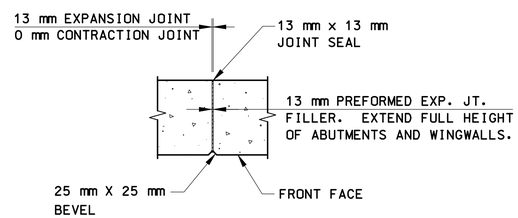

VERTICAL STEM JOINT DETAIL
SCALE: 1:20

JOINT NOTES:

1. JOINT SEAL AND 13 mm PREFORMED EXPANSION JOINT FILLER SHALL BE INCLUDED IN THE ITEM "CLASS 'A' CONCRETE".
2. ABUTMENTS - JOINT SEAL TO EXTEND FROM TOP OF FOOTING TO TOP OF BACKWALL AND HORIZONTALLY ALONG TOP OF BACKWALL.
3. WINGWALLS - JOINT SEAL TO EXTEND FROM TOP OF FOOTING TO TOP OF PARAPET AND HORIZONTALLY ALONG THIS JOINT TO OUTSIDE FACE OF PARAPET.
4. REINFORCEMENT: NO REINFORCEMENT SHALL PASS THROUGH EXPANSION OR CONTRACTION JOINTS. REINFORCEMENT SHALL PASS THROUGH CONSTRUCTION JOINTS.

REV.	DATE	DESCRIPTION	SHEET. NO
		REVISIONS	

SCALE AS NOTED

DESIGNER: T. LALIBERTE
DRAFTER: G. LEE \ T. LALIBERTE
CHECKED BY: O. JAMBOTKAR
DATE CHECKED: 11-12-12

STATE OF CONNECTICUT
DEPARTMENT OF TRANSPORTATION

ENGINEER: PB AMERICAS, INC.
APPROVED BY:
DATE:

PROJECT TITLE: RECONSTRUCTION OF I-95 OVER WEST RIVER (BRIDGE NO. 00163)
CADD
PLOTTED 11/13/2012

TOWN: NEW HAVEN / WEST HAVEN
DRAWING TITLE: SUBSTRUCTURE DETAILS

PROJECT NO.: 92-522
DRAWING NO.: STR-55
SHEET NO.:

11/13/2012 11:08:40 AM
T:\V8CADD\Projects\PB87351FD\Structures\Contract_Sheets\Br00163\str-55-092522-00163.dgn

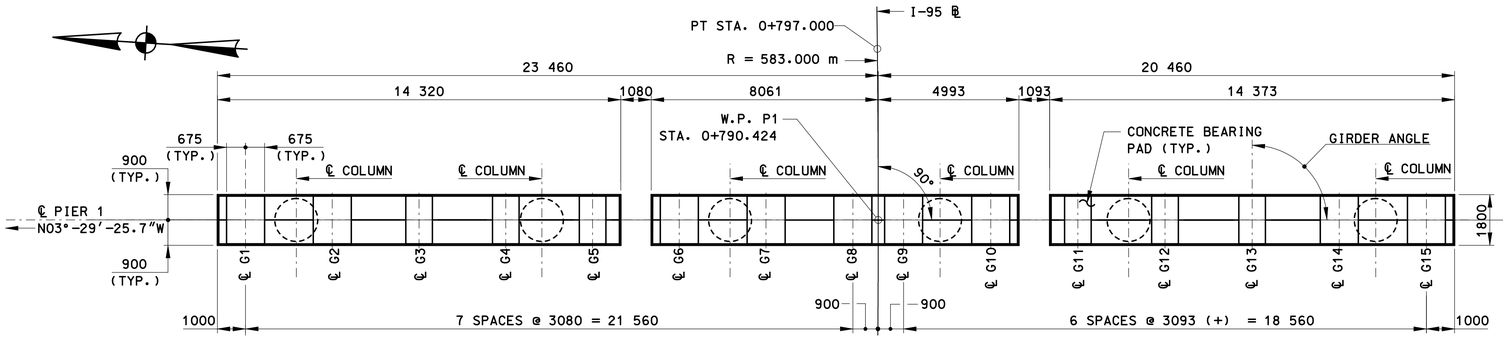

CAP PLAN

SCALE: 1:100

CONCRETE BEARING PAD ELEVATIONS AND GIRDER ANGLES		
LOCATION	ELEVATION	ANGLE*
P1SB - G1	8.067	90°-00'-00.0"
P1SB - G2	8.204	90°-00'-00.0"
P1SB - G3	8.272	90°-00'-00.0"
P1SB - G4	8.410	90°-00'-00.0"
P1SB - G5	8.547	90°-00'-00.0"
P1SB - G6	8.753	90°-00'-00.0"
P1SB - G7	8.770	90°-00'-00.0"
P1SB - G8	8.692	90°-00'-00.0"
P1NB - G9	8.687	90°-00'-00.0"
P1NB - G10	8.818	90°-00'-00.0"
P1NB - G11	8.881	90°-00'-00.0"
P1NB - G12	9.012	90°-00'-00.0"
P1NB - G13	9.143	90°-00'-00.0"
P1NB - G14	9.344	90°-00'-00.0"
P1NB - G15	9.268	90°-00'-00.0"

*GIRDER ANGLE MEASURED BETWEEN ℄ BRG. AND FROM A LINE TANGENT TO ℄ GIRDER AT ℄ BRG.

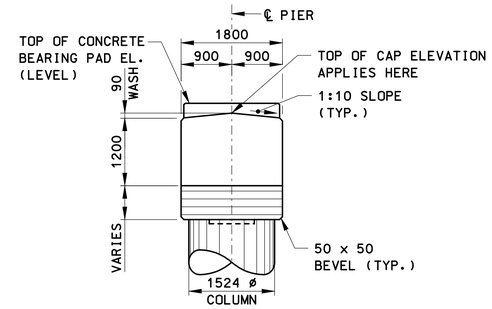

END VIEW

SCALE: 1:50
(TYPICAL ALL PIERS)

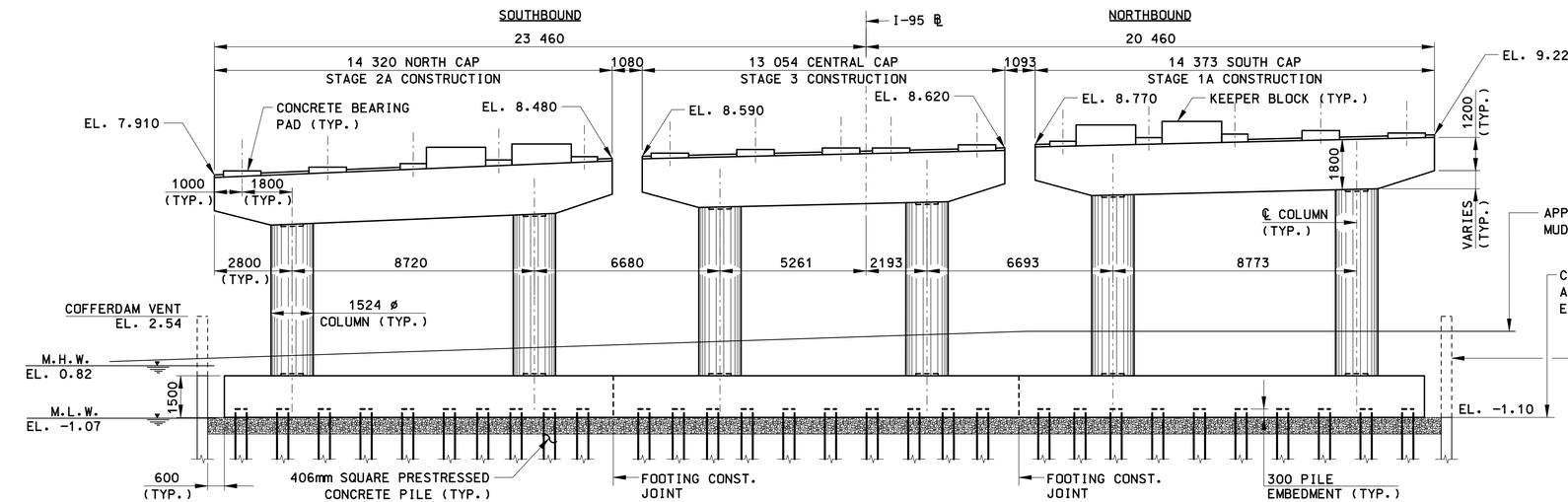

PIER 1 ELEVATION

SCALE: 1:100

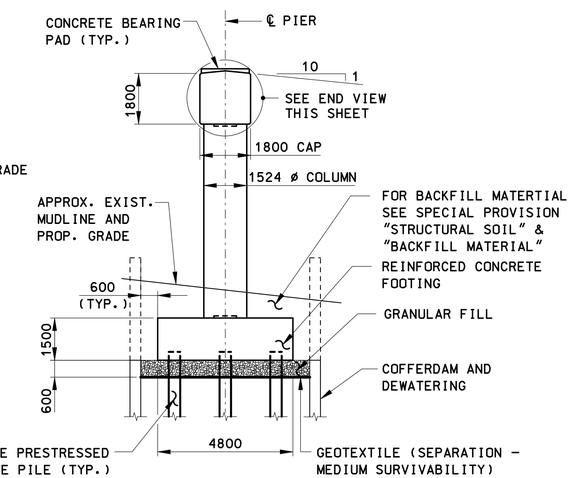

TYPICAL SECTION

SCALE: 1:100

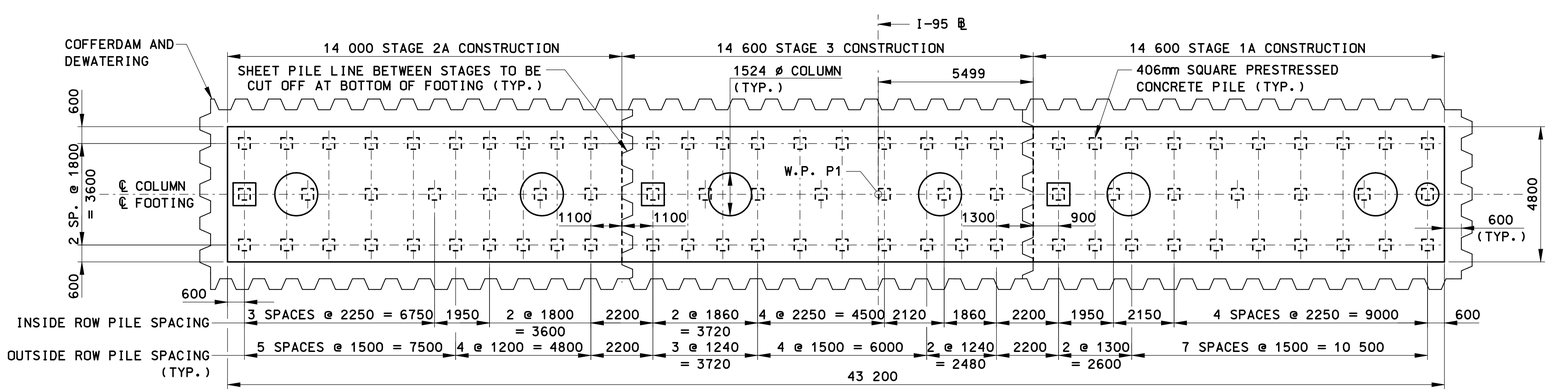

FOOTING PLAN

SCALE: 1:100

PILE NOTES:

1. □ DENOTES PROPOSED VERTICAL PILE.
   ⊡ DENOTES TEST PILE (26.0m LONG).
   ⊙ DENOTES TEST PILE (26.0m LONG) WITH PILE LOAD TEST.
2. PRIOR TO DRIVING THE PILES, THE CONTRACTOR SHALL SUBMIT TO THE ENGINEER FOR REVIEW AND APPROVAL HIS METHOD AND SEQUENCE OF PILE DRIVING.
3. PIER 1 ESTIMATED LENGTH OF PILES IS 23.7m.
4. THE NUMBER OF PILES FOR PIER 1: 81.
5. MAX. DESIGN PILE LOAD = 1037 KN (STRENGTH-I).
   MAX. DESIGN PILE LOAD = 980 KN (EXT. EVENT-I).
6. FOR PILE DETAILS, SEE "PILE DETAILS".
7. PDA TESTING ON ALL TEST PILES.

NOTES:

1. FOR WORKING POINT (W.P.) AND GIRDER COORDINATES, SEE "LAYOUT PLAN & COORDINATES" SHEETS.
2. FOR PIER DETAILS AND REINFORCEMENT, SEE "PIER DETAILS" SHEETS.
3. FOR GIRDER BEARING DETAILS, SEE "BEARINGS" SHEETS.
4. FOR KEEPER BLOCK DIMENSION AND REINFORCEMENT DETAILS, SEE "BEARING DETAILS 3"

REV.	DATE	DESCRIPTION	SHEET. NO.
		REVISIONS	

THE INFORMATION, INCLUDING ESTIMATED QUANTITIES OF WORK, SHOWN ON THESE SHEETS IS BASED ON LIMITED INVESTIGATIONS BY THE STATE AND IS IN NO WAY WARRANTED TO INDICATE THE CONDITIONS OR ACTUAL QUANTITIES OF WORK WHICH WILL BE REQUIRED.

DESIGNER: T. LALIBERTE
DRAFTER: T. LALIBERTE \ G. LEE
CHECKED BY: O. JAMBOTKAR
DATE CHECKED: 11-12-12

STATE OF CONNECTICUT
DEPARTMENT OF TRANSPORTATION

ENGINEER: PB AMERICAS, INC.
APPROVED BY: DATE:

PROJECT TITLE: RECONSTRUCTION OF I-95 OVER WEST RIVER (BRIDGE NO. 00163)
CADD PLOTTED 11/13/2012

TOWN: NEW HAVEN / WEST HAVEN
DRAWING TITLE: PIER 1

PROJECT NO.: 92-522
DRAWING NO.: STR-56
SHEET NO.:

11/09/25 AM
11/13/2012
T:\PBCADD\Projects\PB\8735\FD\Structures\Contract_Sheets\Br00163.dgn-56-092522-00163.dgn

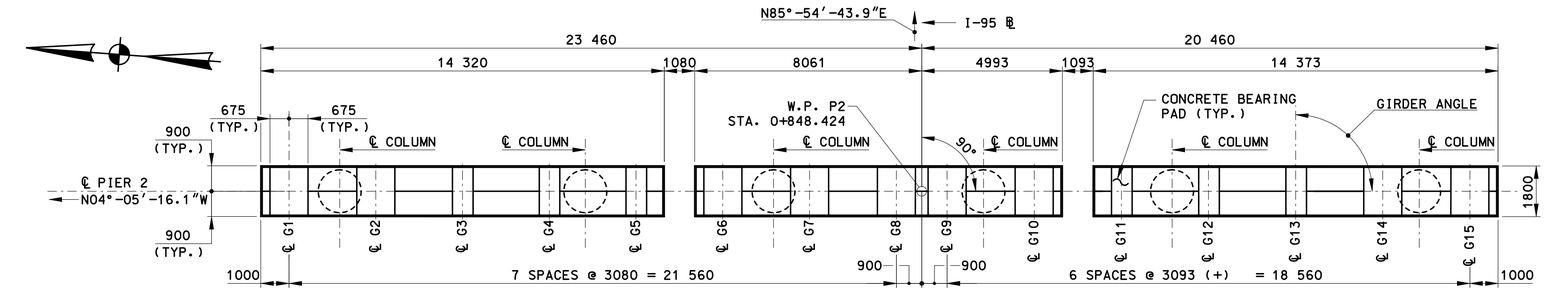

CAP PLAN

SCALE: 1:100

CONCRETE BEARING PAD ELEVATIONS AND GIRDER ANGLES		
LOCATION	ELEVATION	ANGLE
P2SB - G1	7.980	90°-00'-00.0"
P2SB - G2	8.083	90°-00'-00.0"
P2SB - G3	8.227	90°-00'-00.0"
P2SB - G4	8.307	90°-00'-00.0"
P2SB - G5	8.403	90°-00'-00.0"
P2SB - G6	8.470	90°-00'-00.0"
P2SB - G7	8.446	90°-00'-00.0"
P2SB - G8	8.337	90°-00'-00.0"
P2NB - G9	8.337	90°-00'-00.0"
P2NB - G10	8.451	90°-00'-00.0"
P2NB - G11	8.596	90°-00'-00.0"
P2NB - G12	8.661	90°-00'-00.0"
P2NB - G13	8.726	90°-00'-00.0"
P2NB - G14	8.745	90°-00'-00.0"
P2NB - G15	8.638	90°-00'-00.0"

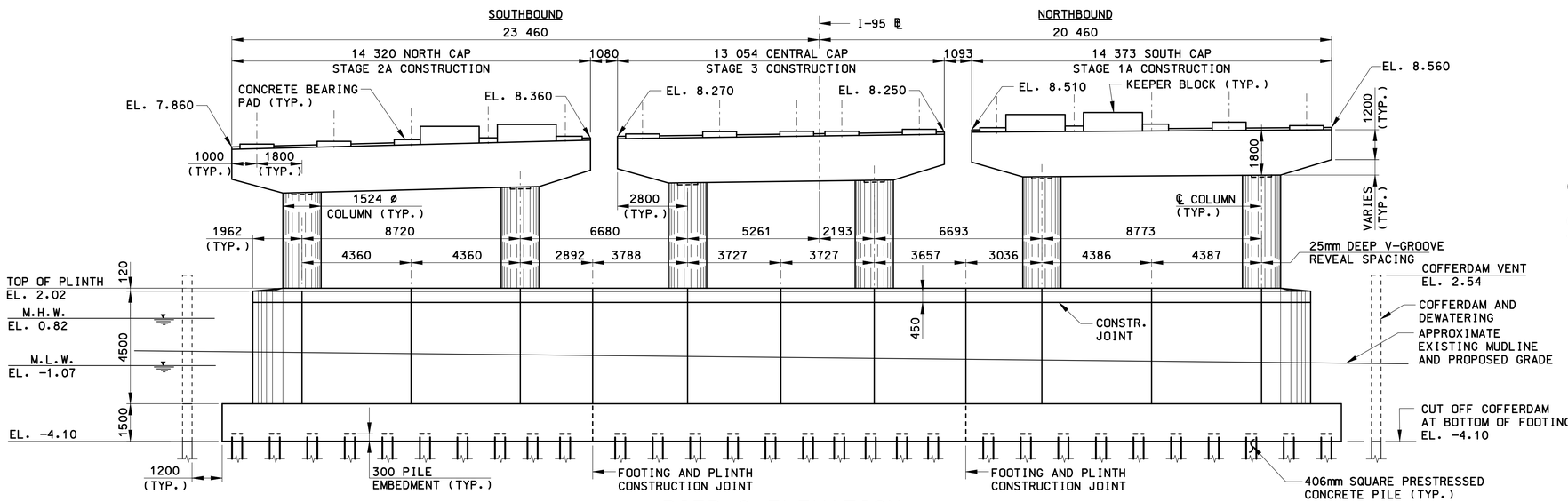

PIER 2 ELEVATION

SCALE: 1:100

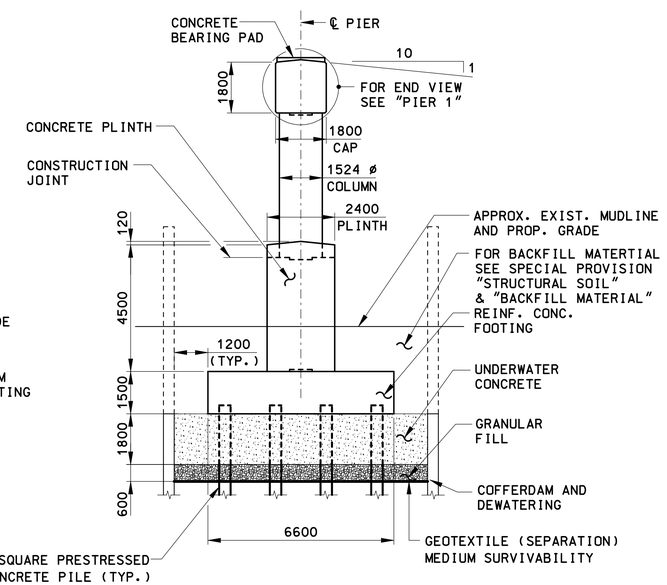

TYPICAL SECTION

SCALE: 1:100

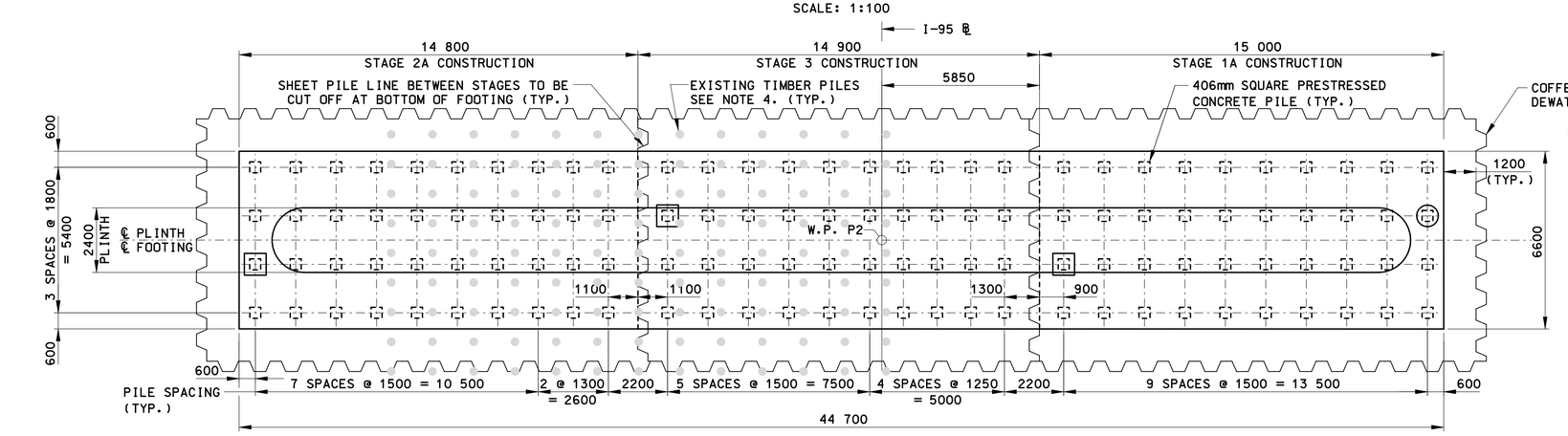

FOOTING PLAN

SCALE: 1:100

PILE NOTES:

1. □ DENOTES PROPOSED VERTICAL PILE.
   ⊡ DENOTES TEST PILE (26.0m LONG).
   ⊙ DENOTES TEST PILE (26.0m LONG) WITH PILE LOAD TEST.
2. PRIOR TO DRIVING THE PILES, THE CONTRACTOR SHALL SUBMIT TO THE ENGINEER FOR REVIEW AND APPROVAL HIS METHOD AND SEQUENCE OF PILE DRIVING.
3. PIER 2 ESTIMATED LENGTH OF PILES IS 23.7m.
4. THE NUMBER OF PILES FOR PIER 2: 120.
5. MAX. DESIGN PILE LOAD = 949 KN (STRENGTH-I).
   MAX. DESIGN PILE LOAD = 993 KN (EXT. EVENT-I).
6. FOR PILE DETAILS, SEE "PIER 1".
7. PDA TESTING ON ALL TEST PILES.

NOTES:

1. FOR WORKING POINT (W.P.) AND GIRDER COORDINATES, SEE "LAYOUT PLAN & COORDINATES" SHEETS.
2. FOR PIER DETAILS AND REINFORCEMENT, SEE "PIER DETAILS" SHEETS.
3. FOR GIRDER BEARING DETAILS, SEE "BEARINGS" SHEETS.
4. FOR APPROXIMATE LOCATIONS AND REMOVAL LIMITS OF EXISTING TIMBER PILES, SEE DWG. "RIVER SOUNDINGS CONTOUR PLAN".
5. FOR KEEPER BLOCK DIMENSION AND REINFORCEMENT DETAILS, SEE "KEEPER BLOCK DETAILS".

REV.	DATE	DESCRIPTION	SHEET. NO.
		REVISIONS	

THE INFORMATION, INCLUDING ESTIMATED QUANTITIES OF WORK, SHOWN ON THESE SHEETS IS BASED ON LIMITED INVESTIGATIONS BY THE STATE AND IS IN NO WAY WARRANTED TO INDICATE THE CONDITIONS OR ACTUAL QUANTITIES OF WORK WHICH WILL BE REQUIRED.

DESIGNER: T. LALIBERTE
DRAFTER: T. LALIBERTE \ G. LEE
CHECKED BY: O. JAMBOTKAR
DATE CHECKED: 11-12-12

STATE OF CONNECTICUT
DEPARTMENT OF TRANSPORTATION

ENGINEER: PB AMERICAS, INC.
APPROVED BY:
DATE:

PROJECT TITLE: RECONSTRUCTION OF I-95 OVER WEST RIVER (BRIDGE NO. 00163)
CADD
PLOTTED 11/13/2012

TOWN: NEW HAVEN / WEST HAVEN
DRAWING TITLE: PIER 2

PROJECT NO.: 92-522
DRAWING NO.: STR-57
SHEET NO.:

11/13/2012 11:04 AM
T:\VBCADD-Projects\PB\8735\FD\Structures\Contract_Sheets\Br00163\dn-57-092522-00163.dgn

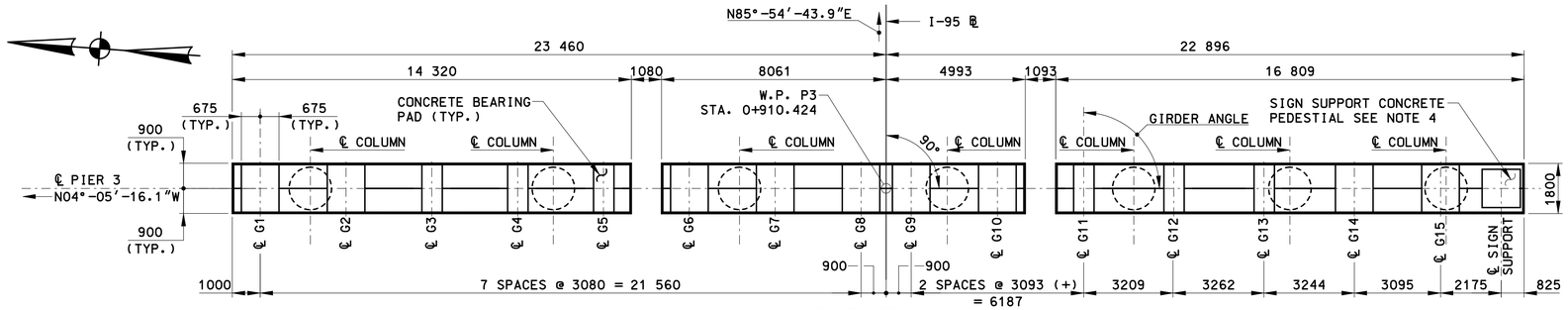

CAP PLAN

SCALE: 1:100

NOTE:
LONGITUDINAL CAP BEAM REINFORCEMENT SHALL BE PLACED TO AVOID SIGN SUPPORT ANCHOR BOLTS.

CONCRETE BEARING PAD ELEVATIONS AND GIRDER ANGLES		
LOCATION	ELEVATION	ANGLE
P3SB - G1	7.949	90°-00'-00.0"
P3SB - G2	8.037	90°-00'-00.0"
P3SB - G3	8.145	90°-00'-00.0"
P3SB - G4	8.190	90°-00'-00.0"
P3SB - G5	8.251	90°-00'-00.0"
P3SB - G6	8.220	90°-00'-00.0"
P3SB - G7	8.141	90°-00'-00.0"
P3SB - G8	8.026	90°-00'-00.0"
P3NB - G9	8.026	90°-00'-00.0"
P3NB - G10	8.141	90°-00'-00.0"
P3NB - G11	8.284	90°-00'-00.0"
P3NB - G12	8.314	89°-26'-55.7" *
P3NB - G13	8.267	88°-53'-51.2" *
P3NB - G14	8.160	88°-18'-51.7" *
P3NB - G15	8.065	88°-18'-33.0" *
SIGN SUPPORT	8.403	-

* GIRDER ANGLE MEASURED BETWEEN ℄ BRG. AND FROM A LINE TANGENT TO ℄ GIRDER AT ℄ BRG.

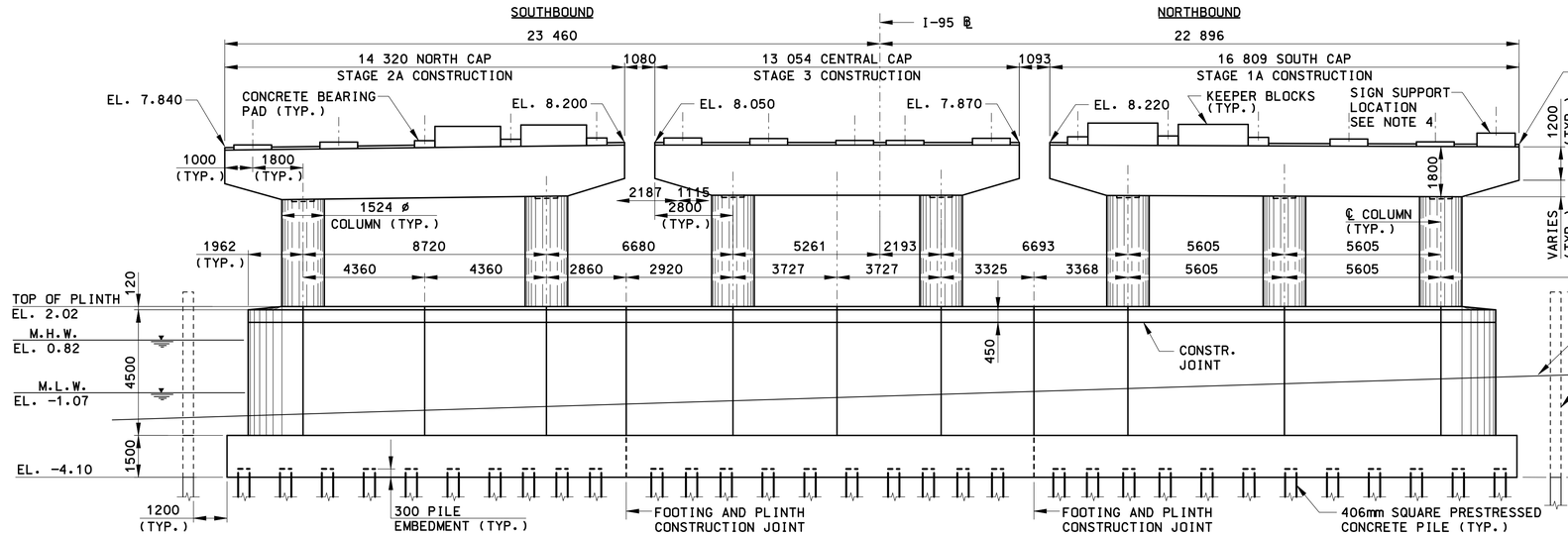

PIER 3 ELEVATION

SCALE: 1:100

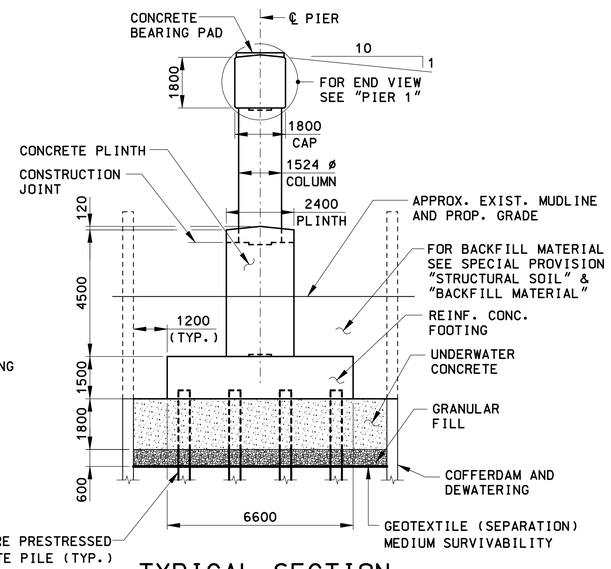

TYPICAL SECTION

SCALE: 1:100

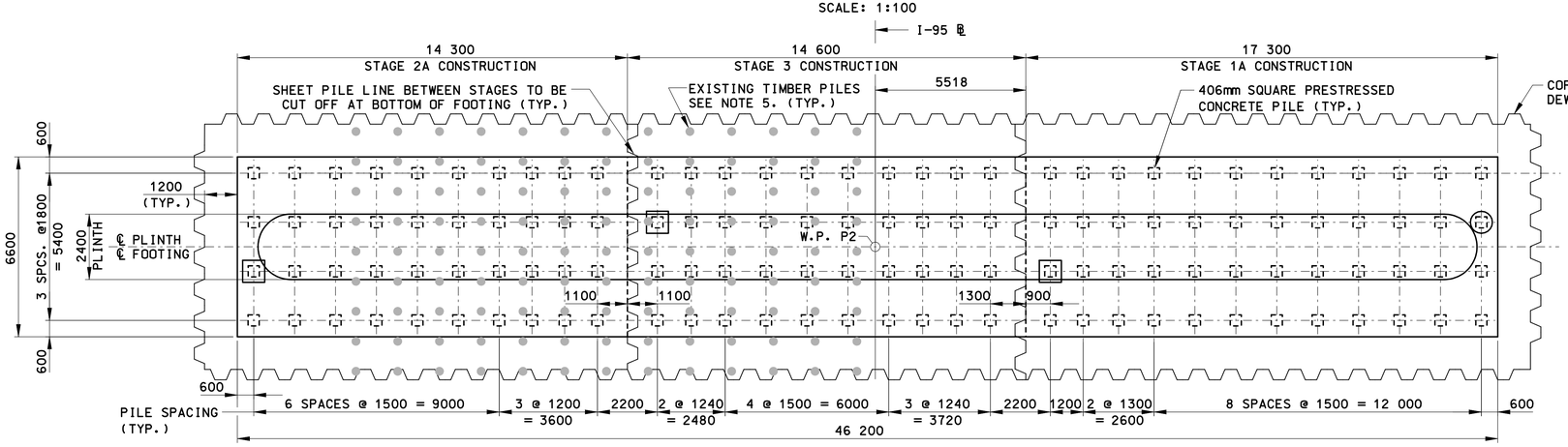

FOOTING PLAN

SCALE: 1:100

PILE NOTES:

1. □ DENOTES PROPOSED VERTICAL PILE.
   ⊡ DENOTES TEST PILE (26.0m LONG).
   ⊙ DENOTES TEST PILE (26.0m LONG) WITH PILE LOAD TEST.
2. PRIOR TO DRIVING THE PILES, THE CONTRACTOR SHALL SUBMIT TO THE ENGINEER FOR REVIEW AND APPROVAL HIS METHOD AND SEQUENCE OF PILE DRIVING.
3. PIER 3 ESTIMATED LENGTH OF PILES IS 21.7m.
4. THE NUMBER OF PILES FOR PIER 3: 128.
5. MAX. DESIGN PILE LOAD = 953 KN (STRENGTH-I).
   MAX. DESIGN PILE LOAD = 1019 KN (EXT. EVENT-I).
6. FOR PILE DETAILS, SEE "PILE DETAILS".
7. PDA TESTING ON ALL TEST PILES.

NOTES:

1. FOR WORKING POINT (W.P.) AND GIRDER COORDINATES, SEE "LAYOUT PLAN & COORDINATES" SHEETS.
2. FOR PIER DETAILS AND REINFORCEMENT, SEE "PIER DETAILS" SHEETS.
3. FOR GIRDER BEARING DETAILS, SEE "BEARINGS" SHEETS.
4. FOR SIGN SUPPORT DETAILS AND PEDESTAL REINFORCEMMENT, SEE "SIGN SUPPORT DETAILS".
5. FOR APPROXIMATE LOCATIONS AND REMOVAL LIMITS OF EXISTING TIMBER PILES, SEE DWG. "RIVER SOUNDINGS CONTOUR PLAN".
6. FOR KEEPER BLOCK DIMENSION AND REINFORCEMENT DETAILS, SEE "KEEPER BLOCK DETAILS".

REV.	DATE	DESCRIPTION	SHEET. NO.
		REVISIONS	

THE INFORMATION, INCLUDING ESTIMATED QUANTITIES OF WORK, SHOWN ON THESE SHEETS IS BASED ON LIMITED INVESTIGATIONS BY THE STATE AND IS IN NO WAY WARRANTED TO INDICATE THE CONDITIONS OR ACTUAL QUANTITIES OF WORK WHICH WILL BE REQUIRED.

DESIGNER: T. LALIBERTE
DRAFTER: T. LALIBERTE \ G. LEE
CHECKED BY: O. JAMBOTKAR
DATE CHECKED: 11-12-12

STATE OF CONNECTICUT
DEPARTMENT OF TRANSPORTATION

ENGINEER: PB AMERICAS, INC.
APPROVED BY: DATE:

PROJECT TITLE: RECONSTRUCTION OF I-95 OVER WEST RIVER (BRIDGE NO. 00163)
CADD
PLOTTED 11/13/2012

TOWN: NEW HAVEN / WEST HAVEN
DRAWING TITLE: PIER 3

PROJECT NO.: 92-522
DRAWING NO.: STR-58
SHEET NO.:

11/13/2012 11:10:58 AM
T:\V8CADD\Projects\PB8735\FD\Structures\Contract_Sheets\Br00163\str-58-092522-00163.dgn

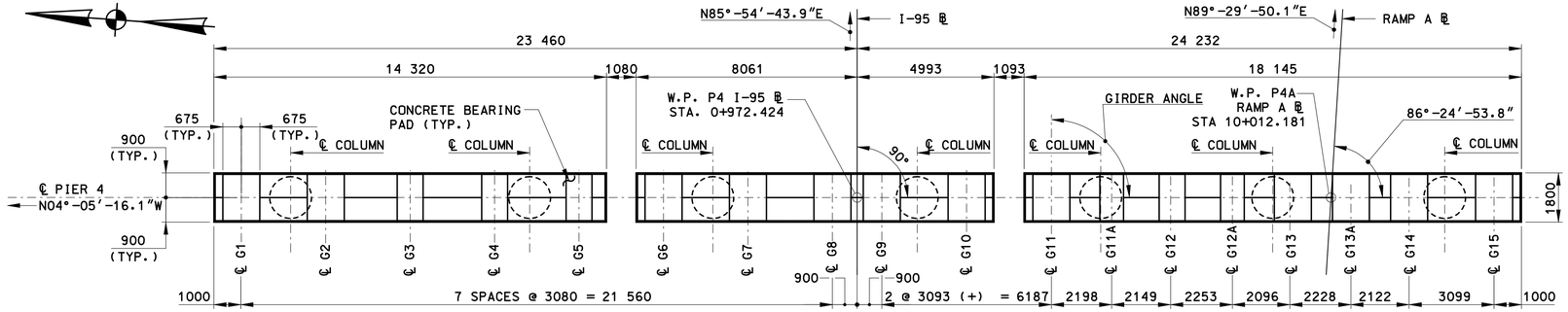

CAP PLAN

SCALE: 1:100

CONCRETE BEARING PAD ELEVATIONS AND GIRDER ANGLES		
LOCATION	ELEVATION	ANGLE
P4SB - G1	7.742	90°-00'-00.0"
P4SB - G2	7.832	90°-00'-00.0"
P4SB - G3	7.831	90°-00'-00.0"
P4SB - G4	7.893	90°-00'-00.0"
P4SB - G5	7.954	90°-00'-00.0"
P4SB - G6	7.988	90°-00'-00.0"
P4SB - G7	7.892	90°-00'-00.0"
P4SB - G8	7.776	90°-00'-00.0"
P4NB - G9	7.786	90°-00'-00.0"
P4NB - G10	7.910	90°-00'-00.0"
P4NB - G11	7.937	90°-00'-00.0"
P4NB - G11A	8.016	89°-19'-44.4"
P4NB - G12	7.937	88°-38'-20.2"
P4NB - G12A	7.928	87°-58'-02.1"
P4NB - G13	7.836	87°-16'-37.4"
P4NB - G13A	7.886	86°-51'-05.6"
P4NB - G14	7.821	86°-24'-53.6"
P4NB - G15	7.723	86°-24'-53.8"

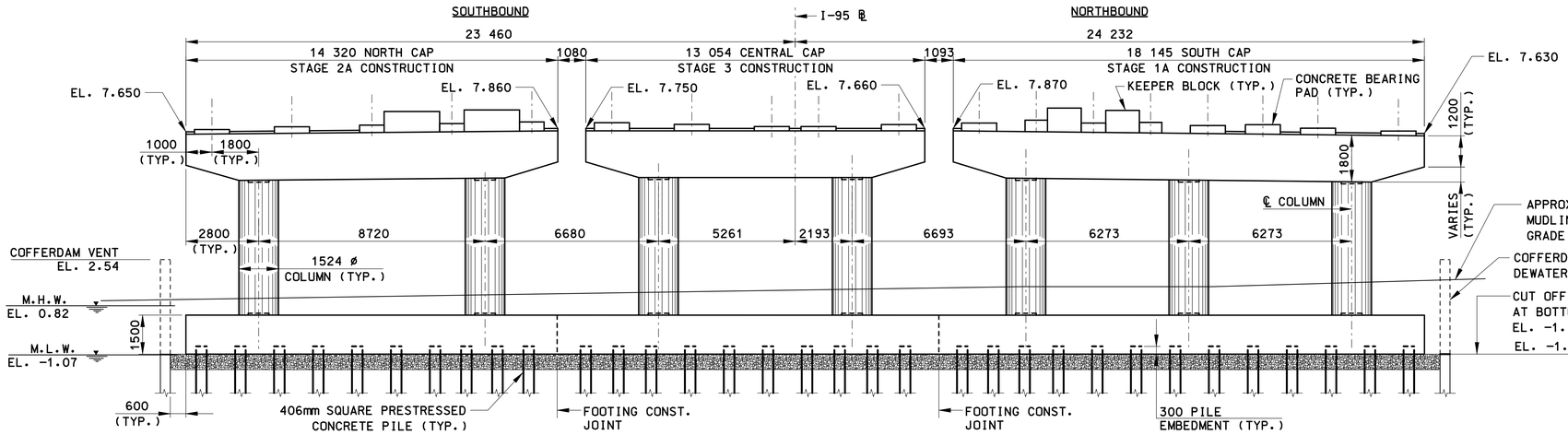

PIER 4 ELEVATION

SCALE: 1:100

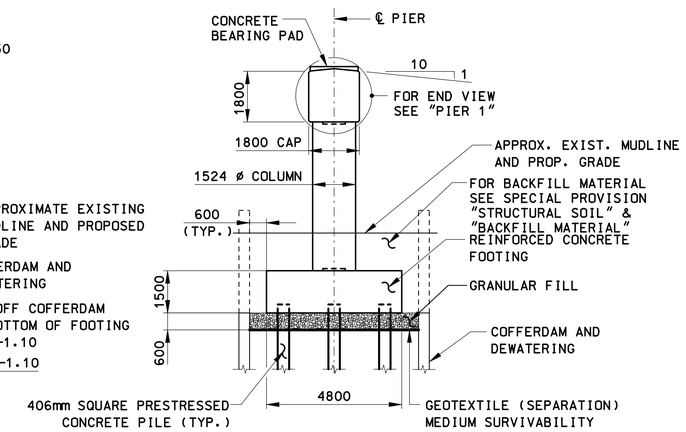

TYPICAL SECTION

SCALE: 1:100

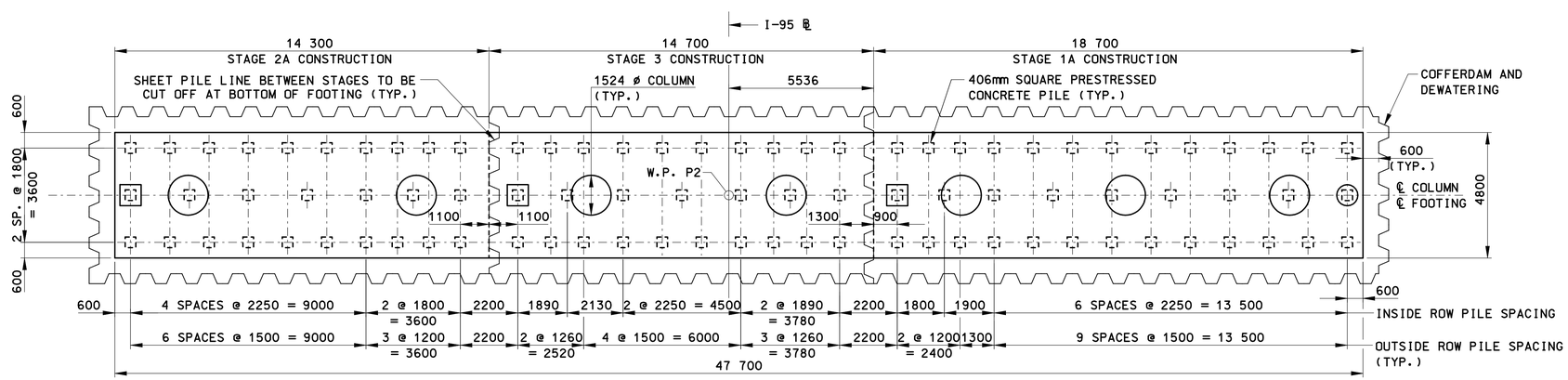

FOOTING PLAN

SCALE: 1:100

PILE NOTES:

1. □ DENOTES PROPOSED VERTICAL PILE.
   ⊡ DENOTES TEST PILE (27.5m LONG).
   ⊡ DENOTES TEST PILE (27.5m LONG) WITH PILE LOAD TEST.
2. PRIOR TO DRIVING THE PILES, THE CONTRACTOR SHALL SUBMIT TO THE ENGINEER FOR REVIEW AND APPROVAL HIS METHOD AND SEQUENCE OF PILE DRIVING.
3. PIER 4 ESTIMATED LENGTH OF PILES IS 26.2m.
4. THE NUMBER OF PILES FOR PIER 4: 89.
5. MAXIMUM DESIGN PILE LOAD = 1040 KN (STRENGTH-I).
   MAXIMUM DESIGN PILE LOAD = 1033 KN (EXTREME EVENT-I).
6. FOR PILE DETAILS, SEE "PILE DETAILS".
7. PDA TESTING ON ALL TEST PILES.

NOTES:

1. FOR WORKING POINT (W.P.) AND GIRDER COORDINATES, SEE "LAYOUT PLAN & COORDINATES" SHEETS.
2. FOR PIER DETAILS AND REINFORCEMENT, SEE "PIER DETAILS" SHEETS.
3. FOR GIRDER BEARING DETAILS, SEE "BEARING DETAILS" SHEETS.
4. FOR KEEPER BLOCK DIMENSION AND REINFORCEMENT DETAILS, SEE "KEEPER BLOCK DETAILS"

REV.	DATE	DESCRIPTION	SHEET. NO
		REVISIONS	

THE INFORMATION, INCLUDING ESTIMATED QUANTITIES OF WORK, SHOWN ON THESE SHEETS IS BASED ON LIMITED INVESTIGATIONS BY THE STATE AND IS IN NO WAY WARRANTED TO INDICATE THE CONDITIONS OR ACTUAL QUANTITIES OF WORK WHICH WILL BE REQUIRED.

DESIGNER: T. LALIBERTE
DRAFTER: T. LALIBERTE \ G. LEE
CHECKED BY: O. JAMBOTKAR
DATE CHECKED: 11-12-12

STATE OF CONNECTICUT
DEPARTMENT OF TRANSPORTATION

ENGINEER: PB AMERICAS, INC.
APPROVED BY: DATE:

PROJECT TITLE: RECONSTRUCTION OF I-95 OVER WEST RIVER (BRIDGE NO. 00163)
CADD PLOTTED 11/13/2012

TOWN: NEW HAVEN / WEST HAVEN
DRAWING TITLE: PIER 4

PROJECT NO.: 92-522
DRAWING NO.: STR-59
SHEET NO.:

11/14/46 AM
11/13/2012
T:\WBCADD-Projects\PB\BT35\FD\Structures\Contract_Sheets\Br00163.dgn-59-092522-00163.dgn

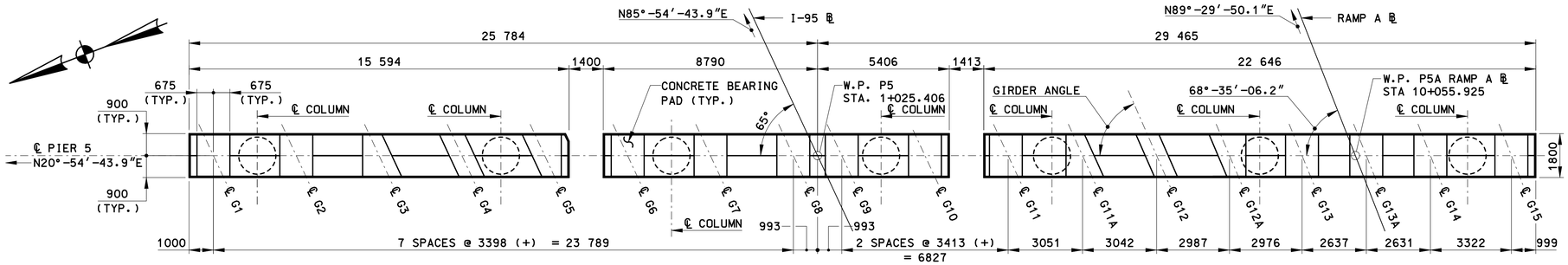

CAP PLAN

SCALE: 1:100

CONCRETE BEARING PAD ELEVATIONS AND GIRDER ANGLES		
LOCATION	ELEVATION	ANGLE
P5SB - G1	7.201	65°-00'-00.0"
P5SB - G2	7.309	65°-00'-00.0"
P5SB - G3	7.326	65°-00'-00.0"
P5SB - G4	7.406	65°-00'-00.0"
P5SB - G5	7.495	65°-00'-00.0"
P5SB - G6	7.578	65°-00'-00.0"
P5SB - G7	7.562	65°-00'-00.0"
P5SB - G8	7.504	65°-00'-00.0"
P5NB - G9	7.518	65°-00'-00.0"
P5NB - G10	7.649	65°-00'-00.0"
P5NB - G11	7.718	65°-00'-00.0"
P5NB - G11A	7.754	65°-40'-15.6"
P5NB - G12	7.744	66°-21'-39.8"
P5NB - G12A	7.710	67°-01'-57.9"
P5NB - G13	7.666	67°-43'-22.6"
P5NB - G13A	7.667	68°-08'-54.4"
P5NB - G14	7.617	68°-34'-57.1"
P5NB - G15	7.523	68°-41'-56.1"

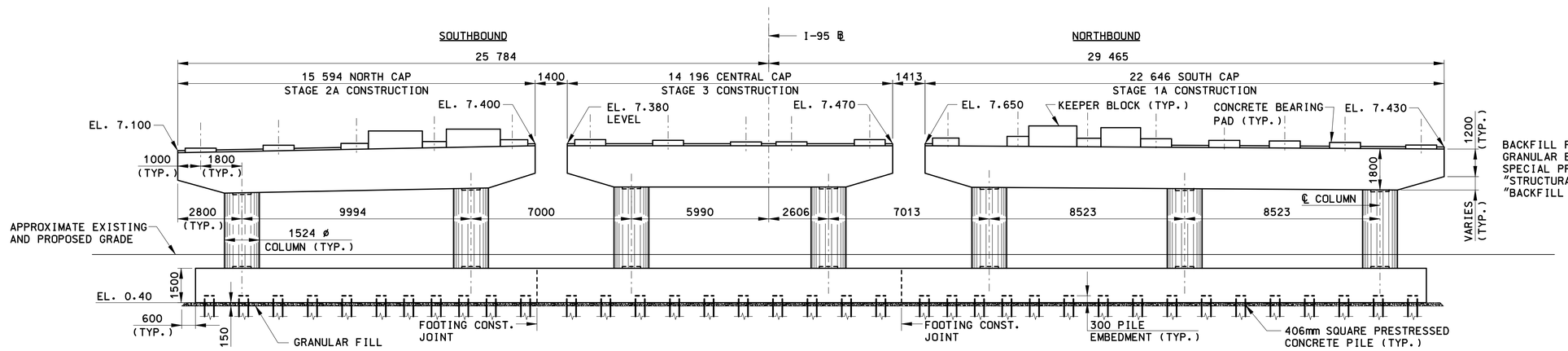

PIER 5 ELEVATION

SCALE: 1:100

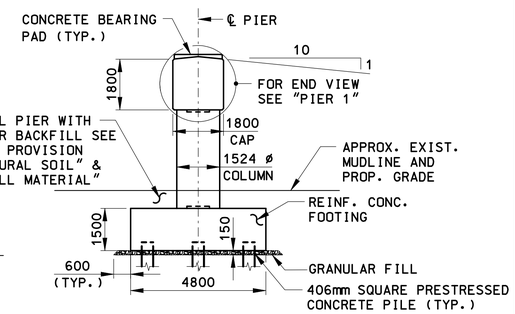

TYPICAL SECTION

SCALE: 1:100

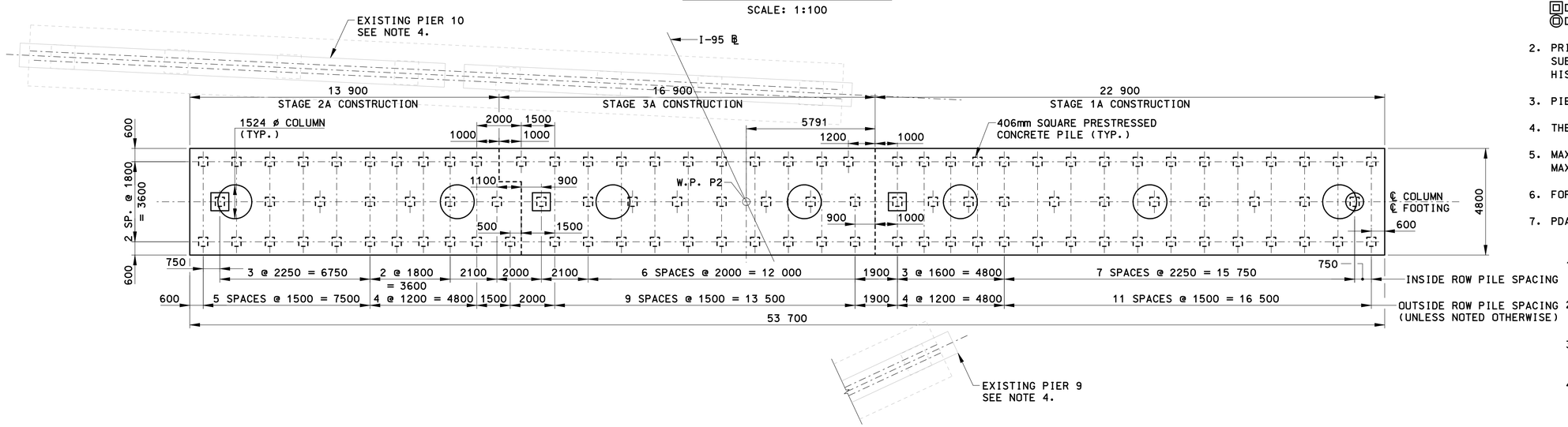

FOOTING PLAN

SCALE: 1:100

PILE NOTES:

1. □ DENOTES PROPOSED VERTICAL PILE.
   ⊡ DENOTES TEST PILE (27.5m LONG).
   ⊡ DENOTES TEST PILE (27.5m LONG) WITH PILE LOAD TEST.
2. PRIOR TO DRIVING THE PILES, THE CONTRACTOR SHALL SUBMIT TO THE ENGINEER FOR REVIEW AND APPROVAL HIS METHOD AND SEQUENCE OF PILE DRIVING.
3. PIER 5 ESTIMATED LENGTH OF PILES IS 25.2m.
4. THE NUMBER OF PILES FOR PIER 5: 100.
5. MAXIMUM DESIGN PILE LOAD = 905 KN (STRENGTH-I).
   MAXIMUM DESIGN PILE LOAD = 851 KN (EXTREME EVENT-I).
6. FOR PILE DETAILS, SEE "PILE DETAILS".
7. PDA TESTING ON ALL TEST PILES.

NOTES:

1. FOR WORKING POINT (W.P.) AND GIRDER COORDINATES, SEE "LAYOUT PLAN & COORDINATES" SHEETS.
2. FOR PIER DETAILS AND REINFORCEMENT, SEE "PIER DETAILS" SHEETS.
3. FOR GIRDER BEARING DETAILS, SEE "BEARINGS" SHEETS.
4. PORTION OF EXISTING SUBSTRUCTURE INCLUDING THE EXISTING PILES SHALL BE REMOVED DURING STAGES 2 AND 3. FOR REMOVAL LIMITS OF SUBSTRUCTURE AND PILES, SEE "DEMOLITION DETAILS".
5. FOR KEEPER BLOCK DIMENSONS AND REINFORCEMENT DETAILS SEE SHT "KEEPER BLOCK DETAILS"

REV.	DATE	DESCRIPTION	SHEET. NO
		REVISIONS	

THE INFORMATION, INCLUDING ESTIMATED QUANTITIES OF WORK, SHOWN ON THESE SHEETS IS BASED ON LIMITED INVESTIGATIONS BY THE STATE AND IS IN NO WAY WARRANTED TO INDICATE THE CONDITIONS OR ACTUAL QUANTITIES OF WORK WHICH WILL BE REQUIRED.

DESIGNER: T. LALIBERTE
DRAFTER: T. LALIBERTE \ G. LEE
CHECKED BY: O. JAMBOTKAR
DATE CHECKED: 11-12-12

STATE OF CONNECTICUT
DEPARTMENT OF TRANSPORTATION

ENGINEER: PB AMERICAS, INC.
APPROVED BY: DATE:

PROJECT TITLE: RECONSTRUCTION OF I-95 OVER WEST RIVER (BRIDGE NO. 00163)

CADD | PLOTTED 11/13/2012

TOWN: NEW HAVEN / WEST HAVEN

DRAWING TITLE: PIER 5

PROJECT NO.: 92-522
DRAWING NO.: STR-60
SHEET NO.:

11/12/27 AM
11/13/2012
T:\WBCADD\Projects\PB\BT35\FD\Structures\Contract_Sheets\Br00163.dgn

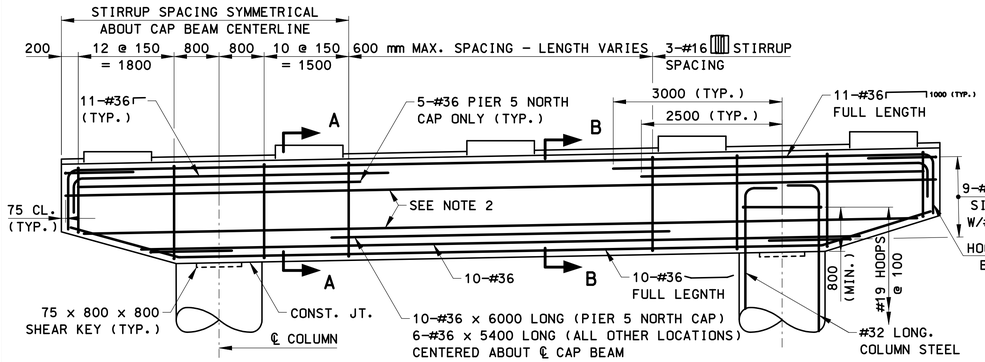

NOTES: 1. DETAIL APPLIES FOR FOLLOWING LOCATIONS: PIER NOS. 1 & 2, NORTH, CENTRAL AND SOUTH CAP. PIER NOS. 3, 4 & 5, NORTH AND CENTRAL CAP. PIER NO. 5 NORTH CAP SHOWN, OTHERS SIMILAR.

2. 12-#36 BARS EACH FACE.

TYPICAL 2-COLUMN CAP

SCALE: 1:50

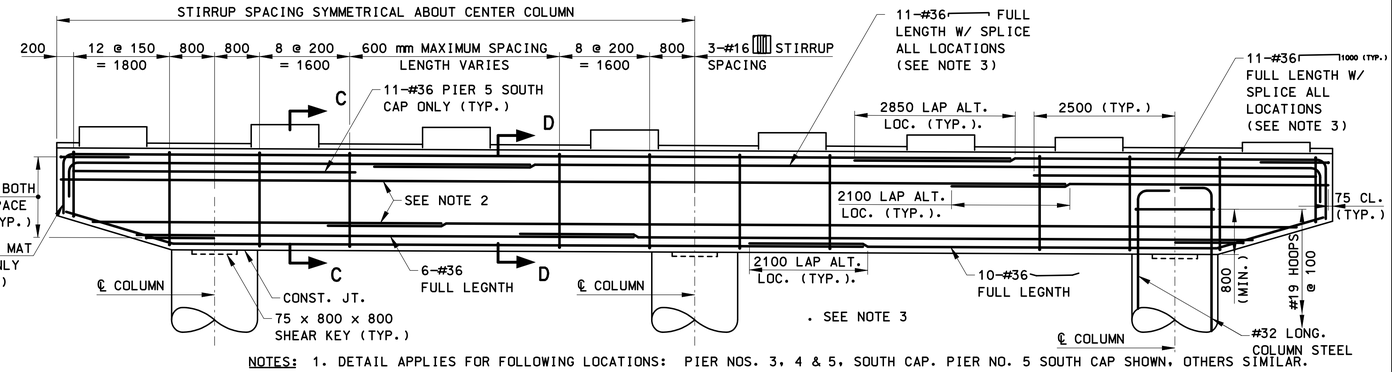

NOTES: 1. DETAIL APPLIES FOR FOLLOWING LOCATIONS: PIER NOS. 3, 4 & 5, SOUTH CAP. PIER NO. 5 SOUTH CAP SHOWN, OTHERS SIMILAR.

2. 12-#36 BARS EACH FACE.

3. ALL SPLICES SHOWN APPLY AT PIER NO. 5. ONLY TOP TWO MAT SPLICES SHOWN APPLY AT PIER NOS. 3 AND 4.

TYPICAL 3-COLUMN CAP

SCALE: 1:50

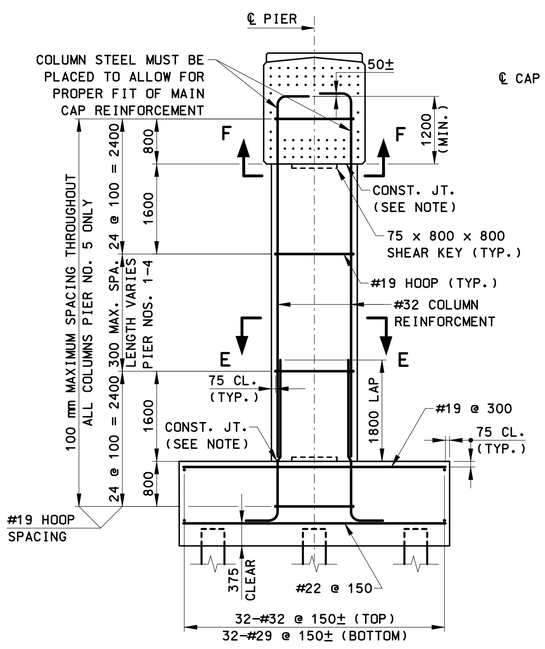

CONSTRUCTION JOINT NOTE:
ROUGHEN CONTACT SURFACE TO AN AMPLITUTE OF 6mm± AND APPLY A NEAT CEMENT GROUT OR OTHER SUITABLE BONDING MATERIAL IMMEDIATELY PRIOR TO PLACING ADJACENT CONCRETE.

NOTE: FOR ADDITIONAL DETAILS OF COLUMN, PLINTH AND FOOTING AT PLINTH LOCATIONS, SEE "TYPICAL SECTION @ PLINTH" ON DWG. "PIER DETAILS - SHEET 2 OF 2".

TYPICAL SECTION @ COLUMN

SCALE: 1:50

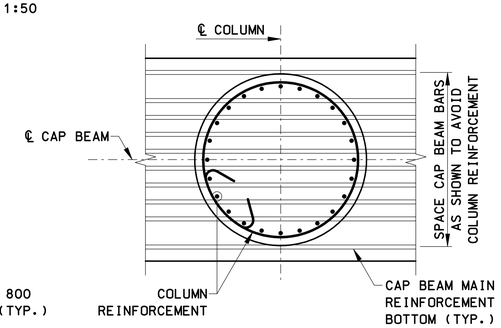

SECTION F-F

SCALE: 1:25

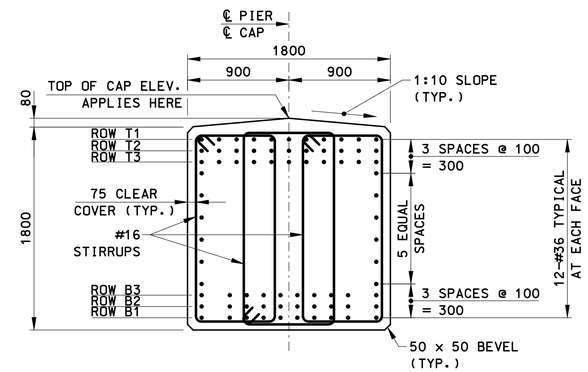

TYPICAL CAP BEAM SECTION

SCALE: 1:25

CAP NOTES:

1. ALL CAP BEAM MAIN REINFORCEMENT SHALL BE #36 BARS SPACED AS SHOWN IN THE TYPICAL SECTION TO AVOID COLUMN REINFORCEMENT.
2. SEE TABLE FOR NUMBER OF BARS IN EACH ROW.

CAP BEAM MAIN REINFORCEMENT TABLE

NUMBER OF #36 BARS

SECTION	TOP BARS			BOTTOM BARS			LOCATION
	ROW T1	ROW T2	ROW T3	ROW B1	ROW B2	ROW B3	
A-A	11	11	5	10	10	-	PIER 5 NORTH CAP
A-A	11	11	-	10	10	-	ALL OTHER 2-COLUMN CAP LOC.
B-B	11	-	-	10	10	10	PIER 5 NORTH CAP
B-B	11	-	-	10	10	6	ALL OTHER 2-COLUMN CAP LOC.
C-C	11	11	11	10	10	-	PIER 5 SOUTH CAP
C-C	11	11	-	10	6	-	PIER 3 AND PIER 4 SOUTH CAP
D-D	11	11	-	10	10	-	PIER 5 SOUTH CAP
D-D	11	11	-	10	6	-	PIER 3 AND PIER 4 SOUTH CAP

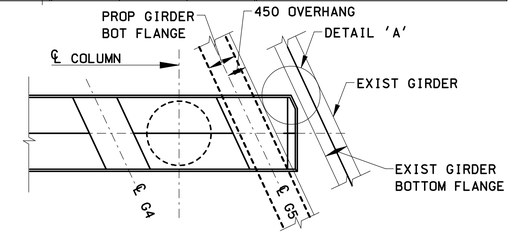

PIER 5 - PIER CAP PARTIAL PLAN

SCALE: 1:70

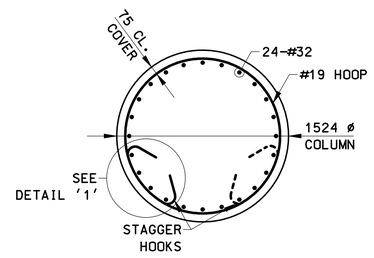

SECTION E-E

SCALE: 1:25

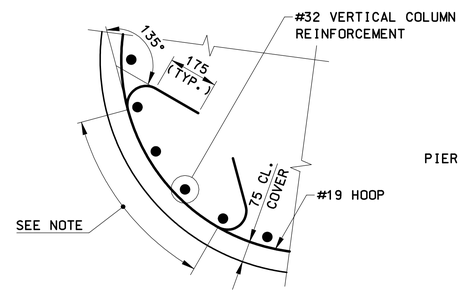

NOTE: ENGAGE 4-#32 VERTICAL BARS WITHIN HOOKS AS SHOWN.

DETAIL '1'

SCALE: 1:10

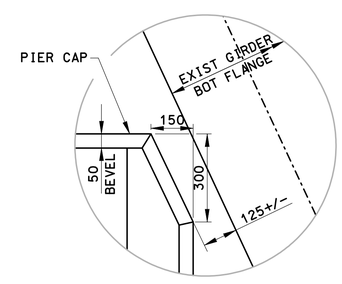

DETAIL 'A'

SCALE: 1:10

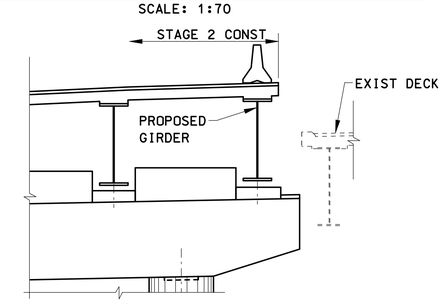

PIER 5 PIER CAP PARTIAL ELEVATION

SCALE: 1:70

REV.	DATE	DESCRIPTION	SHEET. NO
		REVISIONS	

SCALE AS NOTED

DESIGNER: T. LALIBERTE
DRAFTER: G. LEE / T. LALIBERTE
CHECKED BY: O. JAMBOTKAR
DATE CHECKED: 11-12-12

STATE OF CONNECTICUT
DEPARTMENT OF TRANSPORTATION

ENGINEER: PB AMERICAS, INC.
APPROVED BY:
DATE:

PROJECT TITLE: RECONSTRUCTION OF I-95 OVER WEST RIVER (BRIDGE NO. 00163)
CADD
PLOTTED 11/13/2012

TOWN: NEW HAVEN / WEST HAVEN
DRAWING TITLE: PIER DETAILS - SHEET 1 OF 3

PROJECT NO.: 92-522
DRAWING NO.: STR-61
SHEET NO.:

11:35:11 AM
11/13/2012
T:\WBCADD\Projects\PB\8735\FD\Structures\Contract_Sheets\Br0163\dr-61-092522-00163.dgn

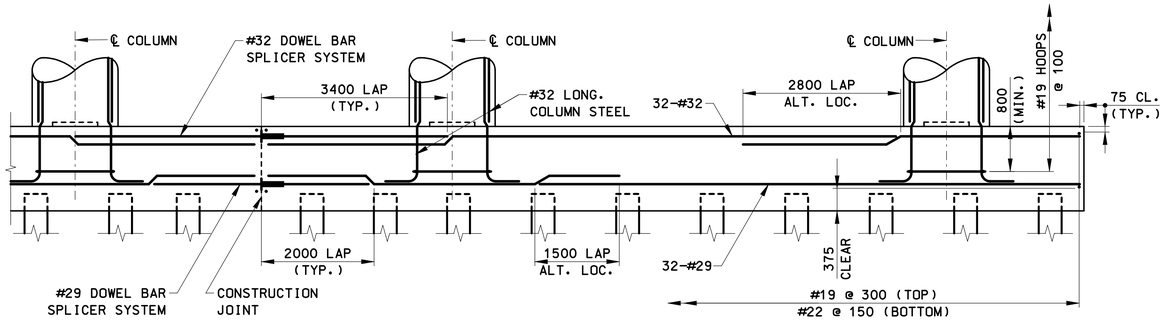

NOTE: DETAIL APPLIES FOR PIER NOS. 1, 4 & 5.

TYPICAL COLUMN FOOTING

SCALE: 1:50

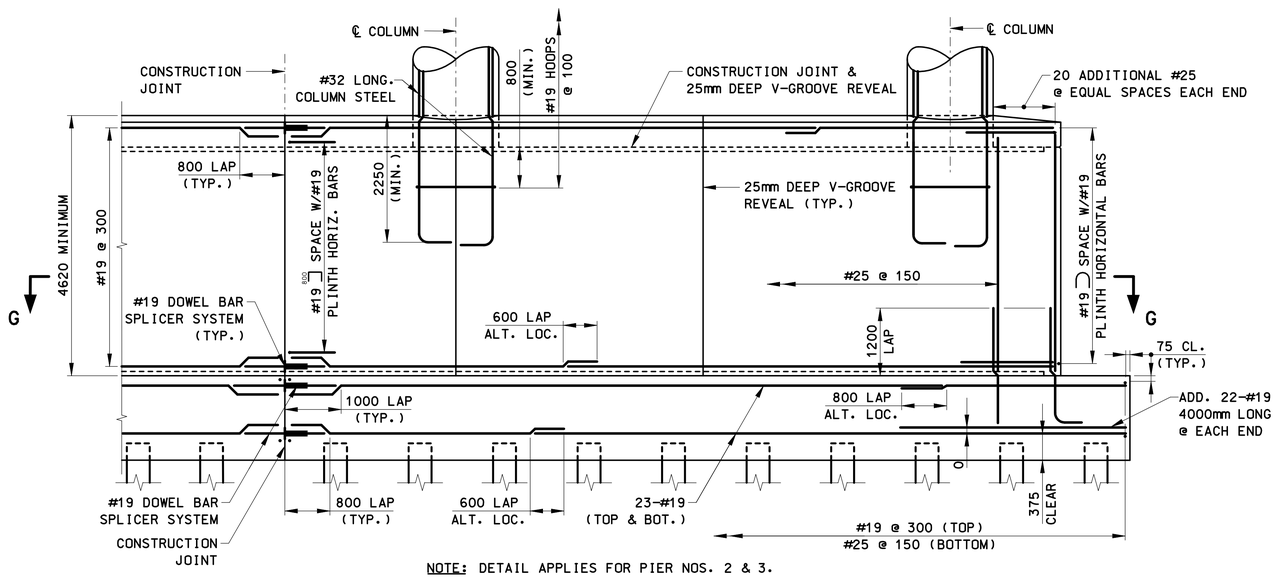

NOTE: DETAIL APPLIES FOR PIER NOS. 2 & 3.

TYPICAL PLINTH FOOTING

SCALE: 1:50

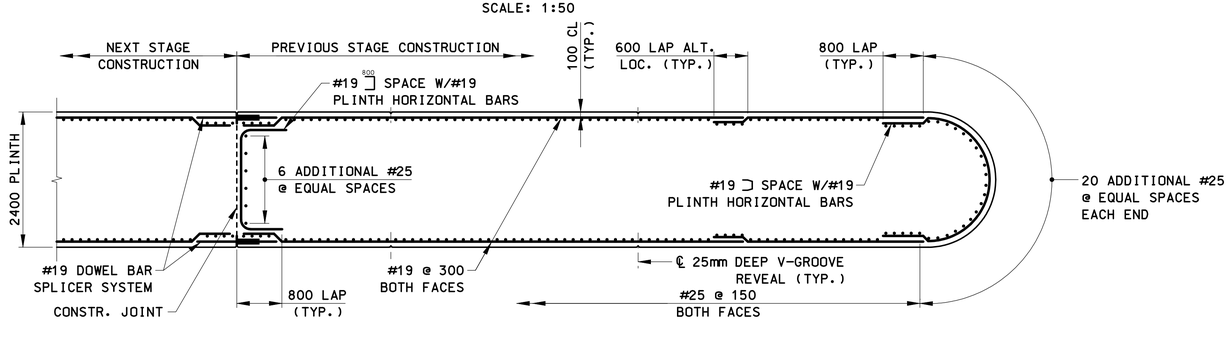

SECTION G-G

SCALE: 1:50

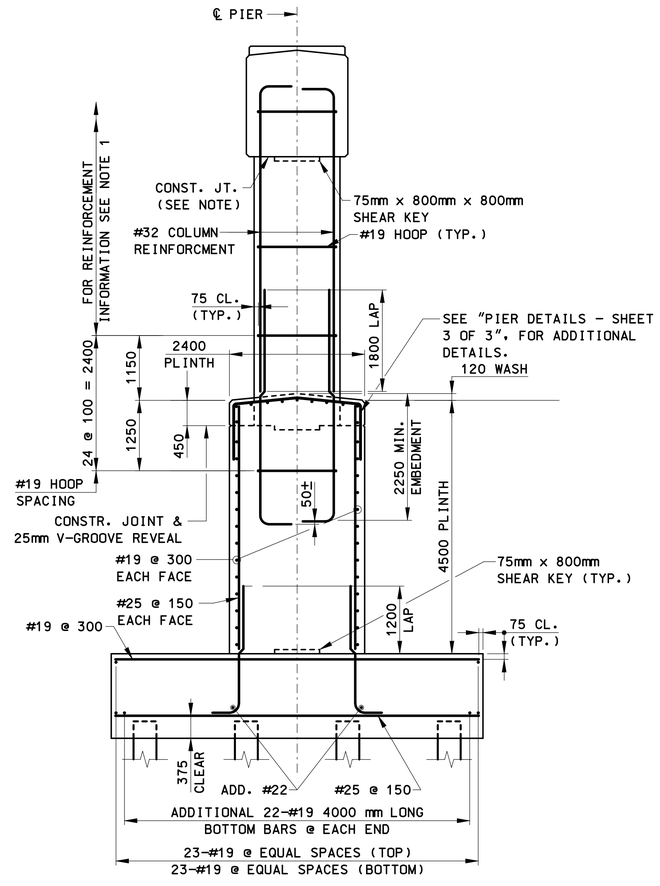

CONSTRUCTION JOINT NOTE:
ROUGHEN CONTACT SURFACE TO AN AMPLITUTE OF 6mm± AND APPLY A NEAT CEMENT GROUT OR OTHER SUITABLE BONDING MATERIAL IMMEDIATELY PRIOR TO PLACING ADJACENT CONCRETE.

NOTE:

1. FOR ADDITIONAL DETAILS OF COLUMN REINFORCEMENT, SEE "TYPICAL SECTION @ COLUMN" ON DWG. "PIER DETAILS - 1 OF 2".

TYPICAL SECTION @ PLINTH

SCALE: 1:50

NOTE:

FOR LAYOUT AND LOCATION OF ANCHOR RODS ON CONCRETE BEARING PADS, SEE "BEARING DETAILS".

REV.	DATE	DESCRIPTION	SHEET. NO.
		REVISIONS	

SCALE AS NOTED

DESIGNER: T. LALIBERTE
DRAFTER: T. LALIBERTE
CHECKED BY: O. JAMBOTKAR
DATE CHECKED: 11-12-12

STATE OF CONNECTICUT
DEPARTMENT OF TRANSPORTATION

ENGINEER: PB AMERICAS, INC.
APPROVED BY:
DATE:

PROJECT TITLE: RECONSTRUCTION OF I-95 OVER WEST RIVER (BRIDGE NO. 00163)

CADD
PLOTTED 11/13/2012

TOWN: NEW HAVEN / WEST HAVEN

DRAWING TITLE: PIER DETAILS - SHEET 2 OF 3

PROJECT NO.: 92-522
DRAWING NO.: STR-62
SHEET NO.:

11/14/07 AM
11/13/2012
T:\V8CADD\Projects\PB\8735\FD\Structures\Contract_Sheets\Br00163\str-62-092522-00163.dgn

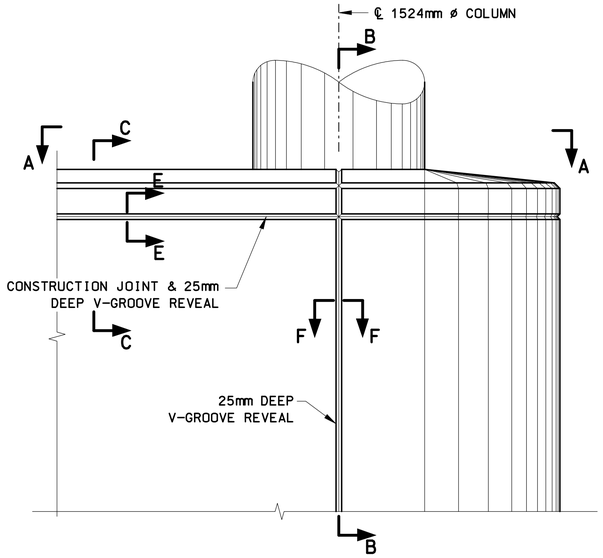

TYPICAL PLINTH ELEVATION
SCALE: 1:25

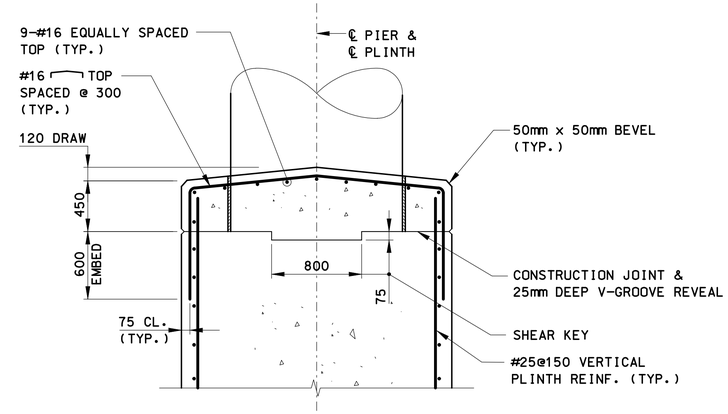

SECTION B-B
SCALE: 1:25

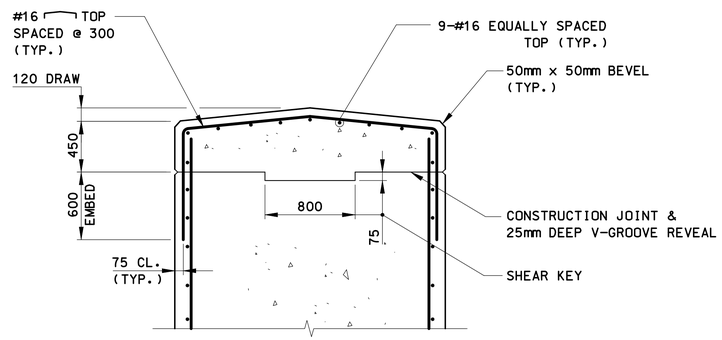

SECTION C-C
SCALE: 1:25

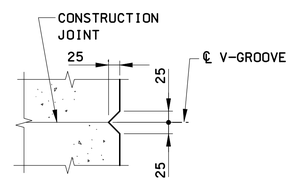

SECTION E-E
NOT TO SCALE

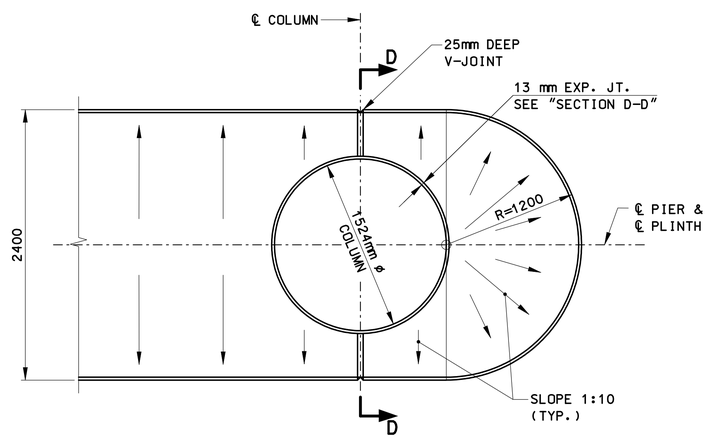

VIEW A-A
SCALE: 1:25

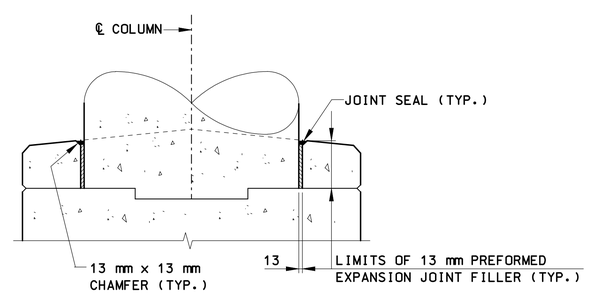

SECTION D-D
NOT TO SCALE

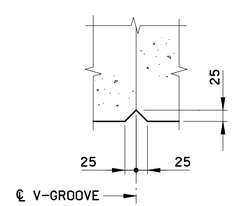

SECTION F-F
NOT TO SCALE

REV.	DATE	DESCRIPTION	SHEET. NO
		REVISIONS	

SCALE AS NOTED

DESIGNER: T. LALIBERTE
DRAFTER: G. LEE
CHECKED BY: O. JAMBOTKAR
DATE CHECKED: 11-12-12

STATE OF CONNECTICUT
DEPARTMENT OF TRANSPORTATION

ENGINEER: PB AMERICAS, INC.
APPROVED BY:
DATE:

PROJECT TITLE: RECONSTRUCTION OF I-95 OVER WEST RIVER (BRIDGE NO. 00163)
CADD
PLOTTED 11/13/2012

TOWN: NEW HAVEN / WEST HAVEN
DRAWING TITLE: PIER DETAILS - SHEET 3 OF 3

PROJECT NO.: 92-522
DRAWING NO.: STR-63
SHEET NO.:

11/13/2012 11:50:43 AM
T:\WBCADD-Projects\PB\8735\FD\Structures\Contract_Sheets\Br00163\str-63-092522-00163.dgn

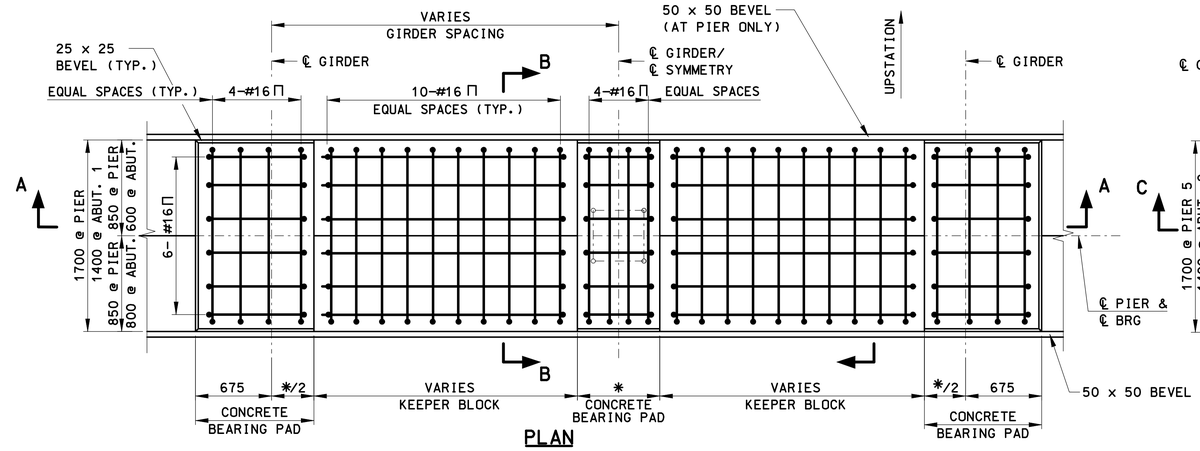

PLAN

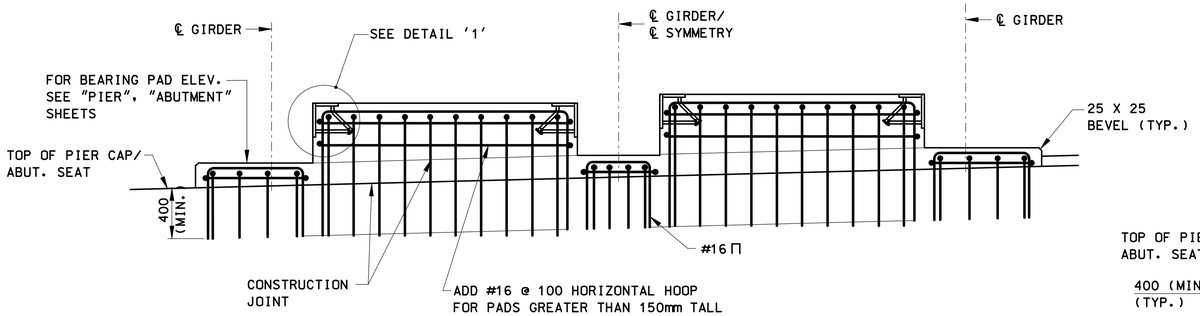

SECTION A-A

KEEPER BLOCK DETAIL AT ABUTMENT 1 & PIERS 1 TO 4

SCALE: 1:25
(PIER 2 SHOWN;
ABUTMENT & OTHER PIERS SIMILAR)

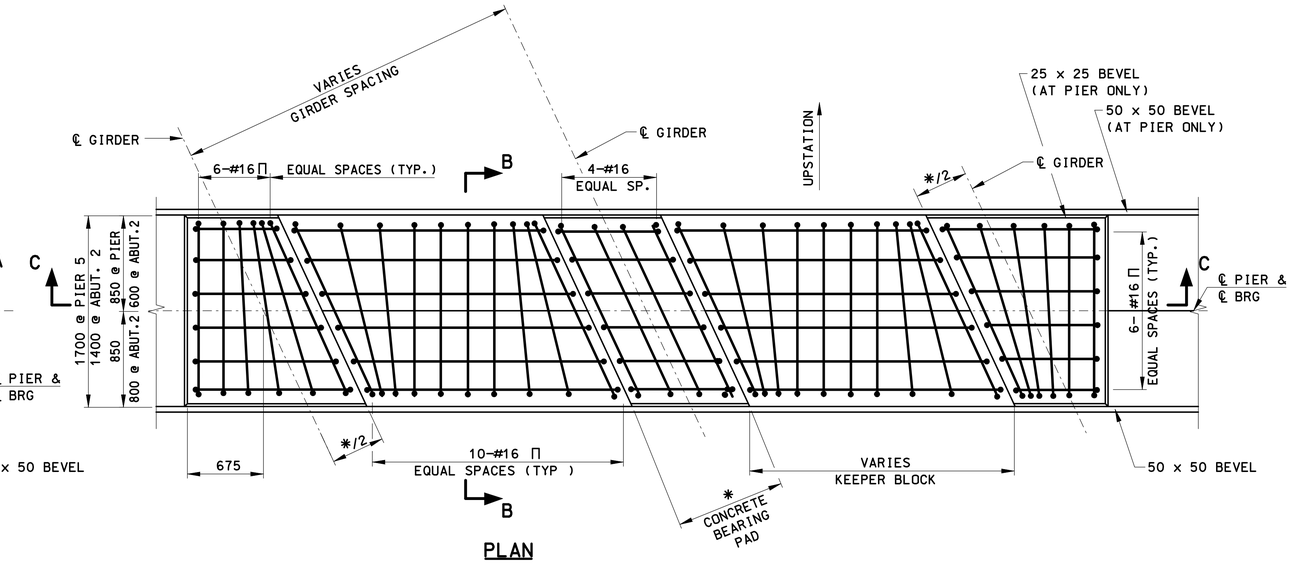

PLAN

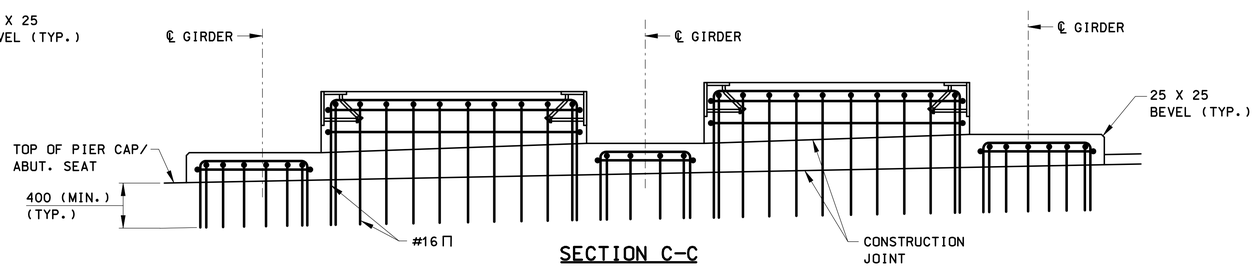

SECTION C-C

KEEPER BLOCK DETAIL AT PIER 5 & ABUTMENT 2

SCALE: 1:25
(PIER SHOWN; ABUTMENT SIMILAR)

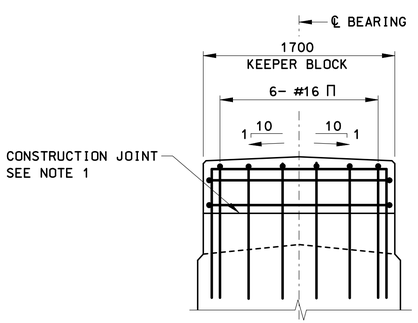

SECTION B-B

SCALE: 1:25

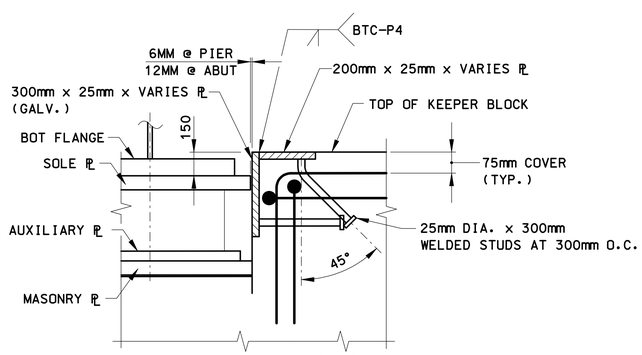

DETAIL '1'

SCALE: 1:10

* WIDTH OF PAD EQUALS DIMENSION "M" AT PIERS & "M+12" AT ABUTMENT SHOWN AT RESPECTIVE LOCATIONS FOR FIXED & LONGITUDINALLY GUIDED BEARINGS. FOR CONCRETE PADS AT ALL OTHER LOCATIONS, SEE SHT "CONCRETE BEARING PAD DETAILS".

KEEPER BLOCK NOTES

1. ROUGHEN CONTACT SURFACE TO AN AMPLITUDE OF 6mm ± PRIOR TO PLACING KEEPER BLOCK CONCRETE.
2. KEEPER BLOCK TO BE CONSTRUCTED AFTER ALL STRUCTURAL STEEL HAS BEEN ERECTED IN ITS FINAL POSITION.
3. ALL REINFORCING STEEL FOR KEEPER BLOCKS SHALL BE PAID FOR UNDER "DEFORMED STEEL BARS". ALL REINFORCING SHALL HAVE 75mm COVER UNLESS NOTED OTHERWISE.
4. ALL CONCRETE FOR KEEPER BLOCKS SHALL BE CLASS 'F' AND SHALL BE PAID UNDER "CLASS 'F' CONCRETE".
5. FOR KEEPER BLOCK LOCATIONS SEE "ABUTMENT 1, "ABUTMENT 2, "PIER1" TO "PIER 5" SHEETS.
6. STRUCTURAL STEEL FOR KEEPER PLATES SHALL BE ASTM A709 GRADE 345 GALVANIZED, AND SHALL BE INCLUDED IN THE LUMP SUM ITEM "STRUCTURAL STEEL".
7. WELDED STUDS FOR KEEPER PLATES SHALL CONFORM TO THE REQUIREMENTS OF "WELDED STUDS", AND SHALL BE INCLUDED IN THE LUMP SUM "STRUCTURAL STEEL".

REV.	DATE	DESCRIPTION	SHEET. NO
		REVISIONS	

SCALE AS NOTED

DESIGNER: O. JAMBOTKAR
DRAFTER: G. LEE
CHECKED BY: T. LALIBERTE
DATE CHECKED: 11-12-12

STATE OF CONNECTICUT
DEPARTMENT OF TRANSPORTATION

ENGINEER: PB AMERICAS, INC.
APPROVED BY:
DATE:

PROJECT TITLE: RECONSTRUCTION OF I-95 OVER WEST RIVER (BRIDGE NO. 00163)
CADD
PLOTTED 11/13/2012

TOWN: NEW HAVEN / WEST HAVEN
DRAWING TITLE: KEEPER BLOCK DETAILS

PROJECT NO.: 92-522
DRAWING NO.: STR-65
SHEET NO.:

11/5/59 AM
11/13/2012
T:\V8CADD\Projects\PB\8735\FD\Structures\Contract_Sheets\Br00163\str-64092552-00163.dgn

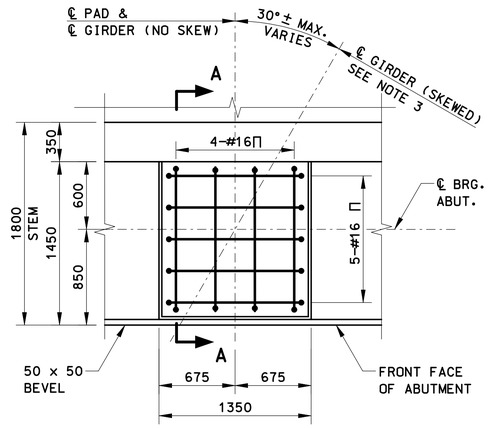

PLAN
SCALE: 1:25

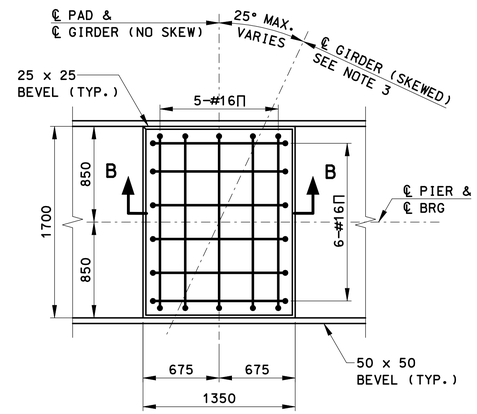

PLAN
SCALE: 1:25

CONCRETE PAD NOTES:

1. CONCRETE FOR THE CONCRETE PADS SHALL BE PAID FOR UNDER THE ITEM "CLASS '40' CONCRETE".
2. PLACE REINFORCEMENT TO CLEAR ANCHOR RODS.
3. FOR GIRDER ANGLES AND CONCRETE PAD ELEVATIONS, SEE "PIER", "ABUTMENT" SHEETS.
4. FOR DETAILS OF ANCHOR RODS, SEE "BEARING DETAILS 2".
5. FOR CONCRETE PAD ADJACENT TO KEEPER BLOCKS AND KEEPER BLOCK DETAILS SEE "KEEPER BLOCK DETAILS".

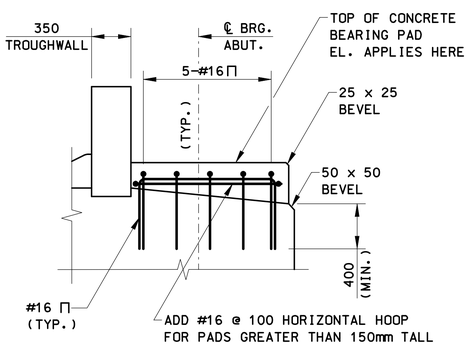

SECTION A-A
NOT TO SCALE

AT ABUTMENTS

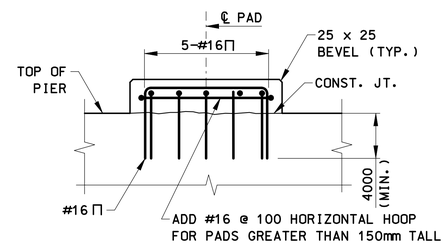

SECTION B-B
NOT TO SCALE

AT PIERS

CONCRETE BEARING PAD DETAILS

REV.	DATE	DESCRIPTION	SHEET. NO
		REVISIONS	

SCALE AS NOTED

DESIGNER: O. JAMBOTKAR
DRAFTER: G. LEE
CHECKED BY: T. LALIBERTE
DATE CHECKED: 10-17-12

STATE OF CONNECTICUT
DEPARTMENT OF TRANSPORTATION

ENGINEER: PB AMERICAS, INC.
APPROVED BY:
DATE:

PROJECT TITLE: RECONSTRUCTION OF I-95 OVER WEST RIVER (BRIDGE NO. 00163)
CADD str-65-092522-00163.dgn
PLOTTED 11/12/2012

TOWN: NEW HAVEN / WEST HAVEN
DRAWING TITLE: CONCRETE BEARING PAD DETAILS

PROJECT NO.: 92-522
DRAWING NO.: STR-64
SHEET NO.:

6:07:04 PM
11/12/2012
T:\WBCADD\Projects\PB\87350\FD\Structures\Contract_Sheets\Br00163\str-65-092522-00163.dgn

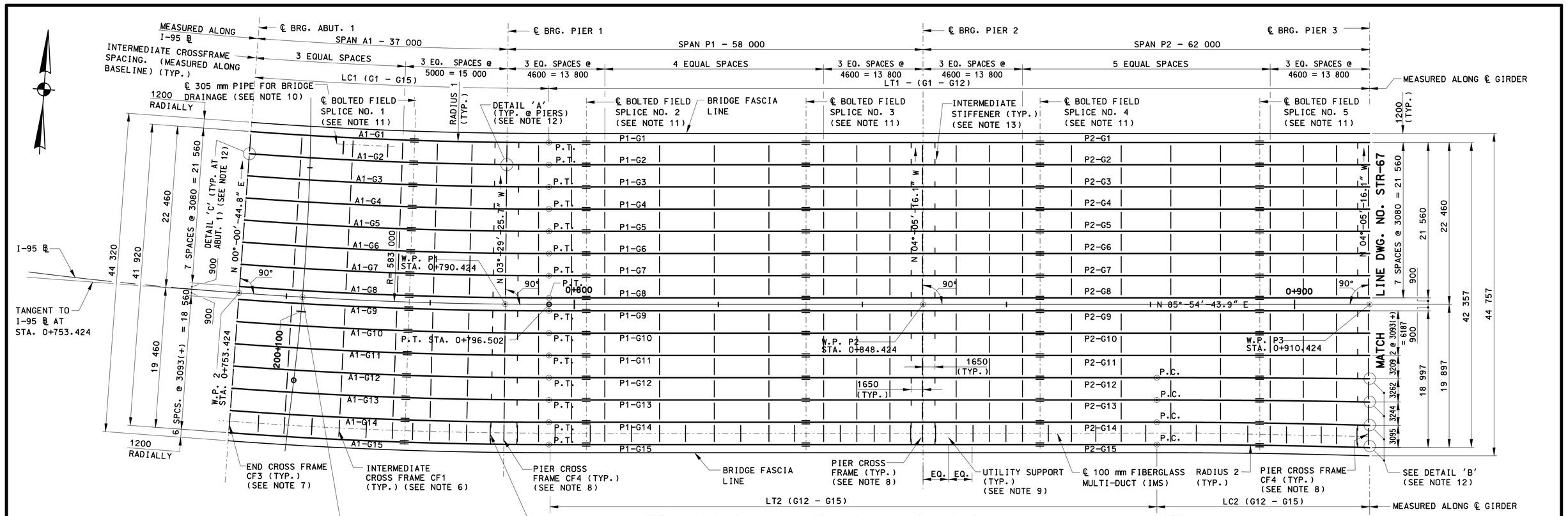

FRAMING PLAN - SPANS A1, P1 & P2

SCALE: 1:250

NOTE: TRANSVERSE INTERMEDIATE STIFFENERS AND CONNECTION PLATES SHALL BE APPROXIMATELY 300 mm CLEAR OF ALL SPLICE PLATES.

CURVED GIRDER DATA

MARK	RADIUS 1	LC1	LT1	LT2	RADIUS 2	LC2
G1	560 540	41 418	113 922	-	-	-
G2	563 620	41 646	113 922	-	-	-
G3	566 700	41 873	113 922	-	-	-
G4	569 780	42 101	113 922	-	-	-
G5	572 860	42 329	113 922	-	-	-
G6	575 940	42 556	113 922	-	-	-
G7	579 020	42 784	113 922	-	-	-
G8	582 100	43 011	113 922	-	-	-
G9	583 900	43 144	113 922	-	-	-
G10	586 993	43 373	113 922	-	-	-
G11	590 087	43 602	113 922	-	-	-
G12	593 180	43 830	-	84 380	3 070 916	29 543
G13	596 273	44 059	-	84 380	1 535 418	29 544
G14	599 367	44 287	-	84 380	1 004 293	29 546
G15	602 460	44 516	-	84 380	1 001 200	29 546

LC1: GIRDER LENGTH ALONG CURVE MEASURED FROM ℄ BRG. ABUT. NO. 1 TO PT.
LT1: GIRDER LENGTH ALONG TANGENT MEASURED FROM PT. TO ℄ BRG. PIER 3.
LT2: GIRDER LENGTH ALONG TANGENT MEASURED FROM PT. TO P.C. .
LC2: GIRDER LENGTH ALONG CURVE MEASURED FROM P.C. TO ℄ BRG. PIER 3.
RADIUS 1: MEASURED ALONG ℄ GIRDER WEB ALONG LC1.
RADIUS 2: MEASURED ALONG ℄ GIRDER WEB ALONG LC2.
- : DOES NOT APPLY.

HIGH STRENGTH BOLT NOTES

1. ALL BOLTED CONNECTIONS SHALL BE "SLIP CRITICAL" CONNECTIONS WITH CLASS 'B' SURFACE CONDITIONS UNLESS OTHERWISE NOTED.

2. ALL HIGH STRENGTH BOLTS SHALL BE 22 mm, ASTM A325 TYPE 1 BOLTS IN STANDARD HOLES UNLESS NOTED OTHERWISE. BOLTS, NUTS AND WASHERS THAT REQUIRE FIELD PAINTING SHALL BE MECHANICALLY GALVANIZED IN ACCORDANCE WITH ASTM B695, CLASS 50.

STRUCTURAL STEEL NOTES

1. STRUCTURAL STEEL (LOW ALLOY) SHALL CONFORM TO AASHTO M270, GRADE 345WT2 & TO GRADE 485WT2 AS SHOWN IN "GIRDER SCHEDULE" SHEETS.

2. WELDING DETAILS, PROCEDURES AND TESTING METHODS SHALL CONFORM TO THE ANSI/AASTHO/AWS D1.5 2005 BRIDGE WELDING CODE, UNLESS OTHERWISE NOTED ON THE PLANS.

3. BOLTED FIELD SPLICES, OTHER THAN THOSE INDICATED ON THE PLANS, WILL NOT BE ALLOWED EXCEPT WITH THE WRITTEN PERMISSION OF THE ENGINEER PRIOR TO THE SUBMISSION OF SHOP PLANS. IF ALLOWED, THESE SPLICES SHALL BE DESIGNED BY THE CONTRACTOR AND APPROVED BY THE ENGINEER. THE COST OF THESE SPLICES, INCLUDING THE COST OF DESIGN, SHALL BE AT NO EXTRA EXPENSE TO THE STATE. WELDED FIELD SPLICES WILL NOT BE ALLOWED.

4. ALL WELDED GIRDERS SHALL BE FABRICATED TO THE REQUIRED HORIZONTAL CURVATURE BY HEAT CURVING OR CUTTING THE FLANGES FROM LARGER SIZE PLATES. WHERE CURVATURE IS PROVIDED BY CUTTING FLANGES, THE CONTRACTOR SHALL INDICATE ON HIS SHOP DRAWINGS THE LOCATION OF ANY ADDITIONAL SPLICES REQUIRED.

5. ALL WEB TO FLANGE, WEB TO BEARING STIFFENER AND BEARING STIFFENER TO FLANGE FILLET WELDS SHALL BE INSPECTED IN THEIR ENTIRETY BY THE MAGNETIC PARTICLE METHOD. IF HEAT CURVING IS USED TO OBTAIN THE REQUIRED HORIZONTAL CURVATURE, THE PREVIOUSLY MENTIONED LOCATIONS SHALL BE INSPECTED BY THE MAGNETIC PARTICLE METHOD AFTER HEAT CURVING.

6. MULTIPLE PASS WELDS, INSPECTED BY THE MAGNETIC PARTICLE METHOD SHALL HAVE EACH PASS OR LAYER INSPECTED AND ACCEPTED BEFORE PROCEEDING TO THE NEXT PASS OR LAYER, AS DETERMINED BY THE ENGINEER.

7. SHOP WEB SPLICES SHALL BE LOCATED WITHIN THE MIDDLE THIRD OF THE SPAN.

8. SHOP FLANGE SPLICES SHALL BE LOCATED A MINIMUM OF 150 MM FROM WEB SPLICES.

9. FLANGE OR WEB SPLICES SHALL BE LOCATED A MINIMUM OF 150 MM FROM STIFFENERS AND CONNECTION PLATES.

10. BEARING STIFFENERS, INTERMEDIATE STIFFENERS AND THE ENDS OF GIRDERS SHALL BE VERTICAL AFTER THE APPLICATION OF FULL DEAD LOADS.

11. THE STRUCTURAL STEEL FABRICATORS SHALL BE CERTIFIED UNDER THE AISC QUALITY CONTROL PROGRAM AS NOTED BELOW:
    CATEGORY SBrF - SIMPLE STEEL BRIDGE STRUCTURES: TYPICAL WORK INCLUDES: HIGHWAY SIGN STRUCTURES, INSPECTION PLATFORMS, BRIDGE COMPONENTS SUCH AS CROSS FRAMES AND UN-SPLICED ROLLED BEAM BRIDGES.

    CATEGORY MBrF - MAJOR STEEL BRIDGES: ALL BRIDGE STRUCTURES OTHER THAN UN-SPLICED ROLLED BEAM BRIDGES.

12. THE CONTRACTOR SHALL TAKE THE PROPER PRECAUTIONS TO INSURE THE STABILITY OF ALL STRUCTURAL ELEMENTS UNTIL THE TOTAL STRUCTURE IS IN BEING.

FRAMING PLAN NOTES

1. DIMENSIONS AT ENDS OF GIRDERS ARE MEASURED ALONG THE ℄ OF BEARING.
2. ALL LENGTH DIMENSIONS ARE HORIZONTAL.
3. FOR GENERAL NOTES, SEE DWG. "GENERAL NOTES & QUANTITIES.
4. FOR WORKING POINT COORDINATES, SEE DWG. "LAYOUT PLAN & COORDINATES".
5. FOR GIRDER SCHEDULE, SEE DWGS. "GIRDER SCHEDULES".
6. ALL INTERMEDIATE CROSS FRAMES ARE TYPE CF1 UNLESS SHOWN OR NOTED OTHERWISE. FOR DETAILS, SEE "STRUCTURAL STEEL DETAILS - CROSS FRAME DETAILS".
7. ALL END CROSS FRAMES ARE TYPE CF3 UNLESS NOTED OTHERWISE. FOR DETAILS, SEE "STRUCTURAL STEEL DETAILS - CROSS FRAME DETAILS."
8. ALL PIER CROSS FRAMES ARE TYPE CF4 UNLESS NOTED OTHERWISE. FOR DETAILS, SEE "STRUCTURAL STEEL DETAILS - CROSS FRAME DETAILS".
9. UTILITY SUPPORTS SHALL BE EQUALLY SPACED BETWEEN CROSS FRAMES UNLESS NOTED OTHERWISE. FOR DETAILS, SEE "STRUCTURAL STEEL DETAILS - UTILITY SUPPORT DETAILS".
10. FOR SUPPORTS FOR BRIDGE DRAINAGE PIPES, SEE "STRUCTURAL STEEL DETAILS - UTILITY SUPPORT DETAILS" & "BRIDGE DRAINAGE" SHEETS.
11. FOR BOLTED FIELD SPLICE DETAILS, SEE "STRUCTURAL STEEL DETAILS - BOLTED FIELD SPLICES".
12. FOR DETAILS 'A', 'B' & 'C', SEE "STRUCTURAL STEEL DETAILS - STIFFENER DETAILS".
13. FOR INTERMEDIATE STIFFENER DETAILS, SEE "STRUCTURAL STEEL DETAILS - STIFFENER DETAILS".

REV.	DATE	DESCRIPTION	SHEET. NO
		REVISIONS	

SCALE AS NOTED

DESIGNER: T. YOUNG
DRAFTER: G. LEE
CHECKED BY: T. LALIBERTE
DATE CHECKED: 11-12-12

STATE OF CONNECTICUT
DEPARTMENT OF TRANSPORTATION

ENGINEER: PB AMERICAS, INC.
APPROVED BY:
DATE:

PROJECT TITLE: RECONSTRUCTION OF I-95 OVER WEST RIVER (BRIDGE NO. 00163)
CADD
PLOTTED 11/13/2012

TOWN: NEW HAVEN / WEST HAVEN
DRAWING TITLE: FRAMING PLAN - ABUTMENT 1 TO PIER 3

PROJECT NO.: 92-522
DRAWING NO.: STR-66
SHEET NO.:

11:49:08 AM
11/13/2012
T:\WBCADD\Projects\PB\87135\FD\Structures\Contract_Sheets\Br00163\dr-66-092522-00163.dgn

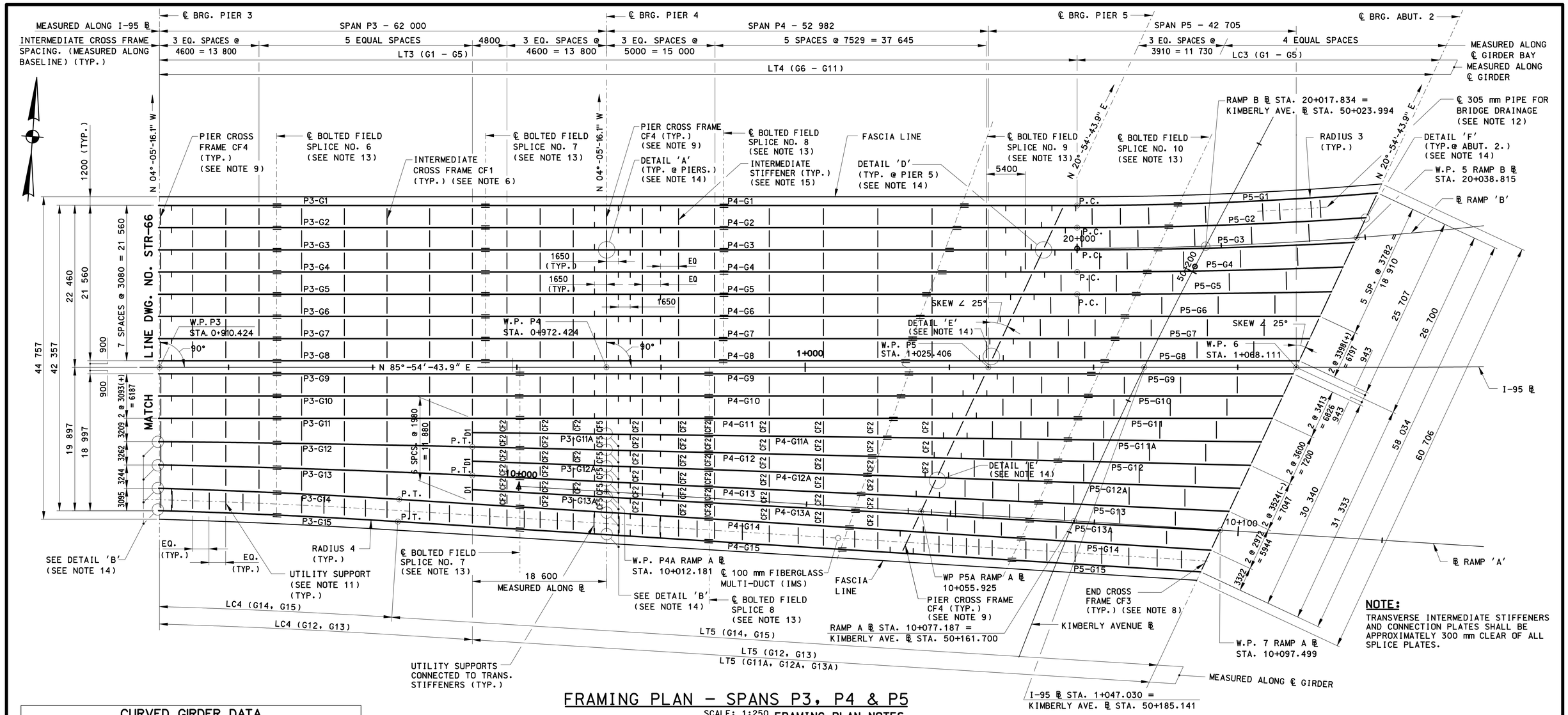

NOTE:
TRANSVERSE INTERMEDIATE STIFFENERS AND CONNECTION PLATES SHALL BE APPROXIMATELY 300 mm CLEAR OF ALL SPLICE PLATES.

FRAMING PLAN - SPANS P3, P4 & P5

SCALE: 1:250

CURVED GIRDER DATA

MARK	LT3	RADIUS 3	LC3	LT4	RADIUS 4	LC4	LT5
G1	127 298	500 500	41 721	–	–	–	–
G2	127 298	578 000	40 106	–	–	–	–
G3	127 298	711 000	38 495	–	–	–	–
G4	127 298	980 000	36 886	–	–	–	–
G5	127 298	1 800 000	35 282	–	–	–	–
G6	–	–	–	160 979	–	–	–
G7	–	–	–	159 543	–	–	–
G8	–	–	–	158 107	–	–	–
G9	–	–	–	157 267	–	–	–
G10	–	–	–	155 825	–	–	–
G11	–	–	–	154 382	–	–	–
G11A	–	–	–	–	–	–	109 469
G12	–	–	–	–	3 070 916	43 406	107 970
G12A	–	–	–	–	–	–	106 517
G13	–	–	–	–	1 535 418	43 426	105 080
G13A	–	–	–	–	–	–	103 862
G14	–	–	–	–	1 004 293	33 294	112 814
G15	–	–	–	–	1 001 200	33 100	111 601

LT3: GIRDER LENGTH ALONG TANGENT MEASURED FROM ℄ BRG. PIER 3 TO P.C.
RADIUS 3: MEASURED ALONG ℄ GIRDER WEB ALONG LC3.
LC3: GIRDER LENGTH ALONG CURVE MEASURED FROM P.C. TO ℄ BRG. ABUT. NO. 2.
LT4: GIRDER LENGTH ALONG TANGENT MEASURED FROM ℄ BRG. PIER 3 TO ℄ BRG. ABUT. NO. 2
RADIUS 4: MEASURED ALONG ℄ GIRDER WEB ALONG LC4.
LC4: GIRDER LENGTH ALONG CURVE MEASURED FROM ℄ BRG. PIER 3 TO P.T.
LT5: GIRDER LENGTH ALONG TANGENT MEASURED FROM P.T. TO ℄ BRG. ABUT. 2.
– : DOES NOT APPLY.

FRAMING PLAN NOTES

1. DIMENSIONS AT ENDS OF GIRDERS ARE MEASURED ALONG THE ℄ OF BEARING.
2. ALL LENGTH DIMENSIONS ARE HORIZONTAL.
3. FOR GENERAL NOTES, SEE DWG. "GENERAL NOTES & QUANTITIES".
4. FOR WORKING POINT COORDINATES, SEE DWGS. "LAYOUT PLAN & COORDINATES".
5. FOR GIRDER SCHEDULE, SEE DWGS. "GIRDER SCHEDULES".
6. ALL INTERMEDIATE CROSS FRAMES ARE TYPE CF1 UNLESS SHOWN OR NOTED OTHERWISE. FOR DETAILS, SEE "STRUCTURAL STEEL DETAILS - CROSS FRAME DETAILS".
7. FOR DETAILS OF INTERMEDIATE CROSSFRAME TYPE CF2, AS NOTED ON THE FRAMING PLAN BETWEEN GIRDERS G11 THROUGH G14, SEE "STRUCTURAL STEEL DETAILS - CROSS FRAME DETAILS".
8. ALL END CROSS FRAMES ARE TYPE CF3 UNLESS NOTED OTHERWISE. FOR DETAILS, SEE "STRUCTURAL STEEL DETAILS - CROSS FRAME DETAILS".
9. ALL PIER CROSS FRAMES ARE TYPE CF4 UNLESS NOTED OTHERWISE. FOR DETAILS, SEE "STRUCTURAL STEEL DETAILS - CROSS FRAME DETAILS".
10. FOR DETAILS OF PIER CROSS FRAME TYPE CF5, AS NOTED ON THE FRAMING PLAN BETWEEN GIRDERS G-11 THROUGH G14, SEE "STRUCTURAL STEEL DETAILS - CROSS FRAME DETAILS".
11. UTILITY SUPPORTS SHALL BE EQUALLY SPACED BETWEEN CROSS FRAMES UNLESS NOTED OTHERWISE. FOR DETAILS, SEE "STRUCTURAL STEEL DETAILS - UTILITY SUPPORT DETAILS".
12. FOR SUPPORTS FOR BRIDGE DRAINAGE PIPES, SEE "STRUCTURAL STEEL DETAILS - UTILITY SUPPORT DETAILS" & "BRIDGE DRAINAGE" SHEETS.
13. FOR BOLTED FIELD SPLICE DETAILS, SEE "STRUCTURAL STEEL DETAILS - BOLTED FIELD SPLICES".
14. FOR DETAILS 'A', 'B', 'C', 'D', 'E' & 'F', SEE "STRUCTURAL STEEL DETAILS - STIFFENER DETAILS".
15. FOR DETAILS OF PARTIAL LENGTH GIRDER END DIAPHRAGM D1, AS SHOWN ON FRAMING PLAN, SEE "STRUCTURAL STEEL DETAILS - DIAPHRAGM & MISC. DETAILS".
16. INTERMEDIATE STIFFENERS ARE EQUALLY SPACED BETWEEN ADJACENT CROSS FRAMES, UNLESS NOTED OTHERWISE. FOR INTERMEDIATE STIFFENER DETAILS, SEE "STRUCTURAL STEEL DETAILS - STIFFENER DETAILS".
17. FOR STRUCTURAL STEEL NOTES AND HIGH STRENGTH BOLT NOTES, SEE "FRAMING PLAN - ABUTMENT 1 TO PIER 3".

REV.	DATE	DESCRIPTION	SHEET. NO
		REVISIONS	

SCALE AS NOTED

DESIGNER: T. YOUNG
DRAFTER: G. LEE
CHECKED BY: T. LALIBERTE
DATE CHECKED: 11-12-12

STATE OF CONNECTICUT
DEPARTMENT OF TRANSPORTATION

ENGINEER: PB AMERICAS, INC.
APPROVED BY:
DATE:

PROJECT TITLE: RECONSTRUCTION OF I-95 OVER WEST RIVER (BRIDGE NO. 00163)
CADD
PLOTTED 11/13/2012

TOWN: NEW HAVEN / WEST HAVEN
DRAWING TITLE: FRAMING PLAN - PIER 3 TO ABUTMENT 2

PROJECT NO.: 92-522
DRAWING NO.: STR-67
SHEET NO.:

11:50:16 AM
11/13/2012
T:\V8CADD\Projects\PB8735\FD\Structures\Contract_Sheets\Br00163\str-67-092522-00163.dgn

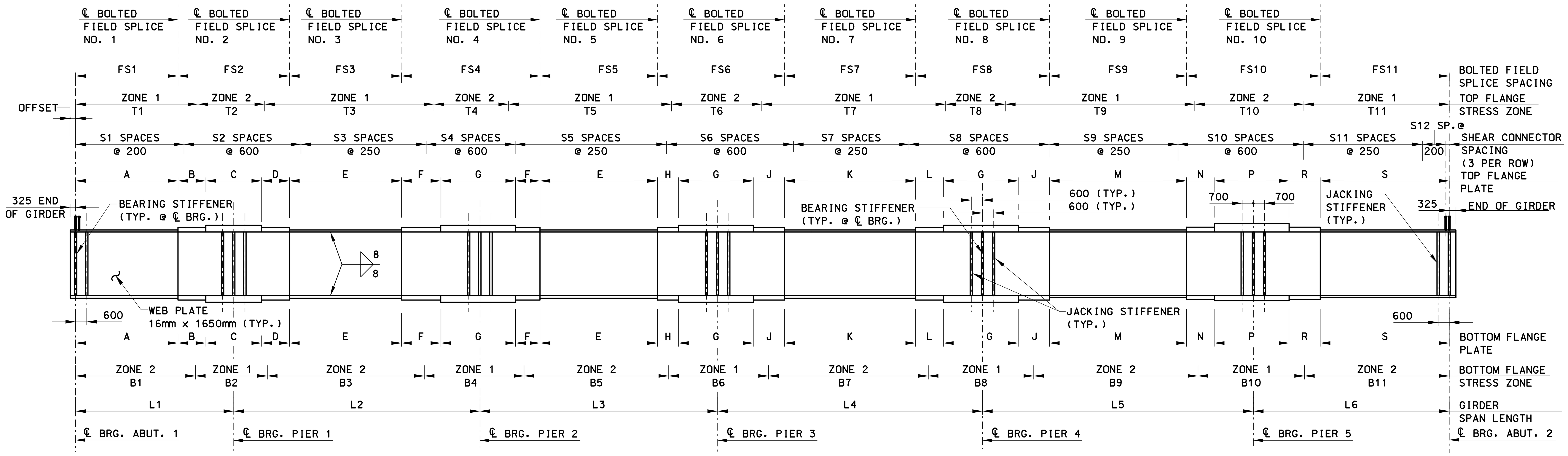

STRESS ZONE

ZONE 1 = COMPRESSION
ZONE 2 = TENSION OR REVERSAL

GIRDER ELEVATION

NOT TO SCALE

NOTES

1. ALL LENGTH DIMENSIONS ARE HORIZONTAL AND MEASURED ALONG THE ℄ OF THE GIRDER WEB.
2. (HPS) DENOTES STRUCTURAL STEEL CONFORMING TO AASHTO M270, GRADE HPS 485 WT2. ALL OTHER STRUCTURAL STEEL SHALL CONFORM TO AASHTO M270, GRADE 345T2.
3. NO ATTACHMENT SHALL BE FILLET WELDED, PLUG WELDED OR TACK WELDED TO THE TENSION OR REVERSAL FLANGES (ZONE 2).
4. FOR STRUCTURAL STEEL NOTES, SEE "FRAMING PLAN - ABUTMENT 1 TO PIER 3".
5. FOR BEARING STIFFENER, JACKING STIFFENER, TRANSVERSE INTERMEDIATE STIFFENER AND CONNECTION PLATE DETAILS, SEE "STRUCTURAL STEEL DETAILS - STIFFENER DETAILS".
6. FOR SHEAR CONNECTOR AND FLANGE TRANSITION DETAILS, SEE "GIRDER SCHEDULE - G11A THROUGH G13A".
7. FOR GIRDER CURVATURE DATA, SEE DWGS. "FRAMING PLANS".
8. TRANSVERSE INTERMEDIATE STIFFENERS & CONNECTION PLATES OMITTED FOR CLARITY.
9. FOR BOLTED FIELD SPLICE DETAILS, SEE "STRUCTURAL STEEL DETAILS - BOLTED FIELD SPLICES".

GIRDER SCHEDULE

MARK	FLANGE PLATE	A		B		C		D		E		F (HPS)		G (HPS)		H (HPS)		J (HPS)		K		L (HPS)		M		N (HPS)		P (HPS)		R (HPS)		S	
		SIZE	LENGTH	SIZE	LENGTH	SIZE	LENGTH	SIZE	LENGTH	SIZE	LENGTH	SIZE	LENGTH	SIZE	LENGTH	SIZE	LENGTH	SIZE	LENGTH	SIZE	LENGTH	SIZE	LENGTH	SIZE	LENGTH	SIZE	LENGTH	SIZE	LENGTH	SIZE	LENGTH	SIZE	LENGTH
G1	TOP	25x450	22 750	35x600	8000	55x600	8000	35x600	7841	25x450	30 500	40x600	10 750	60x600	11 000	40x600	9750	40x600	10 750	25x450	29 000	40x600	11 250	25x450	33 407	40X600	9700	75X600	11 000	40x600	8892	25x450	27 771
	BOTTOM	35x450	22 750	35x600	8000	55x600	8000	35x600	7841	45x450	30 500	40x600	10 750	60x600	11 000	40x600	9750	40x600	10 750	45x450	29 000	40x600	11 250	45x450	33 407	40X600	9700	75X600	11 000	40x600	8892	40x450	27 771
G2	TOP	25x450	22 875	35x600	8070	55x600	8000	35x600	7874	25x450	30 500	40x600	10 750	60x600	11 000	40x600	9750	40x600	10 750	25x450	29 000	40x600	11 250	25x450	32 385	40X600	9284	75X600	11 000	40x600	9121	25x450	27 365
	BOTTOM	30x450	22 875	35x600	8070	55x600	8000	35x600	7874	40x450	30 500	40x600	10 750	60x600	11 000	40x600	9750	40x600	10 750	40x450	29 000	40x600	11 250	40x450	32 385	40X600	9284	75X600	11 000	40x600	9121	30x450	27 365
G3	TOP	25x450	23 000	35x600	8141	55x600	8000	35x600	7906	25x450	30 500	40x600	10 750	60x600	11 000	40x600	9750	40x600	10 750	25x450	29 000	40x600	11 250	25x450	31 362	40X600	8870	75X600	11 000	40x600	9053	25x450	27 258
	BOTTOM	30x450	23 000	35x600	8141	55x600	8000	35x600	7906	40x450	30 500	40x600	10 750	60x600	11 000	40x600	9750	40x600	10 750	40x450	29 000	40x600	11 250	40x450	31 362	40X600	8870	75X600	11 000	40x600	9053	30x450	27 258
G4	TOP	25x450	23 125	35x600	8211	55x600	8000	35x600	7939	25x450	30 500	40x600	10 750	60x600	11 000	40x600	9750	40x600	10 750	25x450	29 000	40x600	11 250	25x450	30 340	40X600	8456	75X600	11 000	40x600	8985	25x450	27 153
	BOTTOM	30x450	23 125	35x600	8211	55x600	8000	35x600	7939	40x450	30 500	40x600	10 750	60x600	11 000	40x600	9750	40x600	10 750	40x450	29 000	40x600	11 250	40x450	30 340	40X600	8456	75X600	11 000	40x600	8985	30x450	27 153
G5	TOP	25x450	23 250	35x600	8282	55x600	8000	35x600	7971	25x450	30 500	40x600	10 750	60x600	11 000	40x600	9750	40x600	10 750	25x450	29 000	40x600	11 250	25x450	28 148	35x600	8042	65X600	11 000	35x600	10 090	25x450	27 050
	BOTTOM	30x450	23 250	35x600	8282	55x600	8000	35x600	7971	40x450	30 500	40x600	10 750	60x600	11 000	40x600	9750	40x600	10 750	40x450	29 000	40x600	11 250	40x450	28 148	35x600	8042	65X600	11 000	35x600	10 090	30x450	27 050
G6	TOP	25x450	23 375	35x600	8352	55x600	8000	35x600	8004	25x450	30 500	40x600	10 750	60x600	11 000	40x600	9750	40x600	10 750	25x450	29 000	40x600	11 250	25x450	27 296	35x600	7629	65X600	11 000	35x600	9852	25x450	26 950
	BOTTOM	30x450	23 375	35x600	8352	55x600	8000	35x600	8004	40x450	30 500	40x600	10 750	60x600	11 000	40x600	9750	40x600	10 750	40x450	29 000	40x600	11 250	40x450	27 296	35x600	7629	65X600	11 000	35x600	9852	30x450	26 950
G7	TOP	25x450	23 500	35x600	8423	55x600	8000	35x600	8036	25x450	30 500	40x600	10 750	60x600	11 000	40x600	9750	40x600	10 750	25x450	29 000	40x600	11 250	25x450	26 274	35X600	7215	65X600	11 000	35x600	9828	25x450	26 976
	BOTTOM	30x450	23 500	35x600	8423	55x600	8000	35x600	8036	40x450	30 500	40x600	10 750	60x600	11 000	40x600	9750	40x600	10 750	40x450	29 000	40x600	11 250	40x450	26 274	35X600	7215	65X600	11 000	35x600	9828	30x450	26 976
G8	TOP	25x450	23 625	35x600	8493	55x600	8000	35x600	8066	25x450	30 500	40x600	10 750	60x600	11 000	40x600	9750	40x600	10 750	25x450	29 000	40x600	11 250	25x450	25 252	35X600	6799	65X600	11 000	35x600	9828	25x450	26 978
	BOTTOM	30x450	23 625	35x600	8493	55x600	8000	35x600	8066	40x450	30 500	40x600	10 750	60x600	11 000	40x600	9750	40x600	10 750	40x450	29 000	40x600	11 250	40x450	25 252	35X600	6799	65X600	11 000	35x600	9828	30x450	26 978

TOP FLANGE STRESS ZONES

MARK	T1	T2	T3	T4	T5	T6	T7	T8	T9	T10	T11
G1	20 610	26 930	29 340	32 010	30 990	31 350	29 900	32 140	32 260	32 410	26 420
G2	21 090	27 600	28 630	31 720	31 040	31 270	30 340	31 500	31 220	31 960	26 610
G3	21 300	27 630	28 650	31 690	30 900	31 410	30 640	31 100	30 060	30 610	27 600
G4	21 510	27 640	28 670	31 670	30 760	31 540	30 860	30 810	28 830	30 110	27 810
G5	21 720	27 660	28 680	31 660	30 680	31 610	31 000	31 520	27 070	29 130	28 100
G6	21 930	27 680	28 690	31 650	30 680	31 610	31 190	31 210	25 820	28 830	28 170
G7	22 060	27 800	28 670	31 670	30 480	31 810	31 350	30 940	23 320	28 810	29 350
G8	21 840	28 530	28 040	32 410	28 320	34 000	30 830	31 840	31 050	28 810	29 370

BOLTED FIELD SPLICE SPACING

MARK	FS1	FS2	FS3	FS4	FS5	FS6	FS7	FS8	FS9	FS10	FS11
G1	22 750	23 841	30 500	32 500	30 500	31 500	29 000	33 000	33 407	29 592	27 771
G2	22 875	23 944	30 500	32 500	30 500	31 500	29 000	33 000	32 385	29 405	27 365
G3	23 000	24 047	30 500	32 500	30 500	31 500	29 000	33 000	31 362	28 923	27 258
G4	23 125	24 150	30 500	32 500	30 500	31 500	29 000	33 000	30 340	28 441	27 153
G5	23 250	24 253	30 500	32 500	30 500	31 500	29 000	33 000	28 148	29 132	27 050
G6	23 375	24 356	30 500	32 500	30 500	31 500	29 000	33 000	27 296	28 481	26 950
G7	23 500	24 459	30 500	32 500	30 500	31 500	29 000	33 000	26 274	28 043	26 976
G8	23 625	24 559	30 500	32 500	30 500	31 500	29 000	33 000	25 252	27 627	26 978

BEARING AND JACKING STIFFENERS

LOCATION	GIRDERS	BEARING STIFFENER ℄ SIZE	JACKING STIFFENER ℄ SIZE
℄ BEARING ABUT. 1	ALL	2 - 25mm X 200mm	2 - 25mm X 200mm
℄ BEARING PIERS 1,2,3,4 & 5	ALL	2 - 35mm X 275mm	4 - 35mm X 275mm
℄ BEARING ABUT. 2	ALL	2 - 25mm X 200mm	2 - 25mm X 200mm

BOTTOM FLANGE STRESS ZONES

MARK	B1	B2	B3	B4	B5	B6	B7	B8	B9	B10	B11
G1	27 180	17 040	38 770	20 860	41 250	20 640	40 730	21 350	42 010	21 280	33 250
G2	26 560	18 380	37 310	22 880	38 960	23 060	38 620	23 240	38 890	22 760	32 320
G3	26 730	18 440	37 340	22 840	38 860	23 200	38 870	22 850	37 770	22 160	32 530
G4	26 900	18 500	37 360	22 790	38 770	23 340	39 100	22 470	36 640	21 630	32 710
G5	27 080	18 540	37 390	22 760	38 710	23 430	39 260	22 210	35 790	20 640	33 020
G6	27 240	18 630	37 380	22 740	38 620	23 560	39 490	21 860	34 610	20 130	33 200
G7	27 420	18 670	37 430	22 680	38 540	23 680	39 730	21 510	33 340	19 810	33 450
G8	27 970	18 210	37 990	21 910	39 170	23 020	40 660	20 500	32 790	18 670	34 150

WELDED STUD SHEAR CONNECTOR SPACING

MARK	S1	S2	S3	S4	S5	S6	S7	S8	S9	S10	S11	S12
G1	124	32	139	44	151	41	149	42	152	43	96	33
G2	125	32	139	50	124	51	126	51	138	42	96	33
G3	125	37	128	50	124	51	126	51	133	41	96	34
G4	126	37	128	50	124	51	126	50	131	41	95	33
G5	118	40	128	45	136	51	138	44	129	40	96	32
G6	118	40	129	50	124	51	138	44	124	40	94	33
G7	119	40	129	45	124	56	138	43	122	36	111	22
G8	129	33	139	44	151	41	149	43	118	35	129	---

SPAN LENGTH

MARK	℄ TO ℄ BEARING					
	L1	L2	L3	L4	L5	L6
G1	35 575	57 766	62 000	62 000	63 456	43 564
G2	35 770	57 798	62 000	62 000	62 020	43 386
G3	35 966	57 831	62 000	62 000	60 583	43 210
G4	36 161	57 862	62 000	62 000	59 147	43 037
G5	36 357	57 894	62 000	62 000	57 711	42 869
G6	36 552	57 926	62 000	62 000	56 275	42 705
G7	36 748	57 959	62 000	62 000	54 839	42 705
G8	36 943	57 991	62 000	62 000	53 402	42 705

11:51:21 AM
11/13/2012
T:\V8CADD\Projects\PBI8735\FD\Structures\Contract_Sheets\Br00163\str-68-092522-00163.dgn

REV.	DATE	DESCRIPTION	SHEET. NO

REVISIONS

SCALE AS NOTED

DESIGNER: T. YOUNG
DRAFTER: T. YOUNG /G. LEE
CHECKED BY: T. LALIBERTE
DATE CHECKED: 11-12-12

STATE OF CONNECTICUT
DEPARTMENT OF TRANSPORTATION

ENGINEER: PB AMERICAS, INC.
APPROVED BY: DATE:

PROJECT TITLE: RECONSTRUCTION OF I-95 OVER WEST RIVER (BRIDGE NO. 00163)
CADD
PLOTTED 11/13/2012

TOWN: NEW HAVEN / WEST HAVEN
DRAWING TITLE: GIRDER SCHEDULE - G1 THROUGH G8

PROJECT NO.: 92-522
DRAWING NO.: STR-68
SHEET NO.:

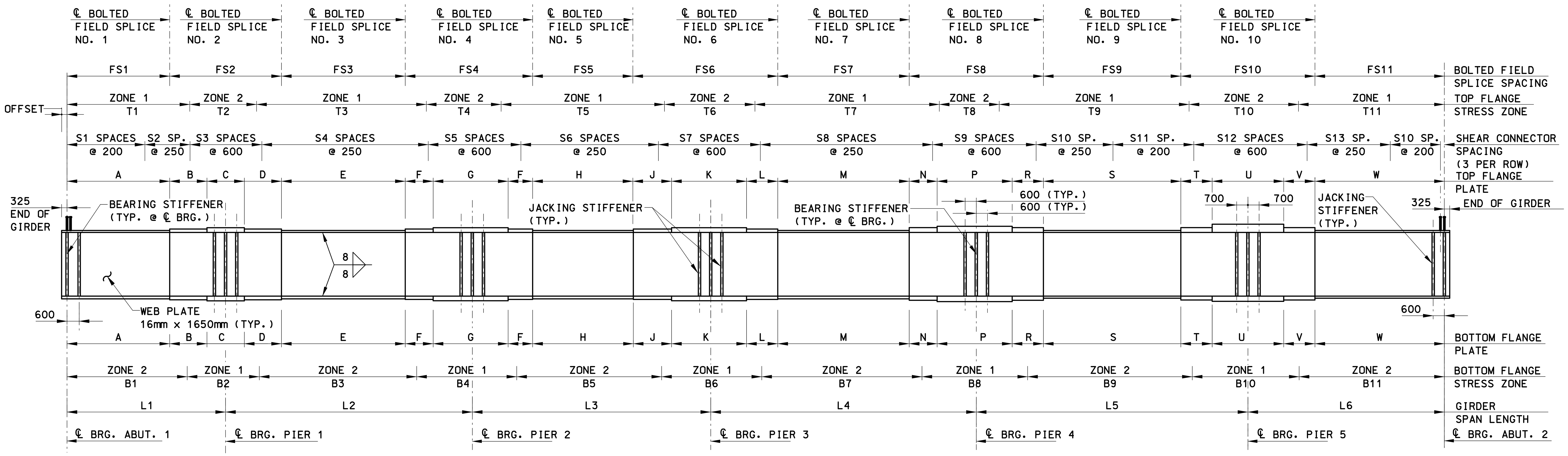

STRESS ZONE

ZONE 1 = COMPRESSION
ZONE 2 = TENSION OR REVERSAL

GIRDER ELEVATION

NOT TO SCALE

NOTES

1. ALL LENGTH DIMENSIONS ARE HORIZONTAL AND MEASURED ALONG THE ℄ OF THE GIRDER WEB.
2. (HPS) DENOTES STRUCTURAL STEEL CONFORMING TO AASHTO M270, GRADE HPS 485 WT2. ALL OTHER STRUCTURAL STEEL SHALL CONFORM TO AASHTO M270, GRADE 345T2.
3. NO ATTACHMENT SHALL BE FILLET WELDED, PLUG WELDED OR TACK WELDED TO THE TENSION OR REVERSAL FLANGES (ZONE 2).
4. TRANSVERSE INTERMEDIATE STIFFENERS & CONNECTION PLATES OMITTED FOR CLARITY.
5. FOR ADDITIONAL NOTES, SEE "GIRDER SCHEDULE – G1 THROUGH G9".

GIRDER SCHEDULE

MARK	FLANGE PLATE	A SIZE	A LENGTH	B SIZE	B LENGTH	C SIZE	C LENGTH	D SIZE	D LENGTH	E SIZE	E LENGTH	F (HPS) SIZE	F (HPS) LENGTH
G9	TOP	25x450	23 698	35x600	9534	60x600	8000	35x600	7084	25x450	30 500	40x600	10 750
	BOTTOM	30x450	23 698	35x600	9534	60x600	8000	35x600	7084	40x450	30 500	40x600	10 750
G10	TOP	25x450	23 824	35x600	9605	60x600	8000	35x600	7116	25x450	30 500	40x600	10 750
	BOTTOM	30x450	23 824	35x600	9605	60x600	8000	35x600	7116	40x450	30 500	40x600	10 750
G11	TOP	25x450	23 949	35x600	9675	60x600	8000	35x600	7149	25x450	30 500	40x600	10 750
	BOTTOM	30x450	23 949	35x600	9675	60x600	8000	35x600	7149	40x450	30 500	40x600	10 750
G12	TOP	25x450	24 075	35x600	9750	60x600	8000	35x600	7178	25x450	30 500	40x600	10 750
	BOTTOM	30x450	24 075	35x600	9750	60x600	8000	35x600	7178	40x450	30 500	40x600	10 750
G13	TOP	25x450	24 200	35x600	9825	60x600	8000	35x600	7206	25x450	30 500	40x600	10 750
	BOTTOM	30x450	24 200	35x600	9825	60x600	8000	35x600	7206	40x450	30 500	40x600	10 750
G14	TOP	25x450	24 326	35x600	9800	60x600	8000	35x600	7334	25x450	30 500	40x600	10 750
	BOTTOM	30x450	24 326	35x600	9800	60x600	8000	35x600	7334	40x450	30 500	40x600	10 750
G15	TOP	25x450	24 451	45x600	9960	60x600	8000	45x600	7278	25x450	30 500	40x600	10 750
	BOTTOM	35x450	24 451	45x600	9960	60x600	8000	45x600	7278	40x450	30 500	40x600	10 750

MARK	FLANGE PLATE	G (HPS) SIZE	G (HPS) LENGTH	H SIZE	H LENGTH	J (HPS) SIZE	J (HPS) LENGTH	K (HPS) SIZE	K (HPS) LENGTH	L (HPS) SIZE	L (HPS) LENGTH	M SIZE	M LENGTH	N (HPS) SIZE	N (HPS) LENGTH
G9	TOP	60x600	11 000	25x450	30 500	40x600	9750	60x600	11 000	40x600	10 750	25x450	33 750	40x600	8500
	BOTTOM	60x600	11 000	40x450	30 500	40x600	9750	60x600	11 000	40x600	10 750	40x450	33 750	40x600	8500
G10	TOP	60x600	11 000	25x450	30 500	40x600	9750	60x600	11 000	40x600	10 750	25x450	33 750	40x600	8000
	BOTTOM	60x600	11 000	40x450	30 500	40x600	9750	60x600	11 000	40x600	10 750	40x450	33 750	40x600	8000
G11	TOP	60x600	11 000	25x450	30 500	40x600	9750	60x600	11 000	40x600	10 750	25x450	33 750	40x600	8000
	BOTTOM	60x600	11 000	40x450	30 500	40x600	9750	60x600	11 000	40x600	10 750	40x450	33 750	40x600	8000
G12	TOP	60x600	11 000	25x450	30 500	40x600	9750	60x600	11 000	40x600	10 751	25x450	33 757	40x600	8000
	BOTTOM	60x600	11 000	40x450	30 500	40x600	9750	60x600	11 000	40x600	10 751	40x450	33 757	40x600	8000
G13	TOP	60x600	11 000	25x450	30 500	40x600	9750	60x600	11 000	40x600	10 755	25x450	33 776	40x600	8000
	BOTTOM	60x600	11 000	40x450	30 500	40x600	9750	60x600	11 000	40x600	10 755	40x450	33 776	40x600	8000
G14	TOP	60x600	11 000	25x450	30 500	40x600	9750	60x600	11 000	40x600	10 765	25x450	33 808	40x600	8000
	BOTTOM	60x600	11 000	40x450	30 500	40x600	9750	60x600	11 000	40x600	10 765	40x450	33 808	40x600	8000
G15	TOP	60x600	11 000	25x450	30 500	40x600	9750	60x600	11 000	40x600	10 765	25x450	33 809	40x600	8523
	BOTTOM	60x600	11 000	45x450	30 500	40x600	9750	60x600	11 000	40x600	10 765	45x450	33 809	40x600	8523

MARK	FLANGE PLATE	P (HPS) SIZE	P (HPS) LENGTH	R (HPS) SIZE	R (HPS) LENGTH	S SIZE	S LENGTH	T SIZE	T LENGTH	U SIZE	U LENGTH	V SIZE	V LENGTH	W SIZE	W LENGTH
G9	TOP	50x600	7000	40x600	10 750	25x450	27 655	35x600	7000	55x600	8000	35x600	10 357	25x450	28 005
	BOTTOM	50x600	7000	40x600	10 750	35x450	27 655	35x600	7000	55x600	8000	35x600	10 357	30x450	28 005
G10	TOP	50x600	8000	40x600	10 250	25x450	26 628	35x600	6000	55x600	8000	35x600	11 973	25x450	26 974
	BOTTOM	50x600	8000	40x600	10 250	35x450	26 628	35x600	6000	55x600	8000	35x600	11 973	30x450	26 974
G11	TOP	50x600	8000	40x600	10 250	25x450	25 602	35x600	6000	45x600	8000	35x600	11 558	25x450	26 974
	BOTTOM	50x600	8000	40x600	10 250	35x450	25 602	35x600	6000	45x600	8000	35x600	11 558	30x450	26 974
G12	TOP	50x600	8000	40x600	10 258	25x450	22 625	35x600	6000	45x600	8000	35x600	11 770	25x450	26 714
	BOTTOM	50x600	8000	40x600	10 258	35x450	22 625	35x600	6000	45x600	8000	35x600	11 770	30x450	26 714
G13	TOP	50x600	8000	40x600	10 281	25x450	21 167	35x600	6000	45x600	8000	35x600	10 589	25x450	26 442
	BOTTOM	50x600	8000	40x600	10 281	35x450	21 167	35x600	6000	45x600	8000	35x600	10 589	30x450	26 442
G14	TOP	50x600	8000	40x600	10 302	25x450	19 608	35x600	6000	45x600	8000	35x600	9766	25x450	26 362
	BOTTOM	50x600	8000	40x600	10 302	35x450	19 608	35x600	6000	45x600	8000	35x600	9766	30x450	26 362
G15	TOP	50x600	7000	40x600	10 779	25x450	18 597	35x600	7000	45x600	8000	35x600	8498	25x450	26 234
	BOTTOM	50x600	7000	40x600	10 779	45x450	18 597	35x600	7000	45x600	8000	35x600	8498	40x450	26 234

TOP FLANGE STRESS ZONES

MARK	T1	T2	T3	T4	T5	T6	T7	T8	T9	T10	T11
G9	22 070	27 107	29 030	33 009	29 230	32 900	31 300	31 250	22 120	26 222	30 095
G10	22 210	28 433	28 050	32 522	28 160	33 330	34 460	29 510	18 970	27 310	30 165
G11	22 230	28 660	28 160	32 364	27 730	33 660	35 310	33 200	10 890	27 877	31 825
G12	22 410	28 716	28 260	32 216	25 900	35 400	36 650	67 700	31 876	---	---
G13	22 600	28 752	28 360	32 128	25 710	35 532	37 130	64 516	31 759	---	---
G14	22 840	28 729	28 240	32 251	27 580	33 774	37 160	62 112	31 635	---	---
G15	24 240	25 455	31 430	30 743	28 630	33 834	34 430	61 396	32 952	---	---

BOLTED FIELD SPLICE SPACING

MARK	FS1	FS2	FS3	FS4	FS5	FS6	FS7	FS8	FS9	FS10	FS11
G9	23 698	24 619	30 500	32 500	30 500	31 500	33 750	26 250	27 655	25 357	28 005
G10	23 824	24 721	30 500	32 500	30 500	31 500	33 750	26 250	26 628	25 973	26 974
G11	23 949	24 825	30 500	32 500	30 500	31 500	33 750	26 250	25 602	25 558	26 974
G12	24 075	24 928	30 500	32 500	30 500	31 501	33 757	26 257	22 625	25 770	26 714
G13	24 200	25 031	30 500	32 500	30 500	31 506	33 778	26 280	21 167	24 584	26 442
G14	24 326	25 134	30 500	32 500	30 500	31 515	33 809	26 301	19 608	23 766	26 362
G15	24 451	25 237	30 500	32 500	30 500	31 515	33 814	26 301	18 597	23 498	26 229

BEARING AND JACKING STIFFENERS

LOCATION	GIRDERS	BEARING STIFFENER ℘ SIZE	JACKING STIFFENER ℘ SIZE
℄ BEARING ABUT. 1	ALL	2 – 25mm X 200mm	2 – 25mm X 200mm
℄ BEARING PIERS 1,2,3,4&5	ALL	2 – 35mm X 275mm	4 – 35mm X 275mm
℄ BEARING ABUT. 2	ALL	2 – 25mm X 200mm	2 – 25mm X 200mm

BOTTOM FLANGE STRESS ZONES

MARK	B1	B2	B3	B4	B5	B6	B7	B8	B9	B10	B11
G9	28 470	17 407	38 100	22 049	39 890	22 140	41 720	19 210	33 850	16 302	35 195
G10	27 770	18 653	37 510	22 832	37 930	23 370	42 900	19 060	31 130	17 410	34 555
G11	27 900	18 740	37 900	22 094	38 050	23 490	43 690	19 070	28 690	16 767	35 515
G12	28 010	18 886	37 980	21 926	37 910	23 600	44 050	19 080	26 010	15 810	35 866
G13	28 180	18 952	38 070	21 788	37 880	23 662	44 640	19 795	21 960	14 931	36 629
G14	28 340	19 009	37 910	22 071	37 760	23 834	44 450	19 423	20 280	15 059	36 185
G15	30 230	15 865	40 520	20 033	40 340	22 114	43 470	18 073	23 040	12 863	36 562

WELDED STUD SHEAR CONNECTOR SPACING

MARK	S1	S2	S3	S4	S5	S6	S7	S8	S9	S10	S11	S12	S13	S14
G9	74	44	38	127	45	149	41	149	42	54	66	39	113	21
G10	74	45	38	127	45	136	46	163	41	41	64	39	110	23
G11	28	74	41	117	49	138	46	163	40	50	50	35	119	22
G12	28	83	38	128	45	136	46	162	47	28	48	33	120	21
G13	28	83	38	129	44	138	46	175	10	---	---	88	110	32
G14	28	84	38	129	44	137	46	175	10	---	---	85	109	32
G15	28	84	33	153	40	137	46	162	39	26	52	27	134	10

SPAN LENGTH

MARK	℄ TO ℄ BEARING L1	L2	L3	L4	L5	L6
G9	37 058	58 009	62 000	62 000	52 562	42 705
G10	37 254	58 041	62 000	62 000	51 120	42 705
G11	37 450	58 074	62 000	62 000	49 678	42 705
G12	37 647	58 106	62 002	62 010	47 116	42 248
G13	37 843	58 138	62 004	62 047	44 633	41 825
G14	38 039	58 170	62 006	62 092	42 439	41 574
G15	38 236	58 203	62 004	62 094	41 033	41 574

REV.	DATE	DESCRIPTION	SHEET. NO

REVISIONS

SCALE AS NOTED

DESIGNER: O. JAMBOTKAR
DRAFTER: G. LEE
CHECKED BY: T. LALIBERTE
DATE CHECKED: 11-12-12

STATE OF CONNECTICUT
DEPARTMENT OF TRANSPORTATION

ENGINEER: PB AMERICAS, INC.
APPROVED BY: DATE:

PROJECT TITLE: RECONSTRUCTION OF I-95 OVER WEST RIVER (BRIDGE NO. 00163)
CADD
PLOTTED 11/13/2012

TOWN: NEW HAVEN / WEST HAVEN
DRAWING TITLE: GIRDER SCHEDULE – G9 THROUGH G15

PROJECT NO.: 92-522
DRAWING NO.: STR-69
SHEET NO.:

11:52:04 AM
11/13/2012
T:\V8CADD\Projects\PBI8735\FD\Structures\Contract_Sheets\Br00163\str-69-092522-00163.dgn

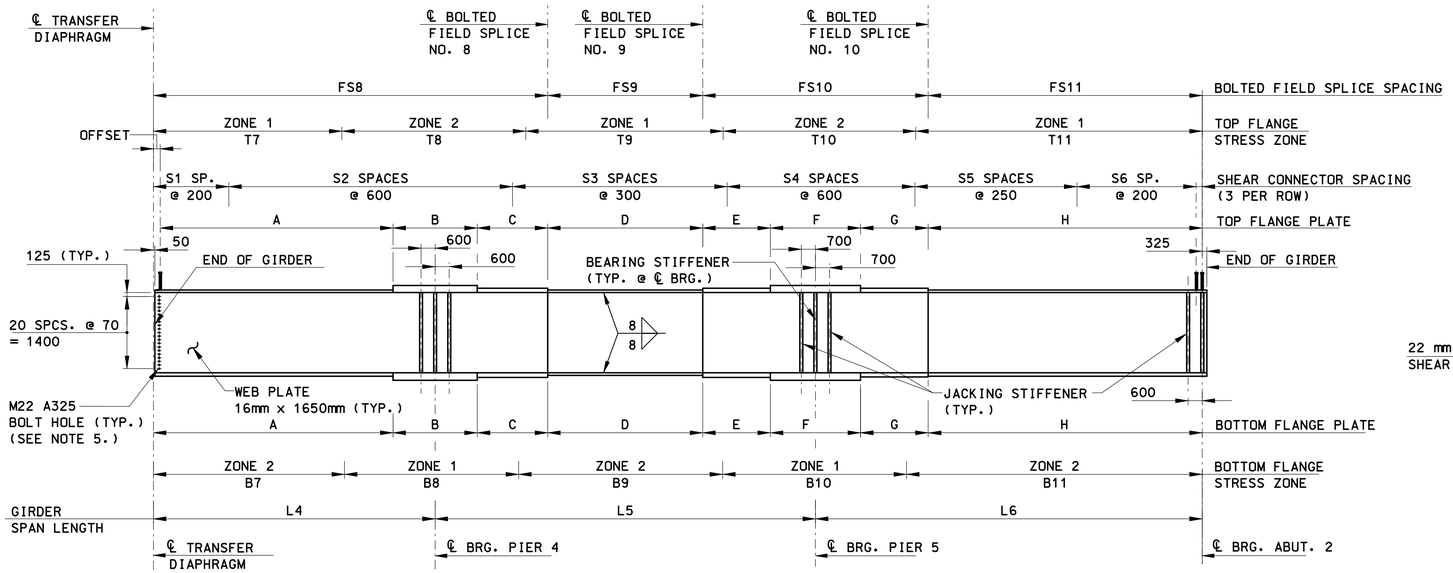

STRESS ZONE
ZONE 1 = COMPRESSION
ZONE 2 = TENSION OR REVERSAL

GIRDER ELEVATION
NOT TO SCALE

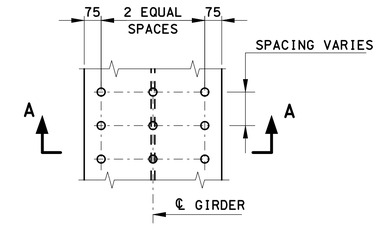

PLAN

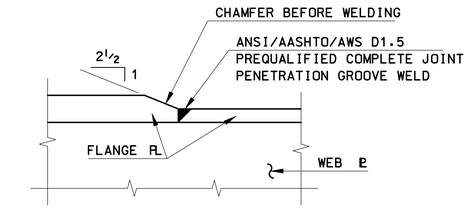

THICKNESS TRANSITION

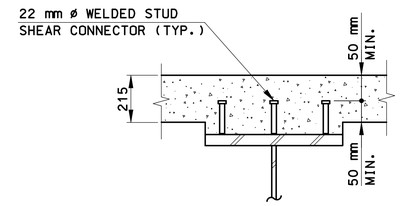

SECTION A–A

WELDED STUD SHEAR CONNECTOR DETAIL
NOT TO SCALE

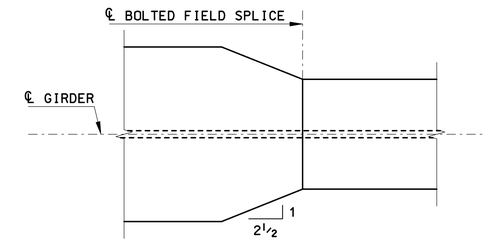

WIDTH TRANSITION

FLANGE TRANSITION DETAILS
NOT TO SCALE

GIRDER SCHEDULE

MARK	FLANGE PLATE	A SIZE	A LENGTH	B SIZE	B LENGTH	C SIZE	C LENGTH	D SIZE	D LENGTH	E SIZE	E LENGTH	F SIZE	F LENGTH	G SIZE	G LENGTH	H SIZE	H LENGTH
G11A	TOP	30x450	14 000	40x450	8000	30x450	10 851	30x450	24 722	35x600	6000	55x600	8000	35x600	11 036	35x450	26 854
	BOTTOM	30x450	14 000	40x450	8000	30x450	10 851	30x450	24 722	35x600	6000	55x600	8000	35x600	11 036	35x450	26 854
G12A	TOP	30x450	14 000	40x450	8000	30x450	10 869	30x450	21 998	35x600	6000	55x600	8000	35x600	11 075	35x450	26 574
	BOTTOM	30x450	14 000	40x450	8000	30x450	10 869	30x450	21 998	35x600	6000	55x600	8000	35x600	11 075	35x450	26 574
G13A	TOP	30x450	14 000	40x450	8000	30x450	10 898	30x450	20 375	35x600	6000	55x600	8000	35x600	10 161	35x450	26 425
	BOTTOM	30x450	14 000	40x450	8000	30x450	10 898	30x450	20 375	35x600	6000	55x600	8000	35x600	10 161	35x450	26 425

TOP FLANGE STRESS ZONES

MARK	T7	T8	T9	T10	T11
G11A	---	27 420	25 240	26 740	30 070
G12A	3300	23 720	23 650	25 870	29 980
G13A	5390	21 380	20 700	26 490	29 900

BOLTED FIELD SPLICE SPACING

MARK	FS8	FS9	FS10	FS11
G11A	32 851	24 722	24 039	27 856
G12A	32 869	21 998	24 082	27 567
G13A	32 898	20 375	23 240	27 346

BOTTOM FLANGE STRESS ZONES

MARK	B7	B8	B9	B10	B11
G11A	9650	14 970	32 110	19 070	33 670
G12A	10 560	13 650	30 470	18 270	33 570
G13A	11 490	12 410	28 740	17 720	33 500

WELDED STUD SHEAR CONNECTOR SPACING

MARK	S1	S2	S3	S4	S5	S6
G11A	9	40	96	38	111	21
G12A	23	34	93	36	111	21
G13A	41	28	87	35	110	21

SPAN LENGTH

MARK	℄ TO ℄ BEARING L4	L5	L6
G11A	18 600	48 392	42 476
G12A	18 610	45 870	42 036
G13A	18 626	43 534	41 699

BEARING AND JACKING STIFFENERS

LOCATION	GIRDERS	BEARING STIFFENER PL SIZE	JACKING STIFFENER PL SIZE
℄ BEARING PIER 4	G11A, G12A & G13A	2 – 25mm X 200mm	4 – 25mm X 200mm
℄ BEARING PIER 5	G11A, G12A & G13A	2 – 35mm X 275mm	4 – 35mm X 275mm
℄ BEARING ABUT. 2	G11A, G12A & G13A	2 – 25mm X 200mm	2 – 25mm X 200mm

SHEAR CONNECTOR NOTES

1. FOR SHEAR CONNECTOR SPACING ALONG GIRDER FLANGE, SEE GIRDER SCHEDULE SHEETS.
2. SHEAR CONNECTORS SHALL BE PLACED RADIALLY ON HORIZONTALLY CURVED PORTIONS OF GIRDER.
3. FOR SHEAR CONNECTOR TREATMENT AT BOLTED FIELD SPLICES, SEE "STRUCTURAL STEEL DETAILS – BOLTED FIELD SPLICES".

NOTES

1. ALL LENGTH DIMENSIONS ARE HORIZONTAL AND MEASURED ALONG THE ℄ OF THE GIRDER WEB.
2. NO ATTACHMENT SHALL BE FILLET WELDED, PLUG WELDED OR TACK WELDED TO THE TENSION OR REVERSAL FLANGES (ZONE 2).
3. TRANSVERSE INTERMEDIATE STIFFENERS & CONNECTION PLATES OMITTED FOR CLARITY.
4. FOR ADDITIONAL NOTES, SEE "GIRDER SCHEDULE – ABUTMENT 1 TO PIER 3".
5. FOR CONNECTION TO DIAPHRAGM D1 DETAILS, SEE "STRUCTURAL STEEL DETAILS – DIAPHRAGM & MISC. DETAILS".

REV.	DATE	DESCRIPTION	SHEET. NO

REVISIONS

SCALE AS NOTED

DESIGNER: O. JAMBOTKAR
DRAFTER: G. LEE
CHECKED BY: T. LALIBERTE
DATE CHECKED: 11–12–12

STATE OF CONNECTICUT
DEPARTMENT OF TRANSPORTATION

ENGINEER: PB AMERICAS, INC.
APPROVED BY:
DATE:

PROJECT TITLE: RECONSTRUCTION OF I–95 OVER WEST RIVER (BRIDGE NO. 00163)
CADD
PLOTTED 11/13/2012

TOWN: NEW HAVEN / WEST HAVEN
DRAWING TITLE: GIRDER SCHEDULE – G11A THROUGH G13A

PROJECT NO.: 92–522
DRAWING NO.: STR–70
SHEET NO.:

11:52:44 AM
11/13/2012
T:\WBCADD\Projects\PB\87135\FD\Structures\Contract_Sheets\Br00163\dr-70-092522-00163.dgn

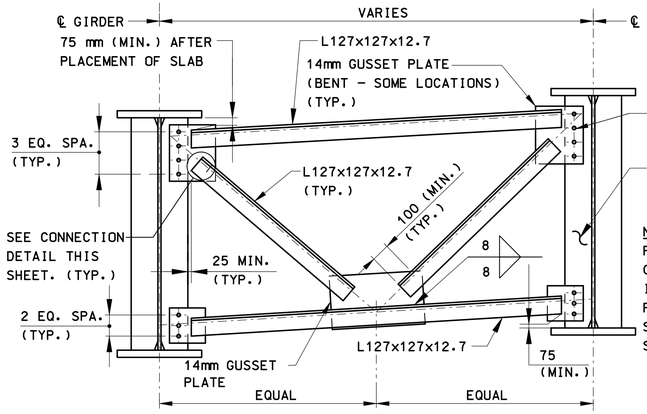

NOTE:
FOR DETAILS OF I.M.S. CONDUIT ATTACHED TO INTERMEDIATE CROSS FRAMES, SEE "STRUCTURAL STEEL DETAILS - UTILITY SUPPORT DETAILS".

INTERMEDIATE CROSS FRAME - TYPE CF1

SCALE: 1:20

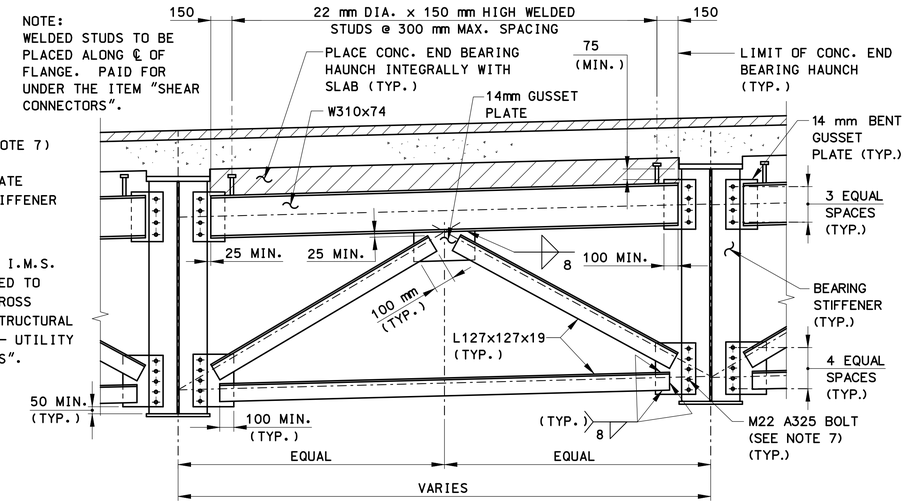

END CROSS FRAME CF3

SCALE: 1:20

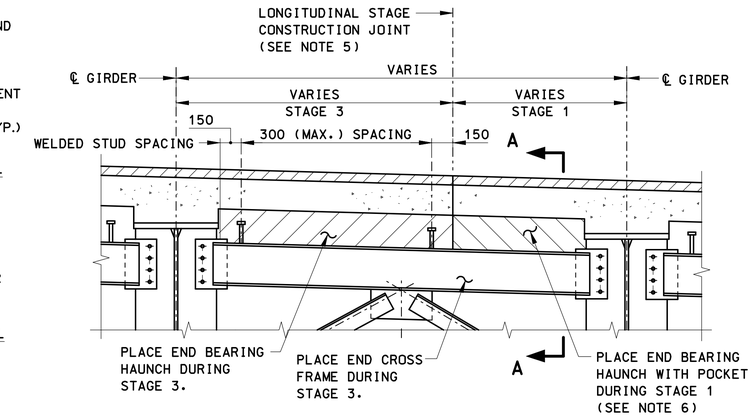

NOTE: FOR INFORMATION NOT SHOWN, SEE "END CROSS FRAME CF3" THIS SHEET.

END CROSS FRAME CF3 AT STAGE CONSTRUCTION JOINT

SCALE: 1:20

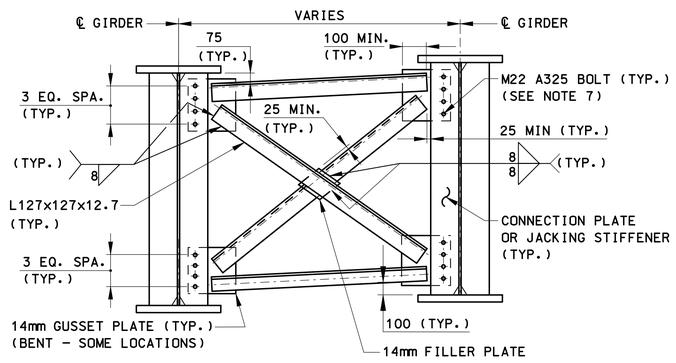

INTERMEDIATE CROSS FRAME - TYPE CF2

SCALE: 1:20

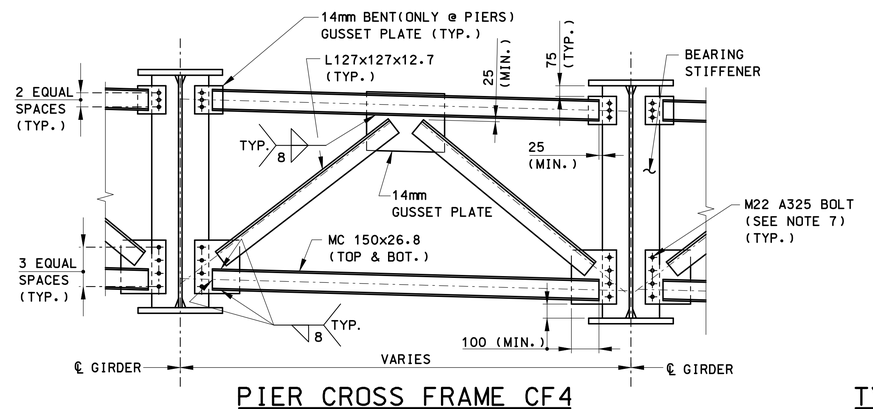

PIER CROSS FRAME CF4

SCALE: 1:20

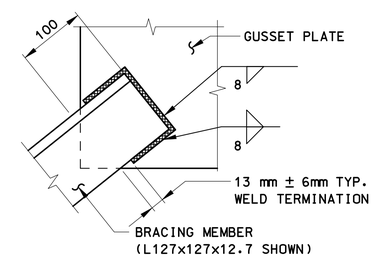

TYPICAL CONNECTION DETAIL

SCALE: 1:5

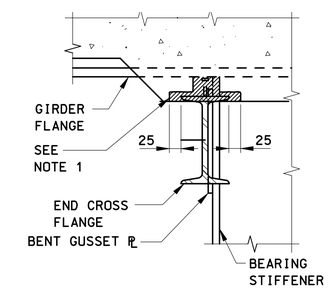

SECTION A-A

SCALE: 1:10

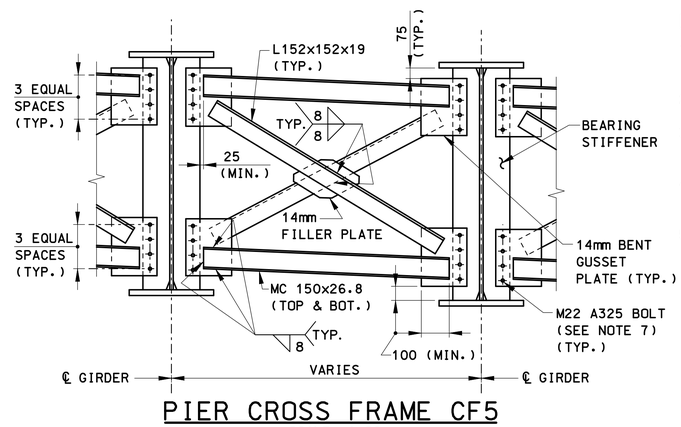

PIER CROSS FRAME CF5

SCALE: 1:20

NOTES:

1. ALL CONNECTION PLATES AND INTERMEDIATE CROSS FRAMES SHALL BE NORMAL TO THE GRADE.
2. FOR CROSS FRAME LOCATIONS, SEE FRAMING PLANS.
3. FOR CONDUIT SUPPORT DETAILS, SEE "STRUCTURAL STEEL DETAILS - UTILITY SUPPORT DETAILS"
4. FOR STRUCTURAL STEEL AND FOR HIGH STRENGTH BOLT NOTES, SEE DWG. "FRAMING PLANS - ABUTMENT 1 TO PIER 3".
5. PLACE END BEARING HAUNCH INTEGRALLY WITH SLAB UP TO LONGITUDINAL STAGE CONSTRUCTION JOINT DURING STAGE 1. FORM POCKET IN END BEARING HAUNCH DURING STAGE 1 TO ACCOMMODATE END CROSS FRAME AND BENT PLATE INSTALLED IN STAGE 3. PLACE END CROSS FRAME AND BENT PLATE DURING STAGE 3 AND PACK VOID WITH NON-SHRINK GROUT. PROCEDURE SIMILAR FOR STAGE CONSTRUCTION JOINT BETWEEN STAGE 2 & 3.
6. SEE STAGE CONSTRUCTION SHEETS FOR LOCATIONS OF LONGITUDINAL STAGE CONSTRUCTION JOINTS.
7. HOLES IN CROSS FRAME GUSSET PLATES SHALL BE 24 mm. HOLES IN CONNECTION PLATES AND STIFFENERS SHALL BE 27 mm.
8. FOR CROSS FRAMES LOCATED AT STAGE CONSTRUCTION JOINTS, CONTRACTOR SHALL FIELD DRILL HOLES IN CONNECTION PLATES AND STIFFENERS ON GIRDER INSTALLED IN SUBSEQUENT STAGE ONLY. CONTRACTOR SHALL PROVIDE ERECTION BOLTS AS NECESSARY PRIOR TO PLACING CONCRETE. FINAL BOLTING SHALL BE COMPLETED PRIOR TO CONSTRUCTION OF THE CLOSURE POUR. CONTRACTOR MUST INVESTIGATE THE NEED FOR AND PROVIDE TEMPORARY BRACING FOR GIRDERS.
9. FOR BRIDGE DRAINAGE SUPPORTED FROM INTERMEDIATE CROSS FRAMES, SEE "BRIDGE DRAINAGE" SHEETS. FOR ADDITIONAL BRIDGE DRAINAGE SUPPORT DETAILS, SEE "STRUCTURAL STEEL DETAILS - UTILITY SUPPORT DETAILS"

REV.	DATE	DESCRIPTION	SHEET. NO
		REVISIONS	

SCALE AS NOTED

DESIGNER: T. YOUNG
DRAFTER: T. YOUNG /G. LEE
CHECKED BY: T. LALIBERTE
DATE CHECKED: 11-12-12

STATE OF CONNECTICUT
DEPARTMENT OF TRANSPORTATION

ENGINEER: PB AMERICAS, INC.
APPROVED BY:
DATE:

PROJECT TITLE: RECONSTRUCTION OF I-95 OVER WEST RIVER (BRIDGE NO. 00163)
CADD
PLOTTED 11/13/2012

TOWN: NEW HAVEN / WEST HAVEN
DRAWING TITLE: STRUCTURAL STEEL DETAILS - CROSS FRAME DETAILS

PROJECT NO.: 92-522
DRAWING NO.: STR-71
SHEET NO.:

11:53:18 AM
11/13/2012
T:\WBCADD\Projects\PB\87135\FD\Structures\Contract_Sheets\Br00163\dn-71-092522-00163.dgn

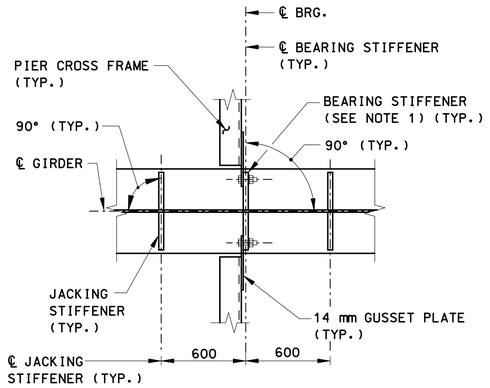

DETAIL 'A'

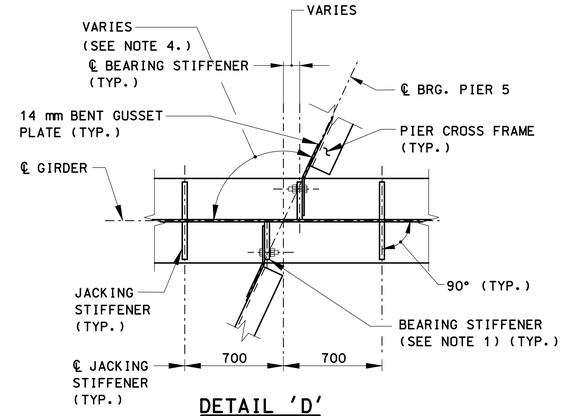

DETAIL 'D'

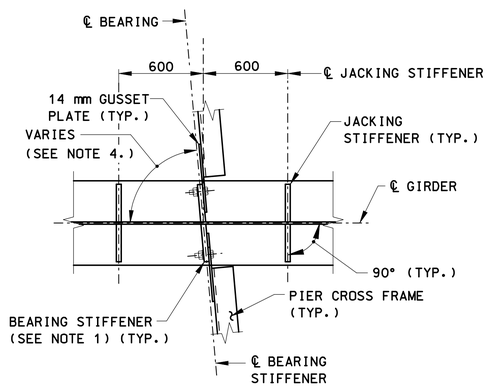

DETAIL 'B'

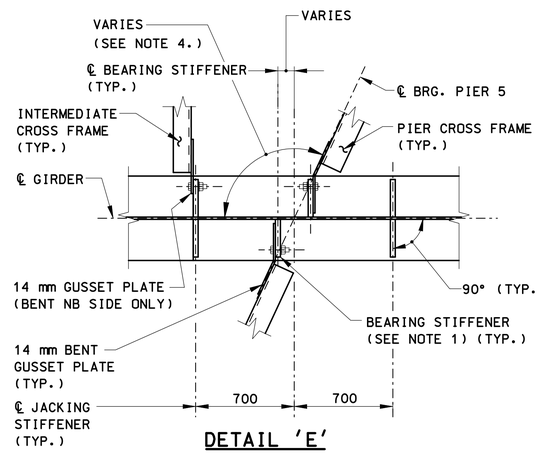

DETAIL 'E'

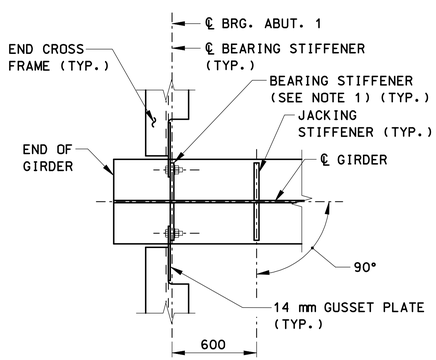

DETAIL 'C'

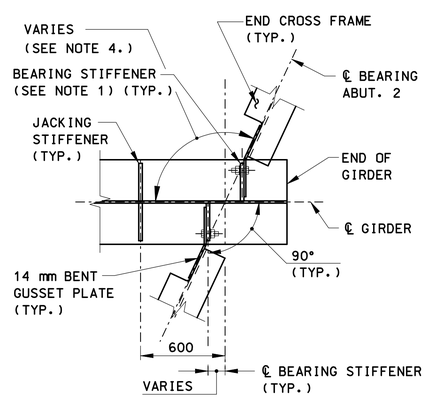

DETAIL 'F'

STIFFENER DETAILS
NOT TO SCALE

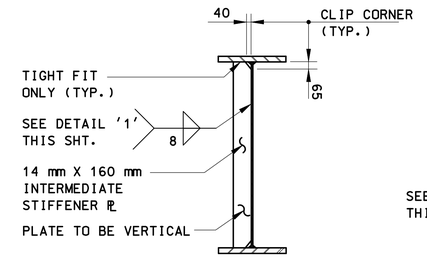

NOTE: DETAIL APPLIES AT LOCATIONS WHERE TENSION IS REVERSED AS INDICATED ON BOTH TOP AND BOTTOM FLANGES. SEE GIRDER SCHEDULES ON DWGS. "GIRDER SCHEDULES".

STRESS REVERSAL ZONE

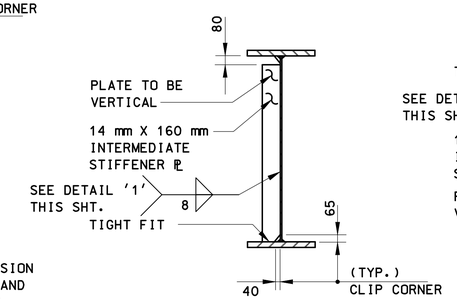

COMPRESSION IN BOTTOM FLANGE

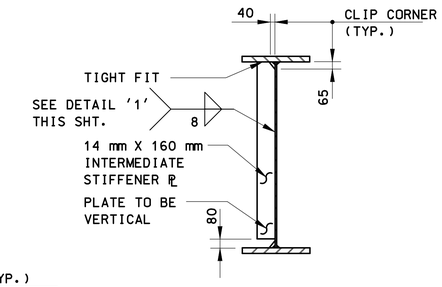

COMPRESSION IN TOP FLANGE

TRANSVERSE INTERMEDIATE STIFFENER DETAILS
SCALE: 1:25

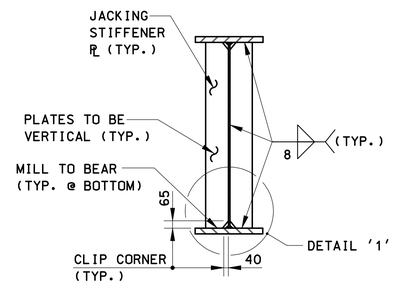

JACKING STIFFENER
SCALE: 1:25

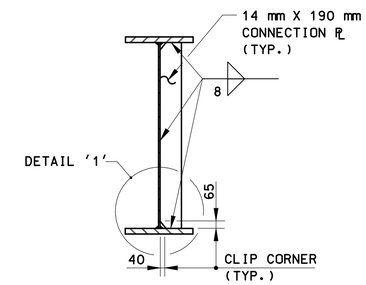

CONNECTION PLATE
SCALE: 1:25

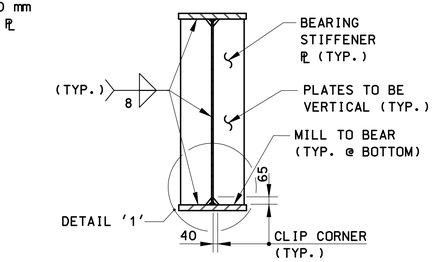

BEARING STIFFENER
SCALE: 1:25

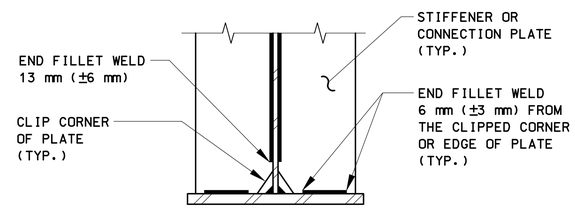

DETAIL '1'
SCALE: 1:10

NOTES:

1. FOR BEARING STIFFENER AND JACKING STIFFENER SIZES, SEE DWGS. "GIRDER SCHEDULES".
2. OMIT CONNECTION PLATE AND CROSS FRAME/DIAPHRAGMS AT EXTERIOR OF FASCIA GIRDERS.
3. FOR CROSS FRAME DETAILS, SEE "STRUCTURAL STEEL DETAILS – CROSS FRAME DETAILS".
4. FOR ANGLE BETWEEN ℄ BRG. AND ℄ GIRDER, SEE "ABUTMENT" AND "PIER" SHEETS.
5. FOR STRUCTURAL STEEL NOTES, SEE "FRAMING PLAN – ABUTMENT 1 TO PIER 3".
6. ALL CONNECTION PLATES AND INTERMEDIATE CROSS FRAMES SHALL BE NORMAL TO THE GRADE.
7. FOR SERVICE LEVEL REACTIONS AT BEARING LOCATIONS FOR USE IN GIRDER JACKING, SEE "BEARING" SHEETS.
8. HOLES IN CROSS FRAME GUSSET PLATES SHALL BE 24 mm. HOLES IN CONNECTION PLATES AND STIFFENERS SHALL BE 27 mm. BOLT HOLES IN CONNECTION PLATES SHALL BE FILLED WITH ASTM A325M BOLTS FOLLOWING REMOVAL OF TEMPORARY MEDIAN CROSS FRAMES.

REV.	DATE	DESCRIPTION	SHEET. NO
		REVISIONS	

SCALE AS NOTED

DESIGNER: T. YOUNG
DRAFTER: T. YOUNG /G. LEE
CHECKED BY: T. LALIBERTE
DATE CHECKED: 11-12-12

STATE OF CONNECTICUT
DEPARTMENT OF TRANSPORTATION

ENGINEER: PB AMERICAS, INC.
APPROVED BY:
DATE:

PROJECT TITLE: RECONSTRUCTION OF I-95 OVER WEST RIVER (BRIDGE NO. 00163)
CADD
PLOTTED 11/13/2012

TOWN: NEW HAVEN / WEST HAVEN
DRAWING TITLE: STRUCTURAL STEEL DETAILS – STIFFENER DETAILS

PROJECT NO.: 92-522
DRAWING NO.: STR-72
SHEET NO.:

11/5/402 AM
11/13/2012
T:\WBCADD\Projects\PB\87135\FD\Structures\Contract_Sheets\Br00163\str-72-092522-00163.dgn

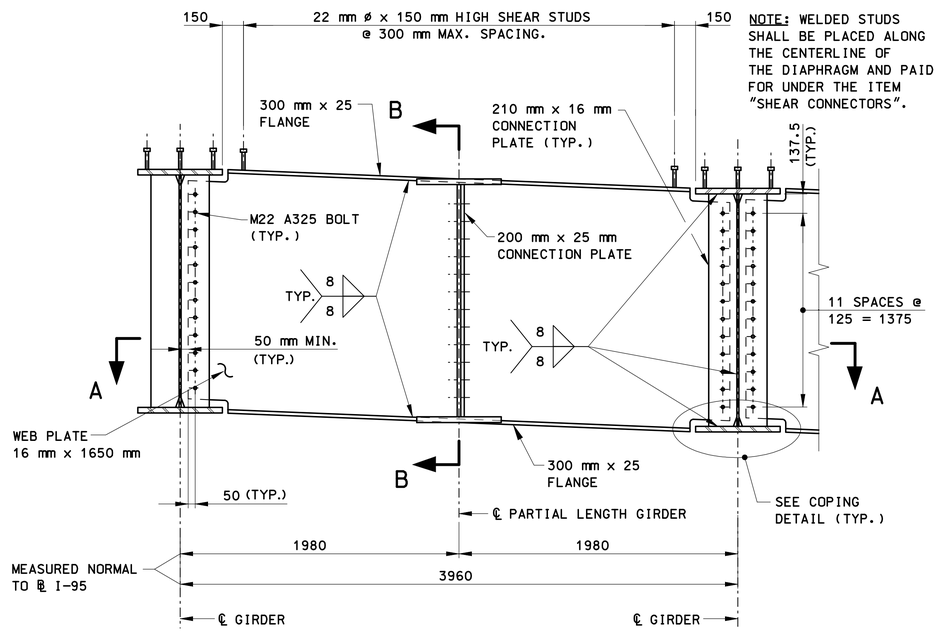

DIAPHRAGM D1

SCALE: 1:20

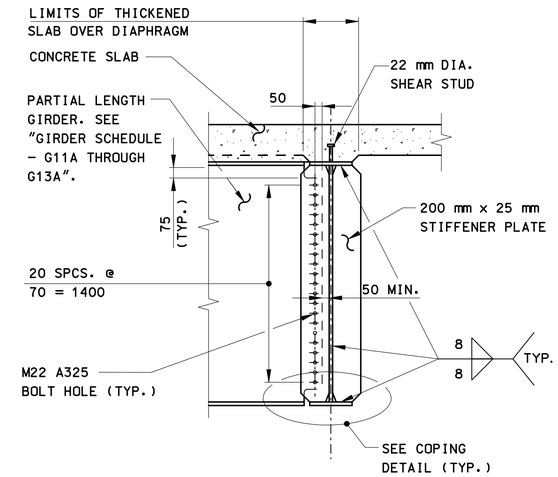

SECTION B-B

SCALE: 1:20

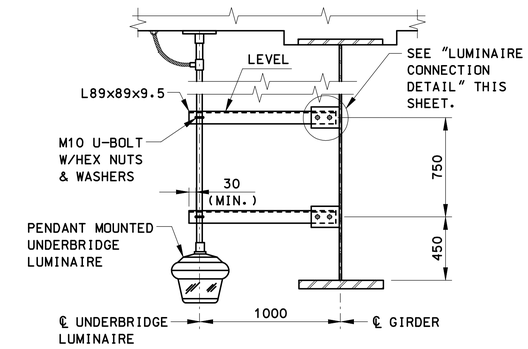

UNDERBRIDGE LUMINAIRE BRACING DETAIL

SCALE: 1:20

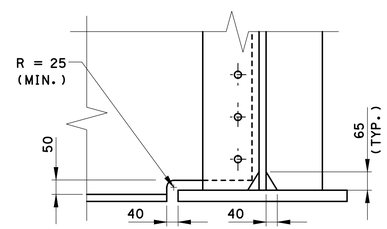

COPING DETAIL

SCALE: 1:10

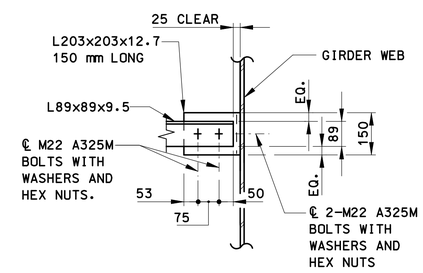

LUMINAIRE CONNECTION DETAIL

SCALE: 1:10

CONTRACTOR NOTE:

THE CONTRACTOR IS RESPONSIBLE FOR DEVELOPING A MEANS AND METHODS TO ERECT DIAPHRAGM D1. THE PARTIAL GIRDERS AND THEIR ASSOCIATED CROSS FRAMES INCLUDING ADDRESSING THE POTENTIAL DIFFERENTIAL DEFLECTIONS BETWEEN THE MAIN AND PARTIAL GIRDERS. THE CONTRACTOR SHALL SUBMIT THE PROPOSED METHOD TO THE ENGINEER FOR APPROVAL PRIOR TO STARTING STRUCTURAL STEEL FABRICATION.

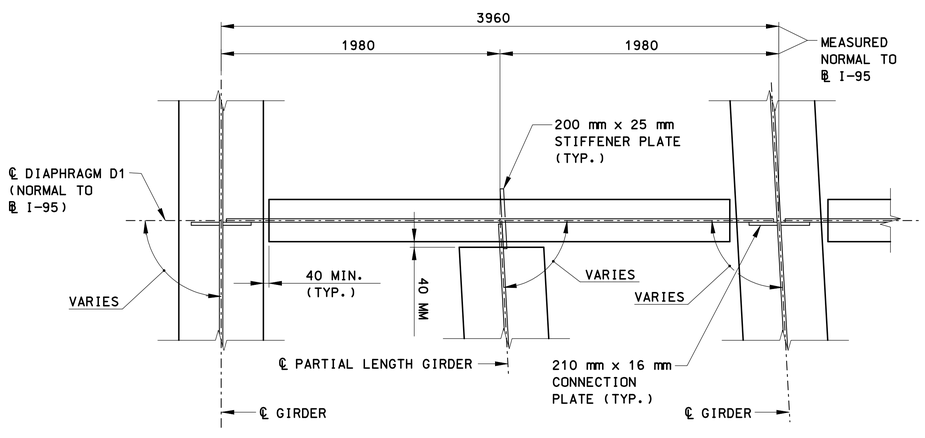

SECTION A-A

SCALE: 1:20

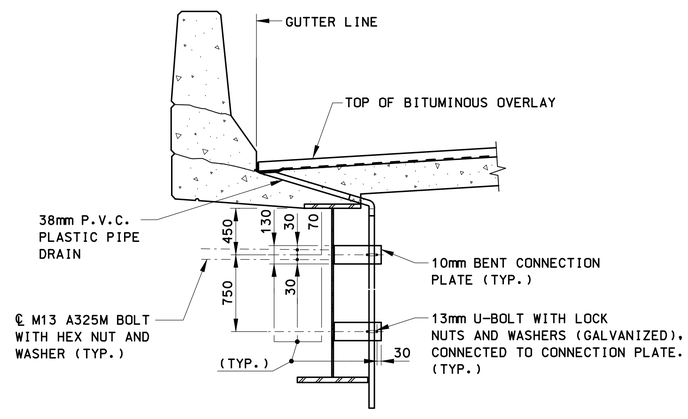

OVERLAY INTERFACE DRAINAGE ATTACHMENT DETAIL

SCALE: 1:20

NOTES:

1. FOR LOCATION OF DIAPHRAGMS TYPE D1, SEE DWGS. "FRAMING PLANS."
2. FOR LOCATION AND ADDITIONAL DETAILS OF OVERLAY DRAINAGE DETAILS (WEEPHOLES), SEE SLAB PLANS AND DETAILS.
3. FOR LOCATIONS AND ADDITIONAL DETAILS OF UNDERBRIDGE LUMINAIRES, SEE THE ELECTRICAL DRAWINGS IN THE HIGHWAY PLANS
4. ALL BOLTS SHALL BE M22 A325M HIGH STRENGTH BOLTS UNLESS OTHERWISE NOTED.
5. ALL CONNECTION PLATES, DIAPHRAGMS AND INTERMEDIATE CROSS FRAMES SHALL BE NORMAL TO THE GRADE.
6. FOR STRUCTURAL STEEL NOTES AND HIGH STRENGTH BOLT NOTES, SEE "FRAMING PLAN - SHEET 1 OF 2 - ABUTMENT 1 TO PIER 3"

REV.	DATE	DESCRIPTION	SHEET. NO.
		REVISIONS	

SCALE AS NOTED

DESIGNER: T. YOUNG
DRAFTER: G. LEE
CHECKED BY: T. LALIBERTE
DATE CHECKED: 11-12-12

STATE OF CONNECTICUT
DEPARTMENT OF TRANSPORTATION

ENGINEER: PB AMERICAS, INC.
APPROVED BY:
DATE:

PROJECT TITLE: RECONSTRUCTION OF I-95 OVER WEST RIVER (BRIDGE NO. 00163)
CADD
PLOTTED 11/13/2012

TOWN: NEW HAVEN / WEST HAVEN
DRAWING TITLE: STRUCTURAL STEEL DETAILS - DIAPHRAGM & MISC. DETAILS

PROJECT NO.: 92-522
DRAWING NO.: STR-73
SHEET NO.:

11:54:40 AM
11/13/2012
T:\V8CADD\Projects\PB8735\FD\Structures\Contract_Sheets\Br00163\str-73-092522-00163.dgn

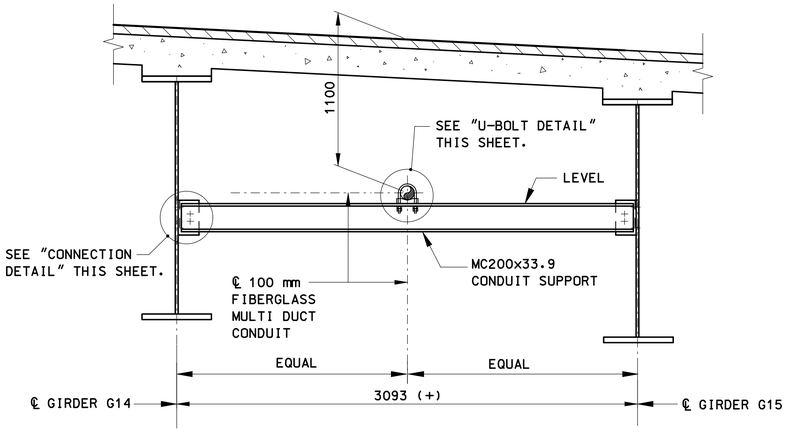

I.M.S. CONDUIT SUPPORT

SCALE: 1:20

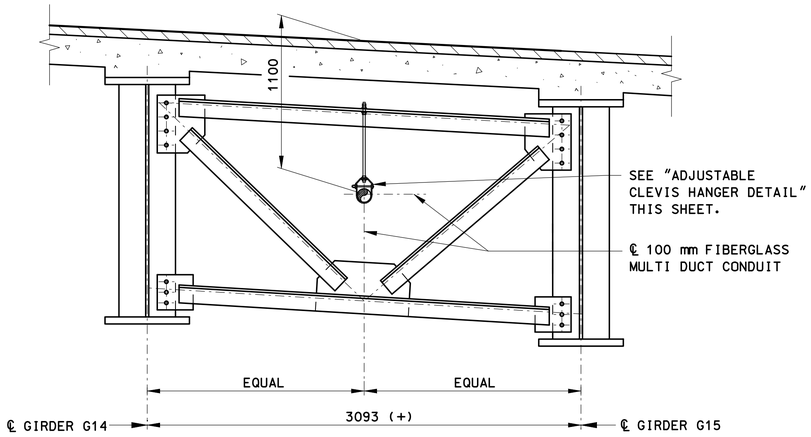

I.M.S. CONDUIT SUPPORT AT INTERMEDIATE CROSS FRAME

SCALE: 1:20

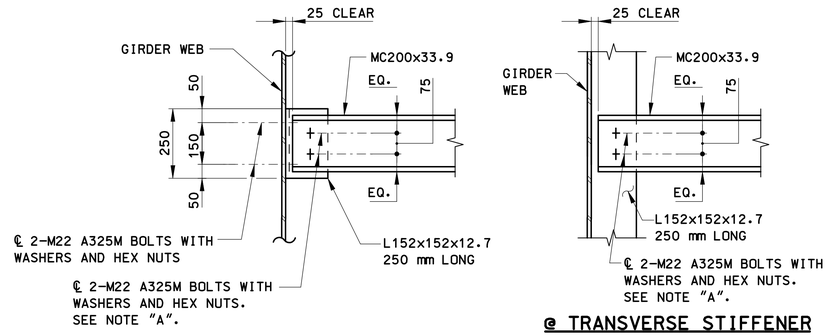

TYPICAL LOCATIONS

@ TRANSVERSE STIFFENER LOCATIONS

NOTE "A":
USE 27 mm x 40 mm SLOTTED HOLE IN CONNECTION ANGLE AND TRANSVERSE STIFFENER.

CONNECTION DETAIL

SCALE: 1:10

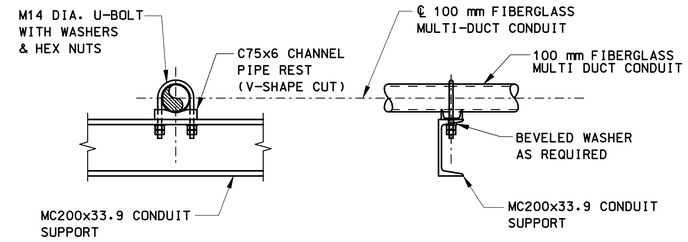

ELEVATION

SECTION

U-BOLT DETAIL

SCALE: 1:10

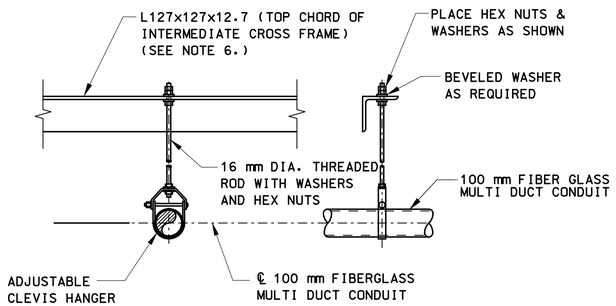

SECTION

ELEVATION

ADJUSTABLE CLEVIS HANGER DETAIL

SCALE: 1:10

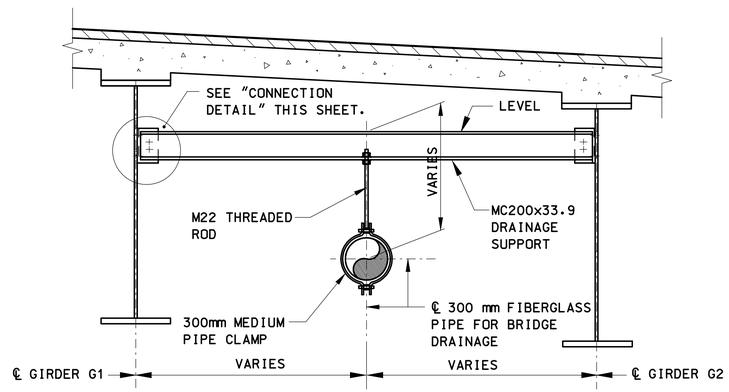

BRIDGE DRAINAGE SUPPORT

SCALE: 1:20

CONDUIT SUPPORT NOTES:

1. THE CONDUIT SHALL BE POSITIVELY CONNECTED TO THE TOP CHORD OF INTERMEDIATE CROSS FRAME WITH AN ADJUSTABLE CLEVIS HANGER OR IMS SUPPORT WITH A U-BOLT. SEE "ADJUSTABLE CLEVIS HANGER DETAIL" AND "U-BOLT DETAIL" THIS SHEET.
2. CLEVIS HANGERS SHALL BE AS SHOWN AND AS MANUFACTURED BY ITT GRINNELL CO., FIG. 260 OR APPROVED EQUAL.
3. THE U-BOLTS, CLEVIS HANGERS, THREADED RODS, NUTS AND WASHERS SHALL BE MECHANICALLY GALVANIZED IN CONFORMANCE WITH ASTM B695, CLASS 50.
4. THE COST OF THE CONDUIT SUPPORTS, CONNECTION PLATES, MODIFIED CROSS FRAMES FOR CONDUIT SUPPORTS, PIPE SLEEVES, NEOPRENE AND ADHESIVE SHALL BE INCLUDED UNDER THE ITEM "STRUCTURAL STEEL (SITE NO. 1)".
5. FOR INFORMATION NOT SHOWN, SEE CROSS FRAME DETAILS ON DWG. NO. STR-70.
6. I.M.S. CONDUIT SUPPORT SHOWN AT "INTERMEDIATE CROSS FRAME", DETAILS SIMILAR AT "PIER CROSS FRAME" AND "END CROSS FRAME".
7. PROVIDE CONDUIT EXPANSION JOINT AT BRIDGE EXPANSION JOINT. SEE SPECIAL PROVISIONS.
8. CONNECTION TO L127x127x12.7 AT INTERMEDIATE CROSS FRAME SHOWN. CONNECTION TO BOTTOM FLANGE OF MC CHANNEL AT PIER AND W-SECTION OF END DIAPHRAGM SIMILAR.
9. 100 mm FIBERGLASS MULTI-DUCT CONDUIT SHALL BE PAID FOR UNDER THE ITEM "100 mm FIBERGLASS MULTI-DUCT CONDUIT - EXTRA HEAVY WALL".

NOTE:

1. FOR ADDITIONAL DETAILS OF BRIDGE DRAINAGE, SEE "BRIDGE DRAINAGE" SHEETS.

REV.	DATE	DESCRIPTION	SHEET. NO.
		REVISIONS	

SCALE AS NOTED

DESIGNER: T. YOUNG
DRAFTER: T. YOUNG /G. LEE
CHECKED BY: T. LALIBERTE
DATE CHECKED: 11-12-12

STATE OF CONNECTICUT
DEPARTMENT OF TRANSPORTATION

ENGINEER: PB AMERICAS, INC.
APPROVED BY:
DATE:

PROJECT TITLE: RECONSTRUCTION OF I-95 OVER WEST RIVER (BRIDGE NO. 00163)
CADD
PLOTTED 11/13/2012

TOWN: NEW HAVEN / WEST HAVEN
DRAWING TITLE: STRUCTURAL STEEL DETAILS - UTILITY SUPPORT DETAILS

PROJECT NO.: 92-522
DRAWING NO.: STR-74
SHEET NO.:

11:55:22 AM
11/13/2012
T:\V8CADD Projects\PB\8735\FD\Structures\Contract_Sheets\Br00163\str-74092522-00163.dgn

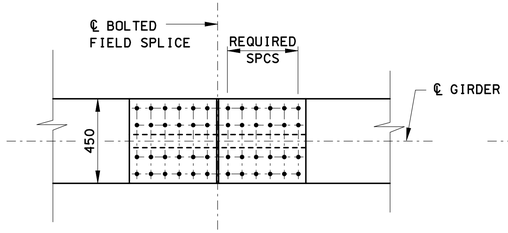

PLAN
(FOR SPLICES WITH 450 mm WIDTH FLANGE)

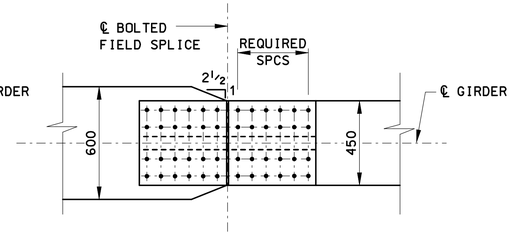

PLAN
(FOR SPLICES WITH 600 mm WIDTH FLANGE)

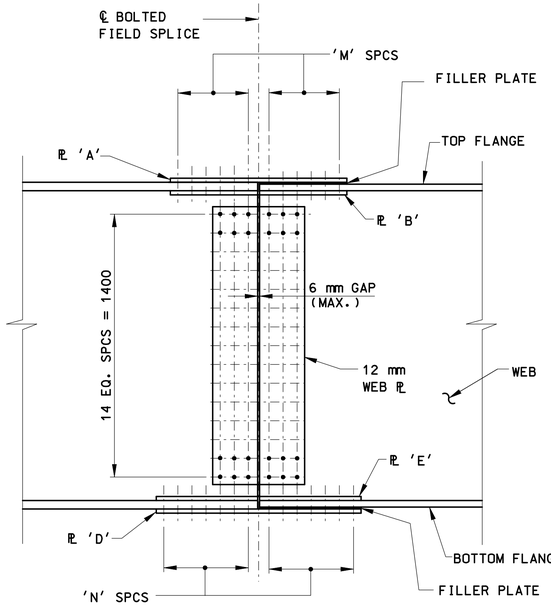

ELEVATION

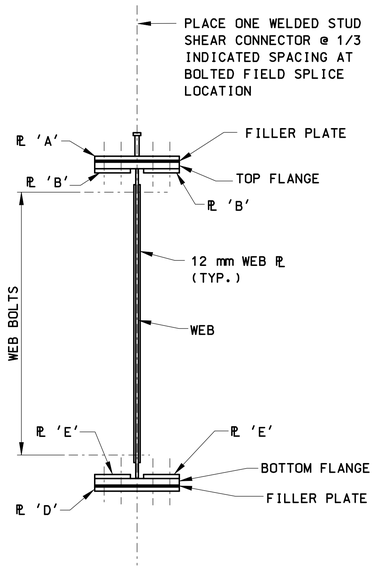

SECTION

BOLTED FIELD SPLICE DETAIL

NOT TO SCALE

BOLTED FIELD SPLICE SCHEDULE

GIRDER NO.	SPLICE MARK	TOP FLANGE			BOTTOM FLANGE		
		PLATE 'A'	PLATE 'B'	'M' SPCS	PLATE 'D'	PLATE 'E'	'N' SPCS
G1 & G8	SPLICE 1	22x450	2-22X190	4	30x450	2-30X190	6
	SPLICE 2	22x450	2-22X190	4	30x450	2-30X190	6
	SPLICE 3	22x450	2-22X190	4	30x450	2-30X190	6
	SPLICE 4	22x450	2-22X190	4	30x450	2-30X190	6
	SPLICE 5	22x450	2-22X190	4	30x450	2-30X190	6
	SPLICE 6	22x450	2-22X190	4	30x450	2-30X190	6
	SPLICE 7	22x450	2-22X190	4	30x450	2-30X190	6
	SPLICE 8	22x450	2-22X190	4	30x450	2-30X190	6
	SPLICE 9	22x450	2-22X190	4	30x450	2-30X190	6
	SPLICE 10	22x450	2-22X190	4	30x450	2-30X190	6

GIRDER NO.	SPLICE MARK	TOP FLANGE			BOTTOM FLANGE		
		PLATE 'A'	PLATE 'B'	'M' SPCS	PLATE 'D'	PLATE 'E'	'N' SPCS
G9 & G15	SPLICE 1	22x450	2-22X190	4	30x450	2-28X190	6
	SPLICE 2	22x450	2-22X190	4	30x450	2-28X190	6
	SPLICE 3	22x450	2-22X190	4	30x450	2-28X190	6
	SPLICE 4	22x450	2-22X190	4	30x450	2-28X190	6
	SPLICE 5	22x450	2-22X190	4	30x450	2-28X190	6
	SPLICE 6	22x450	2-22X190	4	30x450	2-28X190	6
	SPLICE 7	22x450	2-22X190	4	30x450	2-28X190	6
	SPLICE 8	22x450	2-22X190	4	30x450	2-28X190	6
	SPLICE 9	22x450	2-22X190	4	30x450	2-28X190	6
	SPLICE 10	22x450	2-22X190	4	30x450	2-28X190	6

GIRDER NO.	SPLICE MARK	TOP FLANGE			BOTTOM FLANGE		
		PLATE 'A'	PLATE 'B'	'M' SPCS	PLATE 'D'	PLATE 'E'	'N' SPCS
G2 G3 G4 G5 G6 & G7	SPLICE 1	22x190	2-22X190	4	30x450	2-30X190	6
	SPLICE 2	22x190	2-22X190	4	30x450	2-30X190	6
	SPLICE 3	22x190	2-22X190	4	30x450	2-30X190	6
	SPLICE 4	22x190	2-22X190	4	30x450	2-30X190	6
	SPLICE 5	22x190	2-22X190	4	30x450	2-30X190	6
	SPLICE 6	22x190	2-22X190	4	30x450	2-30X190	6
	SPLICE 7	22x190	2-22X190	4	30x450	2-30X190	6
	SPLICE 8	22x190	2-22X190	4	30x450	2-30X190	6
	SPLICE 9	22x190	2-22X190	4	30x450	2-30X190	6
	SPLICE 10	22x190	2-22X190	4	30x450	2-30X190	6

GIRDER NO.	SPLICE MARK	TOP FLANGE			BOTTOM FLANGE		
		PLATE 'A'	PLATE 'B'	'M' SPCS	PLATE 'D'	PLATE 'E'	'N' SPCS
G10 G11 G12 G13 & G14	SPLICE 1	22x450	2-22X190	4	30X450	2-30x190	6
	SPLICE 2	22x450	2-22X190	4	30X450	2-30x190	6
	SPLICE 3	22x450	2-22X190	4	30X450	2-30x190	6
	SPLICE 4	22x450	2-22X190	4	30X450	2-30x190	6
	SPLICE 5	22x450	2-22X190	4	30X450	2-30x190	6
	SPLICE 6	22x450	2-22X190	4	30X450	2-30x190	6
	SPLICE 7	22x450	2-22X190	4	30X450	2-30x190	6
	SPLICE 8	22x450	2-22X190	4	30X450	2-30x190	6
	SPLICE 9	22x450	2-22X190	4	30X450	2-30x190	6
	SPLICE 10	22x450	2-22X190	4	30X450	2-30x190	6

GIRDER NO.	SPLICE MARK	TOP FLANGE			BOTTOM FLANGE		
		PLATE 'A'	PLATE 'B'	'M' SPCS	PLATE 'D'	PLATE 'E'	'N' SPCS
G11A G12A & G13A	SPLICE 1	----	----	----	----	----	----
	SPLICE 2	----	----	----	----	----	----
	SPLICE 3	----	----	----	----	----	----
	SPLICE 4	----	----	----	----	----	----
	SPLICE 5	----	----	----	----	----	----
	SPLICE 6	----	----	----	----	----	----
	SPLICE 7	----	----	----	----	----	----
	SPLICE 8	16x450	2-22X190	3	16X450	2-22x190	3
	SPLICE 9	16x450	2-22X190	4	16X450	2-22x190	4
	SPLICE 10	22x450	2-22X190	4	22X600	2-22x190	4

BOLTED FIELD SPLICE NOTES

1. FOR LOCATION OF FIELD SPLICES, SEE DWGS. "GIRDER SCHEDULES".
2. ALL BOLTS SHALL BE M22 ASTM A325M.
3. ALL FIELD SPLICES SHALL BE SLIP CRITICAL CONNECTIONS WITH CLASS "B" SURFACE CONDITIONS.
4. ALL FASTENERS SHALL HAVE HEAVY HEX NUT AND ONE HARDENED WASHER UNDER THE TURNED ELEMENT.
5. ALL BOLT HOLES SHALL BE DRILLED OR PUNCHED TO A FINISHED DIAMETER OF 24 mm.
6. ALL SPLICES AND FILLER PLATES SHALL CONFORM TO ASTM A709M (GRADE 345) AND SHALL BE FREE FROM BURRS, NICKS, AND GOUGES.
7. BOLT HEAD SHALL FACE DOWNWARD ON FLANGE SPLICES AND SHALL FACE OUTWARD ON FASCIA GIRDER WEB SPLICES.
8. FOR STRUCTURAL STEEL NOTES, SEE "FRAMING PLAN - ABUTMENT 1 TO PIER 3".

REV.	DATE	DESCRIPTION	SHEET. NO
		REVISIONS	

SCALE AS NOTED

DESIGNER: O. JAMBOTKAR
DRAFTER: G. LEE
CHECKED BY: T. LALIBERTE
DATE CHECKED: 07-31-03

STATE OF CONNECTICUT
DEPARTMENT OF TRANSPORTATION

ENGINEER: PB AMERICAS, INC.
APPROVED BY:
DATE:

PROJECT TITLE: RECONSTRUCTION OF I-95 OVER WEST RIVER (BRIDGE NO. 00163)
CADD
PLOTTED 11/13/2012

TOWN: NEW HAVEN / WEST HAVEN
DRAWING TITLE: STRUCTURAL STEEL DETAILS - BOLTED FIELD SPLICES

PROJECT NO.: 92-522
DRAWING NO.: STR-75
SHEET NO.:

11:55:54 AM
11/13/2012
T:\V8CADD\Projects\PB8735\FD\Structures\Contract_Sheets\Br00163\str-75-092522-00163.dgn

CAMBER ORDINATES – SPAN A1 (mm)

GIRDER MARK		INCREMENT	CL. BRG. ABUT. 1	1/14	2/14	3/14	4/14	5/14	6/14	7/14	8/14	9/14	10/14	11/14	12/14	13/14	CL. BRG. PIER 1
G1	STRUCTURAL STEEL	2.541	0	1	2	3	3	3	3	2	1	1	0	−1	−1	−1	0
	ADDITIONAL DEAD LOAD		0	4	8	10	12	12	11	9	6	3	0	−2	−3	−2	0
	COMPOSITE DEAD LOAD		0	1	3	4	4	4	4	3	2	1	0	−1	−1	−1	0
	TOTAL DEAD LOAD		0	7	12	17	19	20	18	15	10	5	0	−4	−5	−4	0
	VERTICAL CURVE ORDINATE																
	TOTAL		0	7	12	17	19	20	18	15	10	5	0	−4	−5	−4	0
G2	STRUCTURAL STEEL	2.555	0	1	2	3	4	4	3	3	2	1	0	−1	−1	−1	0
	ADDITIONAL DEAD LOAD		0	5	10	13	15	15	14	11	8	4	0	−2	−4	−3	0
	COMPOSITE DEAD LOAD		0	1	3	4	4	4	4	3	2	1	0	−1	−1	−1	0
	TOTAL DEAD LOAD		0	8	15	20	23	23	21	17	12	6	0	−4	−6	−5	0
	VERTICAL CURVE ORDINATE																
	TOTAL		0	8	15	20	23	23	21	17	12	6	0	−4	−6	−5	0
G3	STRUCTURAL STEEL	2.569	0	1	2	3	4	4	4	3	2	1	0	−1	−1	−1	0
	ADDITIONAL DEAD LOAD		0	5	10	13	15	16	15	12	8	4	1	−2	−4	−3	0
	COMPOSITE DEAD LOAD		0	2	3	4	4	5	4	4	3	1	0	−1	−1	−1	0
	TOTAL DEAD LOAD		0	8	15	21	24	24	22	18	13	7	1	−4	−6	−5	0
	VERTICAL CURVE ORDINATE																
	TOTAL		0	8	15	21	24	24	22	18	13	7	1	−4	−6	−5	0
G4	STRUCTURAL STEEL	2.583	0	1	3	3	4	4	4	3	2	1	0	−1	−1	−1	0
	ADDITIONAL DEAD LOAD		0	5	10	14	16	16	15	13	9	5	1	−2	−4	−3	0
	COMPOSITE DEAD LOAD		0	2	3	4	5	5	5	4	3	2	0	−1	−1	−1	0
	TOTAL DEAD LOAD		0	9	16	22	25	26	24	20	14	8	2	−3	−6	−5	0
	VERTICAL CURVE ORDINATE																
	TOTAL		0	9	16	22	25	26	24	20	14	8	2	−3	−6	−5	0
G5	STRUCTURAL STEEL	2.597	0	1	3	4	4	4	4	3	2	1	0	−1	−1	−1	0
	ADDITIONAL DEAD LOAD		0	5	10	13	15	16	15	12	9	5	1	−2	−3	−3	0
	COMPOSITE DEAD LOAD		0	2	3	5	5	6	5	4	3	2	1	−1	−1	−1	0
	TOTAL DEAD LOAD		0	9	16	22	25	26	24	20	14	8	2	−3	−5	−4	0
	VERTICAL CURVE ORDINATE																
	TOTAL		0	9	16	22	25	26	24	20	14	8	2	−3	−5	−4	0
G6	STRUCTURAL STEEL	2.611	0	1	3	4	4	4	4	3	3	1	0	0	−1	−1	0
	ADDITIONAL DEAD LOAD		0	4	8	11	12	13	12	10	7	4	1	−1	−2	−2	0
	COMPOSITE DEAD LOAD		0	2	3	4	5	5	4	4	3	2	1	0	−1	−1	0
	TOTAL DEAD LOAD		0	7	14	18	21	22	20	17	13	7	2	−2	−4	−4	0
	VERTICAL CURVE ORDINATE																
	TOTAL		0	7	14	18	21	22	20	17	13	7	2	−2	−4	−4	0
G7	STRUCTURAL STEEL	2.625	0	2	3	4	5	5	4	4	3	2	0	0	−1	−1	0
	ADDITIONAL DEAD LOAD		0	6	11	15	18	18	17	15	11	6	2	−1	−3	−3	0
	COMPOSITE DEAD LOAD		0	1	3	4	4	5	4	4	3	2	1	0	−1	−1	0
	TOTAL DEAD LOAD		0	9	17	23	27	28	26	22	16	9	3	−2	−5	−4	0
	VERTICAL CURVE ORDINATE																
	TOTAL		0	9	17	23	27	28	26	22	16	9	3	−2	−5	−4	0
G8	STRUCTURAL STEEL	2.639	0	2	3	4	5	5	5	4	3	2	1	0	−1	−1	0
	ADDITIONAL DEAD LOAD		0	5	9	12	14	15	14	12	9	5	2	−1	−2	−2	0
	COMPOSITE DEAD LOAD		0	1	2	3	4	4	4	3	2	2	1	0	−1	−1	0
	TOTAL DEAD LOAD		0	8	15	20	23	24	22	19	14	8	3	−1	−4	−3	0
	VERTICAL CURVE ORDINATE																
	TOTAL		0	8	15	20	23	24	22	19	14	8	3	−1	−4	−3	0

CAMBER ORDINATES – SPAN A1 (mm)

GIRDER MARK		INCREMENT	CL. BRG. ABUT. 1	1/14	2/14	3/14	4/14	5/14	6/14	7/14	8/14	9/14	10/14	11/14	12/14	13/14	CL. BRG. PIER 1
G9	STRUCTURAL STEEL	2.647	0	2	3	4	5	5	5	4	3	1	0	−1	−1	−1	0
	ADDITIONAL DEAD LOAD		0	5	10	13	15	16	15	12	9	5	1	−2	−3	−3	0
	COMPOSITE DEAD LOAD		0	2	3	4	5	5	5	4	3	2	1	0	−1	−1	0
	TOTAL DEAD LOAD		0	8	16	21	25	25	24	20	14	8	2	−3	−5	−4	0
	VERTICAL CURVE ORDINATE		0	0	0	0	0	0	0	0	0	0	0	0	0	0	0
	TOTAL		0	8	16	21	25	25	24	20	14	8	2	−3	−5	−4	0
G10	STRUCTURAL STEEL	2.661	0	2	3	4	5	5	5	4	3	2	0	−1	−1	−1	0
	ADDITIONAL DEAD LOAD		0	5	10	14	16	16	15	13	9	5	1	−2	−4	−3	0
	COMPOSITE DEAD LOAD		0	2	4	5	6	6	6	5	4	2	1	−1	−1	−1	0
	TOTAL DEAD LOAD		0	9	17	23	27	28	26	22	16	9	2	−3	−6	−5	0
	VERTICAL CURVE ORDINATE		0	0	0	0	0	0	0	0	0	0	0	0	0	0	0
	TOTAL		0	9	17	23	27	28	26	22	16	9	2	−3	−6	−5	0
G11	STRUCTURAL STEEL	2.675	0	2	3	4	5	5	5	4	3	2	1	0	−1	−1	0
	ADDITIONAL DEAD LOAD		0	5	9	13	15	15	15	13	10	6	2	0	−2	−2	0
	COMPOSITE DEAD LOAD		0	2	4	6	7	7	7	6	4	3	1	0	−1	−1	0
	TOTAL DEAD LOAD		0	9	17	23	26	27	26	22	17	10	4	−1	−4	−4	0
	VERTICAL CURVE ORDINATE		0	0	0	0	0	0	0	0	0	0	0	0	0	0	0
	TOTAL		0	9	17	23	26	27	26	22	17	10	4	−1	−4	−4	0
G12	STRUCTURAL STEEL	2.689	0	2	3	4	5	5	5	4	3	2	1	0	−1	−1	0
	ADDITIONAL DEAD LOAD		0	7	14	19	22	23	22	20	15	10	5	1	−2	−2	0
	COMPOSITE DEAD LOAD		0	2	4	6	7	7	7	6	4	3	1	0	−1	−1	0
	TOTAL DEAD LOAD		0	11	21	29	34	36	34	29	23	15	7	0	−4	−4	0
	VERTICAL CURVE ORDINATE		0	0	0	0	0	0	0	0	0	0	0	0	0	0	0
	TOTAL		0	11	21	29	34	36	34	29	23	15	7	0	−4	−4	0
G13	STRUCTURAL STEEL	2.703	0	2	3	4	5	5	5	4	3	2	1	0	−1	−1	0
	ADDITIONAL DEAD LOAD		0	8	14	20	23	24	23	20	16	11	6	1	−2	−2	0
	COMPOSITE DEAD LOAD		0	2	4	5	6	7	6	5	4	3	1	0	−1	−1	0
	TOTAL DEAD LOAD		0	12	22	30	35	36	35	30	23	15	7	1	−4	−4	0
	VERTICAL CURVE ORDINATE		0	0	0	0	0	0	0	0	0	0	0	0	0	0	0
	TOTAL		0	12	22	30	35	36	35	30	23	15	7	1	−4	−4	0
G14	STRUCTURAL STEEL	2.717	0	2	4	5	6	6	6	5	4	2	1	0	−1	−1	0
	ADDITIONAL DEAD LOAD		0	8	14	20	23	24	23	20	15	10	5	0	−2	−2	0
	COMPOSITE DEAD LOAD		0	2	4	6	7	7	7	6	4	3	1	0	−1	−1	0
	TOTAL DEAD LOAD		0	12	22	30	35	37	35	31	24	15	7	0	−4	−4	0
	VERTICAL CURVE ORDINATE		0	0	0	0	0	0	0	0	0	0	0	0	0	0	0
	TOTAL		0	12	22	30	35	37	35	31	24	15	7	0	−4	−4	0
G15	STRUCTURAL STEEL	2.731	0	2	4	5	6	6	6	5	4	3	1	0	−1	−1	0
	ADDITIONAL DEAD LOAD		0	6	11	15	18	18	17	15	11	7	3	0	−2	−2	0
	COMPOSITE DEAD LOAD		0	2	4	5	6	7	6	6	4	3	1	0	−1	−1	0
	TOTAL DEAD LOAD		0	10	19	26	30	31	30	26	20	13	6	0	−3	−4	0
	VERTICAL CURVE ORDINATE		0	0	0	0	0	0	0	0	0	0	0	0	0	0	0
	TOTAL		0	10	19	26	30	31	30	26	20	13	6	0	−3	−4	0

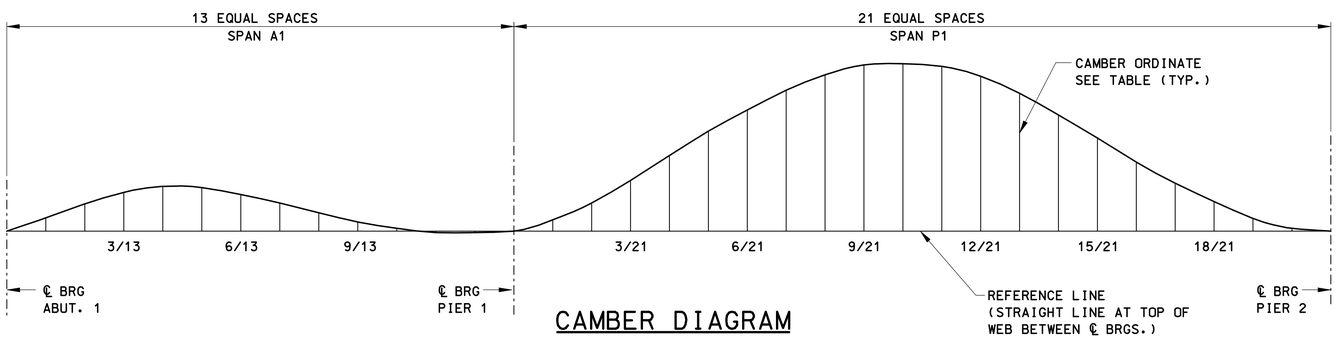

CAMBER DIAGRAM

NOT TO SCALE

NOTES

1. STEEL DEAD LOAD INCLUDES WELDED GIRDERS AND DIAPHRAGMS.
2. OTHER DEAD LOAD INCLUDES CONCRETE DECK SLAB, HAUNCHES, UTILITIES, AND ANY OTHER LOADS SUPPORTED BY THE STEEL SECTION ALONE.
3. COMPOSITE DEAD LOAD INCLUDES PARAPETS, CURBS, RAILINGS, BITUMINOUS CONCRETE OVERLAY AND ANY OTHER LOADS THAT ARE PLACED AFTER THE SLAB HAS CURED.
4. TOTAL CAMBER APPLIES TO TOP OF WEB.
5. IF HORIZONTAL CURVATURE IS ACHIEVED BY THE METHOD OF HEAT CURVING, THE FABRICATOR SHALL PROVIDE ADDITIONAL CAMBER IN ACCORDANCE WITH THE SPECIAL PROVISIONS.

REV.	DATE	DESCRIPTION	SHEET. NO
		REVISIONS	

SCALE AS NOTED

DESIGNER: B. BURKE
DRAFTER: B.BURKE
CHECKED BY: O. JAMBOTKAR
DATE CHECKED: 12-03-10

STATE OF CONNECTICUT
DEPARTMENT OF TRANSPORTATION

ENGINEER: PB AMERICAS, INC.
APPROVED BY:
DATE:

PROJECT TITLE: RECONSTRUCTION OF I-95 OVER WEST RIVER (BRIDGE NO. 00163)

CADD
PLOTTED 11/13/2012

TOWN: NEW HAVEN / WEST HAVEN

DRAWING TITLE: DEFLECTIONS AND CAMBERS – SPAN A1

PROJECT NO.: 92-522
DRAWING NO.: STR-76
SHEET NO.:

11:56:31 AM
11/13/2012
T:\WBCADD\Projects\PB\87735-FD\Structures\Contract_Sheets\Br00163\str-76-092522-00163.dgn

CAMBER ORDINATES – SPAN P1 (mm)

GIRDER MARK		INCREMENT	CL. BRG. PIER 1	1/20	2/20	3/20	4/20	5/20	6/20	7/20	8/20	9/20	10/20	11/20	12/20	13/20	14/20	15/20	16/20	17/20	18/20	19/20	CL. BRG PIER 2
G1	STRUCTURAL STEEL	2.889	0	2	4	8	11	14	18	20	22	23	23	22	20	17	14	11	7	4	2	0	0
	ADDITIONAL DEAD LOAD		0	5	13	23	34	45	54	62	68	70	70	67	61	53	43	32	22	13	6	1	0
	COMPOSITE DEAD LOAD		0	2	5	9	13	17	21	23	25	26	26	25	23	20	17	13	9	5	2	1	0
	TOTAL DEAD LOAD		0	9	23	40	58	76	93	106	115	119	119	114	104	90	73	56	38	22	10	2	0
	VERTICAL CURVE ORDINATE																						
	TOTAL		0	9	23	40	58	76	93	106	115	119	119	114	104	90	73	56	38	22	10	2	0
G2	STRUCTURAL STEEL	2.890	0	2	4	8	11	15	18	21	22	23	23	22	20	18	14	11	8	4	2	0	0
	ADDITIONAL DEAD LOAD		0	7	16	28	41	55	67	77	83	87	86	82	75	65	53	40	27	16	7	2	0
	COMPOSITE DEAD LOAD		0	2	5	9	13	17	21	24	26	27	27	26	23	20	17	13	9	5	2	1	0
	TOTAL DEAD LOAD		0	10	26	45	66	87	106	121	132	137	137	130	119	103	84	63	43	25	11	3	0
	VERTICAL CURVE ORDINATE																						
	TOTAL		0	10	26	45	66	87	106	121	132	137	137	130	119	103	84	63	43	25	11	3	0
G3	STRUCTURAL STEEL	2.892	0	2	4	8	11	15	18	21	23	24	23	22	21	18	15	11	8	5	2	1	0
	ADDITIONAL DEAD LOAD		0	7	16	28	41	55	67	77	84	87	87	83	76	65	53	40	27	16	7	2	0
	COMPOSITE DEAD LOAD		0	2	5	9	13	17	21	24	26	27	27	26	24	21	17	13	9	5	2	1	0
	TOTAL DEAD LOAD		0	10	26	45	66	87	106	121	132	138	137	131	120	104	85	64	44	26	12	3	0
	VERTICAL CURVE ORDINATE																						
	TOTAL		0	10	26	45	66	87	106	121	132	138	137	131	120	104	85	64	44	26	12	3	0
G4	STRUCTURAL STEEL	2.893	0	2	4	8	11	15	18	21	23	24	24	23	21	18	15	11	8	5	2	1	0
	ADDITIONAL DEAD LOAD		0	6	16	28	41	55	67	77	84	88	87	83	76	66	54	41	28	16	7	2	0
	COMPOSITE DEAD LOAD		0	2	6	10	15	19	23	27	29	30	30	29	26	23	19	15	10	6	3	1	0
	TOTAL DEAD LOAD		0	11	26	46	67	89	108	125	136	141	141	135	123	107	87	66	46	27	12	3	0
	VERTICAL CURVE ORDINATE																						
	TOTAL		0	11	26	46	67	89	108	125	136	141	141	135	123	107	87	66	46	27	12	3	0
G5	STRUCTURAL STEEL	2.895	0	2	4	8	11	15	18	21	23	24	24	23	21	18	15	11	8	5	2	1	0
	ADDITIONAL DEAD LOAD		0	6	15	26	39	51	62	72	78	82	82	78	71	62	50	38	26	15	7	2	0
	COMPOSITE DEAD LOAD		0	2	6	10	15	19	23	27	29	30	30	29	27	23	19	15	10	6	3	1	0
	TOTAL DEAD LOAD		0	10	25	44	64	85	104	119	130	136	135	129	118	103	84	64	44	26	12	3	0
	VERTICAL CURVE ORDINATE																						
	TOTAL		0	10	25	44	64	85	104	119	130	136	135	129	118	103	84	64	44	26	12	3	0
G6	STRUCTURAL STEEL	2.897	0	2	4	8	11	15	18	21	23	24	24	23	21	18	15	11	8	5	2	1	0
	ADDITIONAL DEAD LOAD		0	5	11	20	30	39	48	55	60	63	63	60	55	48	39	29	20	12	6	1	0
	COMPOSITE DEAD LOAD		0	2	5	8	12	16	19	22	24	25	25	24	22	19	16	12	8	5	2	1	0
	TOTAL DEAD LOAD		0	8	20	36	53	70	85	98	107	111	111	106	97	85	69	53	36	22	10	3	0
	VERTICAL CURVE ORDINATE																						
	TOTAL		0	8	20	36	53	70	85	98	107	111	111	106	97	85	69	53	36	22	10	3	0
G7	STRUCTURAL STEEL	2.898	0	2	4	8	11	15	18	21	23	24	24	23	21	18	15	12	8	5	2	1	0
	ADDITIONAL DEAD LOAD		0	6	16	28	41	55	67	77	84	88	88	84	77	67	55	42	29	17	8	2	0
	COMPOSITE DEAD LOAD		0	2	4	8	11	15	18	20	22	23	23	22	20	18	15	11	8	5	2	1	0
	TOTAL DEAD LOAD		0	10	25	43	64	84	103	118	129	135	135	129	118	103	84	64	44	27	12	3	0
	VERTICAL CURVE ORDINATE																						
	TOTAL		0	10	25	43	64	84	103	118	129	135	135	129	118	103	84	64	44	27	12	3	0
G8	STRUCTURAL STEEL	3.100	0	2	4	8	11	15	18	21	23	24	24	23	21	18	15	12	8	5	2	1	0
	ADDITIONAL DEAD LOAD		0	5	12	22	32	42	52	60	66	69	68	66	60	52	43	32	22	13	6	2	0
	COMPOSITE DEAD LOAD		0	2	4	7	10	13	15	17	19	20	20	19	17	15	13	10	7	4	2	1	0
	TOTAL DEAD LOAD		0	8	20	36	53	70	85	98	108	112	112	108	99	86	70	54	37	22	11	3	0
	VERTICAL CURVE ORDINATE																						
	TOTAL		0	8	20	36	53	70	85	98	108	112	112	108	99	86	70	54	37	22	11	3	0

CAMBER ORDINATES – SPAN P1 (mm)

GIRDER MARK		INCREMENT	CL. BRG. PIER 1	1/20	2/20	3/20	4/20	5/20	6/20	7/20	8/20	9/20	10/20	11/20	12/20	13/20	14/20	15/20	16/20	17/20	18/20	19/20	CL. BRG PIER 2
G9	STRUCTURAL STEEL	2.901	0	2	5	8	12	16	20	23	25	26	26	25	23	20	17	13	9	5	3	1	0
	ADDITIONAL DEAD LOAD		0	5	13	23	34	45	55	64	70	73	73	70	64	56	46	35	24	14	7	2	0
	COMPOSITE DEAD LOAD		0	2	5	8	12	15	18	21	23	24	24	23	21	19	15	12	8	5	2	1	0
	TOTAL DEAD LOAD		0	9	22	39	58	76	93	108	118	123	123	118	108	94	78	59	41	25	12	3	0
	VERTICAL CURVE ORDINATE		0	0	0	0	0	0	0	0	0	0	0	0	0	0	0	0	0	0	0	0	0
	TOTAL		0	9	22	39	58	76	93	108	118	123	123	118	108	94	78	59	41	25	12	3	0
G10	STRUCTURAL STEEL	2.902	0	2	5	8	12	16	20	23	25	26	26	25	23	20	17	13	9	5	3	1	0
	ADDITIONAL DEAD LOAD		0	6	14	25	37	49	60	69	76	79	80	76	70	61	50	38	26	16	8	2	0
	COMPOSITE DEAD LOAD		0	2	6	10	15	19	24	27	29	31	31	30	27	24	20	15	11	7	3	1	0
	TOTAL DEAD LOAD		0	10	25	43	64	85	104	119	131	136	137	131	120	105	86	66	46	28	13	4	0
	VERTICAL CURVE ORDINATE		0	0	0	0	0	0	0	0	0	0	0	0	0	0	0	0	0	0	0	0	0
	TOTAL		0	10	25	43	64	85	104	119	131	136	137	131	120	105	86	66	46	28	13	4	0
G11	STRUCTURAL STEEL	2.904	0	2	4	8	11	15	18	21	23	24	24	23	21	19	15	12	8	5	2	1	0
	ADDITIONAL DEAD LOAD		0	4	11	19	29	38	47	54	59	62	61	58	53	45	36	27	18	10	4	0	0
	COMPOSITE DEAD LOAD		0	3	6	11	16	21	25	29	32	33	33	32	29	26	21	17	12	7	3	1	0
	TOTAL DEAD LOAD		0	9	22	38	56	74	91	104	114	119	119	113	103	90	73	55	38	22	10	2	0
	VERTICAL CURVE ORDINATE		0	0	0	0	0	0	0	0	0	0	0	0	0	0	0	0	0	0	0	0	0
	TOTAL		0	9	22	38	56	74	91	104	114	119	119	113	103	90	73	55	38	22	10	2	0
G12	STRUCTURAL STEEL	2.906	0	2	4	8	11	15	18	21	23	24	24	23	22	19	16	12	8	5	3	1	0
	ADDITIONAL DEAD LOAD		0	5	14	24	36	49	60	69	75	78	78	73	66	56	45	32	21	11	3	0	0
	COMPOSITE DEAD LOAD		0	2	6	10	15	20	24	27	30	31	31	30	28	24	20	16	11	7	3	1	0
	TOTAL DEAD LOAD		0	10	24	42	62	83	102	117	128	134	133	127	116	100	81	60	40	23	9	1	0
	VERTICAL CURVE ORDINATE		0	0	0	0	0	0	0	0	0	0	0	0	0	0	0	0	0	0	0	0	0
	TOTAL		0	10	24	42	62	83	102	117	128	134	133	127	116	100	81	60	40	23	9	1	0
G13	STRUCTURAL STEEL	2.907	0	2	4	8	11	15	18	21	23	24	24	24	22	19	16	12	9	5	3	1	0
	ADDITIONAL DEAD LOAD		0	5	14	24	36	48	60	69	75	78	78	74	66	56	45	33	21	11	3	0	0
	COMPOSITE DEAD LOAD		0	2	5	9	14	18	22	25	27	29	29	28	26	22	19	14	10	6	3	1	0
	TOTAL DEAD LOAD		0	9	23	41	61	81	100	115	126	131	131	125	113	98	79	59	40	22	9	1	0
	VERTICAL CURVE ORDINATE		0	0	0	0	0	0	0	0	0	0	0	0	0	0	0	0	0	0	0	0	0
	TOTAL		0	9	23	41	61	81	100	115	126	131	131	125	113	98	79	59	40	22	9	1	0
G14	STRUCTURAL STEEL	2.909	0	2	5	8	13	17	21	24	26	27	27	26	24	21	18	14	10	6	3	1	0
	ADDITIONAL DEAD LOAD		0	6	14	26	38	51	63	73	80	84	84	80	73	63	51	38	26	15	6	1	0
	COMPOSITE DEAD LOAD		0	2	5	9	13	18	22	25	27	29	29	28	25	22	19	14	10	6	3	1	0
	TOTAL DEAD LOAD		0	10	25	43	64	86	105	122	134	140	140	134	123	107	87	66	46	27	12	3	0
	VERTICAL CURVE ORDINATE		0	0	0	0	0	0	0	0	0	0	0	0	0	0	0	0	0	0	0	0	0
	TOTAL		0	10	25	43	64	86	105	122	134	140	140	134	123	107	87	66	46	27	12	3	0
G15	STRUCTURAL STEEL	2.910	0	2	4	8	11	15	19	22	24	25	25	24	22	19	16	12	9	5	2	1	0
	ADDITIONAL DEAD LOAD		0	5	13	22	33	44	54	63	69	72	73	70	65	57	47	36	25	15	7	2	0
	COMPOSITE DEAD LOAD		0	2	5	9	13	17	21	24	26	28	28	27	25	22	18	14	10	6	3	1	0
	TOTAL DEAD LOAD		0	9	22	39	57	76	94	108	119	125	126	121	112	98	81	62	44	27	13	4	0
	VERTICAL CURVE ORDINATE		0	0	0	0	0	0	0	0	0	0	0	0	0	0	0	0	0	0	0	0	0
	TOTAL		0	9	22	39	57	76	94	108	119	125	126	121	112	98	81	62	44	27	13	4	0

NOTES

1. STEEL DEAD LOAD INCLUDES WELDED GIRDERS AND DIAPHRAGMS.
2. OTHER DEAD LOAD INCLUDES CONCRETE DECK SLAB, HAUNCHES, UTILITIES, AND ANY OTHER LOADS SUPPORTED BY THE STEEL SECTION ALONE.
3. COMPOSITE DEAD LOAD INCLUDES PARAPETS, CURBS, RAILINGS, BITUMINOUS CONCRETE OVERLAY AND ANY OTHER LOADS THAT ARE PLACED AFTER THE SLAB HAS CURED.
4. TOTAL CAMBER APPLIES TO TOP OF WEB.
5. IF HORIZONTAL CURVATURE IS ACHIEVED BY THE METHOD OF HEAT CURVING, THE FABRICATOR SHALL PROVIDE ADDITIONAL CAMBER IN ACCORDANCE WITH THE SPECIAL PROVISIONS.
6. FOR GIRDER CAMBER DIAGRAM SEE "DEFLECTIONS AND CAMBERS – SPAN A1"

REV.	DATE	DESCRIPTION	SHEET. NO
		REVISIONS	

SCALE AS NOTED

DESIGNER: B. BURKE
DRAFTER: B. BURKE
CHECKED BY: O. JAMBOTKAR
DATE CHECKED: 12-03-10

STATE OF CONNECTICUT
DEPARTMENT OF TRANSPORTATION

ENGINEER: PB AMERICAS, INC.
APPROVED BY:
DATE:

PROJECT TITLE: RECONSTRUCTION OF I-95 OVER WEST RIVER (BRIDGE NO. 00163)
CADD
PLOTTED 11/13/2012

TOWN: NEW HAVEN / WEST HAVEN
DRAWING TITLE: DEFLECTION AND CAMBERS – SPAN P1

PROJECT NO.: 92-522
DRAWING NO.: STR-77
SHEET NO.:

11:57:08 AM
11/13/2012
T:\HBCADD\Projects\PB\8735\FD\Structures\Contract_Sheets\Br00163\dr-77-092592-00163.dgn

CAMBER ORDINATES – SPAN P2 (mm)

GIRDER MARK		INCREMENT	CL. BRG. PIER 2	1/20	2/20	3/20	4/20	5/20	6/20	7/20	8/20	9/20	10/20	11/20	12/20	13/20	14/20	15/20	16/20	17/20	18/20	19/20	CL. BRG PIER 3
G1	STRUCTURAL STEEL	3.100	0	1	3	6	10	14	18	21	24	26	26	26	24	21	18	14	10	6	3	1	0
	ADDITIONAL DEAD LOAD		0	3	9	19	30	43	55	66	75	80	82	80	75	66	55	43	31	19	9	3	0
	COMPOSITE DEAD LOAD		0	1	4	8	12	17	22	26	29	30	31	30	29	26	22	17	12	8	4	1	0
	TOTAL DEAD LOAD		0	5	16	33	52	74	95	113	127	136	139	136	127	113	95	74	53	33	16	5	0
	VERTICAL CURVE ORDINATE																						
	TOTAL		0	5	16	33	52	74	95	113	127	136	139	136	127	113	95	74	53	33	16	5	0
G2	STRUCTURAL STEEL	3.100	0	1	3	6	10	14	18	22	24	26	27	26	24	21	18	14	10	6	3	1	0
	ADDITIONAL DEAD LOAD		0	3	11	22	36	51	65	79	89	95	98	95	89	78	65	50	35	21	10	3	0
	COMPOSITE DEAD LOAD		0	1	4	8	12	17	21	25	28	30	31	30	28	25	21	17	12	7	4	1	0
	TOTAL DEAD LOAD		0	5	17	36	58	81	105	126	142	152	155	151	141	125	104	80	56	34	17	5	0
	VERTICAL CURVE ORDINATE																						
	TOTAL		0	5	17	36	58	81	105	126	142	152	155	151	141	125	104	80	56	34	17	5	0
G3	STRUCTURAL STEEL	3.100	0	1	3	6	10	14	18	21	24	26	26	25	24	21	17	13	9	6	3	1	0
	ADDITIONAL DEAD LOAD		0	3	10	21	35	50	64	77	87	94	96	93	87	76	63	48	34	20	9	3	0
	COMPOSITE DEAD LOAD		0	1	4	7	12	17	21	25	28	30	31	30	28	25	21	16	11	7	3	1	0
	TOTAL DEAD LOAD		0	5	17	35	57	80	103	124	139	149	152	149	138	122	101	78	54	33	15	4	0
	VERTICAL CURVE ORDINATE																						
	TOTAL		0	5	17	35	57	80	103	124	139	149	152	149	138	122	101	78	54	33	15	4	0
G4	STRUCTURAL STEEL	3.100	0	1	3	6	10	14	17	21	24	25	26	25	23	20	17	13	9	5	2	1	0
	ADDITIONAL DEAD LOAD		0	3	10	21	34	49	63	76	86	92	94	92	85	74	61	47	32	19	9	2	0
	COMPOSITE DEAD LOAD		0	1	4	8	13	18	23	28	31	33	34	33	31	27	23	18	12	8	4	1	0
	TOTAL DEAD LOAD		0	5	17	35	57	81	104	125	140	150	153	149	138	122	101	77	53	32	14	4	0
	VERTICAL CURVE ORDINATE																						
	TOTAL		0	5	17	35	57	81	104	125	140	150	153	149	138	122	101	77	53	32	14	4	0
G5	STRUCTURAL STEEL	3.100	0	1	3	6	10	13	17	21	23	25	25	25	23	20	17	13	9	5	2	1	0
	ADDITIONAL DEAD LOAD		0	3	9	19	32	45	58	70	79	85	87	84	78	68	56	43	29	17	8	2	0
	COMPOSITE DEAD LOAD		0	1	4	8	13	18	23	27	31	33	33	32	30	27	22	17	12	7	3	1	0
	TOTAL DEAD LOAD		0	5	16	33	54	76	99	118	133	142	145	141	131	115	95	72	50	29	13	3	0
	VERTICAL CURVE ORDINATE																						
	TOTAL		0	5	16	33	54	76	99	118	133	142	145	141	131	115	95	72	50	29	13	3	0
G6	STRUCTURAL STEEL	3.100	0	1	3	6	9	13	17	20	23	25	25	24	22	20	16	12	8	5	2	0	0
	ADDITIONAL DEAD LOAD		0	2	7	14	24	34	44	53	60	64	66	64	59	51	42	32	22	13	5	1	0
	COMPOSITE DEAD LOAD		0	1	3	6	10	14	18	22	25	26	27	26	24	21	18	14	9	6	3	1	0
	TOTAL DEAD LOAD		0	4	13	27	43	62	80	95	108	115	117	114	105	92	76	58	39	23	10	2	0
	VERTICAL CURVE ORDINATE																						
	TOTAL		0	4	13	27	43	62	80	95	108	115	117	114	105	92	76	58	39	23	10	2	0
G7	STRUCTURAL STEEL	3.100	0	1	3	6	9	13	17	20	23	24	25	24	22	19	16	12	8	5	2	0	0
	ADDITIONAL DEAD LOAD		0	3	9	20	33	47	61	73	83	88	90	87	80	70	57	43	29	16	7	1	0
	COMPOSITE DEAD LOAD		0	1	3	6	9	13	17	20	23	24	24	24	22	19	16	12	9	5	2	0	0
	TOTAL DEAD LOAD		0	4	15	31	51	73	94	113	128	137	139	135	124	109	89	67	46	26	11	2	0
	VERTICAL CURVE ORDINATE																						
	TOTAL		0	4	15	31	51	73	94	113	128	137	139	135	124	109	89	67	46	26	11	2	0
G8	STRUCTURAL STEEL	3.100	0	1	3	5	9	13	17	20	22	24	24	23	22	19	15	11	8	4	2	0	0
	ADDITIONAL DEAD LOAD		0	2	7	15	25	36	46	56	63	67	69	66	61	53	43	32	22	12	5	1	0
	COMPOSITE DEAD LOAD		0	1	2	5	8	11	14	17	19	20	21	20	19	16	14	10	7	4	2	0	0
	TOTAL DEAD LOAD		0	3	12	25	42	60	77	93	104	112	113	110	101	88	72	54	36	20	8	1	0
	VERTICAL CURVE ORDINATE																						
	TOTAL		0	3	12	25	42	60	77	93	104	112	113	110	101	88	72	54	36	20	8	1	0

CAMBER ORDINATES – SPAN P2 (mm)

GIRDER MARK		INCREMENT	CL. BRG. PIER 2	1/20	2/20	3/20	4/20	5/20	6/20	7/20	8/20	9/20	10/20	11/20	12/20	13/20	14/20	15/20	16/20	17/20	18/20	19/20	CL. BRG PIER 3
G9	STRUCTURAL STEEL	3.100	0	1	3	6	10	14	18	21	24	25	26	25	23	20	16	12	8	4	1	0	0
	ADDITIONAL DEAD LOAD		0	2	8	16	27	38	50	60	67	72	73	71	65	56	46	34	23	12	5	0	0
	COMPOSITE DEAD LOAD		0	1	3	6	10	13	17	20	23	24	25	24	22	19	16	12	8	5	2	0	0
	TOTAL DEAD LOAD		0	4	13	28	46	65	84	101	114	122	123	119	110	95	77	58	38	21	8	1	0
	VERTICAL CURVE ORDINATE		0	0	0	0	0	0	0	0	0	0	0	0	0	0	0	0	0	0	0	0	0
	TOTAL		0	4	13	28	46	65	84	101	114	122	123	119	110	95	77	58	38	21	8	1	0
G10	STRUCTURAL STEEL	3.100	0	1	3	6	10	14	18	21	24	25	25	25	22	19	16	12	8	4	1	0	0
	ADDITIONAL DEAD LOAD		0	2	8	17	28	41	53	64	72	77	78	75	69	60	48	36	24	13	5	0	0
	COMPOSITE DEAD LOAD		0	1	4	7	12	17	22	26	29	30	31	30	28	24	20	15	10	5	2	0	0
	TOTAL DEAD LOAD		0	4	14	30	50	71	92	110	124	132	134	130	119	103	84	62	41	22	8	0	0
	VERTICAL CURVE ORDINATE		0	0	0	0	0	0	0	0	0	0	0	0	0	0	0	0	0	0	0	0	0
	TOTAL		0	4	14	30	50	71	92	110	124	132	134	130	119	103	84	62	41	22	8	0	0
G11	STRUCTURAL STEEL	3.100	0	1	2	5	9	12	16	19	21	23	23	22	20	17	14	10	7	3	1	0	0
	ADDITIONAL DEAD LOAD		0	3	10	20	31	44	56	67	76	81	83	82	77	69	58	46	33	21	11	4	0
	COMPOSITE DEAD LOAD		0	1	4	8	13	18	23	27	31	32	33	32	29	26	21	16	10	6	2	0	0
	TOTAL DEAD LOAD		0	5	16	33	53	74	95	113	127	136	139	136	126	111	93	72	50	31	15	4	0
	VERTICAL CURVE ORDINATE		0	0	0	0	0	0	0	0	0	0	0	0	0	0	0	0	0	0	0	0	0
	TOTAL		0	5	16	33	53	74	95	113	127	136	139	136	126	111	93	72	50	31	15	4	0
G12	STRUCTURAL STEEL	3.100	0	1	2	5	8	12	16	19	21	22	22	22	20	17	13	10	6	3	1	0	0
	ADDITIONAL DEAD LOAD		0	6	15	29	46	63	81	96	109	117	120	118	112	101	86	69	51	34	19	8	0
	COMPOSITE DEAD LOAD		0	1	3	7	12	17	21	26	29	30	31	30	27	24	19	14	10	5	2	0	0
	TOTAL DEAD LOAD		0	7	21	41	66	92	118	140	158	169	173	170	159	141	119	93	67	42	22	7	0
	VERTICAL CURVE ORDINATE		0	0	0	0	0	0	0	0	0	0	0	0	0	0	0	0	0	0	0	0	0
	TOTAL		0	7	21	41	66	92	118	140	158	169	173	170	159	141	119	93	67	42	22	7	0
G13	STRUCTURAL STEEL	3.100	0	1	2	5	8	12	15	18	21	22	22	21	19	16	13	9	6	3	1	0	0
	ADDITIONAL DEAD LOAD		0	5	15	29	45	63	80	95	108	116	119	117	110	99	84	68	50	33	18	7	0
	COMPOSITE DEAD LOAD		0	1	3	6	11	15	19	23	26	27	28	27	24	21	17	13	8	4	1	0	0
	TOTAL DEAD LOAD		0	7	21	40	64	90	115	137	154	165	168	165	154	137	115	90	64	40	20	7	0
	VERTICAL CURVE ORDINATE		0	0	0	0	0	0	0	0	0	0	0	0	0	0	0	0	0	0	0	0	0
	TOTAL		0	7	21	40	64	90	115	137	154	165	168	165	154	137	115	90	64	40	20	7	0
G14	STRUCTURAL STEEL	3.100	0	1	2	5	9	13	17	20	23	24	24	23	21	18	14	10	6	3	1	−1	0
	ADDITIONAL DEAD LOAD		0	4	11	23	37	52	67	81	91	97	99	97	90	79	65	50	35	21	10	3	0
	COMPOSITE DEAD LOAD		0	1	3	6	10	15	19	23	25	27	27	26	24	21	17	12	8	4	1	0	0
	TOTAL DEAD LOAD		0	5	17	35	57	80	103	123	139	148	151	146	135	118	96	73	49	28	12	2	0
	VERTICAL CURVE ORDINATE		0	0	0	0	0	0	0	0	0	0	0	0	0	0	0	0	0	0	0	0	0
	TOTAL		0	5	17	35	57	80	103	123	139	148	151	146	135	118	96	73	49	28	12	2	0
G15	STRUCTURAL STEEL	3.100	0	1	3	6	10	14	17	21	23	24	25	24	22	19	15	11	7	3	1	0	0
	ADDITIONAL DEAD LOAD		0	2	7	15	25	35	46	55	62	66	66	64	58	50	39	28	18	8	2	−1	0
	COMPOSITE DEAD LOAD		0	1	3	6	10	14	18	22	24	26	26	25	23	20	16	12	8	4	1	0	0
	TOTAL DEAD LOAD		0	3	12	27	44	63	82	98	109	116	117	113	103	88	70	51	32	16	4	−2	0
	VERTICAL CURVE ORDINATE		0	0	0	0	0	0	0	0	0	0	0	0	0	0	0	0	0	0	0	0	0
	TOTAL		0	3	12	27	44	63	82	98	109	116	117	113	103	88	70	51	32	16	4	−2	0

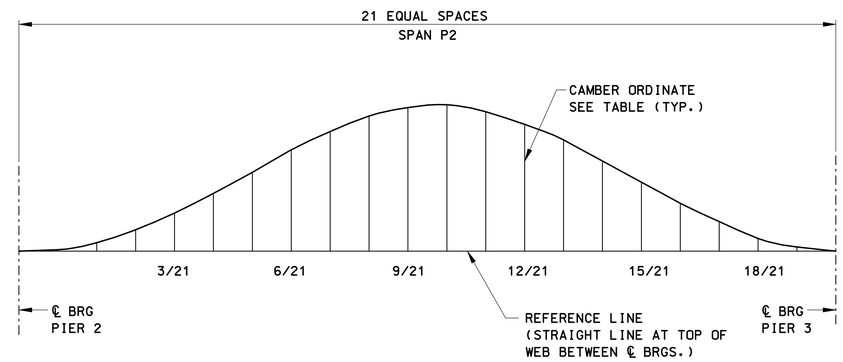

CAMBER DIAGRAM

NOT TO SCALE

NOTES

1. STEEL DEAD LOAD INCLUDES WELDED GIRDERS AND DIAPHRAGMS.
2. OTHER DEAD LOAD INCLUDES CONCRETE DECK SLAB, HAUNCHES, UTILITIES, AND ANY OTHER LOADS SUPPORTED BY THE STEEL SECTION ALONE.
3. COMPOSITE DEAD LOAD INCLUDES PARAPETS, CURBS, RAILINGS, BITUMINOUS CONCRETE OVERLAY AND ANY OTHER LOADS THAT ARE PLACED AFTER THE SLAB HAS CURED.
4. TOTAL CAMBER APPLIES TO TOP OF WEB.
5. IF HORIZONTAL CURVATURE IS ACHIEVED BY THE METHOD OF HEAT CURVING, THE FABRICATOR SHALL PROVIDE ADDITIONAL CAMBER IN ACCORDANCE WITH THE SPECIAL PROVISIONS.

REV.	DATE	DESCRIPTION	SHEET. NO
		REVISIONS	

SCALE AS NOTED

DESIGNER: B. BURKE
DRAFTER: B. BURKE
CHECKED BY: O. JAMBOTKAR
DATE CHECKED: 12-03-10

STATE OF CONNECTICUT
DEPARTMENT OF TRANSPORTATION

ENGINEER: PB AMERICAS, INC.
APPROVED BY:
DATE:

PROJECT TITLE: RECONSTRUCTION OF I-95 OVER WEST RIVER (BRIDGE NO. 00163)

CADD
PLOTTED 11/13/2012

TOWN: NEW HAVEN / WEST HAVEN

DRAWING TITLE: DEFLECTIONS AND CAMBERS – SPAN P2

PROJECT NO.: 92-522
DRAWING NO.: STR-78
SHEET NO.:

11:57:47 AM
11/13/2012
T:\V8CADD\Projects\PB\8735\FD\Structures\Contract_Sheets\Br00163\str-78-092522-00163.dgn

CAMBER ORDINATES – SPAN P3 (mm)

GIRDER MARK		INCREMENT	CL. BRG. PIER 3	1/20	2/20	3/20	4/20	5/20	6/20	7/20	8/20	9/20	10/20	11/20	12/20	13/20	14/20	15/20	16/20	17/20	18/20	19/20	CL. BRG PIER 4
G1	STRUCTURAL STEEL	3.100	0	1	2	5	8	12	16	19	21	23	23	23	21	18	15	11	8	4	2	0	0
	ADDITIONAL DEAD LOAD		0	1	6	14	25	36	47	57	64	69	70	68	63	55	45	33	22	12	5	0	0
	COMPOSITE DEAD LOAD		0	1	3	6	10	14	18	22	25	26	27	26	24	21	17	13	9	5	2	0	0
	TOTAL DEAD LOAD		0	3	11	25	43	62	81	97	110	118	120	117	108	94	77	58	39	21	8	1	0
	VERTICAL CURVE ORDINATE																						
	TOTAL		0	3	11	25	43	62	81	97	110	118	120	117	108	94	77	58	39	21	8	1	0
G2	STRUCTURAL STEEL	3.100	0	1	3	6	9	13	17	21	23	25	26	25	23	21	17	13	9	5	3	1	0
	ADDITIONAL DEAD LOAD		0	2	9	19	32	46	61	73	83	90	92	90	83	73	60	46	32	19	8	2	0
	COMPOSITE DEAD LOAD		0	1	3	6	10	15	19	23	26	28	28	28	26	23	19	15	10	6	3	1	0
	TOTAL DEAD LOAD		0	4	14	31	52	75	97	117	133	143	146	142	132	116	96	74	51	30	14	3	0
	VERTICAL CURVE ORDINATE																						
	TOTAL		0	4	14	31	52	75	97	117	133	143	146	142	132	116	96	74	51	30	14	3	0
G3	STRUCTURAL STEEL	3.100	0	1	3	6	10	14	18	22	25	26	27	27	25	22	18	14	10	6	3	1	0
	ADDITIONAL DEAD LOAD		0	3	10	21	34	49	64	78	88	95	97	95	89	79	66	51	36	22	11	3	0
	COMPOSITE DEAD LOAD		0	1	3	7	11	16	20	24	27	29	30	29	27	24	20	16	11	7	3	1	0
	TOTAL DEAD LOAD		0	4	16	33	55	79	103	123	140	150	154	151	141	125	105	81	58	36	17	5	0
	VERTICAL CURVE ORDINATE																						
	TOTAL		0	4	16	33	55	79	103	123	140	150	154	151	141	125	105	81	58	36	17	5	0
G4	STRUCTURAL STEEL	3.100	0	1	3	6	10	15	19	23	26	28	29	28	26	24	20	16	11	7	4	1	0
	ADDITIONAL DEAD LOAD		0	3	11	22	36	52	67	81	92	100	102	101	94	84	71	56	40	26	13	5	0
	COMPOSITE DEAD LOAD		0	1	4	8	13	18	24	28	32	34	35	34	32	29	24	19	14	9	5	1	0
	TOTAL DEAD LOAD		0	5	18	37	60	85	110	132	150	161	166	163	153	137	115	91	65	42	22	7	0
	VERTICAL CURVE ORDINATE																						
	TOTAL		0	5	18	37	60	85	110	132	150	161	166	163	153	137	115	91	65	42	22	7	0
G5	STRUCTURAL STEEL	3.100	0	1	3	7	11	15	19	23	26	28	29	29	27	24	21	16	12	8	4	1	0
	ADDITIONAL DEAD LOAD		0	3	11	22	35	50	65	78	88	95	98	97	91	81	69	54	40	26	14	5	0
	COMPOSITE DEAD LOAD		0	1	4	8	13	19	24	29	33	35	36	36	33	30	26	20	15	10	5	2	0
	TOTAL DEAD LOAD		0	5	18	37	59	84	108	130	147	159	163	161	151	136	115	91	66	43	23	8	0
	VERTICAL CURVE ORDINATE																						
	TOTAL		0	5	18	37	59	84	108	130	147	159	163	161	151	136	115	91	66	43	23	8	0
G6	STRUCTURAL STEEL	3.100	0	1	4	7	11	16	20	24	27	30	30	30	28	26	22	17	13	9	5	2	0
	ADDITIONAL DEAD LOAD		0	3	9	17	28	40	51	62	70	76	78	77	73	65	55	44	32	21	12	4	0
	COMPOSITE DEAD LOAD		0	1	4	7	11	16	21	25	28	30	31	30	29	26	22	18	13	9	5	2	0
	TOTAL DEAD LOAD		0	5	16	31	51	71	92	110	125	135	139	137	130	117	99	79	59	39	21	8	0
	VERTICAL CURVE ORDINATE																						
	TOTAL		0	5	16	31	51	71	92	110	125	135	139	137	130	117	99	79	59	39	21	8	0
G7	STRUCTURAL STEEL	3.100	0	1	4	7	12	16	21	25	29	31	32	31	30	27	23	19	14	9	5	2	0
	ADDITIONAL DEAD LOAD		0	4	13	26	41	58	75	90	102	110	114	112	106	96	82	66	49	33	19	7	0
	COMPOSITE DEAD LOAD		0	1	4	7	11	15	20	24	27	29	29	29	28	25	22	17	13	9	5	2	0
	TOTAL DEAD LOAD		0	7	20	40	64	90	115	138	157	169	175	173	164	148	127	102	76	51	29	11	0
	VERTICAL CURVE ORDINATE																						
	TOTAL		0	7	20	40	64	90	115	138	157	169	175	173	164	148	127	102	76	51	29	11	0
G8	STRUCTURAL STEEL	3.100	0	1	4	8	12	17	22	26	30	32	33	33	31	28	24	20	15	10	6	2	0
	ADDITIONAL DEAD LOAD		0	4	11	21	33	47	60	72	82	88	91	91	86	78	67	54	41	28	16	7	0
	COMPOSITE DEAD LOAD		0	1	3	6	10	14	18	21	24	25	26	26	25	22	19	16	12	8	5	2	0
	TOTAL DEAD LOAD		0	6	18	35	55	77	99	119	135	146	151	149	142	129	111	90	68	46	27	11	0
	VERTICAL CURVE ORDINATE																						
	TOTAL		0	6	18	35	55	77	99	119	135	146	151	149	142	129	111	90	68	46	27	11	0

CAMBER ORDINATES – SPAN P3 (mm)

GIRDER MARK		INCREMENT	CL. BRG. PIER 3	1/20	2/20	3/20	4/20	5/20	6/20	7/20	8/20	9/20	10/20	11/20	12/20	13/20	14/20	15/20	16/20	17/20	18/20	19/20	CL. BRG PIER 4
G9	STRUCTURAL STEEL	3.100	0	2	5	9	14	20	25	30	34	36	38	37	36	32	28	23	18	12	7	3	0
	ADDITIONAL DEAD LOAD		0	4	12	23	37	51	66	79	90	98	101	101	96	88	76	62	47	32	19	8	0
	COMPOSITE DEAD LOAD		0	1	4	8	13	18	23	27	30	33	34	34	32	30	26	22	17	12	7	3	0
	TOTAL DEAD LOAD		0	7	21	40	64	89	114	136	154	166	173	172	164	150	130	107	81	56	32	13	0
	VERTICAL CURVE ORDINATE		0	0	0	0	0	0	0	0	0	0	0	0	0	0	0	0	0	0	0	0	0
	TOTAL		0	7	21	40	64	89	114	136	154	166	173	172	164	150	130	107	81	56	32	13	0
G10	STRUCTURAL STEEL	3.100	0	2	5	9	15	20	26	31	35	37	39	38	37	34	29	24	18	13	8	3	0
	ADDITIONAL DEAD LOAD		0	5	13	26	41	57	73	88	100	108	112	112	107	98	85	70	53	37	22	9	0
	COMPOSITE DEAD LOAD		0	2	6	11	17	24	30	36	40	43	45	45	43	40	35	29	23	16	10	4	0
	TOTAL DEAD LOAD		0	8	24	46	73	101	129	154	174	189	196	195	187	171	150	123	95	66	39	16	0
	VERTICAL CURVE ORDINATE		0	0	0	0	0	0	0	0	0	0	0	0	0	0	0	0	0	0	0	0	0
	TOTAL		0	8	24	46	73	101	129	154	174	189	196	195	187	171	150	123	95	66	39	16	0
G11	STRUCTURAL STEEL	3.100	0	2	5	9	14	19	24	29	32	35	36	36	35	32	28	23	18	12	7	3	0
	ADDITIONAL DEAD LOAD		0	0	3	8	17	26	36	46	54	60	64	65	63	58	51	42	32	22	13	5	0
	COMPOSITE DEAD LOAD		0	2	6	12	19	26	33	39	44	48	49	49	48	44	39	32	25	18	11	5	0
	TOTAL DEAD LOAD		0	4	14	29	49	71	93	113	130	143	150	150	145	134	118	98	75	53	31	13	0
	VERTICAL CURVE ORDINATE		0	0	0	0	0	0	0	0	0	0	0	0	0	0	0	0	0	0	0	0	0
	TOTAL		0	4	14	29	49	71	93	113	130	143	150	150	145	134	118	98	75	53	31	13	0
G12	STRUCTURAL STEEL	3.101	0	2	5	9	14	20	25	30	34	36	38	38	36	33	29	24	19	13	8	3	0
	ADDITIONAL DEAD LOAD		0	−3	−1	4	13	23	35	47	57	66	71	74	73	69	62	52	40	28	17	7	0
	COMPOSITE DEAD LOAD		0	2	6	12	18	25	32	38	43	46	48	48	46	43	38	32	25	18	11	5	0
	TOTAL DEAD LOAD		0	1	10	25	45	68	92	114	133	148	157	159	155	145	129	108	84	60	36	16	0
	VERTICAL CURVE ORDINATE		0	0	0	0	0	0	0	0	0	0	0	0	0	0	0	0	0	0	0	0	0
	TOTAL		0	1	10	25	45	68	92	114	133	148	157	159	155	145	129	108	84	60	36	16	0
G13	STRUCTURAL STEEL	3.103	0	2	5	10	15	21	26	31	35	38	39	39	38	35	31	26	20	14	9	4	0
	ADDITIONAL DEAD LOAD		0	−2	0	6	15	27	39	52	63	72	78	81	80	76	69	58	46	33	20	9	0
	COMPOSITE DEAD LOAD		0	2	6	11	17	24	30	35	40	43	45	45	44	41	36	30	24	17	11	5	0
	TOTAL DEAD LOAD		0	2	11	27	47	71	95	118	138	153	162	166	162	152	135	114	90	64	39	17	0
	VERTICAL CURVE ORDINATE		0	0	0	0	0	0	0	0	0	0	0	0	0	0	0	0	0	0	0	0	0
	TOTAL		0	2	11	27	47	71	95	118	138	153	162	166	162	152	135	114	90	64	39	17	0
G14	STRUCTURAL STEEL	3.105	0	2	6	11	17	24	30	35	40	43	45	45	44	40	36	30	23	17	10	5	0
	ADDITIONAL DEAD LOAD		0	3	10	21	35	51	68	84	97	108	114	116	113	106	94	79	62	45	28	12	0
	COMPOSITE DEAD LOAD		0	2	6	11	18	24	30	36	41	44	46	46	44	41	37	31	25	18	11	5	0
	TOTAL DEAD LOAD		0	7	22	44	70	99	128	155	178	195	205	207	201	187	167	140	110	79	49	22	0
	VERTICAL CURVE ORDINATE		0	0	0	0	0	0	0	0	0	0	0	0	0	0	0	0	0	0	0	0	0
	TOTAL		0	7	22	44	70	99	128	155	178	195	205	207	201	187	167	140	110	79	49	22	0
G15	STRUCTURAL STEEL	3.105	0	2	6	10	16	22	28	34	38	41	43	43	41	38	34	29	23	16	10	4	0
	ADDITIONAL DEAD LOAD		0	6	16	29	45	62	79	95	107	117	121	122	118	109	97	81	64	46	28	13	0
	COMPOSITE DEAD LOAD		0	2	6	12	18	24	30	36	40	44	45	46	44	41	37	31	25	18	11	5	0
	TOTAL DEAD LOAD		0	10	28	51	79	109	138	164	186	201	210	210	203	189	167	141	111	80	49	22	0
	VERTICAL CURVE ORDINATE		0	0	0	0	0	0	0	0	0	0	0	0	0	0	0	0	0	0	0	0	0
	TOTAL		0	10	28	51	79	109	138	164	186	201	210	210	203	189	167	141	111	80	49	22	0

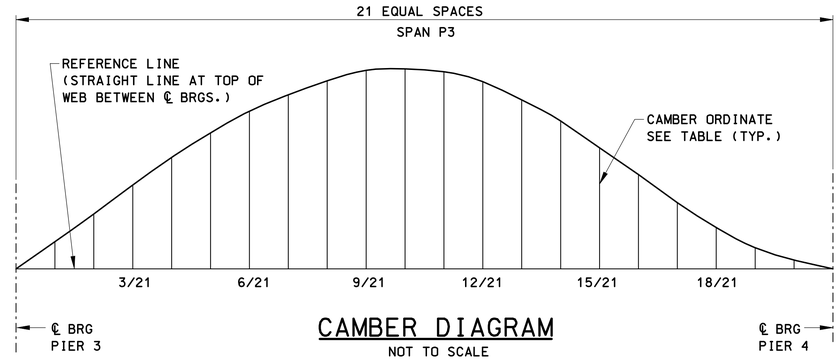

CAMBER DIAGRAM
NOT TO SCALE

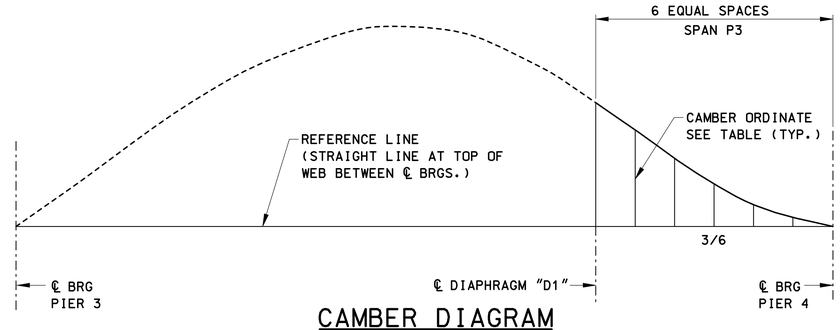

CAMBER DIAGRAM
NOT TO SCALE
(FOR GIRDERS G11A, G12A, & G13A ONLY)

CAMBER ORDINATES – SPAN P3NB (mm)

GIRDER MARK		INCREMENT	℄ "D1"	1/6	2/6	3/6	4/6	5/6	℄.BRG PIER 4
G11A	STEEL DEAD LOAD	3.000	1	0	0	−1	−1	−1	0
	OTHER DEAD LOAD		1	−1	−2	−3	−4	−3	0
	COMPOSITE DEAD LOAD		1	0	0	−1	−1	0	0
	TOTAL DEAD LOAD		3	−1	−2	−5	−6	−4	0
	VERTICAL CURVE ORD		0	0	0	0	0	0	0
	TOTAL CAMBER		3	−1	−2	−5	−6	−4	0
G12A	STEEL DEAD LOAD	3.000	1	0	0	−1	−1	−1	0
	OTHER DEAD LOAD		2	1	−1	−2	−2	−2	0
	COMPOSITE DEAD LOAD		1	1	0	0	−1	−1	0
	TOTAL DEAD LOAD		4	2	−1	−3	−4	−4	0
	VERTICAL CURVE ORD		0	0	0	0	0	0	0
	TOTAL CAMBER		4	2	−1	−3	−4	−4	0
G13A	STEEL DEAD LOAD	3.000	1	1	0	0	0	0	0
	OTHER DEAD LOAD		3	2	1	0	−1	−1	0
	COMPOSITE DEAD LOAD		2	1	1	0	0	0	0
	TOTAL DEAD LOAD		6	4	2	0	−1	−1	0
	VERTICAL CURVE ORD		0	0	0	0	0	0	0
	TOTAL CAMBER		6	4	2	0	−1	−1	0

NOTES

1. STEEL DEAD LOAD INCLUDES WELDED GIRDERS AND DIAPHRAGMS.
2. OTHER DEAD LOAD INCLUDES CONCRETE DECK SLAB, HAUNCHES, UTILITIES, AND ANY OTHER LOADS SUPPORTED BY THE STEEL SECTION ALONE.
3. COMPOSITE DEAD LOAD INCLUDES PARAPETS, CURBS, RAILINGS, BITUMINOUS CONCRETE OVERLAY AND ANY OTHER LOADS THAT ARE PLACED AFTER THE SLAB HAS CURED.
4. TOTAL CAMBER APPLIES TO TOP OF WEB.
5. IF HORIZONTAL CURVATURE IS ACHIEVED BY THE METHOD OF HEAT CURVING, THE FABRICATOR SHALL PROVIDE ADDITIONAL CAMBER IN ACCORDANCE WITH THE SPECIAL PROVISIONS.

REV.	DATE	DESCRIPTION	SHEET. NO.
		REVISIONS	

SCALE AS NOTED

DESIGNER: B.BURKE
DRAFTER: B.BURKE
CHECKED BY: O. JAMBOTKAR
DATE CHECKED: 12-03-10

STATE OF CONNECTICUT
DEPARTMENT OF TRANSPORTATION

ENGINEER: PB AMERICAS, INC.
APPROVED BY:
DATE:

PROJECT TITLE: RECONSTRUCTION OF I-95 OVER WEST RIVER (BRIDGE NO. 00163)

TOWN: NEW HAVEN / WEST HAVEN

DRAWING TITLE: DEFLECTION AND CAMBERS – SPAN P3

PROJECT NO.: 92-522
DRAWING NO.: STR-79
SHEET NO.:

CADD
PLOTTED 11/13/2012

11:59:23 AM
11/13/2012
T:\V8CADD\Projects\PB\8735\FD\Structures\Contract_Sheets\Br00163\str-79-092522-00163.dgn

CAMBER ORDINATES – SPAN P4 (mm)

GIRDER MARK		INCREMENT	CL. BRG. PIER 4	1/20	2/20	3/20	4/20	5/20	6/20	7/20	8/20	9/20	10/20	11/20	12/20	13/20	14/20	15/20	16/20	17/20	18/20	19/20	CL. BRG PIER 5
G1	STRUCTURAL STEEL	3.173	0	1	4	8	12	17	22	26	29	31	32	31	29	26	22	18	13	8	5	2	0
	ADDITIONAL DEAD LOAD		0	4	12	24	38	53	67	80	90	97	99	97	91	82	69	55	40	26	14	5	0
	COMPOSITE DEAD LOAD		0	2	5	10	15	21	27	31	35	38	38	38	36	32	28	23	17	11	6	2	0
	TOTAL DEAD LOAD		0	7	22	42	65	91	115	137	154	165	169	166	156	141	120	95	70	46	25	9	0
	VERTICAL CURVE ORDINATE		0																				0
	TOTAL		0	7	22	42	65	91	115	137	154	165	169	166	156	141	120	95	70	46	25	9	0
G2	STRUCTURAL STEEL	3.101	0	1	3	6	10	14	18	22	25	27	28	27	25	23	19	15	11	7	4	1	0
	ADDITIONAL DEAD LOAD		0	3	11	22	36	52	67	80	91	98	101	99	92	82	69	53	38	24	12	4	0
	COMPOSITE DEAD LOAD		0	1	4	8	13	18	23	27	31	33	34	33	31	28	24	19	14	9	5	2	0
	TOTAL DEAD LOAD		0	5	18	36	59	84	108	130	147	158	162	159	149	133	112	88	63	40	21	7	0
	VERTICAL CURVE ORDINATE		0																				0
	TOTAL		0	5	18	36	59	84	108	130	147	158	162	159	149	133	112	88	63	40	21	7	0
G3	STRUCTURAL STEEL	3.029	0	0	2	5	8	12	15	18	21	23	23	23	21	19	16	12	9	5	3	1	0
	ADDITIONAL DEAD LOAD		0	2	7	17	28	41	55	67	76	82	85	83	77	68	57	44	31	19	9	3	0
	COMPOSITE DEAD LOAD		0	1	3	6	10	15	19	23	26	28	29	28	27	24	21	16	12	8	4	1	0
	TOTAL DEAD LOAD		0	3	12	27	47	68	89	108	123	133	137	134	126	112	93	73	51	32	16	5	0
	VERTICAL CURVE ORDINATE		0																				0
	TOTAL		0	3	12	27	47	68	89	108	123	133	137	134	126	112	93	73	51	32	16	5	0
G4	STRUCTURAL STEEL	2.958	0	0	1	3	6	9	12	15	17	19	19	19	18	16	13	10	7	4	2	1	0
	ADDITIONAL DEAD LOAD		0	0	4	11	21	32	44	54	62	68	70	68	64	56	46	35	24	14	6	1	0
	COMPOSITE DEAD LOAD		0	0	2	5	9	13	17	21	24	26	27	27	25	23	19	15	11	7	4	1	0
	TOTAL DEAD LOAD		0	1	8	20	36	55	73	90	104	112	116	114	107	94	78	60	42	25	11	3	0
	VERTICAL CURVE ORDINATE		0																				0
	TOTAL		0	1	8	20	36	55	73	90	104	112	116	114	107	94	78	60	42	25	11	3	0
G5	STRUCTURAL STEEL	2.886	0	0	1	3	5	8	11	13	15	17	17	17	16	15	12	9	7	4	2	1	0
	ADDITIONAL DEAD LOAD		0	−1	2	8	15	25	34	43	50	54	57	56	52	46	38	29	20	11	5	1	0
	COMPOSITE DEAD LOAD		0	0	1	4	7	11	15	18	21	23	23	23	22	20	17	13	10	6	3	1	0
	TOTAL DEAD LOAD		0	−1	4	14	28	43	59	74	86	94	97	96	90	80	67	52	36	21	10	3	0
	VERTICAL CURVE ORDINATE		0																		0	0	0
	TOTAL		0	−1	4	14	28	43	59	74	86	94	97	96	90	80	67	52	36	21	10	3	0
G6	STRUCTURAL STEEL	2.814	0	0	0	1	3	6	8	10	12	13	14	14	13	11	9	7	5	3	1	0	0
	ADDITIONAL DEAD LOAD		0	−1	0	3	8	14	21	26	31	35	36	36	34	30	25	19	12	7	3	1	0
	COMPOSITE DEAD LOAD		0	0	0	2	4	7	9	12	13	15	15	15	14	13	11	8	6	4	2	0	0
	TOTAL DEAD LOAD		0	−2	1	7	16	26	38	48	57	63	66	65	61	54	45	34	23	13	6	1	0
	VERTICAL CURVE ORDINATE		0																				0
	TOTAL		0	−2	1	7	16	26	38	48	57	63	66	65	61	54	45	34	23	13	6	1	0
G7	STRUCTURAL STEEL	2.742	0	−1	−1	0	2	4	6	7	9	10	11	10	10	9	7	5	3	2	0	0	0
	ADDITIONAL DEAD LOAD		0	−3	−2	1	6	13	20	26	32	36	38	38	35	31	25	18	11	6	1	0	0
	COMPOSITE DEAD LOAD		0	−1	0	1	2	4	6	8	10	11	11	11	11	9	8	6	4	2	1	0	0
	TOTAL DEAD LOAD		0	−4	−3	2	10	20	31	42	51	57	60	60	56	49	40	29	19	9	3	0	0
	VERTICAL CURVE ORDINATE		0																				0
	TOTAL		0	−4	−3	2	10	20	31	42	51	57	60	60	56	49	40	29	19	9	3	0	0
G8	STRUCTURAL STEEL	3.100	0	−1	−1	−1	0	2	3	5	6	7	8	7	7	6	5	3	2	1	0	0	0
	ADDITIONAL DEAD LOAD		0	−3	−4	−2	1	4	9	13	17	20	21	21	19	17	13	9	5	1	−1	−1	0
	COMPOSITE DEAD LOAD		0	−1	−1	0	1	2	4	5	6	7	7	7	7	6	5	4	2	1	0	0	0
	TOTAL DEAD LOAD		0	−5	−5	−3	2	8	16	23	29	33	36	36	33	29	22	15	9	3	−1	−2	0
	VERTICAL CURVE ORDINATE		0																				0
	TOTAL		0	−5	−5	−3	2	8	16	23	29	33	36	36	33	29	22	15	9	3	−1	−2	0

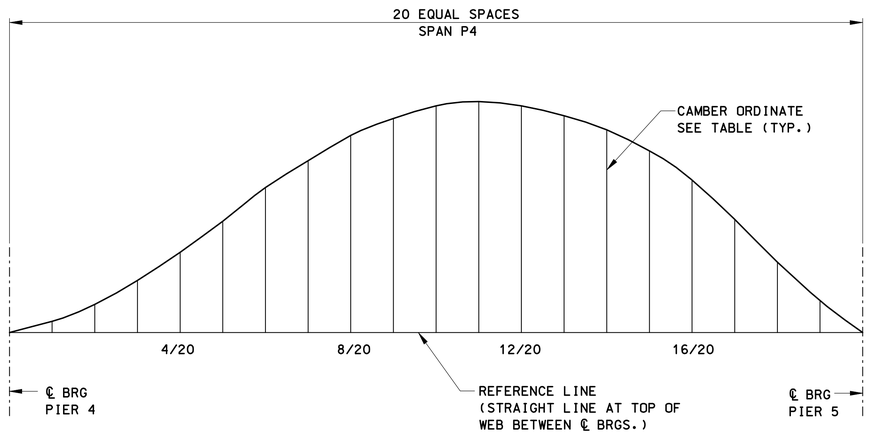

CAMBER DIAGRAM

NOT TO SCALE

NOTES

1. STEEL DEAD LOAD INCLUDES WELDED GIRDERS AND DIAPHRAGMS.
2. OTHER DEAD LOAD INCLUDES CONCRETE DECK SLAB, HAUNCHES, UTILITIES, AND ANY OTHER LOADS SUPPORTED BY THE STEEL SECTION ALONE.
3. COMPOSITE DEAD LOAD INCLUDES PARAPETS, CURBS, RAILINGS, BITUMINOUS CONCRETE OVERLAY AND ANY OTHER LOADS THAT ARE PLACED AFTER THE SLAB HAS CURED.
4. TOTAL CAMBER APPLIES TO TOP OF WEB.
5. IF HORIZONTAL CURVATURE IS ACHIEVED BY THE METHOD OF HEAT CURVING, THE FABRICATOR SHALL PROVIDE ADDITIONAL CAMBER IN ACCORDANCE WITH THE SPECIAL PROVISIONS.

REV.	DATE	DESCRIPTION	SHEET. NO
		REVISIONS	

SCALE AS NOTED

DESIGNER: B. BURKE
DRAFTER: B.BURKE
CHECKED BY: O. JAMBOTKAR
DATE CHECKED: 12-03-10

STATE OF CONNECTICUT
DEPARTMENT OF TRANSPORTATION

ENGINEER: PB AMERICAS, INC.
APPROVED BY:
DATE:

PROJECT TITLE: RECONSTRUCTION OF I-95 OVER WEST RIVER (BRIDGE NO. 00163)
CADD
PLOTTED 11/13/2012

TOWN: NEW HAVEN / WEST HAVEN
DRAWING TITLE: DEFLECTIONS AND CAMBERS – SPAN P4 (G1 – G8)

PROJECT NO.: 92-522
DRAWING NO.: STR-80
SHEET NO.:

11/13/2012 11:56:58 AM
T:\V8CADD\Projects\PB\B735\FD\Structures\Contract_Sheets\Br00163.dgn

CAMBER ORDINATES – SPAN P4 (mm)

GIRDER MARK		INCREMENT	CL. BRG. PIER 4	1/20	2/20	3/20	4/20	5/20	6/20	7/20	8/20	9/20	10/20	11/20	12/20	13/20	14/20	15/20	16/20	17/20	18/20	19/20	CL. BRG PIER 5
G9	STRUCTURAL STEEL	2.628	0	−1	−1	−1	1	2	4	5	7	8	8	8	8	7	5	4	2	1	0	0	0
	ADDITIONAL DEAD LOAD		0	−3	−3	−2	2	6	11	16	20	23	24	24	22	19	15	11	6	2	−1	−1	0
	COMPOSITE DEAD LOAD		0	−1	−2	−1	0	1	2	3	5	6	6	6	6	5	4	3	2	1	0	0	0
	TOTAL DEAD LOAD		0	−6	−6	−4	2	9	17	25	31	36	39	39	36	31	25	17	10	3	−1	−2	0
	VERTICAL CURVE ORDINATE		0	0	0	0	0	0	0	0	0	0	0	0	0	0	0	0	0	0	0	0	0
	TOTAL		0	−6	−6	−4	2	9	17	25	31	36	39	39	36	31	25	17	10	3	−1	−2	0
G10	STRUCTURAL STEEL	2.556	0	−1	−2	−2	−1	0	2	3	4	5	5	5	5	4	3	2	1	0	−1	−1	0
	ADDITIONAL DEAD LOAD		0	−4	−5	−4	−2	2	6	10	14	16	18	18	17	14	11	7	3	0	−2	−2	0
	COMPOSITE DEAD LOAD		0	−2	−3	−3	−3	−2	−1	0	2	3	3	3	3	3	2	1	0	−1	−1	−1	0
	TOTAL DEAD LOAD		0	−8	−10	−9	−6	0	7	14	19	24	26	27	25	21	16	10	4	−1	−4	−3	0
	VERTICAL CURVE ORDINATE		0	0	0	0	0	0	0	0	0	0	0	0	0	0	0	0	0	0	0	0	0
	TOTAL		0	−8	−10	−9	−6	0	7	14	19	24	26	27	25	21	16	10	4	−1	−4	−3	0
G11	STRUCTURAL STEEL	2.484	0	−1	−2	−2	−2	−1	0	1	2	3	3	3	3	2	1	1	0	−1	−1	−1	0
	ADDITIONAL DEAD LOAD		0	−2	−3	−2	0	2	5	7	9	10	11	10	9	7	5	2	0	−2	−3	−2	0
	COMPOSITE DEAD LOAD		0	−2	−4	−4	−4	−3	−2	−1	0	1	1	2	2	1	1	0	−1	−1	−1	−1	0
	TOTAL DEAD LOAD		0	−6	−9	−8	−6	−2	2	7	11	14	15	15	13	10	7	2	−1	−4	−6	−4	0
	VERTICAL CURVE ORDINATE		0	0	0	0	0	0	0	0	0	0	0	0	0	0	0	0	0	0	0	0	0
	TOTAL		0	−6	−9	−8	−6	−2	2	7	11	14	15	15	13	10	7	2	−1	−4	−6	−4	0
G11a	STRUCTURAL STEEL	2.420	0	1	3	5	7	9	11	12	13	14	13	12	11	9	7	5	3	2	1	0	0
	ADDITIONAL DEAD LOAD		0	4	9	15	21	27	31	35	37	37	36	33	29	24	18	13	7	3	0	−1	0
	COMPOSITE DEAD LOAD		0	7	16	26	36	46	54	60	63	64	62	58	51	43	34	24	15	7	1	−1	0
	TOTAL DEAD LOAD		0	12	28	47	65	82	96	107	113	115	111	103	92	76	59	42	25	12	2	−2	0
	VERTICAL CURVE ORDINATE		0	0	0	0	0	0	0	0	0	0	0	0	0	0	0	0	0	0	0	0	0
	TOTAL		0	12	28	47	65	82	96	107	113	115	111	103	92	76	59	42	25	12	2	−2	0
G12	STRUCTURAL STEEL	2.356	0	−2	−3	−3	−3	−3	−2	−2	−1	−1	0	0	0	−1	−1	−1	−2	−2	−2	−1	0
	ADDITIONAL DEAD LOAD		0	−4	−5	−6	−6	−5	−4	−2	−2	−1	−1	−2	−4	−5	−7	−9	−10	−10	−8	−5	0
	COMPOSITE DEAD LOAD		0	−3	−4	−5	−5	−5	−5	−4	−3	−3	−2	−2	−2	−2	−2	−2	−2	−2	−2	−1	0
	TOTAL DEAD LOAD		0	−8	−12	−14	−14	−13	−11	−8	−6	−5	−4	−4	−6	−8	−10	−12	−14	−14	−12	−7	0
	VERTICAL CURVE ORDINATE		0	0	0	0	0	0	0	0	0	0	0	0	0	0	0	0	0	0	0	0	0
	TOTAL		0	−8	−12	−14	−14	−13	−11	−8	−6	−5	−4	−4	−6	−8	−10	−12	−14	−14	−12	−7	0
G12a	STRUCTURAL STEEL	2.294	0	1	2	4	6	7	8	9	10	10	10	9	8	7	5	4	2	1	0	0	0
	ADDITIONAL DEAD LOAD		0	3	7	11	16	20	23	25	26	26	25	23	20	16	11	7	3	0	−1	−2	0
	COMPOSITE DEAD LOAD		0	5	12	19	27	34	39	44	46	46	45	41	36	29	22	14	8	2	−1	−2	0
	TOTAL DEAD LOAD		0	9	21	34	48	60	71	78	82	83	80	73	63	51	38	25	13	4	−2	−4	0
	VERTICAL CURVE ORDINATE		0	0	0	0	0	0	0	0	0	0	0	0	0	0	0	0	0	0	0	0	0
	TOTAL		0	9	21	34	48	60	71	78	82	83	80	73	63	51	38	25	13	4	−2	−4	0
G13	STRUCTURAL STEEL	2.232	0	−2	−3	−4	−4	−5	−4	−4	−4	−4	−3	−3	−3	−3	−3	−3	−3	−3	−2	−1	0
	ADDITIONAL DEAD LOAD		0	−4	−7	−9	−10	−10	−10	−9	−8	−8	−8	−8	−9	−9	−10	−10	−10	−10	−8	−5	0
	COMPOSITE DEAD LOAD		0	−2	−4	−5	−6	−6	−6	−6	−6	−5	−5	−5	−4	−4	−4	−4	−3	−3	−2	−1	0
	TOTAL DEAD LOAD		0	−9	−15	−19	−20	−21	−20	−19	−18	−17	−16		−16	−16	−17	−17	−17	−15	−12	−7	0
	VERTICAL CURVE ORDINATE		0	0	0	0	0	0	0	0	0	0	0	0	0	0	0	0	0	0	0	0	0
	TOTAL		0	−9	−15	−19	−20	−21	−20	−19	−18	−17	−16	−16	−16	−16	−17	−17	−17	−15	−12	−7	0
G13a	STRUCTURAL STEEL	2.177	0	1	2	3	4	5	6	7	7	7	7	6	5	4	3	2	1	0	−1	−1	0
	ADDITIONAL DEAD LOAD		0	2	4	7	10	13	16	17	18	18	17	15	13	10	7	3	1	−1	−2	−2	0
	COMPOSITE DEAD LOAD		0	3	8	13	18	23	28	30	32	32	30	28	23	18	13	7	3	−1	−3	−3	0
	TOTAL DEAD LOAD		0	6	14	23	33	42	49	54	57	57	54	49	41	32	22	13	4	−2	−5	−5	0
	VERTICAL CURVE ORDINATE		0	0	0	0	0	0	0	0	0	0	0	0	0	0	0	0	0	0	0	0	0
	TOTAL		0	6	14	23	33	42	49	54	57	57	54	49	41	32	22	13	4	−2	−5	−5	0
G14	STRUCTURAL STEEL	2.122	0	−2	−4	−5	−6	−6	−6	−6	−6	−6	−6	−6	−6	−5	−5	−5	−5	−4	−3	−2	0
	ADDITIONAL DEAD LOAD		0	−6	−11	−14	−16	−17	−18	−18	−18	−17	−17	−16	−16	−16	−15	−15	−14	−12	−9	−5	0
	COMPOSITE DEAD LOAD		0	−3	−4	−6	−7	−7	−7	−7	−7	−7	−7	−6	−6	−6	−5	−5	−4	−4	−3	−2	0
	TOTAL DEAD LOAD		0	−11	−19	−25	−29	−31	−32	−32	−31	−30	−29	−28	−27	−27	−26	−25	−23	−19	−15	−8	0
	VERTICAL CURVE ORDINATE		0	0	0	0	0	0	0	0	0	0	0	0	0	0	0	0	0	0	0	0	0
	TOTAL		0	−11	−19	−25	−29	−31	−32	−32	−31	−30	−29	−28	−27	−27	−26	−25	−23	−19	−15	−8	0
G15	STRUCTURAL STEEL	2.969	0	−2	−4	−5	−6	−6	−6	−6	−6	−6	−6	−6	−6	−5	−5	−5	−4	−4	−3	−2	0
	ADDITIONAL DEAD LOAD		0	−6	−11	−14	−17	−18	−19	−19	−19	−18	−18	−17	−16	−16	−15	−14	−13	−11	−8	−5	0
	COMPOSITE DEAD LOAD		0	−2	−4	−6	−7	−7	−7	−7	−7	−7	−7	−6	−6	−6	−5	−5	−4	−4	−3	−2	0
	TOTAL DEAD LOAD		0	−11	−19	−25	−29	−31	−32	−32	−32	−31	−30	−29	−28	−27	−26	−24	−22	−18	−14	−8	0
	VERTICAL CURVE ORDINATE		0	0	0	0	0	0	0	0	0	0	0	0	0	0	0	0	0	0	0	0	0
	TOTAL		0	−11	−19	−25	−29	−31	−32	−32	−32	−31	−30	−29	−28	−27	−26	−24	−22	−18	−14	−8	0

NOTES

1. STEEL DEAD LOAD INCLUDES WELDED GIRDERS AND DIAPHRAGMS.
2. OTHER DEAD LOAD INCLUDES CONCRETE DECK SLAB, HAUNCHES, UTILITIES, AND ANY OTHER LOADS SUPPORTED BY THE STEEL SECTION ALONE.
3. COMPOSITE DEAD LOAD INCLUDES PARAPETS, CURBS, RAILINGS, BITUMINOUS CONCRETE OVERLAY AND ANY OTHER LOADS THAT ARE PLACED AFTER THE SLAB HAS CURED.
4. TOTAL CAMBER APPLIES TO TOP OF WEB.
5. IF HORIZONTAL CURVATURE IS ACHIEVED BY THE METHOD OF HEAT CURVING, THE FABRICATOR SHALL PROVIDE ADDITIONAL CAMBER IN ACCORDANCE WITH THE SPECIAL PROVISIONS.
6. FOR GIRDER CAMBER DIAGRAM SEE "DEFLECTIONS AND CAMBERS – SPAN P4 (G1 – G8)"

REV.	DATE	DESCRIPTION	SHEET. NO
		REVISIONS	

SCALE AS NOTED

DESIGNER: B. BURKE
DRAFTER: B.BURKE
CHECKED BY: O. JAMBOTKAR
DATE CHECKED: 12-03-10

STATE OF CONNECTICUT
DEPARTMENT OF TRANSPORTATION

ENGINEER: PB AMERICAS, INC.
APPROVED BY:
DATE:

PROJECT TITLE: RECONSTRUCTION OF I-95 OVER WEST RIVER (BRIDGE NO. 00163)

CADD
PLOTTED 11/13/2012

TOWN: NEW HAVEN / WEST HAVEN

DRAWING TITLE: DEFLECTION AND CAMBERS – SPAN P4 (G9 – G15)

PROJECT NO.: 92-522
DRAWING NO.: STR-81
SHEET NO.:

12:39:20 PM
11/13/2012
T:\V8CADD\Projects\PB\8735\FD\Structures\Contract_Sheets\Br00163\str-81-092522-00163.dgn

CAMBER ORDINATES – SPAN P5 (mm)

GIRDER MARK		INCREMENT	CL. BRG. PIER 5	1/14	2/14	3/14	4/14	5/14	6/14	7/14	8/14	9/14	10/14	11/14	12/14	13/14	CL. BRG. ABUT 2
G1	STRUCTURAL STEEL	3.111	0	−1	0	1	3	5	7	8	10	10	9	8	6	3	0
	ADDITIONAL DEAD LOAD		0	−2	0	3	9	16	23	29	33	34	32	28	20	11	0
	COMPOSITE DEAD LOAD		0	−1	−1	1	3	5	8	10	11	11	11	9	7	3	0
	TOTAL DEAD LOAD		0	−3	−1	5	15	26	38	47	53	55	52	45	33	17	0
	VERTICAL CURVE ORDINATE																
	TOTAL		0	−3	−1	5	15	26	38	47	53	55	52	45	33	17	0
G2	STRUCTURAL STEEL	3.099	0	0	1	2	4	6	9	10	11	12	11	9	7	4	0
	ADDITIONAL DEAD LOAD		0	0	3	9	18	27	37	44	49	50	47	40	29	15	0
	COMPOSITE DEAD LOAD		0	0	0	2	4	7	9	11	12	13	12	10	7	4	0
	TOTAL DEAD LOAD		0	−1	4	13	26	40	54	66	73	74	70	59	43	23	0
	VERTICAL CURVE ORDINATE																
	TOTAL		0	−1	4	13	26	40	54	66	73	74	70	59	43	23	0
G3	STRUCTURAL STEEL	3.086	0	0	1	3	5	7	10	11	12	13	12	10	7	4	0
	ADDITIONAL DEAD LOAD		0	1	5	12	21	31	40	48	52	53	49	41	30	16	0
	COMPOSITE DEAD LOAD		0	0	1	3	5	8	10	12	13	13	12	11	8	4	0
	TOTAL DEAD LOAD		0	1	7	17	31	46	60	71	78	79	73	62	45	24	0
	VERTICAL CURVE ORDINATE																
	TOTAL		0	1	7	17	31	46	60	71	78	79	73	62	45	24	0
G4	STRUCTURAL STEEL	3.074	0	0	2	4	6	8	11	12	13	13	12	10	7	4	0
	ADDITIONAL DEAD LOAD		0	2	7	15	24	34	44	51	55	55	51	43	31	16	0
	COMPOSITE DEAD LOAD		0	0	1	4	6	9	12	14	16	16	15	12	9	5	0
	TOTAL DEAD LOAD		0	3	10	22	36	52	67	78	84	84	78	66	47	25	0
	VERTICAL CURVE ORDINATE																
	TOTAL		0	3	10	22	36	52	67	78	84	84	78	66	47	25	0
G5	STRUCTURAL STEEL	3.062	0	0	2	4	6	9	11	13	14	14	13	11	8	4	0
	ADDITIONAL DEAD LOAD		0	2	8	15	25	35	44	51	54	54	50	42	30	16	0
	COMPOSITE DEAD LOAD		0	0	2	4	8	11	14	16	17	17	16	13	9	5	0
	TOTAL DEAD LOAD		0	3	11	23	38	54	69	79	85	85	78	65	47	25	0
	VERTICAL CURVE ORDINATE																
	TOTAL		0	3	11	23	38	54	69	79	85	85	78	65	47	25	0
G6	STRUCTURAL STEEL	3.051	0	1	2	4	7	10	12	14	14	14	13	11	8	4	0
	ADDITIONAL DEAD LOAD		0	2	6	12	19	26	32	37	40	40	37	31	22	12	0
	COMPOSITE DEAD LOAD		0	1	2	4	7	10	12	14	15	14	13	11	8	4	0
	TOTAL DEAD LOAD		0	3	10	20	32	45	56	65	69	69	63	53	38	20	0
	VERTICAL CURVE ORDINATE																
	TOTAL		0	3	10	20	32	45	56	65	69	69	63	53	38	20	0
G7	STRUCTURAL STEEL	3.051	0	1	3	5	8	11	13	15	16	15	14	12	8	4	0
	ADDITIONAL DEAD LOAD		0	4	10	19	29	40	49	56	60	59	54	45	32	17	0
	COMPOSITE DEAD LOAD		0	1	2	5	7	10	12	14	14	14	13	11	8	4	0
	TOTAL DEAD LOAD		0	6	16	29	45	60	74	85	90	88	81	67	48	25	0
	VERTICAL CURVE ORDINATE																
	TOTAL		0	6	16	29	45	60	74	85	90	88	81	67	48	25	0
G8	STRUCTURAL STEEL	3.051	0	1	3	6	9	12	14	16	17	16	15	12	9	5	0
	ADDITIONAL DEAD LOAD		0	4	10	17	25	34	41	47	49	48	44	37	26	14	0
	COMPOSITE DEAD LOAD		0	1	3	5	7	9	11	12	13	13	12	10	7	4	0
	TOTAL DEAD LOAD		0	6	15	27	41	55	67	75	79	77	71	59	42	22	0
	VERTICAL CURVE ORDINATE																
	TOTAL		0	6	15	27	41	55	67	75	79	77	71	59	42	22	0

CAMBER ORDINATES – SPAN P5 (mm)

GIRDER MARK		INCREMENT	CL. BRG. PIER 5	1/14	2/14	3/14	4/14	5/14	6/14	7/14	8/14	9/14	10/14	11/14	12/14	13/14	CL. BRG. ABUT 2
G9	STRUCTURAL STEEL	3.051	0	2	4	7	11	14	17	19	19	19	17	14	10	5	0
	ADDITIONAL DEAD LOAD		0	4	11	20	30	40	48	54	56	55	50	41	30	16	0
	COMPOSITE DEAD LOAD		0	1	3	6	9	11	13	15	15	15	14	11	8	4	0
	TOTAL DEAD LOAD		0	7	19	33	49	65	78	87	91	89	81	67	48	25	0
	VERTICAL CURVE ORDINATE		0	0	0	0	0	0	0	0	0	0	0	0	0	0	0
	TOTAL		0	7	19	33	49	65	78	87	91	89	81	67	48	25	0
G10	STRUCTURAL STEEL	3.051	0	2	4	8	11	15	17	19	20	19	18	14	10	5	0
	ADDITIONAL DEAD LOAD		0	5	13	23	33	43	52	58	60	59	53	44	31	16	0
	COMPOSITE DEAD LOAD		0	2	5	8	11	15	17	19	20	19	17	14	10	5	0
	TOTAL DEAD LOAD		0	9	22	38	56	73	87	96	100	97	88	72	52	27	0
	VERTICAL CURVE ORDINATE		0	0	0	0	0	0	0	0	0	0	0	0	0	0	0
	TOTAL		0	9	22	38	56	73	87	96	100	97	88	72	52	27	0
G11	STRUCTURAL STEEL	3.051	0	2	5	8	12	15	18	19	20	19	17	14	10	5	0
	ADDITIONAL DEAD LOAD		0	6	13	22	32	41	48	53	55	53	48	39	28	15	0
	COMPOSITE DEAD LOAD		0	2	6	10	14	17	20	22	23	22	20	16	11	6	0
	TOTAL DEAD LOAD		0	10	24	40	57	73	86	94	97	94	84	69	49	26	0
	VERTICAL CURVE ORDINATE		0	0	0	0	0	0	0	0	0	0	0	0	0	0	0
	TOTAL		0	10	24	40	57	73	86	94	97	94	84	69	49	26	0
G11a	STRUCTURAL STEEL	3.034	0	1	3	5	8	11	13	15	16	15	14	12	8	4	0
	ADDITIONAL DEAD LOAD		0	4	11	20	29	39	46	52	54	53	48	39	28	15	0
	COMPOSITE DEAD LOAD		0	6	16	30	45	60	72	81	84	82	75	62	44	23	0
	TOTAL DEAD LOAD		0	11	30	55	82	109	132	147	154	150	136	113	81	42	0
	VERTICAL CURVE ORDINATE		0	0	0	0	0	0	0	0	0	0	0	0	0	0	0
	TOTAL		0	11	30	55	82	109	132	147	154	150	136	113	81	42	0
G12	STRUCTURAL STEEL	3.018	0	2	5	9	12	16	18	20	20	20	18	14	10	5	0
	ADDITIONAL DEAD LOAD		0	10	22	36	51	64	75	82	84	81	73	60	42	22	0
	COMPOSITE DEAD LOAD		0	3	6	10	13	17	20	21	22	21	19	15	11	6	0
	TOTAL DEAD LOAD		0	15	34	55	76	96	113	123	126	121	109	89	64	33	0
	VERTICAL CURVE ORDINATE		0	0	0	0	0	0	0	0	0	0	0	0	0	0	0
	TOTAL		0	15	34	55	76	96	113	123	126	121	109	89	64	33	0
G12a	STRUCTURAL STEEL	3.003	0	1	3	6	8	11	13	15	16	15	14	11	8	4	0
	ADDITIONAL DEAD LOAD		0	5	12	20	30	39	46	51	53	52	47	39	28	14	0
	COMPOSITE DEAD LOAD		0	7	18	32	46	61	73	81	84	82	74	61	44	23	0
	TOTAL DEAD LOAD		0	13	32	58	85	111	133	147	153	149	135	111	79	41	0
	VERTICAL CURVE ORDINATE		0	0	0	0	0	0	0	0	0	0	0	0	0	0	0
	TOTAL		0	13	32	58	85	111	133	147	153	149	135	111	79	41	0
G13	STRUCTURAL STEEL	2.987	0	3	6	9	13	16	19	20	21	20	18	15	10	5	0
	ADDITIONAL DEAD LOAD		0	9	20	32	44	55	64	69	71	68	61	50	36	19	0
	COMPOSITE DEAD LOAD		0	3	6	9	13	16	18	19	20	19	17	14	10	5	0
	TOTAL DEAD LOAD		0	14	31	50	69	87	101	109	112	107	96	79	56	29	0
	VERTICAL CURVE ORDINATE		0	0	0	0	0	0	0	0	0	0	0	0	0	0	0
	TOTAL		0	14	31	50	69	87	101	109	112	107	96	79	56	29	0
G13a	STRUCTURAL STEEL	2.979	0	1	4	6	9	12	14	16	16	16	14	12	8	4	0
	ADDITIONAL DEAD LOAD		0	4	11	19	27	35	41	45	47	46	41	34	24	13	0
	COMPOSITE DEAD LOAD		0	7	18	31	45	58	69	76	79	77	69	57	41	21	0
	TOTAL DEAD LOAD		0	13	33	56	81	105	124	137	142	138	125	103	73	38	0
	VERTICAL CURVE ORDINATE		0	0	0	0	0	0	0	0	0	0	0	0	0	0	0
	TOTAL		0	13	33	56	81	105	124	137	142	138	125	103	73	38	0
G14	STRUCTURAL STEEL	2.969	0	3	7	11	15	19	22	24	24	23	21	17	12	6	0
	ADDITIONAL DEAD LOAD		0	10	21	34	46	57	66	72	73	70	63	51	37	19	0
	COMPOSITE DEAD LOAD		0	3	6	10	13	16	18	20	20	19	17	14	10	5	0
	TOTAL DEAD LOAD		0	16	34	54	74	92	107	115	117	112	100	82	58	30	0
	VERTICAL CURVE ORDINATE		0	0	0	0	0	0	0	0	0	0	0	0	0	0	0
	TOTAL		0	16	34	54	74	92	107	115	117	112	100	82	58	30	0
G15	STRUCTURAL STEEL	2.969	0	3	7	11	15	18	21	22	23	22	19	16	11	6	0
	ADDITIONAL DEAD LOAD		0	9	20	31	42	52	60	64	65	62	56	45	32	17	0
	COMPOSITE DEAD LOAD		0	3	6	9	13	15	17	19	19	18	16	13	9	5	0
	TOTAL DEAD LOAD		0	15	33	51	69	85	98	105	106	102	91	74	52	27	0
	VERTICAL CURVE ORDINATE		0	0	0	0	0	0	0	0	0	0	0	0	0	0	0
	TOTAL		0	15	33	51	69	85	98	105	106	102	91	74	52	27	0

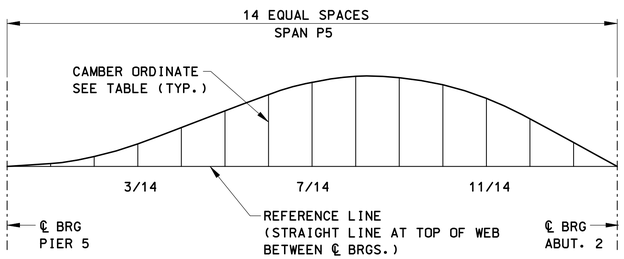

CAMBER DIAGRAM

NOT TO SCALE

NOTES

1. STEEL DEAD LOAD INCLUDES WELDED GIRDERS AND DIAPHRAGMS.
2. OTHER DEAD LOAD INCLUDES CONCRETE DECK SLAB, HAUNCHES, UTILITIES, AND ANY OTHER LOADS SUPPORTED BY THE STEEL SECTION ALONE.
3. COMPOSITE DEAD LOAD INCLUDES PARAPETS, CURBS, RAILINGS, BITUMINOUS CONCRETE OVERLAY AND ANY OTHER LOADS THAT ARE PLACED AFTER THE SLAB HAS CURED.
4. TOTAL CAMBER APPLIES TO TOP OF WEB.
5. IF HORIZONTAL CURVATURE IS ACHIEVED BY THE METHOD OF HEAT CURVING, THE FABRICATOR SHALL PROVIDE ADDITIONAL CAMBER IN ACCORDANCE WITH THE SPECIAL PROVISIONS.

REV.	DATE	DESCRIPTION	SHEET. NO.
		REVISIONS	

SCALE AS NOTED

DESIGNER: B. BURKE
DRAFTER: B. BURKE
CHECKED BY: O. JAMBOTKAR
DATE CHECKED: 12-03-10

STATE OF CONNECTICUT
DEPARTMENT OF TRANSPORTATION

ENGINEER: PB AMERICAS, INC.
APPROVED BY:
DATE:

PROJECT TITLE: RECONSTRUCTION OF I-95 OVER WEST RIVER (BRIDGE NO. 00163)

CADD
PLOTTED 11/13/2012

TOWN: NEW HAVEN / WEST HAVEN

DRAWING TITLE: DEFLECTIONS AND CAMBERS – SPAN P5

PROJECT NO.: 92-522
DRAWING NO.: STR-82
SHEET NO.:

12:40:08 PM
11/13/2012
T:\V8CADD\Projects\PB\8735\FD\Structures\Contract_Sheets\Br00163\str-82-092592-00163.dgn

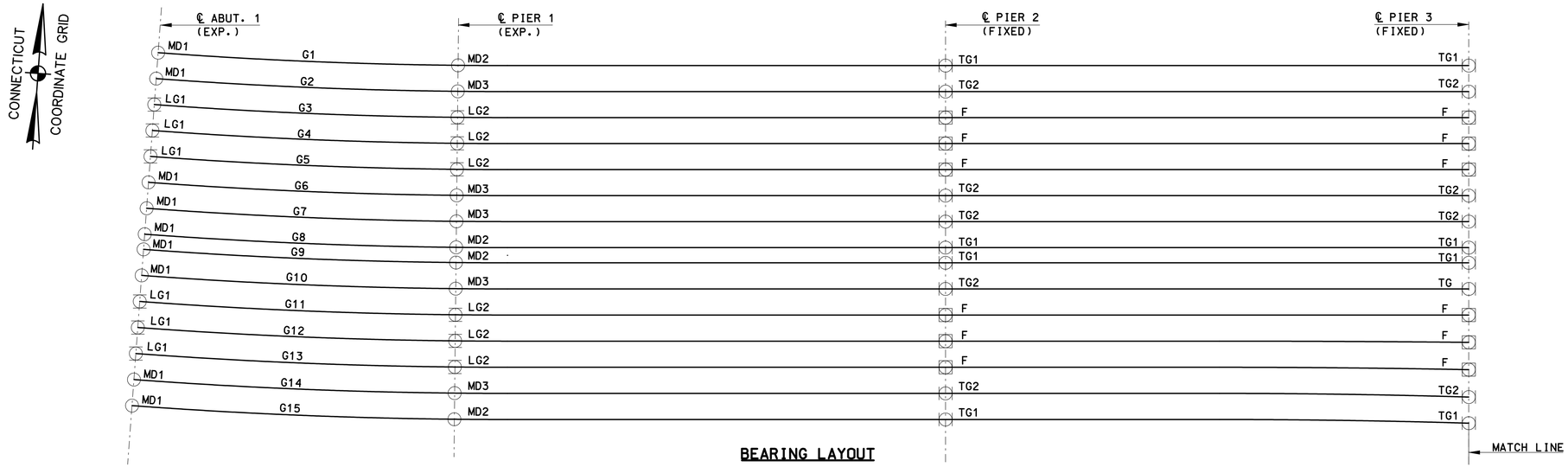

BEARING LAYOUT

SPANS A1, P1 & P2

N.T.S.

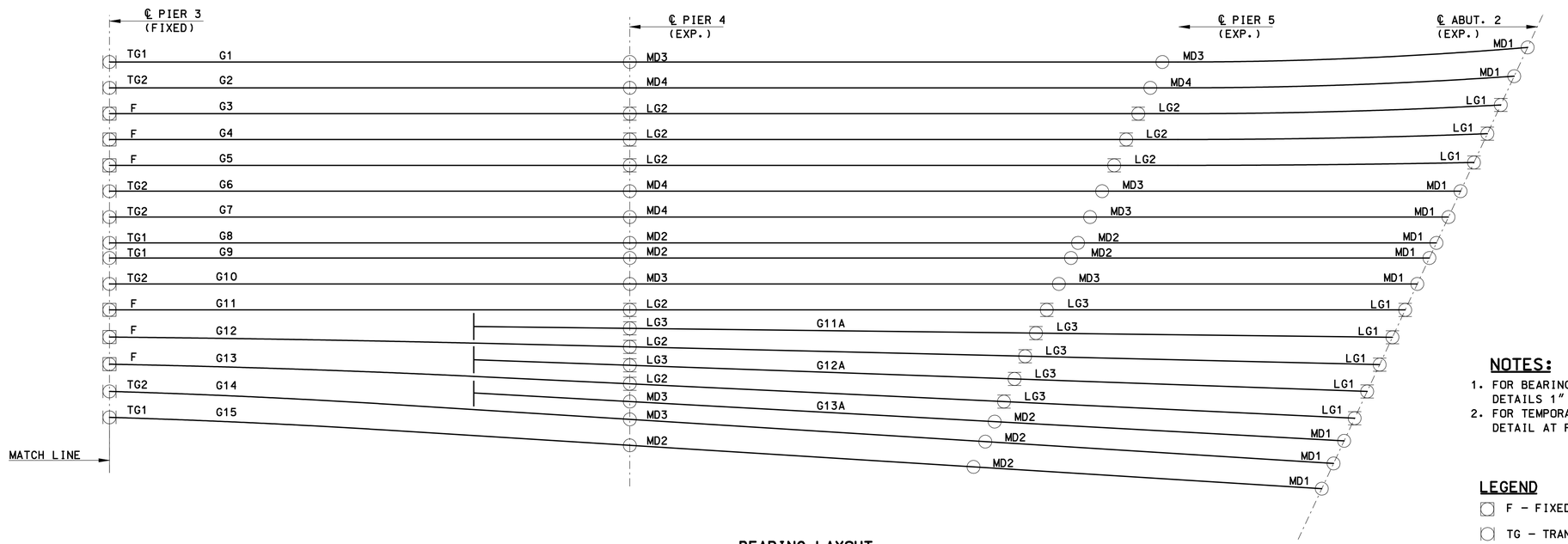

BEARING LAYOUT

SPANS P3, P4 & P5

N.T.S.

NOTES:

1. FOR BEARING SIZES AND DETAILS, SEE SHEET "BEARING DETAILS 1" AND "BEARING DETAILS 2".
2. FOR TEMPORARY FIXED AND TRANSVERSELY GUIDED BEARING DETAIL AT PIER 2, SEE SHT "BEARING DETAILS 2".

LEGEND

- F – FIXED BEARING
- TG – TRANSVERSELY GUIDED BEARING
- LG – LONGTITUDINALLY GUIDED BEARING
- MD – MULTI-DIRECTIONAL EXPANSION BEARING

REV.	DATE	DESCRIPTION	SHEET. NO
		REVISIONS	

THE INFORMATION, INCLUDING ESTIMATED QUANTITIES OF WORK, SHOWN ON THESE SHEETS IS BASED ON LIMITED INVESTIGATIONS BY THE STATE AND IS IN NO WAY WARRANTED TO INDICATE THE CONDITIONS OR ACTUAL QUANTITIES OF WORK WHICH WILL BE REQUIRED.

DESIGNER: O. JAMBOTKAR
DRAFTER: M. DEEGAN
CHECKED BY: T. LALIBERTE
DATE CHECKED: 12-03-10

STATE OF CONNECTICUT
DEPARTMENT OF TRANSPORTATION

ENGINEER: PB AMERICAS, INC.
APPROVED BY: DATE:

PROJECT TITLE: RECONSTRUCTION OF I-95 OVER WEST RIVER (BRIDGE NO. 00163)

CADD PLOTTED 11/13/2012

TOWN: NEW HAVEN / WEST HAVEN

DRAWING TITLE: BEARING LAYOUT

PROJECT NO.: 92-522
DRAWING NO.: STR-83
SHEET NO.:

12:40:55 PM
11/13/2012
T:\VBCADD\Projects\PB187.35\FDS\Structures\Contract_Sheets\Br00163\str-83-092522-00163.dgn

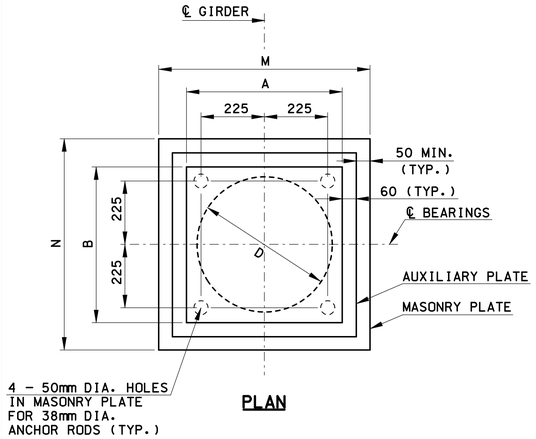

PLAN

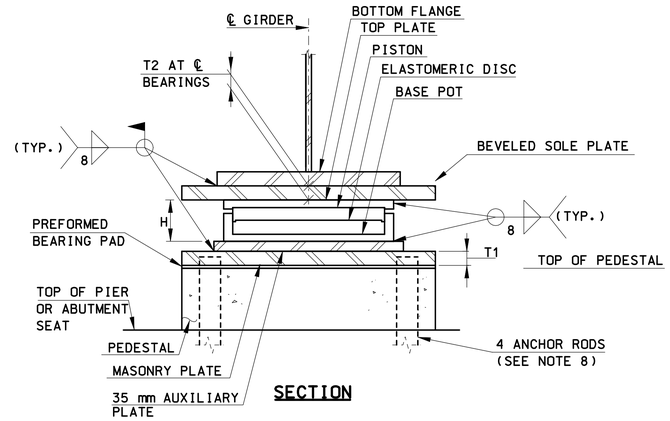

SECTION

FIXED BEARINGS (F)

N.T.S.

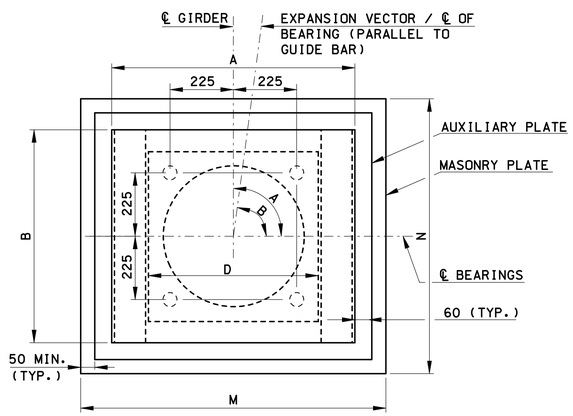

PLAN

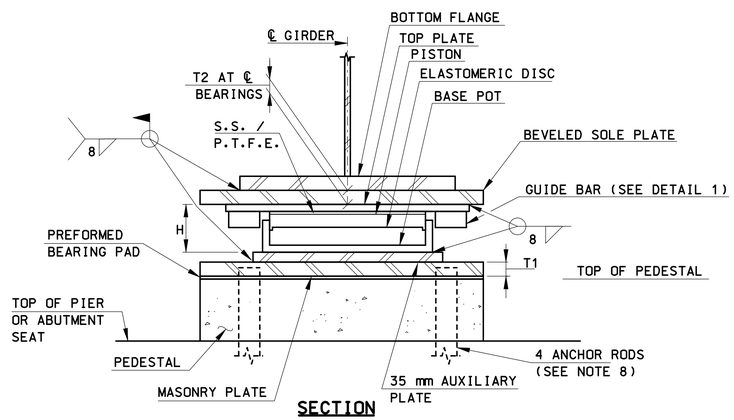

SECTION

LONGITUDINALLY GUIDED BEARINGS (LG)

N.T.S.

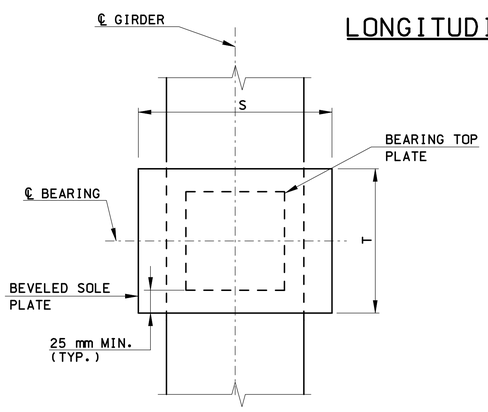

PLAN - BEVELED SOLE PLATE

N.T.S.

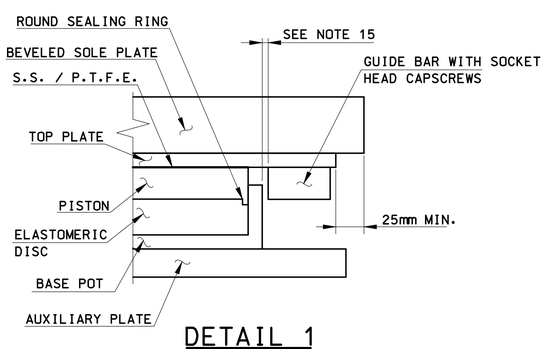

DETAIL 1

N.T.S.

BEARING NOTES:

1. BEARINGS SHALL BE SUPPLIED BY ONLY ONE MANUFACTURER.
2. STEEL FOR THE BEARINGS, SOLE PLATE, AUXILIARY PLATE, AND MASONRY PLATE SHALL BE AASHTO M270, GRADE 345 PAINTED UNLESS NOTED OTHERWISE.
3. BEARINGS SHALL NOT BE WELDED TO MASONRY PLATES UNTIL THE STRUCTURAL STEEL HAS BEEN ERECTED, FIELD SPLICES COMPLETED, AND FINAL BEARING ADJUSTMENTS HAVE BEEN MADE.
4. BEARINGS SHALL BE SET SO THE CENTERLINE OF THE SOLE PLATE IS ALIGNED WITH THE CENTERLINE OF THE BASE POT AT 10° CELSIUS.
5. THE MASONRY PLATES, SOLE PLATES AND AUXILIARY PLATES SHALL BE FURNISHED BY THE BEARING MANUFACTURER. THE COST OF THESE PLATES SHALL BE INCLUDED IN THE COST OF THE BEARING.
6. P.T.F.E. = POLYTETRAFLUOROETHYLENE, S.S. = STAINLESS STEEL.
7. SEE SHT. "BEARING DATA NORTHBOUND" & "BEARING DATA SOUTHBOUND" FOR ANGLES OF BEARING ASSEMBLIES.
8. ANCHOR RODS SHALL EITHER BE CAST MONOLITHIC WITH THE SUBSTRUCTURE USING TEMPLATES OR ANCHOR ROD FORMS SHALL BE USED.
9. THE ANCHOR RODS SHALL BE SET OR CUT SUCH THAT THE TOP IS RECESSED BELOW THE MASONRY PLATE. "SEE DETAIL 2" ON SHT."BEARING DETAILS-2".
10. THE BEARING DETAILS SHOWN ON THIS SHEET AND THE CORRESPONDING PEDESTAL ELEVATIONS SHOWN WITHIN THESE PLANS ARE BASED ON BEARINGS MANUFACTURED BY D.S. BROWN COMPANY.
11. THE SUBJECT BEARING PAD ELEVATIONS AND ADJACENT KEEPER BLOCKS MAY REQUIRE ADJUSTMENTS BY THE CONTRACTOR IF THE OVERALL HEIGHT OF THE BEARING SUPPLIED IS OTHER THAN THAT SHOWN ON THE CONTRACT PLANS.
12. ALL NECESSARY BEARING PAD ELEVATION ADJUSTMENTS MUST BE SUBMITTED TO THE ENGINEER FOR APPROVAL.
13. ANCHOR RODS SHALL BE ASTM F1554, SWEDGED OR THREADED AND SHALL BE GALVANIZED.
14. FINISHED PEDESTAL ELEVATIONS SHOWN ON THE ABUTMENT AND PIER DRAWINGS APPLY AT THE TOP OF THE CONCRETE PEDESTAL.
15. GUIDE BAR GAP DIMENSION SHALL BE A MINIMUM OF EITHER 6 MM OR A DIMENSION SUFFICIENT TO ACCOMMODATE TRANSVERSE MOVEMENTS SHOWN IN THE BEARING LOAD TABLE.
16. FOR TEMPORARY FIXED AND TRANSVERSELY GUIDED BEARING DETAIL AT PIER 2, SEE SHT. "BEARING DETAILS 2".

FIXED BEARING SCHEDULE

BEARING TYPE	BEARING DIMENSIONS				MASONRY PLATE			BEVELED SOLE PLATE			NO. OF BEARINGS
	A	B	D	H	M	N	T1	S	T	T2	
F	519	519	519	153	732	732	50	720	720	50	12

LONGITUDINALLY GUIDED BEARING SCHEDULE

BEARING TYPE	BEARING DIMENSIONS				MASONRY PLATE			BEVELED SOLE PLATE			NO. OF BEARINGS
	A	B	D	H	M	N	T1	S	T	T2	
LG1	450	406	281	128	670	630	50	658	570	50	14
LG2	725	606	481	200	945	830	50	933	730	50	15
LG3	644	550	425	175	865	770	50	852	720	50	7

REV.	DATE	DESCRIPTION	SHEET. NO
		REVISIONS	

SCALE AS NOTED

DESIGNER: O. JAMBOTKAR
DRAFTER: M. DEEGAN
CHECKED BY: T. LALIBERTE
DATE CHECKED: 12-03-10

STATE OF CONNECTICUT
DEPARTMENT OF TRANSPORTATION

ENGINEER: PB AMERICAS, INC.
APPROVED BY: DATE:

PROJECT TITLE: RECONSTRUCTION OF I-95 OVER WEST RIVER (BRIDGE NO. 00163)

CADD PLOTTED 11/13/2012 92-531-6

TOWN: NEW HAVEN / WEST HAVEN

DRAWING TITLE: BEARINGS DETAILS - 1

PROJECT NO.: 92-522
DRAWING NO.: STR-84
SHEET NO.:

12:41:29 PM
11/13/2012
T:\V8CADD\Projects\PB8735\FD\Structures\Contract_Sheets\Br00163\str-84-092522-00163.dgn

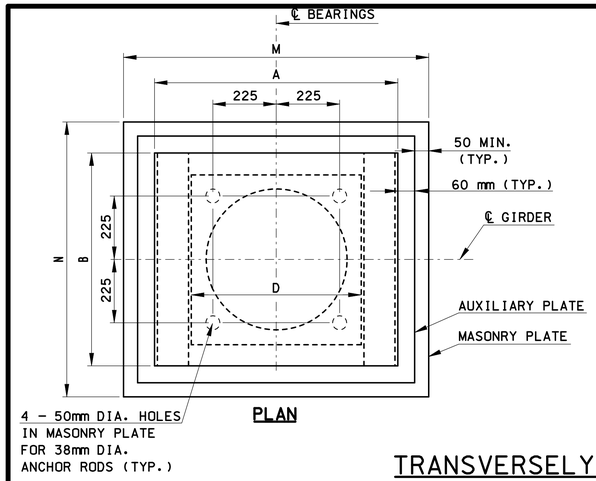

PLAN

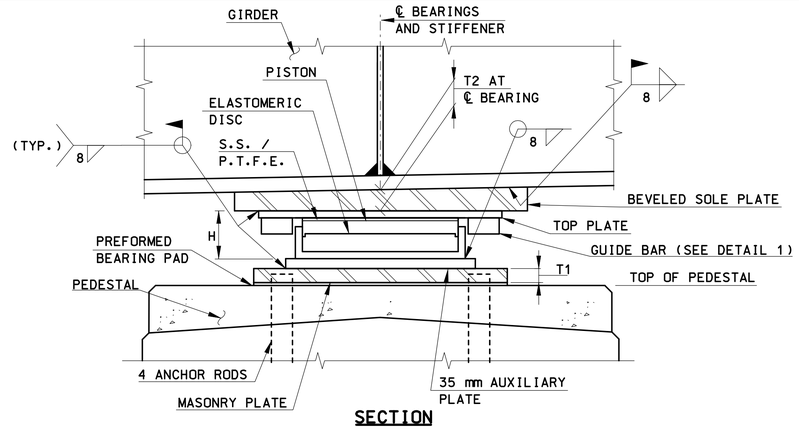

SECTION

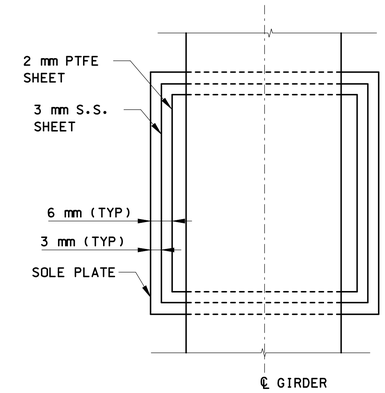

TYPICAL PLAN

TRANSVERSELY GUIDED BEARINGS (TG)

N.T.S.

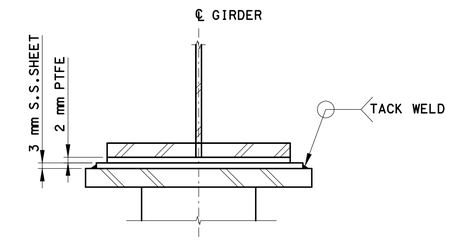

SECTION A-A

TEMPORARY FIXED AND TRANSVERSELY GUIDED BEARING DETAIL

N.T.S.

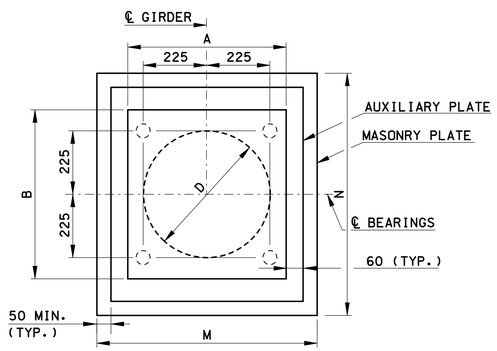

PLAN

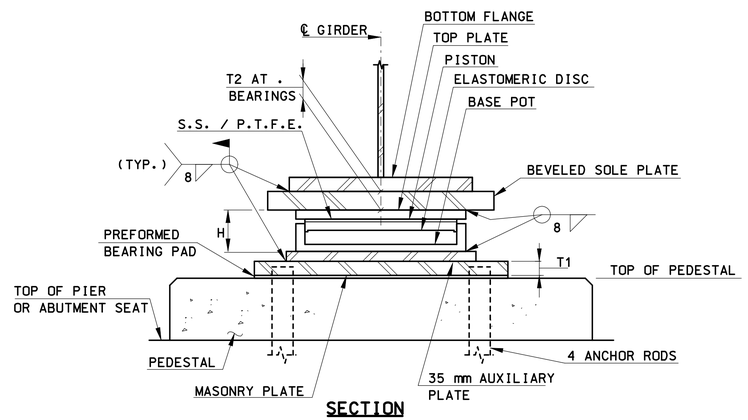

SECTION

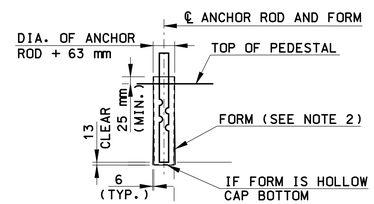

ANCHOR ROD DETAIL

N.T.S.

NON-GUIDED BEARINGS (MD)

N.T.S.

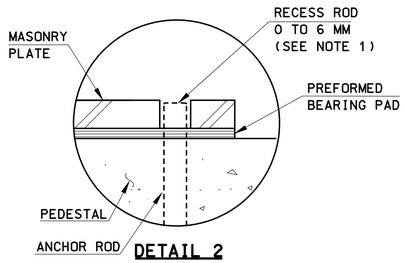

DETAIL 2

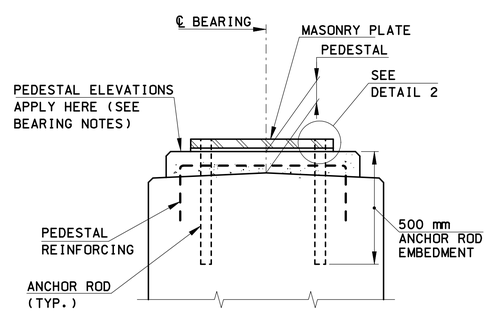

SECTION

ANCHOR RODS AND MASONRY PLATE DETAIL

N.T.S.

NOTES:

1. FILL VOID AT ANCHOR ROD WITH A FLEXIBLE SEALANT PRIOR TO PLACEMENT OF THE BEARINGS.
2. FORMS SHALL BE UNOILED, HELD IN PLACE ACCURATELY BY TEMPLATE, AND REMOVED AFTER CONCRETE HAS HARDENED. ANCHOR BOLTS SHALL BE SET ACCURATELY AND GROUTED WITH NON-SHRINK GROUT. THE COST OF FURNISHING AND INSTALLING FORMS TO BE INCLUDED IN THE CONCRETE ITEM.
3. FOR DETAIL 1, SEE SHEET "BEARING DETAIL 1".

TRANSVERSELY GUIDED BEARING SCHEDULE

BEARING TYPE	BEARING DIMENSIONS				MASONRY PLATE			BEVELED SOLE PLATE			NO. OF BEARINGS
	A	B	D	H	M	N	T1	S	T	T2	
TG1	688	575	450	191	908	795	50	810	720	50	8
TG2	725	606	481	200	945	826	50	845	730	50	10

NON-GUIDED BEARING SCHEDULE

BEARING TYPE	BEARING DIMENSIONS				MASONRY PLATE			BEVELED SOLE PLATE			NO. OF BEARINGS
	A	B	D	H	M	N	T1	S	T	T2	
MD1	325	375	288	100	545	595	50	570	570	50	19
MD2	456	506	425	131	676	726	50	720	720	50	13
MD3	481	531	456	131	701	751	50	720	720	50	12
MD4	506	563	488	138	726	783	50	720	720	50	4

TEMPORARY BEARING DETAIL NOTES:

1. THE PURPOSE OF THE TEMPORARY DETAIL IS TO PROVIDE MEANS FOR EXPANSION AT THE 2ND LINE OF FIXED AND TRANSVERSE GUIDED BEARINGS IN THOSE SECTIONS OF THE STRUCTURE WITH TWO FIXED PIERS. THIS DETAIL IS ONLY REQUIRED UNTIL THE 2ND LINE OF FIXED AND TRANSVERSELY GUIDED BEARINGS CAN BE WELDED TO THE SOLE PLATES. WELDING OF THE 2ND LINE OF FIXED AND TRANSVERSELY GUIDED BEARINGS MUST BE DONE WHEN THE AMBIENT TEMPERATURE IS BETWEEN 4°C AND 15°C.
2. THE COST OF THE TEMPORARY DETAIL SHOWN SHALL BE INCIDENTAL TO THE APPROPRIATE "POT, SPHERICAL OR DISC BEARING" SPECIAL PROVISIONS.
3. THE PTFE AND STAINLESS STEEL SHALL CONFORM TO THE MATERIAL REQUIREMENTS SPECIFIED IN THE "POT, SPHERICAL OR DISC BEARING" SPECIAL PROVISIONS.
4. THE 2 mm x 25 mm PTFE SHEET AT THE KEEPER BLOCK SHALL BE AFIXED TO THE KEEPER BLOCK ARMOR BY A SUITABLE EPOXY.
5. THE PTFE SHEET UNDER THE GIRDER FLANGE WILL NOT BE ATTACHED, THIS SHEET IS INTENDED TO FLOAT. THE CONTRACTOR SHALL BE AWARE THAT THIS SHEET MAY NEED TO BE ADJUSTED FROM TIME TO TIME TO MAINTAIN A SUITABLE SLIDING SURFACE.
6. WHEN THE AMBIENT TEMPERATURE REACHES THE SPECIFIED RANGE, THE TEMPORARY PTFE AND STAINLESS STEEL SHEETS SHALL BE REMOVED. TACK WELDS SHALL BE GROUND SMOOTH, AND THE EPOXY BONDED TO THE KEEPER BLOCK ARMOR SHALL BE CLEANED. THE GIRDERS WILL THEN BE WELDED TO THE SOLE PLATES. FIELD TOUCH UP OF PAINT OR GALVANIZING SHALL BE DONE WHERE NECESSARY.

REV.	DATE	DESCRIPTION	SHEET. NO
		REVISIONS	

SCALE AS NOTED

DESIGNER: O. JAMBOTKAR
DRAFTER: M. DEEGAN
CHECKED BY: T. LALIBERTE
DATE CHECKED: 12-03-10

STATE OF CONNECTICUT
DEPARTMENT OF TRANSPORTATION

ENGINEER: PB AMERICAS, INC.
APPROVED BY:
DATE:

PROJECT TITLE: RECONSTRUCTION OF I-95 OVER WEST RIVER (BRIDGE NO. 00163)
CADD
PLOTTED 11/13/2012

TOWN: NEW HAVEN / WEST HAVEN
DRAWING TITLE: BEARINGS DETAILS - 2

PROJECT NO.: 92-522
DRAWING NO.: STR-85
SHEET NO.:

12:43:09 PM
11/13/2012
T:\WBCADD-Projects\PB\8735\FD\Structures\Contract_Sheets\Br00163\dn-85-092522-00163.dgn

SOUTHBOUND – BEARING LOAD DATA

SUPPORT	GIRDER NUMBER	VERTICAL LOADS					HORIZONTAL LOADS				ONE-WAY MOVEMENT			BEARING TYPE	PAY ITEM DESCRIPTION (SEE NOTE 5)
			LIVE LOAD				SERVICE		EXTREME EVENT						
		SERVICE DEAD LOAD (KN)	(GROUP) + I KN	GROUP I (KN)	GROUP IB (KN)	DESIGN LOAD (KN)	LONG (KN)	TRANS (KN)	LONG (KN)	TRANS (KN)	LONG (MM)	TRANS (MM)	ROTATION (RADIANS)		
ABUT 1	G1	327	477	395	597	924	0	0	0	0	65	6	0.02	MD	1335 KN
	G2	359	539	446	529	887	0	0	0	0	65	4	0.02	MD	1335 KN
	G3	362	539	447	529	891	0	48	0	434	65	0	0.02	LG	1335 KN
	G4	365	540	447	530	895	0	48	0	434	65	0	0.02	LG	1335 KN
	G5	368	541	448	531	899	0	48	0	434	65	0	0.02	LG	1335 KN
	G6	372	541	448	532	903	0	0	0	0	65	2	0.02	MD	1335 KN
	G7	375	542	449	532	907	0	0	0	0	65	4	0.02	MD	1335 KN
	G8	325	396	329	429	754	0	0	0	0	65	6	0.02	MD	1335 KN
PIER 1	G1	1582	1000	871	1189	2772	0	0	0	0	46	6	0.02	MD	3115 KN
	G2	1741	1136	989	1059	2800	0	0	0	0	46	4	0.02	MD	3115 KN
	G3	1747	1137	990	1060	2806	0	96	0	405	46	0	0.02	LG	3115 KN
	G4	1752	1137	991	1060	2812	0	96	0	405	46	0	0.02	LG	3115 KN
	G5	1757	1138	991	1061	2817	0	96	0	405	46	0	0.02	LG	3115 KN
	G6	1762	1139	992	1061	2823	0	0	0	0	46	2	0.02	MD	3115 KN
	G7	1767	1140	993	1062	2829	0	0	0	0	46	4	0.02	MD	3115 KN
	G8	1530	833	726	855	2384	0	0	0	0	46	6	0.02	MD	2670 KN
PIER 2	G1	1920	1063	940	1249	3170	337	0	431	0	0	6	0.02	TG	3560 KN
	G2	2096	1203	1064	1111	3207	337	0	431	0	0	4	0.02	TG	3560 KN
	G3	2094	1203	1063	1111	3204	337	174	431	1362	0	0	0.02	F	3560 KN
	G4	2090	1202	1062	1111	3201	337	174	431	1362	0	0	0.02	F	3560 KN
	G5	2088	1201	1062	1111	3199	337	174	431	1362	0	0	0.02	F	3560 KN
	G6	2086	1201	1061	1111	3196	337	0	431	0	0	2	0.02	TG	3560 KN
	G7	2083	1200	1060	1111	3194	337	0	431	0	0	4	0.02	TG	3560 KN
	G8	1800	876	774	894	2693	337	0	431	0	0	6	0.02	TG	3115 KN
PIER 3	G1	1918	1084	960	1259	3177	339	202	430	0	0	6	0.02	TG	3560 KN
	G2	2107	1227	1087	1118	3225	339	202	430	0	0	4	0.02	TG	3560 KN
	G3	2117	1227	1086	1118	3234	339	202	430	1759	0	0	0.02	F	3560 KN
	G4	2125	1226	1085	1117	3243	339	202	430	1759	0	0	0.02	F	3560 KN
	G5	2131	1225	1085	1117	3248	339	202	430	1759	0	0	0.02	F	3560 KN
	G6	2139	1224	1084	1117	3255	339	202	430	0	0	2	0.02	TG	3560 KN
	G7	2146	1223	1083	1116	3263	339	202	430	0	0	4	0.02	TG	3560 KN
	G8	1863	893	791	898	2761	339	202	430	0	0	6	0.02	TG	3115 KN
PIER 4	G1	1970	1083	960	1259	3229	0	0	0	0	48	6	0.02	MD	3560 KN
	G2	2121	1220	1081	1117	3342	0	0	0	0	48	4	0.02	MD	3560 KN
	G3	2094	1214	1074	1115	3307	0	208	0	933	48	0	0.02	LG	3560 KN
	G4	2066	1207	1068	1113	3273	0	208	0	933	48	0	0.02	LG	3560 KN
	G5	2047	1204	1064	1111	3251	0	208	0	933	48	0	0.02	LG	3560 KN
	G6	2022	1198	1058	1109	3220	0	0	0	0	48	2	0.02	MD	3560 KN
	G7	1996	1193	1053	1106	3189	0	0	0	0	48	4	0.02	MD	3560 KN
	G8	1704	868	765	888	2592	0	0	0	0	48	6	0.02	MD	2670 KN
PIER 5	G1	1922	1086	952	1266	3188	0	0	0	0	81	6	0.02	MD	3560 KN
	G2	2080	1235	1082	1125	3315	0	0	0	0	81	4	0.02	MD	3560 KN
	G3	2041	1226	1073	1119	3267	0	167	0	948	80	0	0.02	LG	3560 KN
	G4	2003	1216	1064	1112	3219	0	167	0	948	79	0	0.02	LG	3560 KN
	G5	1935	1198	1047	1100	3133	0	167	0	948	78	0	0.02	LG	3560 KN
	G6	1884	1178	1028	1085	3062	0	0	0	0	78	2	0.02	MD	3115 KN
	G7	1836	1159	1011	1070	2995	0	0	0	0	77	4	0.02	MD	3115 KN
	G8	1558	841	733	856	2414	0	0	0	0	76	6	0.02	MD	2670 KN
ABUT 2	G1	425	517	431	641	1066	0	0	0	442	104	6	0.02	MD	1335 KN
	G2	474	591	493	570	1065	0	0	0	442	103	4	0.02	MD	1335 KN
	G3	480	590	492	569	1070	0	91	0	442	102	0	0.02	LG	1335 KN
	G4	486	589	491	568	1075	0	91	0	442	101	0	0.02	LG	1335 KN
	G5	497	587	489	568	1084	0	91	0	442	101	0	0.02	LG	1335 KN
	G6	494	575	479	559	1069	0	0	0	0	100	3	0.02	MD	1335 KN
	G7	493	563	469	550	1056	0	0	0	0	99	4	0.02	MD	1335 KN
	G8	430	411	343	442	872	0	0	0	0	98	6	0.02	MD	1335 KN

GIRDER AND BEARING LAYOUT ANGLES

LOCATION	GIRDERS	A (DEGREES)	B (DEGREES)
ABUT 1	G1	90°-00″	93°-24″
	G2	90°-00″	93°-24″
	G3	90°-00″	93°-24″
	G4	90°-00″	93°-24″
	G5	90°-00″	93°-24″
	G6	90°-00″	93°-24″
	G7	90°-00″	93°-24″
	G8	90°-00″	93°-24″
PIER 1	G1	90°-00″	90°-00″
	G2	90°-00″	90°-00″
	G3	90°-00″	90°-00″
	G4	90°-00″	90°-00″
	G5	90°-00″	90°-00″
	G6	90°-00″	90°-00″
	G7	90°-00″	90°-00″
	G8	90°-00″	90°-00″
PIER 2	G1	90°-00″	90°-00″
	G2	90°-00″	90°-00″
	G3	90°-00″	90°-00″
	G4	90°-00″	90°-00″
	G5	90°-00″	90°-00″
	G6	90°-00″	90°-00″
	G7	90°-00″	90°-00″
	G8	90°-00″	90°-00″
PIER 3	G1	90°-00″	90°-00″
	G2	90°-00″	90°-00″
	G3	90°-00″	90°-00″
	G4	90°-00″	90°-00″
	G5	90°-00″	90°-00″
	G6	90°-00″	90°-00″
	G7	90°-00″	90°-00″
	G8	90°-00″	90°-00″
PIER 4	G1	90°-00″	90°-00″
	G2	90°-00″	90°-00″
	G3	90°-00″	90°-00″
	G4	90°-00″	90°-00″
	G5	90°-00″	90°-00″
	G6	90°-00″	90°-00″
	G7	90°-00″	90°-00″
	G8	90°-00″	90°-00″
PIER 5	G1	65°-00″	65°-00″
	G2	65°-00″	65°-00″
	G3	65°-00″	65°-00″
	G4	65°-00″	65°-00″
	G5	65°-00″	65°-00″
	G6	65°-00″	65°-00″
	G7	65°-00″	65°-00″
	G8	65°-00″	65°-00″
ABUT 2	G1	60°-13′	60°-13′
	G2	61°-01′	61°-01′
	G3	61°-54′	61°-54′
	G4	62°-50′	62°-50′
	G5	62°-56′	62°-56′
	G6	65°-00″	65°-00″
	G7	65°-00″	65°-00″
	G8	65°-00″	65°-00″

BEARING SETTING CHART

LONGITUDINAL MOVEMENTS AT BEARING (mm) DUE TO TEMPERATURE CHANGE FROM 10° C				
	± 10°	± 20°	± 30°	± 40°
ABUT 1	15	29	44	58
PIER 1	10	20	31	41
PIER 4	11	21	32	43
PIER 5	17	35	52	69
ABUT 2	22	45	67	89

NOTES:

1. ALL LOADS SHOWN IN THE TABLES ON THIS SHEET ARE UNFACTORED.
2. THE DESIGN BEARING VERTICAL LOAD IS THE DEAD LOAD PLUS THE LARGER OF GROUP I OR GROUP IB LIVE LOAD WITHOUT IMPACT. GROUP I REFERS TO THE HL-93 STANDARD LOAD VEHICLE. GROUP IB REFERS TO THE CONTROLLING P204 OR P380 PERMIT LIVE LOAD VEHICLE.
3. LIVE LOAD GROUP I WITH IMPACT IS PROVIDED FOR FUTURE JACKING REQUIREMENTS.
4. THE MAXIMUM MOVEMENT SHOWN IS GIVEN ALONG THE LINE DEFINED BY ANGLE 'B' ON THE BEARING DETAILS SHEETS. IT IS CALCULATED BASED ON MOVEMENTS DUE TO THE TEMPERATURE RANGE. THE DESIGN TEMPERATURE RANGE IS -23°C TO +43°C. TRANSVERSE MOVEMENT OCCURS ALONG AN AXIS PARALLEL TO THE CENTERLINE OF BEARINGS.
5. BEARINGS SHALL BE PAID FOR UNDER THE ITEM "HIGH LOAD MULTI-ROTATIONAL BEARING (X)" WHERE 'X' IS THE LOAD CAPACITY SHOWN IN THE TABLE.

NORTHBOUND – BEARING LOAD DATA

SUPPORT	GIRDER NUMBER	VERTICAL LOADS					HORIZONTAL LOADS				ONE-WAY MOVEMENT			BEARING TYPE	PAY ITEM DESCRIPTION (SEE NOTE 5)
		SERVICE DEAD LOAD (KN)	LIVE LOAD			DESIGN LOAD (KN)	SERVICE		EXTREME EVENT		LONG (MM)	TRANS (MM)	ROTATION (RADIANS)		
			GROUP I) + I (KN)	GROUP I (KN)	GROUP IB (KN)		LONG (KN)	TRANS (KN)	LONG (KN)	TRANS (KN)					
ABUT 1	G9	334	409	339	431	765	0	0	0	0	65	5	0.02	MD	1335 KN
	G10	387	545	452	535	922	0	0	0	0	65	3	0.02	MD	1335 KN
	G11	391	546	452	536	927	0	49	0	434	65	0	0.02	LG	1335 KN
	G12	396	546	453	537	932	0	49	0	434	65	0	0.02	LG	1335 KN
	G13	399	547	454	537	936	0	49	0	434	65	0	0.02	LG	1335 KN
	G14	408	548	454	538	946	0	0	0	0	65	3	0.02	MD	1335 KN
	G15	373	429	356	527	900	0	0	0	0	65	5	0.02	MD	1335 KN
PIER 1	G9	1588	862	751	860	2448	0	0	0	0	46	5	0.02	MD	2670 KN
	G10	1822	1148	1000	1068	2890	0	0	0	0	46	3	0.02	MD	3115 KN
	G11	1837	1149	1001	1069	2905	0	131	0	405	46	0	0.02	LG	3115 KN
	G12	1826	1149	1002	1069	2895	0	131	0	405	46	0	0.02	LG	3115 KN
	G13	1831	1150	1002	1070	2901	0	131	0	405	46	0	0.02	LG	3115 KN
	G14	1874	1151	1003	1070	2944	0	0	0	0	46	3	0.02	MD	3115 KN
	G15	1745	902	786	1048	2793	0	0	0	0	46	5	0.02	MD	3115 KN
PIER 2	G9	1845	903	798	897	2742	374	0	431	0	0	5	0.02	TG	3115 KN
	G10	2107	1201	1061	1113	3220	374	0	431	0	0	3	0.02	TG	3560 KN
	G11	2082	1205	1064	1116	3198	374	180	431	1362	0	0	0.02	F	3560 KN
	G12	2122	1209	1068	1120	3242	374	180	431	1362	0	0	0.02	F	3560 KN
	G13	2121	1209	1067	1120	3241	374	180	431	1362	0	0	0.02	F	3560 KN
	G14	2143	1203	1063	1117	3260	374	0	431	0	0	3	0.02	TG	3560 KN
	G15	1947	930	822	1084	3031	374	0	431	0	0	5	0.02	TG	3115 KN
PIER 3	G9	1955	922	817	901	2857	391	168	430	0	0	5	0.02	TG	3115 KN
	G10	2236	1225	1085	1118	3354	391	168	430	0	0	3	0.02	TG	3560 KN
	G11	2374	1279	1133	1156	3530	391	168	430	1759	0	0	0.02	F	3560 KN
	G12	2169	1331	1179	1194	3363	391	168	430	1759	0	0	0.02	F	3560 KN
	G13	2180	1324	1173	1190	3371	391	168	430	1759	0	0	0.02	F	3560 KN
	G14	2278	1265	1120	1149	3427	391	168	430	0	0	3	0.02	TG	3560 KN
	G15	2116	948	839	1088	3205	391	168	430	0	0	5	0.02	TG	3560 KN
PIER 4	G9	1678	884	780	884	2562	0	0	0	0	48	6	0.02	MD	2670 KN
	G10	1901	1172	1033	1096	3073	0	0	0	0	48	4	0.02	MD	3115 KN
	G11	2047	1175	1034	1100	3221	0	101	0	933	48	0	0.02	LG	3560 KN
	G11A	1018	794	794	725	1812	0	101	0	933	48	0	0.02	LG	2670 KN
	G12	1804	1169	1028	1101	2973	0	101	0	933	48	0	0.02	LG	3115 KN
	G12A	953	789	644	763	1742	0	101	0	933	48	0	0.02	LG	2670 KN
	G13	1774	1146	1007	1088	2920	0	101	0	933	48	0	0.02	LG	3115 KN
	G13A	881	757	579	725	1639	0	0	0	0	48	3	0.02	MD	2670 KN
	G14	1823	1135	996	1081	2958	0	0	0	0	48	4	0.02	MD	3115 KN
	G15	1638	893	783	1064	2701	0	0	0	0	48	6	0.02	MD	3115 KN
PIER 5	G9	1464	857	746	851	2320	0	0	0	0	76	6	0.02	MD	2670 KN
	G10	1658	1132	986	1049	2790	0	0	0	0	75	4	0.02	MD	3115 KN
	G11	1504	1074	934	1007	2578	0	76	0	948	74	0	0.02	LG	2670 KN
	G11A	1604	967	967	890	2571	0	76	0	948	73	0	0.02	LG	2670 KN
	G12	1424	1009	876	959	2432	0	76	0	948	73	0	0.02	LG	2670 KN
	G12A	1551	973	1259	950	2524	0	76	0	948	72	0	0.02	LG	2670 KN
	G13	1311	961	833	922	2272	0	76	0	948	72	0	0.02	LG	2670 KN
	G13A	1431	893	1154	890	2323	0	0	0	0	72	4	0.02	MD	2670 KN
	G14	1339	999	864	942	2337	0	0	0	0	70	5	0.02	MD	2670 KN
	G15	1285	832	719	961	2246	0	0	0	0	70	7	0.02	MD	2670 KN
ABUT 2	G9	433	424	353	445	877	0	0	0	0	98	7	0.02	MD	1335 KN
	G10	508	564	469	551	1071	0	0	0	0	97	5	0.02	MD	1335 KN
	G11	535	559	465	548	1093	0	52	0	442	96	0	0.02	LG	1335 KN
	G11A	493	478	478	543	1036	0	52	0	442	96	0	0.02	LG	1335 KN
	G12	525	546	455	539	1071	0	52	0	442	95	0	0.02	LG	1335 KN
	G12A	491	532	314	538	1029	0	52	0	442	94	0	0.02	LG	1335 KN
	G13	509	520	432	519	1029	0	52	0	442	93	0	0.02	LG	1335 KN
	G13A	461	483	304	502	963	0	0	0	0	94	5	0.02	MD	1335 KN
	G14	524	525	437	523	1049	0	0	0	0	92	6	0.02	MD	1335 KN
	G15	503	436	362	535	1038	0	0	0	0	91	8	0.02	MD	1335 KN

GIRDER AND BEARING LAYOUT ANGLES

LOCATION	GIRDERS	A (DEGREES)	B (DEGREES)
ABUT 1	G9	90°-00′	93°-24′
	G10	90°-00′	93°-24′
	G11	90°-00′	93°-24′
	G12	90°-00′	93°-24′
	G13	90°-00′	93°-24′
	G14	90°-00′	93°-24′
	G15	90°-00′	93°-24′
PIER 1	G9	90°-00′	90°-00′
	G10	90°-00′	90°-00′
	G11	90°-00′	90°-00′
	G12	90°-00′	90°-00′
	G13	90°-00′	90°-00′
	G14	90°-00′	90°-00′
	G15	90°-00′	90°-00′
PIER 2	G9	90°-00′	90°-00′
	G10	90°-00′	90°-00′
	G11	90°-00′	90°-00′
	G12	90°-00′	90°-00′
	G13	90°-00′	90°-00′
	G14	90°-00′	90°-00′
	G15	90°-00′	90°-00′
PIER 3	G9	90°-00′	90°-00′
	G10	90°-00′	90°-00′
	G11	90°-00′	90°-00′
	G12	90°-00′	90°-00′
	G13	90°-00′	90°-00′
	G14	90°-00′	90°-00′
	G15	90°-00′	90°-00′
PIER 4	G9	90°-00′	90°-00′
	G10	90°-00′	90°-00′
	G11	90°-00′	90°-00′
	G11A	90°-00′	90°-00′
	G12	90°-00′	90°-00′
	G12A	90°-00′	90°-00′
	G13	90°-00′	90°-00′
	G13A	90°-00′	90°-00′
	G14	90°-00′	90°-00′
	G15	90°-00′	90°-00′
PIER 5	G9	65°-00′	65°-00′
	G10	65°-00′	65°-00′
	G11	65°-00′	65°-00′
	G11A	65°-40′	65°-40′
	G12	66°-21′	66°-21′
	G12A	67°-02′	67°-02′
	G13	67°-43′	67°-43′
	G13A	68°-09′	68°-09′
	G14	68°-35′	68°-35′
	G15	68°-42′	68°-42′
ABUT 2	G9	65°-00′	65°-00′
	G10	65°-00′	65°-00′
	G11	65°-00′	65°-00′
	G11A	65°-40′	65°-40′
	G12	66°-21′	66°-21′
	G12A	67°-02′	67°-02′
	G13	67°-43′	67°-43′
	G13A	68°-09′	68°-09′
	G14	68°-35′	68°-35′
	G15	68°-42′	68°-42′

BEARING SETTING CHART

LONGITUDINAL MOVEMENTS AT BEARING (mm) DUE TO TEMPERATURE CHANGE FROM 10° C

	± 10°	± 20°	± 30°	± 40°
ABUT 1	15	29	44	58
PIER 1	10	20	31	41
PIER 4	11	21	32	43
PIER 5	16	32	48	64
ABUT 2	21	42	63	83

NOTES:

1. ALL LOADS SHOWN IN THE TABLES ON THIS SHEET ARE UNFACTORED.
2. THE DESIGN BEARING VERTICAL LOAD IS THE DEAD LOAD PLUS THE LARGER OF GROUP I OR GROUP IB LIVE LOAD WITHOUT IMPACT. GROUP I REFERS TO THE HL-93 STANDARD LOAD VEHICLE. GROUP IB REFERS TO THE CONTROLLING P204 OR P380 PERMIT LIVE LOAD VEHICLE.
3. LIVE LOAD GROUP I WITH IMPACT IS PROVIDED FOR FUTURE JACKING REQUIREMENTS.
4. THE MAXIMUM MOVEMENT SHOWN IS GIVEN ALONG THE LINE DEFINED BY ANGLE 'B' ON THE BEARING DETAILS SHEETS. IT IS CALCULATED BASED ON MOVEMENTS DUE TO THE TEMPERATURE RANGE. THE DESIGN TEMPERATURE RANGE IS -23°C TO +43°C. TRANSVERSE MOVEMENT OCCURS ALONG AN AXIS PARALLEL TO THE CENTERLINE OF BEARINGS.
5. BEARINGS SHALL BE PAID FOR UNDER THE ITEM "HIGH LOAD MULTI-ROTATIONAL BEARING (X)" WHERE 'X' IS THE LOAD CAPACITY SHOWN IN THE TABLE.

REV.	DATE	DESCRIPTION	SHEET. NO
		REVISIONS	

SCALE AS NOTED

DESIGNER: O. JAMBOTKAR
DRAFTER: G. LEE
CHECKED BY: B. BURKE
DATE CHECKED: 12-03-10

STATE OF CONNECTICUT
DEPARTMENT OF TRANSPORTATION

ENGINEER: PB AMERICAS, INC.
APPROVED BY:
DATE:

PROJECT TITLE: RECONSTRUCTION OF I-95 OVER WEST RIVER (BRIDGE NO. 00163)

CADD
PLOTTED 11/13/2012

TOWN: NEW HAVEN / WEST HAVEN

DRAWING TITLE: BEARING FORCES & MOVEMEMT NORTHBOUND

PROJECT NO.: 92-522
DRAWING NO.: STR-87
SHEET NO.:

12:43:38 PM
11/13/2012
T:\WBCADD\Projects\PB\87135\FD\Structures\Contract_Sheets\Br00163\dr-87-092522-00163.dgn

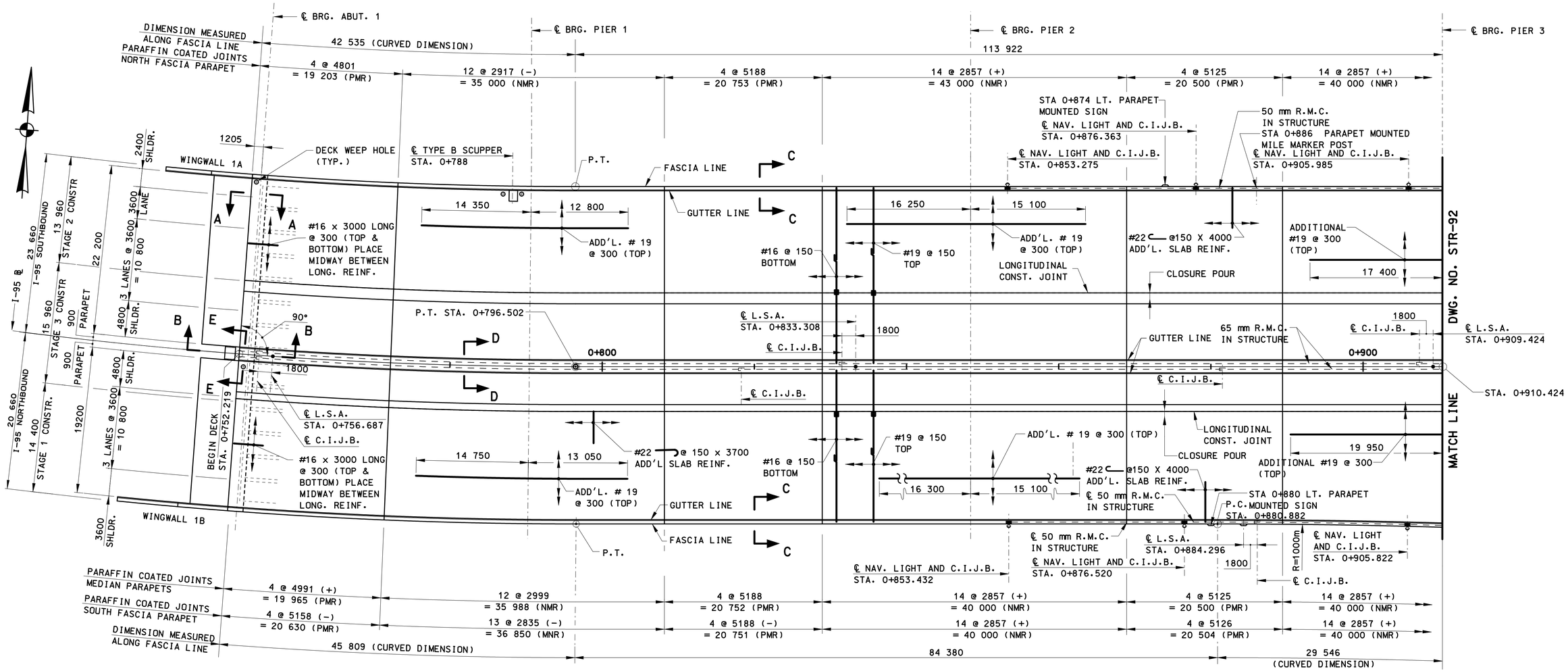

SLAB PLAN – SPAN A1, P1 & P2

SCALE: 1:250

SLAB NOTES

1. ALL REINFORCEMENT IN THE SLAB SHALL BE EPOXY COATED, UNLESS NOTED OTHERWISE.
2. FOR FINISHED SLAB ELEVATIONS, SEE DWGS. "SLAB ELEVATIOS".
3. FOR PROFILES AND BANKING DIAGRAMS, SEE DWGS. "PROFILES" AND "BANKING DIAGRAMS".
4. FOR TYPICAL SLAB SECTIONS AND DETAILS, SEE DWGS. "SLAB SECTIONS".
5. FOR APPROACH SLAB DETAILS, SEE DWG. "APPROACH SLABS AND DETAILS".
6. FOR JOINT DETAILS, SEE DWGS. "FINGER JOINTS".
7. C.I.J.B. DENOTES 450 mm x 300mm x 200mm CAST IRON JUNCTION BOX.
8. L.S.A. DENOTES LIGHT STANDARD ANCHORAGE.
9. TYPE 2 CONDUIT EXPANSION FITTINGS SHALL BE USED AT EACH ABUTMENT EXPANSION JOINT.
10. FOR ELECTRICAL DETAILS, SEE DWGS. "ELECTRICAL DETAILS".
11. FOR PARAPET SECTION AND DETAILS, SEE DWGS. "SLAB DETAILS – PARAPET DETAILS".
12. FOR SLAB POUR SEQUENCE AND LOCATION OF TRANVERSE CONSTRUCTION JOINTS, SEE DWG. "SLAB DETAILS – POURING SEQUENCE".
13. FOR NAVIGATION LIGHTING DETAILS, SEE ROADWAY PLANS.
14. ALL LAP SPLICES SHALL BE ALTERNATED A FULL LAP LENGTH. MINIMUM LAP SPLICES FOR REINFORCING STEEL SHALL BE AS FOLLOWS:

BAR SIZE	SPLICE LENGTH
#13	475 mm
#16	600 mm
#19	750 mm
#22	900 mm

15. FOR LONGITUDINAL CONSTRUCTION JOINT AND CLOSURE POUR DETAILS, SEE DWG. "SLAB DETAILS – TYPICAL DETAILS AND SECTIONS".
16. FOR PARAFFIN COATED JOINTS, THE FOLLOWING APPLIES:
    PMR = POSITIVE MOMENT REGION.
    NMR = NEGATIVE MOMENT REGION.
17. FOR DETAILS OF PARAFFIN COATED JOINTS, SEE DWG. "SLAB DETAILS – PARAPET DETAILS".
18. HIGHWAY ILLUMINATION CONDUIT SHALL BYPASS NAVIGATION LIGHT JUNCTION BOXES. NAVIGATION LIGHT CONDUIT SHALL BYPASS HIGHWAY ILLUMINATION JUNCTION BOXES.
    ⌐ – 450mm x 300mm x 200mm CAST IRON JUNCTION BOX (HIGHWAY ILLUMINATION).
    ▬ – 450mm x 300mm x 200mm CAST IRON JUNCTION BOXES (NAVIGATION LIGHTS).

REV.	DATE	DESCRIPTION	SHEET. NO
		REVISIONS	

SCALE AS NOTED

DESIGNER: O. JAMBOTKAR
DRAFTER: G. LEE
CHECKED BY: T. LALIBERTE
DATE CHECKED: 11-12-12

STATE OF CONNECTICUT
DEPARTMENT OF TRANSPORTATION

ENGINEER: PB AMERICAS, INC.
APPROVED BY: DATE:

PROJECT TITLE: RECONSTRUCTION OF I-95 OVER WEST RIVER (BRIDGE NO. 00163)
CADD PLOTTED 11/13/2012

TOWN: NEW HAVEN / WEST HAVEN
DRAWING TITLE: SLAB PLAN – ABUTMENT 1 TO PIER 3

PROJECT NO.: 92-522
DRAWING NO.: STR-88
SHEET NO.:

12:44:44 PM
11/13/2012
T:\VBCADD\Projects\PB\B735\FD\Structures\Contract_Sheets\Br00163.dgn

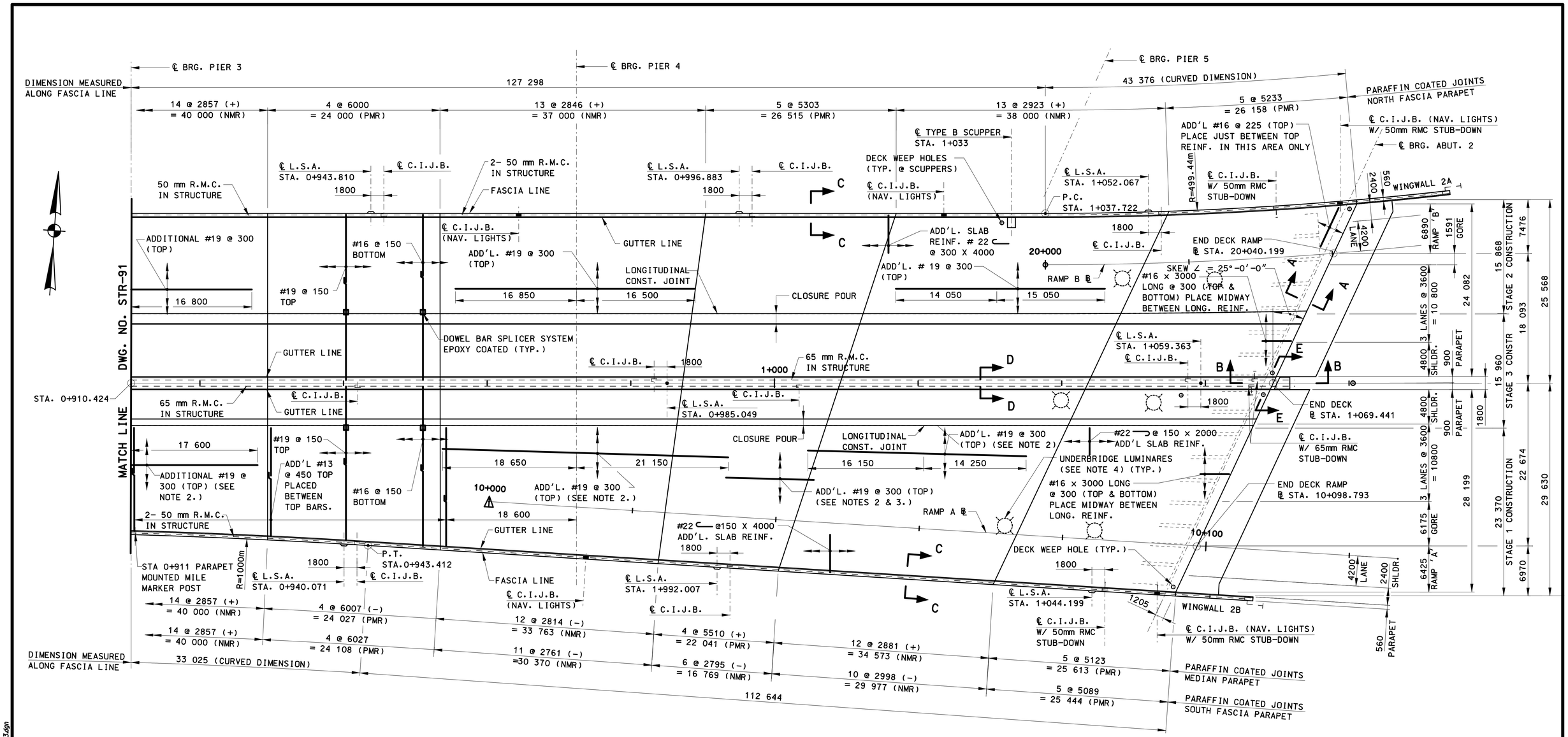

SLAB PLAN – SPAN P3, P4 & P5

SCALE: 1:250

SLAB NOTES:

1. FOR ADDITIONAL SLAB NOTES, SEE DWG. "SLAB PLAN – ABUTMENT 1 TO PIER 3".
2. ADDITIONAL BARS NOTED TO BE PLACED IN A FAN PATTERN RESULTING IN BARS APPROXIMATELY PARALLEL TO ADJACENT GIRDERS.
3. ADDITIONAL #19 @ 300 (TOP) PROVIDED BETWEEN GIRDERS G11 THROUGH G15. LAP WITH ADDITIONAL #19 BARS OVER PIER 4 TO PIER 5.
4. FOR ADDITIONAL INFORMATION AND DETAILS OF THE UNDERBRIDGE LUMINARES, SEE THE ELECTRICAL DRAWINGS OF THE HIGHWAY PLANS.

REV.	DATE	DESCRIPTION	SHEET. NO
		REVISIONS	

SCALE AS NOTED

DESIGNER: O. JAMBOTKAR
DRAFTER: G. LEE
CHECKED BY: T. LALIBERTE
DATE CHECKED: 11-12-12

STATE OF CONNECTICUT
DEPARTMENT OF TRANSPORTATION

ENGINEER: PB AMERICAS, INC.
APPROVED BY:
DATE:

PROJECT TITLE: RECONSTRUCTION OF I-95 OVER WEST RIVER (BRIDGE NO. 00163)

CADD
PLOTTED 11/13/2012

TOWN: NEW HAVEN / WEST HAVEN

DRAWING TITLE: SLAB PLAN – PIER 3 TO ABUTMENT 2

PROJECT NO.: 92-522
DRAWING NO.: STR-89
SHEET NO.:

I244458 PM
11/13/2012
T:\WBCADD\Projects\PB\8735\FD\Structures\Contract_Sheets\Br00163\str-89-092522-00163.dgn

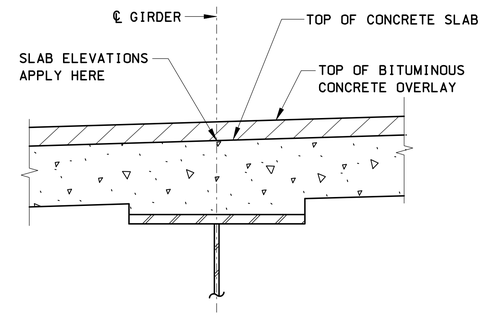

SECTION

SLAB ELEVATION DETAIL

NOT TO SCALE

TOP OF SLAB ELEVATIONS – SPAN A1 (m)

GIRDER MARK	INCREMENT	CL. BRG. ABUT 1	1/14	2/14	3/14	4/14	5/14	6/14	7/14	8/14	9/14	10/14	11/14	12/14	13/14	CL. BRG. PIER 1
G1	2.541	10.385	10.385	10.385	10.384	10.384	10.384	10.383	10.383	10.383	10.382	10.382	10.382	10.381	10.381	10.381
G2	2.555	10.548	10.546	10.544	10.542	10.540	10.538	10.535	10.533	10.531	10.529	10.527	10.525	10.522	10.520	10.518
G3	2.569	10.711	10.707	10.703	10.699	10.695	10.691	10.687	10.683	10.679	10.675	10.671	10.667	10.663	10.659	10.655
G4	2.583	10.875	10.869	10.863	10.857	10.851	10.845	10.839	10.834	10.828	10.822	10.816	10.810	10.804	10.799	10.793
G5	2.597	11.038	11.030	11.022	11.015	11.007	10.999	10.992	10.984	10.976	10.968	10.961	10.953	10.945	10.938	10.930
G6	2.611	11.201	11.191	11.182	11.172	11.163	11.153	11.144	11.134	11.125	11.115	11.105	11.096	11.086	11.077	11.067
G7	2.625	11.244	11.232	11.221	11.209	11.198	11.187	11.175	11.164	11.153	11.141	11.130	11.118	11.107	11.096	11.084
G8	2.639	11.191	11.178	11.165	11.151	11.138	11.125	11.112	11.098	11.085	11.072	11.059	11.046	11.032	11.019	11.006
G9	2.647	11.191	11.178	11.165	11.151	11.138	11.125	11.112	11.098	11.085	11.072	11.059	11.046	11.032	11.019	11.006
G10	2.661	11.353	11.338	11.322	11.307	11.291	11.276	11.261	11.245	11.230	11.214	11.199	11.184	11.168	11.153	11.137
G11	2.675	11.515	11.498	11.480	11.462	11.445	11.427	11.410	11.392	11.374	11.357	11.339	11.322	11.304	11.286	11.269
G12	2.689	11.677	11.658	11.638	11.618	11.598	11.578	11.558	11.539	11.519	11.499	11.479	11.459	11.440	11.420	11.400
G13	2.703	11.839	11.817	11.795	11.773	11.751	11.729	11.707	11.685	11.663	11.641	11.619	11.597	11.575	11.553	11.531
G14	2.717	12.002	11.977	11.953	11.929	11.905	11.881	11.856	11.832	11.808	11.784	11.760	11.735	11.711	11.687	11.663
G15	2.731	11.956	11.930	11.904	11.877	11.851	11.824	11.798	11.772	11.745	11.719	11.692	11.666	11.640	11.613	11.587

TOP OF SLAB ELEVATIONS – SPAN P1 (m)

GIRDER MARK	INCREMENT	CL. BRG. PIER 1	1/20	2/20	3/20	4/20	5/20	6/20	7/20	8/20	9/20	10/20	11/20	12/20	13/20	14/20	15/20	16/20	17/20	18/20	19/20	CL. BRG PIER 2
G1	2.888	10.381	10.380	10.380	10.380	10.379	10.379	10.379	10.379	10.377	10.376	10.375	10.373	10.372	10.370	10.369	10.367	10.365	10.364	10.362	10.361	10.359
G2	2.890	10.518	10.516	10.513	10.511	10.509	10.506	10.504	10.502	10.500	10.497	10.495	10.493	10.491	10.488	10.486	10.483	10.481	10.478	10.476	10.473	10.471
G3	2.892	10.655	10.651	10.646	10.642	10.638	10.633	10.629	10.625	10.621	10.616	10.612	10.608	10.603	10.599	10.594	10.590	10.586	10.581	10.577	10.572	10.568
G4	2.893	10.793	10.786	10.780	10.773	10.767	10.761	10.754	10.748	10.742	10.735	10.729	10.723	10.716	10.710	10.703	10.697	10.690	10.684	10.677	10.671	10.665
G5	2.895	10.930	10.921	10.913	10.904	10.896	10.888	10.879	10.871	10.863	10.854	10.846	10.837	10.829	10.821	10.812	10.804	10.795	10.787	10.778	10.770	10.761
G6	2.896	11.067	11.057	11.046	11.036	11.025	11.015	11.004	10.994	10.984	10.973	10.963	10.952	10.942	10.931	10.921	10.911	10.900	10.890	10.879	10.869	10.858
G7	2.898	11.084	11.072	11.059	11.047	11.034	11.022	11.009	10.997	10.984	10.972	10.959	10.947	10.934	10.922	10.909	10.897	10.884	10.872	10.859	10.847	10.834
G8	2.900	11.006	10.991	10.977	10.962	10.948	10.933	10.919	10.904	10.890	10.875	10.861	10.846	10.832	10.817	10.803	10.788	10.774	10.759	10.745	10.730	10.716
G9	2.900	11.006	10.991	10.977	10.962	10.948	10.933	10.919	10.904	10.890	10.875	10.861	10.846	10.832	10.817	10.803	10.788	10.774	10.759	10.745	10.730	10.716
G10	2.902	11.137	11.120	11.104	11.087	11.072	11.057	11.043	11.028	11.014	10.999	10.985	10.970	10.956	10.941	10.927	10.912	10.897	10.883	10.868	10.854	10.839
G11	2.904	11.269	11.250	11.230	11.211	11.194	11.178	11.162	11.146	11.130	11.114	11.098	11.082	11.066	11.050	11.033	11.017	11.001	10.985	10.969	10.953	10.937
G12	2.905	11.400	11.379	11.357	11.335	11.315	11.296	11.276	11.257	11.237	11.218	11.198	11.178	11.159	11.139	11.120	11.100	11.080	11.061	11.041	11.022	11.002
G13	2.907	11.531	11.508	11.484	11.460	11.437	11.414	11.391	11.368	11.344	11.321	11.298	11.275	11.252	11.229	11.206	11.183	11.160	11.137	11.113	11.090	11.067
G14	2.909	11.663	11.637	11.611	11.584	11.558	11.531	11.505	11.478	11.452	11.425	11.398	11.372	11.345	11.319	11.292	11.265	11.239	11.212	11.186	11.159	11.133
G15	2.910	11.587	11.559	11.531	11.502	11.472	11.442	11.412	11.382	11.352	11.322	11.292	11.261	11.231	11.204	11.177	11.151	11.124	11.097	11.070	11.044	11.017

TOP OF SLAB ELEVATIONS – SPAN P2 (m)

GIRDER MARK	INCREMENT	CL. BRG. PIER 2	1/20	2/20	3/20	4/20	5/20	6/20	7/20	8/20	9/20	10/20	11/20	12/20	13/20	14/20	15/20	16/20	17/20	18/20	19/20	CL. BRG PIER 3
G1	3.100	10.359	10.357	10.356	10.355	10.353	10.352	10.350	10.349	10.347	10.345	10.344	10.342	10.341	10.339	10.337	10.336	10.334	10.333	10.331	10.330	10.328
G2	3.100	10.471	10.468	10.466	10.464	10.461	10.458	10.455	10.452	10.450	10.447	10.444	10.441	10.438	10.436	10.434	10.433	10.431	10.430	10.428	10.426	10.425
G3	3.100	10.568	10.563	10.559	10.553	10.547	10.542	10.536	10.530	10.525	10.519	10.513	10.508	10.502	10.497	10.496	10.494	10.493	10.491	10.490	10.488	10.486
G4	3.100	10.665	10.658	10.651	10.643	10.634	10.626	10.617	10.609	10.600	10.591	10.583	10.574	10.566	10.559	10.557	10.556	10.554	10.553	10.551	10.550	10.548
G5	3.100	10.761	10.752	10.744	10.732	10.721	10.709	10.698	10.687	10.675	10.664	10.652	10.641	10.630	10.621	10.619	10.617	10.616	10.614	10.613	10.611	10.609
G6	3.100	10.858	10.847	10.836	10.822	10.807	10.793	10.779	10.765	10.750	10.736	10.722	10.708	10.693	10.680	10.670	10.660	10.649	10.639	10.629	10.619	10.608
G7	3.100	10.834	10.821	10.808	10.792	10.777	10.761	10.746	10.730	10.715	10.699	10.684	10.668	10.653	10.637	10.622	10.606	10.591	10.575	10.560	10.544	10.529
G8	3.100	10.716	10.700	10.685	10.669	10.654	10.638	10.623	10.607	10.592	10.576	10.561	10.545	10.530	10.514	10.499	10.483	10.467	10.452	10.436	10.421	10.405
G9	3.100	10.716	10.700	10.685	10.669	10.654	10.638	10.623	10.607	10.592	10.576	10.561	10.545	10.530	10.514	10.499	10.483	10.467	10.452	10.436	10.421	10.405
G10	3.100	10.839	10.824	10.808	10.793	10.777	10.762	10.746	10.731	10.715	10.700	10.684	10.669	10.653	10.638	10.622	10.607	10.591	10.576	10.560	10.545	10.529
G11	3.100	10.937	10.920	10.904	10.889	10.873	10.858	10.842	10.827	10.811	10.796	10.780	10.765	10.749	10.734	10.718	10.703	10.687	10.672	10.656	10.641	10.625
G12	3.100	11.002	10.982	10.965	10.947	10.930	10.913	10.896	10.879	10.862	10.845	10.828	10.811	10.794	10.776	10.759	10.742	10.725	10.707	10.690	10.672	10.655
G13	3.100	11.067	11.043	11.020	10.998	10.975	10.952	10.930	10.907	10.884	10.862	10.839	10.816	10.793	10.771	10.748	10.725	10.702	10.679	10.655	10.632	10.608
G14	3.100	11.133	11.104	11.076	11.048	11.020	10.991	10.963	10.935	10.907	10.878	10.850	10.822	10.793	10.765	10.737	10.708	10.679	10.650	10.621	10.591	10.561
G15	3.100	11.017	10.988	10.960	10.932	10.903	10.875	10.846	10.818	10.789	10.761	10.732	10.704	10.675	10.645	10.616	10.589	10.564	10.539	10.513	10.486	10.457

REV.	DATE	DESCRIPTION	SHEET. NO
		REVISIONS	

SCALE AS NOTED

DESIGNER: B. SULLIVAN
DRAFTER: G. LEE
CHECKED BY: T. LALIBERTE
DATE CHECKED: 4-27-05

STATE OF CONNECTICUT
DEPARTMENT OF TRANSPORTATION

ENGINEER: PB AMERICAS, INC.
APPROVED BY:
DATE:

PROJECT TITLE: RECONSTRUCTION OF I-95 OVER WEST RIVER (BRIDGE NO. 00163)
CADD
PLOTTED 11/13/2012

TOWN: NEW HAVEN / WEST HAVEN
DRAWING TITLE: SLAB ELEVATIONS – SPANS A1, P1 & P2

PROJECT NO.: 92-522
DRAWING NO.: STR-90
SHEET NO.:

12:45:37 PM
11/13/2012
T:\WBCADD-Projects\PB\8735\FD\Structures\Contract_Sheets\Br00163\str-90-092522-00163.dgn

TOP OF SLAB ELEVATIONS – SPAN P3 (m)

GIRDER MARK	INCREMENT	CL. BRG. PIER 3	1/20	2/20	3/20	4/20	5/20	6/20	7/20	8/20	9/20	10/20	11/20	12/20	13/20	14/20	15/20	16/20	17/20	18/20	19/20	CL. BRG PIER 4
G1	3.100	10.328	10.326	10.325	10.323	10.309	10.293	10.278	10.262	10.247	10.231	10.216	10.200	10.185	10.169	10.154	10.138	10.123	10.107	10.092	10.076	10.061
G2	3.100	10.425	10.423	10.422	10.420	10.406	10.390	10.375	10.359	10.344	10.328	10.313	10.297	10.282	10.266	10.251	10.235	10.220	10.204	10.189	10.173	10.158
G3	3.100	10.486	10.485	10.483	10.482	10.467	10.452	10.436	10.421	10.405	10.390	10.374	10.359	10.343	10.328	10.312	10.297	10.281	10.266	10.250	10.235	10.219
G4	3.100	10.548	10.546	10.545	10.543	10.529	10.513	10.498	10.482	10.467	10.451	10.436	10.420	10.405	10.389	10.374	10.358	10.343	10.327	10.312	10.296	10.281
G5	3.100	10.609	10.608	10.606	10.605	10.591	10.575	10.560	10.544	10.529	10.513	10.497	10.482	10.466	10.451	10.435	10.420	10.404	10.389	10.373	10.358	10.342
G6	3.100	10.608	10.598	10.588	10.578	10.563	10.547	10.532	10.516	10.501	10.485	10.469	10.454	10.438	10.423	10.407	10.392	10.376	10.361	10.345	10.330	10.314
G7	3.100	10.529	10.513	10.498	10.482	10.467	10.451	10.436	10.420	10.405	10.389	10.373	10.358	10.342	10.327	10.311	10.296	10.280	10.265	10.249	10.234	10.218
G8	3.100	10.405	10.390	10.374	10.359	10.343	10.328	10.312	10.297	10.281	10.266	10.250	10.235	10.219	10.204	10.188	10.173	10.157	10.142	10.126	10.111	10.095
G9	3.100	10.405	10.390	10.374	10.359	10.343	10.328	10.312	10.297	10.281	10.266	10.250	10.235	10.219	10.204	10.188	10.173	10.157	10.142	10.126	10.111	10.095
G10	3.100	10.529	10.514	10.498	10.483	10.467	10.452	10.436	10.421	10.405	10.390	10.374	10.359	10.343	10.327	10.312	10.296	10.281	10.265	10.250	10.234	10.219
G11	3.100	10.625	10.610	10.594	10.579	10.563	10.548	10.532	10.517	10.501	10.486	10.470	10.455	10.439	10.423	10.408	10.392	10.377	10.361	10.346	10.330	10.315
G12	3.101	10.655	10.637	10.619	10.601	10.584	10.568	10.552	10.535	10.518	10.502	10.485	10.468	10.452	10.435	10.418	10.401	10.384	10.367	10.350	10.333	10.316
G13	3.102	10.608	10.584	10.559	10.534	10.516	10.499	10.482	10.464	10.447	10.429	10.411	10.393	10.375	10.356	10.338	10.320	10.301	10.283	10.264	10.246	10.227
G14	3.105	10.561	10.530	10.499	10.468	10.448	10.430	10.412	10.393	10.374	10.355	10.336	10.317	10.298	10.278	10.259	10.239	10.220	10.201	10.181	10.162	10.143
G15	3.105	10.457	10.428	10.397	10.365	10.347	10.330	10.313	10.295	10.277	10.258	10.239	10.220	10.200	10.181	10.162	10.142	10.123	10.103	10.084	10.065	10.045

TOP OF SLAB ELEVATIONS – SPAN P3 (m)

GIRDER MARK	INCREMENT	0/7	1/7	2/7	3/7	4/7	5/7	6/7	CL.BRG PIER 4
G11a	2.657	10.448	10.435	10.422	10.410	10.397	10.384	10.372	10.359
G12a	2.659	10.378	10.363	10.347	10.332	10.317	10.302	10.287	10.271
G13a	2.661	10.299	10.282	10.266	10.250	10.234	10.217	10.201	10.185

TOP OF SLAB ELEVATIONS – SPAN P4 (m)

GIRDER MARK	INCREMENT	CL. BRG. PIER 4	1/20	2/20	3/20	4/20	5/20	6/20	7/20	8/20	9/20	10/20	11/20	12/20	13/20	14/20	15/20	16/20	17/20	18/20	19/20	CL. BRG PIER 5
G1	3.173	10.061	10.045	10.029	10.013	9.997	9.981	9.966	9.950	9.934	9.913	9.879	9.846	9.813	9.779	9.746	9.713	9.680	9.647	9.613	9.575	9.535
G2	3.101	10.158	10.142	10.127	10.111	10.095	10.080	10.064	10.049	10.033	10.016	9.984	9.951	9.919	9.886	9.854	9.821	9.789	9.756	9.724	9.689	9.650
G3	3.029	10.219	10.204	10.189	10.174	10.159	10.143	10.128	10.113	10.098	10.083	10.053	10.021	9.989	9.957	9.926	9.894	9.862	9.831	9.799	9.767	9.729
G4	2.957	10.281	10.266	10.251	10.236	10.222	10.207	10.192	10.177	10.162	10.148	10.122	10.091	10.060	10.029	9.998	9.967	9.936	9.905	9.874	9.843	9.809
G5	2.886	10.342	10.328	10.313	10.299	10.285	10.270	10.256	10.241	10.227	10.212	10.191	10.161	10.130	10.100	10.070	10.040	10.010	9.979	9.949	9.919	9.888
G6	2.814	10.314	10.300	10.286	10.272	10.258	10.244	10.230	10.216	10.202	10.188	10.170	10.141	10.111	10.082	10.052	10.026	10.001	9.976	9.952	9.927	9.902
G7	2.742	10.218	10.205	10.191	10.177	10.163	10.150	10.136	10.122	10.109	10.095	10.081	10.060	10.038	10.017	9.995	9.974	9.957	9.939	9.921	9.904	9.886
G8	2.670	10.095	10.082	10.068	10.055	10.042	10.028	10.015	10.002	9.988	9.975	9.962	9.948	9.935	9.921	9.908	9.895	9.881	9.868	9.855	9.841	9.828
G9	2.628	10.095	10.082	10.069	10.056	10.043	10.029	10.016	10.003	9.990	9.977	9.964	9.951	9.937	9.924	9.911	9.898	9.885	9.872	9.858	9.845	9.832
G10	2.556	10.219	10.206	10.193	10.181	10.168	10.155	10.142	10.129	10.117	10.104	10.091	10.078	10.065	10.053	10.040	10.027	10.014	10.001	9.989	9.976	9.963
G11	2.484	10.315	10.302	10.290	10.278	10.265	10.253	10.240	10.228	10.215	10.203	10.191	10.178	10.166	10.153	10.141	10.128	10.116	10.104	10.091	10.079	10.066
G11a	2.420	10.359	10.347	10.334	10.321	10.309	10.296	10.283	10.271	10.258	10.245	10.233	10.220	10.208	10.195	10.183	10.171	10.159	10.147	10.136	10.124	10.112
G12	2.356	10.315	10.303	10.290	10.277	10.264	10.251	10.238	10.225	10.212	10.199	10.187	10.174	10.162	10.153	10.144	10.135	10.126	10.117	10.109	10.100	10.092
G12a	2.293	10.271	10.258	10.245	10.232	10.219	10.206	10.193	10.180	10.167	10.154	10.140	10.127	10.114	10.108	10.101	10.095	10.089	10.084	10.078	10.073	10.068
G13	2.232	10.227	10.214	10.201	10.187	10.174	10.161	10.148	10.134	10.121	10.108	10.095	10.081	10.068	10.060	10.055	10.051	10.046	10.041	10.037	10.032	10.027
G13a	2.177	10.185	10.172	10.158	10.145	10.132	10.119	10.105	10.092	10.079	10.066	10.052	10.039	10.026	10.015	10.010	10.005	10.000	9.995	9.990	9.986	9.981
G14	2.122	10.143	10.129	10.116	10.103	10.089	10.076	10.063	10.050	10.036	10.023	10.010	9.997	9.983	9.970	9.965	9.960	9.955	9.950	9.944	9.939	9.934
G15	2.052	10.045	10.032	10.019	10.007	9.994	9.981	9.968	9.955	9.943	9.930	9.917	9.904	9.891	9.879	9.870	9.865	9.860	9.855	9.850	9.845	9.840

TOP OF SLAB ELEVATIONS – SPAN P5 (m)

GIRDER MARK	INCREMENT	CL. BRG. PIER 5	1/14	2/14	3/14	4/14	5/14	6/14	7/14	8/14	9/14	10/14	11/14	12/14	13/14	CL. BRG. ABUT 2
G1	3.112	9.535	9.496	9.458	9.419	9.379	9.339	9.298	9.256	9.214	9.172	9.129	9.086	9.042	8.997	8.951
G2	3.099	9.650	9.611	9.572	9.533	9.494	9.454	9.414	9.373	9.332	9.291	9.250	9.209	9.167	9.125	9.081
G3	3.086	9.729	9.691	9.652	9.613	9.574	9.535	9.495	9.456	9.416	9.375	9.334	9.295	9.257	9.219	9.180
G4	3.074	9.809	9.771	9.732	9.693	9.655	9.616	9.577	9.538	9.498	9.459	9.419	9.379	9.345	9.310	9.276
G5	3.062	9.888	9.850	9.812	9.774	9.735	9.697	9.658	9.620	9.581	9.542	9.503	9.464	9.429	9.399	9.369
G6	3.050	9.902	9.872	9.839	9.806	9.773	9.740	9.707	9.675	9.642	9.609	9.576	9.543	9.510	9.484	9.458
G7	3.050	9.886	9.866	9.840	9.815	9.789	9.763	9.737	9.712	9.686	9.660	9.634	9.609	9.583	9.558	9.535
G8	3.050	9.828	9.813	9.794	9.772	9.751	9.730	9.708	9.687	9.665	9.644	9.623	9.601	9.580	9.559	9.537
G9	3.050	9.832	9.817	9.799	9.778	9.757	9.735	9.714	9.693	9.671	9.650	9.629	9.607	9.586	9.565	9.543
G10	3.050	9.963	9.948	9.933	9.912	9.891	9.869	9.848	9.826	9.805	9.784	9.762	9.741	9.720	9.698	9.677
G11	3.050	10.066	10.051	10.036	10.018	9.997	9.975	9.954	9.933	9.911	9.890	9.869	9.847	9.826	9.804	9.783
G11a	3.034	10.112	10.098	10.083	10.069	10.049	10.029	10.009	9.989	9.969	9.949	9.930	9.910	9.891	9.872	9.852
G12	3.018	10.092	10.081	10.071	10.061	10.049	10.033	10.018	10.003	9.988	9.974	9.959	9.945	9.932	9.918	9.905
G12a	3.003	10.068	10.062	10.056	10.050	10.044	10.033	10.023	10.012	10.003	9.993	9.984	9.975	9.964	9.952	9.941
G13	2.988	10.027	10.021	10.014	10.008	10.002	9.992	9.979	9.967	9.955	9.943	9.930	9.918	9.906	9.894	9.882
G13a	2.979	9.981	9.974	9.967	9.960	9.954	9.945	9.933	9.920	9.907	9.895	9.882	9.870	9.857	9.844	9.832
G14	2.970	9.934	9.927	9.920	9.913	9.906	9.898	9.886	9.873	9.860	9.847	9.834	9.821	9.808	9.795	9.782
G15	2.967	9.840	9.833	9.826	9.818	9.811	9.803	9.794	9.780	9.767	9.754	9.740	9.727	9.714	9.701	9.687

NOTE:

FOR DETAIL INDICATING LOCATION THAT SLAB ELEVATIONS APPLY, SEE DWG. "SLAB ELEVATIONS – SPANS A1, P1 & P2".

REV.	DATE	DESCRIPTION	SHEET. NO

REVISIONS

SCALE AS NOTED

DESIGNER: B. SULLIVAN
DRAFTER: G. LEE
CHECKED BY: T. LALIBERTE
DATE CHECKED: 4-27-05

STATE OF CONNECTICUT
DEPARTMENT OF TRANSPORTATION

ENGINEER: PB AMERICAS, INC.
APPROVED BY: DATE:

PROJECT TITLE: RECONSTRUCTION OF I-95 OVER WEST RIVER (BRIDGE NO. 00163)

CADD PLOTTED 11/13/2012

TOWN: NEW HAVEN / WEST HAVEN

DRAWING TITLE: SLAB ELEVATIONS – SPANS P3, P4 & P5

PROJECT NO.: 92-522
DRAWING NO.: STR-91
SHEET NO.:

12:46:17 PM
11/13/2012
T:\V8CADD\Projects\PB\8735\FD\Structures\Contract_Sheets\Br00163\str-91-092522-00163.dgn

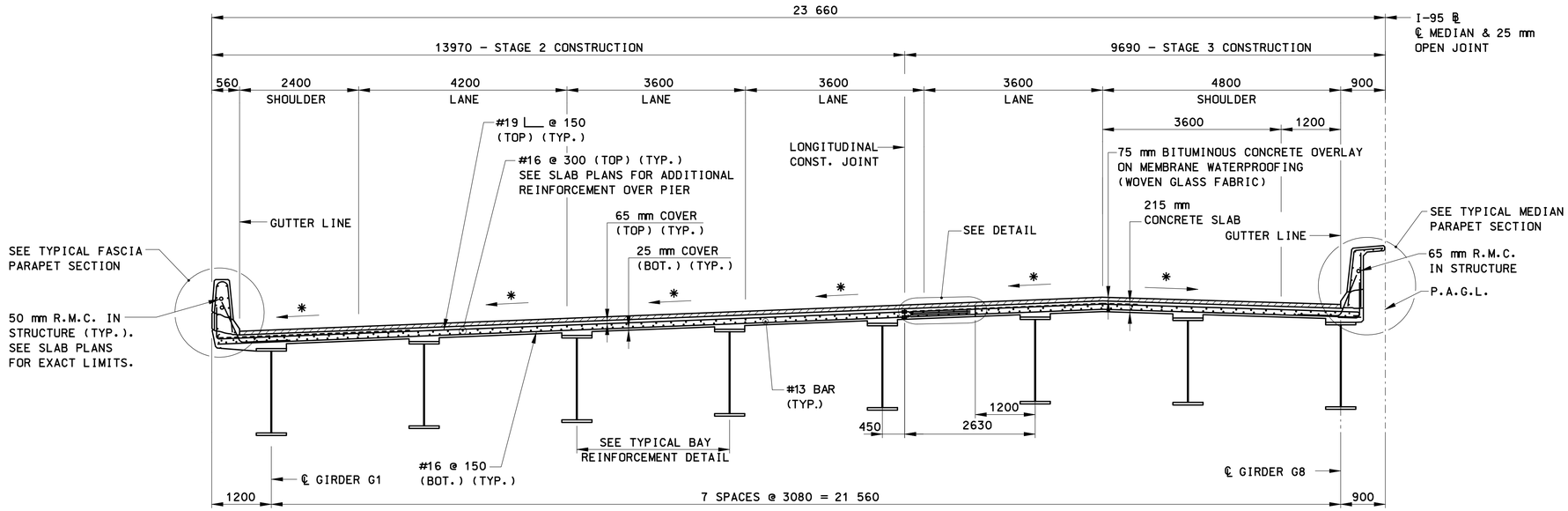

I-95 SOUTHBOUND ℄ STA. 0+752.254 TO STA. 1+037.722

SCALE: 1:50

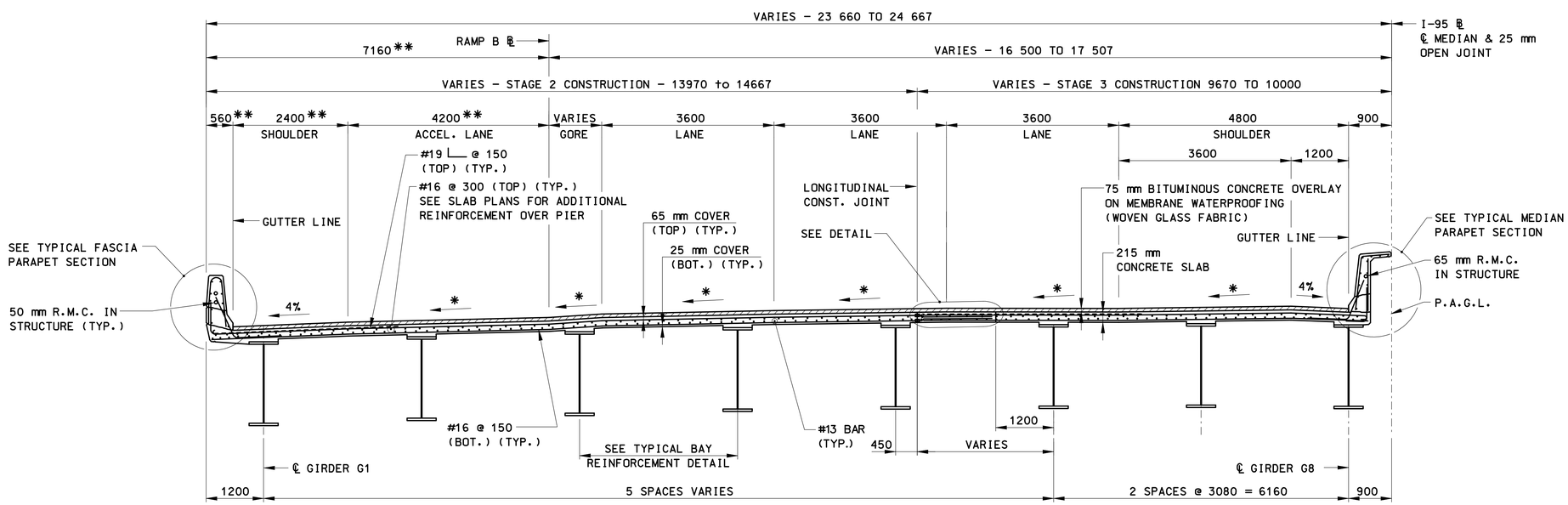

I-95 SOUTHBOUND ℄ STA. 1+037.722 TO STA. 1+069.441

SCALE: 1:50

NOTES

1. ALL REINFORCEMENT IN SLAB TO BE EPOXY COATED.
2. DIAPHRAGMS NOT SHOWN FOR CLARITY.
3. FOR GENERAL NOTES, SEE DWG. "GENERAL PLAN".
4. FOR PROFILES AND BANKING DIAGRAMS, SEE DWGS. "PROFILES" AND "BANKING DIAGRAMS".
5. FOR FRAMING PLANS, SEE DWGS. "FRAMING PLANS".
6. FOR SLAB PLANS, SEE DWGS. "SLAB PLANS".
7. FOR SLAB DETAILS, SEE DWGS. "SLAB DETAILS".
8. FOR ELECTRICAL DETAILS, SEE DWGS. "ELECTRICAL DETAILS".
9. P.A.G.L. STANDS FOR POINT OF APPLICATION OF GRADELINE.

* - CROSS SLOPE VARIES. SEE "BANKING DIAGRAMS".

** - RADIAL DIMENSION MEASURED PERPENDICULAR TO RAMP B ℄.

REV.	DATE	DESCRIPTION	SHEET. NO
		REVISIONS	

SCALE AS NOTED

DESIGNER: T. YOUNG
DRAFTER: G. LEE
CHECKED BY: T. LALIBERTE
DATE CHECKED: 4-27-05

STATE OF CONNECTICUT
DEPARTMENT OF TRANSPORTATION

ENGINEER: PB AMERICAS, INC.
APPROVED BY:
DATE:

PROJECT TITLE: RECONSTRUCTION OF I-95 OVER WEST RIVER (BRIDGE NO. 00163)
CADD
PLOTTED 11/13/2012

TOWN: NEW HAVEN / WEST HAVEN
DRAWING TITLE: SLAB SECTIONS - SOUTHBOUND

PROJECT NO.: 92-522
DRAWING NO.: STR-92
SHEET NO.:

12:46:58 PM
11/13/2012
T:\VBCADD\Projects\PB\BT35\FD\Structures\Contract_Sheets\Br00163.dgn-92-092522-00163.dgn

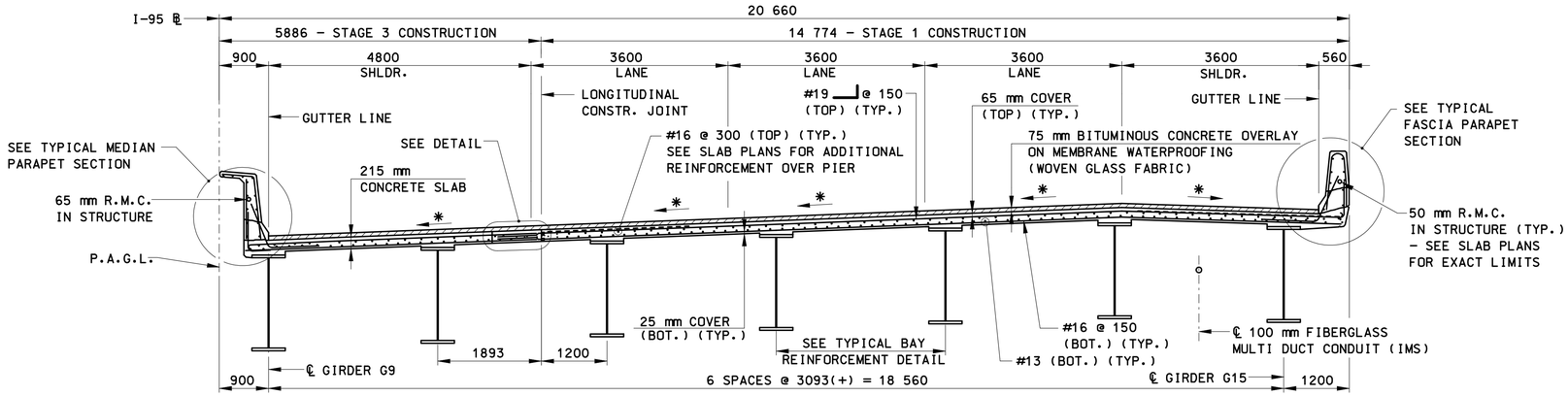

I-95 NORTHBOUND ℄ STA. 0+752.254 TO STA. 0+880.882

SCALE: 1:50

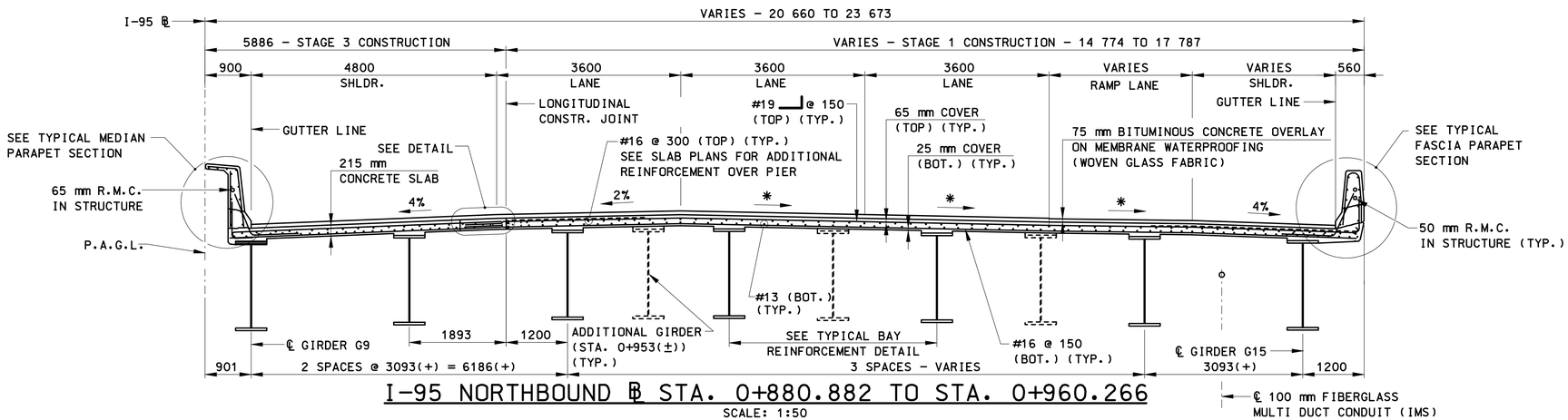

I-95 NORTHBOUND ℄ STA. 0+880.882 TO STA. 0+960.266

SCALE: 1:50

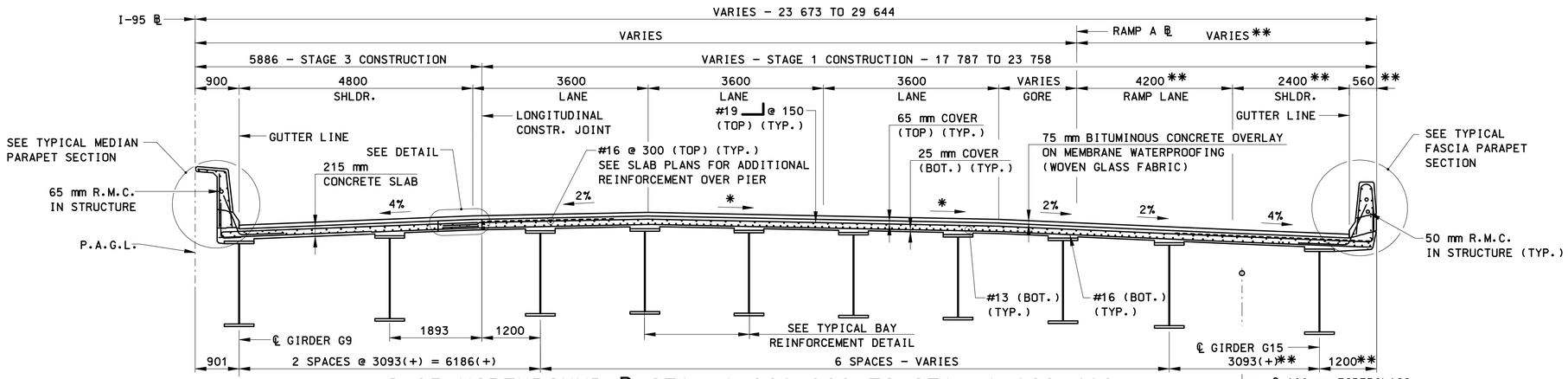

I-95 NORTHBOUND ℄ STA. 0+960.266 TO STA. 1+069.402

SCALE: 1:50

NOTES

1. FOR ADDITIONAL NOTES, SEE DWG. "SLAB SECTION - SOUTHBOUND".
2. FOR TYPICAL BAY REINFORCEMENT, SEE DWG. "SLAB DETAILS - TYPICAL DETAILS AND SECTIONS".
3. FOR VARYING BAY REINFORCEMENT BETWEEN GIRDERS G11 TO G14 FROM ℄ BRG. PIER 3 INTO SPAN P3, SEE DWG. "SLAB DETAILS - TYPICAL DETAILS AND SECTIONS".

* - CROSS SLOPE VARIES. SEE "BANKING DIAGRAMS".

** - DIMENSION MEASURED PERPENDICULAR TO RAMP A ℄.

REV.	DATE	DESCRIPTION	SHEET. NO.
		REVISIONS	

SCALE AS NOTED

DESIGNER: T. YOUNG
DRAFTER: G. LEE
CHECKED BY: T. LALIBERTE
DATE CHECKED: 4-27-05

STATE OF CONNECTICUT
DEPARTMENT OF TRANSPORTATION

ENGINEER: PB AMERICAS, INC.
APPROVED BY: DATE:

PROJECT TITLE: RECONSTRUCTION OF I-95 OVER WEST RIVER (BRIDGE NO. 00163)

CADD PLOTTED 11/13/2012

TOWN: NEW HAVEN / WEST HAVEN

DRAWING TITLE: SLAB SECTIONS - NORTHBOUND

PROJECT NO.: 92-522
DRAWING NO.: STR-93
SHEET NO.:

12:47:36 PM
11/13/2012
T:\WBCADD\Projects\PB\6735\FD\Structures\Contract_Sheets\Br00163.dgn-93-092522-00163.dgn

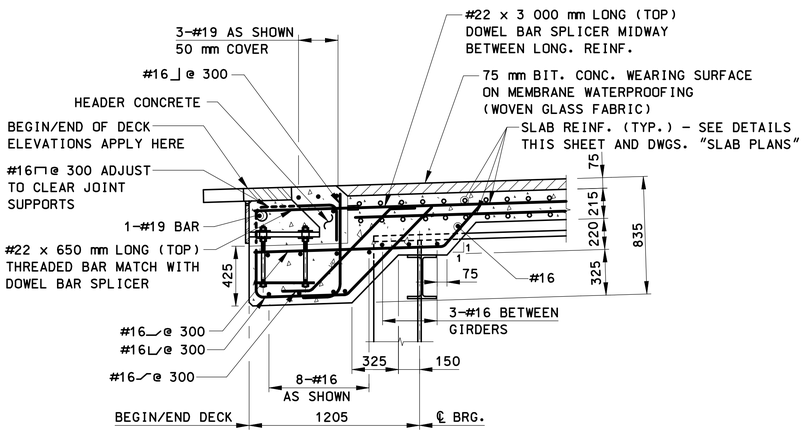

SECTION A-A

SCALE: 1:20
(END OF DECK AT FINGER JOINT)

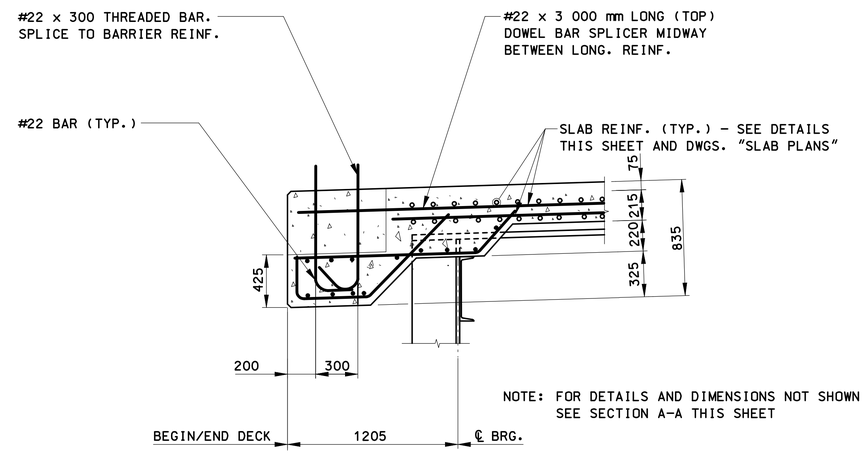

NOTE: FOR DETAILS AND DIMENSIONS NOT SHOWN
SEE SECTION A-A THIS SHEET

SECTION B-B

SCALE: 1:20
(END OF DECK AT MEDIAN BARRIER)

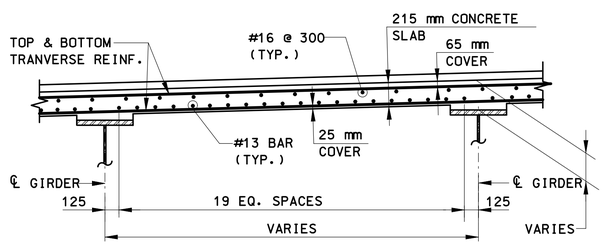

NOTE: APPLIES TO ALL BAYS EXCEPT BETWEEN GIRDERS G11 TO G14
FROM ℄ BRG PIER 3 TO ℄ BRG. PIER 4.

TYPICAL BAY REINFORCEMENT DETAIL

SCALE: 1:25

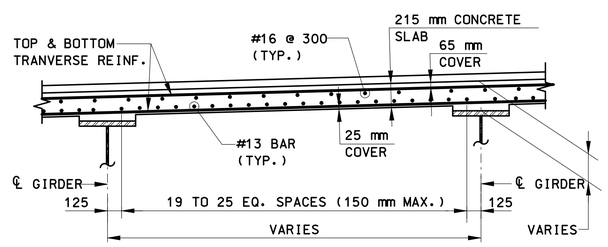

NOTE: APPLIES TO BAYS BETWEEN GIRDERS G11 TO G14
FROM ℄ BRG PIER 3 TO ℄ BRG. PIER 4.

BAY REINFORCEMENT DETAIL

SCALE: 1:25

NOTES

1. OVERLAY ON SHOULDER PORTION TO BE CONSTRUCTED TO THE ARC OF A CIRCLE.
2. 1200 mm SHOULDER SHOWN, 4800mm & 3600 mm SHOULDER SIMILAR.

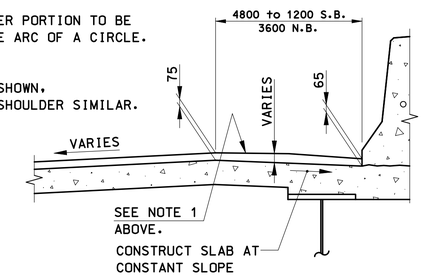

SHOULDER TREATMENT AT HIGH SIDE OF BANK

SCALE: 1:25

REV.	DATE	DESCRIPTION	SHEET. NO
		REVISIONS	

SCALE AS NOTED

DESIGNER: T. YOUNG
DRAFTER: T. YOUNG /G. LEE
CHECKED BY: T. LALIBERTE
DATE CHECKED: 01-27-03

STATE OF CONNECTICUT
DEPARTMENT OF TRANSPORTATION

ENGINEER: PB AMERICAS, INC.
APPROVED BY:
DATE:

PROJECT TITLE: RECONSTRUCTION OF I-95 OVER WEST RIVER (BRIDGE NO. 00163)
CADD
PLOTTED 11/13/2012

TOWN: NEW HAVEN / WEST HAVEN
DRAWING TITLE: SLAB DETAILS - TYPICAL DETAILS AND SECTIONS

PROJECT NO.: 92-522
DRAWING NO.: STR-94
SHEET NO.:

12:48:48 PM
11/13/2012
T:\V8CADD\Projects\PB\8735\FD\Structures\Contract_Sheets\Br00163\dr-94-092522-00163.dgn

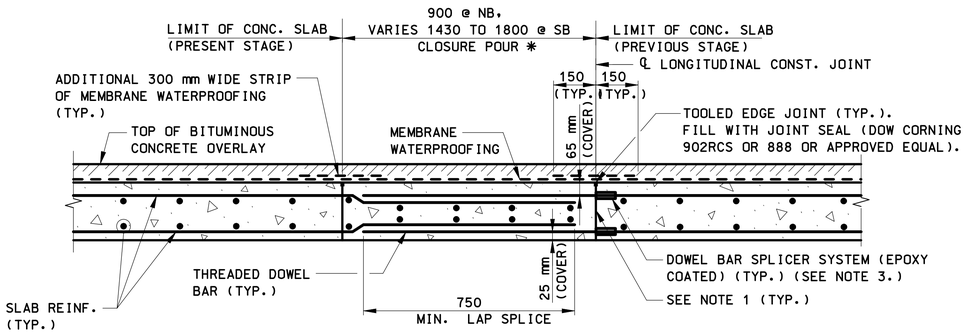

SECTION

LONGITUDINAL CONSTRUCTION JOINT/CLOSURE POUR DETAILS

NOT TO SCALE

NOTES:

1. ROUGHEN SURFACE, BLAST CLEAN, THEN APPLY A NEAT CEMENT GROUT OR OTHER SUITABLE BONDING MATERIAL IMMEDIATELY PRIOR TO PLACING ADJACENT POUR. COST TO BE INCLUDED IN THE CONTRACT ITEM "CLASS 'F' CONCRETE".
2. DOWEL BAR SPLICER SYSTEM SHALL DEVELOP IN TENSION 125% OF THE SPECIFIED YIELD STRENGTH OF THE BAR AND SHALL MEET ALL REQUIREMENTS OF THE LATEST EDITION OF AASHTO. THE CONTRACTOR SHALL SUBMIT TYPE OF CONNECTION FOR ENGINEERS APPROVAL. COST TO BE INCLUDED IN THE ITEM "DOWEL BAR SPLICER SYSTEM - EPOXY COATED."

* CLOSURE POURS SHALL GENERALLY BE USED BETWEEN CONSTRUCTION STAGES AS SHOWN, AND/OR AS DIRECTED BY THE ENGINEER.

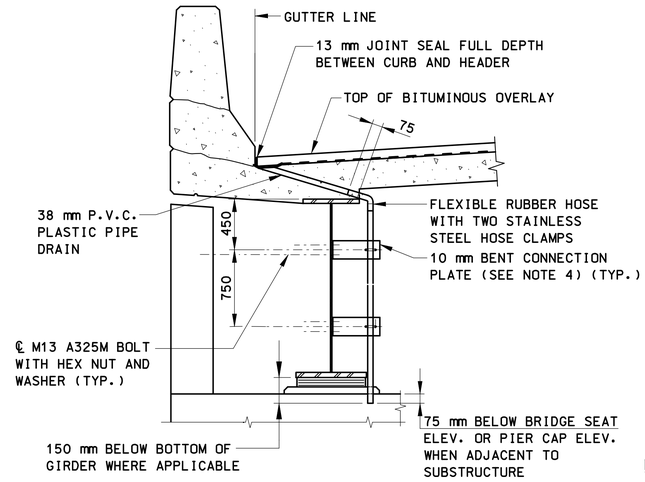

SECTION B-B AT FASCIA GIRDER

SCALE: 1:20

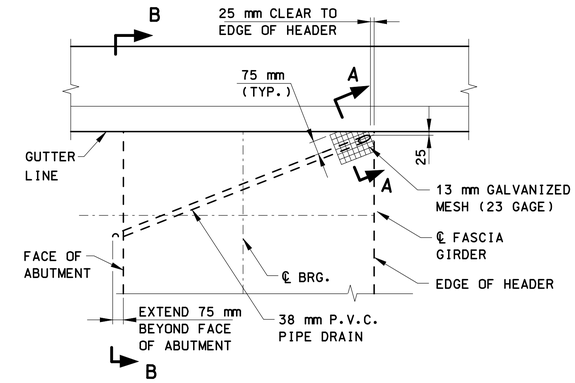

PLAN

SCALE: 1:20

NOTES

1. 38 mm POLYVINYL CHLORIDE (P.V.C.) PLASTIC PIPE DRAINS SHALL BE PLACED THRU SLAB WHERE SHOWN ON THE "SLAB PLAN". LOCATIONS MAY BE FIELD ADJUSTED, AS DIRECTED BY THE ENGINEER, SUCH THAT PIPE DRAINS ARE NOT ABOVE THE TRAVEL LANES, SHOULDERS, OR SIDEWALKS.
2. COST OF PIPE DRAINS SHALL BE INCLUDED UNDER THE ITEM "38 mm POLYVINYL CHLORIDE PLASTIC PIPE".
3. THE COST OF FURNISHING AND INSTALLING MESH SHALL BE INCLUDED IN THE CONTRACT BID PRICE FOR "SUPERPAVE 9.5 mm".
4. FOR ADDITIONAL INFORMATION AND DETAILS OF STRUCTURAL STEEL ATTACHMENT TO GIRDER, SEE DWG. "STRUCTURAL STEEL DETAIL - DIAPHRAGM & MISC. DETAILS.
5. DETAILS SHOWN AT FASCIA, MEDIAN IS SIMILAR.

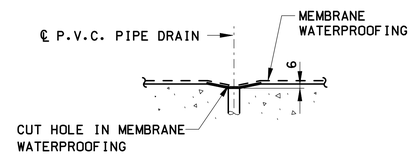

SECTION A-A

NOT TO SCALE

OVERLAY INTERFACE DRAINAGE DETAILS

SCALE AS NOTED

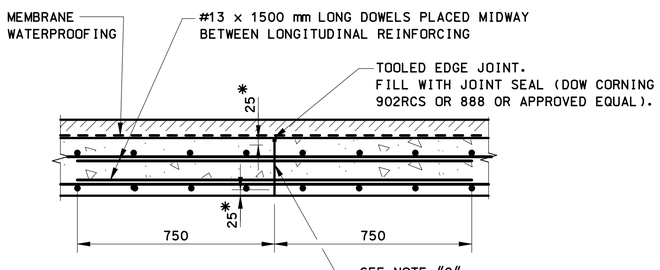

SECTION

TRANSVERSE CONSTRUCTION JOINT

NOT TO SCALE

*LIMIT OF FORMED JOINT

NOTE "C"

ROUGHEN SURFACE, BLAST CLEAN, THEN APPLY A NEAT CEMENT GROUT OR OTHER SUITABLE BONDING MATERIAL IMMEDIATELY PRIOR TO PLACING ADJACENT POUR. COST TO BE INCLUDED IN THE ITEM "CLASS "F" CONCRETE".

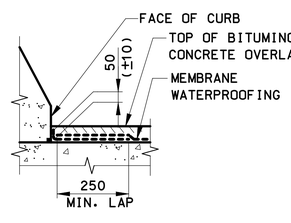

AT GUTTER

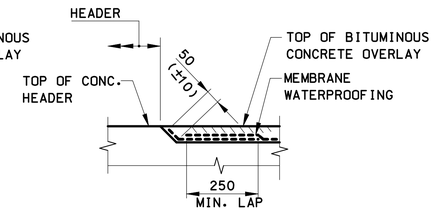

AT HEADER

TREATMENT OF MEMBRANE WATERPROOFING

NOT TO SCALE

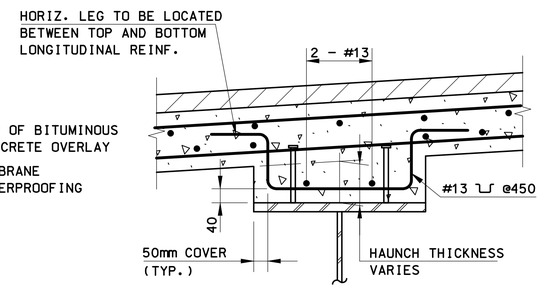

SECTION

HAUNCH REINFORCEMENT DETAIL

SCALE: 1:10

(REQUIRED FOR HAUNCH DEPTH GREATER THAN 100 mm)

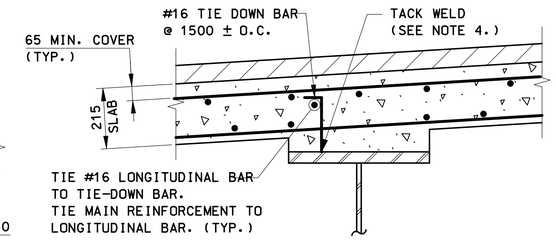

TIE DOWN DETAIL

SCALE: 1:10

TIE DOWN NOTES:

1. TIE-DOWN BARS DO NOT EXCLUDE THE USE OF CHAIRS FOR SUPPORTING THE REINFORCEMENT MAT.
2. THE COST OF FURNISHING AND PLACING TIE-DOWN BARS TO BE INCLUDED IN THE CONTRACT ITEM "DEFORMED STEEL BARS (EPOXY COATED)".
3. TIE-DOWN BARS AND LONGITUDINAL BARS SHALL CLEAR SHEAR CONNECTORS.
4. WELDING OF TIE DOWN BARS SHALL BE ALLOWED IN FLANGE COMPRESSION STRESS ZONES ONLY.

REV.	DATE	DESCRIPTION	SHEET. NO.
		REVISIONS	

SCALE AS NOTED

DESIGNER: T. YOUNG
DRAFTER: T. YOUNG / G. LEE
CHECKED BY: T. LALIBERTE
DATE CHECKED: 4-27-05

STATE OF CONNECTICUT
DEPARTMENT OF TRANSPORTATION

ENGINEER: PB AMERICAS, INC.
APPROVED BY:
DATE:

PROJECT TITLE: RECONSTRUCTION OF I-95 OVER WEST RIVER (BRIDGE NO. 00163)

CADD
PLOTTED 11/13/2012

TOWN: NEW HAVEN / WEST HAVEN

DRAWING TITLE: SLAB DETAILS - MISCELLANEOUS DETAILS

PROJECT NO.: 92-522
DRAWING NO.: STR-95
SHEET NO.:

12:49:41 PM
11/13/2012
T:\V8CADD\Projects\PB18735\FD\Structures\Contract_Sheets\Br00163utl-95-092522-00163.dgn

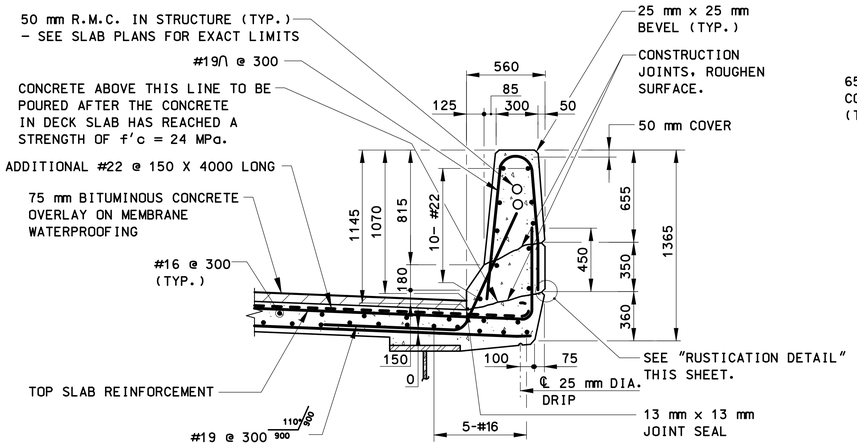

SECTION C-C

TYPICAL FASCIA PARAPET SECTION

SCALE: 1:20

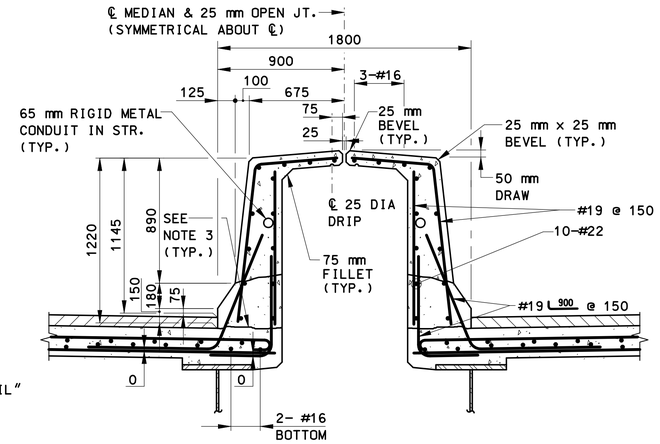

SECTION D-D

TYPICAL MEDIAN PARAPET SECTION

SCALE: 1:20

PARAPET NOTES

1. THE PARAPET CONCRETE SHALL BE PLACED CONTINUOUS WITHOUT VERTICAL JOINTS. LONGITUDINAL REINF. SHALL BE CONTINUOUS WITH MINIMUM LAP SPLICES OF 1000 mm.
2. HORIZONTAL CONSTRUCTION JOINTS ARE REQUIRED AND SHALL BE PLACED AS SHOWN.
3. ALL PARAPET REINFORCEMENT SHALL HAVE 50 mm COVER, EXCEPT AS NOTED.

MEDIAN PARAPET NOTES

1. THE MEDIAN PARAPET SHALL BE CONSTRUCTED DURING STAGE 4. FOR DETAILS, SEE "STAGE CONSTRUCTION PLANS - STAGE 4".
2. DIMENSIONS SHOWN ON THIS DETAIL APPLY AT BOTH SIDES OF THE MEDIAN PARAPET. FOR INFORMATION NOT SHOWN, SEE "TYPICAL FASCIA PARAPET SECTION".
3. CONSTRUCTION JOINT: ROUGHEN SURFACE TO A MINIMUM AMPLITUDE OF 6mm ± PRIOR TO CONSTRUCTION OF FINAL MEDIAN PARAPET.

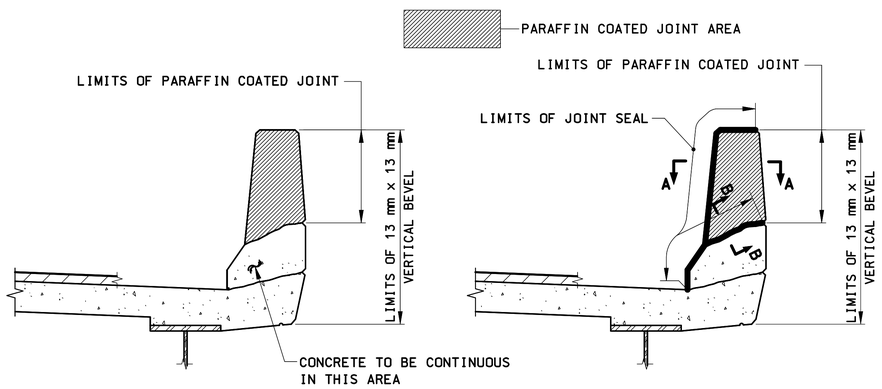

POSITIVE MOMENT REGIONS

NEGATIVE MOMENT REGIONS AND TRANSVERSE CONSTRUCTION JOINTS

NOTE: FASCIA PARAPET SHOWN, MEDIAN PARAPET SIMILAR.

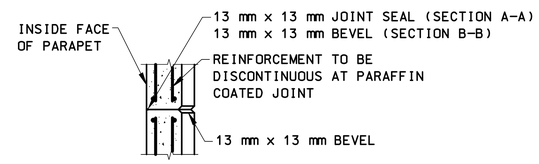

SECTION A-A

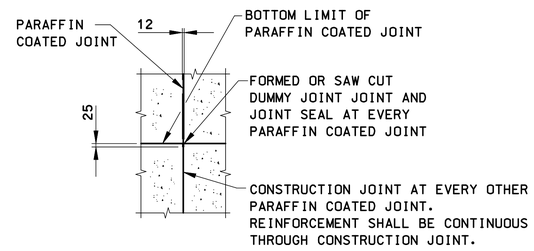

SECTION B-B

PARAFFIN COATED JOINT DETAIL AT PARAPET SECTIONS

SCALE: 1:20

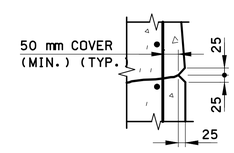

RUSTICATION DETAIL

SCALE: 1:10

REV.	DATE	DESCRIPTION	SHEET. NO
		REVISIONS	

SCALE AS NOTED

DESIGNER: T. YOUNG
DRAFTER: T. YOUNG / G. LEE
CHECKED BY: T. LALIBERTE
DATE CHECKED: 4-27-05

STATE OF CONNECTICUT
DEPARTMENT OF TRANSPORTATION

ENGINEER: PB AMERICAS, INC.
APPROVED BY: DATE:

PROJECT TITLE: RECONSTRUCTION OF I-95 OVER WEST RIVER (BRIDGE NO. 00163)
CADD PLOTTED 11/13/2012

TOWN: NEW HAVEN / WEST HAVEN
DRAWING TITLE: SLAB DETAILS - PARAPET DETAILS

PROJECT NO.: 92-522
DRAWING NO.: STR-96
SHEET NO.:

12:49:47 PM
11/13/2012
T:\WECADD\Projects\PB\8735\FD\Structures\Contract_Sheets\Br0163\dr-96-092522-00163.dgn

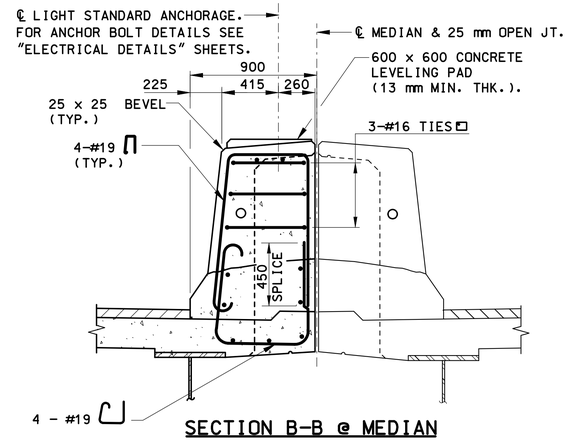

SECTION B-B @ MEDIAN

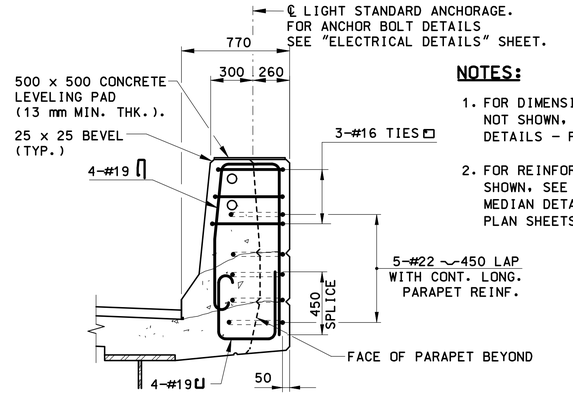

SECTION B-B @ FASCIA PARAPET

NOTES:

1. FOR DIMENSIONS AND DETAILS NOT SHOWN, SEE DWG. "SLAB DETAILS - PARAPET DETAILS".
2. FOR REINFORCEMENT NOT SHOWN, SEE PARAPET AND MEDIAN DETAILS AND SLAB PLAN SHEETS.

LIGHT STANDARD ANCHORAGE SECTIONS

SCALE: 1:20

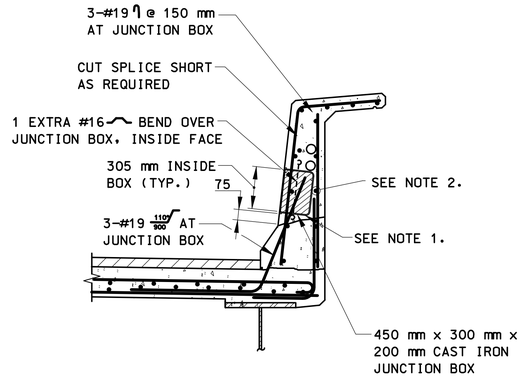

SECTION A-A @ MEDIAN

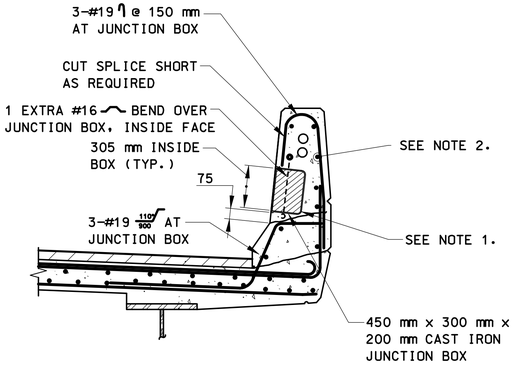

SECTION A-A @ FASCIA PARAPET

PARAPET REINFORCEMENT AT JUNCTION BOX

SCALE: 1:20

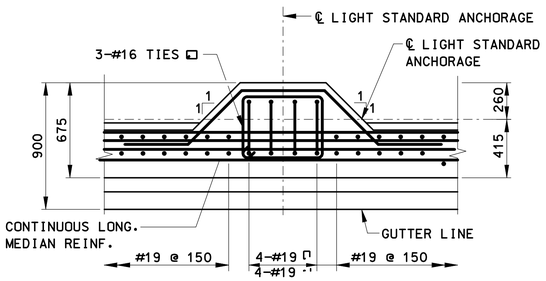

AT MEDIAN

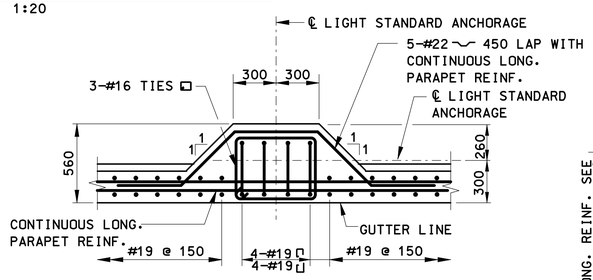

AT FASCIA PARAPET

LIGHT STANDARD ANCHORAGE DETAILS

SCALE: 1:20

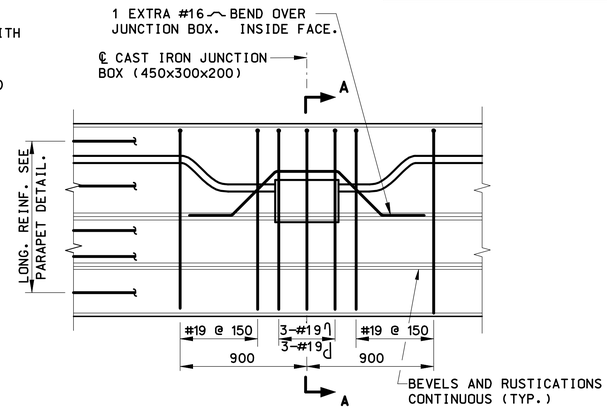

NAVIGATION LIGHT JUNCTION BOX
(APPLIES @ FASCIA PARAPET)

ELEVATION

SCALE: 1:20

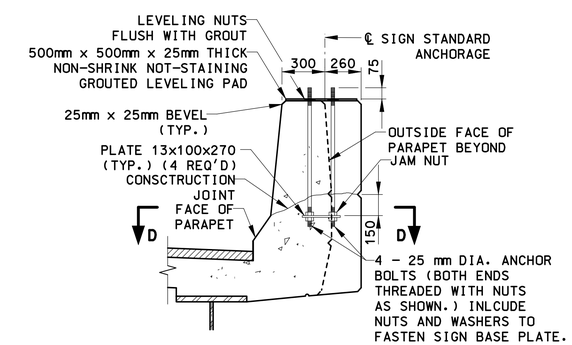

SECTION C-C

SCALE: 1:20

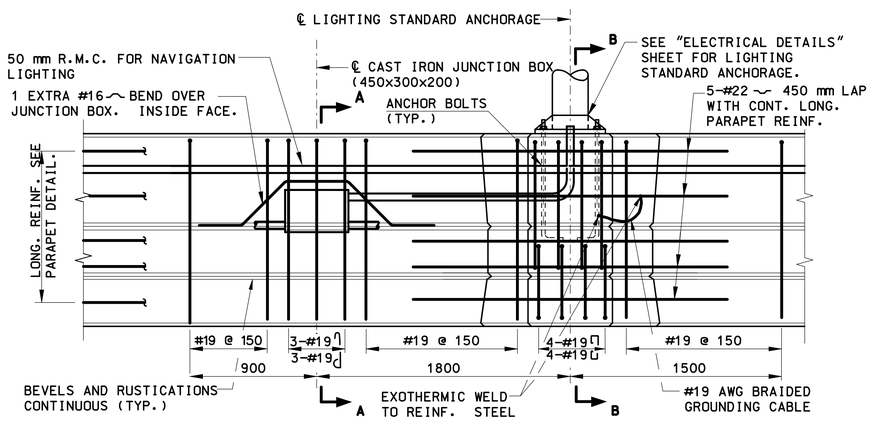

LIGHT STANDARD JUNCTION BOX
(APPLIES @ FASCIA & MEDIAN PARAPET)

ELEVATION

SCALE: 1:20

NOTES:

1. PLACE BOX IN BED OF MORTAR. COST OF FURNISHING AND PLACING MORTAR TO BE INCLUDED IN THE ITEM FOR "CLASS 'F' CONCRETE".
2. 7-#22 (MEDIAN) & 5-#22 (FASCIA) TO BE CONTINOUS (1-#22 INSIDE FACE OF PARAPET TO BE DISCONTINOUS AT JUNCTION BOX).

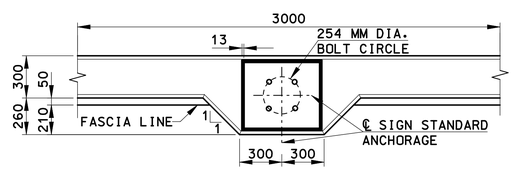

PLAN - TYPICAL PARAPET

SCALE: 1:20

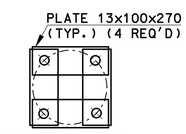

SECTION D-D

SCALE: 1:10

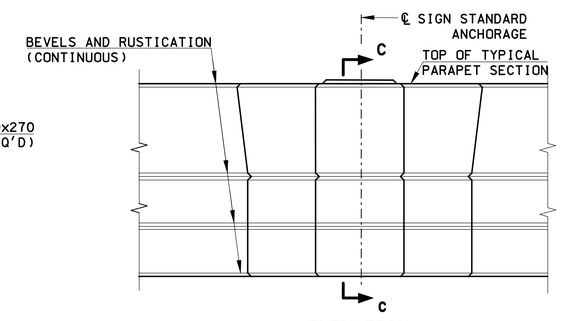

ELEVATION

SCALE: 1:20

ANCHORAGE FOR REGULATORY - WARNING AND GUIDE SIGNS

SCALE AS NOTED

REV.	DATE	DESCRIPTION	SHEET. NO
		REVISIONS	

SCALE AS NOTED

DESIGNER: T. YOUNG
DRAFTER: G. LEE
CHECKED BY: T. LALIBERTE
DATE CHECKED: 4-27-05

STATE OF CONNECTICUT
DEPARTMENT OF TRANSPORTATION

ENGINEER: PB AMERICAS, INC.
APPROVED BY:
DATE:

PROJECT TITLE: RECONSTRUCTION OF I-95 OVER WEST RIVER (BRIDGE NO. 00163)
CADD
PLOTTED 11/13/2012

TOWN: NEW HAVEN / WEST HAVEN
DRAWING TITLE: SLAB DETAILS - PARAPET ELECTRICAL DETAILS

PROJECT NO.: 92-522
DRAWING NO.: STR-97
SHEET NO.:

12:50:32 PM
11/13/2012
T:\V8CADD\Projects\PB8735\FD\Structures\Contract_Sheets\Br00163\str-97-092522-00163.dgn

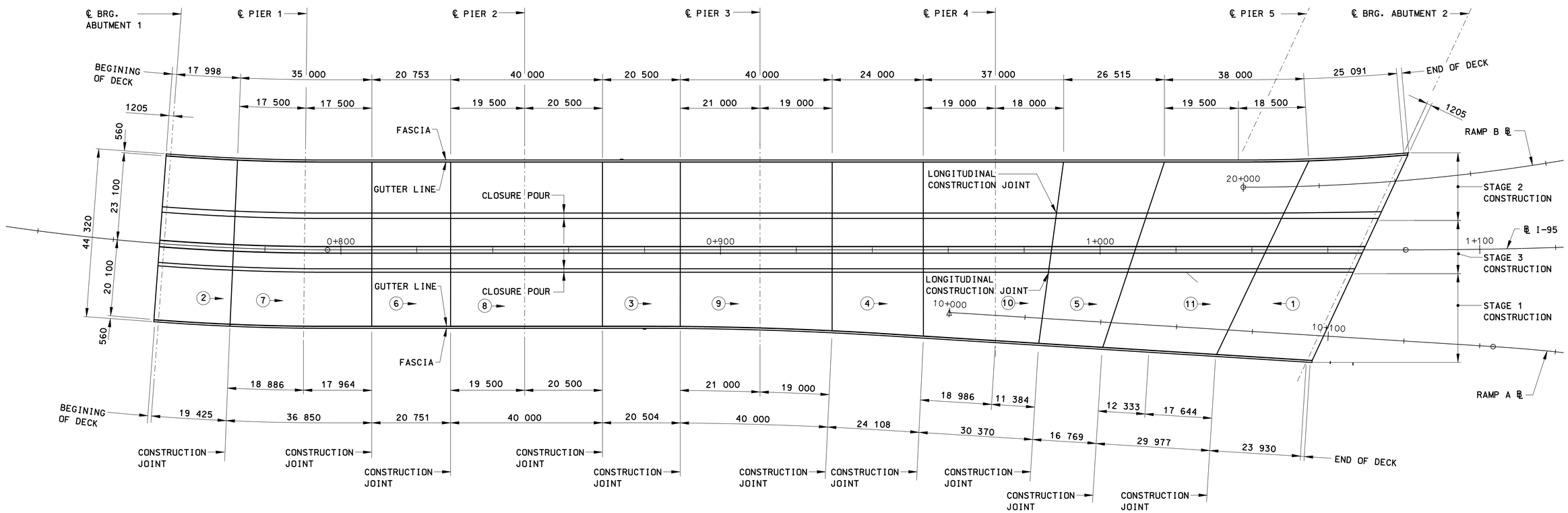

SLAB POUR SEQUENCE

SCALE: 1:500

SEQUENCE OF POUR NOTES:

1. ◯ → INDICATES SEQUENCE AND DIRECTION OF POUR.
2. A MINIMUM f'c = 10.0 MPa MUST BE OBTAINED IN EACH SECTION PRIOR TO PLACING CONCRETE IN OTHER SECTIONS.
3. ALL CONCRETE SHALL BE KEPT IN FLUID CONDITION UNTIL THE ENTIRE POUR IS COMPLETED.
4. A DECK POURING SEQUENCE DIFFERENT FROM THAT SHOWN MAY NOT BE USED WITHOUT THE PRIOR APPROVAL OF THE ENGINEER.
5. ALL DIMENSIONS ARE MEASURED ALONG THE FASCIA.

REV.	DATE	DESCRIPTION	SHEET. NO.
		REVISIONS	

SCALE AS NOTED

DESIGNER: T. YOUNG
DRAFTER: G. LEE / T. YOUNG
CHECKED BY: T. LALIBERTE
DATE CHECKED: 4-27-05

STATE OF CONNECTICUT
DEPARTMENT OF TRANSPORTATION

ENGINEER: PB AMERICAS, INC.
APPROVED BY:
DATE:

PROJECT TITLE: RECONSTRUCTION OF I-95 OVER WEST RIVER (BRIDGE NO. 00163)
CADD
PLOTTED 11/13/2012

TOWN: NEW HAVEN / WEST HAVEN
DRAWING TITLE: SLAB DETAILS - POURING SEQUENCE

PROJECT NO.: 92-522
DRAWING NO.: STR-98
SHEET NO.:

12:51:08 PM
11/13/2012
T:\WBCADD-Projects\PB\8735\FD\Structures\Contract_Sheets\Br00163\str-98-092522-00163.dgn

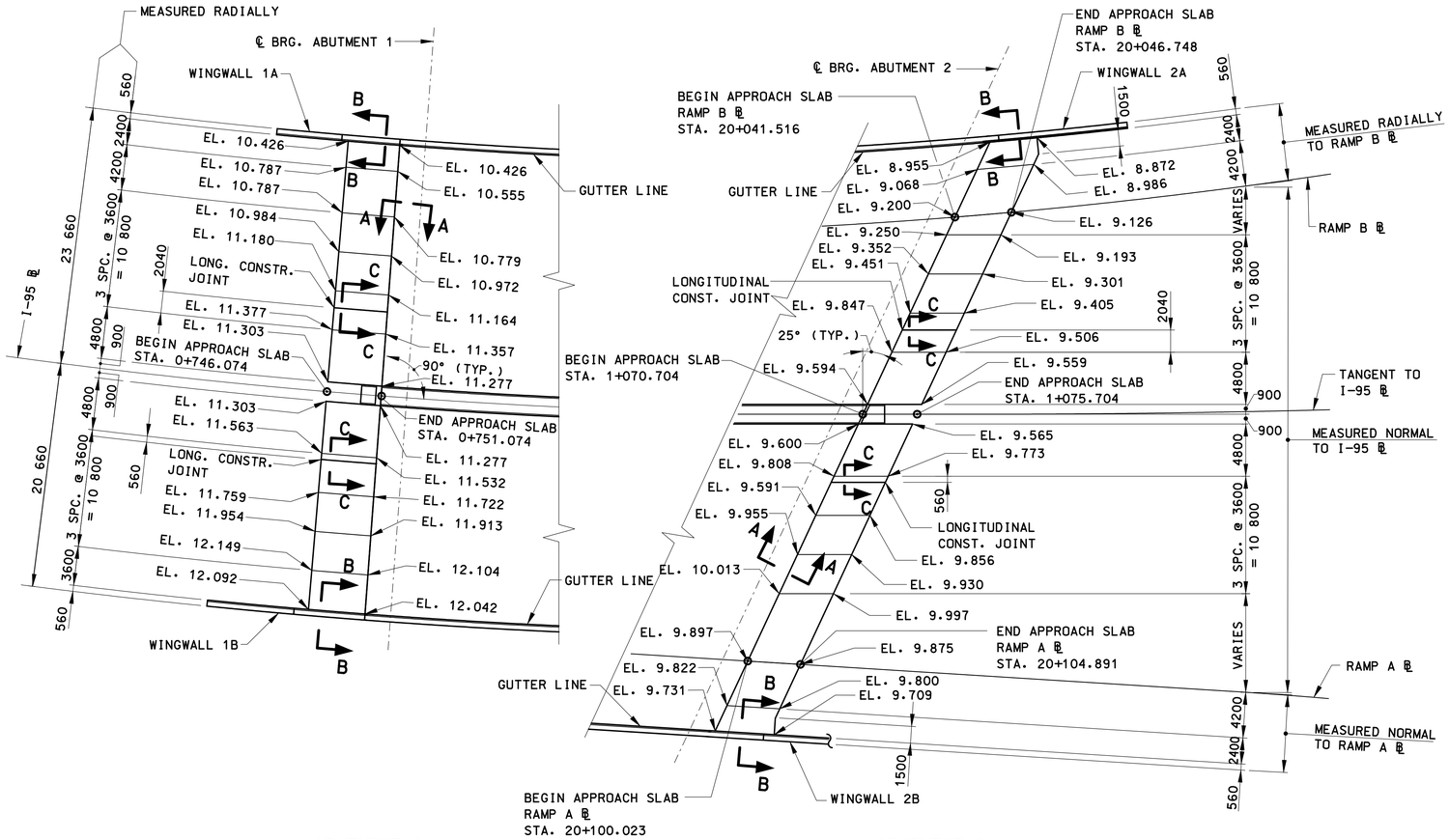

PLAN AT APPROACH SLABS
SCALE: 1:250

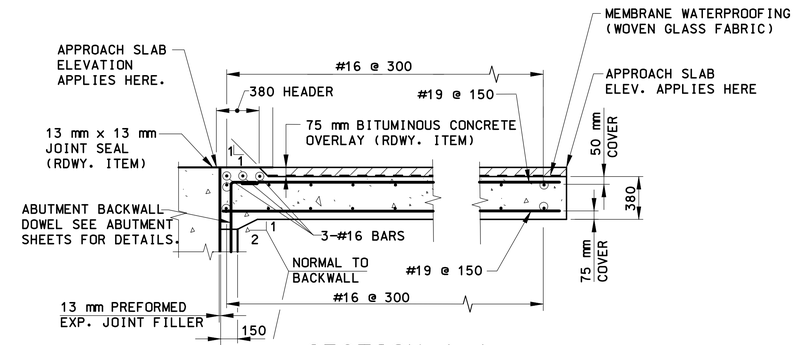

SECTION A-A
SCALE: 1:20

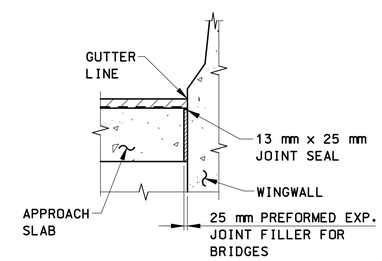

SECTION B-B
SCALE: 1:20

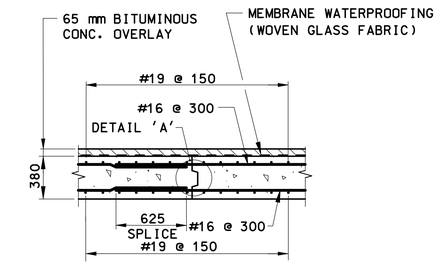

SECTION C-C
SCALE: 1:20

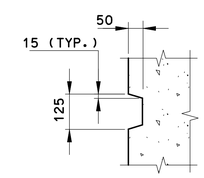

NOTE: REBAR OMITTED FOR CLARITY

DETAIL 'A'
SCALE: 1:10

NOTES:

1. APPROACH SLABS SHALL BE CONSTRUCTED OF CLASS "F" CONCRETE.
2. ALL REINFORCEMENT IN THE APPROACH SLABS SHALL BE EPOXY COATED.
3. THE MEDIAN BARRIER AND GRANULAR FILL WITHIN THE MEDIAN ARE INCLUDED IN THE HIGHWAY ITEMS.
4. ELEVATIONS GIVEN IN "PLAN" APPLY AT TOP OF WEARING SURFACE.

REV.	DATE	DESCRIPTION	SHEET. NO.
		REVISIONS	

SCALE AS NOTED

DESIGNER: T. YOUNG
DRAFTER: G. LEE
CHECKED BY: T. LALIBERTE
DATE CHECKED: 4-27-05

STATE OF CONNECTICUT
DEPARTMENT OF TRANSPORTATION
ENGINEER: PB AMERICAS, INC.
APPROVED BY: DATE:

PROJECT TITLE: RECONSTRUCTION OF I-95 OVER WEST RIVER (BRIDGE NO. 00163)
CADD PLOTTED 11/13/2012

TOWN: NEW HAVEN / WEST HAVEN
DRAWING TITLE: APPROACH SLABS & DETAILS

PROJECT NO.: 92-522
DRAWING NO.: STR-99
SHEET NO.:

12:52:05 PM
11/13/2012
T:\WBCADD-Projects\PB\8735\FD\Structures\Contract_Sheets\Br00163\str-99-092522-00163.dgn

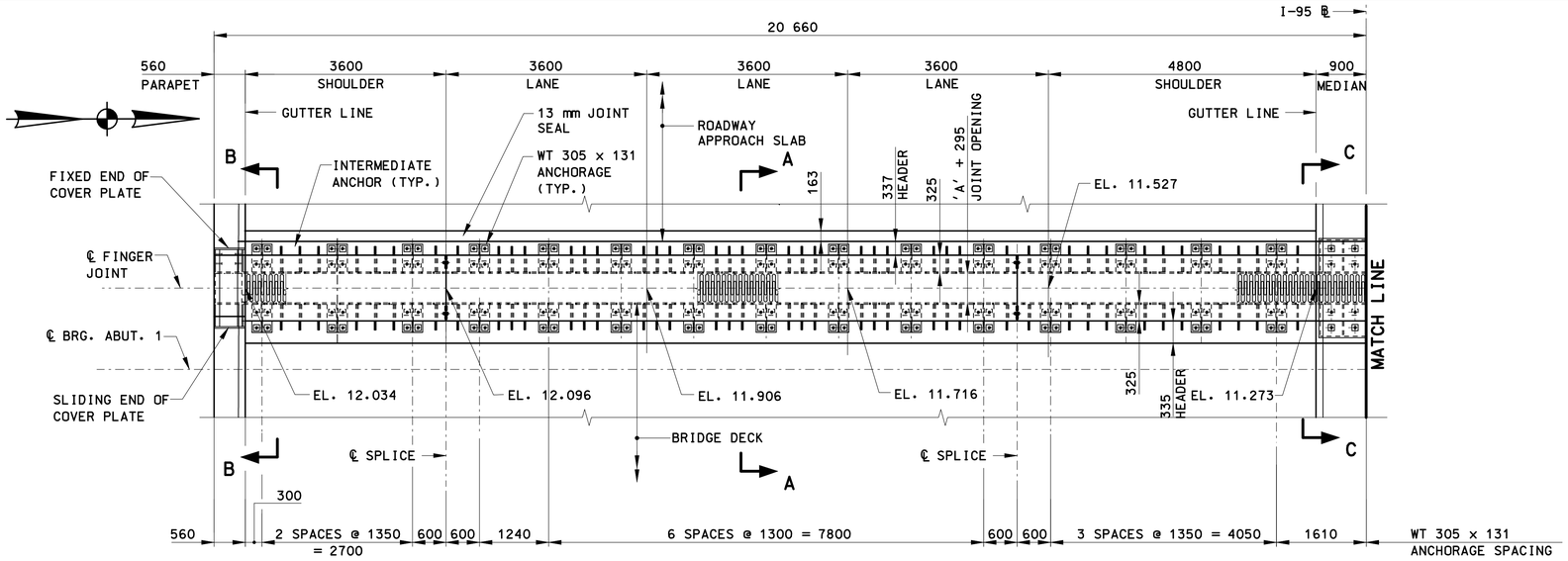

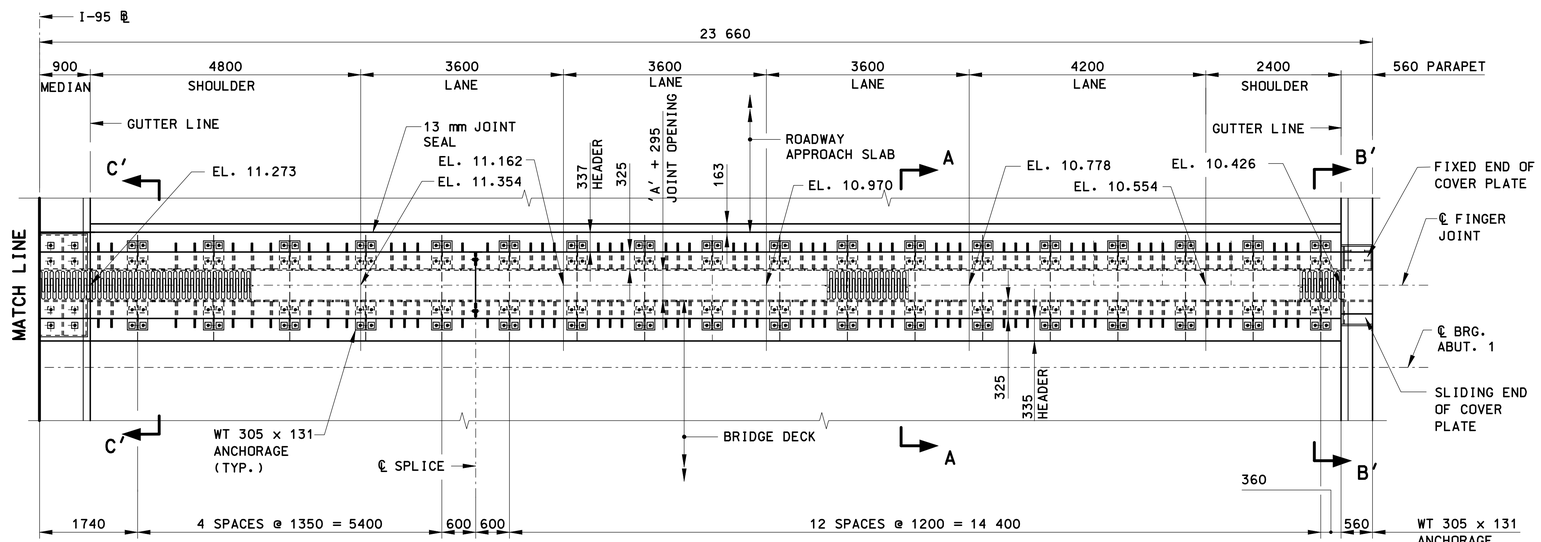

PLAN

SCALE: 1:50

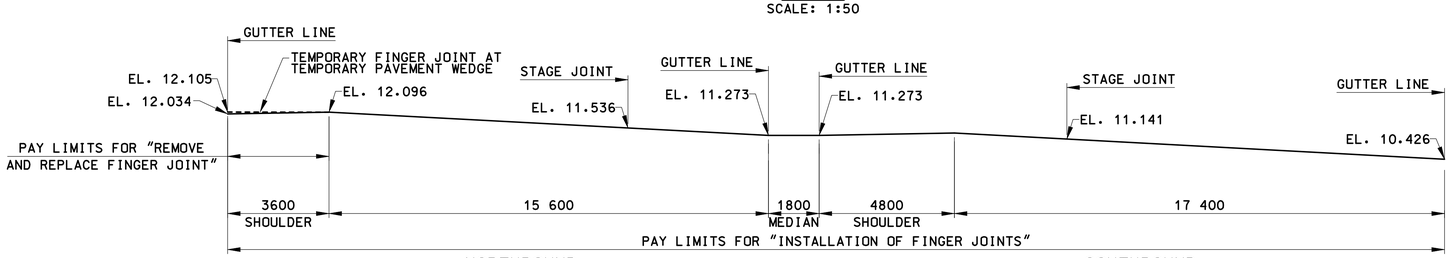

PROFILE

SCALE: 1:100

EXPANSION JOINT NOTES

1. UNLESS OTHERWISE NOTED, STRUCTURAL STEEL FOR THE FINGER JOINT SHALL BE ASTM A709M GRADE 345 AND SHALL BE PAID FOR UNDER THE ITEM "FINGER JOINT ASSEMBLY".
2. ALL STRUCTURAL STEEL SHALL BE HOT DIP GALVANIZED IN CONFORMANCE WITH ASTM A123.
3. ANCHOR BOLTS SHALL CONFORM TO ASTM F1554M, GRADE 380. ANCHOR BOLT NUTS SHALL CONFORM TO ASTM A563M. PLATE WASHERS ON THE ANCHOR BOLTS SHALL CONFORM TO ASTM A709M GRADE 345.THE ANCHOR BOLTS, NUTS AND WASHERS SHALL BE MECHANICALLY GALVANIZED IN CONFORMANCE WITH ASTM B695 CLASS 50 AND PAID FOR UNDER THE ITEM "FINGER JOINT ASSEMBLY".
4. BOLTS, NUTS AND WASHERS SHALL BE ASTM F738M, TYPE 316 STAINLESS STEEL.
5. FLATHEAD SCREWS SHALL BE ASTM F738M TYPE 316 STAINLESS STEEL.
6. NUTS WELDED TO UNDERSIDE OF PLATES AND EMBEDDED IN CONCRETE SHALL BE ACORN NUTS OR HAVE SPECIAL PLASTIC CAPS TO PROVIDE POSITIVE ALLOWANCE FOR BOLT LENGTH AFTER CONCRETE HAS SET.
7. FOR ALL NUTS TACK WELDED TO INSIDE FACES OF PLATES AND WHICH SHALL BE EMBEDDED IN CONCRETE PRIOR TO MAKING FINAL CONNECTIONS, THE FOLLOWING PROCEDURE SHALL BE FOLLOWED:
   PRIOR TO PLACEMENT OF CONCRETE, BOLTS OR MACHINE SCREWS SHALL BE LUBRICATED WITH GRAPHITE AND SET SECURELY IN PLACE, FINGER TIGHT. SCREWS SHALL BE TEMPORARILY REMOVED AFTER CONCRETE HAS ATTAINED FINAL SET.
8. HEADER CONCRETE SHALL BE CLASS "F" AND PAID FOR UNDER THE ITEM "FINGER JOINT ASSEMBLY".
9. UNIT SHALL BE SHIPPED TO THE SITE PREASSEMBLED.
10. TOOTH PLATES SHALL BE FLAME CUT FROM ONE PLATE BY A SINGLE CUT OF A MACHINE GUIDED TORCH. SHARP CORNERS ARE TO BE REMOVED BY GRINDING.
11. JOINT SHALL BE FABRICATED TO FOLLOW THE GRADE AND THE TRANSVERSE CONTOUR OF THE ROADWAY.
12. TO ASSURE THAT ALL BEDDING AREAS AND RECESSES OF THE STRUCTURAL ELEMENTS ARE COMPLETELY FILLED WITH WELL COMPACTED CONCRETE, ADEQUATE VENTING, VIBRATING AND HAND PACKING OF CONCRETE SHALL BE DONE.
13. ANCHOR BOLTS SHALL BE CAST IN PLACE.
14. THE COMPLETE SLIDING PLATE ASSEMBLIES IN THE MEDIAN AND ALL PARAPETS WILL BE PAID FOR UNDER THE ITEM "FINGER JOINT ASSEMBLY".

FINGER JOINT STAGE CONSTRUCTION INSTALLATION NOTES:

1. TOP OF BACKWALL AND DECK BLOCKOUT FOR EACH STAGE SHALL BE CONSTRUCTED TO THE FINAL PERMANENT FINGER JOINT PROFILE.
2. A TEMPORARY FINGER JOINT ASSEMBLY IS TO BE PROVIDED WITHIN THE LIMITS OF THE TEMPORARY PAVEMENT WEDGE DURING STAGES 1A-1C, AS SHOWN IN ABUTEMENT 1 PROFILE THIS SHEET. THE LIMITS OF THE TEMPORARY PAVEMENT WEDGE ARE FROM THE EDGE OF THE NORTHBOUND SHOULDER TO THE FACE OF PARAPET. THE TEMPORARY FINGER JOINT SHALL BE FASTENED TO THE PERMANENT ANCHOR BOLTS.
3. UPON REMOVAL OF THE TEMPORARY PAVEMENT WEDGES, THE TEMPORARY FINGER JOINT ASSEMBLIES SHALL ALSO BE REMOVED. THIS WORK SHALL INCLUDE CHIPPING AWAY THE CONCRETE. CARE SHOULD BE TAKEN SO THAT THE DECK, TOP OF BACKWALL, WEARING SURFACES, AND FINGER JOINT ANCHOR BOLTS ARE NOT DAMAGED DURING THE REMOVAL PROCESS.
4. THE PERMANENT FINGER JOINT ASSEMBLY SHALL BE INSTALLED WITHIN THE LIMITS OF THE NORTHBOUND SHOULDER TEMPORARY WEDGE.
5. ALL WORK ASSOCIATED WITHIN THE INITIAL FURNISHING AND INSTALLATION OF THE JOINT, SHALL BE PAID FOR UNDER THE ITEM "INSTALLATION OF FINGER JOINTS". SEE SPECIAL PROVISIONS.
6. ALL WORK ASSOCIATED WITH THE REMOVAL OF THE TEMPORARY FINGER JOINT ASSEMBLY, AND REPLACEMENT OF THIS JOINT WITH THE PERMANENT JOINT ASSEMBLY, SHALL BE PAID FOR UNDER THE ITEM "REMOVE AND REPLACE FINGER JOINT". SEE SPECIAL PROVISIONS.

NOTES:

1. FOR SECTION A-A, SEE "FINGER JOINT - PROPOSED SECTIONS AND DETAILS".
2. FOR FINGER JOINT SPLICE AND PARAPET DETAILS, SEE "FINGER JOINT - SPLICE AND PARAPET DETAILS".
3. FOR SECTION B-B, B'-B', C-C & C'-C', SEE "FINGER JOINT - PARAPET AND SPLICE DETAILS".

REV.	DATE	DESCRIPTION	SHEET. NO
		REVISIONS	

DESIGNER: O. JAMBOTKAR
DRAFTER: G. LEE
CHECKED BY: B. BURKE
DATE CHECKED: 11-12-12

STATE OF CONNECTICUT
DEPARTMENT OF TRANSPORTATION

ENGINEER: PB AMERICAS, INC.
APPROVED BY:
DATE:

PROJECT TITLE: RECONSTRUCTION OF I-95 OVER WEST RIVER (BRIDGE NO. 00163)

TOWN: NEW HAVEN / WEST HAVEN

DRAWING TITLE: FINGER JOINT LAYOUT - ABUTMENT 1

PROJECT NO.: 92-522
DRAWING NO.: STR-100
SHEET NO.:

CADD str-100-092522-00163.dgn
PLOTTED 11/13/2012

44048 PM
11/13/2012
T:\WBCADD\Projects\PB\8735\FD\Structures\Contract_Sheets\Br00163\str-100-092522-00163.dgn

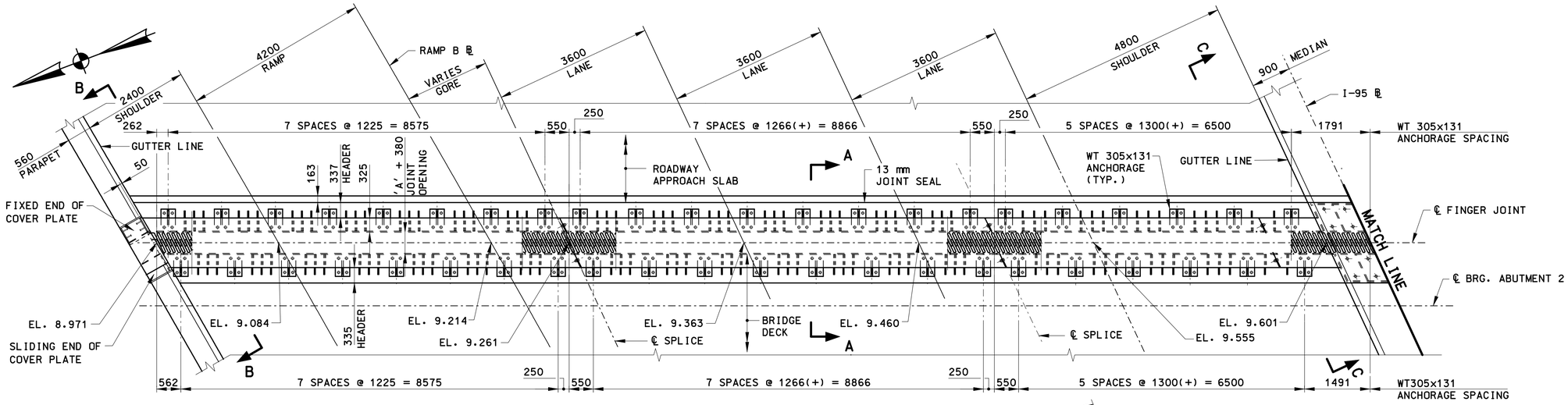

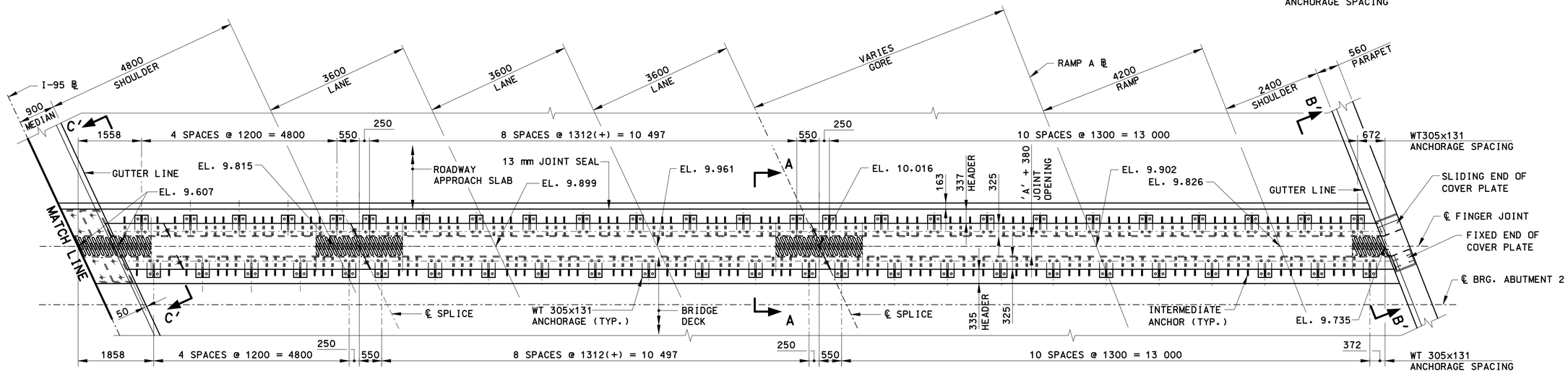

PLAN

SCALE: 1:50

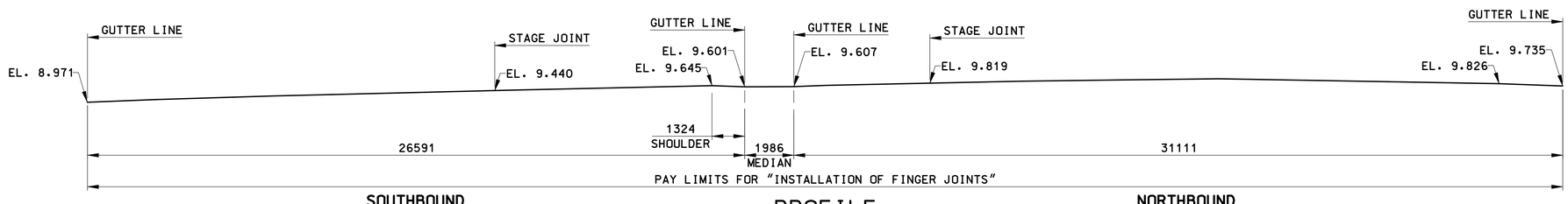

SOUTHBOUND **NORTHBOUND**

PROFILE

SCALE: 1:100

NOTES:

1. FOR ADDITIONAL EXPANSION JOINT NOTES, SEE "FINGER JOINT LAYOUT – ABUTMENT 1".
2. FOR SECTION A–A, SEE "FINGER JOINT – PROPOSED SECTIONS AND DETAILS".
3. FOR SECTIONS B–B, B'–B', C–C AND C'–C', SEE "FINGER JOINT – PARAPET AND SPLICE DETAILS".

REV.	DATE	DESCRIPTION	SHEET. NO.
		REVISIONS	

THE INFORMATION, INCLUDING ESTIMATED QUANTITIES OF WORK, SHOWN ON THESE SHEETS IS BASED ON LIMITED INVESTIGATIONS BY THE STATE AND IS IN NO WAY WARRANTED TO INDICATE THE CONDITIONS OR ACTUAL QUANTITIES OF WORK WHICH WILL BE REQUIRED.

DESIGNER: O. JAMBOTKAR
DRAFTER: G. LEE
CHECKED BY: B. BURKE
DATE CHECKED: 11–12–12

STATE OF CONNECTICUT
DEPARTMENT OF TRANSPORTATION

ENGINEER: PB AMERICAS, INC.
APPROVED BY:
DATE:

PROJECT TITLE: RECONSTRUCTION OF I-95 OVER WEST RIVER (BRIDGE NO. 00163)

CADD str–101–092522–00163.dgn
PLOTTED 11/13/2012

TOWN: NEW HAVEN / WEST HAVEN

DRAWING TITLE: FINGER JOINT LAYOUT – ABUTMENT 2

PROJECT NO.: 92–522
DRAWING NO.: STR–101
SHEET NO.:

4:15:07 PM
11/13/2012
T:\WBCADD-Projects\PB\BT35\FD\Structures\Contract_Sheets\Br00163\str-101-092522-00163.dgn

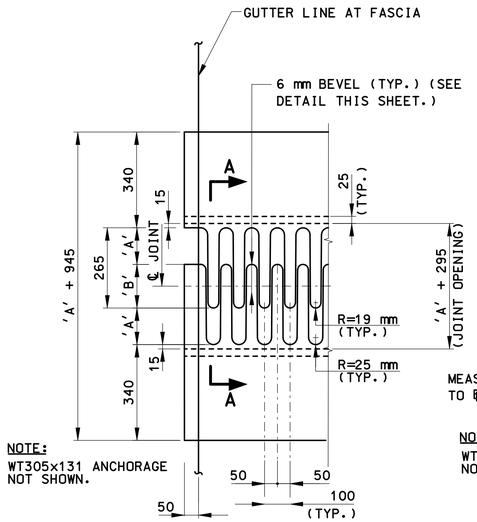

NOTE:
WT305x131 ANCHORAGE NOT SHOWN.

FINGER PLATE DETAIL AT ABUTMENT 1

SCALE: 1:10

SOUTH FASCIA SHOWN, NORTH FASCIA SIMILIAR.

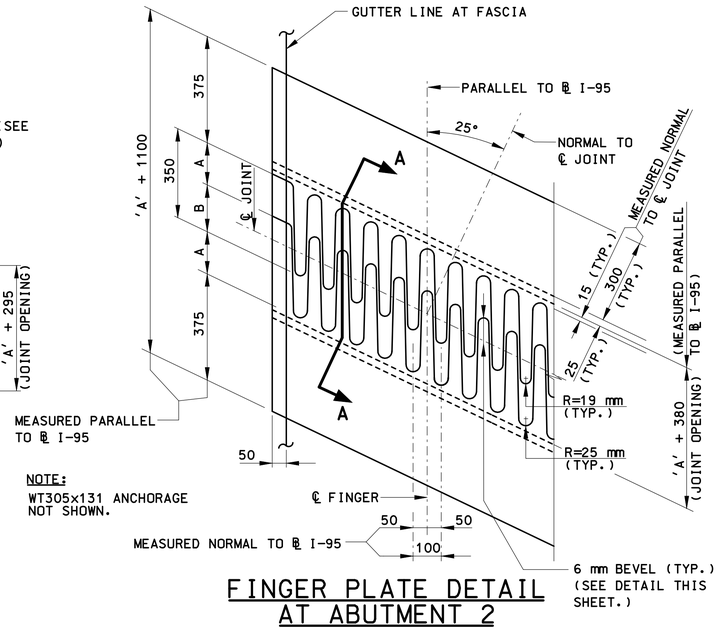

NOTE:
WT305x131 ANCHORAGE NOT SHOWN.

FINGER PLATE DETAIL AT ABUTMENT 2

SCALE: 1:10

NORTH FASCIA SHOWN, SOUTH FASCIA SIMILIAR.

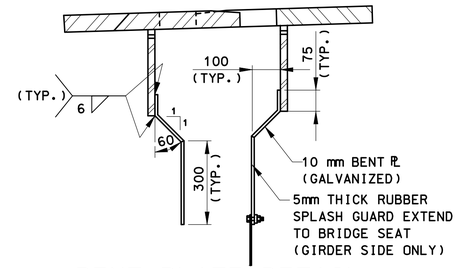

BENT PLATE DETAIL

SCALE: 1:10

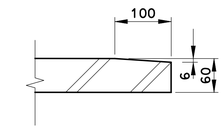

TOOTH BEVEL DETAIL

SCALE: 1:5

JOINT ADJUSTMENTS FOR VARIOUS INSTALLATION TEMPERATURES

TEMP. (°C)	ABUTMENT 1				ABUTMENT 2			
	NORTHBOUND		SOUTHBOUND		NORTHBOUND		SOUTHBOUND	
	'A'	'B'	'A'	'B'	'A'	'B'	'A'	'B'
-7	151	114	150	115	208	142	206	144
-1	142	123	142	123	195	155	193	157
4	134	131	134	131	182	168	181	169
10	126	139	126	139	169	181	169	181
16	118	147	118	147	156	194	157	193
21	110	155	110	155	143	207	145	205
27	101	164	102	163	130	220	132	218
32	93	172	94	171	117	233	120	230

NOTES:

1. MAKE LINEAR INTERPOLATION FOR TEMPERATURES BETWEEN THOSE IN TABLE.
2. ALL VALUES GIVEN ARE IN MM UNLESS NOTED OTHERWISE.

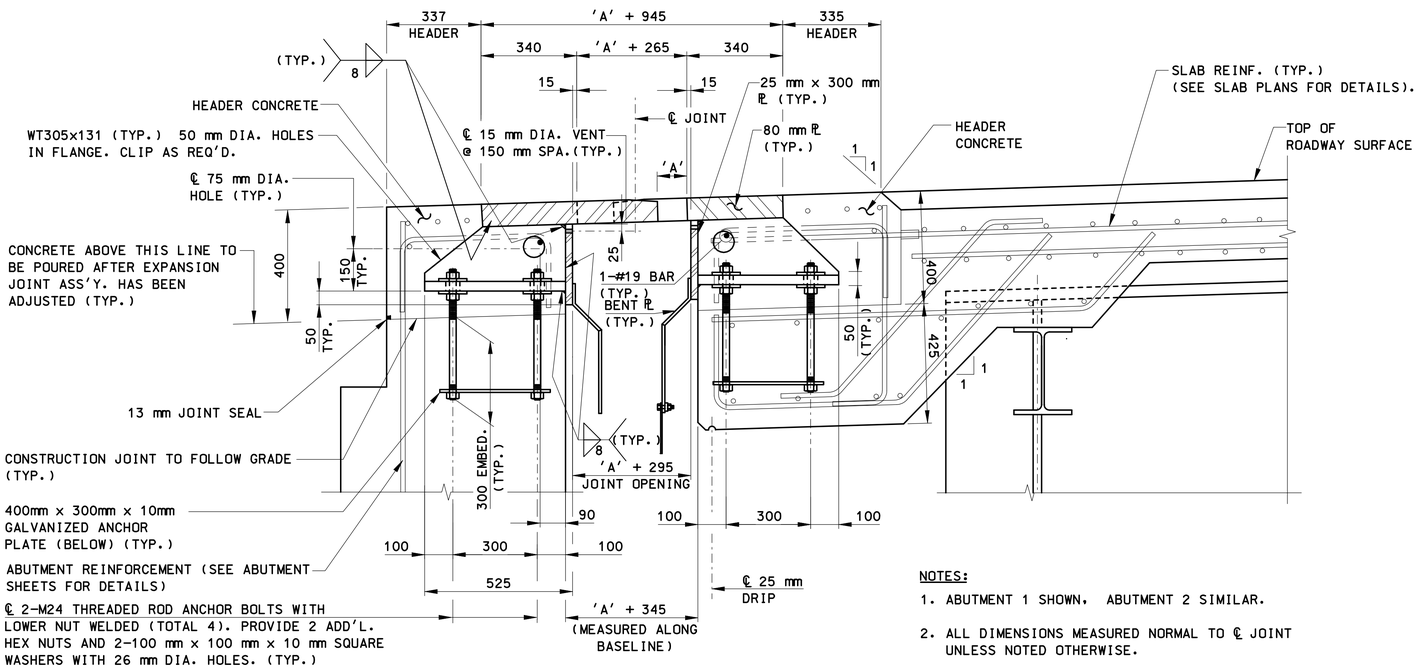

NOTES:

1. ABUTMENT 1 SHOWN, ABUTMENT 2 SIMILAR.
2. ALL DIMENSIONS MEASURED NORMAL TO ℄ JOINT UNLESS NOTED OTHERWISE.

SECTION A-A

SCALE: 1:10

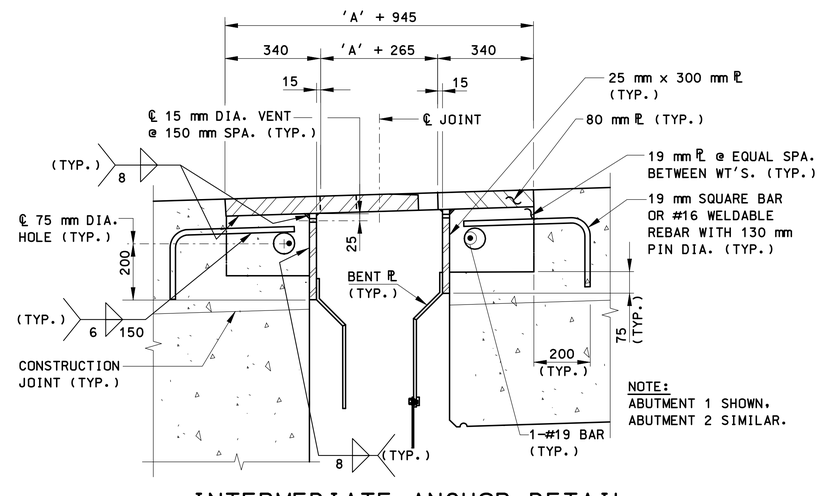

NOTE:
ABUTMENT 1 SHOWN, ABUTMENT 2 SIMILAR.

INTERMEDIATE ANCHOR DETAIL

SCALE: 1:10

REV.	DATE	DESCRIPTION	SHEET. NO
		REVISIONS	

SCALE AS NOTED

DESIGNER: T. YOUNG
DRAFTER: G. LEE
CHECKED BY: O. JAMBOTKAR
DATE CHECKED: 11-12-12

STATE OF CONNECTICUT
DEPARTMENT OF TRANSPORTATION

ENGINEER: PB AMERICAS, INC.
APPROVED BY:
DATE:

PROJECT TITLE: RECONSTRUCTION OF I-95 OVER WEST RIVER (BRIDGE NO. 00163)

CADD
PLOTTED 11/13/2012

TOWN: NEW HAVEN / WEST HAVEN

DRAWING TITLE: FINGER JOINT - PROPOSED SECTIONS AND DETAILS

PROJECT NO.: 92-522
DRAWING NO.: STR-102
SHEET NO.:

12:54:31 PM
11/13/2012
T:\WBCADD\Projects\PB\BT35\FD\Structures\Contract_Sheets\Br00163\dfr-102-092522-00163.dgn

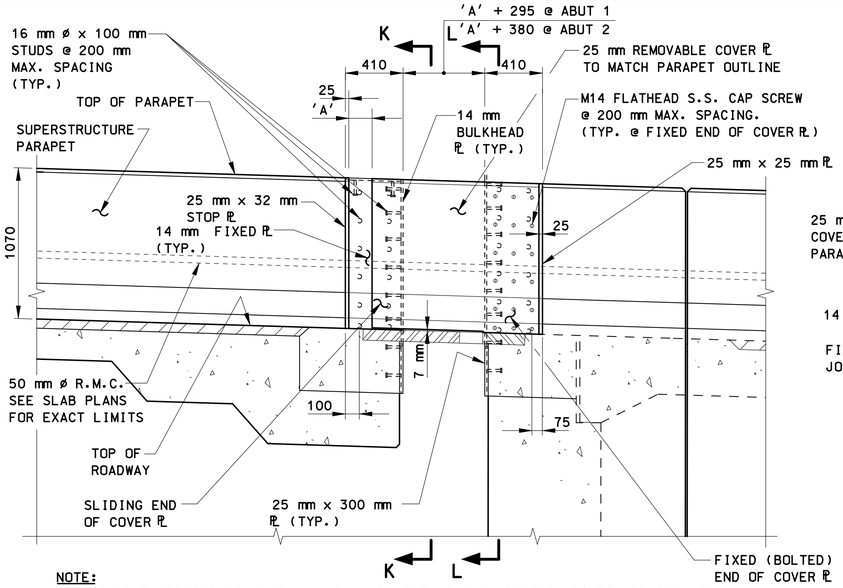

NOTE:
SECTION B–B APPLIES AT ABUT. 1 N.B. AND ABUT. 2 S.B; SECTION B′–B′ APPLIES AT ABUT. 1 S.B. AND ABUT. 2 N.B. AND IS OPPOSITE HAND AND SIMILAR, EXCEPT THAT FIXED (BOLTED) END OF COVER PLATE IS ON THE SUPERSTRUCTURE.

SECTION B–B (B′–B′)

SCALE: 1:20

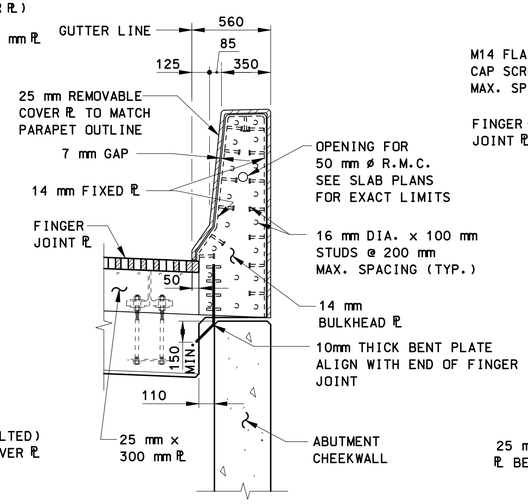

SECTION K–K

SCALE: 1:20

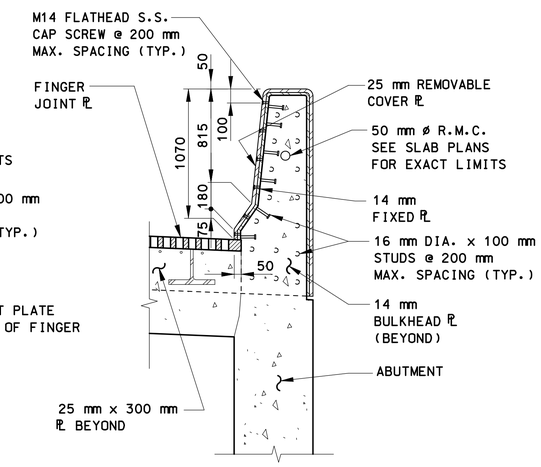

SECTION L–L

SCALE: 1:20

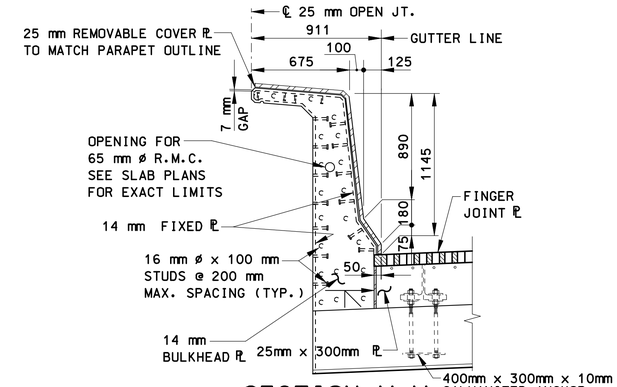

SECTION M–M

SCALE: 1:20

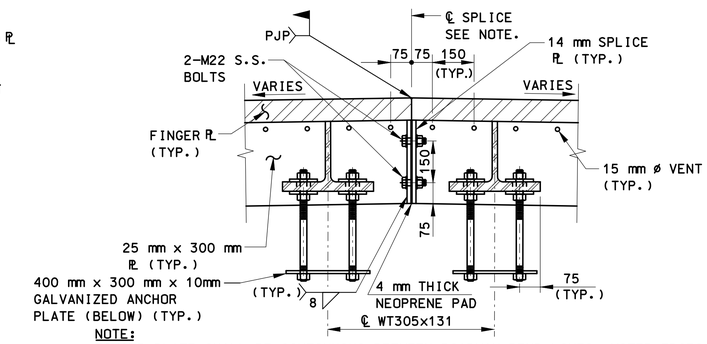

NOTE:
FINGER PLATE SHALL BE CONTINUOUS BETWEEN ROADWAY BEND LINES. MITER EDGES AND FIELD WELD THE TWO SECTIONS AT THE CROWN LINE. DO NOT WELD TEMPORARY JOINT TO PERMANENT JOINT AT EDGE OF SHOULDER.

SECTION E–E
(SECTION E′–E′ SIMILAR)

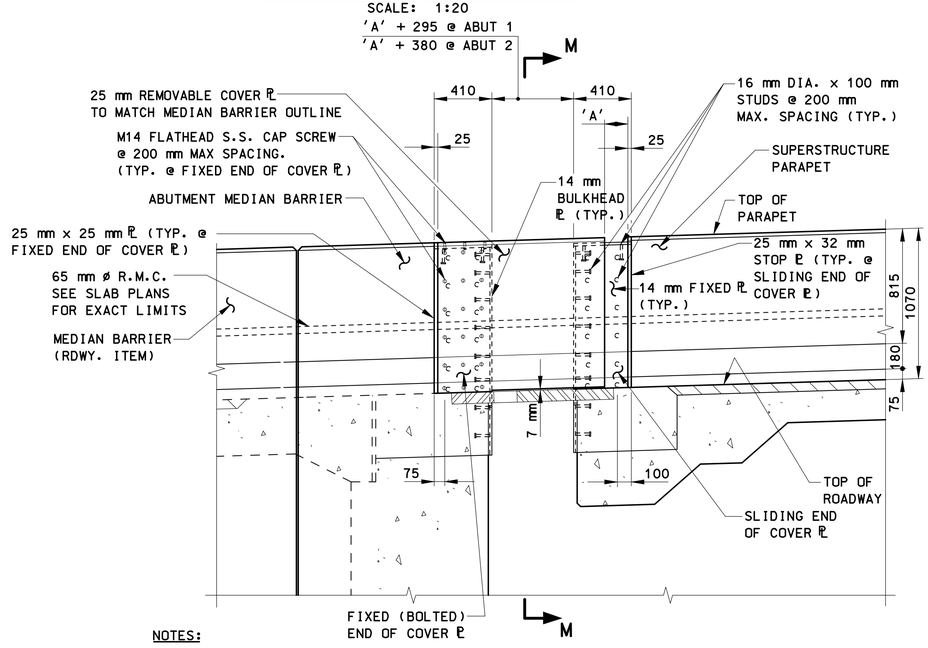

NOTES:

1. SECTION C–C APPLIES AT ABUT. 1 N.B. AND ABUT. 2 S.B. SECTION C′–C′ APPLIES AT ABUT. 1 S.B. AND ABUTMENT 2 N.B. AND IS OPPOSITE HAND AND SIMILAR, EXCEPT THAT FIXED (BOLTED) END OF COVER PLATE IS ON THE SUPERSTRUCTURE.
2. FINAL MEDIAN BARRIER SHOWN. SEE "FINGER JOINT – TEMPORARY DETAILS" AND "STAGE CONSTRUCTION DETAILS" FOR MEDIAN DETAILS DURING STAGED CONSTRUCTION SEQUENCE.

SECTION C–C (C′–C′)

SCALE: 1:20

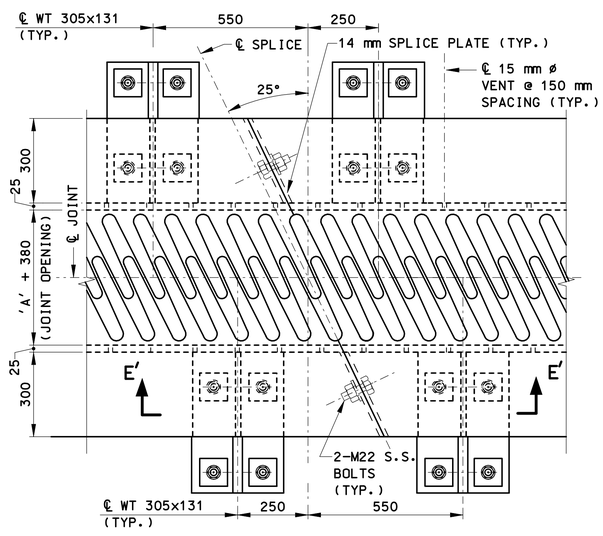

ABUTMENT 2

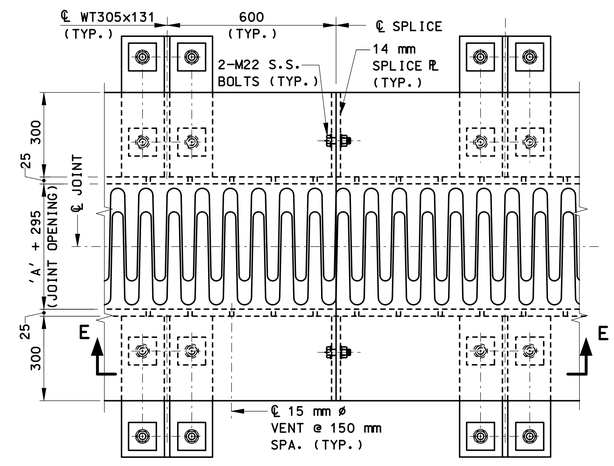

ABUTMENT 1

FINGER JOINT SPLICE DETAILS

SCALE: 1:10

REV.	DATE	DESCRIPTION	SHEET. NO
		REVISIONS	

SCALE AS NOTED

DESIGNER: T. YOUNG
DRAFTER: G. LEE
CHECKED BY: O. JAMBOTKAR
DATE CHECKED: 11–12–12

STATE OF CONNECTICUT
DEPARTMENT OF TRANSPORTATION

ENGINEER: PB AMERICAS, INC.
APPROVED BY:
DATE:

PROJECT TITLE: RECONSTRUCTION OF I–95 OVER WEST RIVER (BRIDGE NO. 00163)
CADD
PLOTTED 11/13/2012

TOWN: NEW HAVEN / WEST HAVEN
DRAWING TITLE: FINGER JOINT – PARAPET AND SPLICE DETAILS

PROJECT NO.: 92–522
DRAWING NO.: STR–103
SHEET NO.:

12:55:48 PM
11/13/2012
T:\VBCADD\Projects\PB8735\FD\Structures\Contract_Sheets\Br00163\str-103-092522-00163.dgn

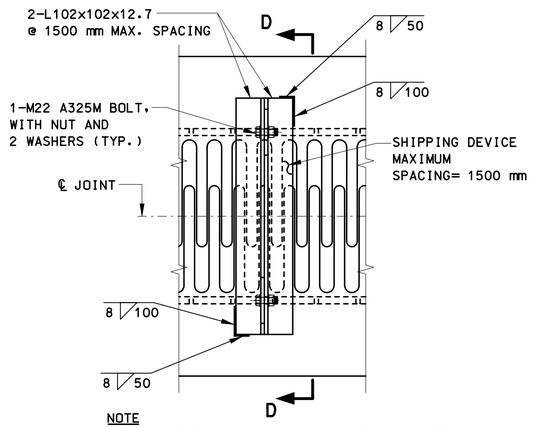

NOTE
SKID RESISTANCE WELD NOT SHOWN FOR CLARITY.

SHIPPING DEVICE PLAN

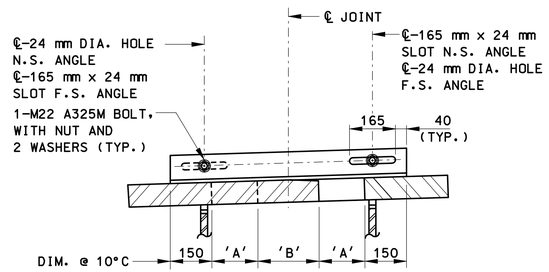

SECTION D-D

SHIPPING DEVICE DETAILS

SCALE: 1:10

NOTES FOR SHIPPING DEVICE

1. SHOP DRAWINGS SHALL BE SUBMITTED FOR THIS DEVICE. ALL JOINT ASSEMBLIES SHALL BE PROPERLY FITTED IN THE SHOP AND SHIPPED WITH THE DEVICE FOR MAINTAINING PROPER SPACING AND FIT.
2. JOINT SHALL BE SECURED TO THE ABUTMENT OR DECK ANCHOR BOLTS WHEN THE AMBIENT TEMPERATURE IS BETWEEN 5 DEG. C AND 20 DEG. C. THE CONTRACTOR SHALL ENSURE THAT BOTH EDGES OF THE JOINT ARE PARALLEL. BOLTS OF THE SHIPPING DEVICE SHALL BE RETIGHTENED AFTER ADJUSTMENT PRIOR TO SECURING THE JOINT TO THE REMAINING ANCHOR BOLTS.
3. BOLTS ON THE SHIPPING DEVICE SHALL BE LOOSENED BEFORE PLACEMENT OF THE HEADER CONCRETE. SHIPPING DEVICE SHALL BE REMOVED BY CHIPPING CONNECTION WELDS AFTER HEADER CONCRETE HAS SET ON BOTH SIDES OF THE JOINT.
4. PRIOR TO WELDING SHIPPING ANGLES TO THE JOINT, GRIND GALVANIZING FROM A 15 mm x 40 mm AREA WHERE THE WELD WILL BE LOCATED. AFTER SHIPPING ANGLES ARE REMOVED, GRIND JOINT SURFACE TO A SMOOTH FINISH AND TOUCH UP BARE METAL WITH A HIGH ZINC DUST CONTENT PRIMER.

REV.	DATE	DESCRIPTION	SHEET. NO
		REVISIONS	

SCALE AS NOTED

DESIGNER: T. YOUNG
DRAFTER: G. LEE
CHECKED BY: O. JAMBOTKAR
DATE CHECKED: 11-12-12

STATE OF CONNECTICUT
DEPARTMENT OF TRANSPORTATION

ENGINEER: PB AMERICAS, INC.
APPROVED BY:
DATE:

PROJECT TITLE: RECONSTRUCTION OF I-95 OVER WEST RIVER (BRIDGE NO. 00163)
CADD
PLOTTED 11/13/2012

TOWN: NEW HAVEN / WEST HAVEN
DRAWING TITLE: SHIPPING DEVICE DETAILS

PROJECT NO.: 92-522
DRAWING NO.: STR-104
SHEET NO.:

12:55:59 PM
11/13/2012
T:\V8CADD\Projects\PB\8735\FD\Structures\Contract_Sheets\Br00163\str-104-092522-00163.dgn

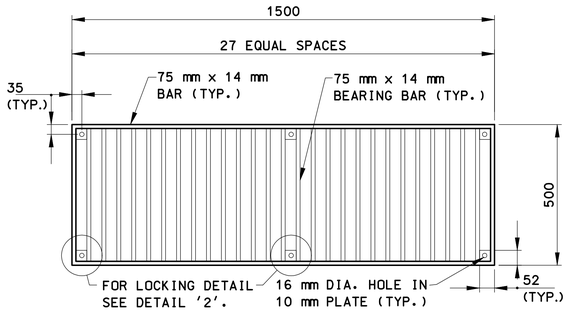

GRATE PLAN
SCALE: 1:10

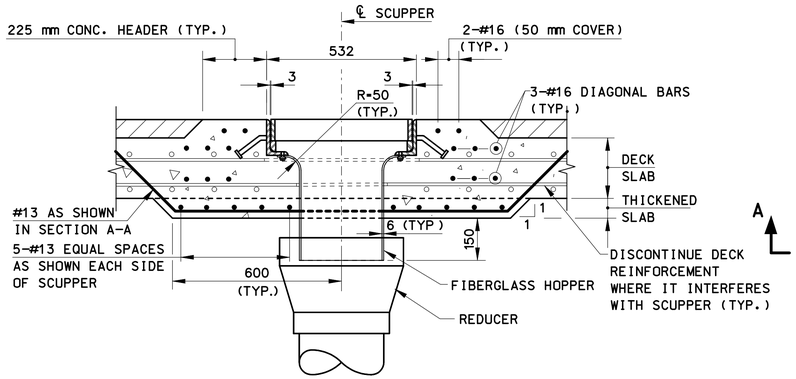

SECTION B-B
SCALE: 1:10

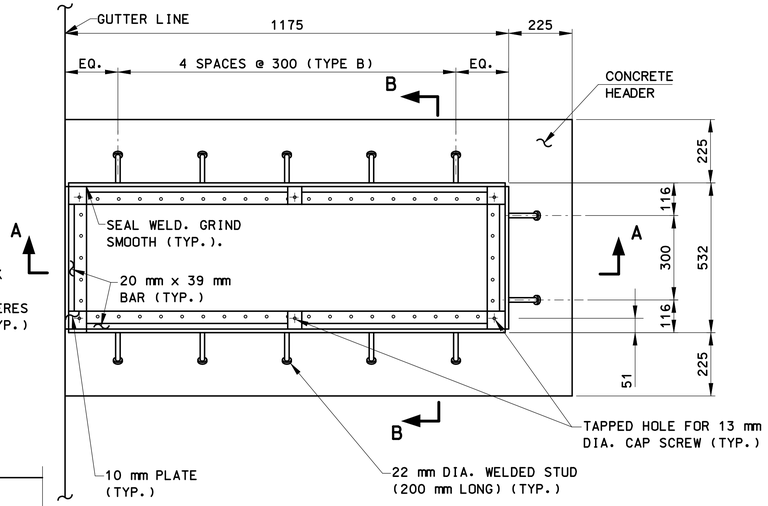

PLAN @ FRAME
SCALE: 1:10

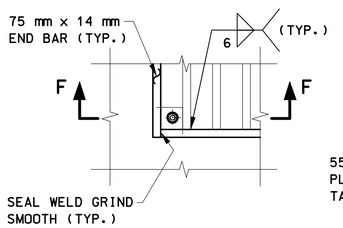

PLAN

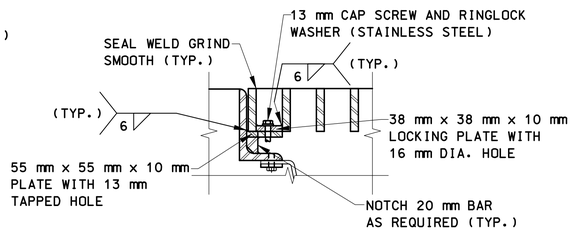

SECTION F-F

DETAIL '2'
SCALE: 1:5

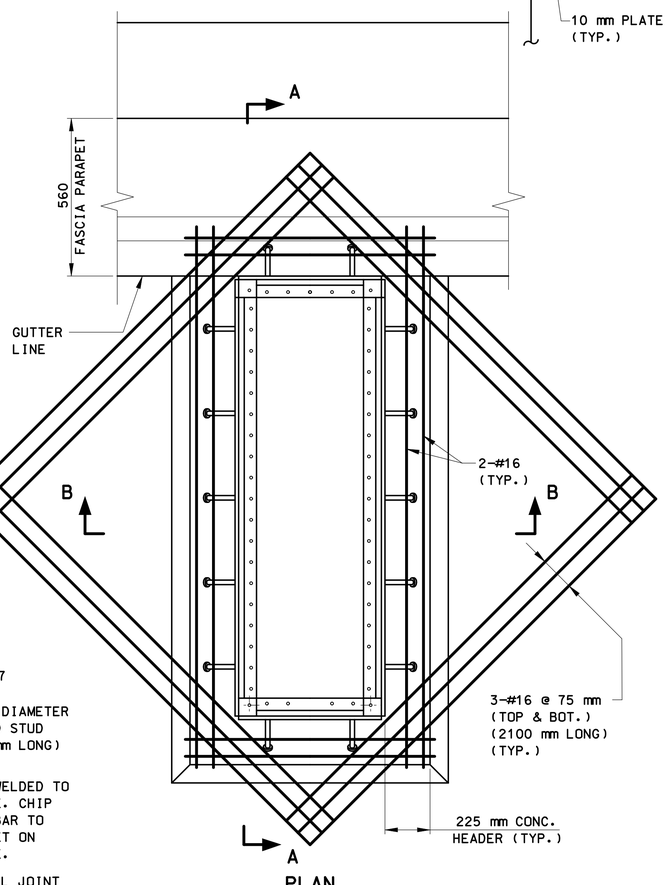

PLAN

SLAB REINFORCEMENT @ SCUPPERS
SCALE: 1:20

NOTE "A"

SCUPPER DOWNSPOUT SHALL BE ALIGNED AT REDUCER DURING INSTALLATION SO THAT DOWNSPOUT AND REDUCER CENTERLINES ARE CONCENTRIC @ 10°C.

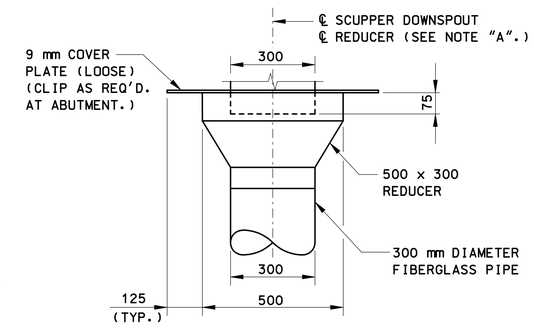

FIBERGLASS PIPE REDUCER DETAIL
SCALE: 1:10

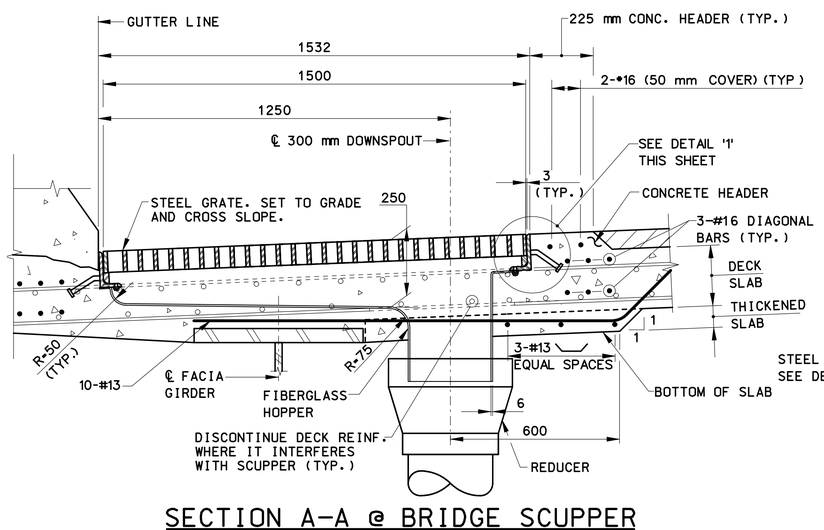

SECTION A-A @ BRIDGE SCUPPER
SCALE: 1:10

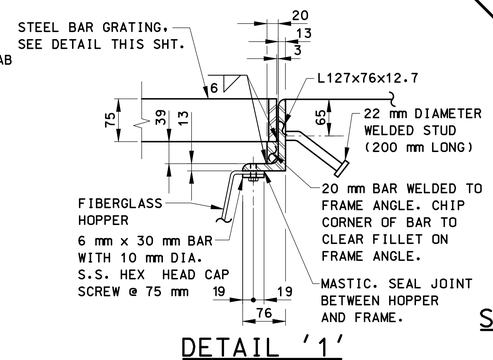

DETAIL '1'
SCALE: 1:5

BRIDGE DRAINAGE NOTES:

1. ALL DIMENSIONS AND ANGLES ARE APPROXIMATE. THE CONTRACTOR SHALL VERIFY ALL DIMENSIONS AND ANGLES IN THE FIELD, PRIOR TO ORDERING MATERIALS.
2. PIPING LAYOUTS, CONNECTIONS AND SUPPORTS SHOWN ARE SCHEMATIC. FINAL LAYOUT SHALL BE SUBMITTED BY THE CONTRACTOR FOR APPROVAL IN ACCORDANCE WITH ARTICLE 1.05.02 (SEE SPECIAL PROVISIONS "300 mm PIPE FOR BRIDGE DRAINAGE (FIBERGLASS)".
3. SEE "SLAB PLANS" FOR LOCATIONS OF BRIDGE SCUPPERS.
4. SEE "FRAMING PLANS" FOR LONGITUDINAL DRAIN PIPES AND SUPPORT FRAMING LOCATIONS.
5. ALL STEEL FOR PIPE SUPPORTS SHALL BE ASTM A709M GRADE 345 GALVANIZED.

REV.	DATE	DESCRIPTION	SHEET. NO.
		REVISIONS	

SCALE AS NOTED

DESIGNER: T. YOUNG
DRAFTER: G. LEE
CHECKED BY: O. JAMBOTKAR
DATE CHECKED: 11-12-12

STATE OF CONNECTICUT
DEPARTMENT OF TRANSPORTATION

ENGINEER: PB AMERICAS, INC.
APPROVED BY:
DATE:

PROJECT TITLE: RECONSTRUCTION OF I-95 OVER WEST RIVER (BRIDGE NO. 00163)
CADD
PLOTTED 11/13/2012

TOWN: NEW HAVEN / WEST HAVEN
DRAWING TITLE: BRIDGE DRAINAGE - SCUPPER DETAILS

PROJECT NO.: 92-522
DRAWING NO.: STR-105
SHEET NO.:

12:56:43 PM
11/13/2012
T:\V8CADD\Projects\PB\8735\FD\Structures\Contract_Sheets\Br00163str-105-092522-00163.dgn

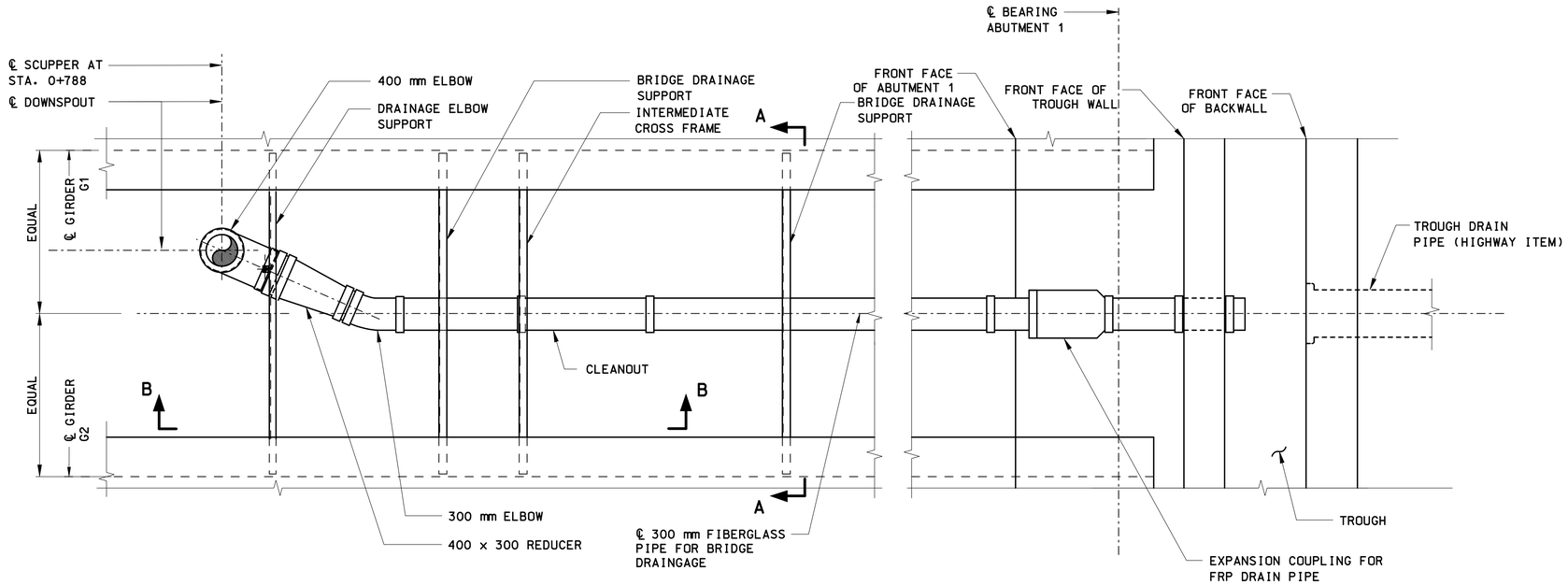

BRIDGE DRAINAGE PLAN
SCALE: 1:25

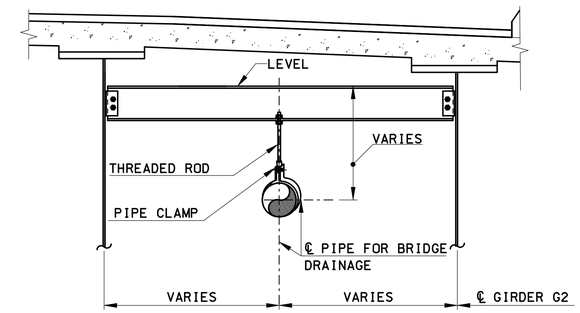

SECTION A–A
SCALE: 1:25

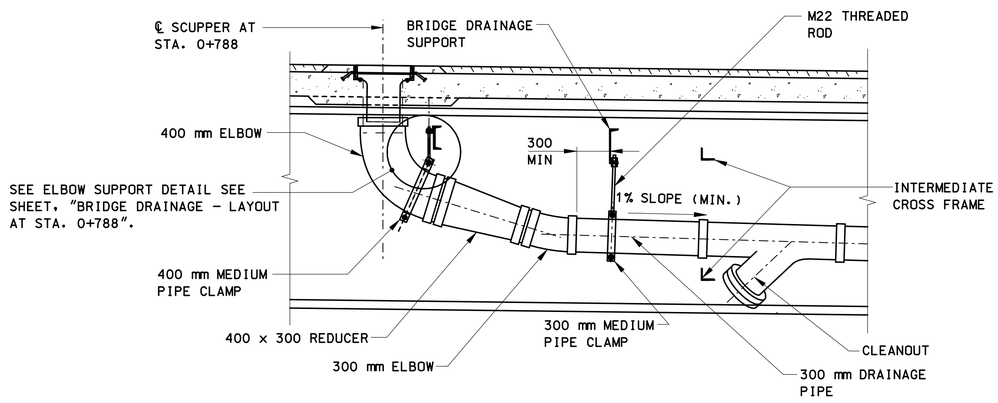

SECTION B–B
SCALE: 1:25

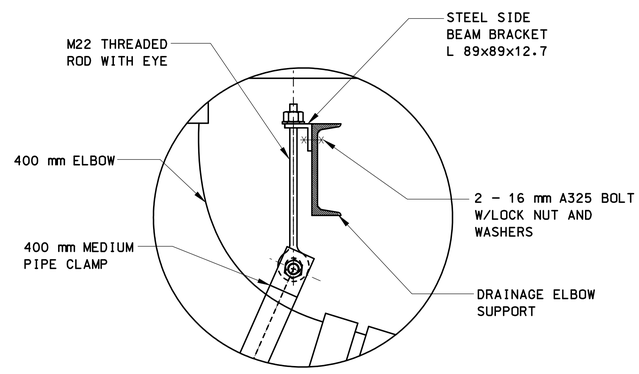

ELBOW SUPPORT DETAIL
NOT TO SCALE

NOTES:

1. FOR BRIDGE DRAINAGE NOTES, SEE "BRIDGE DRAINAGE – SCUPPER DETAILS".
2. FOR BRIDGE SCUPPER DETAILS, SEE "BRIDGE DRAINAGE – SCUPPER DETAILS".
3. GIRDER CONNECTION PLATES AND STIFFENERS NOT SHOWN FOR CLARITY.
4. FOR STRUCTURAL STEEL DETAILS OF BRIDGE DRAINAGE SUPPORTS, SEE "STRUCTURAL STEEL DETAILS – UTILITY SUPPORT DETAILS".
5. FINAL DRAINAGE PIPE SLOPE TO BE DETERMINED IN THE FIELD AND ESTABLISHED BY INVERT AT SCUPPER DRAIN ASSEMBLY AND INVERT OF DRAIN PIPE AT TROUGH WALL.
6. SEE ABUTMENT ELEVATION SHEET FOR MORE DETAILS.

DRAINAGE LAYOUT AT SCUPPER @ STA. 0+788
SCALE AS NOTED

REV.	DATE	DESCRIPTION	SHEET. NO
		REVISIONS	

SCALE AS NOTED

DESIGNER: B. BURKE
DRAFTER: G. GERARD
CHECKED BY: T. LALIBERTE
DATE CHECKED: 11–12–12

STATE OF CONNECTICUT
DEPARTMENT OF TRANSPORTATION

ENGINEER: PB AMERICAS, INC.
APPROVED BY: DATE:

PROJECT TITLE: RECONSTRUCTION OF I–95 OVER WEST RIVER (BRIDGE NO. 00163)
CADD PLOTTED 11/13/2012

TOWN: NEW HAVEN / WEST HAVEN
DRAWING TITLE: BRIDGE DRAINAGE – LAYOUT AT STA 0+788

PROJECT NO.: 92–522
DRAWING NO.: STR–106
SHEET NO.:

4:06:38 PM
11/13/2012
T:\HBCADD\Projects\PB\87135\FD\Structures\Contract_Sheets\Br00163\str-106-092522-00163.dgn

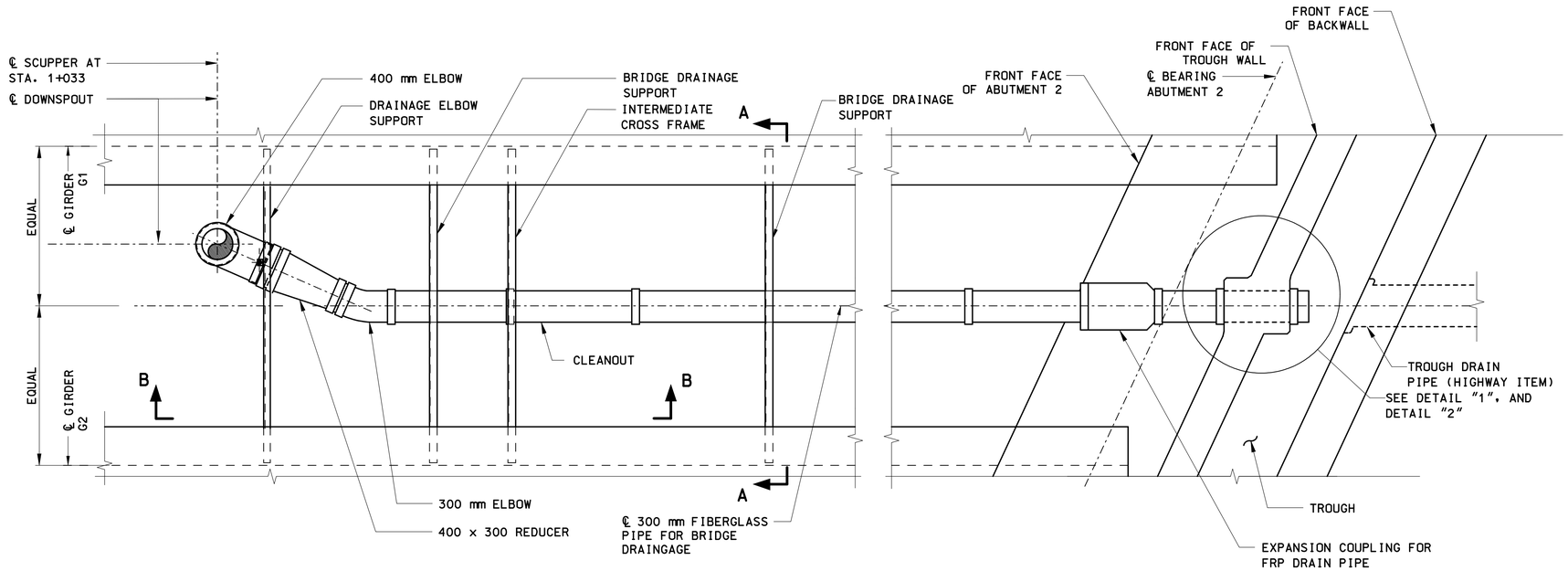

BRIDGE DRAINAGE PLAN
SCALE: 1:25

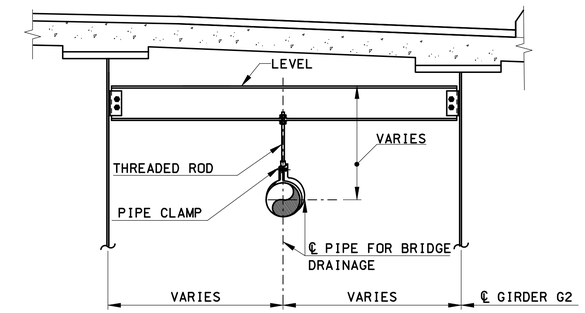

SECTION A-A
SCALE: 1:25

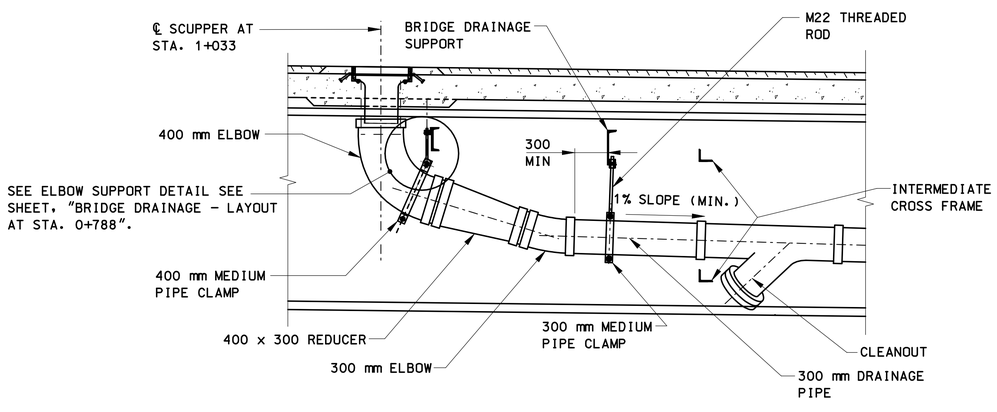

SECTION B-B
SCALE: 1:25

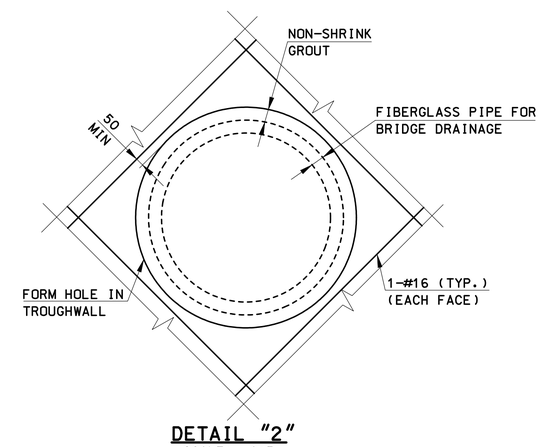

DETAIL "2"
SCALE: 1:5

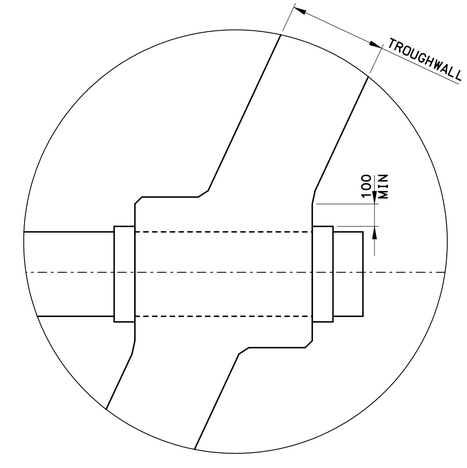

DETAIL "1"
SCALE: 1:10

DRAINAGE LAYOUT AT SCUPPER @ STA. 1+033
SCALE AS NOTED

NOTE:

FOR TYPICAL REFERENCE NOTES, SEE "BRIDGE DRAINAGE - LAYOUT AT STA. 0+788".

REV.	DATE	DESCRIPTION	SHEET. NO.
		REVISIONS	

SCALE AS NOTED

DESIGNER: B. BURKE
DRAFTER: G. GERARD
CHECKED BY: T. LALIBERTE
DATE CHECKED: 11-12-12

STATE OF CONNECTICUT
DEPARTMENT OF TRANSPORTATION

ENGINEER: PB AMERICAS, INC.
APPROVED BY:
DATE:

PROJECT TITLE: RECONSTRUCTION OF I-95 OVER WEST RIVER (BRIDGE NO. 00163)
CADD
PLOTTED 11/13/2012

TOWN: NEW HAVEN / WEST HAVEN
DRAWING TITLE: BRIDGE DRAINAGE - LAYOUT AT STA 1+033

PROJECT NO.: 92-522
DRAWING NO.: STR-107
SHEET NO.:

12:58:48 PM
11/13/2012
T:\V8CADD\Projects\PB\8735\FD\Structures\Contract_Sheets\Br00163\str-107-092522-00163.dgn

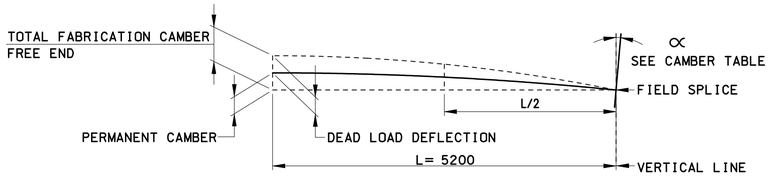

CAMBER DIAGRAM

SPAN	MAXIMUM SIGN AREA	FLANGE CONNECTION				CAMBER			
		PL. THK.	PL. O.D.	BOLT CIRCLE DIA.	BOLT DIA.	DEAD LOAD	PERMANENT	TOTAL	∝
mm	m2	mm	mm	mm	mm	mm	mm	mm	DEGREES
9150	17.19	51	990	865	32	67	7	74	0.807

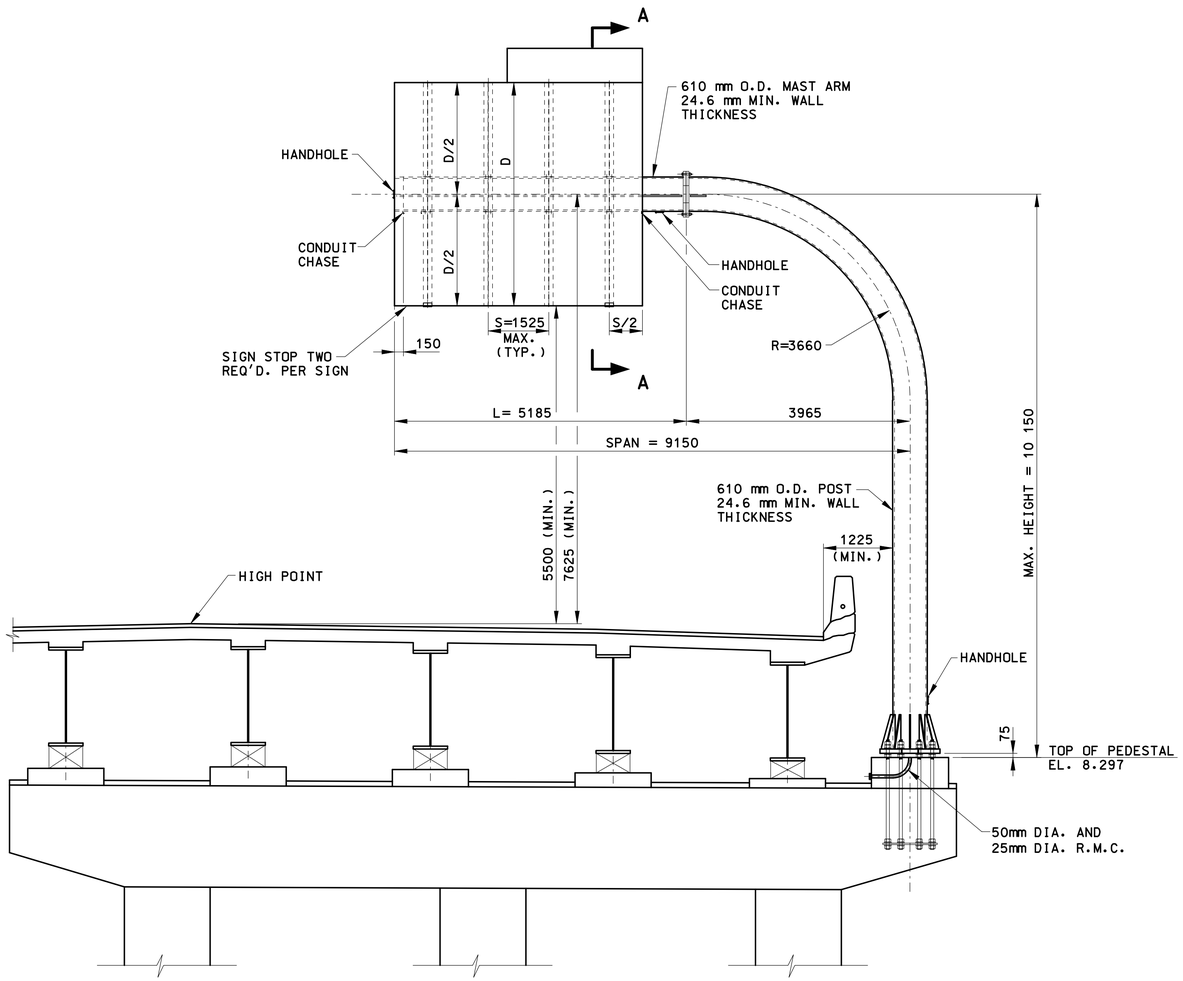

ELEVATION

TUBULAR ARCH CANTILEVER SIGN SUPPORT

SCALE: 1:50

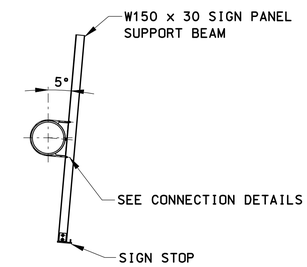

SECTION A-A

SCALE 1:50

GENERAL NOTES

SPECIFICATIONS: STATE OF CONNECTICUT DEPARTMENT OF TRANSPORTATION STANDARD SPECIFICATIONS (FORM 816) AND SPECIAL PROVISIONS.

DESIGN SPECIFICATIONS: AASHTO STANDARD SPECIFICATIONS FOR STRUCTURAL SUPPORTS FOR HIGHWAY SIGNS, LUMINARIES AND TRAFFIC SIGNALS (2009), AS SUPPLEMENTED BY THE CONNECTICUT DEPARTMENT OF TRANSPORTATION BRIDGE DESIGN MANUAL (2003).

ALLOWABLE DESIGN STRESSES:

CLASS "F" CONCRETE	BASED ON f'c = 28 Mpa
REINFORCEMENT (ASTM A615M GRADE 420)	fs = 414 Mpa
STRUCTURAL STEEL (AASHTO M270M GRADE 345)	Fy = 345 Mpa
TUBULAR STEEL	Fy = 310 Mpa (MINIMUM)

WIND LOAD: 193 km/h

DIMENSIONS: ALL DIMENSIONS SHALL BE FIELD VERIFIED. THE CONTRACTOR SHALL BE RESPONSIBLE FOR THE PROPER FIT OF SIGN STRUCTURES AT ANCHORAGES AND SPLICES. THE CONTRACTOR SHALL TAKE FIELD MEASUREMENTS TO VERIFY ANCHORAGE AND SPAN LENGTH PRIOR TO FABRICATION.

PAY ITEMS: THE COST OF THE TUBULAR STEEL PIPE AND STRUCTURAL STEEL PLATES, INCLUDING FABRICATION, COATING AND ERECTION, SHALL BE PAID FOR UNDER THE ITEM "TUBULAR ARCH CANTILEVER SIGN SUPPORT (BRIDGE)".

CONCRETE FOR THE SIGN SUPPORT PEDESTAL SHALL BE PAID FOR UNDER THE ITEM "CLASS '40' CONCRETE".

ANCHORAGE NOTES

THE ANCHOR BOLTS SHALL CONFORM TO THE REQUIREMENTS OF ASTM F1554M (AASHTO M314), GRADE 725. EACH END OF THE BOLTS SHALL BE THREADED 460 mm. EACH BOLT SHALL HAVE 5 HEX NUTS AND 4 HARDENED WASHERS. THE ANCHOR BOLTS, NUTS AND WASHERS SHALL BE HOT-DIP GALVANIZED IN ACCORDANCE WITH ASTM A153M.

THE ANCHORAGE PLATE SHALL CONFORM TO THE REQUIREMENTS OF ASTM A572M, GRADE 345. THE PLATE SHALL BE HOT-DIP GALVANIZED IN ACCORDANCE WITH ASTM A123M.

A BOLT TEMPLATE SHALL BE USED TO FACILITATE THE INSTALLATION OF THE ANCHOR BOLTS AND TO MITIGATE CONFLICTS WITH MAIN CAP REINFORCEMENT.

PLACE REINFORCEMENT TO CLEAR ANCHOR BOLTS.

COST OF FURNISHING AND INSTALLING ANCHOR BOLTS, NUTS AND STEEL PLATES TO BE PAID FOR UNDER THE ITEM "DEFORMED STEEL BARS".

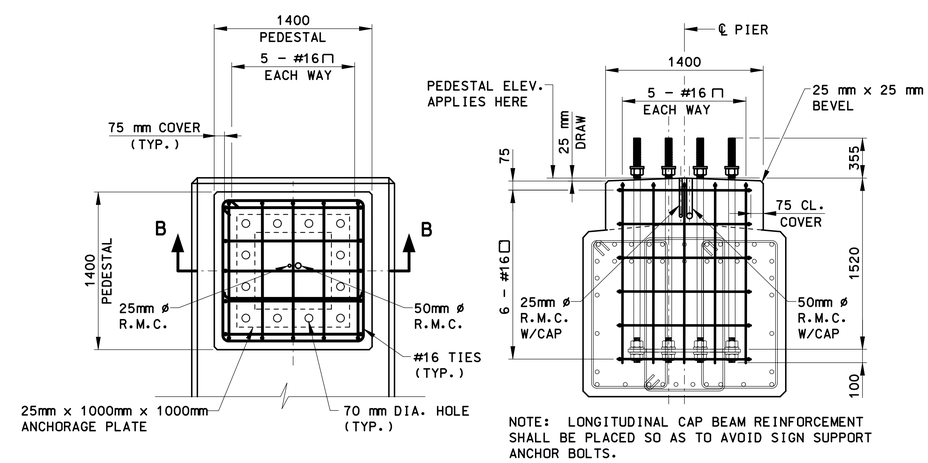

NOTE: LONGITUDINAL CAP BEAM REINFORCEMENT SHALL BE PLACED SO AS TO AVOID SIGN SUPPORT ANCHOR BOLTS.

PLAN **SECTION B-B**

SIGN SUPPORT PEDESTAL DETAIL

SCALE: 1:25

REV.	DATE	DESCRIPTION	SHEET. NO
		REVISIONS	

SCALE AS NOTED

DESIGNER: D. BAGDASARIAN
DRAFTER: G. LEE
CHECKED BY: T. LALIBERTE
DATE CHECKED: 11-12-12

STATE OF CONNECTICUT
DEPARTMENT OF TRANSPORTATION

ENGINEER: PB AMERICAS, INC.
APPROVED BY: DATE:

PROJECT TITLE: RECONSTRUCTION OF I-95 OVER WEST RIVER (BRIDGE NO. 00163)
CADD PLOTTED 11/13/2012

TOWN: NEW HAVEN / WEST HAVEN
DRAWING TITLE: SIGN SUPPORT DETAILS - SHEET 1 OF 3

PROJECT NO.: 92-522
DRAWING NO.: STR-108
SHEET NO.:

11/13/2012 11:55:54 PM
T:\WORKDIR\Projects\PB\8735\FD\Structures\Contract_Sheets\Br00163\str-108-092522-00163.dgn

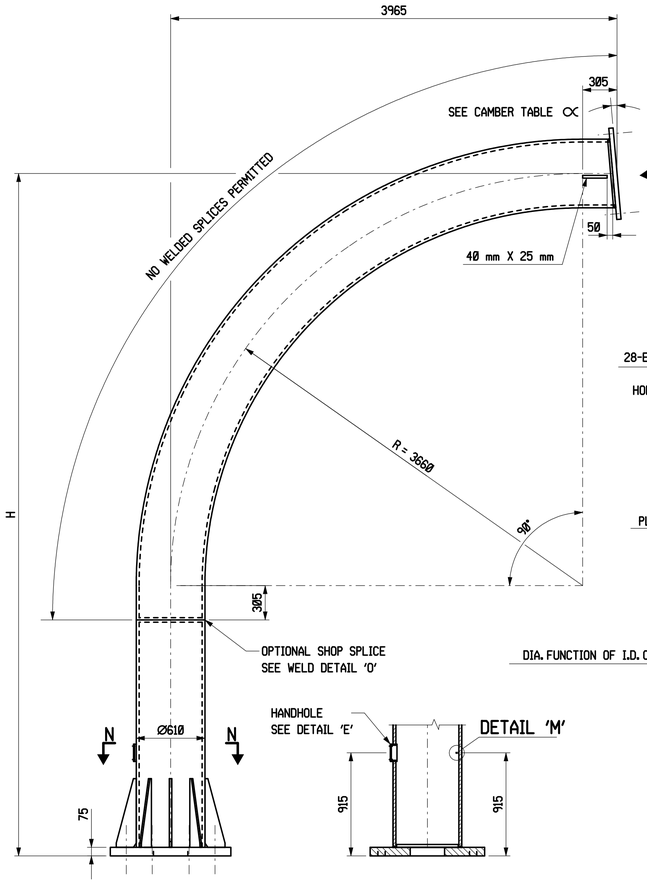

POST
SCALE 1:25

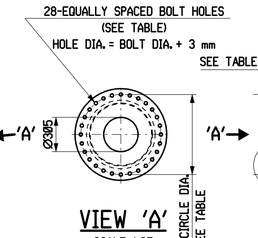

VIEW 'A'
SCALE 1:25

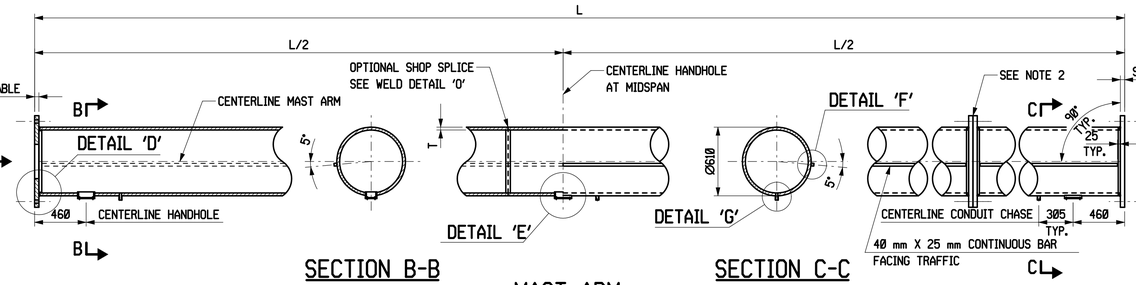

SECTION B-B

MAST ARM
SCALE 1:25

SECTION C-C

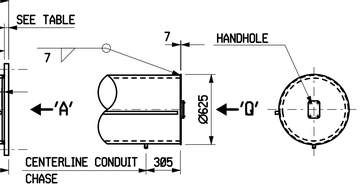

END SECTION
CANTILEVERED FRAME

VIEW 'Q'

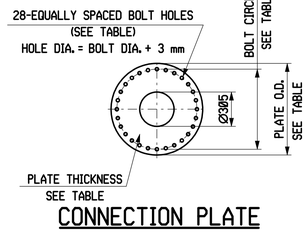

CONNECTION PLATE
SCALE 1:25

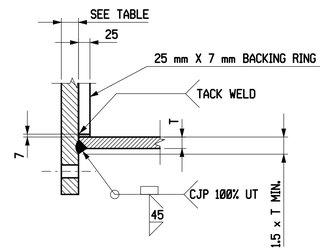

DETAIL 'D'
NO SCALE

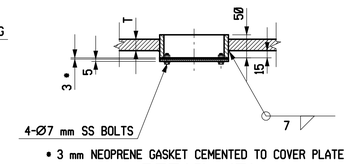

DETAIL 'E'
NO SCALE

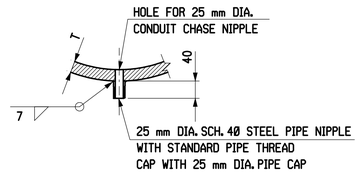

DETAIL 'G'
NO SCALE

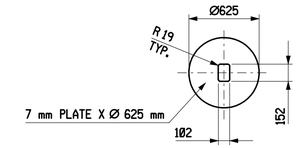

END PLATE
SCALE 1:25

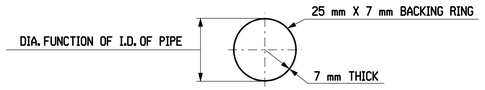

BACKING RING
SCALE 1:25

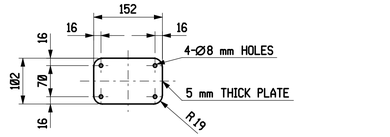

HANDHOLE COVER PLATE
NO SCALE

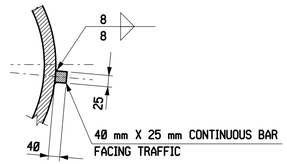

DETAIL 'F'
NO SCALE

SECTION THRU POST
SCALE 1:25

DETAIL 'M'
NO SCALE

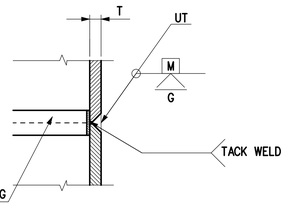

DETAIL 'O'
NO SCALE

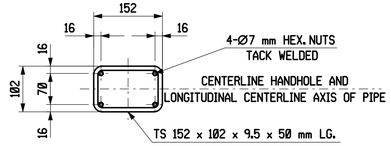

HANDHOLE TUBE
NO SCALE

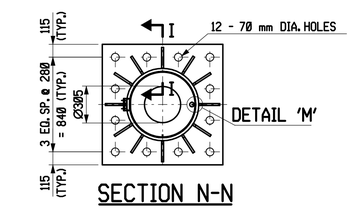

SECTION N-N
SCALE 1:25

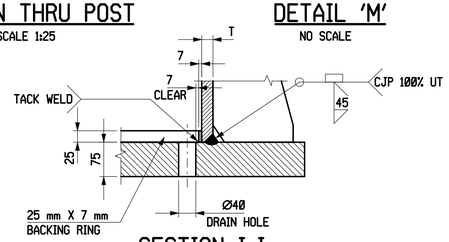

SECTION I-I
NO SCALE

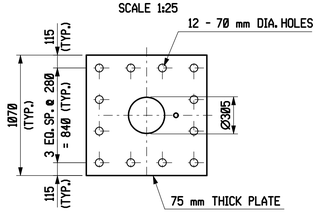

BASE PLATE
SCALE 1:25

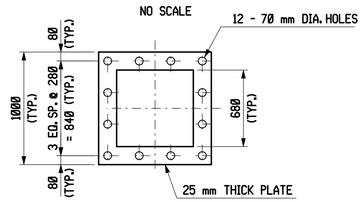

ANCHORAGE PLATE
SCALE 1:25

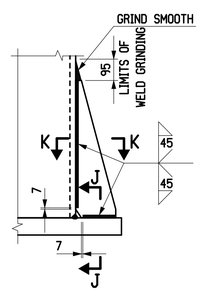

GUSSET PLATE WELD DETAIL
NO SCALE

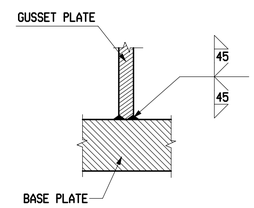

SECTION J-J
NO SCALE

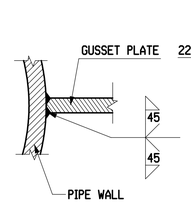

SECTION K-K
NO SCALE

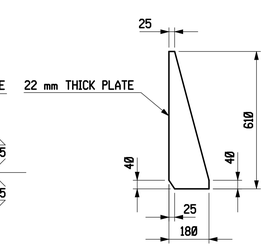

GUSSET PLATE
NO SCALE

STEEL NOTES:

TUBULAR STEEL PIPE FOR THE POSTS AND MAST ARM SHALL CONFORM TO THE REQUIREMENTS OF ASTM A500, GRADE B, A53, GRADE B, TYPE E OR S, A252, GRADE 3, TYPE E OR S, A106, GRADE B OR C, TYPE S ONLY, API 5L, GRADE B, TYPE E OR S, API 5LX, GRADE X42, TYPE E OR S.

THE STEEL USED FOR BASE PLATES, SPLICE PLATES, FILLER PLATES, BLOCKING PLATES, 40 mm X 25 mm CONTINOUS BAR, SIGN PANEL SUPPORT BEAMS AND SIGN STOPS SHALL CONFORM TO THE REQUIREMENTS OF AASHTO M270M, GRADE 345. ALL STEEL SHALL BE HOT-DIP GALVANIZED, AFTER FABRICATION, IN ACCORDANCE WITH ASTM A123M.

WELDING DETAILS, PROCEDURES AND TESTING METHODS SHALL CONFORM TO THE LATEST EDITION OF AWS STRUCTURAL WELDING CODE D1.1 - STEEL.
ALL WELDING SHALL BE CONTINUOUS, UNLESS NOTED OTHERWISE.

ALL HIGH STRENGTH BOLTS SHALL CONFORM TO ASTM A325M, TYPE 1. THE NUTS SHALL CONFORM TO ASTM A563M, GRADE DH OR DH3, OR ASTM A194, GRADE 2H. THE WASHERS SHALL CONFORM TO ASTM F436M. THE BOLTS, NUTS AND WASHERS SHALL BE GALVANIZED IN ACCORDANCE WITH ASTM A153M OR ASTM B695, GRADE 345.

COMPRESSIBLE-WASHER-TYPE DIRECT TENSION INDICATORS SHALL CONFORM TO ASTM F959 AND SHALL BE GALVANIZED IN ACCORDANCE WITH ASTM B695, CLASS 345.

U-BOLTS SHALL CONFORM TO ASTM A449M. THE NUTS SHALL CONFORM TO ASTM A563, GRADE DH. THE WASHERS SHALL CONFORM TO ASTM F436M. THE BOLTS, NUTS AND WASHERS SHALL BE GALVANIZED IN ACCORDANCE WITH ASTM A153M OR ASTM B695, GRADE 345.

FOR ADDITIONAL STEEL NOTES SEE 'SIGN SUPPORT DETAILS - SHEET 3 OF 3'.

NOTE:

FOR TABLE, SEE 'SIGN SUPPORT DETAILS - SHEET 1 OF 3'.

ALL DIMENSIONS ARE IN MILLIMETERS (mm) EXCEPT AS NOTED

REV.	DATE	DESCRIPTION	SHEET. NO.
		REVISIONS	

SCALE AS NOTED

DESIGNER: D. BAGDASARIAN
DRAFTER: G. LEE
CHECKED BY: T. LALIBERTE
DATE CHECKED: 11-12-12

STATE OF CONNECTICUT
DEPARTMENT OF TRANSPORTATION

ENGINEER: PB AMERICAS, INC.
APPROVED BY:
DATE:

PROJECT TITLE: RECONSTRUCTION OF I-95 OVER WEST RIVER (BRIDGE NO. 00163)
CADD
PLOTTED 11/13/2012

TOWN: NEW HAVEN / WEST HAVEN
DRAWING TITLE: SIGN SUPPORT DETAILS - SHEET 2 OF 3

PROJECT NO.: 92-522
DRAWING NO.: STR-109
SHEET NO.:

I:\20\DT PW
11/13/2012
T:\V8CADD\Projects\PB18735\FD\Structures\Contract_Sheets\Br00163\str-109-092522-00163.dgn

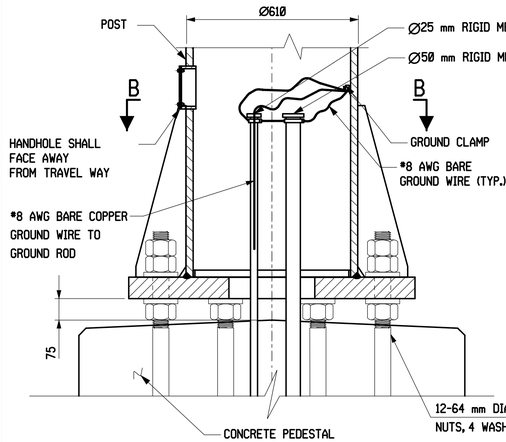

SECTION A-A

SCALE 1:10

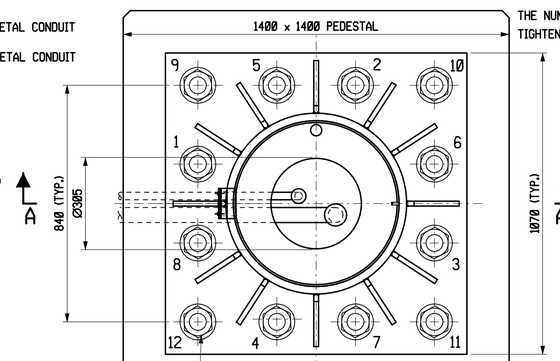

FOLLOWING THE INITIAL TIGHTENING, THE UPPER NUTS SHALL BE BROUGHT TO ONE-SIXTH TURN BEYOND A SNUG TIGHT CONDITION. THIS CAN BE OBTAINED BY A FEW IMPACTS OF AN IMPACT WRENCH OR THE FULL EFFORT OF A MAN USING AN ORDINARY SPUD WRENCH. SNUG TIGHTENING SHALL PROGRESS SYSTEMATICALLY ACCORDING TO THE TIGHTENING SEQUENCE AS SHOWN ON THE PLANS. THE NUTS AND WASHERS, BOTH UPPER AND LOWER, SHALL HAVE FULL EVEN BEARING ON THE BASE PLATE. A LOCKING NUT SHALL BE INSTALLED OVER THE UPPER NUT.

SECTION B-B

SCALE 1:10

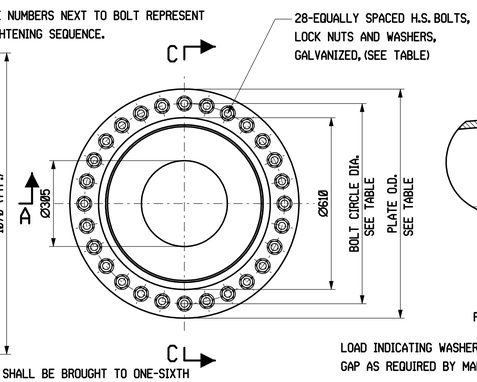

SECTION D-D

SCALE 1:10

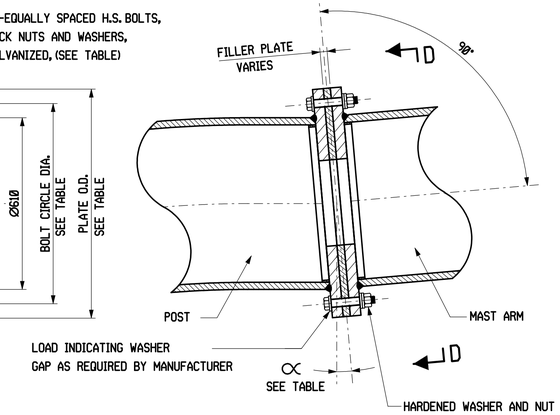

SECTION C-C

SCALE 1:10

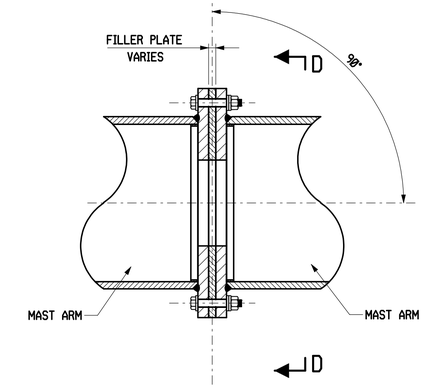

OPTIONAL BOLTED FIELD SPLICE DETAIL

SCALE 1:10

POST CONNECTION TO CONCRETE PEDESTAL

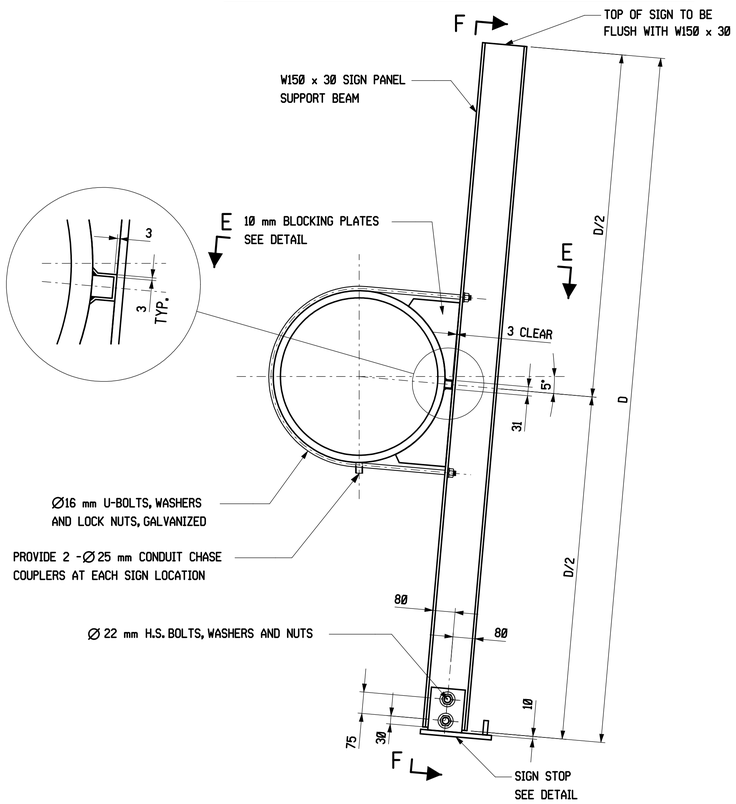

SECTION THROUGH MAST ARM

SCALE 1:10

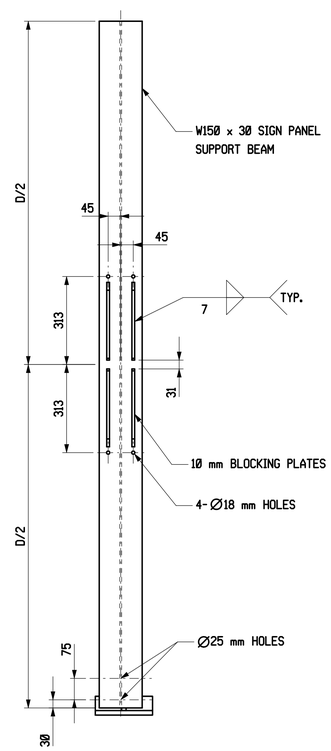

SECTION F-F

SCALE 1:10

POST CONNECTION TO ARM

NOTE: FOR TABLE OF DIMENSIONS REFER TO DWG. NO. STR-105 (SIGN SUPPORT SHEET).

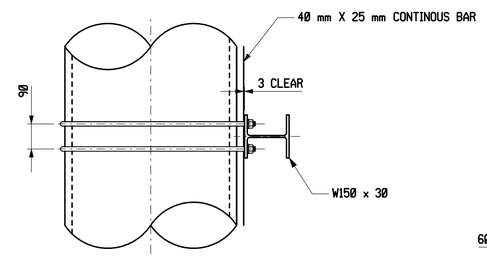

SECTION E-E

SCALE 1:5

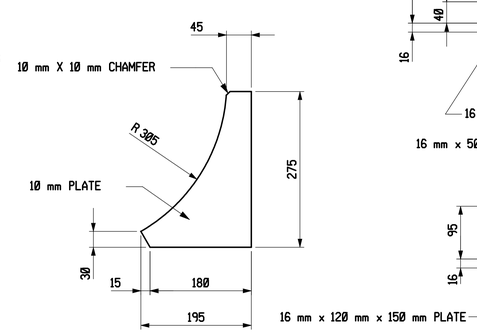

BLOCKING PLATE DETAIL

SCALE 1:5

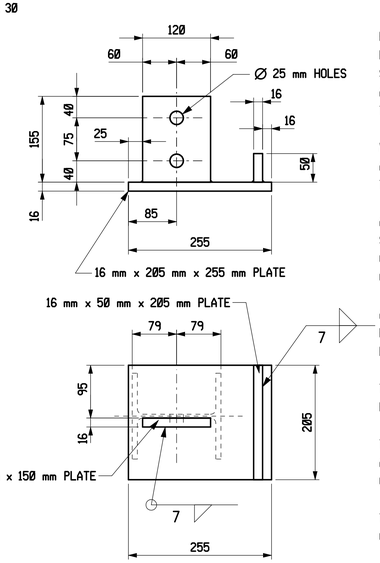

SIGN STOP DETAIL

SCALE 1:5

SIGN CONNECTION TO MAST ARM

STEEL NOTES CONT'D:

THE HIGH STRENGTH BOLTED CONNECTIONS ARE DESIGNED AS SLIP-CRITICAL CONNECTIONS WITH CLASS 'C' SURFACE CONDITIONS. THE GALVANIZED CONTACT SURFACES SHALL BE LIGHTLY SCORED BY WIRE BRUSHING AFTER GALVANIZING AND PRIOR TO ASSEMBLY.

ALL HIGH STRENGTH BOLTS SHALL HAVE HARDENED WASHERS PLACED UNDER ALL ELEMENTS (NUT OR BOLT HEAD) TURNED DURING TENSIONING.

TO FACILITATE GALVANIZING AND HAULING OPERATION OF THE MAST ARM ADDITIONAL BOLTED FIELD SPLICES WILL BE PERMITTED AS FOLLOWS:

- FOR MAST ARM LENGTHS LESS THAN 21350 mm (L <21350 mm) A MAXIMUM OF TWO ADDITIONAL BOLTED FIELD SPLICES WILL BE PERMITTED AT THE MIDPOINT OR THE ONE THIRD POINTS.
- FOR MAST ARM LENGTHS GREATER THAN 21350 mm (L >21350 mm) THE SPLICES SHALL BE LOCATED AT THE ONE THIRD POINTS ONLY AS DETERMINED BY THE FABRICATOR.

AT BOLTED FIELD SPLICES, THE FABRICATOR SHALL PROVIDE THE APPROPRIATE FILLER PLATE THICKNESS BASED ON FIELD MEASUREMENTS AND CAMBER REQUIREMENTS. THE FILLER PLATE MAY VARY IN THICKNESS FROM 0 mm TO A MAXIMUM OF 50 mm AT EACH SPLICE LOCATION. THE HIGH STRENGTH BOLTS SHALL BE OF SUFFICIENT LENGTH TO ACCOMMODATE THE APPROPRIATE FILLER PLATE THICKNESS AND HAVE NO THREADS IN THE SHEAR PLANES.

WELDED SHOP SPLICES, LOCATED BY THE FABRICATOR, ARE PERMITTED IN THE POST AND THE MAST ARM, EXCEPT AS NOTED. THESE SPLICES SHALL BE PLACED NO CLOSER THAN 150 mm TO FIELD SPLICES, HANDHOLES OR CONDUIT CHASE COUPLERS.

A HANDHOLE AND CONDUIT CHASE COUPLER SHALL BE PLACED AT EACH BOLTED FIELD SPLICE. THE CENTERLINE OF THE HANDHOLE SHALL BE LOCATED 460 mm FROM THE CENTERLINE OF THE BOLTED FIELD SPLICE. THE CENTERLINE ON THE CONDUIT CHASE COUPLER SHALL BE LOCATED 300 mm FROM THE CENTERLINE OF THE HANDHOLE.

A HANDHOLE AND CONDUIT CHASE COUPLER SHALL BE PLACED AT MIDSPAN IN THE MAST ARM ON TUBULAR ARCH SIGN SUPPORT STRUCTURES WITH NO ADDITIONAL BOLTED SPLICES.

THE EDGES OF ALL HOLES AND OPENINGS FOR GALVANIZING, CONDUITS, HANDHOLES, ETC., SHALL BE GROUND SMOOTH AND BE FREE OF NICKS, BURRS AND GOUGES.

THE MAST ARM SHALL BE TEMPORARILY SUPPORTED WHILE THE FIELD SPLICE BOLTS ARE TENSIONED IN ORDER TO BRING ALL PLATES OF THE CONNECTION INTO FIRM CONTACT.

THE CONTRACTOR SHALL TAKE THE PROPER PRECAUTIONS TO INSURE THE STABILITY OF ALL STRUCTURAL ELEMENTS UNTIL THE TOTAL STRUCTURE IS ERECTED.

FOR ADDITIONAL STEEL NOTES, SEE "SIGN SUPPORT DETAILS - SHEET 2 OF 3".

ALL DIMENSIONS ARE IN MILLIMETERS (mm) EXCEPT AS NOTED

REV.	DATE	DESCRIPTION	SHEET. NO
		REVISIONS	

SCALE AS NOTED

DESIGNER: D. BAGDASARIAN
DRAFTER: G. LEE
CHECKED BY: T. LALIBERTE
DATE CHECKED: 11-12-12

STATE OF CONNECTICUT
DEPARTMENT OF TRANSPORTATION

ENGINEER: PB AMERICAS, INC.
APPROVED BY:
DATE:

PROJECT TITLE: RECONSTRUCTION OF I-95 OVER WEST RIVER (BRIDGE NO. 00163)
CADD
PLOTTED 11/13/2012

TOWN: NEW HAVEN / WEST HAVEN
DRAWING TITLE: SIGN SUPPORT DETAILS - SHEET 3 OF 3

PROJECT NO.: 92-522
DRAWING NO.: STR-110
SHEET NO.:

11/13/2012 1:29:31 PM
T:\WORKADD\Projects\PB\87735\FD\Structures\Contract_Sheets\Br00163-dgn-110-092522-00163.dgn

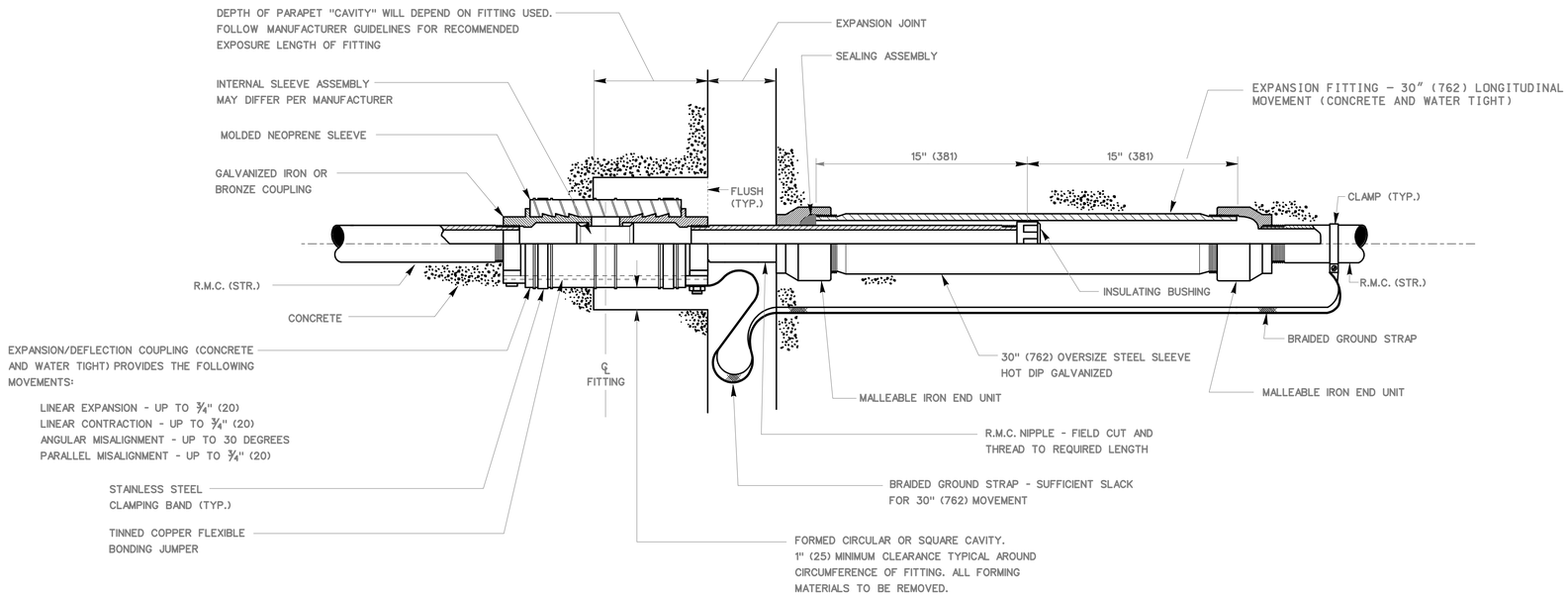

EXPANSION FITTING TYPE 3

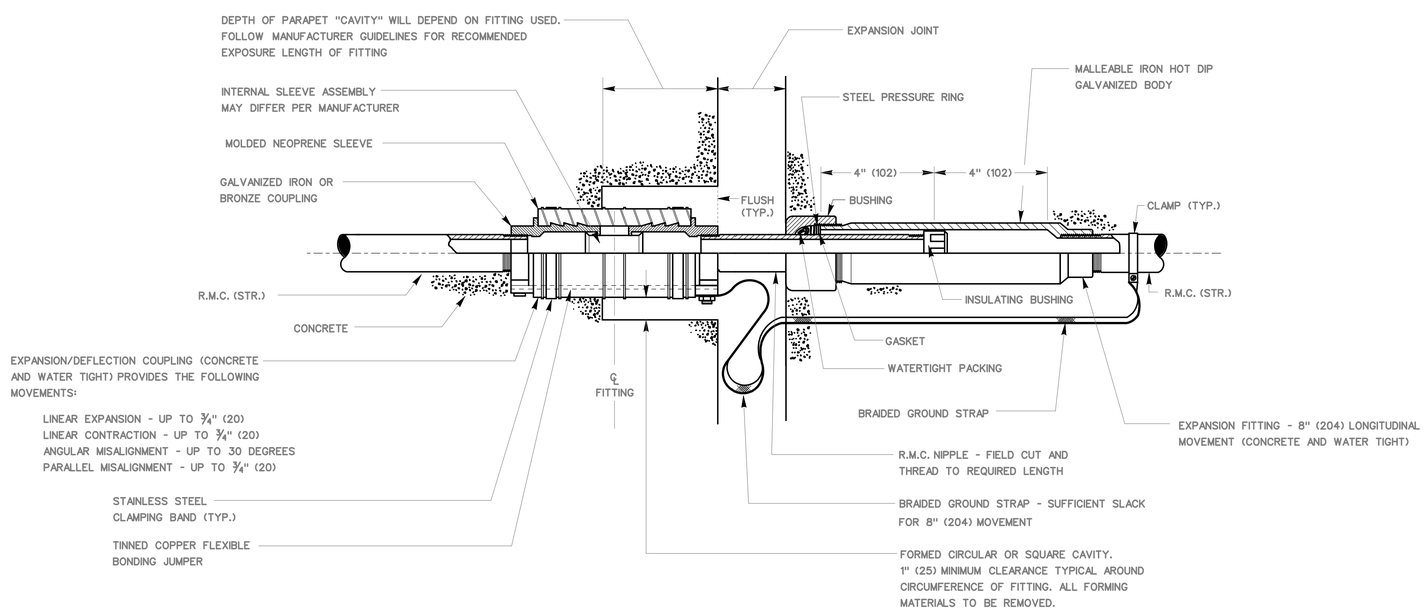

EXPANSION FITTING TYPE 2

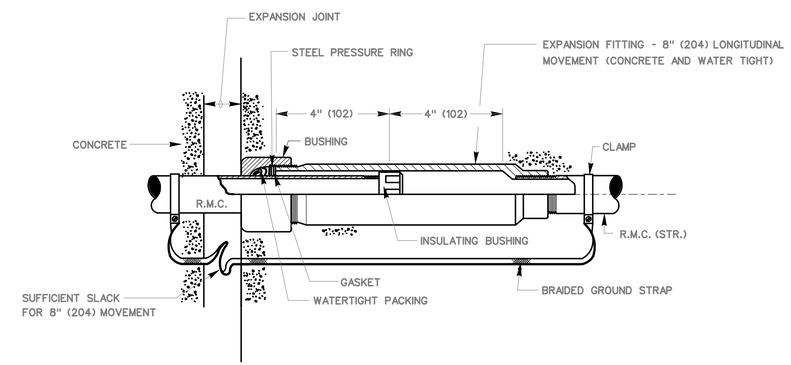

EXPANSION FITTING TYPE 1

NOTES:

SEE BRIDGE PLANS FOR SPECIFIC FITTING TYPE TO BE USED AT EACH BRIDGE EXPANSION JOINT.

ORIENTATION OF FITTING TO BE FIELD DETERMINED.

REV.	DATE	DESCRIPTION	SHEET. NO
		REVISIONS	

NOT TO SCALE

DESIGNER:
DRAFTER:
CHECKED BY:
DATE CHECKED:

STATE OF CONNECTICUT
DEPARTMENT OF TRANSPORTATION

ENGINEER: OFFICE OF ENGINEERING
APPROVED BY:
DATE:

OFFICE OF ENGINEERING

PROJECT TITLE: RECONSTRUCTION OF I-95 OVER WEST RIVER (BRIDGE NO. 00163)

CADD
PLOTTED 11/13/2012

TOWN: NEW HAVEN / WEST HAVEN

DRAWING TITLE: ELECTRICAL DETAILS - EXPANSION FITTINGS

PROJECT NO.: 92-522
DRAWING NO.: STR-111
SHEET NO.:

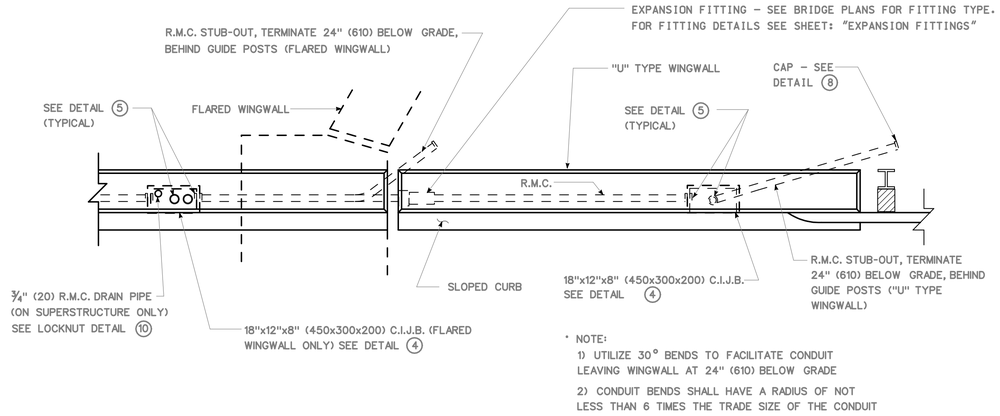

TOP VIEW

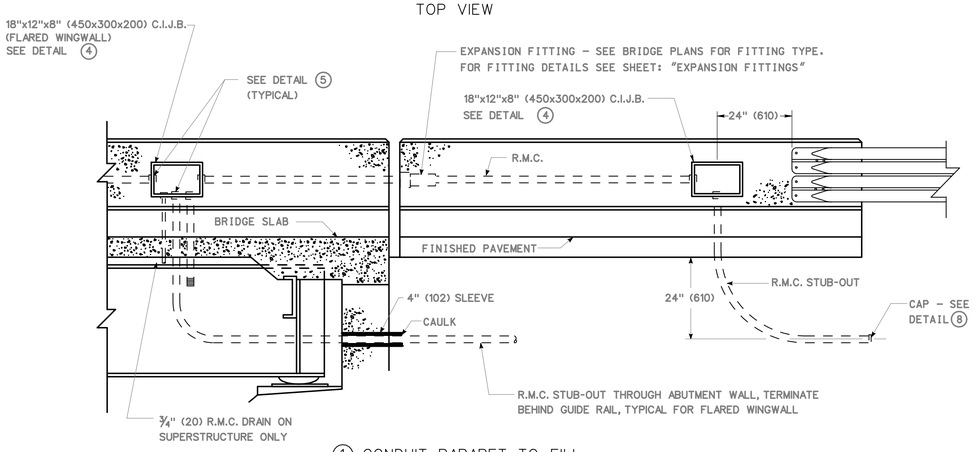

1 CONDUIT PARAPET TO FILL

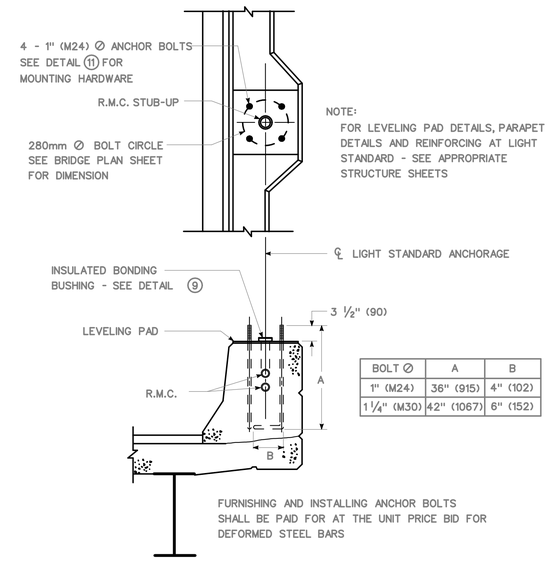

BOLT Ø	A	B
1" (M24)	36" (915)	4" (102)
1 ¼" (M30)	42" (1067)	6" (152)

3 PARAPET TREATMENT AT LIGHT STANDARD

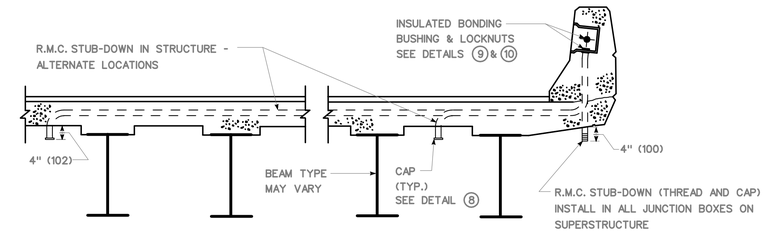

6 SERVICE TO LUMINAIRE UNDER STRUCTURE

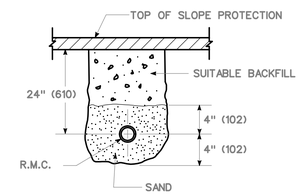

7 RIGID METAL CONDUIT UNDER SLOPE PROTECTION

8 MALLEABLE IRON CAP

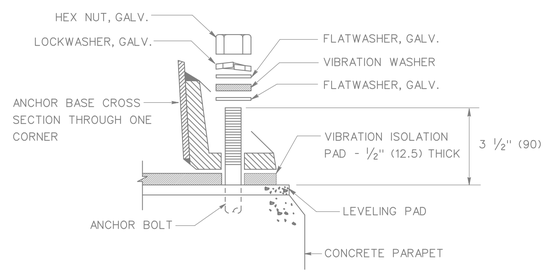

11 ANCHOR BASE LIGHT STANDARD MOUNTING HARDWARE

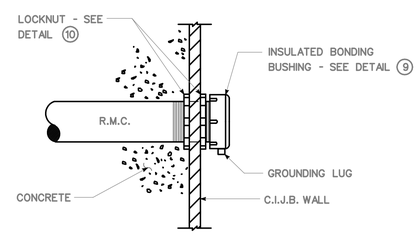

5 CONDUIT ENTRY INTO CAST IRON JUNCTION BOX

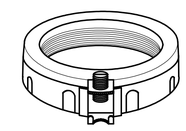

9 INSULATED BONDING BUSHING WITH GROUND LUG

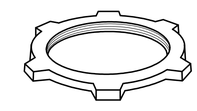

10 LOCKNUT

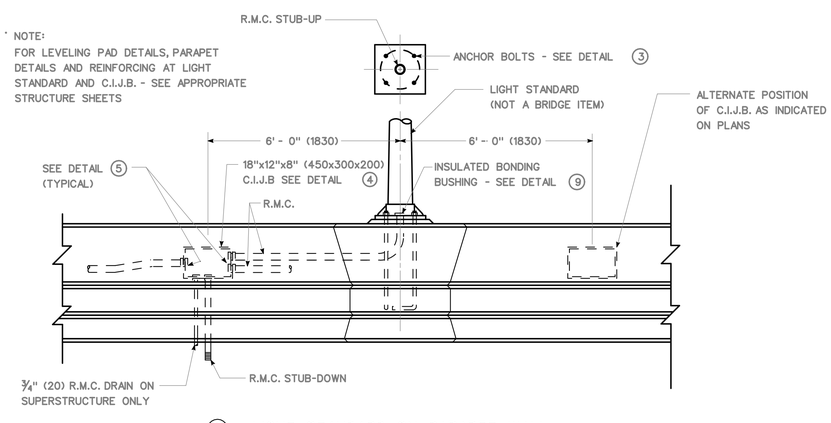

2 LIGHT STANDARD ON PARAPET WALL

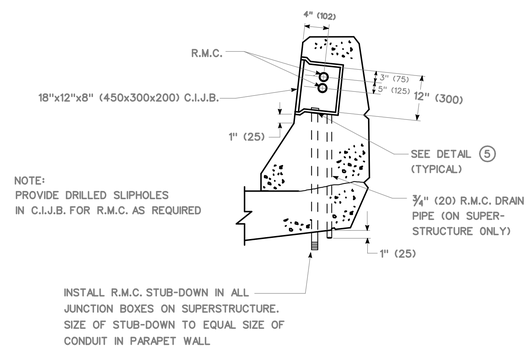

4 JUNCTION BOX INSTALLATION

NOTES:

1) SEE BRIDGE PLANS FOR SPECIFIC CONSTRUCTION DETAILS AND LOCATIONS.

2) DIAMETER OF RIGID METAL CONDUIT SHALL BE AS CALLED FOR ON BRIDGE PLANS.

3) R.M.C. STUB-UPS TO LIGHT STANDARDS, STUB-OUTS TO FILL, AND STUB-DOWNS TO UNDERBRIDGE LUMINAIRES, SHALL BE OF THE SAME DIAMETER AS THE R.M.C. CAST IN THE PARAPET WALL.

4) INSTALL ONE R.M.C. STUB-DOWN IN ALL JUNCTION BOXES ON SUPERSTRUCTURE. ADDITIONAL STUB-DOWNS SHALL BE INSTALLED WHERE INDICATED ON THE PLANS.

5) USE APPLICABLE DETAILS.

REV.	DATE	DESCRIPTION	SHEET. NO
		REVISIONS	

NOT TO SCALE

DESIGNER:
DRAFTER:
CHECKED BY:
DATE CHECKED:

STATE OF CONNECTICUT
DEPARTMENT OF TRANSPORTATION

ENGINEER: OFFICE OF ENGINEERING
APPROVED BY: DATE:

OFFICE OF ENGINEERING

PROJECT TITLE: RECONSTRUCTION OF I-95 OVER WEST RIVER (BRIDGE NO. 00163)

CADD PLOTTED 11/13/2012

TOWN: NEW HAVEN / WEST HAVEN

DRAWING TITLE: ELECTRICAL DETAILS - PARAPET

PROJECT NO.: 92-522
DRAWING NO.: STR-112
SHEET NO.:

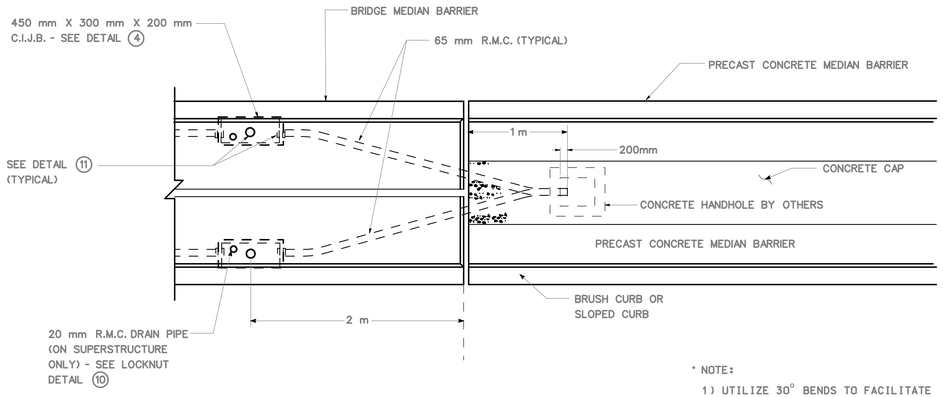

TOP VIEW

* NOTE:

1) UTILIZE 30° BENDS TO FACILITATE CONDUIT LEAVING WINGWALL

2) CONDUIT BENDS SHALL HAVE A RADIUS OF NOT LESS THAN 6 TIMES THE TRADE SIZE OF CONDUIT

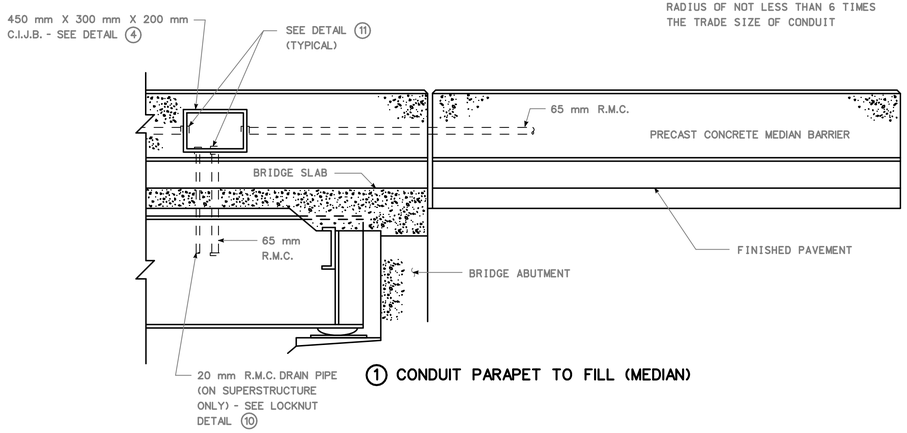

1 CONDUIT PARAPET TO FILL (MEDIAN)

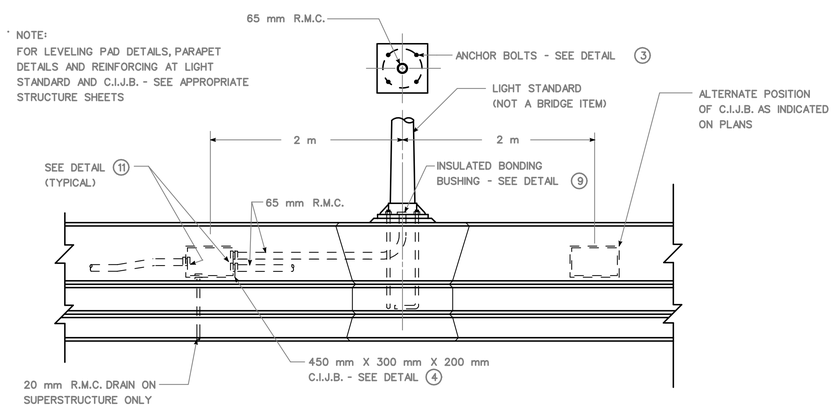

2 LIGHT STANDARD ON PARAPET WALL

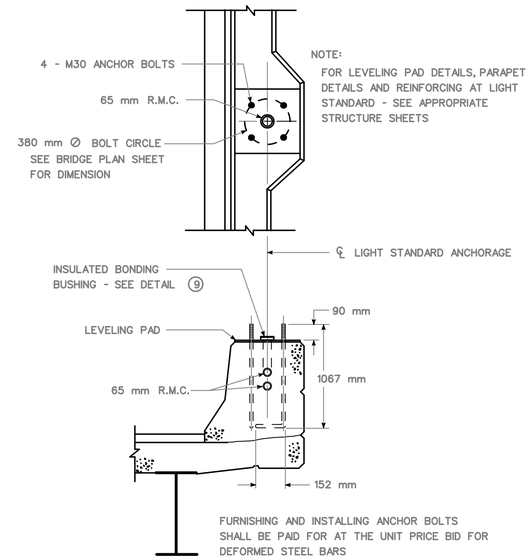

3 PARAPET TREATMENT AT LIGHT STANDARD

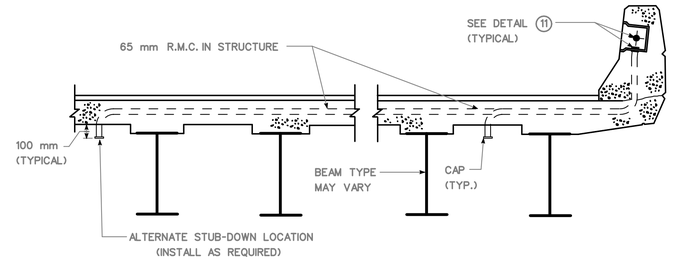

6 SERVICE TO LUMINAIRE UNDER STRUCTURE

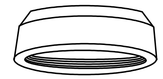

8 MALLEABLE IRON CAP

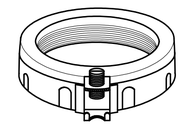

9 INSULATED BONDING BUSHING WITH GROUND LUG

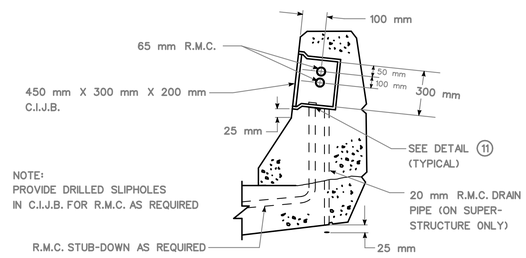

4 JUNCTION BOX INSTALLATION

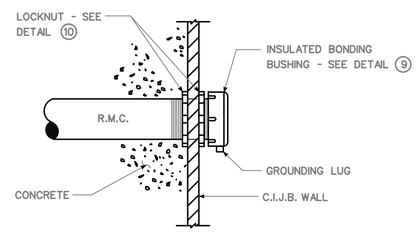

11 CONDUIT ENTRY INTO CAST IRON JUNCTION BOX

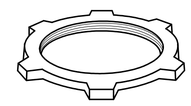

10 LOCKNUT

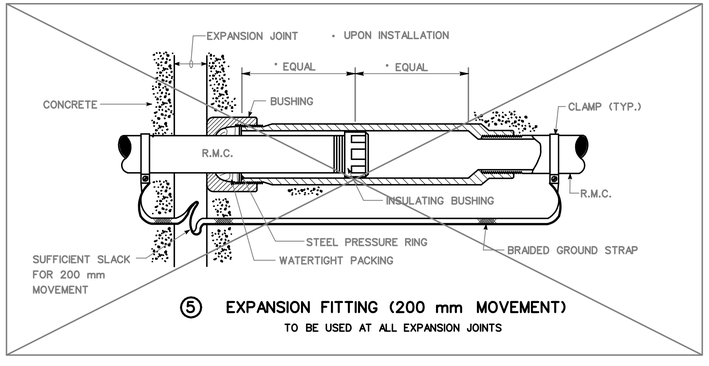

5 EXPANSION FITTING (200 mm MOVEMENT)

TO BE USED AT ALL EXPANSION JOINTS

NOTES:

1) SEE BRIDGE PLANS FOR SPECIFIC CONSTRUCTION DETAILS AND LOCATIONS.

2) R.M.C. STUB-UPS TO LIGHT STANDARDS, STUB-OUTS TO FILL, AND STUB-DOWNS TO UNDERBRIDGE LUMINAIRES, SHALL BE OF THE SAME DIAMETER AS THE R.M.C. CAST IN THE PARAPET WALL.

3) USE APPLICABLE DETAILS.

REV.	DATE	DESCRIPTION	SHEET. NO
		REVISIONS	

NOT TO SCALE

DESIGNER:
DRAFTER:
CHECKED BY:
DATE CHECKED:

STATE OF CONNECTICUT
DEPARTMENT OF TRANSPORTATION

ENGINEER: OFFICE OF ENGINEERING
APPROVED BY:
DATE:

OFFICE OF ENGINEERING

PROJECT TITLE: RECONSTRUCTION OF I-95 OVER WEST RIVER (BRIDGE NO. 00163)

CADD
PLOTTED 11/13/2012

TOWN: NEW HAVEN / WEST HAVEN

DRAWING TITLE: ELECTRICAL DETAILS - MEDIAN

PROJECT NO.: 92-522
DRAWING NO.: STR-113
SHEET NO.:

ERECTION AND DEMOLITION NOTES

1. CONSTRUCTION OF THE NEW BRIDGE AND DEMOLITION OF THE EXISTING BRIDGE SHALL BE PERFORMED CONCURRENTLY IN ACCORDANCE WITH THE CONTRACT DRAWINGS AND SPECIFICATIONS, THE PERMIT REQUIREMENTS AND AS DIRECTED BY THE ENGINEER.

2. THE WORK WILL BE STAGED TO PROVIDE UNINTERRUPTED SERVICE FOR ALL ROADWAY TRAFFIC, RIVER TRAFFIC, PEDESTRIAN TRAFFIC AND EXISTING UTILITIES, WHICH ARE TO REMAIN IN SERVICE. IN GENERAL, 3 LANES OF TRAFFIC SHALL BE MAINTAINED ON THE I-95 NB AND SB ROADWAYS. WHERE SHORT TERM OPERATIONS REQUIRE TRAVEL LANE CLOSURES, THAT WORK SHALL BE PERFORMED IN OFF-PEAK TRAFFIC PERIODS AS OUTLINED IN THE PROSECUTION AND PROGRESS SECTION OF THE SPECIAL PROVISIONS.

3. CONSTRUCTION WITHIN THE LIMITS OF THE WEST RIVER SHALL BE ACCOMPLISHED FROM TEMPORARY WORK TRESTLES, BARGES, THE EXISTING BRIDGE AND/OR THE NEW BRIDGE.

4. THE INFORMATION SHOWN ON THE PLANS PERTAINING TO CONSTRUCTION ACCESS, SEQUENCE OF CONSTRUCTION, ERECTION AND DEMOLITION PROCEDURES CONVEYS THE ASSUMPTIONS MADE BY THE DESIGNER IN DESIGNING THE STRUCTURE AND IS FOR INFORMATION ONLY. THE CONTRACTOR SHALL BE RESPONSIBLE FOR SELECTING THE MEANS AND METHODS FOR CONSTRUCTION. REFER TO THE SPECIAL PROVISION ITEM "CONSTRUCTION ACCESS" FOR ADDITIONAL INFORMATION.

5. THE CONTRACTOR SHALL BE RESPONSIBLE FOR OBTAINING REVISED PERMITS FROM ALL GOVERNING LOCAL, STATE AND FEDERAL AGENCIES DUE TO HIS PROPOSED CHANGES IN CONSTRUCTION METHODOLOGY, WHICH EFFECTS ENVIRONMENTAL IMPACTS.

6. THE CONTRACTOR SHALL PREPARE AND SUBMIT TO THE ENGINEER, WORKING DRAWINGS AND COMPUTATIONS STAMPED BY A PROFESSIONAL ENGINEER LICENSED IN THE STATE OF CONNECTICUT. THE DRAWINGS SHALL DEPICT HIS PROPOSED DEMOLITION AND ERECTION PROCEDURES, INCLUDING, BUT NOT LIMITED TO, SEQUENCING AND COMPLETE DETAILS OF THE MATERIALS, METHODS AND EQUIPMENT TO BE USED.

STRUCTURAL INFORMATION:

7. BASIC AND SIMPLIFIED CHARACTERISTICS OF THE EXISTING BRIDGE, BASED UPON THE ORIGINAL CONTRACT DRAWINGS, ARE SHOWN ON THIS SET OF DRAWINGS. THESE DRAWINGS DO NOT SHOW ANY DETAIL SUCH AS REINFORCING STEEL, CONNECTION DETAILS, MISCELLANEOUS DETAILS, ETC. ORIGINAL DRAWINGS OF THE EXISTING BRIDGE MAY BE OBTAINED FOR THE CONNECTICUT DEPARTMENT OF TRANSPORTATION. THESE DRAWINGS ARE NOT "AS BUILT" DRAWINGS AND MAY NOT FULLY DEPICT THE ACTUAL CONDITIONS ON SITE. IT WILL BE THE CONTRACTOR'S RESPONSIBILITY TO VERIFY THE ACCURACY OF THE INFORMATION IN THE FIELD.

8. DRAWINGS AND SPECIFICATIONS FOR THE NEW I-95 BRIDGE SCHEDULED FOR CONCURRENT CONSTRUCTION WITH THE EXISTING BRIDGE DEMOLITION ARE INCLUDED WITHIN THESE CONTRACT DOCUMENTS.

DEMOLITION OF THE EXISTING BRIDGE:

9. THROUGHOUT ALL STAGES OF THE DEMOLITION WORK, THE CONTRACTOR SHALL TAKE THE PROPER PRECAUTIONS TO INSURE THE STRUCTURAL INTEGRITY OF THE EXISTING BRIDGE TO REMAIN.

10. ALL MATERIALS RELATED TO DEMOLITION SHALL BECOME THE PROPERTY OF THE CONTRACTOR. THE CONTRACTOR SHALL REMOVE ALL MATERIALS FROM THE JOB SITE AND LEGALLY DISPOSE OF THEM. THE METHOD OF DEBRIS REMOVAL, TRANSPORTATION AND LOCATION OF DISPOSAL SHALL BE APPROVED BY THE ENGINEER AND BY THE DEPARTMENT OF ENVIRONMENTAL PROTECTION. AS AN EXCEPTION TO THE ABOVE, THE CONTRACTOR WILL BE REQUIRED BY CONNDOT TO DELIVER FOR SALVAGE, TO A LOCATION SPECIFIED BY THE ENGINEER, THE FOLLOWING ITEMS:

ALUMINUM LIGHT STANDARDS
ROADWAY LUMINAIRES

11. THE COST OF REMOVING THE SUPERSTRUCTURE, INCLUDING THE DELIVERY OF ALL MATERIALS DESIGNATED TO BE SALVAGED FROM THE EXISTING BRIDGE SHALL BE PAID FOR UNDER THE ITEM "REMOVAL OF SUPERSTRUCTURE (SITE NO. 1)".

12. PRIOR TO BEGINNING REMOVAL OF THE SUPERSTRUCTURE, THE CONTRACTOR SHALL INSTALL AND MAINTAIN A PROTECTIVE BARRIER BENEATH THE BRIDGE AT COMPOST ROAD, THE WEST RIVER, BETWEEN PIERS 4 AND 5 AND KIMBERLY AVENUE TO CAPTURE DEMOLITION DEBRIS. THE BARRIERS SHALL EXTEND A MINIMUM OF 2 m BEYOND THE LIMITS OF THE SUPERSTRUCTURE. EXISTING VERTICAL CLEARANCES BENEATH THE EXISTING SUPERSTRUCTURE SHALL BE MAINTAINED EXCEPT FOR PERIODS ALLOWED IN THE CONTRACT. REFER TO THE SPECIAL PROVISION ITEMS "REMOVAL OF SUPERSTRUCTURE (SITE NO. 1)" AND "PROSECUTION AND PROGRESS" FOR ADDITIONAL REQUIREMENTS.

13. NO DEMOLITION DEBRIS SHALL BE ALLOWED TO FALL TO THE GROUND OR IN THE RIVER EXCEPT FOR THE FOLLOWING:

WITHIN 3 m OF STEM AND WINGWALL OF ABUTMENTS
WITHIN 3 m OF SHAFTS OF LAND PIERS (WITHOUT TEMPORARY ENCLOSURES)
WITHIN TEMPORARY STEEL SHEET PILE ENCLOSURES AT RIVER PIERS.

14. TEMPORARY STEEL SHEET PILE ENCLOSURES SHALL BE CONSTRUCTED PRIOR TO THE DEMOLITION OF PIERS 2 THROUGH 7, 12 THROUGH 21 AND RAMP ABUTMENT. THE PURPOSE OF THESE ENCLOSURES IS TO CONTAIN THE DEBRIS AND TURBID WATER. THESE ENCLOSURES SHALL NOT BE DEWATERED. ALL DEBRIS SHALL BE REMOVED AND DISPOSED OF FROM WITHIN THE TEMPORARY SHEET PILE ENCLOSURE AFTER DEMOLITION IS COMPLETED IN ACCORDANCE WITH THE PERMIT REQUIREMENTS. SHEET PILES SHALL CONFORM TO ASTM A328 m. ALL SHEET PILE ENCLOSURES SHALL BE COMPLETELY REMOVED AFTER DEMOLITION WORK IS COMPLETE.

15. SUBSTRUCTURES SHALL BE REMOVED IN ACCORDANCE WITH THE STAGING OF THE WORK DEPICTED ON THE DRAWINGS BY CUTTING, SPLITTING OR IMPACT HAMMER METHODS. BLASTING WILL NOT BE ALLOWED. THE CONTRACTOR SHALL REMOVE THE SUBSTRUCTURES TO THE CUT-OFF ELEVATIONS AND LIMITS SHOWN ON THE PLANS. ANY MUD LINES OR EXISTING GROUND LINES SHOWN ON THE PLANS ARE FOR INFORMATIONAL PURPOSES ONLY. REFER TO THE SPECIAL PROVISION ITEMS "REMOVAL OF PIER _" AND "REMOVAL OF ABUTMENT _" FOR ADDITIONAL REQUIREMENTS.

CONSTRUCTION OF NEW BRIDGE:

16. DETAILS SHOWING THE SUGGESTED METHODS FOR CONSTRUCTING THE NEW BRIDGE ARE PROVIDED AS A CONCEPT TO PERFORM THE WORK WITHIN THE REQUIREMENTS OF THE MAINTENANCE AND PROTECTION OF TRAFFIC, PROSECUTION AND PROGRESS AND THE PERMITS. THIS INFORMATION IN NOT INTENDED TO COVER ALL DETAILS OF THE WORK. THE CONTRACTOR MAY USE OTHER METHODS OF CONSTRUCTION PROVIDED THAT THE REQUIREMENTS OF THE CONTRACT ARE SATISFIED.

17. CRANES DEPICTED ON THE DRAWINGS WERE SELECTED ACCORDING TO ASSUMED SET-UP LOCATIONS, MAXIMUM WORKING RADIUS AND MAXIMUM HOIST LOADS. IT IS ASSUMED THAT 2 CRANES WILL BE REQUIRED FOR ERECTING SELECT STEEL GIRDER SECTIONS. CRANE SET-UPS ON COMPLETED SECTIONS OF THE NEW BRIDGE DURING STAGE 3 SHALL NOT CAUSE OVERSTRESS OR DAMAGE TO THE STRUCTURE. REFER TO SPECIAL PROVISION ITEM "CONSTRUCTION ACCESS" FOR ADDITIONAL REQUIREMENTS.

NOTE:

FOR ADDITIONAL STAGE CONSTRUCTION DETAILS AND NOTES, SEE STRUCTURE DRAWINGS "STAGE CONSTRUCTION PLANS" AND "TYPICAL STAGING SECTIONS".

LEGEND:

✱ - SEE "ERECTION AND DEMOLITION NOTES" ON DRAWING NO. STR-114

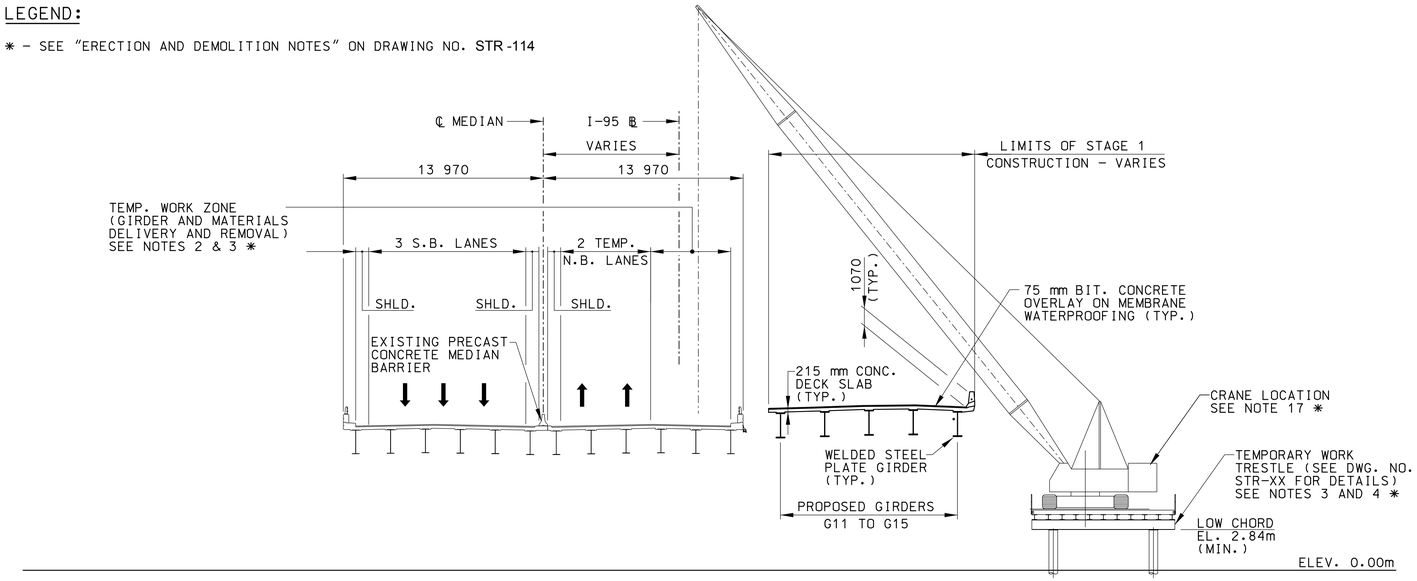

STAGE 1 CONSTRUCTION

SCALE: 1:200

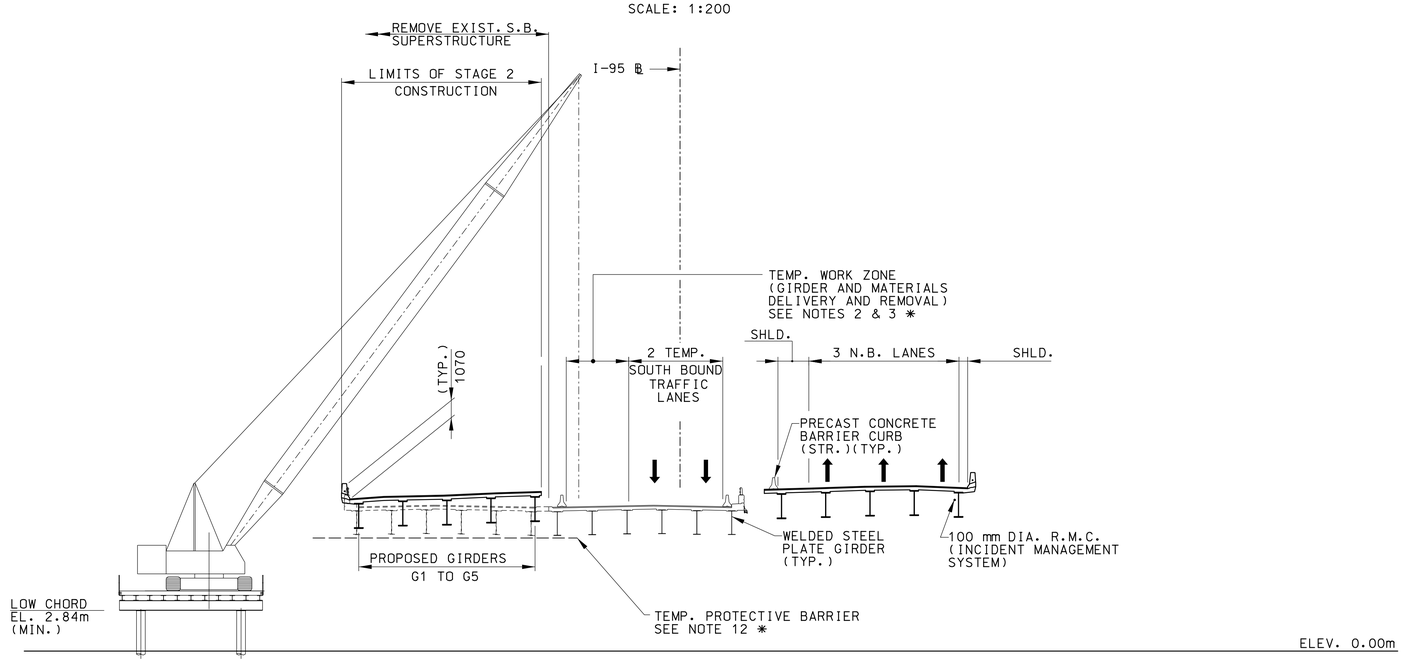

STAGE 2 CONSTRUCTION

SCALE: 1:200

STAGE 1 CONSTRUCTION

STAGE 1 CONSTRUCTION INCLUDES THE PARTIAL CONSTRUCTION OF THE PROPOSED N.B. BRIDGE, STAGE 1A AND DEMOLITION OF EXISTING RAMP, STAGE 1C.

PARTIAL DEMOLITION OF EXISTING N.B. BRIDGE IS REQUIRED TO PROVIDE ADEQUATE ROOM FOR THE PROPOSED CONSTRUCTION. THE MAJORITY OF THE DEMOLITION WORK CAN BE ACCOMPLISHED FROM THE GROUND ADJACENT TO COMPOST RD. AND KIMBERLY AVE.

CONSTRUCTION OF TEMPORARY TRESTLES ALONG THE SOUTH SIDE OF THE EXISTING N.B. BRIDGE AND EAST SIDE OF THE EXISTING RAMP BRIDGE IS REQUIRED TO PROVIDE A MEANS OF CONSTRUCTION ACCESS WITHIN THE LIMITS OF THE RIVER FOR DEMOLITION OF THE RAMP BRIDGE AND PARTIAL CONSTRUCTION OF THE PROPOSED BRIDGE, INCLUDING INSTALLATION OF TEMPORARY SHEETING, PILES, PIERS, ABUTMENTS AND SUPERSTRUCTURE. DEMOLITION OF THE EXISTING RAMP BRIDGE CAN ALSO BE ACCOMPLISHED WITH EQUIPMENT LOCATED ON ADJACENT SPANS.

IN ACCORDANCE WITH THE PROJECT'S LIMITATIONS, THE OUTSIDE LANE OF THE EXISTING N.B. BRIDGE MAY BE USED AS A TEMPORARY WORK ZONE FOR REMOVAL OF DEMOLITION MATERIALS AND DELIVERY OF PROPOSED GIRDERS AND CONCRETE.

STAGE 2 CONSTRUCTION

STAGE 2 CONSTRUCTION INCLUDES THE DEMOLITION OF THE EXISTING S.B. BRIDGE AND PARTIAL CONSTRUCTION OF THE PROPOSED BRIDGE.

CONSTRUCTION OF TEMPORARY TRESTLES ALONG THE NORTH SIDE OF THE EXISTING BRIDGE IS REQUIRED TO PROVIDE A MEANS OF CONSTRUCTION ACCESS FOR WORK IN STAGE 2.

THE WORK REQUIRED FOR THE REMOVAL OF THE SUPERSTRUCTURE, INSTALLATION OF TEMPORARY SHEET PILE ENCLOSURES, COFFERDAMS, AND THE DEMOLITION OF EXISTING SUBSTRUCTURES AND PARTIAL CONSTRUCTION OF THE PROPOSED BRIDGE MAY BE ACCOMPLISHED WITH EQUIPMENT LOCATED ON THE GROUND WITHIN THE TEMPORARY WORK ZONES INDICATED, BARGES IN THE RIVER AND/OR THE TEMPORARY TRESTLES.

IN ACCORDANCE WITH THE PROJECT'S LIMITATIONS, THE INSIDE LANE OF THE EXISTING N.B. BRIDGE MAY BE USED AS A TEMPORARY WORK ZONE FOR REMOVAL OF DEMOLITION MATERIALS AND DELIVERY OF PROPOSED GIRDERS AND CONCRETE.

NOTE:

FOR ADDITIONAL STAGE CONSTRUCTION DETAILS AND NOTES, SEE STRUCTURE DRAWINGS "STAGE CONSTRUCTION PLANS" AND "TYPICAL STAGING SECTIONS".

REV.	DATE	DESCRIPTION	SHEET. NO.
		REVISIONS	

THE INFORMATION INCLUDING ESTIMATED QUANTITIES OF WORK SHOWN ON THESE SHEETS IS BASED ON LIMITED INVES-TIGATIONS BY THE STATE AND IS IN NO WAY WARRANTED TO INDICATE THE TRUE CONDITIONS OR ACTUAL QUANTITIES OR DISTRIBUTION OF QUANTITIES OF WORK WHICH WILL BE REQUIRED.

DESIGNER: L. PIPPIN
DRAFTER: B. SWANSON
CHECKED BY: M. M. GUPTA
DATE CHECKED: 11-6-2012

STATE OF CONNECTICUT
DEPARTMENT OF TRANSPORTATION

ENGINEER: PARSONS BRINCKERHOFF QUADE & DOUGLAS, INC./BY GM2 ASSOCIATES, INC.
APPROVED BY: DATE:

PROJECT TITLE: RECONSTRUCTION OF I-95 OVER WEST RIVER (BRIDGE NO. 00163)
CADD FILE: erectseqpln2.dgn PLOTTED DATE: 11/12/2012

TOWN: NEW HAVEN / WEST HAVEN
DRAWING TITLE: SUPERSTRUCTURE ERECTION /DEMOLITION SHEET 1 OF 2

PROJECT NO.: 92-522
DRAWING NO.: STR -115
SHEET NO.:

10:41:54 AM
11/12/2012
X:\Parsons-I95\Cddwgs\October 2012\erectseqpln2.dgn

LEGEND:

✱ - SEE "ERECTION AND DEMOLITION NOTES" ON DRAWING NO. STR-114

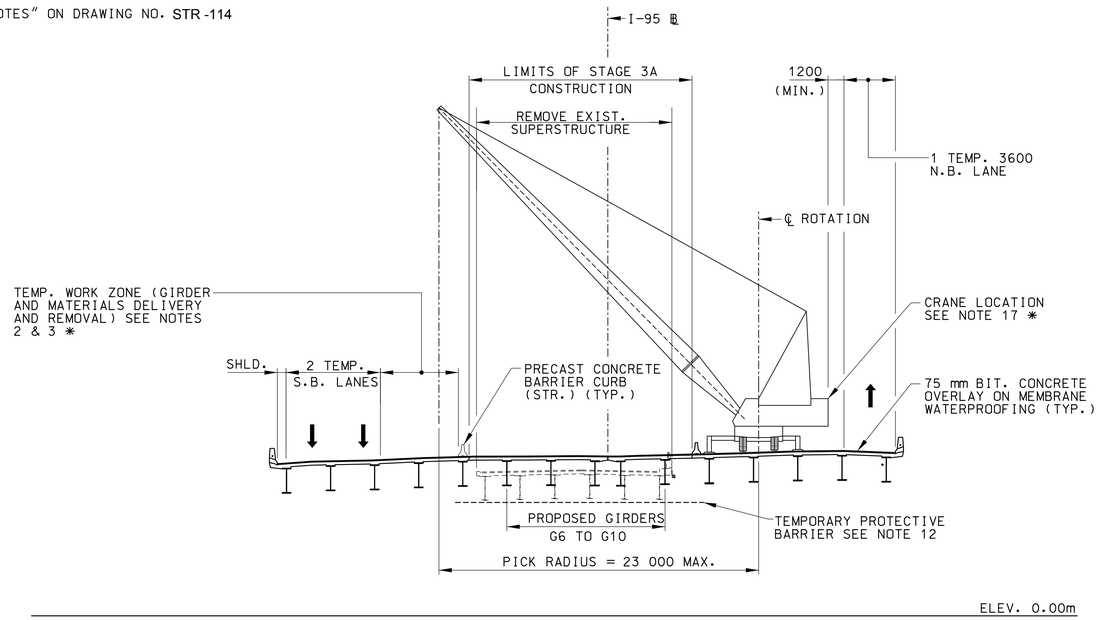

STAGE 3 CONSTRUCTION

SCALE: 1:200

STAGE 3 CONSTRUCTION

STAGE 3 CONSTRUCTION COMPLETES THE MAJOR ELEMENTS OF THE PROPOSED BRIDGE, INCLUDING DEMOLITION OF THE EXISTING N.B. BRIDGE AND COMPLETION OF THE PROPOSED BRIDGE.

THE WORK REQUIRED FOR THE REMOVAL OF THE SUPERSTRUCTURE, INSTALLATION OF TEMPORARY SHEET PILE ENCLOSURES, COFFERDAMS, AND THE DEMOLITION OF EXISTING SUBSTRUCTURES AND PARTIAL CONSTRUCTION OF THE PROPOSED BRIDGE MAY BE ACCOMPLISHED WITH EQUIPMENT LOCATED ON THE GROUND WITHIN THE TEMPORARY WORK ZONES INDICATED, BARGES IN THE RIVER AND/OR THE TEMPORARY TRESTLES AND FROM THE COMPLETED PORTION OF THE N.B. BRIDGE

IN ACCORDANCE WITH THE PROJECT'S LIMITATIONS, THE INSIDE LANE OF THE S.B. ROADWAY MAY BE USED AS A TEMPORARY WORK ZONE FOR REMOVAL OF DEMOLITION MATERIALS AND THE DELIVERY OF NEW GIRDERS AND CONCRETE. N.B. TRAFFIC MAY BE LIMITED TO 1 LANE TO PROVIDE A TEMPORARY WORK ZONE FOR CRANES USED FOR THE REMOVAL OF EXISTING GIRDERS AND ERECTING PROPOSED GIRDERS G6 TO G10.

DUE TO VERY LIMITED TIME CONSTRAINTS, 2 LANE CLOSURES SHOULD ONLY BE USED WHERE OTHER MEANS, METHODS AND LOCATIONS ARE NOT PRACTICAL. IT IS ASSUMED THAT THE END SPANS OF THE PROPOSED BRIDGE CAN BE CONSTRUCTED BY CRANES POSITIONED ON THE GROUND ADJACENT TO KIMBERLY AVENUE, COMPOST ROAD AND ON THE PROPOSED ROADWAY EMBANKMENTS. CRANES POSITIONED ON TEMPORARY TRESTLES CAN ALSO BE USED FOR CONSTRUCTION OF OTHER SECTIONS OF STAGE 3

FOR SET-UPS ON THE COMPLETED SECTIONS OF THE NEW BRIDGE, THE CRANES SHALL NOT CAUSE OVERSTRESS OR DAMAGE TO THE STRUCTURE AND SHALL BE RESTRICTED TO THE FOLLOWING ASSUMPTIONS AND LIMITATIONS USED BY THE DESIGNER:

- A SINGLE CRANE SHALL BE LIMITED TO A 136 METRIC TON (150 TON) MAXIMUM WIRE ROPE OR HYDRAULIC RUBBER TIRE TRUCK CANE.
- THE OUTRIGGER PADS SHALL BE CENTERED OVER GIRDERS G11 AND G13 AS SHOWN.
- 2 SINGLE CRANES, BACK TO BACK, IN TANDEM WILL BE REQUIRED FOR ERECTING GIRDER FIELD SECTION.
- THE MAXIMUM WEIGHT OF THE FIELD SECTION AND THE REQUIRED HOIST LOAD IS XX KG. FOR GIRDER X, FIELD SECTION X.
- THE MAXIMUM LOAD RADIUS MEASURED FROM THE CENTERLINE OF ROTATION IS 23 000 MM (75 FEET) AND THE MAXIMUM BOOM LENGTH IS 30 000 MM (100 FEET).
- THE MAXIMUM OUTRIGGER PAD LOADS APPLIED TO G11 (HOIST SIDE)

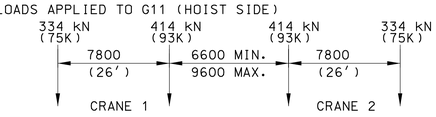

ERECTION SEQUENCE

THE ERECTION SEQUENCE SHOWN IS A SUGGESTED PLAN. THE CONTRACTOR SHALL PREPARE A DETAILED ERECTION PROCEDURE PREPARED BY A PROFESSIONAL ENGINEER. THE CONTRACTOR SHALL BE RESPONSIBLE FOR THE STABILITY OF EACH GIRDER DURING ERECTION.

ALL GIRDERS AND DIAPHRAGMS SHALL BE SUFFICIENTLY BOLTED IN EACH STAGE PRIOR TO ADVANCING TO THE SUBSEQUENT STAGE.

SHORT TERM CLOSURES OF COMPOST ROAD, THE NAVIGATION CHANNEL OF WEST RIVER AND KIMBERLY AVENUE WILL BE REQUIRED. THE CONTRACTOR SHALL COORDINATE ALL SHORT TERM CLOSURES AS INDICATED IN THE SPECIAL PROVISIONS.

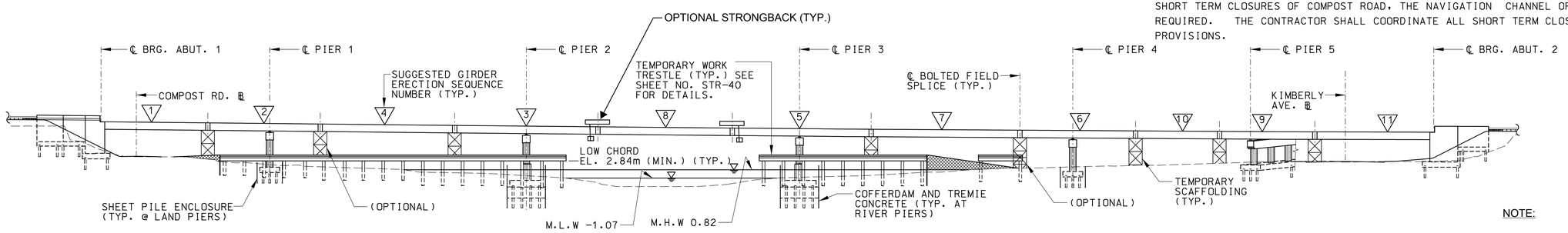

ELEVATION - SUGGESTED GIRDER ERECTION SEQUENCE

SCALE: 1:500

NOTE:

FOR ADDITIONAL STAGE CONSTRUCTION DETAILS AND NOTES, SEE STRUCTURE DRAWINGS "STAGE CONSTRUCTION PLANS" AND "TYPICAL STAGING SECTIONS".

REV.	DATE	DESCRIPTION	SHEET. NO
		REVISIONS	

THE INFORMATION INCLUDING ESTIMATED QUANTITIES OF WORK SHOWN ON THESE SHEETS IS BASED ON LIMITED INVESTIGATIONS BY THE STATE AND IS IN NO WAY WARRANTED TO INDICATE THE TRUE CONDITIONS OR ACTUAL QUANTITIES OR DISTRIBUTION OF QUANTITIES OF WORK WHICH WILL BE REQUIRED.

DESIGNER: L. PIPPIN
DRAFTER: B. SWANSON
CHECKED BY: M. M. GUPTA
DATE CHECKED: 11-6-2012

STATE OF CONNECTICUT
DEPARTMENT OF TRANSPORTATION

ENGINEER: PARSONS BRINCKERHOFF QUADE & DOUGLAS, INC./BY GM2 ASSOCIATES, INC.
APPROVED BY: DATE:

PROJECT TITLE: RECONSTRUCTION OF I-95 OVER WEST RIVER (BRIDGE NO. 00163)
CADD FILE: erectseqpln3.dgn PLOTTED DATE: 11/12/2012

TOWN: NEW HAVEN / WEST HAVEN
DRAWING TITLE: SUPERSTRUCTURE ERECTION /DEMOLITION SHEET 2 OF 2

PROJECT NO.: 92-522
DRAWING NO.: STR-116
SHEET NO.:

10:40:40 AM
11/12/2012
X:\Parsons-I95\Cddwgs\October 2012\erectseqpln3.dgn

NOTES:

1. FOR DEMOLITION NOTES, SEE DRAWINGS NO. STR-114
2. THIS DRAWING SHOWS THE BASIC SIMPLIFIED ABUTMENT CHARACTERISTICS ONLY.
3. REMOVAL OF THE EXISTING STRUCTURE ABOVE THE TOP OF CONCRETE ABUTMENT SHALL BE INCLUDED IN ITEM "REMOVAL OF SUPERSTRUCTURE (SITE 1)".
4. REMOVAL OF THE ABUTMENT INCLUDING EXCAVATION AND BACKFILLING SHALL BE INCLUDED IN ITEM "REMOVAL OF RAMP ABUTMENT".

ABUTMENT REMOVAL SEQUENCE:

1. CONSTRUCT STEEL SHEET PILE ENCLOSURE. REMOVE OBSTRUCTIONS AS REQUIRED.
2. EXCAVATE WITHIN ENCLOSURE TO ABUTMENT REMOVAL ELEVATION. ALL EXCAVATED MATERIALS RELATED TO THE REMOVAL OF THE EXISTING PIER SHALL BE REMOVED AND DISPOSED OF AT AN APPROVED UPLAND DISPOSAL SITE.
3. COMPLETELY DEMOLISH REINFORCED CONCRETE ABUTMENT, WINGWALLS AND FOOTINGS. REMOVE ALL DEMOLITION DEBRIS. EXISTING CONCRETE PILES TO REMAIN-IN-PLACE.
4. BACKFILL ENCLOSURE AREA WITH CLEAN FILL TO MATCH FINISHED GRADES.
5. REMOVE STEEL SHEET PILE ENCLOSURE IN ITS ENTIRETY AFTER BACKFILL HAS BEEN COMPLETED AND ACCEPTED BY THE ENGINEER. SEE SPECIAL PROVISIONS.

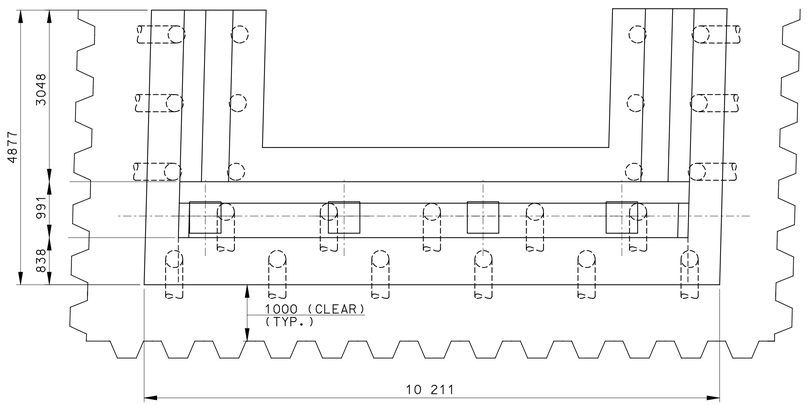

PLAN
SCALE: 1:50

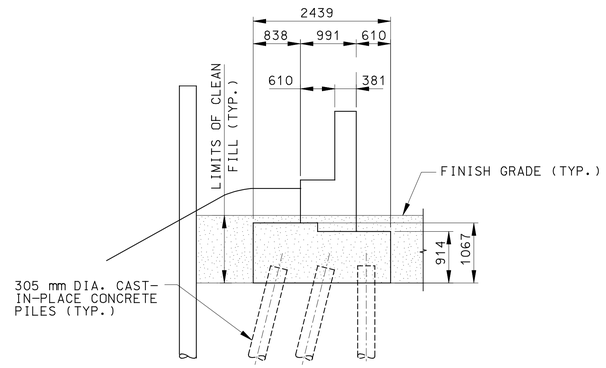

ABUTMENT SECTION
SCALE: 1:50

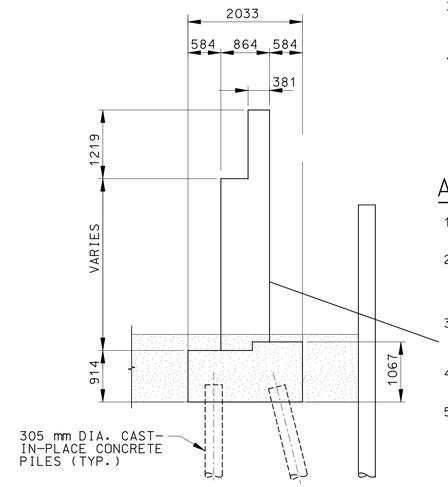

WINGWALL SECTION
SCALE: 1:50

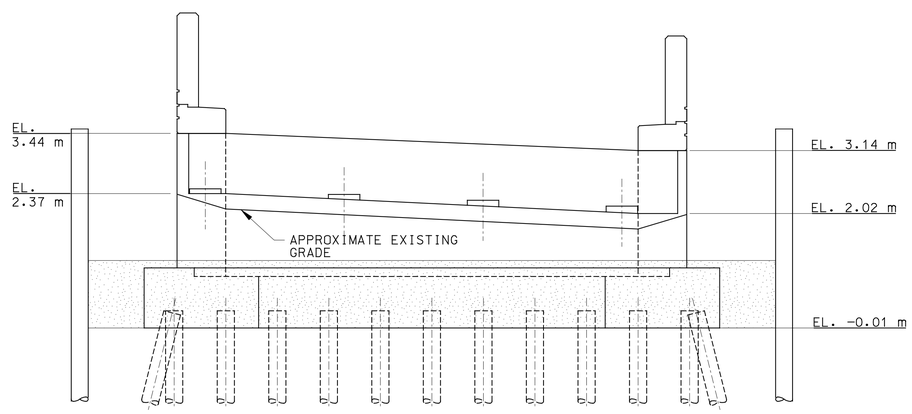

ELEVATION
SCALE: 1:50

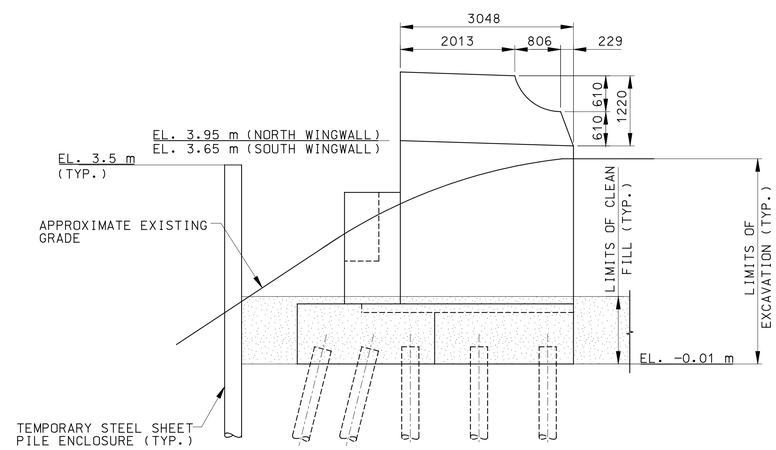

WINGWALL ELEVATION
SCALE: 1:50

REV.	DATE	DESCRIPTION	SHEET. NO.
		REVISIONS	

THE INFORMATION INCLUDING ESTIMATED QUANTITIES OF WORK SHOWN ON THESE SHEETS IS BASED ON LIMITED INVESTIGATIONS BY THE STATE AND IS IN NO WAY WARRANTED TO INDICATE THE TRUE CONDITIONS OR ACTUAL QUANTITIES OR DISTRIBUTION OF QUANTITIES OF WORK WHICH WILL BE REQUIRED.

DESIGNER: L. PIPPIN
DRAFTER: A. KILPATRICK
CHECKED BY: M. M. GUPTA
DATE CHECKED: 7-30-03

STATE OF CONNECTICUT
DEPARTMENT OF TRANSPORTATION

ENGINEER: PARSONS BRINCKERHOFF QUADE & DOUGLAS, INC./BY GM2 ASSOCIATES, INC.
APPROVED BY: DATE:

PROJECT TITLE: RECONSTRUCTION OF I-95 OVER WEST RIVER (BRIDGE NO. 00163)
CADD FILE: ramp_abut.dgn PLOTTED DATE: 8/7/2012

TOWN: NEW HAVEN / WEST HAVEN
DRAWING TITLE: DEMOLITION DETAILS RAMP ABUTMENT

PROJECT NO.: 92-522
DRAWING NO.: STR-126
SHEET NO.:

10:55:59 AM
8/7/2012
X:\Parsons\I95\Cadd\dwgs\Final\Revisions\ramp_abut.dgn

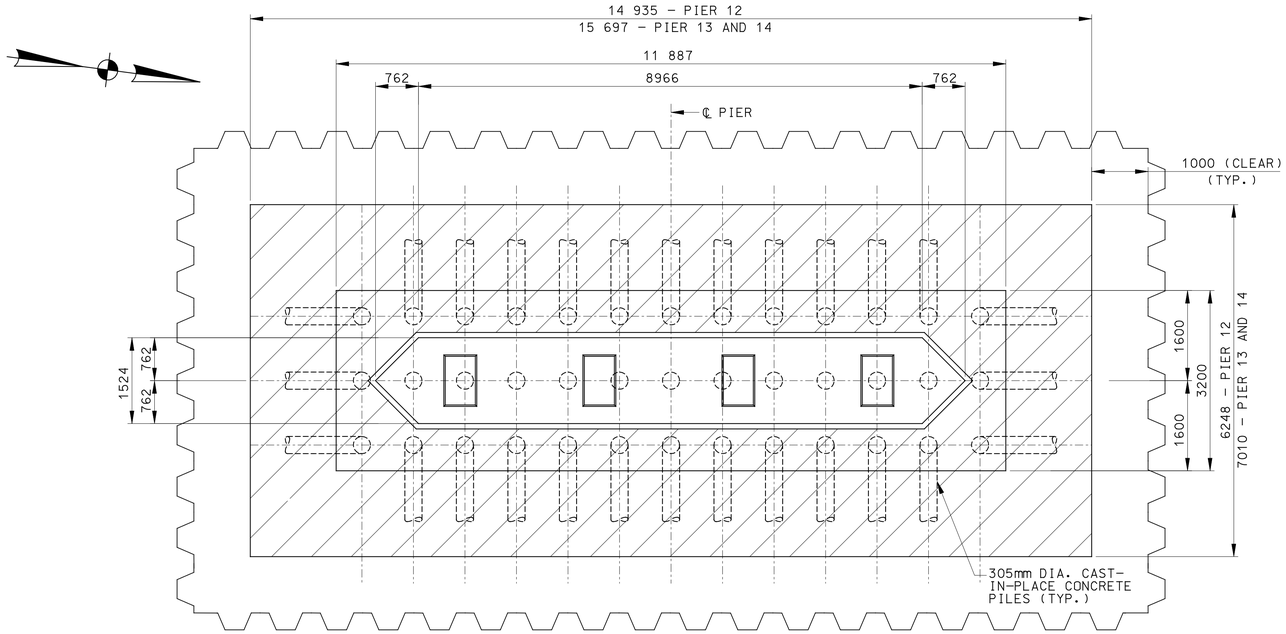

PLAN
SCALE: 1:50

NOTES:

1. FOR DEMOLITION GENERAL NOTES, SEE DRAWING NO. STR-114
2. THIS DRAWING SHOWS THE BASIC SIMPLIFIED PIER CHARACTERISTICS ONLY.
3. REMOVAL OF THE EXISING STRUCTURE ABOVE THE TOP OF CONCRETE PIER SHALL BE INCLUDED IN ITEM "REMOVAL OF SUPERSTRUCTURE (SITE NO. 1)" SEE SUPERSTRUCTURE REMOVAL DRAWINGS.
4. CROSS HATCHED AREAS SHOWN ON THIS DRAWING INDICATE EXISTING PARTS TO REMAIN. ALL OTHER PARTS SHALL BE REMOVED.
5. REMOVAL OF THE PIER INCLUDING THE STEEL SHEET PILE ENCLOSURE EXCAVATION AND BACKFILLING SHALL BE INCLUDED IN ITEM "REMOVAL OF PIER 12, 17, OR 14".

PIER REMOVAL SEQUENCE:

1. CONSTRUCT STEEL SHEET PILE ENCLOSURE, REMOVE OBSTRUCTIONS AS REQUIRED.
2. EXCAVATE WITHIN ENCLOSURE TO PIER REMOVAL ELEVATION. ALL EXCAVATED MATERIALS RELATED TO THE REMOVAL OF THE EXISTING PIER SHALL BE REMOVED AND DISPOSED OF AT AN APPROVED UPLAND DISPOSAL SITE.
3. DEMOLISH REINFORCED CONCRETE PIER TO ELEVATION SHOWN. REMOVE ALL DEMOLITION DEBRIS.
4. BACKFILL ENCLOSURE AREA WITH CLEAN FILL TO MATCH EXISTING GROUND.
5. REMOVE STEEL SHEET PILE ENCLOSURE IN ITS ENTIRETY AFTER BACKFILL HAS BEEN COMPLETED AND ACCEPTED BY THE ENGINEER. SEE SPECIAL PROVISIONS.

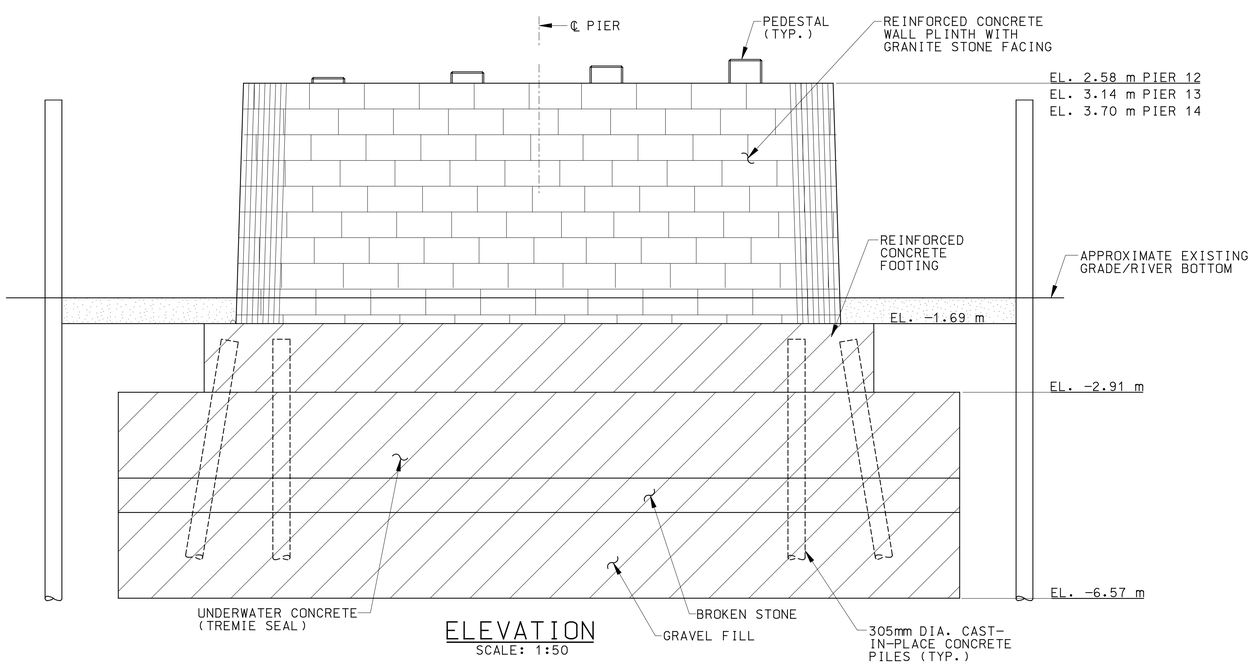

ELEVATION
SCALE: 1:50

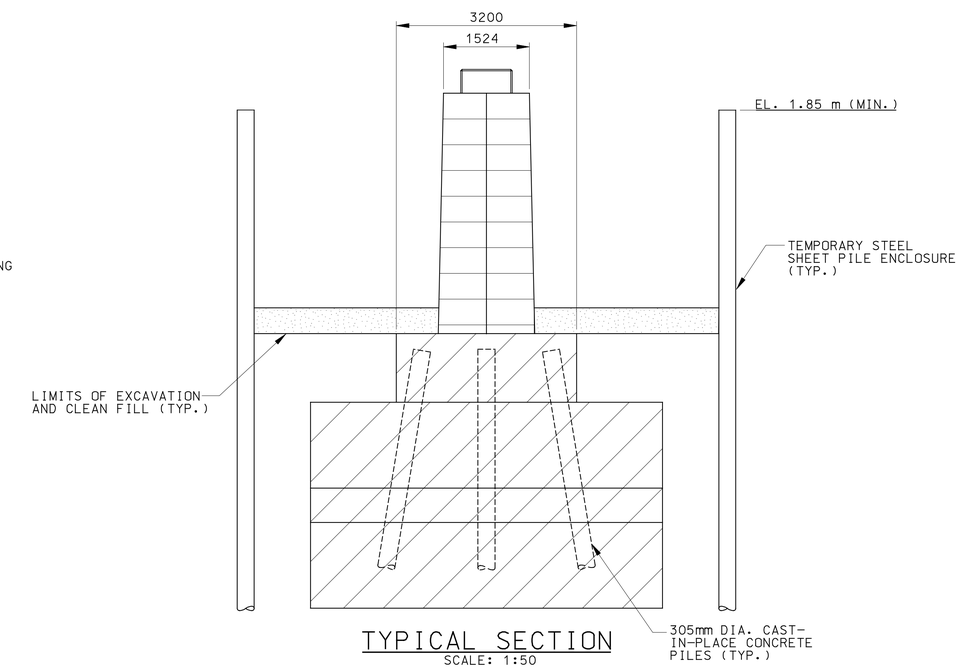

TYPICAL SECTION
SCALE: 1:50

REV.	DATE	DESCRIPTION	SHEET. NO.
		REVISIONS	

THE INFORMATION INCLUDING ESTIMATED QUANTITIES OF WORK SHOWN ON THESE SHEETS IS BASED ON LIMITED INVESTIGATIONS BY THE STATE AND IS IN NO WAY WARRANTED TO INDICATE THE TRUE CONDITIONS OR ACTUAL QUANTITIES OR DISTRIBUTION OF QUANTITIES OF WORK WHICH WILL BE REQUIRED.

DESIGNER: L. PIPPIN
DRAFTER: A. KILPATRICK
CHECKED BY: M. M. GUPTA
DATE CHECKED: 7–30–03

STATE OF CONNECTICUT
DEPARTMENT OF TRANSPORTATION

ENGINEER: PARSONS BRINCKERHOFF QUADE & DOUGLAS, INC./BY GM2 ASSOCIATES, INC.
APPROVED BY: DATE:

PROJECT TITLE: RECONSTRUCTION OF I-95 OVER WEST RIVER (BRIDGE NO. 00163)
CADD FILE: PIERS12-14.dgn
PLOTTED DATE: 8/7/2012

TOWN: NEW HAVEN / WEST HAVEN
DRAWING TITLE: DEMOLITION DETAILS PIERS 12, 13 & 14

PROJECT NO.: 92-522
DRAWING NO.: STR-127
SHEET NO.:

10:56:43 AM
8/7/2012
X:\Parsons-I95\Cadd\wgs\Final\Revisions\PIERS\2-14.dgn

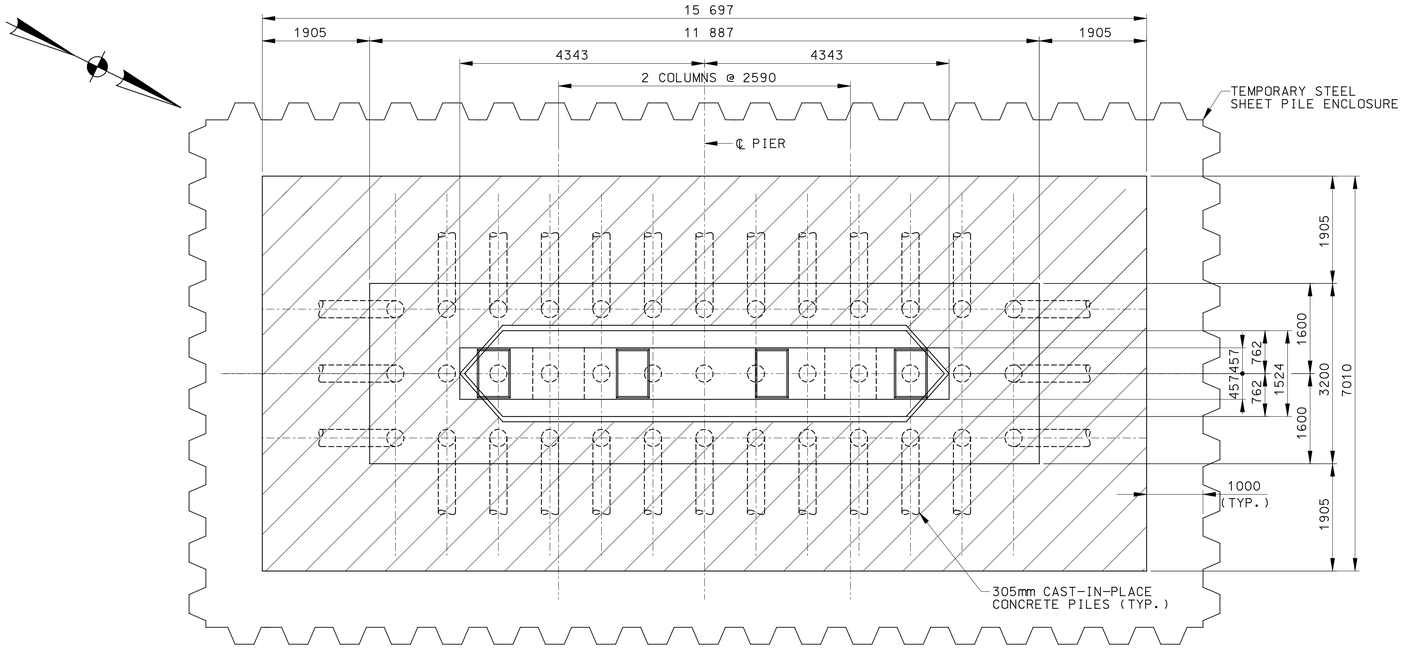

PLAN
SCALE: 1:50

NOTES:

1. FOR DEMOLITION GENERAL NOTES, SEE DRAWING NO. STR -114 .
2. THIS DRAWING SHOWS THE BASIC SIMPLIFIED PIER CHARACTERISTICS ONLY.
3. REMOVAL OF THE EXISING STRUCTURE ABOVE THE TOP OF CONCRETE PIER INCLUDED IN ITEM "REMOVAL OF SUPERSTRUCTURE (SITE NO.1)" SEE SUPERSTRUCTURE REMOVAL DRAWINGS.
4. CROSS HATCHED AREAS SHOWN ON THIS DRAWING INDICATE EXISTING PARTS TO REMAIN. ALL OTHER PARTS SHALL BE REMOVED.
5. REMOVAL OF TIME PIER INCLUDING THE STEEL SHEET PILE ENCLOSURE, EXCAVATION AND BACKFILLING SHALL BE INCLUDED IN ITEM "REMOVAL OF PIER 15 .... 21".

PIER REMOVAL SEQUENCE:

1. CONSTRUCT STEEL SHEET PILE ENCLOSURE, REMOVE OBSTRUCTIONS AS REQUIRED.
2. EXCAVATE WITHIN ENCLOSURE TO PIER REMOVAL ELEVATION. ALL EXCAVATED MATERIALS RELATED TO THE REMOVAL OF THE EXISTING PIER SHALL BE REMOVED AND DISPOSED OF AT AN APPROVED UPLAND DISPOSAL SITE.
3. DEMOLISH REINFORCED CONCRETE PIER TO ELEVATION SHOWN. REMOVE ALL DEMOLITION DEBRIS.
4. BACKFILL ENCLOSURE AREA WITH CLEAN FILL TO MATCH EXISTING GROUND.
5. REMOVE STEEL SHEET PILE ENCLOSURE IN ITS ENTIRETY AFTER BACKFILL HAS BEEN COMPLETED AND ACCEPTED BY THE ENGINEER. SEE SPECIAL PROVISIONS.

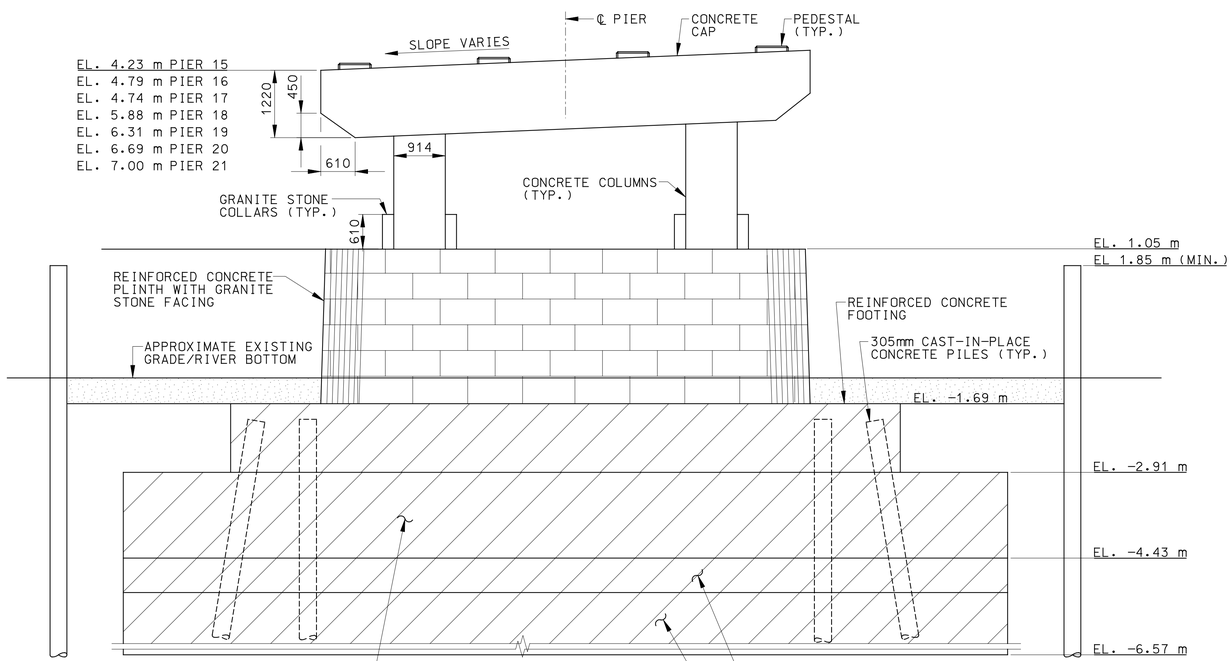

ELEVATION
SCALE: 1:50

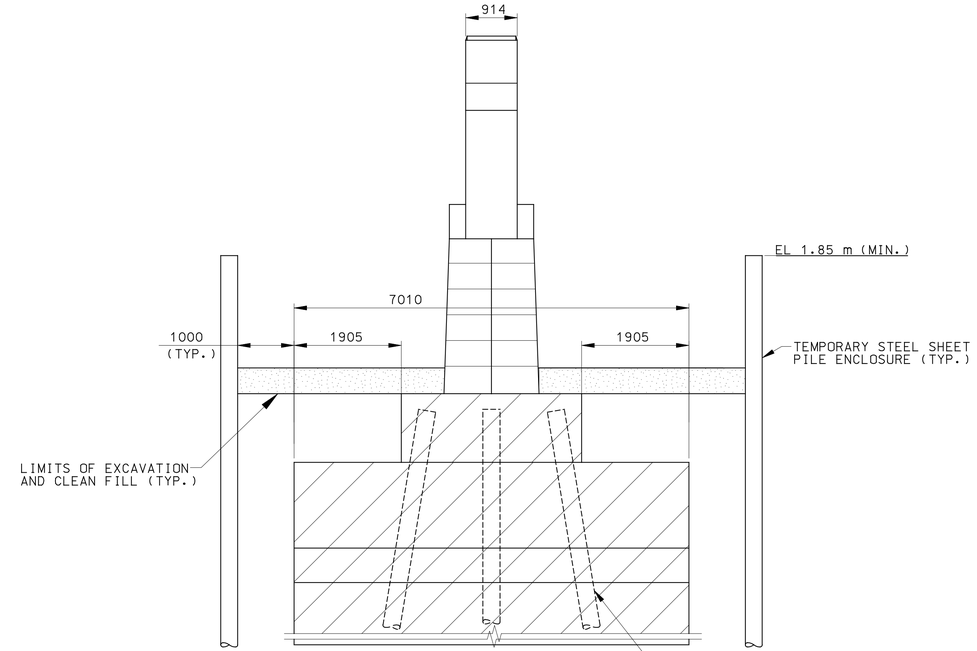

TYPICAL SECTION
SCALE: 1:50

REV.	DATE	DESCRIPTION	SHEET. NO.
		REVISIONS	

THE INFORMATION INCLUDING ESTIMATED QUANTITIES OF WORK SHOWN ON THESE SHEETS IS BASED ON LIMITED INVESTIGATIONS BY THE STATE AND IS IN NO WAY WARRANTED TO INDICATE THE TRUE CONDITIONS OR ACTUAL QUANTITIES OR DISTRIBUTION OF QUANTITIES OF WORK WHICH WILL BE REQUIRED.

DESIGNER: L. PIPPIN
DRAFTER: A. KILPATRICK
CHECKED BY: M. M. GUPTA
DATE CHECKED: 7-30-03

STATE OF CONNECTICUT
DEPARTMENT OF TRANSPORTATION

ENGINEER: PARSONS BRINCKERHOFF QUADE & DOUGLAS, INC./BY GM2 ASSOCIATES, INC.
APPROVED BY: DATE:

PROJECT TITLE: RECONSTRUCTION OF I-95 OVER WEST RIVER (BRIDGE NO. 00163)
CADD FILE: PIERS15-21.dgn PLOTTED DATE: 8/7/2012

TOWN: NEW HAVEN / WEST HAVEN
DRAWING TITLE: DEMOLITION DETAILS PIERS 15 THRU 21

PROJECT NO.: 92-522
DRAWING NO.: STR -128
SHEET NO.:

10:57:22 AM
8/7/2012
X:\Parsons-I95\Cadd\gs\Final\Revisions\PIERS15-21.dgn