STATE OF CONNECTICUT
DEPARTMENT OF TRANSPORTATION

RECONSTRUCTION OF I-95 OVER WEST RIVER
IN THE TOWNS OF
NEW HAVEN AND WEST HAVEN
STATE PROJECT NUMBER 092-522

VOLUME 1 : SUBSET 19

SIGNING AND PAVEMENT MARKING PLANS

PRINCIPAL ENGINEER (SEALED AND CERTIFIED) *

* THIS SIGNATURE BLOCK IS DEDICATED TO THE PRIME DISCIPLINE PRINCIPAL ENGINEER/ARCHITECT THAT IS RESPONSIBLE FOR CERTIFYING PLANS

2:25:04 PM
11/13/2012
t:\v8cadd\projects\pb18735\fd\highway\contract_sheets\ssc-01-19-092522.dgn

REV.	DATE	DESCRIPTION	SHEET. NO

REVISIONS

DESIGNER: R. P. TALBOT
DRAFTER: M.C. DEEGAN
CHECKED BY:
DATE CHECKED:

STATE OF CONNECTICUT
DEPARTMENT OF TRANSPORTATION
ENGINEER: PB AMERICAS, INC.
APPROVED BY: DATE:

PROJECT TITLE: RECONSTRUCTION OF I-95 OVER WEST RIVER
CADD ssc-01-19-092522.dgn PLOTTED 11/13/2012

TOWN: NEW HAVEN / WEST HAVEN
DRAWING TITLE: SUBSET COVER SIGNING AND PAVEMENT MARKING PLANS

PROJECT NO.: 92-522
DRAWING NO.: SSC-01.19
SHEET NO.:

NOTES:

1. THE CONTRACTOR SHALL REMOVE ALL EXISTING SIGNS AND POSTS LOCATED WITHIN THE PROJECT LIMITS UNLESS OTHERWISE NOTED OR AS DIRECTED BY THE ENGINEER. THIS WORK WILL BE PAYABLE UNDER ITEM NO. 1206023A "REMOVAL AND RELOCATION OF EXISTING SIGNS". ALL SIDE - MOUNTED SIGNS TO BE PERMANENTLY RELOCATED ARE TO BE RE-INSTALLED ON NEW BREAKAWAY SIGN POSTS. THIS IS ALSO PAYABLE UNDER ITEM NO. 1206023A. REFER TO THE MPT PLANS FOR ADDITIONAL INFORMATION.

2. THE CONTRACTOR SHALL CLEAR AND TRIM AS DIRECTED BY THE ENGINEER TO PROVIDE ADEQUATE SIGHT DISTANCE TO SIGNS. THIS WORK SHALL BE PAID FOR UNDER ITEM "CLEARING AND GRUBBING".

3. FOR TEMPORARY CONSTRUCTION SIGNING, REFER TO THE MPT PLANS.

4. ALL SHEET ALUMINUM SIGNS SHALL BE INSTALLED IN ACCORDANCE WITH TR-1208_01"SIGN SUPPORT AND SIGN PLACEMENT DETAILS, GORE EXIT SIGN" AND TR-1208_02" METAL SIGN POSTS AND SIGN MOUNTING DETAILS" UNLESS OTHERWISE NOTED ON THE PLANS.

5. SIGNS SHALL BE INSTALLED NO CLOSER THAN 3m FROM UTILITY POLES UNLESS OTHERWISE DIRECTED BY THE ENGINEER.

6. ALL SHEET ALUMINUM SIGNS REMOVED SHALL BE SALVAGED AS PER SPECIFICATIONS.

7. ALL POST MOUNTED PARKING REGULATORY SIGNS TO BE AT A 45° ANGLE AS SHOWN ON TRAFFIC STANDARD DRAWING TR-1208-02.

8. FOR THE LOCATION OF SPAN MOUNTED OVERHEAD SIGNS AT SIGNALIZED INTERSECTIONS, REFER TO TRAFFIC CONTROL SIGNAL PLANS.

9. FINAL SIGN LOCATIONS TO BE CONFIRMED BY THE ENGINEER AND THE DIVISION OF TRAFFIC ENGINEERING.

10. TYPE DE-1, DE-2 AND DE-3 DELINEATORS SHALL BE INSTALLED IN ACCORDANCE WITH TR-1205_01 "DELINEATION, DELINEATORS AND OBJECT MARKER DETAILS".

11. MILE MARKERS (SIGNS NO. 51-5307 AND 51-5301) SHALL BE INSTALLED AT 0.2 MILE INTERVALS IN ACCORDANCE WITH STANDARD TR-1205_01- "DELINEATION, DELINEATORS AND OBJECT MARKER DETAILS" AND SHALL BE PAID UNDER ITEM NO. 1208928 "SIGN FACE - SHEET ALUMINUM TYPE III REFLECTIVE SHEETING".

12. DELINEATORS SHALL BE INSTALLED ON BOTH SIDES OF EXPRESSWAY.

13. FOR SIGNING AND PAVEMENT MARKINGS LOCATED WITHIN THE COMMUTER LOT, REFER TO LOT-1.

14. ALL FINAL PAVEMENT MARKINGS TO BE EPOXY RESIN WITH THE EXCEPTION OF150 mm WHITE BROKEN LINES AND CHANNELIZING LINES ON I-95, WHICH SHALL BE PREFORMED PLASTIC.

15. REMOVE EXISTING CONFLICTING PAVEMENT MARKINGS WITHIN THE PAVEMENT MARKING LIMITS. THIS WORK IS TO BE PAID FOR UNDER ITEM NO.1211001,"REMOVAL OF PAVEMENT MARKINGS".

16. PAVEMENT MARKINGS SHALL BE INSTALLED THROUGHOUT THE PROJECT TO THE LIMITS OF PAVEMENT MARKINGS. MATCH EXISTING MARKINGS AT THE LIMITS OF PAVEMENT MARKINGS OR AS DIRECTED BY THE ENGINEER.

17. ALL PAVEMENT MARKINGS SHALL BE INSTALLED IN ACCORDANCE WITH TR-1210_1 - "PAVEMENT MARKINGS (DURABLE MARKINGS) FOR DIVIDED HIGHWAYS", TR-1210_02 - "TYPICAL PAVEMENT MARKINGS (DURABLE MARKINGS) FOR DIVIDED HIGHWAYS", AND TR-1210_03 - "SPECIAL DETAILS AND TYPICAL PAVEMENT MARKINGS FOR TWO-WAY HIGHWAYS" UNLESS OTHERWISE DIMENSIONED OR NOTED ON THE PLANS.

18. THE STATE SHALL MAINTAIN ALL FINAL PAVEMENT MARKINGS ON I-95 AND RAMPS, KIMBERLY AVENUE (S.R. 745), ELLA T. GRASSO BOULEVARD (ROUTE 10), SEA STREET INTERSECTION MARKINGS (FROM STA. 100+000 TO 100+055) AND THE COMMUTER PARKING LOT. THE CITY OF NEW HAVEN TO MAINTAIN FINAL PAVEMENT MARKINGS ALONG SEA STREET FROM STA. 100+055 AND EASTWARD. THE TOWN OF WEST HAVEN SHALL MAINTAIN ALL FINAL PAVEMENT MARKINGS ON THE COMPOST ACCESS ROAD.

19. THE CONTRACTOR SHALL REMOVE ALL EXISTING EXTRUDED ALUMINUM SIGNS, SUPPORTS, AND FOUNDATIONS LOCATED WITHIN THE SIGNING LIMIT UNLESS OTHERWISE NOTED OR AS DIRECTED BY THE ENGINEER.

20. THE REMOVAL OF EXISTING SIDE-MOUNTED EXTRUDED ALUMINUM SIGNS, SIGN SUPPORTS, AND FOUNDATIONS WILL BE PAID FOR UNDER ITEM NO. 1206023A "REMOVAL AND RELOCATION OF EXISTING SIGNS".

21. THE REMOVAL OF EXISTING OVERHEAD-MOUNTED EXTRUDED ALUMINUM SIGNS, SIGN SUPPORTS, AND FOUNDATIONS WILL BE PAID FOR UNDER ITEM NO. 1206025A "REMOVAL OF EXISTING OVERHEAD SIGNING"

22. ALL EXISTING EXTRUDED ALUMINUM SIGNS OUTSIDE THE LIMIT OF SIGNING ARE TO REMAIN UNLESS OTHERWISE NOTED OR DIRECTED BY THE ENGINEER.

23. THE RELATIVE LOCATION OF EACH SIGN ON OVERHEAD STRUCTURES IS SHOWN READING ALPHABETICALLY FROM LEFT TO RIGHT AS VIEWED BY TRAFFIC.

24. REFER TO SPECIAL PROVISION FOR ITEM NO. 1207034A "SIGN FACE EXTRUDED ALUMINUM (TYPE IV RETROREFLECTIVE SHEETING)" FOR PROPOSED OVERHEAD, CANTILEVER, SIDE MOUNTED AND STRUCTURE MOUNTED SIGN DETAILS.

25. REFER TO SPM-12 FOR EXISTING SIGN LOCATIONS ON RAMPS AND SECONDARY ROADS.

26. THE CONTRACTOR SHALL COORDINATE SIGNING WORK WITH ADJACENT STATE PROJECTS 92-531, 92-649 AND 173-351.

27. PAVEMENT MARKINGS INSTALLED ON CITY STREETS SHALL CONFORM TO CITY OF NEW HAVEN STANDARDS. SEE CITY OF NEW HAVEN PAVEMENT MARKING DETAILS.

28. ALL CITY MAINTAINED SIGNS SHALL BE INSTALLED USING THE VLOC FIXTURE AND ROUND POSTS. SEE CITY OF NEW HAVEN SIGN DETAILS.

SIGNING STANDARD CONVENTIONS

	OVERHEAD INSTALLATION	
	CANTILEVER INSTALLATION	
	SIDE MOUNTED INSTALLATION	
	STRUCTURE MOUNTED INSTALLATION	
	SINGLE POST MOUNTING	REGULATORY, WARNING OR GUIDE SIGN INSTALLATION
	DOUBLE POST MOUNTING	
	PARAPET MOUNTED	
	PARAPET MOUNTED MILE MARKER POST	
S	SIGNALIZATION LOCATION	
00-000-000 A	LOCATION AND TABULATION NO. EXTRUDED ALUMINUM SIGNS	
00 / 00-0	LOCATION NO. / SIGN NO.	

REV.	DATE	DESCRIPTION	SHEET. NO
		REVISIONS	

NOT TO SCALE

DESIGNER: R. P. TALBOT
DRAFTER: M.C. DEEGAN
CHECKED BY:
DATE CHECKED:

STATE OF CONNECTICUT
DEPARTMENT OF TRANSPORTATION

ENGINEER: PB AMERICAS, INC.
APPROVED BY: DATE:

PROJECT TITLE: RECONSTRUCTION OF I-95 OVER WEST RIVER

TOWN: NEW HAVEN / WEST HAVEN

DRAWING TITLE: SIGNING AND PAVEMENT MARKING NOTES

PROJECT NO.: 92-522
DRAWING NO.: SPM-01
SHEET NO.:

CADD spm-01-092522.dgn PLOTTED 11/13/2012

2:41:07 PM
11/13/2012
T:\V8CADD\Projects\PB18735\FD\Highway\Contract_Sheets\spm-01-092522.dgn

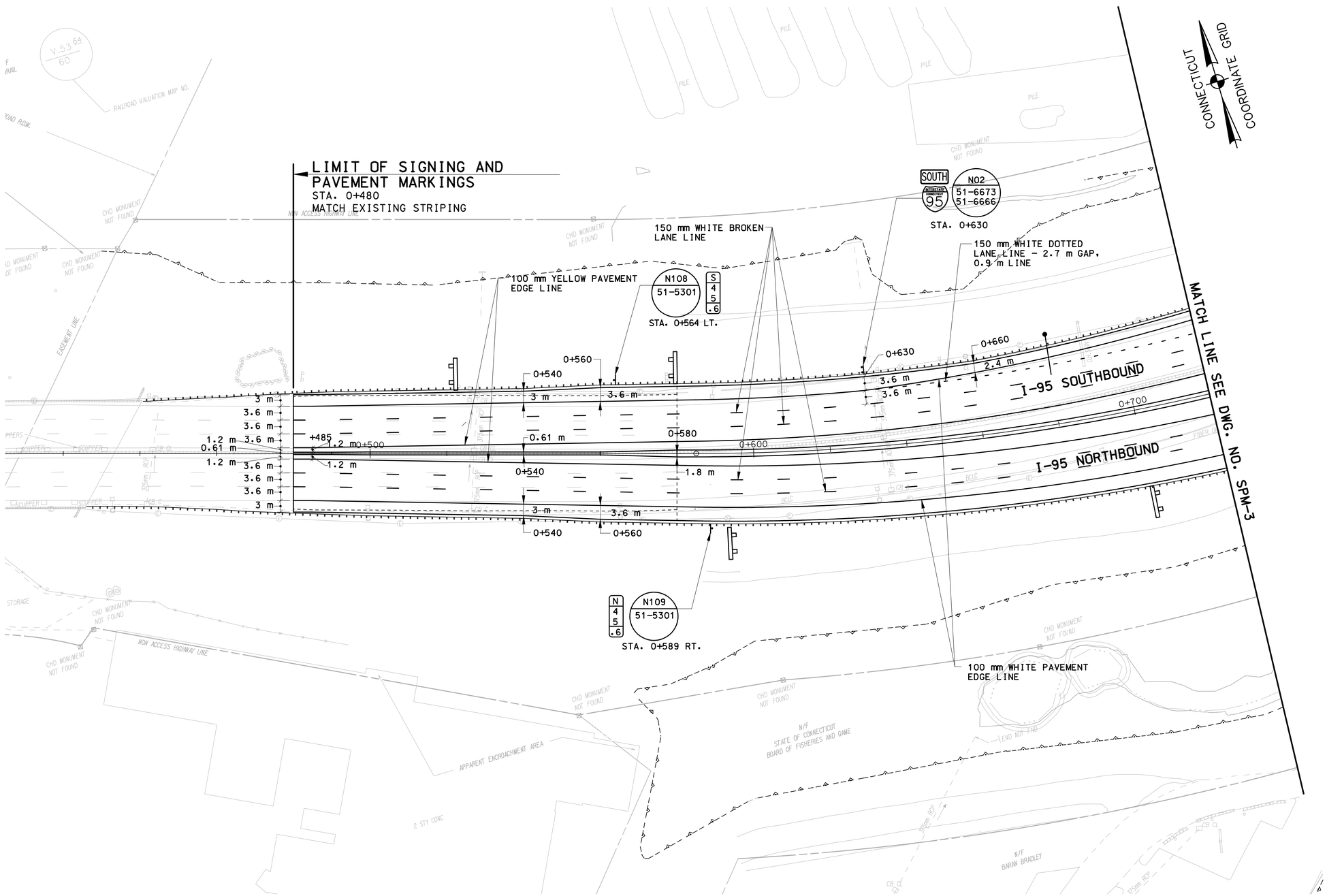

NOTES:

1. REFER TO SPM-1 FOR SIGNING AND PAVEMENT MARKING NOTES AND LEGENDS.

REV.	DATE	DESCRIPTION	SHEET. NO
		REVISIONS	

SCALE IN METERS
0 5 10 15 20 25
SCALE 1:500

DESIGNER: R. P. TALBOT
DRAFTER: M.C. DEEGAN
CHECKED BY:
DATE CHECKED:

STATE OF CONNECTICUT
DEPARTMENT OF TRANSPORTATION

ENGINEER: PB AMERICAS, INC.
APPROVED BY:
DATE:

PROJECT TITLE: RECONSTRUCTION OF I-95 OVER WEST RIVER
CADD spm-02-092522.dgn
PLOTTED 11/13/2012

TOWN: NEW HAVEN / WEST HAVEN
DRAWING TITLE: SIGNING AND PAVEMENT MARKING PLAN - 1

PROJECT NO.: 92-522
DRAWING NO.: SPM-02
SHEET NO.:

2:25:09 PM
11/13/2012
t:\v8cadd\projects\pb18735\td\highway\contract_sheets\spm-02-092522.dgn

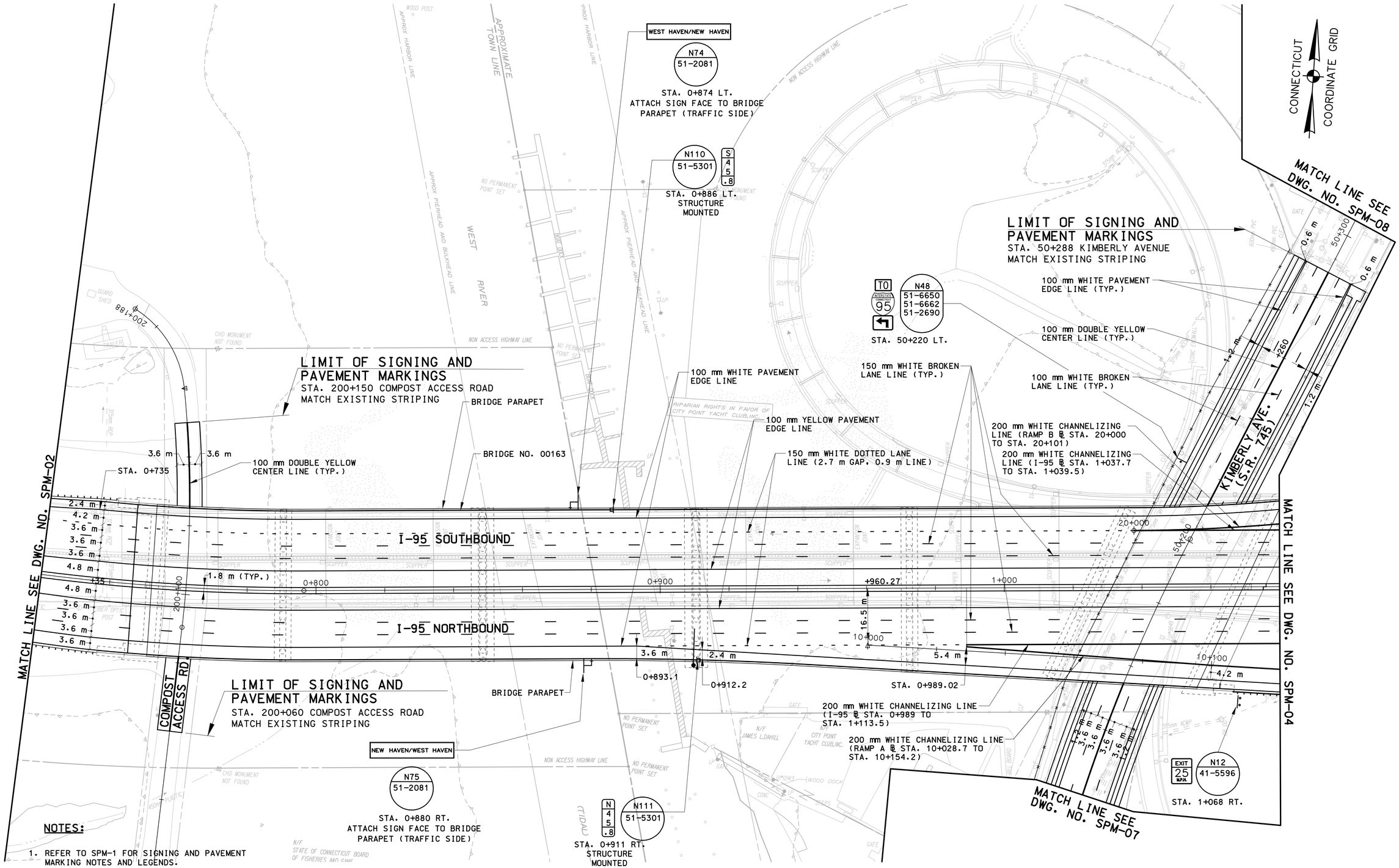

NOTES:

1. REFER TO SPM-1 FOR SIGNING AND PAVEMENT MARKING NOTES AND LEGENDS.

REV.	DATE	DESCRIPTION	SHEET. NO
		REVISIONS	

SCALE IN METERS
0 5 10 15 20 25
SCALE 1:500

DESIGNER: R. P. TALBOT
DRAFTER: M.C. DEEGAN
CHECKED BY:
DATE CHECKED:

STATE OF CONNECTICUT
DEPARTMENT OF TRANSPORTATION

ENGINEER: PB AMERICAS, INC.
APPROVED BY: DATE:

PROJECT TITLE: RECONSTRUCTION OF I-95 OVER WEST RIVER

CADD spm-03-092522.dgn PLOTTED 11/13/2012

TOWN: NEW HAVEN / WEST HAVEN

DRAWING TITLE: SIGNING AND PAVEMENT MARKING PLAN - 2

PROJECT NO.: 92-522
DRAWING NO.: SPM-03
SHEET NO.:

2:25:12 PM
11/13/2012
t:\v8cadd\projects\pb18735\fd\highway\contract_sheets\spm-03-092522.dgn

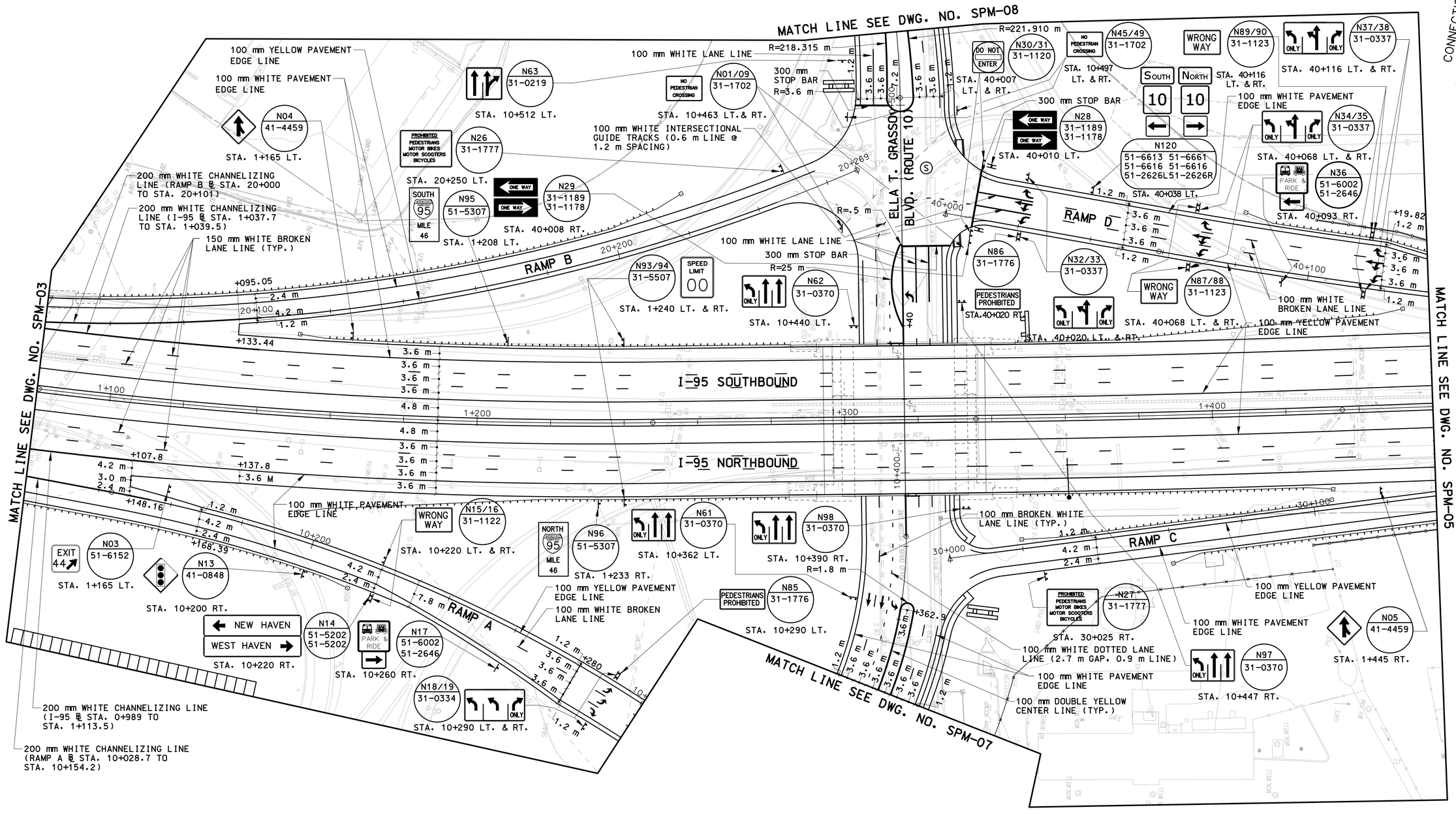

NOTES:

1. REFER TO SPM-1 FOR SIGNING AND PAVEMENT MARKING NOTES AND LEGENDS.

REV.	DATE	DESCRIPTION	SHEET. NO
		REVISIONS	

SCALE IN METERS
0 5 10 15 20 25
SCALE 1:500

DESIGNER: R. P. TALBOT
DRAFTER: M.C. DEEGAN
CHECKED BY:
DATE CHECKED:

STATE OF CONNECTICUT
DEPARTMENT OF TRANSPORTATION

ENGINEER: PB AMERICAS, INC.
APPROVED BY: DATE:

PROJECT TITLE: RECONSTRUCTION OF I-95 OVER WEST RIVER

CADD spm-04-092522.dgn PLOTTED 11/13/2012

TOWN: NEW HAVEN / WEST HAVEN

DRAWING TITLE: SIGNING AND PAVEMENT MARKING PLAN - 3

PROJECT NO.: 92-522
DRAWING NO.: SPM-04
SHEET NO.:

2:25:15 PM
11/13/2012
t:\v8cadd\projects\pb18735\fd\highway\contract_sheets\spm-04-092522.dgn

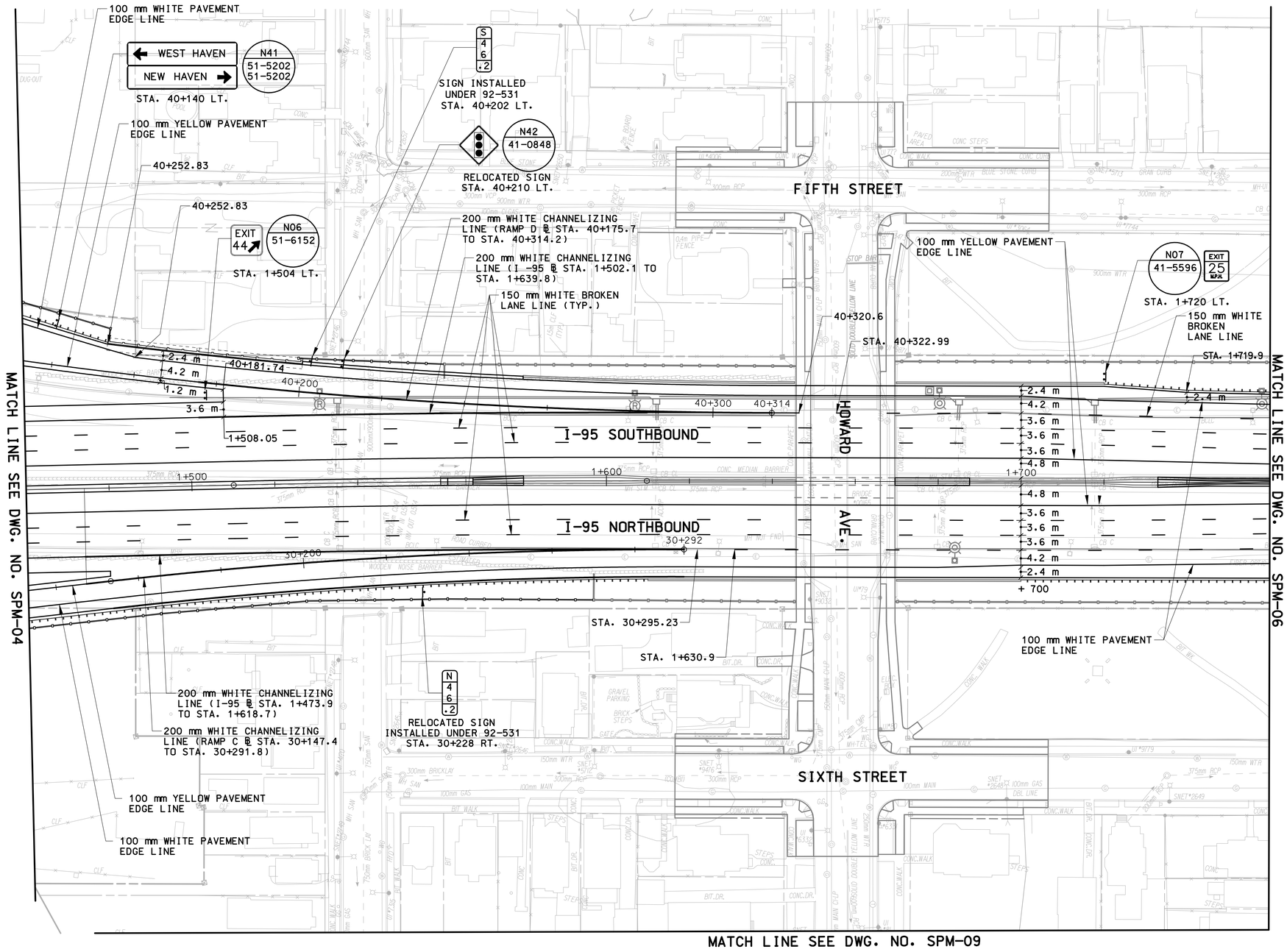

NOTES:

1. REFER TO SPM-1 FOR SIGNING AND PAVEMENT MARKING NOTES AND LEGENDS.

REV.	DATE	DESCRIPTION	SHEET. NO
		REVISIONS	

SCALE IN METERS
0 5 10 15 20 25
SCALE 1:500

DESIGNER: R. P. TALBOT
DRAFTER: M.C. DEEGAN
CHECKED BY:
DATE CHECKED:

STATE OF CONNECTICUT
DEPARTMENT OF TRANSPORTATION
ENGINEER: PB AMERICAS, INC.
APPROVED BY: DATE:

PROJECT TITLE: RECONSTRUCTION OF I-95 OVER WEST RIVER
CADD spm-05-092522.dgn PLOTTED 11/32/2012

TOWN: NEW HAVEN / WEST HAVEN
DRAWING TITLE: SIGNING AND PAVEMENT MARKING PLAN - 4

PROJECT NO.: 92-522
DRAWING NO.: SPM-05
SHEET NO.:

2:25:19 PM
11/32/2012
t:\v8cadd\projects\pb18735\fd\highway\contract_sheets\spm-05-092522.dgn

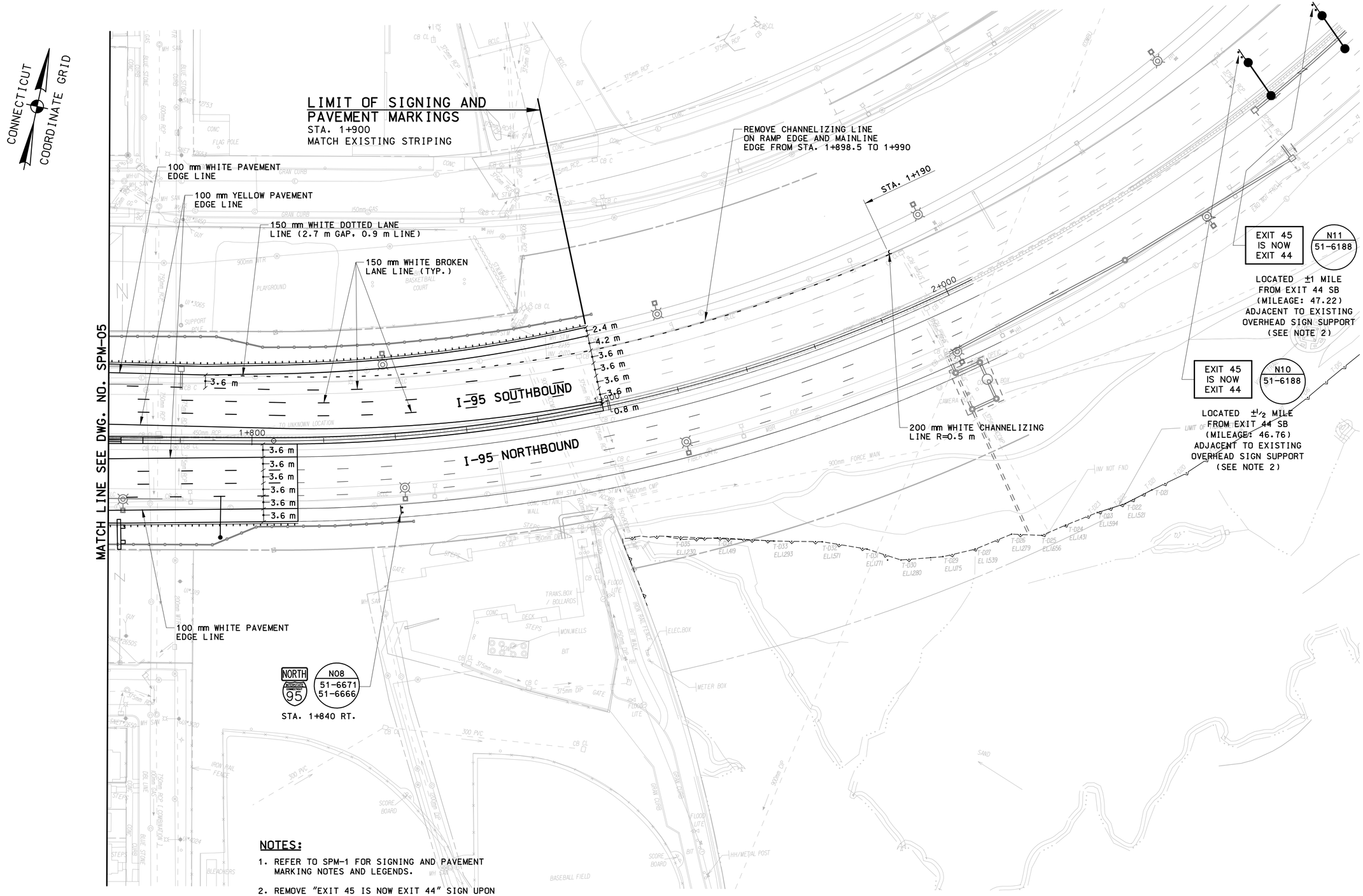

NOTES:

1. REFER TO SPM-1 FOR SIGNING AND PAVEMENT MARKING NOTES AND LEGENDS.
2. REMOVE "EXIT 45 IS NOW EXIT 44" SIGN UPON COMPLETION OF PROJECT.

REV.	DATE	DESCRIPTION	SHEET. NO
		REVISIONS	

SCALE IN METERS
0 5 10 15 20 25
SCALE 1:500

DESIGNER: R. P. TALBOT
DRAFTER: M.C. DEEGAN
CHECKED BY:
DATE CHECKED:

STATE OF CONNECTICUT
DEPARTMENT OF TRANSPORTATION

ENGINEER: PB AMERICAS, INC.
APPROVED BY:
DATE:

PROJECT TITLE: RECONSTRUCTION OF I-95 OVER WEST RIVER
CADD spm-06-092522.dgn
PLOTTED 11/13/2012

TOWN: NEW HAVEN / WEST HAVEN
DRAWING TITLE: SIGNING AND PAVEMENT MARKING PLAN – 5

PROJECT NO.: 92-522
DRAWING NO.: SPM-06
SHEET NO.:

2:25:23 PM
11/13/2012
t:\v8cadd\projects\pb18735\fd\highway\contract_sheets\spm-06-092522.dgn

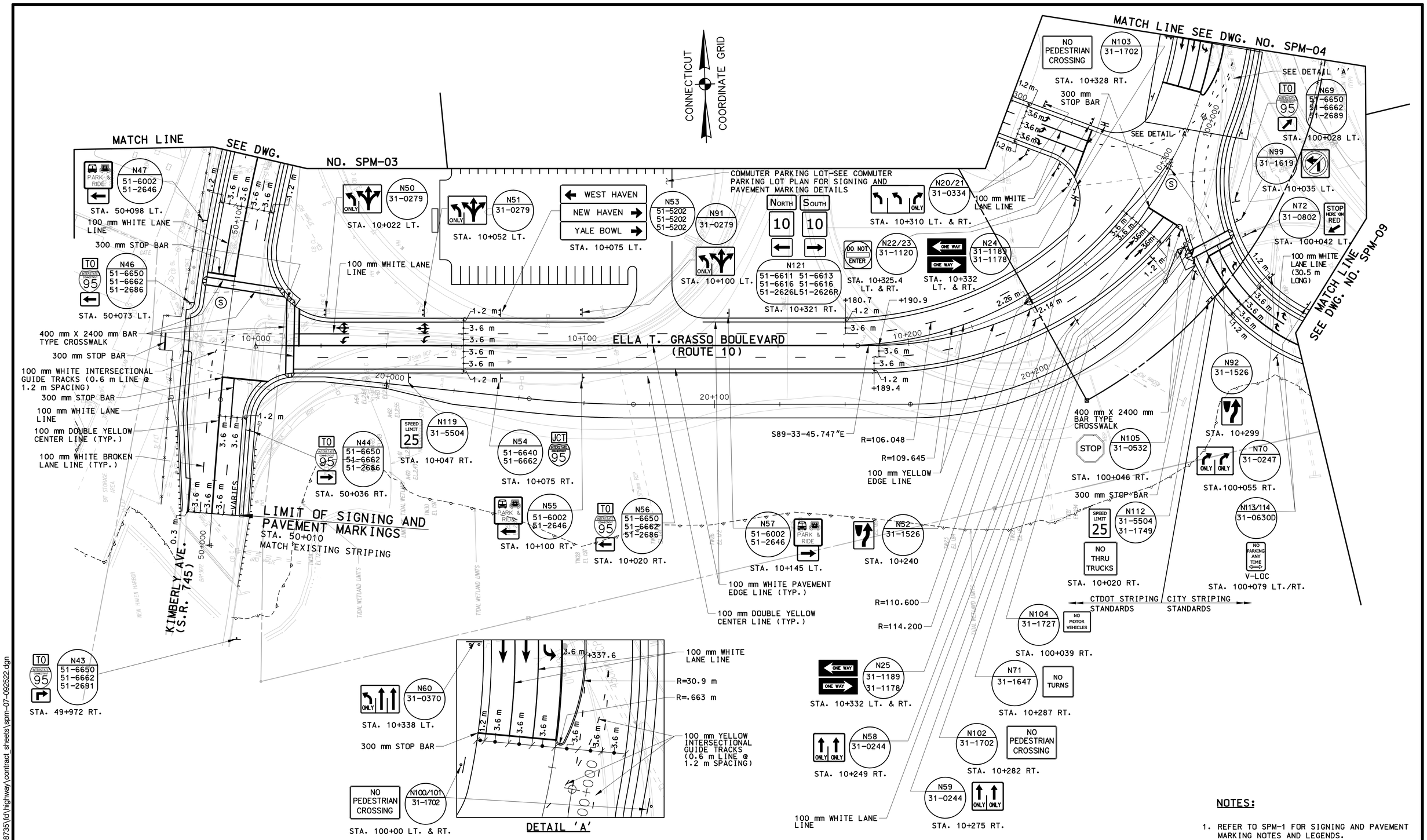

NOTES:

1. REFER TO SPM-1 FOR SIGNING AND PAVEMENT MARKING NOTES AND LEGENDS.

REV.	DATE	DESCRIPTION	SHEET. NO
		REVISIONS	

SCALE IN METERS
0 5 10 15 20 25
SCALE 1:500

DESIGNER: R. P. TALBOT
DRAFTER: M.C. DEEGAN
CHECKED BY:
DATE CHECKED:

STATE OF CONNECTICUT
DEPARTMENT OF TRANSPORTATION

ENGINEER: PB AMERICAS, INC.
APPROVED BY:
DATE:

PROJECT TITLE: RECONSTRUCTION OF I-95 OVER WEST RIVER

CADD spm-07-092522.dgn
PLOTTED 11/13/2012

TOWN: NEW HAVEN / WEST HAVEN

DRAWING TITLE: SIGNING AND PAVEMENT MARKING PLAN - 6

PROJECT NO.: 92-522
DRAWING NO.: SPM-07
SHEET NO.:

2:25:26 PM
11/13/2012
t:\v8cadd\projects\pb18735\fd\highway\contract_sheets\spm-07-092522.dgn

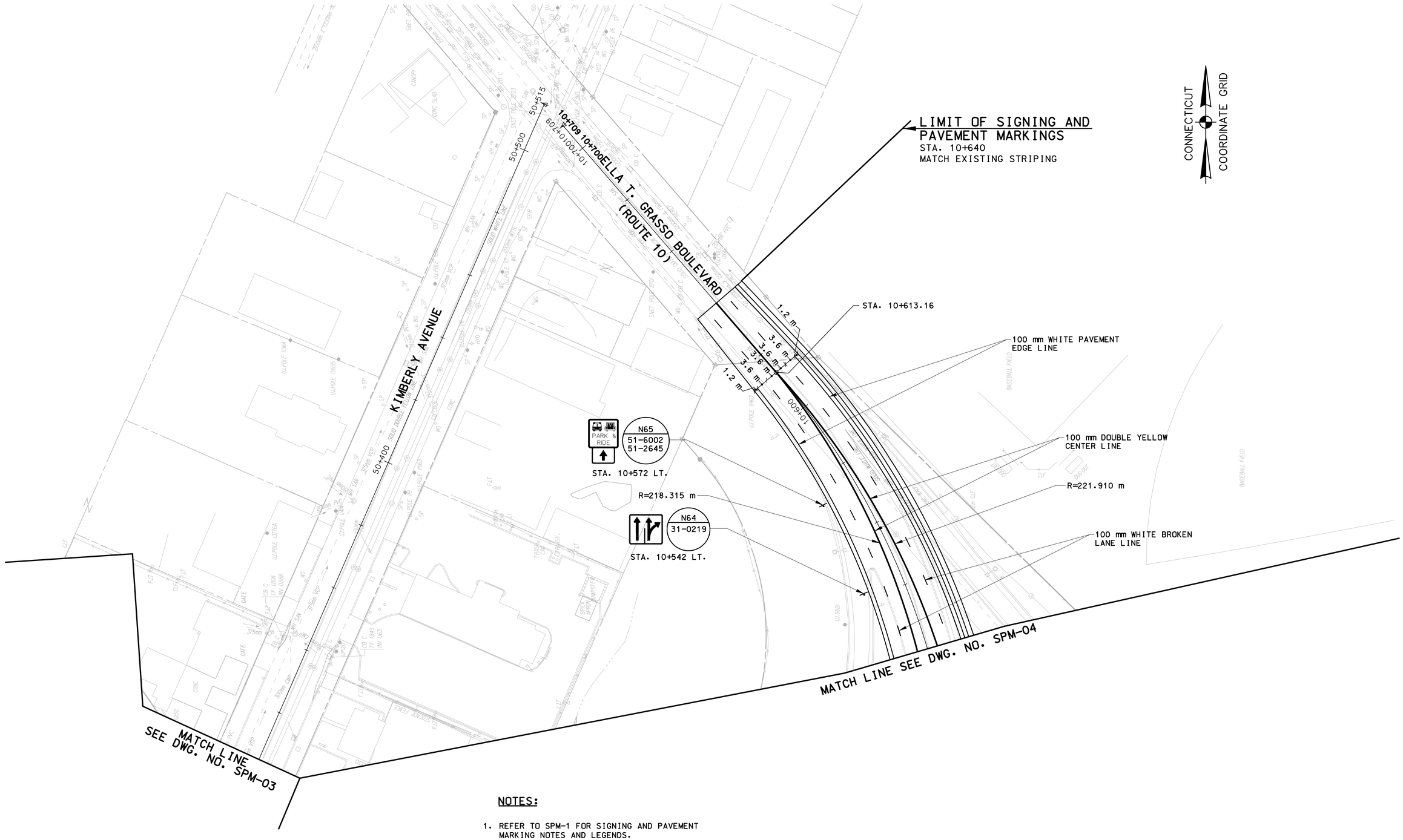

NOTES:

1. REFER TO SPM-1 FOR SIGNING AND PAVEMENT MARKING NOTES AND LEGENDS.

REV.	DATE	DESCRIPTION	SHEET. NO
		REVISIONS	

SCALE IN METERS
0 5 10 15 20 25
SCALE 1:500

DESIGNER: R. P. TALBOT
DRAFTER: M.C. DEEGAN
CHECKED BY:
DATE CHECKED:

STATE OF CONNECTICUT
DEPARTMENT OF TRANSPORTATION

ENGINEER: PB AMERICAS, INC.
APPROVED BY: DATE:

PROJECT TITLE: RECONSTRUCTION OF I-95 OVER WEST RIVER
CADD spm-08-092522.dgn PLOTTED 11/13/2012

TOWN: NEW HAVEN / WEST HAVEN
DRAWING TITLE: SIGNING AND PAVEMENT MARKING PLAN - 7

PROJECT NO.: 92-522
DRAWING NO.: SPM-08
SHEET NO.:

2:25:30 PM
11/13/2012
t:\v8cadd\projects\pb18735\fd\highway\contract_sheets\spm-08-092522.dgn

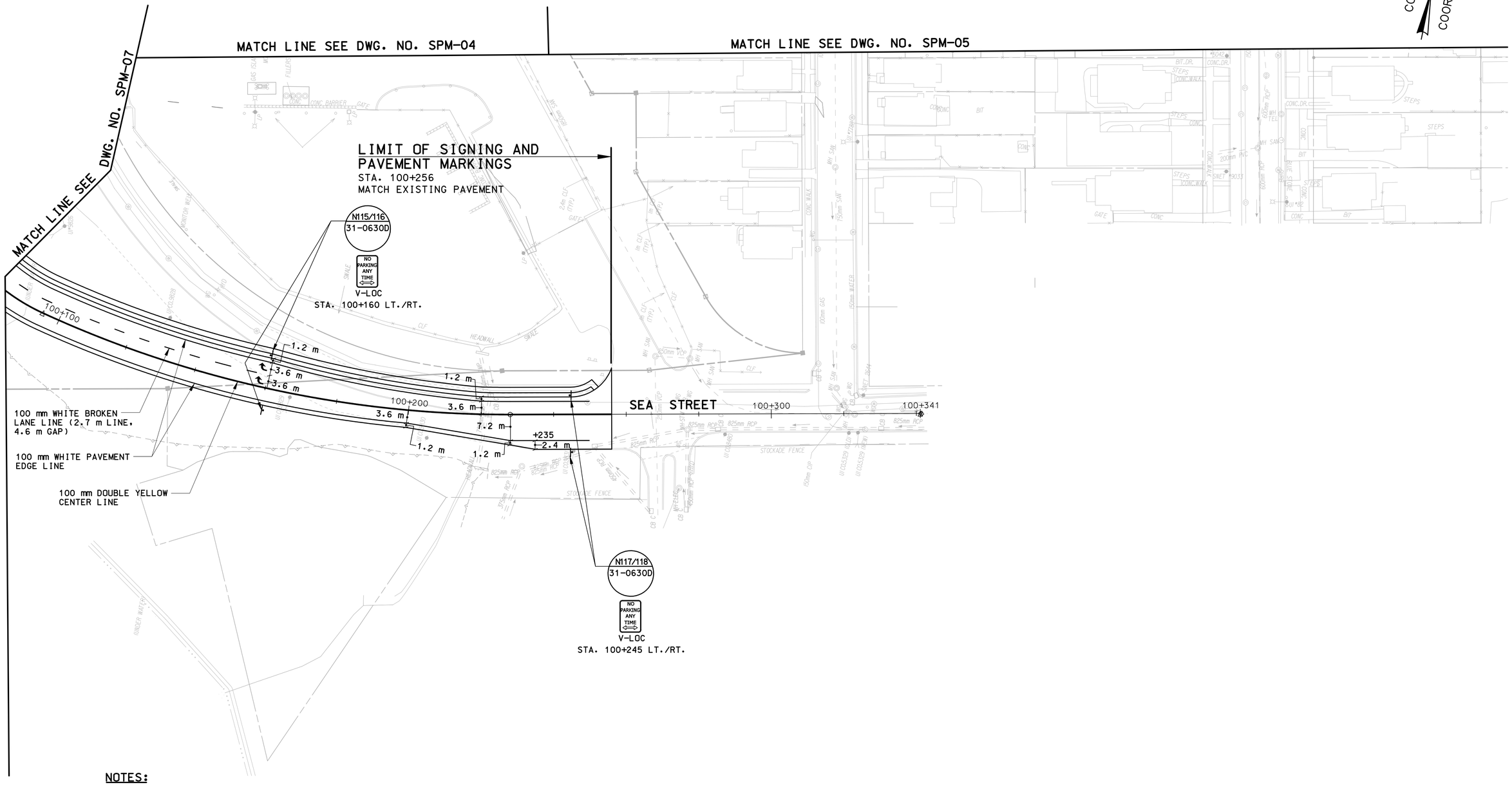

NOTES:

1. REFER TO SPM-1 FOR SIGNING AND PAVEMENT MARKING NOTES AND LEGENDS.

REV.	DATE	DESCRIPTION	SHEET. NO
		REVISIONS	

SCALE IN METERS
0 5 10 15 20 25
SCALE 1:500

DESIGNER: R. P. TALBOT
DRAFTER: M.C. DEEGAN
CHECKED BY:
DATE CHECKED:

STATE OF CONNECTICUT
DEPARTMENT OF TRANSPORTATION

ENGINEER: PB AMERICAS, INC.
APPROVED BY: DATE:

PROJECT TITLE: RECONSTRUCTION OF I-95 OVER WEST RIVER

CADD spm-09-092522.dgn PLOTTED 11/13/2012

TOWN: NEW HAVEN / WEST HAVEN

DRAWING TITLE: SIGNING AND PAVEMENT MARKING PLAN - 8

PROJECT NO.: 92-522
DRAWING NO.: SPM-09
SHEET NO.:

2:25:33 PM
11/13/2012
t:\v8cadd\projects\pb18735\fd\highway\contract_sheets\spm-09-092522.dgn

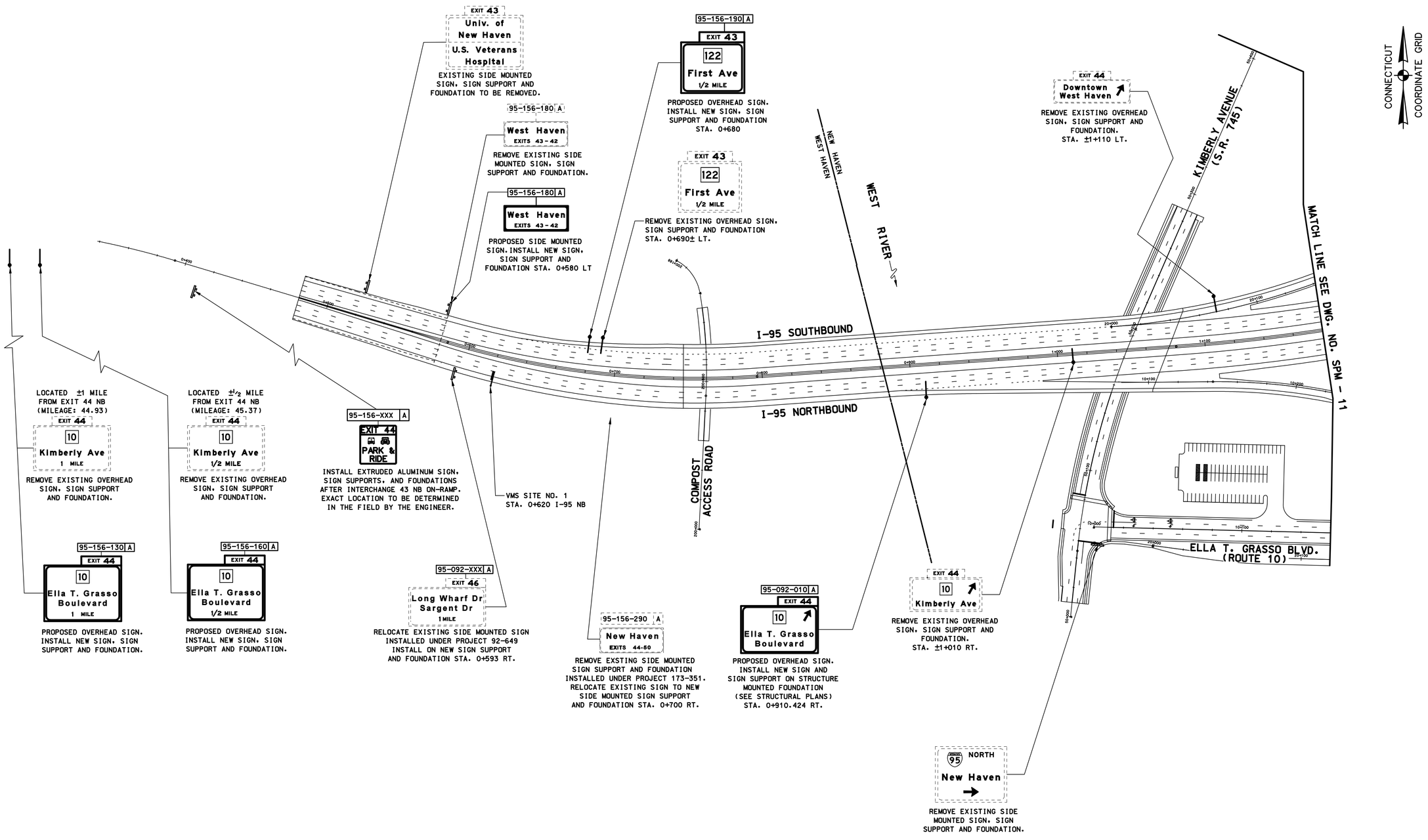

NOTES:

1. REFER TO SPM-1 FOR SIGNING AND PAVEMENT MARKING NOTES AND LEGENDS.

REV.	DATE	DESCRIPTION	SHEET. NO
		REVISIONS	

SCALE IN METERS
0 10 20 30 40 50 60
SCALE 1:1250

DESIGNER: R. P. TALBOT
DRAFTER: M.C. DEEGAN
CHECKED BY:
DATE CHECKED:

STATE OF CONNECTICUT
DEPARTMENT OF TRANSPORTATION

ENGINEER: PB AMERICAS, INC.
APPROVED BY: DATE:

PROJECT TITLE: RECONSTRUCTION OF I-95 OVER WEST RIVER

CADD spm-10-092522.dgn PLOTTED 11/13/2012

TOWN: NEW HAVEN / WEST HAVEN

DRAWING TITLE: OVERHEAD SIGNING PLAN - 1

PROJECT NO.: 92-522
DRAWING NO.: SPM-10
SHEET NO.:

2:25:35 PM
11/13/2012
t:\v8cadd\projects\pb18735\fd\highway\contract_sheets\spm-10-092522.dgn

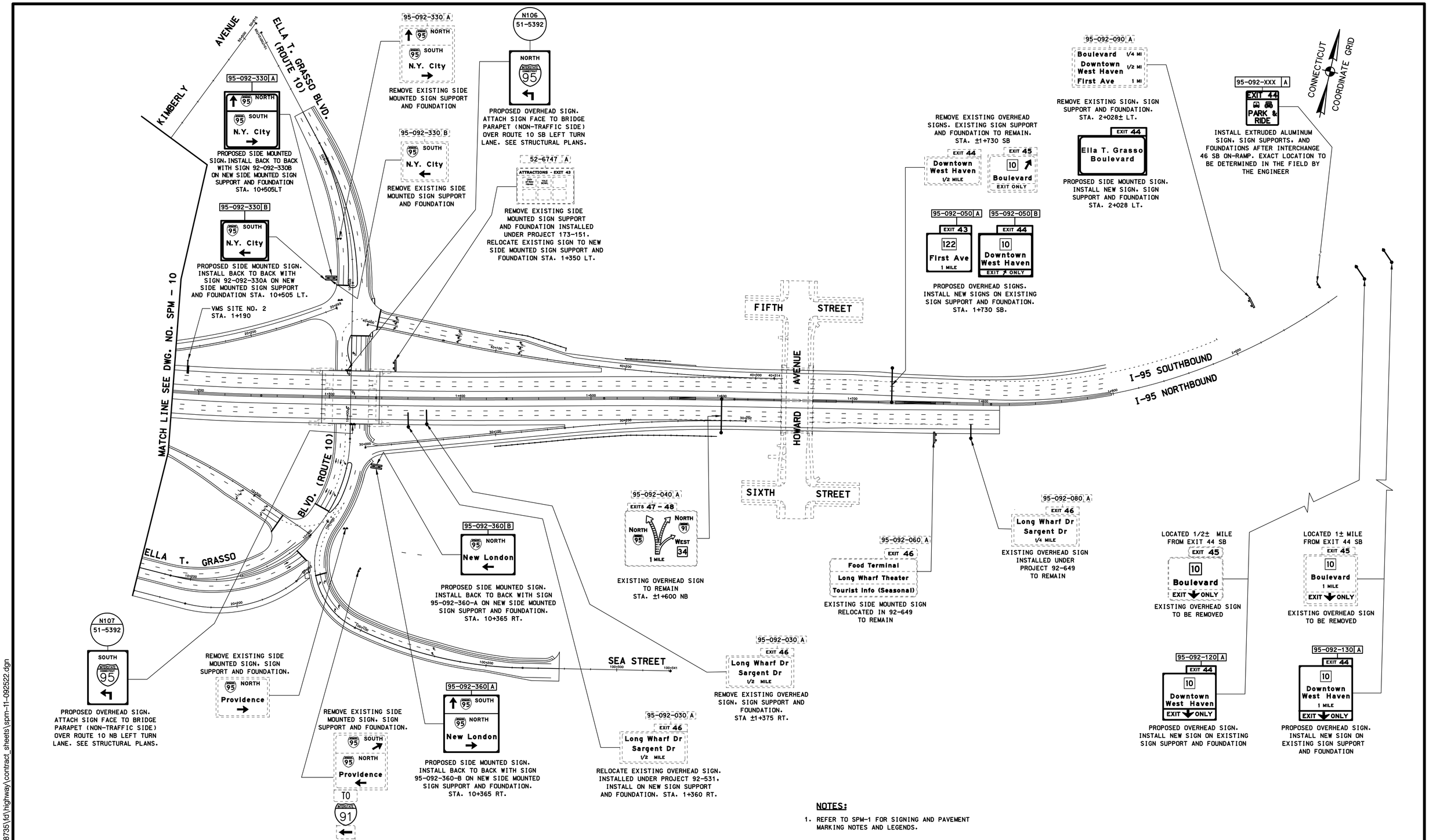

NOTES:

1. REFER TO SPM-1 FOR SIGNING AND PAVEMENT MARKING NOTES AND LEGENDS.

REV.	DATE	DESCRIPTION	SHEET. NO
		REVISIONS	

SCALE IN METERS
0 10 20 30 40 50 60
SCALE 1:1250

DESIGNER: R. P. TALBOT
DRAFTER: M.C. DEEGAN
CHECKED BY:
DATE CHECKED:

STATE OF CONNECTICUT
DEPARTMENT OF TRANSPORTATION

ENGINEER: PB AMERICAS, INC.
APPROVED BY: DATE:

PROJECT TITLE: RECONSTRUCTION OF I-95 OVER WEST RIVER

CADD spm-11-092522.dgn PLOTTED 11/13/2012

TOWN: NEW HAVEN / WEST HAVEN

DRAWING TITLE: OVERHEAD SIGNING PLAN – 2

PROJECT NO.: 92-522
DRAWING NO.: SPM-11
SHEET NO.:

2:25:41 PM
11/13/2012
t:\v8cadd\projects\pb18735\fd\highway\contract_sheets\spm-11-092522.dgn

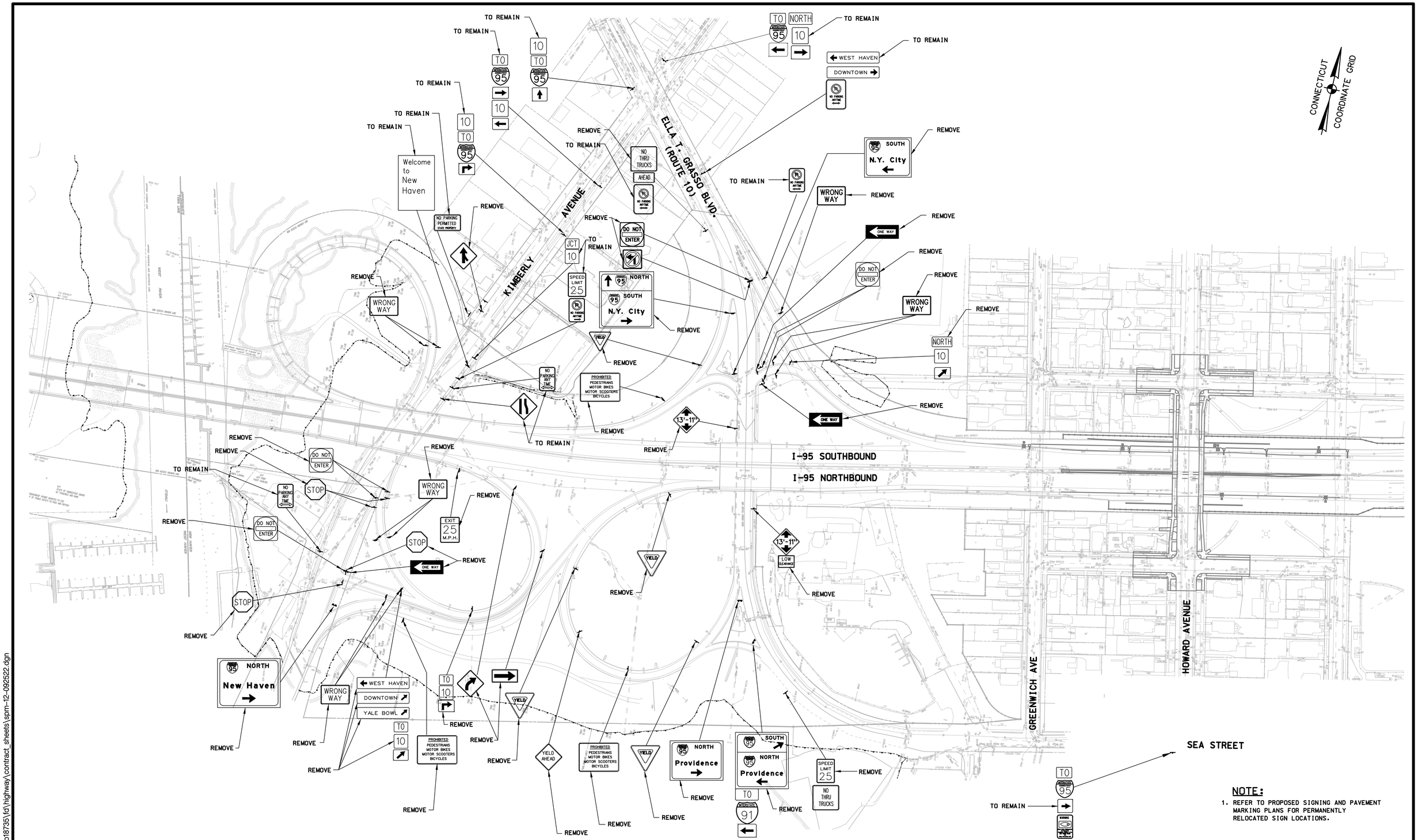

NOTE:

1. REFER TO PROPOSED SIGNING AND PAVEMENT MARKING PLANS FOR PERMANENTLY RELOCATED SIGN LOCATIONS.

REV.	DATE	DESCRIPTION	SHEET. NO
		REVISIONS	

SCALE IN METERS
0 5 10 15 20 25
SCALE 1:500

DESIGNER: R. P. TALBOT
DRAFTER: M.C. DEEGAN
CHECKED BY:
DATE CHECKED:

STATE OF CONNECTICUT
DEPARTMENT OF TRANSPORTATION

ENGINEER: PB AMERICAS, INC.
APPROVED BY: DATE:

PROJECT TITLE: RECONSTRUCTION OF I-95 OVER WEST RIVER

CADD spm-12-092522.dgn PLOTTED 11/13/2012

TOWN: NEW HAVEN / WEST HAVEN

DRAWING TITLE: EXISTING SIGNING PLAN

PROJECT NO.: 92-522
DRAWING NO.: SPM-12
SHEET NO.:

2:25:46 PM
11/13/2012
t:\v8cadd\projects\pb18735\td\highway\contract_sheets\spm-12-092522.dgn

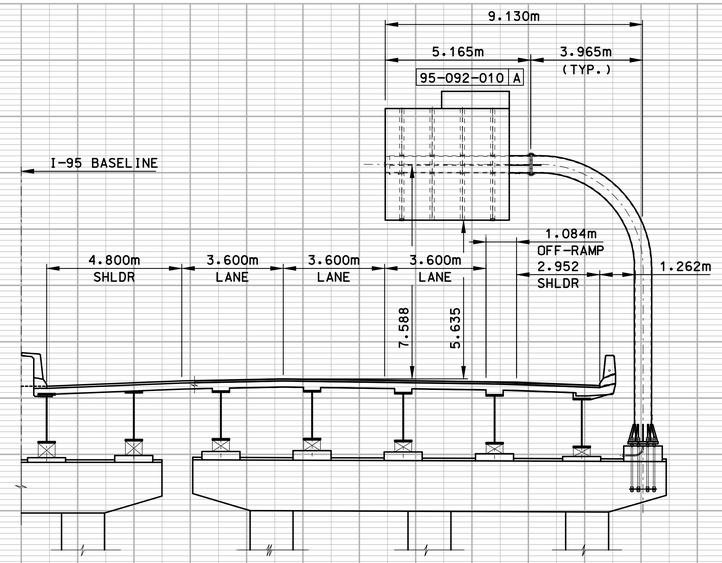

SIGN SUPPORT ON STRUCTURE MOUNTED FOUNDATION
SIGN NO. 95-092-010-A
STA. 0+910.424
VIEW IN DIRECTION OF STATIONING
(SEE STRUCTURAL PLANS)

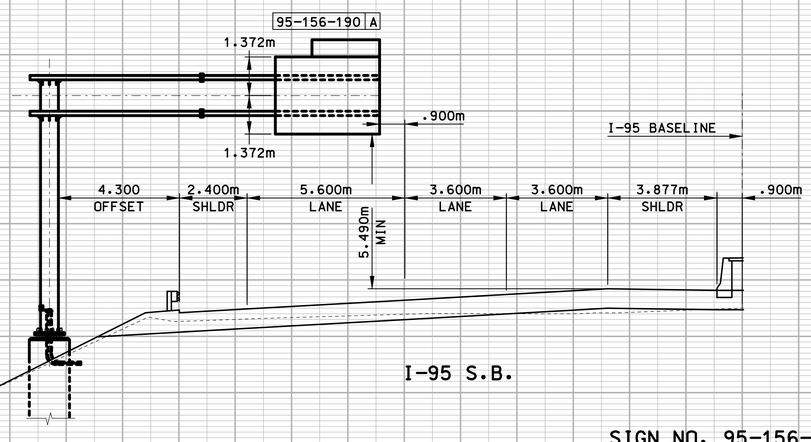

SIGN NO. 95-156-190-A
STA. 0+680
VIEW IN DIRECTION OF STATIONING

REV.	DATE	DESCRIPTION	SHEET. NO
		REVISIONS	

HORIZ. SCALE IN METERS 0 1 2 3 4 5
VERT. SCALE IN METERS 0 1 2 3 4 5
HORIZ. SCALE 1:100 VERT. SCALE 1:100

DESIGNER: R. P. TALBOT
DRAFTER: M.C. DEEGAN
CHECKED BY:
DATE CHECKED:

STATE OF CONNECTICUT
DEPARTMENT OF TRANSPORTATION

ENGINEER: PB AMERICAS, INC.
APPROVED BY: DATE:

PROJECT TITLE: RECONSTRUCTION OF I-95 OVER WEST RIVER
CADD spm-13-092522.dgn PLOTTED 11/13/2012

TOWN: NEW HAVEN / WEST HAVEN
DRAWING TITLE: SIGN SUPPORT AND FOUNDATION CROSS-SECTIONS

PROJECT NO.: 92-522
DRAWING NO.: SPM-13
SHEET NO.:

2:25:53 PM
11/13/2012
t:\v8cadd\projects\pb18735\fd\highway\contract_sheets\spm-13-092522.dgn

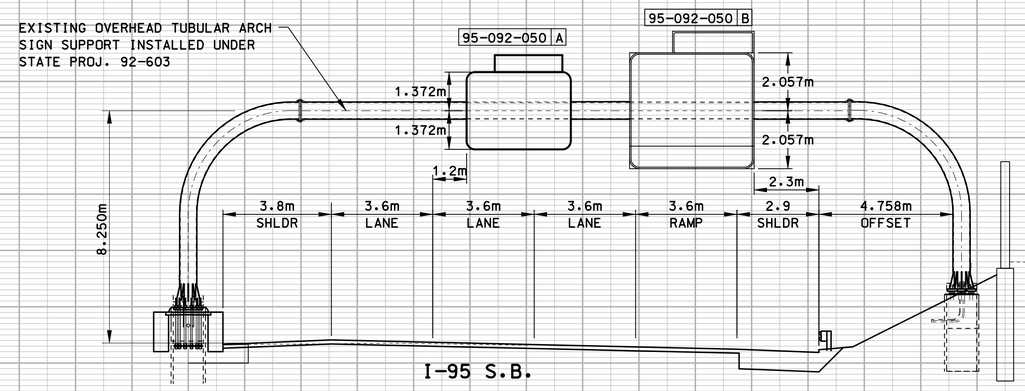

NEW SIGN PANELS ON EXISTING OVERHEAD
TUBULAR ARCH SIGN SUPPORT
SIGN NO. 95-092-050-A&B
STA. 1+730
VIEW IN DIRECTION OF TRAFFIC

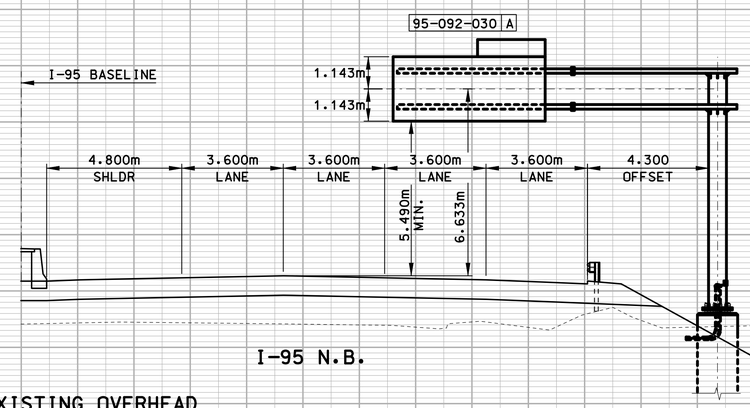

RELOCATED EXISTING OVERHEAD
SIGN NO. 95-092-030-A
STA. 1+360
VIEW IN DIRECTION OF STATIONING

REV.	DATE	DESCRIPTION	SHEET. NO
		REVISIONS	

HORIZ. SCALE IN METERS 0 1 2 3 4 5
VERT. SCALE IN METERS 0 1 2 3 4 5
HORIZ. SCALE 1:100 VERT. SCALE 1:100

DESIGNER: R. P. TALBOT
DRAFTER: M.C. DEEGAN
CHECKED BY:
DATE CHECKED:

STATE OF CONNECTICUT
DEPARTMENT OF TRANSPORTATION

ENGINEER: PB AMERICAS, INC.
APPROVED BY: DATE:

PROJECT TITLE: RECONSTRUCTION OF I-95 OVER WEST RIVER
CADD spm-14-092522.dgn PLOTTED 11/13/2012

TOWN: NEW HAVEN / WEST HAVEN
DRAWING TITLE: SIGN SUPPORT AND FOUNDATION CROSS-SECTIONS

PROJECT NO.: 92-522
DRAWING NO.: SPM-14
SHEET NO.:

2:25:55 PM
11/13/2012
t:\v8cadd\projects\pb18735\fd\highway\contract_sheets\spm-14-092522.dgn

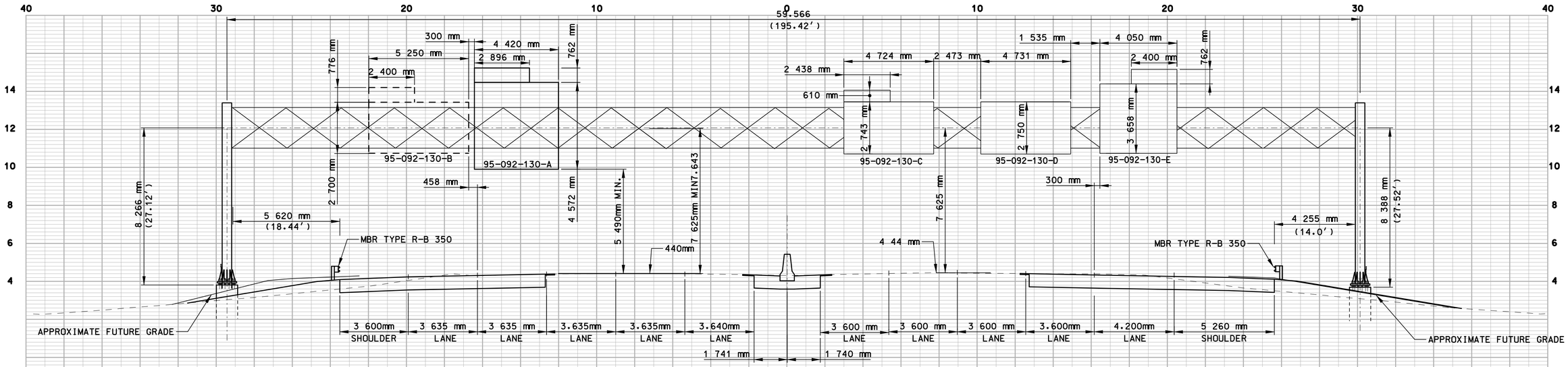

INSTALL NEW SIGN
LOCATION 95-092-130-A
I-95 SOUTHBOUND
STATION 1+750 (92-619)
EXISTING TRUSS SIGN SUPPORT STRUCTURE

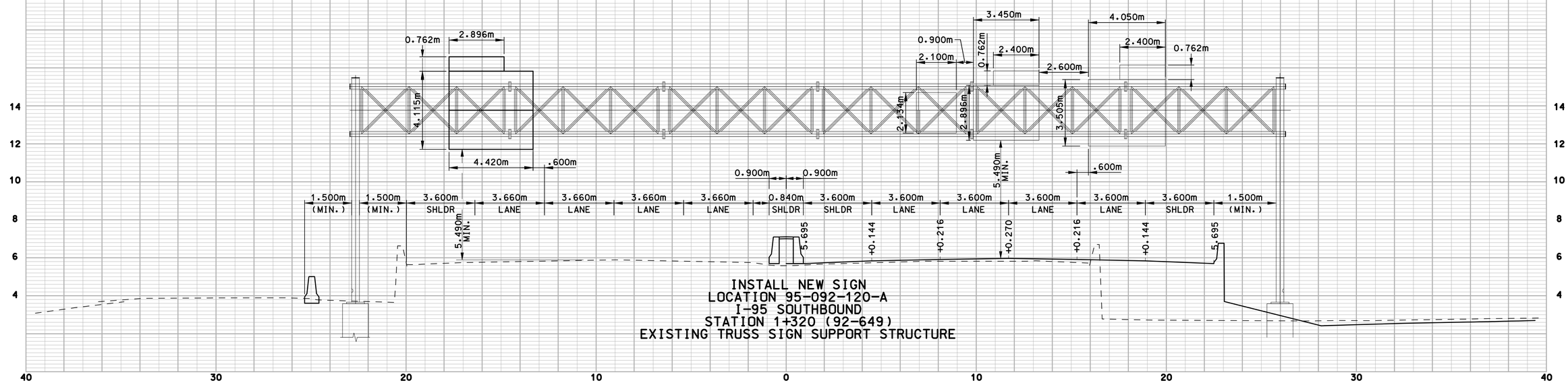

INSTALL NEW SIGN
LOCATION 95-092-120-A
I-95 SOUTHBOUND
STATION 1+320 (92-649)
EXISTING TRUSS SIGN SUPPORT STRUCTURE

REV.	DATE	DESCRIPTION	SHEET. NO

REVISIONS

HORIZ. SCALE IN METERS 0 1 2 3 4 5
VERT. SCALE IN METERS 0 1 2 3 4 5
HORIZ. SCALE 1:100 VERT. SCALE 1:100

DESIGNER: R. P. TALBOT
DRAFTER: M.C. DEEGAN
CHECKED BY:
DATE CHECKED:

STATE OF CONNECTICUT
DEPARTMENT OF TRANSPORTATION

ENGINEER: PB AMERICAS, INC.
APPROVED BY: DATE:

PROJECT TITLE: RECONSTRUCTION OF I-95 OVER WEST RIVER

CADD spm-15-092522.dgn PLOTTED 11/13/2012

TOWN: NEW HAVEN / WEST HAVEN

DRAWING TITLE: SIGN SUPPORT AND FOUNDATION CROSS-SECTIONS

PROJECT NO.: 92-522
DRAWING NO.: SPM-15
SHEET NO.:

2:25:57 PM
11/13/2012
t:\v8cadd\projects\pb18735\fd\highway\contract_sheets\spm-15-092522.dgn

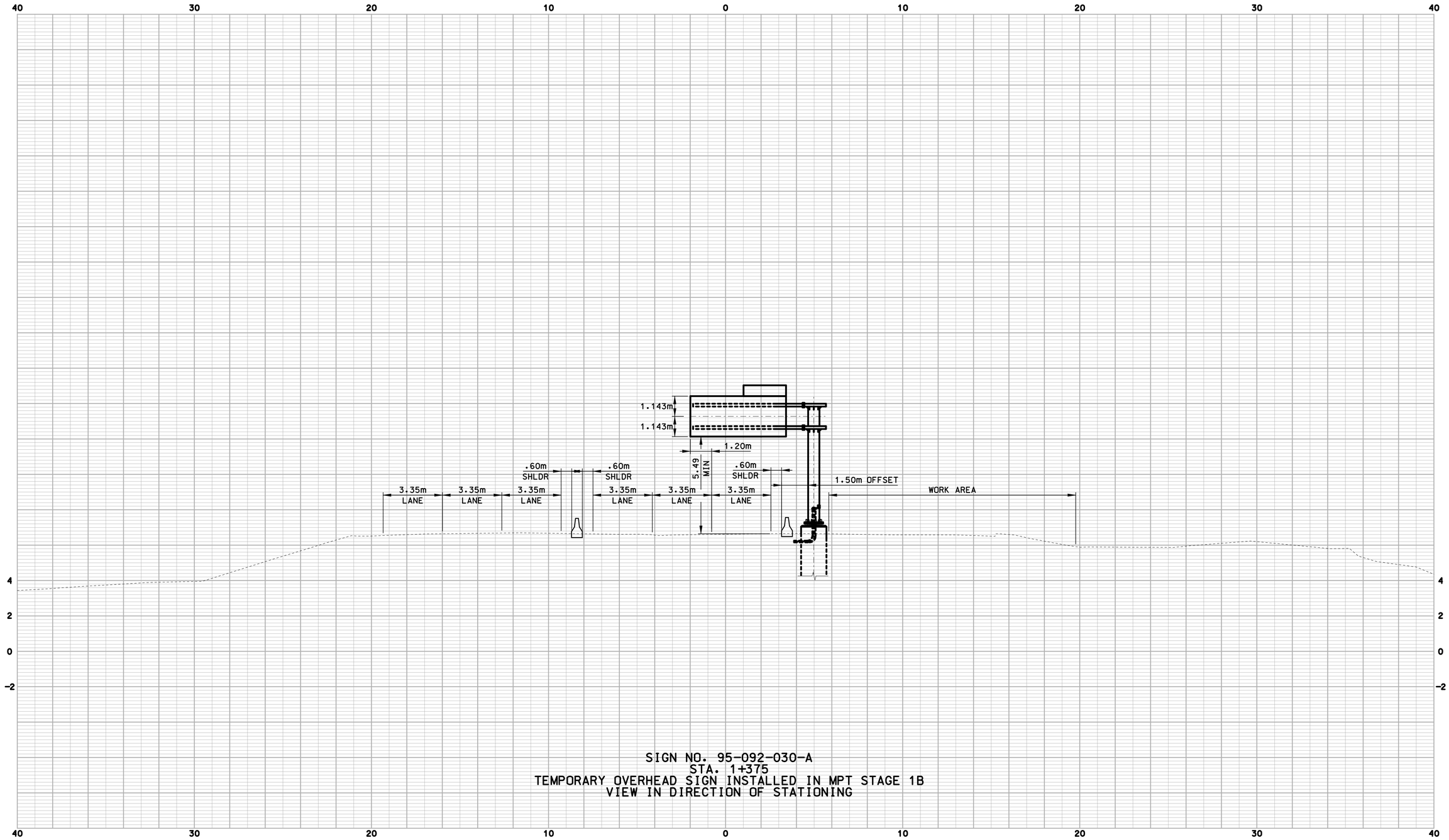

REV.	DATE	DESCRIPTION	SHEET. NO
		REVISIONS	

HORIZ. SCALE IN METERS 0 1 2 3 4 5
VERT. SCALE IN METERS 0 1 2 3 4 5
HORIZ. SCALE 1:100 VERT. SCALE 1:100

DESIGNER: R. P. TALBOT
DRAFTER: M.C. DEEGAN
CHECKED BY:
DATE CHECKED:

STATE OF CONNECTICUT
DEPARTMENT OF TRANSPORTATION

ENGINEER: PB AMERICAS, INC.
APPROVED BY: DATE:

PROJECT TITLE: RECONSTRUCTION OF I-95 OVER WEST RIVER
CADD spm-16-092522.dgn PLOTTED 11/13/2012

TOWN: NEW HAVEN / WEST HAVEN
DRAWING TITLE: SIGN SUPPORT AND FOUNDATION CROSS-SECTIONS

PROJECT NO.: 92-522
DRAWING NO.: SPM-16
SHEET NO.:

2:25:59 PM
11/13/2012
t:\v8cadd\projects\pb18735\fd\highway\contract_sheets\spm-16-092522.dgn

R1 - SERIES

R1-1 *

STOP

LEGEND - WHITE
BACKGROUND - RED

AREA (SQ. FT)	SIZE (INCHES)	CONN. D.O.T. #	POSTS	ALUM. THK.
3.31	24	31-0536	1	.080
5.19	30	31-0552	1	.080
13.3	48	31-0557	2	.100

R1-2 *

YIELD

LEGEND - RED
BACKGROUND -WHITE

AREA (SQ. FT)	SIZE (INCHES)	CONN. D.O.T. #	POSTS	ALUM. THK.
3.90	36	31-0523	1	.080
10.83	60	31-0528	2B	.100

R1-3 *

ALL-WAY

LEGEND - WHITE
BACKGROUND - RED

AREA (SQ. FT)	SIZE (INCHES)	CONN. D.O.T. #	POSTS	ALUM. THK.
0.75	18X6	31-0508		.080

R2 - SERIES

R2-1

SPEED LIMIT 00

AREA (SQ. FT)	SIZE (INCHES)	CONN. D.O.T. #	POSTS	ALUM. THK.
5.00	24X30	31-5505	1	.080
12.00	36X48	31-5506	2	.100
20.00	48X60	31-5507	2	.100

R2-4a

SPEED LIMIT 00 MINIMUM 00

AREA (SQ. FT)	SIZE (INCHES)	CONN. D.O.T. #	POSTS	ALUM. THK.
32.00	48X96	31-5510	2B	.125

SPEED CHECKED BY RADAR

AREA (SQ. FT)	SIZE (INCHES)	CONN. D.O.T. #	POSTS	ALUM. THK.
5.00	24X30	31-5512	1	.080
20.00	48X60	31-5532	2	.100

R3 - SERIES

R3-1

NO RIGHT TURN

31-1604 OVERHEAD MTD
LEGEND - BLACK
BACKGROUND - WHITE
CIRCLE & DIAGONAL - RED

AREA (SQ. FT)	SIZE (INCHES)	CONN. D.O.T. #	POSTS	ALUM. THK.
4.00	24X24	31-1604		.080
6.25	30X30	31-1617	1	.080
5.00	30X24	31-1618		.080
9.00	36X36	31-1627	2	.080
7.50	36X30	31-1628		.080

R3-2

NO LEFT TURN

31-1603 OVERHEAD MTD
LEGEND - BLACK
BACKGROUND - WHITE
CIRCLE & DIAGONAL - RED

AREA (SQ. FT)	SIZE (INCHES)	CONN. D.O.T. #	POSTS	ALUM. THK.
4.00	24X24	31-1603		.080
6.25	30X30	31-1619	1	.080
5.00	30X24	31-1620		.080
9.00	36X36	31-1629	2	.080
7.50	36X30	31-1630		.080

R3-3

NO TURNS

AREA (SQ. FT)	SIZE (INCHES)	CONN. D.O.T. #	POSTS	ALUM. THK.
4.00	24X24	31-1648	1	.080
9.00	36X36	31-1647	2	.080

R3-4

LEGEND - BLACK
BACKGROUND - WHITE
CIRCLE & DIAGONAL - RED

AREA (SQ. FT)	SIZE (INCHES)	CONN. D.O.T. #	POSTS	ALUM. THK.
4.00	24X24	31-1622	1	.080
9.00	36X36	31-1632	1	.080

R3-5

ONLY (L) ONLY (R)

AREA (SQ. FT)	SIZE (INCHES)	CONN. D.O.T. #	POSTS	ALUM. THK.
4.00	24X24	31-0135L	1	.080
4.00	24X24	31-0138R	1	.080
7.50	30X36	31-0183L	1	.080
7.50	30X36	31-0184R	1	.080

R3-6

(L) (R)

AREA (SQ. FT)	SIZE (INCHES)	CONN. D.O.T. #	POSTS	ALUM. THK.
7.50	30X36	31-0157L	1	.080
7.50	30X36	31-0158R	1	.080

R3-7L LEFT LANE MUST TURN LEFT

R3-7R RIGHT LANE MUST TURN RIGHT

AREA (SQ. FT)	SIZE (INCHES)	CONN. D.O.T. #	POSTS	ALUM. THK.
6.25	30X30	31-0117L	1	.080
6.25	30X30	31-0118R	1	.080

R3-48

ONLY (L) ONLY (R)

AREA (SQ. FT)	SIZE (INCHES)	CONN. D.O.T. #	POSTS	ALUM. THK.
6.25	30X30	31-0262L	1	.080
6.25	30X30	31-0261R	1	.080

ONLY

AREA (SQ. FT)	SIZE (INCHES)	CONN. D.O.T. #	POSTS	ALUM. THK.
4.00	24X24	31-0125	1	.080
6.25	30X30	31-0165	1	.080
9.00	30X36	31-0175	1	.080

ONLY ONLY

AREA (SQ. FT)	SIZE (INCHES)	CONN. D.O.T. #	POSTS	ALUM. THK.
5.00	30X24	31-0290	1	.080

ONLY ONLY 31-0222 ONLY ONLY 31-0223

AREA (SQ. FT)	SIZE (INCHES)	CONN. D.O.T. #	POSTS	ALUM. THK.
6.25	30X30		1	.080

ONLY ONLY 31-0282 ONLY ONLY 31-0283

AREA (SQ. FT)	SIZE (INCHES)	CONN. D.O.T. #	POSTS	ALUM. THK.
7.50	36X30		2	.080

ONLY ONLY 31-0295 31-0219

AREA (SQ. FT)	SIZE (INCHES)	CONN. D.O.T. #	POSTS	ALUM. THK.
7.50	36X30		2	.080

ONLY ONLY 31-0307 31-0372 ONLY

AREA (SQ. FT)	SIZE (INCHES)	CONN. D.O.T. #	POSTS	ALUM. THK.
5.00	30X24	31-0247	1	.080

ONLY ONLY

AREA (SQ. FT)	SIZE (INCHES)	CONN. D.O.T. #	POSTS	ALUM. THK.
11.25	54X30	31-0337	2	.100

ONLY ONLY

AREA (SQ. FT)	SIZE (INCHES)	CONN. D.O.T. #	POSTS	ALUM. THK.
8.75	42X30	31-0279	2	.100

R3-8b

ONLY ONLY

AREA (SQ. FT)	SIZE (INCHES)	CONN. D.O.T. #	POSTS	ALUM. THK.
10.00	48X30	31-0302	2	.100

ONLY

AREA (SQ. FT)	SIZE (INCHES)	CONN. D.O.T. #	POSTS	ALUM. THK.
10.00	48X30		2	.100

ONLY ONLY 31-0370 ONLY ONLY 31-0371

AREA (SQ. FT)	SIZE (INCHES)	CONN. D.O.T. #	POSTS	ALUM. THK.
8.75	42X30		2	.100

LEFT LANE MUST TURN LEFT

AREA (SQ. FT)	SIZE (INCHES)	CONN. D.O.T. #	POSTS	ALUM. THK.
20.00	48X60	31-0121L	2	.100
20.00	48X60	31-0122R	2	.100

RIGHT LANE MUST TURN RIGHT

AREA (SQ. FT)	SIZE (INCHES)	CONN. D.O.T. #	POSTS	ALUM. THK.
5.00	24X30	31-1502	1	.080

LEFT LANE MUST TURN LEFT AHEAD

AREA (SQ. FT)	SIZE (INCHES)	CONN. D.O.T. #	POSTS	ALUM. THK.
20.00	48X60	31-0124L	2	.100
20.00	48X60	31-0137R	2	.100

RIGHT LANE MUST TURN RIGHT AHEAD

AREA (SQ. FT)	SIZE (INCHES)	CONN. D.O.T. #	POSTS	ALUM. THK.
20.00	48X60	31-1574	2	.100

R4 - SERIES

R4-1

DO NOT PASS

KEEP RIGHT EXCEPT TO PASS

SLOW VEHICLES KEEP RIGHT

AREA (SQ. FT)	SIZE (INCHES)	CONN. D.O.T. #	POSTS	ALUM. THK.
20.00	48X60	31-1504	2	.100

R4-3

SLOWER TRAFFIC KEEP RIGHT

AREA (SQ. FT)	SIZE (INCHES)	CONN. D.O.T. #	POSTS	ALUM. THK.
5.00	24X30	31-1562	1	.080
20.00	48X60	31-1564	2	.100

R4-7

AREA (SQ. FT)	SIZE (INCHES)	CONN. D.O.T. #	POSTS	ALUM. THK.
5.00	24X30	31-1526	1	.080
12.00	36X48	31-1536	2	.100
20.00	48X60	31-1546	2	.100

R5 - SERIES

R5-1 *

DO NOT ENTER

LEGEND - WHITE
BACKGROUND - WHITE
CIRCLE - RED

AREA (SQ. FT)	SIZE (INCHES)	CONN. D.O.T. #	POSTS	ALUM. THK.
6.25	30X30	31-1119	1	.080
9.00	36X36	31-1120	2	.100
16.00	48X48	31-1121	2	.100

PROHIBITED PEDESTRIANS MOTOR BIKES MOTOR SCOOTERS BICYCLES

AREA (SQ. FT)	SIZE (INCHES)	CONN. D.O.T. #	POSTS	ALUM. THK.
6.00	36X24	31-1777	2	.080

R5-1 *

WRONG WAY

LEGEND - WHITE
BACKGROUND - RED

AREA (SQ. FT)	SIZE (INCHES)	CONN. D.O.T. #	POSTS	ALUM. THK.
6.00	36X24	31-1122	2	.080
8.75	42X30	31-1123	2	.100

EMERGENCY AND AUTHORIZED VEHICLES ONLY

AREA (SQ. FT)	SIZE (INCHES)	CONN. D.O.T. #	POSTS	ALUM. THK.
5.00	24X30	31-1790	1	.080
20.00	48X60	31-1792	2	.100

PROHIBITED COMMERCIAL VEH TRAILERS COMBINATION VEH OVER 7500 LBS VEH. OVER 8' HIGH MOPEDS - BICYCLES PEDESTRIANS

AREA (SQ. FT)	SIZE (INCHES)	CONN. D.O.T. #	POSTS	ALUM. THK.
27.00	54X72	31-1719	2	.125

R5-10c

PEDESTRIANS PROHIBITED

AREA (SQ. FT)	SIZE (INCHES)	CONN. D.O.T. #	POSTS	ALUM. THK.
2.00	24X12	31-1776	1	.080

R7 - SERIES

HANDICAPPED PARKING PERMIT REQUIRED
VIOLATORS WILL BE FINED MIN $150

(R) (D) (L) (P) (NO ARROW)

LEGEND - WHITE
BACKGROUND - BLUE

AREA (SQ. FT)	SIZE (INCHES)	CONN. D.O.T. #	POSTS	ALUM. THK.
2.00	12X24	31-0629	1	.080

R7-1

NO PARKING ANY TIME

(R) (D) (L)

LEGEND - RED
BACKGROUND - WHITE

AREA (SQ. FT)	SIZE (INCHES)	CONN. D.O.T. #	POSTS	ALUM. THK.
1.50	12X18	31-0630	1	.080

R7-2

NO PARKING 0:00 AM TO 0:00 PM

VARIABLE TIMES
(R) (D) (L)

LEGEND - RED
BACKGROUND - WHITE

AREA (SQ. FT)	SIZE (INCHES)	CONN. D.O.T. #	POSTS	ALUM. THK.
1.50	12X18	31-0603	1	.080

NO PARKING BUS STOP

(R) (D) (L)

LEGEND - RED
BACKGROUND - WHITE

AREA (SQ. FT)	SIZE (INCHES)	CONN. D.O.T. #	POSTS	ALUM. THK.
1.50	12X18	31-0614	1	.080

R6 - SERIES

R6-1

ONE WAY (L)
ONE WAY (R)

AREA (SQ. FT)	SIZE (INCHES)	CONN. D.O.T. #	POSTS	ALUM. THK.
3.00	36X12	31-1188L	1	.080
3.00	36X12	31-1177R	1	.080
6.75	54X18	31-1189L	1	.100
6.75	54X18	31-1178R	1	.100

R8 - SERIES

R8-7

EMERGENCY STOPPING ONLY

AREA (SQ. FT)	SIZE (INCHES)	CONN. D.O.T. #	POSTS	ALUM. THK.
13.50	54X36	31-0667	2	.100

R9 - SERIES

HITCHHIKING PROHIBITED DO NOT STOP

AREA (SQ. FT)	SIZE (INCHES)	CONN. D.O.T. #	POSTS	ALUM. THK.
27.50	66X60	31-1733	2B	.125

R10 - SERIES

R10-6

STOP HERE ON RED 31-0801 STOP HERE ON RED 31-0802

AREA (SQ. FT)	SIZE (INCHES)	CONN. D.O.T. #	POSTS	ALUM. THK.
6.00	24X36		1	.080

NO TURN ON RED

OVERHEAD MOUNTED

AREA (SQ. FT)	SIZE (INCHES)	CONN. D.O.T. #	POSTS	ALUM. THK.
2.25	18X18	31-0817		.080
4.00	24X24	31-0823		.080

RIGHT TURN ON RED FROM RIGHT LANE ONLY

AREA (SQ. FT)	SIZE (INCHES)	CONN. D.O.T. #	POSTS	ALUM. THK.
7.50	30X36	31-0847	1	.080
20.00	48X60	31-0849	2	.100

DO NOT BLOCK DRIVEWAY

AREA (SQ. FT)	SIZE (INCHES)	CONN. D.O.T. #	POSTS	ALUM. THK.
5.00	24X30	31-0803	1	.080
12.00	36X48	31-0804	2	.100

R10-10L

LEFT TURN SIGNAL

AREA (SQ. FT)	SIZE (INCHES)	CONN. D.O.T. #	POSTS	ALUM. THK.
2.25	18X18	31-0841	1	.080
5.00	24X24	31-0842	1	.080

DO NOT BLOCK INTERSECTION

AREA (SQ. FT)	SIZE (INCHES)	CONN. D.O.T. #	POSTS	ALUM. THK.
5.00	24X30	31-0806	1	.080
12.00	36X48	31-0807	2	.100

R10-11a

NO TURN ON RED

AREA (SQ. FT)	SIZE (INCHES)	CONN. D.O.T. #	POSTS	ALUM. THK.
3.00	18X24	31-0818	1	.080
5.00	24X30	31-0824	1	.080
7.50	30X36	31-0830	1	.080

R11 - SERIES

R11-1

KEEP OFF MEDIAN

AREA (SQ. FT)	SIZE (INCHES)	CONN. D.O.T. #	POSTS	ALUM. THK.
5.00	24X30	31-1915	1	.080
20.00	48X60	31-1918	2	.100

METRIC CONVERSION CHART (1" = 25mm)

ENGLISH	METRIC	ENGLISH	METRIC	ENGLISH	METRIC
12"	300	42"	1050	72"	1800
18"	450	48"	1200	78"	1950
24"	600	54"	1350	84"	2100
30"	750	60"	1500	90"	2250
36"	900	66"	1650	96"	2400

✸ —— THIS SIGN ADDED FOR THIS PROJECT ONLY.

NOTES:

FOR METRIC SEE CONVERSION CHART.

1. THE LEGEND "S.T.C." SHALL APPEAR ON ALL R- SERIES SIGNS EXCEPT WHEN SUFFIXED WITH THE LETTER "Z".
2. FOR SPECIFIC SIGN DESIGN CONTACT CONN. D.O.T., DIVISION OF TRAFFIC ENGINEERING. FOR BOLT HOLE PATTERN REFER TO FHWA PUBLICATION "STANDARD HIGHWAY SIGNS". SIGNS OF DIFFERENT DIMENSIONS TO BE ERECTED ON THE SAME POSTS, OR SPAN/MAST ARM MOUNTED, MAY REQUIRE SPECIAL BOLT HOLE PATTERNS.
3. POSTS - SEE CONN. D.O.T. STANDARD SHEET (TR-1208_02) - "METAL SIGN POSTS AND SIGN MOUNTING DETAILS."
4. POSTS - TYPE A (EXCEPT WHERE NOTED WITH A "B" FOR TYPE B)
5. FOR OVERHEAD MOUNTED SIGNS, SEE TYPICAL SIGNAL SHEET - "MISC. TRAFFIC SIGNAL INSTALLATION DETAILS."
6. SIGNS SHALL BE FABRICATED OF ONE CONTINUOUS PIECE OF SHEET ALUMINUM. SPLICING OF SHEET ALUMINUM WILL NOT BE ACCEPTED.
7. BACKGROUND SHEETING SHALL BE TYPE III RETROREFLECTIVE SHEETING, EXCEPT NOTED BY *.

COLORS:

R-SERIES
BACKGROUND - WHITE (SILVER) - EXCEPT AS NOTED.
LEGEND - BLACK - EXCEPT AS NOTED.
ALL COLORS SHALL BE RETROREFLECTIVE WITH THE EXCEPTION OF BLACK WHICH SHALL BE OPAQUE.
* SIGNS TO BE "BRIGHT WIDE ANGLE RETROREFLECTIVE SHEETING".

REV.	DATE	INIT.	DESCRIPTION

REVISIONS

SCALE - NONE

ORIGINAL SIGNED

DIVISION OF TRAFFIC ENGINEERING CADD

STATE OF CONNECTICUT
DEPARTMENT OF TRANSPORTATION

SUBMITTED BY: DATE:
APPROVED BY: DATE:

OFFICE OF ENGINEERING

PROJECT TITLE: RECONSTRUCTION OF I-95 OVER WEST RIVER

CADD FILE: spm-17-092522.dgn

TOWN: NEW HAVEN / WEST HAVEN

DRAWING TITLE: SIGN FACE SHEET ALUMINUM R - SERIES SIGNS TYPICAL DETAILS

PROJECT NO.: 92-522
DRAWING NO.: SPM-17
SHEET NO.:

S - SERIES

S1-1

AREA (SQ. FT)	SIZE (INCHES)	CONN. D.O.T. #	POSTS	ALUM. THK.
4.69	30	41-2111	1	.080
6.75	36	41-2112	1	.080
12.00	48	41-2113	2	.100

W1 - SERIES

W1-1L

AREA (SQ. FT)	SIZE (INCHES)	CONN. D.O.T. #	POSTS	ALUM. THK.
6.25	30	41-4006	1	.080
16.00	48	41-4056	2	.100

W1-1R

AREA (SQ. FT)	SIZE (INCHES)	CONN. D.O.T. #	POSTS	ALUM. THK.
6.25	30	41-4005	1	.080
16.00	48	41-4055	2	.100

AREA (SQ. FT)	SIZE (INCHES)	CONN. D.O.T. #	POSTS	ALUM. THK.
6.25	30	41-4012	1	.080
16.00	48	41-4062	2	.100

AREA (SQ. FT)	SIZE (INCHES)	CONN. D.O.T. #	POSTS	ALUM. THK.
6.25	30	41-4011	1	.080
16.00	48	41-4061	2	.100

W1-2

AREA (SQ. FT)	SIZE (INCHES)	CONN. D.O.T. #	POSTS	ALUM. THK.
6.25	30	41-4028	1	.080
16.00	48	41-4068	2	.100

AREA (SQ. FT)	SIZE (INCHES)	CONN. D.O.T. #	POSTS	ALUM. THK.
6.25	30	41-4027	1	.080
16.00	48	41-4067	2	.100

AREA (SQ. FT)	SIZE (INCHES)	CONN. D.O.T. #	POSTS	ALUM. THK.
6.25	30	41-4038	1	.080
16.00	48	41-4088	2	.100

AREA (SQ. FT)	SIZE (INCHES)	CONN. D.O.T. #	POSTS	ALUM. THK.
6.25	30	41-4037	1	.080
16.00	48	41-4087	2	.100

AREA (SQ. FT)	SIZE (INCHES)	CONN. D.O.T. #	POSTS	ALUM. THK.
6.25	30	41-4008	1	.080
16.00	48	41-4058	2	.100

AREA (SQ. FT)	SIZE (INCHES)	CONN. D.O.T. #	POSTS	ALUM. THK.
6.25	30	41-4007	1	.080
16.00	48	41-4057	2	.100

W1-6

(LEFT OR RIGHT)

AREA (SQ. FT)	SIZE (INCHES)	CONN. D.O.T. #	POSTS	ALUM. THK.
2.00	24X12	41-4221	1	.080
8.00	48X24	41-4222	2	.100
12.50	60X30	41-4224	2	.100

W1-7

AREA (SQ. FT)	SIZE (INCHES)	CONN. D.O.T. #	POSTS	ALUM. THK.
2.00	24X12	41-4209	1	.080
8.00	48X24	41-4207	2	.100
12.50	60X30	41-4208	2	.100

W1-10L

AREA (SQ. FT)	SIZE (INCHES)	CONN. D.O.T. #	POSTS	ALUM. THK.
6.25	30	41-4034	1	.080
16.00	48	41-4090	2	.100

W1-10R

AREA (SQ. FT)	SIZE (INCHES)	CONN. D.O.T. #	POSTS	ALUM. THK.
6.25	30	41-4033	1	.080
16.00	48	41-4089	2	.100

W1-8

(LEFT OR RIGHT)

AREA (SQ. FT)	SIZE (INCHES)	CONN. D.O.T. #	POSTS	ALUM. THK.
1.50	12X18	41-4202	1	.080
5.00	24X30	41-4203	1	.080
7.50	30X36	41-4204	1	.080

W2 - SERIES

W2-1

AREA (SQ. FT)	SIZE (INCHES)	CONN. D.O.T. #	POSTS	ALUM. THK.
6.25	30	41-4226	1	.080
9.00	36	41-4236	1	.080
16.00	48	41-4246	2	.100

W2-2

(LEFT OR RIGHT)

AREA (SQ. FT)	SIZE (INCHES)	CONN. D.O.T. #	POSTS	ALUM. THK.
6.25	30	41-4225	1	.080
9.00	36	41-4235	1	.080
16.00	48	41-4245	2	.100

W2-3

(L) (R)

AREA (SQ. FT)	SIZE (INCHES)	CONN. D.O.T. #	POSTS	ALUM. THK.
6.25	30	41-4220L	1	.080
6.25	30	41-4219R	1	.080
16.00	48	41-4244L	2	.100
16.00	48	41-4243R	2	.100

W2-4

AREA (SQ. FT)	SIZE (INCHES)	CONN. D.O.T. #	POSTS	ALUM. THK.
6.25	30	41-4217	1	.080
16.00	48	41-4247	2	.100

W3 - SERIES

W3-1

OCTAGON - RED

AREA (SQ. FT)	SIZE (INCHES)	CONN. D.O.T. #	POSTS	ALUM. THK.
6.25	30	41-0501	1	.080
9.00	36	41-0502	1	.080
16.00	48	41-0503	2	.100

W3-2

TRIANGLE - RED & WHITE

AREA (SQ. FT)	SIZE (INCHES)	CONN. D.O.T. #	POSTS	ALUM. THK.
6.25	30	41-0504	1	.080
9.00	36	41-0505	2	.100
16.00	48	41-0506	2	.100

W3-3

SYMBOL & LEGEND - BLACK
BACKGROUND - YELLOW
TOP CIRCLE - RED
BOTTOM CIRCLE - GREEN

AREA (SQ. FT)	SIZE (INCHES)	CONN. D.O.T. #	POSTS	ALUM. THK.
9.00	36	41-0836	1	.080
16.00	48	41-0848	2	.100
24.00	60	41-0860	2	.125

W/ FLASHERS

AREA (SQ. FT)	SIZE (INCHES)	CONN. D.O.T. #	POSTS	ALUM. THK.
25.00	60	41-0534	2B	.125

W4 - SERIES

W4-1L

AREA (SQ. FT)	SIZE (INCHES)	CONN. D.O.T. #	POSTS	ALUM. THK.
6.25	30	41-4450	1	.080
9.00	36	41-4448	1	.080
16.00	48	41-4452	2	.100

W4-1R

AREA (SQ. FT)	SIZE (INCHES)	CONN. D.O.T. #	POSTS	ALUM. THK.
6.25	30	41-4451	1	.080
9.00	36	41-4449	1	.080
16.00	48	41-4459	2	.100

W4-2L

AREA (SQ. FT)	SIZE (INCHES)	CONN. D.O.T. #	POSTS	ALUM. THK.
9.00	36	41-4442	1	.080
16.00	48	41-4446	2	.100

W4-2R

AREA (SQ. FT)	SIZE (INCHES)	CONN. D.O.T. #	POSTS	ALUM. THK.
9.00	36	41-4441	1	.080
16.00	48	41-4447	2	.100

W4-3L

AREA (SQ. FT)	SIZE (INCHES)	CONN. D.O.T. #	POSTS	ALUM. THK.
6.25	30	41-4433	1	.080
16.00	48	41-4435	2	.100

W4-3R

AREA (SQ. FT)	SIZE (INCHES)	CONN. D.O.T. #	POSTS	ALUM. THK.
6.25	30	41-4432	1	.080
16.00	48	41-4434	2	.100

W5 - SERIES

W5-1

AREA (SQ. FT)	SIZE (INCHES)	CONN. D.O.T. #	POSTS	ALUM. THK.
6.25	30	41-4401	1	.080
16.00	48	41-4404	2	.100

W6 - SERIES

W6-1 W6-2

AREA (SQ. FT)	SIZE (INCHES)	CONN. D.O.T. #	POSTS	ALUM. THK.
6.25	30	41-4333	1	.080
9.00	36	41-4335	1	.080

W6-3

AREA (SQ. FT)	SIZE (INCHES)	CONN. D.O.T. #	POSTS	ALUM. THK.
6.25	30	41-4327	1	.080
9.00	36	41-4329	1	.080
16.00	48	41-4331	2	.100

W7 - SERIES

W7-1

AREA (SQ. FT)	SIZE (INCHES)	CONN. D.O.T. #	POSTS	ALUM. THK.
6.25	30	41-4506	1	.080
16.00	48	41-4508	2	.100

METRIC CONVERSION CHART (1" = 25mm)

ENGLISH	METRIC	ENGLISH	METRIC	ENGLISH	METRIC
12"	300	42"	1050	72"	1800
18"	450	48"	1200	78"	1950
24"	600	54"	1350	84"	2100
30"	750	60"	1500	90"	2250
36"	900	66"	1650	96"	2400

W8 - SERIES

W8-5

AREA (SQ. FT)	SIZE (INCHES)	CONN. D.O.T. #	POSTS	ALUM. THK.
6.25	30	41-4519	1	.080
9.00	36	41-4520	1	.080
16.00	48	41-4521	2	.100

W9 - SERIES

W9-1

LEFT LANE ENDS (L) RIGHT LANE ENDS (R)

AREA (SQ. FT)	SIZE (INCHES)	CONN. D.O.T. #	POSTS	ALUM. THK.
9.00	36	41-4443L	1	.080
9.00	36	41-4440R	1	.080
16.00	48	41-4444L	2	.100
16.00	48	41-4445R	2	.100

W9-2

LANE ENDS MERGE LEFT (L) LANE ENDS MERGE RIGHT (R)

AREA (SQ. FT)	SIZE (INCHES)	CONN. D.O.T. #	POSTS	ALUM. THK.
9.00	36	41-4454L	1	.080
9.00	36	41-4453R	1	.080
16.00	48	41-4456L	2	.100
16.00	48	41-4455R	2	.100

SLOW VEHICLE LANE ENDS

AREA (SQ. FT)	SIZE (INCHES)	CONN. D.O.T. #	POSTS	ALUM. THK.
22.00	66X48	41-1510	2	.100

W10 - SERIES

W10-1

AREA (SQ. FT)	SIZE (INCHES)	CONN. D.O.T. #	POSTS	ALUM. THK.
1.77	18	41-2202	1	.080
7.07	36	41-2201	1	.080

W11 - SERIES

W11-2

AREA (SQ. FT)	SIZE (INCHES)	CONN. D.O.T. #	POSTS	ALUM. THK.
6.25	30	41-4810	1	.080
9.00	36	41-4811	1	.080
16.00	48	41-4812	2	.100

W11-8

AREA (SQ. FT)	SIZE (INCHES)	CONN. D.O.T. #	POSTS	ALUM. THK.
6.25	30	41-4680	1	.080
16.00	48	41-4692	2	.100

W12 - SERIES

W12-1

AREA (SQ. FT)	SIZE (INCHES)	CONN. D.O.T. #	POSTS	ALUM. THK.
4.00	24	41-4212	1	.080
16.00	48	41-4214	2	.100

LEFT LANE

(SUBPLATE)

AREA (SQ. FT)	SIZE (INCHES)	CONN. D.O.T. #	POSTS	ALUM. THK.
7.50	36X30	41-4729		.080

W12-2

00'-0"

AREA (SQ. FT)	SIZE (INCHES)	CONN. D.O.T. #	POSTS	ALUM. THK.
6.25	30	41-4704	1	.080
9.00	36	41-4706	1	.080
16.00	48	41-4708	2	.100

RIGHT LANE

(SUBPLATE)

AREA (SQ. FT)	SIZE (INCHES)	CONN. D.O.T. #	POSTS	ALUM. THK.
7.50	36X30	41-4728		.080

W13 - SERIES

W13-1

00 M.P.H. 41-5568 41-5569 41-5572

00 M.P.H. 41-5570

AREA (SQ. FT)	SIZE (INCHES)	CONN. D.O.T. #	POSTS	ALUM. THK.
2.25	18X18	41-5568	1	.080
4.00	24X24	41-5569	1	.080
7.50	36X30	41-5570	1	.080
16.00	48X48	41-5572	2	.100

W13-2

EXIT 00 M.P.H.

AREA (SQ. FT)	SIZE (INCHES)	CONN. D.O.T. #	POSTS	ALUM. THK.
20.00	48X60	41-5596	2	.100

W13-3

RAMP 00 M.P.H.

AREA (SQ. FT)	SIZE (INCHES)	CONN. D.O.T. #	POSTS	ALUM. THK.
20.00	48X60	41-5598	2B	.100

W16 - SERIES

W16-2a

41-6130 000 FT
41-6132 000 FT
41-6134 0000 FT

(SUBPLATE)
USE AT ADVANCE SIGN LOCATION

AREA (SQ. FT)	SIZE (INCHES)	CONN. D.O.T. #	POSTS	ALUM. THK.
2.00	24X12	41-6130		.080
3.75	30X18	41-6132		.080
7.00	42X24	41-6134		.100

W16-7PL

(SUBPLATE)
USE WITH S1-1 & W11-2
PEDESTRIAN SIGNS AT CROSSWALK

AREA (SQ. FT)	SIZE (INCHES)	CONN. D.O.T. #	POSTS	ALUM. THK.
2.00	24X12	41-2607		.080
3.75	30X18	41-2608		.080

W16-7PR

(SUBPLATE)
USE WITH S1-1 & W11-2
PEDESTRIAN SIGNS AT CROSSWALK

AREA (SQ. FT)	SIZE (INCHES)	CONN. D.O.T. #	POSTS	ALUM. THK.
2.00	24X12	41-2609		.080
3.75	30X18	41-2610		.080

AHEAD

AREA (SQ. FT)	SIZE (INCHES)	CONN. D.O.T. #	POSTS	ALUM. THK.
3.75	30X18	41-6112	1	.080
6.00	36X24	41-6116	1	.100
12.00	48X36	41-6115	2	.100

NOTES:

FOR METRIC SEE CONVERSION CHART.

1. FOR SPECIFIC SIGN DESIGN CONTACT CONN. D.O.T., DIVISION OF TRAFFIC ENGINEERING. FOR BOLT HOLE PATTERN REFER TO FHWA PUBLICATION "STANDARD HIGHWAY SIGNS". SIGNS OF DIFFERENT DIMENSIONS TO BE ERECTED ON THE SAME POSTS, OR SPAN/MAST ARM MOUNTED, MAY REQUIRE SPECIAL BOLT HOLE PATTERNS.
2. POSTS - SEE CONN. D.O.T. STANDARD SHEET (TR-1208_02) - "METAL SIGN POSTS AND SIGN MOUNTING DETAILS."
3. POSTS - TYPE A (EXCEPT WHERE NOTED WITH A "B" FOR TYPE B)
4. SIGNS SHALL BE FABRICATED OF ONE CONTINUOUS PIECE OF SHEET ALUMINUM. SPLICING OF SHEET ALUMINUM WILL NOT BE ACCEPTED.

COLORS:

S & W - SERIES
BACKGROUND - YELLOW - EXCEPT AS NOTED.
LEGEND - BLACK - EXCEPT AS NOTED.
ALL COLORS SHALL BE TYPE III RETROREFLECTIVE WITH THE EXCEPTION OF BLACK WHICH SHALL BE OPAQUE.

REV.	DATE	INIT.	DESCRIPTION

REVISIONS

SCALE - NONE

ORIGINAL SIGNED

DIVISION OF TRAFFIC ENGINEERING CADD

STATE OF CONNECTICUT
DEPARTMENT OF TRANSPORTATION

SUBMITTED BY: DATE:
APPROVED BY: DATE:

OFFICE OF ENGINEERING

PROJECT TITLE: RECONSTRUCTION OF I-95 OVER WEST RIVER

CADD FILE: spm-18-092522.dgn

TOWN: NEW HAVEN / WEST HAVEN

DRAWING TITLE: SIGN FACE SHEET ALUMINUM S & W - SERIES SIGNS TYPICAL DETAILS

PROJECT NO.: 92-522
DRAWING NO.: SPM-18
SHEET NO.:

D1 - SERIES

D1-1
51-5202 (VARIABLE) →

D1-2
51-5203 (VARIABLE) (VARIABLE) →

VARIABLE LEGEND & ARROW DIRECTION

AREA (SQ. FT)	SIZE (INCHES)	CONN. D.O.T. #	POSTS	ALUM. THK.
4.17	60X10	51-5202	2	.100
8.33	60X20	51-5203	2	.100

D2 - SERIES

D2-1
51-5222 (VARIABLE) 00

D2-2
51-5223 (VARIABLE) (VARIABLE) 00

VARIABLE LEGEND & MILEAGE

AREA (SQ. FT)	SIZE (INCHES)	CONN. D.O.T. #	POSTS	ALUM. THK.
4.17	60X10	51-5222	2	.100
8.33	60X20	51-5223	2	.100

D3 - SERIES

(VARIABLE ROAD NAME)

AREA (SQ. FT)	SIZE (INCHES)	CONN. D.O.T. #	POSTS	ALUM. THK.
4.00	48X12	51-2010	2	.100
5.00	60X12	51-2011	2	.100
6.00	72X12	51-2012	2	.100
7.00	84X12	51-2013	2	.100

D4 - SERIES

PARK & RIDE

AREA (SQ. FT)	SIZE (INCHES)	CONN. D.O.T. #	POSTS	ALUM. THK.
5.00	24X30	51-6001	1	.080

PARK & RIDE
51-6002

PARK & RIDE
51-6003

AREA (SQ. FT)	SIZE (INCHES)	CONN. D.O.T. #	POSTS	ALUM. THK.
5.00	24X30	51-6002	1	.080
5.00	24X30	51-6003	1	.080

51-2666
51-2646
L or R

51-2645

AREA (SQ. FT)	SIZE (INCHES)	CONN. D.O.T. #	POSTS	ALUM. THK.
0.75	12X9	51-2666		.080
2.19	21X15	51-2646		.080
2.19	21X15	51-2645		.080

51-2650

51-2651

AREA (SQ. FT)	SIZE (INCHES)	CONN. D.O.T. #	POSTS	ALUM. THK.
2.19	21X15	51-2650		.080
2.19	21X15	51-2651		.080

NOTICE
THIS PARKING AREA PATROLLED

LEGEND - BLACK
BACKGROUND - WHITE

AREA (SQ. FT)	SIZE (INCHES)	CONN. D.O.T. #	POSTS	ALUM. THK.
15.00	60X36	51-5937	2	.100

PARK AT YOUR OWN RISK
REMOVE KEYS AND LOCK CAR
NOT RESPONSIBLE FOR
PROPERTY LOST OR STOLEN

LEGEND - BLACK
BACKGROUND - WHITE

AREA (SQ. FT)	SIZE (INCHES)	CONN. D.O.T. #	POSTS	ALUM. THK.
4.50	36X18	51-6037	1	.080

D5 - SERIES

D5-2b
REST AREA ↗

LEGEND - WHITE
BACKGROUND - BLUE

AREA (SQ. FT)	SIZE (INCHES)	CONN. D.O.T. #	POSTS	ALUM. THK.
42.25	78	51-6901	2B	.125

SERVICE AREA ↗

LEGEND - WHITE
BACKGROUND - BLUE

AREA (SQ. FT)	SIZE (INCHES)	CONN. D.O.T. #	POSTS	ALUM. THK.
35.00	84X60	51-6158	2B	.125

D7 - SERIES

D-7
51-6802 (VARIABLE) →
51-6803 (VARIABLE) (VARIABLE) →

W or W/O ARROW
VARIABLE ARROW DIRECTION

AREA (SQ. FT)	SIZE (INCHES)	CONN. D.O.T. #	POSTS	ALUM. THK.
4.17	60X10	51-6802	2	.100
8.33	60X20	51-6803	2	.100

D9 - SERIES

D9-2
H

** FOR ARROW SUBPLATES
USE M5 & M6 SERIES

AREA (SQ. FT)	SIZE (INCHES)	CONN. D.O.T. #	POSTS	ALUM. THK.
4.00	24	51-6788	1	.080

D9-3a

** FOR ARROW SUBPLATES
USE M5 & M6 SERIES

AREA (SQ. FT)	SIZE (INCHES)	CONN. D.O.T. #	POSTS	ALUM. THK.
4.00	24	51-6762	1	.080

51-6705 DIESEL →
51-6706 FOOD →
51-6707 PHONE →
51-6708 GAS →
51-6709 LODGING →

VARIABLE ARROW DIRECTION

AREA (SQ. FT)	SIZE (INCHES)	CONN. D.O.T. #	POSTS	ALUM. THK.
2.25	36X9		1	.080

D10 - SERIES

D10-1 MILE 0
D10-2 MILE 0 0
D10-3 MILE 0 0 0 0

AREA (SQ. FT)	SIZE (INCHES)	CONN. D.O.T. #	POSTS	ALUM. THK.
2.00	12X24	51-5291	1	.080
3.00	12X36	51-5292	1	.080
4.00	12X48	51-5293	1	.080

N 0 .0
N 0 0 .0
N 0 0 0 .0

CARDINAL DIRECTION VARIABLE - N, S, E, W

AREA (SQ. FT)	SIZE (INCHES)	CONN. D.O.T. #	POSTS	ALUM. THK.
1.88	10X27	51-5300	1	.080
2.49	10X36	51-5301	1	.080
3.33	10X48	51-5302	1	.080

NORTH
95
MILE
000

CARDINAL DIRECTION,
SHIELD AND NUMERALS ARE VARIABLE

AREA (SQ. FT)	SIZE (INCHES)	CONN. D.O.T. #	POSTS	ALUM. THK.
6.75	18X54	51-5307	1	.080

RECREATIONAL RW- SERIES

RW-080

AREA (SQ. FT)	SIZE (INCHES)	CONN. D.O.T. #	POSTS	ALUM. THK.
4.00	24	51-6873	1	.080

51-2705

51-2706
L or R

AREA (SQ. FT)	SIZE (INCHES)	CONN. D.O.T. #	POSTS	ALUM. THK.
				.080
				.080

E5 - SERIES

E5-1a
EXIT ↖ (L)
EXIT ↗ (R)

FOR USE AT "NO NUMBERED" EXITS

AREA (SQ. FT)	SIZE (INCHES)	CONN. D.O.T. # (L or R)	POSTS	ALUM. THK.
30.00	72X60	51-6150	2B	.125

E5-1a
EXIT ↖ 00 (L)
EXIT 00 ↗ (R)

AREA (SQ. FT)	SIZE (INCHES)	CONN. D.O.T. # (L or R)	POSTS	ALUM. THK.
30.00	72X60	51-6152	2B	.125
37.50	90X60	51-6153	2B	.125
47.50	114X60	51-6154	2B	.125

I - SERIES

(VARIABLE)
RIVER

VARIABLE: RIVER, BROOK, CREEK

AREA (SQ. FT)	SIZE (INCHES)	CONN. D.O.T. #	POSTS	ALUM. THK.
1.50	18X12	51-2009	1	.080
12.00	48X36	51-2051	2	.100

(TOWN NAME)
(INCORPORATED OR SETTLED) (DATE)
TOWN LINE

VARIABLE: TOWN / CITY

AREA (SQ. FT)	SIZE (INCHES)	CONN. D.O.T. #	POSTS	ALUM. THK.
7.50	40X27	51-2020	2	.080

(NAME)
Connecticut

AREA (SQ. FT)	SIZE (INCHES)	CONN. D.O.T. #	POSTS	ALUM. THK.
10.00	48X30	51-2040	2	.100

AREA (SQ. FT)	SIZE (INCHES)	CONN. D.O.T. #	POSTS	ALUM. THK.
6.25	30X30	51-1344		.080

M1 - SERIES

M1-1
INTERSTATE CONNECTICUT 00

VARIABLE: 1, 2 or 3 DIGITS
LEGEND - WHITE
BACKGROUND - RED & BLUE

AREA (SQ. FT)	SIZE (INCHES)	CONN. D.O.T. #	POSTS	ALUM. THK.
3.20	24X24	51-6662	1	.080
3.99	30X24	51-6663	1	.080
7.20	36X36	51-6666	2	.080
8.99	45X36	51-6667	2	.100

M1-4
00

VARIABLE: 1, 2 or 3 DIGITS
LEGEND - BLACK
BACKGROUND - WHITE

AREA (SQ. FT)	SIZE (INCHES)	CONN. D.O.T. #	POSTS	ALUM. THK.
4.00	24X24	51-6615	1	.080
9.00	36X36	51-6635	2	.080

M1-5
00

VARIABLE: 1, 2 or 3 DIGITS
LEGEND - BLACK
BACKGROUND - WHITE

AREA (SQ. FT)	SIZE (INCHES)	CONN. D.O.T. #	POSTS	ALUM. THK.
4.00	24X24	51-6616	1	.080
9.00	36X36	51-6636	2	.080

M2 - SERIES

M2-1
JCT

AREA (SQ. FT)	SIZE (INCHES)	CONN. D.O.T. #	COLOR	ALUM. THK.
2.19	21X15	51-6640	(1)	.080
2.19	21X15	51-6610	(2)	.080

M3 - SERIES

M3-1
NORTH

AREA (SQ. FT)	SIZE (INCHES)	CONN. D.O.T. #	COLOR	ALUM. THK.
2.00	24X12	51-6651	(1)	.080
2.00	24X12	51-6611	(2)	.080
3.12	30X15	51-6671	(1)	.080
3.12	30X15	51-6631	(2)	.080

M3-4
WEST

AREA (SQ. FT)	SIZE (INCHES)	CONN. D.O.T. #	COLOR	ALUM. THK.
2.00	24X12	51-6654	(1)	.080
2.00	24X12	51-6614	(2)	.080
3.12	30X15	51-6674	(1)	.080
3.12	30X15	51-6634	(2)	.080

M3-2
EAST

AREA (SQ. FT)	SIZE (INCHES)	CONN. D.O.T. #	COLOR	ALUM. THK.
2.00	24X12	51-6652	(1)	.080
2.00	24X12	51-6612	(2)	.080
3.12	30X15	51-6672	(1)	.080
3.12	30X15	51-6632	(2)	.080

M3-3
SOUTH

AREA (SQ. FT)	SIZE (INCHES)	CONN. D.O.T. #	COLOR	ALUM. THK.
2.00	24X12	51-6653	(1)	.080
2.00	24X12	51-6613	(2)	.080
3.12	30X15	51-6673	(1)	.080
3.12	30X15	51-6633	(2)	.080

M4 - SERIES

M4-5
TO

AREA (SQ. FT)	SIZE (INCHES)	CONN. D.O.T. #	COLOR	ALUM. THK.
2.00	24X12	51-6650	(1)	.080
2.00	24X12	51-6620	(2)	.080

M5 - SERIES

M5-1
L or R

AREA (SQ. FT)	SIZE (INCHES)	CONN. D.O.T. #	COLOR	ALUM. THK.
2.19	21X15	51-2690L	(1)	.080
2.19	21X15	51-2691R	(1)	.080
2.19	21X15	51-2630L	(2)	.080
2.19	21X15	51-2631R	(2)	.080

M5-2
L or R

AREA (SQ. FT)	SIZE (INCHES)	CONN. D.O.T. #	COLOR	ALUM. THK.
2.19	21X15	51-2692L	(1)	.080
2.19	21X15	51-2693R	(1)	.080
2.19	21X15	51-2632L	(2)	.080
2.19	21X15	51-2633R	(2)	.080

M6 - SERIES

M6-1
L or R

AREA (SQ. FT)	SIZE (INCHES)	CONN. D.O.T. #	COLOR	ALUM. THK.
2.19	21X15	51-2686	(1)	.080
2.19	21X15	51-2626	(2)	.080

M6-4

AREA (SQ. FT)	SIZE (INCHES)	CONN. D.O.T. #	COLOR	ALUM. THK.
2.19	21X15	51-2697	(1)	.080
2.19	21X15	51-2627	(2)	.080

M6-2
L or R

AREA (SQ. FT)	SIZE (INCHES)	CONN. D.O.T. #	COLOR	ALUM. THK.
2.19	21X15	51-2688L	(1)	.080
2.19	21X15	51-2689R	(1)	.080
2.19	21X15	51-2628L	(2)	.080
2.19	21X15	51-2629R	(2)	.080
4.89	32X22	51-2609R	(2)	.080

M6-3

AREA (SQ. FT)	SIZE (INCHES)	CONN. D.O.T. #	COLOR	ALUM. THK.
2.19	21X15	51-2685	(1)	.080
2.19	21X15	51-2625	(2)	.080

METRIC CONVERSION CHART (1" = 25mm)

ENGLISH	METRIC	ENGLISH	METRIC	ENGLISH	METRIC
12"	300	42"	1050	72"	1800
18"	450	48"	1200	78"	1950
24"	600	54"	1350	84"	2100
30"	750	60"	1500	90"	2250
36"	900	66"	1650	96"	2400

SYMBOL - WHITE
BACKGROUND - BLUE

AREA (SQ. FT)	SIZE (INCHES)	CONN. D.O.T. #	POSTS	ALUM. THK.
3.00	18X24	51-5943	1	.080

51-6504 (VARIABLE)
51-6505 (VARIABLE) (VARIABLE)

TO BE SUBMOUNTED W/ 51-5943
LEGEND - WHITE
BACKGROUND - BLUE

AREA (SQ. FT)	SIZE (INCHES)	CONN. D.O.T. #	POSTS	ALUM. THK.
0.75	18X6	51-6504	1	.080
1.50	18X12	51-6505	1	.080

NOTES:

FOR METRIC SEE CONVERSION CHART.

1. FOR SPECIFIC SIGN DESIGN CONTACT CONN. D.O.T., DIVISION OF TRAFFIC ENGINEERING. FOR BOLT HOLE PATTERN REFER TO FHWA PUBLICATION "STANDARD HIGHWAY SIGNS". SIGNS OF DIFFERENT DIMENSIONS TO BE ERECTED ON THE SAME POSTS, OR SPAN/MAST ARM MOUNTED, MAY REQUIRE SPECIAL BOLT HOLE PATTERNS.
2. POSTS - SEE CONN. D.O.T. STANDARD SHEET (TR-1208_02) - "METAL SIGN POSTS AND SIGN MOUNTING DETAILS."
3. POSTS - TYPE A (EXCEPT WHERE NOTED WITH A "B" FOR TYPE B)
4. SIGNS SHALL BE FABRICATED OF ONE CONTINUOUS PIECE OF SHEET ALUMINUM. SPLICING OF SHEET ALUMINUM WILL NOT BE ACCEPTED.

COLORS:

D - SERIES
D1, 2, 3, 4, 10 BACKGROUND-GREEN, LEGEND-WHITE
D7, RW BACKGROUND-BROWN, LEGEND-WHITE
D9 BACKGROUND-BLUE, LEGEND-WHITE
ALL OTHER D-SERIES AS NOTED

E - SERIES
BACKGROUND-GREEN, LEGEND-WHITE

I - SERIES
BACKGROUND-GREEN, LEGEND-WHITE
(EXCEPT AS NOTED)

M2 - M6 SERIES
(1) BACKGROUND-BLUE, LEGEND-WHITE
(2) BACKGROUND-WHITE, LEGEND-BLACK

ALL COLORS SHALL BE TYPE III RETROREFLECTIVE WITH THE EXCEPTION OF BLACK WHICH SHALL BE OPAQUE.

REV.	DATE	INIT.	DESCRIPTION

REVISIONS

ALL DIMENSIONS ARE IN MILLIMETERS (mm) EXCEPT AS NOTED

SCALE - NONE

ORIGINAL SIGNED

DIVISION OF TRAFFIC ENGINEERING CADD

STATE OF CONNECTICUT
DEPARTMENT OF TRANSPORTATION

SUBMITTED BY: DATE:
APPROVED BY: DATE:

OFFICE OF ENGINEERING

PROJECT TITLE:
RECONSTRUCTION OF I-95 OVER WEST RIVER

CADD FILE: spm-19-092522.dgn

TOWN:
NEW HAVEN / WEST HAVEN

DRAWING TITLE:
SIGN FACE SHEET ALUMINUM
D,E,I & M - SERIES SIGNS
TYPICAL DETAILS

PROJECT NO.: 92-522
DRAWING NO.: SPM-19
SHEET NO.:

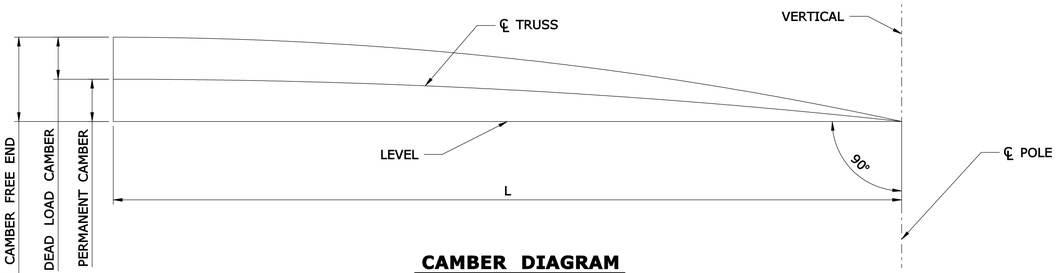

CAMBER DIAGRAM

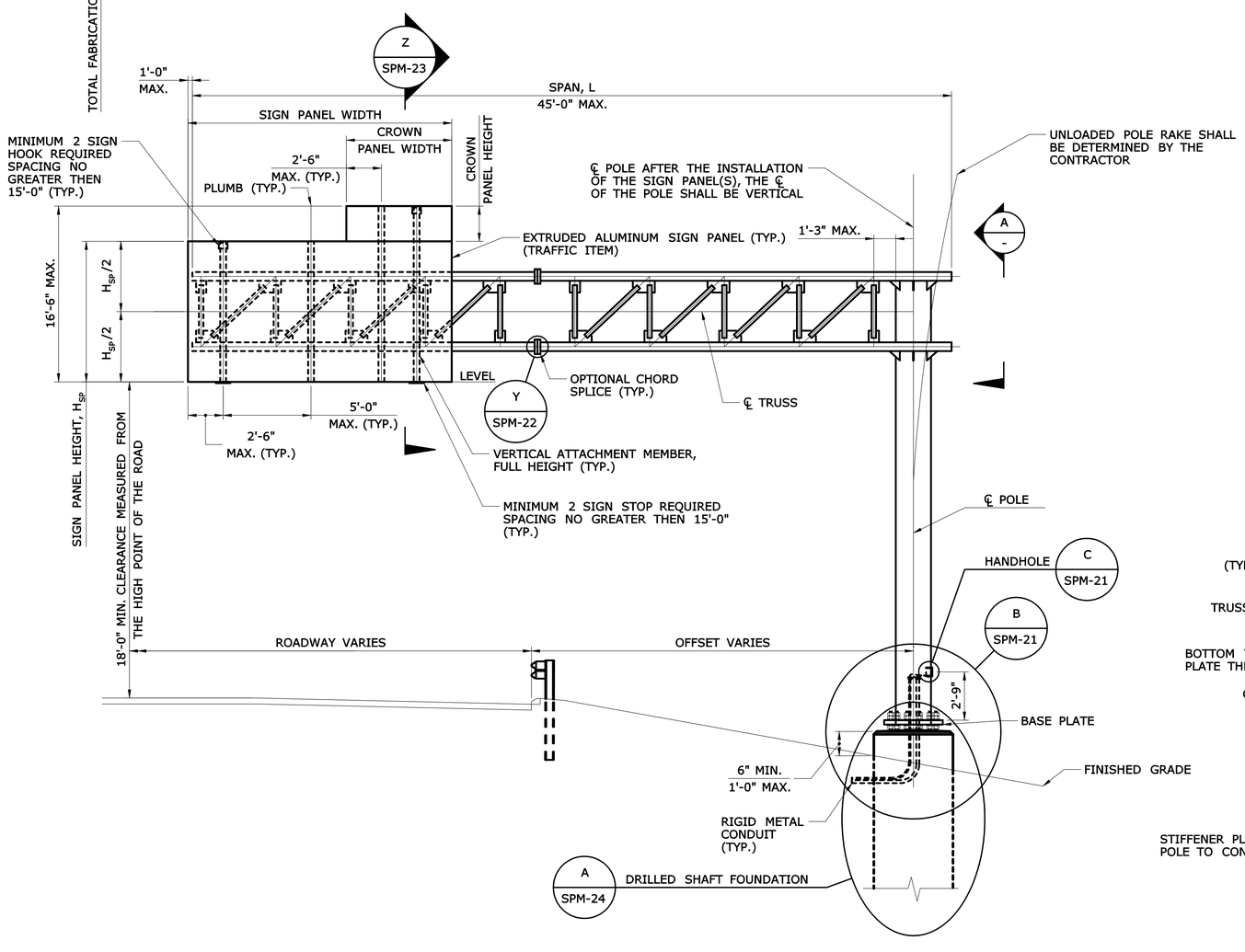

ELEVATION

SCALE: ¼" = 1'-0"

THE 4 CHORD TRUSS CANTILEVER SIGN STRUCTURE, INCLUDING THE ANCHORAGE TO THE FOUNDATION AND THE HARDWARE AND STRUCTURAL MEMBERS REQUIRED TO SUPPORT THE TRAFFIC APPURTENANCES, SHALL BE DESIGNED, FABRICATED, ERECTED, ASSEMBLED AND INSTALLED BY THE CONTRACTOR IN ACCORDANCE WITH THE SPECIAL PROVISION "4 CHORD TRUSS CANTILEVER SIGN STRUCTURE".

THE 4 CHORD TRUSS CANTILEVER SIGN STRUCTURE SHALL BE COMPOSED OF A 4 CHORD TRUSS HORIZONTAL OVERHEAD SPAN MEMBER SUPPORTED ON A SINGLE LINEAR TUBULAR POLE MEMBER.

THE DETAILS PRESENTED AND REFERRED TO ON THIS SHEET REPRESENT CONCEPTUAL DETAILS OF A SIGN SUPPORT CONSISTENT WITH THE REQUIREMENTS IN THE SPECIFICATIONS. THE CONTRACTOR IS RESPONSIBLE FOR DETERMINING ALL DETAILS AND DIMENSIONS.

THE APPROXIMATE DIMENSIONS OF THE HORIZONTAL TRUSS AND THE POLE HEIGHTS ARE SHOWN IN PLAN AND ELEVATION ON THE TRAFFIC SHEETS. THE ACTUAL SIGN SUPPORT DIMENSIONS SHALL BE DETERMINED BY THE CONTRACTOR BASED ON A THE HORIZONTAL AND VERTICAL CLEARANCES SHOWN ON THE TRAFFIC SHEETS, A FIELD SURVEY OF THE FINISHED GRADE AT THE SITE, THE ELEVATION OF THE TOP OF THE FINISHED FOUNDATION, THE LOCATIONS OF OVERHEAD AND SUBSURFACE UTILITIES, THE LOCATION OF THE DRAINAGE FACILITIES AND NOISE BARRIER WALL LOCATIONS.

THE SIGN PANELS, INCLUDING CROWN PANELS AS APPLICABLE, SHALL BE LOCATED ON THE HORIZONTAL TRUSS BASED ON THE DIMENSIONS SHOWN ON THE TRAFFIC SHEETS AND THE ACTUAL SIGN SUPPORT DIMENSIONS. THE SIGN PANELS SHALL BE INSTALLED SYMMETRICALLY ABOUT THE CENTERLINE OF THE TRUSS. THE NUMBER AND SPACING OF PANEL SUPPORT MEMBERS SHALL BE DETERMINED BY THE CONTRACTOR BASED ON THE WIDTH OF THE SIGN AND CROWN PANELS AND THE SUPPORT MEMBER SPACING PARAMETERS. SIGN PANELS SHALL BE SUPPORTED BY NO LESS THAN 3 SUPPORT MEMBERS. CROWN PANELS SHALL BE SUPPORTED BY NO LESS THAN 2 SUPPORT MEMBERS.

THE CONTRACTOR SHALL BE RESPONSIBLE FOR THE PROPER FIT OF THE SIGN SUPPORT STRUCTURES ON THE CONSTRUCTED FOUNDATIONS. PRIOR TO FABRICATION, THE CONTRACTOR SHALL TAKE FIELD MEASUREMENTS TO VERIFY ALL SIGN SUPPORT DIMENSIONS DEPENDANT UPON THE CONSTRUCTED FOUNDATIONS. THE OVERHEAD MEMBER SHALL BE TEMPORARILY SUPPORTED, IN ORDER TO BRING ALL PLATES OF THE CONNECTIONS INTO FIRM CONTACT, WHILE THE HIGH STRENGTH BOLTS ARE INSTALLED AND TENSIONED. THE CONTRACTOR SHALL TAKE THE PROPER PRECAUTIONS TO ENSURE THE STABILITY OF ALL STRUCTURAL ELEMENTS UNTIL THE TOTAL STRUCTURE IS ERECTED.

THE COST OF THE TUBULAR STEEL MEMBERS, STRUCTURAL STEEL ROLLED SHAPES, PLATES AND BARS, HIGH-STRENGTH BOLTS AND ANCHORAGE MATERIALS, INCLUDING THE DESIGN, FABRICATION, COATING AND ERECTION, SHALL BE PAID FOR UNDER THE ITEM "4 CHORD TRUSS CANTILEVER SIGN STRUCTURE". THE COST OF FOUNDATION EXCAVATION, REINFORCEMENT AND CONCRETE, INCLUDING THE DESIGN AND FABRICATION, SHALL BE PAID FOR UNDER THE ITEM "DRILLED SHAFT TRAFFIC STRUCTURE FOUNDATION".

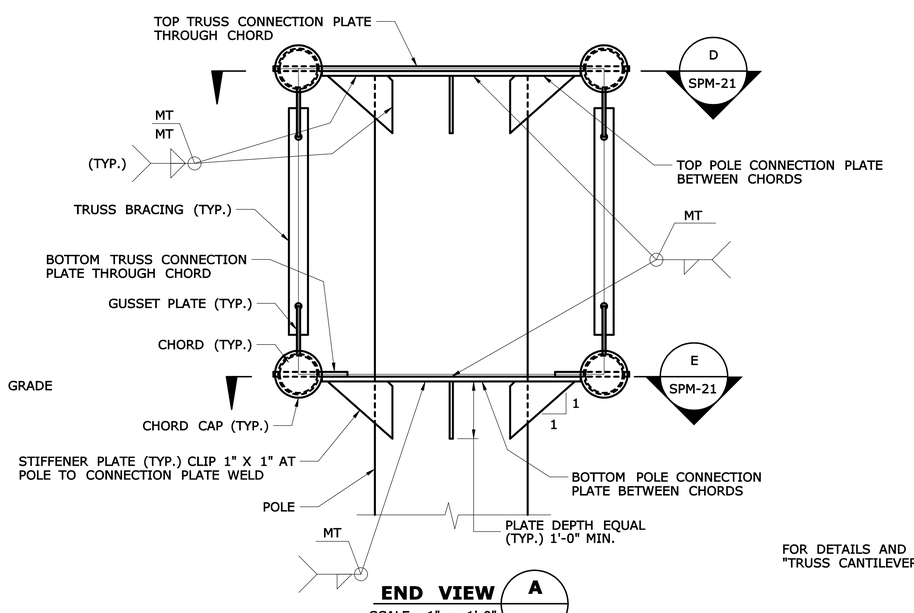

END VIEW

SCALE: 1" = 1'-0"

A
-

FOR DETAILS AND SECTIONS, SEE DRAWING "TRUSS CANTILEVER SIGN STRUCTURE DETAILS - 1".

Drawing Identifier
Description Sheet Number

REV.	DATE	DESCRIPTION	SHEET. NO
		REVISIONS	

SCALE AS NOTED

DESIGNER: O. JAMBOTKAR
DRAFTER: G. GERARD
CHECKED BY: T. LALIBERTE
DATE CHECKED: 11-12-12

STATE OF CONNECTICUT
DEPARTMENT OF TRANSPORTATION

ENGINEER: PB AMERICAS
APPROVED BY:
DATE:

PROJECT TITLE: RECONSTRUCTION OF I-95 OVER WEST RIVER

CADD spm-20-092522.dgn
PLOTTED 11/13/2012

TOWN: NEW HAVEN / WEST HAVEN

DRAWING TITLE: 4 CHORD CANTILEVER TRUSS SIGN STRUCTURE

PROJECT NO.: 92-522
DRAWING NO.: SPM-20
SHEET NO.:

2:26:17 PM
11/13/2012
t:\v8cadd\projects\pb18735\fd\highway\contract_sheets\spm-20-092522.dgn

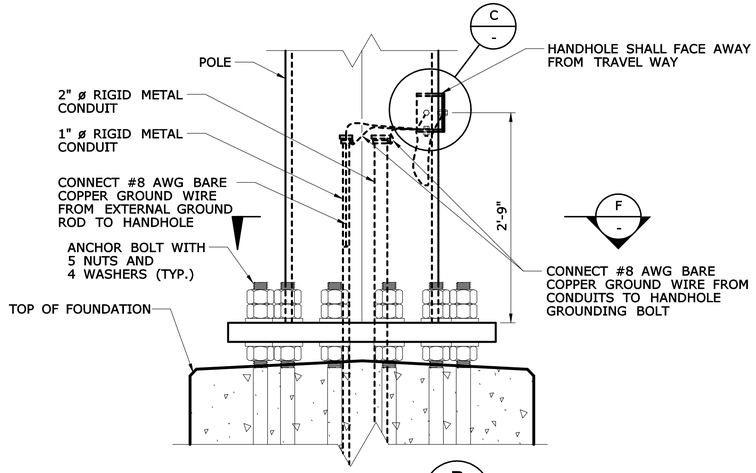

DETAIL B
SCALE: 1" = 1'-0"

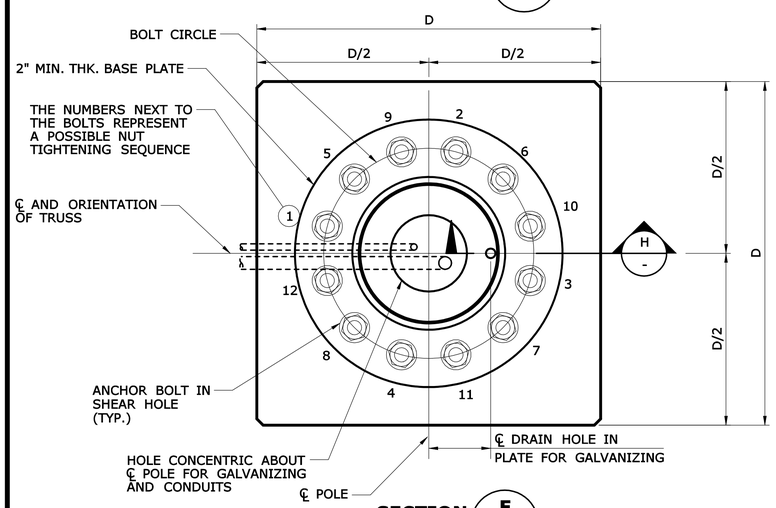

SECTION F
SCALE: 1" = 1'-0"

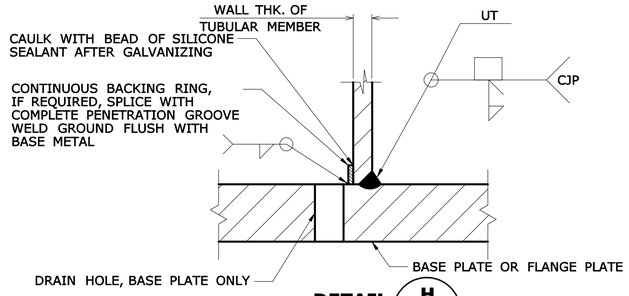

DETAIL H
SCALE: 3" = 1'-0"

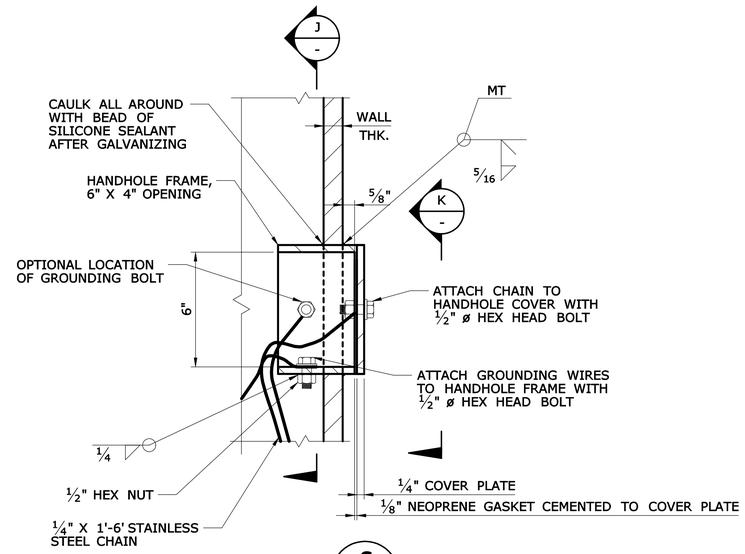

DETAIL C
SCALE: 3" = 1'-0"

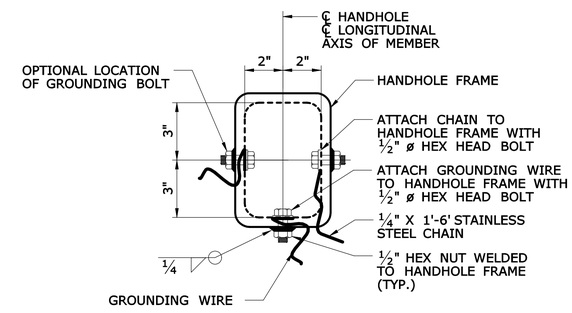

SECTION J
SCALE: 3" = 1'-0"

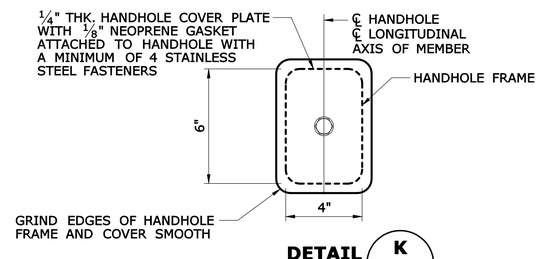

DETAIL K
SCALE: 3" = 1'-0"

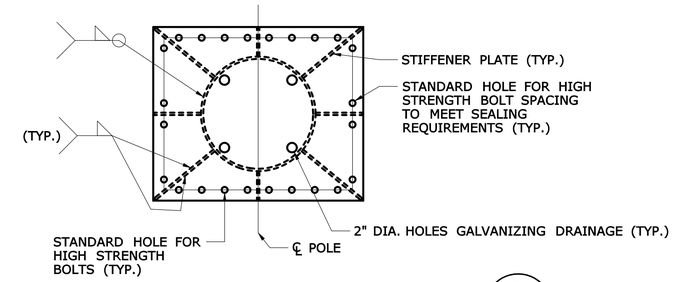

SECTION - TOP CONNECTION PLATE D -
SCALE: 3/4" = 1'-0"

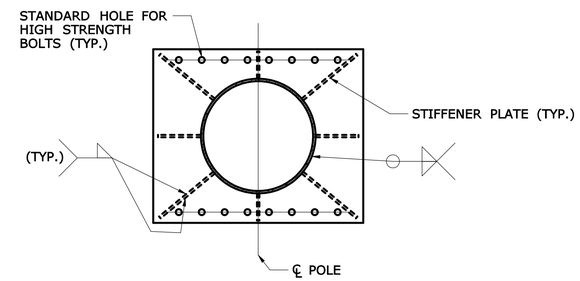

SECTION - BOTTOM CONNECTION PLATE E -
SCALE: 3/4" = 1'-0"

REV.	DATE	DESCRIPTION	SHEET. NO
		REVISIONS	

SCALE AS NOTED

DESIGNER: O. JAMBOTKAR
DRAFTER: G. GERARD
CHECKED BY: T. LALIBERTE
DATE CHECKED: 11-12-12

STATE OF CONNECTICUT
DEPARTMENT OF TRANSPORTATION

ENGINEER: PB AMERICAS
APPROVED BY:
DATE:

PROJECT TITLE: RECONSTRUCTION OF I-95 OVER WEST RIVER
CADD spm-21-092522.dgn
PLOTTED 11/13/2012

TOWN: NEW HAVEN / WEST HAVEN
DRAWING TITLE: TRUSS CANTILEVER SIGN STRUCTURE DETAILS-1

PROJECT NO.: 92-522
DRAWING NO.: SPM-21
SHEET NO.:

2:26:21 PM
11/13/2012
t:\v8cadd\projects\pb18735\fd\highway\contract_sheets\spm-21-092522.dgn

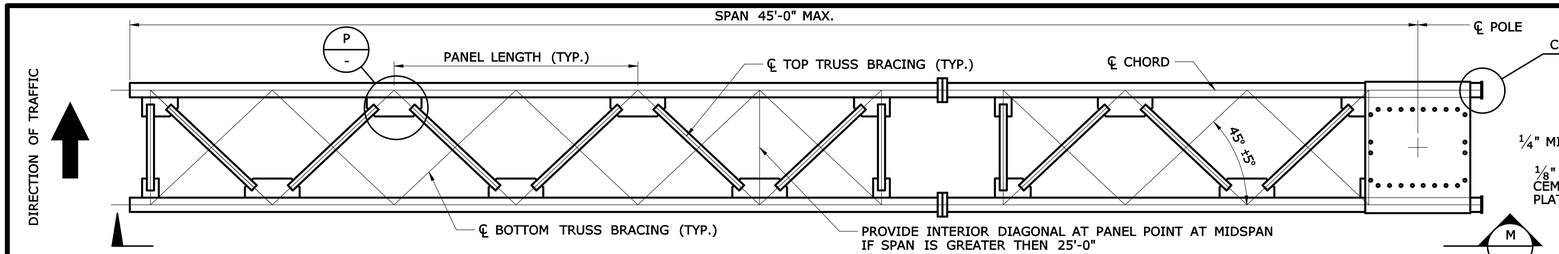

PLAN L
SCALE: 3/8" = 1'-0"

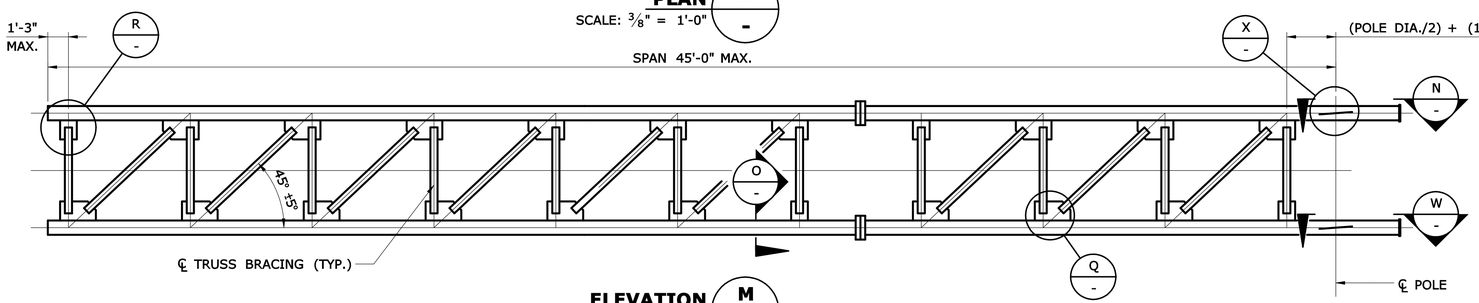

ELEVATION M
SCALE: 3/8" = 1'-0"

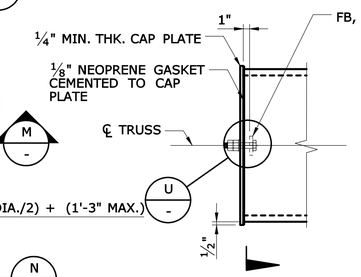

DETAIL S
SCALE: 1" = 1'-0"

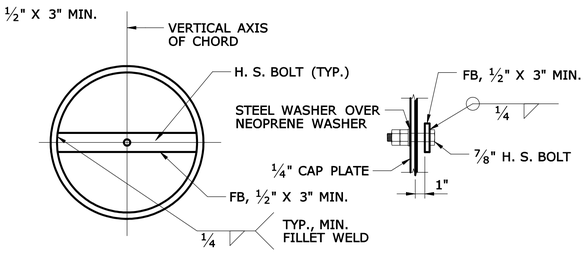

SECTION T
SCALE: 1" = 1'-0"

DETAIL U
SCALE: 1 1/2" = 1'-0"

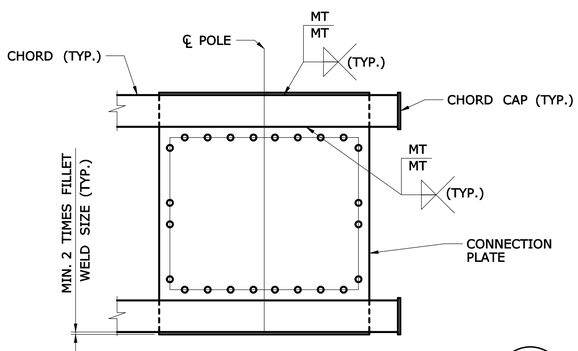

VIEW - TOP TRUSS CONNECTON PLATE N
SCALE: 3/4" = 1'-0"

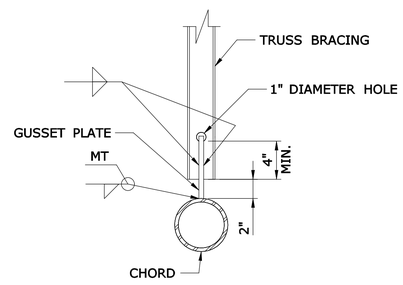

SECTION O
SCALE: 1 1/2" = 1'-0"

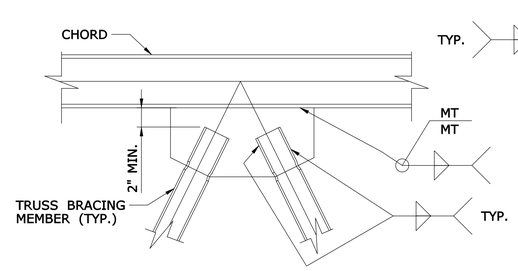

GUSSET PLATE DETAIL P
SCALE: 1 1/2" = 1'-0"

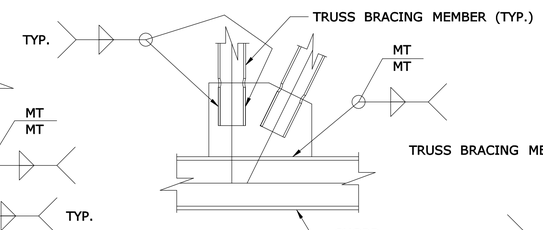

GUSSET PLATE DETAIL Q
SCALE: 1 1/2" = 1'-0"

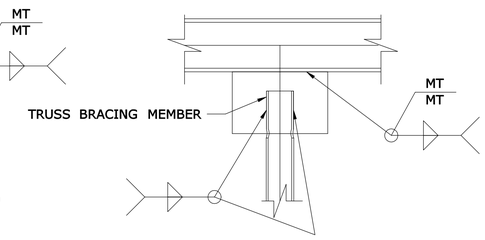

GUSSET PLATE DETAIL R
SCALE: 1 1/2" = 1'-0"

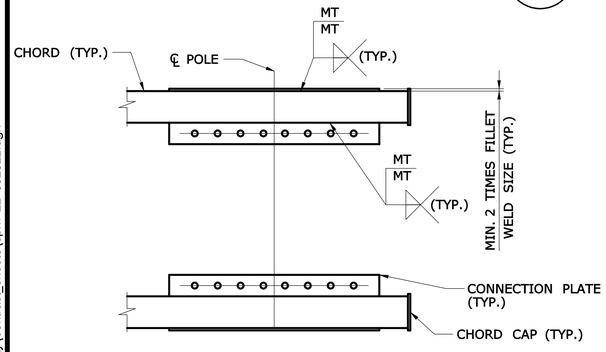

VIEW - BOTTOM TRUSS CONNECTION PLATE W
SCALE: 3/4" = 1'-0"

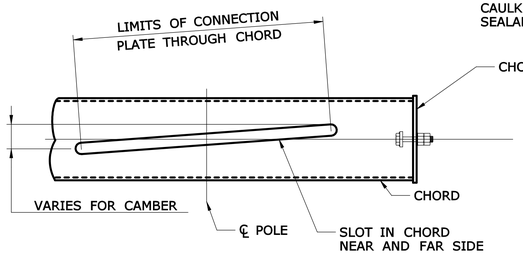

SLOTTED CHORD DETAIL X
SCALE: 1 1/2" = 1'-0"

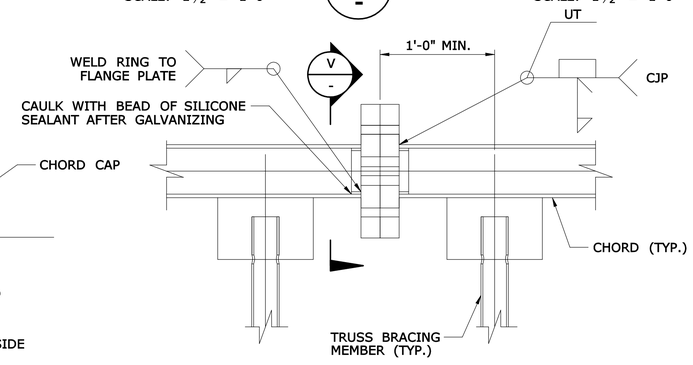

CHORD SPLICE Y
SCALE: 1 1/2" = 1'-0"

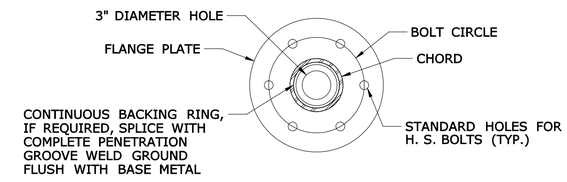

SECTION V
SCALE: 1 1/2" = 1'-0"

REV.	DATE	DESCRIPTION	SHEET. NO
		REVISIONS	

SCALE AS NOTED

DESIGNER: O. JAMBOTKAR
DRAFTER: G. GERARD
CHECKED BY: T. LALIBERTE
DATE CHECKED: 11-12-12

STATE OF CONNECTICUT
DEPARTMENT OF TRANSPORTATION

ENGINEER: PB AMERICAS
APPROVED BY:
DATE:

PROJECT TITLE: RECONSTRUCTION OF I-95 OVER WEST RIVER
CADD spm-22-092522.dgn
PLOTTED 11/13/2012

TOWN: NEW HAVEN / WEST HAVEN
DRAWING TITLE: TRUSS CANTILEVER SIGN STRUCTURE DETAILS-2

PROJECT NO.: 92-522
DRAWING NO.: SPM-22
SHEET NO.:

2:26:23 PM
11/13/2012
t:\v8cadd\projects\pb18735\fd\highway\contract_sheets\spm-22-092522.dgn

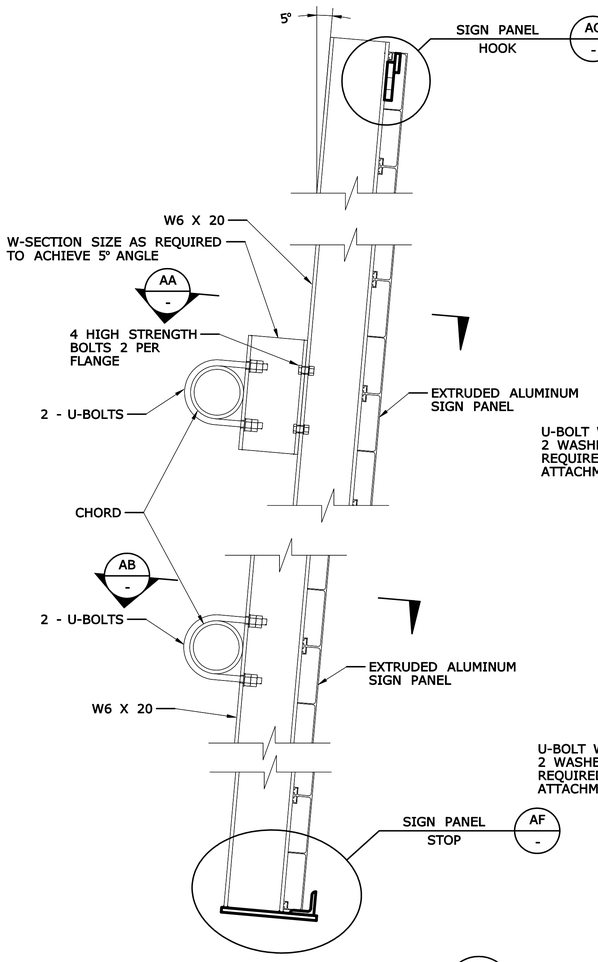

VERTICAL ATTACHMENT DETAIL Z

SCALE: 1½" = 1'-0"

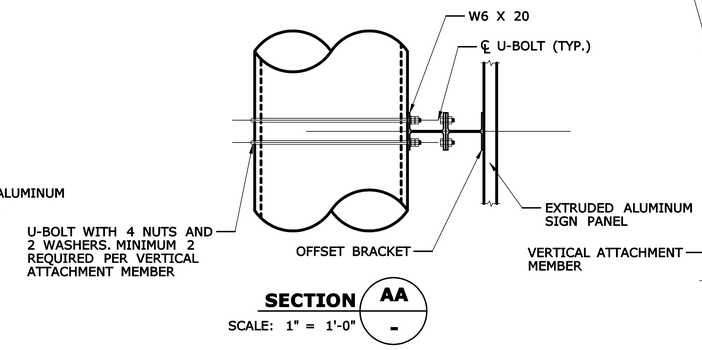

SECTION AA

SCALE: 1" = 1'-0"

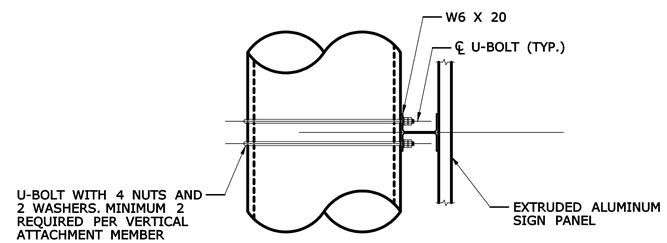

SECTION AB

SCALE: 1" = 1'-0"

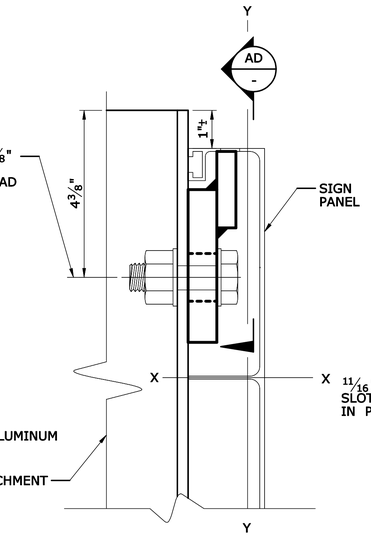

DETAIL AC

SCALE: 6" = 1'-0"

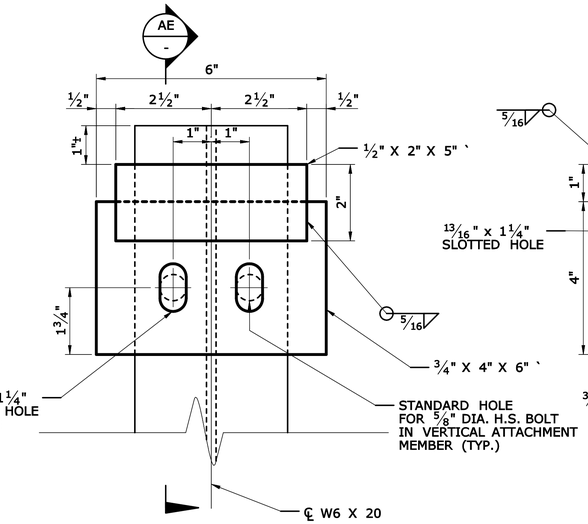

SECTION AD

SCALE: 6" = 1'-0"

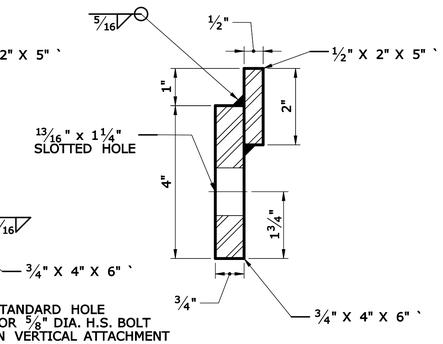

SECTION AE

SCALE: 6" = 1'-0"

TYPICAL SIGN HOOK DETAILS

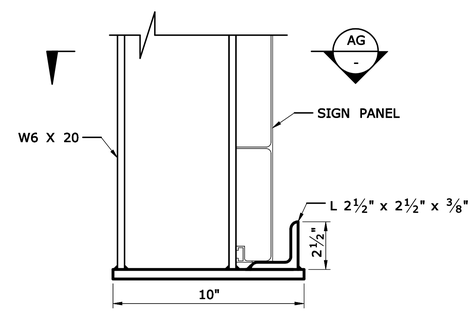

DETAIL AF

SCALE: 3" = 1'-0"

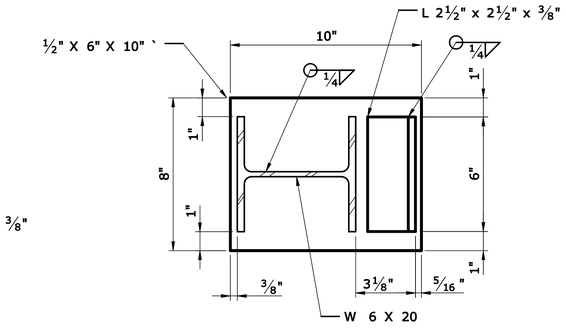

DETAIL AG

SCALE: 3" = 1'-0"

TYPICAL SIGN STOP DETAILS

REV.	DATE	DESCRIPTION	SHEET. NO
		REVISIONS	

SCALE AS NOTED

DESIGNER: O. JAMBOTKAR
DRAFTER: G. GERARD
CHECKED BY: T. LALIBERTE
DATE CHECKED: 11-12-12

STATE OF CONNECTICUT
DEPARTMENT OF TRANSPORTATION

ENGINEER: PB AMERICAS
APPROVED BY:
DATE:

PROJECT TITLE: RECONSTRUCTION OF I-95 OVER WEST RIVER

CADD spm-23-092522.dgn
PLOTTED 11/13/2012

TOWN: NEW HAVEN / WEST HAVEN

DRAWING TITLE: TRUSS CANTILEVER SIGN STRUCTURE DETAILS-3

PROJECT NO.: 92-522
DRAWING NO.: SPM-23
SHEET NO.:

2:26:26 PM
11/13/2012
t:\v8cadd\projects\pb18735\fd\highway\contract_sheets\spm-23-092522.dgn

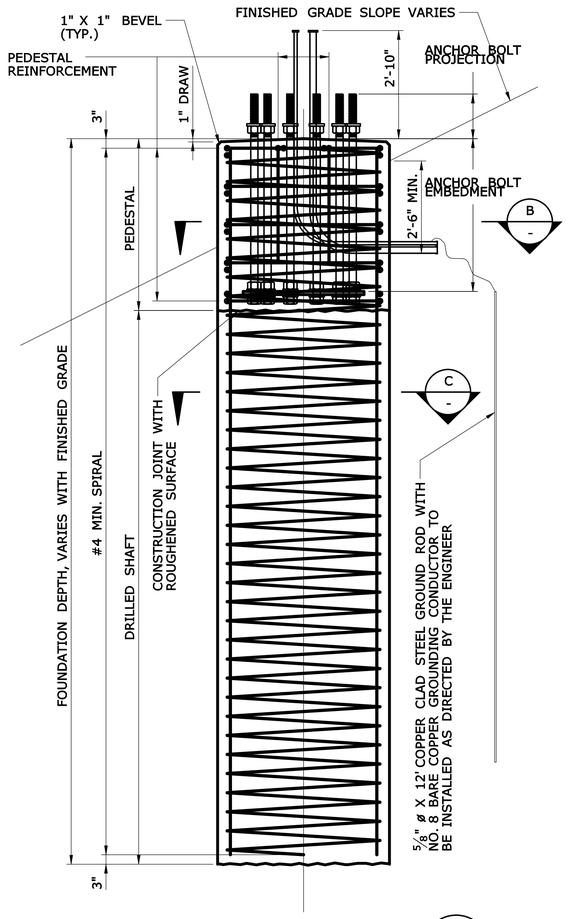

FOUNDATION IN EARTH (A / -)

SCALE: ½" = 1'-0"

FOUNDATION NOTES

THE DRILLED SHAFT FOUNDATION SHALL BE DESIGNED, FABRICATED, AND CONSTRUCTED BY THE CONTRACTOR IN ACCORDANCE WITH THE SPECIAL PROVISION "DRILLED SHAFT TRAFFIC STRUCTURE FOUNDATION".

FOR THE DESIGN OF THE DRILLED SHAFT FOUNDATION, THE CONTRACTOR IS RESPONSIBLE TO DETERMINE THE SUBSURFACE CONDITIONS (CHARACTER OF THE SOIL AND ROCK, PRESENCE OF GROUND WATER, ETC.) IN THE LOCATION OF, ADJACENT TO AND BELOW THE SHAFT EXCAVATION. SOIL BORINGS, IF AVAILABLE, ARE INCLUDED WITH THE CONTRACT DOCUMENTS. THE CONTRACTOR MAY OBTAIN SUBSURFACE INFORMATION AT HIS OWN EXPENSE.

THE DESIGN OF THE FOUNDATION SHALL BE COORDINATED WITH THE SIGN SUPPORT AND THE SUPPORT ANCHORAGE TO ENSURE THAT THE FOUNDATION IS ADEQUATE FOR THE SUPPORT REACTIONS AND TO AVOID CONFLICTS BETWEEN THE EMBEDDED SUPPORT ANCHORAGE AND THE FOUNDATION REINFORCEMENT.

THE SIGN SUPPORT SHALL NOT BE INSTALLED UNTIL BOTH THE PEDESTAL CONCRETE AND SHAFT CONCRETE HAVE REACHED THE DESIGN COMPRESSIVE STRENGTH, f'_c, OF 4,000 PSI AT 28 DAYS.

ADDITIONAL RIGID METAL CONDUITS SHALL BE PROVIDED AS DIRECTED BY THE ENGINEER.

ALL EMPTY RIGID METAL CONDUITS SHALL BE CAPPED.

THE RIGID METAL CONDUIT SWEEPS SHALL EXTEND A MINIMUM 2'-0" FROM THE SIDE OF THE FOUNDATION.

THE NO. 8 AWG BARE COPPER CONDUCTOR SHALL BE CONNECTED TO THE EXTERNAL GROUND ROD USING A GROUNDING CLAMP APPROVED FOR DIRECT BURIAL.

THE COST OF FOUNDATION EXCAVATION, REINFORCEMENT AND CONCRETE, INCLUDING THE DESIGN AND FABRICATION, SHALL BE PAID FOR UNDER THE ITEM "DRILLED SHAFT TRAFFIC STRUCTURE FOUNDATION".

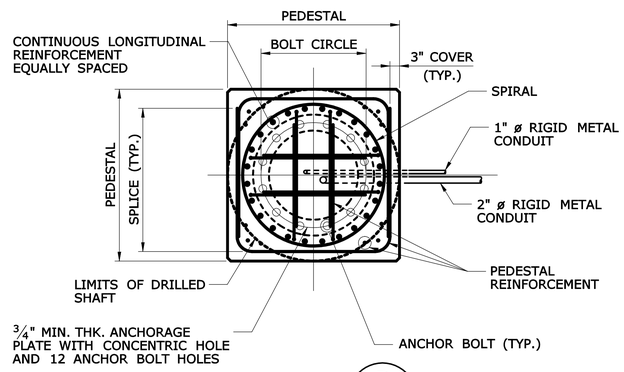

SECTION (B / -)

SCALE: ½" = 1'-0"

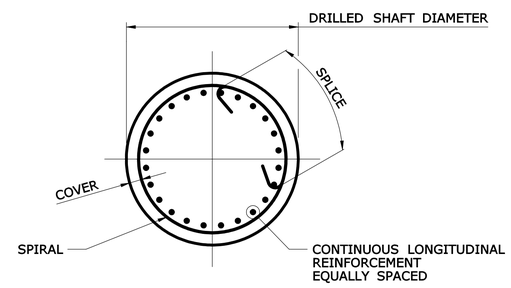

SECTION (C / -)

SCALE: ½" = 1'-0"

REV.	DATE	DESCRIPTION	SHEET. NO
		REVISIONS	

SCALE AS NOTED

DESIGNER: O. JAMBOTKAR
DRAFTER: G. GERARD
CHECKED BY: T. LALIBERTE
DATE CHECKED: 11-12-12

STATE OF CONNECTICUT
DEPARTMENT OF TRANSPORTATION

ENGINEER: PB AMERICAS
APPROVED BY:
DATE:

PROJECT TITLE: RECONSTRUCTION OF I-95 OVER WEST RIVER

CADD spm-24-092522.dgn
PLOTTED 11/13/2012

TOWN: NEW HAVEN / WEST HAVEN

DRAWING TITLE: DRILLED SHAFT TRAFFIC STRUCTURE FOUNDATION

PROJECT NO.: 92-522
DRAWING NO.: SPM-24
SHEET NO.:

2:26:29 PM
11/13/2012
t:\v8cadd\projects\pb18735\fd\highway\contract_sheets\spm-24-092522.dgn

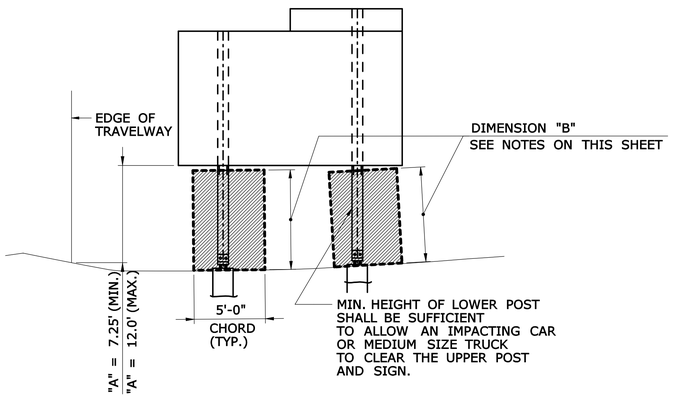

LEVEL TO SHALLOW SLOPES

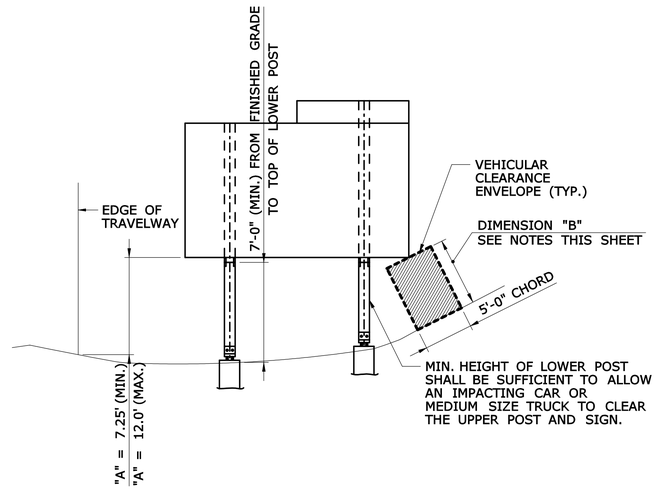

STEEPER SLOPES

SIGN LOCATION - CUT

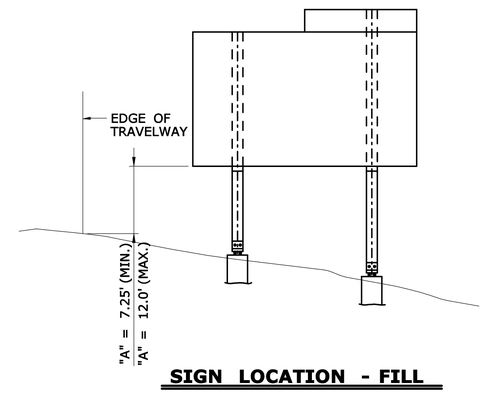

SIGN LOCATION - FILL

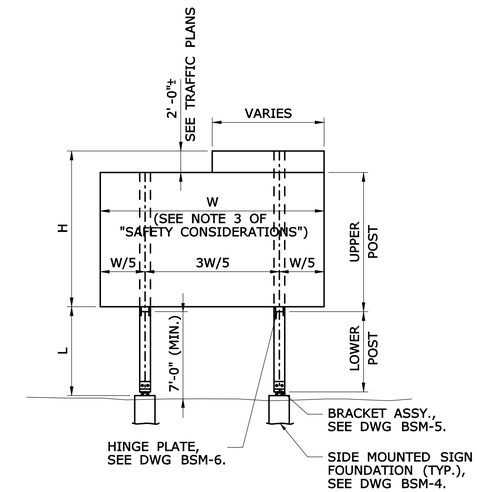

TYPICAL POST MOUNTED SIGN

NOTES FOR DETERMINING DIMENSION "B"

1. DIMENSION "B" IS THE SMALLER OF:
   A. THE CLEAR DISTANCE BETWEEN THE BOTTOM OF SIGN AND THE FINISHED GRADE.
   B. THE CLEAR DISTANCE BETWEEN THE BOTTOM OF UPPER POST AND THE FINISHED GRADE.
2. DIMENSION "B" SHALL TYPICALLY BE A MINIMUM OF 7'-0" TO CLEAR AN IMPACTING CAR OR MEDIUM SIZE TRUCK.
3. WHEN DIMENSION "A" WOULD EXCEED 12'-0", CONSIDERATION MAY BE GIVEN TO REDUCING DIMENSION "B" IN ACCORDANCE WITH PROVISIONS OF NOTE 3.
4. DIMENSION "B" MAY BE LESS THAN 7'-0":
   A. IF THE POST IS OUT OF THE CLEAR ZONE.
   B. IF THE POST IS WITHIN THE CLEAR ZONE BUT SHIELDED BY AN APPROPRIATE BARRIER SYSTEM.
   C. IN NO CASE SHALL DIMENSION "B" BE LESS THAN 2'-6".
5. IF FIELD CONDITIONS EXCEED THESE REQUIREMENTS, CONTACT THE ENGINEER FOR DIRECTION.

SAFETY CONSIDERATIONS

1. THE HINGE BETWEEN THE UPPER AND LOWER POSTS SHALL BE AT LEAST 7 FT. ABOVE THE GROUND.
2. NO SUPPLEMENTARY SIGNS SHALL BE ATTACHED BELOW THE HINGES.
3. THE POST SPACING SHALL BE 3/5 W EXCEPT AS NOTED BELOW:

UNIT WEIGHT OF POST	POST SPACING REQUIREMENTS
LESS THAN 17 PLF	NO RESTRICTIONS ON POST SPACING **
FROM 17 PLF TO 44 PLF	PROVIDE AT LEAST 7 FT. CLEAR DISTANCE BETWEEN POSTS ***
EXCEEDS 44 PLF	RELOCATE SIGN OUTSIDE OF CLEAR ZONE OR SHIELD SIGN FROM VEHICULAR IMPACT AS DIRECTED BY THE ENGINEER

** IF THE TOTAL COMBINED WEIGHT OF ONE LOWER POST AND TWO BRACKETS EXCEEDS 600 LBS OR THE COMBINED WEIGHT OF TWO POSTS AND FOUR BRACKETS LOCATED WITHIN A CLEAR DISTANCE OF 7 FT OF EACH OTHER EXCEEDS 600 LBS, THE SIGN SHALL BE RELOCATED OUTSIDE OF THE CLEAR ZONE OR SHALL BE PROPERLY SHIELDED FROM VEHICULAR IMPACT AS DIRECTED BY THE ENGINEER. SEE "TABLE 1 - BRACKET DATA" ON BSM-5 FOR BRACKET WEIGHT.

*** IF THE REQUIRED CLEAR DISTANCE CANNOT BE ATTAINED, THE ENGINEER MAY DIRECT THAT THE SIGN BE RELOCATED OUTSIDE THE CLEAR ZONE OR THAT IT BE PROPERLY SHIELDED FROM VEHICULAR IMPACT.

SELECTING A POST SIZE, BRACKET NUMBER, AND HINGE TYPE

1. DETERMINE THE REQUIRED SIGN DIMENSIONS AND POST HEIGHTS (SEE "TYPICAL POST MOUNTED SIGN" DETAIL, THIS SHEET).

   W = SIGN WIDTH (HORIZONTAL DIMENSION)
   H = SIGN HEIGHT (VERTICAL DIMENSION) (ADD CROWN HEIGHT WHEN APPLICABLE)
   L = POST HEIGHT (THE DISTANCE BETWEEN THE TOP OF THE FOUNDATION AND THE BOTTOM OF THE SIGN MEASURED AT THE TALLER POST)

2. ENTER "POST SELECTION TABLE 1 AND 2" ON DWG BSM-2 AND BSM-3 WITH THE DESIRED VALUES OF W, H, AND L. ROUND UP TO THE NEAREST VALUES IN THE TABLE. READ THE CORRESPONDING POST SIZE AND BRACKET NUMBER. REFER TO DWG BSM-5 FOR BRACKET TYPE AND BSM-6 FOR TYPICAL HINGE REQUIREMENTS.

   EXAMPLE: W = 8', L = 10', H = 14'

   ENTER "POST SELECTION TABLE 1" ON DWG BSM-2 SINCE TABLE 1 IS APPLICABLE FOR SIGN WIDTH ≤ 15'. LOCATE THE FOLLOWING CELL:

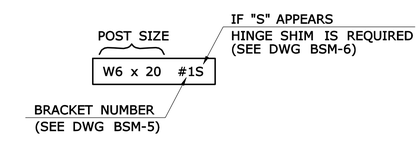

3. IF NO POST SIZE IS SHOWN FOR THE COMBINATION OF DIMENSIONS W, L, AND H, THE ENGINEER WILL EITHER PROVIDE A DESIGN FOR THE POST AND FOUNDATION OR RELOCATE THE SIGN.

NOTES ON TOTAL HEIGHT OF SIGN POSTS

1. UPPER SIGN POSTS SHALL EXTEND TO THE TOP OF FULL WIDTH SIGN PANEL OR THE TOP OF CROWN, WHICHEVER IS HIGHER.
2. FOR SIGN OR CROWN PANEL RETROFIT, THE EXISTING SIGN POSTS SHALL BE REPLACED WITH NEW POSTS OR EXTENDED WITH ADDITIONAL SECTIONS USING HINGE ASSEMBLIES. REFER TO TRAFFIC TYPICAL SHEETS "EXTRUDED SIGN PANEL - RETROFIT DETAIL".

BREAKAWAY SIGN SUPPORT TYPICAL SHEETS ARE IN US CUSTOMARY UNITS

FOR METRIC PROJECTS:
1. DETERMINE US CUSTOMARY POST SIZE FROM THE POST SELECTION TABLE.
2. CALCULATE THE WEIGHT OF POSTS IN US CUSTOMARY UNITS (CWT) THEN USE THE FOLLOWING CONVERSION FACTOR TO CONVERT CWT TO KILOGRAMS.

1 CWT = 45.36 KG

EXAMPLE: 120 CWT x 45.36 KG/CWT = 5443 KG

TABLE OF CONTENT

DWG. NO.	DESCRIPTION
BSM-1	GENERAL NOTES
BSM-2	POST SELECTION TABLE 1 (W ≤ 15 FT.)
BSM-3	POST SELECTION TABLE 2 (W > 15 FT.)
BSM-4	FOUNDATION DETAILS
BSM-5	BRACKET DETAILS
BSM-6	HINGE DETAILS

REV.	DATE	DESCRIPTION	SHEET. NO

REVISIONS

NOT TO SCALE

DESIGNER: R. P. TALBOT
DRAFTER: M.C. DEEGAN
CHECKED BY:
DATE CHECKED:

STATE OF CONNECTICUT
DEPARTMENT OF TRANSPORTATION

ENGINEER:
APPROVED BY: DATE:

PROJECT TITLE: RECONSTRUCTION OF I-95 OVER WEST RIVER

CADD spm-25-092522.dgn PLOTTED 11/13/2012

TOWN: NEW HAVEN / WEST HAVEN

DRAWING TITLE: BREAKAWAY SIGN SUPPORTS GENERAL NOTES

PROJECT NO.: 92-522
DRAWING NO.: SPM-25
SHEET NO.:

2:26:32 PM
11/13/2012
t:\v8cadd\projects\pb18735\fd\highway\contract_sheets\spm-25-092522.dgn

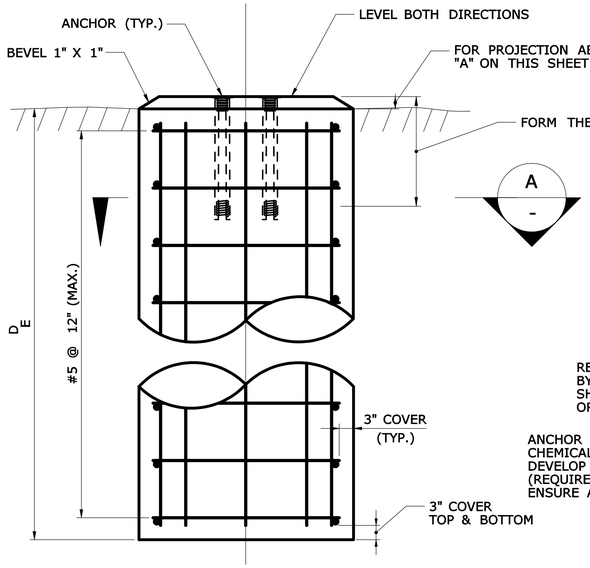

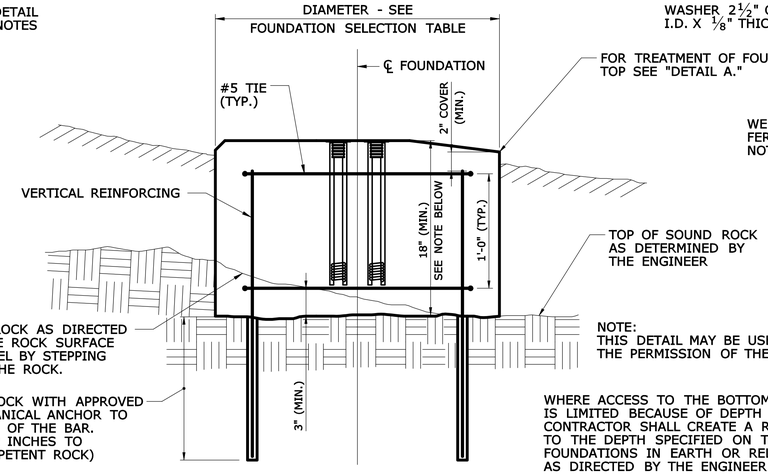

NOTE:
THIS DETAIL MAY BE USED ONLY WITH THE PERMISSION OF THE ENGINEER.

WHERE ACCESS TO THE BOTTOM OF THE HOLE IS LIMITED BECAUSE OF DEPTH TO ROCK, THE CONTRACTOR SHALL CREATE A ROCK SOCKET TO THE DEPTH SPECIFIED ON THE PLANS FOR FOUNDATIONS IN EARTH OR RELOCATE THE SIGN AS DIRECTED BY THE ENGINEER

TYPICAL SECTION SIGN

SCALE: $1\frac{1}{2}$" = 1'-0"

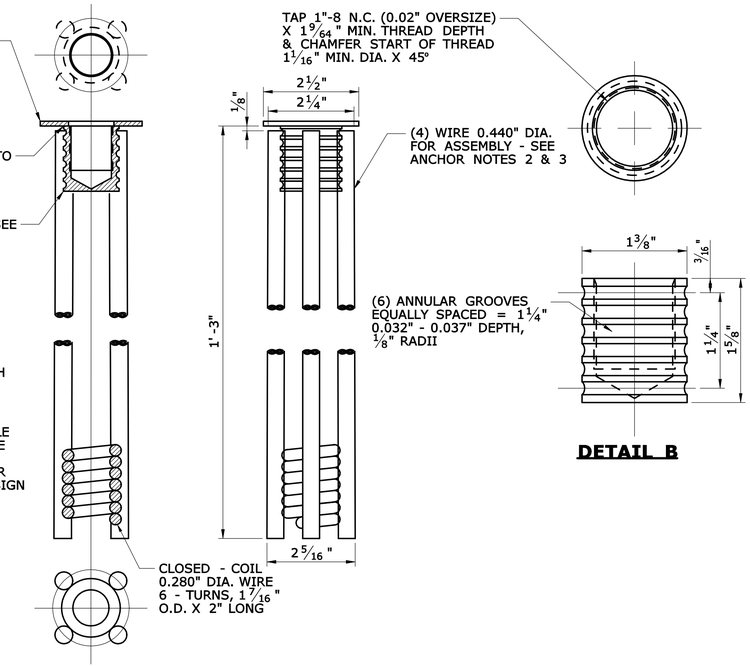

DETAIL B

SCALE: $\frac{3}{4}$" = 1'-0"

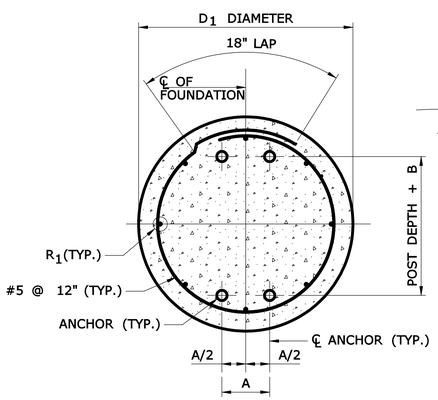

SECTION - DRILLED FOUNDATION A -

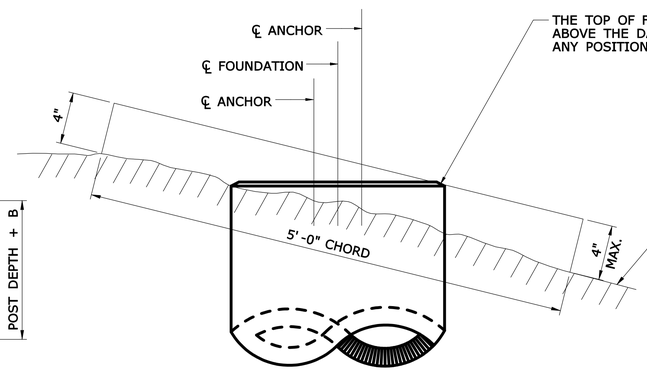

STANDARD FOUNDATION TOP

THE TOP OF FOUNDATION SHALL NOT PROJECT ABOVE THE DASHED LINE WHEN THE LINE IS IN ANY POSITION STRADDLING THE FOUNDATION

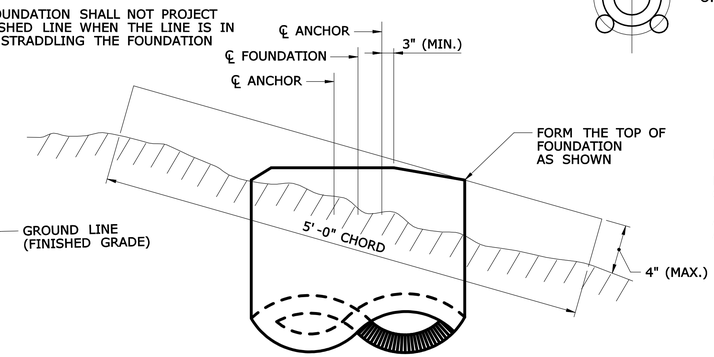

MODIFIED FOUNDATION TOP
(SEE FOUNDATION NOTE 3)

DETAIL A - PROJECTION OF FOUNDATION ABOVE GROUND

FOUNDATION NOTES

1. DETAIL A ILLUSTRATES THE METHOD USED TO MEASURE THE PROJECTION OF THE FOUNDATION ABOVE FINISHED GRADE. IT IS IMPORTANT THAT THE TOP OF THE FOUNDATION BE PLACED IN ACCORDANCE WITH THIS DETAIL.
2. THE TOP OF FOUNDATION SHALL BE CONSTRUCTED AS CLOSE TO THE FINISHED GRADE AS POSSIBLE, BUT SHOULD NOT BE COVERED BY SOIL.
3. USE A MODIFIED TOP WHERE PROJECTION LIMITS CANNOT BE MET WITH THE STANDARD TOP.
4. FOUNDATIONS SHALL BE PLACED AGAINST UNDISTURBED SOIL. WHERE ROCK IS ENCOUNTERED, THE CONTRACTOR MAY USE THE "SIGN SUPPORT FOUNDATION IN ROCK" DETAIL SHOWN ON THIS SHEET WITH THE PERMISSION OF THE ENGINEER.
5. IF UNSUITABLE SOIL IS ENCOUNTERED DURING EXCAVATION, THE ENGINEER SHALL BE NOTIFIED. AN ALTERNATE FOUNDATION DESIGN MAY BE SUPPLIED BY THE ENGINEER, OR THE SIGN MAY BE RELOCATED.
6. PLACEMENT OF FOUNDATIONS SHALL BE IN ACCORDANCE WITH "SIGN SUPPORT PLACEMENT DETAILS" ON THIS SHEET.
7. WHERE FOUNDATIONS ARE PLACED ON SLOPES STEEPER THAN 1V : 6H, GRADE AROUND THE FOUNDATIONS IN CONFORMANCE WITH DETAIL A.

SELECTING A FOUNDATION:

ENTER THE "FOUNDATION SELECTION TABLE" WITH THE POST SIZE AND BRACKET NO. SELECTED FROM THE "POST SELECTION TABLE 1 OR 2" ON DWG BSM-2 OR DWG BSM-3. READ HORIZONTALLY ACROSS THE TABLE THE CORRESPONDING VALUES OF FOUNDATION DIAMETER, EMBEDMENT DEPTH, REINFORCING BAR SIZE, ANCHOR SPACING AND DIMENSION "B".

FOUNDATION SELECTION TABLE FOR BREAKAWAY SIGNS

POST SIZE	DIAMETER D_I (FT.)	DEPTH D_E (FT.)	REINF. STEEL R_I	ANCHOR SPACING A (IN.)	B (IN.) BRACKET NO. 1	2	3
W6 W8	2.5	8	8 - #5	3	$7\frac{15}{16}$	$8\frac{1}{16}$	$8\frac{1}{8}$
W10 W12	2.5	8	8 - #5	4	$7\frac{15}{16}$	$8\frac{1}{16}$	$8\frac{1}{8}$
W14 W16 W18 W21	3.25	8	8 - #6	4	$7\frac{15}{16}$	$8\frac{1}{16}$	$8\frac{1}{8}$

ERECTION NOTE:

FOR MAXIMUM EFFECTIVENESS AND TO ELIMINATE OR MINIMIZE SPECULAR GLARE, POSITION SIDE MOUNTED SIGNS AS FOLLOWS:

A. ON TANGENT SECTION, POSITION THE SIGN SUCH THAT THE VERTICAL AXIS IS PLUMB AND THE HORIZONTAL AXIS IS AT AN ANGLE OF 93° WITH THE TRAFFIC LANE WHICH THE SIGN SERVES (SEE DIAGRAM).

B. WHERE THE SIGN IS POSITIONED ON THE OUTSIDE OR INSIDE OF THE HORIZONTAL CURVE, THE SIGN FACE SHOULD BE ORIENTED 90° TO THE STRAIGHT LINE BETWEEN THE SIGN AND THE POINT FROM WHICH THE SIGN IS TO BE READ AT THE DISTANCE SHOWN.

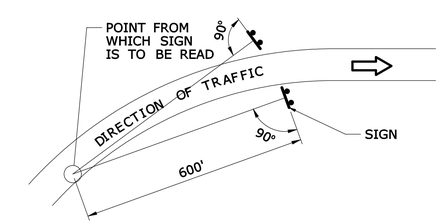

SIGN SUPPORT PLACEMENT DETAILS

REV.	DATE	DESCRIPTION	SHEET. NO
		REVISIONS	

NOT TO SCALE

DESIGNER: R. P. TALBOT
DRAFTER: M.C. DEEGAN
CHECKED BY:
DATE CHECKED:

STATE OF CONNECTICUT
DEPARTMENT OF TRANSPORTATION
ENGINEER: OFFICE OF ENGINEERING
APPROVED BY: DATE:

PROJECT TITLE: RECONSTRUCTION OF I-95 OVER WEST RIVER
CADD spm-26-092522.dgn PLOTTED 11/13/2012

TOWN: NEW HAVEN / WEST HAVEN
DRAWING TITLE: BREAKAWAY SIGN SUPPORTS FOUNDATION DETAILS

PROJECT NO.: 92-522
DRAWING NO.: SPM-26
SHEET NO.:

2:26:35 PM
11/13/2012
t:\v8cadd\projects\pb18735\fd\highway\contract_sheets\spm-26-092522.dgn

W	L	H (Sign Height + Crown Height)																		
		4 ft	5 ft	6 ft	7 ft	8 ft	9 ft	10 ft	11 ft	12 ft	13 ft	14 ft	15 ft	16 ft	17 ft	18 ft	19 ft	20 ft	21 ft	22 ft
8 ft	7 ft	W6 x 9 #3	W6 x 9 #3	W6 x 9 #2	W6 x 9 #2	W6 x 9 #2	W6 x 12 #2	W6 x 12 #2	W6 x 12 #2	W6 x 15 #2	W6 x 15 #1	W6 x 15 #1S	W6 x 16 #1S	W8 x 18 #2S	W8 x 21 #1S	W10 x 22 #2	W10 x 22 #2	W10 x 26 #2	W10 x 26 #1S	W10 x 26 #1S
	8 ft	W6 x 9 #2	W6 x 9 #2	W6 x 9 #2	W6 x 9 #2	W6 x 12 #2	W6 x 12 #2	W6 x 12 #2	W6 x 15 #2	W6 x 15 #1	W6 x 15 #1	W6 x 16 #1S	W8 x 18 #1	W8 x 21 #1S	W8 x 21 #1S	W10 x 22 #2	W10 x 26 #1	W10 x 26 #1	W10 x 26 #1S	W10 x 30 #1S
	9 ft	W6 x 9 #2	W6 x 9 #2	W6 x 9 #2	W6 x 12 #2	W6 x 12 #2	W6 x 12 #2	W6 x 15 #1	W6 x 15 #1	W6 x 15 #1	W6 x 16 #1	W8 x 18 #1	W6 x 20 #1S	W8 x 21 #1S	W8 x 21 #1S	W10 x 26 #1	W10 x 26 #1	W10 x 26 #1	W10 x 30 #1S	W12 x 30 #1
	10 ft	W6 x 9 #2	W6 x 9 #2	W6 x 12 #2	W6 x 12 #2	W6 x 12 #1	W6 x 15 #1	W6 x 15 #1	W6 x 15 #1	W6 x 15 #1	W8 x 18 #1	W6 x 20 #1S	W6 x 20 #1S	W8 x 21 #1S	W10 x 26 #1	W10 x 26 #1	W10 x 26 #1	-	-	-
	11 ft	W6 x 9 #2	W6 x 9 #2	W6 x 12 #1	W6 x 12 #1	W6 x 15 #1	W6 x 15 #1	W6 x 15 #1	W6 x 15 #1	W8 x 18 #1	W6 x 20 #1	W6 x 20 #1S	W8 x 21 #1	-	-	-	-	-	-	-
	12 ft	W6 x 9 #2	W6 x 12 #1	W6 x 12 #1	W6 x 15 #1	W6 x 15 #1	W6 x 15 #1	W6 x 15 #1	W8 x 18 #1	W6 x 20 #1	W6 x 20 #1	W6 x 20 #1S	-	-	-	-	-	-	-	-
	13 ft	W6 x 12 #1	W6 x 12 #1	W6 x 12 #1	W6 x 15 #1	W6 x 15 #1	W6 x 15 #1	W8 x 18 #1	W8 x 18 #1	W6 x 20 #1	W6 x 20 #1	-	-	-	-	-	-	-	-	-
	14 ft	W6 x 12 #1	W6 x 12 #1	W6 x 15 #1	W6 x 15 #1	W6 x 15 #1	W6 x 16 #1	W8 x 18 #1	W6 x 20 #1	W6 x 20 #1	-	-	-	-	-	-	-	-	-	-
	15 ft	W6 x 12 #1	W6 x 15 #1	W6 x 15 #1	W6 x 15 #1	W6 x 15 #1	W8 x 18 #1	-	-	-	-	-	-	-	-	-	-	-	-	-
	16 ft	W6 x 12 #1	W6 x 15 #1	W6 x 15 #1	W6 x 15 #1	-	-	-	-	-	-	-	-	-	-	-	-	-	-	-
9 ft	7 ft	W6 x 9 #3	W6 x 9 #3	W6 x 9 #2	W6 x 9 #2	W8 x 10 #2	W6 x 12 #2	W6 x 12 #2	W6 x 15 #2	W6 x 15 #2	W6 x 15 #1S	W6 x 15 #1S	W8 x 18 #2S	W8 x 21 #2S	W10 x 22 #2	W10 x 22 #2	W10 x 26 #2	W10 x 26 #2S	W10 x 26 #1S	W12 x 30 #2S
	8 ft	W6 x 9 #2	W6 x 9 #2	W6 x 9 #2	W8 x 10 #2	W6 x 12 #2	W6 x 12 #2	W6 x 15 #2	W6 x 15 #2	W6 x 15 #1	W6 x 15 #1S	W8 x 18 #2	W8 x 21 #2S	W8 x 21 #1S	W10 x 22 #2	W10 x 26 #2	W10 x 26 #1	W10 x 26 #1S	W12 x 30 #2	W12 x 30 #2S
	9 ft	W6 x 9 #2	W6 x 9 #2	W6 x 9 #2	W6 x 12 #2	W6 x 12 #2	W6 x 15 #2	W6 x 15 #1	W6 x 15 #1	W6 x 15 #1	W8 x 18 #2	W6 x 20 #1S	W8 x 21 #1S	W8 x 21 #1S	W10 x 26 #2	W10 x 26 #1	W10 x 26 #1	W10 x 30 #1S	W12 x 30 #1	-
	10 ft	W6 x 9 #2	W6 x 9 #2	W6 x 12 #2	W6 x 12 #2	W6 x 15 #1	W6 x 15 #1	W6 x 15 #1	W6 x 15 #1	W8 x 18 #1	W6 x 20 #1S	W6 x 20 #1S	W8 x 21 #1S	W10 x 26 #1	W10 x 26 #1	W10 x 26 #1	-	-	-	-
	11 ft	W6 x 9 #2	W6 x 12 #2	W6 x 12 #1	W6 x 12 #1	W6 x 15 #1	W6 x 15 #1	W6 x 15 #1	W6 x 15 #1	W8 x 18 #1	W6 x 20 #1	W6 x 20 #1S	W8 x 21 #1S	W10 x 26 #1	W10 x 26 #1	-	-	-	-	-
	12 ft	W6 x 9 #2	W6 x 12 #2	W6 x 12 #1	W6 x 15 #1	W6 x 15 #1	W6 x 15 #1	W6 x 15 #1	W8 x 18 #1	W6 x 20 #1	W6 x 20 #1	W8 x 21 #1	-	-	-	-	-	-	-	-
	13 ft	W6 x 12 #1	W6 x 12 #1	W6 x 15 #1	W6 x 15 #1	W6 x 15 #1	W6 x 16 #1	W8 x 18 #1	W6 x 20 #1	W6 x 20 #1	-	-	-	-	-	-	-	-	-	-
	14 ft	W6 x 12 #1	W6 x 12 #1	W6 x 15 #1	W6 x 15 #1	W6 x 15 #1	W8 x 18 #1	W6 x 20 #1	W6 x 20 #1	W6 x 20 #1	-	-	-	-	-	-	-	-	-	-
	15 ft	W6 x 12 #1	W6 x 15 #1	W6 x 15 #1	W6 x 15 #1	W8 x 18 #1	-	-	-	-	-	-	-	-	-	-	-	-	-	-
	16 ft	W6 x 15 #1	W6 x 15 #1	W6 x 15 #1	-	-	-	-	-	-	-	-	-	-	-	-	-	-	-	-
10 ft	7 ft	W6 x 9 #3	W6 x 9 #3	W6 x 9 #2	W6 x 9 #2	W6 x 12 #2	W6 x 12 #2	W6 x 12 #2	W6 x 15 #2	W6 x 15 #2	W6 x 15 #1S	W8 x 18 #2	W8 x 18 #2S	W10 x 22 #2	W10 x 22 #2	W10 x 26 #2	W10 x 26 #2S	W10 x 26 #2S	W12 x 30 #2S	W14 x 30 #2S
	8 ft	W6 x 9 #2	W6 x 9 #2	W6 x 9 #2	W6 x 12 #2	W6 x 12 #2	W6 x 12 #2	W6 x 15 #2	W6 x 15 #1	W6 x 15 #1	W8 x 18 #2	W8 x 18 #2S	W8 x 21 #1S	W10 x 22 #2	W10 x 26 #2	W10 x 26 #2	W10 x 26 #1S	W12 x 30 #2	W14 x 30 #2	-
	9 ft	W6 x 9 #2	W6 x 12 #2	W6 x 12 #2	W6 x 12 #2	W6 x 15 #2	W6 x 15 #2	W6 x 15 #1	W6 x 15 #1	W6 x 15 #1	W8 x 18 #2	W6 x 20 #1S	W8 x 21 #1S	W8 x 21 #1S	W10 x 26 #2	W10 x 26 #2	W10 x 26 #1	W10 x 30 #2	-	-
	10 ft	W6 x 9 #2	W6 x 12 #2	W6 x 12 #2	W6 x 12 #2	W6 x 15 #1	W6 x 15 #1	W6 x 15 #1	W6 x 16 #1	W8 x 18 #1	W6 x 20 #1S	W8 x 21 #1S	W10 x 26 #2	W10 x 26 #1	W10 x 26 #1	-	-	-	-	-
	11 ft	W6 x 9 #2	W6 x 12 #2	W6 x 12 #1	W6 x 15 #1	W6 x 15 #1	W6 x 15 #1	W6 x 16 #1	W8 x 18 #1	W6 x 20 #1	W6 x 20 #1	W8 x 24 #1S	-	-	-	-	-	-	-	-
	12 ft	W6 x 12 #2	W6 x 12 #1	W6 x 15 #1	W6 x 15 #1	W6 x 15 #1	W6 x 15 #1	W8 x 18 #1	W6 x 20 #1	W6 x 20 #1	W10 x 22 #1	-	-	-	-	-	-	-	-	-
	13 ft	W6 x 12 #1	W6 x 12 #1	W6 x 15 #1	W6 x 15 #1	W6 x 15 #1	W8 x 18 #1	W6 x 20 #1	W6 x 20 #1	W8 x 21 #1	-	-	-	-	-	-	-	-	-	-
	14 ft	W6 x 12 #1	W6 x 15 #1	W6 x 15 #1	W6 x 15 #1	W8 x 18 #1	W6 x 20 #1	W6 x 20 #1	W6 x 20 #1	-	-	-	-	-	-	-	-	-	-	-
	15 ft	W6 x 12 #1	W6 x 15 #1	W6 x 15 #1	W6 x 16 #1	W8 x 18 #1	W6 x 20 #1	W6 x 20 #1	-	-	-	-	-	-	-	-	-	-	-	-
	16 ft	W6 x 15 #1	W6 x 15 #1	W6 x 15 #1	W6 x 15 #1	-	-	-	-	-	-	-	-	-	-	-	-	-	-	-
11 ft	7 ft	W6 x 9 #3	W6 x 9 #3	W6 x 9 #2	W8 x 10 #3	W6 x 12 #2	W6 x 12 #2	W6 x 15 #2	W6 x 15 #2	W6 x 15 #2S	W6 x 15 #1S	W8 x 18 #2S	W8 x 21 #2S	W10 x 22 #2	W10 x 22 #2	W10 x 26 #2	W10 x 26 #2S	W12 x 26 #2S	W14 x 30 #2S	W16 x 36 #2S
	8 ft	W6 x 9 #2	W6 x 9 #2	W6 x 9 #2	W6 x 12 #2	W6 x 12 #2	W6 x 15 #2	W6 x 15 #2	W6 x 15 #1	W6 x 15 #1S	W8 x 18 #2	W8 x 21 #2S	W8 x 21 #1S	W10 x 22 #2	W10 x 26 #2	W10 x 26 #2S	W12 x 30 #2	W14 x 30 #2	-	-
	9 ft	W6 x 9 #2	W6 x 9 #2	W6 x 12 #2	W6 x 12 #2	W6 x 15 #2	W6 x 15 #2	W6 x 15 #1	W6 x 15 #1	W8 x 18 #2	W6 x 20 #1S	W8 x 21 #1S	W10 x 22 #2	W10 x 26 #2	W10 x 26 #1	W10 x 26 #1S	W12 x 30 #2	-	-	-
	10 ft	W6 x 9 #2	W6 x 12 #2	W6 x 12 #2	W6 x 15 #2	W6 x 15 #1	W6 x 15 #1	W6 x 15 #1	W8 x 18 #2	W6 x 20 #1S	W6 x 20 #1S	W8 x 21 #1S	W10 x 26 #2	W10 x 26 #1	W10 x 26 #1	-	-	-	-	-
	11 ft	W6 x 9 #2	W6 x 12 #2	W6 x 12 #1	W6 x 15 #1	W6 x 15 #1	W6 x 15 #1	W8 x 18 #1	W6 x 20 #1	W6 x 20 #1S	W8 x 21 #1	-	-	-	-	-	-	-	-	-
	12 ft	W6 x 12 #2	W6 x 12 #1	W6 x 15 #1	W6 x 15 #1	W6 x 15 #1	W8 x 18 #1	W6 x 20 #1	W6 x 20 #1	W8 x 21 #1	-	-	-	-	-	-	-	-	-	-
	13 ft	W6 x 12 #1	W6 x 15 #1	W6 x 15 #1	W6 x 15 #1	W8 x 18 #1	W8 x 18 #1	W6 x 20 #1	W6 x 20 #1	-	-	-	-	-	-	-	-	-	-	-
	14 ft	W6 x 12 #1	W6 x 15 #1	W6 x 15 #1	W6 x 15 #1	W8 x 18 #1	W6 x 20 #1	W6 x 20 #1	-	-	-	-	-	-	-	-	-	-	-	-
	15 ft	W6 x 15 #1	W6 x 15 #1	W6 x 15 #1	W8 x 18 #1	-	-	-	-	-	-	-	-	-	-	-	-	-	-	-
	16 ft	W6 x 15 #1	W6 x 15 #1	W6 x 15 #1	-	-	-	-	-	-	-	-	-	-	-	-	-	-	-	-
12 ft	7 ft	W6 x 9 #3	W6 x 9 #3	W6 x 9 #2	W6 x 12 #2	W6 x 12 #2	W6 x 12 #2	W6 x 15 #2	W6 x 15 #2	W6 x 15 #2S	W8 x 18 #2S	W8 x 18 #2S	W10 x 22 #2	W10 x 22 #2	W10 x 26 #2	W10 x 26 #2S	W12 x 26 #2S	W14 x 30 #2S	W18 x 35 #2	W18 x 40 #2
	8 ft	W6 x 9 #2	W6 x 9 #2	W6 x 12 #2	W6 x 12 #2	W6 x 12 #2	W6 x 15 #2	W6 x 15 #2	W6 x 15 #1	W8 x 18 #2	W8 x 18 #2S	W8 x 21 #2S	W10 x 22 #2	W10 x 26 #2	W10 x 26 #2	W12 x 26 #2	W14 x 30 #2	W18 x 35 #2	-	-
	9 ft	W6 x 9 #2	W8 x 10 #2	W6 x 12 #2	W6 x 12 #2	W6 x 15 #2	W6 x 15 #2	W6 x 15 #1	W8 x 18 #2	W8 x 18 #2	W8 x 21 #1S	W8 x 21 #1S	W10 x 26 #2	W10 x 26 #2	W10 x 26 #1	W12 x 30 #2	-	-	-	-
	10 ft	W6 x 9 #2	W6 x 12 #2	W6 x 12 #2	W6 x 15 #2	W6 x 15 #2	W6 x 15 #1	W6 x 15 #1	W8 x 18 #1	W6 x 20 #1S	W8 x 21 #1S	W10 x 26 #2	W10 x 26 #1	W10 x 26 #1	-	-	-	-	-	-
	11 ft	W6 x 12 #2	W6 x 12 #2	W6 x 15 #1	W6 x 15 #1	W6 x 15 #1	W6 x 16 #1	W8 x 18 #1	W6 x 20 #1	W8 x 21 #1	-	-	-	-	-	-	-	-	-	-
	12 ft	W6 x 12 #2	W6 x 12 #1	W6 x 15 #1	W6 x 15 #1	W6 x 15 #1	W8 x 18 #1	W6 x 20 #1	W6 x 20 #1	-	-	-	-	-	-	-	-	-	-	-
	13 ft	W6 x 12 #1	W6 x 15 #1	W6 x 15 #1	W6 x 15 #1	W8 x 18 #1	W6 x 20 #1	W6 x 20 #1	-	-	-	-	-	-	-	-	-	-	-	-
	14 ft	W6 x 12 #1	W6 x 15 #1	W6 x 15 #1	W8 x 18 #1	W6 x 20 #1	W6 x 20 #1	-	-	-	-	-	-	-	-	-	-	-	-	-
	15 ft	W6 x 15 #1	W6 x 15 #1	W6 x 16 #1	W8 x 18 #1	-	-	-	-	-	-	-	-	-	-	-	-	-	-	-
	16 ft	W6 x 15 #1	W6 x 15 #1	-	-	-	-	-	-	-	-	-	-	-	-	-	-	-	-	-
13 ft	7 ft	W6 x 9 #3	W6 x 9 #2	W6 x 9 #2	W6 x 12 #2	W6 x 12 #2	W6 x 15 #2	W6 x 15 #2	W6 x 15 #2S	W6 x 15 #2S	W8 x 18 #2S	W8 x 21 #2S	W10 x 22 #2	W10 x 22 #2	W10 x 26 #2S	W12 x 26 #2	W14 x 30 #2	W18 x 35 #3	W18 x 40 #2	W21 x 44 #3
	8 ft	W6 x 9 #2	W6 x 9 #2	W6 x 12 #2	W6 x 12 #2	W6 x 15 #2	W6 x 15 #2	W6 x 15 #2	W6 x 15 #1S	W8 x 18 #2	W8 x 21 #2S	W8 x 21 #2S	W10 x 22 #2	W10 x 26 #2	W10 x 26 #2S	W12 x 30 #2	W14 x 34 #2	W18 x 40 #2	W21 x 44 #3	W21 x 44 #3
	9 ft	W6 x 9 #2	W6 x 12 #2	W6 x 12 #2	W6 x 15 #2	W6 x 15 #2	W6 x 15 #1	W6 x 15 #1	W8 x 18 #2	W6 x 20 #1S	W8 x 21 #1S	W10 x 22 #2	W10 x 26 #2	W12 x 30 #2	W14 x 30 #2	W16 x 36 #2	W18 x 40 #2	W21 x 44 #2	-	-
	10 ft	W6 x 9 #2	W6 x 12 #2	W6 x 12 #2	W6 x 15 #2	W6 x 15 #1	W6 x 15 #1	W6 x 18 #2	W6 x 20 #1S	W8 x 21 #1	W10 x 22 #2	W10 x 26 #2	W10 x 26 #1	W12 x 30 #2	W14 x 30 #2	W16 x 36 #2	W18 x 40 #2	W21 x 44 #2	-	-
	11 ft	W6 x 12 #2	W6 x 12 #2	W6 x 15 #1	W6 x 15 #1	W6 x 15 #1	W8 x 18 #2	W6 x 20 #1	W6 x 20 #1	W8 x 21 #1	W10 x 26 #1	W10 x 26 #1	W10 x 30 #1	W12 x 30 #2	W14 x 34 #2	W18 x 40 #2	W21 x 44 #2	-	-	-
	12 ft	W6 x 12 #1	W6 x 15 #1	W6 x 15 #1	W6 x 15 #1	W8 x 18 #1	W6 x 20 #1	W6 x 20 #1	W8 x 21 #1	W10 x 26 #1	W10 x 26 #1	W10 x 26 #1	W12 x 30 #2	W14 x 34 #2	W16 x 36 #2	W18 x 40 #2	-	-	-	-
	13 ft	W6 x 12 #1	W6 x 15 #1	W6 x 15 #1	W6 x 16 #1	W8 x 18 #1	W6 x 20 #1	W8 x 21 #1	W10 x 26 #1	W10 x 26 #1	W10 x 26 #1	W10 x 30 #1	W12 x 30 #1	W16 x 36 #2	W18 x 40 #2	-	-	-	-	-
	14 ft	W6 x 15 #1	W6 x 15 #1	W6 x 15 #1	W8 x 18 #1	W6 x 20 #1	W6 x 20 #1	W8 x 24 #1	W10 x 26 #1	W10 x 26 #1	W10 x 30 #1	W12 x 30 #1	W14 x 34 #1	W16 x 40 #2	-	-	-	-	-	-
	15 ft	W6 x 15 #1	W6 x 15 #1	W8 x 18 #1	W6 x 20 #1	W6 x 20 #1	W8 x 24 #1	W10 x 26 #1	W10 x 26 #1	W10 x 30 #1	W10 x 30 #1	W14 x 34 #1	-	-	-	-	-	-	-	-
	16 ft	W6 x 15 #1	W6 x 16 #1	W8 x 18 #1	W6 x 20 #1	W6 x 20 #1	W8 x 24 #1	W10 x 26 #1	W10 x 30 #1	W10 x 30 #1	W14 x 34 #1	W14 x 34 #1	-	-	-	-	-	-	-	-
14 ft	7 ft	W6 x 9 #3	W6 x 9 #2	W8 x 10 #3	W6 x 12 #2	W6 x 12 #2	W6 x 15 #2	W6 x 15 #2	W6 x 15 #2S	W8 x 18 #2	W8 x 18 #2S	W10 x 22 #2	W10 x 22 #2	W10 x 26 #2	W10 x 26 #2S	W12 x 26 #2S	W14 x 30 #2S	W18 x 35 #3	W21 x 44 #3	-
	8 ft	W6 x 9 #2	W6 x 9 #2	W6 x 12 #2	W6 x 12 #2	W6 x 15 #2	W6 x 15 #2	W6 x 15 #2	W8 x 18 #2	W8 x 18 #2S	W8 x 21 #2S	W10 x 22 #2	W10 x 26 #2	W10 x 26 #2	W12 x 26 #2	W14 x 30 #2	W18 x 35 #2	W18 x 40 #2	W21 x 44 #3	-
	9 ft	W6 x 9 #2	W6 x 12 #2	W6 x 12 #2	W6 x 15 #2	W6 x 15 #2	W6 x 15 #1	W8 x 18 #2	W8 x 18 #2	W8 x 21 #2S	W10 x 22 #2	W10 x 26 #2	W10 x 26 #2	W12 x 26 #2	W14 x 30 #2	W16 x 36 #2	W18 x 40 #2	W21 x 44 #3	-	-
	10 ft	W6 x 12 #2	W6 x 12 #2	W6 x 15 #2	W6 x 15 #2	W6 x 15 #1	W8 x 18 #2	W8 x 18 #2	W6 x 20 #1S	W8 x 21 #1S	W10 x 26 #2	W10 x 26 #2	W10 x 26 #1	W12 x 30 #2	W16 x 36 #2	W18 x 40 #2	W21 x 44 #3	-	-	-
	11 ft	W6 x 12 #2	W6 x 12 #2	W6 x 15 #1	W6 x 15 #1	W6 x 16 #1	W8 x 18 #2	W6 x 20 #1	W8 x 21 #1	W10 x 26 #2	W10 x 26 #2	W10 x 26 #1	W12 x 30 #2	W14 x 34 #2	W16 x 36 #2	W18 x 40 #2	-	-	-	-
	12 ft	W6 x 12 #1	W6 x 15 #1	W6 x 15 #1	W6 x 15 #1	W8 x 18 #1	W6 x 20 #1	W8 x 21 #1	W10 x 26 #2	W10 x 26 #1	W10 x 26 #1	W10 x 30 #1	W14 x 34 #2	W16 x 36 #2	W18 x 40 #2	-	-	-	-	-
	13 ft	W6 x 12 #1	W6 x 15 #1	W6 x 15 #1	W6 x 15 #1	W8 x 18 #1	W6 x 20 #1	W8 x 24 #1	W10 x 26 #1	W10 x 26 #1	W10 x 30 #1	W12 x 30 #1	W14 x 34 #2	W16 x 36 #2	W18 x 40 #2	-	-	-	-	-
	14 ft	W6 x 15 #1	W6 x 15 #1	W6 x 16 #1	W6 x 20 #1	W6 x 20 #1	W8 x 21 #1	W10 x 26 #1	W10 x 26 #1	W10 x 30 #1	W12 x 30 #1	W14 x 34 #2	W16 x 36 #2	W18 x 40 #2	-	-	-	-	-	-
	15 ft	W6 x 15 #1	W6 x 15 #1	W8 x 18 #1	W6 x 20 #1	W6 x 20 #1	W8 x 24 #1	W10 x 26 #1	W10 x 30 #1	W10 x 30 #1	W14 x 34 #1	W16 x 36 #2	-	-	-	-	-	-	-	-
	16 ft	W6 x 15 #1	W8 x 18 #1	W6 x 20 #1	W6 x 20 #1	W6 x 20 #1	W8 x 24 #1	W10 x 26 #1	W10 x 30 #1	W12 x 30 #1	W14 x 34 #1	-	-	-	-	-	-	-	-	-
15 ft	7 ft	-	W6 x 9 #2	W8 x 10 #3	W6 x 12 #2	W12 x 14 #3	W6 x 15 #2	W6 x 15 #2	W6 x 15 #2S	W6 x 15 #2S	W8 x 18 #2S	W8 x 21 #2S	W10 x 22 #2	W10 x 22 #2	W10 x 26 #2S	W12 x 26 #2	W14 x 30 #2	W18 x 35 #3	W18 x 40 #3	W21 x 44 #3
	8 ft	-	W8 x 10 #3	W6 x 12 #2	W12 x 14 #3	W6 x 15 #2	W6 x 15 #2	W6 x 15 #2	W6 x 15 #2S	W8 x 18 #2	W8 x 21 #2S	W10 x 22 #2	W10 x 22 #2	W10 x 26 #2	W12 x 26 #2	W14 x 30 #2	W18 x 35 #3	W18 x 40 #2	W21 x 44 #3	-
	9 ft	-	W6 x 12 #2	W6 x 12 #2	W6 x 15 #2	W6 x 15 #2	W6 x 15 #1	W8 x 18 #2	W6 x 20 #1S	W8 x 21 #2S	W10 x 22 #2	W10 x 26 #2	W10 x 26 #2	W12 x 30 #2	W14 x 34 #2	W18 x 40 #2	W21 x 44 #3	-	-	-
	10 ft	-	W6 x 12 #2	W6 x 15 #2	W6 x 15 #2	W6 x 15 #1	W8 x 18 #2	W6 x 20 #1S	W8 x 21 #1	W10 x 22 #2	W10 x 26 #2	W10 x 26 #2	W12 x 30 #2	W14 x 30 #2	W16 x 36 #2	W18 x 40 #2	W21 x 44 #2	-	-	-
	11 ft	-	W6 x 15 #2	W6 x 15 #1	W6 x 15 #1	W8 x 18 #2	W6 x 20 #1	W8 x 21 #1	W10 x 22 #2	W10 x 26 #2	W10 x 26 #1	W10 x 30 #1	W14 x 30 #2	W16 x 36 #2	W18 x 40 #2	W21 x 44 #2	-	-	-	-
	12 ft	-	W6 x 15 #1	W6 x 15 #1	W6 x 16 #1	W8 x 18 #1	W6 x 20 #1	W8 x 21 #1	W10 x 26 #2	W10 x 26 #1	W10 x 26 #1	W12 x 30 #2	W14 x 34 #2	W18 x 40 #2	W21 x 44 #2	-	-	-	-	-
	13 ft	-	W6 x 15 #1	W6 x 15 #1	W8 x 18 #1	W6 x 20 #1	W8 x 21 #1	W10 x 26 #1	W10 x 26 #1	W10 x 26 #1	W12 x 30 #2	W14 x 34 #2	W16 x 36 #2	W18 x 40 #2	-	-	-	-	-	-
	14 ft	-	W6 x 15 #1	W8 x 18 #1	W6 x 20 #1	W6 x 20 #1	W8 x 24 #1	W10 x 26 #1	W10 x 26 #1	W10 x 30 #1	W12 x 30 #1	W16 x 36 #2	W18 x 40 #2	-	-	-	-	-	-	-
	15 ft	-	W6 x 16 #1	W8 x 18 #1	W6 x 20 #1	W6 x 24 #1	W10 x 26 #1	W10 x 26 #1	W10 x 30 #1	W12 x 30 #1	W14 x 34 #1	-	-	-	-	-	-	-	-	-
	16 ft	-	W8 x 18 #1	W6 x 20 #1	W6 x 20 #1	W8 x 24 #1	W10 x 26 #1	W10 x 30 #1	W10 x 30 #1	W14 x 34 #1	-	-	-	-	-	-	-	-	-	-

REV.	DATE	DESCRIPTION	SHEET. NO
		REVISIONS	

NOT TO SCALE

DESIGNER: R. P. TALBOT
DRAFTER: M.C. DEEGAN
CHECKED BY:
DATE CHECKED:

STATE OF CONNECTICUT
DEPARTMENT OF TRANSPORTATION

ENGINEER: OFFICE OF ENGINEERING
APPROVED BY: DATE:

PROJECT TITLE: RECONSTRUCTION OF I-95 OVER WEST RIVER

CADD spm-27-092522.dgn PLOTTED 11/13/2012

TOWN: NEW HAVEN / WEST HAVEN

DRAWING TITLE: BREAKAWAY SIGN SUPPORTS POST SELECTION TABLE 1

PROJECT NO.: 92-522
DRAWING NO.: SPM-27
SHEET NO.:

2:26:40 PM
11/13/2012
t:\v8cadd\projects\pb18735\fd\highway\contract_sheets\spm-27-092522.dgn

POST SELECTION TABLE 2

W	L	H (Sign Height + Crown Height)																		
		4 ft	5 ft	6 ft	7 ft	8 ft	9 ft	10 ft	11 ft	12 ft	13 ft	14 ft	15 ft	16 ft	17 ft	18 ft	19 ft	20 ft	21 ft	22 ft
16 ft	7 ft	-	W6 x 9 #2	W6 x 12 #2	W6 x 12 #2	W6 x 15 #2	W6 x 15 #2	W6 x 15 #2S	W8 x 18 #2	W8 x 18 #2S	W10 x 22 #2	W10 x 22 #2	W10 x 26 #2	W10 x 26 #2S	W12 x 26 #2S	W18 x 35 #3	W18 x 35 #3	W21 x 44 #3	-	-
	8 ft	-	W8 x 10 #3	W6 x 12 #2	W6 x 15 #2	W6 x 15 #2	W6 x 15 #2	W6 x 16 #2S	W8 x 18 #2	W8 x 21 #2S	W10 x 22 #2	W10 x 26 #2	W10 x 26 #2	W12 x 26 #2	W14 x 30 #2	W18 x 35 #3	W21 x 44 #3	-	-	-
	9 ft	-	W6 x 12 #2	W6 x 15 #2	W6 x 15 #2	W6 x 15 #2	W6 x 16 #1	W8 x 18 #2	W8 x 21 #2	W10 x 22 #2	W10 x 26 #2	W10 x 26 #2	W12 x 26 #2	W14 x 30 #2	W18 x 35 #2	W18 x 40 #2	W21 x 44 #3	-	-	-
	10 ft	-	W6 x 12 #2	W6 x 15 #2	W6 x 15 #2	W6 x 16 #1	W8 x 18 #2	W8 x 21 #2	W8 x 21 #1	W10 x 26 #2	W10 x 26 #2	W12 x 26 #2	W14 x 30 #2	W16 x 36 #2	W18 x 40 #2	W21 x 44 #3	-	-	-	-
	11 ft	-	W6 x 15 #2	W6 x 15 #1	W6 x 15 #1	W8 x 18 #2	W6 x 20 #1	W8 x 21 #1	W10 x 26 #2	W10 x 26 #2	W10 x 26 #1	W12 x 30 #2	W14 x 34 #2	W18 x 40 #2	W21 x 44 #3	-	-	-	-	-
	12 ft	-	W6 x 15 #1	W6 x 15 #1	W8 x 18 #2	W6 x 20 #1	W8 x 21 #1	W10 x 26 #2	W10 x 26 #2	W10 x 26 #1	W12 x 30 #2	W14 x 34 #2	W16 x 36 #2	W18 x 40 #2	-	-	-	-	-	-
	13 ft	-	W6 x 15 #1	W6 x 16 #1	W6 x 20 #1	W6 x 20 #1	W10 x 22 #2	W10 x 26 #1	W10 x 26 #1	W10 x 30 #1	W14 x 34 #2	W16 x 36 #2	W18 x 40 #2	-	-	-	-	-	-	-
	14 ft	-	W6 x 15 #1	W8 x 18 #1	W6 x 20 #1	W8 x 21 #1	W10 x 26 #1	W10 x 26 #1	W10 x 30 #1	W12 x 30 #1	W14 x 34 #2	W18 x 40 #2	-	-	-	-	-	-	-	-
	15 ft	-	W8 x 18 #1	W6 x 20 #1	W6 x 20 #1	W8 x 24 #1	W10 x 26 #1	W10 x 30 #1	W10 x 30 #1	W14 x 34 #2	W16 x 36 #2	-	-	-	-	-	-	-	-	-
	16 ft	-	W8 x 18 #1	W6 x 20 #1	W8 x 24 #1	W10 x 26 #1	W10 x 26 #1	W10 x 30 #1	W12 x 30 #1	W14 x 34 #1	-	-	-	-	-	-	-	-	-	-
17 ft	7 ft	-	W6 x 9 #2	W6 x 12 #2	W6 x 12 #2	W6 x 15 #2	W6 x 15 #2	W6 x 15 #2S	W8 x 18 #2S	W8 x 21 #2S	W10 x 22 #2	W10 x 22 #2	W10 x 26 #2S	W12 x 26 #2	W14 x 30 #2	W18 x 35 #3	W21 x 44 #3	-	-	-
	8 ft	-	W6 x 12 #2	W6 x 12 #2	W6 x 15 #2	W6 x 15 #2	W6 x 15 #2	W8 x 18 #2	W8 x 21 #2S	W10 x 22 #2	W10 x 22 #2	W10 x 26 #2	W12 x 26 #2	W14 x 30 #2	W18 x 35 #3	W18 x 40 #3	W21 x 44 #3	-	-	-
	9 ft	-	W6 x 12 #2	W6 x 15 #2	W6 x 15 #2	W6 x 15 #2	W8 x 18 #2	W6 x 20 #1S	W8 x 21 #2S	W10 x 22 #2	W10 x 26 #2	W10 x 26 #2	W14 x 30 #2	W18 x 35 #3	W18 x 40 #2	W21 x 44 #3	-	-	-	-
	10 ft	-	W6 x 12 #2	W6 x 15 #2	W6 x 15 #1	W8 x 18 #2	W6 x 20 #1	W8 x 21 #2	W10 x 22 #2	W10 x 26 #2	W10 x 26 #2	W12 x 30 #2	W14 x 34 #2	W18 x 40 #2	W21 x 44 #3	-	-	-	-	-
	11 ft	-	W6 x 15 #2	W6 x 15 #1	W6 x 16 #1	W8 x 18 #2	W8 x 21 #2	W10 x 22 #2	W10 x 26 #2	W10 x 26 #2	W12 x 30 #2	W14 x 30 #2	W16 x 36 #2	W18 x 40 #2	W21 x 44 #3	-	-	-	-	-
	12 ft	-	W6 x 15 #1	W6 x 15 #1	W8 x 18 #2	W6 x 20 #1	W8 x 21 #1	W10 x 26 #2	W10 x 26 #2	W10 x 30 #1	W14 x 30 #2	W16 x 36 #2	W18 x 40 #2	W21 x 44 #2	-	-	-	-	-	-
	13 ft	-	W6 x 15 #1	W8 x 18 #1	W6 x 20 #1	W8 x 21 #1	W10 x 26 #2	W10 x 26 #1	W10 x 26 #1	W12 x 30 #2	W14 x 34 #2	W18 x 40 #2	W21 x 44 #2	-	-	-	-	-	-	-
	14 ft	-	W6 x 15 #1	W8 x 18 #1	W6 x 20 #1	W8 x 24 #1	W10 x 26 #1	W10 x 26 #1	W12 x 30 #2	W14 x 34 #2	W16 x 36 #2	W18 x 40 #2	-	-	-	-	-	-	-	-
	15 ft	-	W8 x 18 #1	W6 x 20 #1	W8 x 21 #1	W10 x 26 #1	W10 x 26 #1	W10 x 30 #1	W12 x 30 #1	W16 x 36 #2	-	-	-	-	-	-	-	-	-	-
	16 ft	-	W6 x 20 #1	W6 x 20 #1	W8 x 24 #1	W10 x 26 #1	W10 x 30 #1	W12 x 30 #1	W14 x 34 #1	-	-	-	-	-	-	-	-	-	-	-
18 ft	7 ft	-	W8 x 10 #3	W6 x 12 #2	W12 x 14 #3	W6 x 15 #2	W6 x 15 #2S	W6 x 15 #2S	W8 x 18 #2S	W8 x 21 #2S	W10 x 22 #2	W10 x 26 #2	W12 x 26 #2	W14 x 30 #2	W18 x 35 #3	W18 x 35 #3	W21 x 44 #3	-	-	-
	8 ft	-	W6 x 12 #2	W6 x 12 #2	W6 x 15 #2	W6 x 15 #2	W6 x 15 #2S	W8 x 18 #2	W8 x 21 #2S	W10 x 22 #2	W10 x 26 #2	W10 x 26 #2	W12 x 26 #2	W18 x 35 #3	W18 x 35 #3	W21 x 44 #3	-	-	-	-
	9 ft	-	W6 x 12 #2	W6 x 15 #2	W6 x 15 #2	W6 x 15 #2	W8 x 18 #2	W8 x 21 #2	W10 x 22 #2	W10 x 26 #2	W10 x 26 #2	W12 x 26 #2	W14 x 30 #2	W18 x 35 #3	W21 x 44 #3	-	-	-	-	-
	10 ft	-	W6 x 15 #2	W6 x 15 #2	W6 x 15 #1	W8 x 18 #2	W8 x 21 #2	W8 x 21 #2	W10 x 26 #2	W10 x 26 #2	W12 x 26 #2	W14 x 30 #2	W18 x 35 #2	W18 x 40 #2	W21 x 44 #3	-	-	-	-	-
	11 ft	-	W6 x 15 #2	W6 x 15 #1	W8 x 18 #2	W6 x 20 #1	W8 x 21 #2	W10 x 26 #2	W10 x 26 #2	W10 x 26 #2	W12 x 30 #2	W16 x 36 #2	W18 x 40 #2	W21 x 44 #3	-	-	-	-	-	-
	12 ft	-	W6 x 15 #1	W6 x 15 #1	W8 x 18 #2	W8 x 21 #1	W10 x 22 #2	W10 x 26 #2	W10 x 26 #1	W12 x 30 #2	W14 x 34 #2	W18 x 40 #2	W21 x 44 #3	-	-	-	-	-	-	-
	13 ft	-	W6 x 15 #1	W8 x 18 #1	W6 x 20 #1	W8 x 21 #1	W10 x 26 #2	W10 x 26 #1	W10 x 30 #1	W14 x 34 #2	W16 x 36 #2	W18 x 40 #2	-	-	-	-	-	-	-	-
	14 ft	-	W6 x 16 #1	W6 x 20 #1	W6 x 20 #1	W10 x 26 #1	W10 x 26 #1	W10 x 30 #1	W12 x 30 #2	W16 x 36 #2	W18 x 40 #2	-	-	-	-	-	-	-	-	-
	15 ft	-	W8 x 18 #1	W6 x 20 #1	W8 x 24 #1	W10 x 26 #1	W10 x 26 #1	W12 x 30 #1	W14 x 34 #2	W16 x 36 #2	-	-	-	-	-	-	-	-	-	-
	16 ft	-	W6 x 20 #1	W6 x 20 #1	W10 x 26 #1	W10 x 26 #1	W10 x 30 #1	W12 x 30 #1	W14 x 34 #1	-	-	-	-	-	-	-	-	-	-	-
19 ft	7 ft	-	-	W6 x 12 #2	W12 x 14 #3	W6 x 15 #2	W6 x 15 #2S	W8 x 18 #2	W8 x 18 #2S	W10 x 22 #2	W10 x 22 #2	W10 x 26 #2	W12 x 26 #2	W14 x 30 #2	W18 x 35 #3	W21 x 44 #3	-	-	-	-
	8 ft	-	-	W12 x 14 #3	W6 x 15 #2	W6 x 15 #2	W6 x 16 #2S	W8 x 18 #2	W10 x 22 #2	W10 x 22 #2	W10 x 26 #2	W12 x 26 #2	W14 x 30 #2	W18 x 35 #3	W21 x 44 #3	W21 x 44 #3	-	-	-	-
	9 ft	-	-	W6 x 15 #2	W6 x 15 #2	W6 x 16 #2	W8 x 18 #2	W8 x 21 #2	W10 x 22 #2	W10 x 26 #2	W12 x 26 #2	W14 x 30 #2	W18 x 35 #3	W18 x 35 #3	W21 x 44 #3	-	-	-	-	-
	10 ft	-	-	W6 x 15 #2	W6 x 15 #1	W8 x 18 #2	W8 x 21 #2	W10 x 22 #2	W10 x 26 #2	W10 x 26 #2	W12 x 26 #2	W18 x 35 #3	W18 x 40 #3	W21 x 44 #3	-	-	-	-	-	-
	11 ft	-	-	W6 x 15 #1	W8 x 18 #2	W6 x 20 #1	W8 x 21 #1	W10 x 26 #2	W10 x 26 #2	W12 x 26 #2	W14 x 30 #2	W16 x 36 #2	W21 x 44 #3	-	-	-	-	-	-	-
	12 ft	-	-	W8 x 18 #2	W6 x 20 #1	W8 x 21 #1	W10 x 26 #2	W10 x 26 #2	W10 x 26 #1	W14 x 30 #2	W16 x 36 #2	W18 x 40 #2	W21 x 44 #3	-	-	-	-	-	-	-
	13 ft	-	-	W8 x 18 #1	W6 x 20 #1	W10 x 22 #2	W10 x 26 #2	W10 x 26 #1	W12 x 30 #2	W16 x 36 #2	W18 x 40 #2	W21 x 44 #2	-	-	-	-	-	-	-	-
	14 ft	-	-	W6 x 20 #1	W8 x 21 #1	W10 x 26 #1	W10 x 26 #1	W12 x 30 #2	W14 x 34 #2	W16 x 36 #2	-	-	-	-	-	-	-	-	-	-
	15 ft	-	-	W6 x 20 #1	W8 x 24 #1	W10 x 26 #1	W10 x 30 #1	W12 x 30 #1	W16 x 36 #2	-	-	-	-	-	-	-	-	-	-	-
	16 ft	-	-	W6 x 20 #1	W10 x 26 #1	W10 x 26 #1	W10 x 30 #1	W14 x 34 #2	-	-	-	-	-	-	-	-	-	-	-	-
20 ft	7 ft	-	-	W6 x 12 #2	W6 x 15 #2	W6 x 15 #2	W6 x 15 #2S	W8 x 18 #2S	W8 x 21 #2S	W10 x 22 #2	W10 x 22 #2	W12 x 26 #2	W14 x 30 #3	W16 x 31 #3	W18 x 35 #3	W21 x 44 #3	-	-	-	-
	8 ft	-	-	W6 x 15 #2	W6 x 15 #2	W6 x 15 #2	W8 x 18 #2	W8 x 21 #2S	W10 x 22 #2	W10 x 22 #2	W10 x 26 #2	W12 x 26 #2	W18 x 35 #3	W18 x 35 #3	W21 x 44 #3	-	-	-	-	-
	9 ft	-	-	W6 x 15 #2	W6 x 15 #2	W8 x 18 #2	W8 x 21 #2	W10 x 22 #2	W10 x 22 #2	W10 x 26 #2	W12 x 26 #2	W14 x 34 #2	W18 x 35 #3	W21 x 44 #3	-	-	-	-	-	-
	10 ft	-	-	W6 x 15 #2	W6 x 16 #1	W8 x 18 #2	W8 x 21 #2	W10 x 22 #2	W10 x 26 #2	W12 x 26 #2	W14 x 30 #2	W18 x 35 #3	W21 x 44 #3	W21 x 44 #3	-	-	-	-	-	-
	11 ft	-	-	W6 x 15 #1	W8 x 18 #2	W8 x 21 #2	W10 x 22 #2	W10 x 26 #2	W10 x 26 #2	W12 x 30 #2	W18 x 35 #2	W18 x 40 #2	W21 x 44 #3	-	-	-	-	-	-	-
	12 ft	-	-	W8 x 18 #2	W6 x 20 #1	W8 x 21 #1	W10 x 26 #2	W10 x 26 #2	W12 x 30 #2	W14 x 30 #2	W18 x 40 #2	W21 x 44 #3	-	-	-	-	-	-	-	-
	13 ft	-	-	W6 x 20 #1	W8 x 21 #1	W10 x 26 #2	W10 x 26 #2	W10 x 30 #1	W14 x 30 #2	W16 x 36 #2	W18 x 40 #2	W21 x 44 #2	-	-	-	-	-	-	-	-
	14 ft	-	-	W6 x 20 #1	W8 x 21 #1	W10 x 26 #1	W10 x 26 #1	W12 x 30 #2	W16 x 36 #2	W18 x 40 #2	-	-	-	-	-	-	-	-	-	-
	15 ft	-	-	W6 x 20 #1	W10 x 26 #1	W10 x 26 #1	W10 x 30 #1	W14 x 34 #2	W16 x 36 #2	-	-	-	-	-	-	-	-	-	-	-
	16 ft	-	-	W8 x 24 #1	W10 x 26 #1	W10 x 30 #1	W12 x 30 #1	W16 x 36 #2	-	-	-	-	-	-	-	-	-	-	-	-
21 ft	7 ft	-	-	W6 x 12 #2	W6 x 15 #2	W6 x 15 #2	W6 x 16 #2S	W8 x 18 #2S	W10 x 22 #2	W10 x 22 #2	W10 x 26 #2	W12 x 26 #2	W16 x 31 #3	W18 x 35 #3	W21 x 44 #3	-	-	-	-	-
	8 ft	-	-	W6 x 15 #2	W6 x 15 #2	W6 x 15 #2	W8 x 18 #2	W8 x 21 #2S	W10 x 22 #2	W10 x 26 #2	W12 x 26 #2	W14 x 30 #2	W18 x 35 #3	W21 x 44 #3	-	-	-	-	-	-
	9 ft	-	-	W6 x 15 #2	W6 x 15 #2	W8 x 18 #2	W8 x 21 #2	W10 x 22 #2	W10 x 26 #2	W12 x 26 #2	W14 x 30 #2	W18 x 35 #3	W18 x 35 #3	W21 x 44 #3	-	-	-	-	-	-
	10 ft	-	-	W6 x 15 #2	W8 x 18 #2	W6 x 20 #1	W10 x 22 #2	W10 x 26 #2	W10 x 26 #2	W12 x 26 #2	W18 x 35 #3	W18 x 35 #3	W21 x 44 #3	-	-	-	-	-	-	-
	11 ft	-	-	W6 x 15 #1	W8 x 18 #2	W8 x 21 #2	W10 x 22 #2	W10 x 26 #2	W12 x 26 #2	W14 x 30 #2	W16 x 40 #2	W21 x 44 #3	-	-	-	-	-	-	-	-
	12 ft	-	-	W8 x 18 #2	W6 x 20 #1	W10 x 22 #2	W10 x 26 #2	W10 x 26 #2	W14 x 30 #2	W16 x 36 #2	W18 x 40 #2	W21 x 44 #3	-	-	-	-	-	-	-	-
	13 ft	-	-	W6 x 20 #1	W8 x 21 #1	W10 x 26 #2	W10 x 26 #2	W12 x 30 #2	W14 x 34 #2	W18 x 40 #2	W21 x 44 #3	-	-	-	-	-	-	-	-	-
	14 ft	-	-	W6 x 20 #1	W10 x 26 #2	W10 x 26 #1	W10 x 30 #1	W14 x 34 #2	W16 x 36 #2	-	-	-	-	-	-	-	-	-	-	-
	15 ft	-	-	W8 x 21 #1	W10 x 26 #1	W10 x 26 #1	W12 x 30 #2	W16 x 36 #2	-	-	-	-	-	-	-	-	-	-	-	-
	16 ft	-	-	W8 x 24 #1	W10 x 26 #1	W10 x 30 #1	W14 x 34 #2	W16 x 36 #2	-	-	-	-	-	-	-	-	-	-	-	-
22 ft	7 ft	-	-	W6 x 12 #2	W6 x 15 #2	W6 x 15 #2	W8 x 18 #2	W8 x 18 #2S	W10 x 22 #2	W10 x 22 #2	W12 x 26 #3	W16 x 26 #3	W16 x 31 #3	W18 x 35 #3	W21 x 44 #3	-	-	-	-	-
	8 ft	-	-	W6 x 15 #2	W6 x 15 #2	W6 x 15 #2	W8 x 18 #2	W10 x 22 #2	W10 x 22 #2	W10 x 26 #2	W12 x 26 #2	W16 x 31 #3	W18 x 35 #3	W21 x 44 #3	-	-	-	-	-	-
	9 ft	-	-	W6 x 15 #2	W6 x 15 #2	W8 x 18 #2	W8 x 21 #2	W10 x 22 #2	W10 x 26 #2	W12 x 26 #2	W14 x 30 #2	W18 x 35 #3	W21 x 44 #3	-	-	-	-	-	-	-
	10 ft	-	-	W6 x 15 #2	W8 x 18 #2	W8 x 21 #2	W10 x 22 #2	W10 x 26 #2	W12 x 26 #2	W14 x 30 #2	W18 x 35 #3	W21 x 44 #3	-	-	-	-	-	-	-	-
	11 ft	-	-	W6 x 16 #1	W6 x 20 #1	W8 x 21 #2	W10 x 26 #2	W10 x 26 #2	W12 x 26 #2	W18 x 35 #3	W18 x 40 #3	W21 x 44 #3	-	-	-	-	-	-	-	-
	12 ft	-	-	W8 x 18 #2	W8 x 21 #2	W10 x 22 #2	W10 x 26 #2	W12 x 26 #2	W14 x 30 #2	W18 x 40 #2	W21 x 44 #3	-	-	-	-	-	-	-	-	-
	13 ft	-	-	W6 x 20 #1	W8 x 21 #1	W10 x 26 #2	W10 x 26 #1	W12 x 30 #2	W16 x 36 #2	W18 x 40 #2	-	-	-	-	-	-	-	-	-	-
	14 ft	-	-	W6 x 20 #1	W10 x 26 #2	W10 x 26 #1	W12 x 30 #2	W14 x 34 #2	W18 x 40 #2	-	-	-	-	-	-	-	-	-	-	-
	15 ft	-	-	W10 x 22 #1	W10 x 26 #1	W10 x 30 #1	W12 x 30 #2	W16 x 36 #2	-	-	-	-	-	-	-	-	-	-	-	-
	16 ft	-	-	W10 x 26 #1	W10 x 26 #1	W10 x 30 #1	W14 x 34 #2	-	-	-	-	-	-	-	-	-	-	-	-	-

REV.	DATE	DESCRIPTION	SHEET. NO
		REVISIONS	

NOT TO SCALE

DESIGNER: R. P. TALBOT
DRAFTER: M.C. DEEGAN
CHECKED BY:
DATE CHECKED:

STATE OF CONNECTICUT
DEPARTMENT OF TRANSPORTATION

ENGINEER: OFFICE OF ENGINEERING
APPROVED BY: DATE:

PROJECT TITLE: RECONSTRUCTION OF I-95 OVER WEST RIVER
CADD spm-28-092522.dgn PLOTTED 11/13/2012

TOWN: NEW HAVEN / WEST HAVEN
DRAWING TITLE: BREAKAWAY SIGN SUPPORTS POST SELECTION TABLE 2

PROJECT NO.: 92-522
DRAWING NO.: SPM-28
SHEET NO.:

2:26:42 PM
11/13/2012
t:\v8cadd\projects\pb18735\fd\highway\contract_sheets\spm-28-092522.dgn

TABLE 1 - BRACKET DATA													
POST SIZE	BRACKET TYPE	BRACKET WEIGHT (LBS)	DIMENSIONS (IN.)			HOLE DIAMETERS (IN.)			DIMENSIONS (IN.)				
									E			F	G
									BRACKET NO.				
			A	B	C	D1	D2	D3	1	2	3		
W6, W8	B525	7 5/8	5 1/4	1 1/8	1 1/2	17/32	7/16	1/2" -13 UNC 1A	0.100	0.150	0.200	1 7/8	1/2
ALL OTHERS	B650	9 1/2	6 1/2	1 1/8	2	21/32	17/32	5/8"-11 UNC 1A	0.100	0.150	0.200	2 7/8	1/2

TABLE 2 - BRACKET BOLTS								
POST SIZE	BRACKET TYPE	BOLT AND CAP SCREW DIAMETER	BOLT LENTGH			CAP SCREW LENGTH	THREAD DESIGNATION (U.S. CUSTOMARY UNITS)	
			TOP	MIDDLE	BOTTOM		BOLT	CAP SCREW
W6, W8	B525	1/2	2 1/2	2 3/4	3	1 1/4	13 UNC	13 UNC
ALL OTHERS	B650	5/8	2 3/4	3	3 1/4	1 1/4	11 UNC	11 UNC

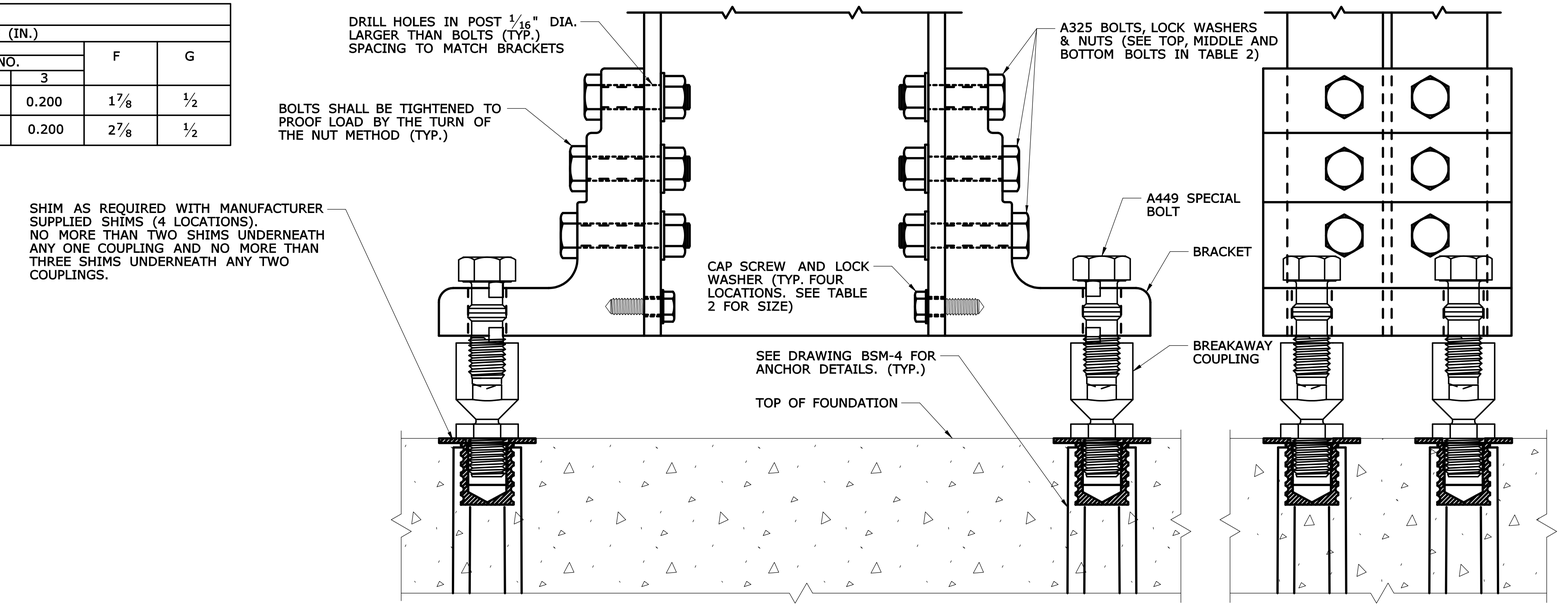

SIDE ELEVATION

FRONT ELEVATION

BRACKET ASSEMBLY DETAILS

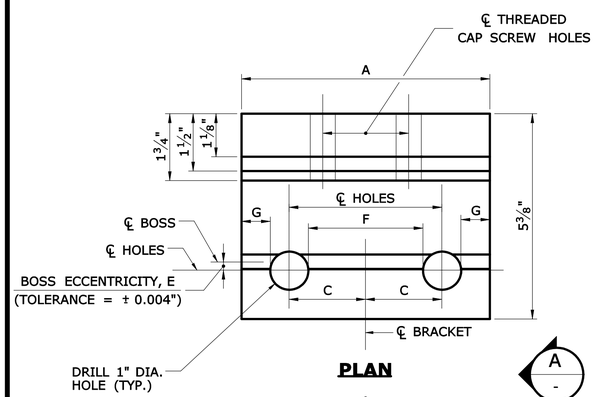

PLAN

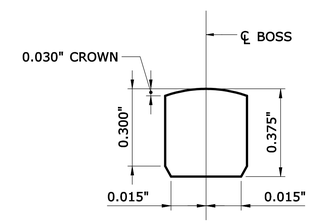

BOSS DETAIL

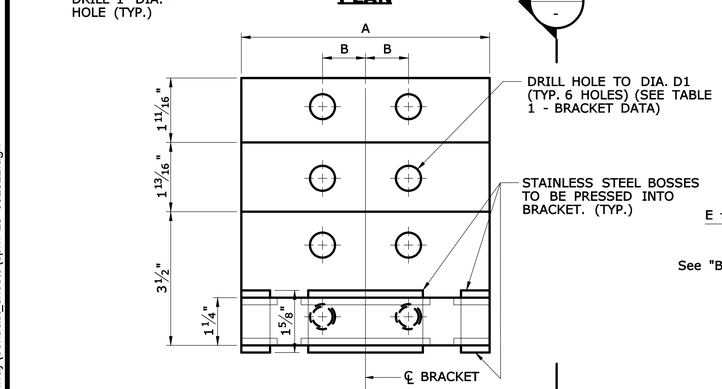

ELEVATION

BRACKET DETAILS
HALF SCALE

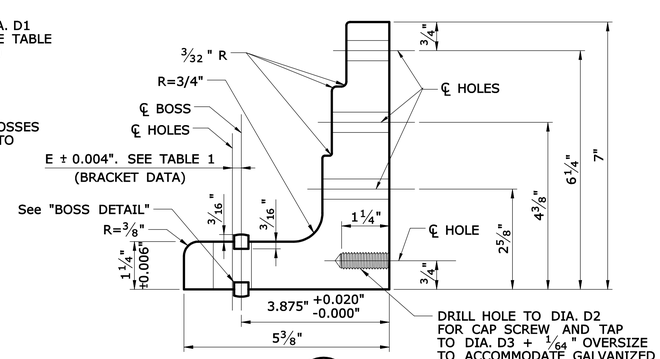

VIEW A

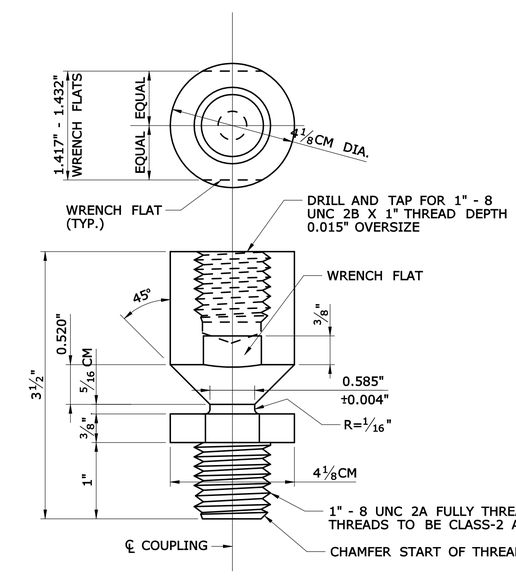

NOTE:
TOLERANCES TO 1/32" EXCEPT AS NOTED

BREAKAWAY COUPLING

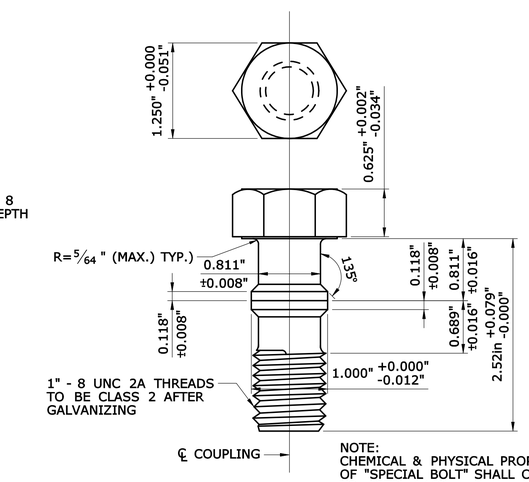

NOTE:
CHEMICAL & PHYSICAL PROPERTIES OF "SPECIAL BOLT" SHALL CONFORM TO ASTM A449.

SPECIAL BOLT

REV.	DATE	DESCRIPTION	SHEET. NO
		REVISIONS	

NOT TO SCALE

DESIGNER: R. P. TALBOT
DRAFTER: M.C. DEEGAN
CHECKED BY:
DATE CHECKED:

STATE OF CONNECTICUT
DEPARTMENT OF TRANSPORTATION
ENGINEER: OFFICE OF ENGINEERING
APPROVED BY:
DATE:

PROJECT TITLE: RECONSTRUCTION OF I-95 OVER WEST RIVER
CADD spm-29-092522.dgn
PLOTTED 11/32/2012

TOWN: NEW HAVEN / WEST HAVEN
DRAWING TITLE: BREAKAWAY SIGN SUPPORTS BRACKET DETAILS

PROJECT NO.: 92-522
DRAWING NO.: SPM-29
SHEET NO.:

2:26:43 PM
11/32/2012
t:\v8cadd\projects\pb18735\fd\highway\contract_sheets\spm-29-092522.dgn

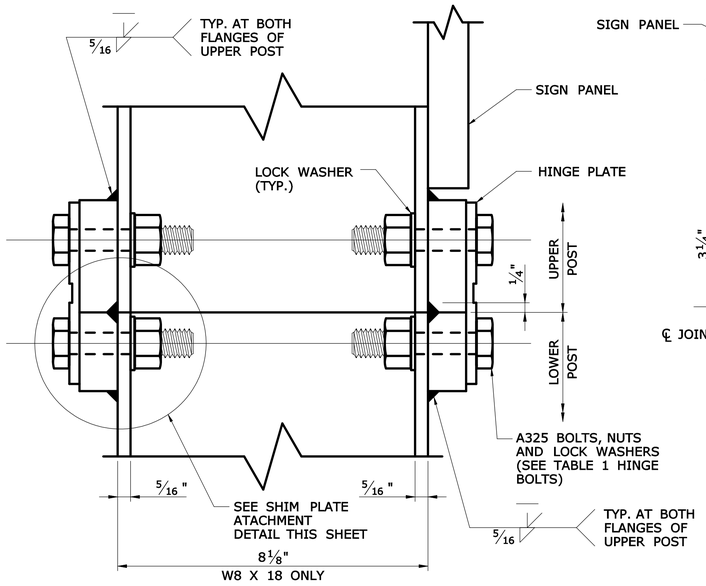

SIDE ELEVATION

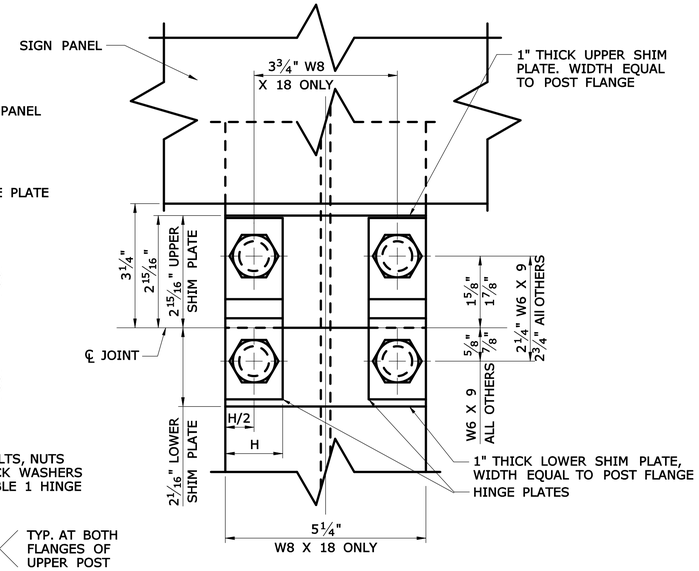

FRONT ELEVATION

WITH SHIM PLATE
SCALE: 1/2 (W8 X 18)

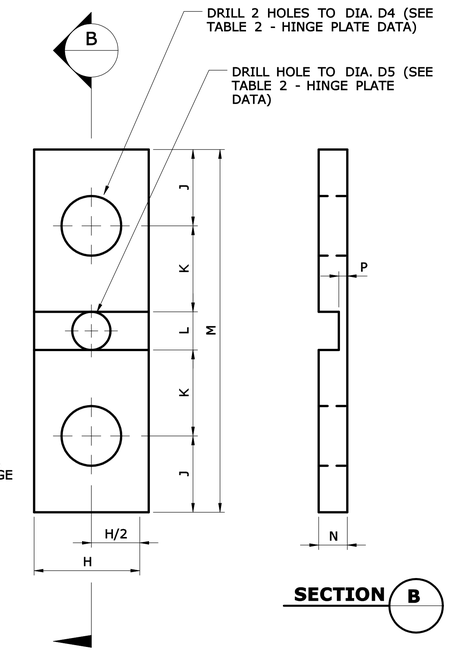

HINGE PLATE DETAILS
SCALE: FULL

SECTION B

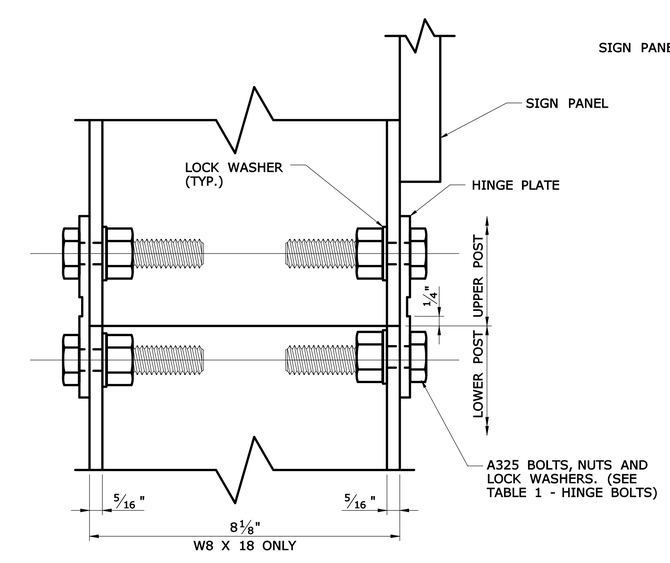

SIDE ELEVATION

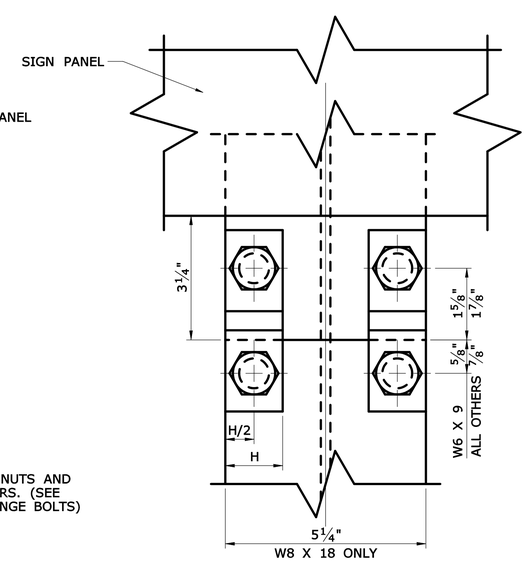

FRONT ELEVATION

WITHOUT SHIM PLATE
SCALE: 1/2 (W8 X 18)

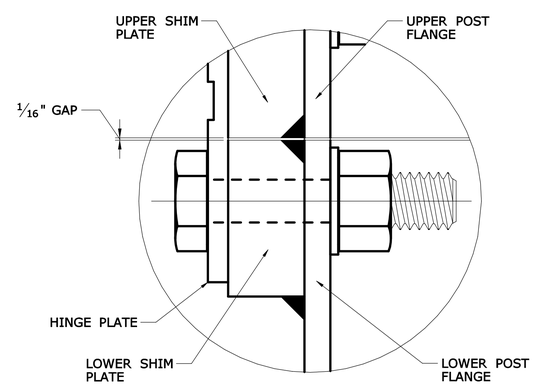

SHIM PLATE ATTACHMENT DETAILS

TABLE 2 - HINGE PLATE DATA

POST SIZE	PLATE NO.	DIMENSIONS (IN.)							HOLE DIA. (IN.)	
		H	J	K	L	M	N	P	D4	D5
W6 X 9	1	1	3/4	7/8	1/2	3 3/4	15/64	0.071 ± 0.004	17/32	NONE
W6* AND W8	2	1 1/2	1	1 1/8	1/2	4 3/4	3/8	0.113 ± 0.004	25/32	1/2
ALL OTHERS	3	1 1/2	1	1 1/8	1/2	4 3/4	3/8	0.113 ± 0.004	25/32	NONE

* EXCLUDING W6 X 9

GENERAL NOTES

SPECIFICATIONS: CONNECTICUT DEPARTMENT OF TRANSPORTATION FORM 816 (2004), SUPPLEMENTAL SPECIFICATION DATED JANUARY 2007, AND SPECIAL PROVISIONS.
DESIGN SPECIFICATIONS: AASHTO STANDARD SPECIFICATIONS FOR HIGHWAY BRIDGES 17TH EDITION DATED 2002, AND AASHTO STANDARD SPECIFICATIONS FOR STRUCTURAL SUPPORTS FOR HIGHWAY SIGNS, LUMINAIRES AND TRAFFIC SIGNALS (2001) WITH INTERIM SPECIFICATIONS UP TO AND INCLUDING 2006.
DESIGN LOADS: THE DESIGN WIND SPEED IS 100 MPH, BASED ON A 10-YEAR MEAN RECURRENCE INTERVAL.
MATERIALS:

FOUNDATIONS: CONCRETE FOR FOUNDATIONS SHALL BE CLASS "A" CONCRETE.

REINFORCEMENT: REINFORCING STEEL SHALL CONFORM TO THE REQUIREMENTS OF ASTM A615, GRADE 60.
SIGN POSTS: STEEL FOR SIGN POSTS SHALL CONFORM TO THE REQUIREMENTS OF ASTM A709, GRADE 36, AND SHALL BE HOT DIP GALVANIZED AFTER FABRICATION IN ACCORDANCE WITH ASTM A123. THE POST SHALL BE PERMANENTLY LABELED WITH THE POST SIZE ON THE WEB AT THE BOTTOM OF THE LOWER POST.
ANCHORS: THREADED FERRULES SHALL BE FABRICATED FROM TYPE 304 STAINLESS STEEL. RODS SHALL BE FABRICATED FROM STEEL CONFORMING TO AISI 1038. STEEL COILS SHALL CONFORM TO THE REQUIREMENTS OF AISI 1008. MINIMUM TENSILE STRENGTH OF 60,000 LBS.
SHIMS: 1" HORSESHOE SHIMS SHALL BE FABRICATED FROM 14 OR 18 GAUGE SHEET STEEL.

BREAKAWAY COUPLINGS: BREAKAWAY COUPLINGS SHALL BE MADE FROM ALLOY STEEL CONFORMING TO AMS 6378D WITH EXCEPTIONS TO DECARBURIZATION AND MACROSTRUCTURE CLAUSES OR AN EQUIVALENT MATERIAL, AND SHALL HAVE A MINIMUM TENSILE YIELD STRENGTH OF 130,000 PSI. THE COUPLING SHALL HAVE A MINIMUM TENSILE ULTIMATE STRENGTH OF 40,400 LBS. THE ROCKWELL HARDNESS SHALL BE C32 MINIMUM. COUPLINGS SHALL BE HOT DIP GALVANIZED IN ACCORDANCE WITH ASTM A153, CLEANED AND PHOSPHATED PER FEDERAL SPECIFICATION TT-C-490C, COATED, 0.002" - 0.004" THICK, USING MORTON POWDER COATINGS' 20-7037 BLACK POLYESTER POWDER OR EQUIVALENT.
CHIPPED AREAS OF THE COATED SURFACE SHALL BE REPAIRED. ALL THREADED SURFACES, AFTER COATING, SHALL BE CLEANED TO ALLOW THEM TO FUNCTION PROPERLY.

BRACKETS: BRACKETS SHALL BE MADE FROM ALUMINUM ALLOY 6061-T6 OR AN EQUIVALENT MATERIAL. THE LOAD CONCENTRATING MEMBER (BOSS) SHALL BE MADE FROM STAINLESS STEEL CONFORMING TO ASTM A582, TYPE 416 WITH ROCKWELL HARDNESS OF C33 - C45. LOCATION HOLES FOR THE BREAKAWAY COUPLING SHALL BE ACCURATELY POSITIONED RELATIVE TO THE LOAD CONCENTRATING MEMBER AND BRACKETS SHALL BE PERMANENTLY LABELED WITH THE BRACKET NUMBER TO REFLECT THE HOLE POSITIONING. SEE DWG. NO. BSM-5 FOR IDENTIFICATION OF BRACKETS BY NUMBER.

HINGE PLATES: HINGE PLATES SHALL BE MADE FROM ALLOY STEEL CONFORMING TO AISI 4130 OR AN EQUIVALENT MATERIAL AND SHALL BE GALVANIZED AFTER FABRICATION IN ACCORDANCE WITH ASTM A123. THE HINGE PLATE SHALL HAVE A MINIMUM TENSILE YIELD STRENGTH OF 90,000 PSI AND MINIMUM TENSILE ULTIMATE STRENGTH AS FOLLOWS:

HI-1 7,100 LBS
HI-2 11,300 LBS
HI-3 17,000 LBS

BOLTS, NUTS AND WASHERS: UNLESS NOTED OTHERWISE, ALL BOLTS SHALL CONFORM TO THE REQUIREMENTS OF ASTM A325. SPECIAL BOLTS SHALL CONFORM TO ASTM A449. NUTS SHALL CONFORM TO THE REQUIREMENTS OF ASTM A563, GRADE DH. LOCKWASHERS SHALL CONFORM TO THE REQUIREMENTS OF ANSI B18-21-1. BOLTS, NUTS AND WASHERS SHALL BE GALVANIZED IN ACCORDANCE WITH THE REQUIREMENTS OF ASTM A153. SPECIAL BOLTS MAY BE MECHANICALLY GALVANIZED IN ACCORDANCE WITH THE REQUIREMENTS OF ASTM B695, CLASS 50.

CAP SCREWS: CAP SCREWS ATTACHING BRACKETS TO POSTS SHALL CONFORM TO THE REQUIREMENTS OF ASTM A307 AND SHALL BE HOT DIP GALVANIZED IN ACCORDANCE WITH ASTM A153.

BREAKAWAY HARDWARE: BREAKAWAY HARDWARE SHALL BE SUPPLIED AS COMPONENTS OF A CRASH-TESTED SYSTEM COMPLYING WITH THE GUIDELINES OF NCHRP REPORT 350 (RECOMMENDED PROCEDURES FOR THE SAFETY PERFORMANCE EVALUATION OF HIGHWAY FEATURES). THE MANUFACTURER SHALL SUBMIT TEST REPORTS TO FHWA FOR APPROVAL.

CERTIFICATION: THE CONTRACTOR SHALL PROVIDE A MATERIALS CERTIFICATE TO CERTIFY THAT THE MATERIAL AND COMPONENTS CONFORM TO THOSE SHOWN ON THE PLANS AND SPECIFICATIONS.

CHANGES: NO CHANGE IN DESIGN MATERIALS OR DETAIL ALTERATIONS WILL BE PERMITTED WITHOUT PRIOR APPROVAL BY THE ENGINEER.

INSTALLATION: INSTALLATION OF THE BREAKAWAY ASSEMBLY SHALL BE IN ACCORDANCE WITH THE RECOMMENDED PRACTICES OF THE SUPPLIER.

BASIS OF PAYMENT: THE COST OF FURNISHING AND INSTALLING THE BREAKAWAY HINGE PLATE ASSEMBLY WILL BE INCLUDED IN THE PAY ITEM "STRUCTURAL STEEL SIGN SUPPORTS." THE COST OF FURNISHING AND INSTALLING THE BREAKAWAY COUPLING SYSTEM, CONSISTING OF BRACKET, BREAKAWAY COUPLINGS, SPECIAL BOLTS, AND SHIMS WILL BE INCLUDED IN THE PAY ITEM "SIDE MOUNTED SIGN FOUNDATION." THE COST OF FURNISHING AND INSTALLING FOUNDATIONS, INCLUDING EXCAVATING, CLASS "A" CONCRETE, REINFORCING STEEL AND ANCHOR FERRULES, WILL BE INCLUDED IN THE PAY ITEM "SIDE MOUNTED SIGN FOUNDATION."

TABLE 1 - HINGE BOLTS

POST SIZE	HINGE ASSEMBLY		THREAD DESIGNATION (U.S. CUSTOMARY UNITS)
	BOLT DIAMETER	BOLT LENGTH	
W6 x 9	1/2	1 1/2	13 UNC
ALL OTHERS	3/4	2 1/4	10 UNC

REV.	DATE	DESCRIPTION	SHEET. NO
		REVISIONS	

SCALE AS NOTED

DESIGNER: R. P. TALBOT
DRAFTER: M.C. DEEGAN
CHECKED BY:
DATE CHECKED:

STATE OF CONNECTICUT
DEPARTMENT OF TRANSPORTATION
ENGINEER: OFFICE OF ENGINEERING
APPROVED BY: DATE:

PROJECT TITLE: RECONSTRUCTION OF I-95 OVER WEST RIVER
CADD spm-30-092522.dgn PLOTTED 11/13/2012

TOWN: NEW HAVEN / WEST HAVEN
DRAWING TITLE: BREAKAWAY SIGN SUPPORTS HINGE DETAILS

PROJECT NO.: 92-522
DRAWING NO.: SPM-30
SHEET NO.:

2:26:46 PM
11/13/2012
t:\v8cadd\projects\pb18735\fd\highway\contract_sheets\spm-30-092522.dgn

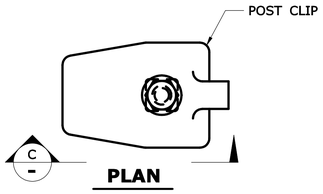

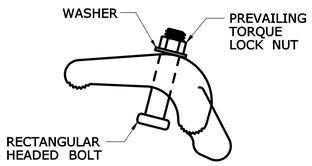

ELEVATION
POST CLIP DETAIL — C / -
FULL SCALE

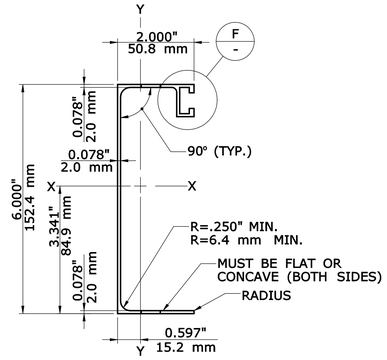

6" (150 mm) EXTRUDED PANEL — D / BS-1
SCALE: 6" = 1-0'

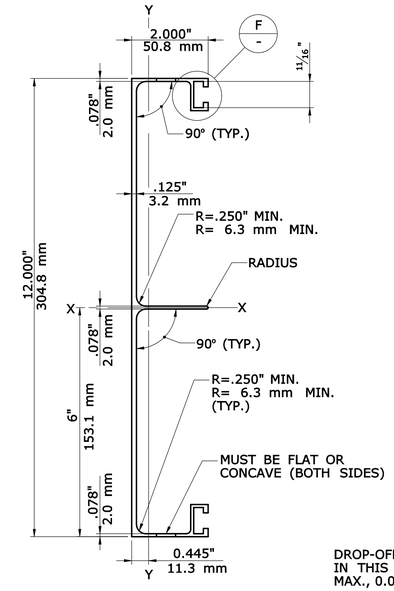

ALTERNATE A

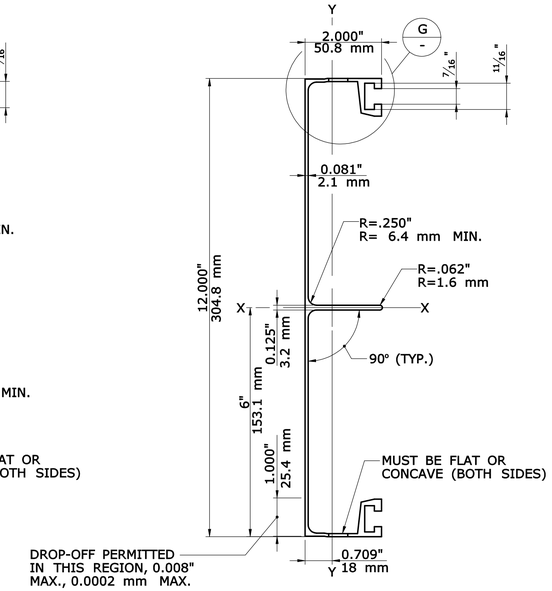

ALTERNATE B

12" (305 mm) EXTRUDED PANEL — E / BS-1
SCALE: 6" = 1-0'

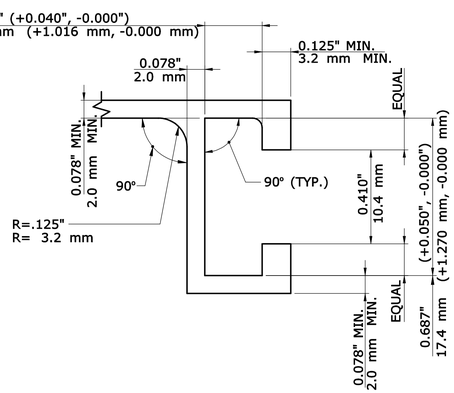

DETAIL — F / -
SCALE: 3 X FULL SCALE

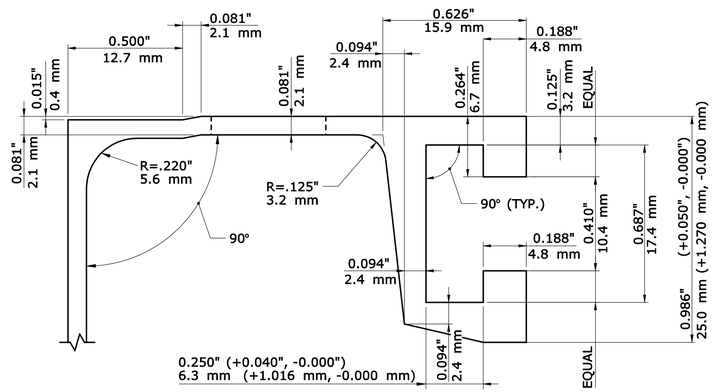

DETAIL — G / -
SCALE: 3 X FULL SCALE

NOTES

THE EXTRUDED PANELS SHALL CONFORM TO THE REQUIREMENTS ASTM B221, ALLOY 6063-T6 AND THE FOLLOWING SECTION PROPERTIES:

SECTION	AREA OF SECTION in^2 (mm^2)	WT. / FT. LBS. / FT. (KG / M)	I_{X-X} in^4 (mm^4)	I_{Y-Y} in^4 (mm^4)
6" (150 mm) EXTRUDED PANEL	0.933 (601.93)	1.13 (0.16)	5.023 (2 090 730)	0.473 (196 877)
12" (305 mm) EXTRUDED PANEL ALTERNATE A	2.237 (1443.22)	2.72 (0.38)	36.284 (15 102 541)	0.941 (391 674)
12" (305 mm) EXTRUDED PANEL ALTERNATE B	2.091 (1349.03)	2.54 (0.35)	38.947 (16 210 965)	1.183 (492 402)

NOTES

THE PANEL BOLTS SHALL CONFORM TO ASTM A193, CLASS 1, GRADE B8 (TYPE 304). THE NUTS SHALL BE A COMPATIBLE HEX, PREVAILING TORQUE (NYLON INSERT) LOCK NUTS CONFORMING TO ASTM A194, CLASS 1, GRADE B8 (TYPE 304). THE WASHERS SHALL BE A COMPATIBLE, FLAT, CIRCULAR WASHERS CONFORMING TO ASTM A276, TYPE 304, ANNEALED.

THE POST CLIP ASSEMBLY SHALL COMPOSED OF A POST CLIP AND A BOLT WITH A NUT AND WASHER. THE POST CLIP SHALL CONFORM TO THE REQUIREMENTS OF ASTM B26, ALLOY 356.0-T6. THE POST BOLT SHALL BE A ⅜" DIA. X 1¾" LONG (9 mm DIA. X 44 mm LONG) RECTANGULAR HEAD BOLT CONFORMING TO ASTM A193, CLASS 1, GRADE B8 (TYPE 304). THE NUT SHALL BE A COMPATIBLE HEX, PREVAILING TORQUE (NYLON INSERT) LOCK NUT CONFORMING TO ASTM A194, CLASS 1, GRADE B8 (TYPE 304). THE WASHER SHALL BE A COMPATIBLE, FLAT, CIRCULAR WASHER CONFORMING TO ASTM A276, TYPE 304, ANNEALED. THE DIMENSIONS OF THE RECTANGULAR BOLT HEAD SHALL BE SUCH THAT IT WILL FIT INTO THE EXTRUDED PANEL SLOT AND WILL NOT ROTATE WHILE THE NUT IS BEING TURNED.

THE COST OF FURNISHING AND INSTALLING THE EXTRUDED ALUMINUM SIGN AND CROWN PANELS, INCLUDING THE PANELS BOLTS AND POST CLIP ASSEMBLIES, SHALL BE PAID FOR UNDER THE ITEM "SIGN FACE - EXTRUDED ALUMINUM (TYPE IV RETROREFLECTIVE SHEETING)".

REV.	DATE	DESCRIPTION	SHEET. NO
		REVISIONS	

SCALE AS NOTED

DESIGNER: R. P. TALBOT
DRAFTER: M.C. DEEGAN
CHECKED BY:
DATE CHECKED:

STATE OF CONNECTICUT
DEPARTMENT OF TRANSPORTATION
ENGINEER: OFFICE OF ENGINEERING
APPROVED BY: DATE:

PROJECT TITLE: RECONSTRUCTION OF I-95 OVER WEST RIVER
CADD spm-31-092522.dgn PLOTTED 11/13/2012

TOWN: NEW HAVEN / WEST HAVEN
DRAWING TITLE: EXTRUDED ALUMINUM SIGN PANEL MANUFACTURING DETAILS

PROJECT NO.: 92-522
DRAWING NO.: SPM-31
SHEET NO.:

2:26:50 PM
11/13/2012
t:\v8cadd\projects\pb18735\fd\highway\contract_sheets\spm-31-092522.dgn

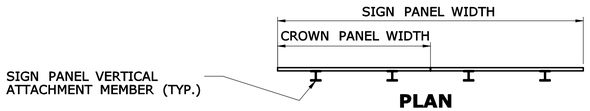

PLAN

OVERHEAD MOUNTED SIGN PANEL

SCALE: 1/4" = 1' - 0"

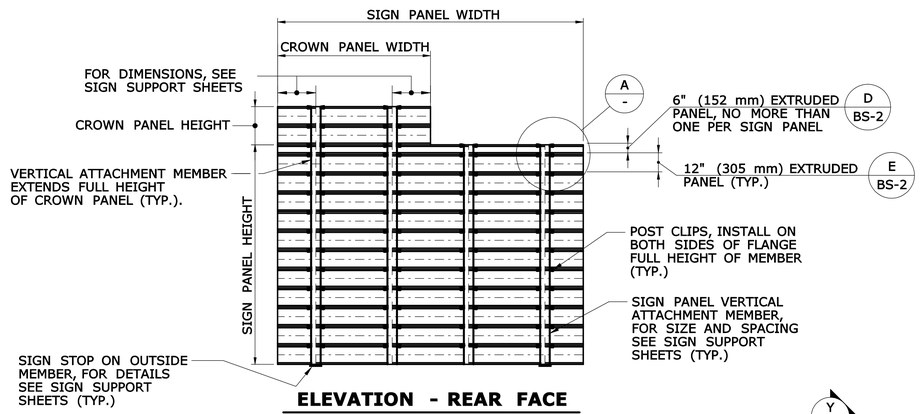

ELEVATION - REAR FACE

OVERHEAD MOUNTED SIGN PANEL

SCALE: 1/4" = 1' - 0"

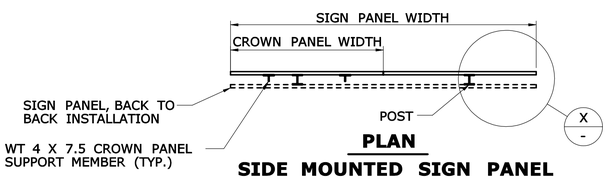

PLAN

SIDE MOUNTED SIGN PANEL

SCALE: 1/4" = 1' - 0"

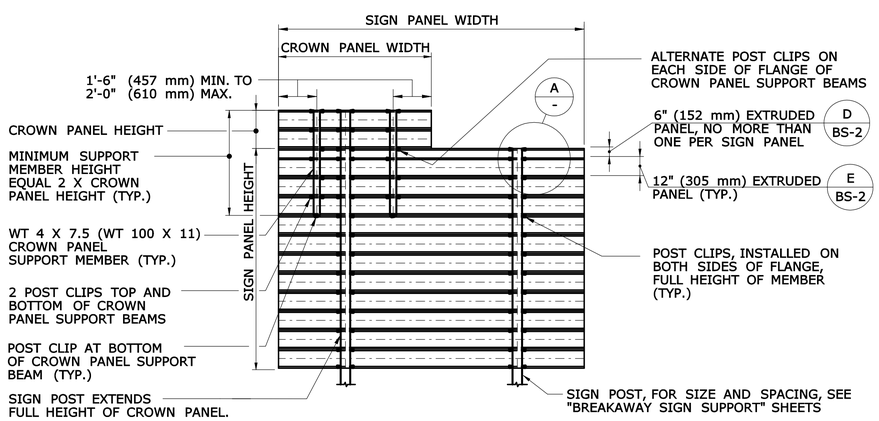

ELEVATION - REAR FACE

SIDE MOUNTED SIGN PANEL

SCALE: 1/4" = 1' - 0"

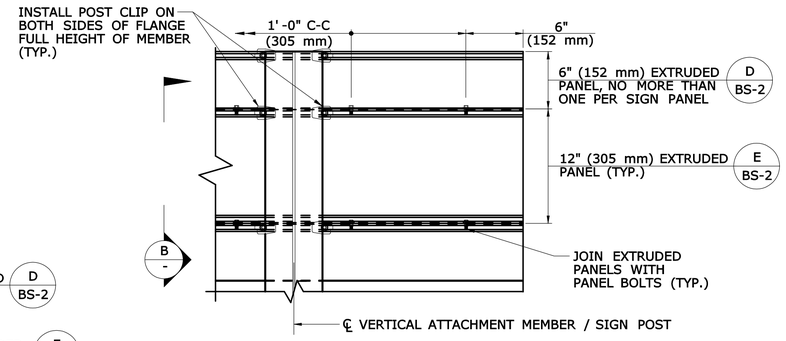

SIGN PANEL CONNECTION DETAILS A -

SCALE: 1 1/2" = 1' -0"

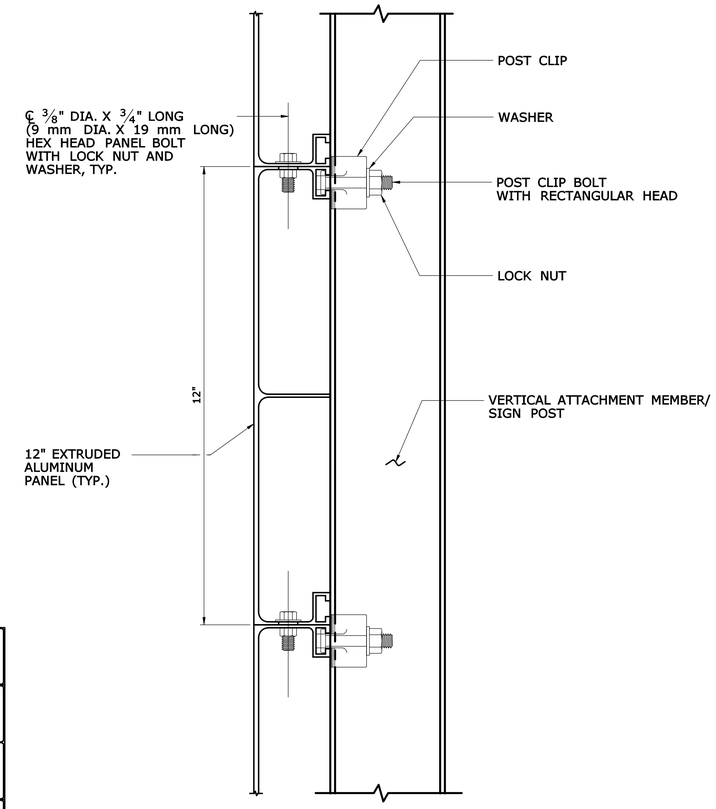

NOTE:

IF THE PANEL BOLTS CANNOT BE INSTALLED DUE TO MISALIGNED HOLES, A NEW HOLE(S) SHALL BE INSTALLED IN THE FLANGE OF THE EXTRUDED PANEL. THE NEW HOLE(S) SHALL BE A MINIMUM OF 2" (50 mm) FROM ANY EXISTING PANEL BOLT HOLES.

SECTION - SIGN PANEL CONNECTION B -

SCALE: 6" = 1' -0"

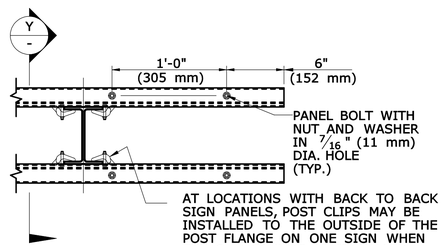

PLAN - PANEL BOLT X -

SCALE: 1 1/2" = 1'-0"

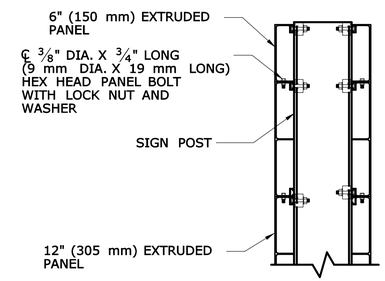

SECTION - DOUBLE PANELS Y -

SCALE: 1 1/2" = 1'-0"

REV.	DATE	DESCRIPTION	SHEET. NO
		REVISIONS	

SCALE AS NOTED

DESIGNER: R. P. TALBOT
DRAFTER: M.C. DEEGAN
CHECKED BY:
DATE CHECKED:

STATE OF CONNECTICUT
DEPARTMENT OF TRANSPORTATION

ENGINEER: OFFICE OF ENGINEERING
APPROVED BY: DATE:

PROJECT TITLE: RECONSTRUCTION OF I-95 OVER WEST RIVER

CADD spm-32-092522.dgn PLOTTED 11/13/2012

TOWN: NEW HAVEN / WEST HAVEN

DRAWING TITLE: EXTRUDED ALUMINUM SIGN PANEL CONNECTION DETAILS

PROJECT NO.: 92-522
DRAWING NO.: SPM-32
SHEET NO.:

2:26:53 PM
11/13/2012
t:\v8cadd\projects\pb18735\fd\highway\contract_sheets\spm-32-092522.dgn

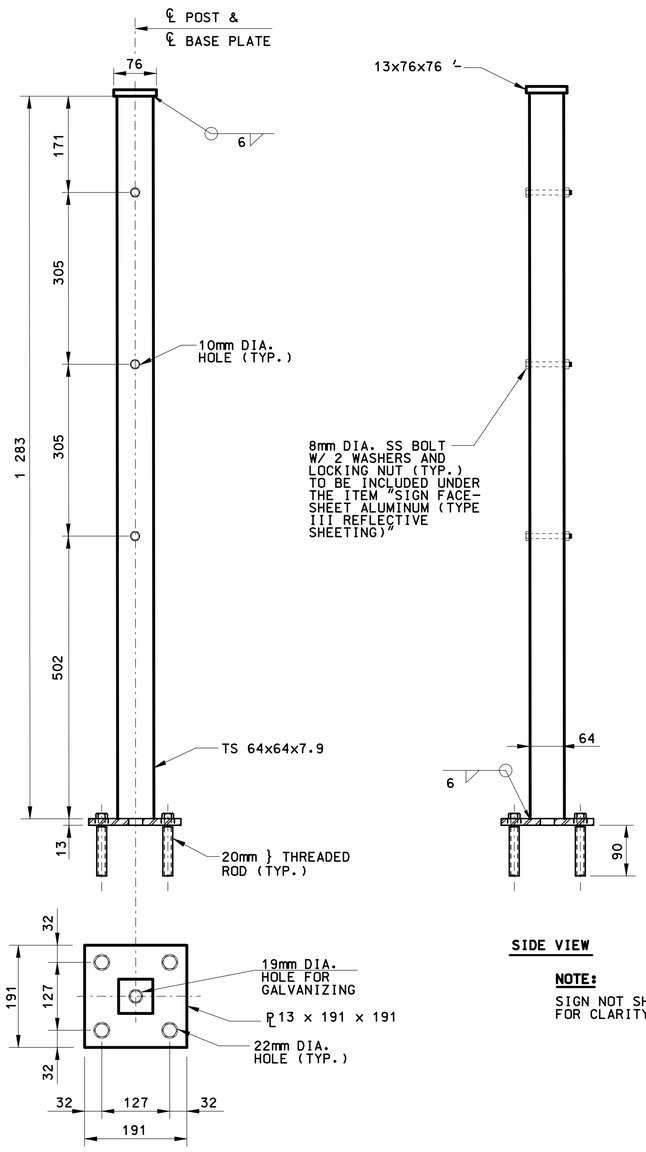

SIDE VIEW

NOTE:

SIGN NOT SHOWN
FOR CLARITY.

.2 MILE MARKER POST ON STANDARD PARAPET

NOT TO SCALE

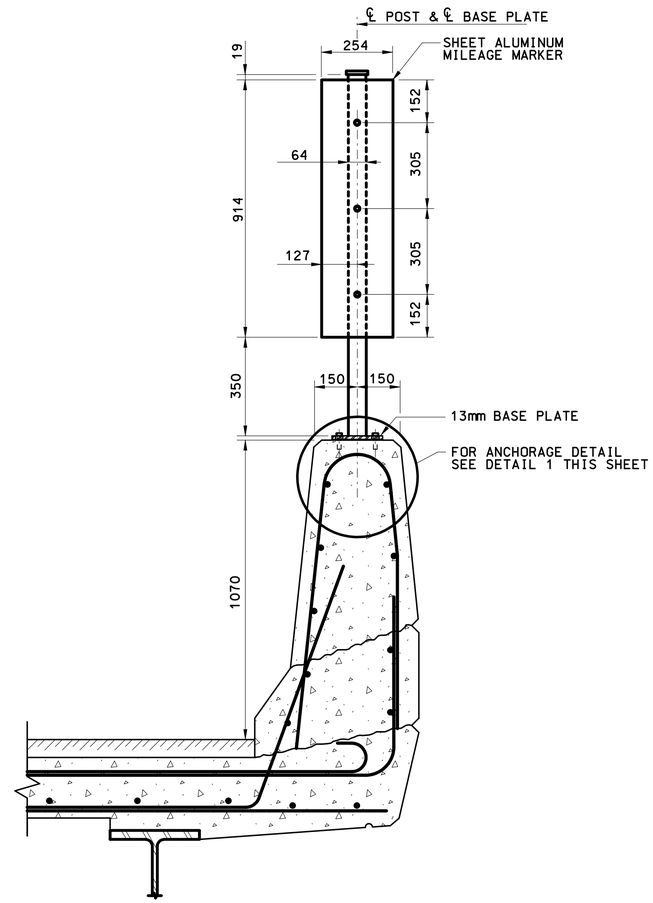

TYPICAL INSTALLATION OF .2 MILE MARKER ON STANDARD PARAPET

NOT TO SCALE

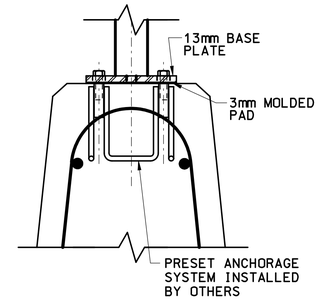

PRESET ANCHORAGE

NOT TO SCALE

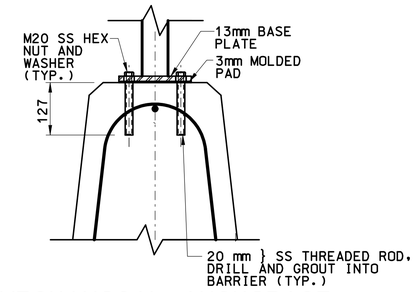

MECHANICAL ANCHORAGE

NOT TO SCALE

DETAIL 1

NOTES:

1. ALL POSTS AND ANCHORAGES SHALL BE FABRICATED AND ERECTED SO THAT THE POSTS ARE TRULY VERTICAL.
2. FOR ADDITIONAL INFORMATION, SEE SPECIAL PROVISIONS, "MILE MARKER SIGN SUPPORT".
3. ALL DIMENSIONS IN mm UNLESS OTHERWISE NOTED.
4. ANCHOR BOLTS ARE TO BE 20mm DIAMETER MECHANICAL ANCHOR WITH 10 KN MINIMUM WORKING LOAD CAPACITY.

REV.	DATE	DESCRIPTION	SHEET. NO
		REVISIONS	

SCALE AS NOTED

DESIGNER: R. P. TALBOT
DRAFTER: M.C. DEEGAN
CHECKED BY:
DATE CHECKED:

STATE OF CONNECTICUT
DEPARTMENT OF TRANSPORTATION
ENGINEER: OFFICE OF ENGINEERING
APPROVED BY: DATE:

PROJECT TITLE: RECONSTRUCTION OF I-95 OVER WEST RIVER
CADD spm-33-092522.dgn PLOTTED 11/13/2012

TOWN: NEW HAVEN / WEST HAVEN
DRAWING TITLE: MILE MARKER SIGN SUPPORT DETAILS

PROJECT NO.: 92-522
DRAWING NO.: SPM-33
SHEET NO.:

2:26:56 PM
11/13/2012
t:\v8cadd\projects\pb18735\fd\highway\contract_sheets\spm-33-092522.dgn

CITY OF NEW HAVEN DEPARTMENT OF ENGINEERING	DRAWN BY: K:\ENGINEER\DWG FILE: CITY-STD-SIGN-DTLS-2009 DETAIL-5
RICHARD H. MILLER, P.E., L.S. 9886 CITY ENGINEER	DATE: DEC. 1, 2009 DRAWING NO.: STD-NH-25

23-VR1 – MF'D BY
TAPCO, 800 WALL ST.
ELM GROVE, WI 53122
1-800-239-0112
tapco@tapconet.com
www.tapconet.com

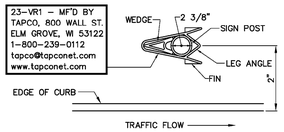

NOTE:
CONTRACTOR SHALL SUPPLY TO THE CITY OF NEW HAVEN ONE 24 FOOT LENGHT OF 2-3/8" O.D. SCHEDULE 40 GALVANIZED STEEL PIPE FOR EACH TWO (OR PART THEREOF) V-LOCS INSTALLED.

VLOC SOCKET SYSTEM

N.T.S.

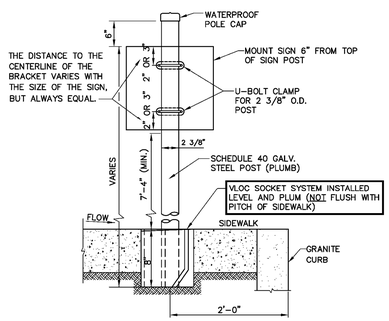

VLOC AND SIGN POST DETAIL

N.T.S.

CITY OF NEW HAVEN DEPARTMENT OF ENGINEERING	DRAWN BY: K:\ENGINEER\DWG FILE: CITY-STD-SIGN-DTLS-2009 DETAIL-5
RICHARD H. MILLER, P.E., L.S. 9886 CITY ENGINEER	DATE: DEC. 1, 2009 DRAWING NO.: STD-NH-25A

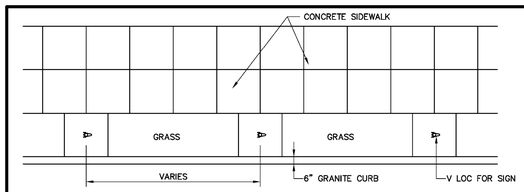

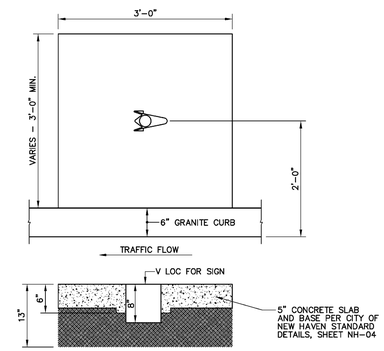

VLOC IN GRASS STRIP

N.T.S.

REV.	DATE	DESCRIPTION	SHEET. NO
		REVISIONS	

SCALE AS NOTED

DESIGNER: R. P. TALBOT
DRAFTER: M.C. DEEGAN
CHECKED BY:
DATE CHECKED:

STATE OF CONNECTICUT
DEPARTMENT OF TRANSPORTATION
ENGINEER: OFFICE OF ENGINEERING
APPROVED BY: DATE:

PROJECT TITLE: RECONSTRUCTION OF I-95 OVER WEST RIVER
CADD spm-34-092522.dgn PLOTTED 11/13/2012

TOWN: NEW HAVEN / WEST HAVEN
DRAWING TITLE: CITY OF NEW HAVEN STANDARDS

PROJECT NO.: 92-522
DRAWING NO.: SPM-34
SHEET NO.:

2:27:00 PM
11/13/2012
t:\v8cadd\projects\pb18735\fd\highway\contract_sheets\spm-34-092522.dgn

CITY OF NEW HAVEN
DEPARTMENT OF ENGINEERING
RICHARD H. MILLER, P.E., L.S. 9886
CITY ENGINEER

DRW'G: K:\ENGINEER\DWG
FILE: CITYSTD\SPM35\SPM STD DETAILS
DATE: DEC. 1, 2009
DRAWING NO.: **STD–NH–27**

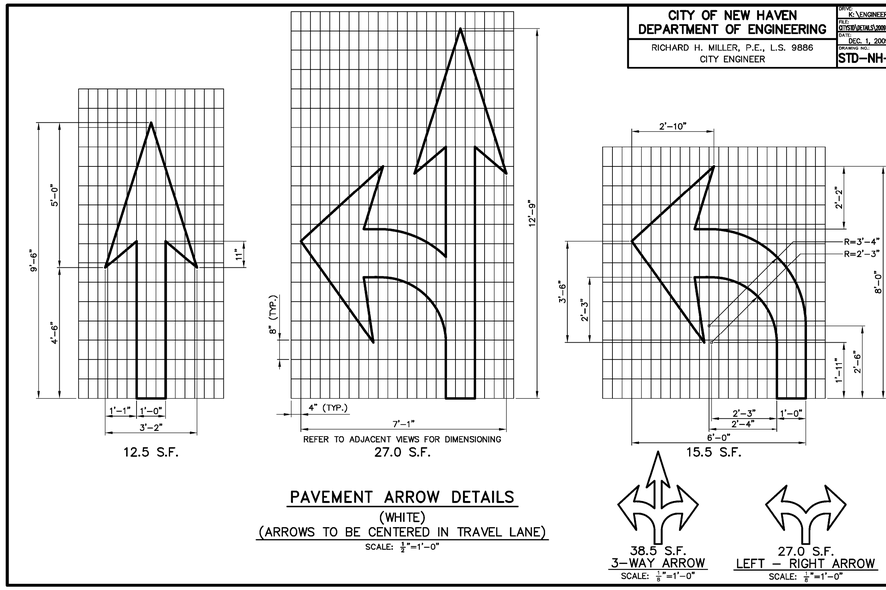

PAVEMENT ARROW DETAILS
(WHITE)
(ARROWS TO BE CENTERED IN TRAVEL LANE)
SCALE: 1/2"=1'–0"

CITY OF NEW HAVEN
DEPARTMENT OF ENGINEERING
RICHARD H. MILLER, P.E., L.S. 9886
CITY ENGINEER

DRW'G: K:\ENGINEER\DWG
FILE: CITYSTD\SPM35\SPM STD DETAILS
DATE: DEC. 1, 2009
DRAWING NO.: **STD–NH–29**

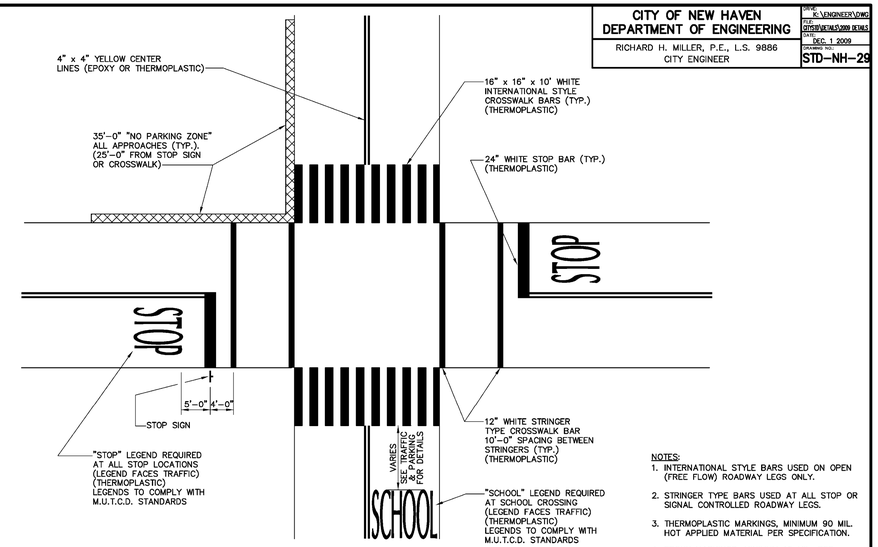

NOTES:
1. INTERNATIONAL STYLE BARS USED ON OPEN (FREE FLOW) ROADWAY LEGS ONLY.
2. STRINGER TYPE BARS USED AT ALL STOP OR SIGNAL CONTROLLED ROADWAY LEGS.
3. THERMOPLASTIC MARKINGS, MINIMUM 90 MIL. HOT APPLIED MATERIAL PER SPECIFICATION.
4. EPOXY MARKINGS, MINIMUM 15 MIL. PER SPECIFICATION.

PAVEMENT MARKING DETAIL
SCALE: 1"=10'–0"

CITY OF NEW HAVEN
DEPARTMENT OF ENGINEERING
RICHARD H. MILLER, P.E., L.S. 9886
CITY ENGINEER

DRW'G: K:\ENGINEER\DWG
FILE: CITYSTD\SPM35\SPM STD DETAILS
DATE: DEC. 1, 2009
DRAWING NO.: **STD–NH–29A**

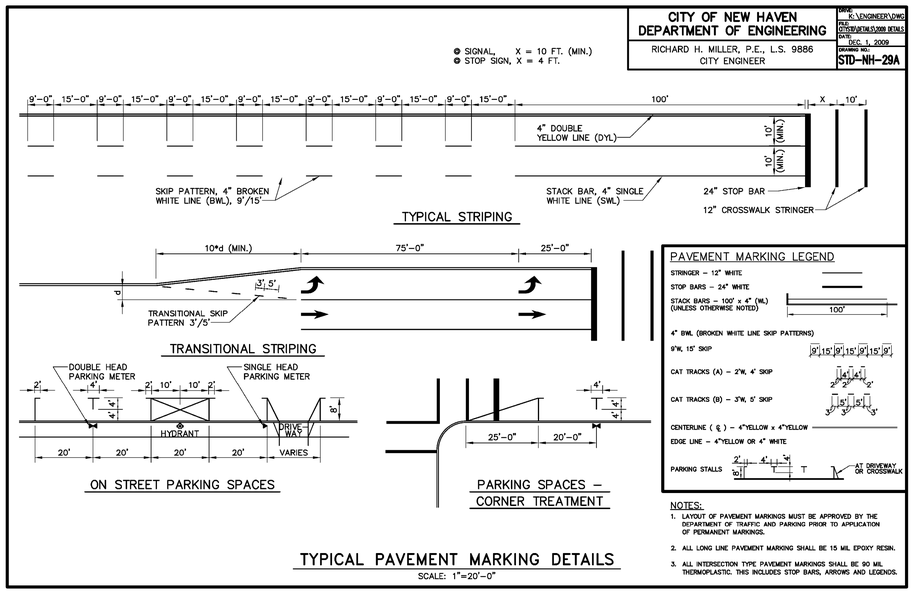

NOTES:
1. LAYOUT OF PAVEMENT MARKINGS MUST BE APPROVED BY THE DEPARTMENT OF TRAFFIC AND PARKING PRIOR TO APPLICATION OF PERMANENT MARKINGS.
2. ALL LONG LINE PAVEMENT MARKING SHALL BE 15 MIL EPOXY RESIN.
3. ALL INTERSECTION TYPE PAVEMENT MARKINGS SHALL BE 90 MIL THERMOPLASTIC. THIS INCLUDES STOP BARS, ARROWS AND LEGENDS.

TYPICAL PAVEMENT MARKING DETAILS
SCALE: 1"=20'–0"

REV.	DATE	DESCRIPTION	SHEET. NO
		REVISIONS	

SCALE AS NOTED

DESIGNER: R. P. TALBOT
DRAFTER: M.C. DEEGAN
CHECKED BY:
DATE CHECKED:

STATE OF CONNECTICUT
DEPARTMENT OF TRANSPORTATION
ENGINEER: OFFICE OF ENGINEERING
APPROVED BY: DATE:

PROJECT TITLE: RECONSTRUCTION OF I-95 OVER WEST RIVER
CADD spm-35-092522.dgn PLOTTED 11/13/2012

TOWN: NEW HAVEN / WEST HAVEN
DRAWING TITLE: CITY OF NEW HAVEN STANDARDS

PROJECT NO.: 92-522
DRAWING NO.: SPM-35
SHEET NO.:

2:27:04 PM
11/13/2012
t:\v8cadd\projects\pb18735\fd\highway\contract_sheets\spm-35-092522.dgn

CITY OF NEW HAVEN
DEPARTMENT OF ENGINEERING
RICHARD H. MILLER, P.E., L.S. 9886
CITY ENGINEER

DRWG: K:\ENGINEER\DWG
FILE: CITYSTD\SPM\STD\SPM DETAILS
DATE: DEC. 1, 2009
DRAWING NO.: **STD–NH–27**

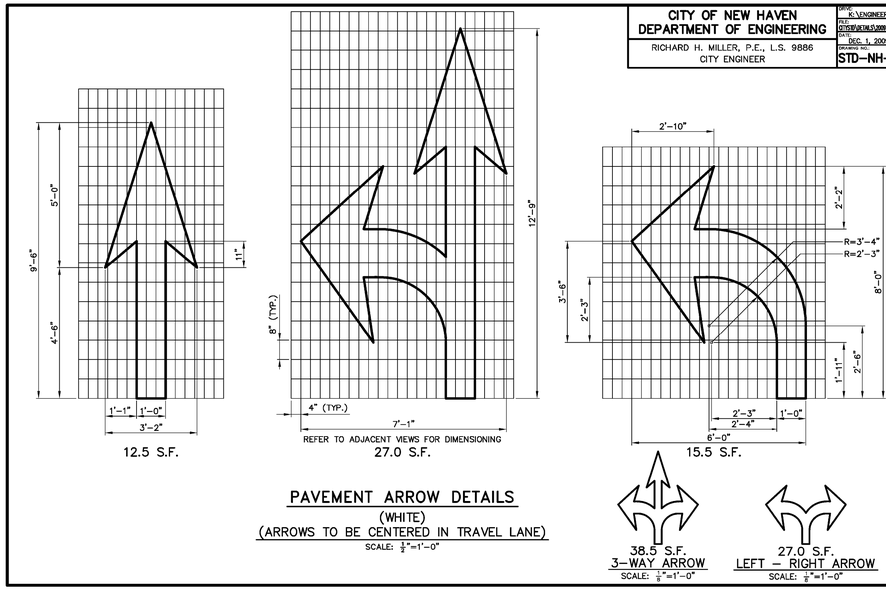

PAVEMENT ARROW DETAILS
(WHITE)
(ARROWS TO BE CENTERED IN TRAVEL LANE)
SCALE: 1/2"=1'–0"

CITY OF NEW HAVEN
DEPARTMENT OF ENGINEERING
RICHARD H. MILLER, P.E., L.S. 9886
CITY ENGINEER

DRWG: K:\ENGINEER\DWG
FILE: CITYSTD\SPM\STD\SPM DETAILS
DATE: DEC. 1, 2009
DRAWING NO.: **STD–NH–29**

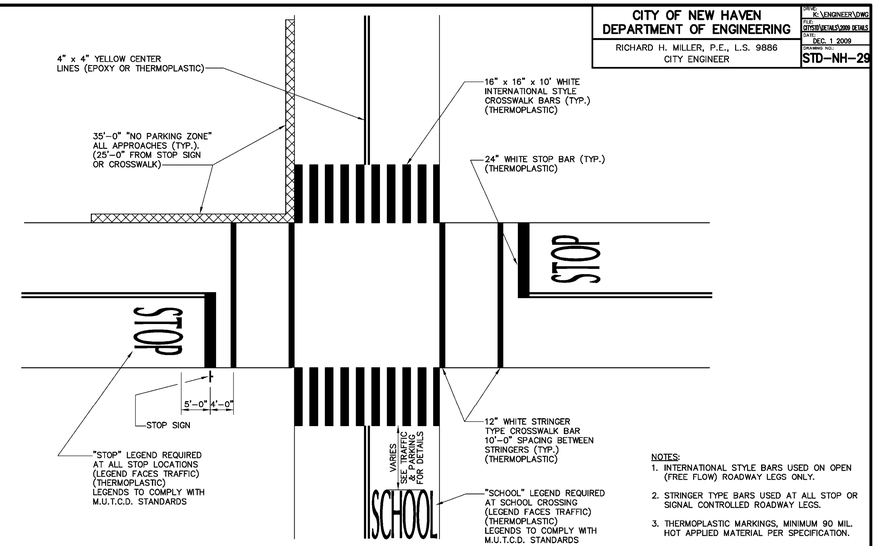

NOTES:
1. INTERNATIONAL STYLE BARS USED ON OPEN (FREE FLOW) ROADWAY LEGS ONLY.
2. STRINGER TYPE BARS USED AT ALL STOP OR SIGNAL CONTROLLED ROADWAY LEGS.
3. THERMOPLASTIC MARKINGS, MINIMUM 90 MIL. HOT APPLIED MATERIAL PER SPECIFICATION.
4. EPOXY MARKINGS, MINIMUM 15 MIL. PER SPECIFICATION.

PAVEMENT MARKING DETAIL
SCALE: 1"=10'–0"

CITY OF NEW HAVEN
DEPARTMENT OF ENGINEERING
RICHARD H. MILLER, P.E., L.S. 9886
CITY ENGINEER

DRWG: K:\ENGINEER\DWG
FILE: CITYSTD\SPM\STD\SPM DETAILS
DATE: DEC. 1, 2009
DRAWING NO.: **STD–NH–29A**

● SIGNAL, X = 10 FT. (MIN.)
● STOP SIGN, X = 4 FT.

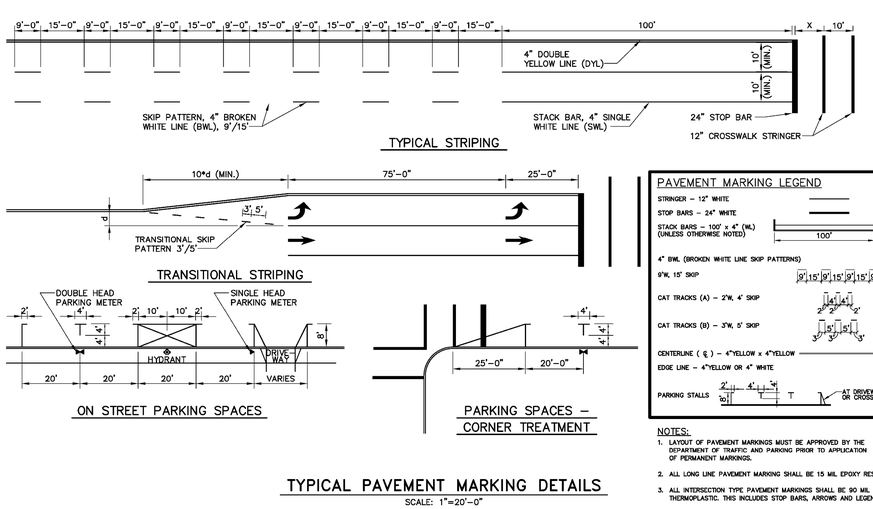

PAVEMENT MARKING LEGEND
STRINGER – 12" WHITE
STOP BARS – 24" WHITE
STACK BARS – 100' x 4" (WL) (UNLESS OTHERWISE NOTED) — 100'
4" BWL (BROKEN WHITE LINE SKIP PATTERNS)
9'W, 15' SKIP — 9' 15' 9' 15' 9' 15' 9'
CAT TRACKS (A) – 2'W, 4' SKIP — 4' 4' 2' 2' 2'
CAT TRACKS (B) – 3'W, 5' SKIP — 5' 5' 3' 3' 3'
CENTERLINE (℄) – 4"YELLOW x 4"YELLOW
EDGE LINE – 4"YELLOW OR 4" WHITE
PARKING STALLS — 2' 4' 4' 90° T T — AT DRIVEWAY OR CROSSWALK

NOTES:
1. LAYOUT OF PAVEMENT MARKINGS MUST BE APPROVED BY THE DEPARTMENT OF TRAFFIC AND PARKING PRIOR TO APPLICATION OF PERMANENT MARKINGS.
2. ALL LONG LINE PAVEMENT MARKING SHALL BE 15 MIL EPOXY RESIN.
3. ALL INTERSECTION TYPE PAVEMENT MARKINGS SHALL BE 90 MIL THERMOPLASTIC. THIS INCLUDES STOP BARS, ARROWS AND LEGENDS.

TYPICAL PAVEMENT MARKING DETAILS
SCALE: 1"=20'–0"

REV.	DATE	DESCRIPTION	SHEET. NO
		REVISIONS	

SCALE AS NOTED

DESIGNER: R. P. TALBOT
DRAFTER: M.C. DEEGAN
CHECKED BY:
DATE CHECKED:

STATE OF CONNECTICUT
DEPARTMENT OF TRANSPORTATION
ENGINEER: OFFICE OF ENGINEERING
APPROVED BY: DATE:

PROJECT TITLE: RECONSTRUCTION OF I-95 OVER WEST RIVER
CADD spm-36-092522.dgn PLOTTED 11/12/2012

TOWN: NEW HAVEN / WEST HAVEN
DRAWING TITLE: CITY OF NEW HAVEN STANDARDS

PROJECT NO.: 92-522
DRAWING NO.: SPM-36
SHEET NO.:

7:08:00 PM
11/12/2012
t:\v8cadd\projects\pb18735\fd\highway\contract_sheets\spm-36-092522.dgn