STATE OF CONNECTICUT
DEPARTMENT OF TRANSPORTATION

RECONSTRUCTION OF I-95 OVER WEST RIVER
IN THE TOWNS OF
NEW HAVEN AND WEST HAVEN
STATE PROJECT NUMBER 092-522

VOLUME 1 : SUBSET 6

TYPICAL SECTIONS

PRINCIPAL ENGINEER (SEALED AND CERTIFIED) *

* THIS SIGNATURE BLOCK IS DEDICATED TO THE PRIME DISCIPLINE PRINCIPAL ENGINEER/ARCHITECT THAT IS RESPONSIBLE FOR CERTIFYING PLANS

6:31:05 PM
11/12/2012
t:\v8cadd\projects\pb18735\fd\highway\contract_sheets\ssc-01-06-092522.dgn

REV.	DATE	DESCRIPTION	SHEET. NO
		REVISIONS	

DESIGNER: R. P. TALBOT
DRAFTER: M.C. DEEGAN
CHECKED BY:
DATE CHECKED:

STATE OF CONNECTICUT
DEPARTMENT OF TRANSPORTATION
ENGINEER: PB AMERICAS, INC.
APPROVED BY: DATE:

PROJECT TITLE: RECONSTRUCTION OF I-95 OVER WEST RIVER
CADD ssc-01-06-092522.dgn PLOTTED 11/12/2012

TOWN: NEW HAVEN / WEST HAVEN
DRAWING TITLE: SUBSET COVER TYPICAL SECTIONS

PROJECT NO.: 92-522
DRAWING NO.: SSC-01.06
SHEET NO.:

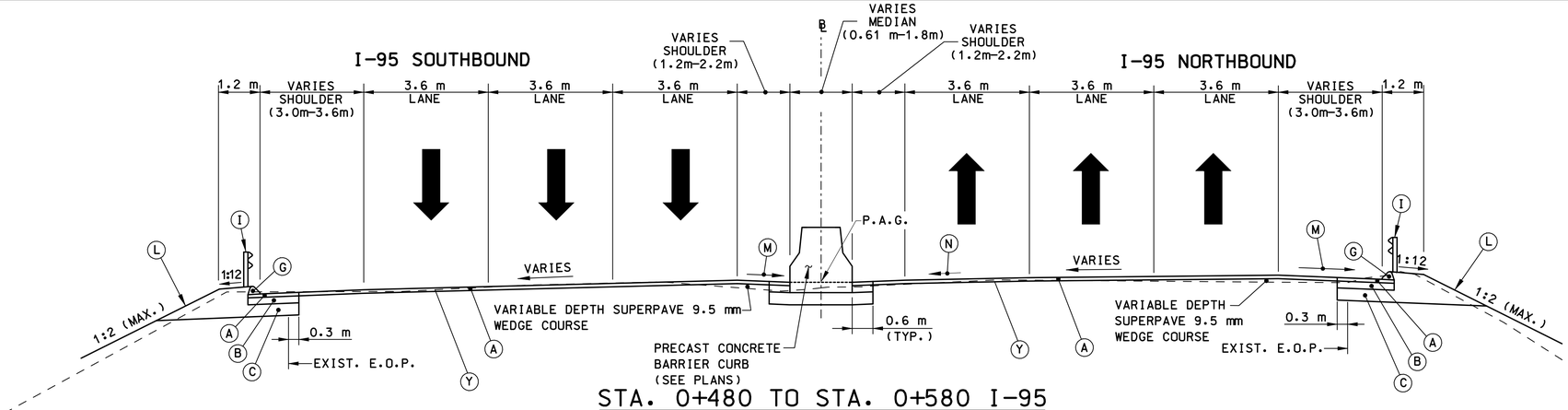

STA. 0+480 TO STA. 0+580 I-95

N.T.S.

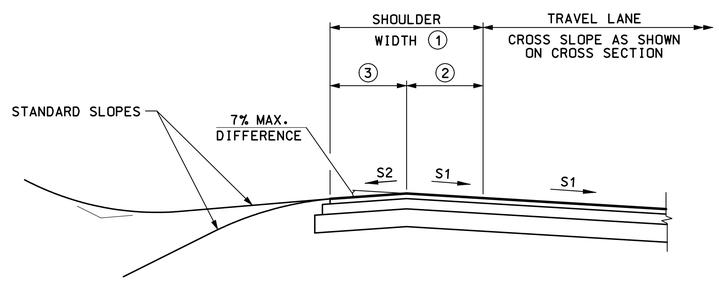

1	2	3
< 1.2m	0 TO 1.2m	0
1.2 TO <2.4m	0 TO 1.2m	1.2m
≥ 2.4m	0	≥ 2.4m

GENERAL NOTES:

1. WHEN S2 IS FLATTER THAN 2% , THE CONTRACTOR SHALL VERIFY THE CROSS SLOPE AT EACH 10m INTERVAL. (PAYMENT TO BE INCLUDED IN THE COST OF THE HMA PAY ITEM - THERE WILL BE NO DIRECT PAYMENT).
2. MAY REQUIRE ATTACHABLE EXTENSIONS OR CUT - OFF PLATES ON PAVING EQUIPMENT.
3. S2 SHALL BE 1% MINIMUM.

SHOULDER TREATMENT HIGH SIDE OF BANK

N.T.S.

LEGEND

A	100 mm HMA S0.5 (PLACED IN TWO EQUAL LIFTS on 40 mm HMA S0.375)
B	200 mm HMA S1(PLACED IN TWO EQUAL LIFTS)
C	350 mm PROCESSED AGGREGATE SUBBASE
D	100 mm HMA S0.5 (PLACED IN TWO EQUAL LIFTS)
E	150 mm HMA S1
F	250 mm PROCESSED AGGREGATE SUBBASE
G	100 mm BITUMINOUS CONCRETE PARK CURB
H	150 mm CONCRETE CURBING
I	MBR TYPE R-B 350
J	530mm x 1145 mm F-SHAPE PRECAST CONCRETE BARRIER CURB
K	GRANULAR FILL
L	TURF ESTABLISHMENT
M	SEE SHOULDER TREATMENT HIGH SIDE OF BANK TYPICAL DRAWING NO. TYP-01
N	MINIMUM CROSS SLOPE 4% OR CONTINUE ROADWAY CROSS SLOPE IF GREATER
O	130 mm CONCRETE SIDEWALK ON 100 mm GRANULAR FILL
P	MATERIAL FOR TACK COAT
Q	100 mm CONCRETE CAP
R	BRIDGE PARAPET
S	BRIDGE MEDIAN
T	25 mm HMA S0.25
U	50 mm HMA S0.5
V	MEMBRANE WATERPROOFING
W	100 mm HMA S1
X	25 mm MINIMUM HMA S0.375 LEVELING COURSE (VARIES)
Y	MILL 100 mm EXISTING HMA PAVEMENT
Z	300 mm SUBBASE
↑	DIRECTION OF TRAVEL AHEAD STATION
↓	DIRECTION OF TRAVEL BACK STATION
P.A.G.	POINT OF APPLICATION OF GRADE

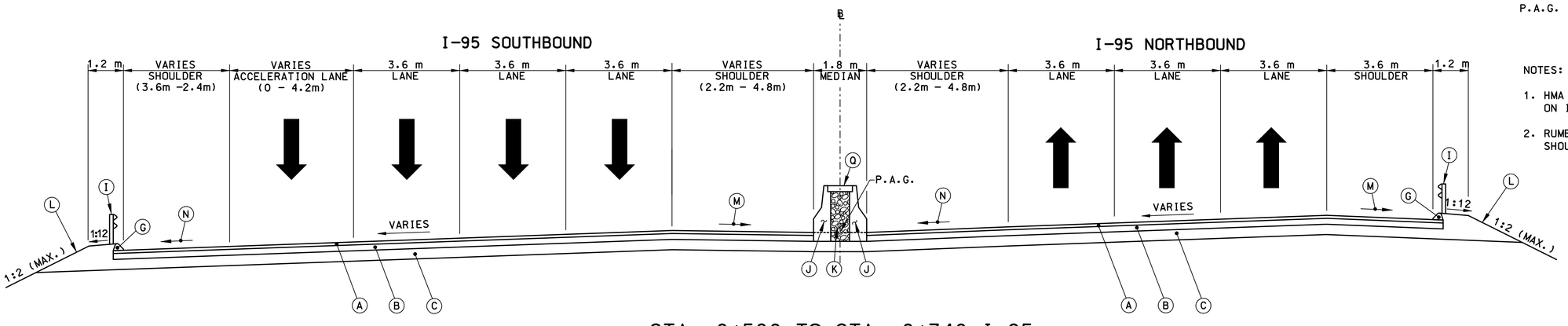

STA. 0+580 TO STA. 0+740 I-95

N.T.S.

NOTES:

1. HMA S1 MUST NOT BE USED AS A RIDING SURFACE ON I-95, OR RAMPS A,B,C,D
2. RUMBLE STRIPS SHALL BE INSTALLED ON I-95 SHOULDERS AS STATED IN THE SPECIFICATIONS.

REV.	DATE	DESCRIPTION	SHEET. NO
		REVISIONS	

NOT TO SCALE

DESIGNER: R. P. TALBOT
DRAFTER: M.C. DEEGAN
CHECKED BY:
DATE CHECKED:

STATE OF CONNECTICUT
DEPARTMENT OF TRANSPORTATION

ENGINEER: PB AMERICAS, INC.
APPROVED BY: DATE:

PROJECT TITLE: RECONSTRUCTION OF I-95 OVER WEST RIVER

CADD typ-01-092522.dgn PLOTTED 11/13/2012

TOWN: NEW HAVEN / WEST HAVEN

DRAWING TITLE: TYPICAL SECTIONS

PROJECT NO.: 92-522
DRAWING NO.: TYP-01
SHEET NO.:

1:03:13 PM
11/13/2012
t:\v8cadd\projects\pb18735\fd\highway\contract_sheets\typ-01-092522.dgn

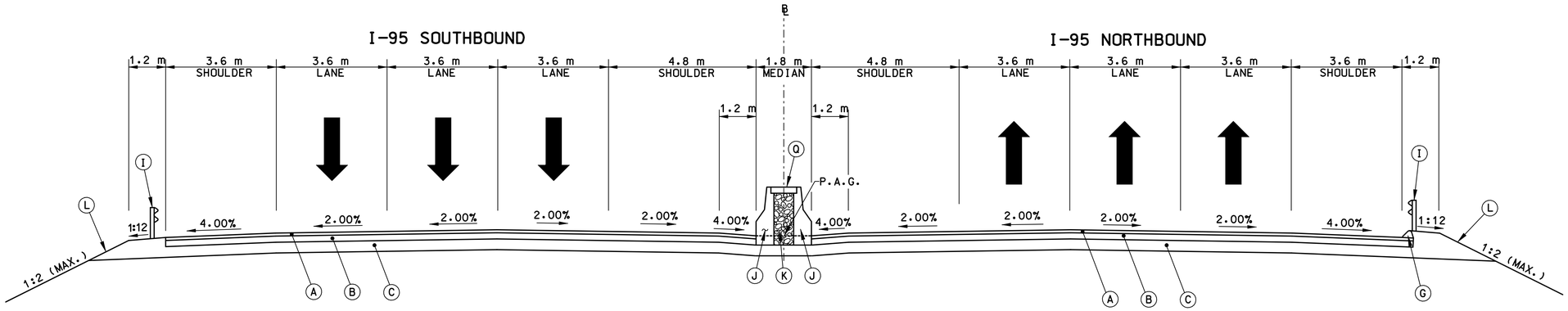

I-95 6 LANE NORMAL SECTION

N.T.S.

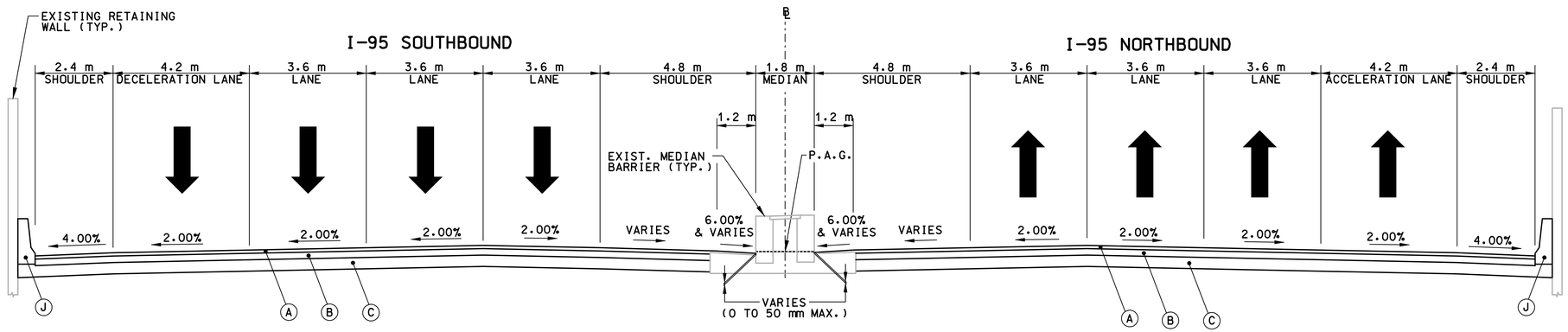

I-95 8 LANE NORMAL SECTION AT HOWARD AVENUE

N.T.S.

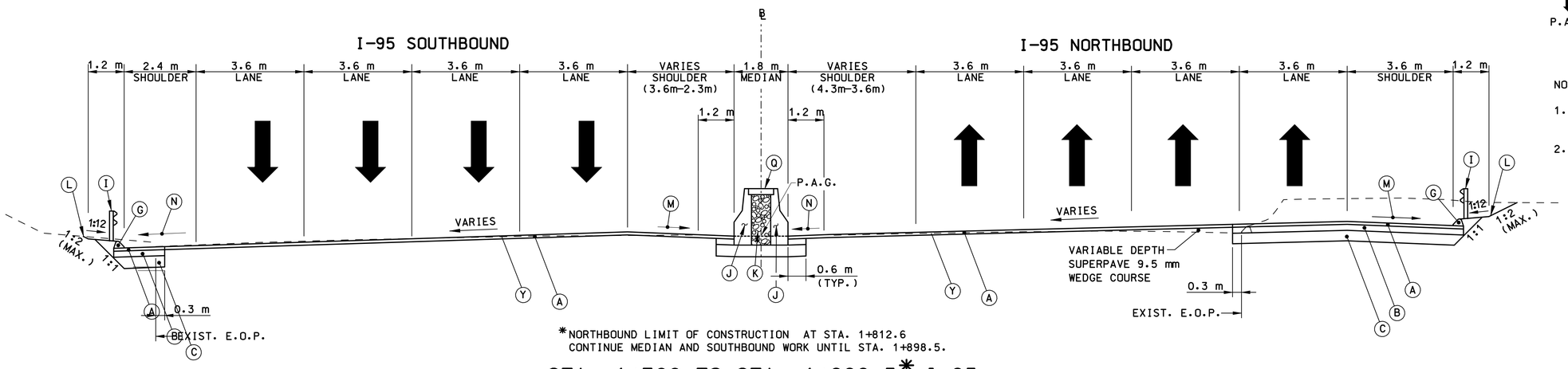

*NORTHBOUND LIMIT OF CONSTRUCTION AT STA. 1+812.6
CONTINUE MEDIAN AND SOUTHBOUND WORK UNTIL STA. 1+898.5.

STA. 1+700 TO STA. 1+898.5* I-95

N.T.S.

LEGEND

A	100 mm HMA S0.5 (PLACED IN TWO EQUAL LIFTS on 40 mm HMA S0.375)
B	200 mm HMA S1(PLACED IN TWO EQUAL LIFTS)
C	350 mm PROCESSED AGGREGATE SUBBASE
D	100 mm HMA S0.5 (PLACED IN TWO EQUAL LIFTS)
E	150 mm HMA S1
F	250 mm PROCESSED AGGREGATE SUBBASE
G	100 mm BITUMINOUS CONCRETE PARK CURB
H	150 mm CONCRETE CURBING
I	MBR TYPE R-B 350
J	530mm x 1145 mm F-SHAPE PRECAST CONCRETE BARRIER CURB
K	GRANULAR FILL
L	TURF ESTABLISHMENT
M	SEE SHOULDER TREATMENT HIGH SIDE OF BANK TYPICAL DRAWING NO. TYP-01
N	MINIMUM CROSS SLOPE 4% OR CONTINUE ROADWAY CROSS SLOPE IF GREATER
O	130 mm CONCRETE SIDEWALK ON 100 mm GRANULAR FILL
P	MATERIAL FOR TACK COAT
Q	100 mm CONCRETE CAP
R	BRIDGE PARAPET
S	BRIDGE MEDIAN
T	25 mm HMA S0.25
U	50 mm HMA S0.5
V	MEMBRANE WATERPROOFING
W	100 mm HMA S1
X	25 mm MINIMUM HMA S0.375 LEVELING COURSE (VARIES)
Y	MILL 100 mm EXISTING HMA PAVEMENT
Z	300 mm SUBBASE
↑	DIRECTION OF TRAVEL AHEAD STATION
↓	DIRECTION OF TRAVEL BACK STATION
P.A.G.	POINT OF APPLICATION OF GRADE

NOTES:

1. HMA S1 MUST NOT BE USED AS A RIDING SURFACE ON I-95, OR RAMPS A,B,C,D
2. RUMBLE STRIPS SHALL BE INSTALLED ON I-95 SHOULDERS AS STATED IN THE SPECIFICATIONS.

REV.	DATE	DESCRIPTION	SHEET. NO
		REVISIONS	

NOT TO SCALE

DESIGNER: R. P. TALBOT
DRAFTER: M.C. DEEGAN
CHECKED BY:
DATE CHECKED:

STATE OF CONNECTICUT
DEPARTMENT OF TRANSPORTATION

ENGINEER: PB AMERICAS, INC.
APPROVED BY: DATE:

PROJECT TITLE: RECONSTRUCTION OF I-95 OVER WEST RIVER

CADD typ-03-092522.dgn PLOTTED 11/13/2012

TOWN: NEW HAVEN / WEST HAVEN

DRAWING TITLE: TYPICAL SECTIONS

PROJECT NO.: 92-522
DRAWING NO.: TYP-03
SHEET NO.:

1:03:16 PM
11/13/2012
t:\v8cadd\projects\pb18735\fd\highway\contract_sheets\typ-03-092522.dgn

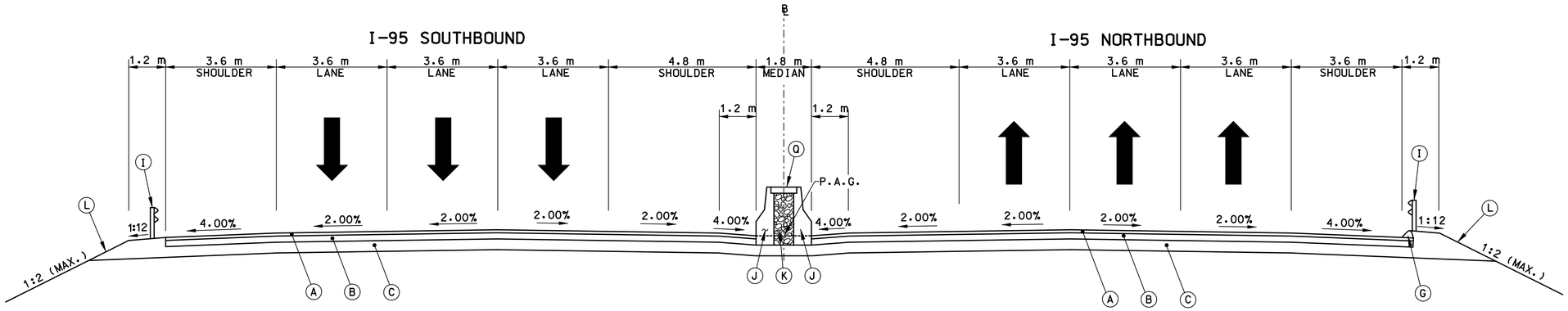

I-95 6 LANE NORMAL SECTION

N.T.S.

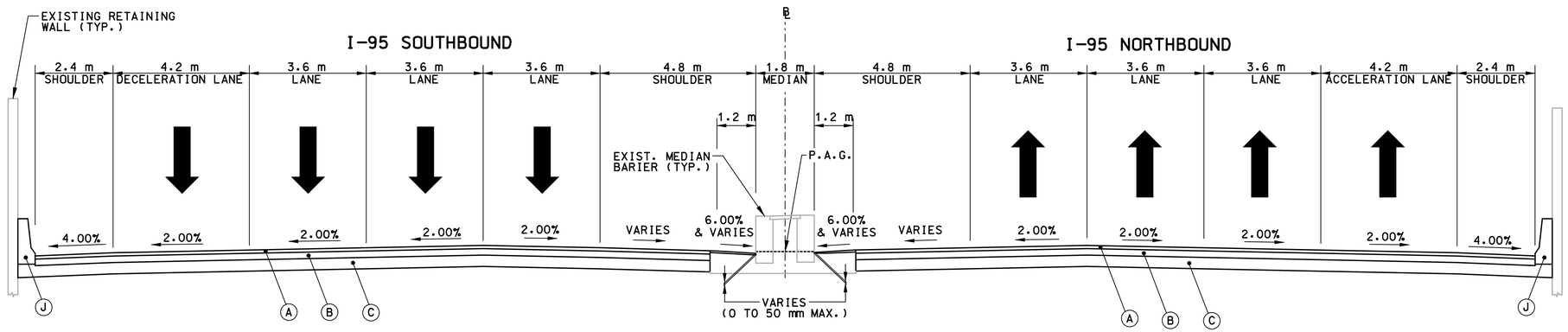

I-95 8 LANE NORMAL SECTION AT HOWARD AVENUE

N.T.S.

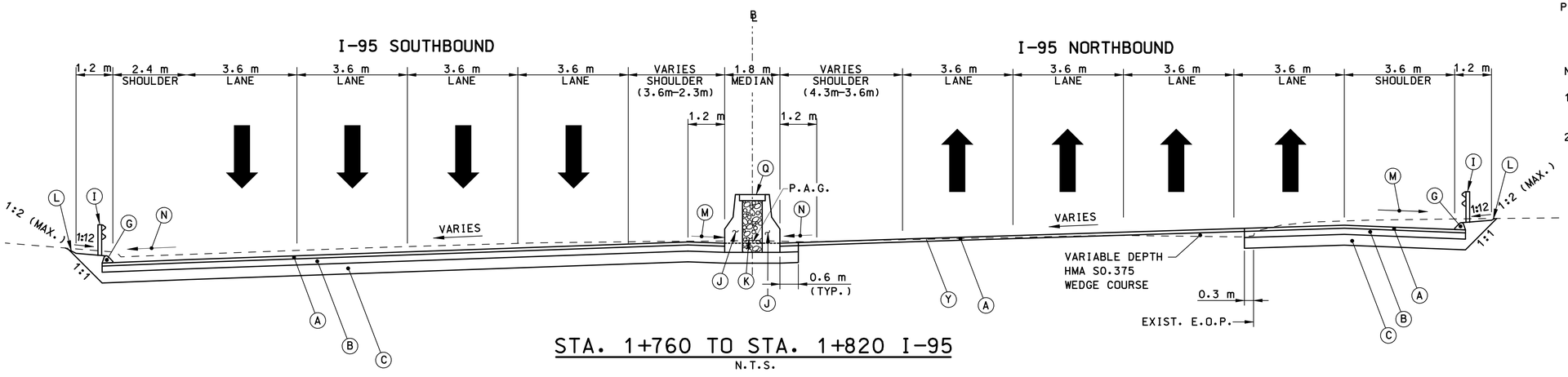

STA. 1+760 TO STA. 1+820 I-95

N.T.S.

LEGEND

A	100 mm HMA S0.5 (PLACED IN TWO EQUAL LIFTS on 40 mm HMA S0.375)
B	200 mm HMA S1(PLACED IN TWO EQUAL LIFTS)
C	350 mm PROCESSED AGGREGATE SUBBASE
D	100 mm HMA S0.5 (PLACED IN TWO EQUAL LIFTS)
E	150 mm HMA S1
F	250 mm PROCESSED AGGREGATE SUBBASE
G	100 mm BITUMINOUS CONCRETE PARK CURB
H	150 mm CONCRETE CURBING
I	MBR TYPE R-B 350
J	530mm x 1145 mm F-SHAPE PRECAST CONCRETE BARRIER CURB
K	GRANULAR FILL
L	TURF ESTABLISHMENT
M	SEE SHOULDER TREATMENT HIGH SIDE OF BANK TYPICAL DRAWING NO. TYP-01
N	MINIMUM CROSS SLOPE 4% OR CONTINUE ROADWAY CROSS SLOPE IF GREATER
O	130 mm CONCRETE SIDEWALK ON 100 mm GRANULAR FILL
P	MATERIAL FOR TACK COAT
Q	100 mm CONCRETE CAP
R	BRIDGE PARAPET
S	BRIDGE MEDIAN
T	25 mm HMA S0.25
U	50 mm HMA S0.5
V	MEMBRANE WATERPROOFING
W	100 mm HMA S1
X	25 mm MINIMUM HMA S0.375 LEVELING COURSE (VARIES)
Y	MILL 100 mm EXISTING HMA PAVEMENT
Z	300 mm SUBBASE
↑	DIRECTION OF TRAVEL AHEAD STATION
↓	DIRECTION OF TRAVEL BACK STATION
P.A.G.	POINT OF APPLICATION OF GRADE

NOTES:

1. HMA S1 MUST NOT BE USED AS A RIDING SURFACE ON I-95, OR RAMPS A,B,C,D
2. RUMBLE STRIPS SHALL BE INSTALLED ON I-95 SHOULDERS AS STATED IN THE SPECIFICATIONS.

REV.	DATE	DESCRIPTION	SHEET. NO
		REVISIONS	

NOT TO SCALE

DESIGNER: R. P. TALBOT
DRAFTER: M.C. DEEGAN
CHECKED BY:
DATE CHECKED:

STATE OF CONNECTICUT
DEPARTMENT OF TRANSPORTATION

ENGINEER: PB AMERICAS, INC.
APPROVED BY: DATE:

PROJECT TITLE: RECONSTRUCTION OF I-95 OVER WEST RIVER

CADD typ-03-092522.dgn PLOTTED 11/12/2012

TOWN: NEW HAVEN / WEST HAVEN

DRAWING TITLE: TYPICAL SECTIONS

PROJECT NO.: 92-522
DRAWING NO.: TYP-03
SHEET NO.:

6:31:14 PM
11/12/2012
t:\v8cadd\projects\pb18735\fd\highway\contract_sheets\typ-03-092522.dgn

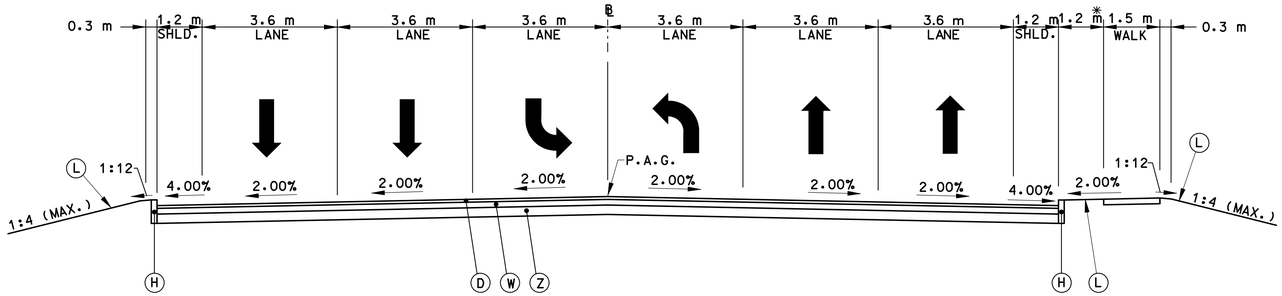

ELLA T. GRASSO BOULEVARD
6 LANE SECTION
N.T.S.

* UNDER BRIDGE ELIMINATE GRASS AREA AND PROVIDE A 2.7M SIDEWALK

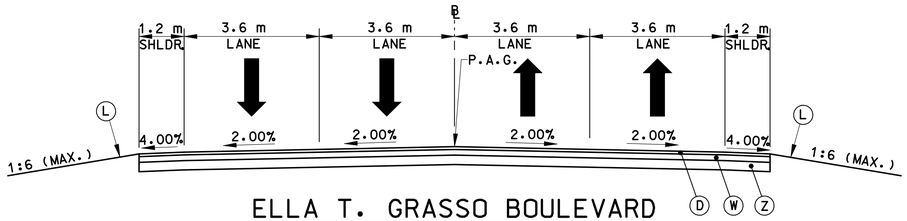

ELLA T. GRASSO BOULEVARD
4 LANE SECTION
N.T.S.

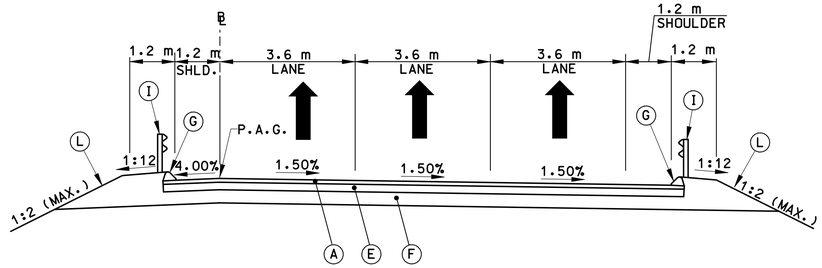

3 LANE RAMP SECTION
N.T.S.

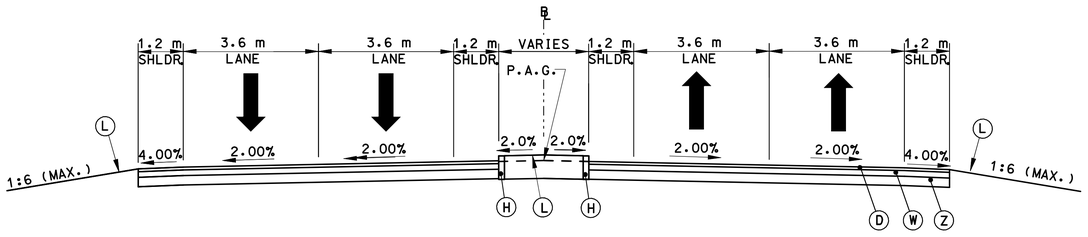

ELLA T. GRASSO BOULEVARD ISLAND SECTION
N.T.S.

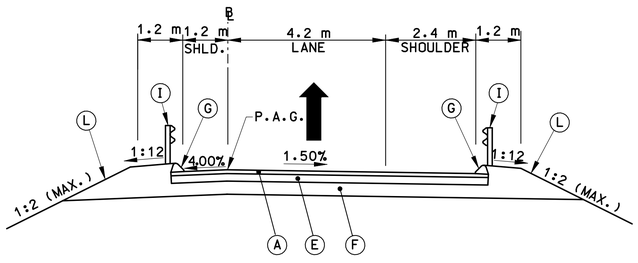

NORMAL RAMP SECTION
N.T.S.

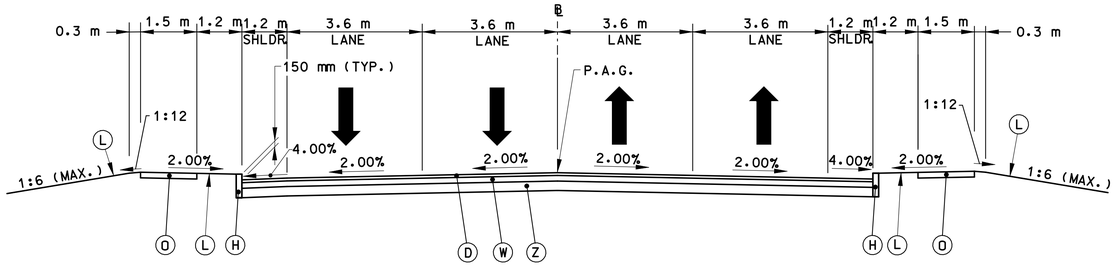

KIMBERLY AVENUE
N.T.S.

LEGEND

A	100 mm HMA S0.5 (PLACED IN TWO EQUAL LIFTS on 40 mm HMA S0.375)
B	200 mm HMA S1(PLACED IN TWO EQUAL LIFTS)
C	350 mm PROCESSED AGGREGATE SUBBASE
D	100 mm HMA S0.5 (PLACED IN TWO EQUAL LIFTS)
E	150 mm HMA S1
F	250 mm PROCESSED AGGREGATE SUBBASE
G	100 mm BITUMINOUS CONCRETE PARK CURB
H	150 mm CONCRETE CURBING
I	MBR TYPE R-B 350
J	530mm x 1145 mm F-SHAPE PRECAST CONCRETE BARRIER CURB
K	GRANULAR FILL
L	TURF ESTABLISHMENT
M	SEE SHOULDER TREATMENT HIGH SIDE OF BANK TYPICAL DRAWING NO. TYP-01
N	MINIMUM CROSS SLOPE 4% OR CONTINUE ROADWAY CROSS SLOPE IF GREATER
O	130 mm CONCRETE SIDEWALK ON 100 mm GRANULAR FILL
P	MATERIAL FOR TACK COAT
Q	100 mm CONCRETE CAP
R	BRIDGE PARAPET
S	BRIDGE MEDIAN
T	25 mm HMA S0.25
U	50 mm HMA S0.5
V	MEMBRANE WATERPROOFING
W	100 mm HMA S1
X	25 mm MINIMUM HMA S0.375 LEVELING COURSE (VARIES)
Y	MILL 100 mm EXISTING HMA PAVEMENT
Z	300 mm SUBBASE
↑	DIRECTION OF TRAVEL AHEAD STATION
↓	DIRECTION OF TRAVEL BACK STATION
P.A.G.	POINT OF APPLICATION OF GRADE

NOTES:

1. HMA S1 MUST NOT BE USED AS A RIDING SURFACE ON I-95, OR RAMPS A,B,C,D
2. RUMBLE STRIPS SHALL BE INSTALLED ON I-95 SHOULDERS AS STATED IN THE SPECIFICATIONS.

REV.	DATE	DESCRIPTION	SHEET. NO
		REVISIONS	

NOT TO SCALE

DESIGNER: R. P. TALBOT
DRAFTER: M.C. DEEGAN
CHECKED BY:
DATE CHECKED:

STATE OF CONNECTICUT
DEPARTMENT OF TRANSPORTATION

ENGINEER: PB AMERICAS, INC.
APPROVED BY: DATE:

PROJECT TITLE: RECONSTRUCTION OF I-95 OVER WEST RIVER

CADD typ-04-092522.dgn PLOTTED 11/12/2012

TOWN: NEW HAVEN / WEST HAVEN

DRAWING TITLE: TYPICAL SECTIONS

PROJECT NO.: 92-522
DRAWING NO.: TYP-04
SHEET NO.:

6:31:17 PM
11/12/2012
t:\v8cadd\projects\pb18735\fd\highway\contract_sheets\typ-04-092522.dgn

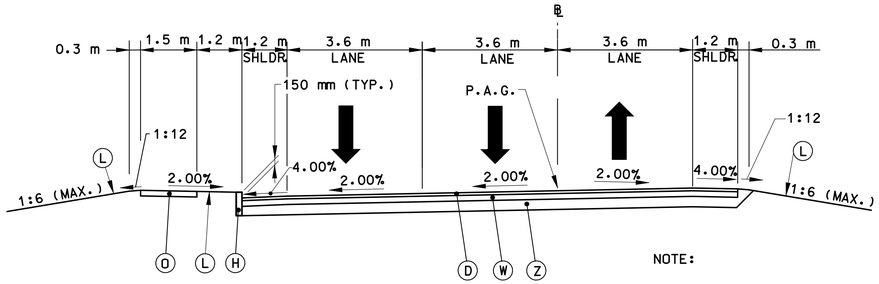

NOTE:

1. SEE CITY OF NEW HAVEN DETAIL ON DWG. NO. MDS-XX FOR PAVEMENT MARKING ALONG SEA STREET, STA. 100+055 TO STA. 100+256.

SEA STREET
3 LANE SECTION

N.T.S.

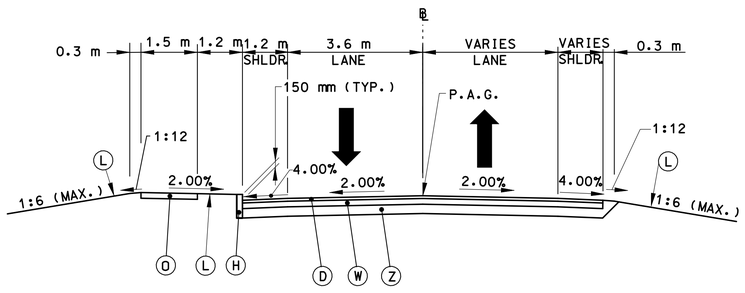

SEA STREET
2 LANE SECTION

N.T.S.

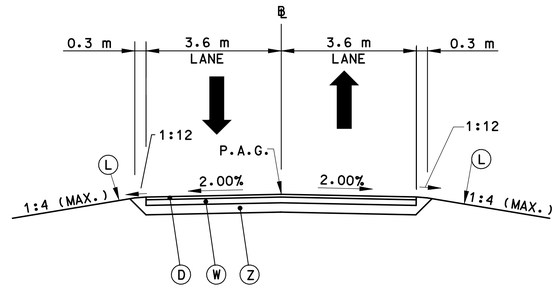

COMPOST ACCESS ROAD

N.T.S.

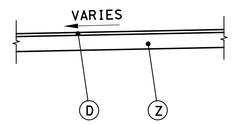

COMMUTER PARKING LOT

N.T.S.

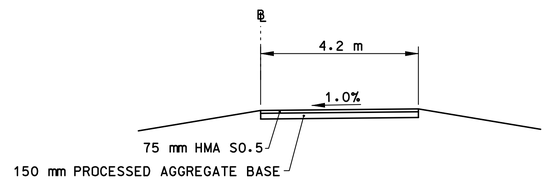

HARBORSIDE TRAIL

N.T.S.

LEGEND

A	100 mm HMA S0.5 (PLACED IN TWO EQUAL LIFTS on 40 mm HMA S0.375)
B	200 mm HMA S1(PLACED IN TWO EQUAL LIFTS)
C	350 mm PROCESSED AGGREGATE SUBBASE
D	100 mm HMA S0.5 (PLACED IN TWO EQUAL LIFTS)
E	150 mm HMA S1
F	250 mm PROCESSED AGGREGATE SUBBASE
G	100 mm BITUMINOUS CONCRETE PARK CURB
H	150 mm CONCRETE CURBING
I	MBR TYPE R-B 350
J	530mm x 1145 mm F-SHAPE PRECAST CONCRETE BARRIER CURB
K	GRANULAR FILL
L	TURF ESTABLISHMENT
M	SEE SHOULDER TREATMENT HIGH SIDE OF BANK TYPICAL DRAWING NO. TYP-01
N	MINIMUM CROSS SLOPE 4% OR CONTINUE ROADWAY CROSS SLOPE IF GREATER
O	130 mm CONCRETE SIDEWALK ON 100 mm GRANULAR FILL
P	MATERIAL FOR TACK COAT
Q	100 mm CONCRETE CAP
R	BRIDGE PARAPET
S	BRIDGE MEDIAN
T	25 mm HMA S0.25
U	50 mm HMA S0.5
V	MEMBRANE WATERPROOFING
W	100 mm HMA S1
X	25 mm MINIMUM HMA S0.375 LEVELING COURSE (VARIES)
Y	MILL 100 mm EXISTING HMA PAVEMENT
Z	300 mm SUBBASE
↑	DIRECTION OF TRAVEL AHEAD STATION
↓	DIRECTION OF TRAVEL BACK STATION
P.A.G.	POINT OF APPLICATION OF GRADE

NOTES:

1. HMA S1 MUST NOT BE USED AS A RIDING SURFACE ON I-95, OR RAMPS A,B,C,D
2. RUMBLE STRIPS SHALL BE INSTALLED ON I-95 SHOULDERS AS STATED IN THE SPECIFICATIONS.

REV.	DATE	DESCRIPTION	SHEET. NO
		REVISIONS	

NOT TO SCALE

DESIGNER: R. P. TALBOT
DRAFTER: M.C. DEEGAN
CHECKED BY:
DATE CHECKED:

STATE OF CONNECTICUT
DEPARTMENT OF TRANSPORTATION

ENGINEER: PB AMERICAS, INC.
APPROVED BY: DATE:

PROJECT TITLE: RECONSTRUCTION OF I-95 OVER WEST RIVER

CADD typ-05-092522.dgn PLOTTED 11/12/2012

TOWN: NEW HAVEN / WEST HAVEN

DRAWING TITLE: TYPICAL SECTIONS

PROJECT NO.: 92-522
DRAWING NO.: TYP-05
SHEET NO.:

6:31:20 PM
11/12/2012
t:\v8cadd\projects\pb18735\fd\highway\contract_sheets\typ-05-092522.dgn