(from HNTB report; to request the entire report, contact the Office of Quality Assurance)

Railroad Station at Fairfield Metro Center
State Project No. 301-0060
April 20, 2011

Introduction

HNTB was requested by the Connecticut Department of Transportation (ConnDOT), through the Office of Project Oversight and Quality Assurance, to perform a forensic analysis of the vehicular bridge over Timko Street being constructed under State Project No. 301-0060, hereinafter referred to as the Project. This exercise focused on determining the factors contributing to the out-of-plane bending of Girders G1and G8 and the concrete bridge deck variance from plan identified thickness of 8 ¼". Conclusions and recommendations for project specific actions and modifications to ConnDOT practices are provided at the end of this report.

Project Background

The access road bridge, constructed under State Project No. 301-0060, is a two span continuous bridge over the Metro-North Railroad and Timko Street in Fairfield, Connecticut. The superstructure is of conventional construction featuring relatively shallow parallel welded plate girders with 37 inch deep webs and 18 inch wide flanges. The diaphragms are staggered in placement and vary in design from standard MC channels to rolled angle fabrications. All three bearing lines are parallel and skewed to 39.38 degrees as measured from normal to the access road centerline. The abutments are of traditional full-height, cast-in-place cantilever wall construction on spread footings. The center pier is constructed as singular columns carrying each individual girder bearings and supported by a common spread footing. The superstructure is thermally fixed at the pier via traditional steel bearings, and is free to expand at the abutments via elastomeric bearings which are unattached to the abutment bearing seat.

The Project was designed by DMJM Harris, Inc. (herein after referred to as AECOM) and is being constructed by The Middlesex Corporation with Siefert Associates, LLC preparing working drawings for Middlesex Corporation. STV Incorporated (STV) is providing Construction Engineering and Inspection (CEI) on behalf of ConnDOT. Construction of the Project began in 2008 and was under construction at the time of this report. Sometime after the bridge deck was poured on May 5, 2010, certain deviations from the design documents were observed in the construction prior to casting the parapets and sidewalks. Specifically, Girders G1 and G8 were observed to be out of plumb and the deck thickness was observed to be greater than the thickness identified in the contract documents.

Conclusions and Recommendations

After reviewing the documents provided, visiting the site, meeting with design and field inspection staff and performing independent analyses it is apparent there were several factors at play that led to the out of plane bending and excess deflection of the fascia girders on the vehicular bridge over Timko Street in Fairfield, CT. The major contributing factors were limited consideration of construction loads by both the designer and the contractor, lack of communication between design and construction and inconsistency in design requirements.

Return to Lessons Learned Link Page

What follows are specific conclusions and recommendations for both the Project and for ConnDOT policy / practice.

1. Project Specific

In general, it appears that the designer abided by the codes and standards in place at the time this structure was designed and standard engineering practices were employed. The designer prepared a two dimensional model of the structure in the design of the bridge. Two dimensional models do not indicate the effects of torsional stresses on a structure. *AASHTO LRFD Bridge Design Specifications* have been revised in recent editions to include skew factors designed to account for these stresses in skewed bridges. Three-dimensional models, such as finite element analysis, make the effects of torsional stresses readily apparent and allow the designer to modify a design to account for these stresses. This would have been particularly beneficial on this structure given its high skew angle.

Inadequate bracing of the fascia girders under construction loads appears to be the cause of the out of plane bending and excess deflection observed at Girders G1 and G8. The structural analysis of this bridge suggests that the eccentric overhang bracket (construction platform) loading, which was not considered in the design calculations, contributed to excessive and unanticipated stresses in the fascia girders which resulted in both excessive deflection of the girders and failure of the diaphragm connections.

During placement of the deck concrete the dead load of the wet concrete exacerbated the problem introducing further deflection and torsional bending of the fascia girders. Due to this unanticipated deflection, the contractor placed concrete until the design surface deck elevations were reached. This resulted in increased deck thicknesses at these locations. This is evident in the construction photo below which shows the finished deck concrete elevation only a few inches below the sidewalk reinforcing as opposed to 6 to 7 inches per the details.

In reviewing the design computations, it appears that the ability of the piers to withstand seismic forces is inadequate because the pier diaphragms were not designed to adequately transfer seismic forces equally to the columns. Revisions to the seismic code, made after this design was completed, may alleviate this issue.

We offer the following recommendations for action on the Project.

A. The designer's LRFR rating of the structure does not completely reflect the as-built condition. The rating should be revised accordingly to reflect the as-built condition including the dead load associated with the Stay-In-Place forms as well as the stresses induced by the out of plane bending and excess deflection of the fascia girders.

B. Should the ratings produced in A. not yield adequate results (Unity rating of 1.0 or greater), a more refined analysis should be performed through hand calculations to determine if adequate ratings can be achieved.

C. The presumption of composite behavior of the superstructure should be verified.

D. To ensure adequate capacity in the diaphragm connections in the negative moment regions (located within 38 eight feet on either side of the pier centerline), it is recommended that the bolts in these connections be replaced to relieve any residual stresses and to ensure they are forming slip connections instead of bearing connections. If residual stresses exist in these connections but are not

relieved in the manner described above, the connections could fail by tearing of the diaphragms/connecting plates or shearing of the bolts.

E. Design calculation for the pier should be reviewed to verify that the pier design is adequate to resist seismic forces in accordance with the revised seismic code requirements.

2. ConnDOT Policy / Practice

In performing this analysis, the following opportunities for improvement in the design and construction of ConnDOT bridges were evident.

A. There appears to be a conflict between the ConnDOT Bridge Manual and the AASHTO LRFD Bridge Design Specifications with regard to intermediate diaphragm sizing. AASHTO requires intermediate diaphragms to be 75% of girder heights, at a minimum, whereas detail 4.3.2 of the ConnDOT Bridge Design Manual allows for smaller intermediate diaphragm sizing. Additionally, detail 4.3.2 specifies connection requirements. It is recommended that the ConnDOT Bridge Manual be updated to be consistent with AASHTO requirements.

Furthermore, specific language should be included in Section 7.2.6 – "Diaphragms and Cross-Frames" of the ConnDOT Bridge Manual requiring designers to analyze, by computation, all proposed diaphragm configurations for their ability to convey design loads with particular attention given to diaphragms configured to accommodate proposed or existing utilities carried on the bridge. Utilities should be precluded from being carried in outside bays.

B. There is no published requirement for bridges to be modeled in three dimensions. At a minimum, for bridges with skew angles 20 degrees or larger, it is recommended that the ConnDOT Bridge Manual be revised to require designers to prepare three dimensional models.

C. It is common practice for contractors to construct temporary work platforms outside of the bridge parapets. Designers are not required to account for this loading because the contractor's "means and methods" of construction are not known during design. Current ConnDOT practice is to require the Contractor to account for construction loads in their working drawings submittals. Minimally, the ConnDOT Bridge Manual should be revised to require designers to account for some minimum construction load criteria in their designs and to require that this information be included in the Construction Contract Documents.

D. The ConnDOT Standard Specification for Roads, Bridges and Incidental Construction identifies requirements for Contractor's to engineer temporary work platforms and associated bracing and all other construction loads during construction of a bridge. ConnDOT should consider this issue, through input from its design and construction staff as well as consultant designers and contractors, to determine where responsibility for this task should be placed. Under the present requirements, while contractors are required to address these issues in working drawings prepared by a licensed Connecticut Professional Engineer, there are no experience requirements identified for such engineers in the Contract Documents. Since the contractors are responsible for their work, including working drawings, designers often perform audit type reviews of these working drawings. This leaves a grey area where gaps in analyses can occur and correctable or avoidable problems can be missed. Two options for consideration for improving performance in this are:

1. Require designers to consider temporary bracing in their designs and identify these considerations and resulting allowable construction loads in the Contract Documents. Contractor's would still be required to prepare working drawings but would now be provided with limiting construction loading criteria with which to work. The major benefit of this option is that the

designer, who is intimately familiar with the details of the design, would be best suited to efficiently establish construction loading criteria.

2. Continue to require contractors to submit working drawings and calculations, but require designers to perform detailed reviews of these items to validate that the full effects of construction loads have been considered.

In either option or variation thereof, it is imperative that field personnel be familiar with the requirements and report any deviations from approved documents to the designer for their consideration.

E. Detail 6.2.3 of the ConnDOT Bridge Manual shows a thickening of the slab at the parapet which is formed by the concrete installer raking concrete into this area. This prevents the contractor from extending the concrete screed out to the edge of the deck and makes monitoring of the deck thickness in this area difficult. This challenge is magnified on bridge decks with sidewalks because deck and sidewalk reinforcing are typically installed complete before placement of deck concrete. This allows reinforcing installation to be performed once rather than in two separate operations. The one-time installation of all reinforcing steel requires contractors to set concrete screeds on interior girders as opposed to fascia girders and further limits the contractor's ability to monitor thickness of the deck concrete in the sidewalk/parapet areas during placement. As such, unanticipated deflections will not be readily apparent during concrete placement.

To better monitor concrete depth during placement, we recommend that the ConnDOT Standard Specification for Roads, Bridges and Incidental Construction and detail 6.2.3 of the ConnDOT Bridge Design Manual be revised to require the use of rebar splices for sidewalk reinforcing and that such reinforcing not be installed until after the deck concrete is placed. This modification would allow mounting of the concrete screed closer to the edge of the deck (at the fascia girder) giving the contractor greater control of concrete depth during placement. This also would facilitate placement of deck concrete in these areas because the contractor would not be encumbered by sidewalk reinforcing.

Furthermore, detail 6.2.3 should be revised to include a bulkhead at the edge of the deck which would act as a guide from which concrete depth can be monitored during placement. The practice of casting deck concrete to a uniform thickness is employed by Maine DOT (Figure 1), Massachusetts DOT (Figure 2) and New Jersey DOT (Figure 3). By employing these changes, field personnel (Contractor and Inspector) would have the ability to verify elevations in the sidewalk areas and react to any unanticipated deflections prior to and during the placement of deck concrete.

FIGURE 1 – MAINE DOT DECK SLAB DETAIL

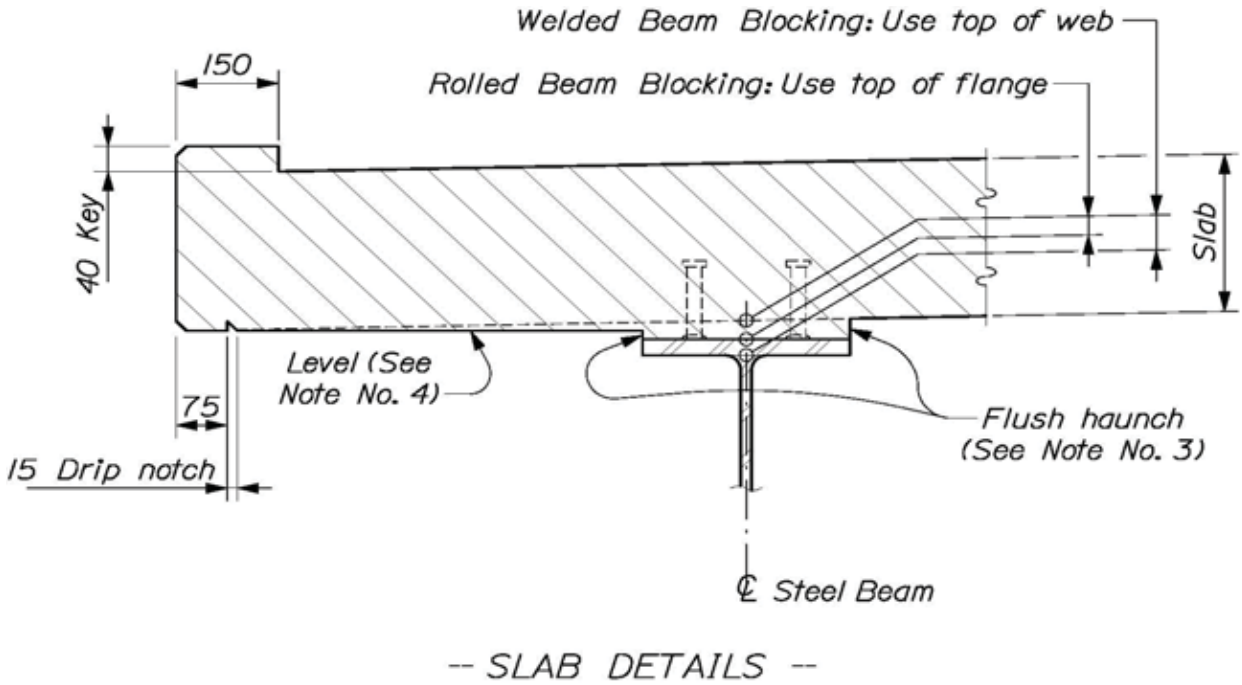

NOTES:

1. Shear key and drip notch details are typical for all superstructure designs.

2. Blocking dimensions for construction shall be determined using the "Bottom of Slab Elevations" table shown on the Design Drawings. Theoretical Blocking will be given for reference purposes only. Do not use Theoretical Blocking for setting formwork.

3. Blocking on all beams shall be formed using the flush haunch detail shown.

4. On curved superelevated structures, where the distance between the exterior beam and the fascia varies over the length of the deck, the bottom of the slab overhang shall follow the superelevation cross - slope.

COMPOSITE CONCRETE SUPERSTRUCTURE SLAB

502(02)

FIGURE 2 - MASSACHUSETTS DOT PARAPET DETAIL

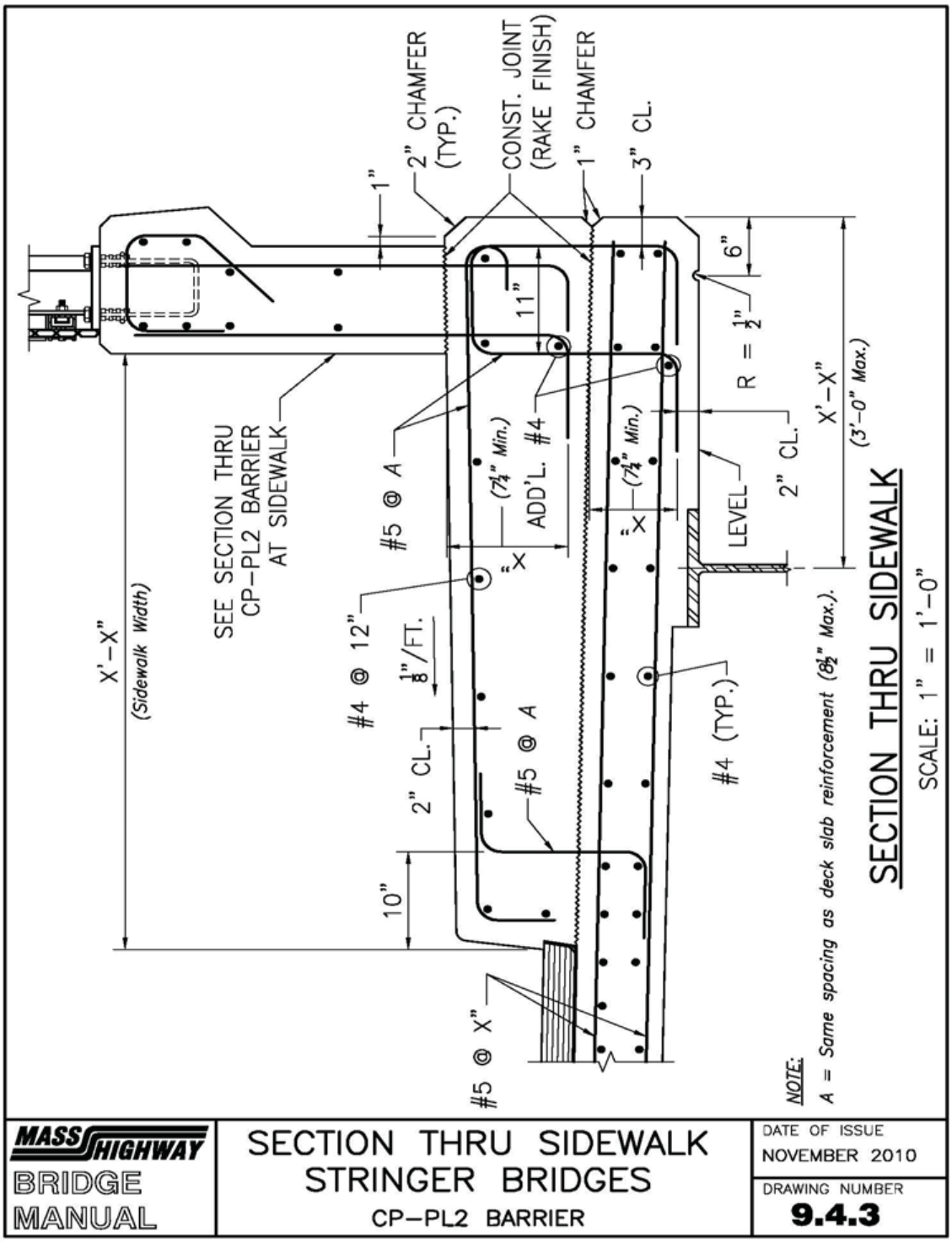

FIGURE 3 – NEW JERSEY DOT PARAPET DETAIL

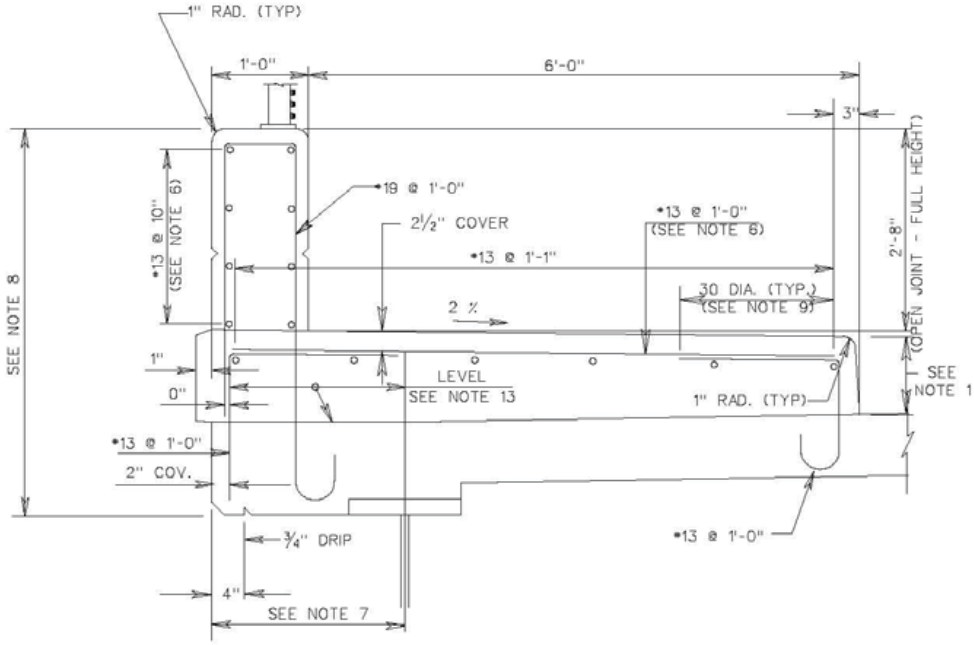

BCD-507-2.3
(2'-8" HIGH PARAPET WITH SIDEWALK)

NOTES:

1 CURB HEIGHT TO MATCH ROADWAY APPROACH CURB.

2 3/16" OPEN DEFLECTION JOINT SHALL BE PROVIDED IN PARAPETS AT INTERVALS NOT EXCEEDING 20'-0" AND CONTRACTION JOINTS SHALL BE PROVIDED AT THE MIDPOINT BETWEEN THE OPEN JOINTS.

3 THE 3/16" OPEN JOINT SHALL STOP AT THE LINE INDICATED AND A CONTRACTION JOINT SHALL BE PROVIDED BELOW THAT LINE.

4 CONTRACTION JOINTS SHALL BE PROVIDED IN SIDEWALKS AT LOCATIONS OF 3/16" OPEN PARAPET DEFLECTION JOINTS.

5 FULL DEPTH JOINTS SHALL BE PROVIDED AT LOCATION OF TRANSVERSE DECK JOINTS. THE FULL DEPTH JOINT OPENING WIDTH SHALL EQUAL THE TRANSVERSE DECK JOINT OPENING WIDTH.

6 ALL REINFORCEMENT STEEL IN PARAPET AND SIDEWALK SHALL BE CORROSION PROTECTED.

7 PREFERRED MAXIMUM OVERHANG 2'-6". PERMANENT METAL STAY-IN-PLACE FORMS NOT PERMITTED IN THIS AREA.

8 FASCIA RUSTICATION AND CONFIGURATION AS PER NJDOT STANDARD SPECIFICATIONS.

9 AS AN OPTION, THE CONTRACTOR MAY ELIMINATE SPLICES AT EACH END OF THE TOP TRANSVERSE REINFORCEMENT STEEL IN SIDEWALKS BY PROVIDING A SINGLE BAR OF THE SAME CONFIGURATION WITH HOOKS AT EACH END, EMBEDDED IN THE DECK SLAB.

10 IF CONDUITS ARE USED WITHIN THE PARAPET, PROVIDE A SLEEVE OF SUFFICIENT LENGTH TO ACCOMODATE MAXIMUM EXPANSION AND CONTRACTION OF THE EXPANSION JOINT.

11 IN CONSIDERING THE HEIGHT OF THE PARAPET AND RAILING COMBINATION, THE MINIMUM HEIGHT SHALL BE 4'-6" FOR BICYCLE TRAFFIC AND 3'-6" FOR PEDESTRIAN TRAFFIC.

12 FOR ADDITIONAL REINFORCEMENT STEEL THAT IS REQUIRED IN THE VICINITY OF PARAPET JOINTS TO PREVENT CONCRETE CRACKING IN THE OVERHANG PORTIONS OF THE DECK SLAB, SEE "DETAIL 1."

13 THE BRIDGE DECK PORTION UNDER THE PARAPET SHALL BE POURED LEVEL.

14 ALL REINFORCEMENT STEEL IS DESIGNATED IN METRIC UNITS.

F. Communication between design and construction must be improved. Recommendations for improvements in this area are:

1. Regardless of the financial value of projects, independent constructability reviews should be performed on at least the 60% or Semi-Final submittal. Although the cost of this bridge is relatively low in comparison to other much larger bridge projects undertaken by ConnDOT, the complexity associated with the high skew angle of this bridge was the risk to be considered. Independent reviews could be performed by designer staff not previously involved with the Project. Such reviews should be documented and included with the review comments on the submittal.

2. During construction, emphasis on the effect of construction means and methods on design should be reinforced to all parties. Training of inspection staff in this area is recommended. Increased participation in this effort by designers is recommended especially at the commencement of projects and prior to significant project activities such as steel demolition /erection and concrete pours. A portion of preconstruction meetings should be allocated to design for presentation of the design and key underlying assumptions particularly those that could be affected by construction.

3. ConnDOT should establish working groups consisting of public and private sector construction and design professionals. If ConnDOT has already established similar internal working groups, private sector representatives should be invited to join these groups. These groups should meet regularly to discuss industry trends specifically as they relate to the areas of constructability and risk management. The benefit of this collaboration would be improved design and construction product quality, reduced risk for all parties, more effective project costing and improved worksite safety.

(from HNTB report; to request the entire report, contact the Office of Quality Assurance)