FORM NO. ENG. 8 ED. 11-62

PUB. ROAD DIV. NO.	STATE	TOWN	FED. AID PROJ. NO.	PROJ. NO.	YEAR	ROUTE NO.	SHEET NO.	TOTAL SHEETS
1	CONN.	EAST HARTFORD	I-84-4(42)63 U-46(18) U-150(7)	42-134 42-133 42-132	1962	I-84	1	215

CONNECTICUT
STATE HIGHWAY DEPARTMENT
PLAN
FOR
CONSTRUCTION
OF

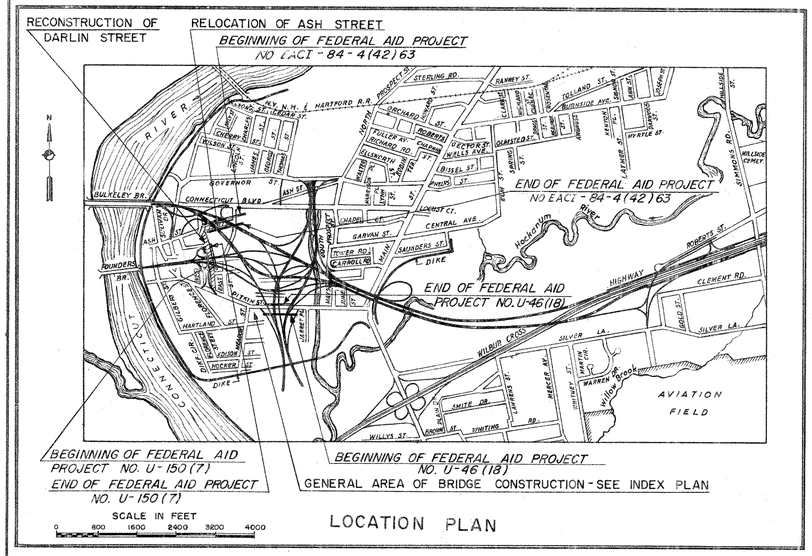

LOCATION PLAN

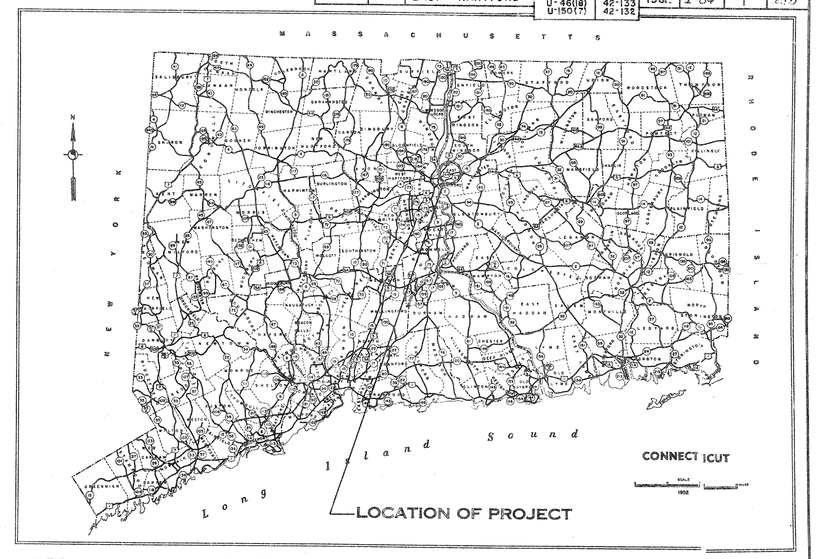

INTERSTATE ROUTE 84
IN THE TOWN OF
EAST HARTFORD
BRIDGES, RELOCATION OF ASH STREET AND RECONSTRUCTION OF DARLIN STREET

SCALES { PLAN 1 IN. = 40 FT.
PROFILE: HOR. 1 IN. = 40 FT. VERT. 1 IN. = 4 FT.
CROSS SECTION: 1 IN. = 10 FT. AND 1 IN. = 5 FT.

TO BE MAINTAINED BY THE STATE

1955 SPECIFICATIONS, FORM NO., 808 GOVERN
ALL ELEVATIONS ON THIS PROJECT BASED ON U.S.C. & G.S. DATUM

TOWN NO. 42
PROJECT NOS. 132 133 134

FEDERAL AID SYSTEM - INTERSTATE & PRIMARY
ASSUMED DESIGN SPEED - 50 M.P.H.
ANTICIPATED A.D.T. IN 1975 - SEE SHEET NO. 7
30TH HIGHEST HOUR DIRECTIONAL TRAFFIC IN 1975 - 5000-1600
C.H.D. CLASSIFICATION - "F" URBAN (COMMERCIAL OR INDUSTRIAL)
LIMITED ACCESS ON EXPRESSWAY

CONSTRUCTION STARTED - 4-24-62
CONSTRUCTION COMPLETED - 1-9-64 PROJ. NO. 42-134

CONSTRUCTION STARTED 4-24-62
CONSTRUCTION COMPLETED 1-6-64 PROJ NO 42-133

CONSTRUCTION STARTED 4-24-62
CONSTRUCTION COMPLETED 8-6-63 PROJ. NO. 42-132

PLANS REVISED BY W.E.S. DATE 1-3-66
CHECKED BY GAR DATE 10-5-66
PROPERTY CHECK

NOTE:
WHEREVER I-84-4(42)63 APPEARS ON THE PLANS IT SHALL BE CONSTRUED TO READ EACI-84-4(42)63

NOTE:
WHEREVER I-84-4(38)63 APPEARS ON THE PLANS IT SHALL BE CONSTRUED TO READ EAC I-84-4(38)63

SCALES { PLAN 1 IN. = 40 FT.
PROFILE: HOR. 1 IN. = 40 FT. VERT. 1 IN. = 4 FT.
CROSS SECTION: 1 IN. = 10 FT. AND 1 IN. = 5 FT.

TO BE MAINTAINED BY THE STATE

FEDERAL AID PROJECT NO. EAC I-84-4(42)63

FROM LINE NO.1 BRIDGE A STA. 34+52.83 TO STA. 35+63.45
FROM LINE NO.2 BRIDGE B STA. 32+64.20 TO STA. 33+32.66

FEDERAL AID LENGTH = 89.54 FT. AVERAGE

FEDERAL AID PROJECT NO. U-46 (18)

FROM LINE NO.4 BRIDGE J STA. 176+43.39 TO STA. 177+04.00
FROM LINE NO.3 BRIDGE L STA. 176+76.98 TO STA. 177+52.92

FEDERAL AID LENGTH = 68.27 FT. AVERAGE
(CONNECTION TO EAST HARTFORD HIGHWAY)

FEDERAL AID PROJECT NO. U-150 (7)

FROM LINE NO.8 BRIDGE C STA. 54+67.10 TO STA. 55+24.14
FROM LINE NO.7 BRIDGE E STA. 54+71.53 TO STA. 55+31.67

FEDERAL AID LENGTH = 58.59 FT. AVERAGE
(APPROACH FROM FOUNDERS BRIDGE)

STRUCTURE		LINE NO.	STA.	TO STA.	LENGTH FEET	LENGTH: INCLUDED IN PROJECT LENGTH FEET	LENGTH: EXCEPTED FEET	LENGTH: NOT INCLUDED IN PROJECT LENGTH FEET	REMARKS
FEDERAL AID PROJECT EACI-84-4(42)63									
BRIDGE	A	1	34+52.83	35+63.45	110.62	55.31			Single Span composite welded Plate Stringer Bridge.
BRIDGE	B	2	32+64.20	33+32.66	68.46 / 2	34.23			Single Span composite rolled Beam Bridge.
BRIDGE	F	8	58+60.64	60+03.36				142.72	Three Span composite & non-composite Rolled Beam Br.
BRIDGE	G	14	9+85.05	11+45.04				158.99	Three Span composite & non-composite Rolled Beam and welded Plate Stringers Bridge.
BRIDGE	H	10	12+77.52	14+62.94				185.42	Three Span composite & non-composite Rolled Beam and welded Plate Stringers Bridge.
BRIDGE	M	4	179+43.61	180+80.38	136.77			68.385	Three Span composite & non-composite Rolled Beam Br.
BRIDGE	P	4	182+54.70	183+28.16	73.46			36.73	Single Span composite Rolled Beam Bridge.
BRIDGE	T	4	188+32.57	189+77.32	144.75 / 2			72.375	Three Span composite & non-composite Rolled Beam and welded Plate Stringers Bridge.
VIADUCT	Y	6	2+11.29	10+61.10				849.81	
		9	7+16.51	13+61.33				644.82	* See Note below
ROAD SECTION - ASH ST			10+00.00	18+76.00				876.00	Two Course, Bituminous Concrete on 3" Bit. Mac. Base on 3" Broken Stone Base.
				TOTAL				3038.25	
			AVERAGE	LENGTH		89.54			
FEDERAL AID PROJECT U-150 (7)									
BRIDGE	C	8	54+67.10	55+24.14	57.04				Single Span composite Rolled Beam Bridge.
BRIDGE	D	10	2+98.10	3+55.20				57.10	Single Span composite Rolled Beam Bridge.
BRIDGE	E	7	54+71.53	55+31.67	60.14				Single Span composite Rolled Beam Bridge.
ROAD SECTION - DARLIN ST.			0+16.00	13+56.00				1340.00	Two Course, Bituminous Concrete on 3" Bit. Mac. Base on 3" Broken Stone Base.
				TOTAL	117.18			1397.10	
			AVERAGE	LENGTH	117.18 / 2	58.59			
FEDERAL AID PROJECT U-46 (18)									
BRIDGE	I	10	17+87.11	18+54.29				67.18	Single Span composite Rolled Beam Bridge.
BRIDGE	J	4	176+43.39	177+04.00	60.61				Single Span composite Rolled Beam Bridge.
BRIDGE	K	9	15+67.08	16+26.32				58.24	Single Span composite Rolled Beam Bridge.
BRIDGE	L	3	176+76.98	177+52.92	75.94				Single Span composite Rolled Beam Bridge.
				TOTAL	136.55			125.42	
			AVERAGE	LENGTH	136.55 / 2	68.27			

* NOTE:
Ten span Viaduct composite & non composite Rolled Beam & welded Plate Stringers on Line 6 & seven span Viaduct composite welded Plate Stringers on Line 9.

STANDARD CONVENTIONS

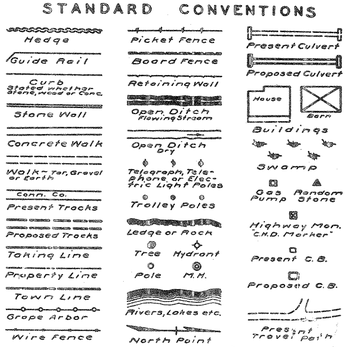

LIST OF DRAWINGS

SHEET NO.	TITLE
1	TITLE SHEET
2	INDEX PLAN
3-6	INDEX PROFILES
7	TRAFFIC VOLUMES
8-9	DETAILED ESTIMATE SHEETS
10	TYPICAL CROSS SECTIONS & DETAILS
11-12	ALIGNMENT
13-14	SEQUENCE OF OPERATIONS
15-20	PLAN SHEETS
21-22	PROFILE SHEETS
23-29	CROSS SECTIONS - DARLIN STREET
30-33	CROSS SECTIONS - ASH STREET
34-44	BRIDGE SHEETS - BRIDGE A - (1) - (6)
45-54	BRIDGE SHEETS - BRIDGE B - (2)
55-65	BRIDGE SHEETS - BRIDGE F - (8)
66-78	BRIDGE SHEETS - BRIDGE G - (9) - (14)
79-88	BRIDGE SHEETS - BRIDGE H - (10)
89-98	BRIDGE SHEETS - BRIDGE M - (4)
99-109	BRIDGE SHEETS - BRIDGE P - (4) - (12)
110-119	BRIDGE SHEETS - BRIDGE T - (4)
120-148	BRIDGE SHEETS - VIADUCT Y - (6) - (9)
149-160	BRIDGE SHEETS - BRIDGE C - (6) - (14) - (28)
161-167	BRIDGE SHEETS - BRIDGE D - (10)
168-176	BRIDGE SHEETS - BRIDGE E - (7) - (21)
177-187	BRIDGE SHEETS - BRIDGE I - (10)
188-196	BRIDGE SHEETS - BRIDGE J - (4)
197-206	BRIDGE SHEETS - BRIDGE K - (9)
207-216	BRIDGE SHEETS - BRIDGE L - (3)
A	UTILITY SHEET

STANDARD SHEETS	
221-F	ENDWALLS - SLOPE PAVED INLETS AND OUTLETS
221-H	OUTLET DETAILS
222-B	CONCRETE STEPS, CONCRETE SIDEWALK, PAVED DITCH
222-C	CURBING
223-A	MANHOLE, FRAME AND COVER
228-A	TYPE "C" CATCH BASIN, TYPE "C" DROP INLET
228-C	TYPE "C-L" CATCH BASIN, TYPE "C-L" DROP INLET
228-D	STEEL FRAME AND GRATE FOR TYPE "C", "C-G" AND "C-L" CATCH BASIN AND DROP INLET.
712-B	FENCES, BARWAYS,
712-C	BARRICADES AND CONCRETE RAMP
718	TEMPORARY FIELD OFFICE FOR STATE HIGHWAY DEPT. FORCES.

DESIGNED BY: E. LIONEL PAVLO, CONSULTING ENGINEER
APPROVED E. Lionel Pavlo DATE May 24 1961
CONN. P.E. & L.S. REG. NO. 3474

DEPARTMENT OF COMMERCE
BUREAU OF PUBLIC ROADS
APPROVED:
DIVISION ENGINEER DATE

SUBMITTED Dec 28 1961
Maxwell Kramer
HIGHWAY ENGINEER OF DESIGN (CONSULTING ENGINEERS)
APPROVAL RECOMMENDED 19
HIGHWAY CHIEF OF DESIGN
APPROVED Dec. 28 1961
David S. Yanosek
HIGHWAY DIRECTOR OF PLANNING AND DESIGN

FORM NO. ENG. 11 ED. 8-53

PUB. ROAD DIV. NO.	STATE	TOWN	FED. AID PROJ. NO.	PROJ. NO.	YEAR	ROUTE NO.	SHEET NO.	TOTAL SHEETS
1	CONN.	EAST HARTFORD	EACI-84-4(42)63 U-46(18) U-150(7)	42-134 42-133 42-132	1962	I-84	2	216

INTERSTATE ROUTE No. 84

INDEX PLAN

SCALE: 1"=200'

THIS SHEET NOT REVISED

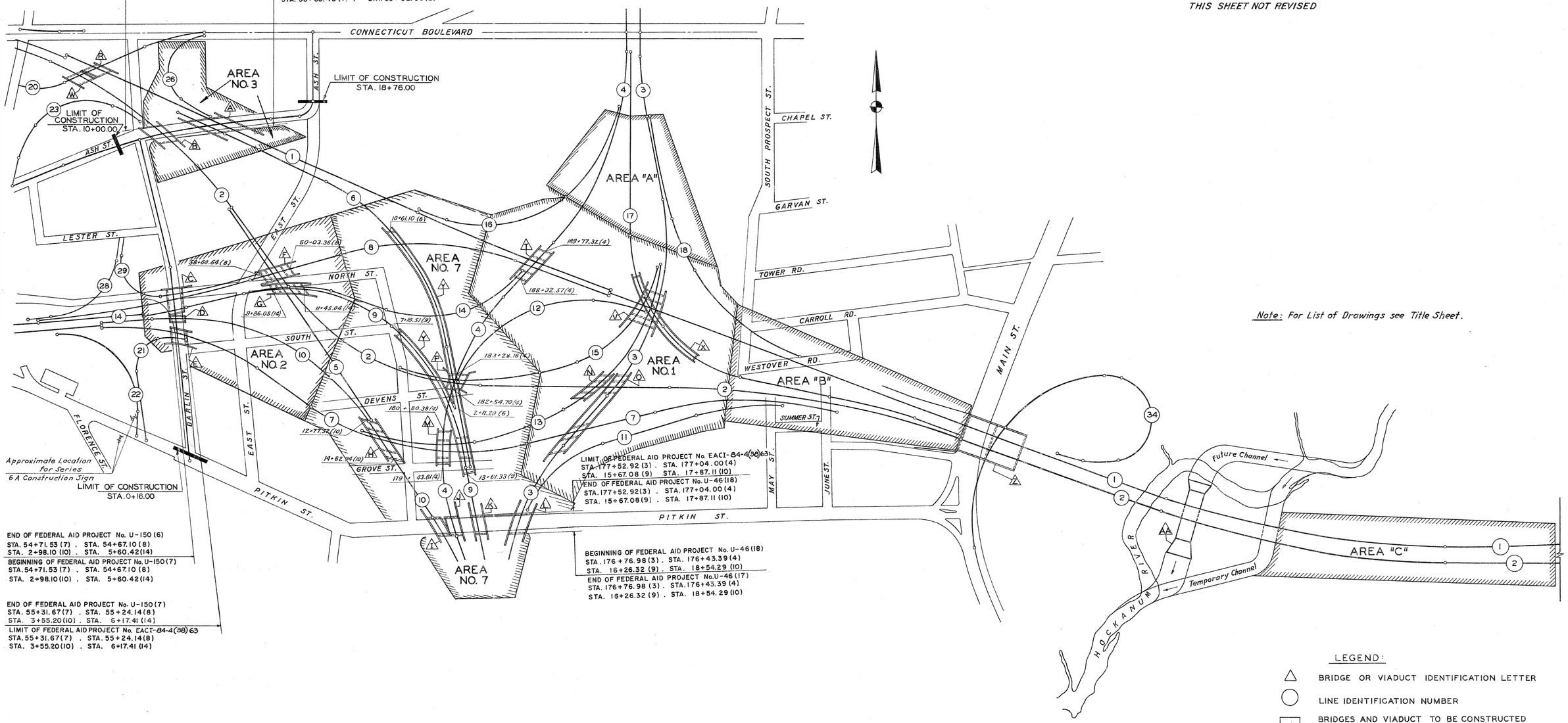

Note: For List of Drawings see Title Sheet.

LEGEND:

- △ BRIDGE OR VIADUCT IDENTIFICATION LETTER
- ○ LINE IDENTIFICATION NUMBER
- ▭ BRIDGES AND VIADUCT TO BE CONSTRUCTED UNDER THESE PROJECTS
- ▨ ROADWAY TO BE CONSTRUCTED UNDER THESE PROJECTS
- ▨ AREAS IN WHICH SURPLUS MATERIAL IS TO BE PLACED-SEE SPECIAL PROVISIONS

~~THE INFORMATION, INCLUDING ESTIMATED QUANTITIES OF WORK, SHOWN ON THESE SHEETS IS BASED ON LIMITED INVESTIGATIONS BY THE STATE AND IS IN NO WAY WARRANTED TO INDICATE THE TRUE CONDITIONS OR ACTUAL QUANTITIES OR DISTRIBUTION OF QUANTITIES OF WORK WHICH WILL BE REQUIRED.~~

PLAN	BY	DATE	CHECKED BY	DATE
Surveyed				
Plotted				
Traced				
Designed				
New Const. Noted				
Top. Field Chk. noted				
NOTE BOOK NO.				

Eugene Dietzgen Co., Inc., New York, N. Y. No. 135 Imperial Tracing Cloth

THE INFORMATION, INCLUDING ESTIMATED QUANTITIES OF WORK, SHOWN ON THESE SHEETS, IS BASED ON LIMITED INVESTIGATIONS BY THE STATE AND IS IN NO WAY WARRANTED TO INDICATE THE TRUE CONDITIONS OR ACTUAL QUANTITIES OR DISTRIBUTION OF QUANTITIES OF WORK WHICH WILL BE REQUIRED.

FED. ROAD DIV. NO.	STATE	TOWN	FED. AID PROJ. NO.	PROJ. NO.	YEAR	ROUTE NO.	SHEET NO.	TOTAL SHEETS
1	CONN.	EAST HARTFORD	EACI-84-4(42)63	42-134	1962	I-84	3	216

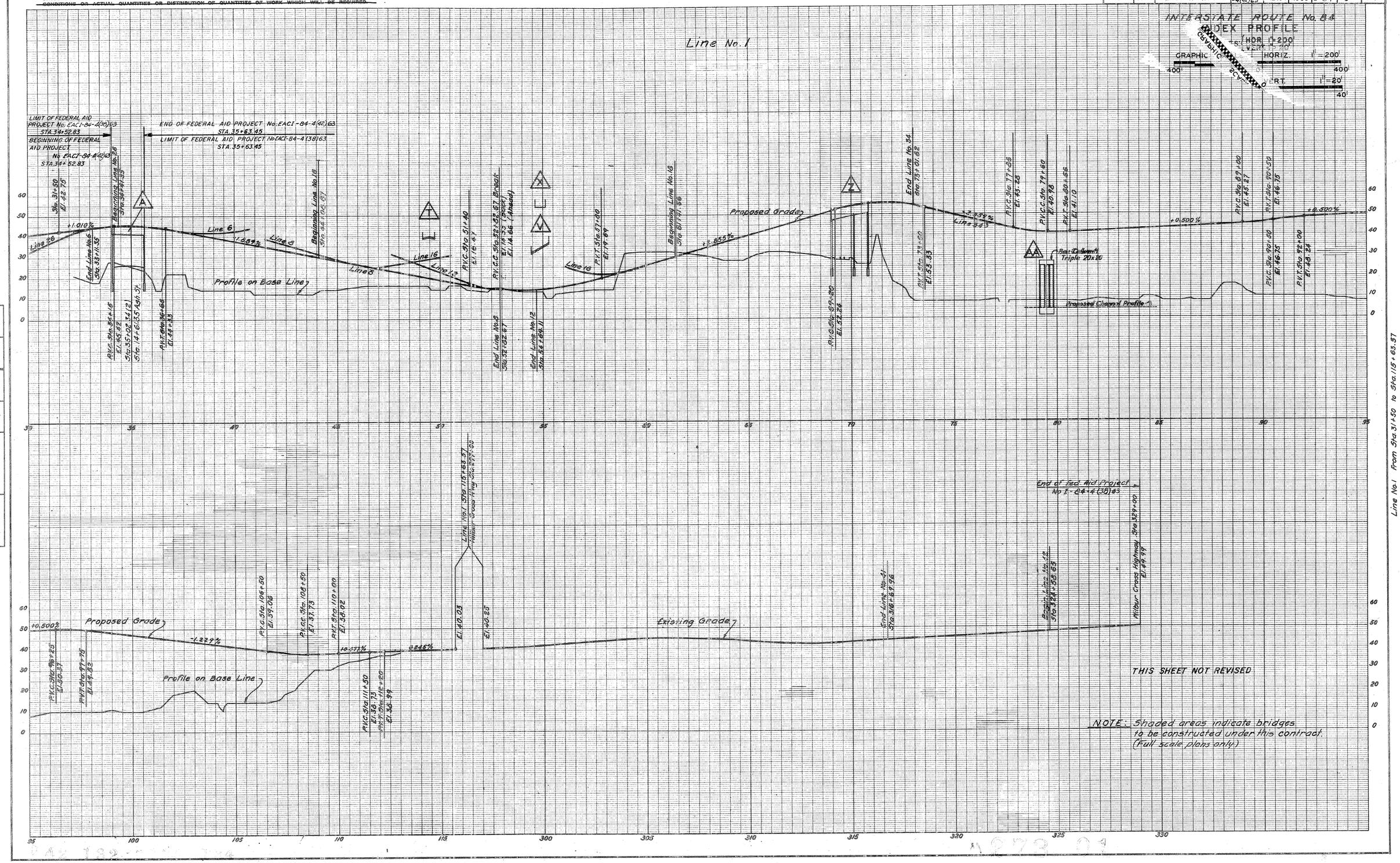

Line No. 1 from Sta. 31+50 to Sta. 115+63.57

PROFILE NOTE BOOK NO. 2,3

Surveyed
Plotted
Traced
Designed
Nov. Const. Noted
Top. Field Chk. noted

THE INFORMATION, INCLUDING ESTIMATED QUANTITIES OF WORK, SHOWN ON THESE SHEETS, IS BASED ON LIMITED INVESTIGATIONS BY THE STATE AND IS IN NO WAY WARRANTED TO INDICATE THE TRUE CONDITIONS OR ACTUAL QUANTITIES OR DISTRIBUTION OF QUANTITIES OF WORK WHICH WILL BE REQUIRED.

PUB. ROAD DIV. NO.	STATE	TOWN	FED. AID PROJ. NO.	PROJ. NO.	YEAR	ROUTE NO.	SHEET NO.	TOTAL SHEETS
1	CONN.	EAST HARTFORD	EACI-84-4(42)63	42-134	1962	I-84	4	216

INTERSTATE ROUTE No. 84

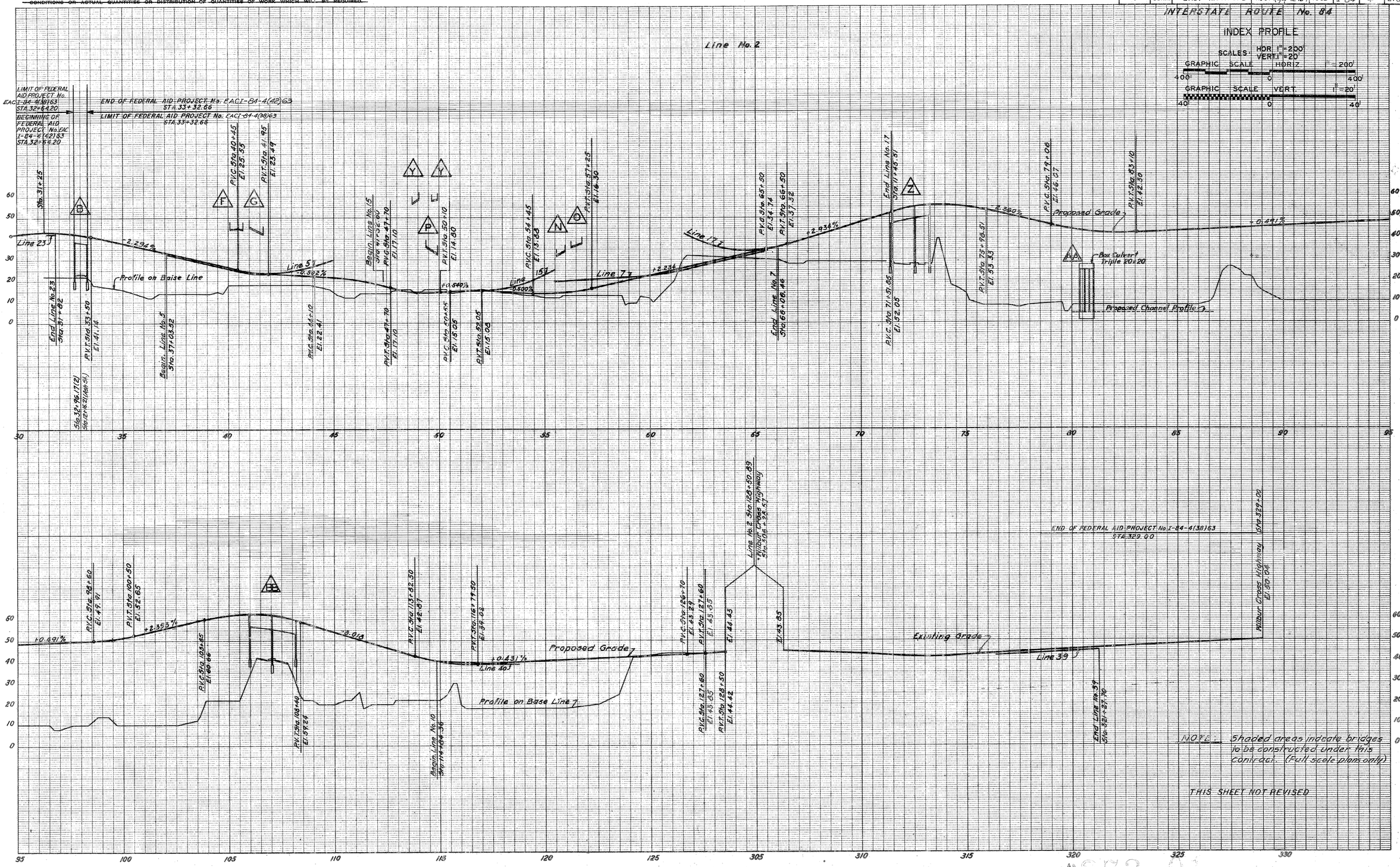

Line No. 2 from Sta. 31+25 to Sta. 128+50.89

PROFILE
NOTE BOOK NO. 1, 2, 3
Surveyed
Plotted
Traced
Designed
New Const. Noted
Top. Field Chk. noted

~~THIS INFORMATION, INCLUDING ESTIMATED QUANTITIES OF WORK, SHOWN ON THESE SHEETS, IS BASED ON LIMITED INVESTIGATIONS BY THE STATE AND IS IN NO WAY WARRANTED TO INDICATE THE TRUE CONDITIONS OR ACTUAL QUANTITIES OR DISTRIBUTION OF QUANTITIES OF WORK WHICH WILL BE REQUIRED.~~

PUC. ROAD DIV. NO.	STATE	TOWN	FED. AID PROJ. NO.	PROJ. NO.	YEAR	ROUTE NO.	SHEET NO.	TOTAL SHEETS
1	CONN.	EAST HARTFORD	U-46(18) I-84-4(42)63	42-133 42-134	1962	I-84	5	216

INTERSTATE ROUTE No. 84

INDEX PROFILE

SCALES: HOR. 1"=200'
VERT. 1"=20'

GRAPHIC SCALE HORIZ. 1" = 200'
400' 0 400

GRAPHIC SCALE VERT. 1" = 20'
40' 0 40'

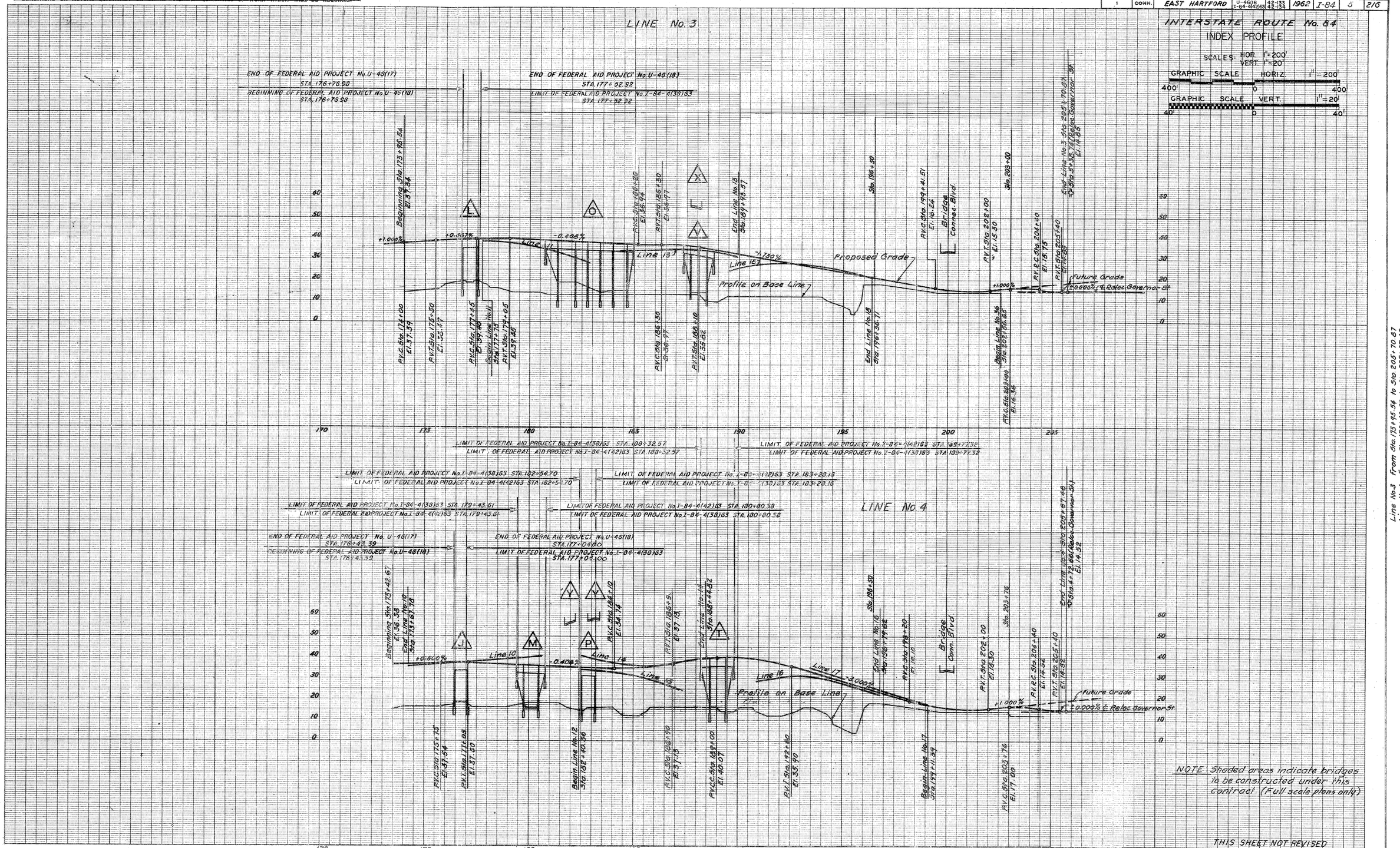

NOTE Shaded areas indicate bridges to be constructed under this contract (Full scale plans only)

THIS SHEET NOT REVISED

Line No. 3 From Sta. 173+95.54 to Sta. 205+70.87
Line No. 4 From Sta. 173+42.67 to Sta. 205+67.46

Checked	
Traced	
Blueprinted	
Rev. Cartog. Revised	
Rev. Field Chk. Noted	

NOTE BOOKS
NO. 2,3

A 273 01

THE INFORMATION, INCLUDING ESTIMATED QUANTITIES OF WORK, SHOWN ON THESE SHEETS, IS BASED ON LIMITED INVESTIGATIONS BY THE STATE AND IS IN NO WAY WARRANTED TO INDICATE THE TRUE CONDITIONS OR ACTUAL QUANTITIES OR DISTRIBUTION OF QUANTITIES OF WORK WHICH WILL BE REQUIRED.

PUB. ROAD DIV. NO.	STATE	TOWN	FED. AID PROJ. NO.	PROJ. NO.	YEAR	ROUTE NO.	SHEET NO.	TOTAL SHEETS
1	CONN.	EAST HARTFORD	U-150(7) I-84-4(42)63	42-132 42-134	1962	I-84	6	216

INTERSTATE ROUTE No. 84
INDEX PROFILE

SCALES: HOR. 1" = 200'
VERT. 1" = 20'

GRAPHIC SCALE HORIZ. 1" = 200'
400' 0 400'

GRAPHIC SCALE VERT. 1" = 20'
40' 0 40'

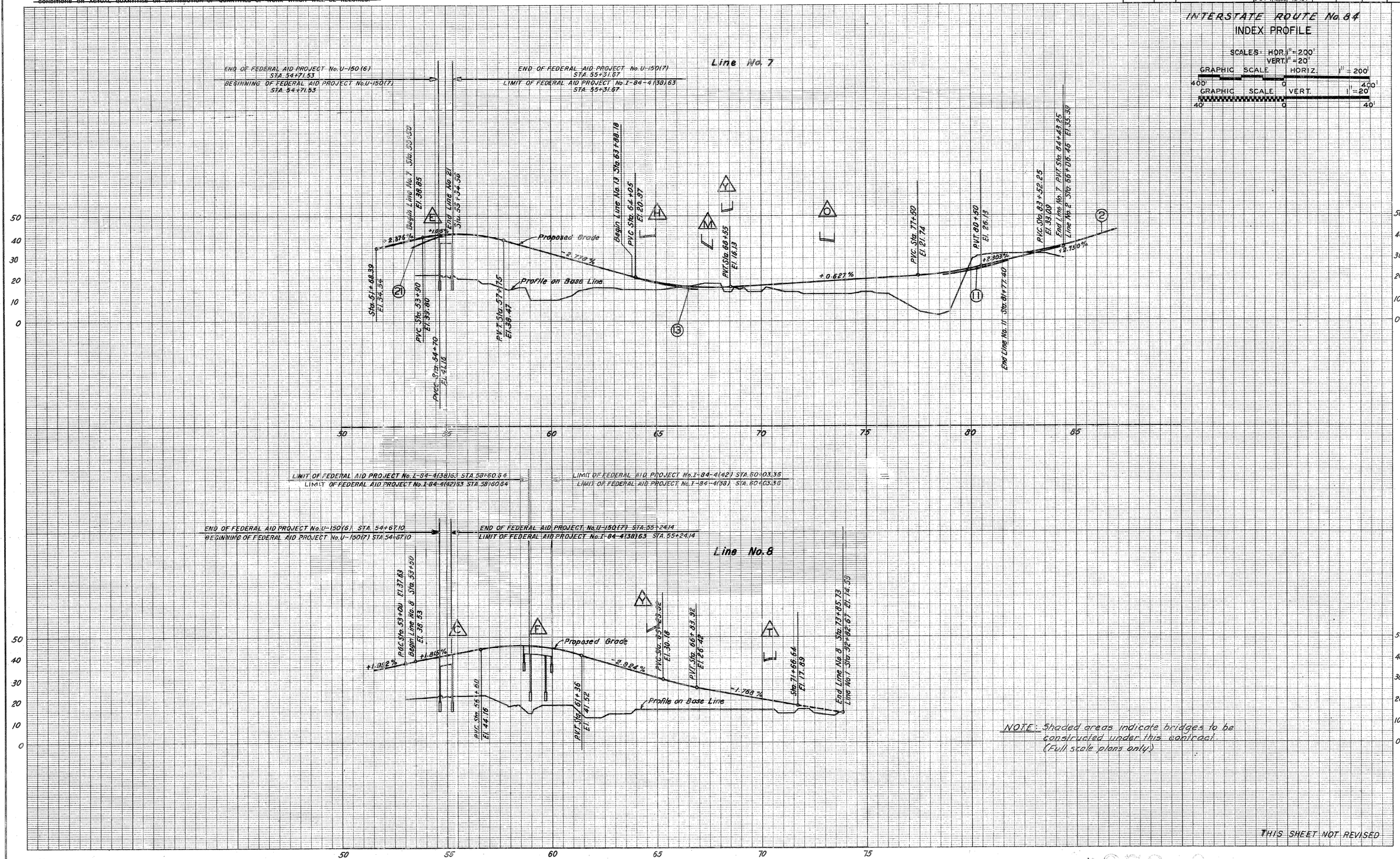

NOTE: Shaded areas indicate bridges to be constructed under this contract. (Full scale plans only)

Line No. 7 From Sta. 50+00 to Sta. 84+43.25

Line No. 8 From Sta. 50+00 to Sta. 73+85.73

THIS SHEET NOT REVISED

PROFILE
NOTE BOOK NO. 1
Surveyed
Plotted
Traced
Designed
New Const. Noted
Top. Field Chk. noted

PUB. ROAD DIV. NO.	STATE	TOWN	FED. AID PROJ. NO.	PROJ. NO.	YEAR	ROUTE NO.	SHEET NO.	TOTAL SHEETS
1	CONN.	EAST HARTFORD	I-84-4(42) 63 U-150(7) U-46(18)	42-134 42-132 42-133	1962	I-84	7	216

INTERSTATE ROUTE NO. 84

TRAFFIC VOLUMES

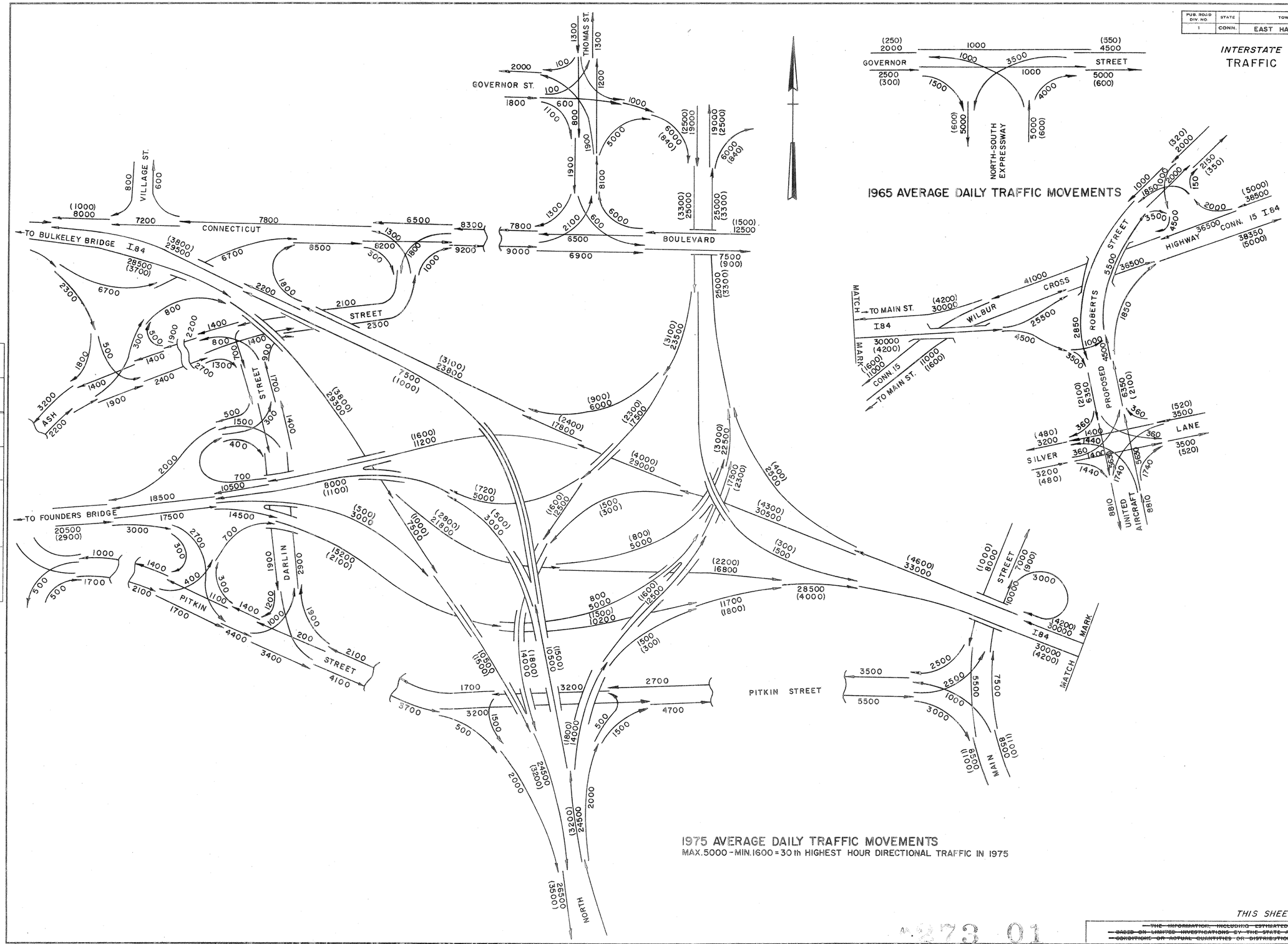

1965 AVERAGE DAILY TRAFFIC MOVEMENTS

1975 AVERAGE DAILY TRAFFIC MOVEMENTS

MAX.5000 - MIN.1600 = 30th HIGHEST HOUR DIRECTIONAL TRAFFIC IN 1975

PLAN		BY	DATE	CHECKED BY	DATE
NOTE BOOK NO.	Surveyed Plotted Traced Designed New Const. Noted Top. Field Chk. noted				

THIS SHEET NOT REVISED

~~THE INFORMATION, INCLUDING ESTIMATED QUANTITIES OF WORK, SHOWN ON THESE SHEETS IS BASED ON LIMITED INVESTIGATIONS BY THE STATE AND IS IN NO WAY WARRANTED TO INDICATE THE TRUE CONDITIONS OR ACTUAL QUANTITIES OR DISTRIBUTION OF QUANTITIES OF WORK WHICH WILL BE REQUIRED.~~

273 01

F42 132 F133 134

FORM NO. ENG. 8 ED 4-54

THE INFORMATION, INCLUDING ESTIMATED QUANTITIES OF WORK, SHOWN ON THESE SHEETS IS BASED ON LIMITED INVESTIGATIONS BY THE STATE AND IS IN NO WAY WARRANTED TO INDICATE THE TRUE CONDITIONS OR ACTUAL QUANTITIES OR DISTRIBUTION OF QUANTITIES OF WORK WHICH WILL BE REQUIRED.

DETAILED ESTIMATE SHEET

PUB. ROAD DIV. NO.	STATE	TOWN	FED. AID PROJ. NO.	PROJECT NO.	YEAR	ROUTE NO.	SHEET NO.	TOTAL SHEETS
1	CONN.	EAST HARTFORD	EACI-84-4(42)63 U-150 (7) U-46 (18)	42-134 42-132 42-133	1962	I-84	8	2/6

FOR THE CONSTRUCTION OF BRIDGES, RELOCATION OF ASH STREET AND RECONSTRUCTION OF DARLIN STREET-A SECTION OF INTERSTATE ROUTE 84 IN THE TOWN OF EAST HARTFORD

EACI-84-4 (42)63 Line 1 Sta.34+52.83 to Sta. 35+63.45 Line 2 Sta.32+64.20 to Sta.33+32.66 Length = 89.54 L.F.
U-46(18) Line 3 Sta.176+76.98 to Sta.177+52.92 Line 4 Sta.176+43.39 to Sta.177+04.00 Length = 68.27 L.F.
U-150(7) Line 7 Sta. 54+71.53 to Sta. 55+31.67 Line 8 Sta. 54+67.10 to Sta. 55+24.14 Length = 58.59 L.F.
TOTAL LENGTH = 216.40 L.F.

THIS SHEET NOT CORRECTED

EXCAVATION AND BORROW

STA.	TO STA.	EARTH EXCAVATION C.Y.	FILL C.Y.	BORROW C.Y.
RELOCATED ASH STREET				
10+00	18+76	1903	263	
MISCELLANEOUS		97	17	
TOTAL		2000	280	
RELOCATED DARLIN STREET				
0+00	13+50	4448	3711	
MISCELLANEOUS		222	179	
TOTAL		4670	3890	
TOTALS		6670	4170	
Shrinkage		-667		
Available for Fill		6003	-6003	
Surplus			1833	
Earth and Structure Excavation From Sheet 9 to be placed in Disposal Areas				
I-84-4(42)63		55500		
U-150(7)		2065		
U-46(18)		3205		
TOTAL		60770		
Surplus from Ash St I-84-4(42)63		1833		
Surplus Material to be Hauled and Placed as Required by Special Provisions		62603		
TOTALS		6670		

DRAINAGE

FEDERAL AID PROJECT PARTICIPATING EACI-84-4(42)63

STA.	TO	STA.	R.C.P. 12"	R.C.P. 15"	R.C.P. 18"	A.C.C.M.P. 6"	A.C.C.M.P. 15"		15" ELBOW	CATCH BASINS TYPE "C"	CATCH BASINS TYPE "C-L"	TYPE "C" OVER 10' DEEP	MANHOLE		TRENCH EXCAVATION 0'-6' DEEP	TRENCH EXCAVATION 0'-10' DEEP	TRENCH EXCAVATION 0'-15' DEEP	GRAVEL FILL	CLASS "A" CONCRETE	DITCH EXCAVATION	PAVED DITCH
			L.F.	L.F.	L.F.	L.F.	L.F.		L.F.	E.A.	E.A.	E.A.	E.A.	E.A.	C.Y.	C.Y.	C.Y.	C.Y.	C.Y.	C.Y.	S.Y.
RELOCATED	ASH STREET																				
10+00	11+10	LT.			40							1				59		5			
11+13	13+53	LT. & RT.			236											215	61	25			
11+71	11+82	RT.				40									12			4			19
12+20	12+47	LT.				26									8			2			
13+53	15+00	RT.		144											103			23			
15+00		LT.		28		34				1	1				24	54		7		14	
15+00	15+25	RT.		20		12				1					27			4			
15+00	18+25	℄		320									2		218			39			
18+25	18+60	LT.		28						1					28			3			
18+60	18+71	RT.								1					14						
18+64	18+71	LT. & RT.		28											13			3			
LINE 1																					
50+00	50+54																				29
LINE 2																					
42+20		LT. & RT.		60						1					45			7			
LINE 7																					
64+70	65+05	LT.		52						1					50			6	1.5		
67+60	68+65	LT.		124	96					4					104	48		30	1.8		
67+70	68+00	RT.		24						1	1				53	19		3			
LINE 8																					
71+03		RT.					18			1					25			2	1.5	11	
LINE 6																					
2+11	10+40					180									63				0.6	22	61
LINE 9																					
8+00	13+00					110									41	5		7	0.3	10	27
SUB	TOTAL			828	372	402	18			12	2	1	2		828	400	61	170	5.7	57	136
UNASSIGNED				44	20	18	2			-	-	-	-		37	20	4	10	0.3	3	9
TOTAL				872	392	420	20			12	2	1	2		865	420	65	180	6	60	145
FEDERAL AID PROJECT																					
RELOCATED	DARLIN ST.																				
0+04	0+06	RT.	8							1					13			1			
0+14	2+14			200											101			24			
0+44	0+50	LT.	8							1					13			1			
2+15	4+42			224									2		132			27			
2+20	2+25	LT. & RT.		40						2					44			5			
4+47	4+81	LT. & RT.		68		98				2	1				86			17			
7+30	8+80	RT.	100			40							2		66	32		15			
7+30	7+78	LT. & RT.				58									17			5			
8+80	9+30	LT.		60						1						72		7			
8+80	10+50	RT.		168												151		20			
10+50	13+00	RT.		312	184		50			3			3		212	307		61			
12+92	13+00	LT.		32						1					24			4			
LINE 8																					
55+40	55+77	LT. & RT.		64						2					98						
LINE 14																					
6+40		LT. & RT.		36						2					18						
LINE 29																					
2+70		RT.					32		12						26				1.5		
SUB TOTAL			116	1204	184	196	82		12	15	1		7		850	562		187	1.5		
UNASSIGNED			4	60	8	10	2								45	38		8	0.5		
TOTAL			120	1264	192	206	84		12	15	1		7		895	600		195	2		
FEDERAL AID PROJECT																					
PITKIN STREET																					
19+70	20+07	LT.				36									10			7			
20+10	20+45	LT.				36									11						
22+05		RT.				16									5			2			
21+85	22+30	LT.				50									18			5			
SUB TOTAL						138									44			14			
UNASSIGNED						8									6			1			
TOTAL						146									50			15			
SUMMARY																					
F.A.P. EACI-84-4(42)63			-	872	392	420	20	-	-	12	2	1	2		865	420	65	180	6	60	145
F.A.P. U-150 (7)			120	1264	192	206	84	-	12	15	1	-	7		895	600	-	195	2	-	-
F.A.P. U-46 (18)			-	-	-	146	-	-	-	-	-	-	-		50	-	-	15	-	-	-
	TOTAL		120	2136	584	772	104	-	12	27	3	1	9	-	1810	1020	65	390	8	60	145

MISCELLANEOUS

PARTICIPATING EACI-84-4(42)63

STA.	TO STA.	MAINTENANCE AND PROTECTION OF TRAFFIC	TRAFFICMEN	SUBBASE	FORMATION OF SUBGRADE	BROKEN STONE FOR BASE	BROKEN STONE FOR BITUMINOUS MACADAM BASE	BITUMINOUS MATERIAL FOR BITUMINOUS MACADAM PAVEMENT	CONCRETE FOR PAVEMENT	HOT ASPHALT CONCRETE	CALCIUM CHLORIDE FOR DUST CONTROL	WATER FOR DUST CONTROL	CONCRETE PARK CURBING	5" GRANITE STONE CURBING	5" GRANITE CURVED STONE CURBING	CONCRETE CURBING	TWO COURSE BITUMINOUS CONCRETE	CONCRETE SIDEWALK	CONCRETE RAMP	6' CHAIN LINK FENCE	CONCRETE FOR STEPS AND COPINGS	METAL HAND RAIL
		L.S.	HOUR	C.Y.	S.Y.	TON	TON	GAL.	C.Y.	TON	TON	M GAL.	L.F.	L.F.	L.F.	L.F.	TON	S.F.	C.Y.	L.F.	C.Y.	L.F.
RELOCATED ASH	ST.																					
10+00	18+76	L.S.		1307	3851	780	704	6355			2	27					554					
RAMPS						19				8									9			
10+00	11+71													189				68		145		
11+71	17+95													1250				2328		435		
17+95	18+76													11	150			296				
SUB	TOTAL	L.S.		1307	3851	799	704	6355		8	2	27		1450	150		554	2692	9	580		
UNASSIGNED			100	63	184			315		-	-	1		70	10		26	108		30		
TOTAL		L.S.	100	1370	4035	799	704	6670		8	2	28		1520	160		580	2800	9	610		
U-150 (7)																						
RELOCATED	DARLIN STREET																					
0+16	0+73			111	333	68	61	549						32	100		48	480				
0+73	9+37			1216	3648	739	666	6019	10	14				1728	36		524	5960		254		
9+37	10+24			135	405	82	74	668		4				87			58	532				
10+24	11+81			221	663	134	121	1094	3	1				314			95	968			1	8
11+81	13+56			299	896	181	164	1478						260	151		129	1432				
MISC.				43		90				9	3	42										
ISLAND													198									
RAMPS																			30			
THESE QUANTITIES NOT CORRECTED																						
SUB	TOTAL			2025	5945	1294	1086	9808	13	28	3	42	198	2421	287		854	9372	30	254	1	8
UNASSIGNED		L.S.	100	105	320			522	1	2	-	2	12	124	13		46	328		16		
TOTAL		L.S.	100	2130	6265	1294	1086	10330	14	30	3	44	210	2545	300		900	9700	30	270	1	8
U-46 (18)																						
PITKIN	STREET																					
17+70	22+80 LT.																			280		
18+40	22+91 LT.															352						
22+80	23+55 LT.																			75		
18+45	21+05 RT.															255						
20+98	21+92 RT.																			95		
SUB	TOTAL															607				450		
UNASSIGNED			100		100	30										33	10			20		
TOTAL			100		100	30										640	10			470		
SUMMARY																						
		L.S.	100	1370	4035	799	704	6670	-	8	2	28	-	1520	160	-	580	2800	9	610	-	-
		L.S.	100	2130	6265	1294	1086	10330	14	30	3	44	210	2545	300	-	900	9700	30	270	1	8
		L.S.	100	-	100	30	-	-	-	-	-		-	-	-	640	10			470	-	-
TOTALS		L.S.	300	3500	10400	2123	1790	17000	14	38	5	72	210	4065	460	640	1490	12500	39	1350	1	8

PREPARED	DRAFTED	CHECKED
BY		
DATE		

158 ARKWRIGHT JOSEPH MERRITT & CO. 16251

FORM NO. ENG. 11 ED. 8-54

DETAILED ESTIMATE SHEET

PUB. ROAD DIV. NO.	STATE	TOWN	FED. AID PROJ. NO.	PROJ. NO.	YEAR	ROUTE NO.	SHEET NO.	TOTAL SHEETS
1	CONN.	EAST HARTFORD	EACI-84-4(42)63 U-150(7) U-46(18)	42-134 42-132 42-133	1962	I-84	9	216

FOR THE CONSTRUCTION OF BRIDGES, RELOCATION OF ASH STREET AND RECONSTRUCTION OF DARLIN STREET-A SECTION OF INTERSTATE ROUTE 84 IN THE TOWN OF EAST HARTFORD

EACI-84-4 (42) 63 Line 1 Sta. 34+52.83 to Sta. 35+63.45 Line 2 Sta 32+64.20 to Sta. 33+32.66 Length = 89.54 L.F.
U-46(18) Line 3 Sta. 176+76.98 to Sta. 177+52.92 Line 4 Sta. 176+43.39 to Sta. 177+04.00 Length = 68.27 L.F.
U-150(7) Line 7 Sta. 54+71.53 to Sta. 55+31.67 Line 8 Sta. 54+67.10 to Sta. 55+24.14 Length = 58.59 L.F. TOTAL LENGTH = 216.40 L.F.

DESCRIPTION	EARTH EXCAVATION C.Y.	STRUCTURE EXCAVATION (COMPLETE) C.Y.		6" A.C.C.M. PIPE L.F.	6" PERFORATED A.C.C.M. PIPE L.F.	SOIL LOADING TEST EACH	TEST PILE (STEEL 12 BP 53 80' LONG) EACH	TEST PILE (STEEL 12 BP 53 85' LONG) EACH	TEST PILE (STEEL 12 BP 53 90' LONG) EACH	TEST PILE (STEEL 12 BP 53 95' LONG) EACH	TEST PILE (STEEL 12 BP 53 100' LONG) EACH	TEST PILE (STEEL 12 BP 53 105' LONG) EACH	TEST PILE (STEEL 12 BP 53 115' LONG) EACH	TEST PILE (STEEL 12 BP 53 120' LONG) EACH	FURNISHING STEEL PILES LB.	SPLICING STEEL PILES EACH	ANCHOR BOLTS FOR OVERHEAD SIGN SUPPORT EACH	CLASS "A" CONCRETE C.Y.	½" PREFORMED EXPANSION JOINT FILLER FOR BRIDGES S.F.	1" PREFORMED EXPANSION JOINT FILLER FOR BRIDGES S.F.	1½" PREFORMED EXPANSION JOINT FILLER FOR BRIDGES S.F.	BRIDGE SCUPPER EACH	DEFORMED STEEL BARS LB.	STRUCTURAL STEEL LB.	DAMPPROOFING S.Y.	PERVIOUS STRUCTURE BACKFILL C.Y.	COMPACTED GRAVEL FILL C.Y.	NEOPRENE PLATE EXPANSION JOINT L.F.	6"x6"x½" GRANITE STONE CURBING FOR BRIDGES L.F.	2" RIGID STEEL CONDUIT IN BRIDGE L.F.	CAST IRON JUNCTION BOX (18"x18"x10") EACH	6" WROUGHT IRON PIPE L.F.	6" CAST IRON PIPE L.F.	CRUSHED STONE FOR SLOPE PROTECTION TON	METAL BRIDGE RAIL L.F.	PILE LOADING TEST EACH	POINT REINFORCEMENT FOR STEEL PILES EACH	DRIVING STEEL PILES L.F.	SHEAR CONNECTORS L.F.
FEDERAL AID PARTICIPATING																																							
FEDERAL AID PROJECT NO EACI-(84)-4(42)63																																							
BRIDGE A-1-6 LINE 1 STA. 34+52.83-STA. 35+63.45		1800		16	240				3						960,600	11		2,340	750	10	10		186,000	381,000	1,040	4,300			435	460	2				395	1	11	18,200	1,120
BRIDGE B-2 LINE 2 STA. 32+64.20-STA. 33+32.66		900		10	140						2				652,000	8		1,450	450	10	10		107,000	122,000	630	2,850			320	180	1				280		8	12,400	576
BRIDGE A-8 LINE 8 STA. 58+60.64-STA. 60+03.36	7,050	290				1												690	115	12	12		110,000	200,000	115	300	150	120	330	185	1			170	290				544
BRIDGE G-9-14 LINE 14 STA. 9+86.05-STA. 11+45.04	11,000	320				1												870	140	12	12		134,000	260,000	190	550	150	135	390	220	1			175	335				996
BRIDGE A-10 LINE 10 STA. 12+77.52-STA. 14+62.94	15,500	300				1												920	155	12	12		125,000	280,000	190	500	150	140	440	240	1			170	385				829
BRIDGE M-4 LINE 4 STA. 179+43.61-STA. 180+60.38	11,500	270				1												775	120	13	14		112,000	200,000	140	500	90	120	335	185	1			150	290				549
BRIDGE A-4-12 LINE 4 STA. 182+54.70-STA. 183+28.16		1,920		20					2						760,000	18		1,280	400	15	15		110,000	137,000	520	2700			160	90	2				160	1	18	14,500	560
BRIDGE A-4 LINE 4 STA. 188+32.57-STA. 189+77.32	10,000	400				1											16	810	200		20		117,000	242,000	150	400	150	80	350	190	1			160	300				642
VIADUCT A-6-9 LINE 6 STA. 2+11.29-STA. 10+61.10 LINE 9 STA. 7+16.51-STA. 13+61.33		2,770							3	8	1	1	1	2	1,195,000	28	16	4,210	310		32	15	700,000	2,190,000	180	375		450	3,100	1,630	7	700	170	230	3,000	2	28	22,500	8050
TOTAL	55,050	8,970		46	380	5			8	8	3	1	1	2	3,567,600	65	32	13,345	2,640	84	137	15	1,701,000	4,012,000	3,155	12,475	690	1045	5,860	3,380	17	700	170	1,055	5,435	4	65	67,600	13,866
FOR USE IN BACKFILLING BEHIND ABUTMENTS AND WALLS	8,520																																						
AVAILABLE FOR FILL	46,530																																						
FEDERAL AID PROJECT NO. U-150 (7)																																							
BRIDGE C-8-14-29 LINE 8 STA. 54+67.10-STA. 55+24.14		935		10	208						4				1431,000	14		1,285	450	6	6		110,000	140,000	600	4,250			193	150	1				172	1	14	27,000	801
BRIDGE D-10 LINE 10 STA. 2+98.10-STA. 3+55.20		510			140													595	240		15		52,000	46,000	320	1,500			116						185				268
BRIDGE E-7-21 LINE 7 STA. 54+71.53-STA. 55+31.67		620		10	116													820	130	6	6		72,500	84,500	380	2,500			200	155	1				180				447
TOTAL		2,065		20	464						4				1,431,000	14		2,700	820	12	27		234,500	270,500	1,300	8,250			509	305	2				537	1	14	27,000	1,516
FEDERAL AID PROJECT NO. U-46 (18)																																							
BRIDGE I-10 LINE 10 STA. 17+87.11-STA. 18+54.29		670			130		2	2							1,306,450	15		910	230	6	18		78,000	80,000	430	1,950			225	170	1				235	1	15	24,650	378
BRIDGE A-4 LINE 4 STA. 176+43.39-STA. 177+04.00		700		12	166													820	310		15		77,000	65,000	440	1,750			162	75	1				225				342
BRIDGE K-9 LINE 9 STA. 15+67.08-STA. 16+26.32		910		8	70													1,110	270	6	11		89,000	62,500	525	2,600			282	175	1				255				335
BRIDGE A-3 LINE 3 STA. 176+76.98-STA. 177+52.92		925		12	106		2								435,000	5		1,100	280	10	10		112,000	150,000	550	2,250			315	350	2				275		5	8,200	580
TOTAL		3,205		32	472		2	2							1,741,450	20		3,940	1,090	22	54		356,000	357,500	1,945	8,550			984	770	5				990	1	20	32,850	1,635

THIS SHEET NOT CORRECTED

THE INFORMATION, INCLUDING ESTIMATED QUANTITIES OF WORK, SHOWN ON THESE SHEETS IS BASED ON LIMITED INVESTIGATIONS BY THE STATE AND IS IN NO WAY WARRANTED TO INDICATE THE TRUE CONDITIONS OR ACTUAL QUANTITIES OR DISTRIBUTION OF QUANTITIES OF WORK WHICH WILL BE REQUIRED.

PLAN — Surveyed, Plotted, Traced, Designed, New Const. Noted, Top. Field Chk. noted. NOTE BOOK NO.

"ARKWRIGHT" TRACING CLOTH JOSEPH MERRITT & CO. 9088

42 132 P133 134

279 01

TYPICAL CROSS SECTIONS

NOT TO SCALE

PUB. ROAD DIV. NO.	STATE	TOWN	FED. AID PROJ. NO.	PROJ. NO.	YEAR	ROUTE NO.	SHEET NO.	TOTAL SHEETS
1	CONN.	EAST HARTFORD	I-84-4(42)63 U-150(7) U-46(8)	42-134 42-132 42-133	1962	I-84	10	216

INTERSTATE ROUTE No. 84

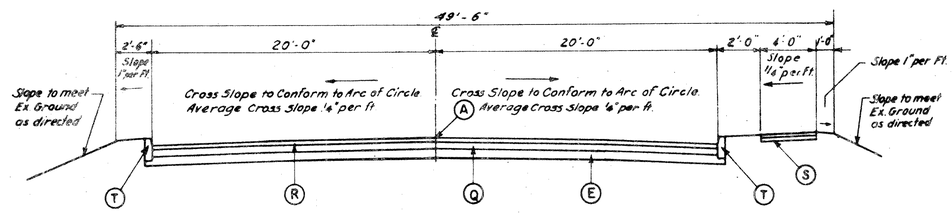

TYPICAL SECTION FOR RELOCATED ASH STREET

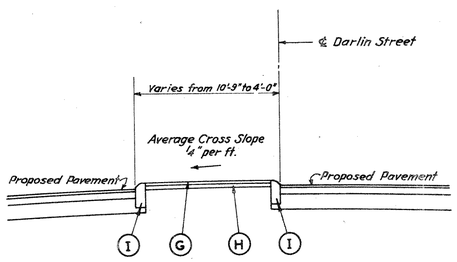

TYPICAL SECTION
FOR
ISLAND AT INTERSECTION
DARLIN ST. AND ASH ST.

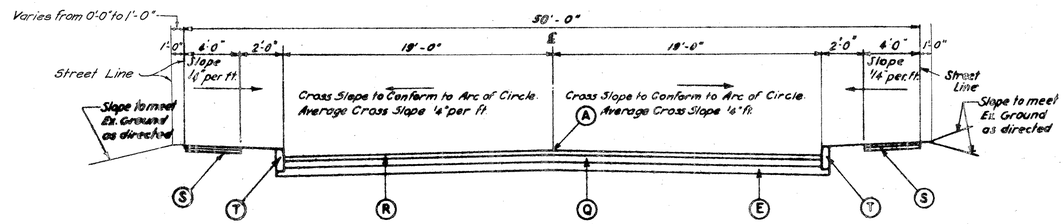

TYPICAL SECTION FOR DARLIN ST.

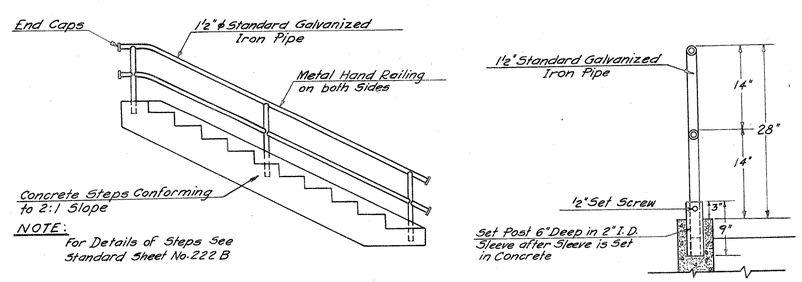

~~HAND RAILING DETAILS~~

Not Constructed

LEGEND:

A - Point of application of Grade
E - Place 12" Subbase in Cuts, 6" Subbase in Fills
T - 5" Granite Stone Curbing
Q - 3" Bituminous Macad. Base on 3" Broken Stone Base
* R - Two Course Bituminous Concrete
S - Concrete Sidewalk

* Two Course Bituminous Concrete consisting of 1 1/4" Hot Asphalt Concrete on 1 1/4" Bituminous Concrete Binder Course

G - 2" Hot Asphalt Concrete
H - 4" Broken Stone Base
I - Concrete Park Curbing

~~THE INFORMATION, INCLUDING ESTIMATED QUANTITIES OF WORK, SHOWN ON THESE SHEETS IS BASED ON LIMITED INVESTIGATIONS BY THE STATE AND IS IN NO WAY WARRANTED TO INDICATE THE TRUE CONDITIONS OR ACTUAL QUANTITIES OR DISTRIBUTION OF QUANTITIES OF WORK WHICH WILL BE REQUIRED.~~

DATE	CHECKED BY	DATE	BY	NOTE VARIOUS
				Surveyed Plotted Traced Designed Quantities Checked Final Draft Checked

PLAN NO.

NO REVISIONS SUBMITTED FOR THIS SHEET

PUB. ROAD DIV. NO.	STATE	TOWN	FED. AID PROJ. NO.	PROJ. NO.	YEAR	ROUTE NO.	SHEET NO.	TOTAL SHEETS
1	CONN.	EAST HARTFORD	U-150(7) I-84-4(42)63	42-132 42-134	1962	I-84	11	215

INTERSTATE ROUTE No. 84

DETAILS OF ALIGNMENT

SCALE, 1" = 100'

GRAPHIC SCALE 1" = 100'

200' 0 200'

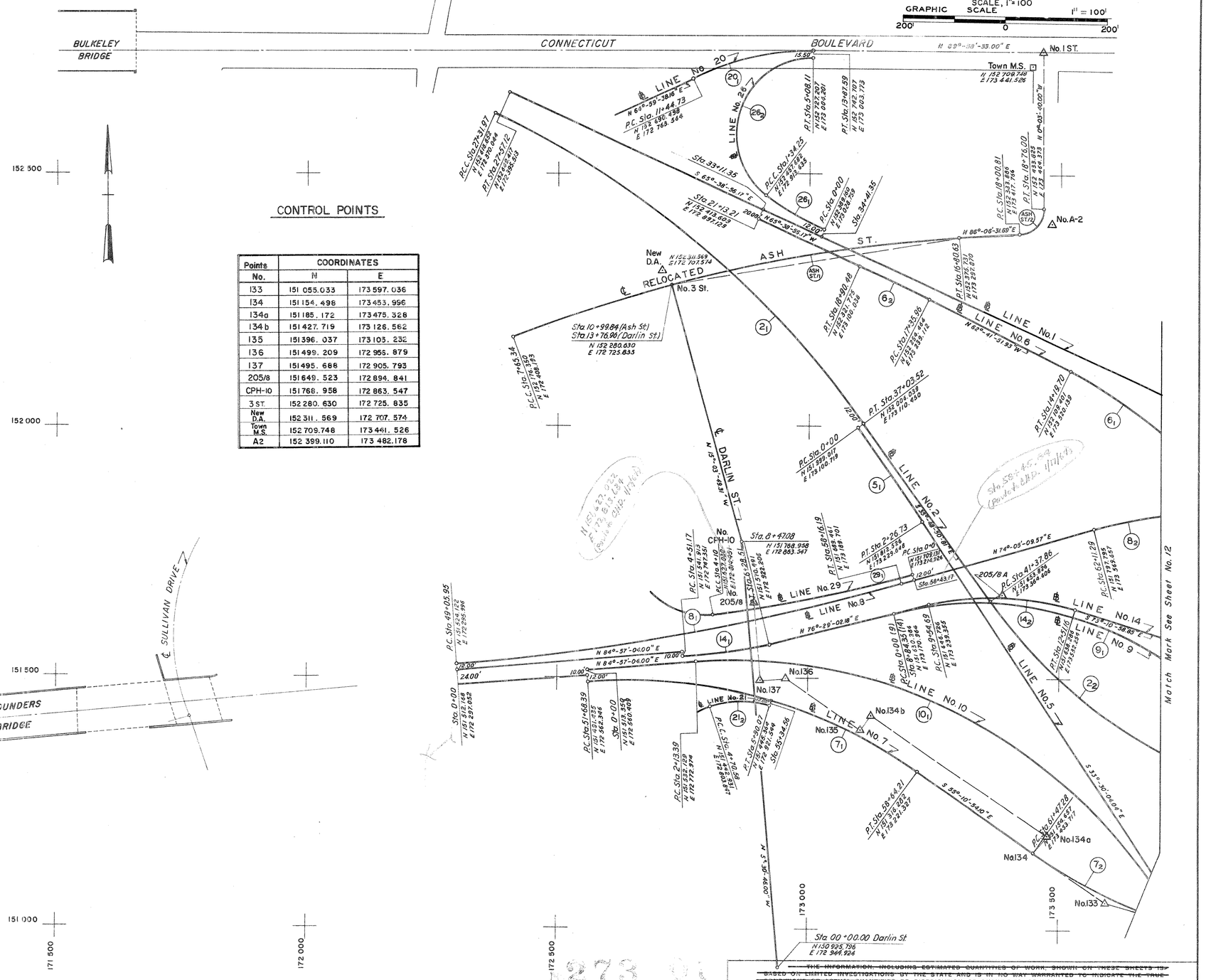

CURVE DATA & COORDINATES

CURVE No.	Δ	D	R	T	L	E	P.I. COORDINATES N	P.I. COORDINATES E
2/1	29°-08'-40.19"	2°-59'-59.20"	1910.00'	496.53'	971.55'	63.48'	152 408.685	172 819.902
2/2	53°-57'-35.26"	5°-43'-46.48"	1000.00'	509.08'	941.78'	122.13'	151 241.000	173 662.500
5/1	2°-18'-46.77"	1°-01'-12.48"	5616.50'	113.38'	226.73'	1.14'	151 907.073	173 167.066
6/1	52°-21'-04.58"	5°-43'-46.48"	1000.00'	491.53'	913.70'	116.27'	151 883.943	173 956.915
6/2	2°-57'-04.24"	1°-54'-35.49"	3000.00'	77.28'	154.52'	1.00'	152 289.910	173 170.442
7/1	39°-52'-01.90"	5°-43'-46.48"	1000.00'	362.66'	695.81'	63.73'	151 523.351	172 923.597
7/2	19°-46'-01.36"	5°-43'-46.48"	1000.00'	174.23'	345.00'	15.06'	151 055.175	173 596.755
8/1	10°-51'-54.43"	1°-11'-37.18"	4800.00'	456.49'	910.23'	21.66'	151 564.295	172 750.710
8/2	36°-05'-19.75"	4°-46'-28.73"	1200.00'	390.93'	755.84'	62.07'	151 904.986	173 945.607
9/1	53°-48'-59.56"	8°-11'-06.40"	700.00'	355.26'	657.49'	84.99'	151 713.316	173 516.382
10/1	61°-32'-51.96"	5°-43'-46.48"	1000.00'	595.50'	1074.21'	163.88'	151 584.537	173 366.166
14/2	30°-19'-58.97"	10°-13'-53.00"	560.00'	151.80'	296.47'	20.21'	151 682.204	173 386.948
21/2	34°-13'-53.82"	28°-38'-52.40"	200.00'	61.59'	119.49'	9.27'	151 462.269	172 862.321
26/1	12°-49'-12.70"	9°-32'-57.47"	600.00'	67.41'	134.25'	3.77'	152 416.954	172 967.348
26/2	142°-48'-16.46"	38°-11'-49.87"	150.00'	445.77'	373.86'	320.34'	152 727.019	172 558.427
ASH ST./1	17°-28'-50.69"	1°-54'-35.49"	3000.00'	461.23'	915.29'	35.25'	152 344.431	172 837.705
ASH ST./2	88°-10'-11.69"	114°-35'-29.76"	50.00'	46.77'	75.20'	18.46'	152 387.060	173 464.423
29/1	8°-42'-01.75"	2°-07'-19.44"	2700.00'	208.40'	410.00'	7.80'	151 651.989	173 014.513
14/1	8°-28'-01.82"	5°-43'-46.48"	1200.00'	88.83'	177.34'	3.28'	151 549.730	172 835.836

CONTROL POINTS

Points No.	COORDINATES N	COORDINATES E
133	151 055.033	173 597.036
134	151 154.498	173 453.996
134a	151 185.172	173 475.328
134b	151 427.719	173 126.562
135	151 396.037	173 105.232
136	151 499.209	172 955.879
137	151 495.686	172 905.793
205/8	151 649.523	172 894.841
CPH-10	151 768.958	172 863.547
3 ST.	152 280.630	172 725.835
New D.A.	152 311.569	172 707.574
Town M.S.	152 709.748	173 441.526
A2	152 399.110	173 482.178

TIES

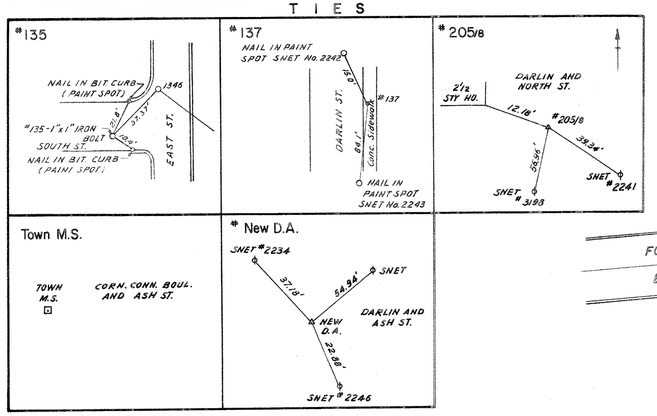

PLAN	BY	DATE	CHECKED BY	DATE
Surveyed	I.K.S.	1960	M.K.	1960
Plotted	M.S.	1960	P.R.	1960
Traced	M.S.	1960	P.R.	1960
Designed	E.K.	1960	A.Sh.	1960
Measurement Noted				
Top Field Chk. noted				

NOTE BOOK NO. 10 to 14

~~THE INFORMATION, INCLUDING ESTIMATED QUANTITIES OF WORK, SHOWN ON THESE SHEETS IS BASED ON LIMITED INVESTIGATIONS BY THE STATE AND IS IN NO WAY WARRANTED TO INDICATE THE TRUE CONDITIONS OR ACTUAL QUANTITIES OR DISTRIBUTION OF QUANTITIES OF WORK WHICH WILL BE REQUIRED.~~

PUB. ROAD DIV. NO.	STATE	TOWN	FED. AID PROJ. NO.	PROJ. NO.	YEAR	ROUTE NO.	SHEET NO.	TOTAL SHEETS
1	CONN.	EAST HARTFORD	I-84-4(42)63 U-46(18)	42-134 42-133	1962	I-84	12	216

INTERSTATE ROUTE No. 84

DETAILS OF ALIGNMENT

SCALE, 1" = 100'

GRAPHIC SCALE 1" = 100'

200' 0 200'

CURVE DATA & COORDINATES

CURVE No.	Δ	D	R	T	L	E	P.I. COORDINATES N	P.I. COORDINATES E
1/1	4°-10'-34.50"	0°-28'-40.59"	11988.00'	437.09'	873.80'	7.97'	151 799.066	174 303.470
2/2	53°-57'-35.24"	5°-43'-46.48"	1000.00'	509.08'	941.78'	122.13'	151 241.000	173 662.500
2/3	19°-56'-55.38"	1°-35'-29.58"	3600.00'	633.12'	1253.41'	55.25'	151 233.287	175 617.138
3/1	16°-33'-37.29"	4°-24'-26.52"	1300.00'	189.19'	375.74'	13.69'	150 247.283	174 255.718
3/2	35°-36'-23.42"	5°-43'-46.48"	1000.00'	321.13'	621.48'	50.30'	150 754.603	174 310.956
3/3	51°-58'-38.81"	5°-43'-46.48"	1000.00'	487.49'	907.18'	112.50'	151 556.000	175 028.000
3/4	10°-07'-58.45"	3°-49'-10.99"	1500.00'	132.99'	265.28'	5.88'	152 512.488	174 856.640
4/1	12°-27'-35.57"	3°-47'-21.85"	1512.00'	165.06'	328.81'	8.98'	150 201.484	174 207.103
4/2	61°-25'-38.74"	5°-43'-46.48"	1000.00'	594.08'	1072.11'	163.16'	151 169.539	173 866.959
4/3	42°-05'-30.17"	4°-46'-28.73"	1200.00'	461.74'	881.57'	85.77'	152 193.111	174 790.775
6/1	52°-21'-04.58"	5°-43'-46.48"	1000.00'	491.53'	913.70'	114.27'	151 883.943	173 956.915
7/3	28°-21'-47.89"	4°-35'-01.18"	1250.00'	315.87'	618.79'	39.29'	150 927.903	174 070.046
7/4	24°-54'-27.52"	3°-10'-59.16"	1800.00'	397.53'	782.50'	43.37'	151 218.734	175 299.191
8/2	36°-05'-19.75"	4°-46'-28.73"	1200.00'	390.93'	755.84'	62.07'	151 904.986	173 948.607
9/1	53°-48'-59.55"	8°-11'-06.40"	700.00'	355.26'	657.49'	84.99'	151 713.316	173 516.382
9/2	39°-21'-10.92"	5°-43'-46.48"	1000.00'	357.59'	686.84'	62.01'	151 549.730	172 835.837
10/2	14°-08'-28.47"	3°-51'-01.88"	1488.00'	184.57'	367.26'	11.40'	150 523.388	174 068.560
11/1	49°-55'-09.37"	11°-27'-32.96"	500.00'	232.73'	435.63'	51.51'	150 919.996	174 448.824
11/2	20°-40'-36.34"	5°-43'-46.48"	1000.00'	182.42'	360.88'	16.50'	151 170.865	175 242.391
12/1	81°-34'-39.44"	10°-25'-02.69"	550.00'	474.56'	783.09'	176.43'	151 659.588	174 180.105
12/2	13°-15'-22.76"	5°-43'-46.48"	1000.00'	116.20'	231.37'	6.73'	151 588.427	174 766.566
13/1	30°-50'-55.95"	6°-14'-42.97"	917.43'	253.12'	493.96'	34.28'	150 962.567	173 906.661
13/2	19°-04'-19.52"	4°-46'-28.73"	1200.00'	201.59'	399.44'	16.81'	151 040.224	174 354.690
13/3	54°-31'-37.27"	7°-09'-43.10"	800.00'	412.27'	761.34'	99.98'	151 336.940	174 892.069
14/3	64°-44'-57.98"	10°-25'-02.69"	550.00'	348.70'	621.55'	101.22'	151 462.182	174 114.916
15/1	17°-26'-06.48"	7°-04'-03.00"	810.69'	124.31'	246.70'	9.48'	151 268.476	173 952.563
15/2	12°-41'-28.31"	3°-34'-51.55"	1600.00'	177.93'	354.41'	9.86'	151 254.374	174 254.476
15/3	10°-23'-45.27"	5°-43'-46.48"	1000.00'	90.97'	181.40'	4.13'	151 301.147	174 519.279
15/4	62°-18'-06.19"	11°-27'-32.96"	500.00'	302.22'	543.69'	84.24'	151 438.287	174 887.784
16/1	7°-57'-27.89"	6°-21'-58.31"	900.00'	62.60'	125.00'	2.17'	151 964.411	173 967.242
16/2	56°-06'-49.26"	10°-25'-02.69"	550.00'	293.14'	538.65'	73.24'	151 864.010	174 308.522
16/3	39°-14'-15.17"	8°-48'-53.05"	650.00'	231.69'	445.14'	40.08'	152 199.401	174 712.210
17/1	27°-57'-41.29"	10°-25'-02.69"	550.00'	136.93'	268.41'	16.79'	151 745.922	174 802.964
17/2	7°-55'-30.05"	5°-12'-31.35"	1100.00'	76.20'	152.15'	2.64'	151 557.714	174 902.975
17/3	42°-18'-50.52"	10°-25'-02.69"	550.00'	212.86'	406.19'	39.73'	151 323.601	175 072.511
18/1	42°-15'-50.25"	7°-09'-43.10"	800.00'	309.21'	590.12'	57.68'	151 471.848	175 234.622
18/2	9°-11'-27.61"	3°-49'-10.99"	1500.00'	120.57'	240.62'	4.84'	151 852.852	175 035.766
18/3	8°-12'-47.36"	1°-54'-35.49"	3000.00'	215.39'	430.04'	7.72'	152 171.689	174 929.887
35/1	12°-39'-39.54"	14°-19'-26.20"	400.00'	44.38'	88.39'	2.45'	153 124.076	174 274.528
Rel. Gov. RD.	11°-40'-03.17"	11°-27'-32.96"	500.00'	51.09'	101.82'	2.60'	153 299.364	174 568.910
Rel. Carroll RD.	100°-23'-48.85"	42°-01'-52.53"	110.12'	132.16'	192.96'	61.91'	151 480.579	175 299.664

CONTROL POINTS

Point No.	COORDINATES N	COORDINATES E
116	151 979.290	173 905.263
TW-2	151 580.952	174 474.445
108	151 046.722	174 572.359
131	150 927.828	174 070.163
132a	150 998.972	173 805.560
115	151 766.369	174 405.623
119	151 610.601	174 265.026
121	151 136.404	173 837.057
126	150 657.937	173 881.879
ST. Pitkin	150 660.483	173 933.014
"PUMP" Pitkin	150 675.236	174 218.348
112	150 679.093	174 301.813
CP 205/19	151 295.750	175 283.070
NEW TW PITKIN	150 703.553	174 612.911

Point No.	COORDINATES N	COORDINATES E
111	150 754.264	174 310.626
111c	150 783.350	174 278.759
111b	150 876.971	174 362.508
111a	150 848.204	174 394.677
106	151 071.831	174 594.783
TW-1	151 113.525	174 548.186
104	151 236.735	174 740.148
129	151 235.818	174 965.220
DRY-3	151 211.328	175 086.082
DRY-2	151 899.800	174 964.743
101	152 036.094	174 942.051
138a	152 358.115	174 884.325
139	152 512.653	174 856.648
140	152 645.618	174 856.589
124	152 655.002	174 790.645
123	152 193.115	174 790.782
205/20	151 367.360	175 650.840
BLINN	151 014.018	175 629.450

PLAN	Surveyed	BY I.K.S.	DATE 1960	CHECKED BY M.K.	DATE 1960
NOTE BOOK NO. 10 to 14	Plotted	N.S.	1960	P.R.	1960
	Traced	N.S.	1960	P.R.	1960
	Designed	E.K.	1960	A.Sh.	1960
	New Const. Noted				
	Top. Field Chk. noted				

~~THE INFORMATION, INCLUDING ESTIMATED QUANTITIES OF WORK, SHOWN ON THESE SHEETS IS BASED ON LIMITED INVESTIGATIONS BY THE STATE AND IS IN NO WAY WARRANTED TO INDICATE THE TRUE CONDITIONS OR ACTUAL QUANTITIES OR DISTRIBUTION OF QUANTITIES OF WORK WHICH WILL BE REQUIRED.~~

M. 273 01

133 134

FORM NO. ENG. 11 ED 8-54

PUB. ROAD DIV. NO.	STATE	TOWN	FED. AID PROJ. NO.	PROJ. NO.	YEAR	ROUTE NO.	SHEET NO.	TOTAL SHEETS
1	CONN.	EAST HARTFORD	I-84-4(42)63 U-46(18) U-150(7)	42-134 42-133 42-132	1962	I-84	13	216

INTERSTATE ROUTE No. 84
PLAN SHOWING
SEQUENCE OF OPERATIONS
ON GRADING AND DRAINAGE CONTRACT

SCALE: 1" = 200'

FOR INFORMATION ONLY

GRAPHIC SCALE 1" = 200'

400' 0 400'

NOTE: The area numbers are for identification only & to not inicate the sequence of filling. For details of sequence of operations, see Special Previsions.

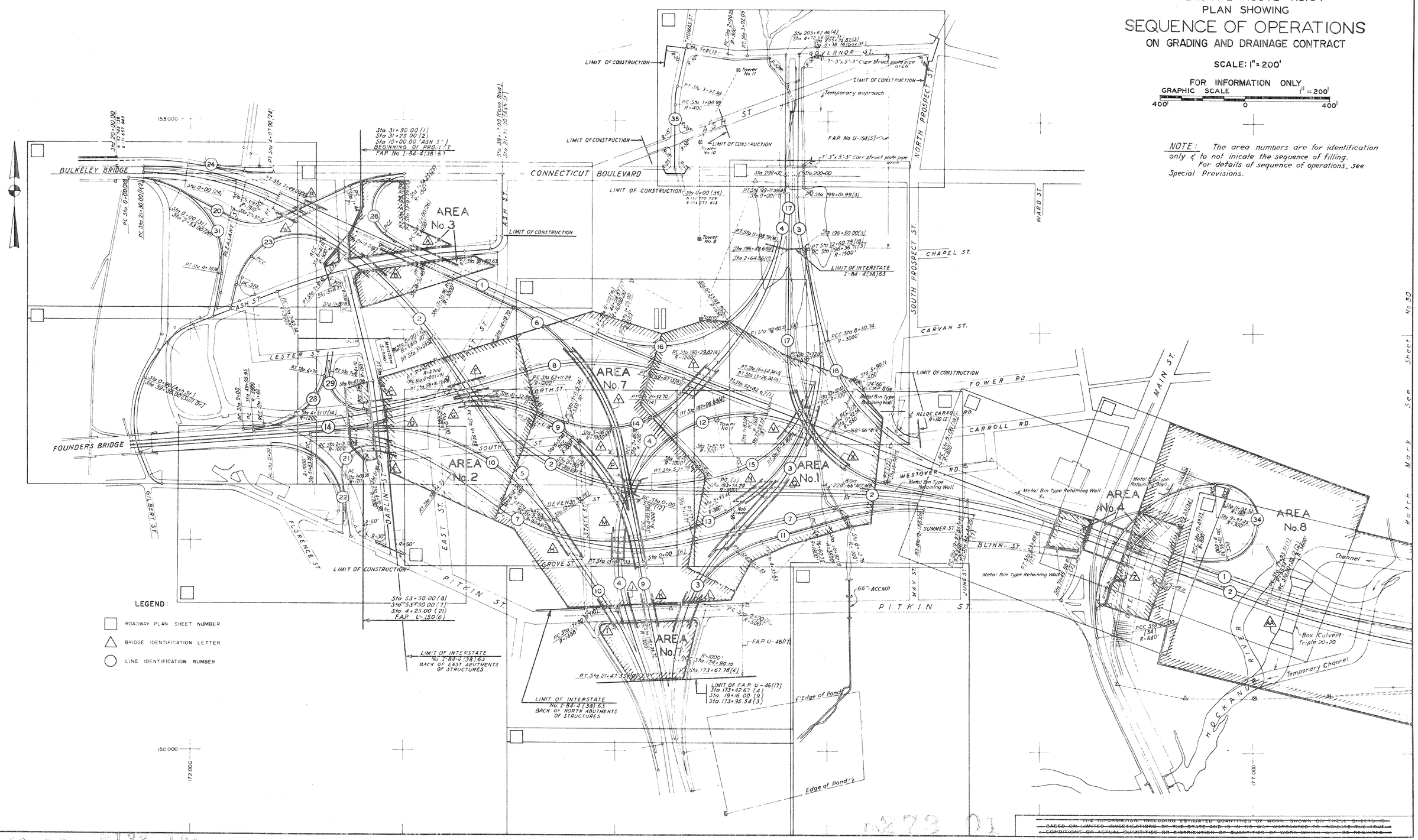

LEGEND:

- ROADWAY PLAN SHEET NUMBER
- BRIDGE IDENTIFICATION LETTER
- LINE IDENTIFICATION NUMBER

PLAN

NOTE BOOK

NO.

Surveyed
Plotted
Traced
Designed
New Const. Noted
Top Field Chk. noted

BY | DATE | CHECKED BY | DATE

THE INFORMATION, INCLUDING ESTIMATED QUANTITIES OF WORK, SHOWN ON THESE SHEETS IS BASED ON LIMITED INVESTIGATIONS BY THE STATE AND IS IN NO WAY WARRANTED TO INDICATE THE TRUE CONDITIONS OR ACTUAL QUANTITIES OR DISTRIBUTION OF QUANTITIES OF WORK WHICH WILL BE REQUIRED.

N273 01

P42 132 P133 134

FORM NO. ENG. 11 ED. 8-54

PUB. ROAD DIV. NO.	STATE	TOWN	FED. AID PROJ. NO.	PROJ. NO.	YEAR	ROUTE NO.	SHEET NO.	TOTAL SHEETS
1	CONN.	EAST HARTFORD	I-84-4(42) 63	42-134	1962	I-84	14	216

INTERSTATE ROUTE No. 84
PLAN SHOWING
SEQUENCE OF OPERATIONS
ON GRADING AND DRAINAGE CONTRACT
SCALE: 1" = 200'
FOR INFORMATION ONLY

GRAPHIC SCALE 1" = 200'
400' 0 400'

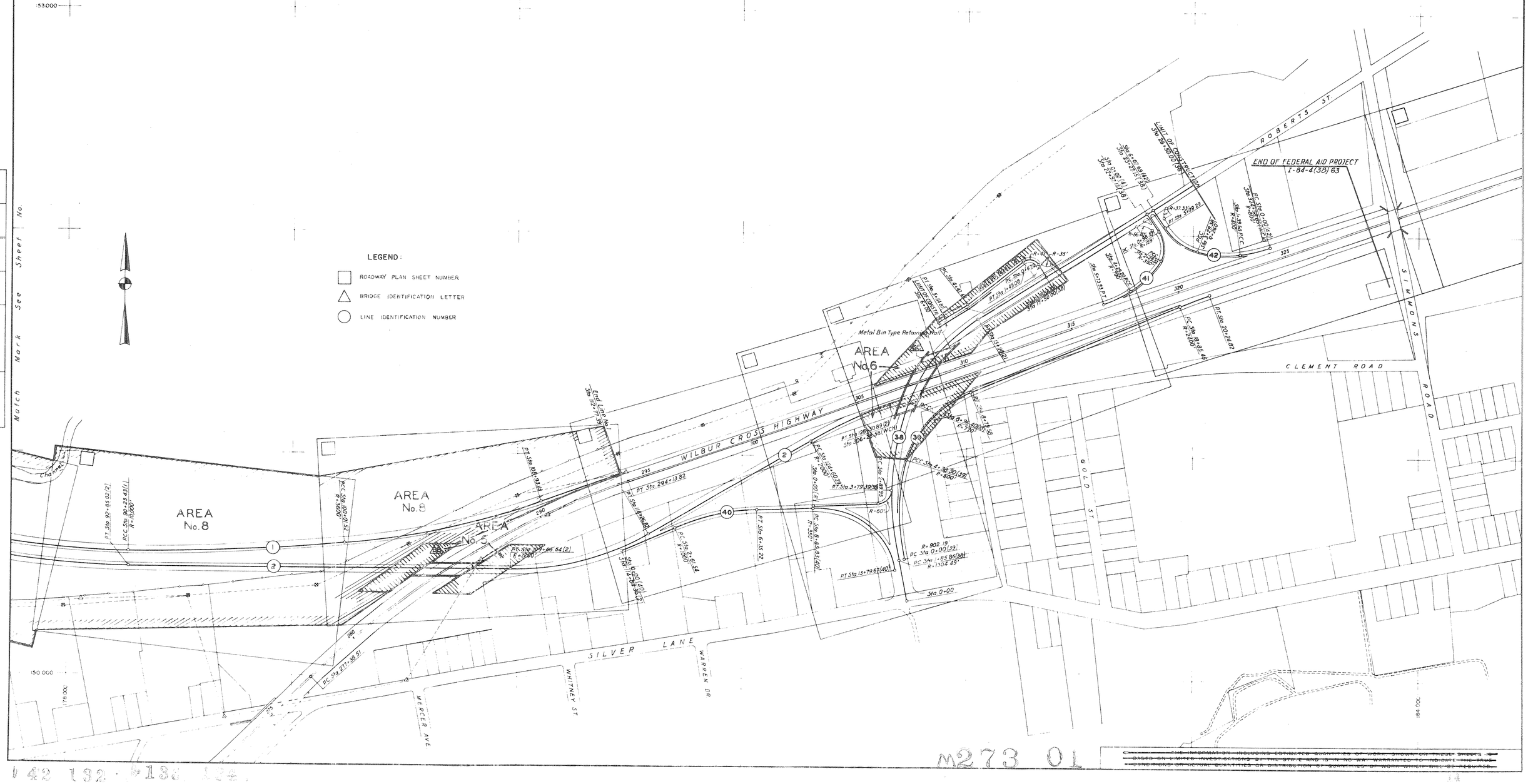

PLAN		BY	DATE	CHECKED BY	DATE
NOTE BOOK	Surveyed				
	Plotted				
	Traced				
	Designed				
	New Const. Noted				
NO.	Top Field Chk. noted				

M273 01

~~THE INFORMATION INCLUDING ESTIMATED QUANTITIES OF WORK SHOWN ON THESE SHEETS IS BASED ON LIMITED INVESTIGATIONS BY THE STATE AND IS IN NO WAY WARRANTED TO INDICATE THE TRUE CONDITIONS OR ACTUAL QUANTITIES OR DISTRIBUTION OF QUANTITIES OF WORK WHICH WILL BE REQUIRED.~~

42 132 133 134

FORM NO. ENG. 11 ED 8-84

PUB. ROAD DIV. NO.	STATE	TOWN	FED. AID PROJ. NO.	PROJ. NO.	YEAR	ROUTE NO.	SHEET NO.	TOTAL SHEETS
1	CONN.	EAST HARTFORD	U-150(7)	42-132	1962	I-84	15	216

INTERSTATE ROUTE No. 84

MINIMUM WIDTH OF R.O.W. 50'

GRAPHIC SCALE 1" = 40'

80' 0 80'

PLAN				
NOTE BOOK NO. 63-103 A,B,C,D,E,F	Surveyed			
	Plotted			
	Traced			
	Designed			
	Rev. Const. Noted			
	Top Field Chk. noted			

BY	DATE	CHECKED BY	DATE

GENERAL CONSTRUCTION NOTES:

PROTECTION OF SETTLEMENT PLATES AND PIEZOMETERS: The Contractor is hereby advised that settlement plates and piezometers have been installed by others within the limits of this Contract. The Contractor shall exercise every precaution to avoid damage to these units. Repair or replacement of any unit damaged by the operations of the Contractor shall be made in accordance with instructions from the Engineer at the Contractor's expense.

Grade and surface all intersecting roads, if, where and as directed by the Engineer.

All drives and barways disturbed by construction shall be surfaced with 2" Hot Asphalt Concrete on 4" Broken Stone for Base unless otherwise shown on Plans.

Depress curbing at all driveways and barways to the width as directed by the Engineer.

Remove all existing drainage culverts where and as directed.

All proposed drainage may be varied by the Engineer to fit conditions found in the field.

If so directed, all underdrain, gravel fill and subbase may be varied as to depth, length and location, according to conditions found in the field or they may be entirely eliminated.

When one endwall is to be used for two pipes, the dimensions of that endwall shall conform to that required for the larger pipe, except the dimension "L" shall be increased by the outside diameter of the smaller pipe plus one foot.

Paved ditches are to be constructed of Hot Asphalt Concrete 2" depth, after compaction, on rolled gravel 4" in depth, after compaction, to be laid in one course.

ABBREVIATION:

N.I.C. - Not in Contract

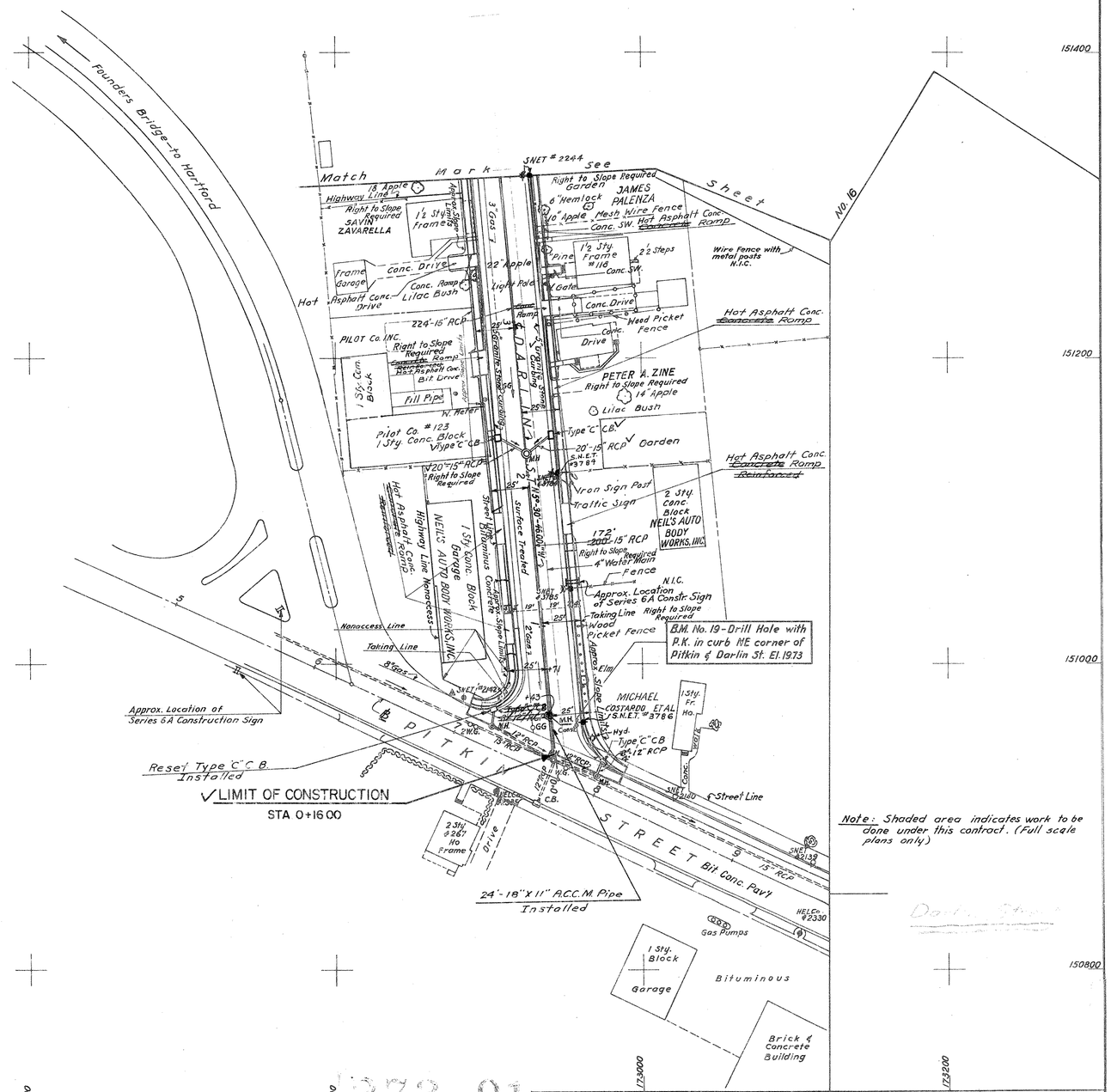

Note: Shaded area indicates work to be done under this contract. (Full scale plans only)

~~THE INFORMATION, INCLUDING ESTIMATED QUANTITIES OF WORK, SHOWN ON THESE SHEETS IS BASED ON LIMITED INVESTIGATIONS BY THE STATE AND IS IN NO WAY WARRANTED TO INDICATE THE TRUE CONDITIONS OR ACTUAL QUANTITIES OR DISTRIBUTION OF QUANTITIES OF WORK WHICH WILL BE REQUIRED.~~

1273 01

PUB. ROAD DIV. NO.	STATE	TOWN	FED. AID PROJ. NO.	PROJ. NO.	YEAR	ROUTE NO.	SHEET NO.	TOTAL SHEETS
1	CONN.	EAST HARTFORD	I-84-4(42)63 U-150-(7)	42-134 42-132	1962	I-84	15	216

INTERSTATE ROUTE No. 84

MINIMUM WIDTH OF RIGHT OF WAY - 400 FT.

GRAPHIC SCALE 1" = 40'

80' 0 80'

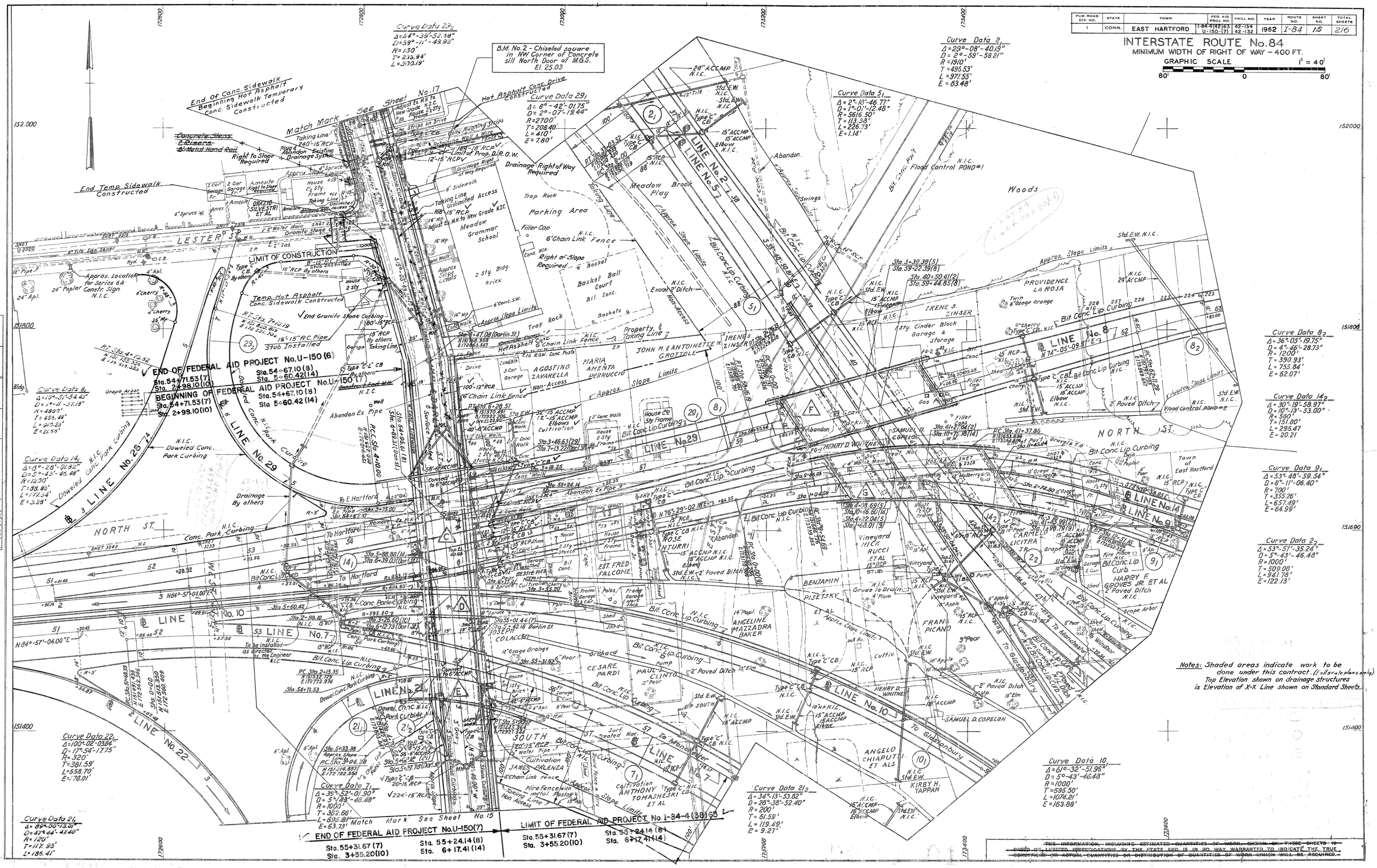

Notes: Shaded areas indicate work to be done under this contract. (Follow plans only)
Top Elevation shown on drainage structures is Elevation of X-X Line shown on Standard Sheets.

THE INFORMATION, INCLUDING ESTIMATED QUANTITIES OF WORK, SHOWN ON THESE SHEETS IS BASED ON LIMITED INVESTIGATIONS BY THE STATE AND IS IN NO WAY WARRANTED TO INDICATE THE TRUE CONDITIONS OR ACTUAL QUANTITIES OR DISTRIBUTION OF QUANTITIES OF WORK WHICH WILL BE REQUIRED.

PLAN	BY	DATE	CHECKED BY	DATE
Surveyed				
Plotted				
Traced				
Designed				
Quantities Checked				
Type Field Checked				

NOTE BOOK NO. 63-103 A,B,C,D,E,F

FORM NO. ENG. 11 ED. 8-53

PUB. ROAD DIV. NO.	STATE	TOWN	FED. AID PROJ. NO.	PROJ. NO.	YEAR	ROUTE NO.	SHEET NO.	TOTAL SHEETS
1	CONN.	EAST HARTFORD	EACI-84-4(42)63 U-150(7)	42-134 42-132	1962	I-84	17	216

INTERSTATE ROUTE No.84

MINIMUM WIDTH OF RIGHT OF WAY - 400 FT.

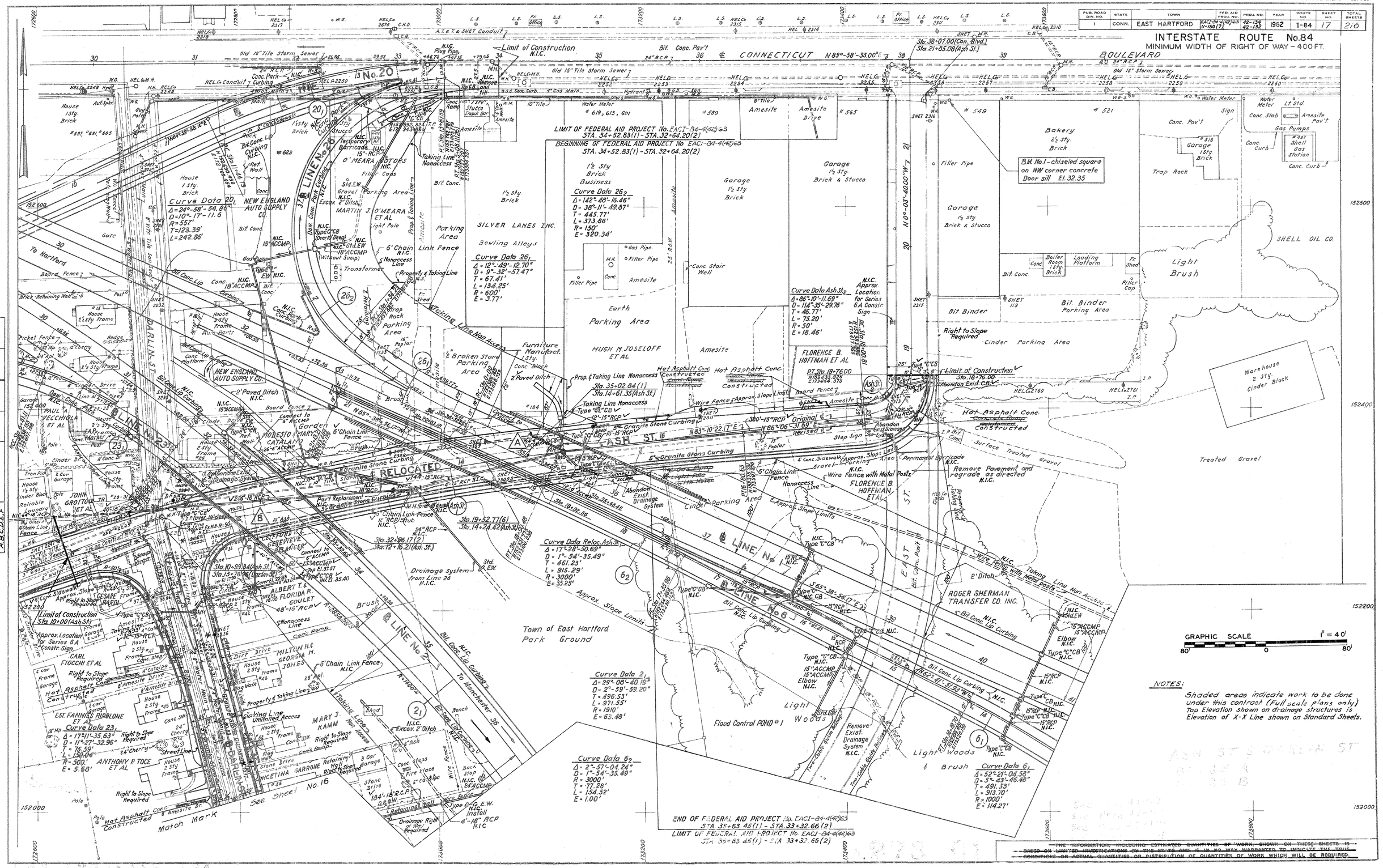

NOTES:

Shaded areas indicate work to be done under this contract (Full scale plans only)
Top Elevation shown on drainage structures is Elevation of X-X Line shown on Standard Sheets.

THE INFORMATION, INCLUDING ESTIMATED QUANTITIES OF WORK, SHOWN ON THESE SHEETS IS BASED ON LIMITED INVESTIGATIONS BY THE STATE AND IS IN NO WAY WARRANTED TO INDICATE THE TRUE CONDITIONS OR ACTUAL QUANTITIES OR DISTRIBUTION OF QUANTITIES OF WORK WHICH WILL BE REQUIRED.

PLAN NOTE BOOK No. 63-103 A,B,C,D,E,F

Surveyed / Plotted / Traced / Designed / New Const. Noted / Top. Field Chk. noted

BY / DATE / CHECKED BY / DATE

PUB. ROAD DIV. NO.	STATE	TOWN	FED. AID PROJ. NO.	PROJ. NO.	YEAR	ROUTE NO.	SHEET NO.	TOTAL SHEETS
1	CONN.	EAST HARTFORD	I-84-4(42)63	42-134	1962	I-84	18	216

INTERSTATE ROUTE No. 84

MINIMUM WIDTH OF RIGHT OF WAY - 1100 FT.

GRAPHIC SCALE 1" = 40'

80' 0 80'

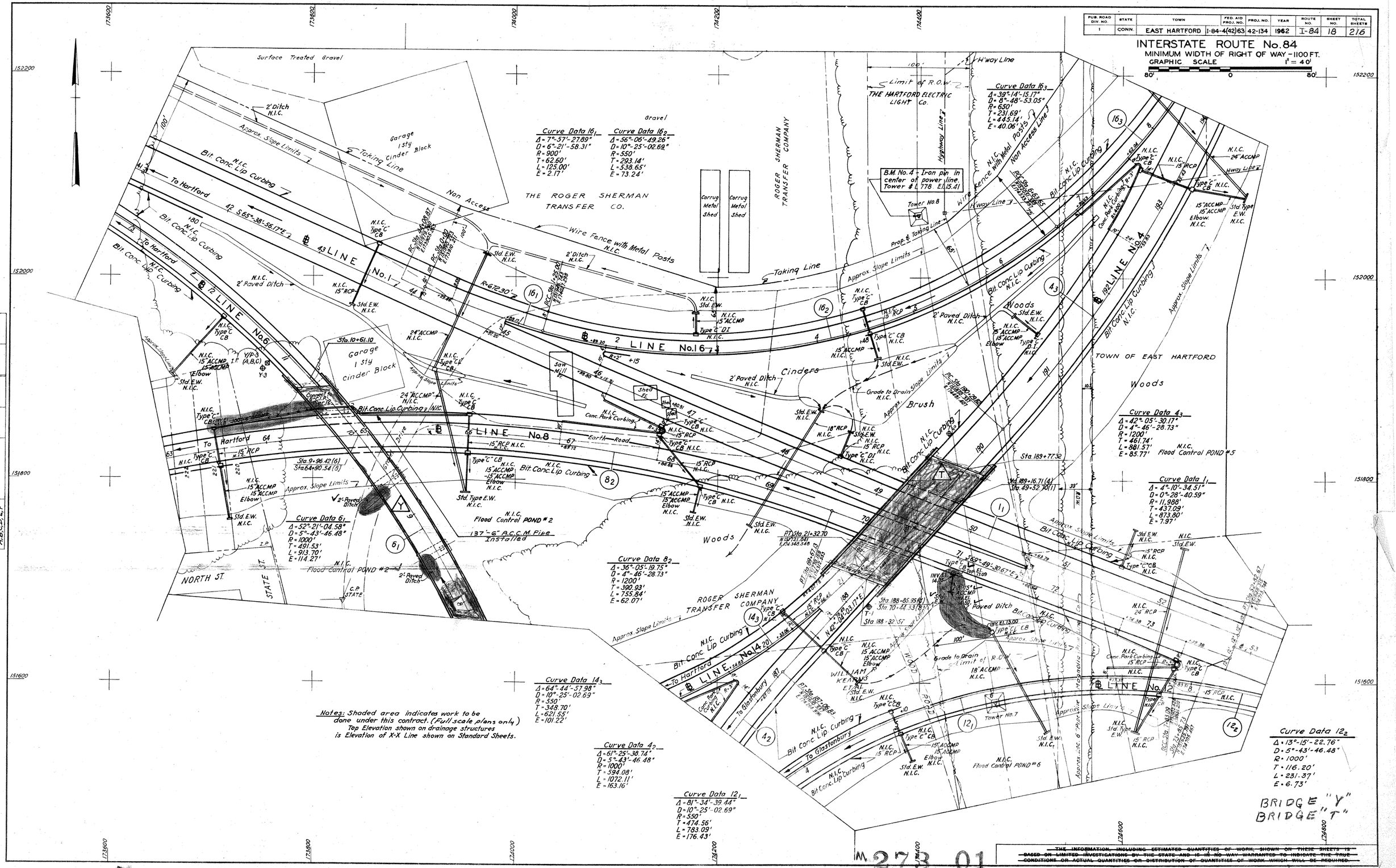

Notes: Shaded area indicates work to be done under this contract. (Full scale plans only)
Top Elevation shown on drainage structures is Elevation of X-X Line shown on Standard Sheets.

PLAN		BY	DATE	CHECKED BY	DATE
NOTE BOOK NO. 63-103 A,B,C,D,E,F	Surveyed				
	Plotted				
	Traced				
	Designed				
	New Const. Noted				
	Top. Field Chk. noted				

THE INFORMATION, INCLUDING ESTIMATED QUANTITIES OF WORK, SHOWN ON THESE SHEETS IS BASED ON LIMITED INVESTIGATIONS BY THE STATE AND IS IN NO WAY WARRANTED TO INDICATE THE TRUE CONDITIONS OR ACTUAL QUANTITIES OR DISTRIBUTION OF QUANTITIES OF WORK WHICH WILL BE REQUIRED.

M 273 01

42 132 133 134

FORM NO. ENG. 11 ED. 8-53

PUB. ROAD DIV. NO.	STATE	TOWN	FED. AID PROJ. NO.	PROJ. NO.	YEAR	ROUTE NO.	SHEET NO.	TOTAL SHEETS
1	CONN.	EAST HARTFORD	I-84-4(42)63	42-134	1962	I-84	19	216

INTERSTATE ROUTE No. 84

MINIMUM WIDTH OF RIGHT OF WAY - 1100 FT.

GRAPHIC SCALE 1" = 40'

80' 0 80'

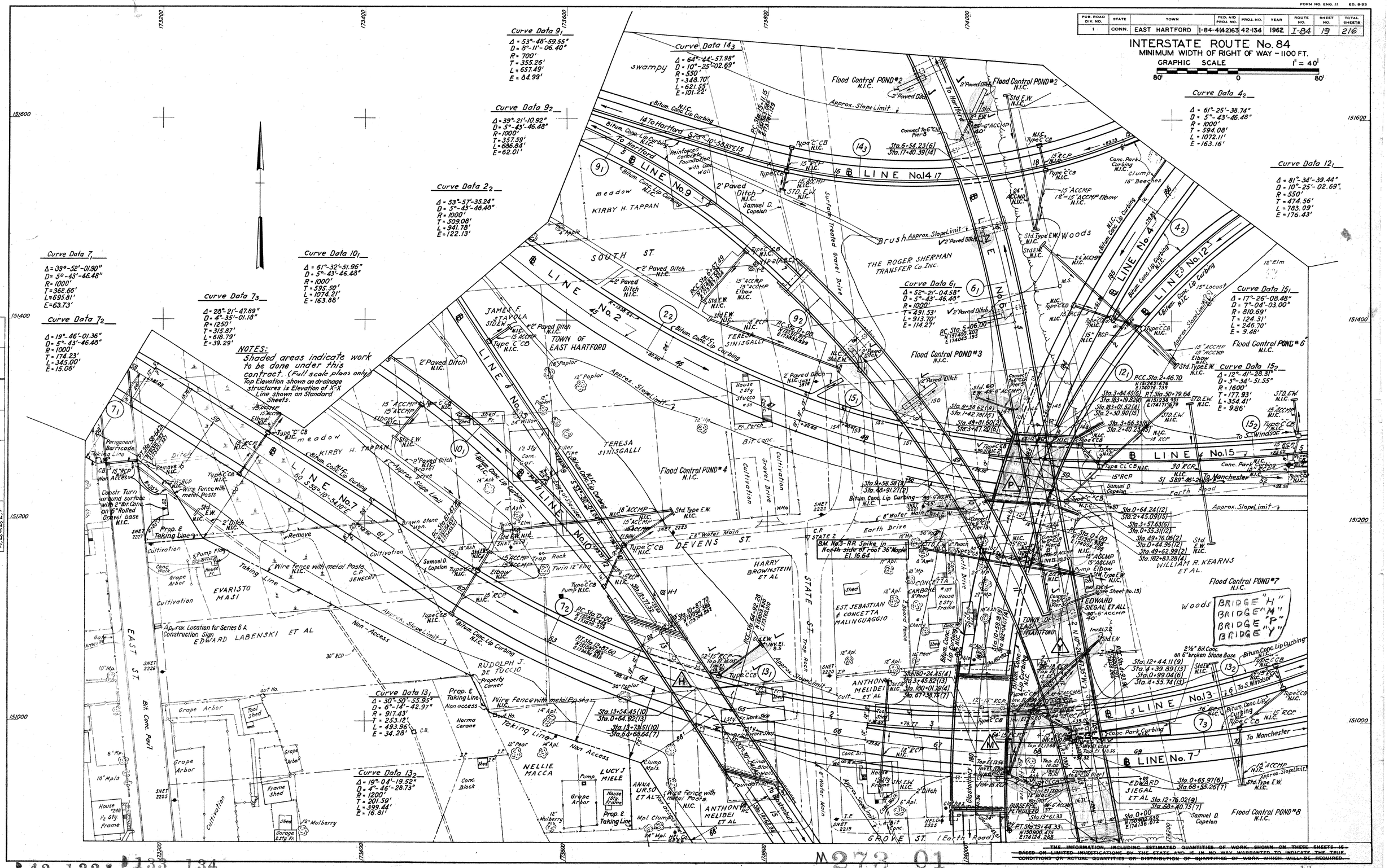

THE INFORMATION, INCLUDING ESTIMATED QUANTITIES OF WORK SHOWN ON THESE SHEETS IS BASED ON LIMITED INVESTIGATIONS BY THE STATE AND IS IN NO WAY WARRANTED TO INDICATE THE TRUE CONDITIONS OR ACTUAL QUANTITIES OR DISTRIBUTION OF QUANTITIES OF WORK WHICH WILL BE REQUIRED.

PLAN		
NOTE BOOK	Surveyed	
	Plotted	
	Traced	
	Checked	
	New Const. Noted	
	Top. Field Chk. noted	
No. 65-103 A,B,C,D,E,F		

BY	DATE	CHECKED BY	DA

42 132 133 134

19

PUB. ROAD DIV. NO.	STATE	TOWN	FED. AID PROJ. NO.	PROJ. NO.	YEAR	ROUTE NO.	SHEET NO.	TOTAL SHEETS
1	CONN.	EAST HARTFORD	U-46(18)	42-133	1962	I-84	20	216

INTERSTATE ROUTE No. 84

MINIMUM WIDTH OF RIGHT OF WAY - 500 FT.

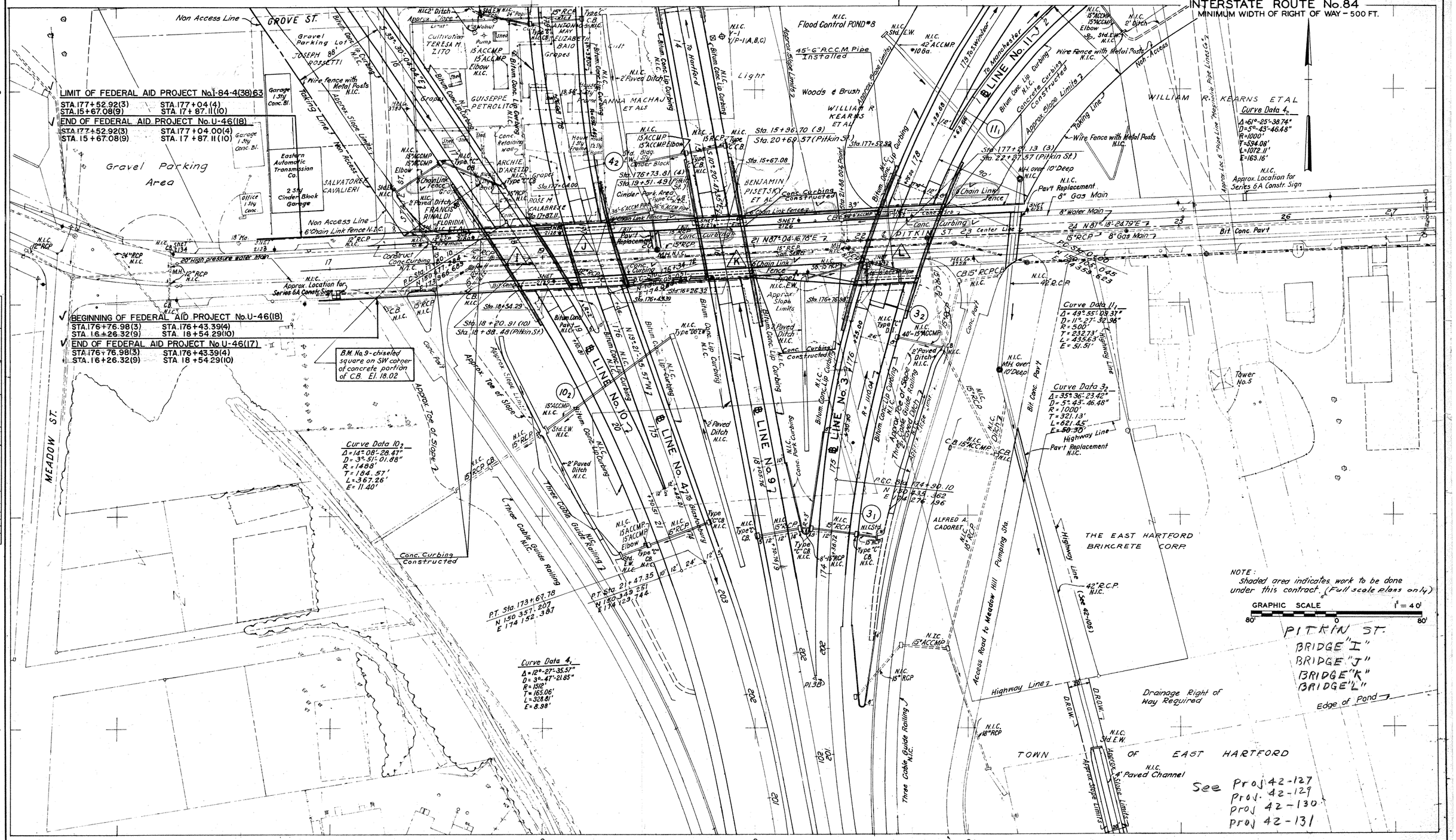

PLAN

NOTE BOOK NO. 63-103 A,B,C,D,E,F

Surveyed
Plotted
Traced
Designed
New Const. Noted
Top. Field Chk. noted

BY DATE CHECKED BY DATE

THE INFORMATION, INCLUDING ESTIMATED QUANTITIES OF WORK, SHOWN ON THESE SHEETS IS BASED ON LIMITED INVESTIGATIONS BY THE STATE AND IS IN NO WAY WARRANTED TO INDICATE THE TRUE CONDITIONS OR ACTUAL QUANTITIES OR DISTRIBUTION OF QUANTITIES OF WORK WHICH WILL BE REQUIRED.

M 273 01

133 134

~~THIS INFORMATION, INCLUDING ESTIMATED QUANTITIES OF WORK, SHOWN ON THESE SHEETS, IS BASED ON LIMITED INVESTIGATIONS BY THE STATE AND IS IN NO WAY WARRANTED TO INDICATE THE TRUE CONDITIONS OR ACTUAL QUANTITIES OR DISTRIBUTION OF QUANTITIES OF WORK WHICH WILL BE REQUIRED.~~

FORM NO. ENG. 12 ED 3-56

PUB. ROAD DIV. NO.	STATE	TOWN	FED. AID PROJ. NO.	PROJ. NO.	YEAR	ROUTE NO.	SHEET NO.	TOTAL SHEETS
1	CONN.	EAST HARTFORD	U-130(7)	42-132	1962	I-84	21	216

INTERSTATE ROUTE No. 84

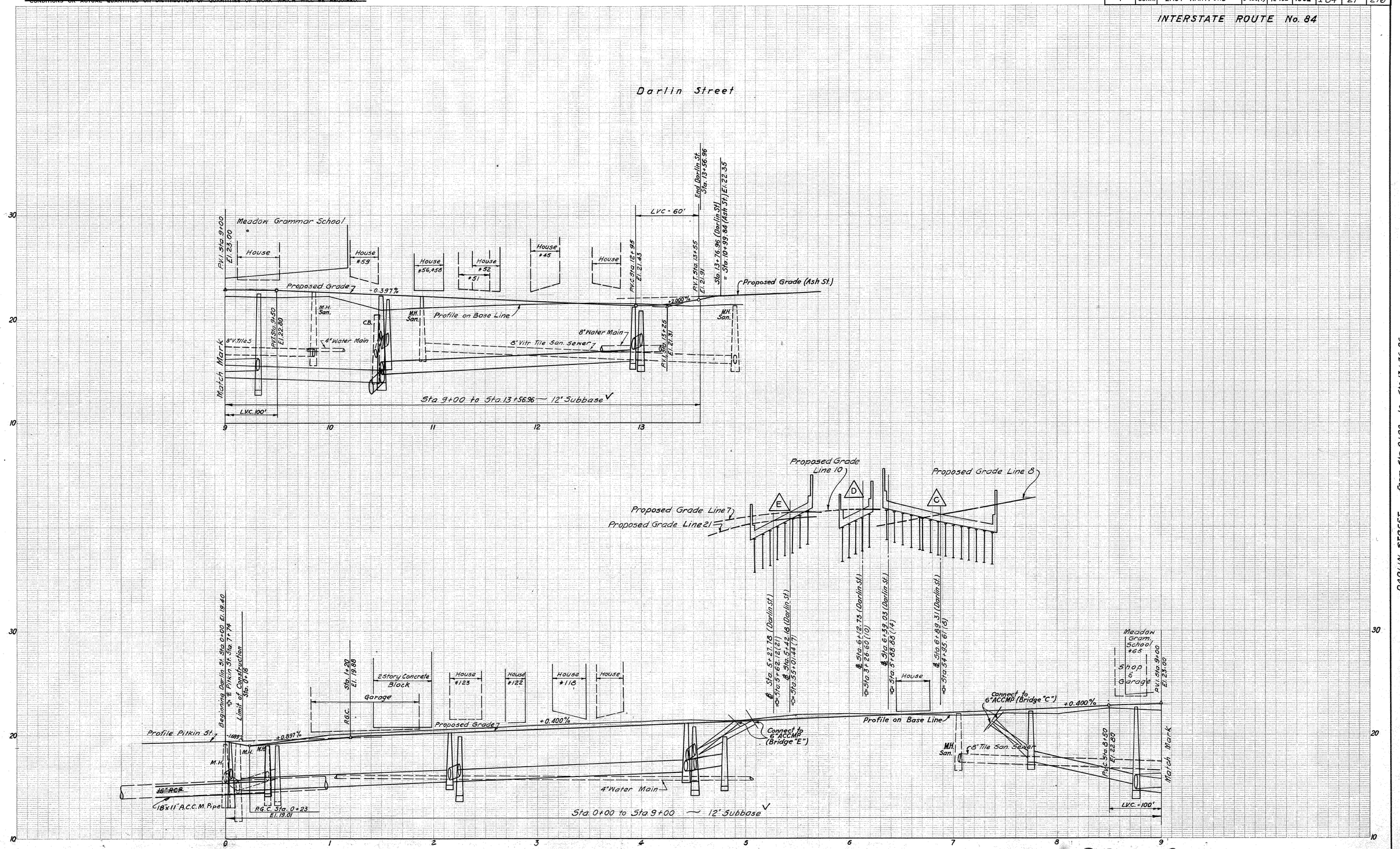

PROFILE	
Surveyed	
Plotted	
Traced	
Designed	
New Const. Noted	
Top. Field Chk. noted	

NOTE BOOK NO. 6-F-1, 13, 14

42 132 · 133 134

273 01

FORM NO. ENG. 12 ED 3-56

PUB. ROAD DIV. NO.	STATE	TOWN	FED. AID PROJ. NO.	PROJ. NO.	YEAR	ROUTE NO.	SHEET NO.	TOTAL SHEETS
1	CONN.	EAST HARTFORD	I-84(102)63	42-134	1962	I-84	22	216

~~THE INFORMATION, INCLUDING ESTIMATED QUANTITIES OF WORK, SHOWN ON THESE SHEETS, IS BASED ON LIMITED INVESTIGATIONS BY THE STATE AND IS IN NO WAY WARRANTED TO INDICATE THE TRUE CONDITIONS OR ACTUAL QUANTITIES OR DISTRIBUTION OF QUANTITIES OF WORK WHICH WILL BE REQUIRED.~~

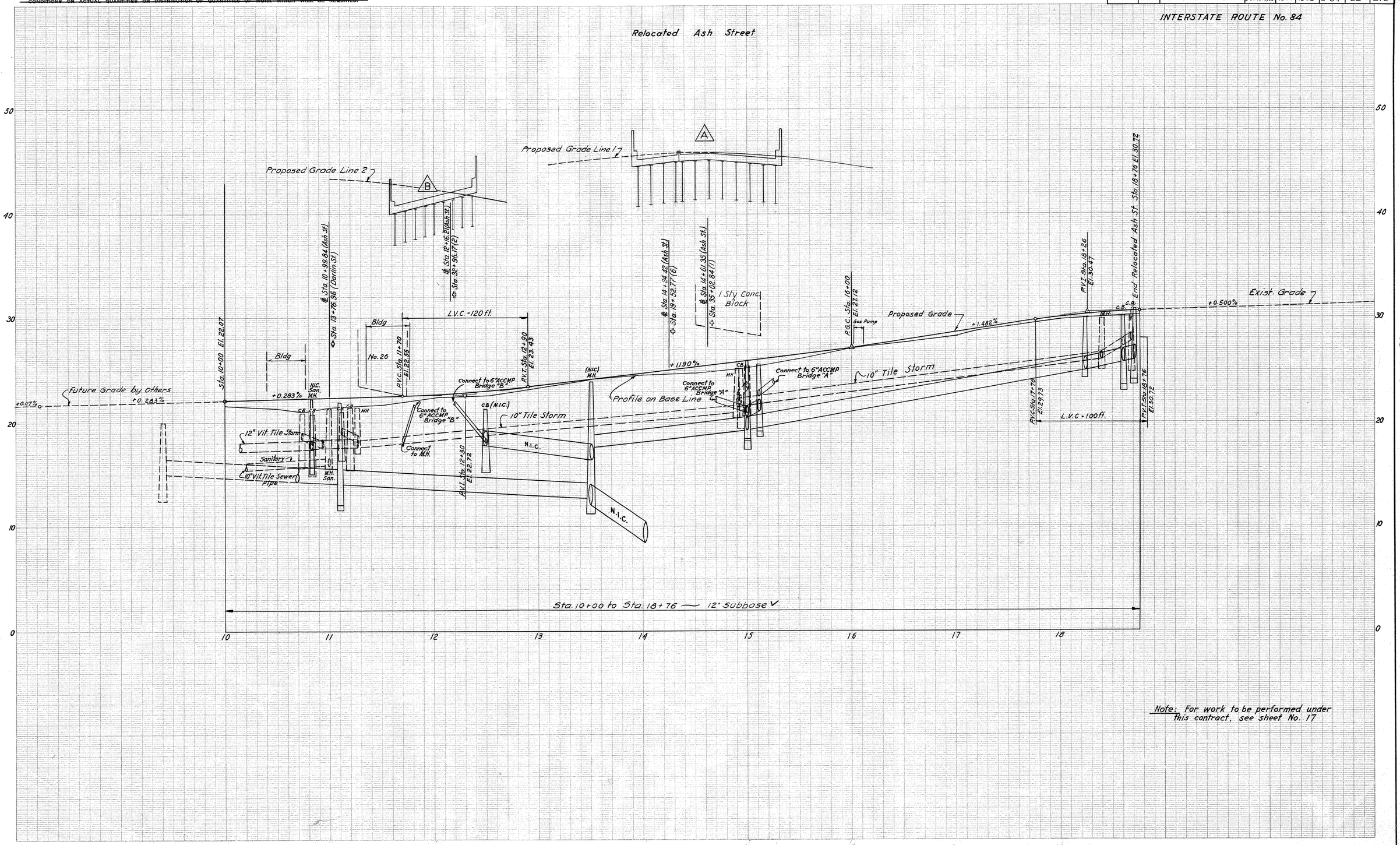

Note: For work to be performed under this contract, see sheet No. 17

PROFILE			
Surveyed			
Plotted			
Traced			
Checked			
NOTE BOOK	New Const. Noted		
NO. 6, F-1, 14	Top. Field Chk. noted		

BY	DATE	CHECKED BY	DATE

42 132 133 134

273 01

"ARKNIGHT" TRACING CLOTH JOSEPH MERRITT & CO. 69024

CROSS SECTIONS

SCALE 1 INCH = 5 FEET

PUB. ROAD DIV. NO.	STATE	TOWN	FED. AID PROJ. NO.	PROJ. NO.	YEAR	ROUTE NO.		
1	CONN.	EAST HARTFORD	U-150(7)	42-132	1962	I-84	23	21[illegible]

INTERSTATE ROUTE No. 84

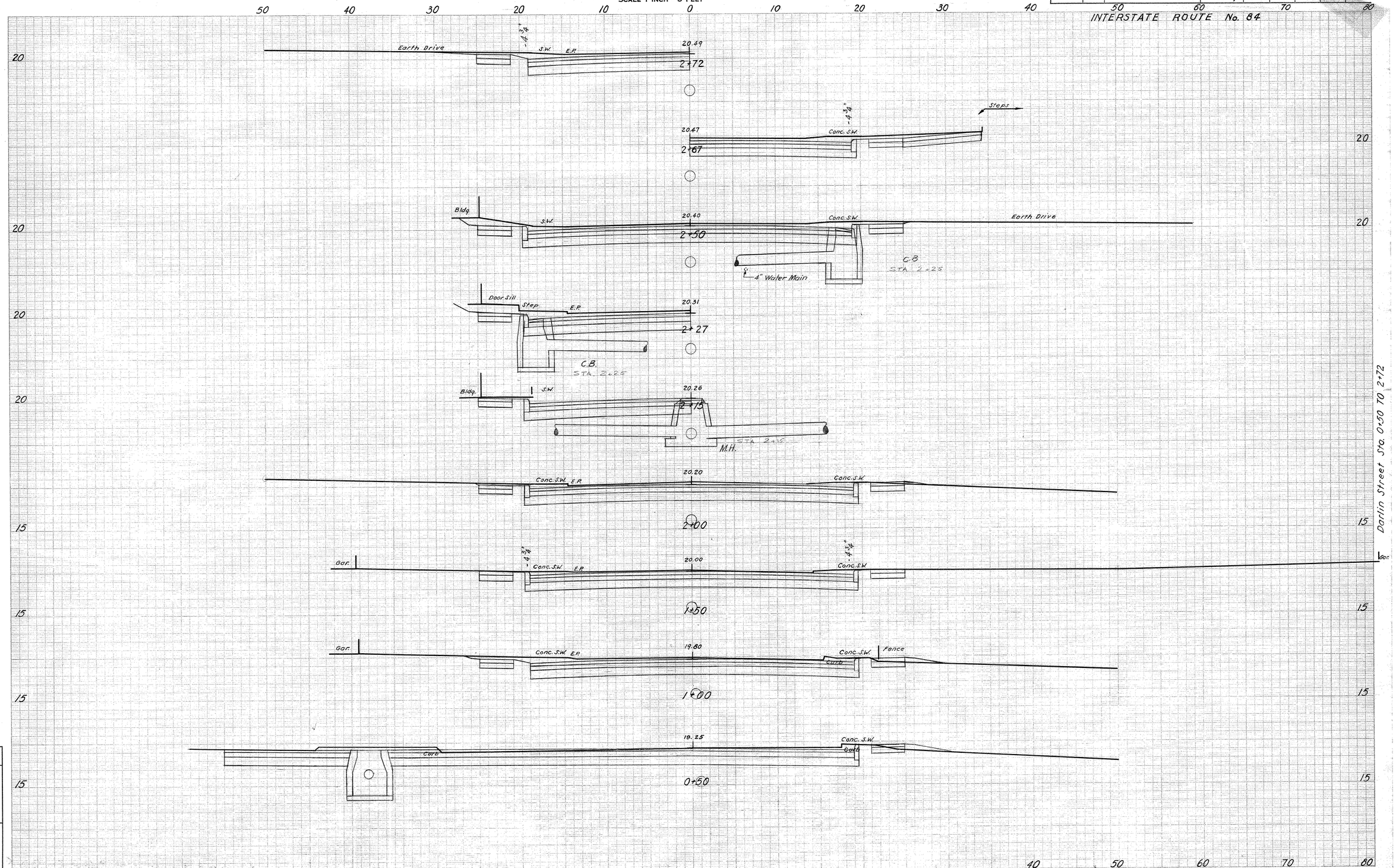

NOTE BOOK NO. 13

Ground Surface Plotted by N.L.K.
" " Checked by [illegible]
Template Sections Plotted by [illegible]
" " Checked by M.K.
Areas by
" Checked by

Final Sections Plotted by
" " Checked by
Final Areas by
" " Checked by
Quantity Transferred by

42 132 133 134

273 01

~~THE INFORMATION, INCLUDING ESTIMATED QUANTITIES OF WORK, SHOWN ON THESE SHEETS IS BASED ON LIMITED INVESTIGATIONS BY THE STATE AND IS IN NO WAY WARRANTED TO INDICATE THE TRUE CONDITIONS OR ACTUAL QUANTITIES OR DISTRIBUTION OF QUANTITIES OF WORK WHICH WILL BE REQUIRED.~~

CROSS SECTIONS

SCALE 1 INCH = 5 FEET

FORM NO. ENG. 13 ED. 6-59

PUB. ROAD DIV. NO.	STATE	TOWN	FED. AID PROJ. NO.	PROJ. NO.	YEAR	ROUTE NO.	SHEET NO.	TOTAL SHEETS
1	CONN.	EAST HARTFORD	U-150(7)	42-132	1962	I-84	24	216

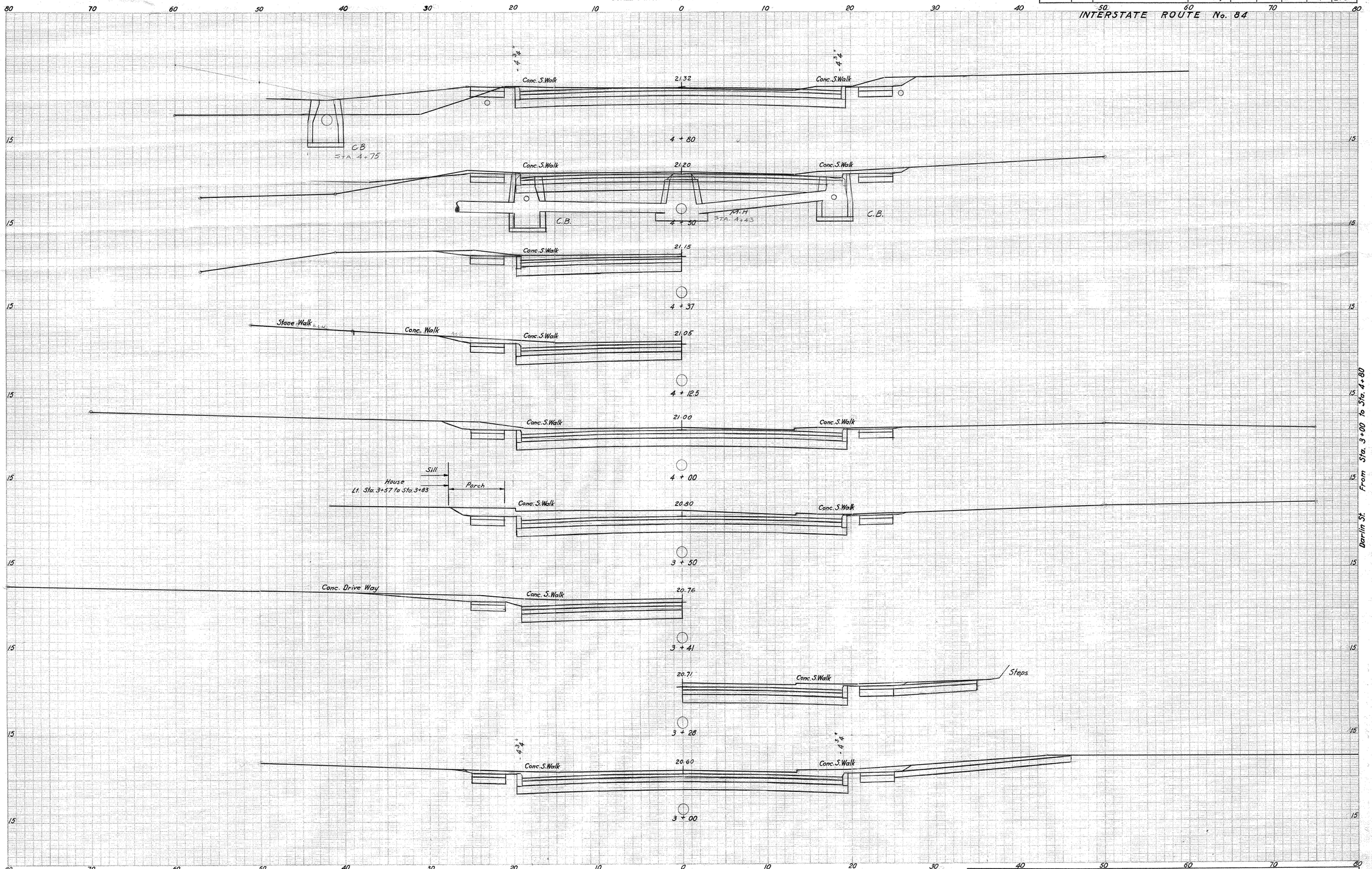

NOTE BOOK NO. 13

Ground Surface Plotted by N.L.K.
" " Checked by I.K.S.
Template Sections Plotted by G.L.
" " Checked by M.K.
Areas by
" Checked by
Final Sections Plotted by
" " Checked by
Final Areas by
" " Checked by
Quantity Transferred by

42 132 133 134

273 01

~~THE INFORMATION, INCLUDING ESTIMATED QUANTITIES OF WORK, SHOWN ON THESE SHEETS IS BASED ON LIMITED INVESTIGATIONS BY THE STATE AND IS IN NO WAY WARRANTED TO INDICATE THE TRUE CONDITIONS OR ACTUAL QUANTITIES OR DISTRIBUTION OF QUANTITIES OF WORK WHICH WILL BE REQUIRED.~~

CROSS SECTIONS

SCALE 1 INCH = 5 FEET

FED. ROAD DIV. NO.	STATE	TOWN	FED. AID PROJ. NO.	PROJ. NO.	YEAR	ROUTE NO.	SHEET NO.	TOTAL SHEETS
1	CONN.	EAST HARTFORD	U-150(7)	42-132	1962	I-84	25	216

INTERSTATE ROUTE No. 84

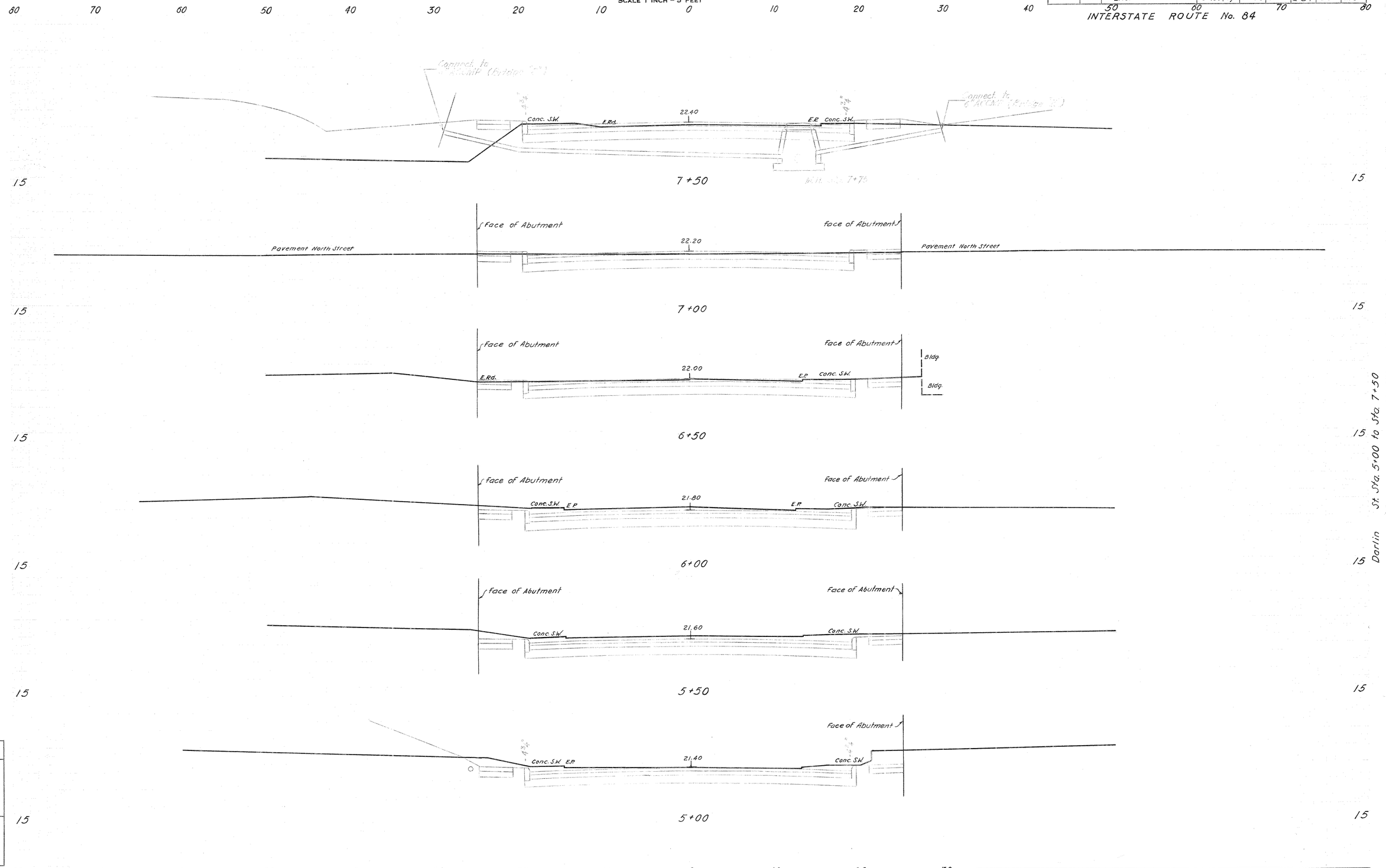

NOTE BOOK NO.	
Ground Surface Plotted by	
" " Checked by	
Template Sections Plotted by	
" " Checked by	
Areas by	
" Checked by	
Final Sections Plotted by	
" " Checked by	
Final Areas by	
" " Checked by	
Quantity Transferred by	

~~THE INFORMATION, INCLUDING ESTIMATED QUANTITIES OF WORK, SHOWN ON THESE SHEETS IS BASED ON LIMITED INVESTIGATIONS BY THE STATE AND IS IN NO WAY WARRANTED TO INDICATE THE TRUE CONDITIONS OR ACTUAL QUANTITIES OR DISTRIBUTION OF QUANTITIES OF WORK WHICH WILL BE REQUIRED.~~

CROSS SECTIONS

SCALE 1 INCH = 5 FEET

FED. ROAD DIV. NO.	STATE	TOWN	FED. AID PROJ. NO.	PROJ. NO.	YEAR	ROUTE NO.	SHEET NO.	TOTAL SHEETS
1	CONN.	EAST HARTFORD	U-150(7)	42-132	1962	I-84	26	216

INTERSTATE ROUTE No. 84

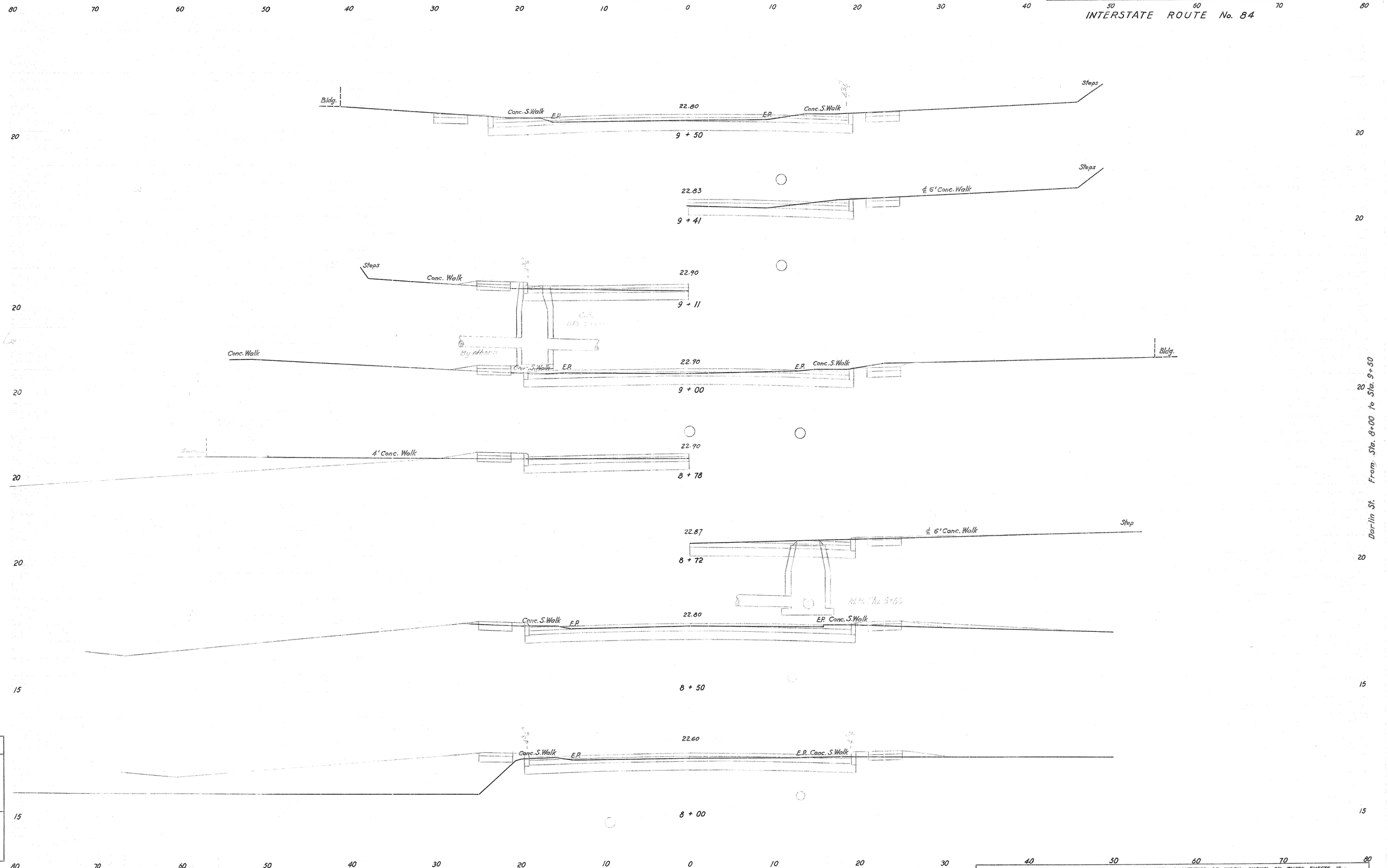

NOTE BOOK NO.

Ground Surface Plotted by
" " Checked by
Template Sections Plotted by
" " Checked by
Areas by
" Checked by
Final Sections Plotted by
" " Checked by
Final Areas by
" " Checked by
Quantity Transferred by

~~THE INFORMATION, INCLUDING ESTIMATED QUANTITIES OF WORK, SHOWN ON THESE SHEETS IS BASED ON LIMITED INVESTIGATIONS BY THE STATE AND IS IN NO WAY WARRANTED TO INDICATE THE TRUE CONDITIONS OR ACTUAL QUANTITIES OR DISTRIBUTION OF QUANTITIES OF WORK WHICH WILL BE REQUIRED.~~

FORM NO. ENG. 12 B.P. 6-59

PUB. ROAD DIV. NO.	STATE	TOWN	FED. AID PROJ. NO.	PROJ. NO.	YEAR	ROUTE NO.	SHEET NO.	TOTAL SHEETS
1	CONN.	EAST HARTFORD	U-150(7)	42-132	1962	I-84	27	216

CROSS SECTIONS

SCALE 1 INCH = 5 FEET

INTERSTATE ROUTE No. 84

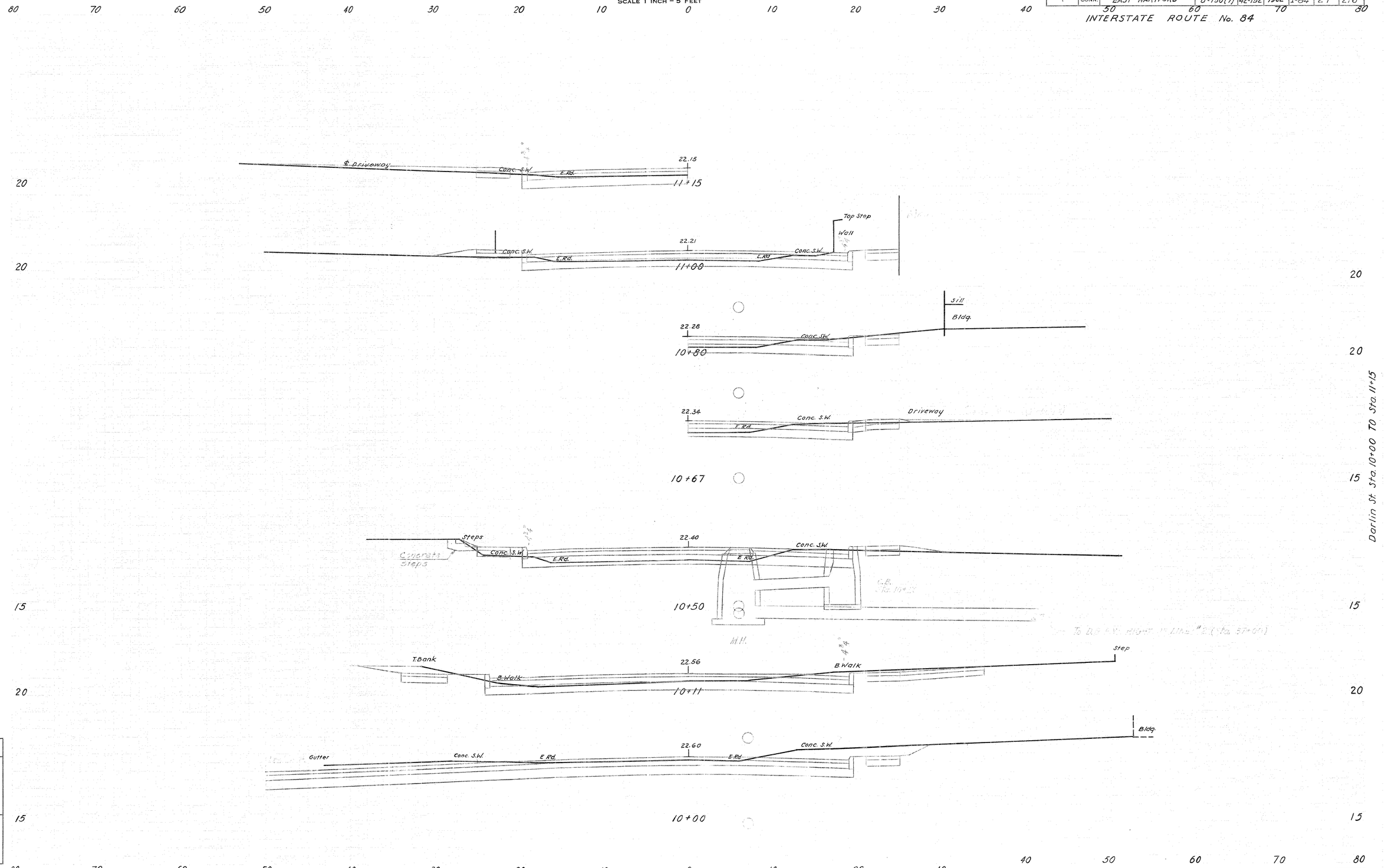

NOTE BOOK NO.	
Ground Surface Plotted by	
" " Checked by	
Template Sections Plotted by	
" " Checked by	
Areas by	
" Checked by	
Final Sections Plotted by	
" " Checked by	
Final Areas by	
" " Checked by	
Quantity Transferred by	

~~THE INFORMATION, INCLUDING ESTIMATED QUANTITIES OF WORK, SHOWN ON THESE SHEETS IS BASED ON LIMITED INVESTIGATIONS BY THE STATE AND IS IN NO WAY WARRANTED TO INDICATE THE TRUE CONDITIONS OR ACTUAL QUANTITIES OR DISTRIBUTION OF QUANTITIES OF WORK WHICH WILL BE REQUIRED.~~

CROSS SECTIONS

SCALE 1 INCH = 5 FEET

PUB. ROAD DIV. NO.	STATE	TOWN	FED. AID PROJ. NO.	PROJ. NO.	YEAR	ROUTE NO.	SHEET NO.	TOTAL SHEETS
1	CONN.	EAST HARTFORD	U-150(7)	42-132	1962	I-84	28	216

INTERSTATE ROUTE No. 84

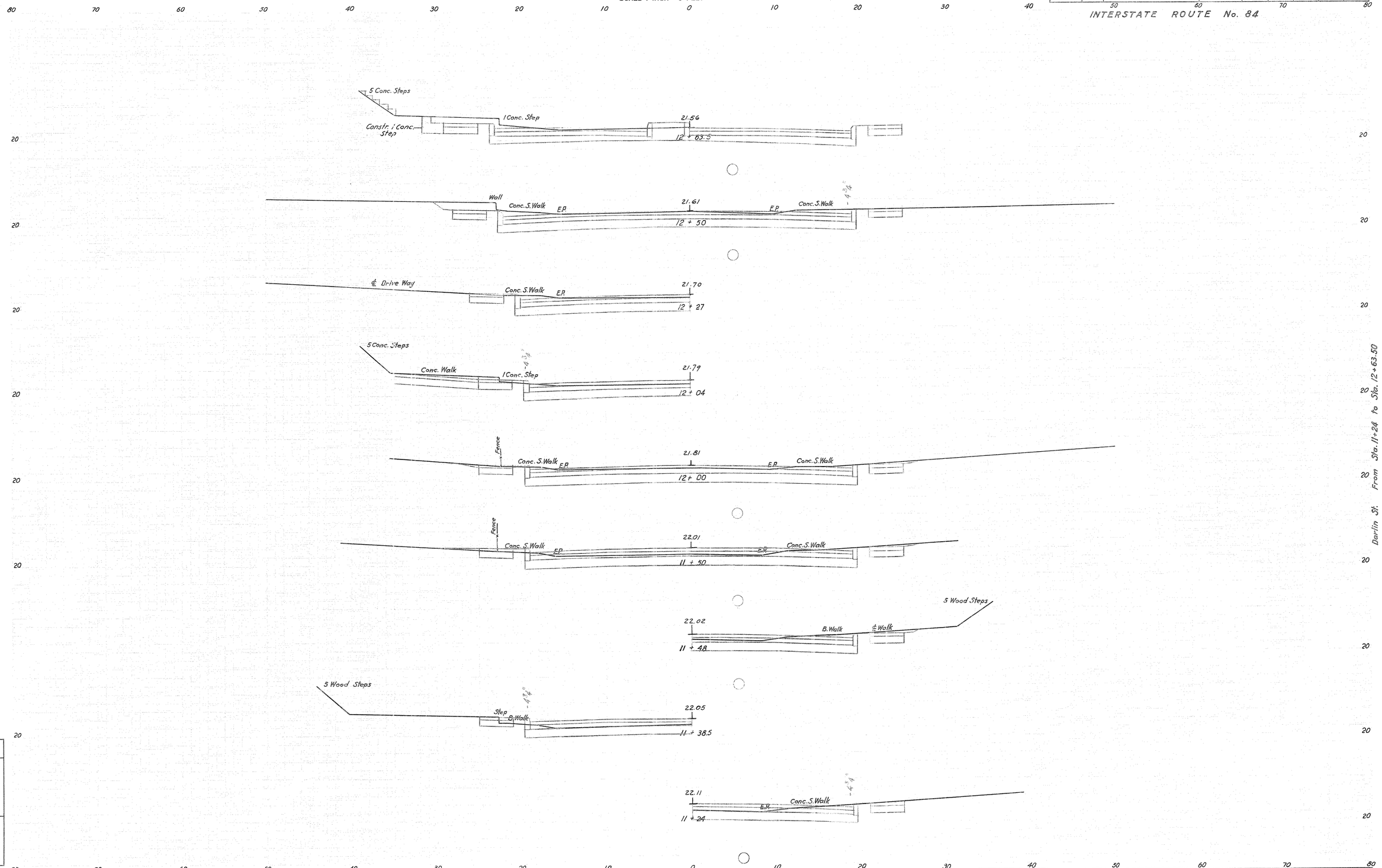

NOTE BOOK NO.

Ground Surface Plotted by
" " Checked by
Template Sections Plotted by
" " Checked by
Areas by
" Checked by
Final Sections Plotted by
" " Checked by
Final Areas by
" " Checked by
Quantity Transferred by

THE INFORMATION, INCLUDING ESTIMATED QUANTITIES OF WORK, SHOWN ON THESE SHEETS IS BASED ON LIMITED INVESTIGATIONS BY THE STATE AND IS IN NO WAY WARRANTED TO INDICATE THE TRUE CONDITIONS OR ACTUAL QUANTITIES OR DISTRIBUTION OF QUANTITIES OF WORK WHICH WILL BE REQUIRED.

273 01

CROSS SECTIONS

SCALE 1 INCH = 5 FEET

FEDERAL AID SECONDARY

PUB. ROAD DIV. NO.	STATE	TOWN	FED. AID PROJ. NO.	PROJ. NO.	YEAR	ROUTE NO.	SHEET NO.	TOTAL SHEETS
1	CONN.	EAST HARTFORD	U-150(7)	42-132	1962	I-84	29	216

INTERSTATE ROUTE No. 84

Darlin St. From Sta. 13+00 to Sta. 13+50

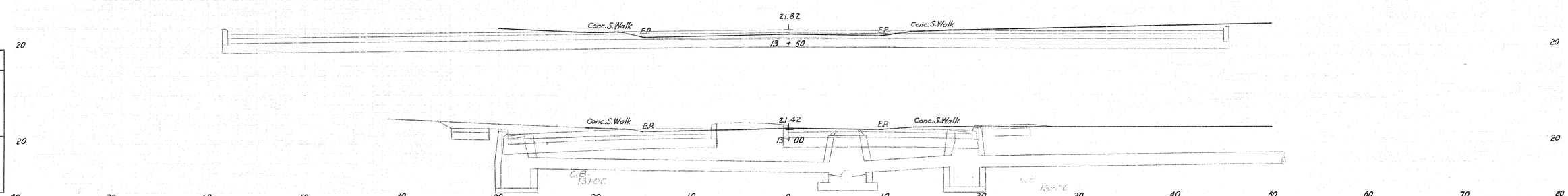

NOTE BOOK NO. 73

Ground Surface Plotted by
" " Checked by
Template Sections Plotted by
" " Checked by
Areas by
" Checked by

Final Sections Plotted by
" " Checked by
Final Areas by
" " Checked by
Quantity Transferred by

~~THE INFORMATION, INCLUDING ESTIMATED QUANTITIES OF WORK, SHOWN ON THESE SHEETS IS BASED ON LIMITED INVESTIGATIONS BY THE STATE AND IS IN NO WAY WARRANTED TO INDICATE THE TRUE CONDITIONS OR ACTUAL QUANTITIES OR DISTRIBUTION OF QUANTITIES OF WORK WHICH WILL BE REQUIRED.~~

CROSS SECTIONS

SCALE 1 INCH=5 FEET

FORM NO. ENG. 13 ED. 11-56

PUB. ROAD DIV. NO.	STATE	TOWN	FED. AID PROJ. NO.	PROJ. NO.	YEAR	ROUTE NO.	SHEET NO.	TOTAL SHEETS
1	CONN.	EAST HARTFORD	I-84-4(42)63	42-134	1962	I-84	30	216

INTERSTATE ROUTE NO. 84

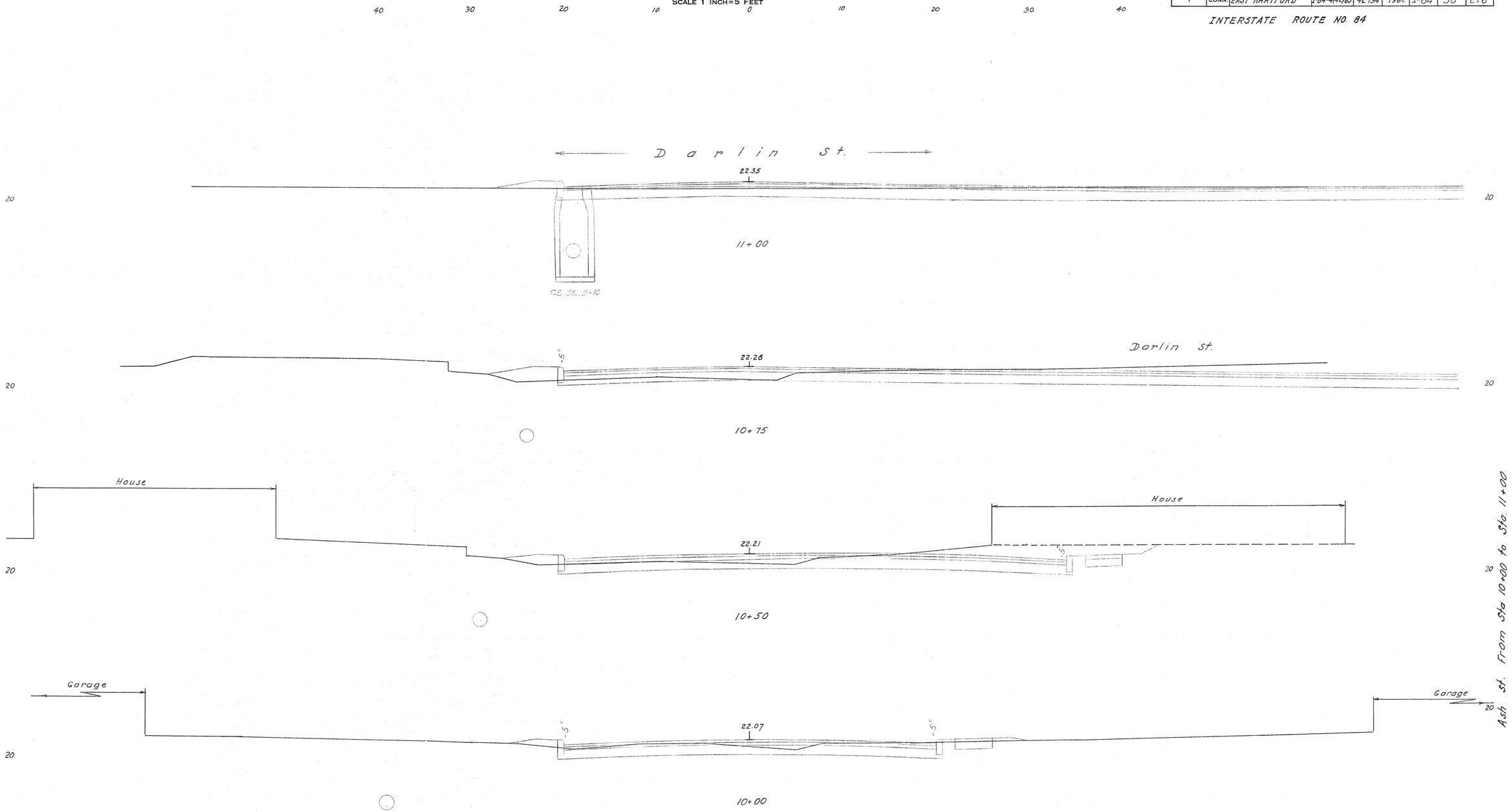

NOTE BOOK NO.	
Ground Surface Plotted by	
" " Checked by	
Template Sections Plotted by	
" " Checked by	
Areas by	
" Checked by	
Final Sections Plotted by	
" " Checked by	
Final Areas by	
" " Checked by	
Quantity Transferred and Inked by	

"ARKWRIGHT" TRACING CLOTH JOSEPH MERRITT & CO. 60442

~~THE INFORMATION, INCLUDING ESTIMATED QUANTITIES OF WORK, SHOWN ON THESE SHEETS IS BASED ON LIMITED INVESTIGATIONS BY THE STATE AND IS IN NO WAY WARRANTED TO INDICATE THE TRUE CONDITIONS OR ACTUAL QUANTITIES OR DISTRIBUTION OF QUANTITIES OF WORK WHICH WILL BE REQUIRED.~~

CROSS SECTIONS

SCALE 1 INCH = 5 FEET

FORM NO. ENG. 13 ED. 6-59

PUB. ROAD DIV. NO.	STATE	TOWN	FED. AID PROJ. NO.	PROJ. NO.	YEAR	ROUTE NO.	SHEET NO.	TOTAL SHEETS
1	CONN.	EAST HARTFORD	I-84-4(42)63	42-134	1962	I-84	31	216

INTERSTATE ROUTE No. 84

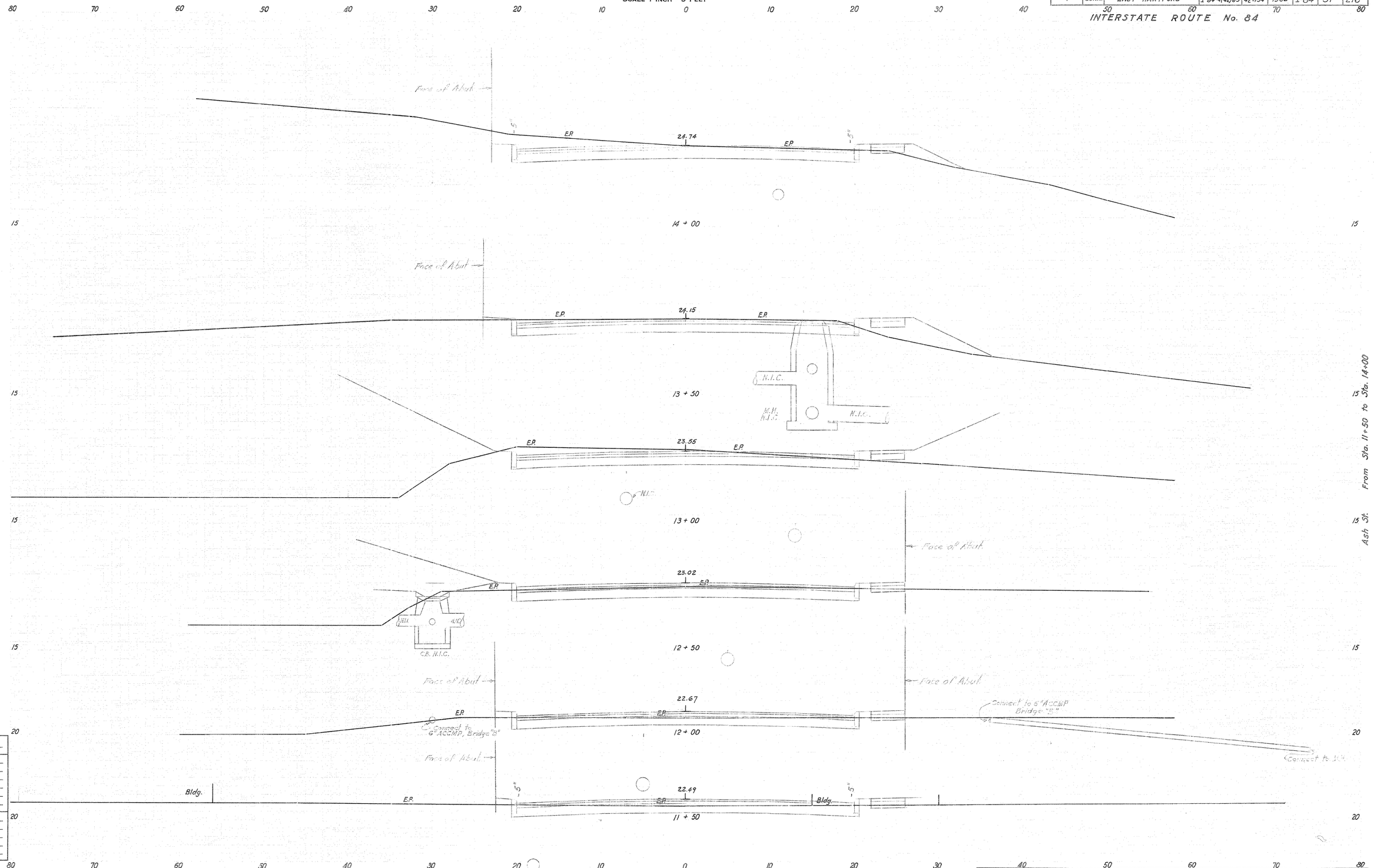

NOTE BOOK NO. 7

Ground Surface Plotted by
" " Checked by
Template Sections Plotted by
" " Checked by
Areas by
" Checked by

Final Sections Plotted by
" " Checked by
Final Areas by
" " Checked by
Quantity Transferred by

THE INFORMATION, INCLUDING ESTIMATED QUANTITIES OF WORK, SHOWN ON THESE SHEETS IS BASED ON LIMITED INVESTIGATIONS BY THE STATE AND IS IN NO WAY WARRANTED TO INDICATE THE TRUE CONDITIONS OR ACTUAL QUANTITIES OR DISTRIBUTION OF QUANTITIES OF WORK WHICH WILL BE REQUIRED.

CROSS SECTIONS

SCALE 1 INCH = 5 FEET

PUB. ROAD DIV. NO.	STATE	TOWN	FED. AID PROJ. NO.	PROJ. NO.	YEAR	ROUTE NO.	SHEET NO.	TOTAL SHEETS
1	CONN.	EAST HARTFORD	I-84-4(42)63	42-134	1962	I-84	32	216

INTERSTATE ROUTE No. 84

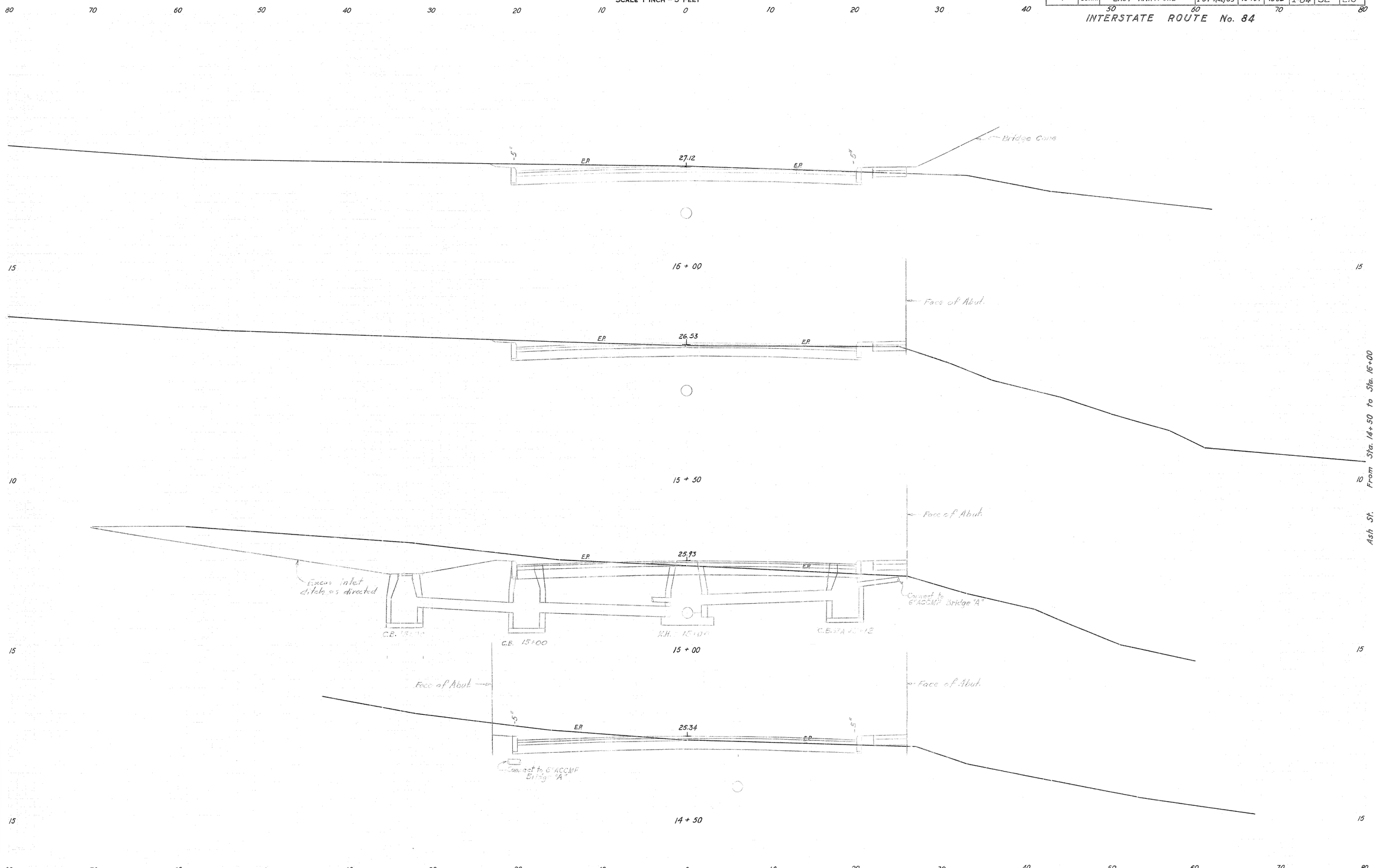

NOTE BOOK NO.	
Ground Surface Plotted by	
" " Checked by	
Template Sections Plotted by	
" " Checked by	
Areas by	
" Checked by	
Final Sections Plotted by	
" " Checked by	
Final Areas by	
" " Checked by	
Quantity Transferred by	

~~THE INFORMATION, INCLUDING ESTIMATED QUANTITIES OF WORK, SHOWN ON THESE SHEETS IS BASED ON LIMITED INVESTIGATIONS BY THE STATE AND IS IN NO WAY WARRANTED TO INDICATE THE TRUE CONDITIONS OR ACTUAL QUANTITIES OR DISTRIBUTION OF QUANTITIES OF WORK WHICH WILL BE REQUIRED.~~

FORM NO. ENG. 13 ED. 6-59

PUB. ROAD DIV. NO.	STATE	TOWN	FED. AID PROJ. NO.	PROJ. NO.	YEAR	ROUTE NO.	SHEET NO.	TOTAL SHEETS
1	CONN.	EAST HARTFORD	I-84-4(42) 63	42-134	1962	I-84	33	216

INTERSTATE ROUTE No. 84

CROSS SECTIONS

SCALE 1 INCH = 5 FEET

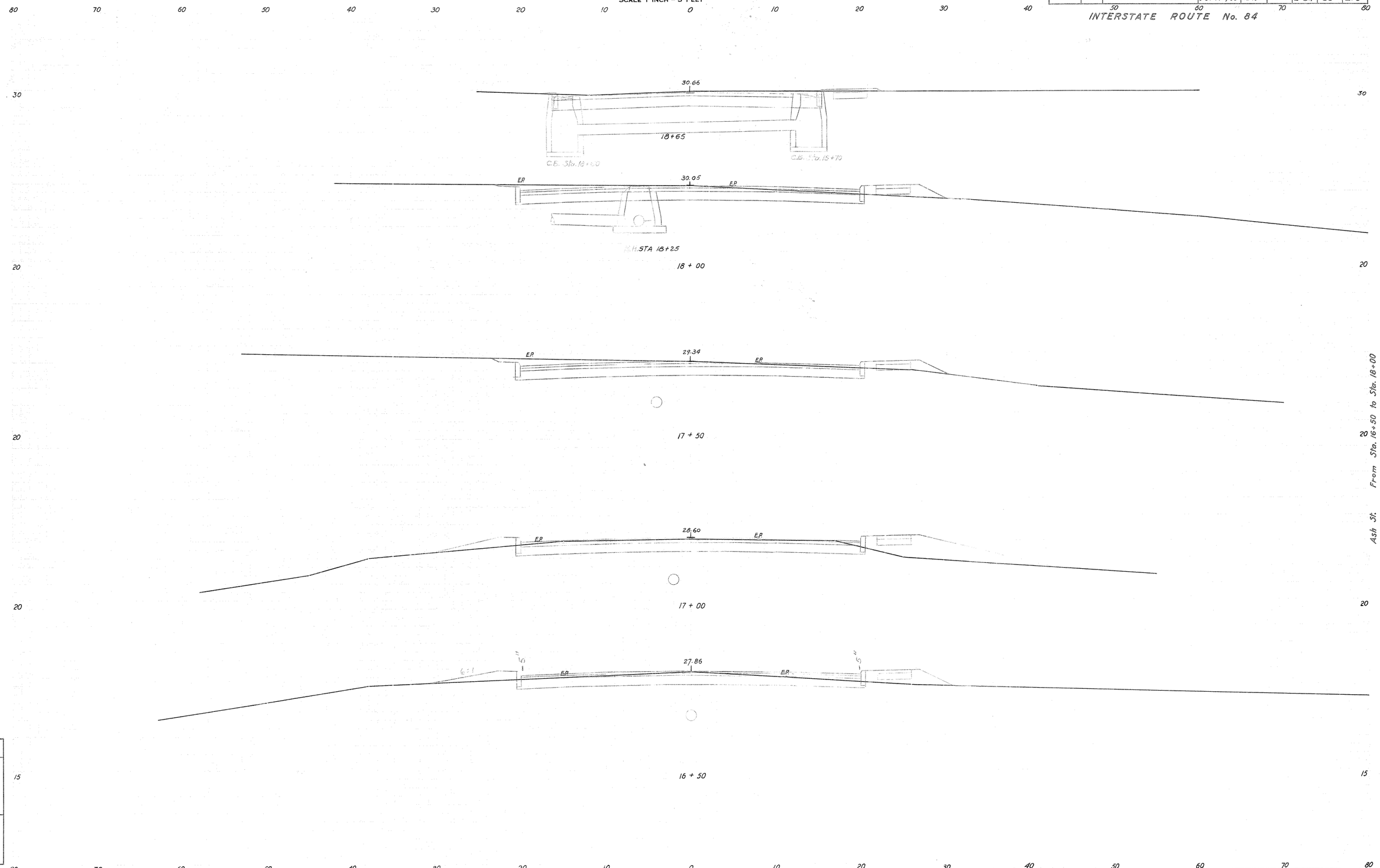

NOTE BOOK NO. 2

Ground Surface Plotted by
" " Checked by
Template Sections Plotted by
" " Checked by
Areas by
" Checked by

Final Sections Plotted by
" " Checked by
Final Areas by
" " Checked by
Quantity Transferred by

~~THE INFORMATION, INCLUDING ESTIMATED QUANTITIES OF WORK, SHOWN ON THESE SHEETS IS BASED ON LIMITED INVESTIGATIONS BY THE STATE AND IS IN NO WAY WARRANTED TO INDICATE THE TRUE CONDITIONS OR ACTUAL QUANTITIES OR DISTRIBUTION OF QUANTITIES OF WORK WHICH WILL BE REQUIRED.~~

PLANS NO. GRS. 10 TO 19-DS

FED. ROAD DIV. NO.	STATE	TOWN	FED. AID PROJ. NO.	PROJ. NO.	YEAR	ROUTE NO.	SHEET NO.	TOTAL SHEETS
6	CONN.	EAST HARTFORD	I-84-4(42)63	42-134	1962	I-84	34	215

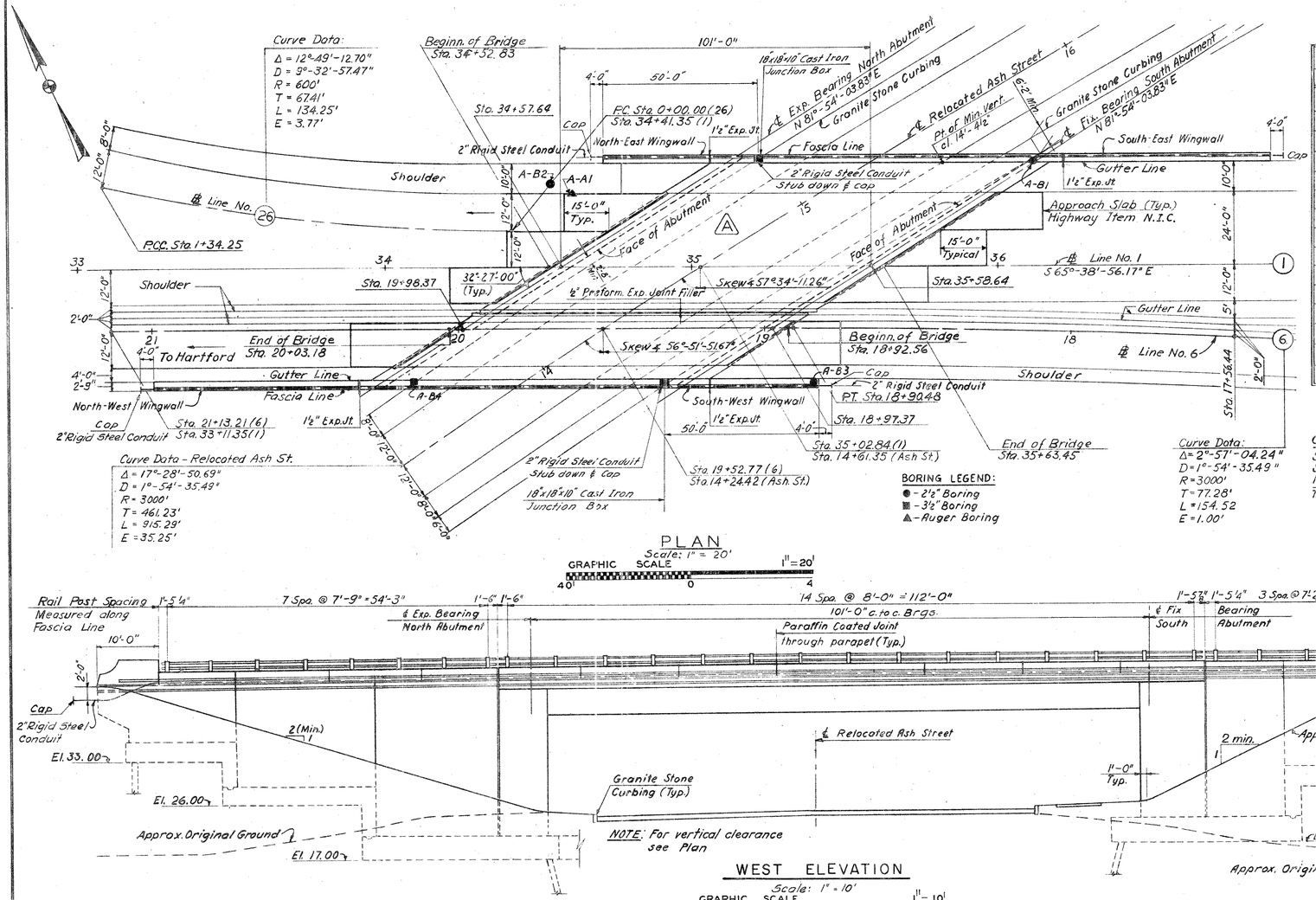

BORING LEGEND:
● - 2½" Boring
■ - 3½" Boring
▲ - Auger Boring

PLAN

Scale: 1" = 20'

GRAPHIC SCALE 1" = 20'

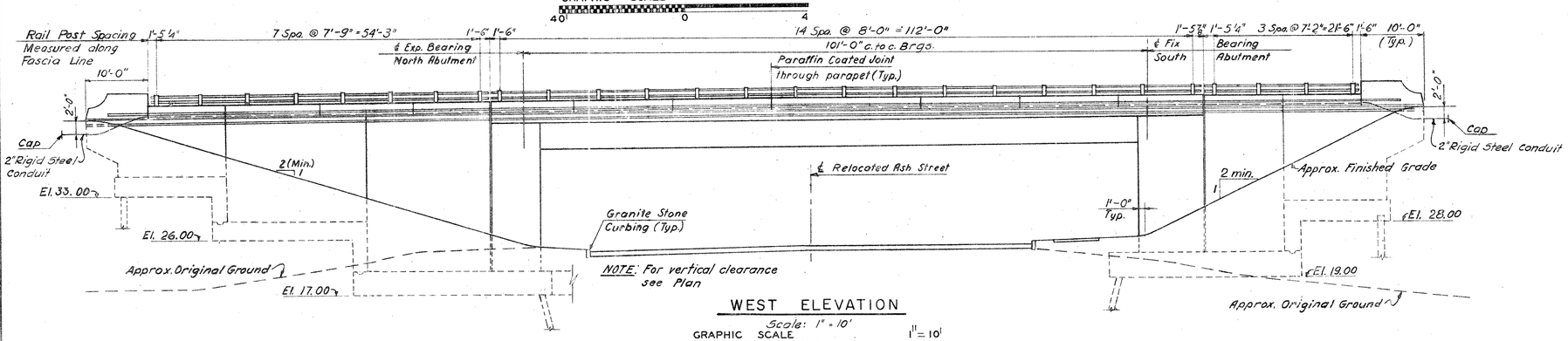

WEST ELEVATION

Scale: 1" = 10'

GRAPHIC SCALE 1" = 10'

ESTIMATE OF QUANTITIES					
ITEM	UNIT	QUANTITY	ITEM	UNIT	QUANTITY
			Structural Steel	lb.	381,000
Structure Excavation (Complete)	c.y.	1800	Dampproofing	s.y.	1,040
6" A.C.C.M. Pipe	l.f.	16	Metal Bridge Rail	l.f.	395
6" Perf. A.C.C.M. Pipe	l.f.	240	Pervious Structure Backfill	c.y.	4300
Test Pile (STEEL-12BP53-90'LONG)	each	3			
Pile loading Test	each	1	6"x9½" Granite stone Curbing for Bridges	l.f.	435
Furnishing Steel Piles	lb.	960,600	Shear Connectors	l.f.	1120
Point Reinforcement for Steel Piles	each	11			
Driving Steel Piles	l.f.	18,200	2" Rigid Steel Conduit in Bridge	l.f.	460
Splicing Steel Piles	each	11	Cast Iron Junction Box (18"x18"x10")	each	2
Class "A" Concrete	c.y.	2340			
½" Pref. Exp. Joint Filler for Bridges	s.f.	750			
1" Pref. Exp. Joint Filler for Bridges	s.f.	10			
1½" Pref. Exp. Jt. Filler for Bridges	s.f.	10			
Deformed Steel Bars	lb.	186,000			

CONCRETE DISTRIBUTION

Superstructure	310	c.y.
Substructure	1210	c.y.
Footings	820	c.y.
Total	2340	c.y.

GENERAL NOTES

SPECIFICATIONS: Connecticut State Highway Department Form 808 (Jan 1955) and Special Provisions.

DESIGN SPECIFICATIONS: Standard Specifications for Highway Bridges (AASHO 1957) except as modified by the Bureau of Public Roads "Policy on Interstate System Projects" (August 1956) and as supplemented by the Connecticut State Highway Department Bridge Manual (July 1960).

LIVE LOAD: H20-S16-44 Alternate 24000# dual axle at 4'-0" o.c. Slab design as per Tentative AASHO Specification T.8 (59)

FUTURE PAVING ALLOWANCE: 25# P.S.F.

COMPOSITE CONSTRUCTION: No temporary intermediate supports shall be used during construction. Superimposed loads shall be placed when directed by the Engineer, but not less than 10 days after the slab has been poured.

CLASS "A" CONCRETE: Class "A" Concrete shall be used throughout. See Special Provisions

DEFORMED STEEL BARS: For grades of deformed steel bars, see Special Provisions.

EXPOSED EDGES: Exposed Edges shall be beveled 1"x1" unless dimensioned otherwise.

STRUCTURAL STEEL: All material for build-up welded sections shall conform to A.S.T.M. A-373. All other steel shall conform to A.S.T.M. A-7 unless noted otherwise. Masonry Plate shall conform to ASTM A-242 (modified) steel. See Special Provision for Structural Steel".

PAINTING: For shop and field painting of Structural Steel and Metal Bridge Rail. See special Provisions.

JOINT SEAL: Joint Seal shall be included in the Item for Class "A" Concrete. See Special Provision.

FELT: The cost of furnishing and placing 2 layers of 15# roofing felt on top of backwalls shall be included in the Item for Class "A" Concrete.

PARAFFIN: The cost of furnishing and applying paraffin to the parapet joints shall be included in the Item for Class "A" Concrete.

PILES: Point Bearing Steel Piles (12BP53). Max. design load per pile = 68 tons. All piles shall be driven to practical refusal on bedrock.

WELDING: For inspection of welding, see special Provisions.

REINFORCING BARS: To have 2" cover except where shown otherwise.

N.I.C.: Denotes not included in Contract.

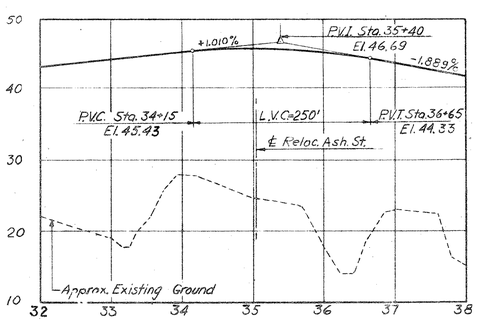

LINE NO. 1 PROFILE

Scale: Horiz. 1" = 100' Vert. 1" = 10'

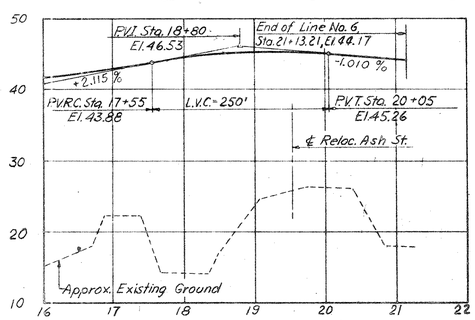

LINE NO. 6 PROFILE

Scale: Horiz. 1" = 100' Vert. 1" = 10'

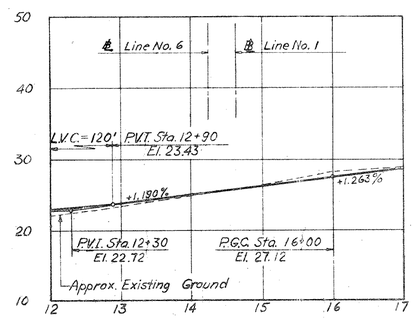

RELOCATED ASH ST. PROFILE

Scale: Horiz. 1" = 100' Vert. 1" = 10'

INSPECTION OF FIELD WELDS		
Method	Unit	Quantity
Radiographic	in.	0
Magnetic Particle	l.f.	0

THE INFORMATION, INCLUDING ESTIMATED QUANTITIES OF WORK, SHOWN ON THESE SHEETS IS BASED ON LIMITED INVESTIGATIONS BY THE STATE AND IS IN NO WAY WARRANTED TO INDICATE THE TRUE CONDITIONS OR ACTUAL QUANTITIES OR DISTRIBUTION OF QUANTITIES OF WORK WHICH WILL BE REQUIRED.

REVISIONS		
NO.	DATE	DESCRIPTION

FED. AID PROJ. I-84-4(42)63

CONNECTICUT STATE HIGHWAY DEPARTMENT

TOWN OF EAST HARTFORD
INTERSTATE ROUTE NO. 84
BRIDGE Ⓐ - ① & ⑥
OVER RELOCATED ASH STREET
GENERAL PLAN & ELEVATION

DESIGNED BY E.L. PAVLO, CONSULTING ENGINEER
SCALES As shown
MADE BY B.R. / G.Z. DATE 10-31-60
CHECKED BY N.V.P. DATE 11-15-60
APPROVED [signature] DATE 1-10-61
PROJECT NO. 42-134
BRIDGE SHEET NO. 1 OF 11

FORM NO. 238.18 CD 11-62

FED. ROAD DIV. NO.	STATE	TOWN	FED. AID PROJ. NO.	PROJ. NO.	YEAR	ROUTE NO.	SHEET NO.	TOTAL SHEETS
1	CONN.	EAST HARTFORD	I-84 4142163	42-134	1962	I-84	35	216

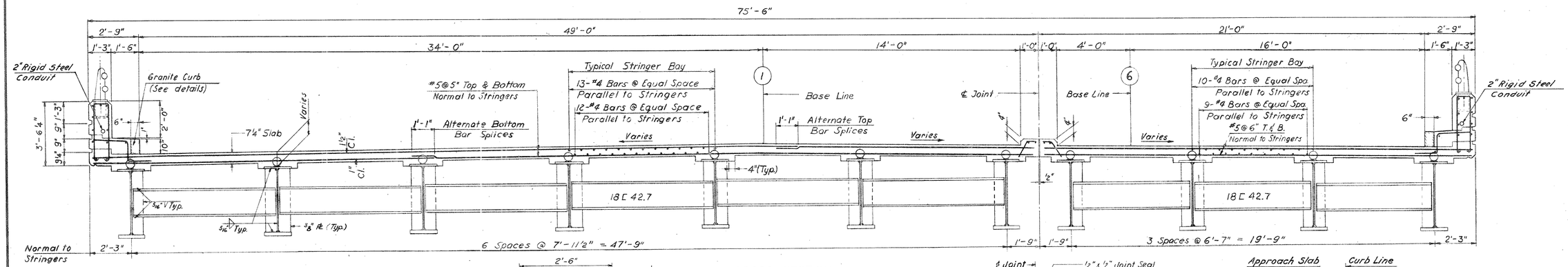

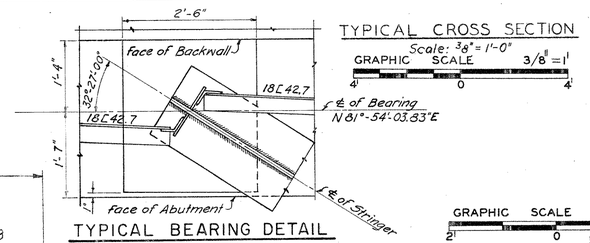

TYPICAL CROSS SECTION
Scale: 3/8" = 1'-0"

TYPICAL BEARING DETAIL
Scale: 3/4" = 1'-0"

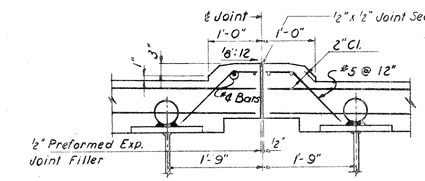

MALL DETAIL
Scale: 3/4" = 1'-0"

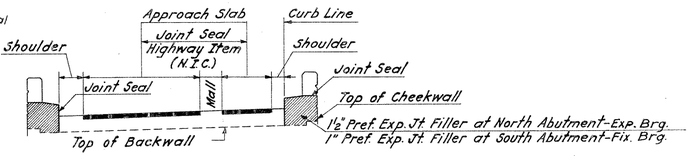

JOINT SEAL, TYPICAL LIMITS
Not to Scale

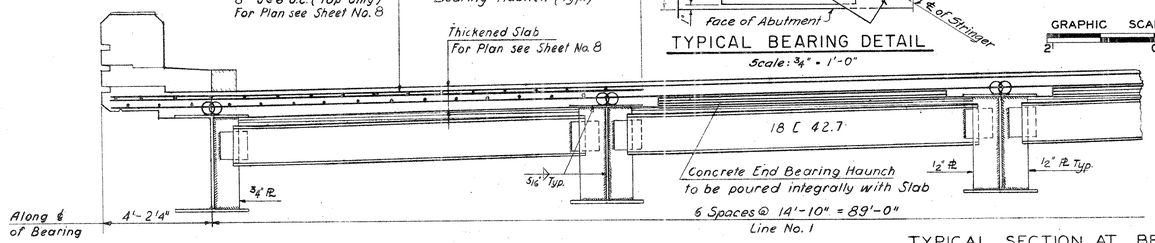

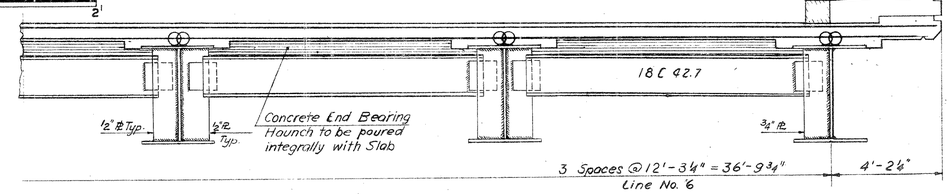

TYPICAL SECTION AT BEARINGS
Scale: 3/8" = 1'-0"

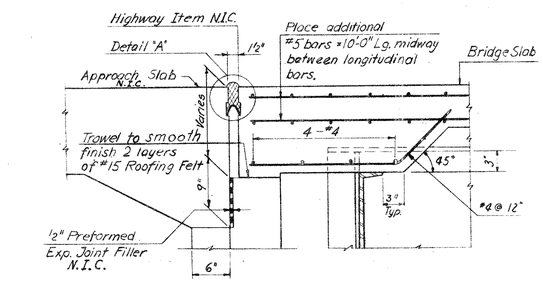

NORMAL SECTION AT EXPANSION END
Scale: 1" = 1'-0"

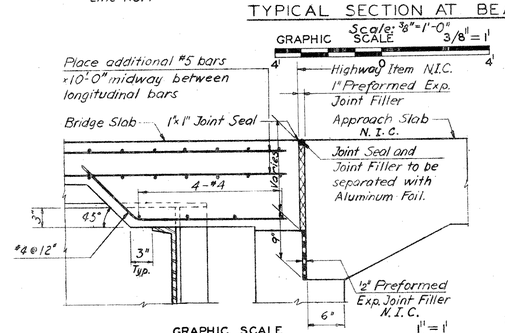

NORMAL SECTION AT FIXED END
Scale: 1" = 1'-0"

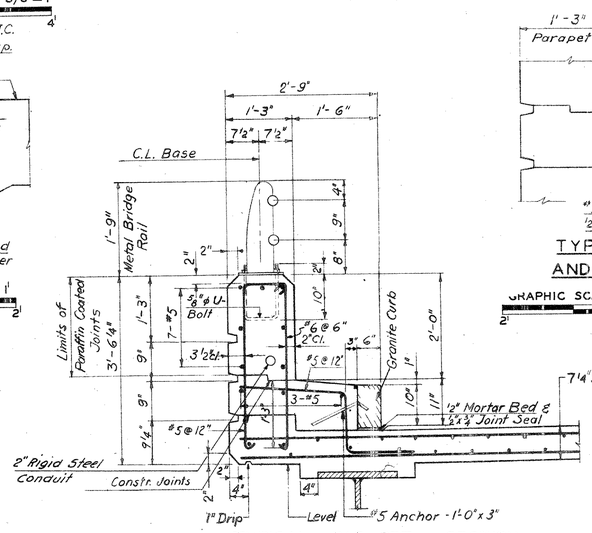

TYPICAL PARAPET SECTION
Scale: 3/4" = 1'-0"

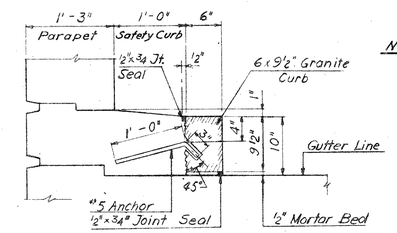

TYPICAL ANCHOR AND STONE DETAIL
Scale: 1" = 1'-0"

NOTES:
For General Notes see Bridge Sheet No. 1
For Framing Plan see Bridge Sheet No. 3

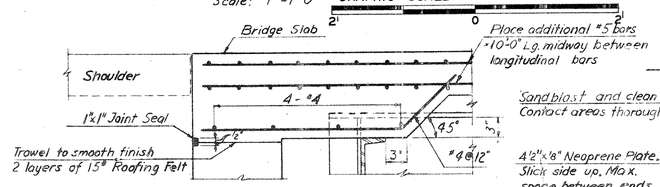

NORMAL SECTION FOR SHOULDERS AT EXPANSION END OR FIXED END
Scale: 1" = 1'-0"
(Where shoulder has approach slab use Normal Section)

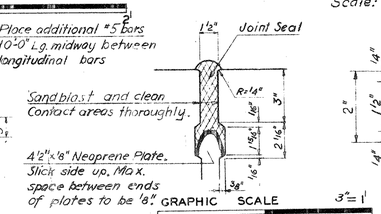

DETAIL A
Not included in contract
Scale: 3" = 1'-0"

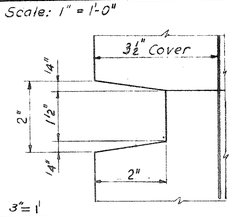

RUSTICATION DETAIL
Scale: 6" = 1'-0"

REVISIONS		
NO.	DATE	DESCRIPTION

FED. AID PROJ. I-84-4(42)63

CONNECTICUT STATE HIGHWAY DEPARTMENT

TOWN OF EAST HARTFORD
INTERSTATE ROUTE NO. 84
BRIDGE A-1 & 6
OVER RELOCATED ASH STREET
CROSS-SECTIONS, DETAILS

DESIGNED BY E.L. PAVLO, CONSULTING ENGINEER
SCALES As shown
MADE BY B.P. DATE 10-31-60
CHECKED BY N.V.P. DATE 1-9-61
APPROVED DATE 1-10-61

PROJECT NO. 42-134
BRIDGE SHEET NO. 2 OF 11

FORM NO. BRG. 19 RD 11-62

PUB. ROAD DIV. NO.	STATE	TOWN	FED. AID PROJ. NO.	PROJ. NO.	YEAR	ROUTE NO.	SHEET NO.	TOTAL SHEETS
1	CONN.	EAST HARTFORD	I-84 4(42)63	42-134	1962	I-84	36	216

DOUBLE SPIRALS — SINGLE SPIRAL

PLAN
Not to Scale

SECTION B-B
Not to Scale.

SECTION A-A
Scale: 1½" = 1'-0"

SECTION C-C
Scale: 1½" = 1'-0"

TYPICAL SPIRAL DETAILS

Estimated wgt. of Spiral Bars = 5150 lbs.

GRAPHIC SCALE 1 1/2" = 1'

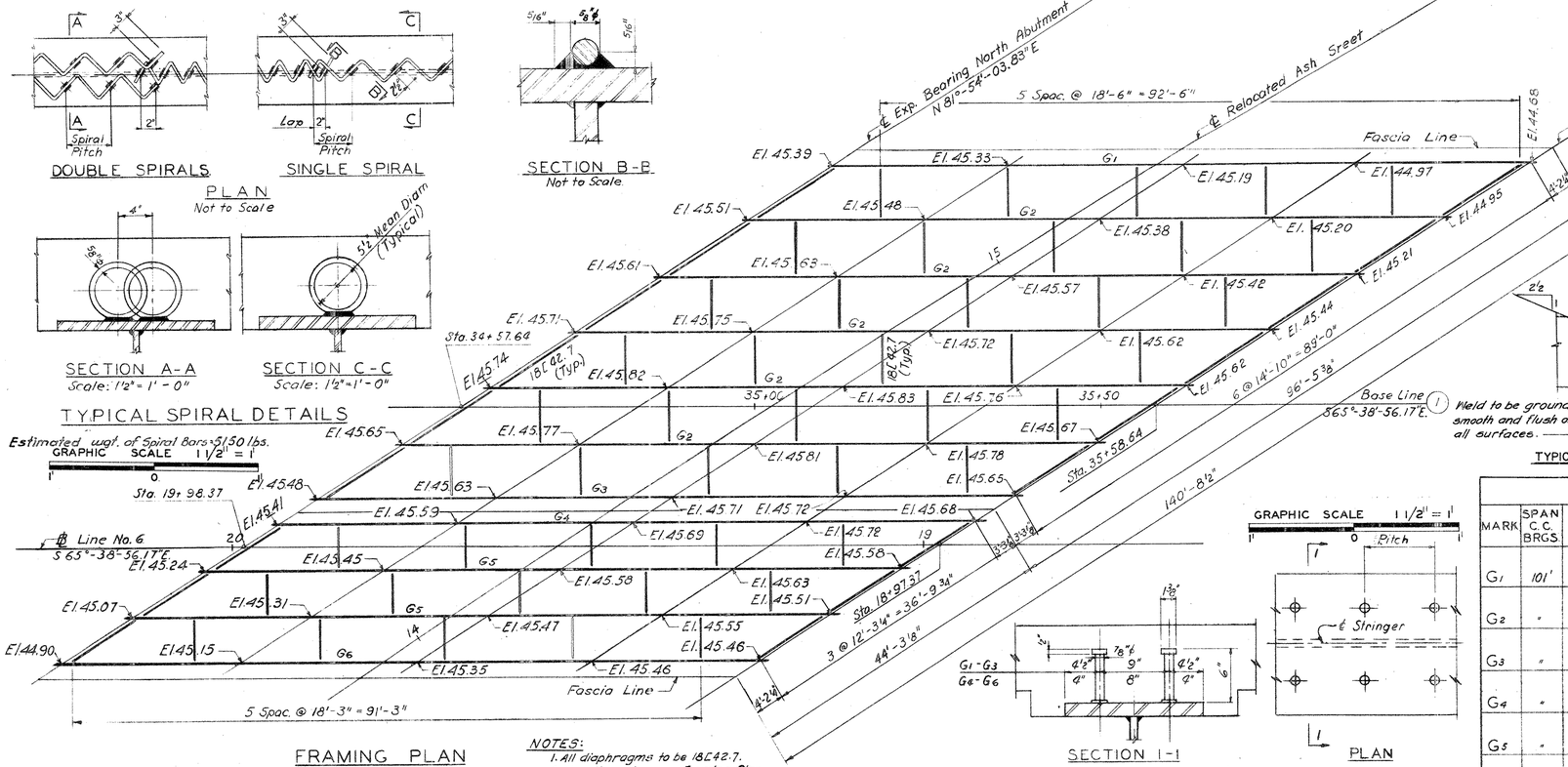

FRAMING PLAN

GRAPHIC SCALE Scale: 1" = 10' 1" = 10'

NOTES:
1. All diaphragms to be 18 [42.7.
2. Elevations shown on framing Plan are finished elevations of top of concrete slab.

SECTION 1-1

PLAN

TYPICAL WELDED STUD DETAILS
Scale: 1½" = 1'-0"

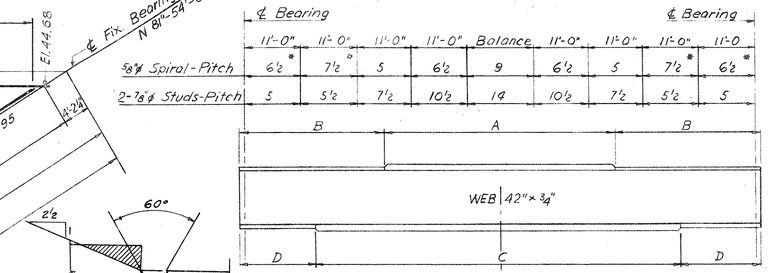

* Denotes double spiral

STRINGER ELEVATION
Not to Scale.

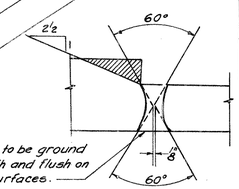

Weld to be ground smooth and flush on all surfaces.

TYPICAL FLANGE SPLICE DETAIL
(No scale)

STRINGER SCHEDULE

MARK	SPAN C.C. BRGS.	MATERIAL	D.L. DEFLECTION STEEL	SLAB	W.S.	PARAP.	TOTAL	V.C.	TOTAL CAMBER
G1	101'	PL "A" 18"×1⅜"×37'-0" & 2 PL "B" 18"×1" Top. Web 42"×⅜", PL "C" 18"×2¼"×75'-0" & 2 PL "D" 18"×1⅛" Bott.	⅞"	1 1/16"	3/16"	3/16"	2 15/16"	1 3/16"	4 3/16"
G2	"	PL "A" 18"×1⅛"×45'-0" & 2 PL "B" 18"×1" Top. Web 42"×⅜", PL "C" 18"×2⅛"×76'-6" & 2 PL "D" 18"×1¼" Bott.	13/16"	1¾"	5/16"	3/16"	3 1/16"	1 3/16"	4⅞"
G3	"	PL "A" 18"×1¼"×35'-0" & 2 PL "B" 18"×1" Top. Web 42"×⅜", PL "C" 18"×2¼"×74'-0" & 2 PL "D" 18"×1⅛" Bott.	13/16"	1⅝"	3/16"	⅛"	2¾"	1¾"	4½"
G4	"	PL "A" 16"×1⅜"×35'-0" & 2 PL "B" 16"×1" Top. Web 42"×⅜", PL "C" 16"×2⅜"×74'-0" & 2 PL "D" 16"×1¼" Bott.	⅞"	1½"	¼"	⅜"	3"	1¾"	4¾"
G5	"	PL "A" 16"×1⅜"×40'-0" & 2 PL "B" 16"×1" Top. Web 42"×⅜", PL "C" 16"×2½"×75'-0" & 2 PL "D" 16"×1¼" Bott.	⅞"	1⅝"	5/16"	5/16"	3⅛"	2 1/16"	5 3/16"
G6	101'	PL "A" 16"×1⅜"×40'-0" & 2 PL "B" 16"×1" Top. Web 42"×⅜", PL "C" 16"×2⅜"×74'-0" & 2 PL "D" 16"×1¼" Bott.	⅞"	1 9/16"	¼"	⅜"	3 1/16"	2 1/16"	5⅛"

NOTE:
No field splices of web or flange plates are permissible.

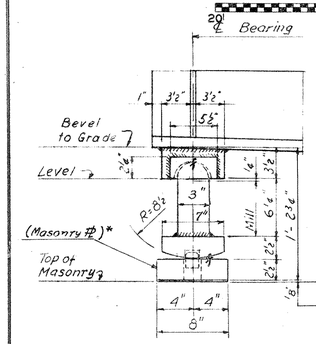

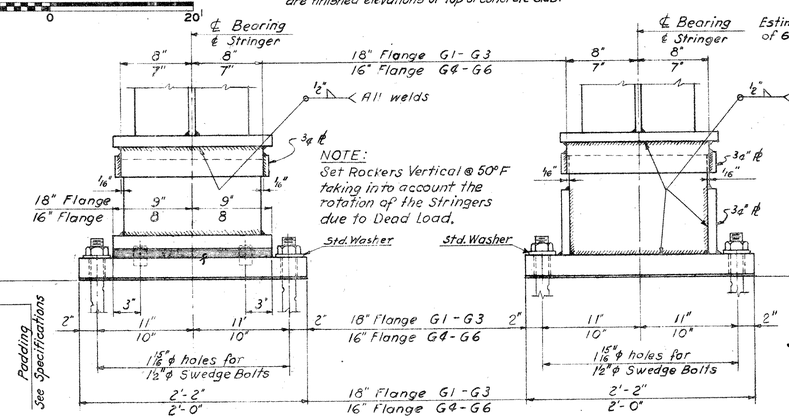

NOTE:
Set Rockers Vertical @ 50°F taking into account the rotation of the Stringers due to Dead Load.

EXPANSION BEARING

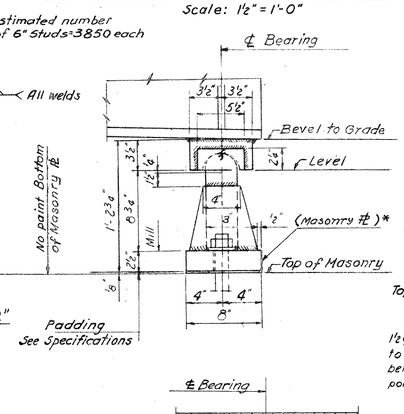

FIXED BEARING

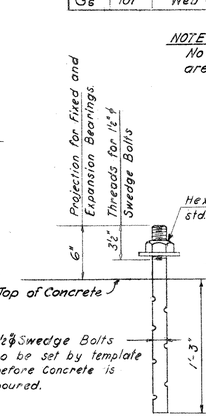

BEARING SHOE DETAILS
Scale: 1½" = 1'-0"
GRAPHIC SCALE 1 1/2" = 1'

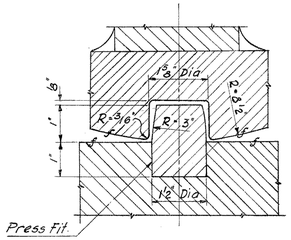

DOWEL DETAIL
Scale: 6" = 1'-0"
GRAPHIC SCALE 6" = 1'

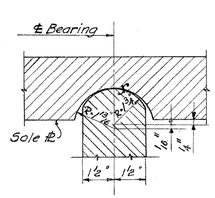

PIN DETAIL
Scale: 3" = 1'-0"
GRAPHIC SCALE 3" = 1'

DETAIL OF SWEDGE BOLT
Scale: 1½" = 1'-0"
GRAPHIC SCALE 1 1/2" = 1'

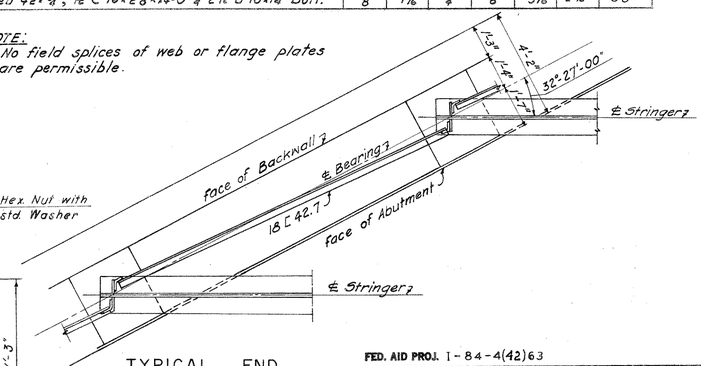

TYPICAL END DIAPHRAGM CONNECTIONS
Scale: ⅜" = 1'-0"
GRAPHIC SCALE 3/8" = 1'

NOTES:
1. For general plan and general notes, see Bridge Sheet No. 1
2. For typical Bearing detail, see Bridge Sheet No. 2
* Shall conform to ASTM A-242 (modified) Steel. See Special Provision for "Structural Steel."

REVISIONS		
NO.	DATE	DESCRIPTION

THE INFORMATION, INCLUDING ESTIMATED QUANTITIES OF WORK, SHOWN ON THESE SHEETS IS BASED ON LIMITED INVESTIGATIONS BY THE STATE AND IS IN NO WAY WARRANTED TO INDICATE THE TRUE CONDITIONS OR ACTUAL QUANTITIES OR DISTRIBUTION OF QUANTITIES OF WORK WHICH WILL BE REQUIRED.

FED. AID PROJ. I-84-4(42)63

CONNECTICUT STATE HIGHWAY DEPARTMENT

TOWN OF EAST HARTFORD
INTERSTATE ROUTE NO 84
BRIDGE A-① & ⑥
OVER RELOCATED ASH STREET
FRAMING PLAN & DETAILS

DESIGNED BY E.L. PAVLO, CONSULTING ENGINEER
SCALES AS SHOWN
MADE BY G.Z. & D.G.S. DATE 11-8-
CHECKED BY N.V.P. DATE 11-9-60
APPROVED [signature] DATE 1-10-61

PROJECT NO. 42-134
BRIDGE SHEET NO. 3 OF 11

PUB. ROAD DIV. NO.	STATE	TOWN	FED. AID PROJ. NO.	PROJ. NO.	YEAR	ROUTE NO.	SHEET NO.	TOTAL SHEETS
1	CONN.	EAST HARTFORD	I-84 (42)63	42-134	1962	I-84	37	216

GRAPHIC SCALE 3/16" = 1'

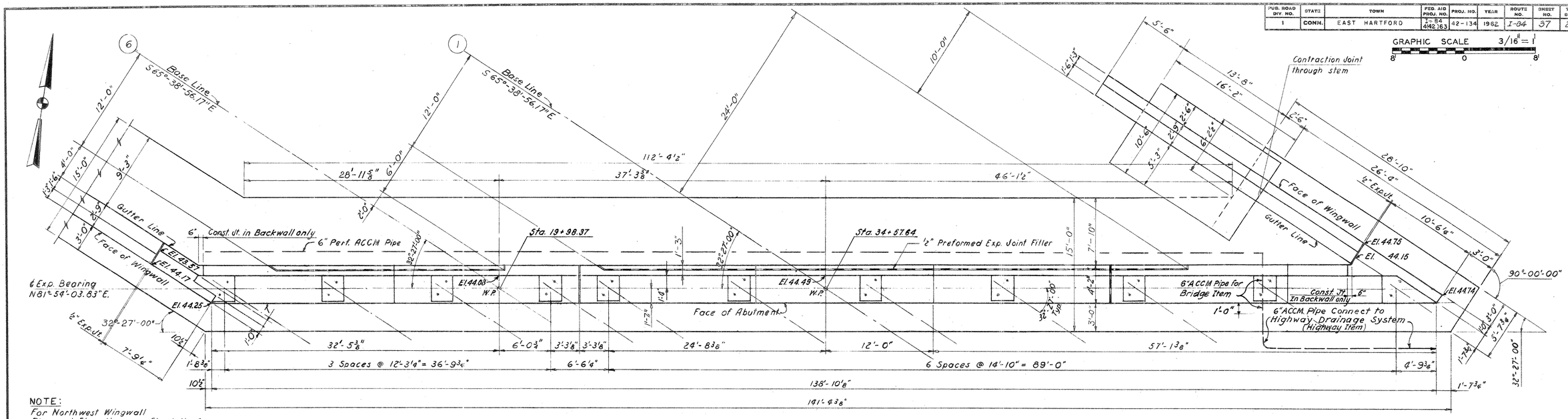

PLAN

NOTE:
For Northwest Wingwall Plan and Elevation see Sheet No. 6

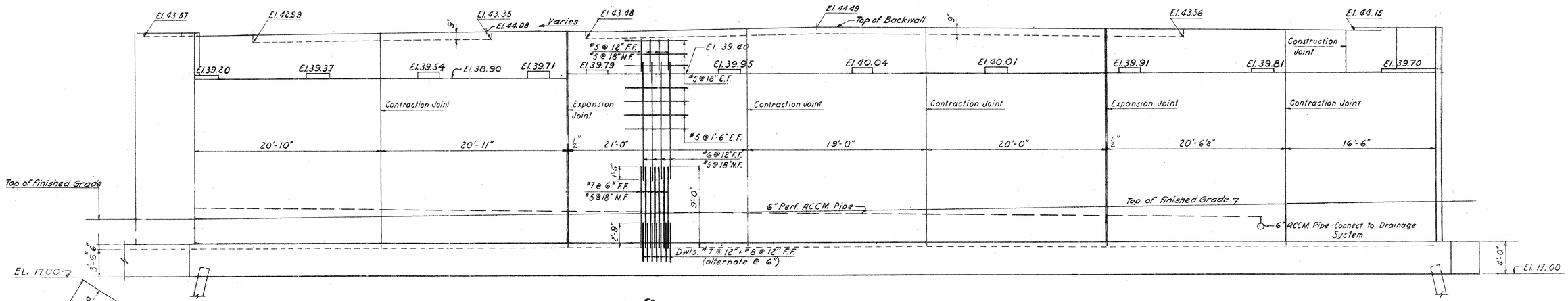

ELEVATION

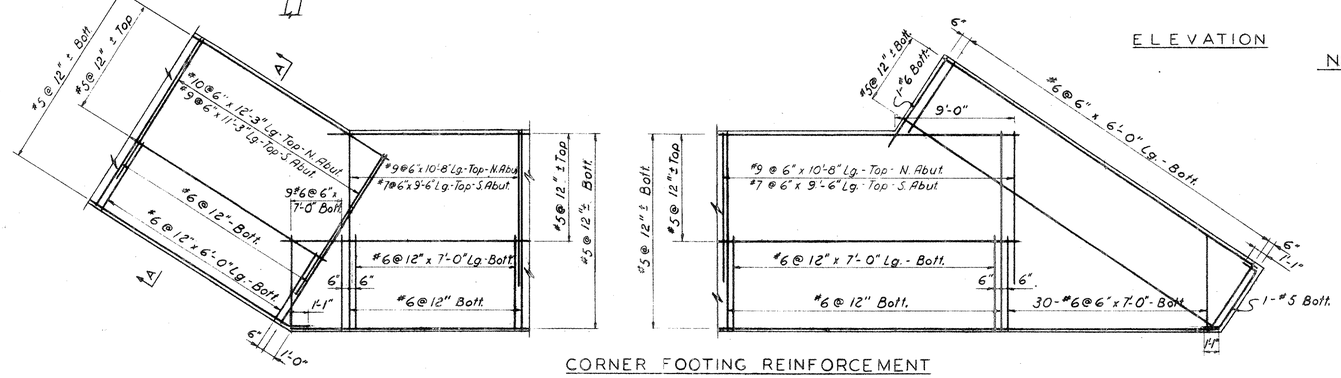

CORNER FOOTING REINFORCEMENT

NOTES:
E.F. - denotes each face
F.F. - denotes far face.
N.F. - denotes near face.
For General Plan and General Notes see Bridge Sheet No. 1
For Framing Plan and Details see Bridge Sheet No. 3
For Abutment and Wingwall Typical Sections see Bridge Sheet No. 6
For Pile Plan see Bridge Sheet No. 8

REVISIONS		
NO.	DATE	DESCRIPTION

THE INFORMATION, INCLUDING ESTIMATED QUANTITIES OF WORK, SHOWN ON THESE SHEETS IS BASED ON LIMITED INVESTIGATIONS BY THE STATE AND IS IN NO WAY WARRANTED TO INDICATE THE TRUE CONDITIONS OR ACTUAL QUANTITIES OR DISTRIBUTION OF QUANTITIES OF WORK WHICH WILL BE REQUIRED.

FED. AID PROJ. I-84-4(42)63

CONNECTICUT STATE HIGHWAY DEPARTMENT

TOWN OF EAST HARTFORD
INTERSTATE ROUTE NO 84
BRIDGE Ⓐ - ① & ⑥
OVER RELOCATED ASH STREET
NORTH ABUTMENT

DESIGNED BY E.L. PAVLO, CONSULTING ENGINEER
SCALES 3/16" = 1'-0"
MADE BY G.Z. & D.G.S. DATE 11-9-60
CHECKED BY N.V.P. DATE 11-10-60
APPROVED [signature] DATE 1-10-61
PROJECT NO. 42-134
BRIDGE SHEET NO. 4 OF 11

PUB. ROAD DIV. NO.	STATE	TOWN	FED. AID PROJ. NO.	PROJ. NO.	YEAR	ROUTE NO.	SHEET NO.	TOTAL SHEETS
1	CONN.	EAST HARTFORD	I-84 4(42)63	42-134	1962	I-84	38	216

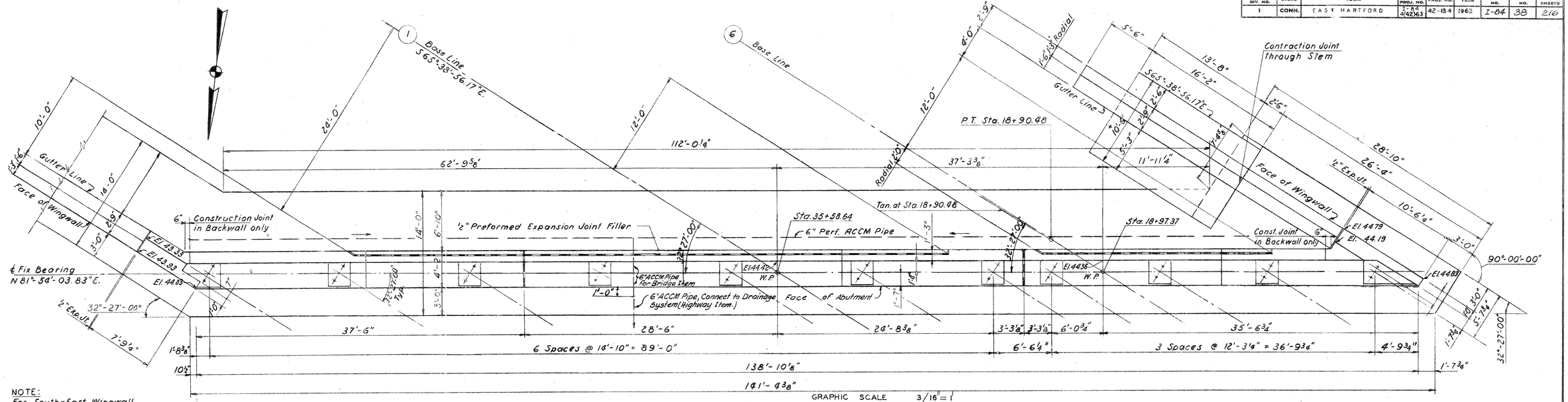

NOTE:
For South-East Wingwall Plan and Elevation see Sheet No. 6.

PLAN
Scale: 3/16" = 1'-0"
GRAPHIC SCALE 3/16" = 1'

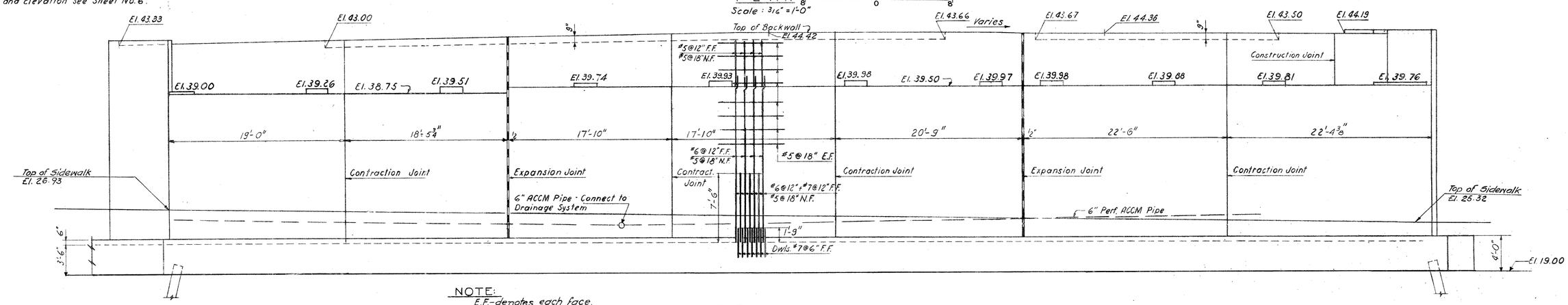

NOTE:
E.F.-denotes each face.
F.F.-denotes far face.
N.F.-denotes near face.

ELEVATION
Scale: 3/16" = 1'-0"
GRAPHIC SCALE 3/16" = 1'

NOTES:
For General Plan and General Notes see Bridge Sheet No. 1
For Framing Plan and Details see Bridge Sheet No. 3
For Abutment and Wingwall Typical Sections see Bridge Sheet No. 6
For Pile Plan see Bridge Sheet No. 8

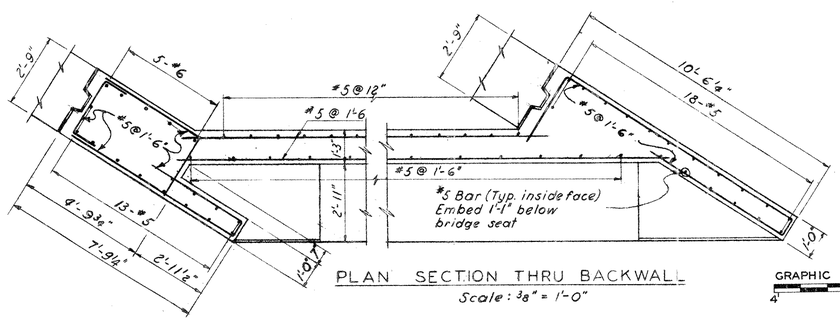

PLAN SECTION THRU BACKWALL
Scale: 3/8" = 1'-0"

GRAPHIC SCALE 3/8" = 1'

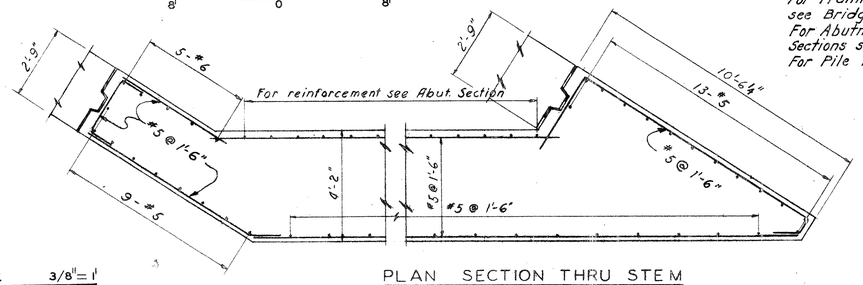

PLAN SECTION THRU STEM
Scale: 3/8" = 1'-0"

THE INFORMATION, INCLUDING ESTIMATED QUANTITIES OF WORK, SHOWN ON THESE SHEETS IS BASED ON LIMITED INVESTIGATIONS BY THE STATE AND IS IN NO WAY WARRANTED TO INDICATE THE TRUE CONDITIONS OR ACTUAL QUANTITIES OR DISTRIBUTION OF QUANTITIES OF WORK WHICH WILL BE REQUIRED.

REVISIONS		
NO.	DATE	DESCRIPTION

FED. AID PROJ. I-84-4(42)63

CONNECTICUT
STATE HIGHWAY DEPARTMENT
TOWN OF EAST HARTFORD
INTERSTATE ROUTE NO. 84
BRIDGE A-① & ⑥
OVER RELOCATED ASH STREET
SOUTH ABUTMENT

DESIGNED BY E.L. PAVLO, CONSULTING ENGINEER
SCALES As shown
MADE BY D.G.S. DATE 11-1-60
CHECKED BY N.V.P. DATE 11-23-60
APPROVED [signature] DATE 1-10-61
PROJECT NO. 42-134
BRIDGE SHEET NO. 5 OF 11

FORM NO. 2MC. 19 20 11-62

PUB. ROAD DIV. NO.	STATE	TOWN	FED. AID PROJ. NO.	PROJ. NO.	YEAR	ROUTE NO.	SHEET NO.	TOTAL SHEETS
1	CONN.	EAST HARTFORD	I-84 4(42)63	42-134	1962	I-84	39	216

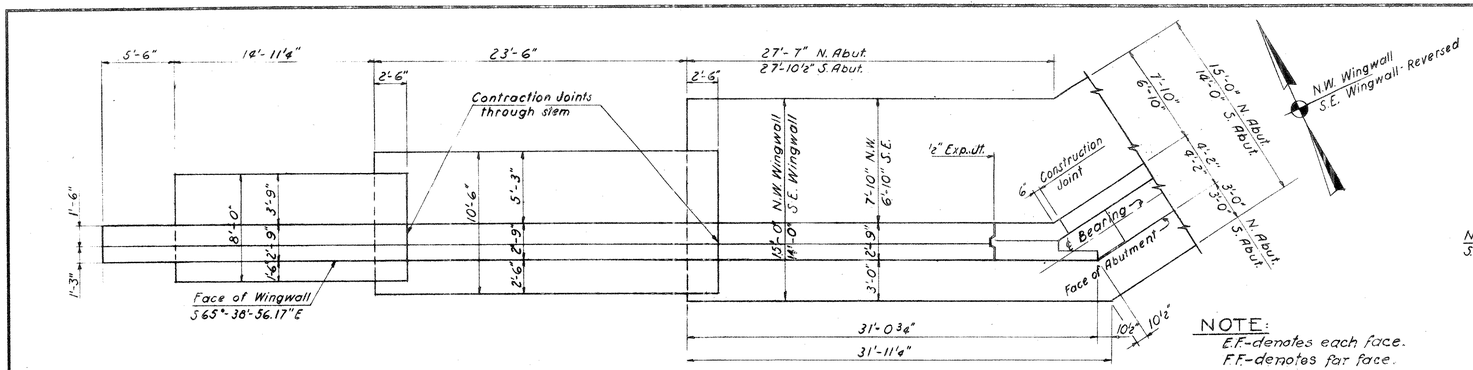

PLAN

Scale: 3/16" = 1'-0"

GRAPHIC SCALE 3/16" = 1'

NOTE:
E.F. - denotes each face.
F.F. - denotes far face.
N.F. - denotes near face.

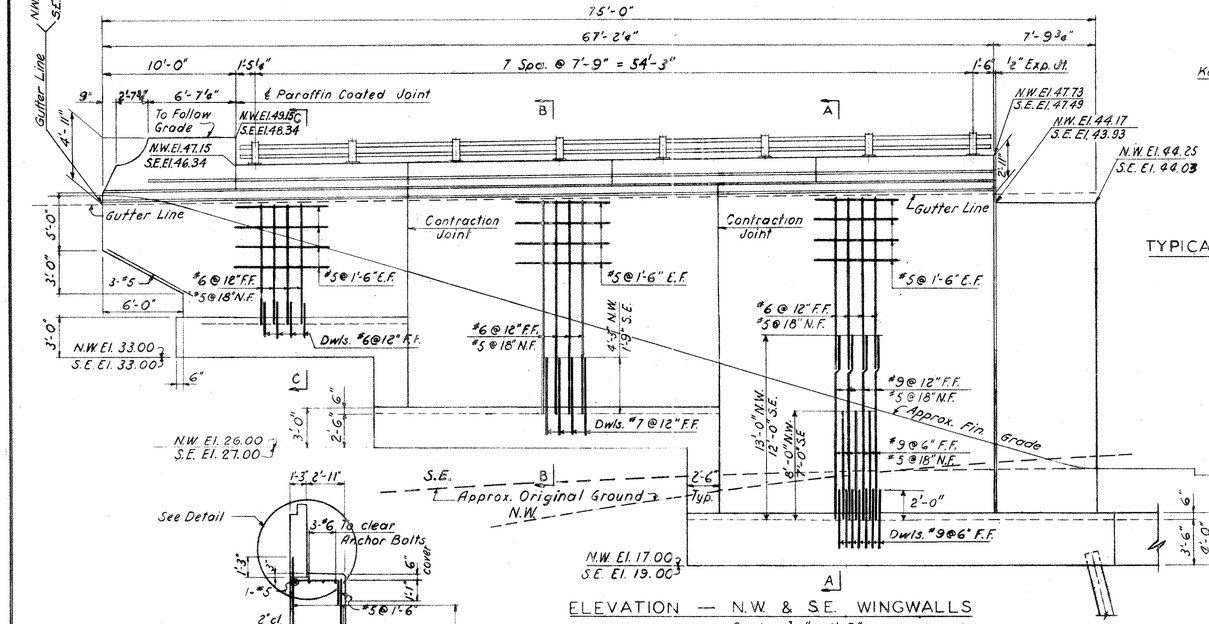

ELEVATION — N.W. & S.E. WINGWALLS

Scale: 3/16" = 1'-0"

GRAPHIC SCALE 3/16" = 1'

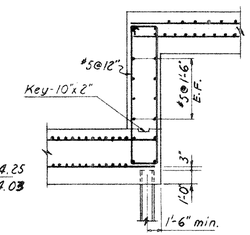

TYPICAL DETAIL AT FOOTING STEPS

Scale: 3/16" = 1'-0"

GRAPHIC SCALE 3/16" = 1'

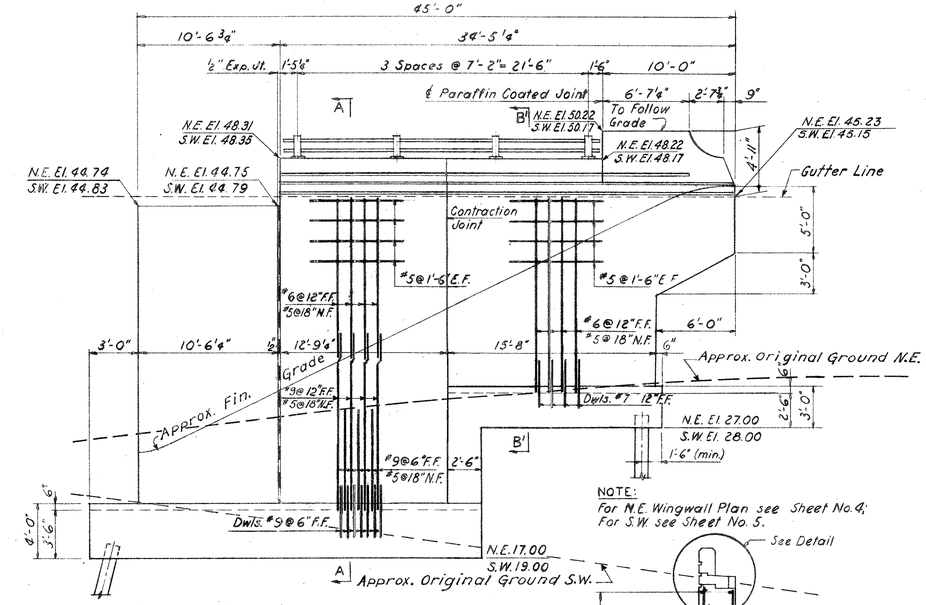

NOTE:
For N.E. Wingwall Plan see Sheet No. 4;
For S.W. see Sheet No. 5.

ELEVATION - N.E. & S.W. WINGWALLS

Scale: 3/16" = 1'-0"

GRAPHIC SCALE 3/16" = 1'

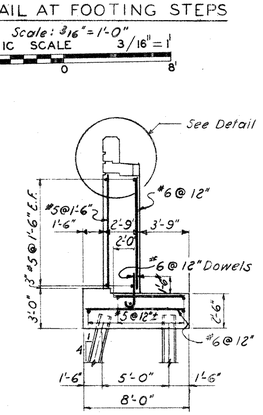

SECTION C-C

Scale: 3/16" = 1'-0"

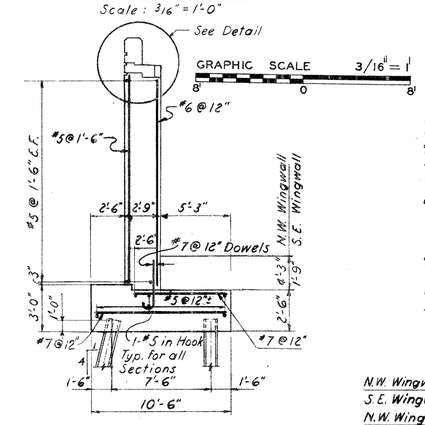

SECTION B-B

Scale: 3/16" = 1'-0"

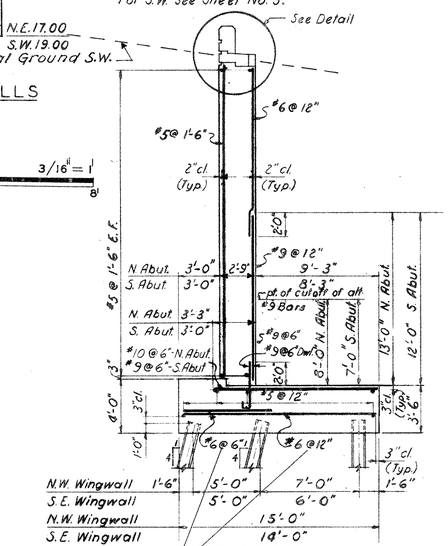

SECTION A-A

Scale: 3/16" = 1'-0"

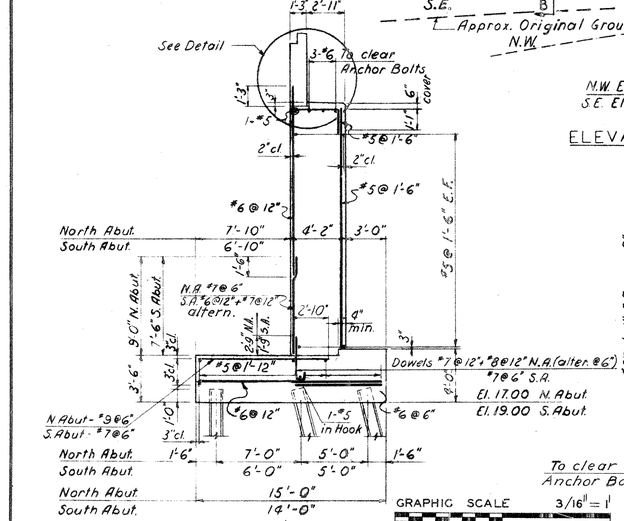

TYPICAL ABUTMENT SECTION

Scale: 3/16" = 1'-0"

GRAPHIC SCALE 3/16" = 1'

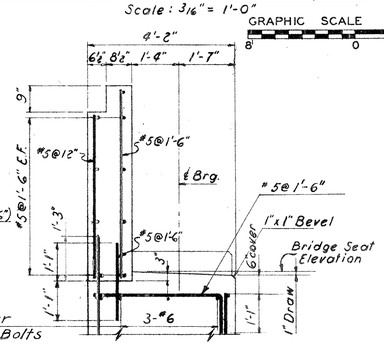

ABUTMENT DETAIL

Scale: ½" = 1'-0"

GRAPHIC SCALE 1/2" = 1'

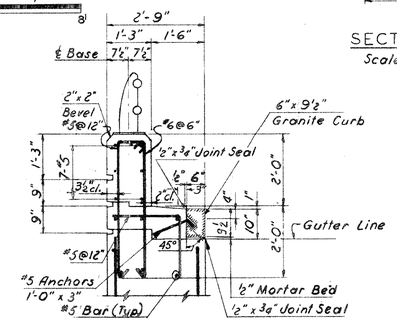

WINGWALL DETAIL

Scale: ½" = 1'-0"

GRAPHIC SCALE 1/2" = 1'

NOTES:
For General Plan and General Notes see Bridge Sheet No. 1
For Abutment Plan and Elevation see Bridge Sheets No. 4 & 5
For Pile Plan see Bridge Sheet No. 8

FED. AID PROJ. I-84 - 4(42)63

CONNECTICUT STATE HIGHWAY DEPARTMENT

TOWN OF EAST HARTFORD
INTERSTATE ROUTE NO. 84
BRIDGE Ⓐ - ① & ⑥
OVER RELOCATED ASH STREET
WINGWALLS - SECTIONS - DETAILS

REVISIONS		
NO.	DATE	DESCRIPTION

DESIGNED BY E.L. PAVLO, CONSULTING ENGINEER
SCALES As shown
MADE BY B.R. & D.G.S. DATE 11-8-60
CHECKED BY N.V.P. DATE 11-15-60
APPROVED [signature] DATE 1-10-61
PROJECT NO. 42-134
BRIDGE SHEET NO. 6 OF 11

THE INFORMATION, INCLUDING ESTIMATED QUANTITIES OF WORK, SHOWN ON THESE SHEETS IS BASED ON LIMITED INVESTIGATIONS BY THE STATE AND IS IN NO WAY WARRANTED TO INDICATE THE TRUE CONDITIONS OR ACTUAL QUANTITIES OR DISTRIBUTION OF QUANTITIES OF WORK WHICH WILL BE REQUIRED.

42 134 273 01

FORM NO. 206.10 (8-50)

PUB. ROAD DIV. NO.	STATE	TOWN	FED. AID PROJ. NO.	PROJ. NO.	YEAR	ROUTE NO.	SHEET NO.	TOTAL SHEETS
1	CONN.	EAST HARTFORD	I-84 4(42)63	42-134	1962	I-84	40	215

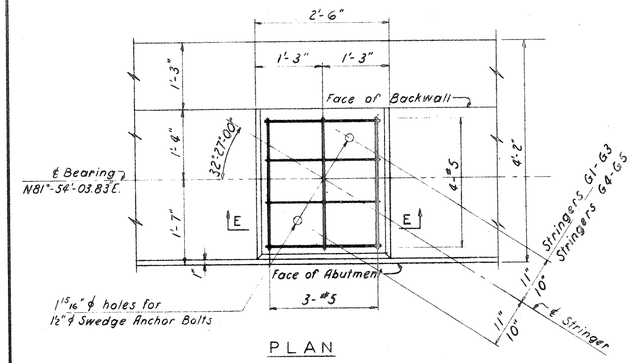

PLAN

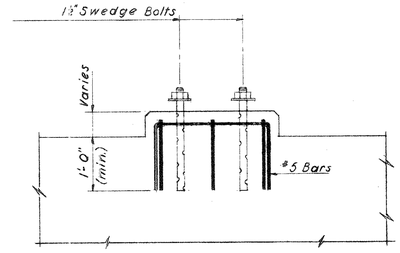

SECTION E-E

TYPICAL PAD DETAIL

Scale: 3/4" = 1'-0"
GRAPHIC SCALE 3/4" = 1'
2' 0 2'

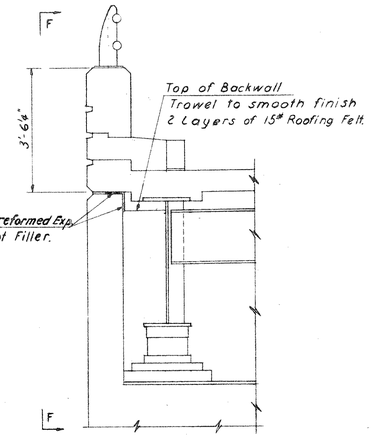

SECTION

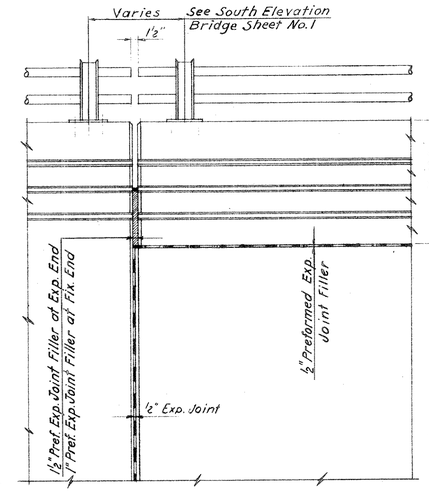

ELEVATION F-F

TYPICAL CHEEK WALL DETAILS

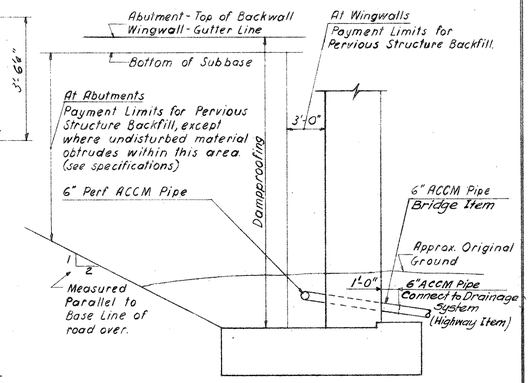

BRIDGE PAYMENT LIMITS

Not to Scale

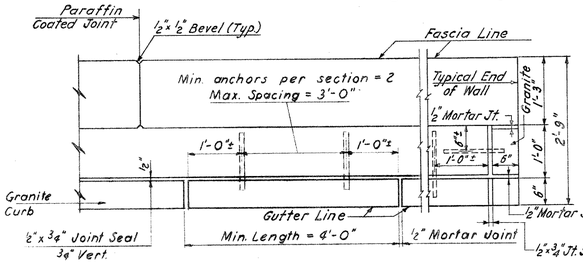

PLAN OF GRANITE CURB

Scale: 3/4" = 1'-0"
GRAPHIC SCALE 3/4" = 1'
2' 0 2'

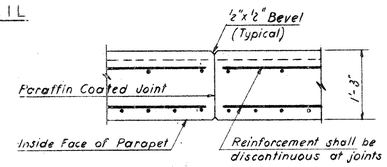

PARAFFIN COATED JOINT DETAIL

Scale: 3/4" = 1'-0"
GRAPHIC SCALE 3/4" = 1'
2' 0 2'

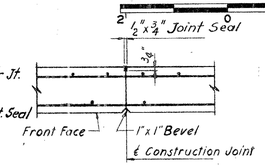

CONSTRUCTION JOINT

Scale: 1/2" = 1'-0"
GRAPHIC SCALE 1/2" = 1'
3' 0 3'

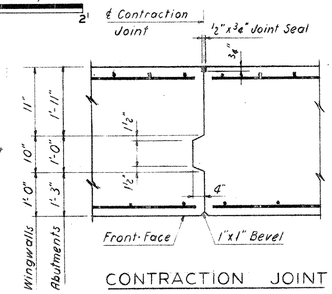

CONTRACTION JOINT

Not to Scale

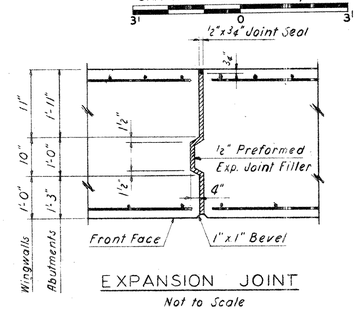

EXPANSION JOINT

Not to Scale

JOINT NOTES:

Abutments: Keys to extend from top of footing to within 1'-0" of the bridge seat. (In backwall no key required.)
Joint Seal to extend from top of footing to top of backwall, except as shown on Sheet #2.

Wingwalls: Keys to extend from top of footing to the Gutter Line.
Joint Seal to extend from top of footing to top of curb and horizontally along joint to inside face of parapet, except as shown on Sheet #2.

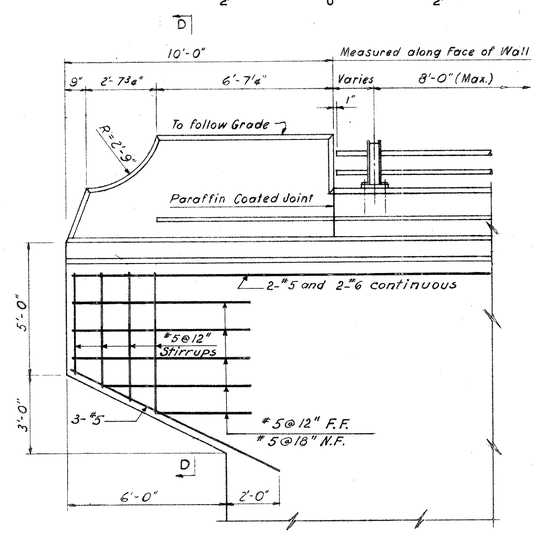

ELEVATION

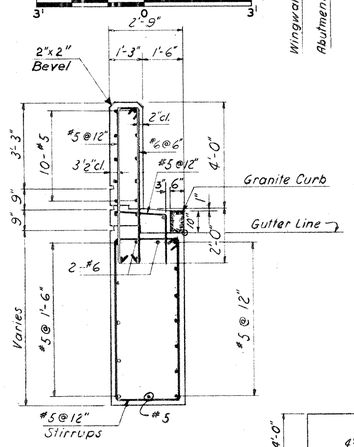

SECTION D-D

END POST DETAILS - GRANITE CURBING

Scale: 3/8" = 1'-0"
GRAPHIC SCALE 3/8" = 1'
4' 0 4'

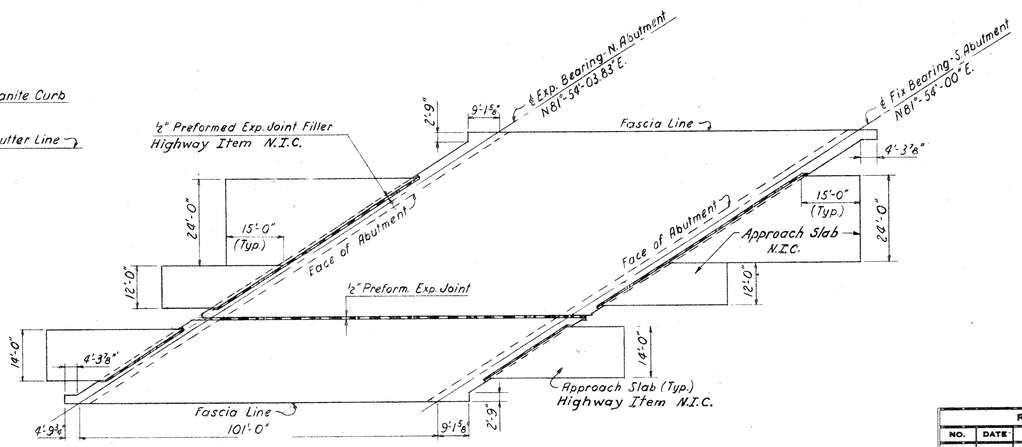

SLAB PLAN

Scale: 1" = 20'
GRAPHIC SCALE 1" = 20'
40' 0 40'

NOTES:
For General Plan and General Notes see Bridge Sheet No. 1
For Framing Plan and Details see Bridge Sheet No. 3
For Abutments see Bridge Sheets No. 4 and 5
For Wingwalls, Sections and Details see Bridge Sheet No. 6

REVISIONS		
NO.	DATE	DESCRIPTION

FED. AID PROJ. I-84-4(42)63

CONNECTICUT
STATE HIGHWAY DEPARTMENT
TOWN OF EAST HARTFORD
INTERSTATE ROUTE NO. 84
BRIDGE A-1-6
OVER RELOCATED ASH STREET
DETAILS

DESIGNED BY E.L. PAVLO, CONSULTING ENGINEER
SCALES As Shown
MADE BY D.G.S. DATE 11-25-60
CHECKED BY N.V.P. DATE 11-29-60
APPROVED [signature] DATE 1-10-61
PROJECT NO. 42-134
BRIDGE SHEET NO. 7 OF 11

42 132 I 84 134

FORM NO. BRG. 10 (8) 11-62

PUB. ROAD DIV. NO.	STATE	TOWN	FED. AID PROJ. NO.	PROJ. NO.	YEAR	ROUTE NO.	SHEET NO.	TOTAL SHEETS
1	CONN.	EAST HARTFORD	I-84 4(42)63	42-134	1962	I-84	41	210

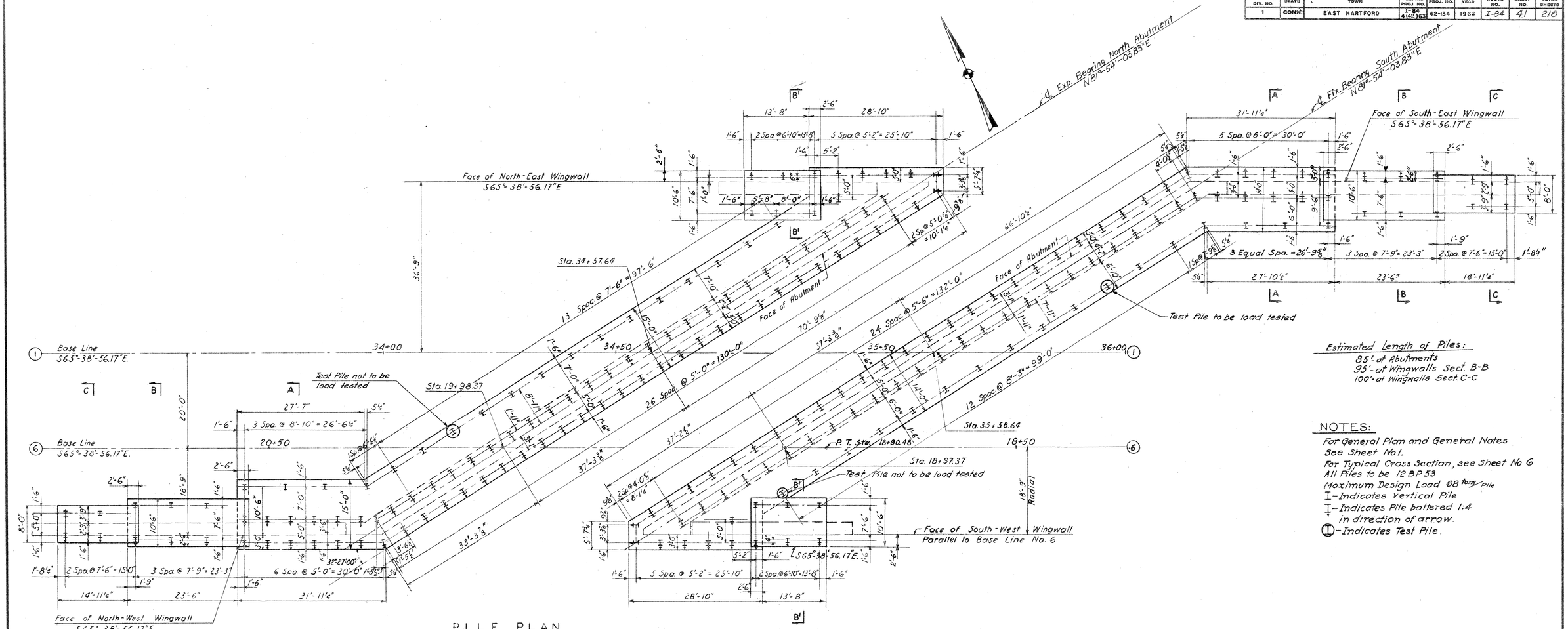

PILE PLAN

Scale: 1" = 10'

GRAPHIC SCALE 1" = 10'

Estimated Length of Piles:

85'- at Abutments
95'- at Wingwalls Sect. B-B
100'- at Wingwalls Sect. C-C

NOTES:

For General Plan and General Notes See Sheet No 1.
For Typical Cross Section, see Sheet No 6
All Piles to be 12 BP 53
Maximum Design Load 88 tons/pile
I - Indicates Vertical Pile
I - Indicates Pile battered 1:4 in direction of arrow.
Ⓣ - Indicates Test Pile.

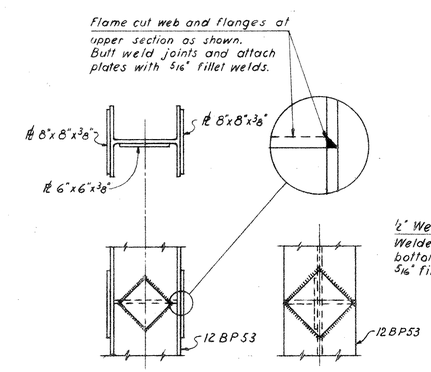

TYPICAL FIELD PILE SPLICE

Scale: 1" = 1'-0"

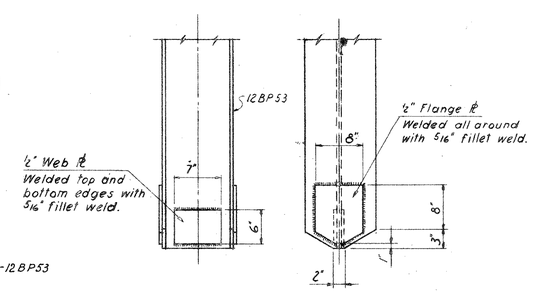

TYPICAL PILE POINT REINFORCEMENT

Scale: 1" = 1'-0"

GRAPHIC SCALE 1" = 1'

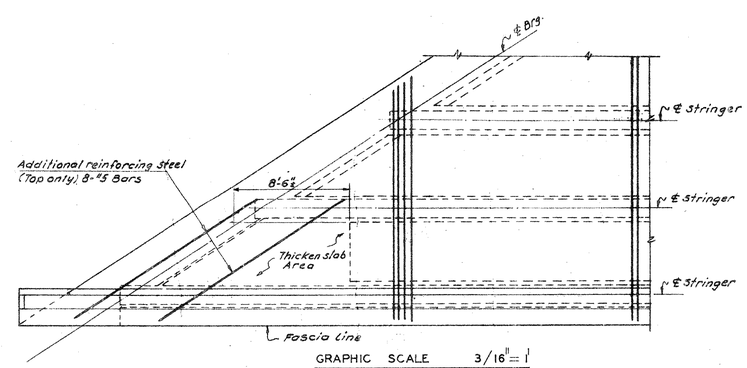

GRAPHIC SCALE 3/16" = 1'

CORNER SLAB REINFORCEMENT

Scale: 3/16" = 1'-0"

THE INFORMATION, INCLUDING ESTIMATED QUANTITIES OF WORK, SHOWN ON THESE SHEETS IS BASED ON LIMITED INVESTIGATIONS BY THE STATE AND IS IN NO WAY WARRANTED TO INDICATE THE TRUE CONDITIONS OR ACTUAL QUANTITIES OR DISTRIBUTION OF QUANTITIES OF WORK WHICH WILL BE REQUIRED.

REVISIONS		
NO.	DATE	DESCRIPTION

FED. AID PROJ. I-84-4(42)63

CONNECTICUT STATE HIGHWAY DEPARTMENT

TOWN OF EAST HARTFORD
INTERSTATE ROUTE NO 84
BRIDGE Ⓐ - ① - ⑥
OVER RELOCATED ASH STREET
PILE PLAN

DESIGNED BY E.L. PAVLO, CONSULTING ENGINEER
SCALES As Shown
MADE BY B.R. & D.G.S. DATE 11-25-60
CHECKED BY N.V.P. DATE 11-28-60
APPROVED [signature] DATE 1-10-61
PROJECT NO. 42-134
BRIDGE SHEET NO. 8 OF 11

PUB. ROAD DIV. NO.	STATE	TOWN	FED. AID PROJ. NO.	PROJ. NO.	YEAR	ROUTE NO.	SHEET NO.	TOTAL SHEETS
1	CONN.	EAST HARTFORD	I-84 4(42)63	42-134	1962	I-84	42	216

FORM NO. ENG. 19 ED. 11-32

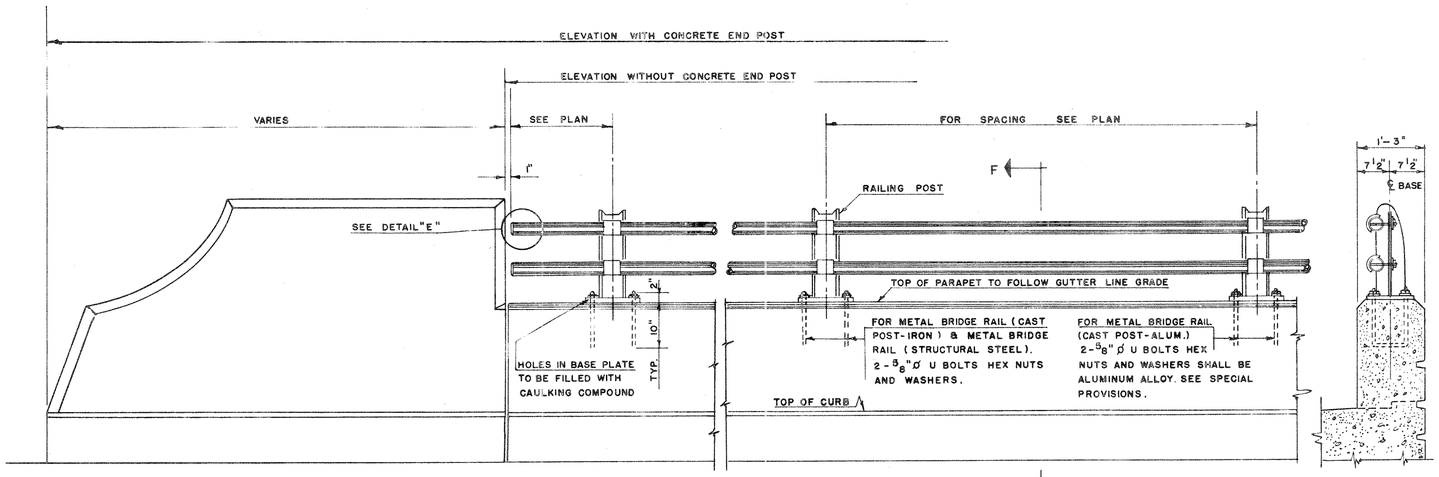

ELEVATION
CONC. END POST AND RAIL
SCALE 3/4" = 1'-0"

SECTION F-F
SCALE 3/4" = 1'-0"

GRAPHIC SCALE 3/4" = 1'
2' 0 2'

METAL BRIDGE RAIL
(STRUCTURAL STEEL)

ALL POSTS TO BE 6 WF 20 STRUCTURAL STEEL.
ALL RAILS TO BE 2 1/2"ø STANDARD STEEL PIPE.
RAILING POSTS SHALL BE VERTICAL.
IF NECESSARY SHIM WITH LEAD WOOL AND CAULK. COST TO BE INCLUDED IN ITEM METAL BRIDGE RAIL.(STRUCTURAL STEEL.)
FOR PAINTING SEE SPECIAL PROVISIONS.
ALL POSTS & BASE PLATES TO BE OF STRUCTURAL STEEL CONFORMING TO A.S.T.M. A-7.

METAL BRIDGE RAIL
(CAST POST - IRON)

ALL POSTS TO BE MALLEABLE IRON CASTING CONFORMING TO A.S.T.M. A-47 GRADE 35018 OR DUCTILE IRON CASTING CONFORMING TO A.S.T.M. A-339.
ALL RAILS TO BE 2 1/2"ø STANDARD STEEL PIPE.
RAILING POSTS SHALL BE VERTICAL.
IF NECESSARY SHIM WITH LEAD WOOL AND CAULK. COST TO BE INCLUDED IN ITEM METAL BRIDGE RAIL (CAST POST-IRON.)
FOR PAINTING SEE SPECIAL PROVISIONS.

METAL BRIDGE RAIL
(CAST POST - ALUMINUM)

ALL POSTS TO BE CAST OF ALUMINUM. SEE SPECIAL PROVISION.
ALL RAILS TO BE 3" O.D. X 2.625" I.D. ALUMINUM TUBING. SEE SPECIAL PROVISIONS.
RAILING POSTS SHALL BE VERTICAL.
IF NECESSARY SHIM WITH ALUMINUM SHEETS AND CAULK.
COST TO BE INCLUDED IN ITEM METAL BRIDGE RAIL (CAST POST-ALUM.)
ALUMINUM RAILING AND POSTS SHALL NOT BE PAINTED.

NOTE:

FOR GENERAL PLAN, BRIDGE ELEVATION RAIL POST SPACING AND GENERAL NOTES SEE BRIDGE SHEET No. 1

GENERAL NOTES:

UNLESS OTHERWISE SPECIFIED ON THE PLANS OR IN THE SPECIAL PROVISIONS METAL BRIDGE RAIL MAY BE: METAL BRIDGE RAIL (STRUCTURAL STEEL). METAL BRIDGE RAIL (CAST POST-IRON) OR METAL BRIDGE RAIL (CAST POST-ALUMINUM).
COST OF FURNISHING AND SETTING 5/8"ø U BOLTS, HEX NUTS AND WASHERS TO BE INCLUDED IN ITEM "METAL BRIDGE RAIL." FOR RAIL POST SPACING SEE BRIDGE SHEET 1.

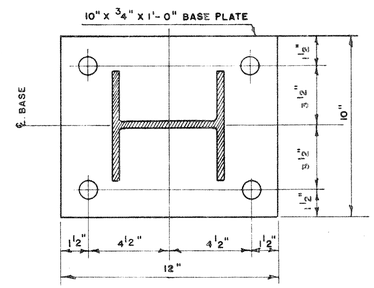

SECTION B-B
SCALE 3" = 1'-0"

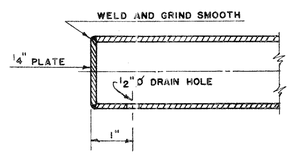

DETAIL "E"
NOT TO SCALE

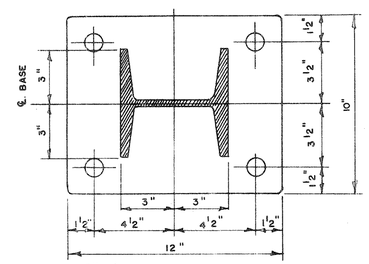

GRAPHIC SCALE 3" = 1'
6" 0 6"

SECTION C-C
SCALE 3" = 1'-0"

GRAPHIC SCALE 3" = 1'
6" 0 6"

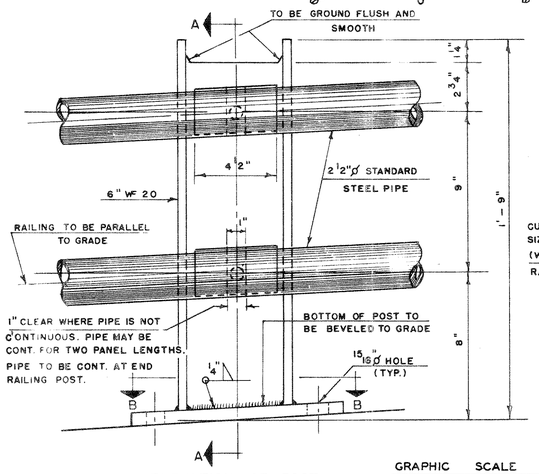

ELEVATION OF POST
SCALE 3" = 1'-0"

GRAPHIC SCALE 3" = 1'
6" 0 6"

DETAILS
STRUCTURAL STEEL POST
FOR METAL BRIDGE RAIL (STUCTURAL STEEL)

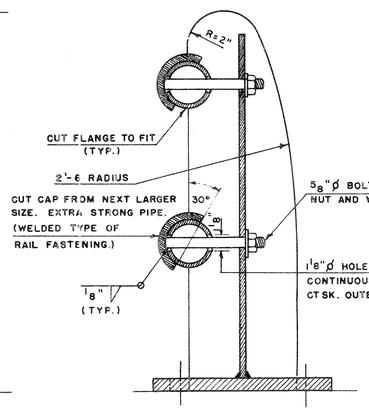

SECTION A-A
SCALE 3" = 1'-0

FOR METAL BRIDGE RAIL (CAST POST-ALUMINUM) 3" O.D. X 2.625" I.D. ALUMINUM TUBING

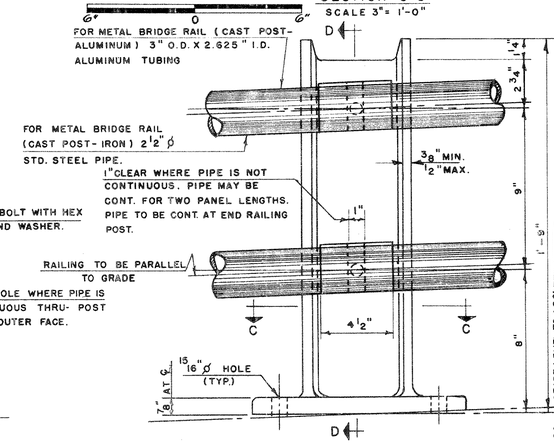

ELEVATION OF POST
SCALE 3" = 1'-0"

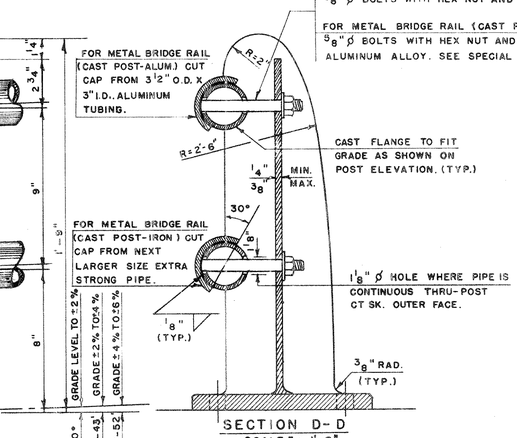

SECTION D-D
SCALE 3" = 1'-0"

GRAPHIC SCALE 3" = 1'
6" 0 6"

DETAILS O
CAST POST
FOR METAL BRIDGE RAIL (CAST POST-IRON)
AND
FOR METAL BRIDGE RAIL (CAST POST-ALUMINUM)

NOTE

DETAILS OF METAL BRIDGE RAILING AND FASTENING SIMILAR TO DETAILS SHOWN FOR METAL BRIDGE RAILING. (STRUCTURAL STEEL.)

REVISIONS		
NO.	DATE	DESCRIPTION

FED. AID PROJ. I-84-4(42)63

CONNECTICUT
STATE HIGHWAY DEPARTMENT

TOWN OF EAST HARTFORD
INTERSTATE ROUTE NO. 84
BRIDGE (A)-(1) & (6)
OVER RELOCATED ASH STREET
METAL BRIDGE RAIL

DESIGNED BY E.L. PAVLO, CONSULTING ENGINEER
SCALES AS NOTED
MADE BY G.M.K. & G.J.Z. DATE 4-29-60
CHECKED BY DATE
APPROVED DATE
PROJECT NO. 42-134
BRIDGE SHEET NO. 9 OF 11

ARMWRIGHT TRACING CLOTH JOSEPH MERRITT & CO. 11210

PUB. ROAD DIV. NO.	STATE	TOWN	FED. AID PROJ. NO.	PROJ. NO.	YEAR	ROUTE NO.	SHEET NO.	TOTAL SHEETS
1	CONN.	EAST HARTFORD	I-84 4(42)63	42-134	1962	I-84	43	216

GRAPHIC SCALE VERT. 1" = 5'

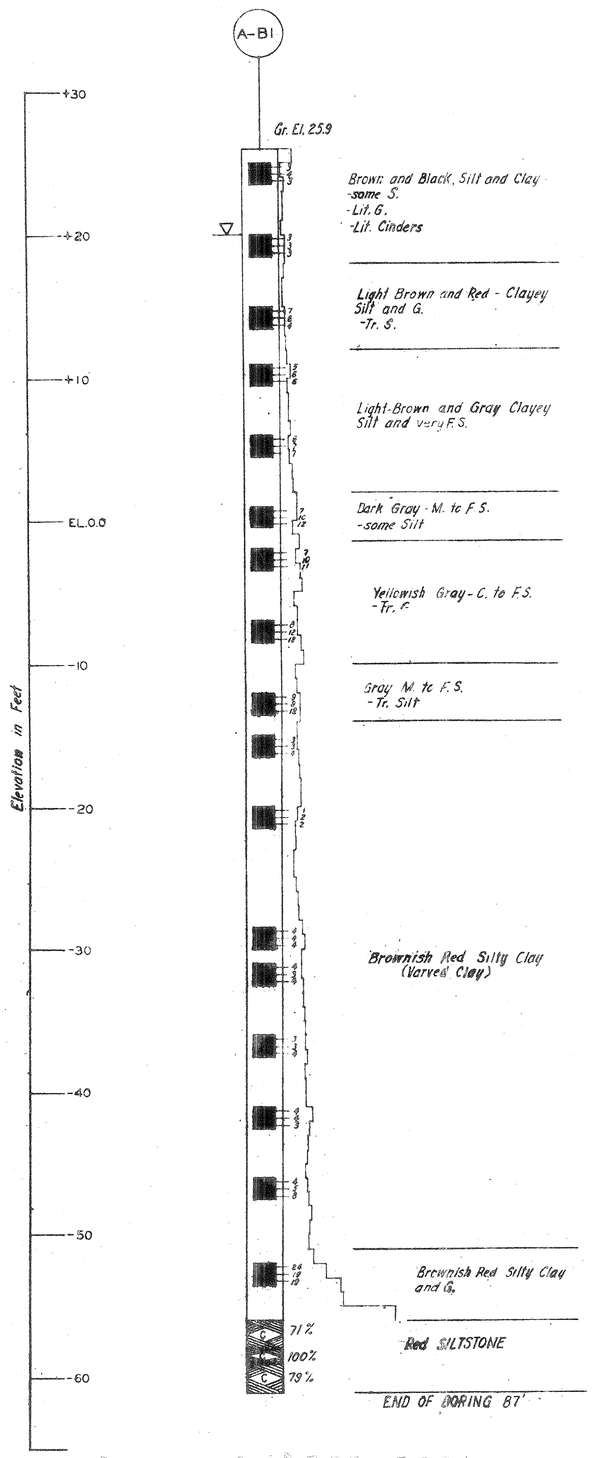

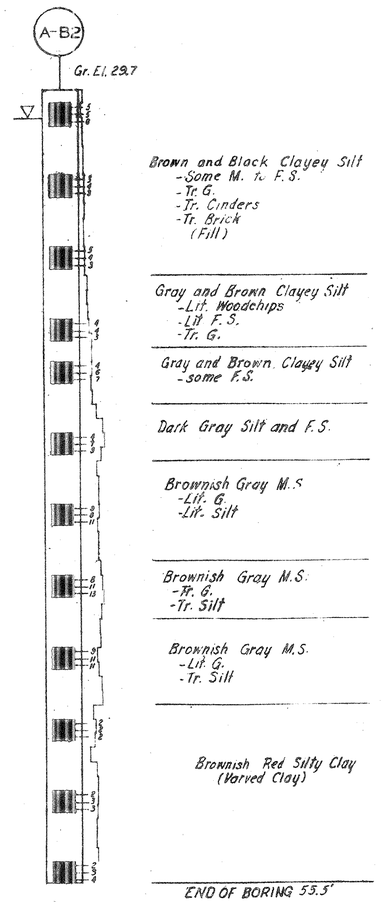

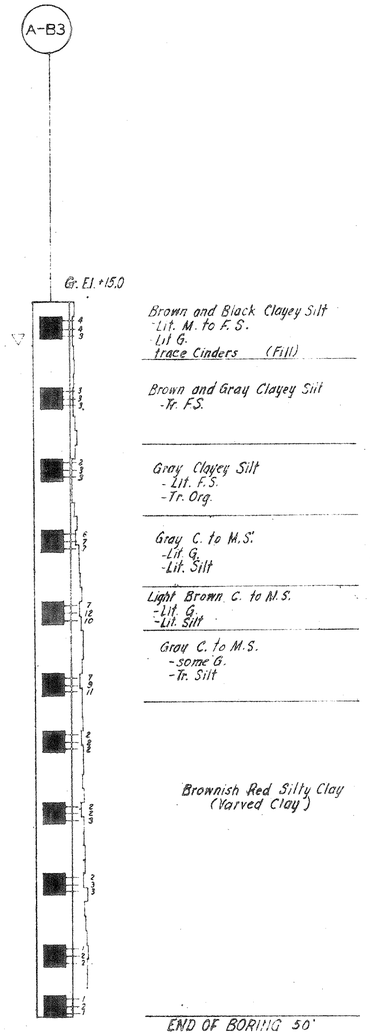

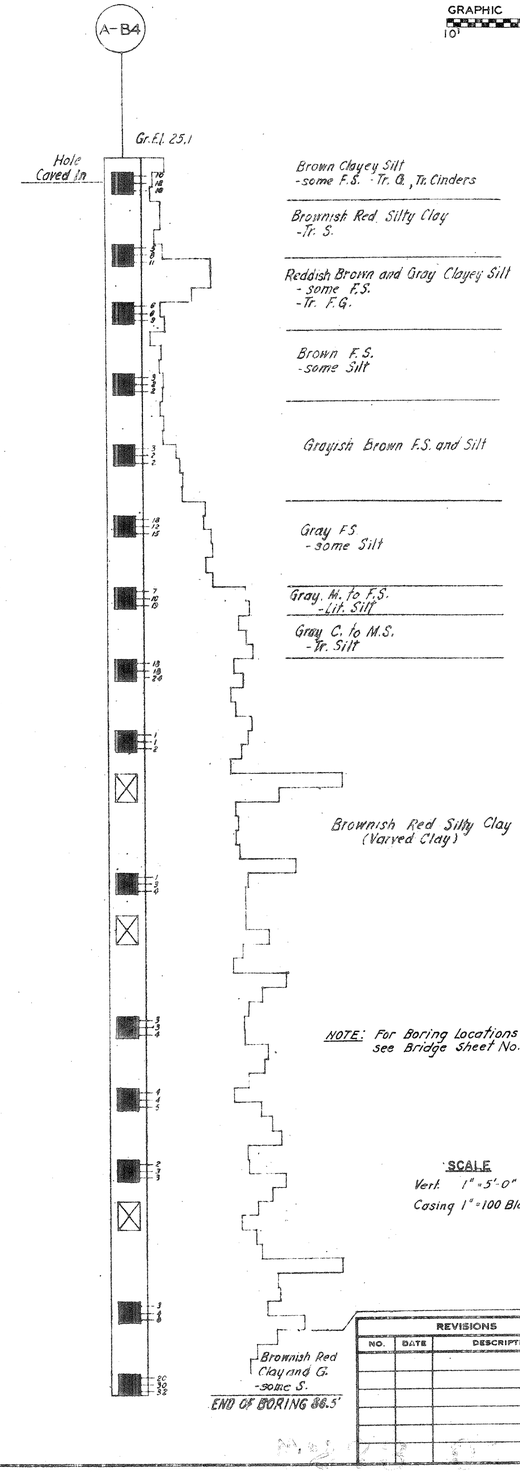

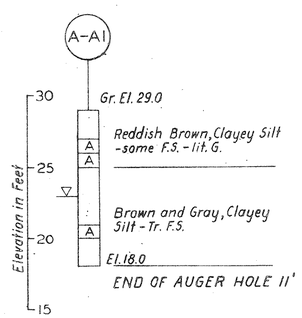

NOTE: For Boring Locations see Bridge Sheet No. 1

ABBREVIATIONS

C. Coarse
F. Fine
M. Medium
G. Gravel
S. Sand
Boul. Boulders
Cobb. Cobbles
lit. little
Tr. Trace
Misc. Miscellaneous
Comp. Compact
Org. Organic
#/ft Weight of Hammer

A-B1, A-B2 & A-B3 Casing I.D. = 2½"
A-B4 Casing I.D. = 3½"
Hammer Wt. = 300 lbs.
Hammer Fall = 24"

Sampler I.D. = 1⅜"
Hammer Wt. = 140 lbs.
Hammer Fall = 30"

KEY

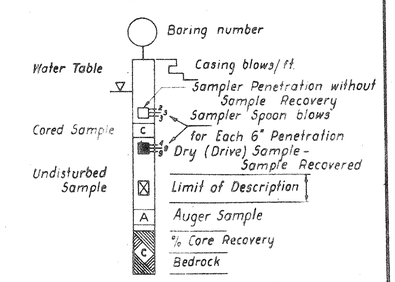

SCALE

Vert. 1" = 5'-0"
Casing 1" = 100 Blows

THE INFORMATION, INCLUDING ESTIMATED QUANTITIES OF WORK, SHOWN ON THESE SHEETS IS BASED ON LIMITED INVESTIGATION BY THE STATE AND IS IN NO WAY WARRANTED TO INDICATE THE TRUE CONDITIONS OR ACTUAL QUANTITIES OR DISTRIBUTION OF QUANTITIES OF WORK WHICH WILL BE REQUIRED.

REVISIONS		
NO.	DATE	DESCRIPTION

FED. AID PROJ. I-84-4(42)63

CONNECTICUT
STATE HIGHWAY DEPARTMENT
TOWN OF EAST HARTFORD
INTERSTATE ROUTE NO. 84
BRIDGE A - 1 & 6
OVER RELOCATED ASH STREET
BORING LOGS

DESIGNED BY E. L. PAVLO, CONSULTING ENGINEER
SCALES As shown
MADE BY E.G.S. DATE 5-6-60
CHECKED BY M.A.S. DATE 5-6-60
APPROVED DATE 5-6-60

PROJECT NO. 42-134
BRIDGE SHEET NO. 10 OF 11

PUB ROAD DIV NO	STATE	TOWN	FED AID PROJ. NO.	PROJ. NO.	YEAR	ROUTE NO.	SHEET NO	TOTAL SHEETS
1	CONN.	EAST HARTFORD	I-84-4 (42)63	42-134	1962	I-84	44	216

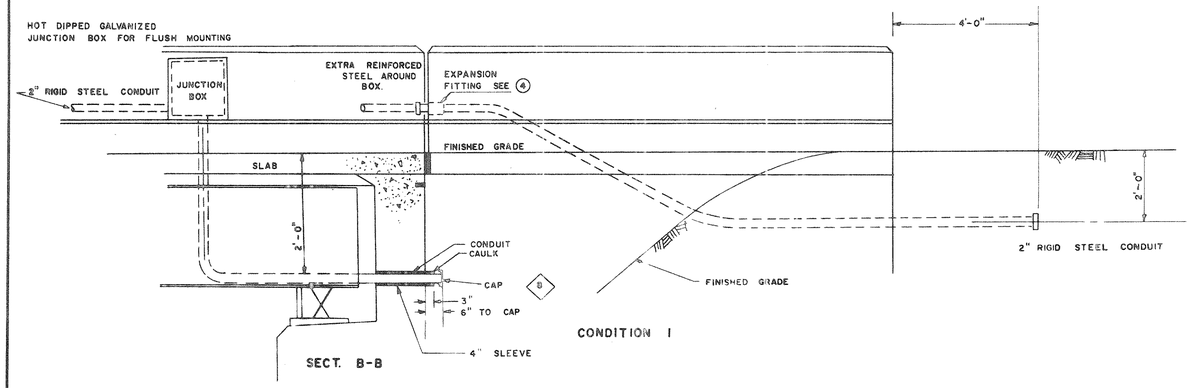

CONDUIT PARAPET TO FILL 3

SCALE 1/2" = 1'-0"
GRAPHIC SCALE 1/2" = 1'
3' 0 3'

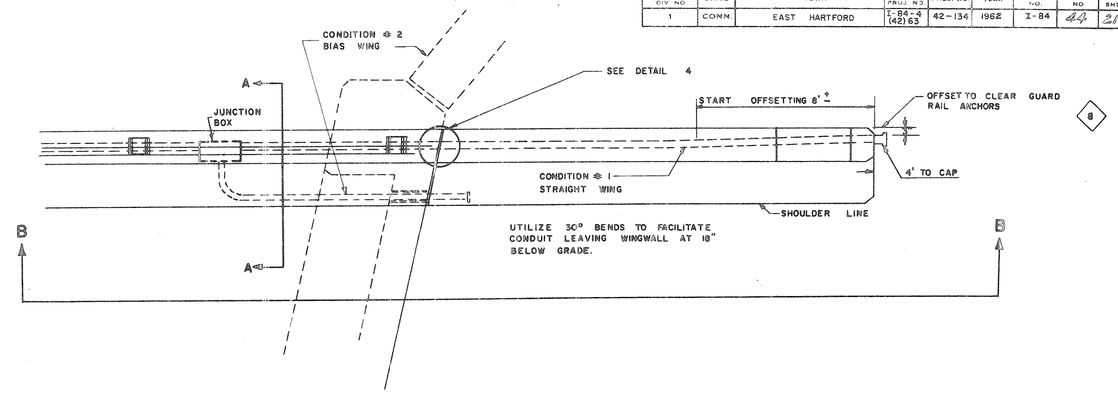

CONDUIT PARAPET TO FILL 1

NOT TO SCALE

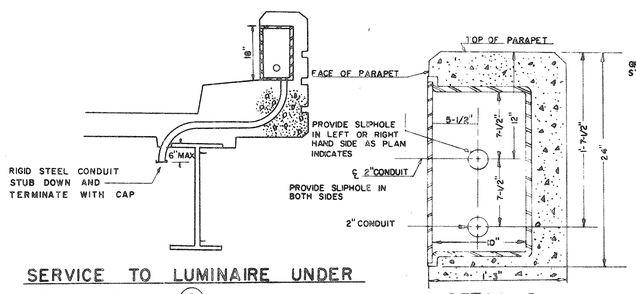

SERVICE TO LUMINAIRE UNDER STRUCTURE 6

NOT TO SCALE

DETAIL 2

18" X 18" X 10" JUNCTION BOX FOR LIGHT STANDARD

NOT TO SCALE

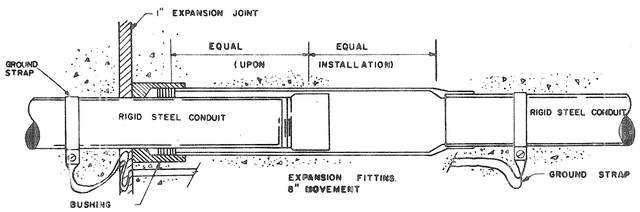

DETAIL OF EXPANSION FITTING 4

USE AT ALL EXPANSION JOINTS

NOT TO SCALE

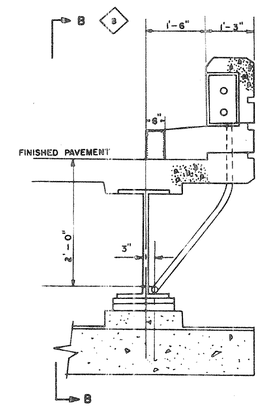

SECT A-A

NOT TO SCALE

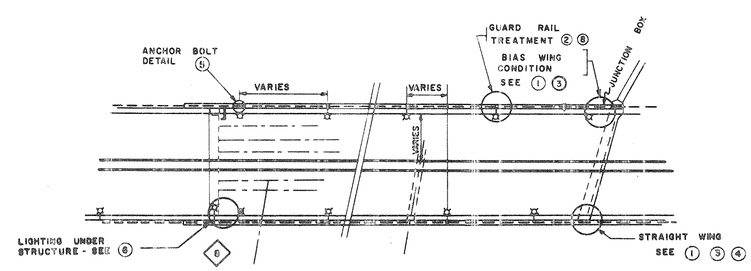

INDEX TO DETAILS

NOT TO SCALE

FEDERAL AID PROJECT NO. I-84-4(42)63

CONNECTICUT
STATE HIGHWAY DEPARTMENT
TRAFFIC DIVISION
TOWN OF EAST HARTFORD
INTERSTATE ROUTE NO. 84

BRIDGE A - 1 & 6
OVER RELOCATED ASH STREET
ELECTRICAL DETAILS

REVISIONS		
NO.	DATE	DESCRIPTION

SCALE AS NOTED	ELECTRICAL		
DESIGNED BY	C. W. JOHNSON	3/1/61	PROJECT NO. 42-134
MADE BY	R. E. WENTWORTH	3/1/61	
SUBMITTED BY	H. A. KERR	3/1/61	BRIDGE SH. NO. 11 OF 11
APPROVED BY	R. M. Williston	3-1-61	

FORM NO. ENG. 15 ED 11-52

PUB. ROAD DIV. NO.	STATE	TOWN	FED. AID PROJ. NO.	PROJ. NO.	YEAR	ROUTE NO.	SHEET NO.	TOTAL SHEETS
1	CONN.	EAST HARTFORD	I-84 4(42)63	42-134	1962	I-84	45	216

CURVE DATA

LINE NO 2	RELOCATED ASH ST.
Δ = 29°-08'-40.19"	Δ = 17° 28'-50.69"
D = 2°-59'-59.20"	D = 1°- 54'-35.49"
R = 1910'	R = 3000'
T = 496.53'	T = 461.23'
L = 971.55'	L = 915.23'
E = 63.48'	E = 35.25'
P.C.C. Sta. 27+31.97	P.C. Sta. 7+65.34
P.T. Sta. 37+03.52	P.T. Sta. 16+80.63

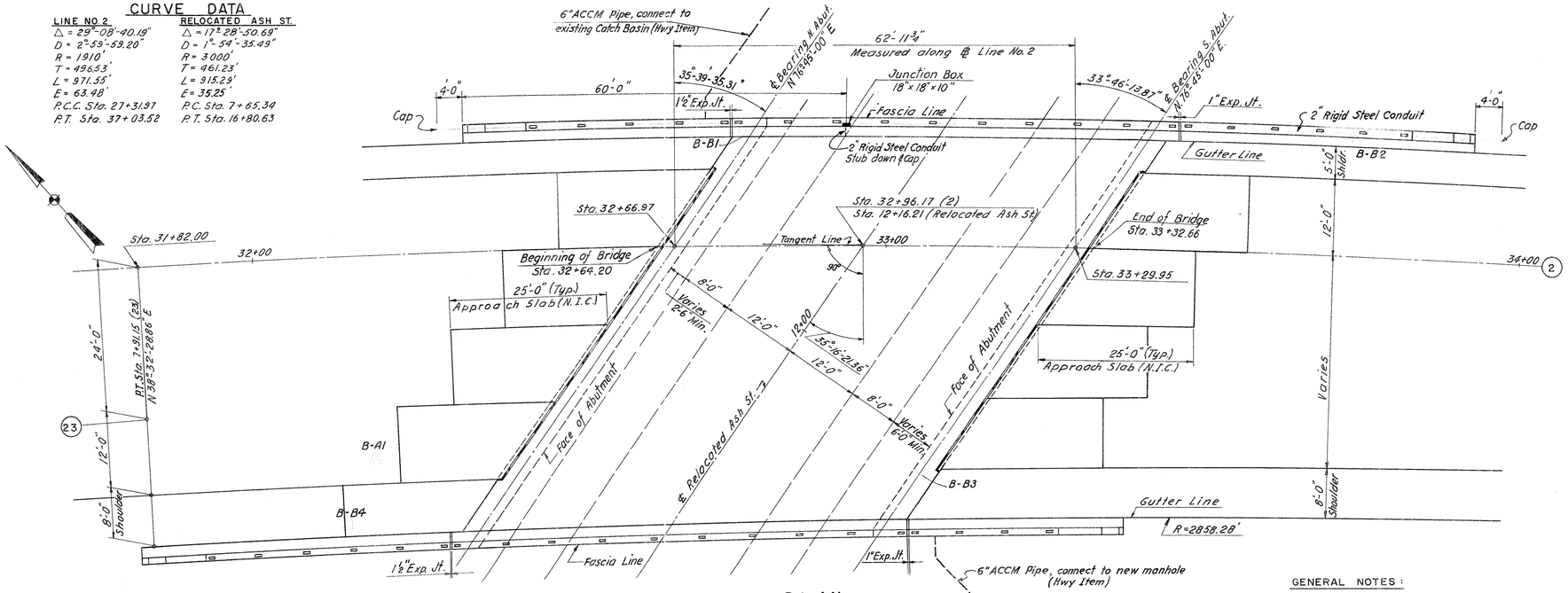

PLAN

Scale: 1" = 10'

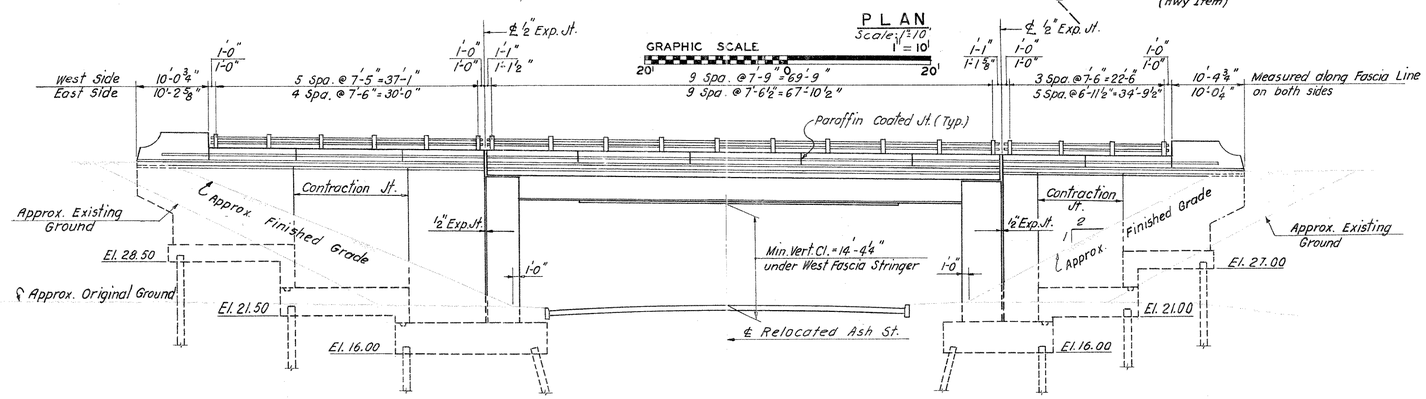

ELEVATION

Scale: 1" = 10'

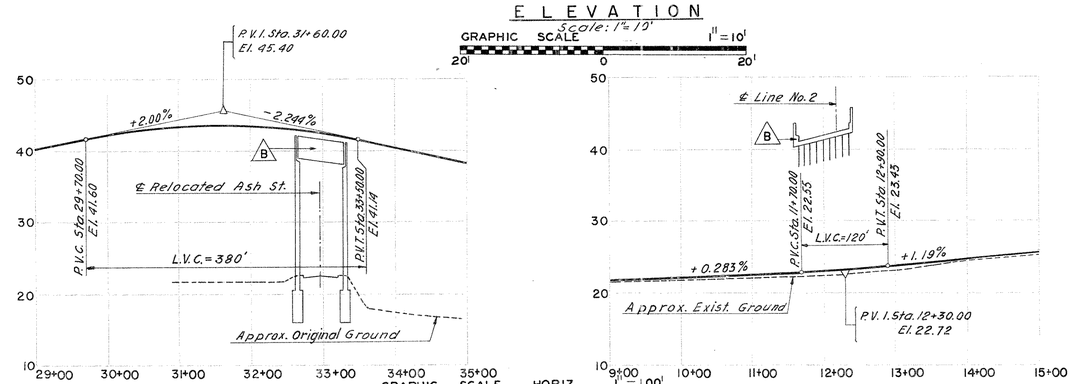

LINE NO. 2 PROFILE

Scale: Horiz. 1" = 100'
Vert. 1" = 10'

RELOCATED ASH ST. PROFILE

Scale: Horiz. 1" = 100'
Vert. 1" = 10'

ESTIMATE OF QUANTITIES

ITEM	UNIT	QUANTITY
Structure Excavation (Complete)	C.Y.	900
6" A.C.C.M. Pipe	L.F.	10
6" Perf. A.C.C.M. Pipe	L.F.	140
Test Pile - (Steel 12 BP 53 - 100' Long)	Each	2
1½" Preformed Exp. Jt. Filler for Bridges	S.F.	10
Furnishing Steel Piles	Lb.	652,000
Point Reinforcement for Steel Piles	Each	8
Driving Steel Piles	L.F.	12,400
Splicing Steel Piles	Each	8
Class "A" Concrete	C.Y.	1450
½" Preformed Exp. Jt. Filler for Bridges	S.F.	450
1" Preformed Exp. Jt. Filler for Bridges	S.F.	10
Deformed Steel Bars	Lb.	107,000
Structural Steel	Lb.	122,000
Dampproofing	S.Y.	630
Metal Bridge Rail	L.F.	280
Pervious Structure Backfill	C.Y.	2,850
6"x0.5" Granite Stone Curbing for Bridges	L.F.	320
Shear Connectors	I.F.	576
2" Rigid Steel Conduit in Bridge	L.F.	180
Cast Iron Junction Box (18"x18"x10")	Each	1

GENERAL NOTES:

SPECIFICATIONS: Connecticut State Highway Department Form 808 (Jan. 1955) and Special Provisions.
DESIGN SPECIFICATIONS: Standard Specifications for Highway Bridges (AASHO 1957) except as modified by the Bureau of Public Roads "Policy on Interstate System Projects" (August 1956) and as supplemented by the Connecticut State Highway Department Bridge Manual (July 1960).
LIVE LOAD: H20-S16-44 Alternate 24,000# dual axle at 4'-0" o.c. Slab design as per Tentative AASHO Specification T. 8 (59).
FUTURE PAVING ALLOWANCE: 25 p.s.f.
COMPOSITE CONSTRUCTION: No temporary intermediate supports shall be used during construction. Superimposed loads shall be placed when directed by the Engineer, but not less than 10 days after the slab has been poured.
CLASS "A" CONCRETE: Class "A" Concrete shall be used throughout. See Special Provisions.
DEFORMED STEEL BARS: For Grades of deformed steel bars, see Special Provisions.
EXPOSED EDGES: Exposed edges shall be beveled 1"x1" unless dimensioned otherwise.
STRUCTURAL STEEL: All material for plated rolled beams & Sole Plates shall conform to A.S.T.M. A-373. All other steel shall conform to A.S.T.M. A-7 unless noted otherwise. Masonry Plate shall conform to ASTM A-242 (modified) steel. See Special Provision for "Structural Steel."
PAINTING: For shop and field painting of Structural Steel and Metal Bridge Rail, see Special Provisions.
JOINT SEAL: Joint Seal shall be included in the Item for Class "A" Concrete. See Special Provisions.
FELT: The cost of furnishing and placing 2 layers of 15# roofing felt on top of backwalls shall be included in the Item for Class "A" Concrete.
PARAFFIN: The cost of furnishing and applying paraffin to the parapet joints shall be included in the Item for Class "A" Concrete.
PILES: Point Bearing Steel Piles (12 BP 53). Max. Design load per pile = 70 tons. All piles shall be driven to practical refusal on bedrock.
WELDING: For inspection of welding, see Special Provisions.
Reinforcing bars to have 2" cover except where shown otherwise.
N.I.C. Denotes not included in Contract.
E.F. Denotes each face.
F.F. Denotes far face.
N.F. Denotes near face.

CONCRETE DISTRIBUTION

SUPERSTRUCTURE	180 C.Y.
SUBSTRUCTURE	660 C.Y.
FOOTINGS	610 C.Y.
TOTAL	1,450 C.Y.

BORING LEGEND

● — 2½" Boring
■ — 3½" Boring
▲ — Auger Boring

INSPECTION OF FIED WELDS		
Method	Unit	Quantity
Radiographic	in.	0
Magnetic Particle	I.F.	0

FED. AID PROJ. NO. I-84-4(42)63

CONNECTICUT
STATE HIGHWAY DEPARTMENT

TOWN OF EAST HARTFORD
INTERSTATE ROUTE NO. 84
BRIDGE Ⓑ-②
OVER RELOCATED ASH ST.

GENERAL PLAN & ELEVATION

REVISIONS		
NO.	DATE	DESCRIPTION

DESIGNED BY E. L. PAVLO, CONSULTING ENGINEER
SCALES AS SHOWN
MADE BY C.D & S.G DATE 12.15.60
CHECKED BY M.A.G. DATE 12.22.60
APPROVED [signature] DATE 1-30-61
PROJECT NO. 42-134
BRIDGE SHEET NO. 1 OF 10

The information, including estimated quantities of work, shown on these sheets is based on limited investigations by the state and is in no way warranted to indicate the true conditions or actual quantities or distribution of quantities of work which will be required.

"ARAMBOND" TRACING CLOTH JOSEPH MERRITT & CO. 14251

Page 194 of 293 184

FORM NO. ENG. 19 ED 11-62

PUB. ROAD DIV. NO.	STATE	TOWN	FED. AID PROJ. NO.	PROJ. NO.	YEAR	ROUTE NO.	SHEET NO.	TOTAL SHEETS
1	CONN.	EAST HARTFORD	I-84 4(42)63	42-134	1962	I-84	46	216

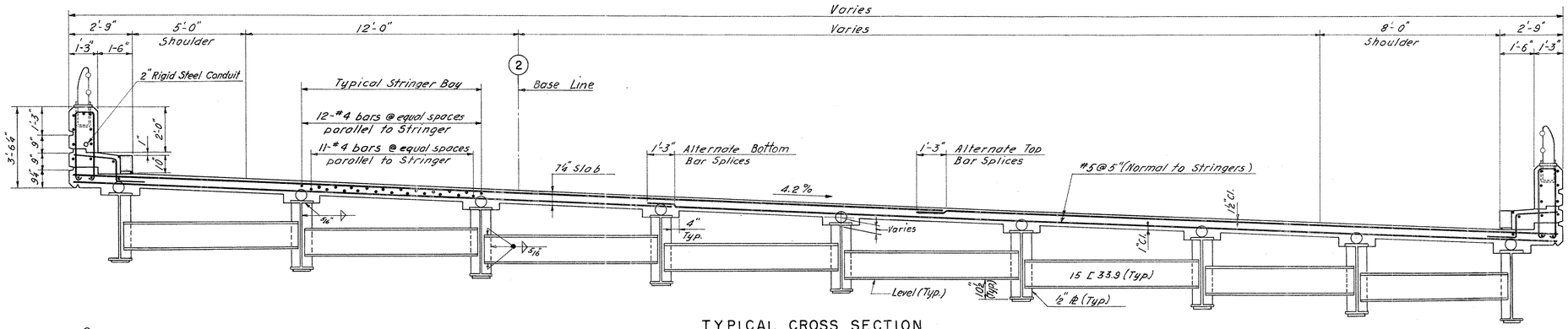

TYPICAL CROSS SECTION

Scale: 3/8" = 1'-0"

GRAPHIC SCALE 3/8" = 1'

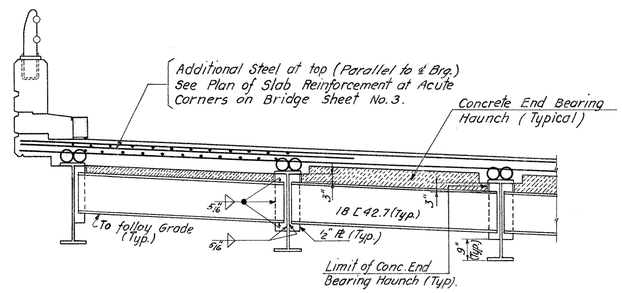

CROSS SECTION AT END DIAPHRAGM

Scale: 3/8" = 1'-0"

NOTE: For reinforcing not shown, see Typical Cross Section.

GRAPHIC SCALE 3/8" = 1'

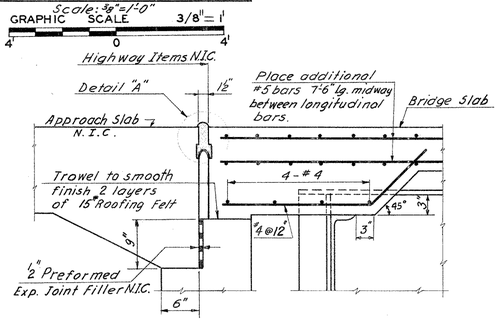

NORMAL SECTION AT EXPANSION END

Scale: 1" = 1'-0"

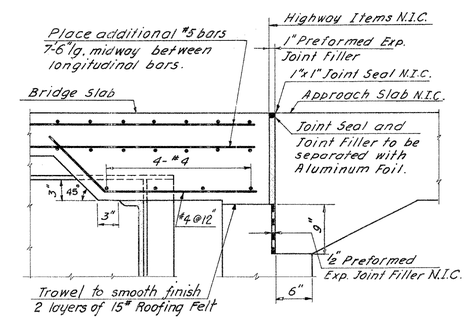

NORMAL SECTION AT FIXED END

Scale: 1" = 1'-0"

GRAPHIC SCALE 1" = 1'

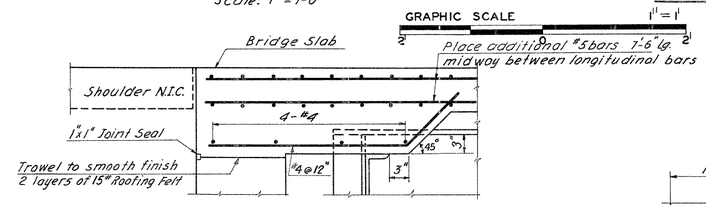

NORMAL SECTION FOR SHOULDERS AT EXPANSION END OR FIXED END

Scale: 1" = 1'-0"

(Where shoulder has approach slab use Normal Section)

GRAPHIC SCALE 1" = 1'

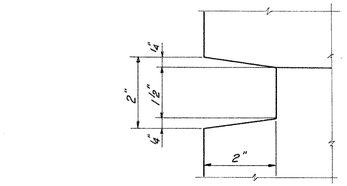

RUSTICATION DETAIL

Not to Scale

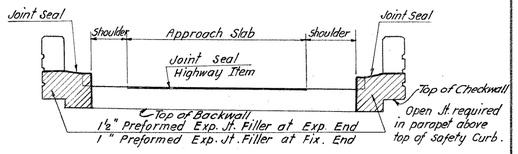

JOINT SEAL TYPICAL LIMITS

Not to scale.

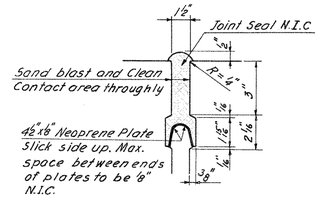

DETAIL "A"

Not to Scale

NOTES:

For General Notes, see Bridge Sheet No. 1
Cost of furnishing and installing aluminum foil and joint seal is to be included in Item "Class "A" Concrete."

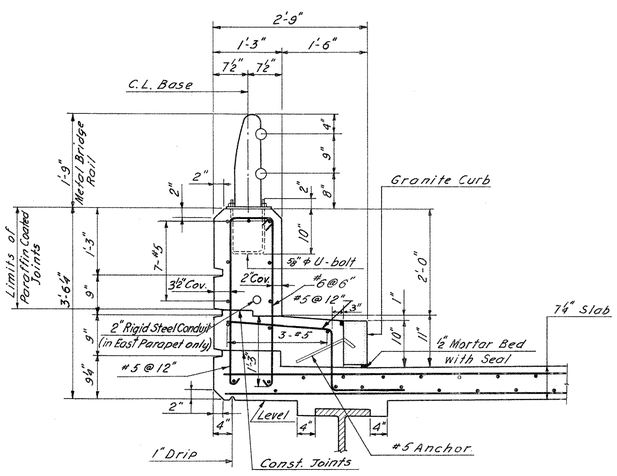

TYPICAL PARAPET SECTION

Scale: ¾" = 1'-0"

GRAPHIC SCALE 3/4" = 1'

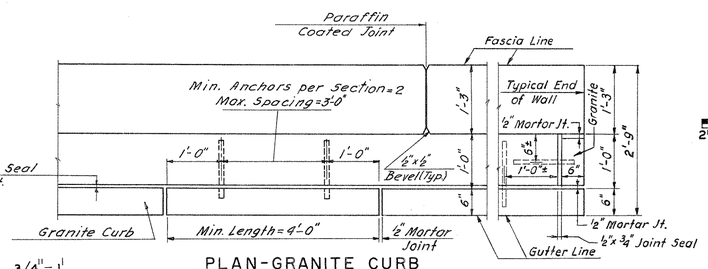

PLAN-GRANITE CURB

Scale: ¾" = 1'-0"

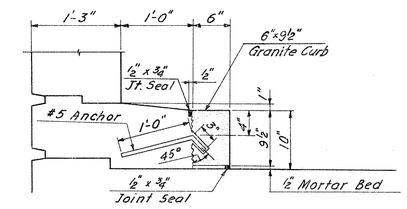

TYPICAL ANCHOR AND STONE DETAIL

Scale: 1" = 1'-0"

GRAPHIC SCALE 1" = 1'

FED. AID PROJ. NO. I-84-4(42)63

CONNECTICUT
STATE HIGHWAY DEPARTMENT

TOWN OF EAST HARTFORD

INTERSTATE ROUTE NO. 84

BRIDGE B-2

OVER RELOCATED ASH ST.

CROSS SECTION & DETAILS

REVISIONS		
NO.	DATE	DESCRIPTION

DESIGNED BY E.L. PAVLO, CONSULTING ENGINEER

SCALES AS SHOWN

MADE BY C.D. & S.G. DATE 12-15-60

CHECKED BY M.A.G. DATE 12-27-60

APPROVED [signature] DATE 1-30-61

PROJECT NO. 42-134

BRIDGE SHEET NO. 2 OF 10

"ARKWRIGHT" TRACING CLOTH JOSEPH MERRITT & CO. 14251

FORM NO. ENG. 15 ED 11-52

PUB. ROAD DIV. NO.	STATE	TOWN	FED. AID PROJ. NO.	PROJ. NO.	YEAR	ROUTE NO.	SHEET NO.	TOTAL SHEETS
1	CONN.	EAST HARTFORD	I-84 4(42)63	42-134	1962	I-84	47	216

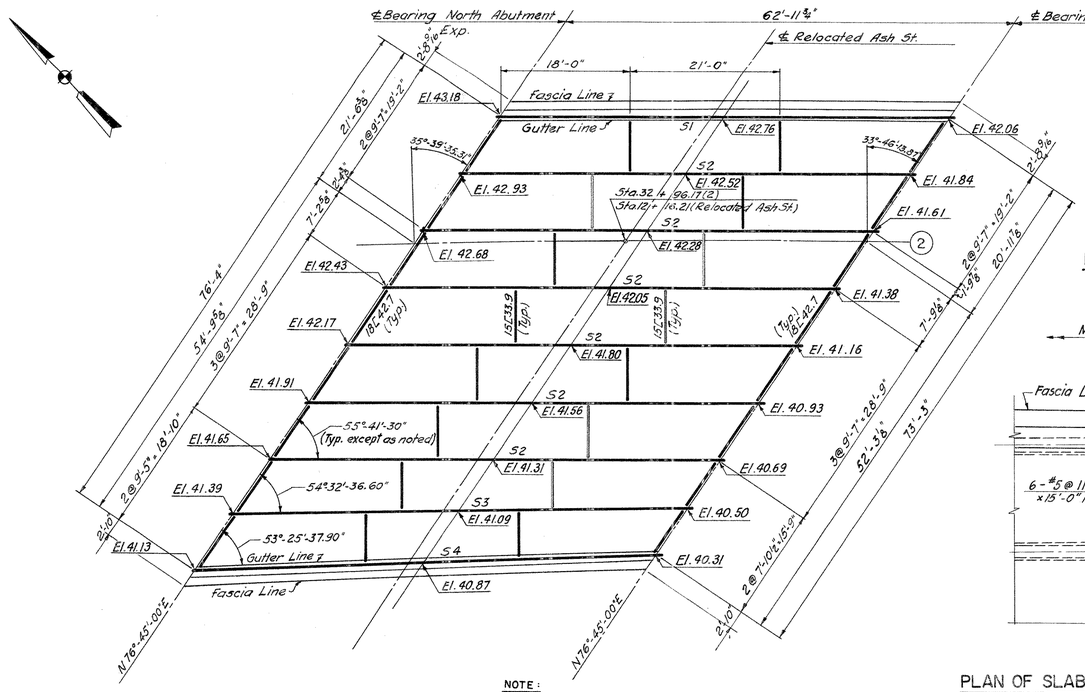

FRAMING PLAN

Scale: 1"=10'

NOTE: Elevations shown on framing plan are elevation at top of pavement over stringers at ℄ Bearing of Abutment or mid-span.

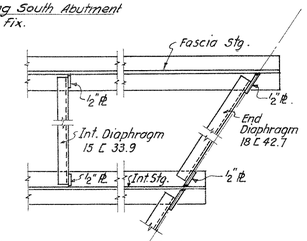

DIAPHRAGM CONNECTING DETAILS

Not to Scale

STRINGER SCHEDULE									
MARK	SPAN C-C BEARING	MATERIAL	DEAD LOAD DEFLECTION					V.C.	TOTAL CAMBER
			STEEL	SLAB	WEAR. SURFACE	PARAPET	TOTAL		
S1	62'-8 1/16"	36WF 160, 10"x⅞"PL x 43'-6"	3/16"	11/16"	1/8"	1/8"	1/3"	½"	1⅝"
S2	62'-8 1/16"	36WF 160, 10"x 1"PL x 45'-0"	3/16"	3/4"	1/8"	1/16"	1/8"	½"	1⅝"
S3	63'-6⅝"	36WF 160, 10"x 3/4"PL x 43'-6"	1/4"	11/16"	1/8"	1/8"	1 3/16"	9/16"	1¾"
S4	64'-5½"	36WF 160, 10"x 3/8"PL x 44'-6"	½"	3/4"	1/8"	1/8"	1¼"	⅝"	1⅞"

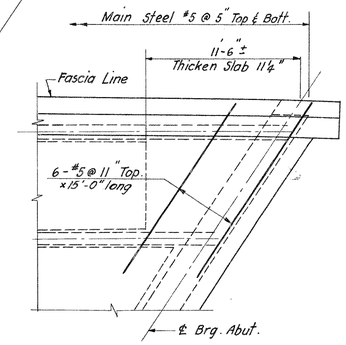

PLAN OF SLAB REINFORCING AT ACUTE CORNERS

Scale: 3/16"=1'-0"

NOTES: Longitudinal steel bars are not shown. Northwest Corner similar.

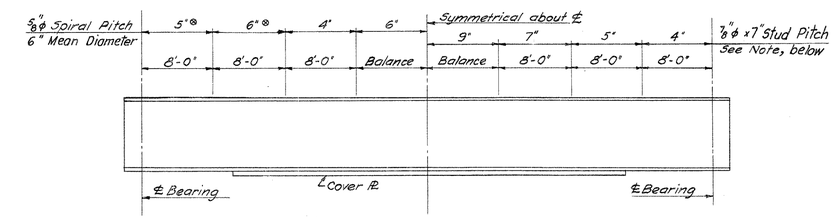

STRINGER ELEVATION

Not to Scale

NOTE: ⊗ Denotes double ⅝"φ Spiral. 2 Studs for each stud pitch.

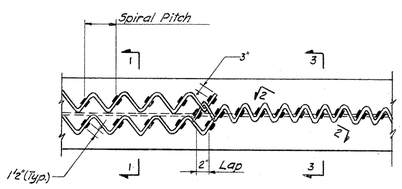

DOUBLE SPIRAL

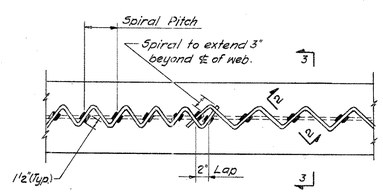

SINGLE SPIRAL

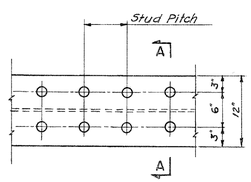

PLAN

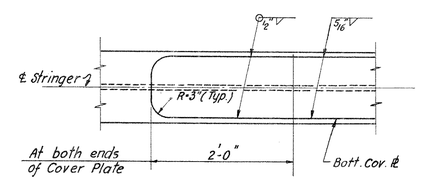

PLAN AT END OF COVER PLATE

Scale: 1"=1'-0"

GRAPHIC SCALE 1" = 1'

NOTES:
For General Notes, see Bridge Sheet No. 1
For Typical Cross Section, see Bridge Sheet No. 2
For Shoe details, see Bridge Sheet No. 7

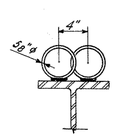

SECTION 1-1

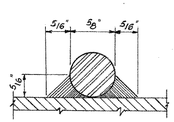

SECTION 2-2

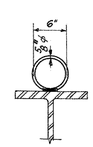

SECTION 3-3

TYPICAL SPIRAL DETAILS

Not to Scale

Estimated Weight of spiral Bars = 3,400 lbs

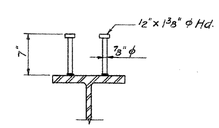

SECTION A-A

TYPICAL STUD DETAILS

Not to Scale

Estimated number of 7" Studs = 2,550 each

The information, including estimated quantities of work, shown on these sheets is based on limited investigations by the state and is in no way warranted to indicate the true conditions or actual quantities or distribution of quantities of work which will be required.

REVISIONS		
NO.	DATE	DESCRIPTION

FED. AID PROJ. NO. I-84-4(42)63

CONNECTICUT
STATE HIGHWAY DEPARTMENT

TOWN OF EAST HARTFORD
INTERSTATE ROUTE NO. 84

BRIDGE B - 2
OVER RELOCATED ASH ST.
FRAMING & STRINGER SCHEDULE

DESIGNED BY E.L. PAVLO, CONSULTING ENGINEER
SCALES AS SHOWN
MADE BY C.D. & M.L.K. DATE 12-15-60
CHECKED BY M.A.G. DATE 12-22-60
APPROVED [signature] DATE 1-30-61

PROJECT NO. 42-134
BRIDGE SHEET NO. 3 OF 10

"ARCHRIGHT" TRACING CLOTH JOSEPH MERRITT & CO. 14221

FORM NO. ENG. 15 ED 11-52

PUB. ROAD DIV. NO.	STATE	TOWN	FED. AID PROJ. NO.	PROJ. NO.	YEAR	ROUTE NO.	SHEET NO.	TOTAL SHEETS
1	CONN.	EAST HARTFORD	I-84 4(42)63	42-134	1962	I-84	48	216

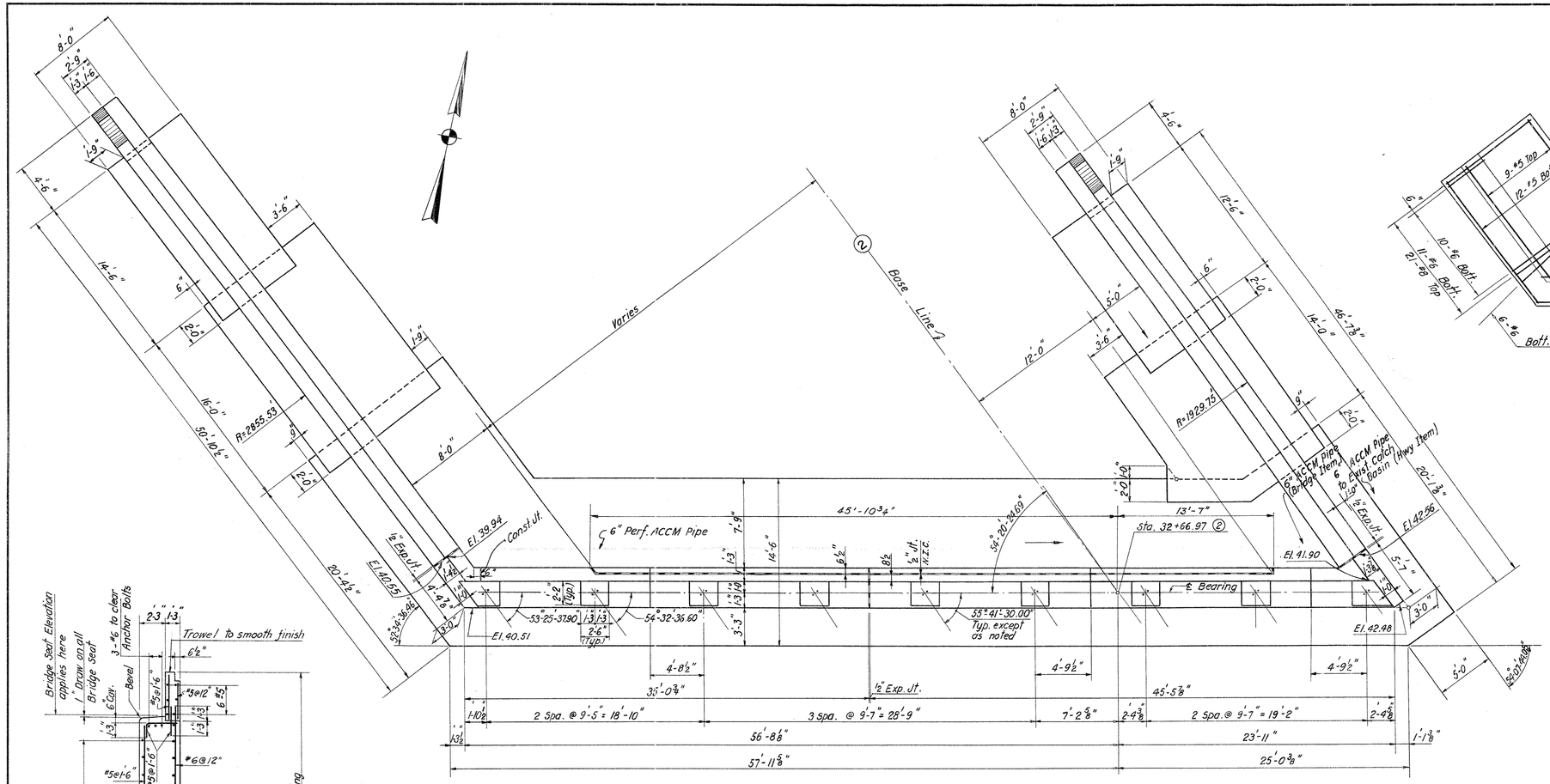

PLAN

Scale: 3/16" = 1'-0"

GRAPHIC SCALE 3/16" = 1'

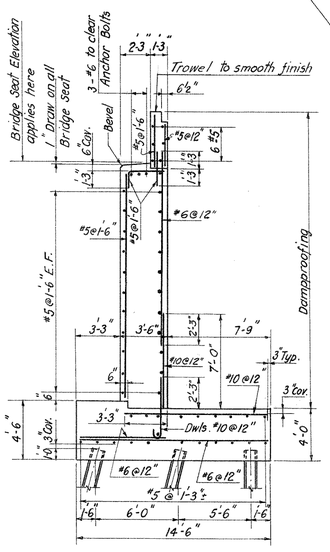

TYPICAL ABUTMENT SECTION

Scale: 3/16" = 1'-0"

GRAPHIC SCALE 3/16" = 1'

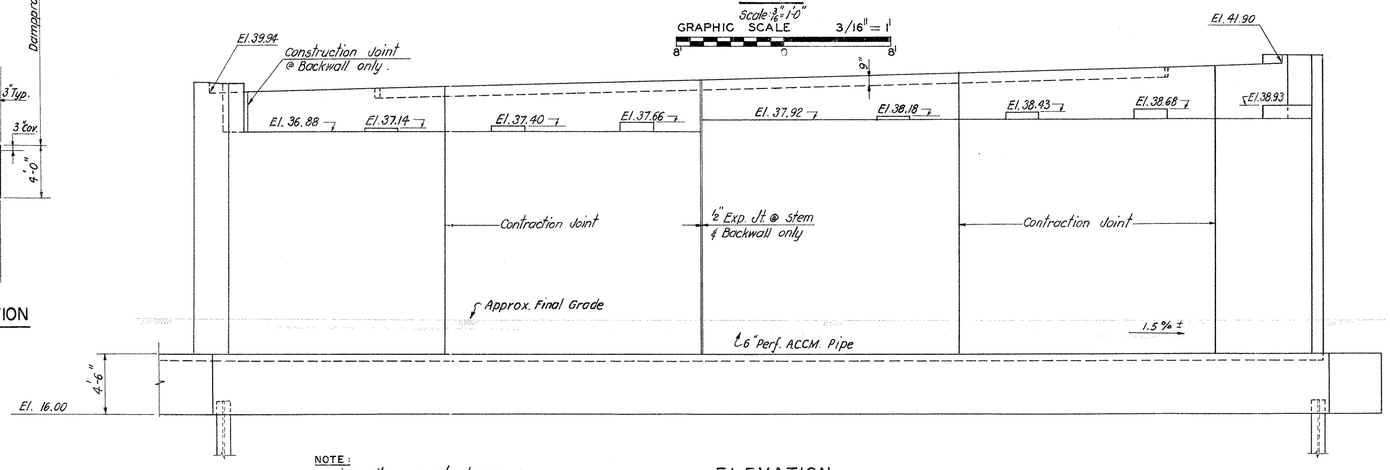

NOTE:
Wingwalls are not shown in Elevation.

ELEVATION

Scale: 3/16" = 1'-0"

GRAPHIC SCALE 3/16" = 1'

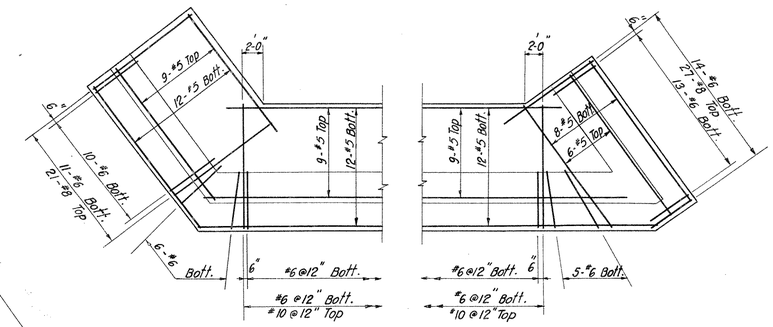

PLAN OF FOOTING REINFORCING AT CORNERS

Scale: 1/8" = 1'-0"

GRAPHIC SCALE 1/8" = 1'

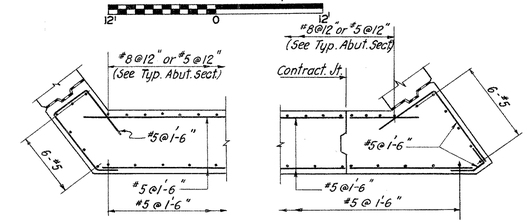

PLAN SECTION THRU STEM

Scale: 1/4" = 1'-0"

GRAPHIC SCALE 1/4" = 1'

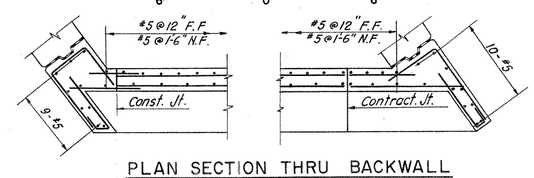

PLAN SECTION THRU BACKWALL

Scale: 1/4" = 1'-0"

GRAPHIC SCALE 1/4" = 1'

NOTES:
For General Notes see Bridge Sheet No. 1
For Pad Details, Backfill and Drainage Detail, see Bridge Sheet No. 5.
For Pile Plan, see Bridge Sheet No. 7
For reinforcing cover, see notes on Sheet No. 6.

The information, including estimated quantities of work, shown on these sheets is based on limited investigations by the state and is in no way warranted to indicate the true conditions or actual quantities or distribution of quantities of work which will be required.

FED. AID PROJ. NO. I-84-4(42)63

CONNECTICUT
STATE HIGHWAY DEPARTMENT

TOWN OF EAST HARTFORD
INTERSTATE ROUTE NO. 84

BRIDGE (B)-(2)

OVER RELOCATED ASH ST.
NORTH ABUTMENT

REVISIONS		
NO.	DATE	DESCRIPTION

DESIGNED BY E.L. PAVLO, CONSULTING ENGINEER

SCALES AS SHOWN
MADE BY C.D. & E.W. DATE 12-15-60
CHECKED BY M.A.G. DATE 12-22-60
APPROVED [signature] DATE 1-30-61

PROJECT NO. 42-134

BRIDGE SHEET NO. 4 OF 10

"ARCHRIGHT" TRACING CLOTH JOSEPH MERRITT & CO. 16261

FORM NO. ENG. 15 ED. 11-52

PUB. ROAD DIV. NO.	STATE	TOWN	FED. AID PROJ. NO.	PROJ. NO.	YEAR	ROUTE NO.	SHEET NO.	TOTAL SHEETS
1	CONN.	EAST HARTFORD	I-84 4(42)63	42-134	1962	I-84	49	216

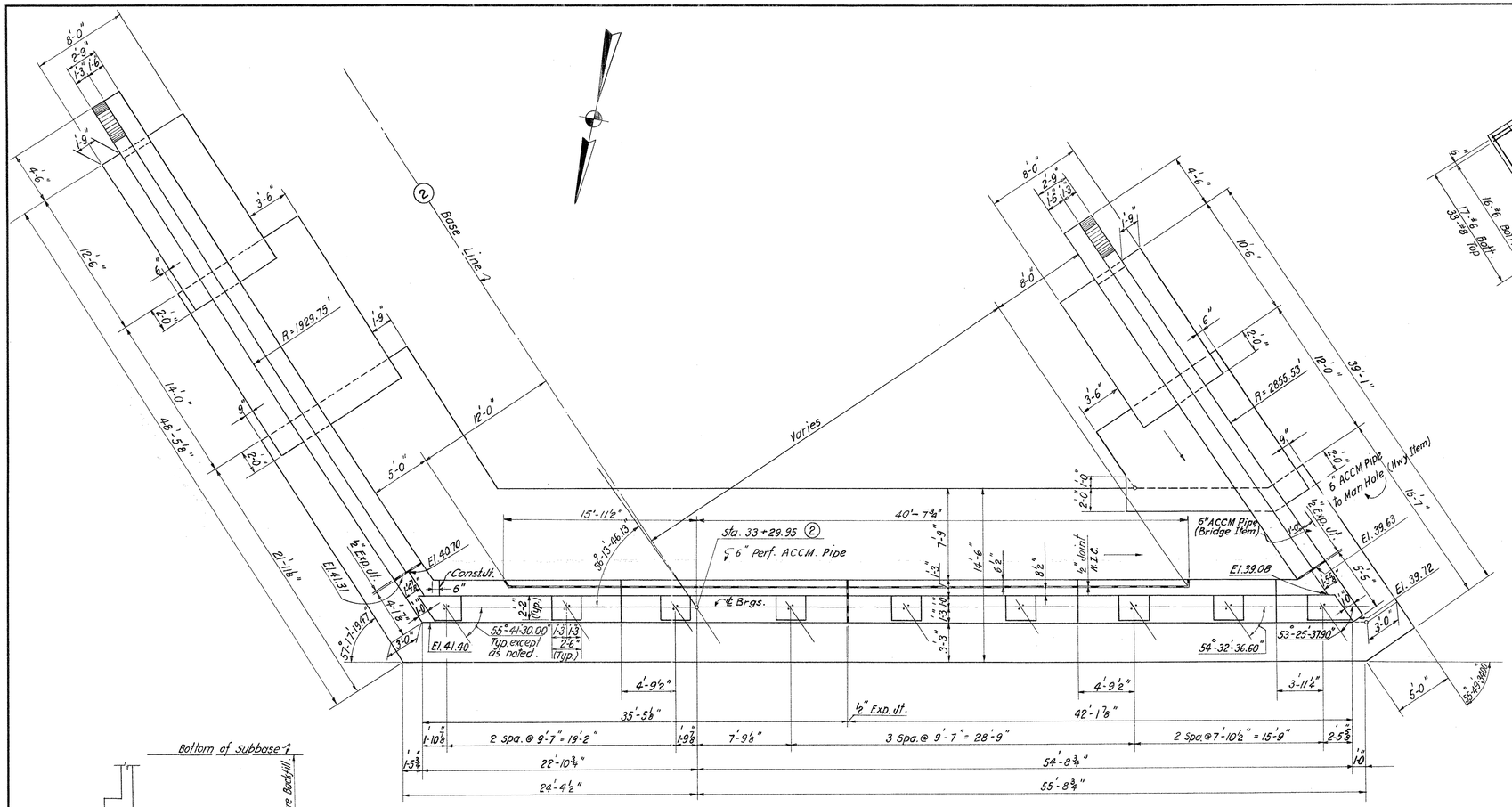

PLAN

Scale: 3/16" = 1'-0"

GRAPHIC SCALE 3/16" = 1'

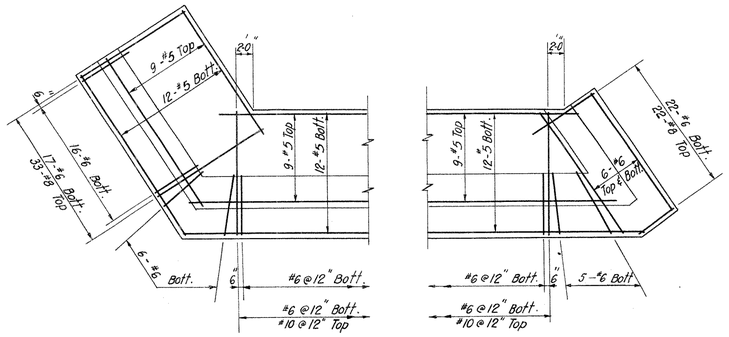

PLAN OF FOOTING REINFORCING AT CORNER

Scale: ½" = 1'-0"

GRAPHIC SCALE 1/8" = 1'

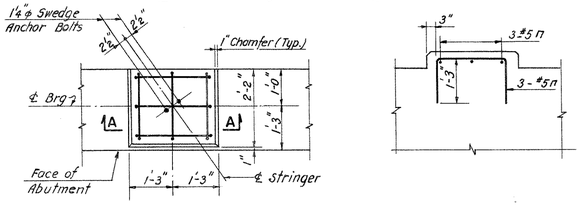

PLAN — SECTION A-A

INTERMEDIATE PAD DETAIL

Scale: ½" = 1'-0"

GRAPHIC SCALE 1/2" = 1'

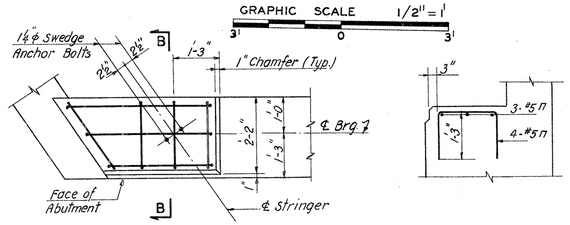

PLAN — SECTION B-B

END PAD DETAIL

Scale: ½" = 1'-0"

GRAPHIC SCALE 1/2" = 1'

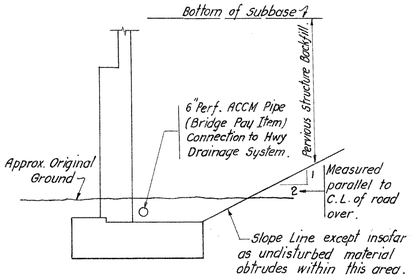

BACKFILL AND DRAINAGE DETAIL

Not to Scale

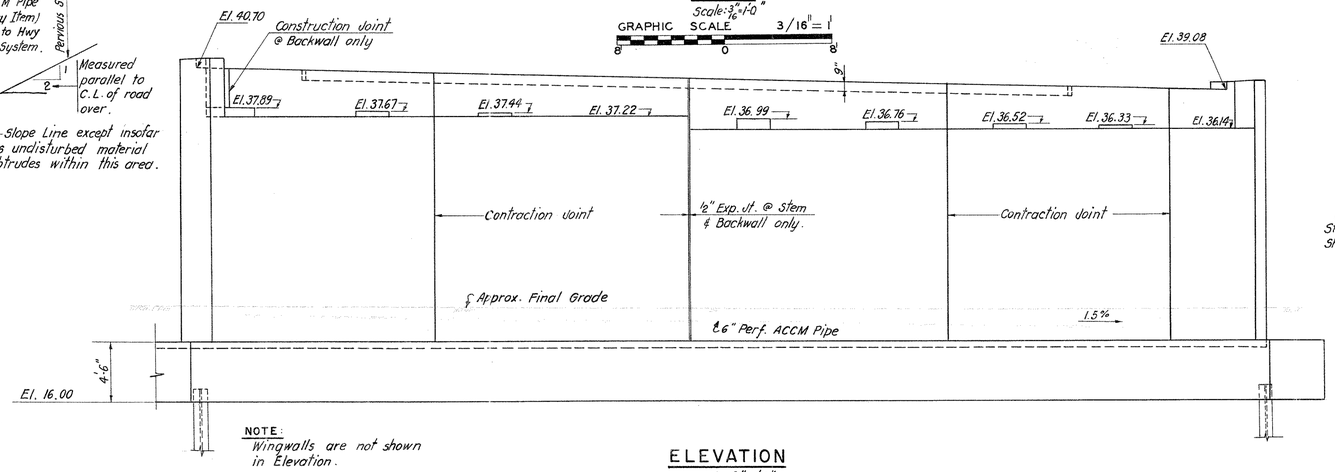

NOTE: Wingwalls are not shown in Elevation.

ELEVATION

Scale: 3/16" = 1'-0"

GRAPHIC SCALE 3/16" = 1'

NOTES:

For General Notes, see Bridge Sheet No. 1

For Typical Abutment Section, Plan Section thru Stem & Plan Section thru Backwall, see Bridge Sheet No. 4.

For Pile Plan, see Bridge Sheet No. 7

The information, including estimated quantities of work, shown on these sheets is based on limited investigations by the state and is in no way warranted to indicate the true conditions or actual quantities or distribution of quantities of work which will be required.

REVISIONS		
NO.	DATE	DESCRIPTION

FED. AID PROJ. NO. I-84-4(42)63

CONNECTICUT
STATE HIGHWAY DEPARTMENT

TOWN OF EAST HARTFORD
INTERSTATE ROUTE NO. 84
BRIDGE (B) - (2)
OVER RELOCATED ASH ST.
SOUTH ABUTMENT

DESIGNED BY E.L.PAVLO, CONSULTING ENGINEER

SCALES AS SHOWN
MADE BY C.D. & E.W. DATE 12-15-60
CHECKED BY M.A.G. DATE 12-27-60
APPROVED [signature] DATE 1-30-61

PROJECT NO. 42-134

BRIDGE SHEET NO. 5 OF 10

"ARKNIGHT" TRACING CLOTH JOSEPH MERRITT & CO. 9023

42 133 134

FORM NO. ENG. 18 ED. 11-52

PUB. ROAD DIV. NO.	STATE	TOWN	FED. AID PROJ. NO.	PROJ. NO.	YEAR	ROUTE NO.	SHEET NO.	TOTAL SHEETS
1	CONN.	EAST HARTFORD	I-84 4(42)63	42-134	1962	I-84	50	216

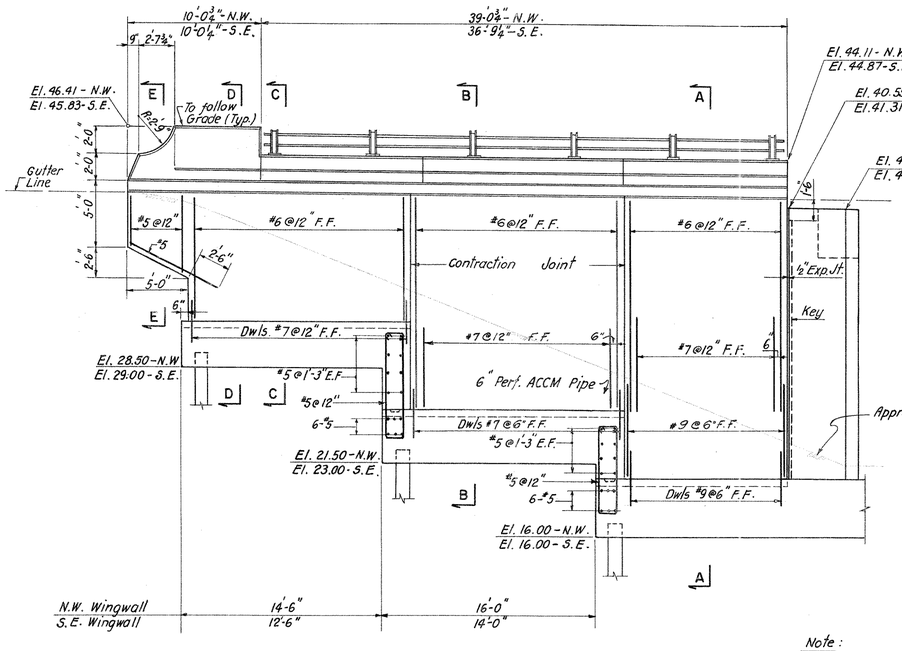

NORTHWEST WINGWALL ELEVATION (SHOWN)
SOUTHEAST WINGWALL ELEVATION (SIMILAR)
Scale: 3/16" = 1'-0"

GRAPHIC SCALE 3/16" = 1'

Note:
Parapet & Footing reinforcement are not shown in Elevations.

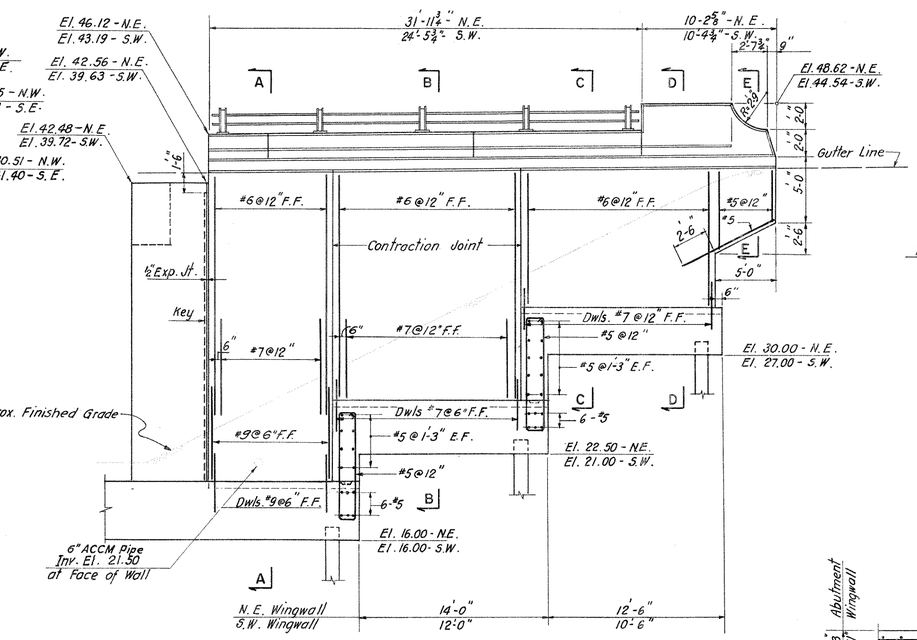

NORTHEAST WINGWALL ELEVATION (SHOWN)
SOUTHWEST WINGWALL ELEVATION (SIMILAR)
Scale: 3/16" = 1'-0"

GRAPHIC SCALE 3/16" = 1'

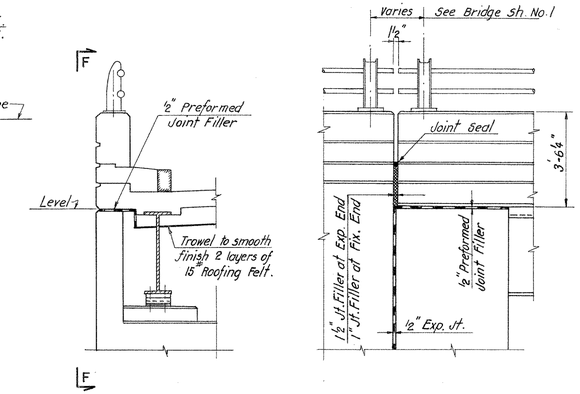

CHEEK WALL DETAIL
Scale: 3/8" = 1'-0"

ELEVATION F - F
Scale: 3/8" = 1'-0"

GRAPHIC SCALE 3/8" = 1'

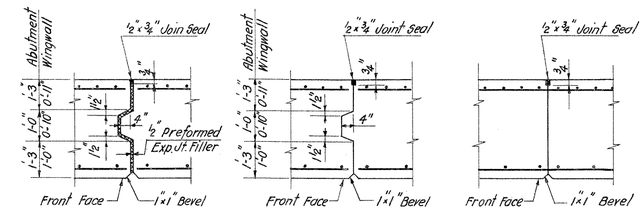

EXPANSION JOINT
Not to Scale

CONTRACTION JOINT
Not to Scale

CONSTRUCTION JOINT
Not to Scale

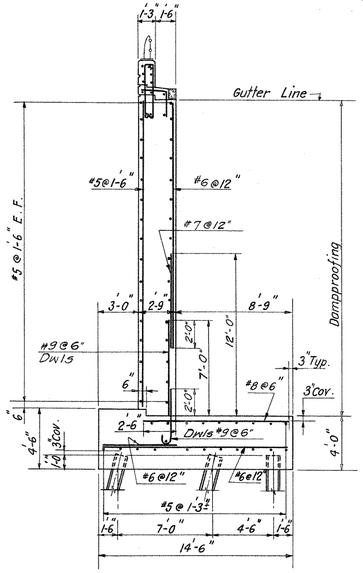

SECTION A-A
Scale: 3/16" = 1'-0"

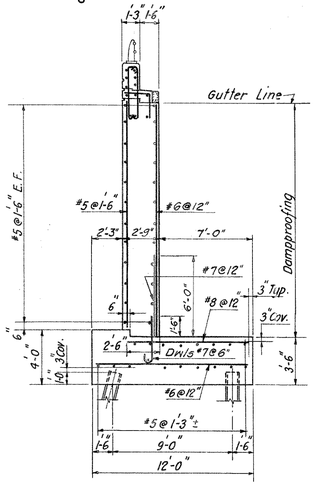

SECTION B-B
Scale: 3/16" = 1'-0"

GRAPHIC SCALE 3/16" = 1'

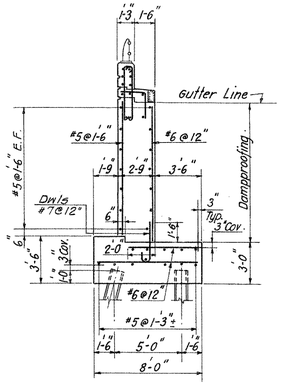

SECTION C-C
Scale: 3/16" = 1'-0"

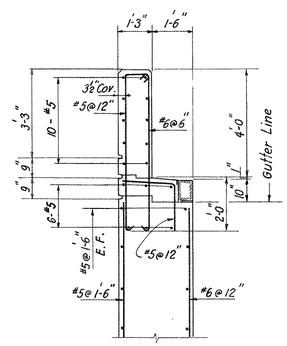

SECTION D-D
Scale: 3/8" = 1'-0"

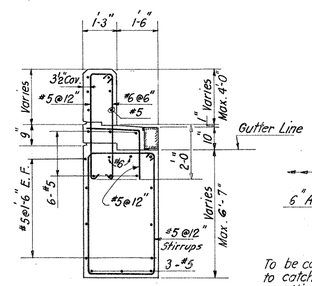

SECTION E-E
Scale: 3/8" = 1'-0"

GRAPHIC SCALE 3/8" = 1'

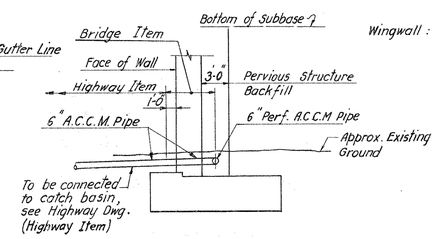

BACKFILL AND DRAINAGE DETAIL
Not to Scale

JOINTS NOTES:

Abutment: Keys to extend from top of footing to 1'-0" below bridge seat.
Joint Seal to extend from top of footing to top of backwall except as shown on sheet No. 2

Wingwall: Keys to extend from top of footing to 1'-6" below gutter line.
Joint Seal to extend from top of footing to top of curb and horizontally along joint to inside face of parapet except as shown on sheet No. 2.

NOTES:

For General Notes, see Bridge Sheet No. 1
For Pile Plan, see Bridge Sheet No. 7
For Typical Parapet Section, Typical Anchor and Stone Detail, see Bridge Sheet No. 2
For Bridge Rail Details, see Bridge Sheet No. 9
Reinforcing bars to have 2" cover except where shown otherwise.

The information, including estimated quantities of work, shown on these sheets is based on limited investigations by the state and is in no way warranted to indicate the true conditions or actual quantities or distrubution of quantities of work which will be required.

REVISIONS		
NO.	DATE	DESCRIPTION

FED. AID PROJ. NO. I-84-4(42)63

CONNECTICUT
STATE HIGHWAY DEPARTMENT
TOWN OF EAST HARTFORD
INTERSTATE ROUTE NO. 84
BRIDGE (B) - (2)
OVER RELOCATED ASH ST.
WINGWALLS AND DETAILS

DESIGNED BY E.L. PAVLO, CONSULTING ENGINEER
SCALES AS SHOWN
MADE BY C.D. & E.W. DATE 12-15-60
CHECKED BY V.T. DATE 1-19-61
APPROVED [signature] DATE 1-30-61
PROJECT NO. 42-134
BRIDGE SHEET NO. 6 OF 10

"ARKWRIGHT" TRACING CLOTH JOSEPH MERRITT & CO. 11810

FORM NO. ENG. 15 ED. 11-52

PUB. ROAD DIV. NO.	STATE	TOWN	FED. AID PROJ. NO.	PROJ. NO.	YEAR	ROUTE NO.	SHEET NO.	TOTAL SHEETS
1	CONN.	EAST HARTFORD	I-84 4(42)63	42-134	1962	I-84	51	216

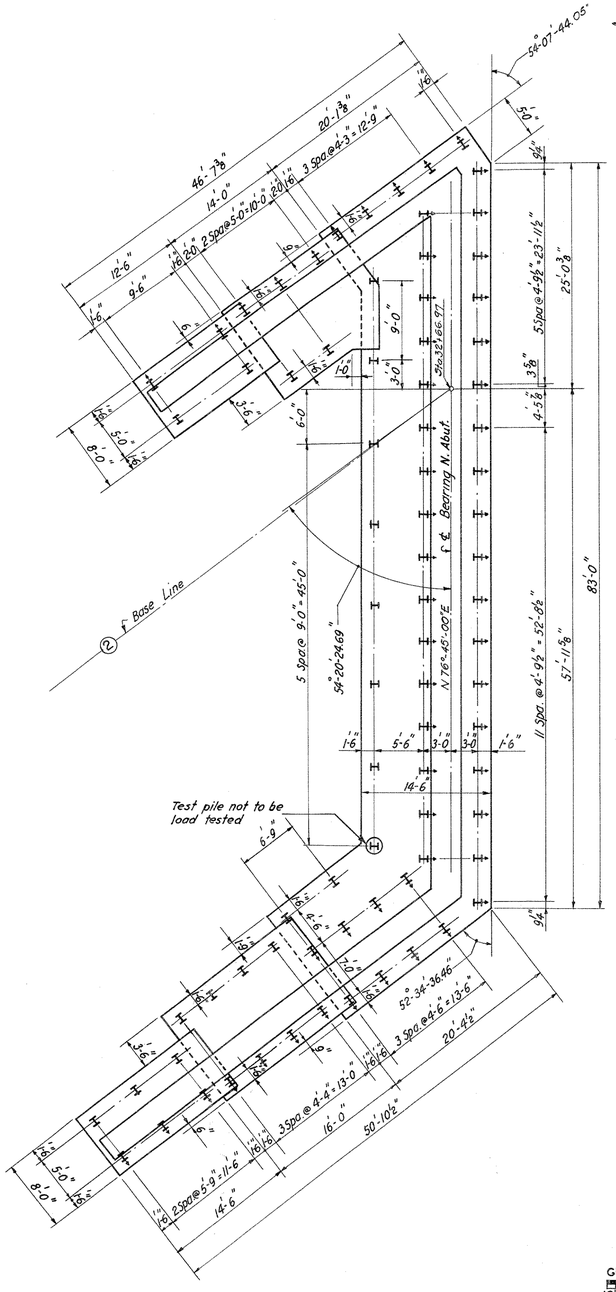

PILE PLAN

Scale: 1/8" = 1'-0"

GRAPHIC SCALE 1/8" = 1'

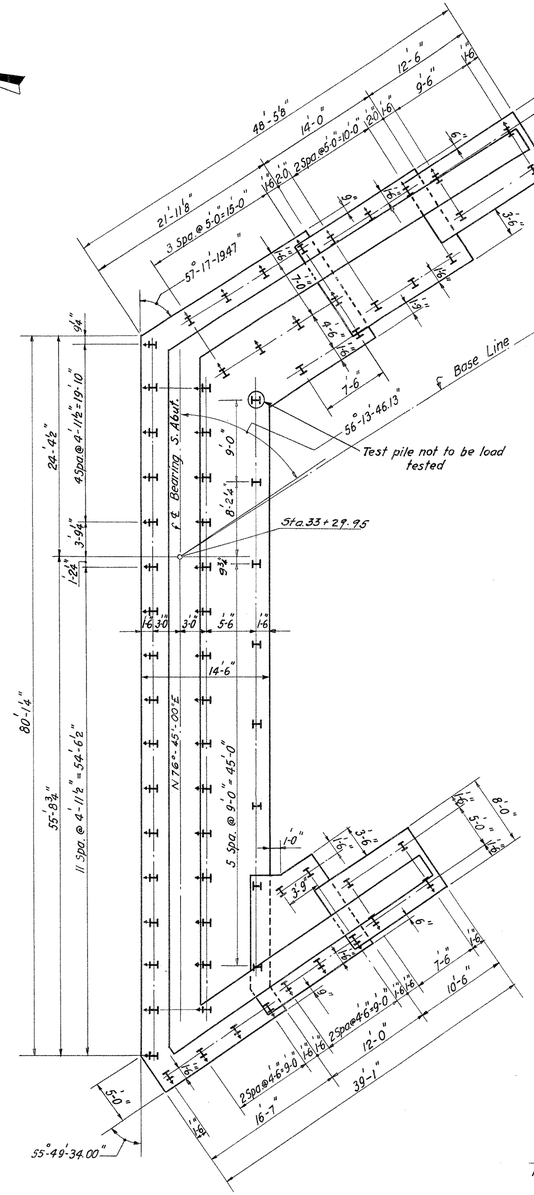

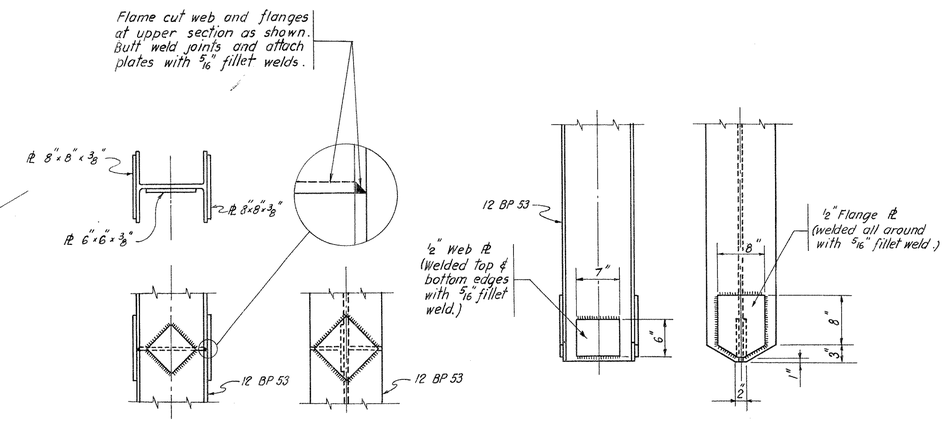

TYPICAL FIELD PILE SPLICE

Scale: 1" = 1'-0"

TYPICAL PILE POINT REINFORCEMENT

Scale: 1" = 1'-0"

GRAPHIC SCALE 1" = 1'

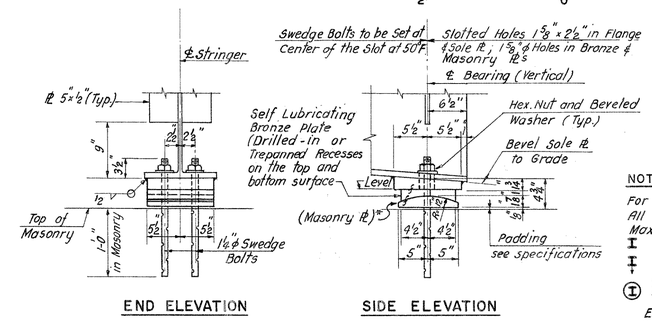

END ELEVATION

SIDE ELEVATION

EXPANSION BEARING SHOE DETAILS

Scale: 1" = 1'-0"

NOTES:

For General Notes, see Bridge Sheet No. 1
All Piles to be 12 BP 53 Steel Bearing Piles.
Maximum Design Load per pile = 70 tons
I Indicates vertical pile
I Indicates pile battered at 1:4 in direction of arrow.
(I) Indicates test pile.

Estimated Pile Lengths:
North Abutment - 80'
South Abutment - 85'

* Shall conform to ASTM A-242 (modified) steel. See Special Provision for "Structural Steel."

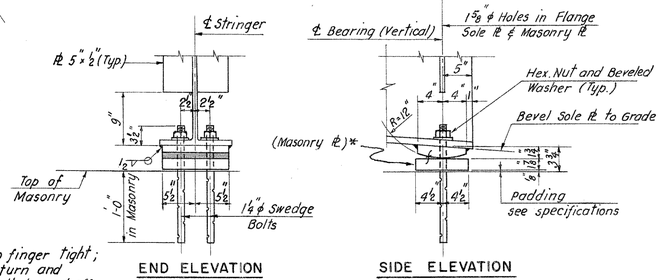

END ELEVATION

SIDE ELEVATION

FIXED BEARING SHOE DETAILS

Scale: 1" = 1'-0"

GRAPHIC SCALE 1" = 1'

NOTE:

Nuts to be drawn up finger tight; then backed off ⅓ turn and threads of swedge bolt burred off at face of nut with a pointed tool.

The information, including estimated quantities of work, shown on these sheets is based on limited investigations by the state and is in no way warranted to indicate the true conditions or actual quantities or distribution of quantities of work which will be required.

REVISIONS		
NO.	DATE	DESCRIPTION

FED. AID PROJ. NO. I-84-4(42)63

CONNECTICUT
STATE HIGHWAY DEPARTMENT

TOWN OF EAST HARTFORD
INTERSTATE ROUTE NO. 84
BRIDGE B-2
OVER RELOCATED ASH ST.
PILE PLAN AND SHOE DETAILS

DESIGNED BY E. L. PAVLO, CONSULTING ENGINEER

SCALES AS SHOWN
MADE BY C. D. & E. W. DATE 12-15-60
CHECKED BY V. T. DATE 1-27-61
APPROVED [signature] DATE 1-30-61

PROJECT NO. 42-134

BRIDGE SHEET NO. 7 OF 10

"ARKWRIGHT" TRACING CLOTH JOSEPH MERRITT & CO. 11210

PUB. ROAD DIV. NO.	STATE	TOWN	FED. AID PROJ. NO.	PROJ. NO.	YEAR	ROUTE NO.	SHEET NO.	TOTAL SHEETS
1	CONN.	EAST HARTFORD	I-84-4 (42)63	42-134	1962	I-84	52	215

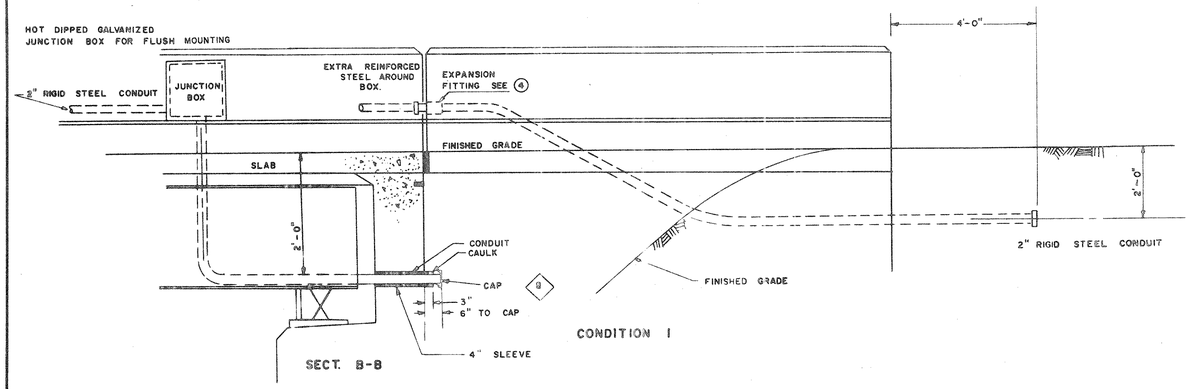

CONDUIT PARAPET TO FILL 3

SCALE ½" = 1'-0"
GRAPHIC SCALE 1/2" = 1'
3' 0 3'

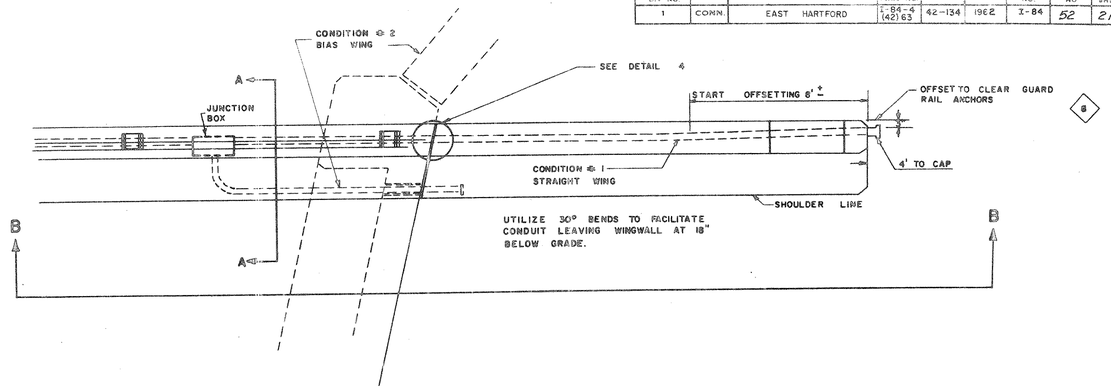

CONDUIT PARAPET TO FILL 1

NOT TO SCALE

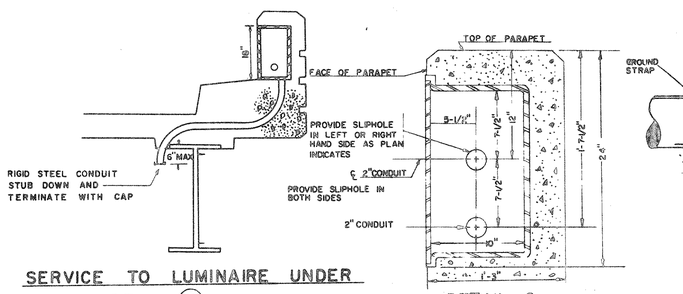

SERVICE TO LUMINAIRE UNDER STRUCTURE 6

NOT TO SCALE

DETAIL 2

18" X 18" X 10" JUNCTION BOX FOR LIGHT STANDARD
NOT TO SCALE

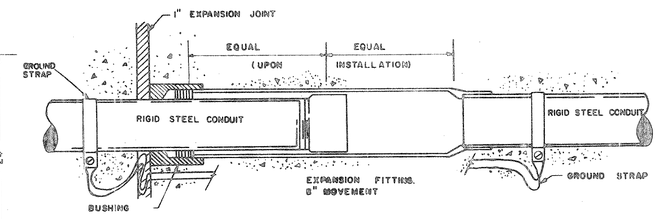

DETAIL OF EXPANSION FITTING 4

USE AT ALL EXPANSION JOINTS
NOT TO SCALE

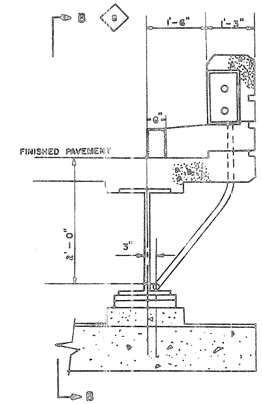

SECT A-A

NOT TO SCALE

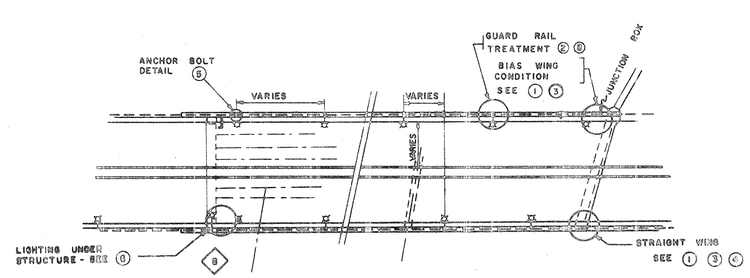

INDEX TO DETAILS

NOT TO SCALE

FEDERAL AID PROJECT NO. I-84-4-(42)63

CONNECTICUT
STATE HIGHWAY DEPARTMENT
TRAFFIC DIVISION
TOWN OF EAST HARTFORD
INTERSTATE ROUTE NO. 84

BRIDGE B - 2
OVER RELOCATED ASH ST.
ELECTRICAL DETAILS

REVISIONS		
NO.	DATE	DESCRIPTION

SCALE AS NOTED	ELECTRICAL		PROJECT NO.
DESIGNED BY	C. W. JOHNSON	3/1/61	42-134
MADE BY	R. E. WENTWORTH	3/1/61	
SUBMITTED BY	H. A. KERR	3/1/61	BRIDGE SH. NO.
APPROVED BY	R. M. Williston	3-1-61	8 OF 10

FORM NO. ENG. 15 ED. 11-52

PUB. ROAD DIV. NO.	STATE	TOWN	FED. AID PROJ. NO.	PROJ. NO.	YEAR	ROUTE NO.	SHEET NO.	TOTAL SHEETS
1	CONN.	EAST HARTFORD	I-84 4(42)63	42-134	1962	I-84	53	216

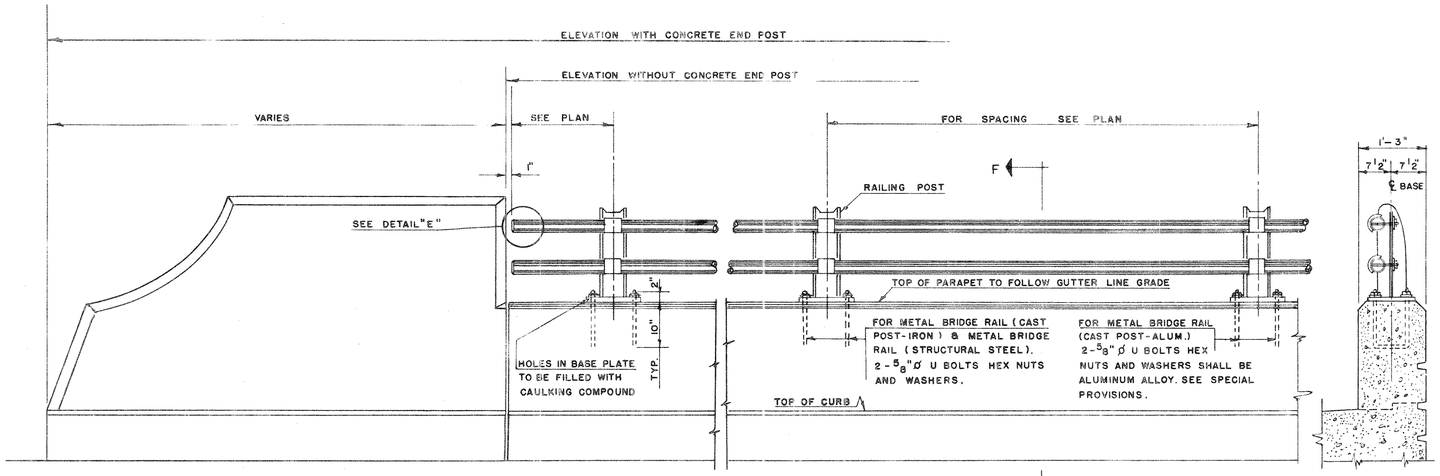

ELEVATION
CONC. END POST AND RAIL
SCALE 3/4" = 1'-0"

SECTION F-F
SCALE 3/4" = 1'-0"

GRAPHIC SCALE 3/4" = 1'
2' 0 2'

METAL BRIDGE RAIL
(STRUCTURAL STEEL)

ALL POSTS TO BE 6 WF 20 STRUCTURAL STEEL.
ALL RAILS TO BE 2 1/2"ø STANDARD STEEL PIPE.
RAILING POSTS SHALL BE VERTICAL.
IF NECESSARY SHIM WITH LEAD WOOL AND CAULK. COST TO BE INCLUDED IN ITEM METAL BRIDGE RAIL. (STRUCTURAL STEEL.)
FOR PAINTING SEE SPECIAL PROVISIONS.
ALL POSTS & BASE PLATES TO BE OF STRUCTURAL STEEL CONFORMING TO A.S.T.M. A-7.

METAL BRIDGE RAIL
(CAST POST - IRON)

ALL POSTS TO BE MALLEABLE IRON CASTING CONFORMING TO A.S.T.M. A-47 GRADE 35018 OR DUCTILE IRON CASTING CONFORMING TO A.S.T.M. A-339.
ALL RAILS TO BE 2 1/2"ø STANDARD STEEL PIPE.
RAILING POSTS SHALL BE VERTICAL.
IF NECESSARY SHIM WITH LEAD WOOL AND CAULK. COST TO BE INCLUDED IN ITEM METAL BRIDGE RAIL (CAST POST-IRON.)
FOR PAINTING SEE SPECIAL PROVISIONS.

METAL BRIDGE RAIL
(CAST POST - ALUMINUM)

ALL POSTS TO BE CAST OF ALUMINUM. SEE SPECIAL PROVISION.
ALL RAILS TO BE 3" O.D. X 2.625" I.D. ALUMINUM TUBING. SEE SPECIAL PROVISIONS.
RAILING POSTS SHALL BE VERTICAL.
IF NECESSARY SHIM WITH ALUMINUM SHEETS AND CAULK.
COST TO BE INCLUDED IN ITEM METAL BRIDGE RAIL (CAST POST-ALUM.)
ALUMINUM RAILING AND POSTS SHALL NOT BE PAINTED.

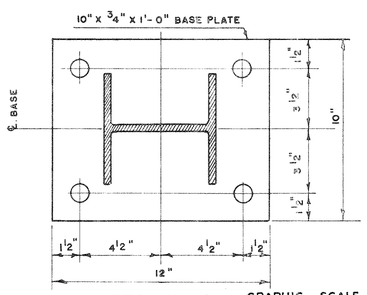

SECTION B-B
SCALE 3" = 1'-0"

GRAPHIC SCALE 3" = 1'
6" 0 6"

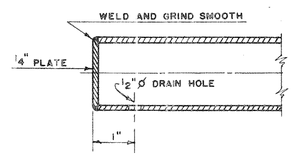

DETAIL "E"
NOT TO SCALE

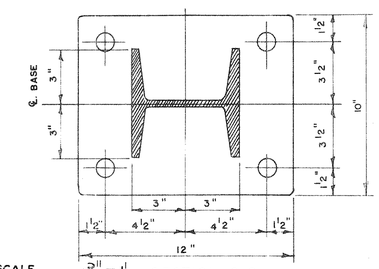

GRAPHIC SCALE 3" = 1'
6" 0 6"

SECTION C-C
SCALE 3" = 1'-0"

GENERAL NOTES:

UNLESS OTHERWISE SPECIFIED ON THE PLANS OR IN THE SPECIAL PROVISIONS METAL BRIDGE RAIL MAY BE: METAL BRIDGE RAIL (STRUCTURAL STEEL). METAL BRIDGE RAIL (CAST POST-IRON) OR METAL BRIDGE RAIL (CAST POST-ALUMINUM).
COST OF FURNISHING AND SETTING 5/8"ø U BOLTS, HEX NUTS AND WASHERS TO BE INCLUDED IN ITEM "METAL BRIDGE RAIL."
FOR RAIL POST SPACING, SEE BRIDGE SHEET NO. 1

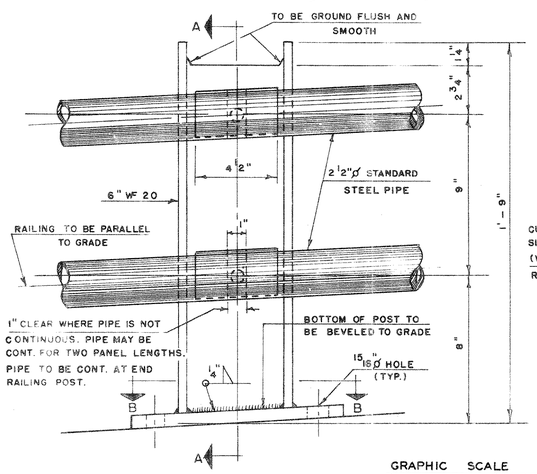

ELEVATION OF POST
SCALE 3" = 1'-0"

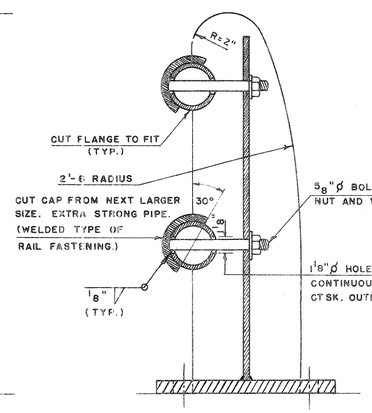

SECTION A-A
SCALE 3" = 1'-0

GRAPHIC SCALE 3" = 1'
6" 0 6"

DETAILS
STRUCTURAL STEEL POST
FOR METAL BRIDGE RAIL (STUCTURAL STEEL)

FOR METAL BRIDGE RAIL (CAST POST-ALUMINUM) 3" O.D. X 2.625" I.D. ALUMINUM TUBING

FOR METAL BRIDGE RAIL (CAST POST-IRON) 2 1/2"ø STD. STEEL PIPE.

1" CLEAR WHERE PIPE IS NOT CONTINUOUS. PIPE MAY BE CONT. FOR TWO PANEL LENGTHS. PIPE TO BE CONT. AT END RAILING POST.

RAILING TO BE PARALLEL TO GRADE

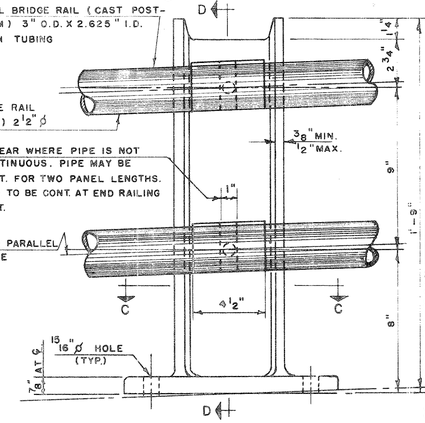

ELEVATION OF POST
SCALE 3" = 1'-0"

NOTE

DETAILS OF METAL BRIDGE RAILING AND FASTENING SIMILAR TO DETAILS SHOWN FOR METAL BRIDGE RAILING. (STRUCTURAL STEEL.)

FOR METAL BRIDGE RAIL (CAST POST-ALUM.) CUT CAP FROM 3 1/2" O.D. X 3" I.D. ALUMINUM TUBING.

FOR METAL BRIDGE RAIL (CAST POST-IRON) CUT CAP FROM NEXT LARGER SIZE EXTRA STRONG PIPE.

GRADE LEVEL TO ±2%
GRADE ±2% TO ±4%
GRADE ±4% TO ±6%
0" 1'-4 3/4" 2'-5 1/2"

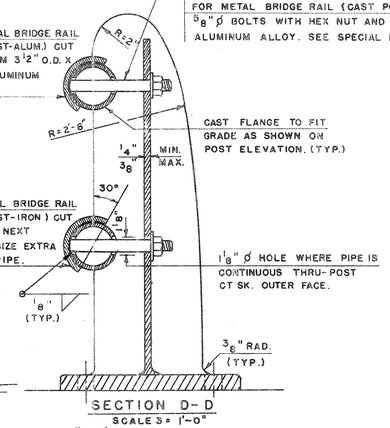

SECTION D-D
SCALE 3" = 1'-0"

FOR METAL BRIDGE RAIL (CAST POST-IRON) 5/8"ø BOLTS WITH HEX NUT AND WASHERS

FOR METAL BRIDGE RAIL (CAST POST-ALUMINUM) 5/8"ø BOLTS WITH HEX NUT AND WASHERS OF ALUMINUM ALLOY. SEE SPECIAL PROVISIONS.

CAST FLANGE TO FIT GRADE AS SHOWN ON POST ELEVATION. (TYP.)

GRAPHIC SCALE 3" = 1'
6" 0 6"

DETAILS
CAST POST
FOR METAL BRIDGE RAIL (CAST POST-IRON)
AND
FOR METAL BRIDGE RAIL (CAST POST-ALUMINUM)

REVISIONS		
NO.	DATE	DESCRIPTION

FED AID PROJ. NO. I-84-4(42)63

CONNECTICUT
STATE HIGHWAY DEPARTMENT

TOWN OF EAST HARTFORD
INTERSTATE ROUTE NO. 84
BRIDGE B-2

OVER RELOCATED ASH ST.
METAL BRIDGE RAIL

DESIGNED BY C.H.D.
SCALES AS NOTED
MADE BY G.M.K. & G.J.Z. DATE 4-29-60
CHECKED BY DATE
APPROVED DATE

PROJECT NO. 42-134
BRIDGE SHEET NO. 9 OF 10

"ARNIGHT" TRACING CLOTH JOSEPH MERRITT & CO. 11810

PUB. ROAD DIV. NO.	STATE	TOWN	FED. AID PROJ. NO.	PROJ. NO.	YEAR	ROUTE NO.	SHEET NO.	TOTAL SHEETS
1	CONN.	EAST HARTFORD	I-84 4(42)63	42-134	1962	I-84	54	216

GRAPHIC SCALE. VERT. 1" = 5'

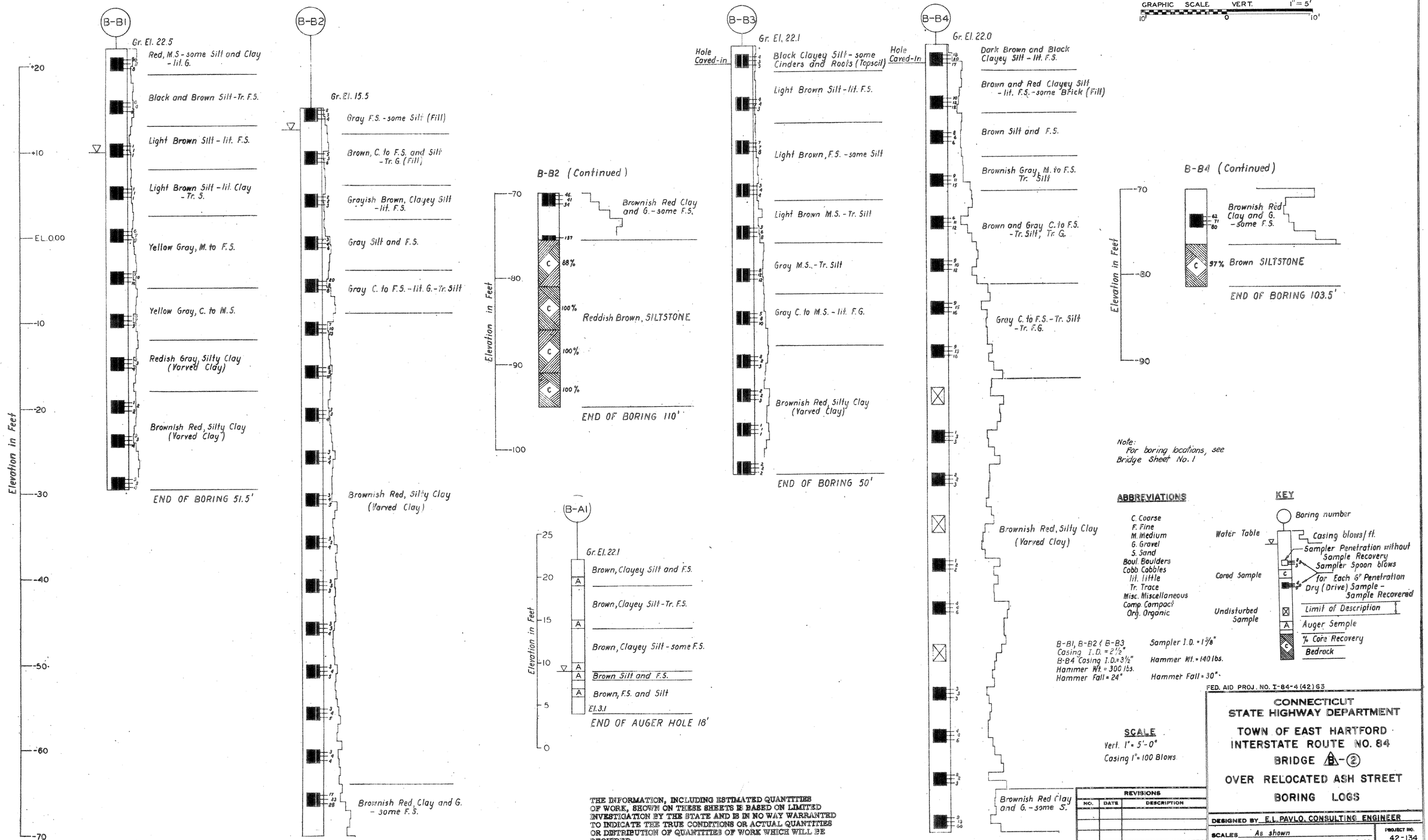

Note:
For boring locations, see Bridge Sheet No. 1

ABBREVIATIONS

C. Coarse
F. Fine
M. Medium
G. Gravel
S. Sand
Boul. Boulders
Cobb. Cobbles
lit. little
Tr. Trace
Misc. Miscellaneous
Comp. Compact
Org. Organic

KEY

Boring number
Water Table
Casing blows/ft.
Sampler Penetration without Sample Recovery
Sampler Spoon blows for Each 6" Penetration
Cored Sample
Dry (Drive) Sample - Sample Recovered
Undisturbed Sample
Limit of Description
Auger Sample
% Core Recovery
Bedrock

B-B1, B-B2 & B-B3 Casing I.D. = 2½"
B-B4 Casing I.D. = 3½"
Hammer Wt. = 300 lbs.
Hammer Fall = 24"

Sampler I.D. = 1⅜"
Hammer Wt. = 140 lbs.
Hammer Fall = 30"

SCALE

Vert. 1" = 5'-0"
Casing 1" = 100 Blows

THE INFORMATION, INCLUDING ESTIMATED QUANTITIES OF WORK, SHOWN ON THESE SHEETS IS BASED ON LIMITED INVESTIGATION BY THE STATE AND IS IN NO WAY WARRANTED TO INDICATE THE TRUE CONDITIONS OR ACTUAL QUANTITIES OR DISTRIBUTION OF QUANTITIES OF WORK WHICH WILL BE REQUIRED.

FED. AID PROJ. NO. I-84-4(42)63

CONNECTICUT
STATE HIGHWAY DEPARTMENT

TOWN OF EAST HARTFORD
INTERSTATE ROUTE NO. 84
BRIDGE B-2
OVER RELOCATED ASH STREET
BORING LOGS

REVISIONS		
NO.	DATE	DESCRIPTION

DESIGNED BY E.L. PAVLO, CONSULTING ENGINEER
SCALES As shown
MADE BY A.S. DATE 5-3-60
CHECKED BY DATE 5-5-60
APPROVED DATE 5-6-60

PROJECT NO. 42-134
BRIDGE SHEET NO. 10 OF 10

FORM NO. CHG. 19 ED 11-58

PUB. ROAD DIV. NO.	STATE	TOWN	FED. AID PROJ. NO.	PROJ. NO.	YEAR	ROUTE NO.	SHEET NO.	TOTAL SHEETS
1	CONN.	East Hartford	I-84 (42)63	42-134	1962	I-84	55	216

CURVE DATA
Δ = 8°-42'-01.75"
D = 2°-07'-19.44"
R = 2700'
T = 208.40'
L = 410.00'
E = 7.80'

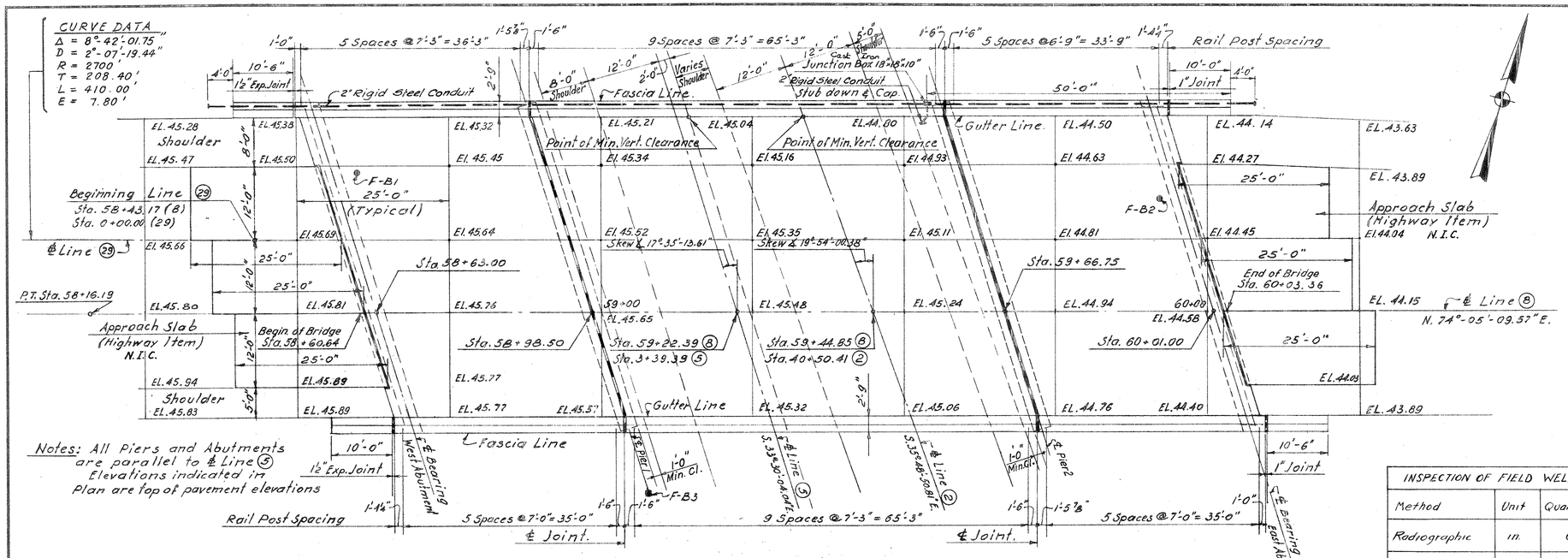

P L A N
Scale: 1" = 10'

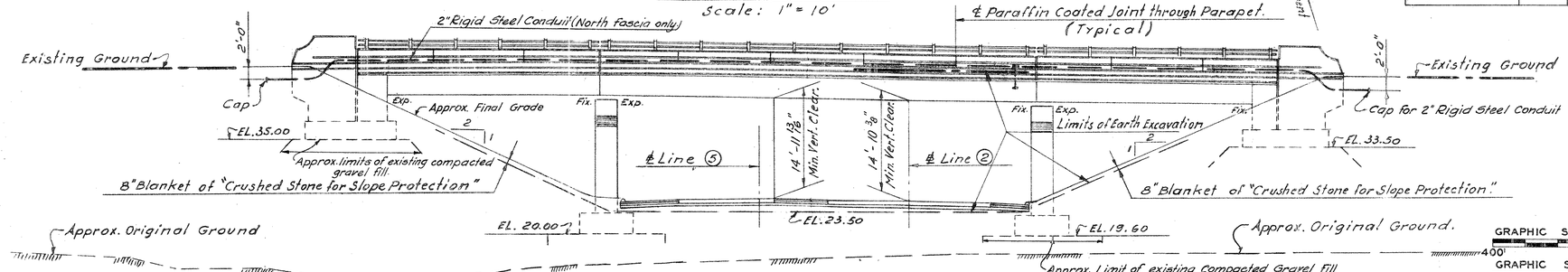

E L E V A T I O N
Scale: 1" = 10'
GRAPHIC SCALE 1" = 10' (20' 0 20')

GRAPHIC SCALE HORIZ. 1" = 200' (400' 0 400')
GRAPHIC SCALE VERT. 1" = 20' (40' 0 40')

NOTE:
The Limits of slope Protection shall be 2' outside Fascia Lines at East Abutment and North side of West Abutment. Protection for South side of West Abutment to be continuous with that for West Abutment for Bridge "G".

ESTIMATE OF QUANTITIES

ITEM	UNIT	QUANTITY
Earth Excavation	C.Y.	7050
Structure Excavation (Complete)	C.Y.	290
Soil Loading Test	Ea.	1
Class "A" Concrete	C.Y.	690
½" Preformed Expansion Joint Filler for Bridges	S.F.	115
1" Preformed Expansion Joint Filler for Bridges	S.F.	12
1½" Preformed Expansion Joint Filler for Bridges	S.F.	12
Deformed Steel Bars	Lb.	110000
Structural Steel	Lb.	200000
Dampproofing	C.Y.	115
Pervious Structure Backfill	C.Y.	300
Neoprene Plate for Bridge Expansion Joint	L.F.	120
6"x2½" Granite Stone Curbing for Bridges	L.F.	330
2" Rigid Steel Conduit in Bridge	L.F.	185
Cast Iron Junction Box (18"x18"x10")	Ea.	1
Crushed Stone for slope protection	Ton.	170
Metal Bridge Rail	L.F.	290
Shear Connectors	l.f.	544
Compacted Gravel Fill	C.Y.	150

INSPECTION OF FIELD WELDS		
Method	Unit	Quantity
Radiographic	in.	0
Magnetic Particle	l.f.	0

CONCRETE DISTRIBUTION:

SUPERSTRUCTURE	250	C.Y.
SUBSTRUCTURE	210	C.Y.
FOOTINGS	230	C.Y.
TOTAL	690	C.Y.

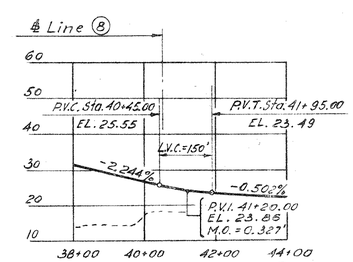

PROFILE LINE (2)

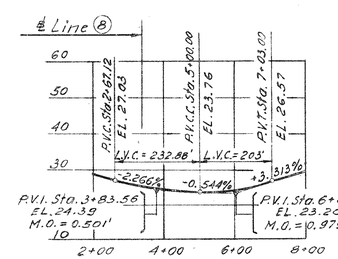

PROFILE LINE (5)

Scales: Horiz. 1" = 200'; Vert. 1" = 20'

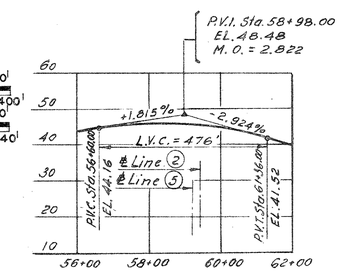

PROFILE LINE (8)

Scales: Horiz. 1" = 200'; Vert 1" = 20'

FED. AID PROJ. NO I-84-4(42)63

VERTICAL CLEARANCE NOTE:
Vertical Clearance shall be established at the time of substructure construction to compensate for future settlement. This shall be done by raising the elevation of the bottom of footings by an amount equal to the anticipated subsequent settlement as directed by the engineer.

GENERAL NOTES

SPECIFICATIONS: CONNECTICUT STATE HIGHWAY DEPARTMENT FORM 808 (JAN. 1955) AND SPECIAL PROVISIONS.
DESIGN SPECIFICATIONS: STANDARD SPECIFICATIONS FOR HIGHWAY BRIDGES (AASHO 1957) EXCEPT AS MODIFIED BY BUREAU OF PUBLIC ROAD "POLICY ON INTERSTATE SYSTEM PROJECTS" (AUGUST 1956) AND AS SUPPLEMENTED BY THE CONNECTICUT STATE HIGHWAY DEPARTMENT BRIDGE MANUAL JULY 1960.
LIVE LOAD: H-20-S16-44 ALTERNATE 24000# DUAL AXLE AT 4'-0" O.C. SLAB DESIGN AS PER TENTATIVE AASHO T. 8 (59).
FUTURE PAVING ALLOWANCE: 25 P.S.F.
COMPOSITE CONSTRUCTION: NO TEMPORARY INTERMEDIATE SUPPORTS SHALL BE USED DURING CONSTRUCTION. SUPERIMPOSED LOADS SHALL BE PLACED WHEN DIRECTED BY THE ENGINEER, BUT NOT LESS THAN 10 DAYS AFTER THE SLAB HAS BEEN POURED.
CLASS "A" CONCRETE: CLASS "A" CONCRETE SHALL BE USED THROUGHOUT. SEE SPECIAL PROVISIONS.
DEFORMED STEEL BARS: FOR GRADES OF DEFORMED STEEL BARS SEE SPECIAL PROVISIONS.
EXPOSED EDGES: EXPOSED EDGES SHALL BE BEVELED 1" x 1" UNLESS DIMENSIONED OTHERWISE.

STRUCTURAL STEEL: ALL MATERIAL FOR NON-PLATED ROLLED BEAMS SHALL CONFORM TO A.S.T.M. A-7. ALL MATERIAL FOR PLATED ROLLED BEAMS AND SOLE PLATES SHALL CONFORM TO A.S.T.M. A-373. MASONRY PLATES SHALL conform to ASTM A-242 (modified) steel. See Special Provision for "Structural Steel." ALL OTHER STEEL SHALL CONFORM TO A.S.T.M. A-7 UNLESS NOTED OTHERWISE.

PAINTING: FOR SHOP AND FIELD PAINTING OF STRUCTURAL STEEL AND METAL BRIDGE RAIL, SEE SPECIAL PROVISIONS.
JOINT SEAL: JOINT SEAL SHALL BE INCLUDED IN THE ITEM FOR CLASS "A" CONCRETE. SEE SPECIAL PROVISIONS.
FELT: THE COST OF FURNISHING AND PLACING 2 LAYERS OF 15# ROOFING FELT ON TOP OF BACKWALLS SHALL BE INCLUDED IN THE ITEM FOR CLASS "A" CONCRETE.
PARAFFIN: THE COST OF FURNISHING AND APPLYING PARAFFIN TO THE PARAPET JOINTS SHALL BE INCLUDED IN THE ITEM FOR CLASS "A" CONCRETE.
SPREAD FOOTINGS:
DESIGN SOIL PRESSURES SHOWN ON SHEETS NO. 6, 7 & 8.

WELDING: FOR INSPECTION OF WELDING, SEE SPECIAL PROVISIONS.
N.I.C. MEANS NOT INCLUDED IN CONTRACT.
REINFORCING BARS TO HAVE 2" COVER EXCEPT WHERE SHOWN OTHERWISE.

REVISIONS		
NO.	DATE	DESCRIPTION

THE INFORMATION, INCLUDING ESTIMATED QUANTITIES OF WORK, SHOWN ON THESE SHEETS IS BASED ON LIMITED INVESTIGATIONS BY THE STATE AND IS IN NO WAY WARRANTED TO INDICATE THE TRUE CONDITIONS OR ACTUAL QUANTITIES OR DISTRIBUTION OF QUANTITIES OF WORK WHICH WILL BE REQUIRED.

CONNECTICUT
STATE HIGHWAY DEPARTMENT

TOWN OF EAST HARTFORD
INTERSTATE ROUTE NO. 84
BRIDGE (F)-(8)
OVER LINES (2) & (5)

GENERAL PLAN & ELEVATION

DESIGNED BY E.L. PAVLO CONSULTING ENGINEER
SCALES AS SHOWN
MADE BY M.S. DATE 11.15.60
CHECKED BY M.Z. DATE 12.2.60
APPROVED [signature] DATE 1-9-61
PROJECT NO. 42-134
BRIDGE SHEET NO. 1 OF 11

PUB. ROAD DIV. NO.	STATE	TOWN	FED. AID PROJ. NO.	PROJ. NO.	YEAR	ROUTE NO.	SHEET NO.	TOTAL SHEETS
1	CONN.	East Hartford	I-84 (142)63	42-134	1962	I-84	56	216

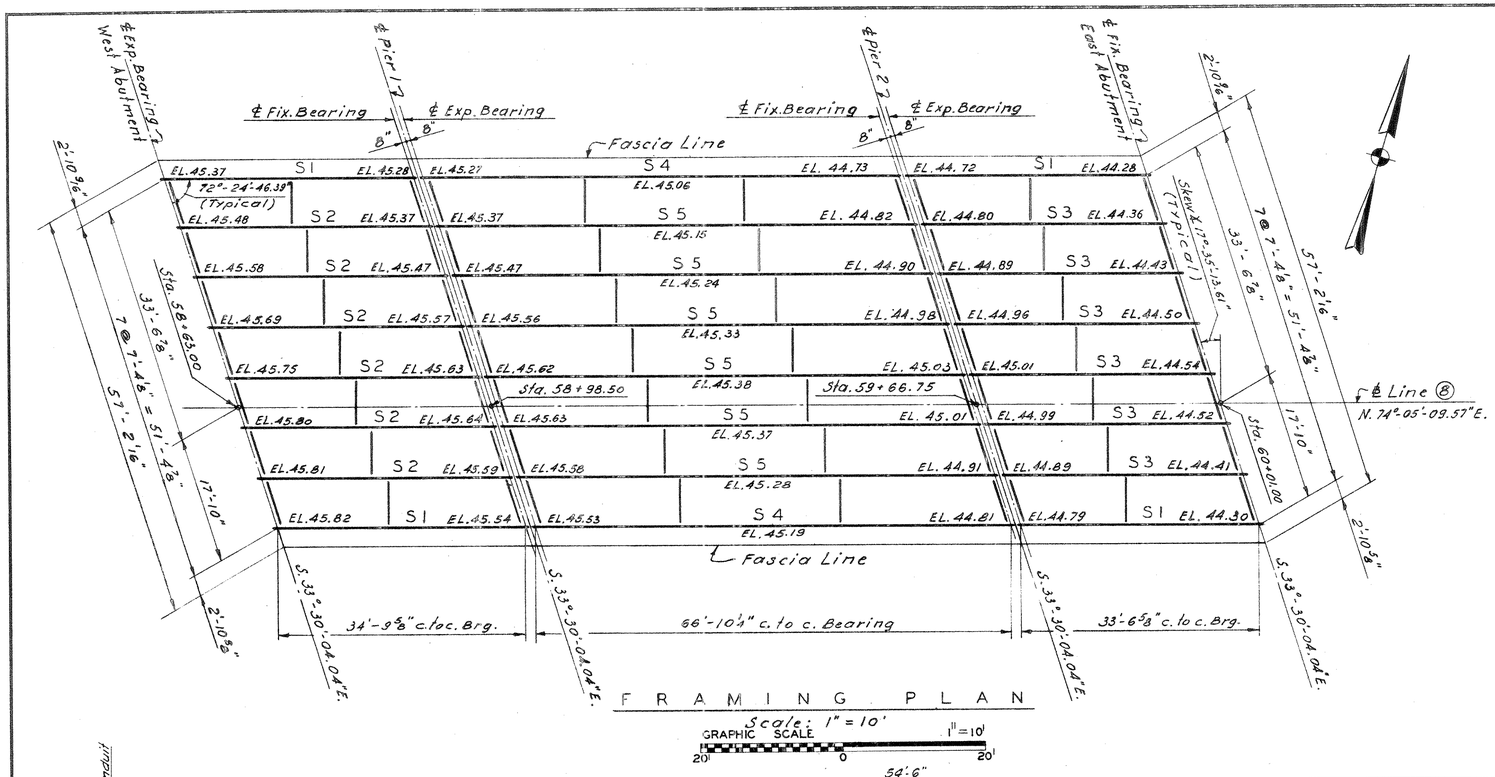

FRAMING PLAN

Scale: 1" = 10'

GRAPHIC SCALE 1" = 10' (20' 0 20')

STRINGER SCHEDULE																	
MARK	STRINGER SIZE	COVER PLATE		SHEAR CONNECTORS								DEAD LOAD DEFL.					
				SPIRAL PITCH				STUD PITCH				STRUCTURAL STEEL	SLAB	FUT. WEARING SURFACE	SAFETY CURB AND PARAPET	TOTAL	VERTICAL CURVE ORDINATE	TOTAL CAMBER REQUIRED
		SIZE	LENGTH	A1	A2	A3	A4	B1	B2	B3	B4							
S1	36 WF 150	-	-	-	-	-	-	-	-	-	-	-	1/16"	-	1/16"	1/8"	3/16"	5/16"
S2	30 WF 116	-	-	-	-	-	-	-	-	-	-	1/16"	1/8"	-	1/16"	1/4"	3/16"	7/16"
S3	30 WF 108	-	-	-	-	-	-	-	-	-	-	1/16"	1/8"	-	1/16"	1/4"	3/16"	7/16"
S4	36 WF 170	10" x 7/8"	46'-6"	*6"	*7"	4½"	6"	4½"	5½"	7½"	10"	1/4"	13/16"	1/8"	1/8"	1 5/16"	11/16"	2"
S5	36 WF 170	10" x 1"	47'-0"	*5½"	*7"	4½"	6"	4½"	5½"	7"	9½"	1/4"	13/16"	1/8"	1/8"	1 5/16"	11/16"	2"

Note : * - Denotes Double Spiral

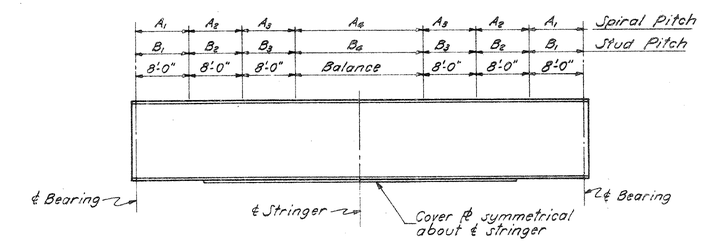

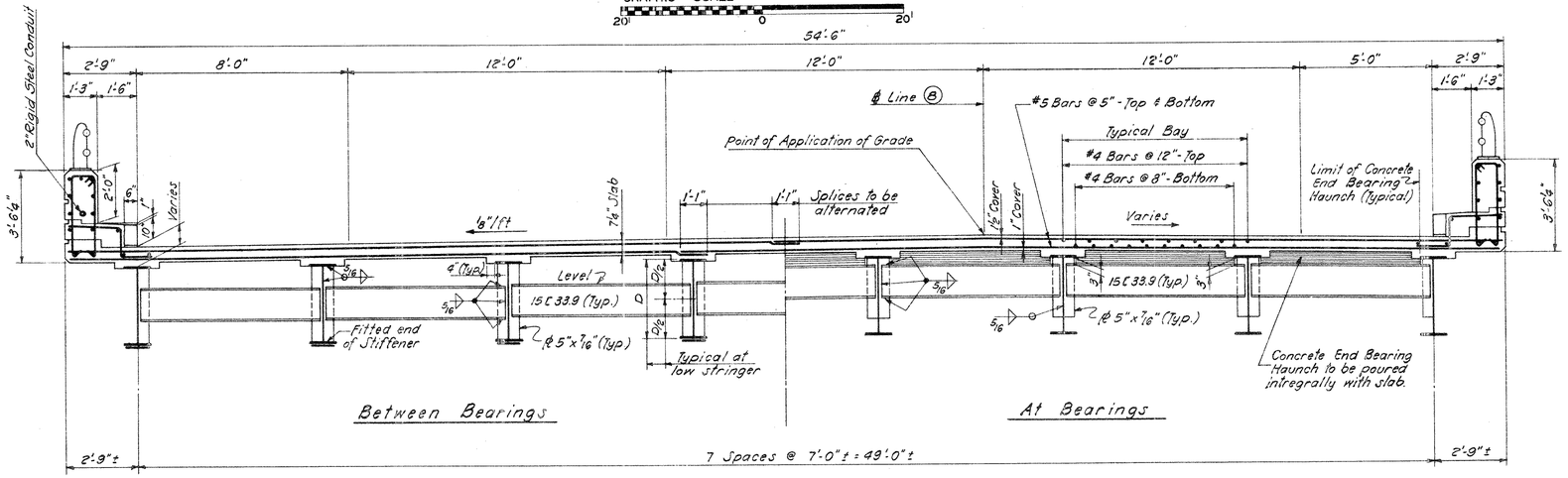

CROSS SECTION

Scale: ⅜" = 1'-0"

GRAPHIC SCALE 3/8" = 1' (4' 0 4')

STRINGER ELEVATION

Not to Scale

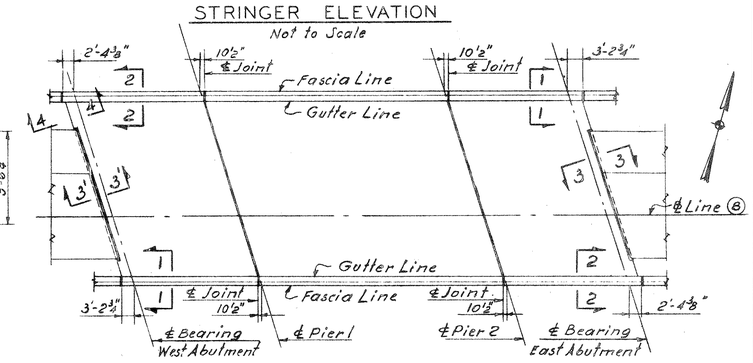

SLAB PLAN

Scale: 1" = 20'

GRAPHIC SCALE VERT. 1" = 20' (40' 0 40')

FED. AID PROJ. NO I-84-4(42)63

Notes: Shear Connectors not shown.
Main Reinforcement to be placed parallel to Abutments and Piers.

Notes:
For General Plan and Elevation see Bridge Sheet No. 1.
For General Notes see Bridge Sheet No. 1.
For Sections 1-1 and 2-2 see Bridge Sheet No. 5.
For Sections 3-3, 3'-3' and 4-4 see Bridge Sheet No. 4.
For additional Details see Bridge Sheets No. 3 & No. 4.
Elevations shown in Framing Plan are top of pavement Elevations over Stringers at ℄ Bearings or mid-span (Center Span)

REVISIONS		
NO.	DATE	DESCRIPTION

CONNECTICUT
STATE HIGHWAY DEPARTMENT

TOWN OF EAST HARTFORD
INTERSTATE ROUTE NO. 84
BRIDGE (F)-(8)
OVER LINES (2) & (5)

FRAMING PLAN & CROSS-SECTION

DESIGNED BY E.L. PAVLO, CONSULTING ENGINEER

SCALES AS SHOWN
MADE BY J.D. & M.S. DATE 12.6.60
CHECKED BY M.Z. DATE 12.8.60
APPROVED [signature] DATE 1-9-61

PROJECT NO. 42-134

BRIDGE SHEET NO. 2 OF 11

FED. ROAD DIV. NO.	STATE	TOWN	FED. AID PROJ. NO.	PROJ. NO.	YEAR	ROUTE NO.	SHEET NO.	TOTAL SHEETS
1	CONN.	EAST HARTFORD	I-84 (42)63	42-134	1962	I-84	57	216

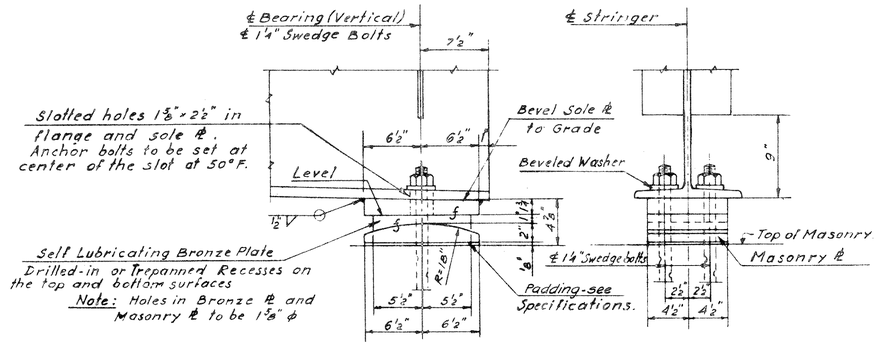

SIDE ELEVATION END ELEVATION

EXPANSION BEARING SHOE DETAILS

CENTER SPAN

Scale: 1½"=1'-0"

GRAPHIC SCALE 1 1/2" = 1'

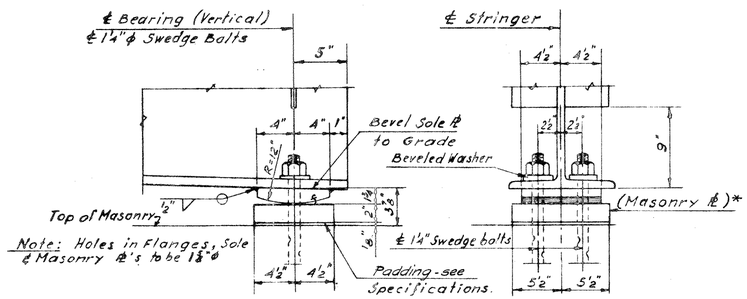

SIDE ELEVATION END ELEVATION

FIXED BEARING SHOE DETAILS

CENTER SPAN

Scale: 1½"=1'-0"

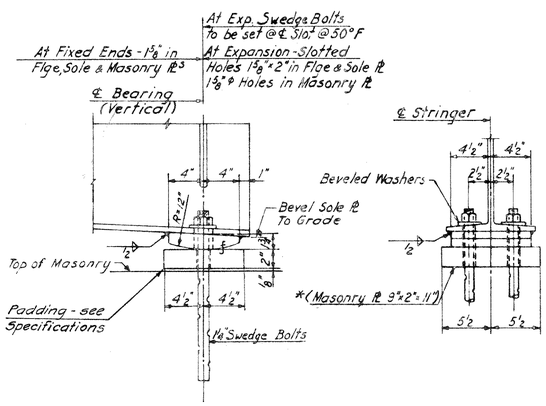

FIXED & EXPANSION BEARING SHOE DETAILS

END SPANS

Scale: 1½"=1'-0"

GRAPHIC SCALE 1 1/2" = 1'

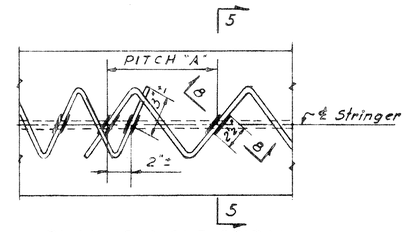

PLAN - SINGLE SPIRAL

Not to Scale.

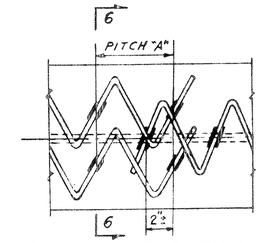

PLAN - DOUBLE SPIRAL

Not to Scale.

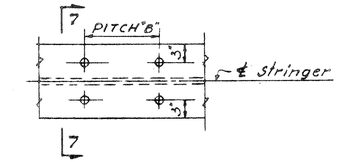

PLAN - WELDED STUDS

Not to Scale.

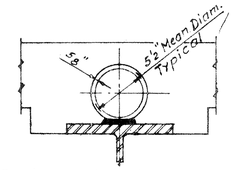

Estimated weight of Spiral Bars = 2800 lbs.

SECTION 5-5

Scale: 1½"=1'-0"

GRAPHIC SCALE 1 1/2" = 1'

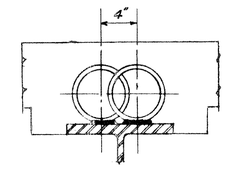

SECTION 6-6

Scale: 1½"=1'-0"

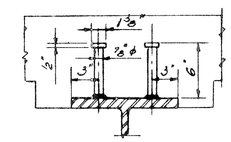

Estimated number of 6" Studs = 2150 each.

SECTION 7-7

Scale: 1½"=1'-0"

GRAPHIC SCALE 1 1/2" = 1'

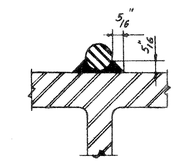

SECTION 8-8

Not to Scale.

SHEAR CONNECTOR DETAILS.

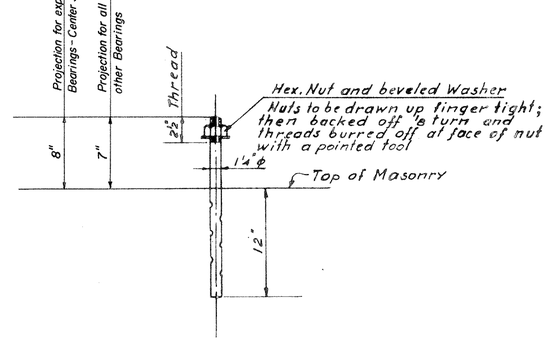

SWEDGE ANCHOR BOLT DETAIL

Scale: 1½"=1'-0"

GRAPHIC SCALE 1 1/2" = 1'

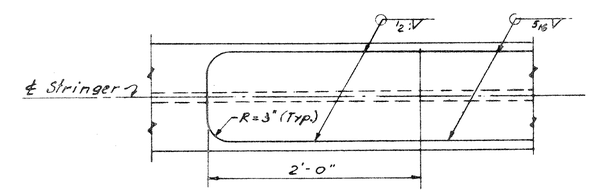

PLAN AT ENDS OF COVER PLATES

Scale: 1½"=1'-0"

* Shall conform to ASTM A-242 (modified) steel. See Special Provision for "Structural Steel."

THE INFORMATION, INCLUDING ESTIMATED QUANTITIES OF WORK, SHOWN ON THESE SHEETS IS BASED ON LIMITED INVESTIGATIONS BY THE STATE AND IS IN NO WAY WARRANTED TO INDICATE THE TRUE CONDITIONS OR ACTUAL QUANTITIES OR DISTRIBUTION OF QUANTITIES OF WORK WHICH WILL BE REQUIRED.

REVISIONS		
NO.	DATE	DESCRIPTION

FED. AID PROJ. I-84-4 (42)63

CONNECTICUT
STATE HIGHWAY DEPARTMENT

TOWN OF EAST HARTFORD
INTERSTATE ROUTE No. 84
BRIDGE A-8
OVER LINES 2 & 5
DETAILS I

DESIGNED BY E.L. PAVLO, CONSULTING ENGINEER

SCALES As Shown

MADE BY M.S. DATE 10-10-60

CHECKED BY M.Z. DATE 10-14-60

APPROVED [signature] DATE 2-28-61

PROJECT NO. 42-134

BRIDGE SHEET NO. 3 OF 11

FORM NO. 2HG. 18 ED 11-52

PUB. ROAD DIV. NO.	STATE	TOWN	FED. AID PROJ. NO.	PROJ. NO.	YEAR	ROUTE NO.	SHEET NO.	TOTAL SH'TS
1	CONN.	EAST HARTFORD	I-84 4(42)63	42-134	1962	I-84	53	216

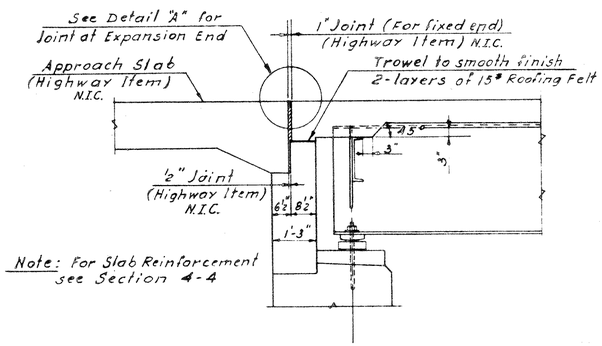

SECTION 3-3

(Section 3'-3' similar except for Detail "A")

Scale: ½" = 1'-0"

GRAPHIC SCALE 1/2" = 1'

3' 0 3'

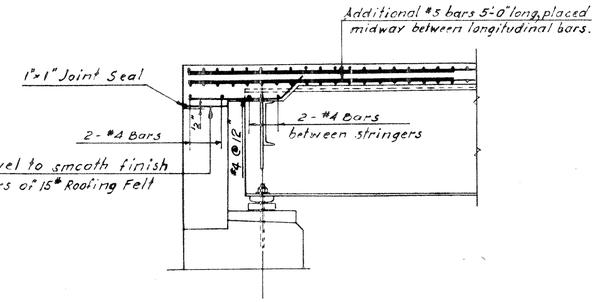

SECTION 4-4

Scale: ½" = 1'-0"

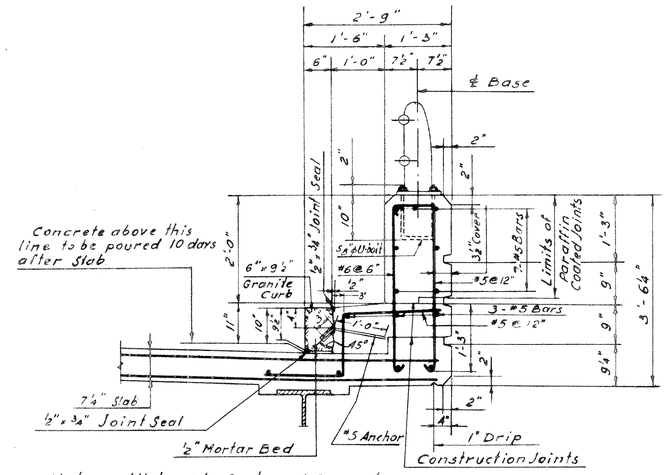

Note: All bars in Curb and Parapet to have 2" cover except where noted otherwise.

SAFETY CURB AND PARAPET DETAIL

Scale: ¾" = 1'-0"

GRAPHIC SCALE 3/4" = 1'

2' 0 2'

NOTES:

For rail post spacing see Bridge Sheet No. 1

For rail details see Bridge Sheet No. 10

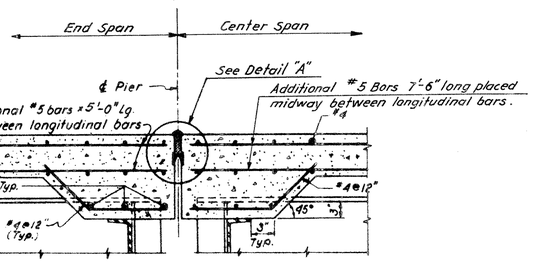

SECTION AT PIERS

Scale: 1" = 1'-0"

GRAPHIC SCALE 1" = 1'

2' 0 2'

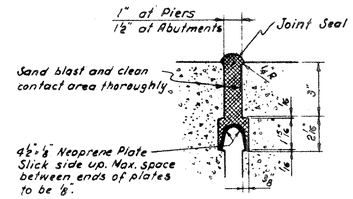

DETAIL "A"

Scale: 3" = 1'-0"

GRAPHIC SCALE 3" = 1'

6" 0 6"

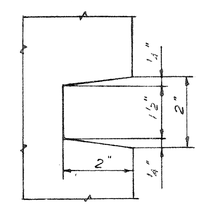

RUSTICATION DETAIL

Scale: 6" = 1'-0"

GRAPHIC SCALE 6" = 1'

3" 0 3"

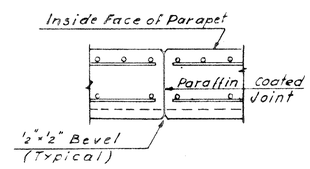

PARAFFIN COATED JOINT DETAIL

Scale: ¾" = 1'-0"

GRAPHIC SCALE 3/4" = 1'

2' 0 2'

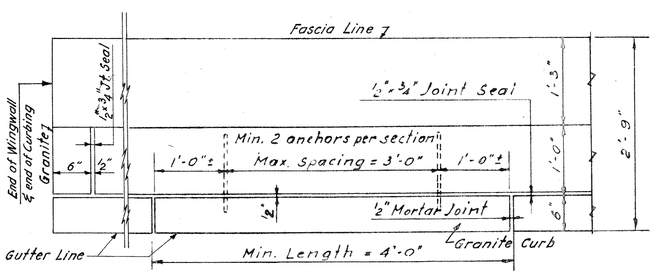

PLAN OF GRANITE CURB

Scale: 1" = 1'-0"

GRAPHIC SCALE 1" = 1'

2' 0 2'

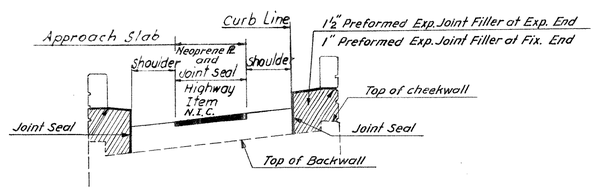

TYPICAL LIMITS FOR JOINT SEAL AT ABUTMENTS

Not to Scale

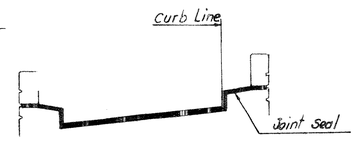

TYPICAL LIMITS FOR JOINT SEAL AT PIERS

Not to Scale

FED. AID PROJ. I-84-4(42)63

CONNECTICUT
STATE HIGHWAY DEPARTMENT

TOWN OF EAST HARTFORD
INTERSTATE ROUTE No. 84
BRIDGE A-8
OVER LINES 2 & 5
DETAILS II

REVISIONS		
NO.	DATE	DESCRIPTION

DESIGNED BY E.L. PAVLO, CONSULTING ENGINEER

SCALES As Shown

MADE BY M.S. DATE 10-10-60

CHECKED BY M.Z. DATE 10-14-60

APPROVED [signature] DATE 2-28-61

PROJECT NO. 42-134

BRIDGE SHEET NO. 4 OF 11

FORM NO. ENG. 19 ED 11-52

PUB. ROAD DIV. NO.	STATE	TOWN	FED. AID PROJ. NO.	PROJ. NO.	YEAR	ROUTE NO.	SHEET NO.	TOTAL SHEETS
1	CONN.	EAST HARTFORD	I-84 4(42)63	42-134	1962	I-84	59	216

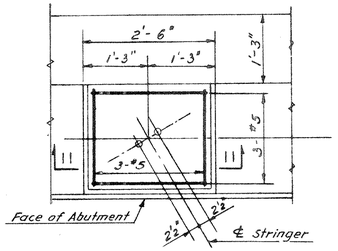

P L A N

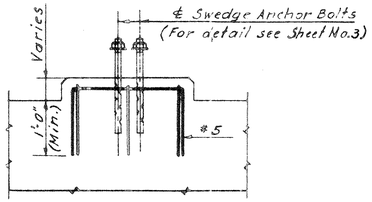

S E C T I O N 11-11

TYPICAL PAD DETAIL

Scale: ¾"=1'-0"

GRAPHIC SCALE 3/4"=1' (2' 0 2')

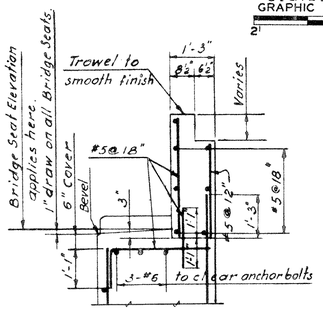

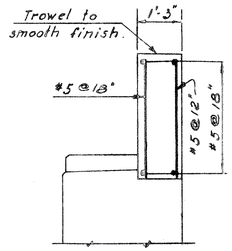

Note: For details not shown see Section 9-9

SECTION 9-9

Scale: ½"=1'-0"

GRAPHIC SCALE 1/2"=1' (3' 0 3')

SECTION 10-10

Scale: ½"=1'-0"

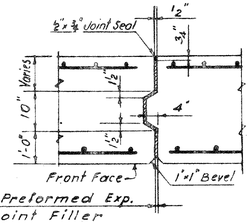

EXPANSION JOINT

Not to Scale.

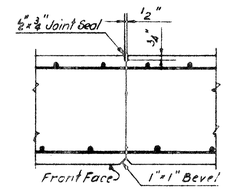

CONSTRUCTION JOINT

Not to Scale.

Joint Notes:

Abutments: Joint Seal to extend from top of footing to top of backwall.

Joint between Abutment and Wingwall: Keys to extend from top of Footing to within 1'-0" of the top of Bridge seat. Joint seal to extend from top of footing to top of backwall, except as shown on Sheet #4.

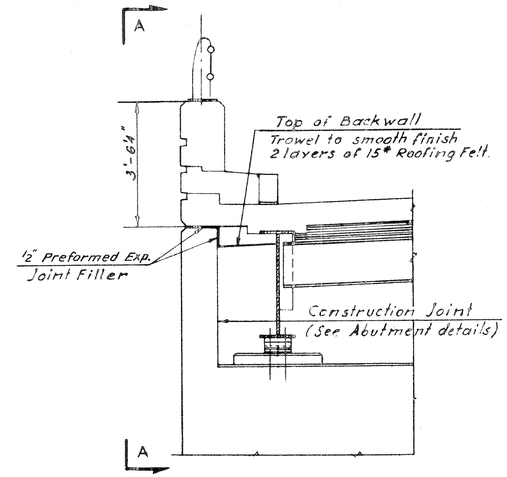

S E C T I O N 1-1

(Section 2-2 similar, opposite hand)

Scale: ½"=1'-0"

GRAPHIC SCALE 1/2"=1' (3' 0 3')

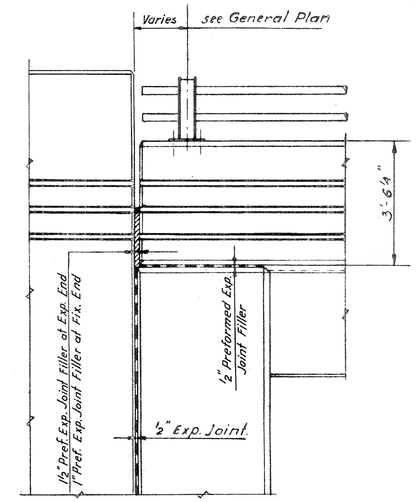

E L E V A T I O N A - A

Scale: ½"=1'-0"

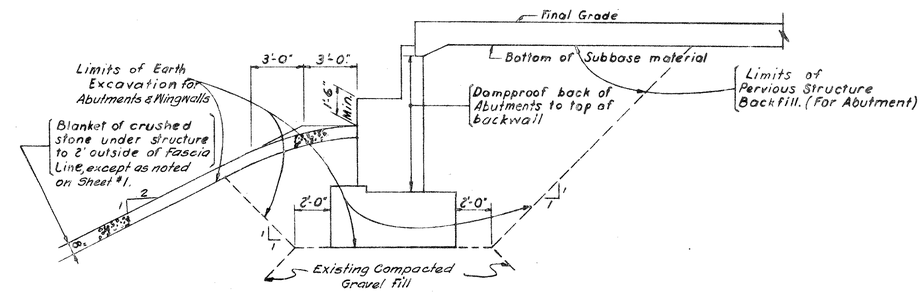

EXCAVATION, BACKFILL AND DRAINAGE DETAIL

No scale

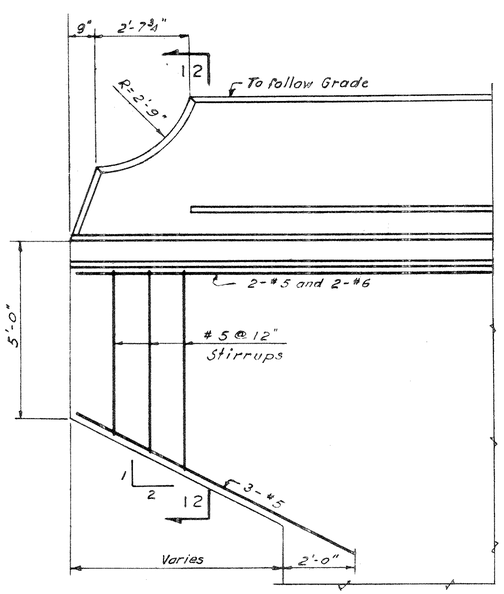

E N D P O S T D E T A I L

Scale: ½"=1'-0"

GRAPHIC SCALE 1/2"=1' (3' 0 3')

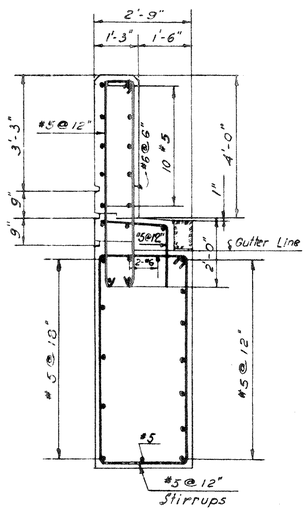

Note: For additional details see Wingwall Detail

S E C T I O N 12-12

Scale: ½"=1'-0"

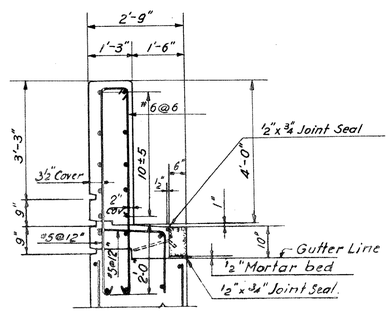

Note: For Rustication detail and Granite Curb details see Sheet No.4

WINGWALL DETAIL

Scale: ½"=1'-0"

GRAPHIC SCALE 1/2"=1' (3' 0 3')

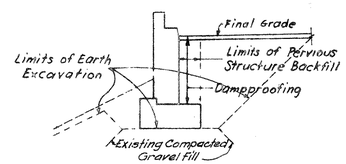

BACKFILL DETAIL OF WINGWALL

No scale.

REVISIONS		
NO.	DATE	DESCRIPTION

FED. AID PROJ. No. I-84-4(42)63

CONNECTICUT
STATE HIGHWAY DEPARTMENT

TOWN OF EAST HARTFORD
INTERSTATE ROUTE No. 84
BRIDGE A-8
OVER LINES 2 & 5
DETAILS III

DESIGNED BY E.L. PAVLO, CONSULTING ENGINEER

SCALES As Shown

MADE BY M.S. DATE 11-15-60

CHECKED BY M.Z. DATE 12-2-60

APPROVED [signature] DATE 2-28-61

PROJECT NO. 42-134

BRIDGE SHEET NO. 5 OF 11

FORM NO. ENG. 19 RD 11-52

PUB. ROAD DIV. NO.	STATE	TOWN	FED. AID PROJ. NO.	PROJ. NO.	YEAR	ROUTE NO.	SHEET NO.	TOTAL SHEETS
1	CONN.	EAST HARTFORD	I-84 4(42)63	42-134	1962	I-84	60	216

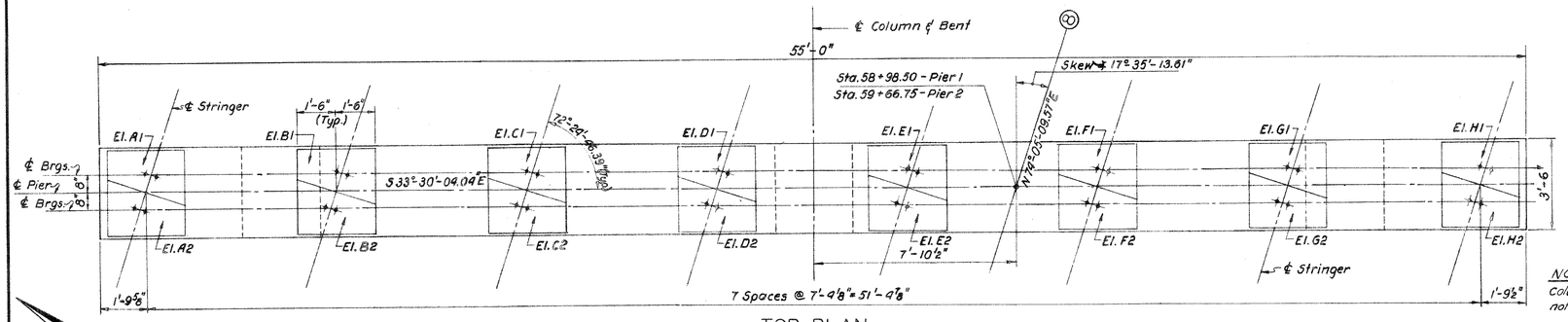

TOP PLAN

Scale: ⅜" = 1'-0" GRAPHIC SCALE 3/8" = 1'

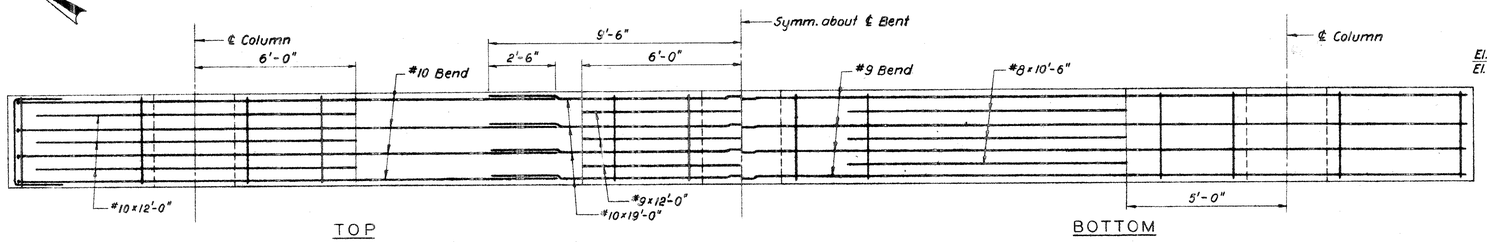

TOP BOTTOM

CAP REINFORCEMENT

Scale: ⅜" = 1'-0" GRAPHIC SCALE 3/8" = 1'

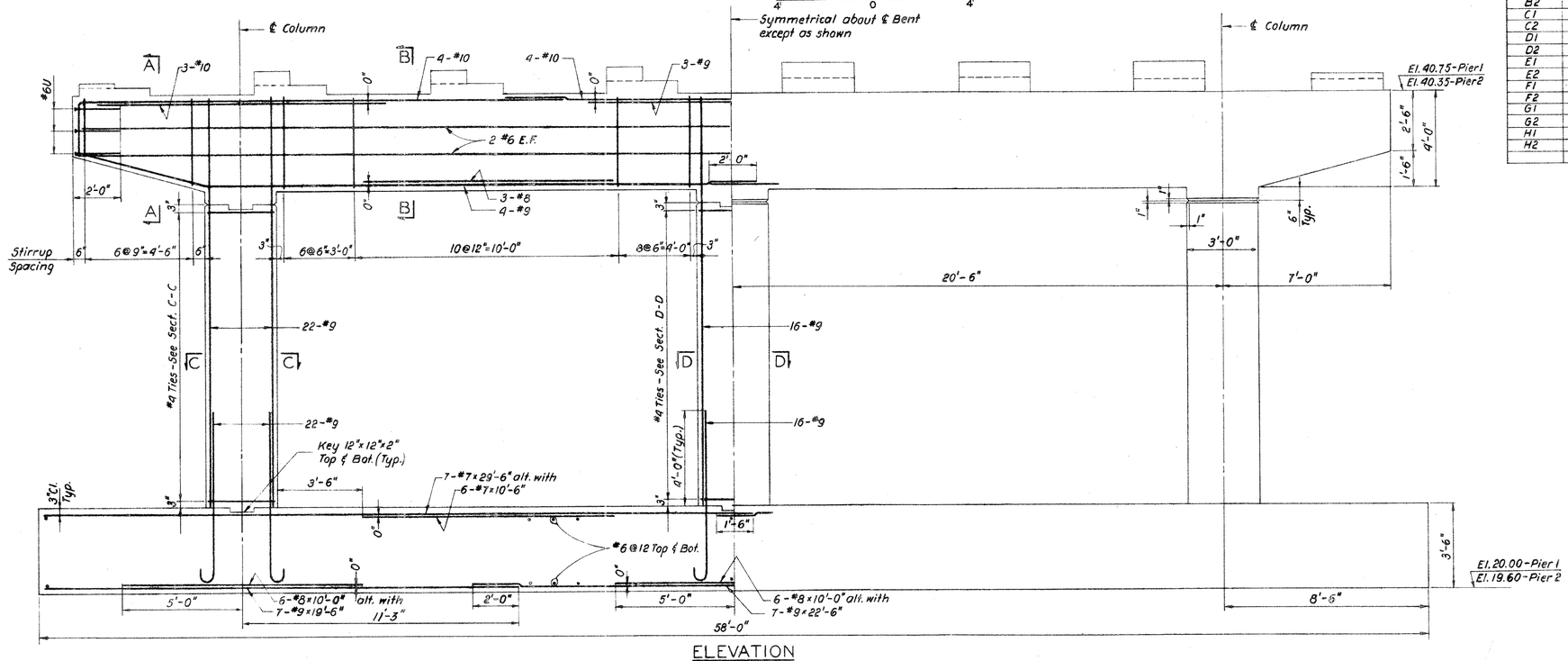

ELEVATION

Scale: ⅜" = 1'-0" GRAPHIC SCALE 3/8" = 1'

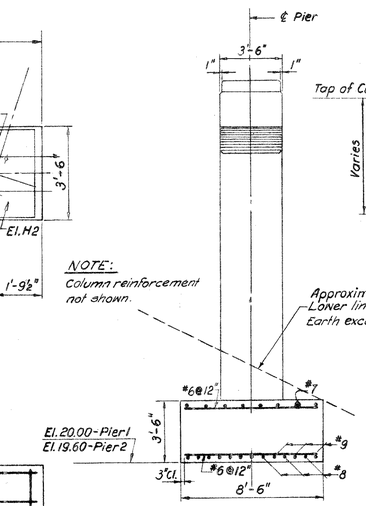

END ELEVATION

Scale: ¼" = 1'-0" GRAPHIC SCALE 1/4" = 1'

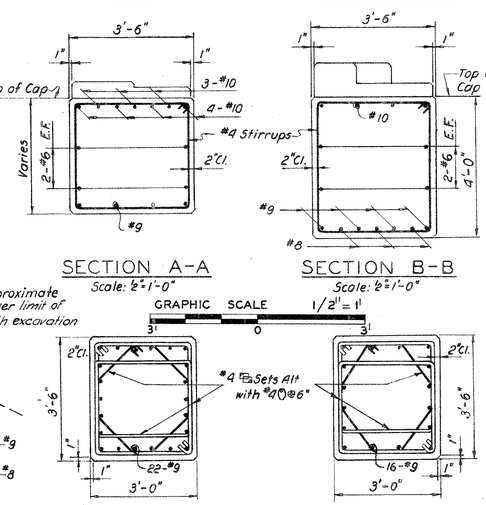

SECTION A-A

Scale: ½" = 1'-0"

SECTION B-B

Scale: ½" = 1'-0"

GRAPHIC SCALE 1/2" = 1'

SECTION C-C

Scale: ½" = 1'-0"

SECTION D-D

Scale: ½" = 1'-0"

GRAPHIC SCALE 1/2" = 1'

PAD ELEVATIONS		
PAD	PIER 1	PIER 2
A1	41.00	40.64
A2	41.19	40.63
B1	41.10	41.22
B2	41.78	40.72
C1	41.19	41.30
C2	41.88	40.80
D1	41.29	41.38
D2	41.97	40.88
E1	41.35	41.42
E2	42.03	40.92
F1	41.36	41.41
F2	42.05	40.91
G1	41.31	41.31
G2	42.00	40.80
H1	41.26	40.70
H2	41.46	40.70

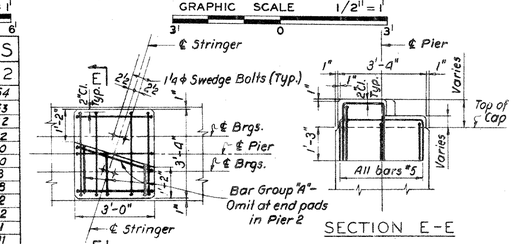

SECTION E-E

TYPICAL PAD DETAIL

Scale: ⅜" = 1'-0"

GRAPHIC SCALE 3/8" = 1'

NOTES:
For General Notes see Bridge Sheet No. 1
For Swedge Bolt details see Bridge Sheet No. 3
Design Soil Pressures: Maximum 1.8 t.s.f.
Average 1.3 t.s.f.

THE INFORMATION, INCLUDING ESTIMATED QUANTITIES OF WORK, SHOWN ON THESE SHEETS IS BASED ON LIMITED INVESTIGATIONS BY THE STATE AND IS IN NO WAY WARRANTED TO INDICATE THE TRUE CONDITIONS OR ACTUAL QUANTITIES OR DISTRIBUTION OF QUANTITIES OF WORK WHICH WILL BE REQUIRED.

REVISIONS		
NO.	DATE	DESCRIPTION

FED. AID PROJ. I-84-4(42)63

CONNECTICUT
STATE HIGHWAY DEPARTMENT

TOWN OF EAST HARTFORD
INTERSTATE ROUTE NO. 84
BRIDGE F-8
OVER LINES 2 & 5
PIERS

DESIGNED BY E. LIONEL PAVLO, CONSULTING ENGINEER
SCALES As shown
MADE BY A.S. DATE 12.28.60
CHECKED BY N.K. DATE 1.6.61
APPROVED [signature] DATE 1.9.61
PROJECT NO. 42-134
BRIDGE SHEET NO. 6 OF 11

PROJ. NO. 42-134

PUB. ROAD DIV. NO.	STATE	TOWN	FED. AID PROJ. NO.	PROJ. NO.	YEAR	ROUTE NO.	SHEET NO.	TOTAL SHEETS
1	CONN.	East Hartford	I-84 (42:63)	42-134	1962	I-84	61	216

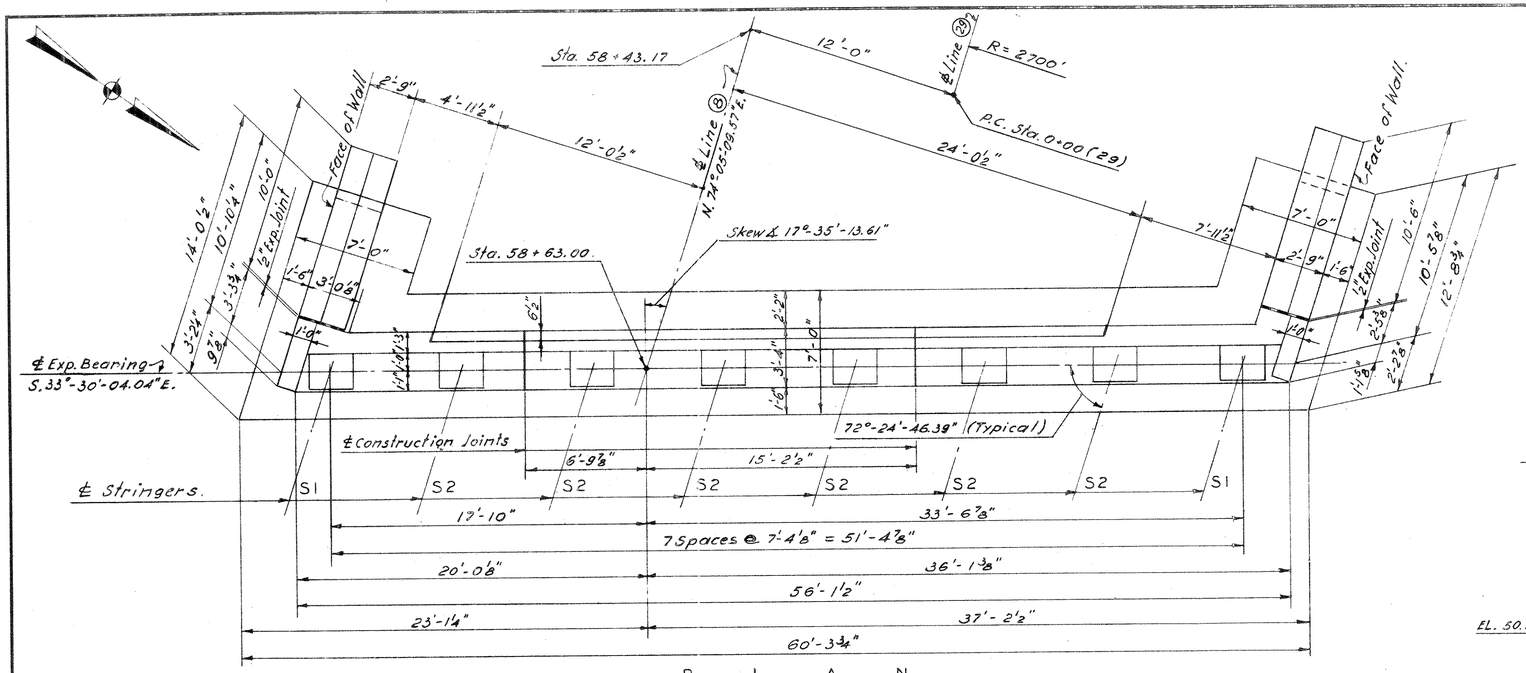

P L A N

Scale: ¼"=1'-0"

GRAPHIC SCALE 1/4"=1'

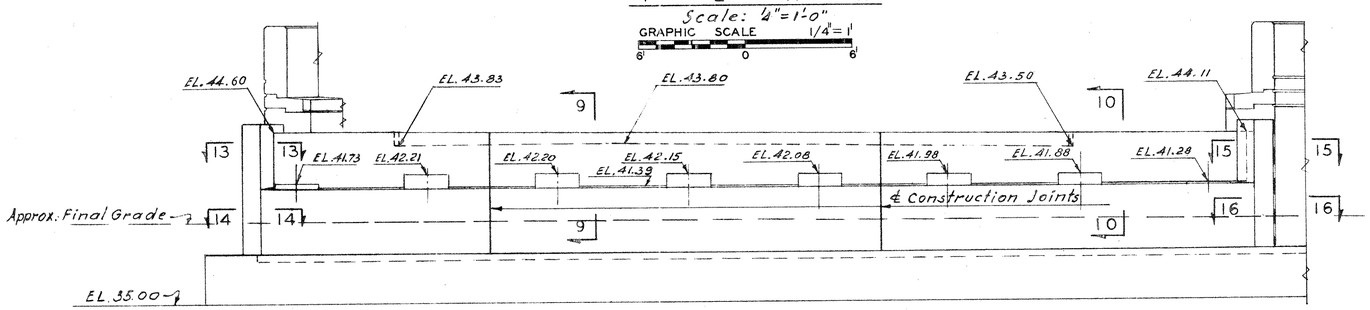

E L E V A T I O N

Scale: ¼"=1'-0"

GRAPHIC SCALE 1/4"=1'

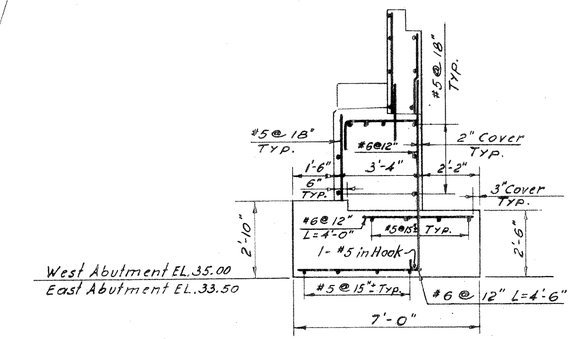

TYPICAL SECTION THROUGH ABUTMENT

Scale: ⅜"=1'-0"

GRAPHIC SCALE 3/8"=1'

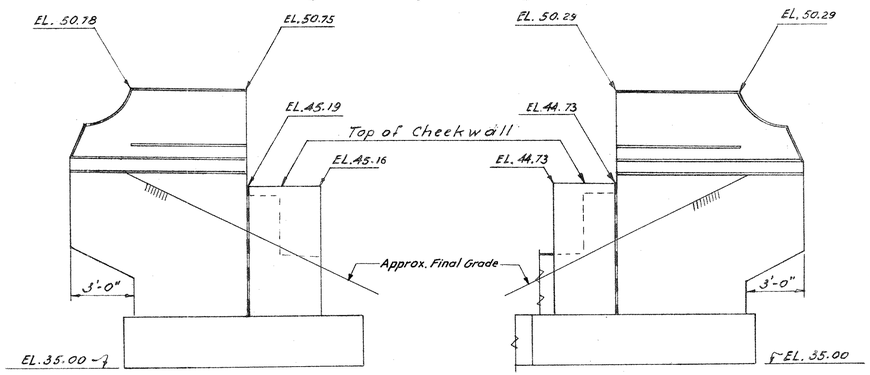

SOUTH WEST WINGWALL ELEVATION

Scale: ¼"=1'-0"

NORTH WEST WINGWALL ELEVATION

Scale: ¼"=1'-0"

GRAPHIC SCALE 1/4"=1'

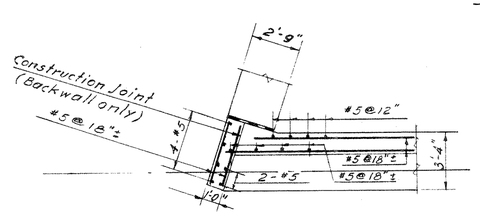

SECTION 13-13

Scale: ¼"=1'-0"

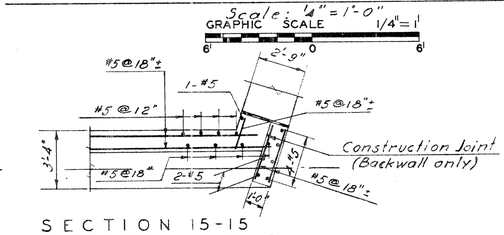

SECTION 15-15

Scale: ¼"=1'-0"

GRAPHIC SCALE 1/4"=1'

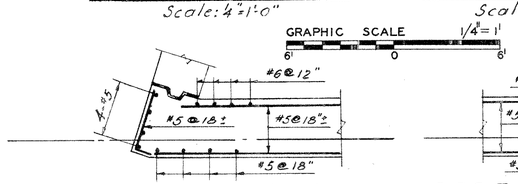

SECTION 14-14

Scale: ¼"=1'-0"

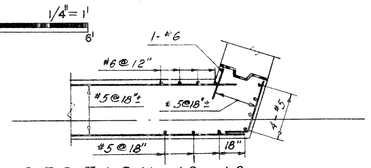

SECTION 16-16

Scale: ¼"=1'-0"

Notes:

For General Plan and Elevation see Bridge Sheet No. 1.
For General Notes see Bridge Sheet No. 1.
For Typical Section through Wingwalls see Bridge Sheet No. 8.
For Plan of Footing Reinforcement see Bridge Sheet No. 8.
For additional Details see Bridge Sheet No. 5.
Design Soil Pressures: Maximum 1.8 t.s.f.
Average 1.0 t.s.f.

THE INFORMATION, INCLUDING ESTIMATED QUANTITIES OF WORK, SHOWN ON THESE SHEETS IS BASED ON LIMITED INVESTIGATIONS BY THE STATE AND IS IN NO WAY WARRANTED TO INDICATE THE TRUE CONDITIONS OR ACTUAL QUANTITIES OR DISTRIBUTION OF QUANTITIES OF WORK WHICH WILL BE REQUIRED.

REVISIONS		
NO.	DATE	DESCRIPTION

FED. AID PROJ. NO. I-84-4(42:63)

CONNECTICUT
STATE HIGHWAY DEPARTMENT

TOWN OF EAST HARTFORD
INTERSTATE ROUTE NO. 84
BRIDGE F-8
OVER LINES 2 & 5

WEST ABUTMENT & WALLS

DESIGNED BY E.L. PAVLO, CONSULTING ENGINEER

SCALES AS SHOWN
MADE BY M.S. DATE 12.6.60
CHECKED BY M.Z. DATE 12.8.60
APPROVED [signature] DATE 1-9-61

PROJECT NO. 42-134

BRIDGE SHEET NO. 7 OF 11

FORM NO. BRG. 12 RD 11-55

PUB. ROAD DIV. NO.	STATE	TOWN	FED. AID PROJ. NO.	PROJ. NO.	YEAR	ROUTE NO.	SHEET NO.	TOTAL SHEETS
1	CONN.	East Hartford	I-84 (42)63	42-134	1962	I-84	62	216

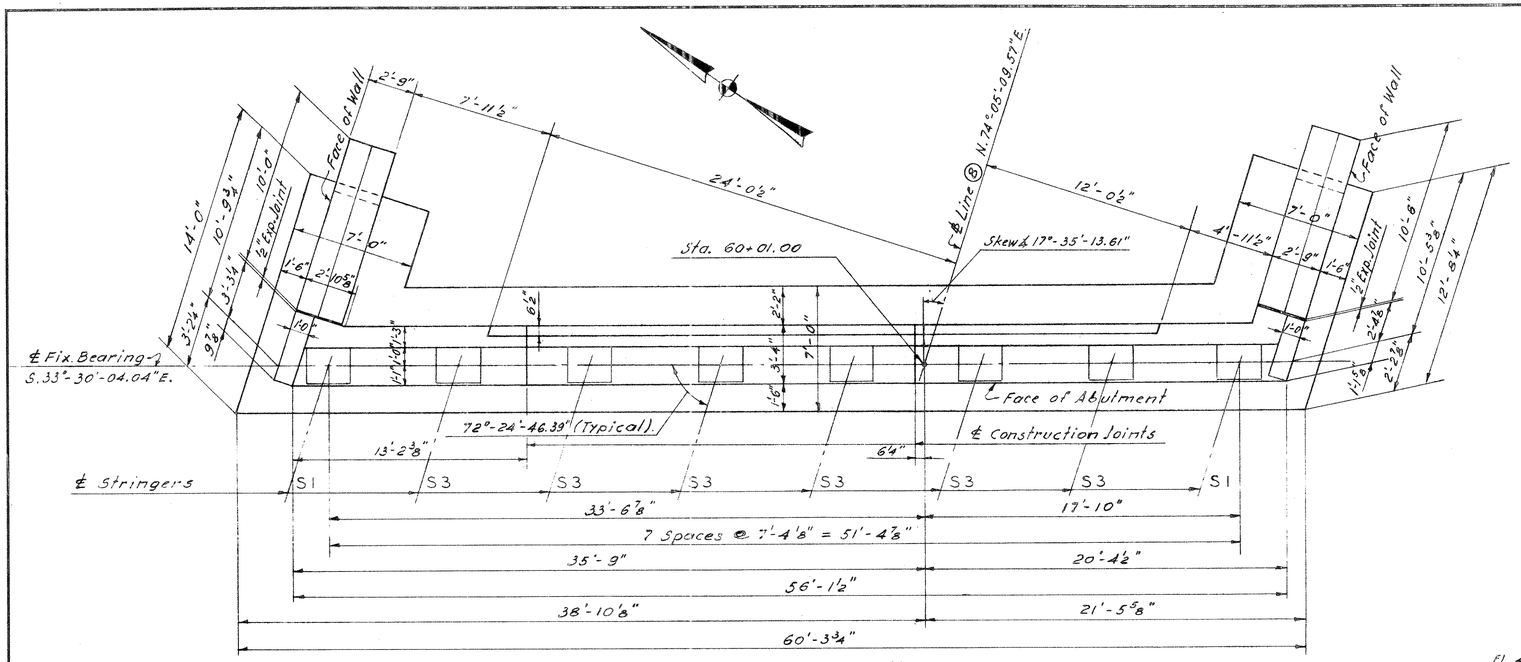

P L A N

Scale: ¼" = 1'-0"

GRAPHIC SCALE 1/4" = 1'

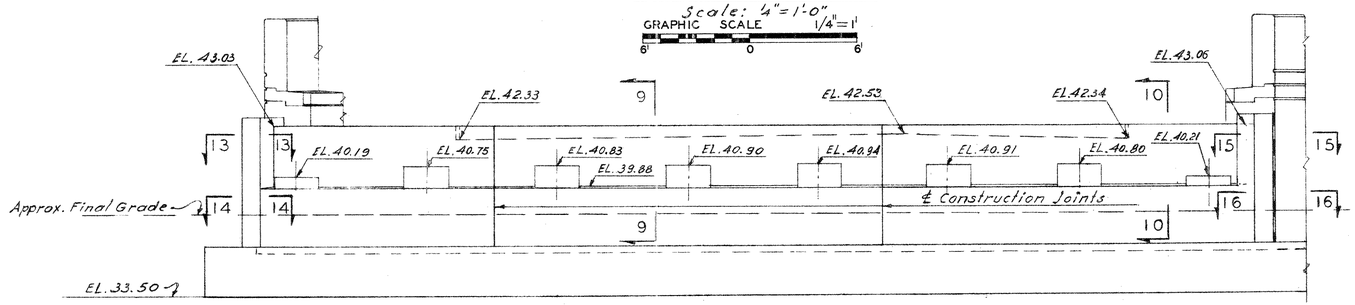

E L E V A T I O N

Scale: ¼" = 1'-0"

GRAPHIC SCALE 1/4" = 1'

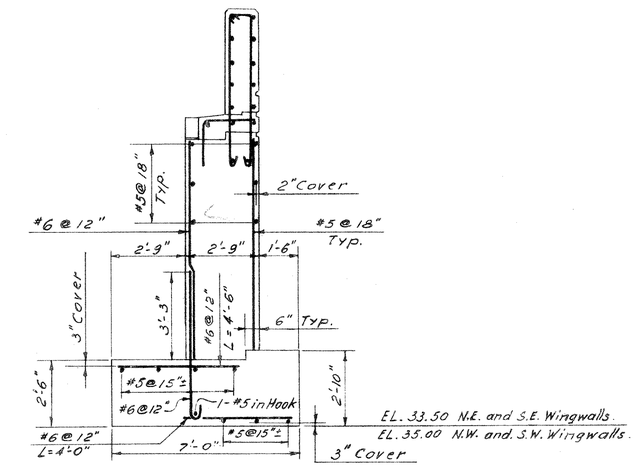

TYPICAL SECTION THROUGH WINGWALL

Scale: ⅜" = 1'-0"

GRAPHIC SCALE 3/8" = 1'

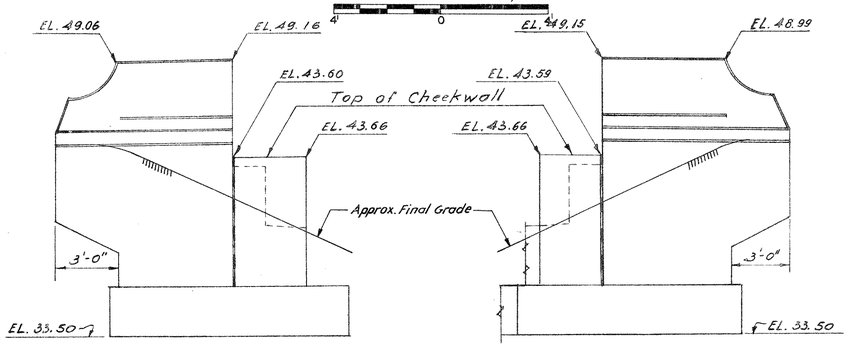

NORTH EAST WINGWALL ELEVATION

Scale: ¼" = 1'-0"

GRAPHIC SCALE 1/4" = 1'

SOUTH EAST WINGWALL ELEVATION

Scale: ¼" = 1'-0"

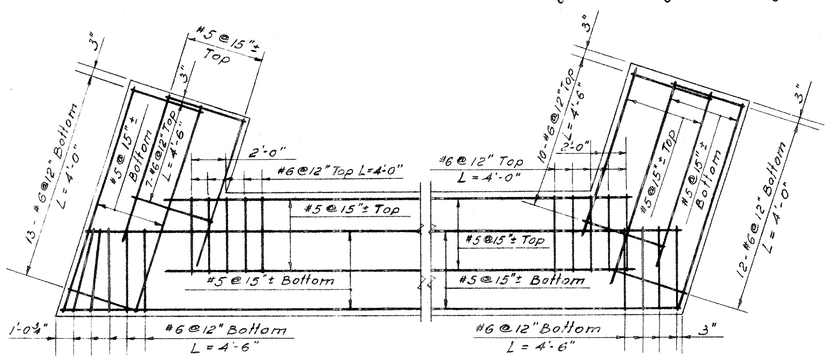

FOOTING REINFORCEMENT

Scale: ¼" = 1'-0"

GRAPHIC SCALE 1/4" = 1'

Notes: For General Plan and Elevation see Bridge Sheet No.1.
For General Notes see Bridge Sheet No.1.
For Typical Section through Abutment see Bridge Sheet No. 7.
For Sections 13-13, 14-14, 15-15 and 16-16 see Bridge Sheet No. 7.
For additional Details see Bridge Sheet No.5.
Design Soil Pressures: Maximum 1.8 t.s.f.
Average 1.0 t.s.f.

THE INFORMATION, INCLUDING ESTIMATED QUANTITIES OF WORK, SHOWN ON THESE SHEETS IS BASED ON LIMITED INVESTIGATIONS BY THE STATE AND IS IN NO WAY WARRANTED TO INDICATE THE TRUE CONDITIONS OR ACTUAL QUANTITIES OR DISTRIBUTION OF QUANTITIES OF WORK WHICH WILL BE REQUIRED.

REVISIONS		
NO.	DATE	DESCRIPTION

FED. AID PROJ. NO I-84-4(42)63

CONNECTICUT
STATE HIGHWAY DEPARTMENT

TOWN OF EAST HARTFORD
INTERSTATE ROUTE NO. 84
BRIDGE F-8
OVER LINES 2 & 5

EAST ABUTMENT & WALLS

DESIGNED BY E.L. PAVLO CONSULTING ENGINEER

SCALES AS SHOWN

MADE BY M.S. DATE 12.6.60

CHECKED BY M.Z. DATE 12.8.60

APPROVED [signature] DATE 1-9-61

PROJECT NO. 42-134

BRIDGE SHEET NO. 8 OF 11

FED. ROAD DIV. NO.	STATE	TOWN	FED. AID PROJ. NO.	PROJ. NO.	YEAR	ROUTE NO.	SHEET NO.	TOTAL SHEETS
1	CONN.	EAST HARTFORD	I-84 4142163	42-134	1962	I-84	63	216

GRAPHIC SCALE VERT. 1" = 5'

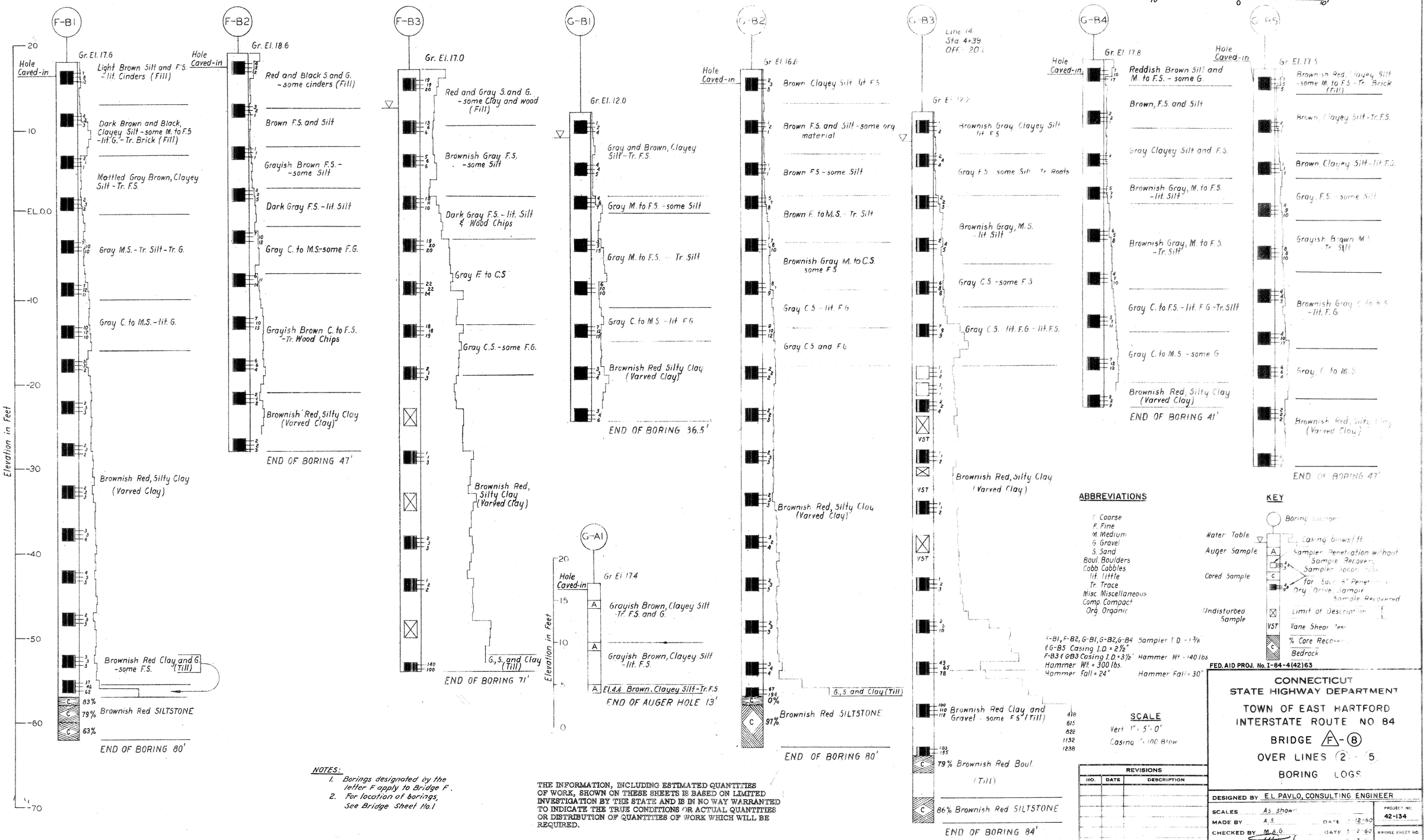

ABBREVIATIONS

C Coarse
F Fine
M Medium
G Gravel
S. Sand
Boul. Boulders
Cobb Cobbles
lit. little
Tr. Trace
Misc. Miscellaneous
Comp. Compact
Org. Organic

F-B1, F-B2, G-B1, G-B2, G-B4 & G-B5 Casing I.D. = 2½"
F-B3 & G-B3 Casing I.D. = 3½"
Hammer Wt. = 300 lbs.
Hammer Fall = 24"

Sampler I.D. = 1⅜"
Hammer Wt. = 140 lbs
Hammer Fall = 30"

KEY

Boring Number
Water Table
Casing Blows/ft.
Auger Sample
Sampler Penetration without Sample Recovery
Sampler Blows for Each 6" Penetration
Cored Sample
Drg. Drive Sampler Sample Recovered
Undisturbed Sample
Limit of Description
VST Vane Shear Test
% Core Recovery
Bedrock

SCALE

Vert. 1" = 5'-0"
Casing 1" = 100 Blows

FED. AID PROJ. No. I-84-4(42)63

NOTES:
1. Borings designated by the letter F apply to Bridge F.
2. For location of borings, See Bridge Sheet No. 1

THE INFORMATION, INCLUDING ESTIMATED QUANTITIES OF WORK, SHOWN ON THESE SHEETS IS BASED ON LIMITED INVESTIGATION BY THE STATE AND IS IN NO WAY WARRANTED TO INDICATE THE TRUE CONDITIONS OR ACTUAL QUANTITIES OR DISTRIBUTION OF QUANTITIES OF WORK WHICH WILL BE REQUIRED.

REVISIONS		
NO.	DATE	DESCRIPTION

CONNECTICUT
STATE HIGHWAY DEPARTMENT

TOWN OF EAST HARTFORD
INTERSTATE ROUTE NO 84

BRIDGE F-8
OVER LINES 2 - 5
BORING LOGS

DESIGNED BY E.L. PAVLO, CONSULTING ENGINEER
SCALES As shown
MADE BY A.S. DATE 12-60
CHECKED BY M.A.G. DATE 2-61
APPROVED DATE 3-61
PROJECT NO. 42-134
BRIDGE SHEET NO. 9 OF 11

DIETZGEN 198M Agaproof Tracing Vellum 6851

FORM NO. ENG. 15 ED. 11-52

PUB. ROAD DIV. NO.	STATE	TOWN	FED. AID PROJ. NO.	PROJ. NO.	YEAR	ROUTE NO.	SHEET NO.	TOTAL SHEETS
1	CONN.	EAST HARTFORD	I-84-4(42)63	42-134	1962	I-84	64	216

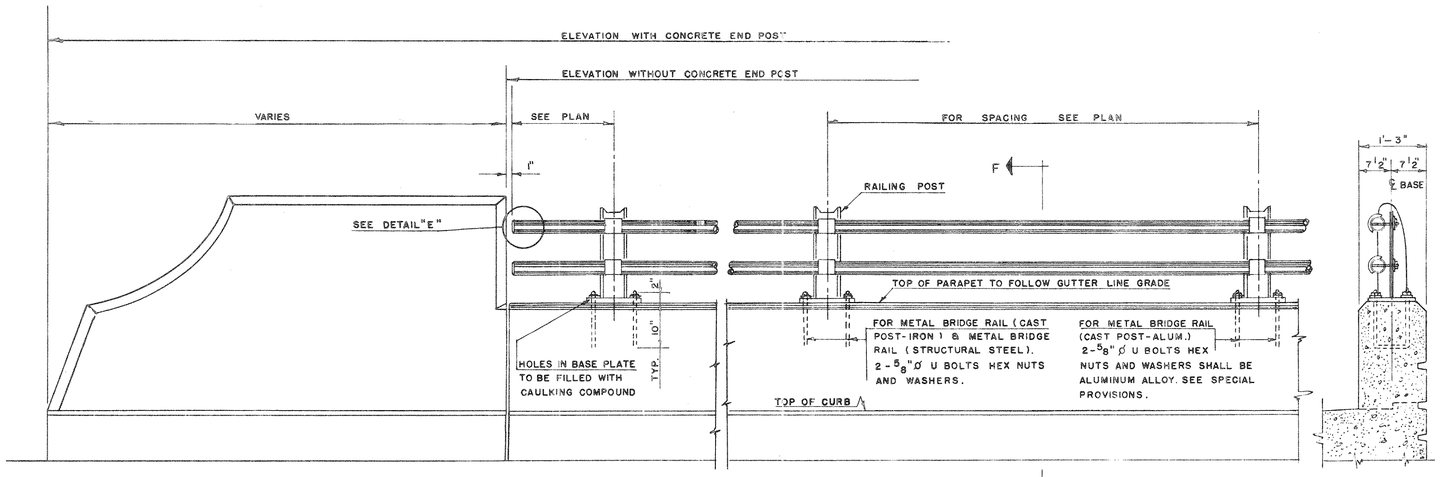

ELEVATION
CONC. END POST AND RAIL
SCALE 3/4" = 1'-0"

SECTION F-F
SCALE 3/4" = 1'-0"

GRAPHIC SCALE 3/4" = 1'
2' 0 2'

METAL BRIDGE RAIL
(STRUCTURAL STEEL)

ALL POSTS TO BE 6 WF 20 STRUCTURAL STEEL.
ALL RAILS TO BE 2 1/2" ø STANDARD STEEL PIPE.
RAILING POSTS SHALL BE VERTICAL.
IF NECESSARY SHIM WITH LEAD WOOL AND CAULK. COST TO BE INCLUDED IN ITEM METAL BRIDGE RAIL. (STRUCTURAL STEEL.)
FOR PAINTING SEE SPECIAL PROVISIONS.
ALL POSTS & BASE PLATES TO BE OF STRUCTURAL STEEL CONFORMING TO A.S.T.M. A-7.

METAL BRIDGE RAIL
(CAST POST - IRON)

ALL POSTS TO BE MALLEABLE IRON CASTING CONFORMING TO A.S.T.M. A-47 GRADE 35018 OR DUCTILE IRON CASTING CONFORMING TO A.S.T.M. A-339.
ALL RAILS TO BE 2 1/2" ø STANDARD STEEL PIPE.
RAILING POSTS SHALL BE VERTICAL.
IF NECESSARY SHIM WITH LEAD WOOL AND CAULK. COST TO BE INCLUDED IN ITEM METAL BRIDGE RAIL (CAST POST-IRON.).
FOR PAINTING SEE SPECIAL PROVISIONS.

METAL BRIDGE RAIL
(CAST POST - ALUMINUM)

ALL POSTS TO BE CAST OF ALUMINUM. SEE SPECIAL PROVISION.
ALL RAILS TO BE 3" O.D. X 2.625" I.D. ALUMINUM TUBING. SEE SPECIAL PROVISIONS.
RAILING POSTS SHALL BE VERTICAL.
IF NECESSARY SHIM WITH ALUMINUM SHEETS AND CAULK.
COST TO BE INCLUDED IN ITEM METAL BRIDGE RAIL (CAST POST-ALUM.)
ALUMINUM RAILING AND POSTS SHALL NOT BE PAINTED.

GENERAL NOTES:

UNLESS OTHERWISE SPECIFIED ON THE PLANS OR IN THE SPECIAL PROVISIONS METAL BRIDGE RAIL MAY BE: METAL BRIDGE RAIL (STRUCTURAL STEEL). METAL BRIDGE RAIL (CAST POST-IRON) OR METAL BRIDGE RAIL (CAST POST-ALUMINUM).
COST OF FURNISHING AND SETTING 5/8"ø U BOLTS, HEX NUTS AND WASHERS TO BE INCLUDED IN ITEM "METAL BRIDGE RAIL."

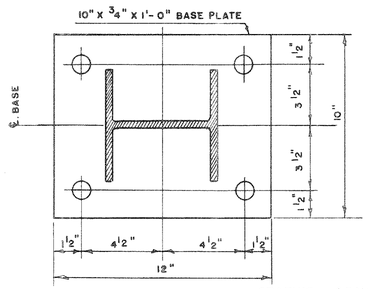

SECTION B-B
SCALE 3" = 1'-0"

GRAPHIC SCALE 3" = 1'
6" 0 6"

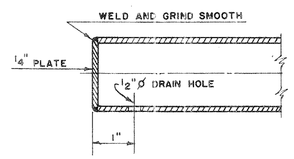

DETAIL "E"
NOT TO SCALE

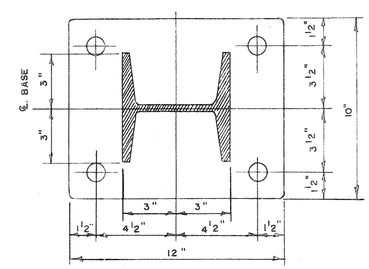

GRAPHIC SCALE 3" = 1'
6" 0 6"

SECTION C-C
SCALE 3" = 1'-0"

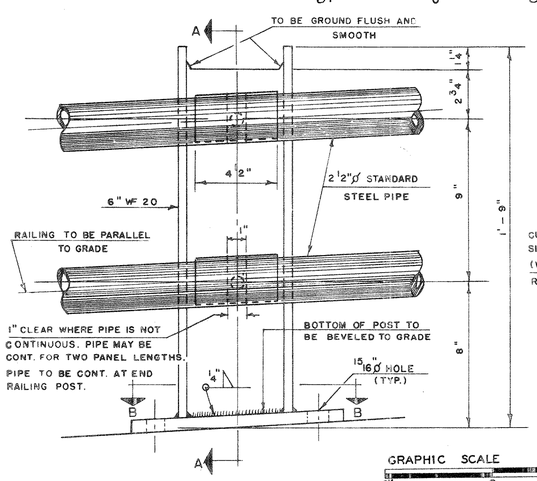

ELEVATION OF POST
SCALE 3" = 1'-0"

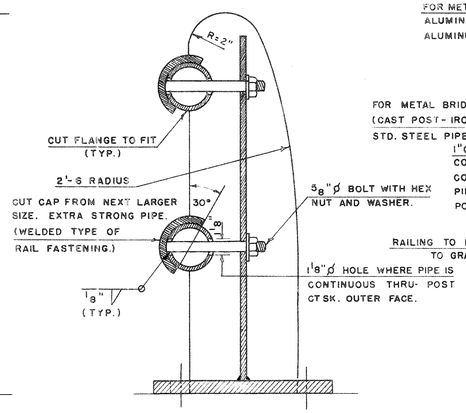

SECTION A-A
SCALE 3" = 1'-0

GRAPHIC SCALE 3" = 1'
6" 0 6"

DETAILS
STRUCTURAL STEEL POST
FOR METAL BRIDGE RAIL (STUCTURAL STEEL)

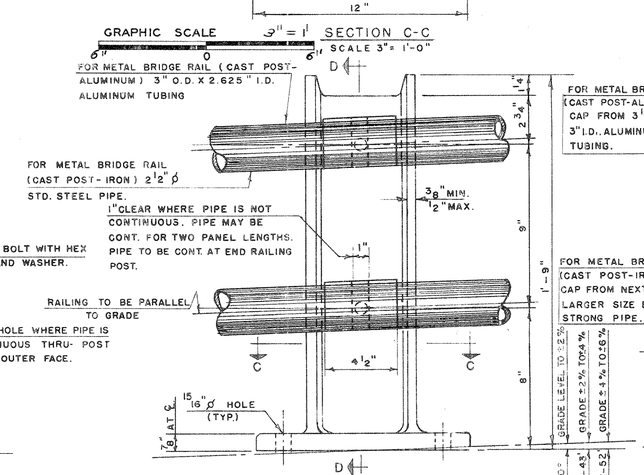

ELEVATION OF POST
SCALE 3" = 1'-0"

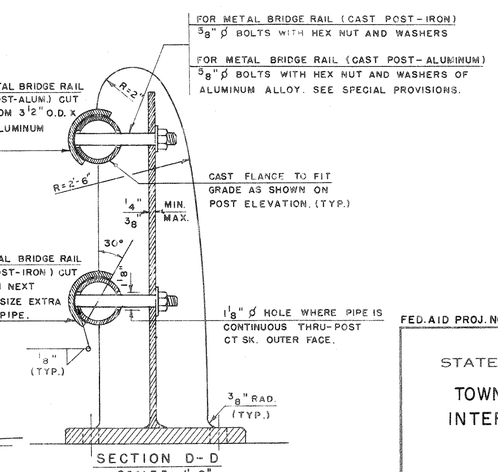

SECTION D-D
SCALE 3" = 1'-0"

GRAPHIC SCALE 3" = 1'
6" 0 6"

DETAILS
CAST POST
FOR METAL BRIDGE RAIL (CAST POST-IRON)
AND
FOR METAL BRIDGE RAIL (CAST POST-ALUMINUM)

NOTE

DETAILS OF METAL BRIDGE RAILING AND FASTENING SIMILAR TO DETAILS SHOWN FOR METAL BRIDGE RAILING. (STRUCTURAL STEEL.)

FED. AID PROJ. NO I-84-4(42)63

CONNECTICUT
STATE HIGHWAY DEPARTMENT

TOWN OF EAST HARTFORD
INTERSTATE ROUTE NO. 84
BRIDGE (F)-(8)
OVER LINES (2) & (5)
METAL BRIDGE RAIL

REVISIONS		
NO.	DATE	DESCRIPTION

DESIGNED BY C.H.D.
SCALES AS NOTED
MADE BY G.M.K. & G.J.Z. DATE 4-29-60
CHECKED BY J.J.C. DATE 10-26-60
APPROVED [signature] DATE 6/13/61
PROJECT NO. 42-134
BRIDGE SHEET NO. 10 OF 11

KEARNEY-TRACING CLOTH JOSEPH MERRITT & CO. 11210

PUB. ROAD DIV. NO.	STATE	TOWN	FED. AID PROJ. NO.	PROJ. NO.	YEAR	BURTS. NO.	SHEET NO.	TOTAL SHEETS
1	CONN.	EAST HARTFORD	I-84-4 (42)63	42-134	1962	I-84	65	216

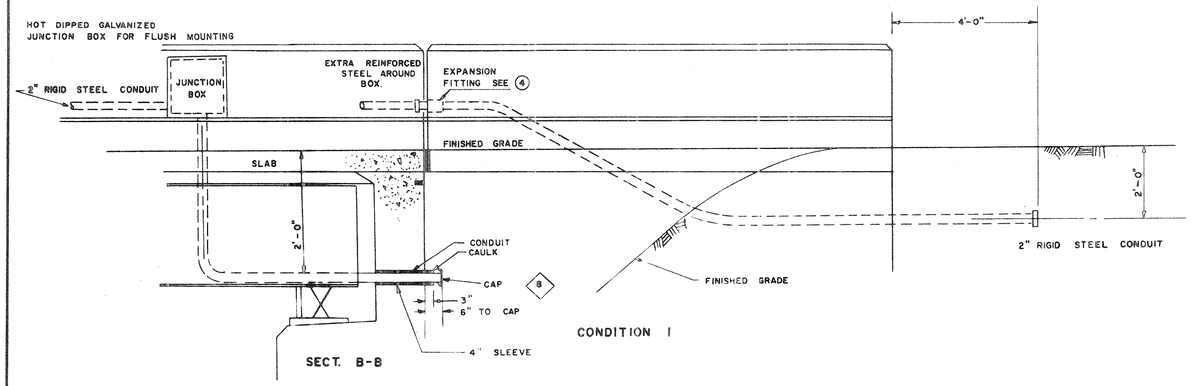

CONDUIT PARAPET TO FILL 3

SCALE 1/2" = 1'-0"

GRAPHIC SCALE 1/2" = 1'

3' 0 3'

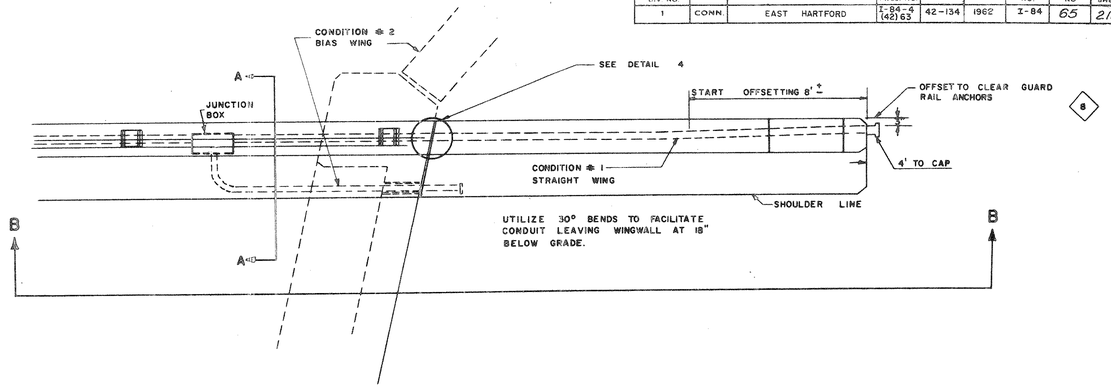

CONDUIT PARAPET TO FILL 1

NOT TO SCALE

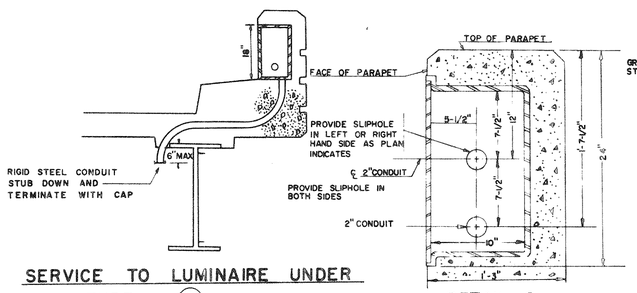

SERVICE TO LUMINAIRE UNDER STRUCTURE 6

NOT TO SCALE

DETAIL 2

18" X 18" X 10" JUNCTION BOX FOR LIGHT STANDARD

NOT TO SCALE

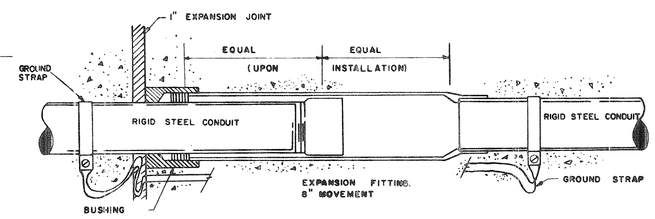

DETAIL OF EXPANSION FITTING 4

USE AT ALL EXPANSION JOINTS

NOT TO SCALE

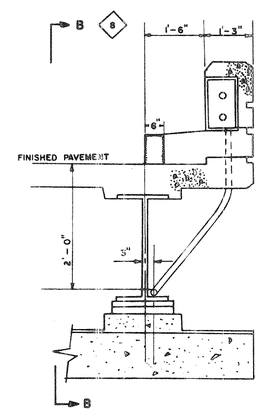

SECT A-A

NOT TO SCALE

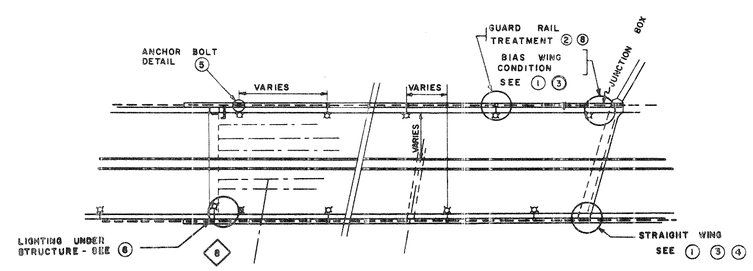

INDEX TO DETAILS

NOT TO SCALE

REVISIONS		
NO.	DATE	DESCRIPTION

FEDERAL AID PROJECT NO. I-84-4(42)63

CONNECTICUT
STATE HIGHWAY DEPARTMENT
TRAFFIC DIVISION
TOWN OF EAST HARTFORD
INTERSTATE ROUTE NO. 84
BRIDGE F - 3
OVER LINES 2 & 5
ELECTRICAL DETAILS

SCALE AS NOTED	ELECTRICAL		
DESIGNED BY	C. W. JOHNSON	3/1/61	PROJECT NO. 42-134
MADE BY	R. E. WENTWORTH	3/1/61	
SUBMITTED BY	H. A. KERR	3/1/61	BRIDGE SH. NO. 11 OF 11
APPROVED BY	R. M. Williston	3-1-61	

FORM NO. BRG. 18 (2) 11-53

PUB. ROAD DIV. NO.	STATE	TOWN	FED. AID PROJ. NO.	PROJ. NO.	YEAR	ROUTE NO.	SHEET NO.	TOTAL SHEETS
1	CONN.	East Hartford	I-84 4(42)63	42-134	1962	I-84	66	216

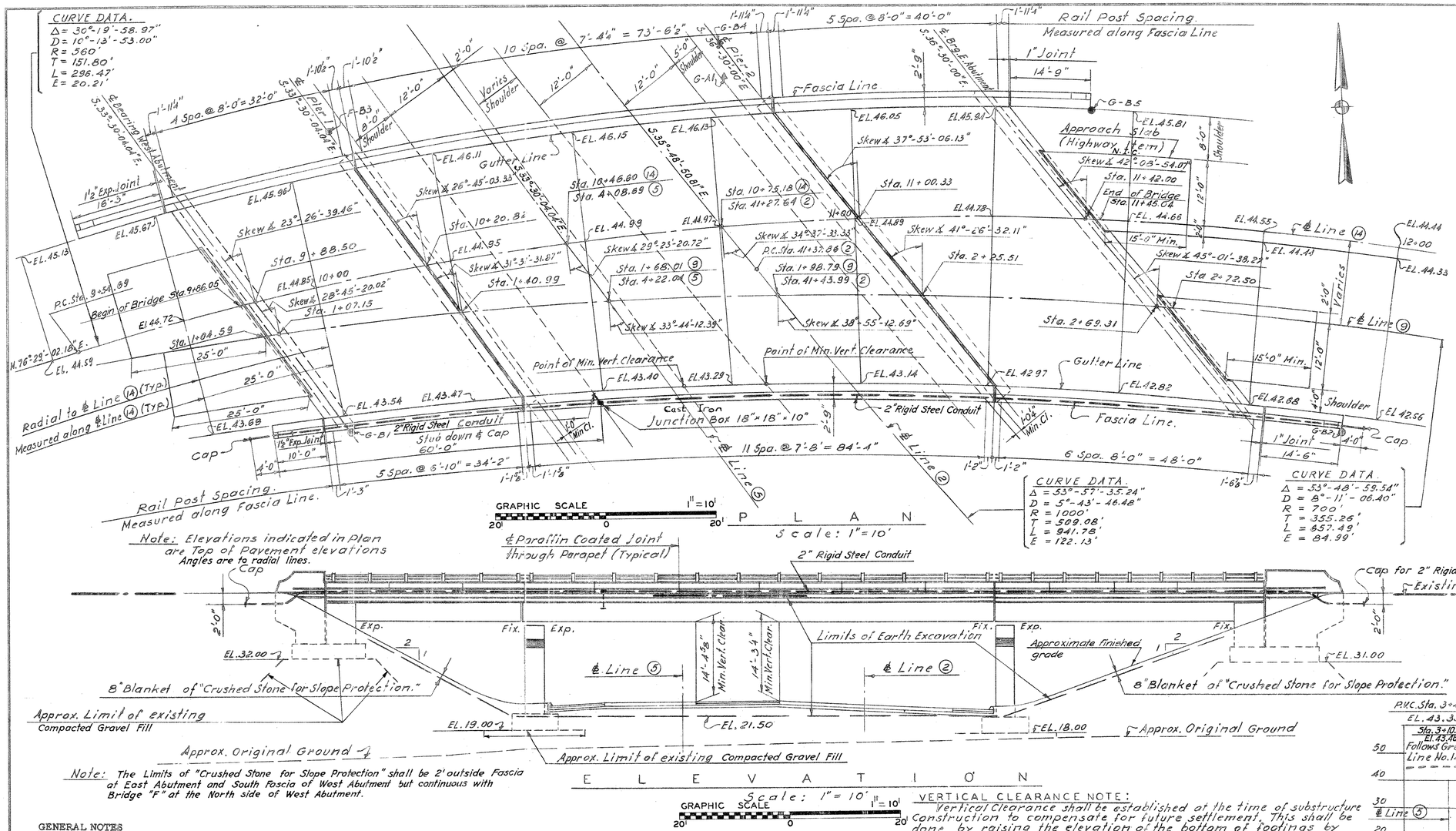

Note: Elevations indicated in plan are Top of Pavement elevations
Angles are to radial lines.

Note: The Limits of "Crushed Stone for Slope Protection" shall be 2' outside Fascia at East Abutment and South Fascia of West Abutment but continuous with Bridge "F" at the North side of West Abutment.

ESTIMATE OF QUANTITIES

	ITEM	UNIT	QUANTITY
	Earth Excavation	CY	11000
	Structure Excavation (Complete)	CY	320
	1/2" Preformed Exp. Joint Filler for Bridges	SF	12
	Soil Loading Test	Ea	1
	Class "A" Concrete	CY	870
	1/2" Preformed Exp. Joint Filler for Bridges	SF	140
	1" Preformed Exp. Joint Filler for Bridges	SF	12
	Deformed Steel Bars	Lb	134000
	Structural Steel	Lb	260000
	Dampproofing	SY	190
	Metal Bridge Rail	LF	335
	Pervious Structure Backfill	CY	550
	Neoprene Plate for Bridge Exp. Joint	LF	135
	6"×9½" Granite Stone Curbing for Bridges	LF	390
	Shear Connectors	L.F	996
	2" Rigid Steel Conduit in Bridge	LF	220
	Cast Iron Junction Box (18"×18"×10")	Ea	1
	Crushed Stone for Slope Protection	Ton	175
	Compacted Gravel Fill	C.Y	150

CONCRETE DISTRIBUTION:

SUPERSTRUCTURE	276 CY
SUBSTRUCTURE	312 CY
FOOTINGS	282 CY
TOTAL	870 CY

GRAPHIC SCALE HORIZ. 1" = 200'
GRAPHIC SCALE VERT. 1" = 20'

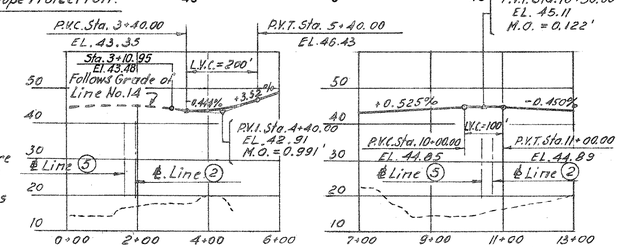

FED. AID PROJ. NO. I-84-4(42)63

VERTICAL CLEARANCE NOTE:
Vertical Clearance shall be established at the time of substructure construction to compensate for future settlement. This shall be done by raising the elevation of the bottom of footings by an amount equal to the anticipated subsequent settlement, as directed by the engineer.

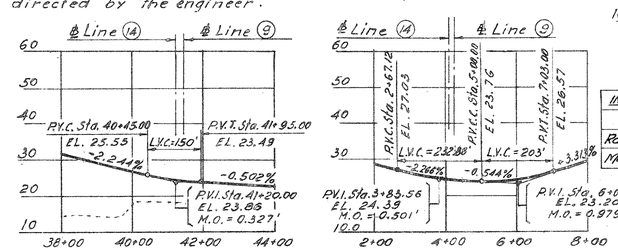

INSPECTION OF FIELD WELDS		
Method	Unit	Quantity
Radiographic	in.	0
Magnetic Particle	I.F.	0

GENERAL NOTES

SPECIFICATIONS: CONNECTICUT STATE HIGHWAY DEPARTMENT FORM 808 (JAN. 1955) AND SPECIAL PROVISIONS.
DESIGN SPECIFICATIONS: STANDARD SPECIFICATIONS FOR HIGHWAY BRIDGES (AASHO 1957) EXCEPT AS MODIFIED BY BUREAU OF PUBLIC ROAD "POLICY ON INTERSTATE SYSTEM PROJECTS" (AUGUST 1956) AND AS SUPPLEMENTED BY THE CONNECTICUT STATE HIGHWAY DEPARTMENT BRIDGE MANUAL JULY 1960.
LIVE LOAD: H-20-S16-44 ALTERNATE 24000# DUAL AXLE AT 4'-0" O.C. SLAB DESIGN AS PER TENTATIVE AASHO T.8 (59).
FUTURE PAVING ALLOWANCE: 25 P.S.F.
COMPOSITE CONSTRUCTION: NO TEMPORARY INTERMEDIATE SUPPORTS SHALL BE USED DURING CONSTRUCTION. SUPERIMPOSED LOADS SHALL BE PLACED WHEN DIRECTED BY THE ENGINEER, BUT NOT LESS THAN 10 DAYS AFTER THE SLAB HAS BEEN POURED.
CLASS "A" CONCRETE: CLASS "A" CONCRETE SHALL BE USED THROUGHOUT. SEE SPECIAL PROVISIONS.
DEFORMED STEEL BARS: FOR GRADES OF DEFORMED STEEL BARS SEE SPECIAL PROVISIONS.
EXPOSED EDGES: EXPOSED EDGES SHALL BE BEVELED 1" x 1" UNLESS DIMENSIONED OTHERWISE.

STRUCTURAL STEEL: ALL MATERIAL FOR NON-PLATED ROLLED BEAMS SHALL CONFORM TO A.S.T.M. A-7. ALL MATERIAL FOR BUILT-UP WELDED SECTIONS AND SOLE PLATES SHALL CONFORM TO A.S.T.M. A-373. MASONRY PLATES SHALL conform to ASTM A-242 (modified) steel. See Special Provision for Structural Steel." ALL OTHER STEEL SHALL CONFORM TO A.S.T.M. A-7 UNLESS NOTED OTHERWISE.

PAINTING: FOR SHOP AND FIELD PAINTING OF STRUCTURAL STEEL AND METAL BRIDGE RAIL. SEE SPECIAL PROVISIONS.
JOINT SEAL: JOINT SEAL SHALL BE INCLUDED IN THE ITEM FOR CLASS "A" CONCRETE. SEE SPECIAL PROVISIONS.
FELT: THE COST OF FURNISHING AND PLACING 2 LAYERS OF 15# ROOFING FELT ON TOP OF BACKWALLS SHALL BE INCLUDED IN THE ITEM FOR CLASS "A" CONCRETE.
PARAFFIN: THE COST OF FURNISHING AND APPLYING PARAFFIN TO THE PARAPET JOINTS SHALL BE INCLUDED IN THE ITEM FOR CLASS "A" CONCRETE.
SPREAD FOOTINGS: DESIGN SOIL PRESSURES SHOWN ON SHEET NO. 7, 8, 9 & 10.

WELDING: FOR INSPECTION OF WELDING, SEE SPECIAL PROVISIONS.
N.L.C. MEANS NOT INCLUDED IN CONTRACT.
REINFORCING BARS TO HAVE 2" COVER EXCEPT WHERE SHOWN OTHERWISE.
NO FIELD SPLICES OF WEB OR FLANGE PLATES ARE PERMISSIBLE.

THE INFORMATION, INCLUDING ESTIMATED QUANTITIES OF WORK, SHOWN ON THESE SHEETS IS BASED ON LIMITED INVESTIGATIONS BY THE STATE AND IS IN NO WAY WARRANTED TO INDICATE THE TRUE CONDITIONS OR ACTUAL QUANTITIES OR DISTRIBUTION OF QUANTITIES OF WORK WHICH WILL BE REQUIRED.

REVISIONS		
NO.	DATE	DESCRIPTION

CONNECTICUT
STATE HIGHWAY DEPARTMENT
TOWN OF EAST HARTFORD
INTERSTATE ROUTE NO. 84
BRIDGE G - 9 - 14
OVER LINES 2 & 5
GENERAL PLAN & ELEVATION

DESIGNED BY E.L. PAVLO CONSULTING ENGINEER
SCALES AS SHOWN
MADE BY M.S. DATE 10.10.60
CHECKED BY N.L. DATE 10.14.60
APPROVED [signature] DATE 1-9-61
PROJECT NO. 42-134
BRIDGE SHEET NO. 1 OF 13

FORM NO. BRG. 19 (2) 11-58

PUB. ROAD DIV. NO.	STATE	TOWN	FED. AID PROJ. NO.	PROJ. NO.	YEAR	ROUTE NO.	SHEET NO.	TOTAL SHEETS
1	CONN.	East Hartford	I-84 4(42)63	42-134	1962	I-84	67	216

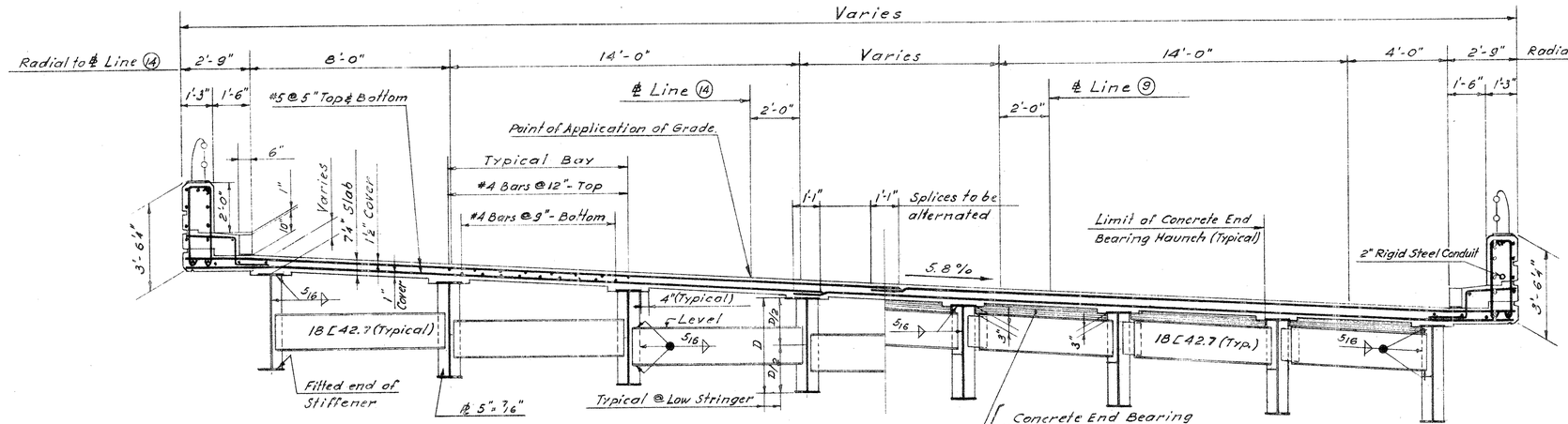

Notes: Shear Connectors not shown.
Main Reinforcement to be placed perpendicular to Stringers

CROSS SECTION (Center Span)
Scale: 3/8" = 1'-0"
GRAPHIC SCALE 3/8" = 1'

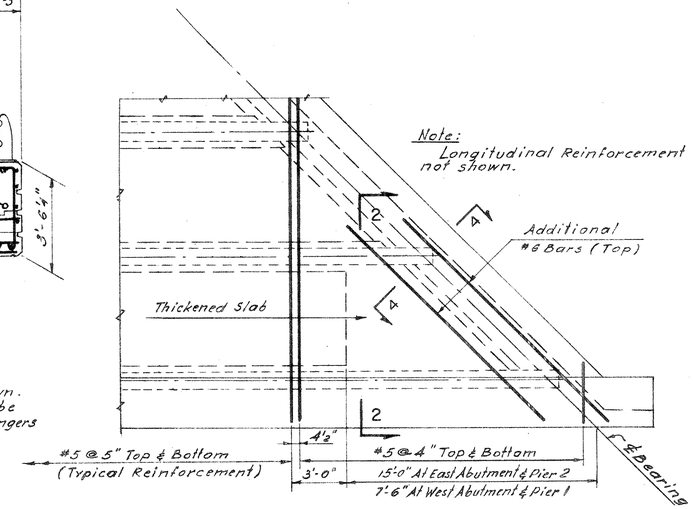

TYPICAL REINFORCEMENT IN ACUTE CORNERS OF SLAB
Not to Scale.

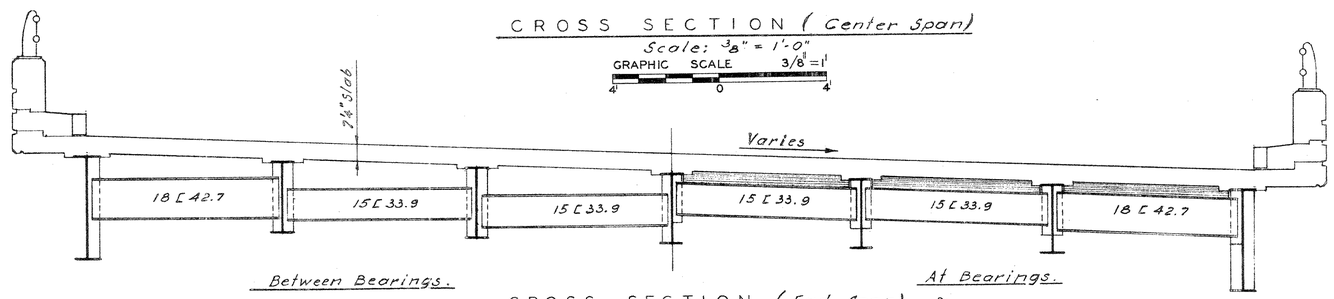

CROSS SECTION (End Span)
Scale: 3/8" = 1'-0"
GRAPHIC SCALE 3/8" = 1'

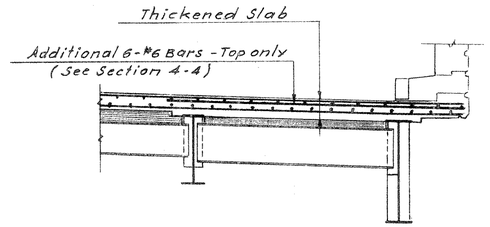

SECTION 2-2
Scale: 3/8" = 1'-0"
GRAPHIC SCALE 3/8" = 1'

Notes:
For General Plan and Elevation see Bridge Sheet No. 1
For General Notes see Bridge Sheet No. 1
For Sections 1-1 and 1'-1' see Bridge Sheet No. 6
For Sections 3-3, 3'-3 and 4-4 see Bridge Sheet No. 5
For Framing Plan see Bridge Sheet No. 3
For additional details see Bridge Sheet No. 5

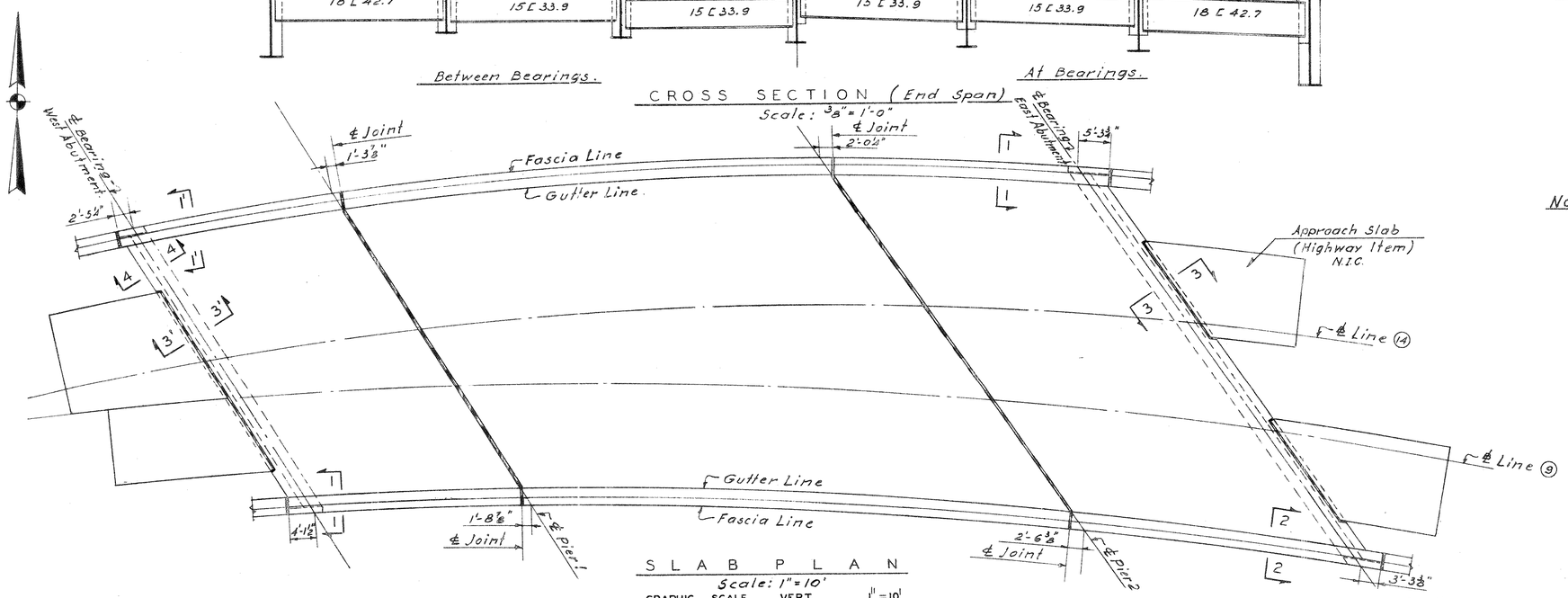

SLAB PLAN
Scale: 1" = 10'
GRAPHIC SCALE VERT. 1" = 10'

REVISIONS		
NO.	DATE	DESCRIPTION

FED. AID PROJ. NO. I-84-4(42)63

CONNECTICUT
STATE HIGHWAY DEPARTMENT

TOWN OF EAST HARTFORD
INTERSTATE ROUTE NO. 84
BRIDGE (6) - (9) - (14)
OVER LINES (2) & (5)

CROSS SECTIONS & SLAB DETAILS

DESIGNED BY E.L. PAVLO CONSULTING ENGINEER
SCALES AS SHOWN
MADE BY M.S. DATE 10.14.60
CHECKED BY N.I. DATE 10.28.60
APPROVED [signature] DATE 1-9-61
PROJECT NO. 42-134
BRIDGE SHEET NO. 2 OF 13

FORM NO. BRG. 19 SD 11-62

PUB. ROAD DIV. NO.	STATE	TOWN	FED. AID PROJ. NO.	PROJ. NO.	YEAR	ROUTE NO.	SHEET NO.	TOTAL SHEETS
1	CONN.	East Hartford	I-84-4(42)63	42-134	1962	I-84	68	216

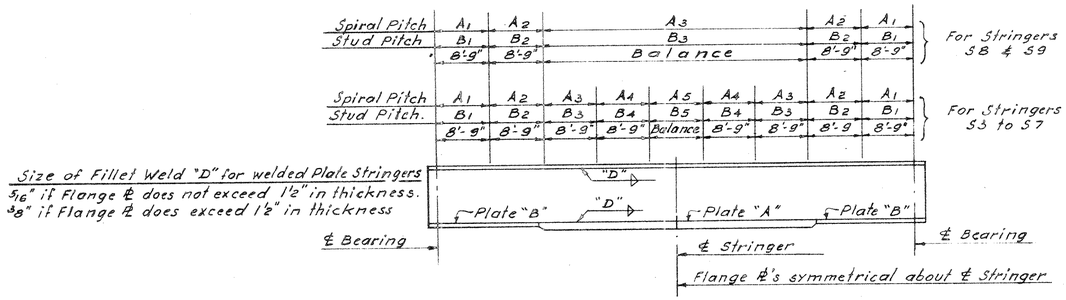

STRINGER ELEVATION

Not to Scale.

Notes: For General Plan and Elevation see Bridge Sheet No. 1
For General Notes see Bridge Sheet No. 1
For Bridge Cross-Section see Bridge Sheet No. 2
For additional details see Bridge Sheet No. 4
Stringer Spacings at Piers are measured along ℄ of Pier between ℄ of Stringers extended.
Lengths of Stringers shown in Plan are measured from ℄ to ℄ Bearings.
Elevations shown in Plan are top of pavement elevations over stringers at ℄ Bearings or mid-span (center span).
* denotes double spiral

$\alpha_1 = 68°-00'-00''$
$\alpha_2 = 65°-13'-08.84''$
$\alpha_3 = 62°-33'-20.89''$
$\alpha_4 = 60°-00'-00''$

$\beta_1 = 60°-04'-25.45''$
$\beta_2 = 58°-36'-44.89''$
$\beta_3 = 57°-04'-10.49''$
$\beta_4 = 55°-27'-36.67''$
$\beta_5 = 53°-56'-00''$

$\gamma_1 = 57°-04'-28.49''$
$\gamma_2 = 55°-36'-48.93''$
$\gamma_3 = 54°-04'-14.53''$
$\gamma_4 = 52°-27'-40.71''$
$\gamma_5 = 50°-56'-04.04''$

$\delta_1 = 51°-38'-53.91''$
$\delta_2 = 49°-47'-18.14''$
$\delta_3 = 48°-01'-30.07''$
$\delta_4 = 46°-21'-16.09''$
$\delta_5 = 45°-33'-43.08''$
$\delta_6 = 45°-00'-00''$

STRINGER SCHEDULE

MARK	MATERIAL	SHEAR CONNECTORS: SPIRAL PITCH A1	A2	A3	A4	A5	STUD PITCH B1	B2	B3	B4	B5	DEAD LOAD DEFLECTION: STRUCTURAL STEEL	SLAB	FUTURE WEARING SURFACE	SAFETY CURB AND PARAPET	TOTAL	VERTICAL CURVE ORDINATE	TOTAL CAMBER REQUIRED
S1	Web ℄ 45"x 3/4" Top ℄ -12"x 3/4"-F.L. Bottom ℄ "A"-12"x 3/4"-F.L.			Non	—	Co	mp	osi	te.			—	1/16"	—	—	1/16"	—	1/16"
S2	30 WF 116			Non	—	Co	mp	osi	te.			—	1/8"	—	1/16"	3/16"	—	3/16"
S3	Web ℄ 45"x 3/4" Top ℄ -12"x 3/4" - F.L. Bot. ℄ "A"-12"x 1 5/8" - 55'-0" Bot. ℄ "B"-12"x 3/4" - Balance.	*6 1/2"	4"	5 1/2"	7"	9 1/2"	5"	6"	8 1/2"	10 1/2"	15"	5/16"	15/16"	1/8"	3/16"	1 9/16"	1/8"	1 11/16"
S4	Web ℄ 45"x 3/4" Top ℄ - 12"x 3/4" - F.L. Bot. ℄ "A"-12"x 1 3/4"-57'-0" Bot. ℄ "B"-12"x 3/4"-Balance.	*6 1/2"	*7 1/2"	5"	6 1/2"	9"	5"	5 1/2"	8"	10"	14"	3/8"	15/16"	1/8"	3/16"	1 5/8"	—	1 5/8"
S5	Web ℄ 45"x 3/4" Top ℄ - 12"x 3/4" - F.L. Bot. ℄ "A"-12"x 1 7/8" - 61'-0" Bot. ℄ "B"-12"x 3/4"-Balance.	*6 1/2"	4"	5"	6 1/2"	9"	5"	6"	8"	10"	14"	7/16"	1 1/16"	1/8"	3/16"	1 13/16"	—	1 13/16"
S6	Web ℄ 45"x 3/4" Top ℄ -12"x 3/4"-F.L. Bot. ℄ "A"-12"x 2"- 63'-6" Bot. ℄ "B"-12"x 3/4"- Balance.	*6 1/2"	*7 1/2"	5"	6 1/2"	8 1/2"	5"	6"	8"	10"	13"	7/16"	1 3/16"	3/16"	3/16"	2"	—	2"
S7	Web ℄ 45"x 3/4" Top ℄ -12"x 1" - F.L. Bot. ℄ "A"-12"x 2"- 61'-0" Bot. ℄ "B"-12"x 1"-Balance.	4"	4 1/2"	6"	7 1/2"	9 1/2"	6"	7"	9 1/2"	11 1/2"	15"	7/16"	1 1/8"	3/16"	3/16"	1 15/16"	—	1 15/16"
S8	Web ℄ 45"x 3/4" Top ℄ 12"x 3/4" - F.L. Bot. ℄ "A" 12"x 3/4" - F.L.	4"	5 1/2"	9 1/2"	—	—	6 1/2"	9"	15"	—	—	1/16"	1/8"	—	—	3/16"	—	3/16"
S9	33 WF 130	*5 1/2"	4"	6 1/2"	—	—	4"	6"	10"	—	—	1/16"	5/16"	—	1/16"	7/16"	—	7/16"

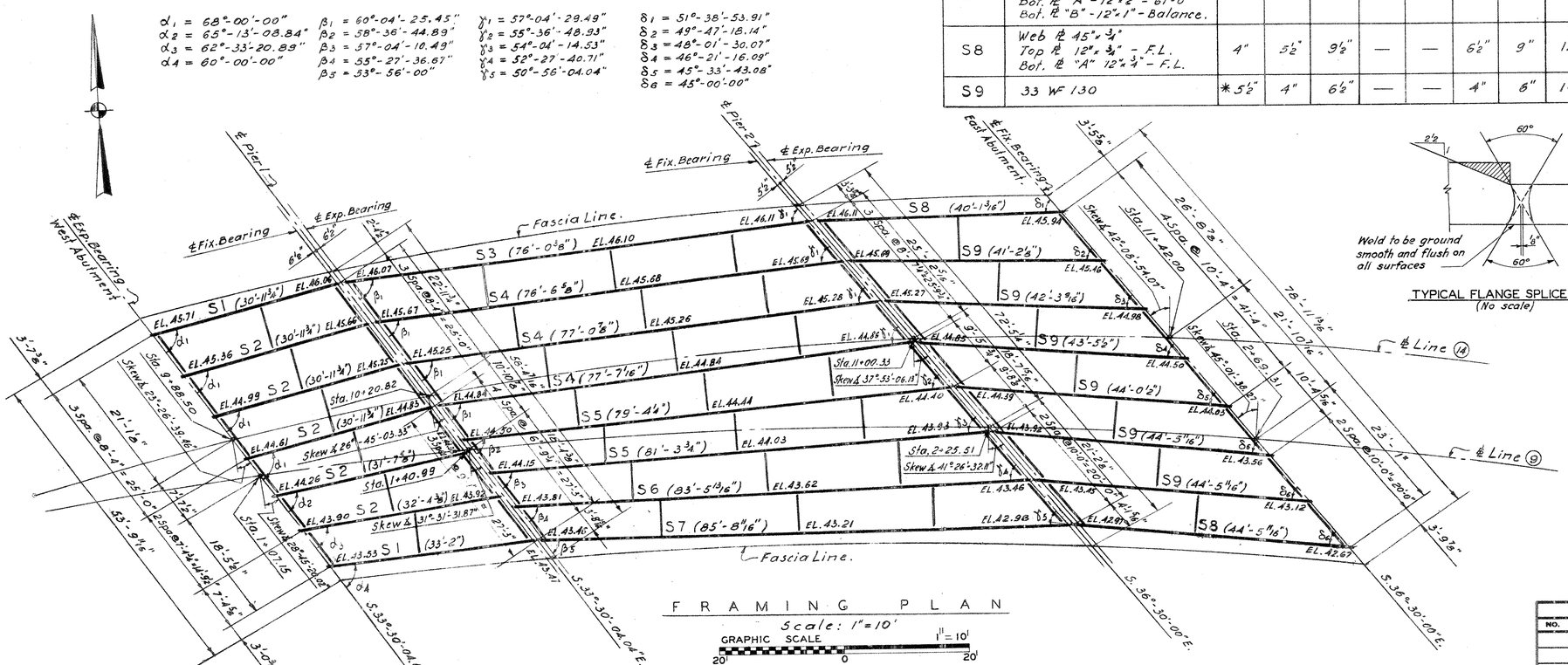

FRAMING PLAN

Scale: 1" = 10'

GRAPHIC SCALE 1" = 10' 20' 0 20'

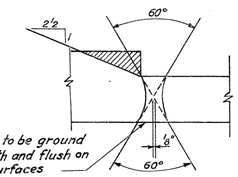

TYPICAL FLANGE SPLICE DETAIL
(No scale)

FED. AID PROJ. NO. I-84-4(42)63

CONNECTICUT
STATE HIGHWAY DEPARTMENT

TOWN OF EAST HARTFORD
INTERSTATE ROUTE NO. 84
BRIDGE (G) - (9) - (14)
OVER LINES (2) & (5)

FRAMING PLAN

REVISIONS		
NO.	DATE	DESCRIPTION

DESIGNED BY E.L. PAVLO CONSULTING ENGINEER
SCALES AS SHOWN
MADE BY M.S. DATE 10.21.60
CHECKED BY H.I. DATE 10.25.60
APPROVED [signature] DATE 1-9-61
PROJECT NO. 42-132
BRIDGE SHEET NO. 3 OF 13

FORM NO. ENG. 15 ED 11-52

PUB. ROAD DIV. NO.	STATE	TOWN	FED. AID PROJ. NO.	PROJ. NO.	YEAR	ROUTE NO.	SHEET NO.	TOTAL SHEETS
1	CONN.	EAST HARTFORD	I-84 4-42163	42-134	1962	I-84	69	216

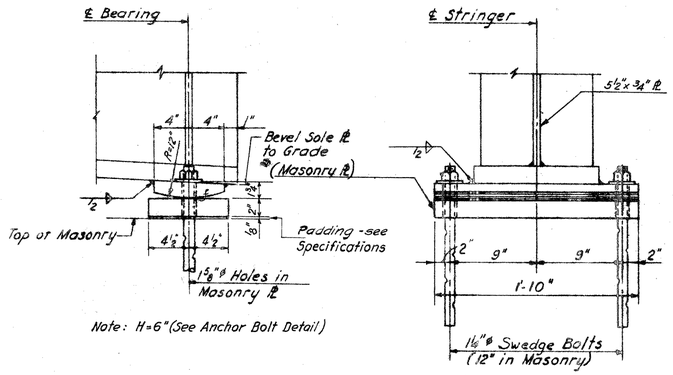

FIXED BEARINGS FOR BUILT-UP GIRDERS

Scale: 1½"=1'-0"

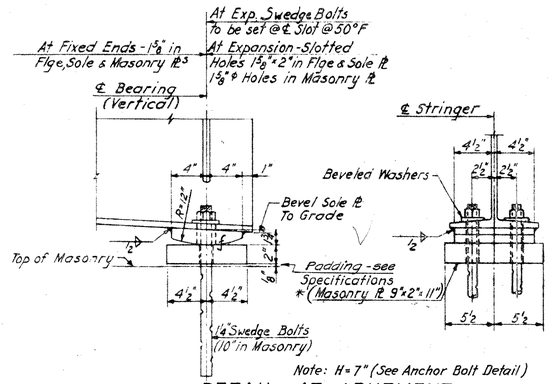

DETAIL AT ABUTMENT

BEARINGS FOR INTERIOR STRINGERS - SIDE SPANS

Scale: 1½=1'-0"

GRAPHIC SCALE 1 1/2" = 1'

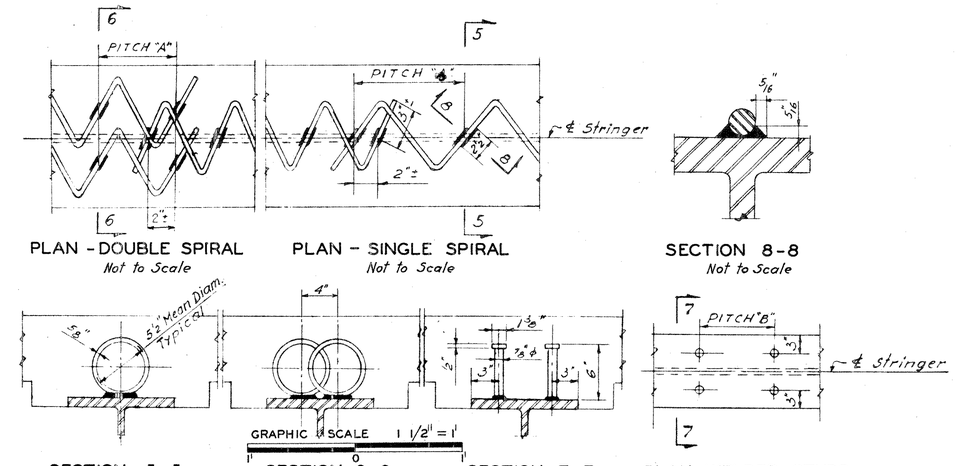

SHEAR CONNECTOR DETAILS

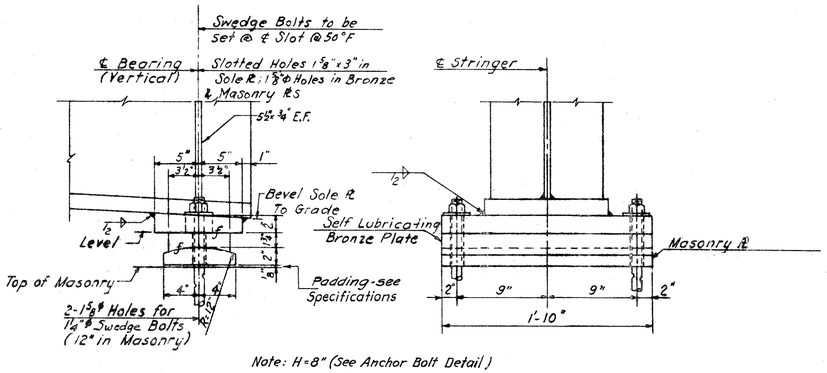

EXPANSION BEARINGS FOR BUILT-UP GIRDERS

Scale: 1½"=1'-0"

GRAPHIC SCALE 1 1/2" = 1'

* Shall conform to A.S.T.M. A-242 (modified) steel. See Special Provision for "Structural Steel".

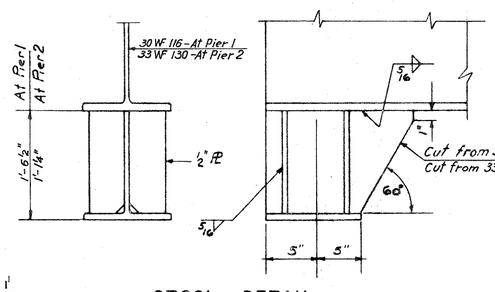

STOOL DETAIL

Scale: 1½"=1'-0"

Note: Bearings for interior stringers for side spans shown above to be welded to stools at Piers.

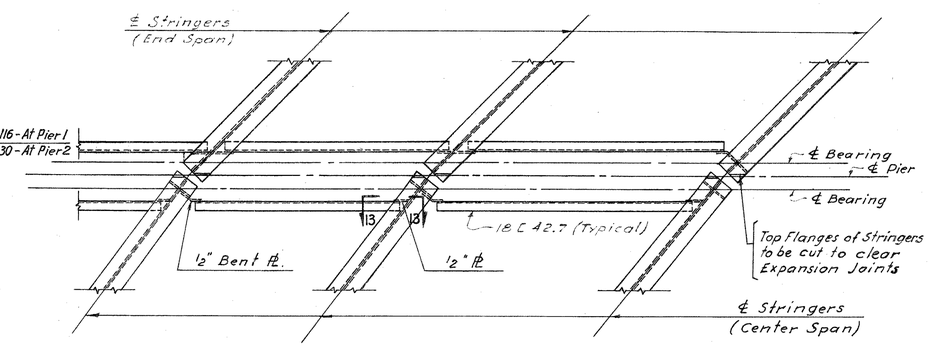

TYPICAL BEARING DIAPHRAGMS AT PIERS

Not to Scale

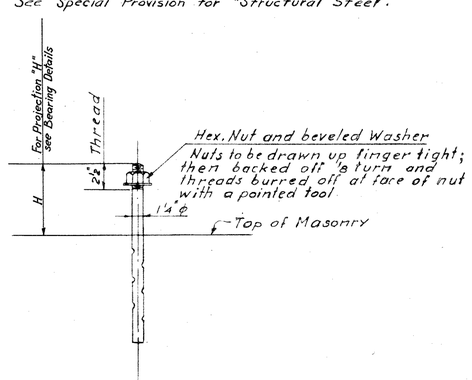

SWEDGE ANCHOR BOLT DETAIL

Scale: 1½" = 1'-0"

GRAPHIC SCALE 1 1/2" = 1'

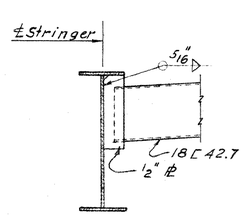

SECTION 13-13

Scale: ½" = 1'-0"

GRAPHIC SCALE 1/2" = 1'

FED. AID PROJ. NO. I-84-4(42)163

CONNECTICUT
STATE HIGHWAY DEPARTMENT

TOWN OF EAST HARTFORD
INTERSTATE ROUTE NO. 84
BRIDGE G - 9 - 14
OVER LINES 2 & 5
DETAILS I

REVISIONS		
NO.	DATE	DESCRIPTION

DESIGNED BY E. J. BEVLO, CONSULTING ENGINEER
SCALES AS SHOWN
MADE BY M.S. DATE 12-1-60
CHECKED BY N.T. DATE 12-2-60
APPROVED [signature] DATE 2-14-61
PROJECT NO. 42-134
BRIDGE SHEET NO. 4 OF 13

THE INFORMATION, INCLUDING ESTIMATED QUANTITIES OF WORK, SHOWN ON THESE SHEETS IS BASED ON LIMITED INVESTIGATIONS BY THE STATE AND IS IN NO WAY WARRANTED TO INDICATE THE TRUE CONDITIONS OR ACTUAL QUANTITIES OR DISTRIBUTION OF QUANTITIES OF WORK WHICH WILL BE REQUIRED.

DIETZGEN 198M Ageproof Tracing Vellum 6954

FORM NO. ENG. 12 ED 11-62

PUB. ROAD DIV. NO.	STATE	TOWN	FED. AID PROJ. NO.	PROJ. NO.	YEAR	ROUTE NO.	SHEET NO.	TOTAL SHEETS
1	CONN.	EAST HARTFORD	I-84 4(42)63	42-134	1962	I-84	70	216

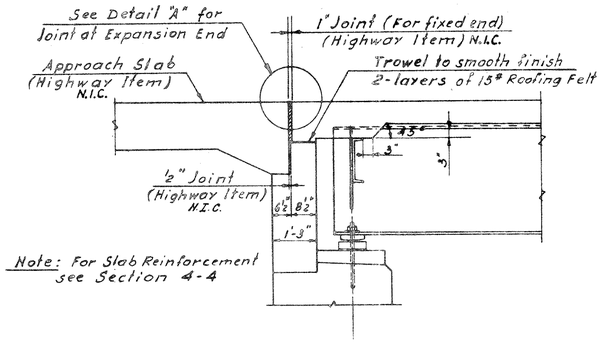

SECTION 3-3

(Section 3'-3' similar except for Detail "A")

Scale: 1/2" = 1'-0"

GRAPHIC SCALE 1/2" = 1'

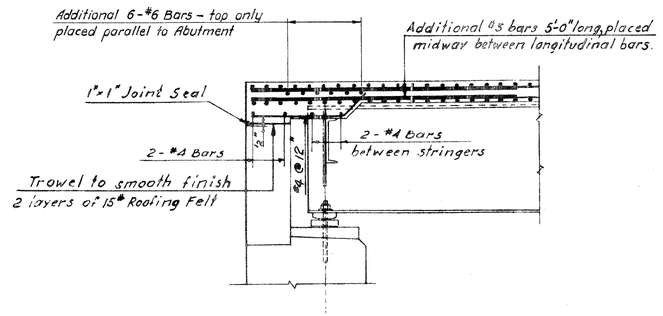

SECTION 4-4

Scale: 1/2" = 1'-0"

GRAPHIC SCALE 1/2" = 1'

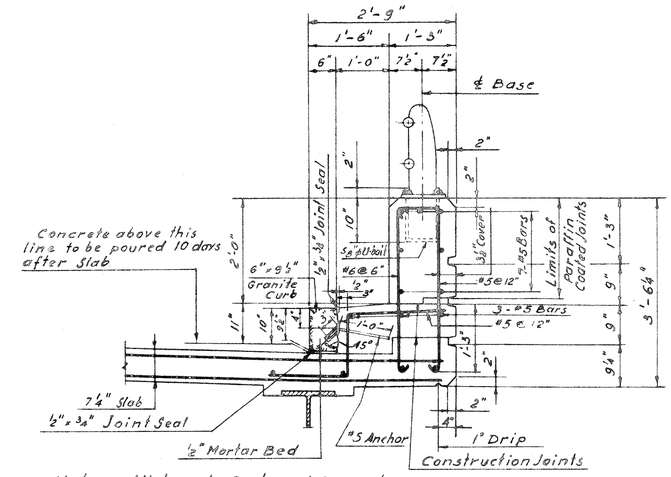

Note: All bars in Curb and Parapet to have 2" cover except where noted otherwise.

SAFETY CURB AND PARAPET DETAIL

Scale: 3/4" = 1'-0"

GRAPHIC SCALE 3/4" = 1'

NOTE:
For railing details see Bridge Sheet No. 12
For Rail Post Spacing see Bridge Sheet No. 1

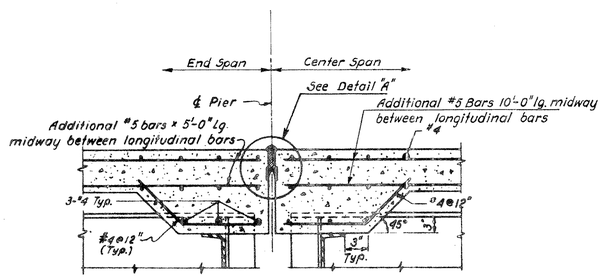

SECTION AT PIERS

Scale: 1" = 1'-0"

GRAPHIC SCALE 1" = 1'

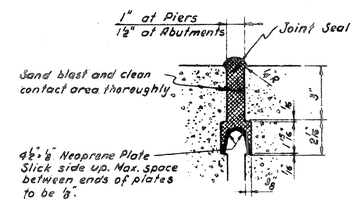

DETAIL "A"

Scale: 3" = 1'-0"

GRAPHIC SCALE 3" = 1'

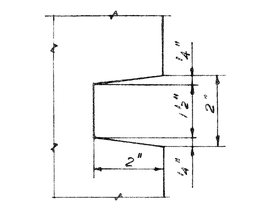

RUSTICATION DETAIL

Scale: 6" = 1'-0"

GRAPHIC SCALE 6" = 1'

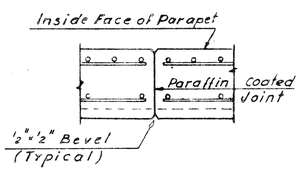

PARAFFIN COATED JOINT DETAIL

Scale: 3/4" = 1'-0"

GRAPHIC SCALE 3/4" = 1'

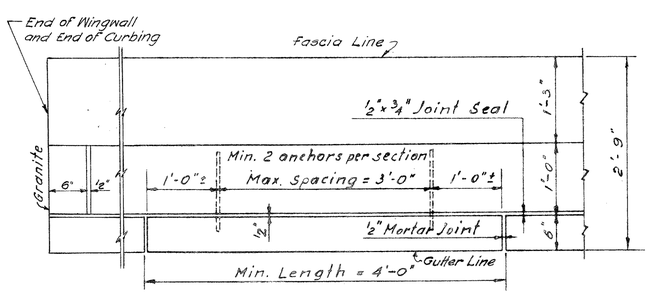

PLAN OF GRANITE CURB

Scale: 1" = 1'-0"

GRAPHIC SCALE 1" = 1'

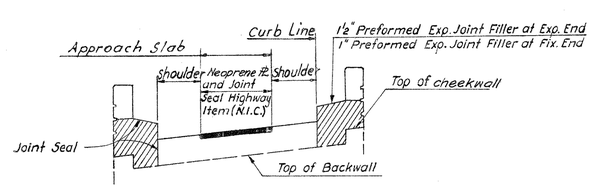

TYPICAL LIMITS FOR JOINT SEAL AT ABUTMENTS

Not to scale.

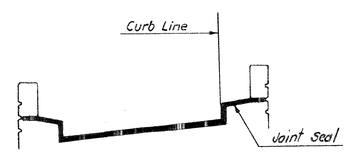

TYPICAL LIMITS FOR JOINT SEAL AT PIERS

Not to Scale

FED. AID PROJ. NO. I-84-4(42)63

CONNECTICUT
STATE HIGHWAY DEPARTMENT
TOWN OF EAST HARTFORD
INTERSTATE ROUTE NO. 84
BRIDGE G-9-14
OVER LINES 2 & 5
DETAILS II

REVISIONS		
NO.	DATE	DESCRIPTION

DESIGNED BY E. LIONEL PAVLO, CONSULTING ENGINEER

SCALES As shown

MADE BY M.S. DATE 10.17.60

CHECKED BY N.I. DATE 10.31.60

APPROVED [signature] DATE 2-28-61

PROJECT NO. 42-134

BRIDGE SHEET NO. 5 OF 13

278

FORM NO. ENG. 15 ED 11-52

PUB. ROAD DIV. NO.	STATE	TOWN	FED. AID PROJ. NO.	PROJ. NO.	YEAR	ROUTE NO.	SHEET NO.	TOTAL SHEETS
1	CONN.	EAST HARTFORD	I-84 4(42)63	42-134	1962	I-84	71	216

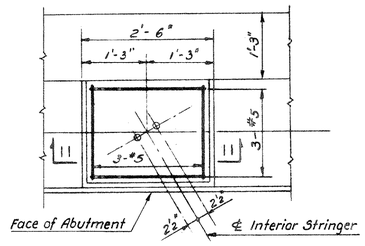

P L A N

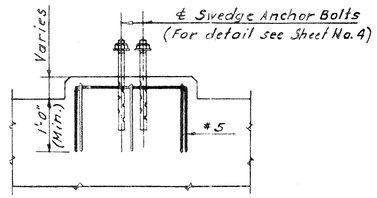

S E C T I O N II-II

TYPICAL PAD DETAIL

Scale: 3/4" = 1'-0"

GRAPHIC SCALE 3/4" = 1'

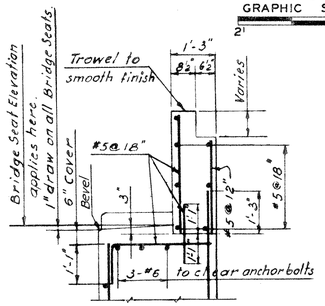

SECTION 9-9

Scale: 1/2" = 1'-0"

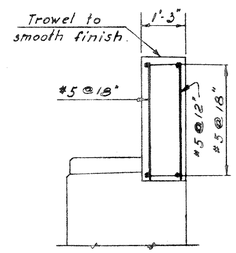

Note: For details not shown see Section 9-9

SECTION 10-10

Scale: 1/2" = 1'-0"

GRAPHIC SCALE 1/2" = 1'

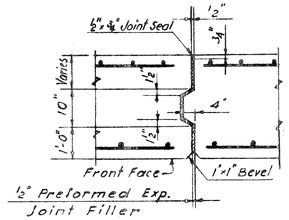

EXPANSION JOINT

Not to Scale.

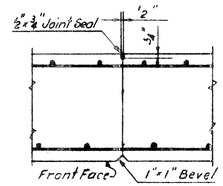

CONSTRUCTION JOINT

Not to Scale.

JOINT NOTES:

Abutments: Joint Seal to extend from top of footing to top of backwall

Joint between Abutment and Wingwall: Keys to extend from top of Footing to within 1'-0" of the top of Bridge seat. Joint Seal to extend from top of footing to top of backwall.

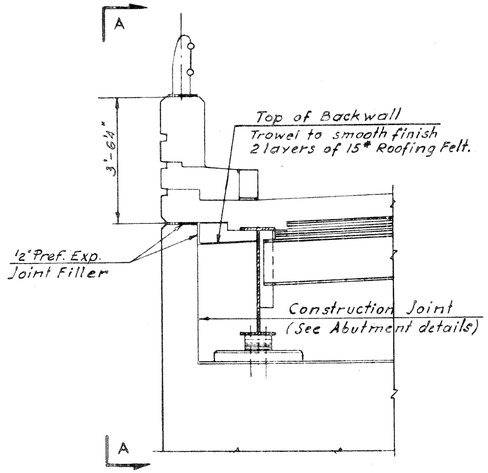

S E C T I O N I-I

(Section 1'-1' similar, opposite hand)

Scale: 1/2" = 1'-0"

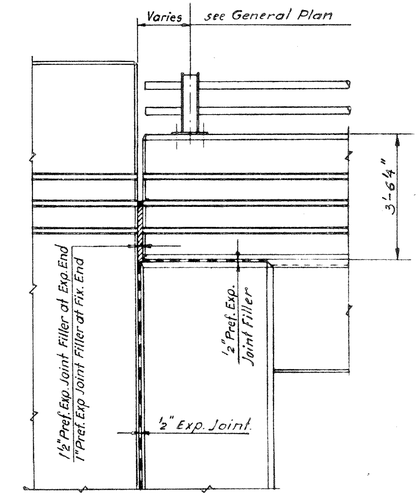

E L E V A T I O N A - A

Scale: 1/2" = 1'-0"

GRAPHIC SCALE 1/2" = 1'

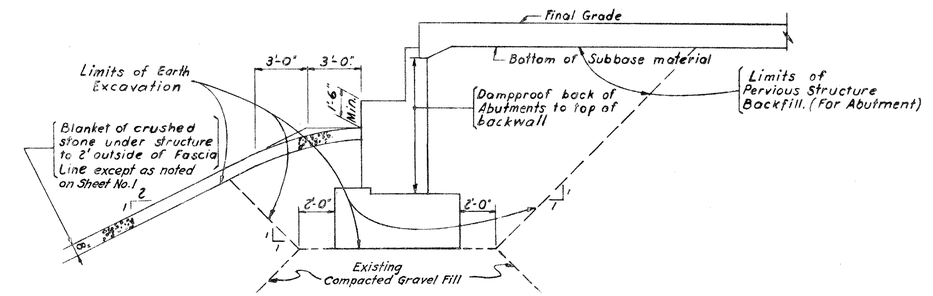

EXCAVATION, BACKFILL AND DRAINAGE DETAIL

No scale

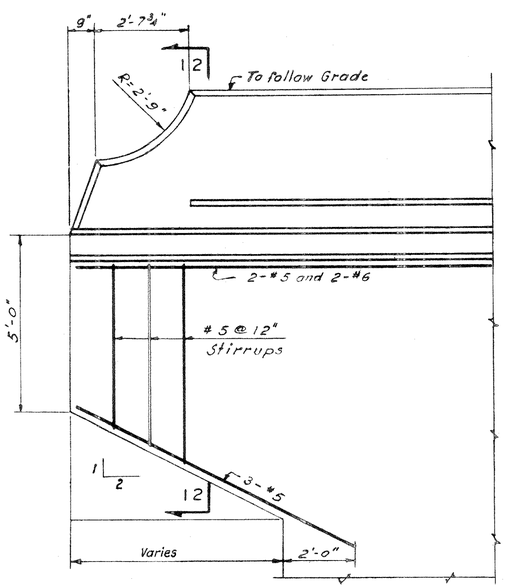

END POST DETAIL

Scale: 1/2" = 1'-0"

GRAPHIC SCALE 1/2" = 1'

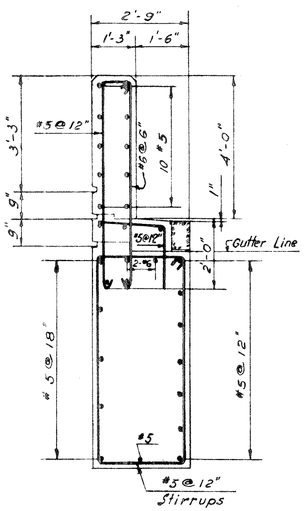

Note: For additional details see Wingwall Detail

SECTION 12-12

Scale: 1/2" = 1'-0"

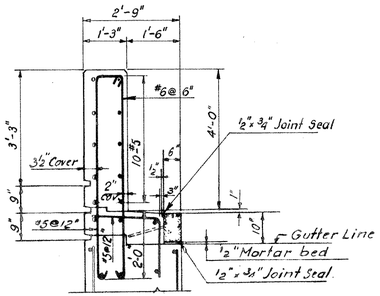

Note: For Rustication detail and Granite Curb details see Bridge Sheet No. 5

WINGWALL DETAIL

Scale: 1/2" = 1'-0"

GRAPHIC SCALE 1/2" = 1'

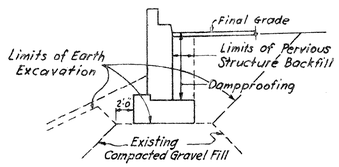

EXCAVATION & BACKFILL DETAIL OF WINGWALL

No scale

FED. AID PROJ. NO. I-84-4(42)63

CONNECTICUT
STATE HIGHWAY DEPARTMENT
TOWN OF EAST HARTFORD
INTERSTATE ROUTE NO. 84
BRIDGE 6-9-14
OVER LINES 2 & 5
DETAILS III

REVISIONS		
NO.	DATE	DESCRIPTION

DESIGNED BY E.L. PAVLO, CONSULTING ENGINEER

SCALES As shown

MADE BY M.S. DATE 11.15.60

CHECKED BY M.Z. DATE 12.2.60

APPROVED [signature] DATE 2-28-61

PROJECT NO. 42-134

BRIDGE SHEET NO. 6 OF 13

PUB. ROAD DIV. NO.	STATE	TOWN	FED. AID PROJ. NO.	PROJ. NO.	YEAR	ROUTE NO.	SHEET NO.	TOTAL SHEETS
1	CONN.	EAST HARTFORD	I-84 4(42)63	42-134	1962	I-84	72	216

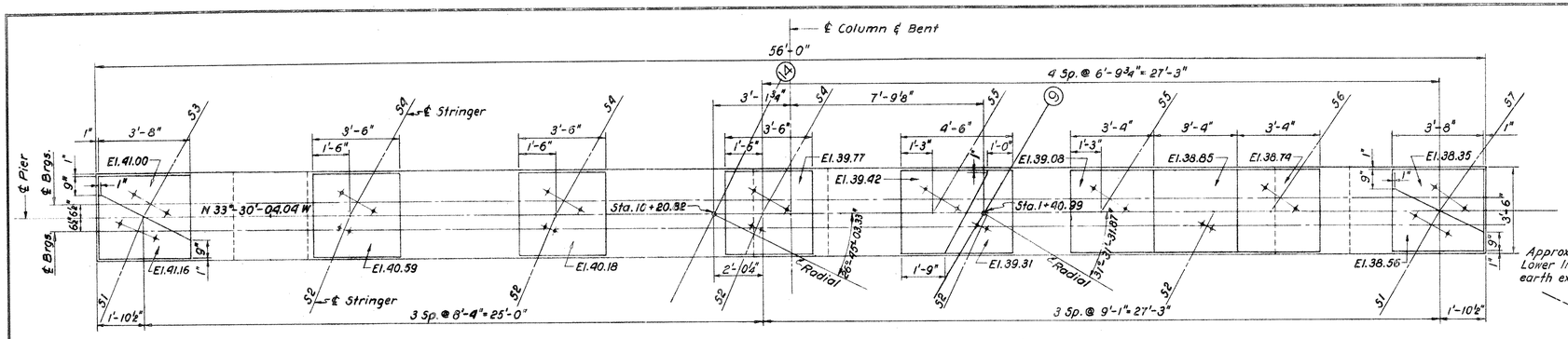

TOP PLAN
Scale: 3/8" = 1'-0"
GRAPHIC SCALE 3/8" = 1'

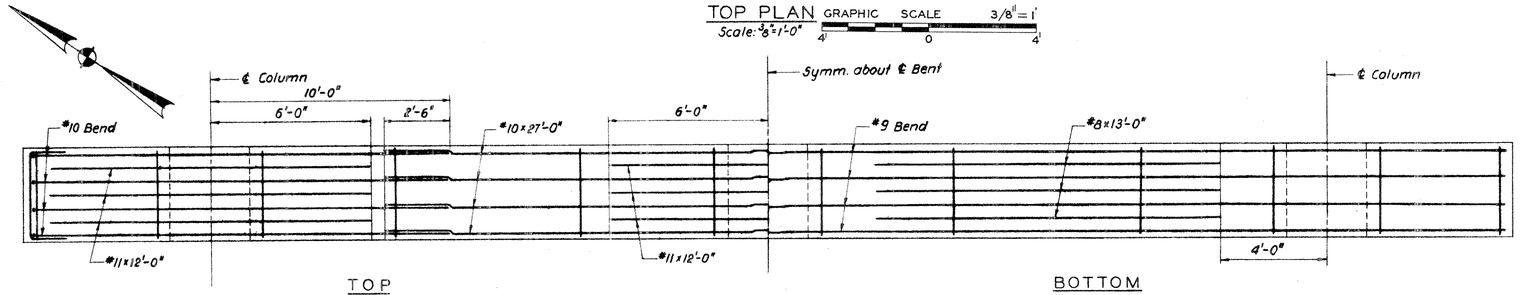

CAP REINFORCEMENT
Scale: 3/8" = 1'-0"
GRAPHIC SCALE 3/8" = 1'

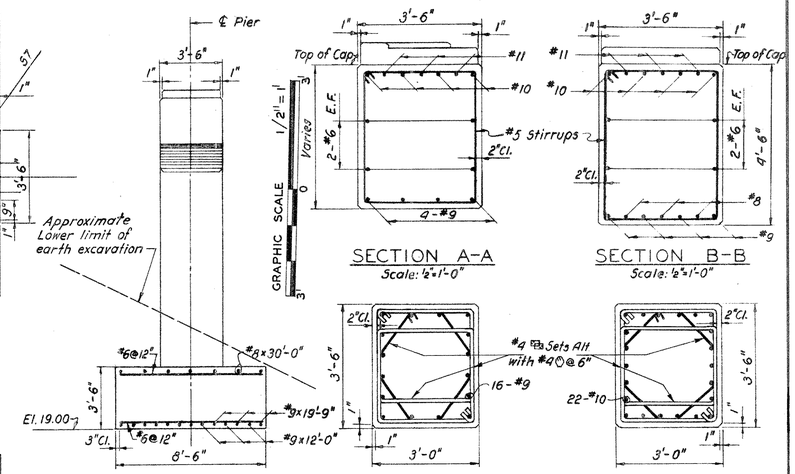

SECTION A-A
Scale: ½" = 1'-0"

SECTION B-B
Scale: ½" = 1'-0"

END ELEVATION
Scale: ¼" = 1'-0"
GRAPHIC SCALE 1/4" = 1'

SECTION C-C
Scale: ½" = 1'-0"

SECTION D-D
Scale: ½" = 1'-0"
GRAPHIC SCALE 1/2" = 1'

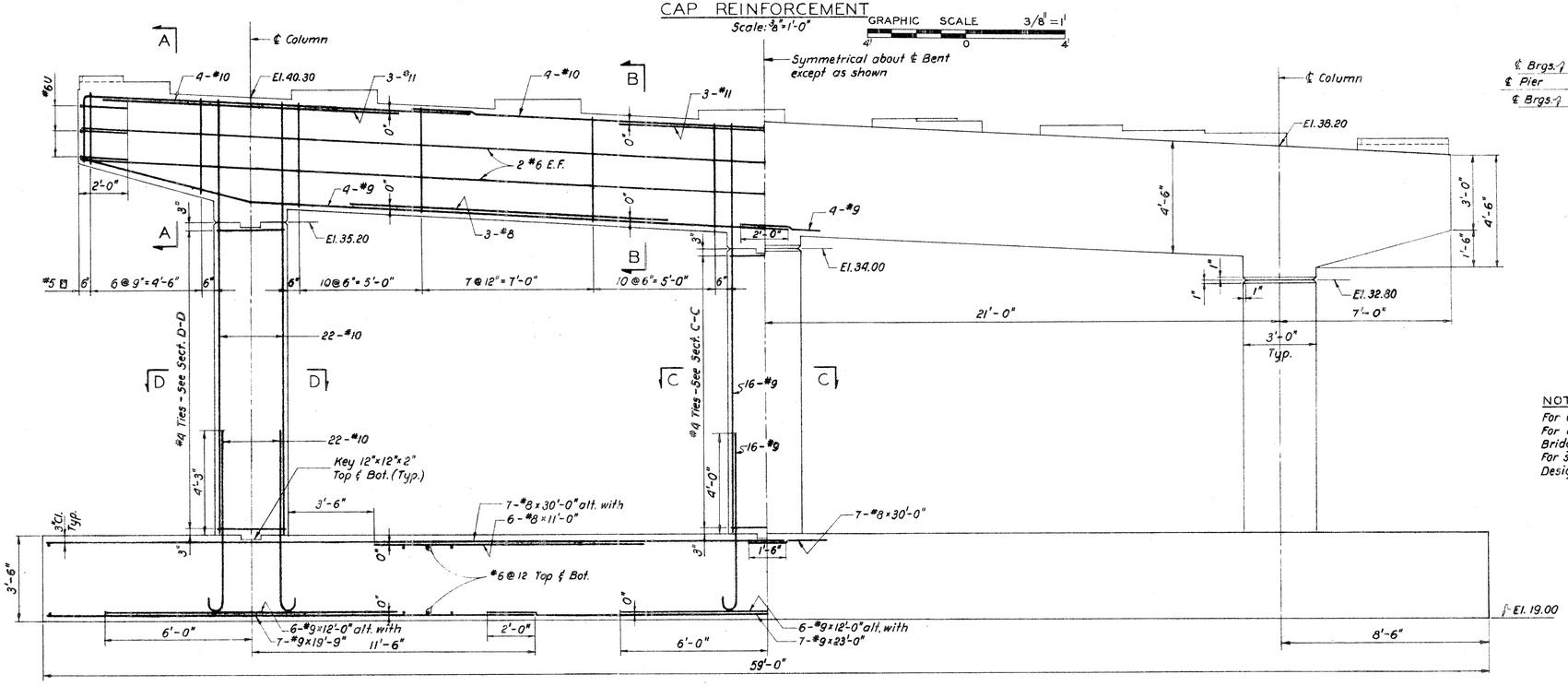

ELEVATION
Scale: 3/8" = 1'-0"
GRAPHIC SCALE 3/8" = 1'

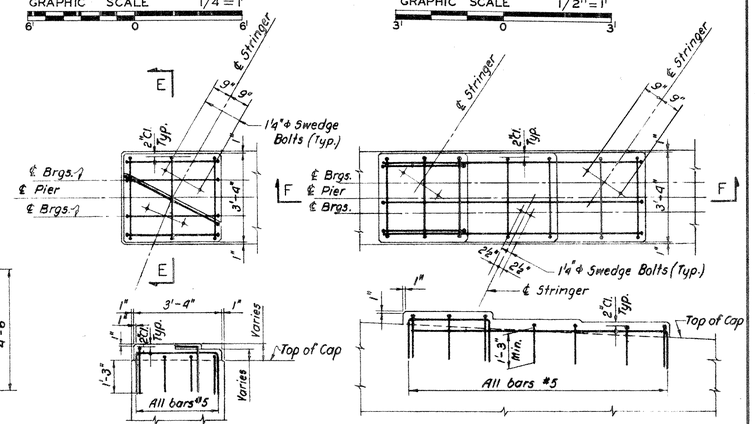

SECTION E-E

SECTION F-F

TYPICAL PAD DETAIL
Scale: 3/8" = 1'-0"
GRAPHIC SCALE 3/8" = 1'

NOTES:
For General Notes see Bridge Sheet No. 1
For orientation of stringers, see "Framing Plan" Bridge Sheet Nos. 3
For swedge bolt details & spacing see Bridge Sheet No. 4
Design Soil Pressures: Maximum: 1.8 t.s.f.
Average: 1.3 t.s.f.

FED. AID PROJ. I-84-4(42)63

THE INFORMATION, INCLUDING ESTIMATED QUANTITIES OF WORK, SHOWN ON THESE SHEETS IS BASED ON LIMITED INVESTIGATIONS BY THE STATE AND IS IN NO WAY WARRANTED TO INDICATE THE TRUE CONDITIONS OR ACTUAL QUANTITIES OR DISTRIBUTION OF QUANTITIES OF WORK WHICH WILL BE REQUIRED.

REVISIONS		
NO.	DATE	DESCRIPTION

CONNECTICUT STATE HIGHWAY DEPARTMENT

TOWN OF EAST HARTFORD
INTERSTATE ROUTE NO. 84
BRIDGE G-9-14
OVER LINES 2 & 5
PIER I

DESIGNED BY E.L. PAVLO, CONSULTING ENGINEER
SCALES As shown
MADE BY A.S. DATE 12-1-60
CHECKED BY N.K. DATE 12-2-60
APPROVED [signature] DATE 1-9-61

PROJECT NO. 42-134
BRIDGE SHEET NO. 7 OF 15

PUB. ROAD DIV. NO.	STATE	TOWN	FED. AID PROJ. NO.	PROJ. NO.	YEAR	ROUTE NO.	SHEET NO.	TOTAL SHEETS
1	CONN.	EAST HARTFORD	I-84 4(42)63	42-134	1962	I-84	73	216

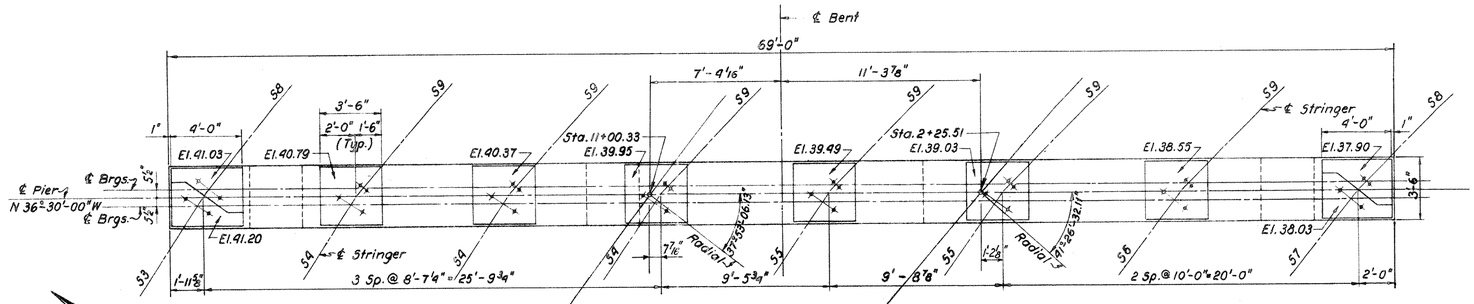

TOP PLAN
Scale: 1/4" = 1'-0"

GRAPHIC SCALE 1/4" = 1'

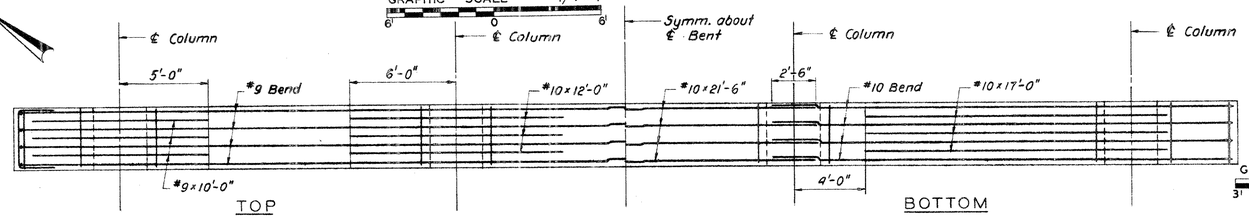

TOP

BOTTOM

CAP REINFORCEMENT
Scale: 1/4" = 1'-0"

GRAPHIC SCALE 1/4" = 1'

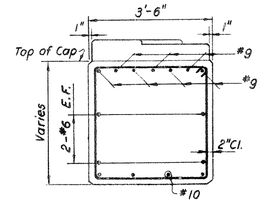

SECTION A-A
Scale: 1/2" = 1'-0"

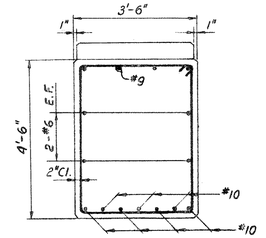

SECTION B-B
Scale: 1/2" = 1'-0"

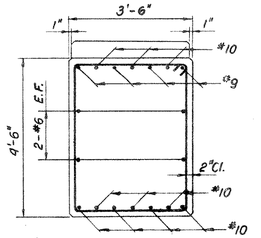

SECTION C-C
Scale: 1/2" = 1'-0"

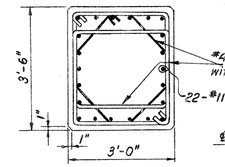

SECTION D-D
Scale: 1/2" = 1'-0"

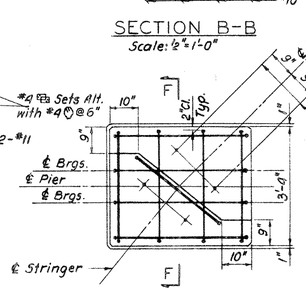

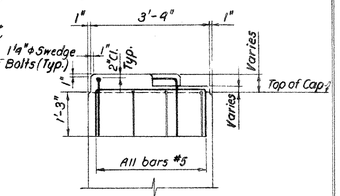

SECTION F-F

END PAD
Scale: 1/2" = 1'-0"

GRAPHIC SCALE 1/2" = 1'

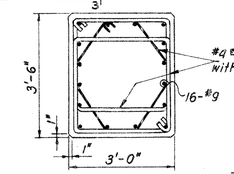

SECTION E-E
Scale: 1/2" = 1'-0"

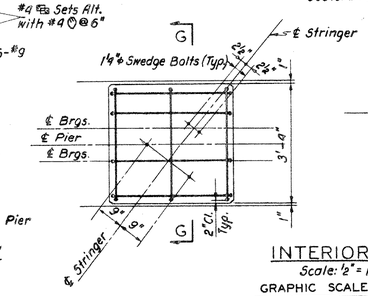

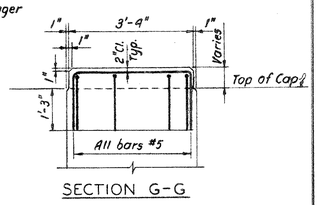

SECTION G-G

INTERIOR PAD
Scale: 1/2" = 1'-0"

GRAPHIC SCALE 1/2" = 1'

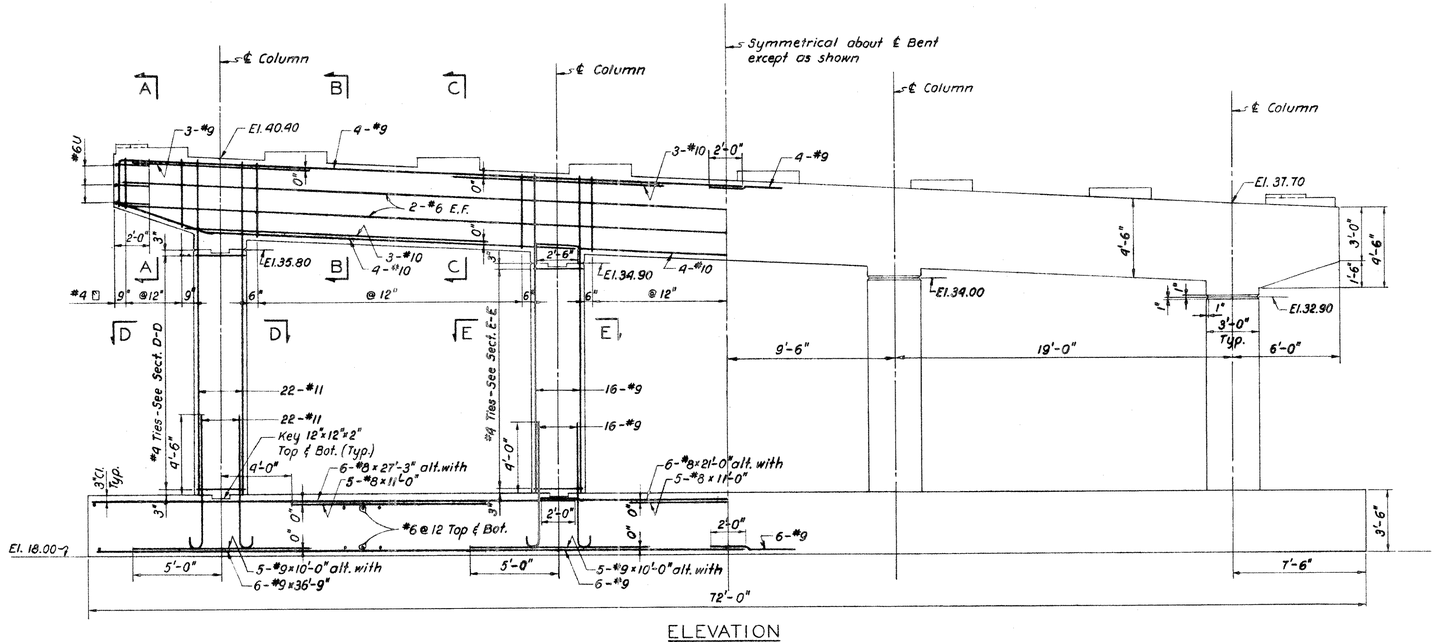

ELEVATION
Scale: 1/4" = 1'-0"

GRAPHIC SCALE 1/4" = 1'

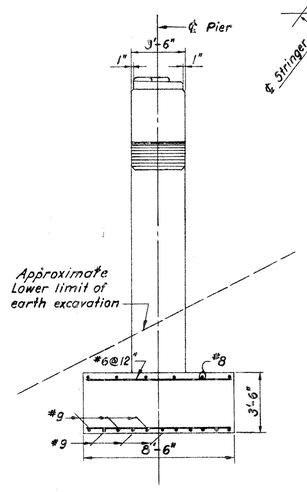

END ELEVATION
Scale: 1/4" = 1'-0"

GRAPHIC SCALE 1/4" = 1'

NOTES:

For General Notes see Bridge Sheet No. 1
For orientation of stringers, see "Framing Plan" Bridge Sheet No. 3
For swedge bolt details & spacing see Bridge Sheet No. 4
Design Soil Pressures: Maximum: 1.7 t.s.f.
Average: 1.2 t.s.f.

FED. AID PROJ. I-84-4(42)63

CONNECTICUT
STATE HIGHWAY DEPARTMENT

TOWN OF EAST HARTFORD
INTERSTATE ROUTE NO. 84
BRIDGE G-⑨-⑭
OVER LINES ② & ⑤
PIER 2

REVISIONS		
NO.	DATE	DESCRIPTION

DESIGNED BY E. L. PAVLO, CONSULTING ENGINEER
SCALES As shown
MADE BY A.S. DATE 12-8-60
CHECKED BY N.K. DATE 12-9-60
APPROVED [signature] DATE 1-9-61
PROJECT NO. 42-134
BRIDGE SHEET NO. 8 OF 13

THE INFORMATION, INCLUDING ESTIMATED QUANTITIES OF WORK, SHOWN ON THESE SHEETS IS BASED ON LIMITED INVESTIGATIONS BY THE STATE AND IS IN NO WAY WARRANTED TO INDICATE THE TRUE CONDITIONS OR ACTUAL QUANTITIES OR DISTRIBUTION OF QUANTITIES OF WORK WHICH WILL BE REQUIRED.

9133 134

FORM NO. ENG. 18 ED 11-52

PUB. ROAD DIV. NO.	STATE	TOWN	FED. AID PROJ. NO.	PROJ. NO.	YEAR	ROUTE NO.	SHEET NO.	TOTAL SHEETS
1	CONN.	East Hartford	I-84 (42)63	42-134	1962	I-84	74	210

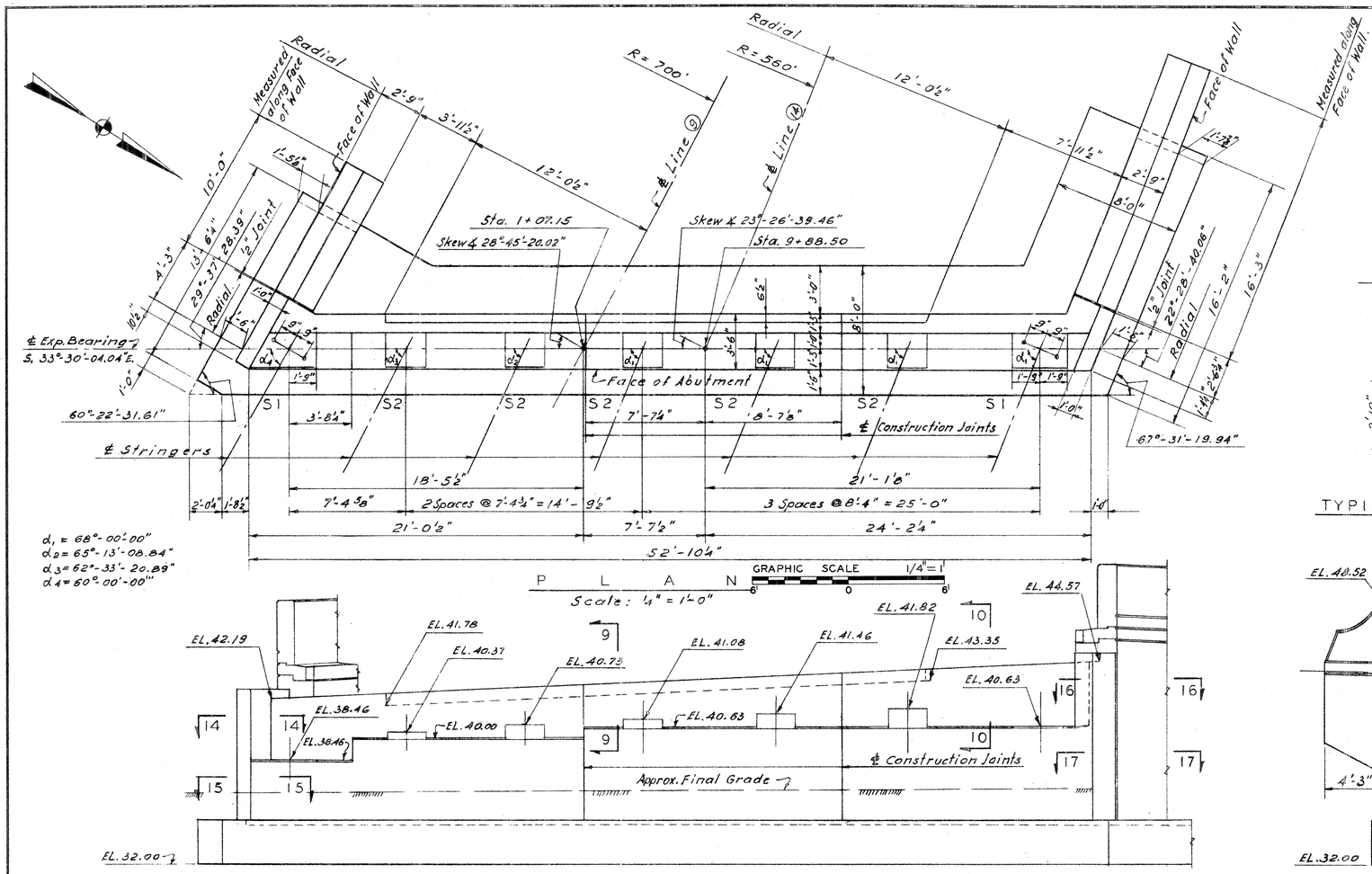

P L A N

GRAPHIC SCALE 1/4" = 1'

Scale: ¼" = 1'-0"

E L E V A T I O N

GRAPHIC SCALE 1/4" = 1'

Scale: ¼" = 1'-0"

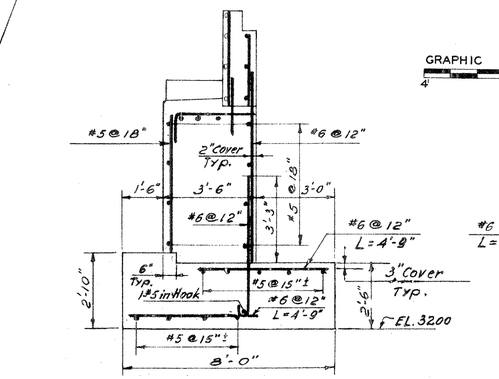

TYPICAL SECTION THROUGH ABUTMENT

Scale: ¼" = 1'-0"

GRAPHIC SCALE 3/8" = 1'

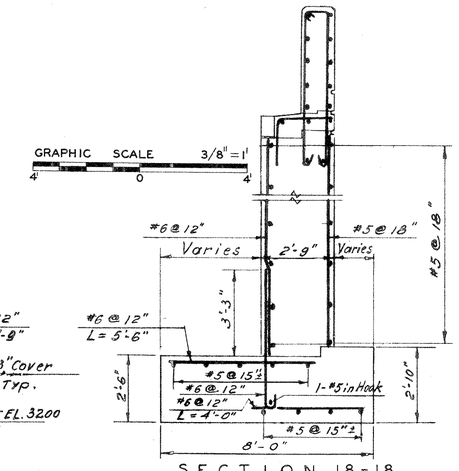

S E C T I O N 18-18

(Section 19-19 similar except for Footing)

Scale: ⅜" = 1'-0"

GRAPHIC SCALE 3/8" = 1'

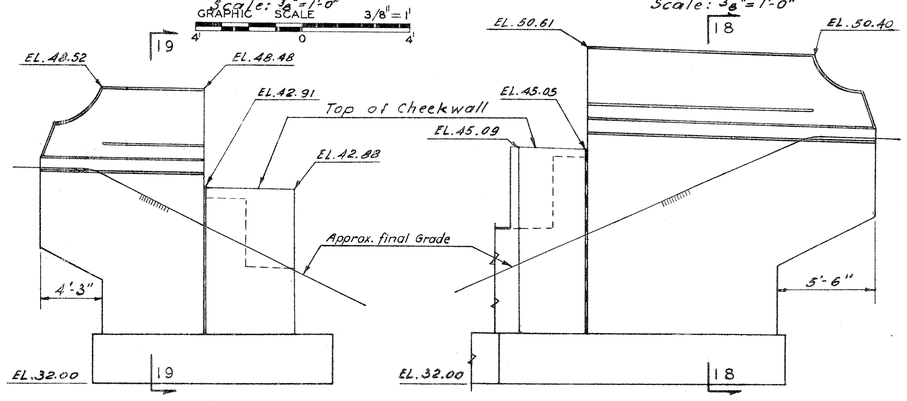

SOUTH WEST WINGWALL ELEVATION

Scale: ¼" = 1'-0"

NORTH WEST WINGWALL ELEVATION

Scale: ¼" = 1'-0"

GRAPHIC SCALE 1/4" = 1'

Notes: For General Plan and Elevation see Bridge Sheet No. 1
For General Notes see Bridge Sheet No. 1
For additional Details see Bridge Sheet No. 6
Design Soil Pressures: Maximum 2.1 t.s.f.
Average 1.1 t.s.f.

GRAPHIC SCALE 1/4" = 1'

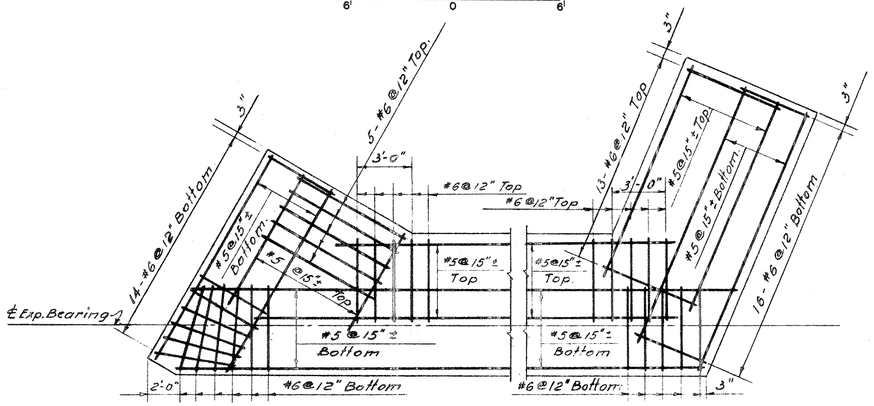

F O O T I N G R E I N F O R C E M E N T

Scale: ¼" = 1'-0"

GRAPHIC SCALE 1/4" = 1'

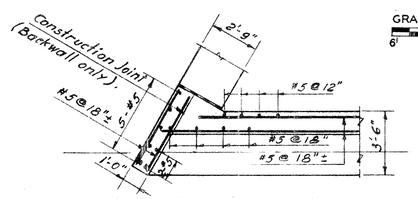

S E C T I O N 14-14

Scale: ¼" = 1'-0"

GRAPHIC SCALE 1/4" = 1'

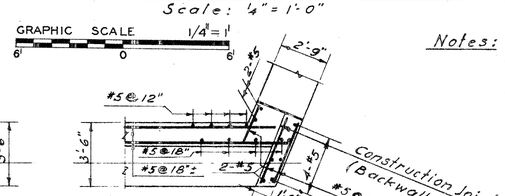

S E C T I O N 16-16

Scale: ¼" = 1'-0"

GRAPHIC SCALE 1/4" = 1'

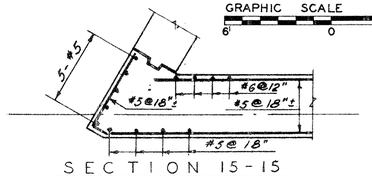

S E C T I O N 15-15

Scale: ¼" = 1'-0"

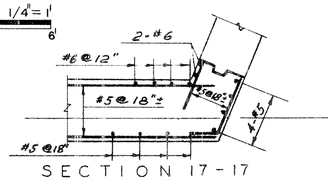

S E C T I O N 17-17

Scale: ¼" = 1'-0"

THE INFORMATION, INCLUDING ESTIMATED QUANTITIES OF WORK, SHOWN ON THESE SHEETS IS BASED ON LIMITED INVESTIGATIONS BY THE STATE AND IS IN NO WAY WARRANTED TO INDICATE THE TRUE CONDITIONS OR ACTUAL QUANTITIES OR DISTRIBUTION OF QUANTITIES OF WORK WHICH WILL BE REQUIRED.

REVISIONS		
NO.	DATE	DESCRIPTION

FED. AID PROJ. NO. I-84-4(42)63

CONNECTICUT
STATE HIGHWAY DEPARTMENT

TOWN OF EAST HARTFORD
INTERSTATE ROUTE NO. 84
BRIDGE G - 9 - 14
OVER LINES 2 & 5

WEST ABUTMENT & WALLS

DESIGNED BY E.L. PAVLO, CONSULTING ENGINEER

SCALES AS SHOWN

MADE BY M.S. DATE 10.17.60

CHECKED BY N.I. DATE 10.31.60

APPROVED [signature] DATE 1-9-61

PROJECT NO. 42-134

BRIDGE SHEET NO. 9 OF 13

#133 134

FORM NO. DHO. 19 ED 11-62

PUB. ROAD DIV. NO.	STATE	TOWN	FED. AID PROJ. NO.	PROJ. NO.	YEAR	ROUTE NO.	SHEET NO.	TOTAL SHEETS
1	CONN.	East Hartford	I-84-4(42)63	42-134	1962	I-84	75	216

GRAPHIC SCALE 1/4" = 1'

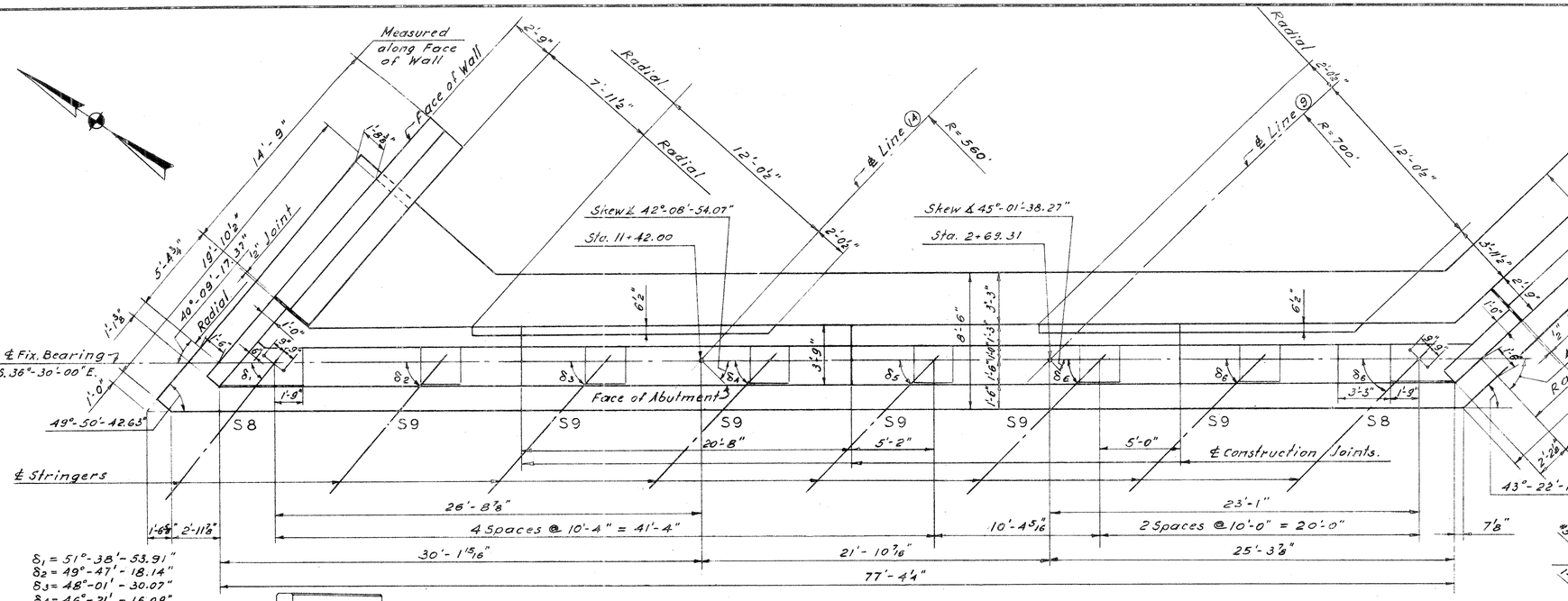

P L A N

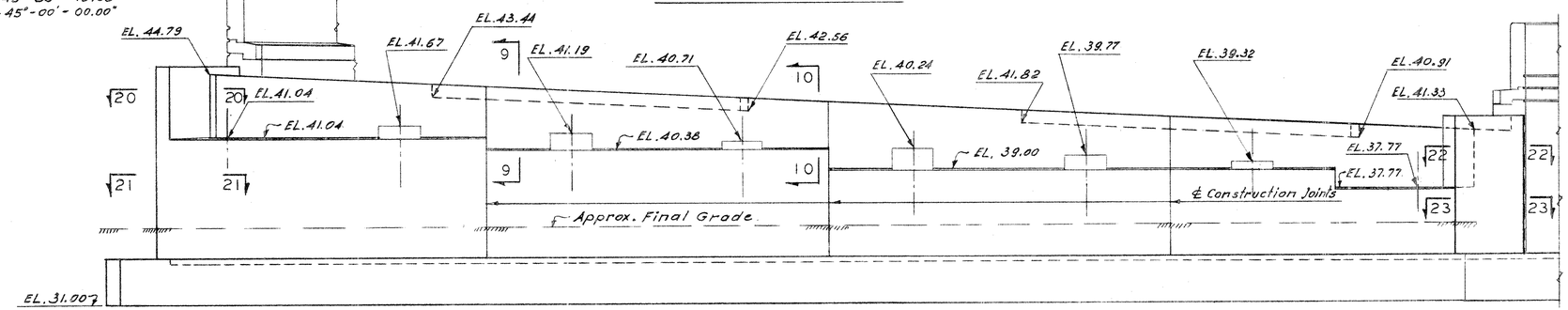

E L E V A T I O N

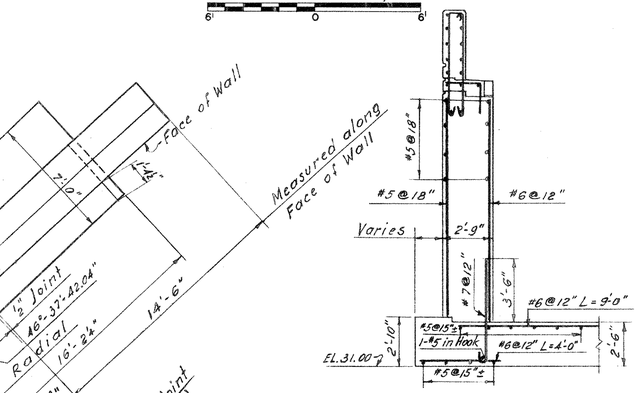

SECTION 25-25

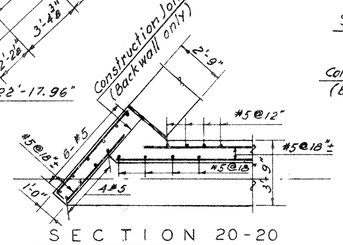

SECTION 20-20

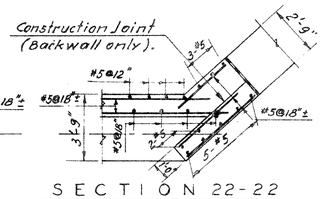

SECTION 22-22

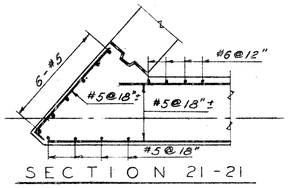

SECTION 21-21

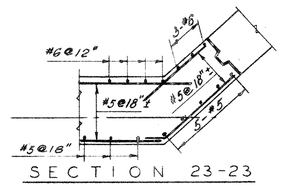

SECTION 23-23

Notes: For General Plan and Elevation see Bridge Sheet No. 1
For General Notes see Bridge Sheet No 1
Arrangement of Footing Reinforcement is similar to that shown for West Abutment, see Bridge Sheet No. 9
For additional details see Bridge Sheet No. 6
Design Soil Pressures: Maximum 2.1 t. s. f.
Average 1.1 t. s. f.

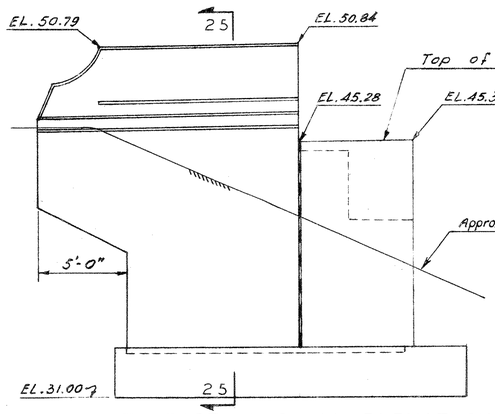

NORTH EAST WINGWALL ELEVATION.

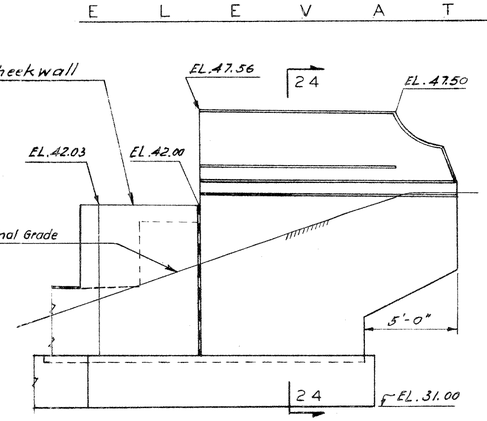

SOUTH EAST WINGWALL ELEVATION.

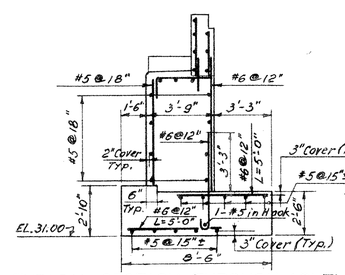

TYPICAL SECTION THROUGH ABUTMENT

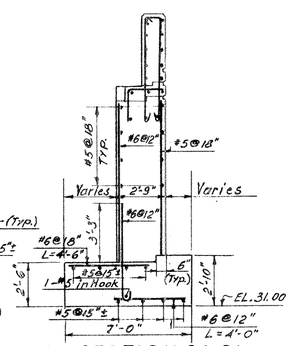

SECTION 24-24

THE INFORMATION, INCLUDING ESTIMATED QUANTITIES OF WORK, SHOWN ON THESE SHEETS IS BASED ON LIMITED INVESTIGATIONS BY THE STATE AND IS IN NO WAY WARRANTED TO INDICATE THE TRUE CONDITIONS OR ACTUAL QUANTITIES OR DISTRIBUTION OF QUANTITIES OF WORK WHICH WILL BE REQUIRED.

REVISIONS		
NO.	DATE	DESCRIPTION

FED. AID PROJ. NO. I-84-4(42)63

CONNECTICUT
STATE HIGHWAY DEPARTMENT

TOWN OF EAST HARTFORD
INTERSTATE ROUTE NO. 84
BRIDGE (G) - (9) - (14)
OVER LINES (2) & (5)

EAST ABUTMENT & WALLS

DESIGNED BY E.L. PAVLO, CONSULTING ENGINEER

SCALES 1/4" = 1'-0"
MADE BY M.S. DATE 10.17.60
CHECKED BY N.L. DATE 10.31.60
APPROVED [signature] DATE 1-9-61

PROJECT NO. 42-134
BRIDGE SHEET NO. 10 OF 13

PUB. ROAD DIV. NO.	STATE	TOWN	FED. AID PROJ. NO.	PROJ. NO.	YEAR	ROUTE NO.	SHEET NO.	TOTAL SHEETS
1	CONN.	EAST HARTFORD	I-84-4(42)63	42-134	1962	I-84	76	216

GRAPHIC SCALE VERT. 1" = 5'
10' 0 10'

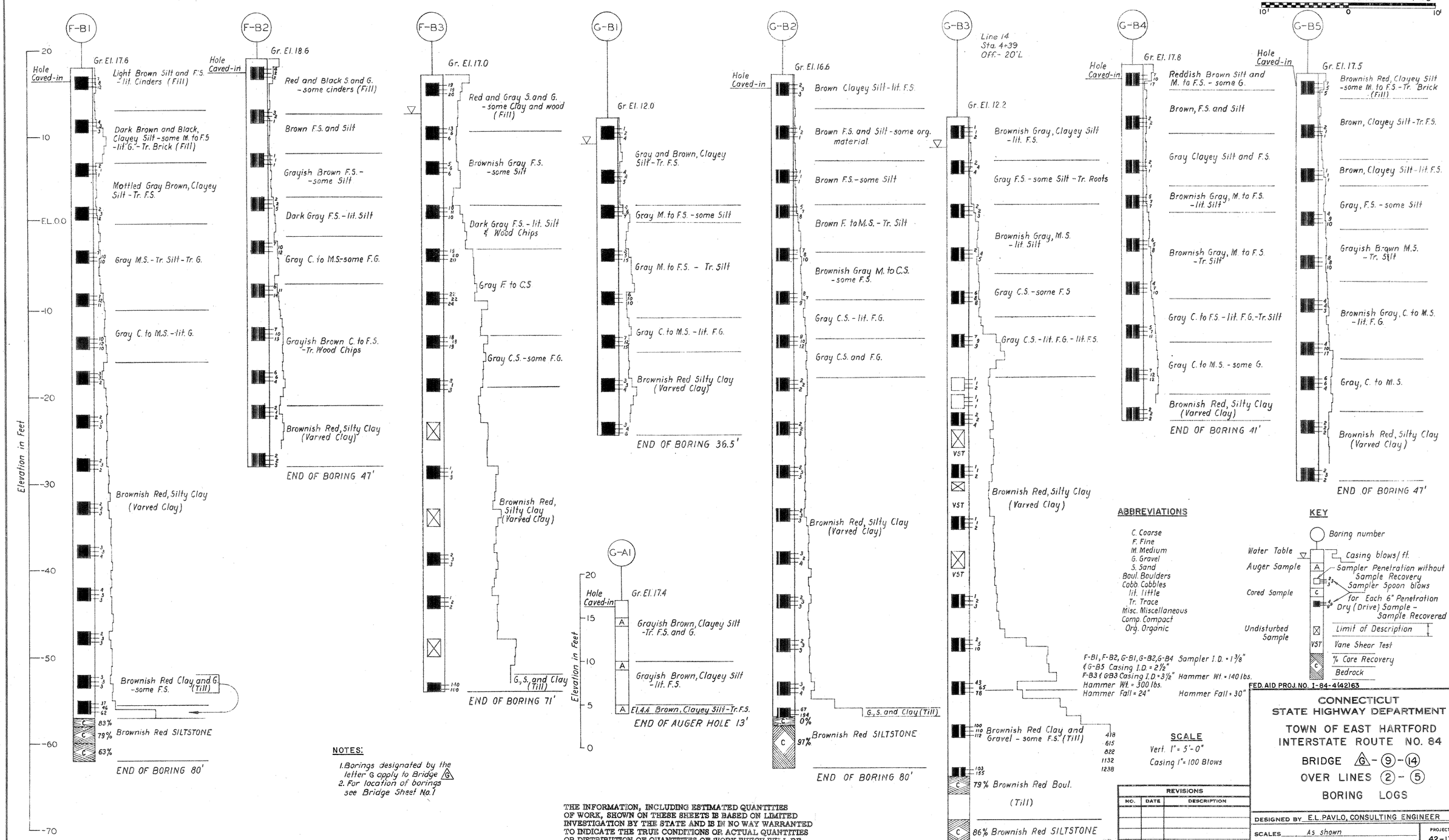

ABBREVIATIONS

C. Coarse
F. Fine
M. Medium
G. Gravel
S. Sand
Boul. Boulders
Cobb. Cobbles
lit. little
Tr. Trace
Misc. Miscellaneous
Comp. Compact
Org. Organic

KEY

Boring number
Water Table — Casing blows/ft.
Auger Sample — A — Sampler Penetration without Sample Recovery
Cored Sample — C — Sampler Spoon blows for Each 6" Penetration
Undisturbed Sample — Dry (Drive) Sample - Sample Recovered
Limit of Description
VST — Vane Shear Test
% Core Recovery
Bedrock

F-B1, F-B2, G-B1, G-B2, G-B4 Sampler I.D. = 1 3/8"
& G-B5 Casing I.D. = 2 1/2"
F-B3 & G-B3 Casing I.D. = 3 1/2" Hammer Wt. = 140 lbs.
Hammer Wt. = 300 lbs.
Hammer Fall = 24" Hammer Fall = 30"

SCALE

Vert. 1" = 5'-0"
Casing 1" = 100 Blows

NOTES:

1. Borings designated by the letter G apply to Bridge G
2. For location of borings see Bridge Sheet No. 1

THE INFORMATION, INCLUDING ESTIMATED QUANTITIES OF WORK, SHOWN ON THESE SHEETS IS BASED ON LIMITED INVESTIGATION BY THE STATE AND IS IN NO WAY WARRANTED TO INDICATE THE TRUE CONDITIONS OR ACTUAL QUANTITIES OR DISTRIBUTION OF QUANTITIES OF WORK WHICH WILL BE REQUIRED.

REVISIONS		
NO.	DATE	DESCRIPTION

FED. AID PROJ. NO. I-84-4(42)63

CONNECTICUT
STATE HIGHWAY DEPARTMENT

TOWN OF EAST HARTFORD
INTERSTATE ROUTE NO. 84

BRIDGE G - 9 - 14
OVER LINES 2 - 5

BORING LOGS

DESIGNED BY E.L. PAVLO, CONSULTING ENGINEER
SCALES As shown
MADE BY A.S. DATE 5-12-60
CHECKED BY M.A.G. DATE 5-12-60
APPROVED [signature] DATE 5-13-60

PROJECT NO. 42-134
BRIDGE SHEET NO. 11 OF 13

DIETZGEN 1984R Approach Tracing Vellum 6651

FORM NO. ENG. 15 ED. 1-62

PUB. ROAD DIV. NO.	STATE	TOWN	FED. AID PROJ. NO.	PROJ. NO.	YEAR	ROUTE NO.	SHEET NO.	TOTAL SHEETS
1	CONN.	EAST HARTFORD	I-84-4(42)63	42-134	1962	I-84	77	210

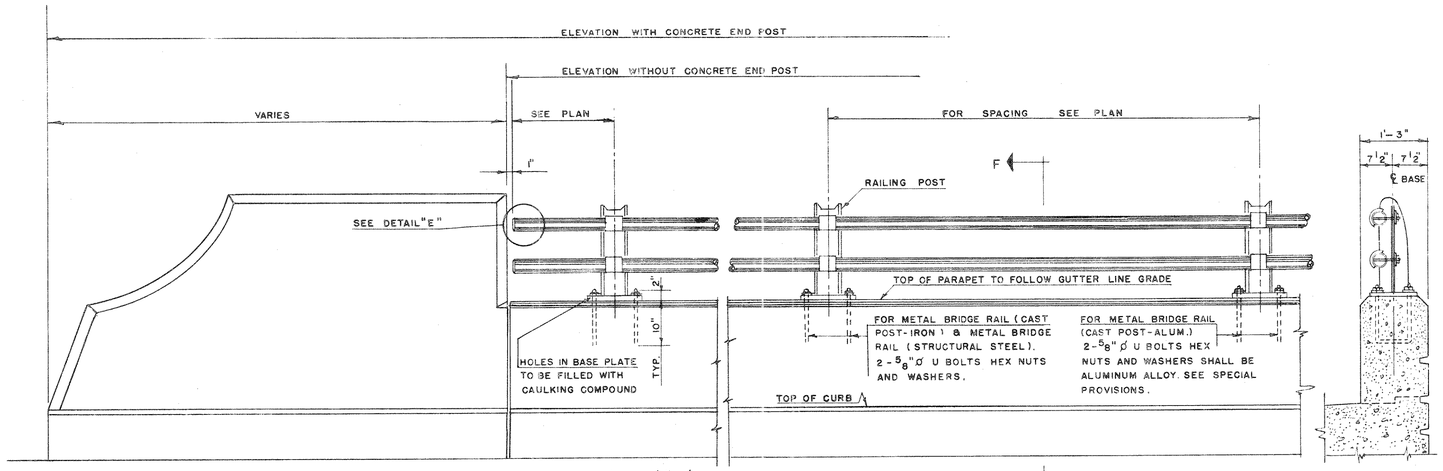

GRAPHIC SCALE 3/4" = 1'
2' 0 2'

ELEVATION
CONC. END POST AND RAIL
SCALE 3/4" = 1'-0"

METAL BRIDGE RAIL
(STRUCTURAL STEEL)

ALL POSTS TO BE 6 WF 20 STRUCTURAL STEEL.
ALL RAILS TO BE 2 1/2"ø STANDARD STEEL PIPE.
RAILING POSTS SHALL BE VERTICAL.
IF NECESSARY SHIM WITH LEAD WOOL AND CAULK. COST TO BE INCLUDED IN ITEM METAL BRIDGE RAIL. (STRUCTURAL STEEL.)
FOR PAINTING SEE SPECIAL PROVISIONS.
ALL POSTS & BASE PLATES TO BE OF STRUCTURAL STEEL CONFORMING TO A.S.T.M. A-7.

METAL BRIDGE RAIL
(CAST POST - IRON)

ALL POSTS TO BE MALLEABLE IRON CASTING CONFORMING TO A.S.T.M. A-47 GRADE 35018 OR DUCTILE IRON CASTING CONFORMING TO A.S.T.M. A-339.
ALL RAILS TO BE 2 1/2"ø STANDARD STEEL PIPE.
RAILING POSTS SHALL BE VERTICAL.
IF NECESSARY SHIM WITH LEAD WOOL AND CAULK. COST TO BE INCLUDED IN ITEM METAL BRIDGE RAIL (CAST POST-IRON.).
FOR PAINTING SEE SPECIAL PROVISIONS.

METAL BRIDGE RAIL
(CAST POST - ALUMINUM)

ALL POSTS TO BE CAST OF ALUMINUM. SEE SPECIAL PROVISION.
ALL RAILS TO BE 3" O.D. X 2.625" I.D. ALUMINUM TUBING. SEE SPECIAL PROVISIONS.
RAILING POSTS SHALL BE VERTICAL.
IF NECESSARY SHIM WITH ALUMINUM SHEETS AND CAULK.
COST TO BE INCLUDED IN ITEM METAL BRIDGE RAIL (CAST POST - ALUM.)
ALUMINUM RAILING AND POSTS SHALL NOT BE PAINTED.

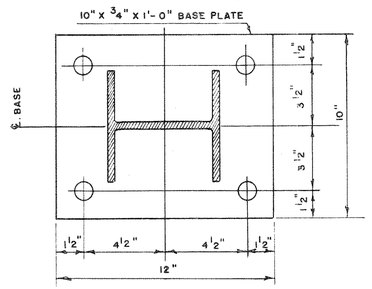

SECTION B-B
SCALE 3" = 1'-0"

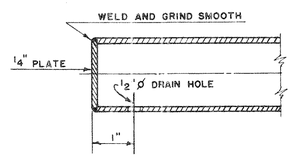

DETAIL "E"
NOT TO SCALE

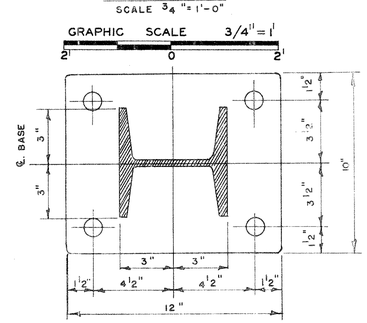

SECTION C-C
SCALE 3" = 1'-0"

GRAPHIC SCALE 3/4" = 1'
2' 0 2'

GRAPHIC SCALE 3" = 1'
6" 0 6"

GENERAL NOTES:

UNLESS OTHERWISE SPECIFIED ON THE PLANS OR IN THE SPECIAL PROVISIONS METAL BRIDGE RAIL MAY BE: METAL BRIDGE RAIL (STRUCTURAL STEEL). METAL BRIDGE RAIL (CAST POST-IRON) OR METAL BRIDGE RAIL (CAST POST-ALUMINUM).
COST OF FURNISHING AND SETTING 5/8"ø U BOLTS, HEX NUTS AND WASHERS TO BE INCLUDED IN ITEM "METAL BRIDGE RAIL."

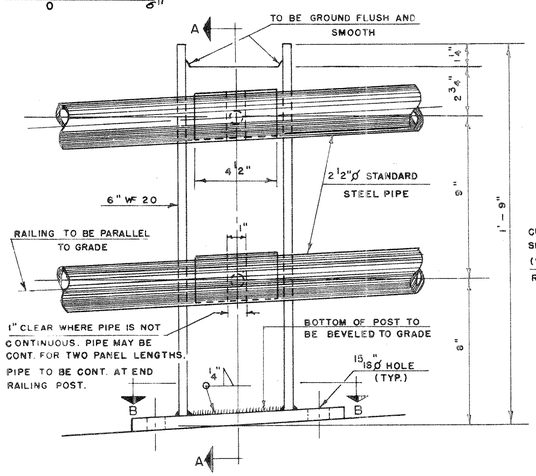

ELEVATION OF POST
SCALE 3" = 1'-0"

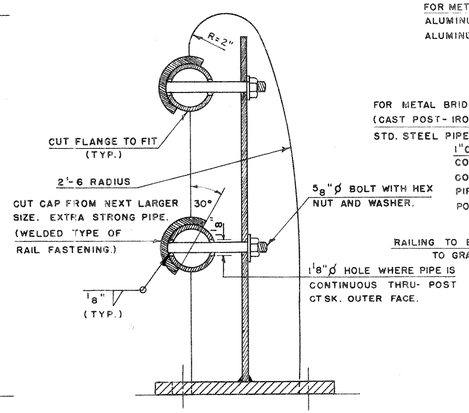

SECTION A-A
SCALE 3" = 1'-0

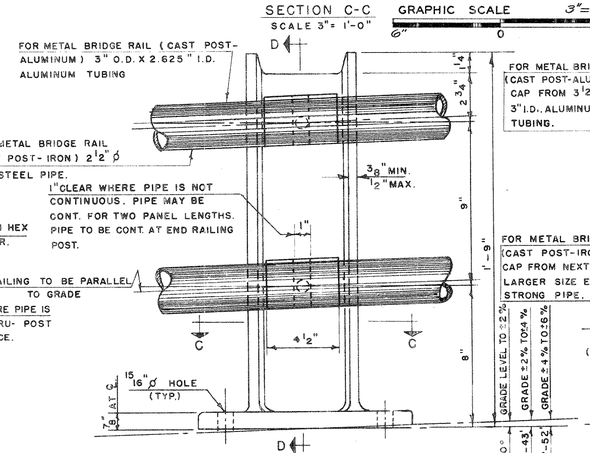

ELEVATION OF POST
SCALE 3" = 1'-0"

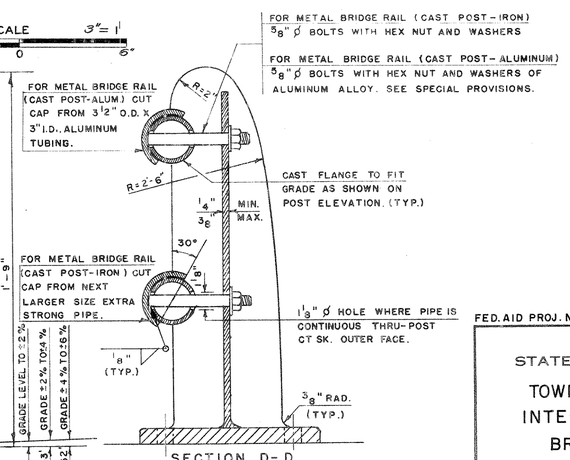

SECTION D-D
SCALE 3" = 1'-0"

GRAPHIC SCALE 3" = 1'
6" 0 6"

GRAPHIC SCALE 3" = 1'
6" 0 6"

DETAILS
STRUCTURAL STEEL POST
FOR METAL BRIDGE RAIL (STUCTURAL STEEL)

NOTE

DETAILS OF METAL BRIDGE RAILING AND FASTENING SIMILAR TO DETAILS SHOWN FOR METAL BRIDGE RAILING. (STRUCTURAL STEEL.)

DETAILS
CAST POST
FOR METAL BRIDGE RAIL (CAST POST-IRON)
AND
FOR METAL BRIDGE RAIL (CAST POST-ALUMINUM)

FED. AID PROJ. NO. I-84-4(42)63

CONNECTICUT
STATE HIGHWAY DEPARTMENT

TOWN OF EAST HARTFORD
INTERSTATE ROUTE NO. 84
BRIDGE G-9-14
OVER LINES 2 & 5
METAL BRIDGE RAIL

REVISIONS		
NO.	DATE	DESCRIPTION

DESIGNED BY G.H.D.
SCALES AS NOTED
MADE BY G.M.K. & G.J.Z. DATE 4-29-60
CHECKED BY J.L.C. DATE 11/10/60
APPROVED [signature] DATE [illegible]
PROJECT NO. 42-134
BRIDGE SHEET NO. 12 OF 13

VELLUM-TRACING CLOTH JOSEPH MERRITT & CO. 11210

I-84 I-84

77

PUB. ROAD DIV. NO.	STATE	TOWN	FED. AID PROJ. NO.	PROJ. NO.	YEAR	ROUTE NO.	SHEET NO.	TOTAL SHEETS
1	CONN.	EAST HARTFORD	I-84-4 (42)63	42-134	1962	I-84	78	216

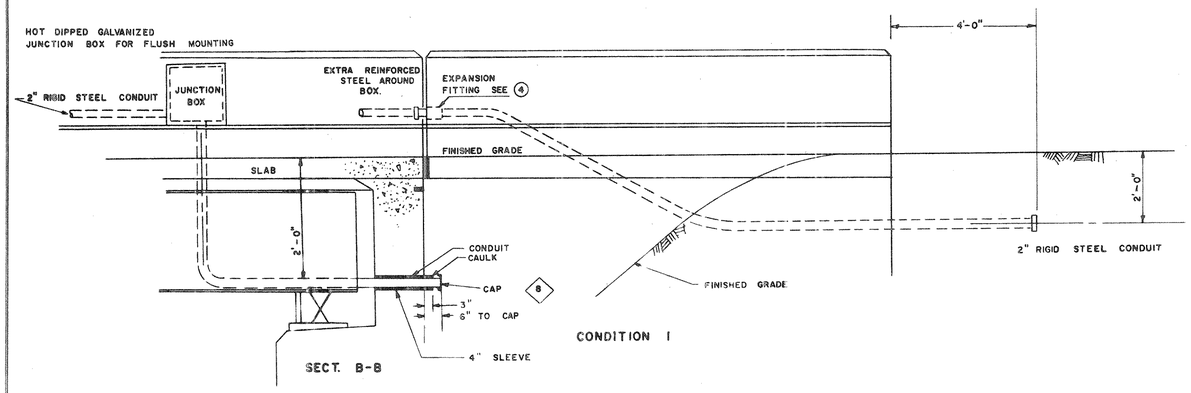

CONDUIT PARAPET TO FILL 3

SCALE 1/2" = 1'-0"

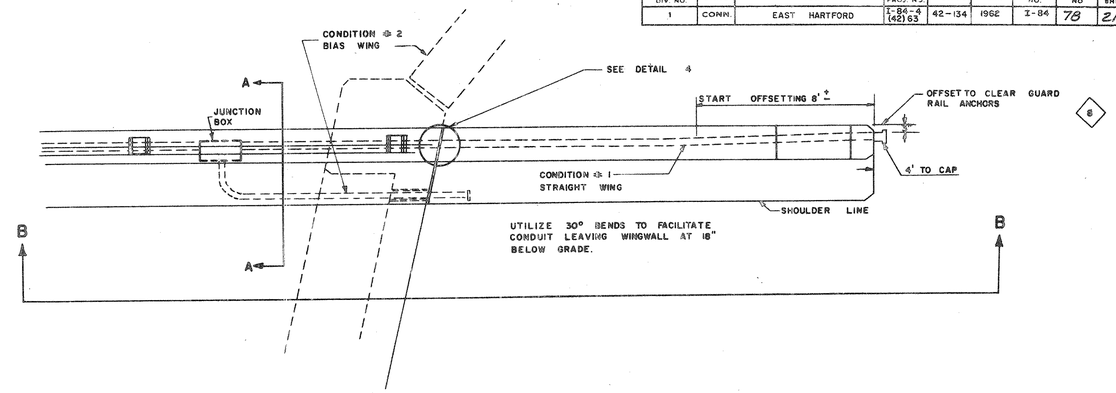

CONDUIT PARAPET TO FILL 1

NOT TO SCALE

GRAPHIC SCALE 1/2" = 1'

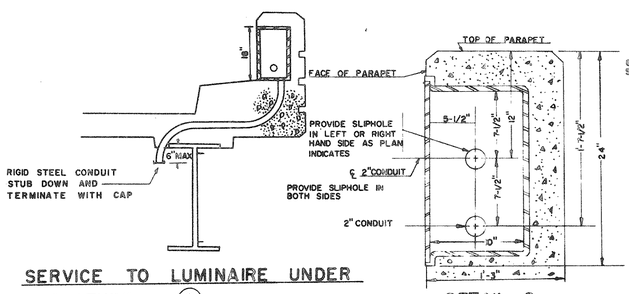

SERVICE TO LUMINAIRE UNDER STRUCTURE 6

NOT TO SCALE

DETAIL 2

18" X 18" X 10" JUNCTION BOX FOR LIGHT STANDARD
NOT TO SCALE

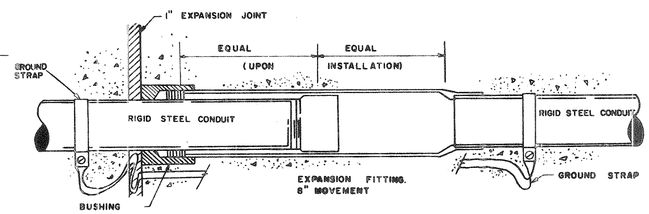

DETAIL OF EXPANSION FITTING 4

USE AT ALL EXPANSION JOINTS
NOT TO SCALE

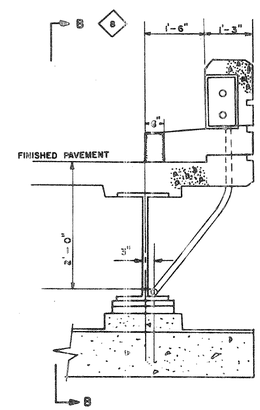

SECT A-A

NOT TO SCALE

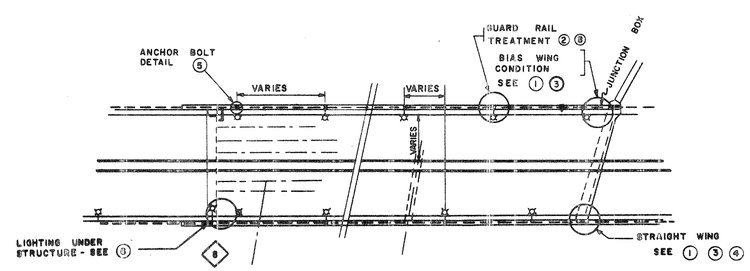

INDEX TO DETAILS

NOT TO SCALE

REVISIONS		
NO.	DATE	DESCRIPTION

FEDERAL AID PROJECT NO. I-84-4(42)63

CONNECTICUT
STATE HIGHWAY DEPARTMENT
TRAFFIC DIVISION
TOWN OF EAST HARTFORD
INTERSTATE ROUTE NO. 84

BRIDGE G - 9 - 14
OVER LINES 2 & 5
ELECTRICAL DETAILS

SCALE AS NOTED	ELECTRICAL		
DESIGNED BY	C. W. JOHNSON	3/1/61	PROJECT NO. 42-134
MADE BY	R. E. WENTWORTH	3/1/61	
SUBMITTED BY	H. A. KERR	3/1/61	BRIDGE SH. NO. 13 OF 13
APPROVED BY	R. M. Williston	3-1-61	

PUB. ROAD DIV. NO.	STATE	TOWN	FED. AID PROJ. NO.	PROJ. NO.	YEAR	ROUTE NO.	SHEET NO.	TOTAL SHEETS
1	CONN.	EAST HARTFORD	I-84 4(42)63	42-134	1962	I-84	79	216

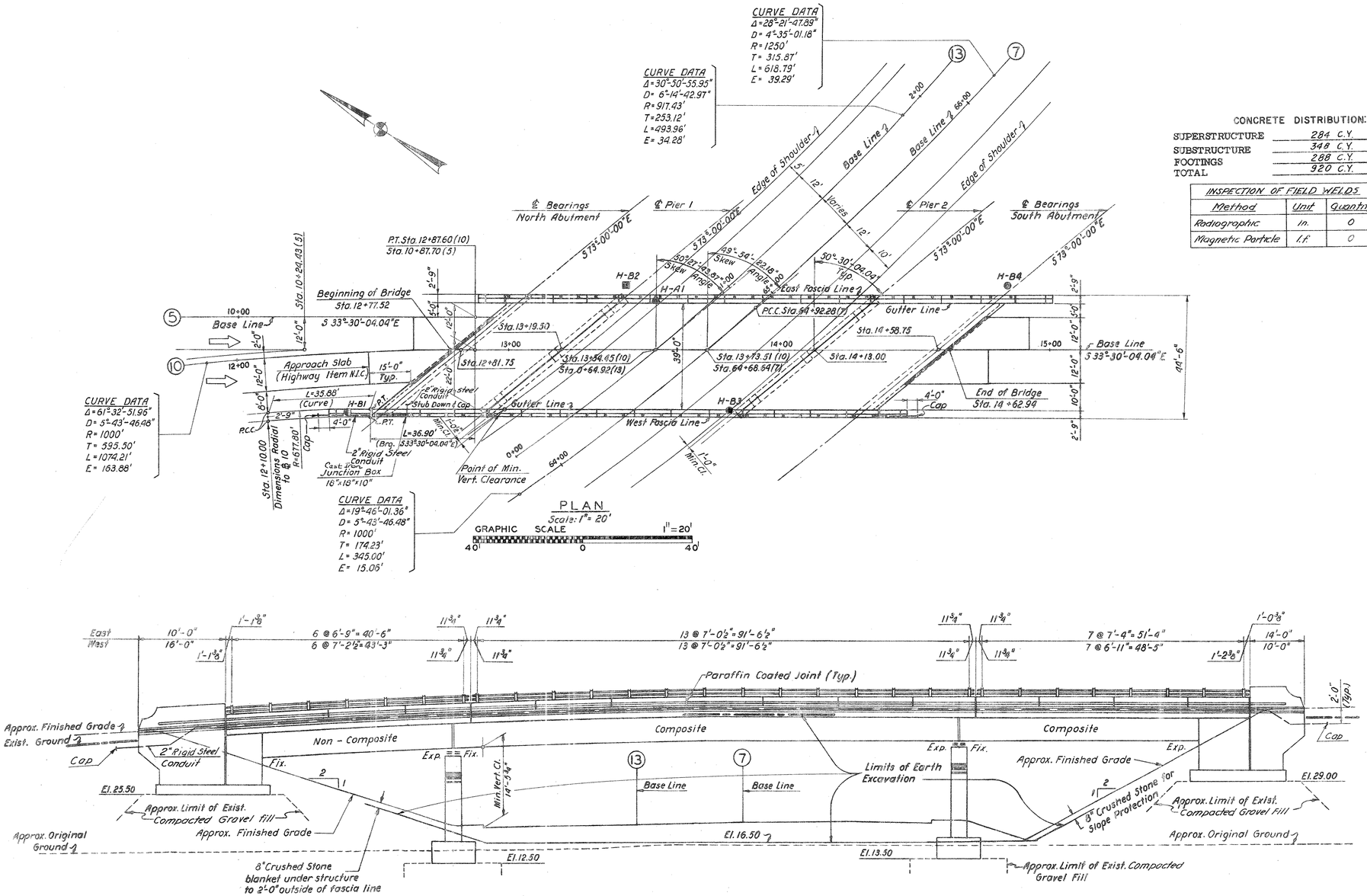

CONCRETE DISTRIBUTION:

SUPERSTRUCTURE	284 C.Y.
SUBSTRUCTURE	348 C.Y.
FOOTINGS	288 C.Y.
TOTAL	920 C.Y.

INSPECTION OF FIELD WELDS		
Method	Unit	Quantity
Radiographic	In.	0
Magnetic Particle	L.F.	0

ESTIMATE OF QUANTITIES

	ITEM	UNIT	QUANTITY
	Earth Excavation	C.Y.	15500
	Structure Excavation (complete)	C.Y.	300
	Crushed Stone for Slope protection	Ton	170
	Soil Loading Test	Ea.	1
	Class "A" Concrete	C.Y.	920
	½" Preformed Exp. Jt. Filler for Bridges	S.F.	155
	1" Preformed Exp. Jt. Filler for Bridges	S.F.	12
	1½" Preformed Exp. Jt. Filler for Bridges	S.F.	12
	Deformed Steel Bars	Lb.	125000
	Structural Steel	Lb.	280000
	Dampproofing	S.Y.	190
	Metal Bridge Rail	L.F.	385
	Pervious Structure Backfill	C.Y.	500
	Neoprene Plate for Bridge Exp. Jt.	L.F.	140
	6"x9½" Granite Stone Curbing for Bridges	L.F.	440
	Shear Connectors	I.F.	829
	2" Rigid Steel Conduit in Bridge	L.F.	240
	Cast Iron Junction Box (18"x18"x10")	Ea.	1
	Compacted Gravel Fill	C.Y.	150

GENERAL NOTES

SPECIFICATIONS: CONNECTICUT STATE HIGHWAY DEPARTMENT FORM 808 (JAN. 1955) AND SPECIAL PROVISIONS.
DESIGN SPECIFICATIONS: STANDARD SPECIFICATIONS FOR HIGHWAY BRIDGES (AASHO 1957) EXCEPT AS MODIFIED BY BUREAU OF PUBLIC ROADS POLICY ON INTERSTATE SYSTEM PROJECTS (AUGUST 1958) AND AS SUPPLEMENTED BY THE CONNECTICUT STATE HIGHWAY DEPARTMENT BRIDGE MANUAL JULY 1960.
LIVE LOAD: H-20-S16-44 ALTERNATE 24000# DUAL AXLE AT 4'-4" O.C. SLAB DESIGN AS PER TENTATIVE AASHO T.8 (59).
FUTURE PAVING ALLOWANCE: 25 P.S.F.
COMPOSITE CONSTRUCTION: NO TEMPORARY INTERMEDIATE SUPPORTS SHALL BE USED DURING CONSTRUCTION. SUPERIMPOSED LOADS SHALL BE PLACED WHEN DIRECTED BY THE ENGINEER, BUT NOT LESS THAN 10 DAYS AFTER THE SLAB HAS BEEN POURED.
CLASS "A" CONCRETE: CLASS "A" CONCRETE SHALL BE USED THROUGHOUT. SEE SPECIAL PROVISIONS.
DEFORMED STEEL BARS: FOR GRADES OF DEFORMED STEEL BARS SEE SPECIAL PROVISIONS.
EXPOSED EDGES: EXPOSED EDGES SHALL BE BEVELED 1" x 1" UNLESS DIMENSIONED OTHERWISE.
STRUCTURAL STEEL: ALL MATERIAL FOR ROLLED BEAMS SHALL CONFORM TO A.S.T.M. A-7. ALL MATERIAL FOR BUILT-UP WELDED SECTIONS AND SOLE PLATES SHALL CONFORM TO A.S.T.M. A-373.

ALL OTHER STEEL SHALL CONFORM TO A.S.T.M. A-7 UNLESS NOTED OTHERWISE.
Masonry plates shall conform to ASTM A-242 (modified) steel. See Special Provision for "Structural Steel".

PAINTING: FOR SHOP AND FIELD PAINTING OF STRUCTURAL STEEL AND METAL BRIDGE RAIL: SEE SPECIAL PROVISIONS.
JOINT SEAL: JOINT SEAL SHALL BE INCLUDED IN THE ITEM FOR CLASS "A" CONCRETE. SEE SPECIAL PROVISIONS.
FELT: THE COST OF FURNISHING AND PLACING 2 LAYERS OF 15# ROOFING FELT ON TOP OF BACKWALLS SHALL BE INCLUDED IN THE ITEM FOR CLASS "A" CONCRETE.

PARAFFIN: THE COST OF FURNISHING AND APPLYING PARAFFIN TO THE PARAPET JOINTS SHALL BE INCLUDED IN THE ITEM FOR CLASS "A" CONCRETE.
SPREAD FOOTINGS: DESIGN SOIL PRESSURES SHOWN ON SHEETS NO. 4,5 & 6.

WELDING: FOR INSPECTION OF WELDING, SEE SPECIAL PROVISIONS.
N.I.C. MEANS NOT INCLUDED IN CONTRACT.
REINFORCING BARS TO HAVE 2" COVER EXCEPT WHERE SHOWN OTHERWISE.
RAIL POST SPACING MEASURED ALONG FASCIA.

CLEARANCE NOTE:
Vertical clearance shall be established at the time of substructure construction to compensate for future settlement. This shall be done by raising the elevation of the bottom of footings by an amount equal to the anticipated subsequent settlement, as directed by the engineer.

BORING LEGEND:
● – 2½" Boring
■ – 3½" Boring
▲ – Auger Boring

THE INFORMATION, INCLUDING ESTIMATED QUANTITIES OF WORK, SHOWN ON THESE SHEETS IS BASED ON LIMITED INVESTIGATIONS BY THE STATE AND IS IN NO WAY WARRANTED TO INDICATE THE TRUE CONDITIONS OR ACTUAL QUANTITIES OR DISTRIBUTION OF QUANTITIES OF WORK WHICH WILL BE REQUIRED.

REVISIONS		
NO.	DATE	DESCRIPTION

FED. AID PROJ. NO. I-84-4(42)63

CONNECTICUT
STATE HIGHWAY DEPARTMENT
TOWN OF EAST HARTFORD
INTERSTATE ROUTE NO 84
BRIDGE A-10
OVER LINES 7 & 13
GENERAL PLAN & ELEVATION

DESIGNED BY E.L. PAVLO, CONSULTING ENGINEER
SCALES As shown
MADE BY A.S. DATE 10-14-60
CHECKED BY N.V.R. & N.K. DATE 2-9-61
APPROVED [signature] DATE 2-28-60
PROJECT NO. 42-134
BRIDGE SHEET NO. 1 of 10

PUB. ROAD DIV. NO.	STATE	TOWN	FED. AID PROJ. NO.	PROJ. NO.	YEAR	ROUTE NO.	SHEET NO.	TOTAL SHEETS
1	CONN.	EAST HARTFORD	I-84 4(42)63	42-134	1962	I-84	80	216

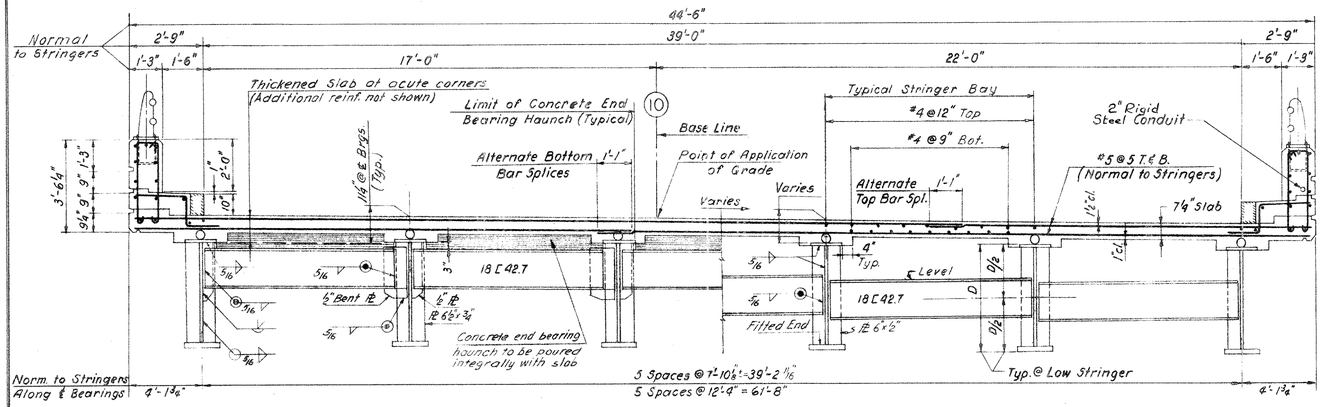

GRAPHIC SCALE 3/8" = 1'

CENTER SPAN CROSS SECTION

Scale: 3/8" = 1'-0"

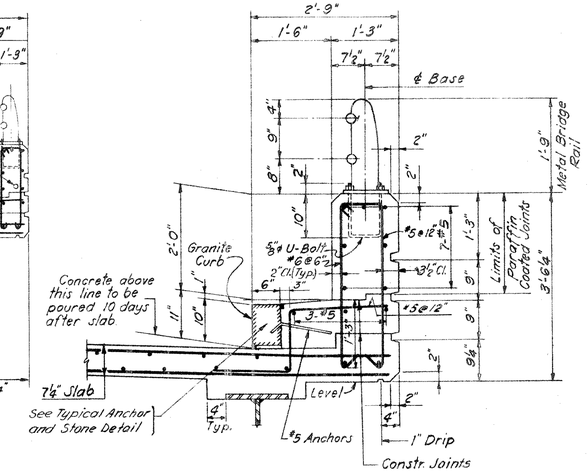

SAFETY CURB AND PARAPET DETAILS

Scale: 3/4" = 1'-0"

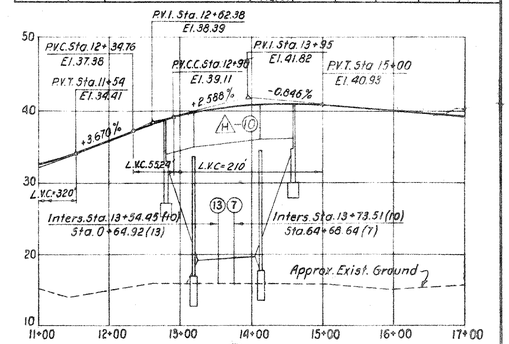

LINE 10 PROFILE

Scale: Vert. 1" = 10'
Horiz. 1" = 100'

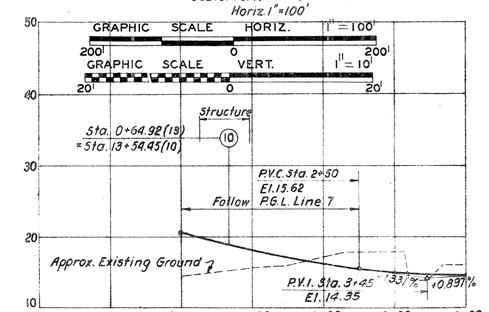

LINE 13 PROFILE

Scale: Vert. 1" = 10'
Horiz. 1" = 100'

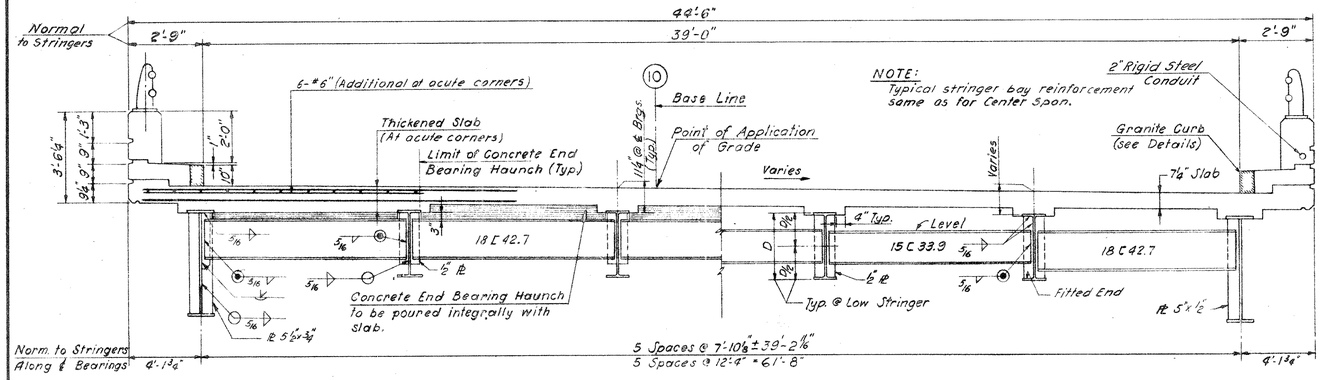

END SPAN CROSS SECTION

Scale: 3/8" = 1'-0"

GRAPHIC SCALE 3/8" = 1'

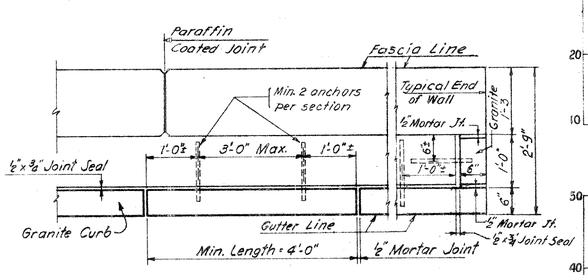

PLAN - GRANITE CURB

Scale: 3/4" = 1'-0"

GRAPHIC SCALE 3/4" = 1'

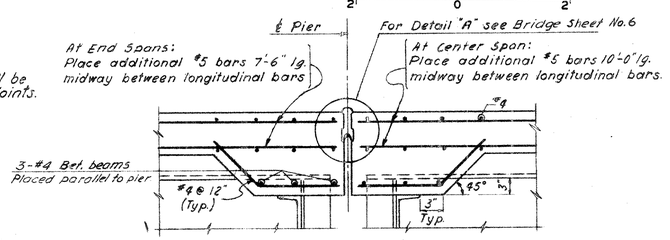

SLAB SECTION AT PIERS

Scale: 1" = 1'-0"

GRAPHIC SCALE 1" = 1'

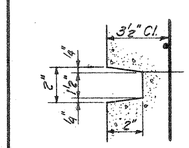

RUSTICATION DETAIL

Scale: 3" = 1'-0"

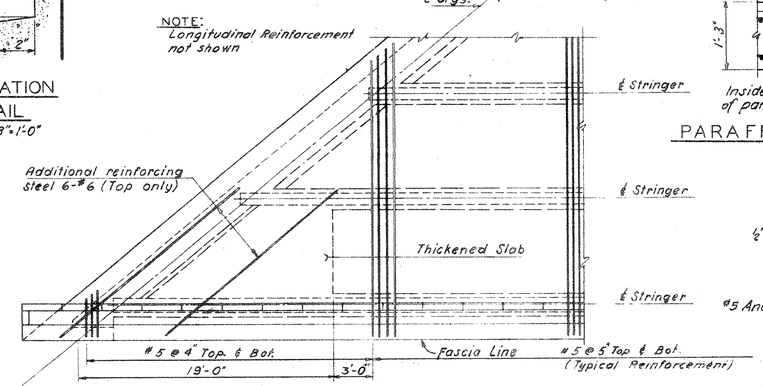

SLAB REINFORCEMENT AT ACUTE CORNERS

Scale: 3/16" = 1'-0"

GRAPHIC SCALE 3/16" = 1'

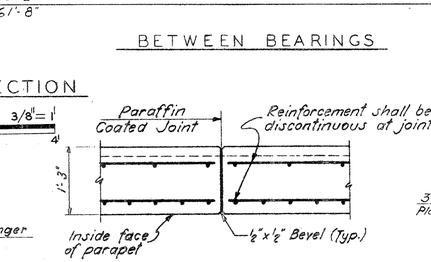

PARAFFIN COATED JOINT DETAIL IN PARAPET

Scale: 3/4" = 1'-0"

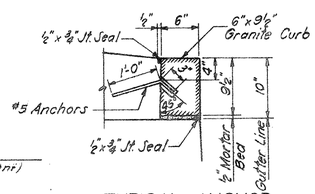

TYPICAL ANCHOR AND STONE DETAIL

Not to Scale

NOTES:

For General Notes see Bridge Sheet No. 1
For Slab Details at Abutments see Bridge Sheet No. 5
For Typical End Diaphragm Connection and other details see Bridge Sheet No. 7.
For rail post spacing and details, See Bridge Sheet Nos. 1 & 8 respectively.

REVISIONS		
NO.	DATE	DESCRIPTION

FED. AID PROJ. NO. I-84-4(42) 63

CONNECTICUT STATE HIGHWAY DEPARTMENT

TOWN OF EAST HARTFORD
INTERSTATE ROUTE NO. 84
BRIDGE A - 10
OVER LINES 7 & 13

SECTIONS, PROFILES, DETAILS

DESIGNED BY E.L. PAVLO, CONSULTING ENGINEER
SCALES AS SHOWN
MADE BY J.R.D. & A.S. DATE 10-28-60
CHECKED BY N.V.P. & N.K. DATE 2-9-61
APPROVED [signature] DATE 1-23-61

PROJECT NO. 42-134
BRIDGE SHEET NO. 2 OF 10

FORM NO. BRS. 18 2D 11-62

FED. ROAD DIV. NO.	STATE	TOWN	FED. AID PROJ. NO.	PROJ. NO.	YEAR	ROUTE NO.	SHEET NO.	TOTAL SHEETS
1	CONN.	EAST HARTFORD	I-84 4(42)63	42-134	1962	I-84	81	216

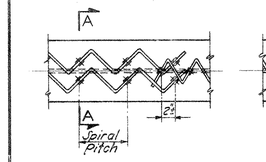

DOUBLE SPIRAL — SINGLE SPIRAL

PLAN
Not to Scale

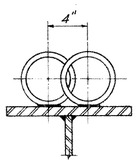

SECTION A-A
Scale: 1½"=1'-0"

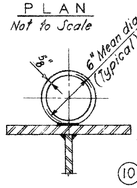

SECTION B-B
Scale: 1½"=1'-0"

SECTION C-C
6"=1'-0"

SPIRAL SHEAR CONNECTORS

Estimated weight of Spiral Bars = 4800 lbs.

GRAPHIC SCALE 1 1/2" = 1'

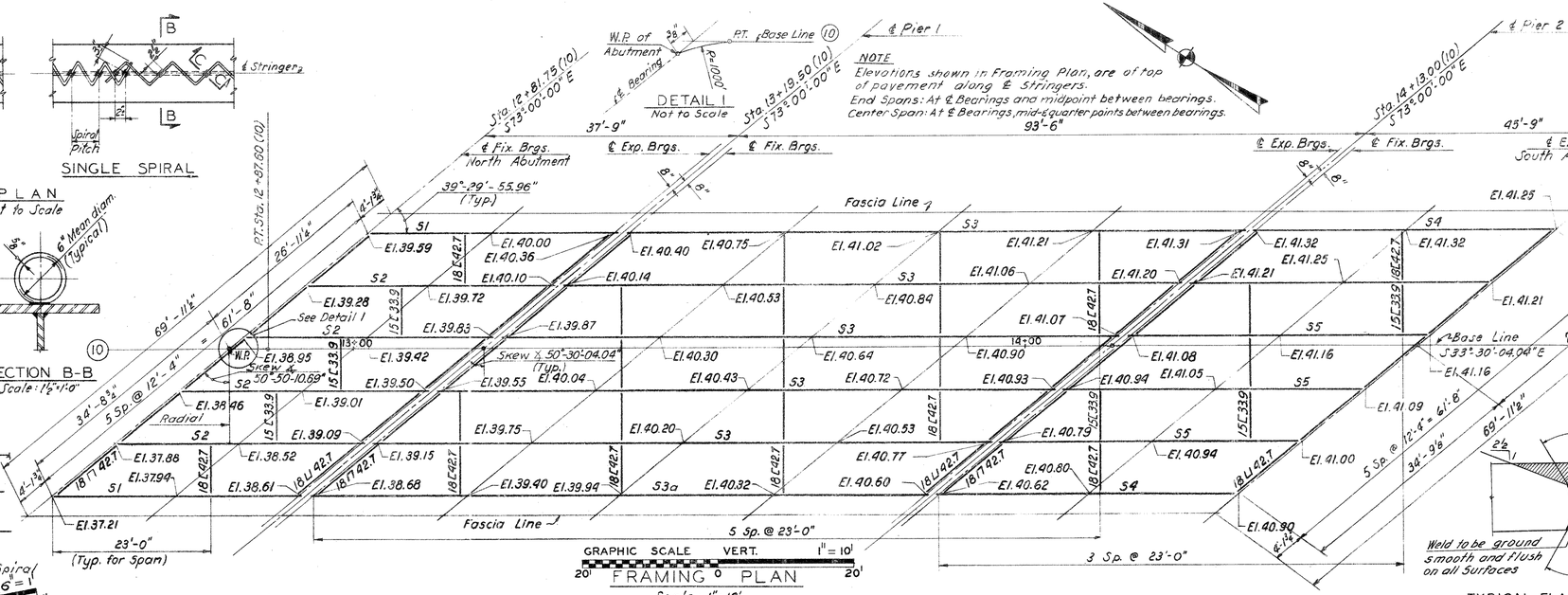

GRAPHIC SCALE VERT. 1" = 10'

FRAMING PLAN
Scale: 1" = 10'

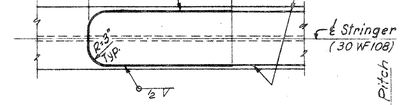

DETAIL OF COVER PLATE
STRINGERS S5

GRAPHIC SCALE Scale: 1" = 1'-0" 1" = 1'

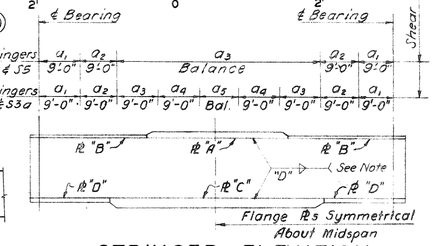

STRINGER ELEVATION
Not to Scale
Size of Fillet Weld "D" Plate Girders to be:
⅜" for Flange thickness up to 1⅜"
½" for Flange thickness of 2¼"

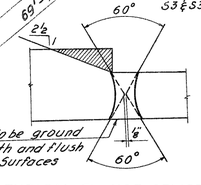

TYPICAL FLANGE SPLICE DETAIL
Not to Scale

STRINGER SCHEDULE

MARK	SPAN C.C. BRGS	MATERIAL	SHEAR CONNECTOR PITCH a_1	a_2	a_3	a_4	a_5	D.L. DEFLECTION STEEL	SLAB	W.S.	PARAP	TOTAL	V.C.	TOTAL CAMBER
S1	36'-8 7/16"	45" x ⅜" web, 12" x 1" PLs "A" & "C"	(Non-composite)					-	1/16"	-	-	1/16"	5/16"	⅜"
S2	36'-8 7/16"	33 WF 130	(Non-composite)					1/16"	3/16"	-	1/16"	5/16"	5/16"	5/8"
S3	91'-4⅞"	45" x ⅜" web, 14" x 1⅜" x 42'-0" lg. PL "A" 2-14" x 1" PLs "B", 16" x 2¼" x 67'-0" lg. PL "C" & 2-16" x 1¼" PLs "D"	6 2) 4	7 2) 5	4 7	5 9	7 11	9/16"	1¼"	3/16"	5/16"	2 5/16"	3) 1 3/16	3) 4⅛"
S3a													4) 3 9/16	4) 5⅞"
S4	44'-8 7/16"	45" x ¾" web, 12" x 1" PLs "A" & "C"	4" 6"	5" 8"	8" 12"	- -	- -	-	⅛"	-	1/16"	3/16"	7/16	⅝"
S5	44'-8 7/16"	30 WF 108 9" x 5/8" x 32'-0" lg. PL "C"	4 2) 3"	6 2) 5"	4" 8"	- -	- -	⅛"	7/16"	1/16"	1/16"	11/16"	7/16	1⅛"

1) The upper line denotes the pitch for spirals, the lower for studs.
2) Double spiral to be used. 3) For Stringers S3. 4) For Stringer S3a.

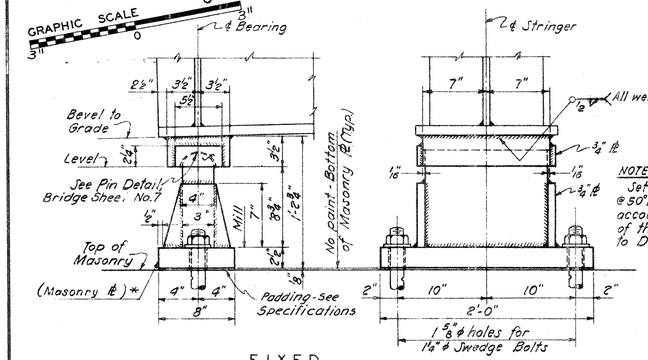

FIXED

GRAPHIC SCALE 1 1/2" = 1'

CENTER SPAN

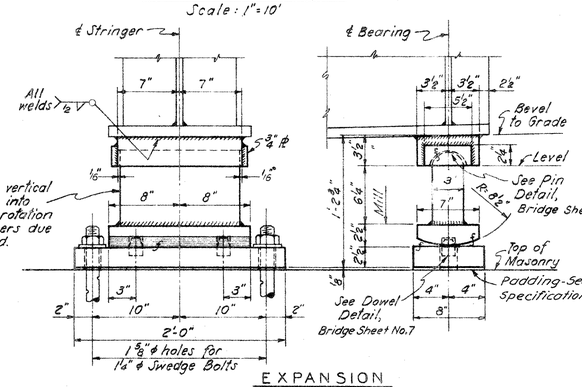

EXPANSION

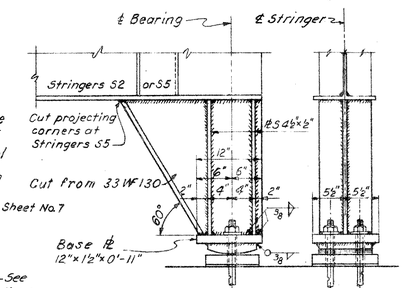

INTERIOR STRINGERS
(Fixed & Expansion)

GRAPHIC SCALE 1" = 1'

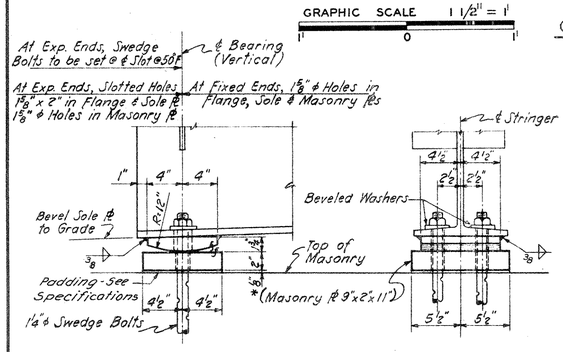

FIXED & EXPANSION-INTERIOR STRINGERS

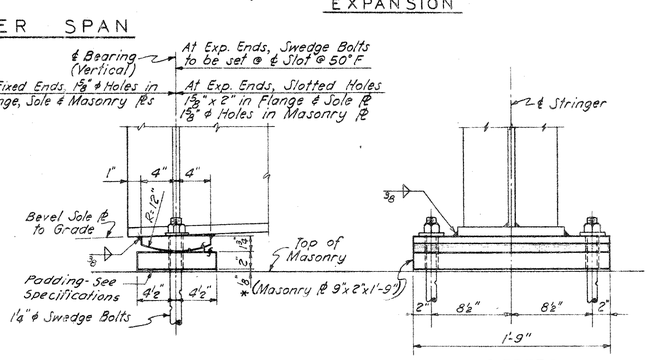

FIXED & EXPANSION - FASCIA GIRDERS

END SPANS AT ABUTMENTS

BEARING SHOE DETAILS
Scale: 1½"=1'-0" GRAPHIC SCALE 1 1/2" = 1'

GRAPHIC SCALE 1" = 1'

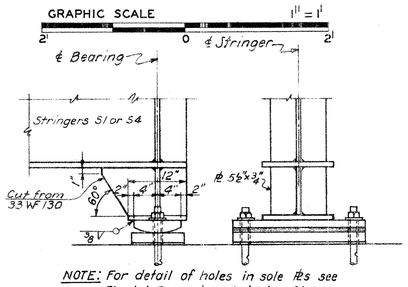

FASCIA GIRDERS
(Fixed & Expansion)

STOOL DETAILS

END SPANS AT PIERS
Scale: 1" = 1'-0"

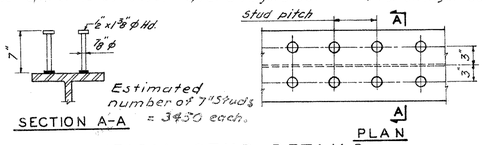

TYPICAL STUD DETAILS

NOTES: (Not to Scale)
For General Notes See Bridge Sheet No.1.
For Typical End Diaphragm Connection see Bridge Sheet No.7.
For Details of Bearing Pin and Dowel see Bridge Sheet No.7.
For Swedge Bolt Details see Bridge Sheet No.7.
All Welds ⅝" unless otherwise shown.
* Shall conform to ASTM A-242 (modified) steel. See Special Provision for "Structural Steel."

FED. AID PROJ. NO. I-84-4(42)63

CONNECTICUT
STATE HIGHWAY DEPARTMENT

TOWN OF EAST HARTFORD
INTERSTATE ROUTE NO. 84
BRIDGE (A) - (10)
OVER LINES (7) & (13)

FRAMING PLAN & DETAILS

REVISIONS		
NO.	DATE	DESCRIPTION

DESIGNED BY E.L. PAVLO, CONSULTING ENGINEER
SCALES As shown
MADE BY A.S. & J.R.D. DATE 11.25.60
CHECKED BY N.V.P. & N.K. DATE 2.9.61
APPROVED [signature] DATE 2-28-61
PROJECT NO. 42-134
BRIDGE SHEET NO. 3 OF 10

THE INFORMATION, INCLUDING ESTIMATED QUANTITIES OF WORK, SHOWN ON THESE SHEETS IS BASED ON LIMITED INVESTIGATIONS BY THE STATE AND IS IN NO WAY WARRANTED TO INDICATE THE TRUE CONDITIONS OR ACTUAL QUANTITIES OR DISTRIBUTION OF QUANTITIES OF WORK WHICH WILL BE REQUIRED.

FORM NO. BRG. 19 RD 11-62

FED. ROAD DIV. NO.	STATE	TOWN	FED. AID PROJ. NO.	PROJ. NO.	YEAR	ROUTE NO.	GNSEY NO.	TOTAL SHEETS
1	CONN.	EAST HARTFORD	I-84 4(42)63	42-134	1962	I-84	82	216

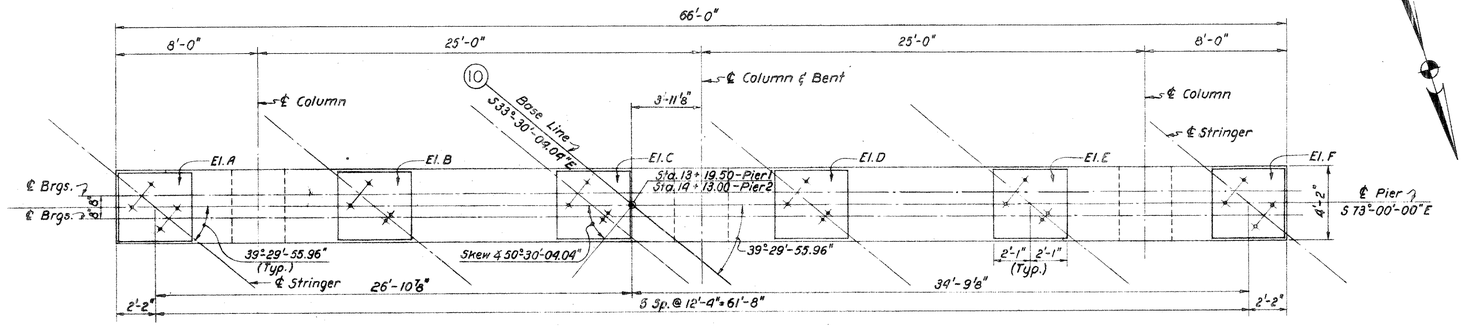

TOP PLAN

Scale: ¼" = 1'-0"

GRAPHIC SCALE 1/4" = 1'

PAD ELEVATIONS						
	EL. A	EL. B	EL. C	EL. D	EL. E	EL. F
Pier 1	34.37	34.11	33.84	33.51	33.12	32.65
Pier 2	35.28	35.17	35.09	34.90	34.74	34.57

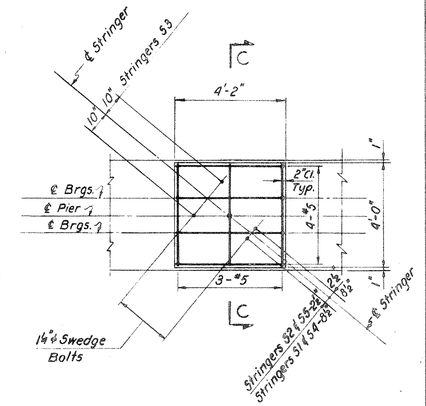

TYPICAL PAD DETAIL

Scale: ⅜" = 1'-0"

GRAPHIC SCALE 3/8" = 1'

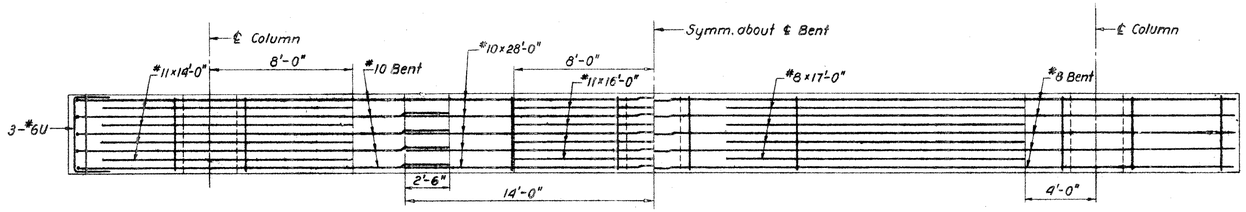

TOP BOTTOM

GRAPHIC SCALE 1/4" = 1'

CAP REINFORCEMENT

Scale: ¼" = 1'-0"

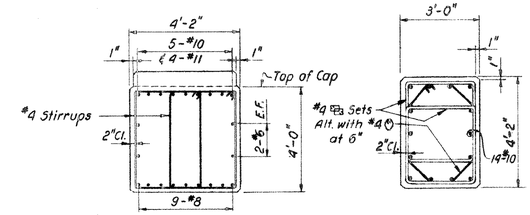

SECTION A-A

Scale: ⅜" = 1'-0"

GRAPHIC SCALE 3/8" = 1'

SECTION B-B

Scale: ⅜" = 1'-0"

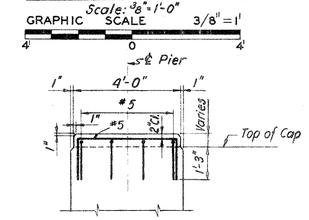

SECTION C-C

Scale: ⅜" = 1'-0"

GRAPHIC SCALE 3/8" = 1'

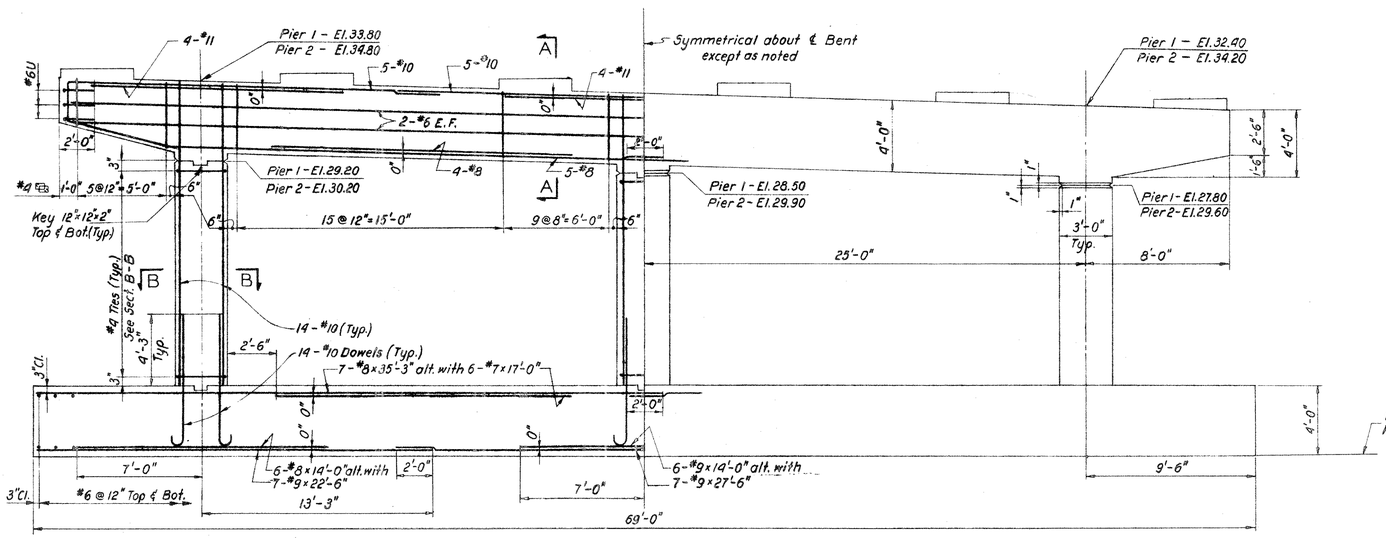

ELEVATION

Scale: ¼" = 1'-0"

GRAPHIC SCALE 1/4" = 1'

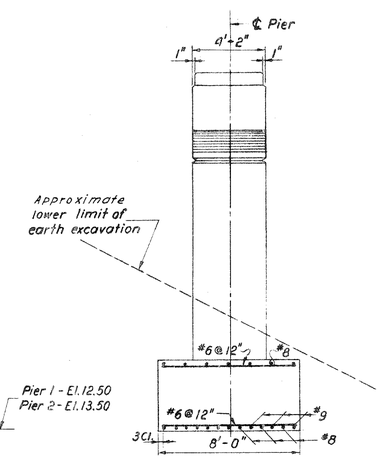

END ELEVATION

Scale: ¼" = 1'-0"

GRAPHIC SCALE 1/4" = 1'

NOTES:

For General Notes See Bridge Sheet No. 1
For swedge bolt location and details See Bridge Sheets No. 3 & 7
Design Soil Pressures: Maximum 1.6 t.s.f.
Average 1.4 t.s.f.
For additional details, See Bridge Sheet Nos. 2 & 7

FED. AID PROJ. I-84-4(42)63

CONNECTICUT
STATE HIGHWAY DEPARTMENT
TOWN OF EAST HARTFORD
INTERSTATE ROUTE NO. 84
BRIDGE H-10
OVER LINES 7 & 13
PIERS

REVISIONS		
NO.	DATE	DESCRIPTION

DESIGNED BY E. L. PAVLO, CONSULTING ENGINEER
SCALES AS SHOWN
MADE BY A.S. DATE 1.17.61
CHECKED BY N.K. DATE 1.18.61
APPROVED [signature] DATE 2-27-61
PROJECT NO. 42-134
BRIDGE SHEET NO. 4 OF 10

THE INFORMATION, INCLUDING ESTIMATED QUANTITIES OF WORK, SHOWN ON THESE SHEETS IS BASED ON LIMITED INVESTIGATIONS BY THE STATE AND IS IN NO WAY WARRANTED TO INDICATE THE TRUE CONDITIONS OR ACTUAL QUANTITIES OR DISTRIBUTION OF QUANTITIES OF WORK WHICH WILL BE REQUIRED.

FORM NO. ENG. 18 ED 11-62

PUB. ROAD DIV. NO.	STATE	TOWN	FED. AID PROJ. NO.	PROJ. NO.	YEAR	ROUTE NO.	SHEET NO.	TOTAL SHEETS
1	CONN.	EAST HARTFORD	I-84 4(42)63	42-134	1962	I-84	83	216

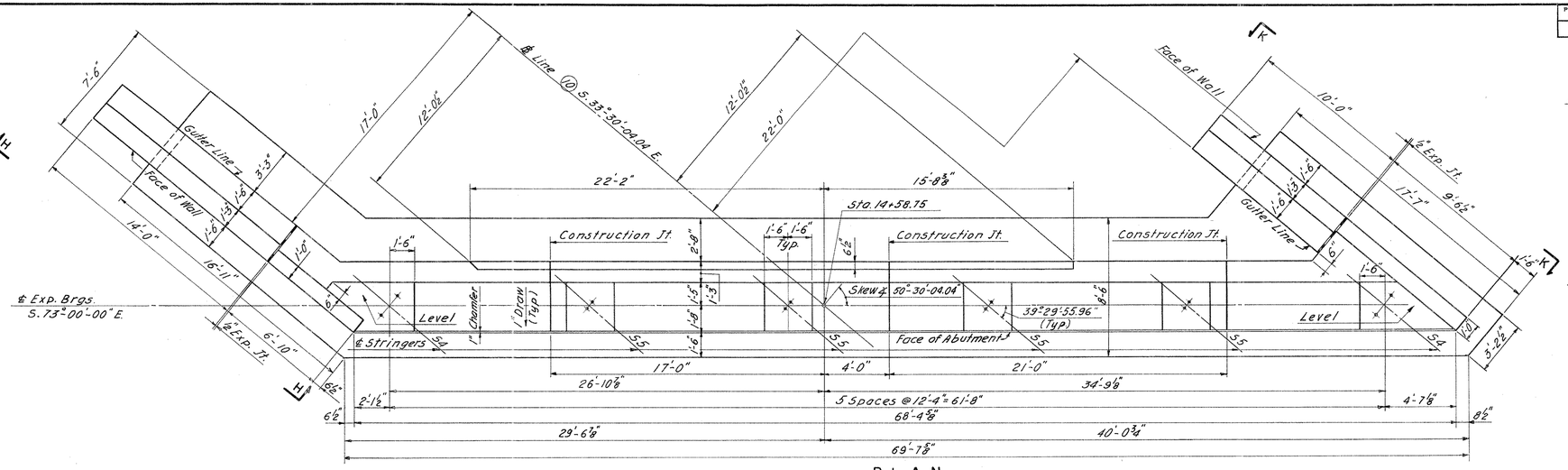

PLAN
Scale: 1/4" = 1'-0"

GRAPHIC SCALE 1/4" = 1'

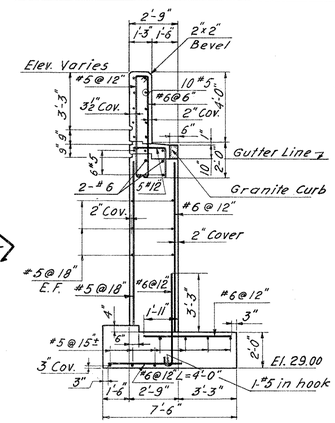

SECTION B-B — AS SHOWN
SECTION B'-B' — SIMILAR
Scale: 1/4" = 1'-0"

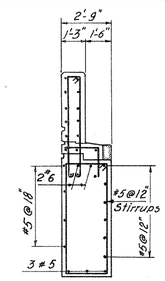

SECTION C-C
Scale: 1/4" = 1'-0"

GRAPHIC SCALE 1/4" = 1'

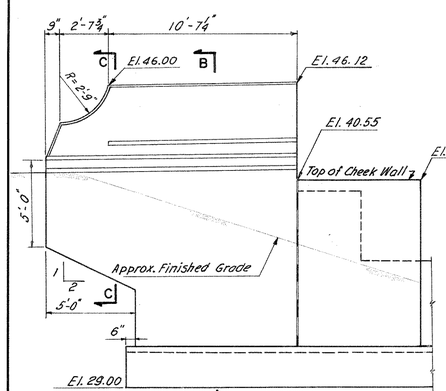

ELEVATION H-H
Scale: 1/4" = 1'-0"

GRAPHIC SCALE 1/4" = 1'

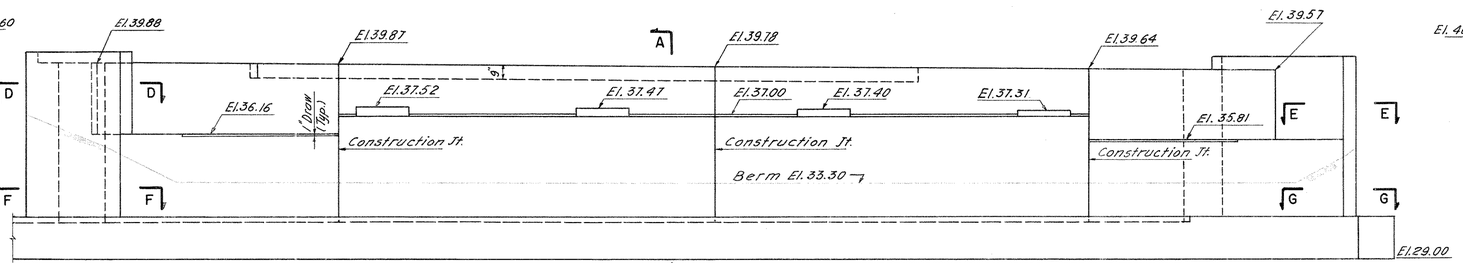

ELEVATION
Scale: 1/4" = 1'-0"

GRAPHIC SCALE 1/4" = 1'

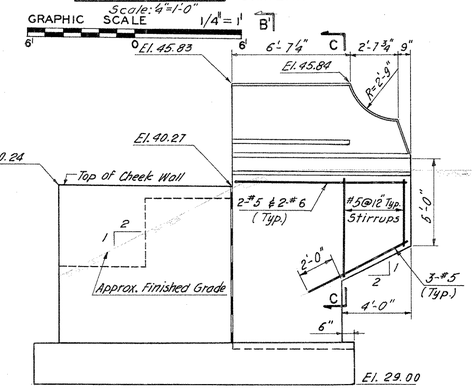

ELEVATION K-K
Scale: 1/4" = 1'-0"

GRAPHIC SCALE 1/4" = 1'

NOTE:
For additional cheekwall details see Bridge Sheet No. 7

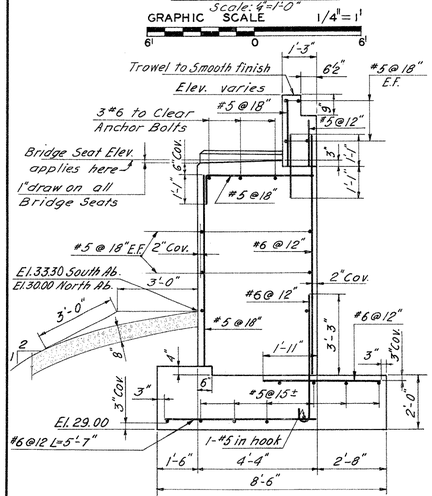

SECTION A-A
Scale: 3/8" = 1'-0"

GRAPHIC SCALE 3/8" = 1'

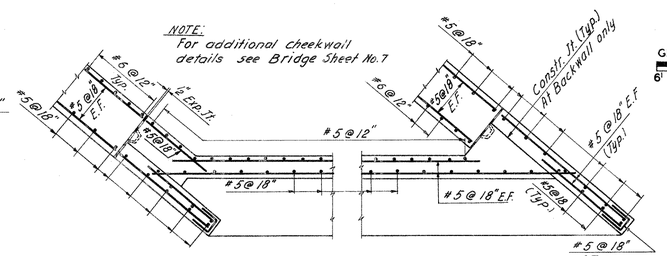

SECTION D-D
Scale: 1/4" = 1'-0"

SECTION E-E
Scale: 1/4" = 1'-0"

GRAPHIC SCALE 1/4" = 1'

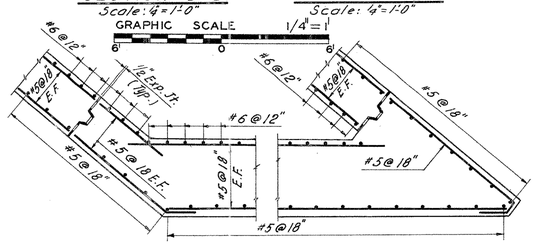

SECTION F-F
Scale: 1/4" = 1'-0"

SECTION G-G
Scale: 1/4" = 1'-0"

GRAPHIC SCALE 1/4" = 1'

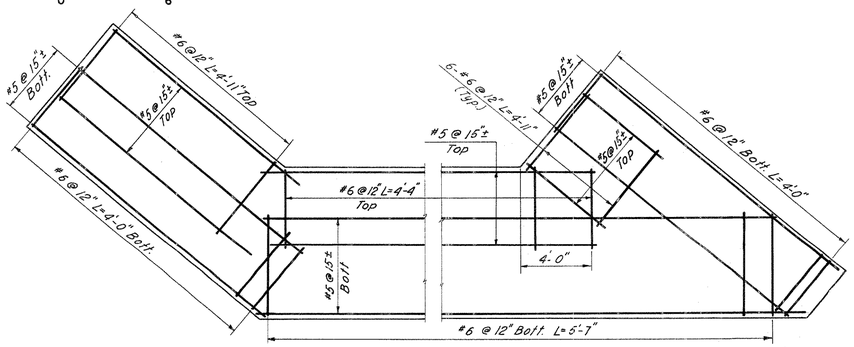

GRAPHIC SCALE 1/4" = 1'

FOOTING REINFORCEMENT
Scale: 1/4" = 1'-0"

NOTES:
For General Notes see Bridge Sheet No. 1.
For Backwall Detail at Shoulders see Bridge Sheet No. 6.
For Additional Details see Bridge Sheet No. 7.
Design Soil Pressures: Maximum 1.7 t.s.f.
Average 1.0 t.s.f.
For rail post spacing and details, see Bridge Sheet Nos. 1 & 8 respectively.

The information, including estimated quantities of work, shown on these sheets is based on limited investigations by the state and is in no way warranted to indicate the true conditions or actual quantities or distribution of quantities of work which will be required.

REVISIONS		
NO.	DATE	DESCRIPTION

FED. AID PROJ. I-84-4(42)63

CONNECTICUT
STATE HIGHWAY DEPARTMENT

TOWN OF EAST HARTFORD
INTERSTATE ROUTE NO. 84
BRIDGE (H)
OVER LINES (7) & (13)
SOUTH ABUTMENT

DESIGNED BY E. L. PAVLO, CONSULTING ENGINEER
SCALES AS SHOWN
MADE BY S. G. DATE 12-14-60
CHECKED BY V. T. & N. K. DATE 2-9-61
APPROVED [signature] DATE 2-28-61

PROJECT NO. 42-134
BRIDGE SHEET NO. 5 OF 10

"ARKWRIGHT" TRACING CLOTH JOSEPH MERRITT & CO. 16251

FORM NO. ENG. 15 ED 11-52

PUB. ROAD DIV. NO.	STATE	TOWN	FED. AID PROJ. NO.	PROJ. NO.	YEAR	ROUTE NO.	SHEET NO.	TOTAL SHEETS
1	CONN.	EAST HARTFORD	I-84 4(42)63	42-134	1962	I-84	84	216

NOTE:
Joint material at abutment N.I.C. (Highway Item)

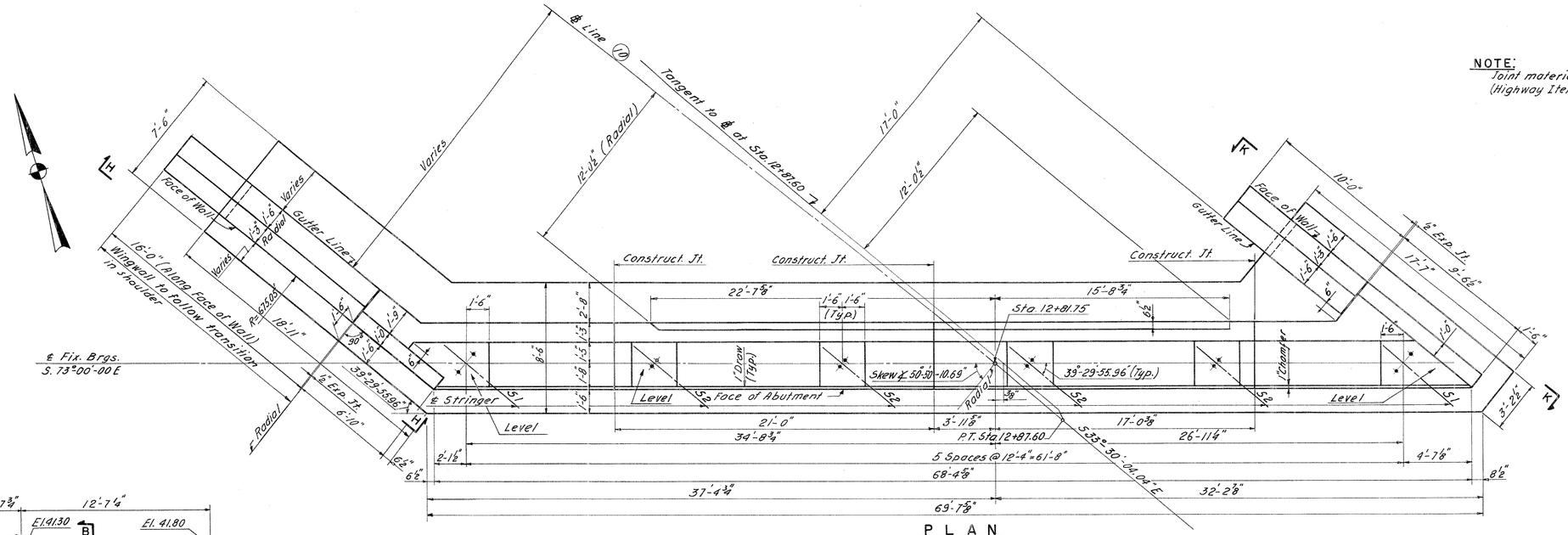

PLAN
Scale: ¼" = 1'-0"
GRAPHIC SCALE 1/4" = 1'

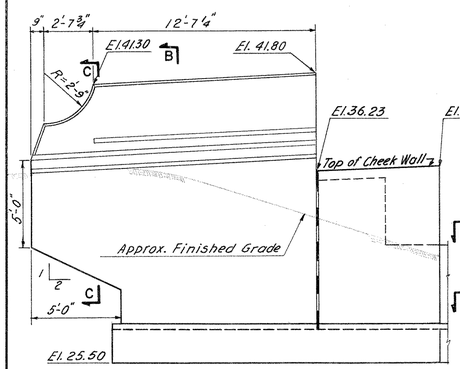

ELEVATION H-H
Scale: ¼" = 1'-0"
GRAPHIC SCALE 1/4" = 1'

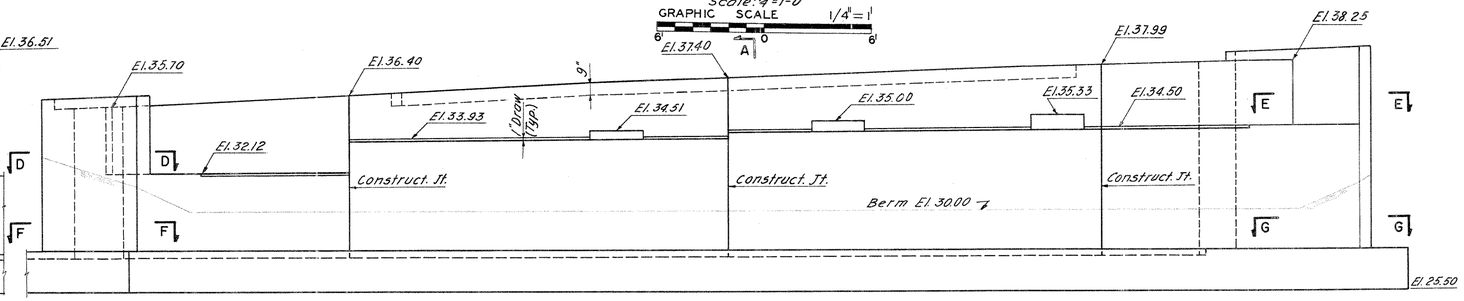

ELEVATION
Scale: ¼" = 1'-0"
GRAPHIC SCALE 1/4" = 1'

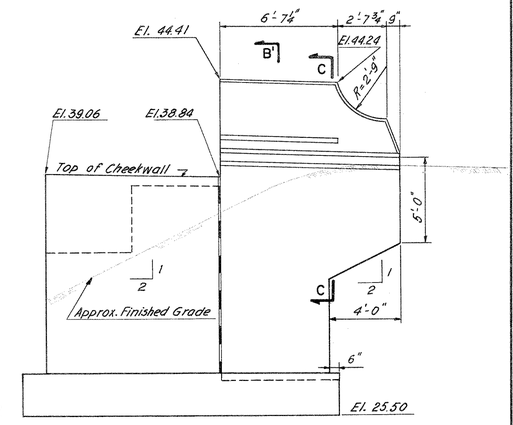

ELEVATION K-K
Scale: ¼" = 1'-0"
GRAPHIC SCALE 1/4" = 1'

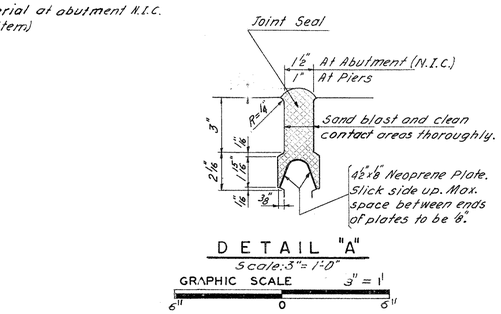

DETAIL "A"
Scale: 3" = 1'-0"
GRAPHIC SCALE 3" = 1'

NOTES:
For General Notes see Bridge Sheet No. 1.
For Sections not shown see Bridge Sheet No. 5.
For Additional Details see Bridge Sheet No. 7.
Design Soil Pressures: Maximum 1.7 t.s.f.
Average 1.0 t.s.f.
For rail post spacing and details, see Bridge Sheet Nos. 1 & 8 respectively.

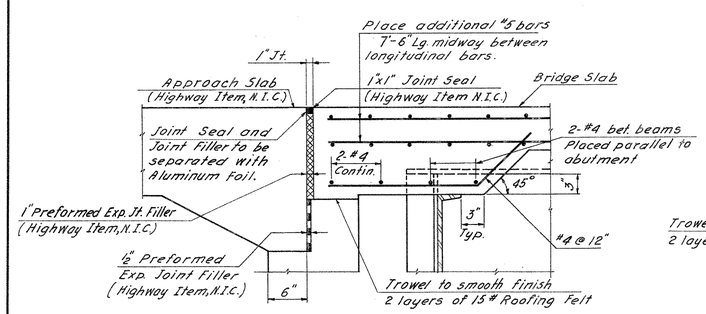

NORTH ABUTMENT AT APPROACH SLAB

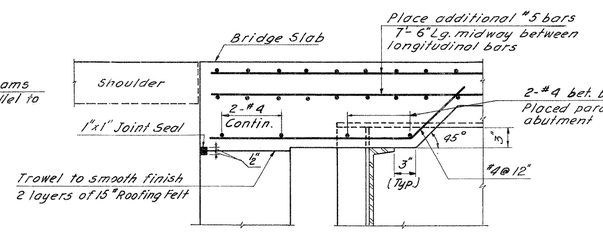

TYPICAL AT SHOULDERS
GRAPHIC SCALE 1" = 1'

TYPICAL SLAB DETAILS AT ABUTMENTS
Scale: 1" = 1'-0"

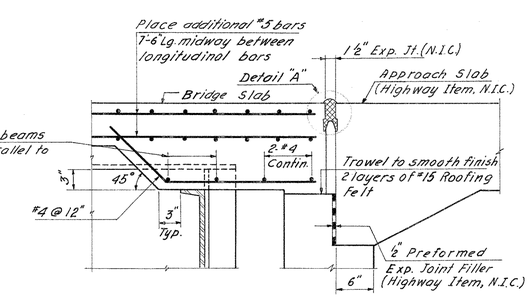

SOUTH ABUTMENT AT APPROACH SLAB

The information, including estimated quantities of work, shown on these sheets is based on limited investigations by the state and is in no way warranted to indicate the true conditions or actual quantities or distribution of quantities of work which will be required.

REVISIONS		
NO.	DATE	DESCRIPTION

FED. AID PROJ. I-84-4(42)63

CONNECTICUT
STATE HIGHWAY DEPARTMENT

TOWN OF EAST HARTFORD
INTERSTATE ROUTE NO. 84
BRIDGE (H)
OVER LINES (7) & (13)
NORTH ABUTMENT

DESIGNED BY E. L. PAVLO, CONSULTING ENGINEER
SCALES AS SHOWN
MADE BY S. G. DATE 1-6-61
CHECKED BY V. T. & N. K. DATE 2-9-61
APPROVED [signature] DATE 2-28-61
PROJECT NO. 42-134
BRIDGE SHEET NO. 6 OF 10

"ARROWHIGHT" TRACING CLOTH JOSEPH MERRITT & CO. 14251

FORM NO. 206. 19 CD 11-28

PUB. ROAD DIV. NO.	STATE	TOWN	FED. AID PROJ. NO.	PROJ. NO.	YEAR	ROUTE NO.	SHEET NO.	TOTAL SHEETS
1	CONN.	EAST HARTFORD	I-84 4(42)63	42-134	1962	I-84	95	216

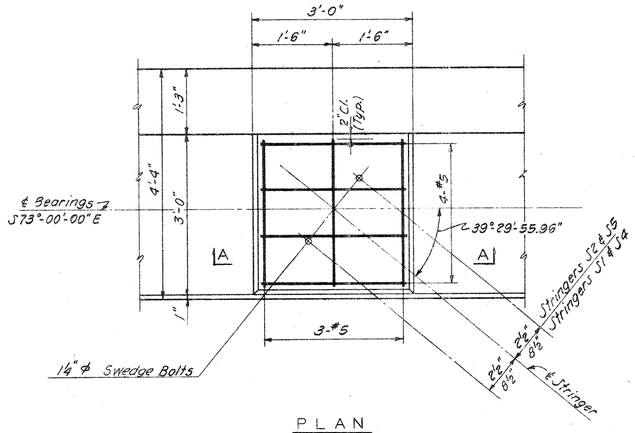

PLAN

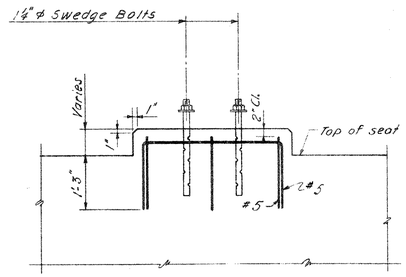

SECTION A-A

TYPICAL PAD DETAIL AT ABUTMENTS

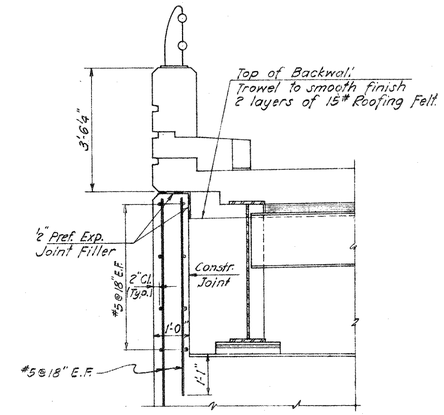

SECTION B-B

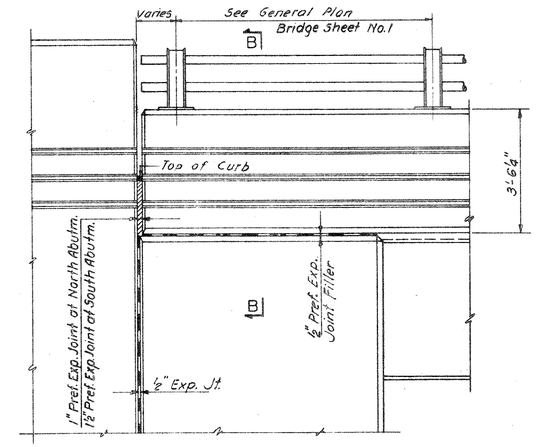

ELEVATION

CHEEKWALL DETAILS

Scale: ½" = 1'-0"
GRAPHIC SCALE 1/2" = 1'
3' 0 3'

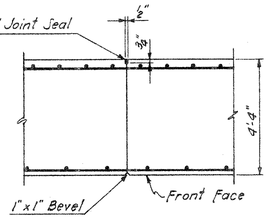

CONSTRUCTION JOINT IN ABUTMENT

Scale: ⅜" = 1'-0"

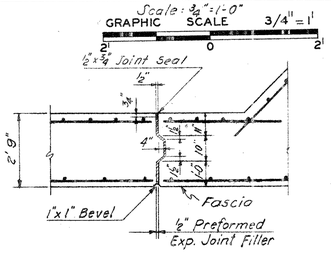

EXPANSION JOINT BETWEEN WINGWALL & ABUTMENT

Scale: ⅜" = 1'-0"

GRAPHIC SCALE 3/8" = 1'
4' 0 4'

JOINT NOTES:

Abutments: Joint Seal to extend from top of footing to top of backwall, and as shown below.
Joints Between Key to extend from top of footing to within 1'-0" of the top of bridge seat
Wingwall and Abutment: Joint Seal to extend from top of footing to top of curb and horizontally along joint to outside face of parapet.

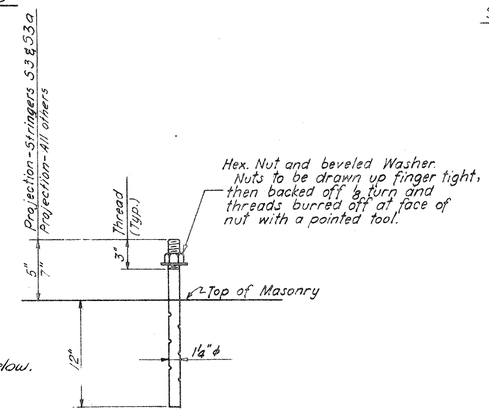

SWEDGE BOLT DETAIL

Scale: 1½" = 1'-0"

GRAPHIC SCALE 1 1/2" = 1'
1' 0 1'

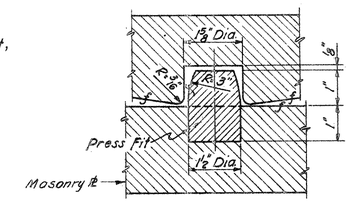

SECTION THRU DOWEL

Scale: 6" = 1'-0"

GRAPHIC SCALE 6" = 1'
3" 0 3"

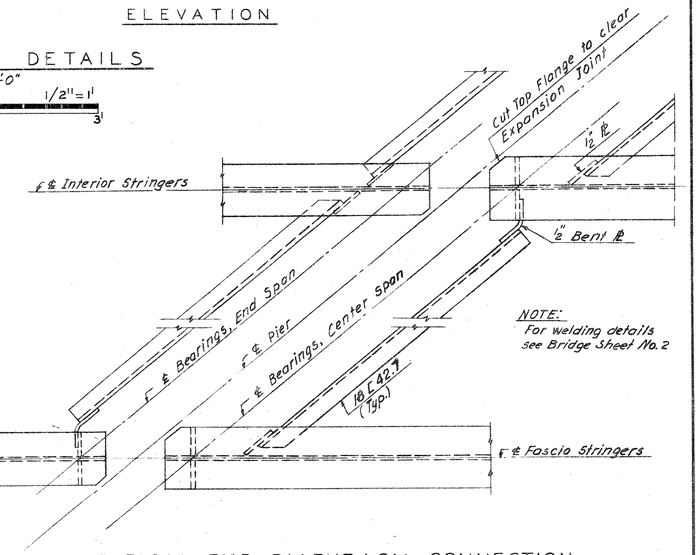

NOTE:
For welding details see Bridge Sheet No. 2

TYPICAL END DIAPHRAGM CONNECTION

Scale: ¾" = 1'-0"

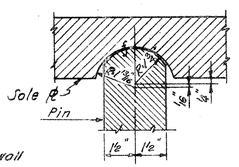

PIN DETAIL

Scale: 3" = 1'-0"

GRAPHIC SCALE 3" = 1'
6" 0 6"

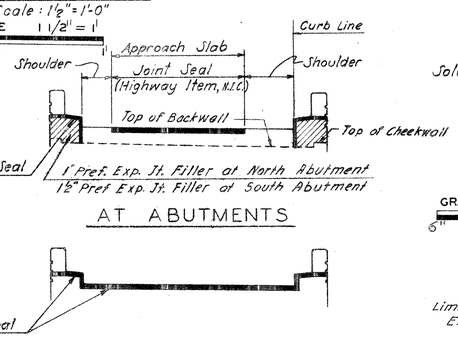

AT ABUTMENTS

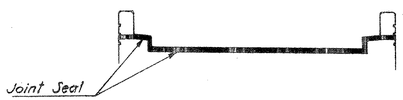

AT PIERS

TYPICAL LIMITS FOR JOINT SEAL

Not to Scale

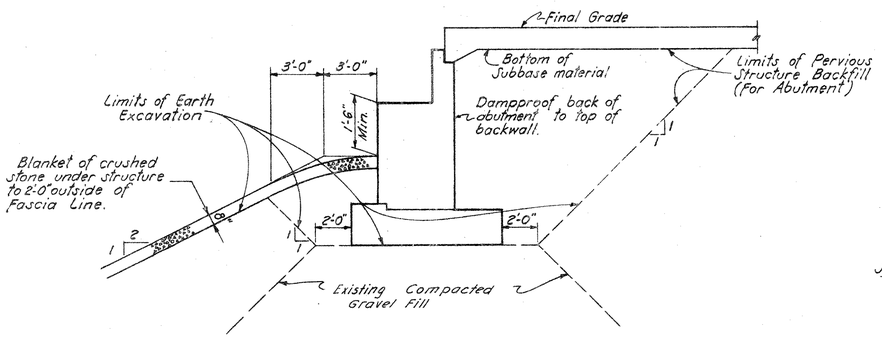

EXCAVATION, BACKFILL AND DRAINAGE DETAIL OF ABUTMENT

Scale: ¼" = 1'-0"

GRAPHIC SCALE 1/4" = 1'
6' 0 6'

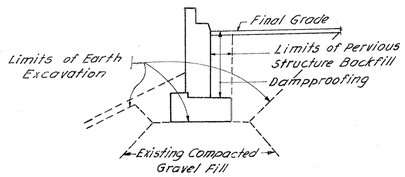

BACKFILL DETAIL OF WINGWALL

Not to Scale

NOTE:
For General Plan & Elevation, see Bridge Sheet No.1
For General Notes see Bridge Sheet No.1

FED. AID PROJ. I-84-4 (42) 63

REVISIONS		
NO.	DATE	DESCRIPTION

CONNECTICUT
STATE HIGHWAY DEPARTMENT

TOWN OF EAST HARTFORD
INTERSTATE ROUTE NO 84
BRIDGE A - 10
OVER LINES 7 & 13

DETAILS

DESIGNED BY E.L. PAVLO, CONSULTING ENGINEER
SCALES AS SHOWN
MADE BY J. R. D. DATE 12-21-60
CHECKED BY N.V.P. & N.K. DATE 2-9-61
APPROVED [signature] DATE 2-28-61

PROJECT NO. 42-134

BRIDGE SHEET NO. 7 OF 10

FORM NO. ENG. 19 ED. 11-52

PUB. ROAD DIV. NO.	STATE	TOWN	FED. AID PROJ. NO.	PROJ. NO.	YEAR	ROUTE NO.	SHEET NO.	TOTAL SHEETS
1	CONN.	EAST HARTFORD	I-84 4(42)63	42-134	1962	I-84	86	216

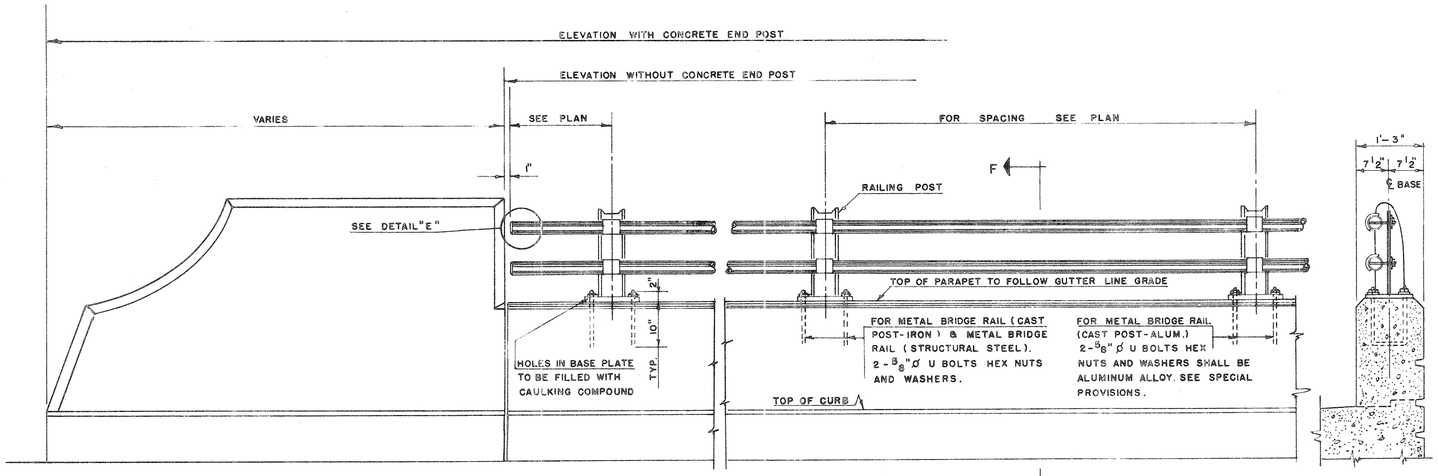

ELEVATION
CONC. END POST AND RAIL
SCALE 3/4" = 1'-0"

SECTION F-F
SCALE 3/4" = 1'-0"

GRAPHIC SCALE 3/4" = 1'
2' 0 2'

METAL BRIDGE RAIL
(STRUCTURAL STEEL)

ALL POSTS TO BE 6 WF 20 STRUCTURAL STEEL.
ALL RAILS TO BE 2 1/2"ø STANDARD STEEL PIPE.
RAILING POSTS SHALL BE VERTICAL.
IF NECESSARY SHIM WITH LEAD WOOL AND CAULK. COST TO BE INCLUDED IN ITEM METAL BRIDGE RAIL. (STRUCTURAL STEEL.)
FOR PAINTING SEE SPECIAL PROVISIONS.
ALL POSTS & BASE PLATES TO BE OF STRUCTURAL STEEL CONFORMING TO A.S.T.M. A-7.

METAL BRIDGE RAIL
(CAST POST - IRON)

ALL POSTS TO BE MALLEABLE IRON CASTING CONFORMING TO A.S.T.M. A-47 GRADE 35018 OR DUCTILE IRON CASTING CONFORMING TO A.S.T.M. A-339.
ALL RAILS TO BE 2 1/2"ø STANDARD STEEL PIPE.
RAILING POSTS SHALL BE VERTICAL.
IF NECESSARY SHIM WITH LEAD WOOL AND CAULK. COST TO BE INCLUDED IN ITEM METAL BRIDGE RAIL (CAST POST-IRON.)
FOR PAINTING SEE SPECIAL PROVISIONS.

METAL BRIDGE RAIL
(CAST POST - ALUMINUM)

ALL POSTS TO BE CAST OF ALUMINUM. SEE SPECIAL PROVISION.
ALL RAILS TO BE 3" O.D. X 2.623" I.D. ALUMINUM TUBING. SEE SPECIAL PROVISIONS.
RAILING POSTS SHALL BE VERTICAL.
IF NECESSARY SHIM WITH ALUMINUM SHEETS AND CAULK.
COST TO BE INCLUDED IN ITEM METAL BRIDGE RAIL (CAST POST-ALUM.)
ALUMINUM RAILING AND POSTS SHALL NOT BE PAINTED.

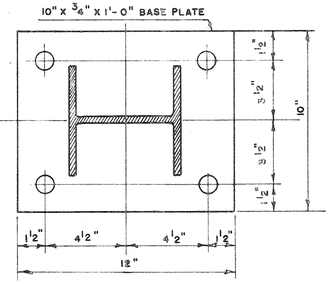

SECTION B-B
SCALE 3" = 1'-0"

GRAPHIC SCALE 3" = 1'
6" 0 6"

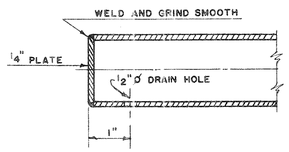

DETAIL "E"
NOT TO SCALE

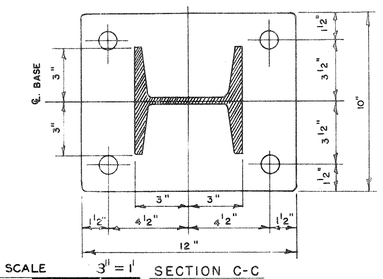

GRAPHIC SCALE 3" = 1'
6" 0 6"

SECTION C-C
SCALE 3" = 1'-0"

GENERAL NOTES:

UNLESS OTHERWISE SPECIFIED ON THE PLANS OR IN THE SPECIAL PROVISIONS METAL BRIDGE RAIL MAY BE: METAL BRIDGE RAIL (STRUCTURAL STEEL). METAL BRIDGE RAIL (CAST POST-IRON) OR METAL BRIDGE RAIL (CAST POST-ALUMINUM).
COST OF FURNISHING AND SETTING 5/8"ø U BOLTS, HEX NUTS AND WASHERS TO BE INCLUDED IN ITEM "METAL BRIDGE RAIL."
FOR RAIL POST SPACING, SEE BRIDGE SHEET NO. 1

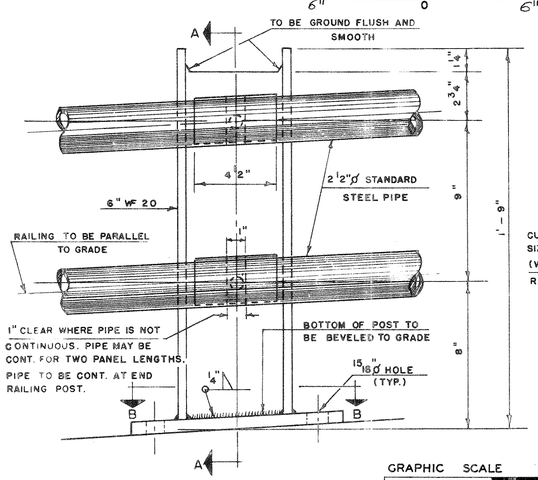

ELEVATION OF POST
SCALE 3" = 1'-0"

GRAPHIC SCALE 3" = 1'
6" 0 6"

DETAILS
STRUCTURAL STEEL POST
FOR METAL BRIDGE RAIL (STUCTURAL STEEL)

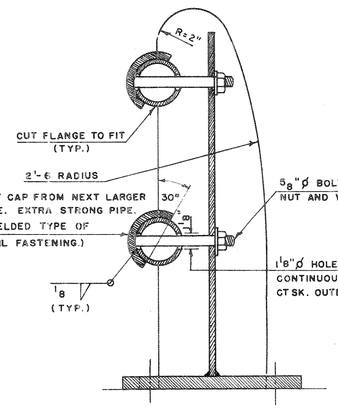

SECTION A-A
SCALE 3" = 1'-0

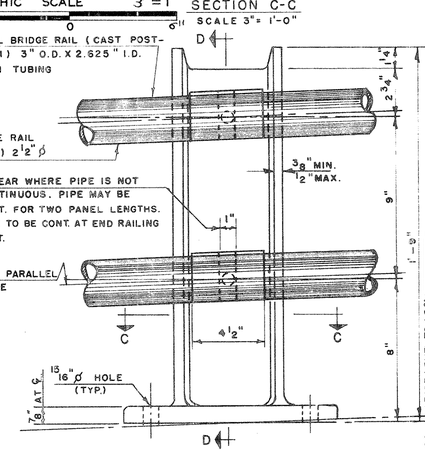

ELEVATION OF POST
SCALE 3" = 1'-0"

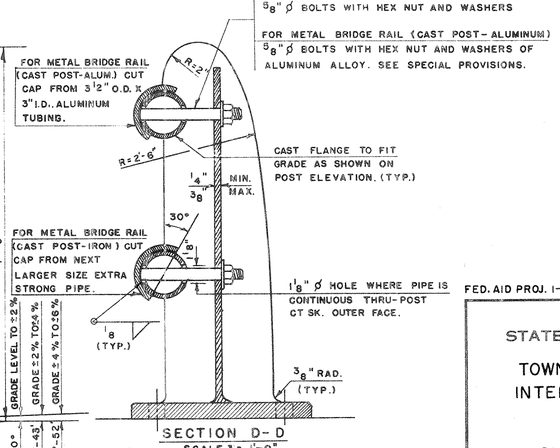

SECTION D-D
SCALE 3" = 1'-0"

GRAPHIC SCALE 3" = 1'
6" 0 6"

DETAILS
CAST POST
FOR METAL BRIDGE RAIL (CAST POST-IRON)
AND
FOR METAL BRIDGE RAIL (CAST POST-ALUMINUM)

NOTE

DETAILS OF METAL BRIDGE RAILING AND FASTENING SIMILAR TO DETAILS SHOWN FOR METAL BRIDGE RAILING. (STRUCTURAL STEEL.)

FED. AID PROJ. I-84-4(42)63

CONNECTICUT
STATE HIGHWAY DEPARTMENT

TOWN OF EAST HARTFORD
INTERSTATE ROUTE NO. 84
BRIDGE (H)
OVER LINES (7) & (13)

METAL BRIDGE RAIL

REVISIONS		
NO.	DATE	DESCRIPTION

DESIGNED BY E.L. PAVLO, CONSULTING ENGINEER
SCALES AS NOTED
MADE BY G.M.K. & G.J.Z. DATE 4-29-60
CHECKED BY K.C. DATE
APPROVED DATE

PROJECT NO. 42-134
BRIDGE SHEET NO. 8 OF 10

"KRAMWHITE" DRAWING CLOTH JOSEPH MERRITT & CO. 51819

Fc 14 No. 163 R

PUB. ROAD DIV. NO.	STATE	TOWN	FED. AID PROJ. NO.	PROJ. NO.	YEAR	ROUTE NO.	SHEET NO.	TOTAL SHEETS
1	CONN.	EAST HARTFORD	I-84-4 (42)63	42-134	1962	I-84	87	216

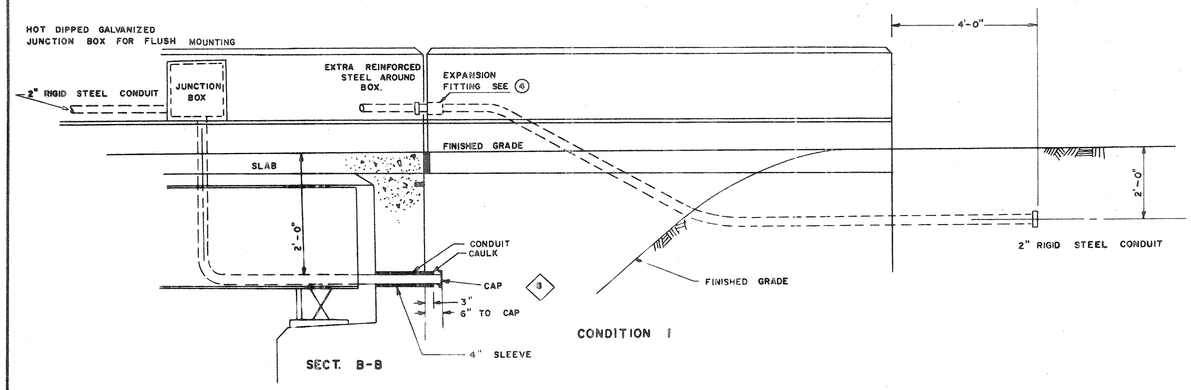

CONDUIT PARAPET TO FILL 3

SCALE 1/2" = 1'-0"

GRAPHIC SCALE 1/2" = 1'

3' 0 3'

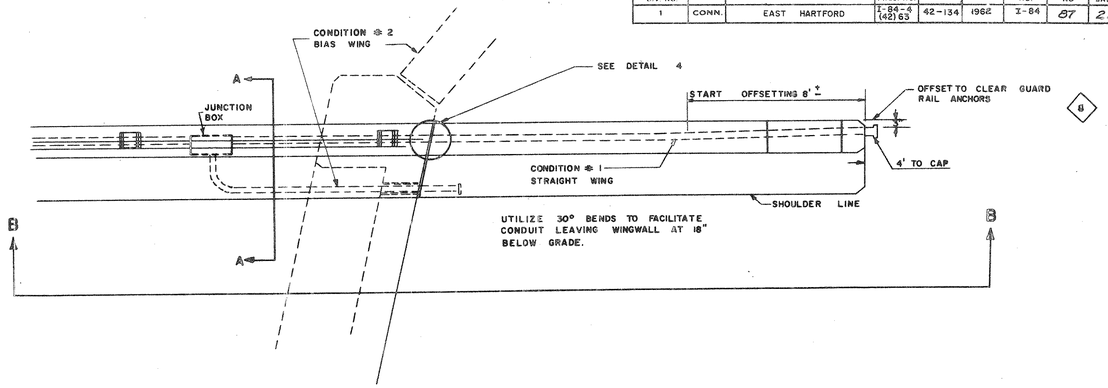

CONDUIT PARAPET TO FILL 1

NOT TO SCALE

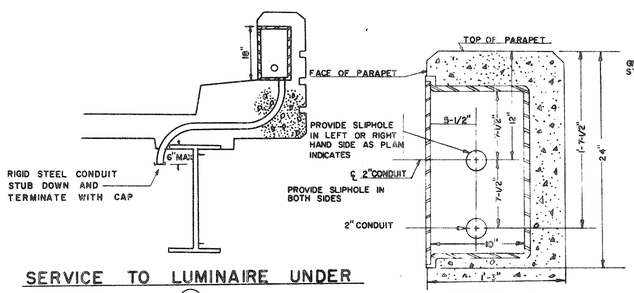

SERVICE TO LUMINAIRE UNDER STRUCTURE 6

NOT TO SCALE

DETAIL 2

18" X 18" X 10" JUNCTION BOX FOR LIGHT STANDARD

NOT TO SCALE

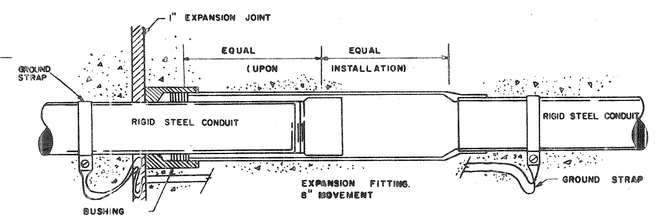

DETAIL OF EXPANSION FITTING 4

USE AT ALL EXPANSION JOINTS

NOT TO SCALE

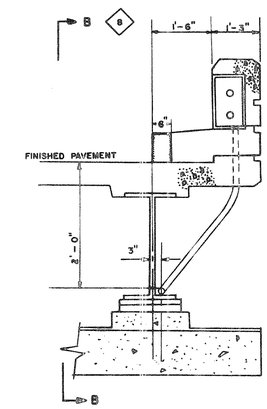

SECT A-A

NOT TO SCALE

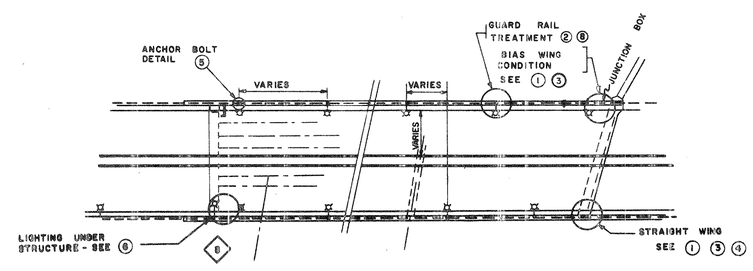

INDEX TO DETAILS

NOT TO SCALE

FEDERAL AID PROJECT NO. I-84-4(42)63

CONNECTICUT
STATE HIGHWAY DEPARTMENT
TRAFFIC DIVISION
TOWN OF EAST HARTFORD
INTERSTATE ROUTE NO. 84
BRIDGE H - 10
OVER LINES 7 & 13
ELECTRICAL DETAILS

REVISIONS		
NO.	DATE	DESCRIPTION

SCALE AS NOTED	ELECTRICAL		PROJECT NO. 42-134
DESIGNED BY	C. W. JOHNSON	3/1/61	
MADE BY	R. E. WENTWORTH	3/1/61	
SUBMITTED BY	H. A. KERR	3/1/61	BRIDGE SH. NO. 9 OF 10
APPROVED BY	R. M. Williston	3-1-61	

FORM NO. ENG. 13 ED 11-52

PUB. ROAD DIV. NO.	STATE	TOWN	FED. AID PROJ. NO.	PROJ. NO.	YEAR	ROUTE NO.	SHEET NO.	TOTAL SHEETS
1	CONN.	EAST HARTFORD	I-84 4(42)63	42-134	1962	I-84	88	216

GRAPHIC SCALE VERT. 1" = 5'

10' 0 10'

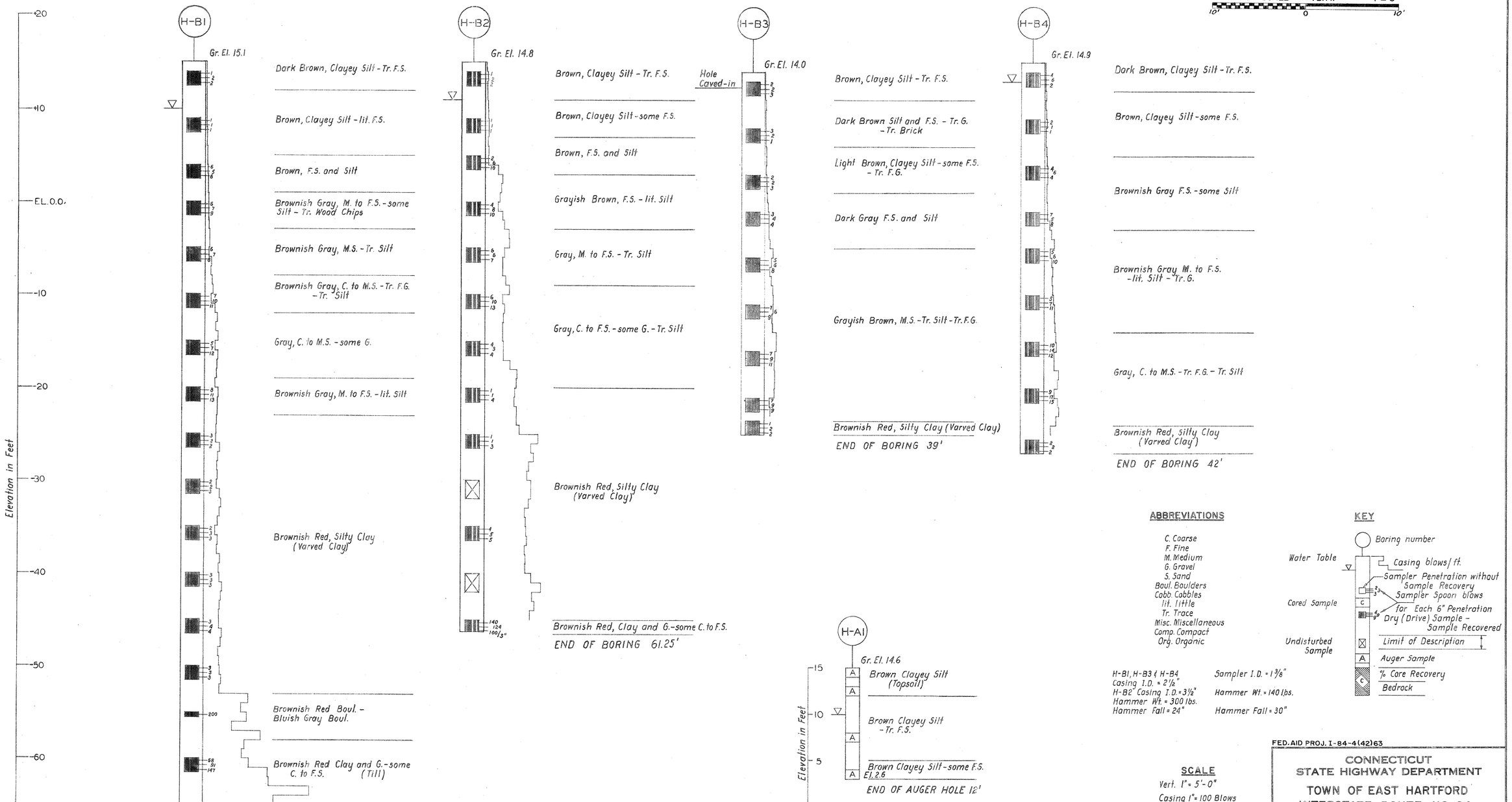

ABBREVIATIONS

C. Coarse
F. Fine
M. Medium
G. Gravel
S. Sand
Boul. Boulders
Cobb. Cobbles
lit. little
Tr. Trace
Misc. Miscellaneous
Comp. Compact
Org. Organic

H-B1, H-B3 & H-B4 Casing I.D. = 2½"
H-B2 Casing I.D. = 3½"
Hammer Wt. = 300 lbs.
Hammer Fall = 24"

Sampler I.D. = 1⅜"
Hammer Wt. = 140 lbs.
Hammer Fall = 30"

KEY

Boring number
Water Table
Casing blows/ft.
Sampler Penetration without Sample Recovery
Sampler Spoon blows for Each 6" Penetration
Cored Sample
Dry (Drive) Sample - Sample Recovered
Undisturbed Sample
Limit of Description
Auger Sample
% Core Recovery
Bedrock

SCALE

Vert. 1" = 5'-0"
Casing 1" = 100 Blows

NOTE:
For Boring locations, See Bridge Sheet No. 1.

The information, including estimated quantities of work, shown on these sheets is based on limited investigations by the state and is in no way warranted to indicate the true conditions or actual quantities or distribution of quantities of work which will be required.

REVISIONS		
NO.	DATE	DESCRIPTION

FED. AID PROJ. I-84-4(42)63

CONNECTICUT
STATE HIGHWAY DEPARTMENT

TOWN OF EAST HARTFORD
INTERSTATE ROUTE NO. 84
BRIDGE A-10
OVER LINES 7 - 13
BORING LOGS

DESIGNED BY E.L. PAVLO, CONSULTING ENGINEER
SCALES As shown
MADE BY A.S. DATE 5-2-60
CHECKED BY M.A.G. DATE 5-2-60
APPROVED [signature] DATE 5-24-60

PROJECT NO. 42-134

BRIDGE SHEET NO. 10 OF 10

DIETZGEN 10984 Ageproof Tracing Vellum 6851