Geotechnical Engineering Roadway Report
Final Plans For Review (FPFR) Submission
State Project 63-H137
Hartford, Connecticut

Vol. I

Prepared for:

H. W. Lochner, Inc.
2110 Silas Deane Highway
Rocky Hill, Connecticut 06067

Prepared by:

Geo**Design**, Inc.
984 Southford Road
Middlebury, CT 06762

March 2010

Table of Contents

1.0 GENERAL INFORMATION 1
1.1 General 1
1.2 Datum 1
1.3 Design Criteria 1
1.4 Coordination of Geotechnical Recommendations 1
1.5 Existing Conditions and Proposed Construction 2
2.0 GEOLOGY 4
2.1 Fill 4
2.2 Glaciolacustrine Deposit 4
2.3 Glacial Till 5
2.4 Bedrock 5
3.0 EXISTING GEOTECHNICAL INFORMATION 5
3.1 Boring Data 5
3.2 Laboratory Test Data 5
4.0 SUBSURFACE EXPLORATIONS 5
4.1 Test Borings 5
4.2 Observation Wells 6
5.0 LABORATORY TESTING 6
5.1 Atterberg Limits 6
5.2 Moisture Contents 6
5.3 Gradation Analyses (Sieve and Hydrometer) 7
6.0 SUBSURFACE CONDITIONS 7
6.1 Subsurface Profiles 7
6.2 Geotechnical Design Parameters 8
6.3 Groundwater 9
7.0 ANALYSES AND DESIGN RECOMMENDATIONS 9
7.1 Settlement Analysis 9
7.1.1 South of NB Station 472+00 9
7.1.2 North of NB Station 472+00 9
7.2 Roadway Embankment Fill 10
7.3 Global Stability of Proposed and Existing Embankments 10

7.4 Roadway Drainage 10
7.5 Existing Ramp "W" Pier Footings 11
8.0 CONSTRUCTION RECOMMENDATIONS 11
8.1 Roadway and Embankment Recommendations 11
8.1.1 Embankment and Roadway Subgrade Preparation 11
8.1.2 Backfill and Placement 12
8.1.3 Utilities 12
8.2 Reuse of Excavated Material 12
8.3 Dewatering 13
9.0 LIMITATIONS 13

ATTACHMENTS

<u>Vol. I</u>
Appendix 1 Figures and Tables
Appendix 2 Limitations

<u>Vol. II</u>
Appendix 3 2008 Boring Logs
Appendix 4 2008 Laboratory Data
Appendix 5 2003 Boring Logs and Laboratory Data

1.0 GENERAL INFORMATION

1.1 General

This report summarizes the final design subsurface exploration program, inferred subsurface conditions, and geotechnical analyses; and provides design recommendations for the roadway of the Hartford North segment of the proposed New Britain-Hartford Busway (Busway) in Hartford, Connecticut. This section of the proposed Busway alignment is shown on Figure 1 (Appendix 1).

The Busway project entails the design and construction of a 9.4-mile corridor between downtown New Britain and downtown Hartford that follows an abandoned railroad right-of-way. The Busway will be a dedicated roadway that will be reserved for buses as part of the Bus Rapid Transit System (BRT).

The main alignment of the Busway North begins approximately 725 feet south of the proposed Sigourney Station at Busway NB Station 450+00, and ends at city street level at Asylum Street at NB Station 490+55. The resulting project length along the baseline is approximately 4,055 feet or about 0.77 miles. This segment of the project is bordered to the south by the Hartford South segment. An additional four alignments are included in the Hartford North segment and are discussed in detail below under Section 1.5 Proposed Construction.

H.W. Lochner (Lochner) is the Prime Designer for this section of the Busway. Geo**Design**, Inc. (Geo**Design**) is the Geotechnical Subconsultant to Lochner.

1.2 Datum

Elevations referenced in this report are in feet and are based on NGVD 1929. The coordinates are based on Connecticut Coordinate System, NAD 1983.

1.3 Design Criteria

Recommendations are based on State of Connecticut Department of Transportation (ConnDOT) Standard Specifications for Roads, Bridges, and Incidental Construction, Form 816 (2004); and ConnDOT Geotechnical Engineering Manual, 2005 Edition. American Society for Testing and Materials (ASTM) publications were followed as the reference standards for applicable field and laboratory tests.

1.4 Coordination of Geotechnical Recommendations

The roadway extends along areas which include structures that are addressed in separate geotechnical reports. In areas where retaining walls or wingwalls are required to retain soils in fills and cuts, our recommendations are provided in separate geotechnical engineering reports

(Retaining Walls, Broad Street Bridge over Amtrak and Busway, Busway SB and NB Bridges over I-84 WB on-ramps), which have been submitted to Lochner by Geo**Design**. This report provides design recommendations for the roadway surface and embankments beyond the areas addressed in previously submitted reports.

1.5 Existing Conditions and Proposed Construction

The Busway alignments generally run southwest to northeast. For this report the railroad and Busway will be considered to run along a general south-north alignment, with the proposed main Busway alignment to be located to the west of the existing tracks. The Busway base line stationing increases from south to north.

At the southerly end of this project, the proposed Busway grade begins at approximately Elevation (El.) 56 feet near NB Station 450+00 to El. 38 feet near NB Station 490+00.

Five alignments are included in this roadway report; they are as follows:

Alignment 1 (*NB Busway)* – The main alignment has northbound (NB) Busway Stationing from 450+00 to 490+88.06. This alignment travels under Sigourney Street, across Flower Street, across proposed Bridge 03 (Busway NB over I-84W Ramp from Capitol Avenue), and ends at grade at Asylum Street.

Alignment 2 (*SB Busway)* – On the south, the Busway has a separate SB alignment from SB Station 803+50 to 813+91.89, where it connects with Alignment 1 at NB Station 460+32.95. Further north, the alignment breaks off from Alignment 1 at NB Station 481+30.57, with SB Stationing from 900+00 to 906+96.82, where it connects to Alignment 3 at WB on-ramp Station 204+75.5. This alignment will travel both across proposed Bridge 02 (Busway SB I-84 WB Ramp from Capitol Avenue), and under a Bridge carrying the I-84 EB off-ramp to Asylum Street.

Alignment 3 (I-84 WB on-ramp from Asylum Street) – This alignment begins at Station 200+00 under I-84 EB bridge, extends north, and ends at Asylum Street at Station 207+08.54.

Alignment 4 (I-84 WB on-ramp from Capitol Avenue) – This alignment begins at Station 300+00 under I-84 EB bridge, extends east, and ends at Capitol Avenue at Station 303+50.

Alignment 5 (Hawthorn Street) – This alignment begins at Station 10+11 and ends at Station 16+88 at Sigourney Street.

The total length of proposed roadway along the five alignments is approximately 1.3 miles. The proposed roadway widths will vary from approximately 18 to 40 feet. To accommodate the new roadway, cuts and fills are required along the alignments; and at some locations, both a cut and fill will be required. Most cuts and fills will be supported by retaining walls. The following table generally summarizes the cuts and fills along each alignment.

Table: Proposed Cuts and Fills	Stationing		Height (ft.) and Side *	
Alignment No. and Wall No. **	**From**	**To**	**Cut**	**Fill**
1 – (NB Busway)	450+00	452+47	4 W	3 E
1 – (NB Busway) RW-102 (R)	452+47	459+00	1 to 4 W	0.5 to 4 E
1 – (NB Busway)	459+00	462+00	1 to 3 E	1 to 2.5 E & W
1 – (NB Busway) RW-103 (R)	462+00	464+20	-	2.5 E & W
1 – (NB Busway) RW-103 (R)	464+20	470+70	-	1.5 to 4 W
1 – (NB Busway) RW-103 (R)	470+70	472+40	-	-
1 – (NB Busway) RW-103 (R)	472+40	474+00	2 to 3 W	-
1 – (NB Busway) RW-104 (L)	472+65	475+34	3 to 7 W	-
1 – (NB Busway)	Broad Street Bridge (01) and Wingwalls			
1 – (NB Busway) RW-105 (L)	476+17	479+30	7 to 10 W	-
1 – (NB Busway) RW-106 (R)	476+13	483+08	1 to 2 W	1 to 3 E & W
1 – (NB Busway)	New Bridge (03) and Wingwalls - NB Busway over I-84 WB on-ramp from Capitol Avenue			
1 – (NB Busway) RW-107 (L)	484+34	485+40	-	4 to 8 W
1 – (NB Busway) RW-108 (R)	484+38	487+42	-	3 to 6 E & W
1 – (NB Busway)	487+42	490+55	-	0 to 3 E & W
2 – (SB Busway)	803+50	808+00	4 to 5 W	-
2 – (SB Busway)	808+00	810+00	-	1 to 3 W
2 – (SB Busway) RW 109 (L)	898+58	901+00	1 to 3 W	1 to 2 E
2 – (SB Busway)	New Bridge (02) and Wingwalls – SB Busway over I-84 WB on-ramp from Capitol Avenue			
2 – (SB Busway) RW 112 (L)	902+80	904+87	-	8 to 15 W 2 to 10 E
3 – (I-84WB on-ramp - Asylum) RW 111 (L)	200+50	204+90	1 to 5 W	1 to 3 E
3 – (I-84WB on-ramp - Asylum) RW 110 (R)	204+90	208+20		3 to 4 E & W

* W=West, E=East (Indicates the cardinal direction of proposed cuts and fills relative to the baseline)
** (R) = Right, (L) = Left (Indicates side of the baseline stationing where the retaining wall is located)

Proposed fills along Alignments No. 1 and 2 (between NB Stations 483+80 and 485+50, and SB Stations 902+00 and 903+00) will surround the existing "Ramp W" pier foundations. "Ramp W" carries the I-84 EB off-ramp to Asylum Street. The proposed fills will impose new stresses to the existing foundations. See Figures 12 through 15 (in Appendix 1) for ConnDOT historic drawings dated November 12, 1985 and refer to Section 7.5 for a discussion of related issues.

2.0 GEOLOGY

Published geologic data for this locale generally indicate Fill over Glaciolacustrine deposits, over Glacial Till, over Bedrock. Mapping indicates Fill is present at the surface throughout the project area. Glaciolacustrine deposits are shown near the surface outside the limits of mapped Fill. To the north and south of the project area, Till is shown to be present at the surface. These strata are described below. They were formed, in a bottom to top sequence; thus, the shallower a layer the younger its geological age.

2.1 Fill

Fill is defined as any material that was not placed naturally (e.g. man-made). Due to a significant amount of construction associated with the RR, I-84, and cross streets, Fill is mapped throughout the project area.

2.2 Glaciolacustrine Deposit

When the late Pleistocene ice sheet in New England retreated about fifteen thousand (15,000) years ago, the Glaciolacustrine deposit was formed in Glacial Lake Hitchcock. The Glaciolacustrine deposit in this area is distinctively featured by alternating layers of clay and silt. Each clay and silt pair is called a "varve", which corresponds to glacial lake deposit of one year. As the glacier melted, melt water streams brought soil particles into Glacial Lake Hitchcock. During the summer, a larger volume of water formed a more turbulent flow. This flow was capable of carrying silt particles (sometimes even larger particles) and settling them on the lake bottom. During the winter, when the volume of melt water decreased and frozen lake surface calmed the water, clay particles were deposited out of suspension. As a result of many years' deposit, the "varved" structure dominated the Glaciolacustrine deposit in this region. The deposit could contain several hundred or even several thousand varves. The thickness of the varves is variable.

Although this deposit contains significant amount of Silt, the literature typically refers to the Glaciolacustrine deposit in this area as Varved Clay. Conforming to tradition, the term "Varved Clay" is used in this report.

This deposit is not present everywhere along this section of the Busway.

2.3 Glacial Till

Glacial Till consists of a heterogeneous mixture of different sized particles. The composition of Till demonstrates a wide range of variation in particle size and distribution. Two extremes of these variations are stony till and clayey till. The former contains more than fifty percent of gravels, pebbles, cobbles and boulders. The latter consists of more than fifty percent of clay size particles.

2.4 Bedrock

The Portland Arkose formation, a sedimentary bedrock unit, is the dominating formation in this locale. Its texture ranges from coarse conglomerate to shale. Depth to bedrock is indicated on mapping to be up to 75 feet on the southwest to less than 25 feet on the northeast. Rock outcroppings are mapped to the south along the Park River; between 100 to 1,000 feet south of the project area.

3.0 EXISTING GEOTECHNICAL INFORMATION

3.1 Boring Data

During the preliminary design phase in 2003, Baker Engineering (Baker) and their subcontractors drilled 13 borings along this section of the Busway alignment. These borings include RB-42, and SB-88 through SB-99. Logs of these borings are included in Appendix 5 and boring locations are depicted on Figures 2 through 5

3.2 Laboratory Test Data

Baker conducted the following variety of laboratory tests on samples retrieved from their borings: Moisture Content, Atterberg Limits, and Gradation (Sieve and Hydrometer) Analyses, and Unconfined Compressive Strength Rock Testing. The results from these tests are presented in Appendix 5. Details of each test and a discussion of the results are provided in Section 5.0.

4.0 SUBSURFACE EXPLORATIONS

Geo**Design** conducted additional subsurface explorations during final design. Details of these explorations are described in this section:

4.1 Test Borings

Geo**Design** coordinated the services of New England Boring Contractors of CT, Inc. (NEBC) to perform Standard Penetration Test (SPT, ASTM D 1586) borings along this section of the Busway alignment in the Fall of 2008. These borings were performed near proposed retaining

walls, along the proposed roadways, and near the three proposed bridges. A total of 74 borings were performed; 33 for retaining walls, 24 for roadways, and 17 for bridges. Boring locations were initially field located by tape measurement and line of sight. Connecticut Department of Transportation (ConnDOT) survey crews then recorded the locations and elevations of the borings by surveying the as-drilled locations. Borings locations are shown on Figures 2 through 5 (Appendix 1), and boring logs are included in Appendix 3. Of the bridge borings, only those located near the roadway alignment are discussed herein, shown on the profiles, and included in Appendix 3.

4.2 Observation Wells

Observation wells were installed in Borings R-23, RW-103-2, and RW-105-1. Information on well installation is included on the boring logs (Appendix 3).

5.0 LABORATORY TESTING

Geo**Design** assigned laboratory tests to estimate engineering properties of the Varved Clay and Fill Materials to verify field classifications and determine material drainage properties. Testing was performed by GeoTesting, Inc. of Boxborough, Massachusetts. Laboratory tests included Atterberg Limits, Sieves, and Hydrometer Analyses. The results of these tests are discussed below, and are included in Appendix 4. As previously noted, laboratory testing was also performed by Baker Engineering in 2003, and those results are included in Appendix 5.

Based on the stiffness of the Varved Clay and inability to obtain undisturbed tube samples, we did not perform consolidation or strength tests on the Varved Clay stratum.

5.1 Atterberg Limits

Baker performed 16 Atterberg Limit Tests on samples obtained in the 2003 pilot borings. Seven new Atterberg Limit tests were performed on samples obtained in the 2008 borings. Atterberg Limits (ASTM D 4318) provide the Liquid Limit (LL), the Plastic Limit (PL), and the Plasticity Index (PI) of cohesive soil samples. These tests can characterize cohesive soils and provide a reference to compare soil properties at different depths and locations.

Test results are summarized in Table 1 (Appendix 1) for Varved Clay samples. The test results indicate a LL range of 28 to 61, a PL range of 19 to 28, and a PI (recent testing only) range of 21 to 35. The LL, PL, and PI generally increased together, with little correlation with depth.

5.2 Moisture Contents

Baker Engineering performed 29 moisture content tests on samples obtained in the 2003 pilot borings. The water contents ranged from 10.4 to 49.7 percent in the Clay, from 10.6 to 17.2

percent in the Fill, and from 2.3 to 14.1 percent in natural granular soils. A summary of these moisture content results are included in Table 2 (Appendix 1).

5.3 Gradation Analyses (Sieve and Hydrometer)

Baker Engineering performed 16 gradation analyses on samples obtained in the 2003 pilot borings. Forty new Sieve and Hydrometer tests were performed on samples taken in the 2008 borings; twenty-seven sieve tests, five hydrometer tests, and eight combined sieve-hydrometer tests. Test results are summarized in Table 3, (Appendix 1) and are discussed below by strata type.

Tests performed on Fill samples (26 tests total) indicate that about 80 percent of the samples tested were granular despite containing more than 50 percent Silt (percent passing the No. 200 sieve). The varying constituents within the Fill include up to 20 percent fine Gravel, 25 to 70 percent fine to coarse Sand, 15 to 70 percent fines (passing the No. 200 Sieve).

Tests performed on the Varved Clay (six tests total) indicate a range of 30 to 50 percent Silt (between the No. 200 Sieve and 0.002 mm) and 50 to 70 percent Clay (less than 0.002 mm). Two of the samples tested indicated 1.5 to 3 percent fine Sand.

Tests performed on the Glacial Till (seven tests total) indicate the gradations being evenly split between being mostly granular or fine grained. The varying constituents within the Glacial Till generally include up to about 15 percent fine Gravel, and 30 to 60 percent of fine to coarse Sand or Silt/Clay.

6.0 SUBSURFACE CONDITIONS

6.1 Subsurface Profiles

Subsurface profiles are shown on Figures 6 through 10 (Appendix 1). These profiles depict the generalized subsurface conditions based on the available subsurface exploration data. The figures depict the following alignments:

Figures 6A through 6F – NB Busway (Alignment 1)
Figure 7 – SB Busway (Alignment 2)
Figure 8A and 8B – I-84 WB on-ramp from Asylum Street (Alignment 3)
Figure 9 – I-84 WB on-ramp from Capitol Avenue (Alignment 4)
Figure 10 – Hawthorn Street (Alignment 5)

The legend for the subsurface profiles is included as Figure 11. Strata data are summarized in Table 4, (Appendix 1). A more general summary of the soil and rock profile along the alignment is summarized as follows:

- **Crushed Stone/Asphalt/Concrete** – 0 to 2 feet thick;
- **Fill –** 0 to 24 feet thick;
- **Varved Clay (Glaciolacustrine Deposit)** – 0 to over 26 feet thick;
- **Glacial Till** – 0 to 23 feet thick;
- **Decomposed Bedrock –** 0 to 6 feet thick; over
- **Bedrock (Siltstone/Shale).**

Fill was observed in most of the borings and generally consisted of loose to very dense, fine to coarse Sand with varying proportions of Silt, and (where present) fine to coarse Gravel, Asphalt, Ash, Cinders, Brick/Concrete fragments, Roots, and Wood. The Fill was observed to be thickest at Boring R-22 near the south end of the I-84 on-ramp from Capitol Avenue (24 feet thick), and at Borings R-3, -4, and -5 at Hawthorn Street (10 to 15 feet thick). Thick Fill was also observed at Boring RW-108-01 near NB Station 485+00 (12 feet thick), and at Borings RW-103-01 and -02 near NB Stations 463+00 and 464+00 (7 to 11 feet thick), respectively. Fill in other areas ranged from 1 to 10 feet thick. Less than two feet of Fill was observed along Alignment 3 (I-84 WB on-ramp from Asylum Street).

Varved Clay was only observed south of Flower Street (NB Station 471+50) and locally in two borings near Asylum Street; R-23 (NB Station 490+10) and R-24 (NB Station 489+45). Where encountered, the Varved Clay generally consists of stiff to very stiff Silty Clay and Clayey Silt layers, with localized soft zones. From south to north (between NB Stations 450+00 and 471+50), the Varved Clay generally decreases in thickness and its stiffness increases.

Glacial Till was encountered in most borings that fully penetrated the Fill and/or the Varved Clay, except in six Borings (R-19, -21, -22, and B-02-1, -2, -4), which encountered Fill over Decomposed Bedrock or Bedrock; and Boring R-24 which encountered Varved Clay over Decomposed Bedrock. Where fully penetrated, the Glacial Till thickness varied from approximately 2 to 24 feet. The Till generally consisted of red brown Clayey Silt and fine to coarse Sand, with variable proportions of fine to coarse Gravel. SPT "N" values indicate the density of this layer ranges from dense to very dense.

Decomposed Bedrock of very dense consistency was encountered in five borings.

Bedrock was encountered or inferred at approximate El. 10 to 36 feet. Rock cores were taken at each of the Bridge borings included in this report (B-01-3, B-01-4, B-02-1, B-02-2, B-02-3, B-02-4, B-03-1, and B-03-2). Rock Quality Designation (RQD) values ranged between 0 and 88 percent indicating very poor to good rock mass quality.

6.2 Geotechnical Design Parameters

Engineering design parameters of the strata present along this section of the Busway were determined based on the boring data and laboratory test results. The engineering design parameters of the Varved Clay were determined from correlation of index tests to published data

and/or data from the adjacent Busway South segment. The following table summarizes the recommended engineering design parameters.

Strata	Total Unit Weight (pcf)	Friction Angle (degrees)	Undrained Shear Strength (psf)	Recompression Ratio (Cr)
Fill	125	32	-	-
Varved Clay	110	--	1,500	0.04
Glacial Till	135	34	-	-
Decomposed Bedrock	138	36	-	-

6.3 Groundwater

Stabilized groundwater readings were made in observation wells installed in Borings R-23, RW-103-2, and RW-105-1. This data is presented in Table 5 (Appendix 1), together with water readings made in the borings during drilling. Groundwater depths ranged from 2.5 to 17 feet below grade, although some of the shallower readings may indicate perched conditions as they were not obtained in wells and are therefore do not represent stabilized groundwater conditions.

Groundwater levels will vary depending on factors such as temperature, season, precipitation, construction activity and other conditions, which may be different from those at the time of these readings.

7.0 ANALYSES AND DESIGN RECOMMENDATIONS

7.1 Settlement Analysis

At proposed retaining wall locations, settlement estimates are included in the Retaining Walls Geotechnical Engineering Report, provided under separate cover.

7.1.1 South of NB Station 472+00

Settlement due to consolidation of the Varved Clay will only occur south of approximate NB Station 472+00. We estimate consolidation settlement due to filling between proposed Retaining Walls 102 and 103 (approximate NB Stations 459+00 to 462+00), to be less than about one-half inch. We expect this settlement to occur within three to six months.

7.1.2 North of NB Station 472+00

North of NB Station 472+00, settlements will occur within the Fill stratum. Outside of retained areas, the Roadway will either be in cut, or will be filled less than about one foot. In these areas, we expect settlements to occur rapidly (i.e. during construction) and to be less than about one-quarter inch.

Where Varved Clay was encountered near Asylum Street in Borings R-23 and R-24, up to 1.5 feet of fill is proposed. Based on the stiffness and limited thickness of the Varved Clay in these locations, we expect consolidation settlements of this layer to be less than about one-quarter inch.

7.2 Roadway Embankment Fill

We recommend the following static design parameters for the embankment fill:

- Unit weight of soil (above groundwater) = 125 pcf
- Soil Angle of Internal Friction, phi = 34°

7.3 Global Stability of Proposed and Existing Embankments

New slopes should be constructed 1V:2H as part of the Busway construction. Based on our review of sections provided by Lochner, it appears that most new embankments not retained by walls will be constructed at a 1V:2H slope or flatter, and that existing embankments are at 1V:2H slope or flatter. Under these conditions, based on subsurface conditions, and based on proposed maximum fill heights, by inspection we have determined that the proposed embankments will have factors of safety against global stability exceeding 1.5.

For slopes with maximum steepened side slopes of 1.5H:1V, we recommend either "special" or "modified" riprap protection of at least 12-inches, and at most 18-inches thick be installed on the embankment slopes faces. All vegetation, topsoil, and any other organic or deleterious materials should be stripped from embankment slope faces prior to placing new embankment materials. The riprap should conform with either Section M.12.02-3 or M.12.02-4 of Form 816, and be placed in accordance with Section 7.03 of Form 816. We recommend the riprap be placed over either filter fabric (6.0 oz/sy non-woven needle-punched geotextile or greater) or six-inch thick compacted Granular Fill that conforms to ConnDOT Form 816 Section M.02.01.

7.4 Roadway Drainage

Per drawings provided by Lochner, the proposed roadway will be pitched approximately 2 to 4 percent from the Busway centerline.

Existing surficial soils are susceptible to frost action because of their elevated Silt content (16 to 70 percent, see Table 3, Appendix 1). Due to the limited width of the new embankments, we recommend that the roadway subgrade be pitched away from the Busway centerline to promote water infiltration flows out of the pavement base.

In areas where little fill or cuts are proposed, the roadway subgrade will generally consist of Silt/Fine Sand or Fill. The roadway pavement section should be designed for drainage of anticipated infiltrated water by using a base or subbase which is sufficiently free-draining and pitched to a gradient which prevents saturation.

Sag curves locations should include sufficient base or subbase to provide a gradient sufficient to prevent the pavement section from becoming saturated, alternately perpendicular underdrains should be installed to drain these locations.

Observed groundwater depths ranged from 2.5 to 17 feet, averaging at 8.5 feet deep. Shallow groundwater (less than five feet) is expected between NB Stations 468+00 and 480+00, and was observed to be shallowest near the Broad Street intersection. In this area, groundwater levels are near proposed bottom of pavement. Thus, we recommend that underdrains be installed from NB Stations 472+00 to 480+00 to lower groundwater levels. The underdrains should be installed on the west side of the proposed Busway. In consideration of our recommendation to pitch the subgrade, and of the relatively narrow width of the roadway, we do not recommend the use of pavement drains.

We estimate that where drainage swales may be present between approximate NB Stations 472+00 and 480+00 will be within the poorly drained existing Fill or Till (35 to 70 percent fines). We recommend using a sufficient slope parallel to the embankment, site grading modifications, or other adjustments to the swales to facilitate removal of water from these areas and prevent ponding.

7.5 Existing Ramp "W" Pier Footings

We analyzed potential impacts of proposed fill loading imparted by the new S.B. Busway embankment fill in the vicinity of "Ramp W". Based on our review of existing historic drawings for "Ramp W" (Figures 12 through 15, Appendix 1), the Ramp W piers and Abutment No. 2 are supported on shallow spread footings bearing on either Glacial Till or Bedrock. The 1985 and 2008 borings indicate the Glacial Till in this area is very dense, and the rock has poor to fair rock mass quality. The potential impacts on existing foundations between SB Stations 901+00 to 903+00, which fall within a zone of influence (1:1) of proposed filling, were considered. We expect that the placement of 5 to 15 feet of new fill will not induce excessive settlement to, or otherwise adversely impact, the existing piers and abutment. This conclusion is based, in part, on our review of available data.

8.0 CONSTRUCTION RECOMMENDATIONS

8.1 Roadway and Embankment Recommendations

8.1.1 Embankment and Roadway Subgrade Preparation

Roadway excavations and formation of embankments should be in accordance with ConnDOT Form 816 specification Section 2.02. Before grading for the proposed roadway begins, the areas must be grubbed free of vegetation, topsoil, and subsoil. Entire root systems of vegetation must be removed. Excavations within Varved Clays should be made with a flat edge excavator

bucket. Where the exposed surface is granular, we recommend proof compaction of four to six passes of a heavy, self propelled drum roller.

8.1.2 Backfill and Placement

In accordance with Form 816 Section 2.02.5, when embankments are constructed on slopes steeper than 1(V):3(H), the slope of the existing ground should be plowed deeply or cut into steps before the filling beings. During each backfill lift placement, we recommend all slopes, regardless of their steepness, be plowed so that the following lift can be placed and compacted on a horizontal plain. Backfill should be placed in 12-inch thick loose lift layers and compacted to not less than 95 percent of the dry density. Earth slopes with a degree of slope from 1V:2H to 1V:5H should be tracked traversing the slopes with cleated tracks so that the cleat indentations are parallel to the slope.

8.1.3 Utilities

Based on drawings provided by Lochner, several existing utilities cross the proposed Busway alignments. Excepting the utility located near NB Station 453+90 (discussed in the Retaining Walls Report under separate cover), settlement of the utilities due to embankment fill loads are expected to be less than about ¼ to ½ -inch. However, the contractor should identify the location of all utilities, and be aware of their presence during construction activities. Available information does not indicate the presence of utilities in areas where cuts of more than 2 feet are proposed.

8.2 Reuse of Excavated Material

Excavated materials are not expected to be suitable for re-use as Compacted Granular Fill or Pervious Structure Backfill. Topsoil and subsoil may be stockpiled and reused to dress proposed slopes.

Existing fill that is free of deleterious materials may be reused as embankment fill (ConnDOT Form 816 Section 2.02.03.5). Form 816 does not indicate an acceptable percentage of fines, however, soils which contain more than about 25 to 30 percent Silt will be difficult to place and compact. Gradation testing indicates that the top three feet of soil encountered between NB Stations 476+00 and 489+00 is mostly granular with less than 25-percent fines (passing No. 200 sieve).

Fill with elevated fines and Varved Clay, are not expected to be suitable for reuse on the project, except for placement of “unsuitable” materials in the outer slopes of an embankment as indicated on ConnDOT Standard Drawing No. 201.

We estimate swell/shrinkage factors for in-situ fill material to be as follows (Estimated from Alaska DOT Geotechnical Procedures Manual, 1983):

Loose (excavated) Factor = 1.20 x bulk (in-situ material)
Compacted Factor = 0.90 x bulk (in-situ material)

8.3 Dewatering

Large amounts of groundwater are not anticipated during roadway preparation. However, shallow groundwater was observed as shallow as 2.5 feet near Broad Street. Contractors should be prepared to lower groundwater using sumps and pumps in the area of Broad Street, and to control surface water in other areas.

9.0 LIMITATIONS

This report is subject to the limitations attached in Appendix 2.

INSERT TAB
APPENDIX 1
HERE

Appendix 1

Figures
&
Tables

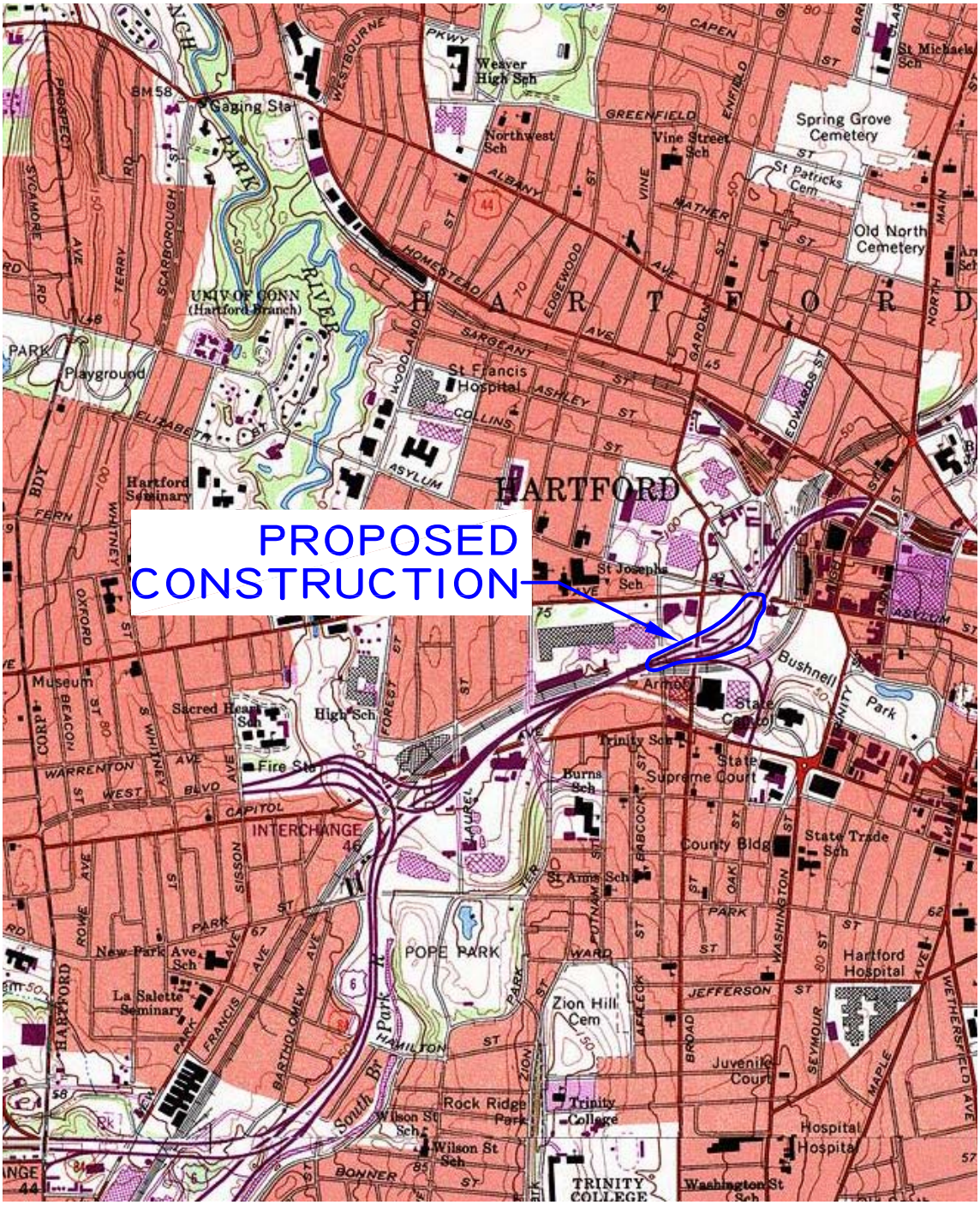

GEODESIGN INCORPORATED

GEOTECHNICAL ENGINEERS • ENVIRONMENTAL CONSULTANTS
984 SOUTHFORD ROAD • MIDDLEBURY CONNECTICUT 06762
TELEPHONE: (203)758-8836 FACSIMILE: (203)758-8842

DRAWN BY: SMC | REVIEWED BY: MGB

CONNECTICUT

SCALE IN FEET
0 1000 2000 4000

PROJECT LOCATION PLAN
ROADWAY AND RETAINING WALLS
NEW BRITAIN-HARTFORD BUSWAY
STATE PROJECT NO. 63-H137

REFERENCE:
U.S.G.S. 7.5 MINUTE QUADRANGLE: HARTFORD, CT.
Figure was created using TOPO! 2003 software

PROJECT NO. 0331-14
DATE: 12-12-08
FIGURE NO. 1

ACAD FILE No. M:\CL\331\14\CADD\Area Map - Broad Stover AAR.dwg

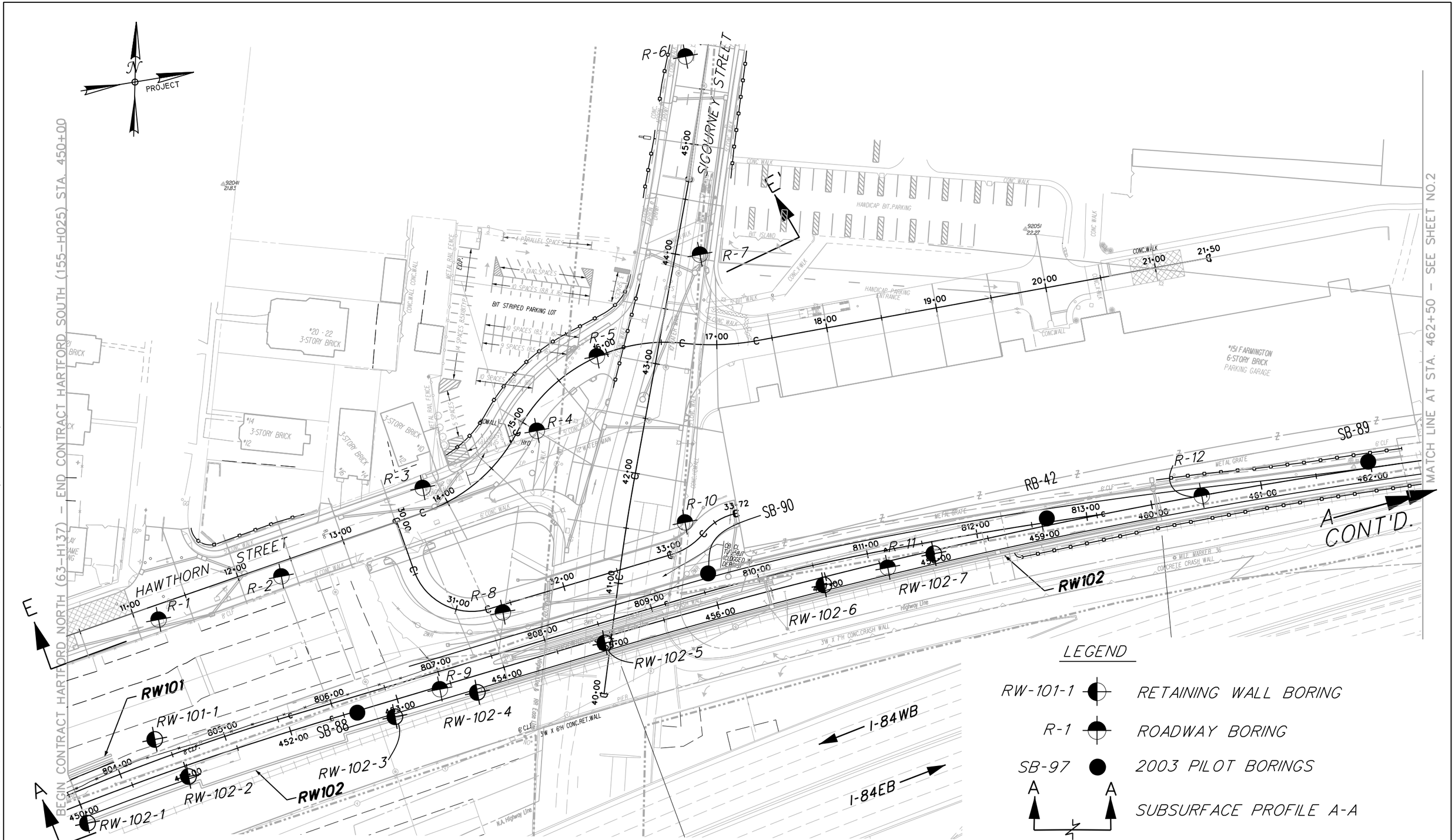

DESIGNED BY JWK						
DRAWN BY SMC						
CHECKED BY JWK						
APPROVED BY ULF		NO.	DATE		DRWN.	CHKD	APPVD
		REVISIONS				

PRIME DESIGNER:

H. W. Lochner
2110 SILAS DEANE HIGHWAY
ROCKY HILL, CT. 06067
Tel: (860) 513-4003
Fax: (860) 513-4006

GEODESIGN INCORPORATED
GEOTECHNICAL ENGINEERS • ENVIRONMENTAL CONSULTANTS
984 SOUTHFORD ROAD • MIDDLEBURY CONNECTICUT 06762
TELEPHONE: (203)758-8836 FACSIMILE: (203)758-8842

DWG. TITLE
AS-DRILLED EXPLORATION LOCATION PLAN

PROJECT
STATE PROJECT NO. 63-H137
NEW BRITAIN - HARTFORD BUSWAY

FILE NO. 331-14
SCALE 1" = 80' DATE 4-8-09
FIGURE NO. 2

M:\CL\331\14\CADD\4 SHEETS - HTFD BUSWAY NORTH - ROADS & R. WALLS - AS-DRILLED BORING LOC PLAN (as of2-24-09)

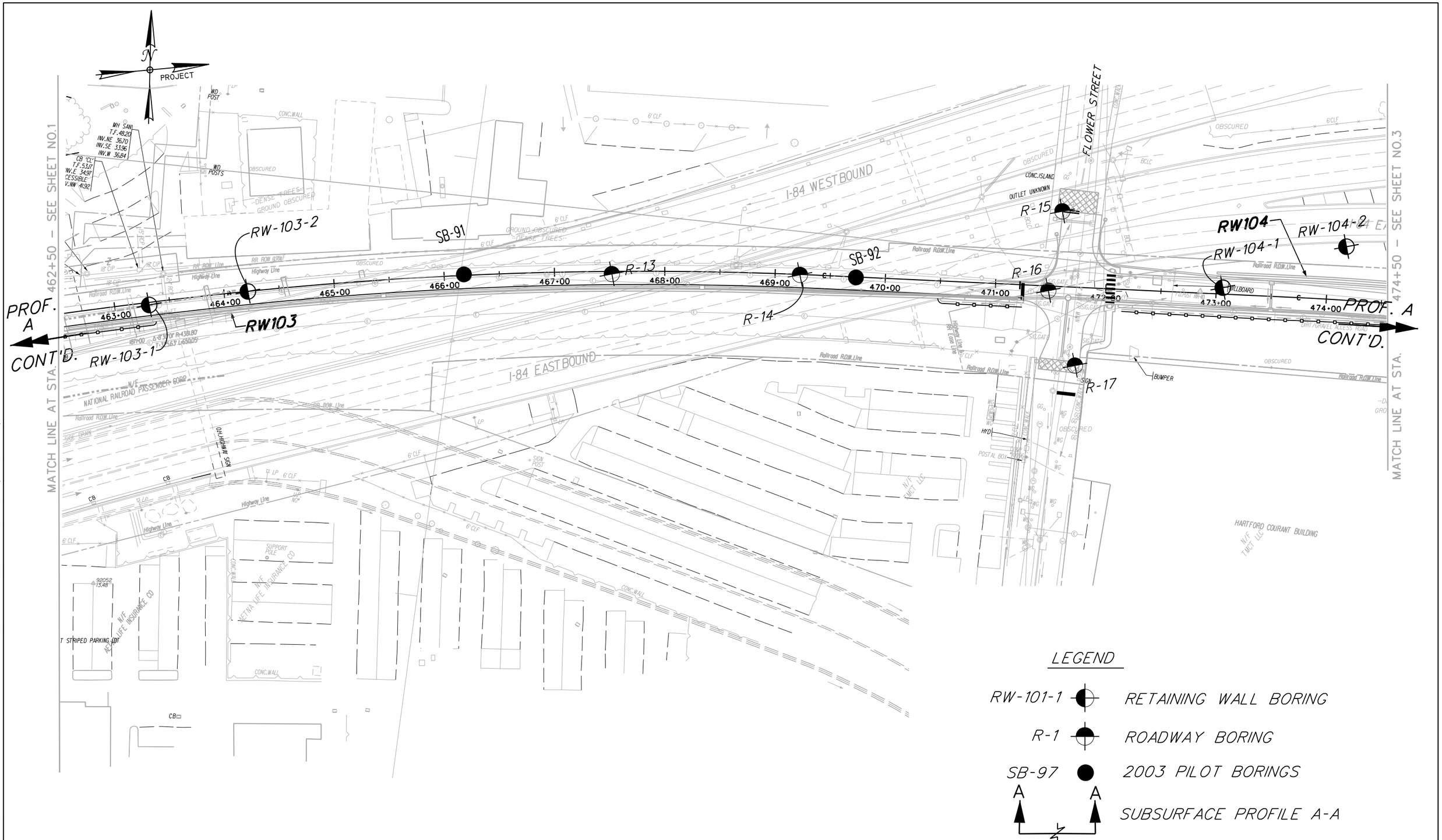

M:\CL\331\14\CADD\4 SHEETS – HTFD BUSWAY NORTH – ROADS & R. WALLS – AS-DRILLED BORING LOC PLAN (as of2-24-09)

DESIGNED BY JWK							
DRAWN BY SMC							
CHECKED BY JWK							
APPROVED BY ULF		NO.	DATE		DRWN.	CHKD	APPVD
		REVISIONS					

PRIME DESIGNER:

H. W. Lochner
2110 SILAS DEANE HIGHWAY
ROCKY HILL, CT. 06067
Tel: (860) 513-4003
Fax: (860) 513-4006

GEODESIGN INCORPORATED
GEOTECHNICAL ENGINEERS • ENVIRONMENTAL CONSULTANTS
984 SOUTHFORD ROAD • MIDDLEBURY CONNECTICUT 06762
TELEPHONE: (203)758-8836 FACSIMILE: (203)758-8842

DWG. TITLE
AS-DRILLED EXPLORATION LOCATION PLAN

PROJECT
STATE PROJECT NO. 63-H137
NEW BRITAIN – HARTFORD BUSWAY

FILE NO. 331-14
SCALE 1" = 80'
DATE 4-8-09
FIGURE NO. 3

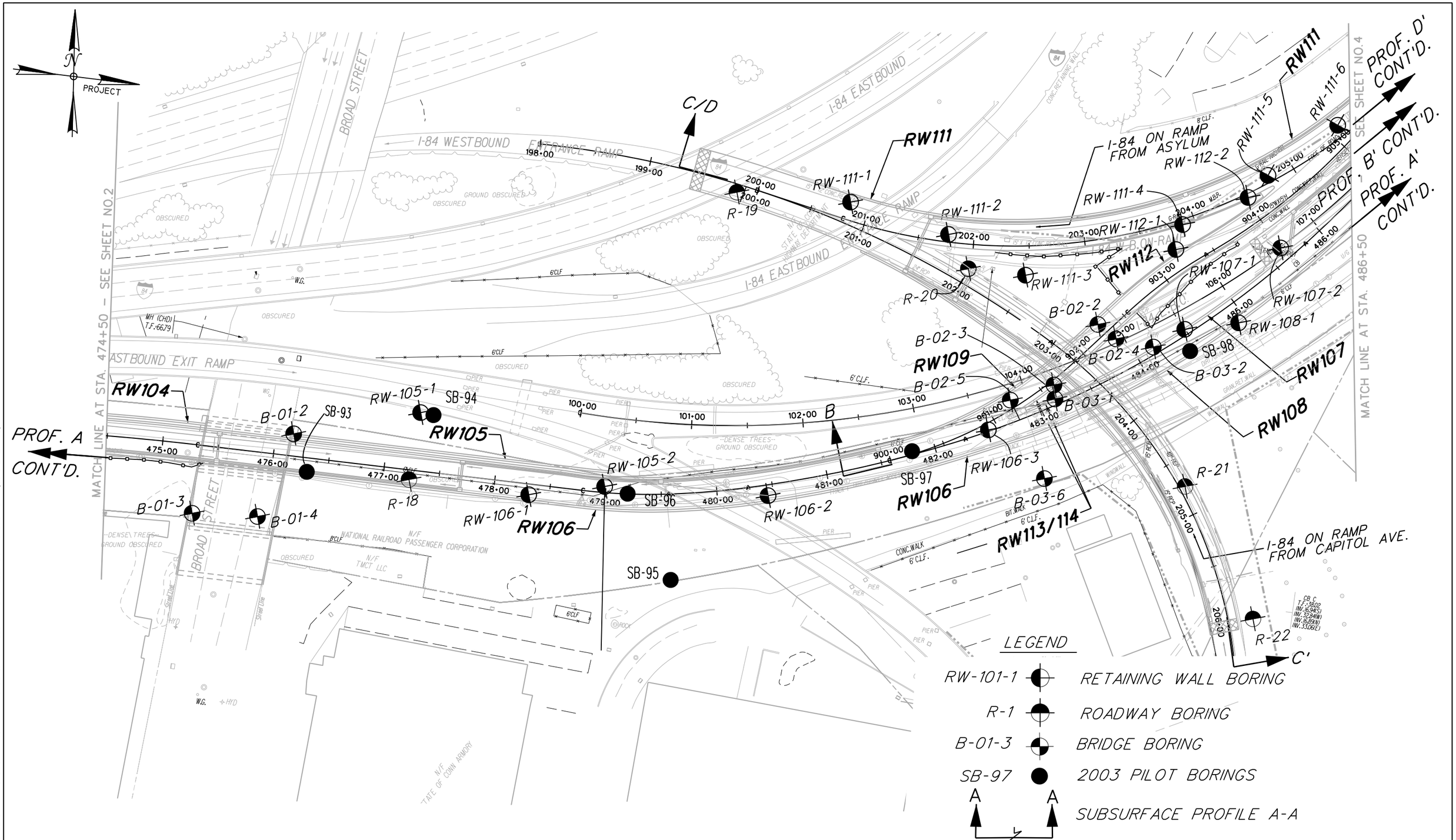

DESIGNED BY JWK							
DRAWN BY SMC							
CHECKED BY JWK							
APPROVED BY ULF		NO.	DATE		DRWN.	CHKD	APPVD
		REVISIONS					

PRIME DESIGNER:

H. W. Lochner
2110 SILAS DEANE HIGHWAY
ROCKY HILL, CT. 06067
Tel: (860) 513-4003
Fax: (860) 513-4006

GEODESIGN INCORPORATED
GEOTECHNICAL ENGINEERS • ENVIRONMENTAL CONSULTANTS
984 SOUTHFORD ROAD • MIDDLEBURY CONNECTICUT 06762
TELEPHONE: (203)758-8836 FACSIMILE: (203)758-8842

DWG. TITLE
AS-DRILLED EXPLORATION LOCATION PLAN

PROJECT
STATE PROJECT NO. 63-H137
NEW BRITAIN - HARTFORD BUSWAY

FILE NO. 331-14
SCALE 1" = 80'
DATE 4-8-09
FIGURE NO. 4

M:\CL\331\14\CADD\4 SHEETS - HTFD BUSWAY NORTH - ROADS & R. WALLS - AS-DRILLED BORING LOC PLAN (as of2-24-09)

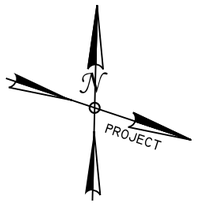

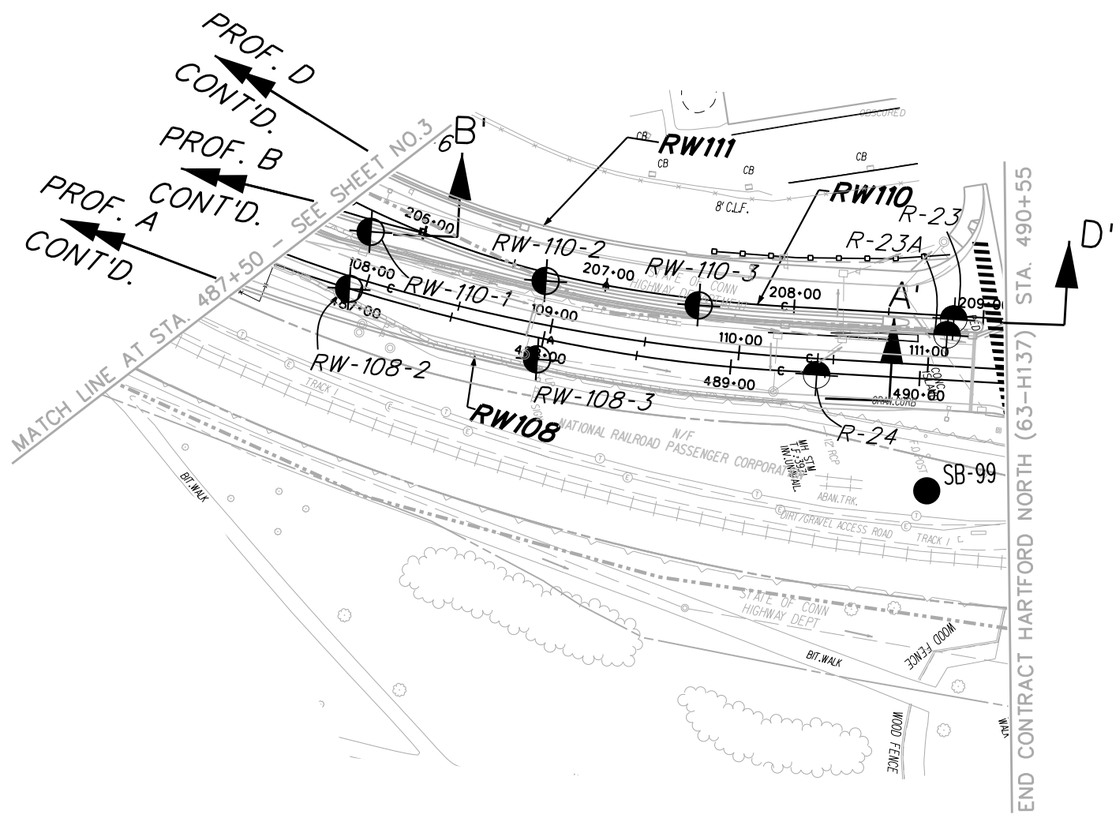

LEGEND

RW-101-1	RETAINING WALL BORING
R-1	ROADWAY BORING
SB-97	2003 PILOT BORINGS
A — A	SUBSURFACE PROFILE A-A

DESIGNED BY JWK							
DRAWN BY SMC							
CHECKED BY JWK							
APPROVED BY ULF		NO.	DATE		DRWN.	CHKD	APPVD
		REVISIONS					

PRIME DESIGNER:

H. W. Lochner
2110 SILAS DEANE HIGHWAY
ROCKY HILL, CT. 06067
Tel: (860) 513-4003
Fax: (860) 513-4006

GEODESIGN INCORPORATED
GEOTECHNICAL ENGINEERS • ENVIRONMENTAL CONSULTANTS
984 SOUTHFORD ROAD • MIDDLEBURY CONNECTICUT 06762
TELEPHONE: (203)758-8836 FACSIMILE: (203)758-8842

DWG. TITLE
AS-DRILLED EXPLORATION LOCATION PLAN

PROJECT
STATE PROJECT NO. 63-H137
NEW BRITAIN – HARTFORD BUSWAY

FILE NO. 331-14
SCALE 1" = 80'
DATE 4-8-09
FIGURE NO. 5

W:\CL\331\14\CADD\4 SHEETS – HTFD BUSWAY NORTH – ROADS & R. WALLS – AS-DRILLED BORING LOC PLAN (as of 2-24-09)

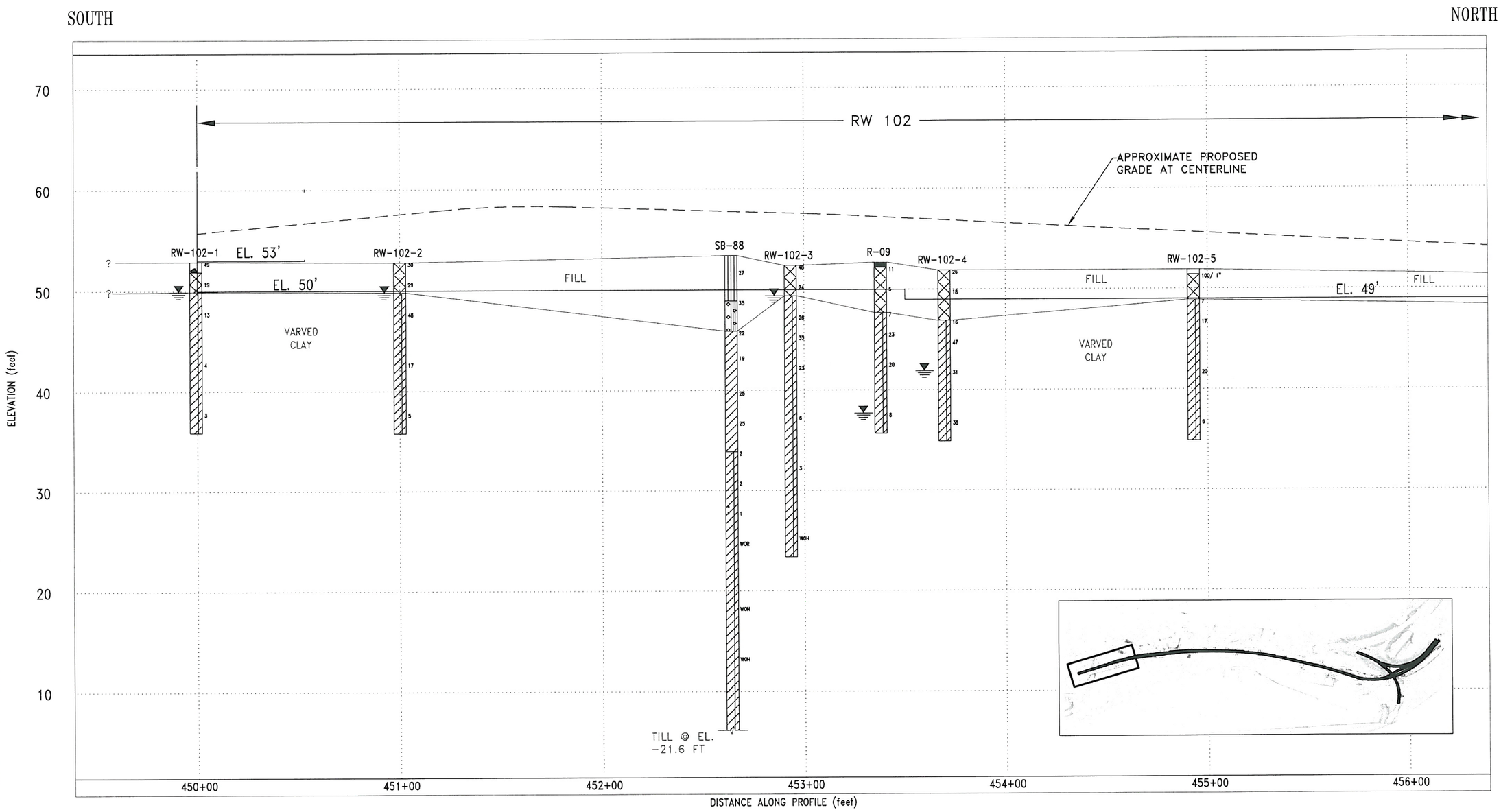

GEODESIGN INCORPORATED
Geotechnical and Environmental Engineering Consultants
984 Southford Road
Middlebury, Connecticut 06762
Telephone: 203-758-8836 Fax: 203-758-8842

0 50
Horizontal Scale (feet)
Vertical Exaggeration: 5x

Notes:
1. Data concerning the various strata have been interpreted at boring locations only. The stratigraphy between borings may vary from that shown.
2. Refer to plan view for subsurface profile location. For strata details and symbol legend, see Subsurface Profile Legend and boring logs appended to this report.
3. Numbers displayed beside boring(s) represent SPT "N" values corresponding to their respective sampling interval. Where coring was performed, numbers represent Recovery and RQD values.
4. Profiles include all 2008 Roadway and Retaining Wall borings, and select Bridge and 2003 Pilot borings.

Date: 2-23-2009 | Drawn By: MJV/DSF | Reviewed By: MGB

SUBSURFACE PROFILE A-A'

New Britain / Hartford Busway
NB Busway 450+00 to 490+55

File No.: 0331-014.0 | Figure No.: 6A

M:\CL\0331\14\Roadway & Retaining Walls\CADD\SUBSURFACE PROFILE A-A' (Roadway Figure 6A-F, Retaining Wall Figures 101-2 to 108-2 and 113-2 to 114-2)(West to East Sta. 443+00 -491+00) 1in.= 50ft. 5x Vert Ex.

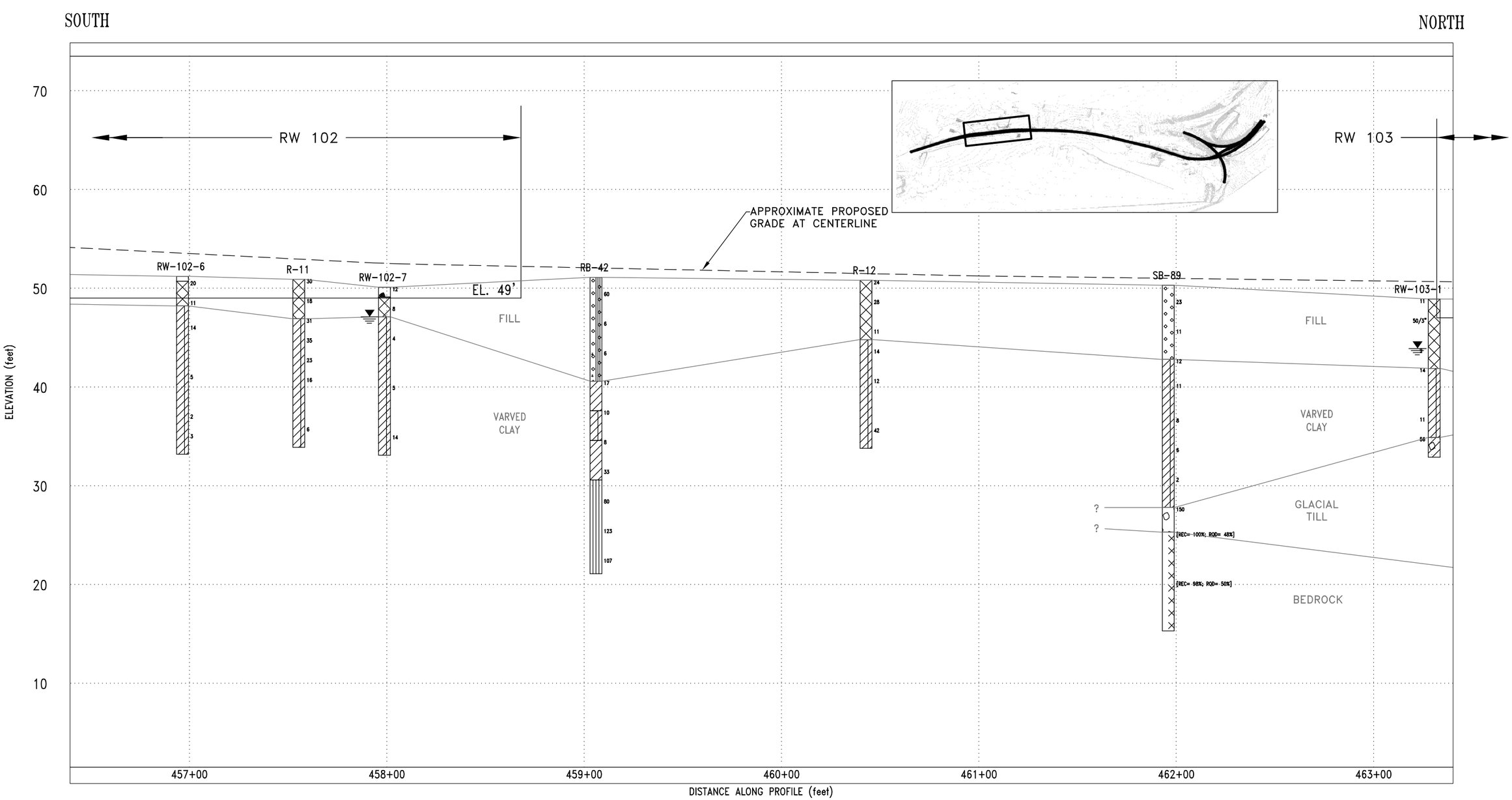

GEODESIGN INCORPORATED
Geotechnical and Environmental Engineering Consultants
984 Southford Road
Middlebury, Connecticut 06762
Telephone: 203-758-8836 Fax: 203-758-8842

0 50
Horizontal Scale (feet)
Vertical Exaggeration: 5x

Notes:
1. Data concerning the various strata have been interpreted at boring locations only. The stratigraphy between borings may vary from that shown.
2. Refer to plan view for subsurface profile location. For strata details and symbol legend, see Subsurface Profile Legend and boring logs appended to this report.
3. Numbers displayed beside boring(s) represent SPT "N" values corresponding to their respective sampling interval. Where coring was performed, numbers represent Recovery and RQD values.
4. Profiles include all 2008 Roadway and Retaining Wall borings, and select Bridge and 2003 Pilot borings.

Date: 2-23-2009 | Drawn By: MJV/DSF | Reviewed By: MGB

SUBSURFACE PROFILE A-A'

New Britain / Hartford Busway
NB Busway 450+00 to 490+55

File No.: 0331-014.0 | Figure No.: 6B

M:\CL\0331\14\Roadway & Retaining Walls\CADD\SUBSURFACE PROFILE A-A' (Roadway Figure 6A-F, Retaining Wall Figures 101-2 to 108-2 and 113-2 to 114-2)(West to East Sta. 443+00 -491+00) 1in.= 50ft. 5x Vert Ex.

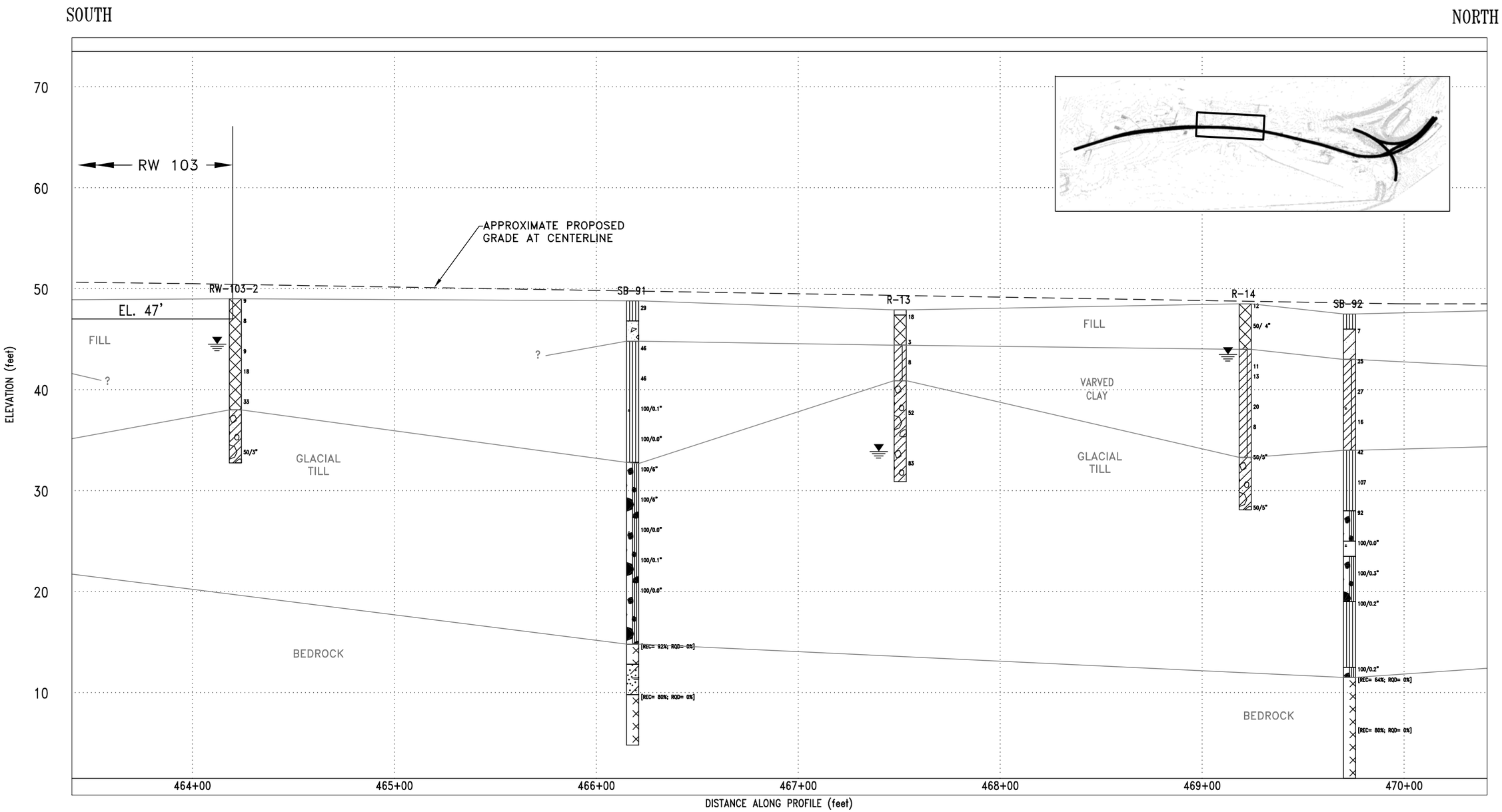

M:\CL\0331\14\Roadway & Retaining Walls\CADD\SUBSURFACE PROFILE A-A' (Roadway Figure 6A-F, Retaining Wall Figures 101-2 to 108-2 and 113-2 to 114-2)(West to East Sta. 443+00 -491+00) 1in.= 50ft. 5x Vert Ex.

GEODESIGN INCORPORATED
Geotechnical and Environmental Engineering Consultants
984 Southford Road
Middlebury, Connecticut 06762
Telephone: 203-758-8836 Fax: 203-758-8842

0 50
Horizontal Scale (feet)
Vertical Exaggeration: 5x

Notes:
1. Data concerning the various strata have been interpreted at boring locations only. The stratigraphy between borings may vary from that shown.
2. Refer to plan view for subsurface profile location. For strata details and symbol legend, see Subsurface Profile Legend and boring logs appended to this report.
3. Numbers displayed beside boring(s) represent SPT "N" values corresponding to their respective sampling interval. Where coring was performed, numbers represent Recovery and RQD values.

Date: 2-23-2009 | Drawn By: MJV/DSF | Reviewed By: MGB

SUBSURFACE PROFILE A-A'

New Britain / Hartford Busway
NB Busway 450+00 to 490+55

File No.: 0331-014.0 | Figure No.: 6C

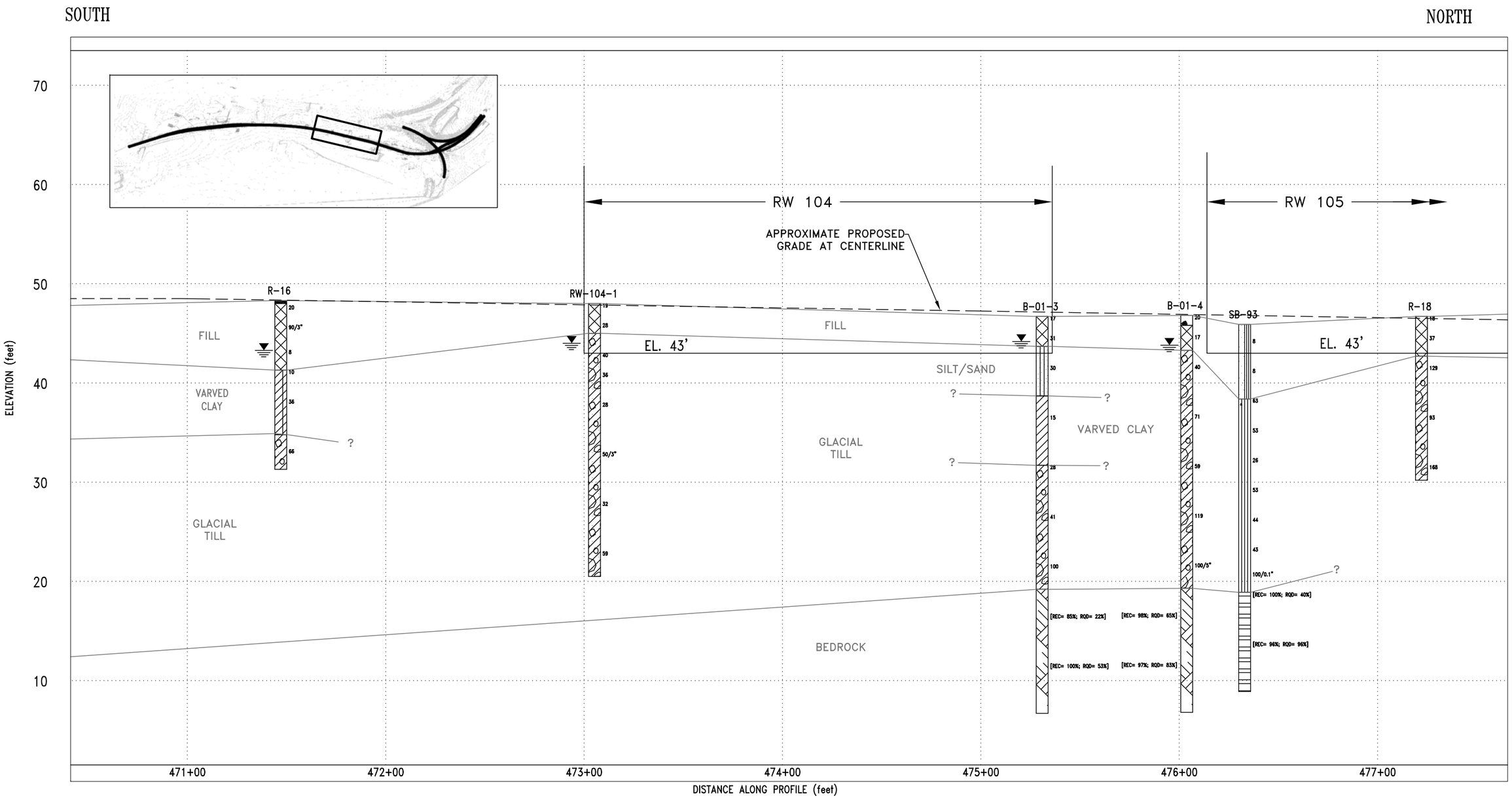

M:\CL\0331\14\Roadway & Retaining Walls\CADD\SUBSURFACE PROFILE A-A' (Roadway Figure 6A-F, Retaining Wall Figures 101-2 to 108-2 and 113-2 to 114-2)(West to East Sta. 443+00 -491+00) 1in.= 50ft. 5x Vert Ex.

GEODESIGN INCORPORATED
Geotechnical and Environmental Engineering Consultants
984 Southford Road
Middlebury, Connecticut 06762
Telephone: 203-758-8836 Fax: 203-758-8842

0 50
Horizontal Scale (feet)
Vertical Exaggeration: 5x

Notes:
1. Data concerning the various strata have been interpreted at boring locations only. The stratigraphy between borings may vary from that shown.
2. Refer to plan view for subsurface profile location. For strata details and symbol legend, see Subsurface Profile Legend and boring logs appended to this report.
3. Numbers displayed beside boring(s) represent SPT "N" values corresponding to their respective sampling interval. Where coring was performed, numbers represent Recovery and RQD values.

Date: 2-23-2009 | Drawn By: MJV/DSF | Reviewed By: MGB

SUBSURFACE PROFILE A-A'

New Britain / Hartford Busway
NB Busway 450+00 to 490+55

File No.: 0331-014.0 | Figure No.: 6D

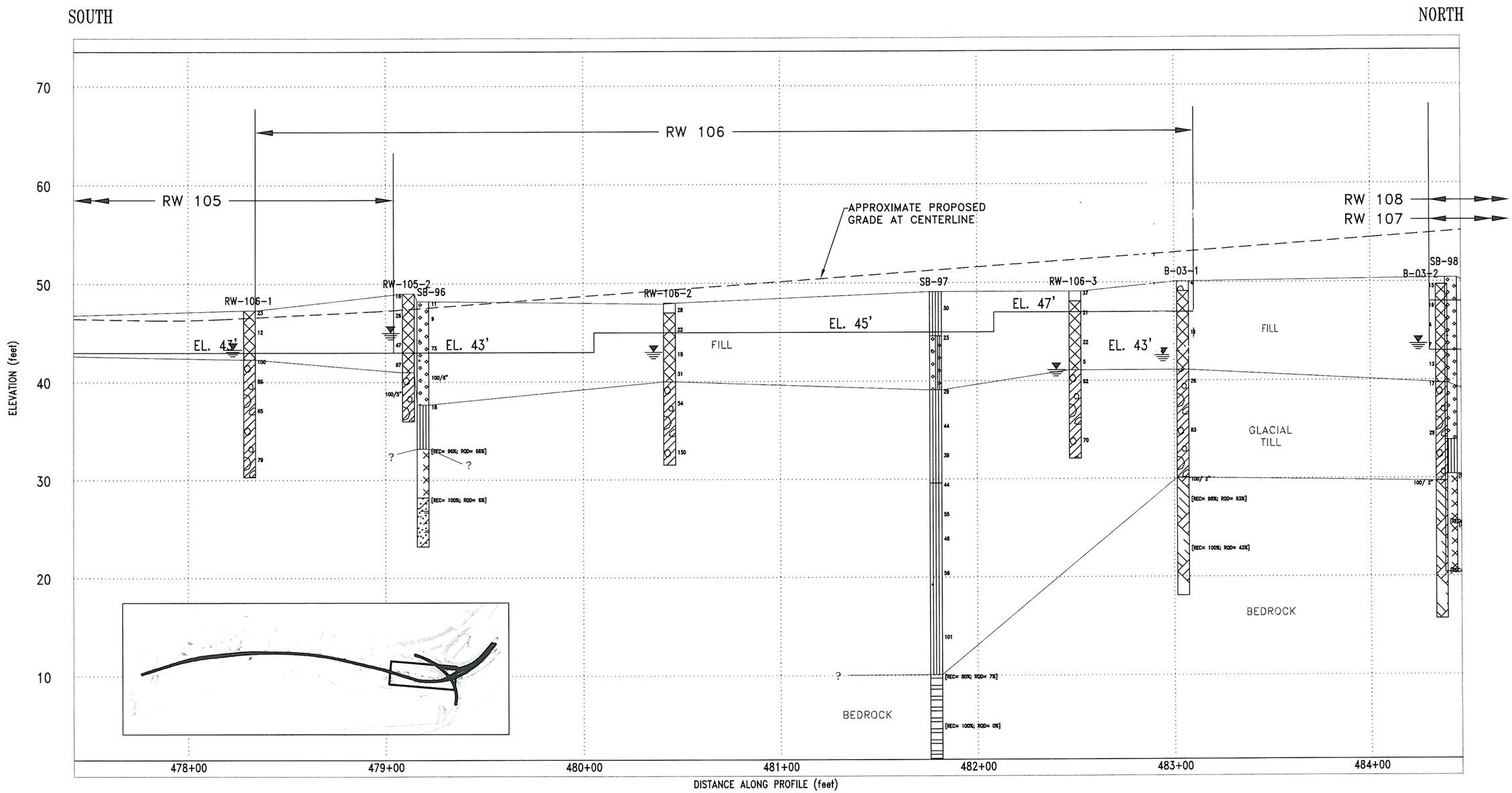

GEODESIGN INCORPORATED
Geotechnical and Environmental Engineering Consultants
984 Southford Road
Middlebury, Connecticut 06762
Telephone: 203-758-8836 Fax: 203-758-8842

0 50
Horizontal Scale (feet)
Vertical Exaggeration: 5x

Notes:
1. Data concerning the various strata have been interpreted at boring locations only. The stratigraphy between borings may vary from that shown.
2. Refer to plan view for subsurface profile location. For strata details and symbol legend, see Subsurface Profile Legend and boring logs appended to this report.
3. Numbers displayed beside boring(s) represent SPT "N" values corresponding to their respective sampling interval. Where coring was performed, numbers represent Recovery and RQD values.

Date: 2-23-2009 | Drawn By: MJV/DSF | Reviewed By: MGB

SUBSURFACE PROFILE A-A'

New Britain / Hartford Busway
NB Busway 450+00 to 490+55

File No.: 0331-014.0 | Figure No.: 6E

M:\CL\0331\14\Roadway & Retaining Walls\CADD\SUBSURFACE PROFILE A-A' (Roadway Figure 6A-F, Retaining Wall Figures 101-2 to 108-2 and 113-2 to 114-2)(West to East Sta. 443+00 -491+00) 1in.= 50ft. 5x Vert Ex.

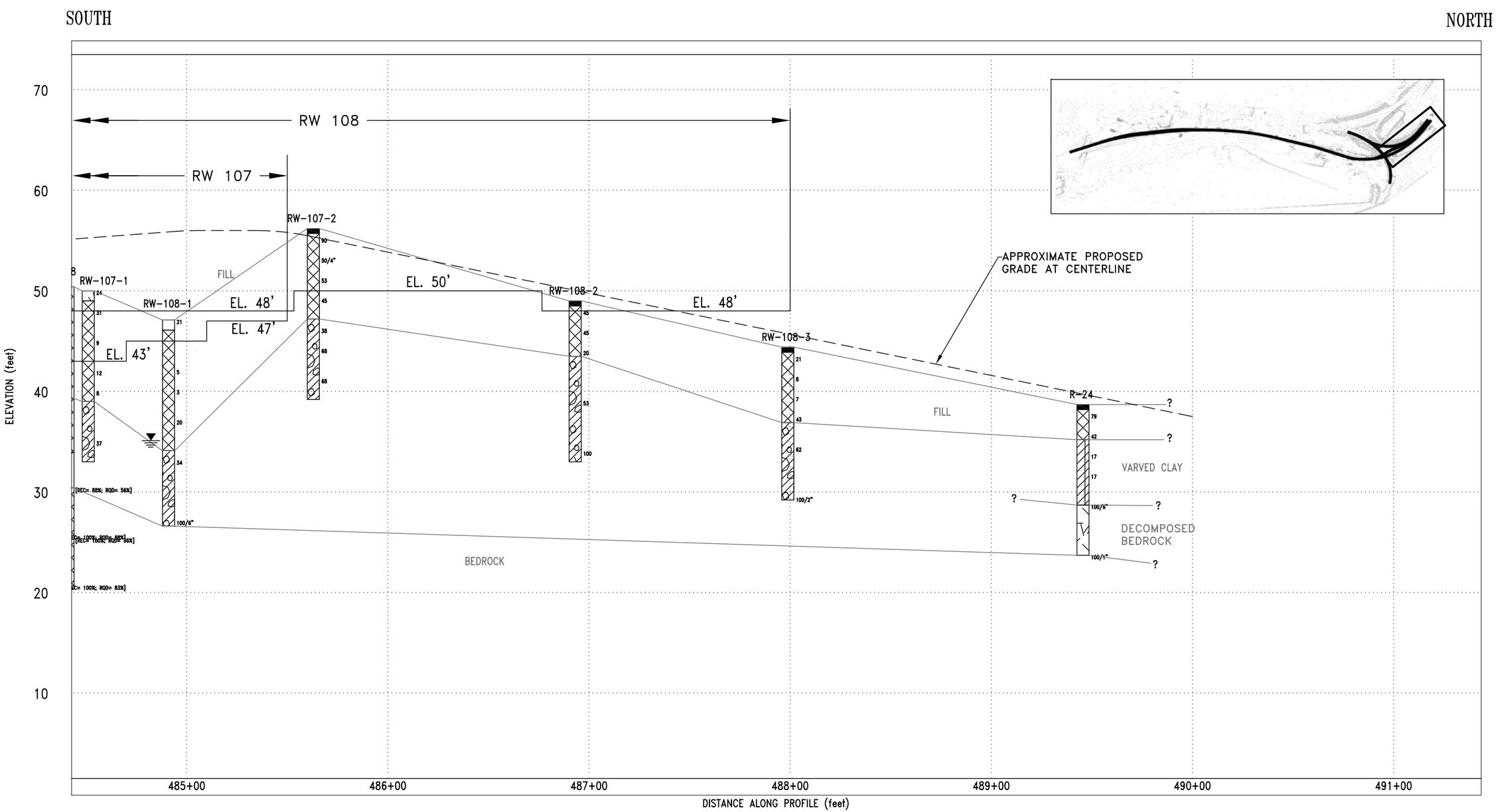

GEODESIGN INCORPORATED
Geotechnical and Environmental Engineering Consultants
984 Southford Road
Middlebury, Connecticut 06762
Telephone: 203-758-8836 Fax: 203-758-8842

0 50
Horizontal Scale (feet)
Vertical Exaggeration: 5x

Notes:
1. Data concerning the various strata have been interpreted at boring locations only. The stratigraphy between borings may vary from that shown.
2. Refer to plan view for subsurface profile location. For strata details and symbol legend, see Subsurface Profile Legend and boring logs appended to this report.
3. Numbers displayed beside boring(s) represent SPT "N" values corresponding to their respective sampling interval. Where coring was performed, numbers represent Recovery and RQD values.

Date: 2-23-2009	Drawn By: MJV/DSF	Reviewed By: MGB

SUBSURFACE PROFILE A-A'

New Britain / Hartford Busway
NB Busway 450+00 to 490+55

File No.: 0331-014.0 Figure No.: 6F

M:\C\0331\14\Roadway & Retaining Walls\CADD\SUBSURFACE PROFILE A-A' (Roadway Figure 6A-F, Retaining Wall Figures 101-2 to 108-2 and 113-2 to 114-2)(West to East Sta. 443+00 -491+00) 1in.= 50ft. 5x Vert Ex.

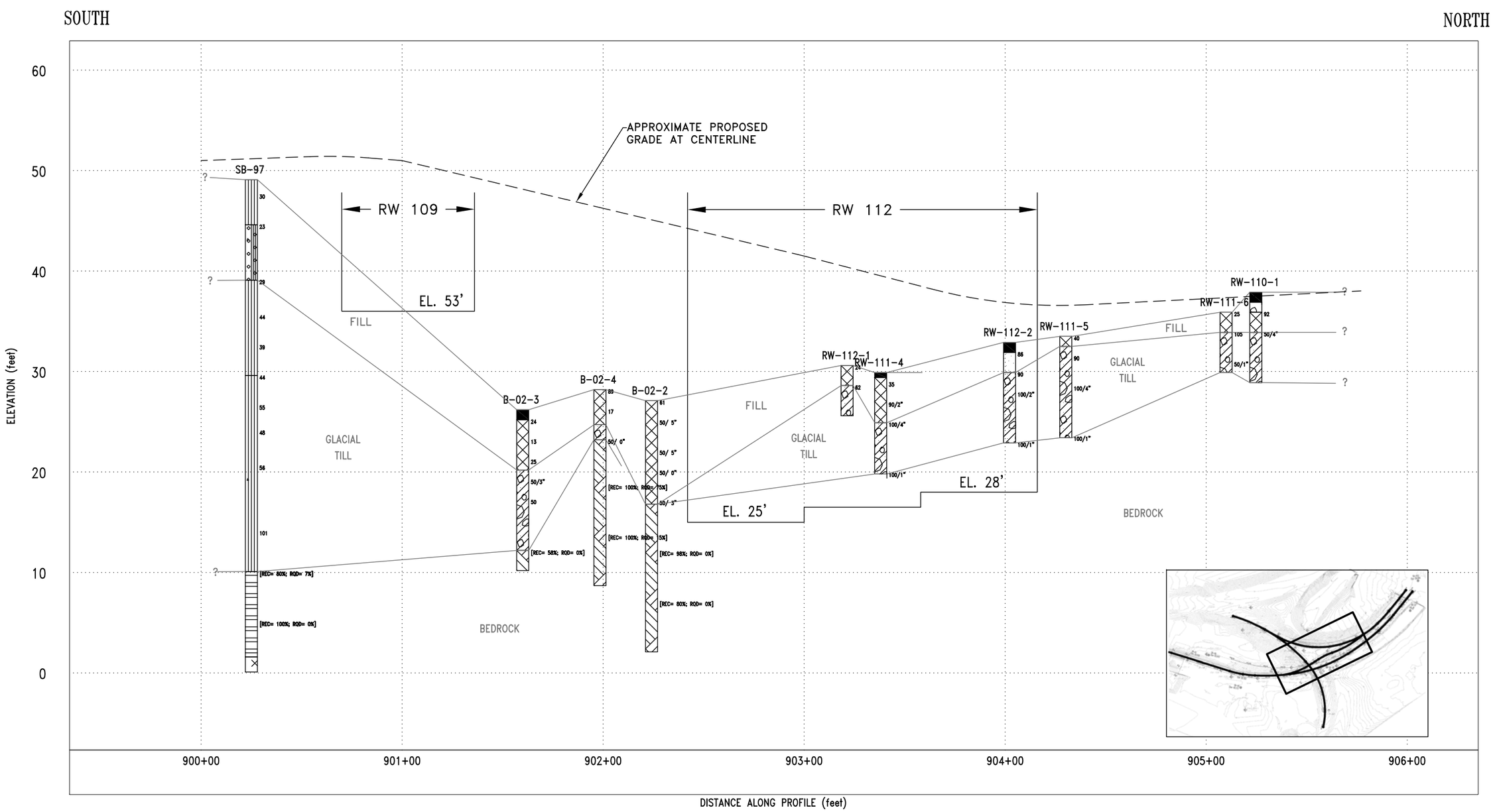

M:\CL\0331\Roadway & Retaining Walls\CADD\SUBSURFACE PROFILE B-B' (Roadway Figure 7, Retaining Wall Figures 109-2 & 112-2)(East to West Sta. 900+00 - 906+50) 1in.= 50ft. 5x Vert Ex

GEODESIGN INCORPORATED
Geotechnical and Environmental Engineering Consultants
984 Southford Road
Middlebury, Connecticut 06762
Telephone: 203-758-8836 Fax: 203-758-8842

0 50
Horizontal Scale (feet)
Vertical Exaggeration: 5x

Notes:
1. Data concerning the various strata have been interpreted at boring locations only. The stratigraphy between borings may vary from that shown.
2. Refer to plan view for subsurface profile location. For strata details and symbol legend, see Subsurface Profile Legend and boring logs appended to this report.
3. Numbers displayed beside boring(s) represent SPT "N" values corresponding to their respective sampling interval. Where coring was performed, numbers represent Recovery and RQD values.

Date: 2-23-2009 | Drawn By: MJV/DSF | Reviewed By: MGB

SUBSURFACE PROFILE B-B'

New Britain / Hartford Busway
SB Busway 900+00 to 906+00

File No.: 0331-014.0 | Figure No.: 7

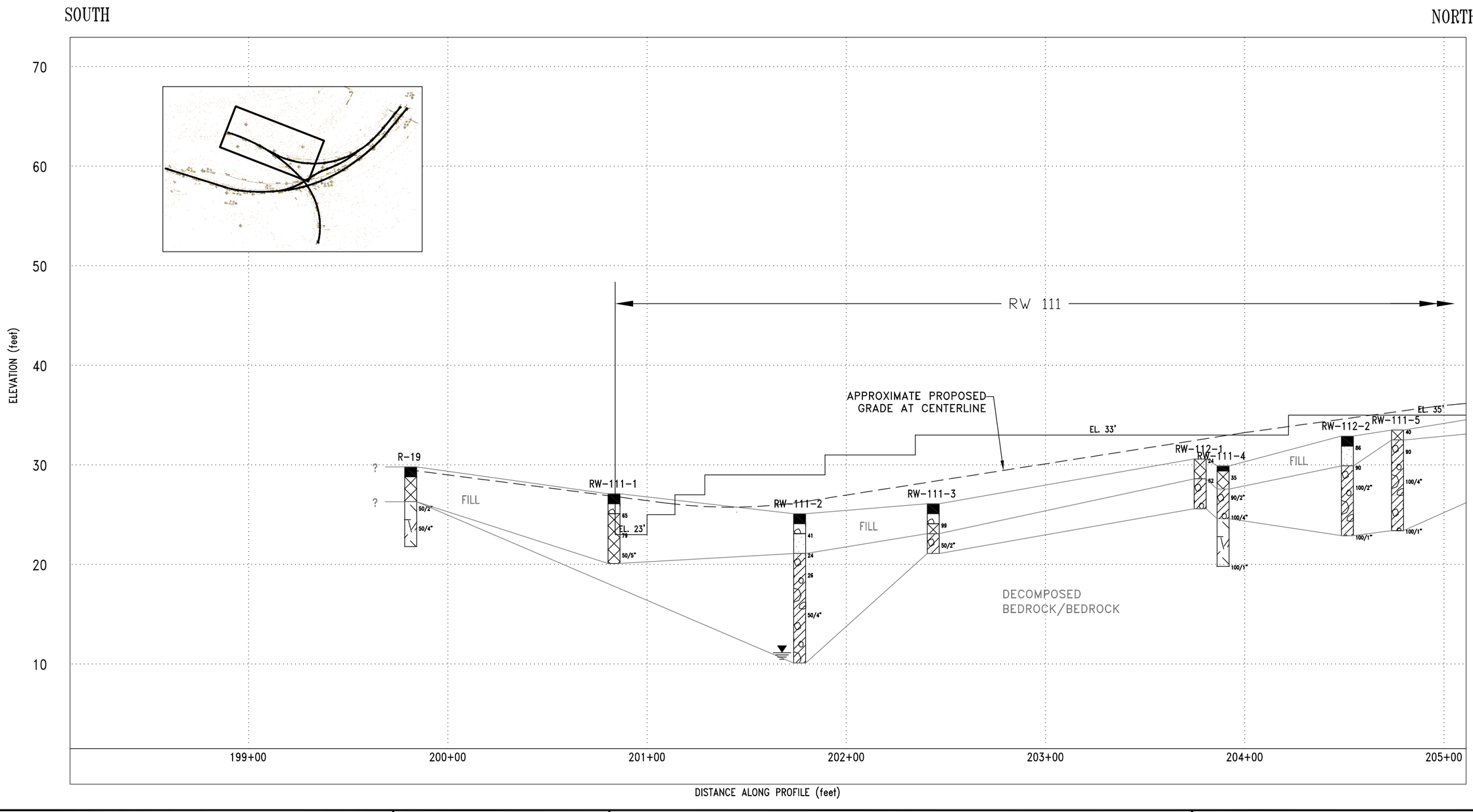

GEODESIGN INCORPORATED
Geotechnical and Environmental Engineering Consultants
984 Southford Road
Middlebury, Connecticut 06762
Telephone: 203-758-8836 Fax: 203-758-8842

0 50
Horizontal Scale (feet)
Vertical Exaggeration: 5x

Notes:
1. Data concerning the various strata have been interpreted at boring locations only. The stratigraphy between borings may vary from that shown.
2. Refer to plan view for subsurface profile location. For strata details and symbol legend, see Subsurface Profile Legend and boring logs appended to this report.
3. Numbers displayed beside boring(s) represent SPT "N" values corresponding to their respective sampling interval. Where coring was performed, numbers represent Recovery and RQD values.

Date: 2-23-2009 | Drawn By: MJV/DSF | Reviewed By: MGB

SUBSURFACE PROFILE D-D'

New Britain / Hartford Busway
I-84 WB Onramp from Asylum Street

File No.: 0331-014.0 | Figure No.: 8A

M:\CL\0331\CADD\Roadway and Retaining Walls\SUBSURFACE PROFILE D-D' (Roadway Figure 8A-B, Retaining Wall Figures 111-2 & 110-2) I-84 WB Onramp - Asylum Street (west to east sta. 200+00 -209+50) 1in.= 50ft. 5x vert ex

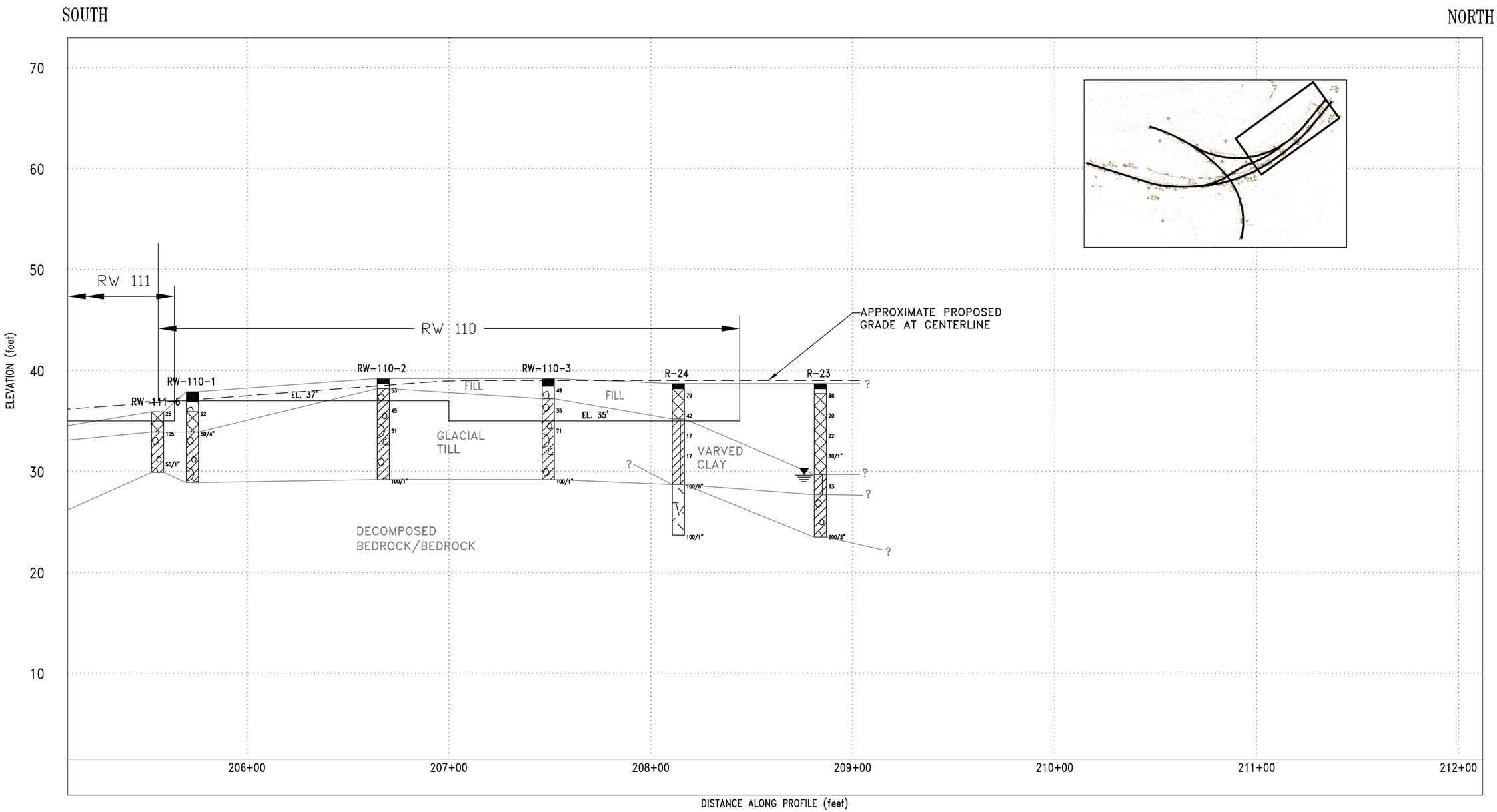

GEODESIGN INCORPORATED
Geotechnical and Environmental Engineering Consultants
984 Southford Road
Middlebury, Connecticut 06762
Telephone: 203-758-8836 Fax: 203-758-8842

0 50
Horizontal Scale (feet)
Vertical Exaggeration: 5x

Notes:
1. Data concerning the various strata have been interpreted at boring locations only. The stratigraphy between borings may vary from that shown.
2. Refer to plan view for subsurface profile location. For strata details and symbol legend, see Subsurface Profile Legend and boring logs appended to this report.
3. Numbers displayed beside boring(s) represent SPT "N" values corresponding to their respective sampling interval. Where coring was performed, numbers represent Recovery and RQD values.

Date: 2-23-2009 | Drawn By: MJV/DSF | Reviewed By: MGB

SUBSURFACE PROFILE D-D'

New Britain / Hartford Busway
I-84 WB Onramp from Asylum Street

File No.: 0331-014.0 | Figure No.: 8B

M:\CL\0331\CADD\Roadway and Retaining Walls\SUBSURFACE PROFILE D-D' (Roadway Figure 8A-B, Retaining Wall Figures 111-2 & 110-2) I-84 WB Onramp - Asylum Street (west to east sta. 200+00 -209+50) 1in.= 50ft. 5x vert ex

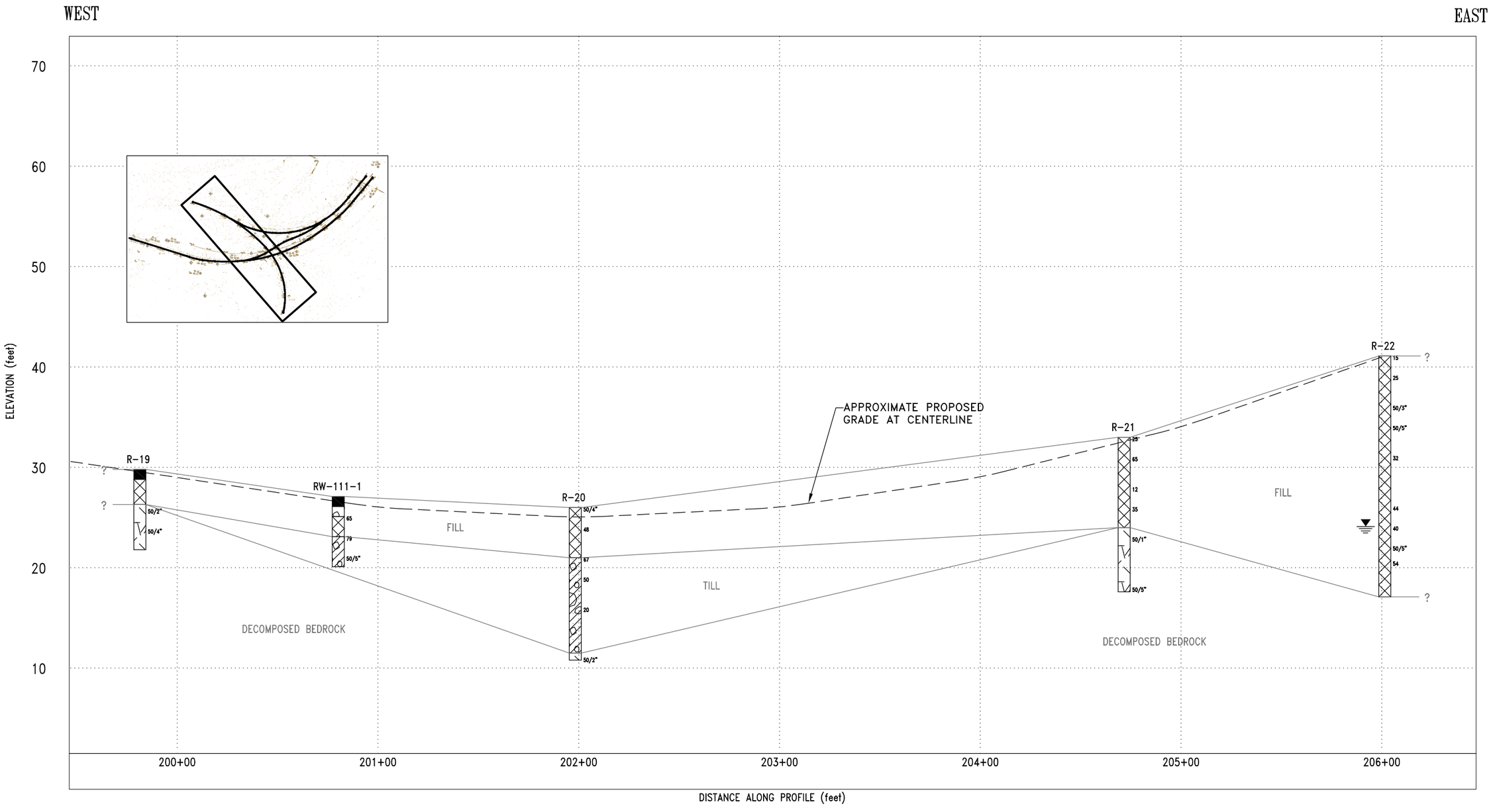

GEODESIGN INCORPORATED
Geotechnical and Environmental Engineering Consultants
984 Southford Road
Middlebury, Connecticut 06762
Telephone: 203-758-8836 Fax: 203-758-8842

0 50
Horizontal Scale (feet)
Vertical Exaggeration: 5x

Notes:
1. Data concerning the various strata have been interpreted at boring locations only. The stratigraphy between borings may vary from that shown.
2. Refer to plan view for subsurface profile location. For strata details and symbol legend, see Subsurface Profile Legend and boring logs appended to this report.
3. Numbers displayed beside boring(s) represent SPT "N" values corresponding to their respective sampling interval. Where coring was performed, numbers represent Recovery and RQD values.

Date: 2-23-2009 | Drawn By: MJV/DSF/JPM | Reviewed By: MGB

SUBSURFACE PROFILE C-C'

New Britain / Hartford Busway
ALIGNMENT 4
I-84 WB Onramp from Capitol Avenue

File No.: 0331-014.0 | Figure No.: 9

M:\CL\0331\14\Roadway and Retaining Walls\CADD\SUBSURFACE PROFILE C-C' (Roadway Fig 9) - I-84 WB Onramp - Capitol Avenue (North to South Sta.198+00 -208+98) 1in.= 50ft. 5x Vert Ex.dwg.dwg

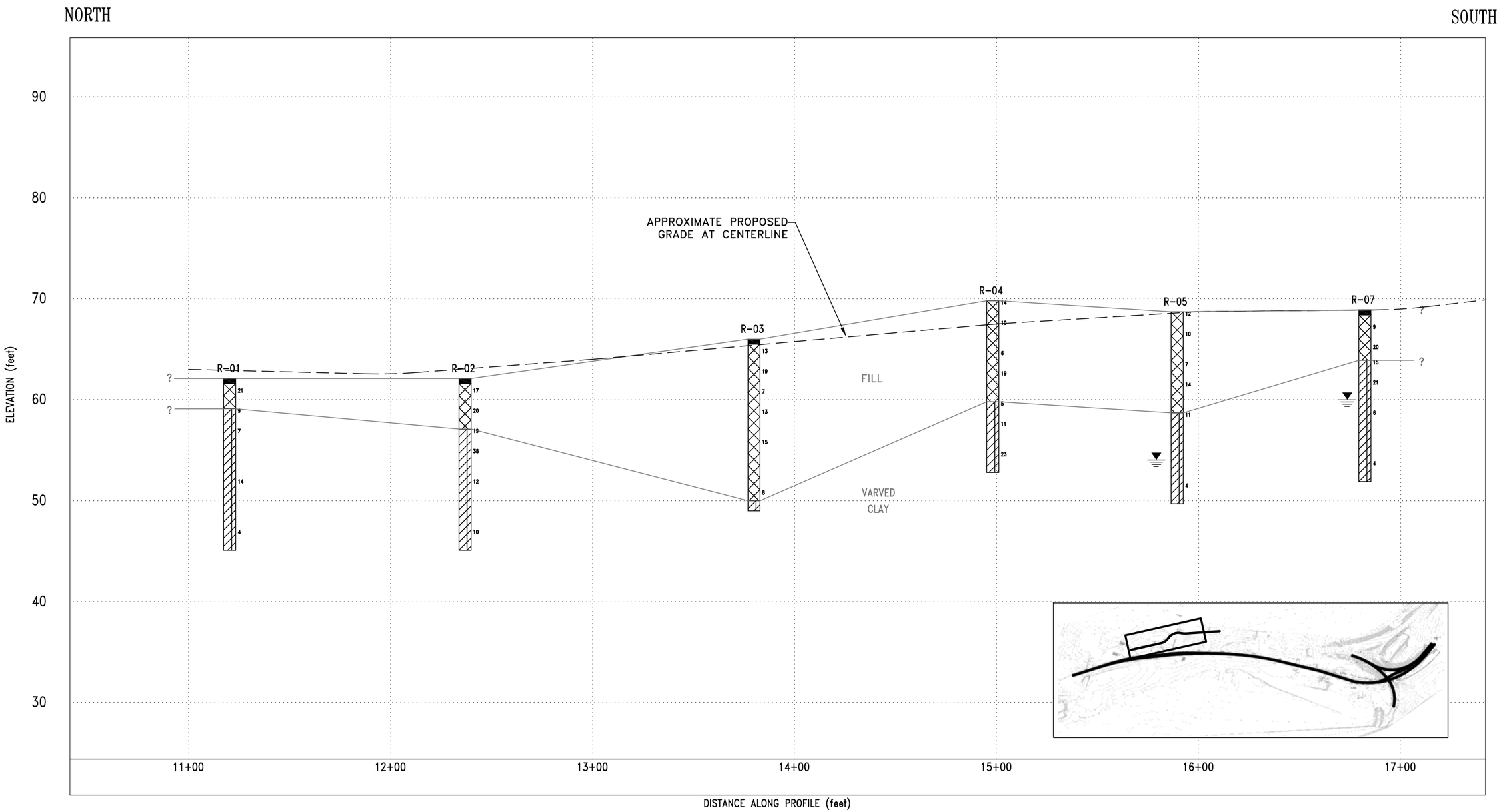

M:\CL\0331\14\Roadway and Retaining Walls\CADD\SUBSURFACE PROFILE E-E' (Roadway Figure 10) - Hawthorn Street (East to West Sta.10+00 -20+00) 1in.= 50ft. 5x Vert Ex.dwg.dwg

GEODESIGN INCORPORATED
Geotechnical and Environmental Engineering Consultants
984 Southford Road
Middlebury, Connecticut 06762
Telephone: 203-758-8836 Fax: 203-758-8842

0 50
Horizontal Scale (feet)
Vertical Exaggeration: 5x

Notes:
1. Data concerning the various strata have been interpreted at boring locations only. The stratigraphy between borings may vary from that shown.
2. Refer to plan view for subsurface profile location. For strata details and symbol legend, see Subsurface Profile Legend and boring logs appended to this report.
3. Numbers displayed beside boring(s) represent SPT "N" values corresponding to their respective sampling interval. Where coring was performed, numbers represent Recovery and RQD values.

Date: 2-23-2009 | Drawn By: MJV/DSF | Reviewed By: MGB

SUBSURFACE PROFILE E-E'

New Britain / Hartford Busway
ALIGNMENT 5
Hawthorn Street

File No.: 0331-014.0 | Figure No.: 10

\MISCELLANEOUS\LEGENDS\SUBSURFACE PROFILE LEGEND.dwg

STRATIGRAPHY SYMBOLS

SYMBOLS	TYPICAL DESCRIPTIONS OF PREDOMINENT MATERIAL TYPE
	ASPHALT
	CONCRETE
	FILL
	TOPSOIL
	SUBSOIL
	ORGANIC SILT OR CLAY WITH SHELLS
	PEAT
	CLAY
	SILT
	CLAY/SILT MIXTURE
	CLAY/SILT/SAND MIXTURE
	SILT/SAND MIXTURE
	SAND/SILT MIXTURE
	POORLY-GRADED SAND
	WELL-GRADED SAND
	SAND/GRAVEL MIXTURE
	SAND/GRAVEL/SILT MIXTURE
	BOULDERS AND/OR COBBLES
	GLACIAL TILL
	DECOMPOSED BEDROCK
	SANDSTONE
	BEDROCK

EXPLANATION OF BORING

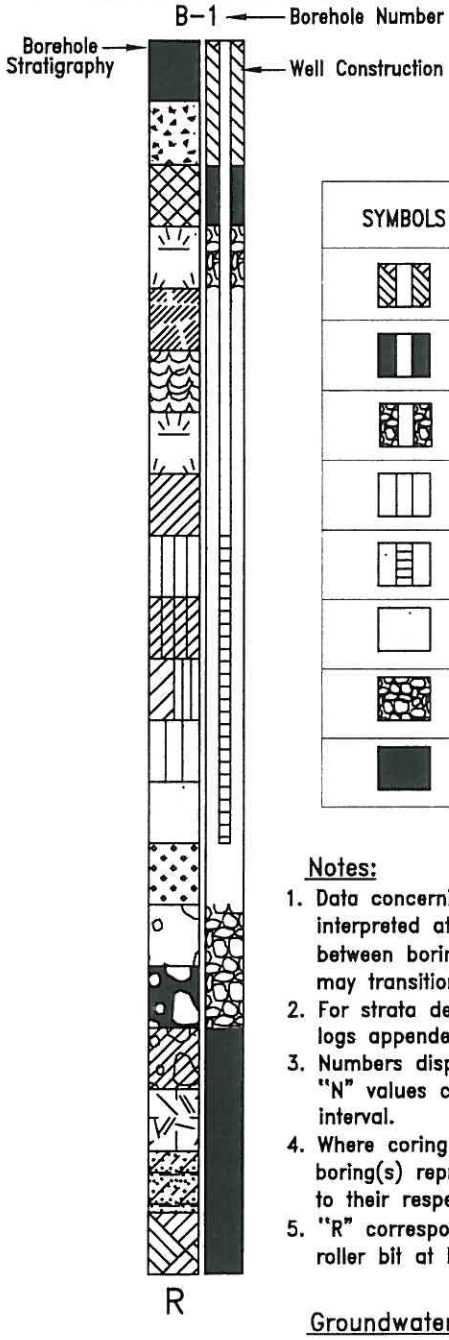

WELL SYMBOLS

SYMBOLS	TYPICAL DESCRIPTIONS
	CEMENT SEAL: 1 PIPE
	BENTONITE SEAL: 1 PIPE
	SLOUGH BACKFILL: 1 PIPE
	FILTER PACK: 1 PIPE
	SLOTTED PIPE WITH FILTER PACK: 1 PIPE
	FILTER PACK AT BOTTOM OF HOLE
	SLOUGH AT BOTTOM OF HOLE
	BENTONITE AT BOTTOM OF HOLE

Notes:

1. Data concerning the various strata have been interpreted at boring locations only. The stratigraphy between borings may vary from that shown, and may transition more gradually within borings.
2. For strata details, see Report and boring logs appended to this report.
3. Numbers displayed beside boring(s) represent SPT "N" values corresponding to their respective sampling interval.
4. Where coring was performed, numbers displayed beside boring(s) represent Recovery and RQD values corresponding to their respective sampling interval.
5. "R" corresponds to refusal of sampler, casing and/or roller bit at bottom of boring.

Groundwater Observations (where applicable)

▽ Water Level Reading at time of drilling.

▼ Water Level Reading after completing drilling.

GEODESIGN INCORPORATED

GEOTECHNICAL ENGINEERS • ENVIRONMENTAL CONSULTANTS
984 SOUTHFORD ROAD • MIDDLEBURY CONNECTICUT 06762
TELEPHONE: (203)758-8836 FACSIMILE: (203)758-8842

Figure 11

SUBSURFACE PROFILE LEGEND

FHWA REGION	STATE	TOWN	FED. AID PROJ. NO.	PROJ. NO.	YEAR	ROUTE NO.	SHEET NO.	TOTAL SHEETS
1	CONN.	HARTFORD	I-84-4(122) 61	63-409	1986	I-84	96	169

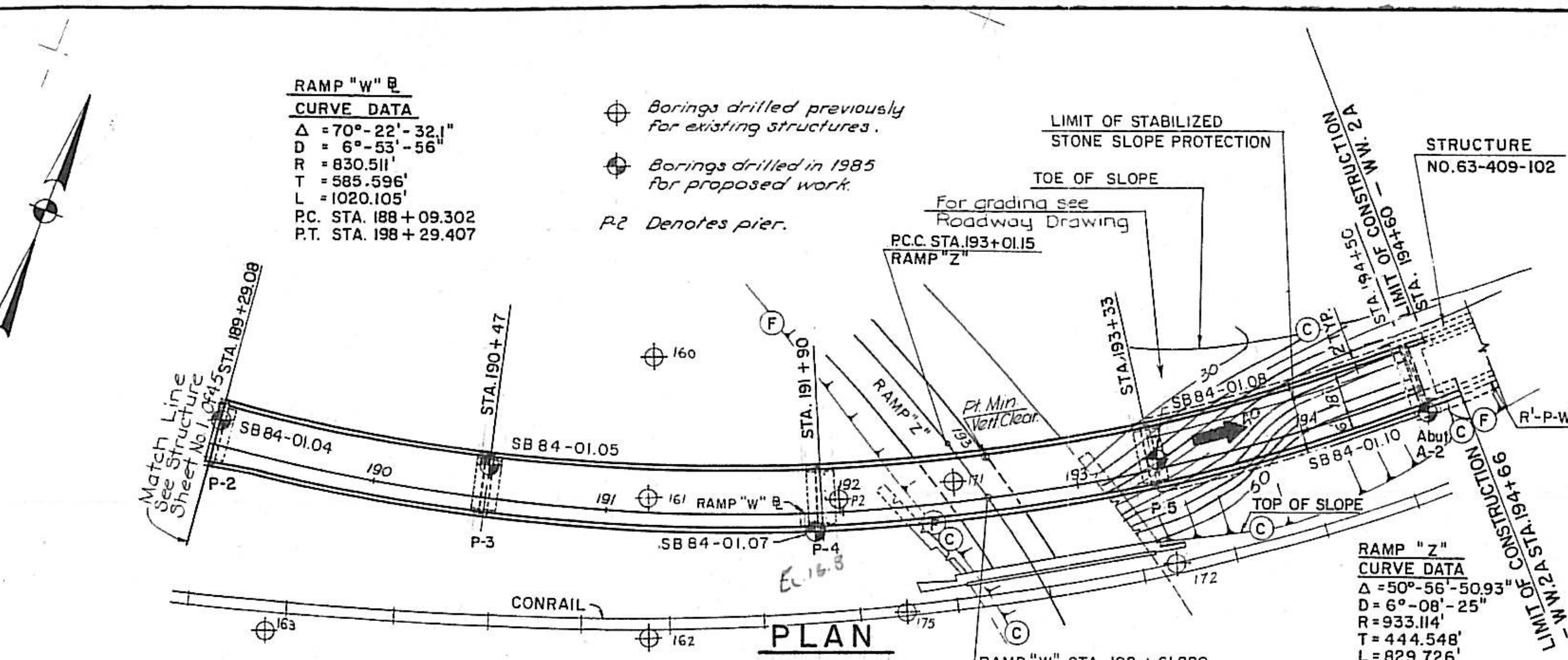

PLAN

SCALE: 1" = 40'

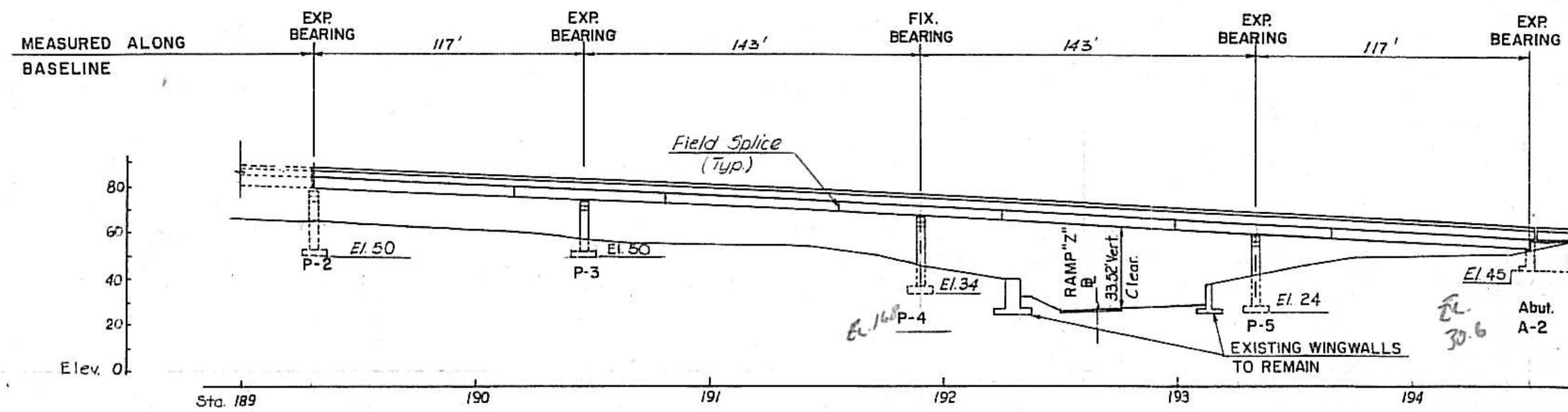

ELEVATION OF RAMP "W"

SCALE: 1" = 40'

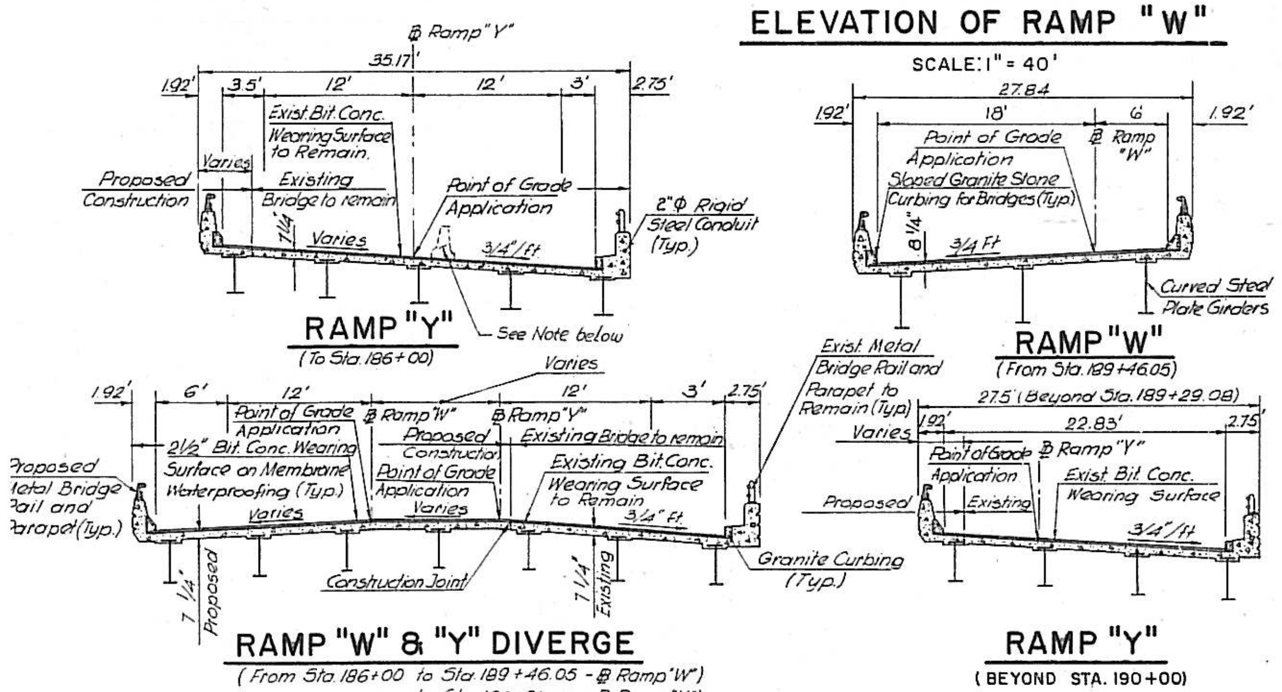

TYPICAL SECTIONS

SCALE: 1/8" = 1'-0"

NOTE: See Highway drawings for location of temporary barrier curb and tie down details.

NOTE: See Framing Plans for Proposed Beam and Girder layout.

CONCRETE DISTRIBUTION

ITEM	UNIT	QUANTITY
SUPERSTRUCTURE	C.Y.	1180
SUBSTRUCTURE	C.Y.	278
FOOTINGS	C.Y.	182
TOTAL	C.Y.	1640

INSPECTION OF FIELD WELDS

METHOD	UNIT	QUANTITY
RADIOGRAPHIC OR ULTRASONIC	IN.	0
MAGNETIC PARTICLE	L.F.	52

TABLE OF QUANTITIES

ITEM	UNIT	QUANTITY
Cut Bituminous Concrete Pavement	L.F.	1,180
Structure Excavation - Earth (Complete)	C.Y.	1170
Structure Excavation - Rock (Complete)	C.Y.	90
Gravel Fill	C.Y.	85
Pervious Structure Backfill	C.Y.	110
Removal Of Existing Bituminous Wearing Surface	S.Y.	131
Bituminous Concrete Class 1	Ton	412
Bituminous Concrete Class 12	Ton	275
Sawing And Sealing Joints	L.F.	23
Removal Of Existing Structural Steel	L.S.	1
Removal Of Existing Bridge Deck, Bridge 63-409-1	S.Y.	2,480
Reset Existing Girder, Bridge 63-409-1	L.S.	1
Removal Of Existing Masonry	C.Y.	260
Shear Connectors	L.S.	1
1-1/2" Polyvinyl Chloride Plastic Pipe	L.F.	60
Prefabricated Expansion Joint Device (Movement Capacity 3-1/2")	L.F.	50
Modification of Finger Joint	L.S.	1
3" Elastomeric Compression Seal	L.F.	610
Pot, Spherical Or Disc Bearing (450 Kips)	Ea.	9
Pot, Spherical Or Disc Bearing (150 Kips)	Ea.	6
Class "A" Concrete	C.Y.	460
Class "F" Concrete	C.Y.	1,180
Construct Concrete Headers	C.Y.	2
1/2" Preformed Expansion Joint Filler For Bridges	S.F.	150
1" Preformed Expansion Joint Filler For Bridges	S.F.	160
Saw Cutting Bridge Joints	L.F.	270
Epoxy Bonding Compound	Gal.	3
Deformed Steel Bars	Lb's.	275,550
Deformed Steel Bars - Epoxy Coated	Lb's.	141,250
Drilling And Grouting Reinforcing Bars	L.F.	225
Drilling And Grouting Anchor Bolts	L.F.	60
Structural Steel Bridge No. 63-409-1	L.S.	1
Splicing Steel Girders 63-409-1	Ea.	18
Field Painting Of Structure, 63-409-1, Girder 9A3	L.S.	1
Special Painting Treatment	S.F.	2,500
Concrete Cylinder Curing Box	Ea.	1
6" C.C.M. Outlet for Structure Underdrain	L.F.	35
Furnishing Steel Piles	Lb's	31,752
Driving Steel Piles	L.F.	756
Splicing Steel Piles	Ea.	3
Point Reinforcement For Steel Piles	Ea.	9
Test Pile (Steel HP 10x42-40' Long)	Ea.	1
Membrane Waterproofing (Sheet)	S.Y.	5,292
Dampproofing	S.Y.	87
Bagged Stone	C.Y.	1
Stabilized Stone Slope Protection	S.Y.	430
Granite Stone Curbing For Bridges (6"x 9'2")	L.F.	16
Sloped Granite Stone Curbing for Bridges (8"x16")	L.F.	2,290
Protective Compound For Bridges	S.Y.	330
Metal Bridge Rail (Traffic) (Extruded Post Aluminum)	L.F.	1,300
Remove And Reset Metal Bridge Rail	L.F.	985
Removal Of Existing Bridge Rail	L.F.	1,140
Modifying Finger Joint - Pier A-10	L.S.	L.S.
2" Rigid Metal Conduit In Structure	L.F.	560
Cast Iron Junction Box 18"x12"x8"	Ea.	6

GENERAL NOTES

SPECIFICATIONS: Connecticut Department of Transportation Form 813 (1985), and Special Provisions.

DESIGN SPECIFICATIONS: Standard Specifications for Highway Bridges (AASHTO-1983), with the Interim Specifications up to and including (1984), as supplemented by the Connecticut Department of Transportation Bridge Manual (1985).

ALLOWABLE DESIGN STRESSES:
Class "A", Class "F",
Based on f'c = 3,000 psi, fc = 1,200 psi.
Reinforcement (Existing) — Grade 40 —
Based on fs (tensile) = 20,000 psi.
Reinforcement - ASTM A615 Grade 60 —
Based on fs (tensile) = 24,000 psi.
Structural Steel (New & Existing)
ASTM A36, Based on ft = 20,000 psi. (< 8")
Structural Steel (Low Alloy) (Existing) —
ASTM A242, Based on ft = 27,000 psi. (< 3/4")
& ft = 25,000 psi. (> 3/4" < 1 1/2")
& ft = 23,000 psi. (> 1 1/2" < 4")
Structural Steel (Low Alloy)
ASTM A588, Based on ft = 27,000 psi. (< 4")

LIVE LOAD: HS 20-44

FUTURE PAVING ALLOWANCE: None

COMPOSITE CONSTRUCTION: No temporary intermediate supports shall be used during the placing and setting of the concrete deck slab. Temporary supports may be used for structural steel erection only. Live and superimposed dead loads will be permitted when directed by the Engineer, but not less than 10 days after the final portion of deck slab has been placed.

CLASS "A" CONCRETE: Class "A" Concrete shall be used for the entire substructure and parapets of the U-Type Wings.

CLASS "F" CONCRETE: Class "F" Concrete shall be used for bridge decks, including parapets.

PROTECTIVE COMPOUND: Protective Compound shall be placed on all pier caps and abutment seats.

JOINT SEAL: See Special Provisions.

PARAFFIN: The cost of furnishing and applying paraffin is included in the item for Class "F" Concrete.

EXPOSED EDGES: Exposed edges shall be beveled 1"x1" unless dimensioned otherwise.

STRUCTURAL STEEL: See Structure Sheet Nos. 23, 24, 28, 29, 30 and 31 of 45 for ASTM designations.

REINFORCEMENT: All reinforcement shall conform to ASTM A-615 Grade 60 and shall be epoxy coated where noted on the plans.

PAINT: Existing and new structural steel shall be cleaned and painted in accordance with the Standard Specifications and the Special Provisions. Paint shall conform to the requirements of Article 6.03.03-30b "Bridge Color No. 206".

FELT: The cost of furnishing and placing 15# felt is included in the item for Class "A" Concrete.

FOUNDATION PRESSURES AND PILE LOADS: The various Group Loadings noted on the substructure plan sheets refer to the Group Loads as given in the AASHTO Standard Specifications for Highway Bridges.

CONSTRUCTION JOINTS: Construction Joints, other than those shown on the plans, will not be permitted without prior approval of the Engineer.

GENERAL NOTES (CONT.)

DECIMAL DIMENSIONS: When dimensions are given to less than three decimal places, the omitted digits shall be assumed to be zeros.

VERIFICATION OF EXISTING CONDITIONS: All information pretaining to the existing structure is derived from field surveys taken during a period from July through September, 1985 and from Design Drawings dated 1963. Prior to the start of construction and the fabrication of materials, the Contractor shall take complete field measurements to verify all dimensions, elevations and locations required for the rehabilitation and modification of the bridge.

GENERAL NOTES (CONT.)

REMAIN-IN-PLACE FORMS: The use of remain-in-place forms on this structure is not allowed.

BITUMINOUS CONCRETE OVERLAY: This shall consist of two lifts. The first shall be Bituminous Concrete - Class (12) (1" Thick) and the second shall be Bituminous Concrete - Class (1) (1 1/2" Thick).

THIS SHEET NOT CORR[illegible]

THE INFORMATION, INCLUDING ESTIMATED QUANTITIES OF WORK SHOWN ON THESE SHEETS IS BASED ON LIMITED INVESTIGATIONS BY THE STATE AND IS IN NO WAY WARRANTED TO INDICATE THE TRUE CONDITIONS OR ACTUAL QUANTITIES OR DISTRIBUTION OF QUANTITIES OF WORK WHICH WILL BE REQUIRED.

NO.	DATE	DESCRIPTION

REVISIONS

STATE OF CONNECTICUT
DEPARTMENT OF TRANSPORTATION
HARTFORD

INTERSTATE ROUTE 84
RAMPS "W" & "Y"
OVER
BROAD ST, CONRAIL, AMTRAK & RAMP "Z"

GENERAL PLAN NO. 2

ENGINEER BERGER, LEHMAN ASSOCIATES, P.C. BY STORCH ENGINEERS
DESIGNER G.J.G. DRAFTER F.M.W. CHECKER J.J.B.
APPROVED [signature] DATE 11-12-85
STRUCTURE NO. 63-409-1

FIGURE 12

FORM NO. ENG. 15A ID 4-80

FHWA REGION	STATE	TOWN	FED. AID PROJ. NO.	PROJ. NO.	YEAR	ROUTE NO.	SHEET NO.	TOTAL SHEETS
1	CONN.	HARTFORD	I-84-4(122)161	63-409	1986	I-84	102	169

EL. 70 · EL. 60 · EL. 50 · EL. 40 · EL. 30 · EL. 20 · EL. 10

HOLE NO. SB84-01.5

STORCH ENGINEERS BORING REPORT

DATE STARTED: 4-2-85 · DATE FINISHED: 4-3-85 · SHEET 1 OF 2 · BORING NO. SB84-01.5

CLIENT: Connecticut Department of Transportation (ConnDOT)

PROJECT NAME AND LOCATION: Modernization of Interchange I-84/91, Phase A

PROJECT NO. (S): #63-375 (ConnDOT); #4644 (Storch Engineers)

BORING CONTRACTOR: New England Boring Contractors, Inc. · BORING FOREMAN: D. Tucillo, Jr.

SOILS ENGINEER: Storch Engineers · INSPECTOR: N. Rechia

EQUIPMENT	CASING	SPLIT SPOON (SS)	UNDISTURBED (US)	CORE BARREL	AUGER	OBS. WELL PIPE	OBS. WELL CAP	DRILLING RIG AND METHOD
TYPE	HW	SS		NX				Truck Rig Water Wash
SIZE	3"	1-3/8"		2-1/8				
HAMMER WT/FALL	300lb./24"	140lb/30"		Diamond BIT				

SURFACE ELEVATION: 64.1 · NORTH COORDINATE: 339,852 · EAST COORDINATE: 617,735

SURFACE CONDITIONS: 16' W of Manhole No. 79, 10' N of top of 2H:1V Slope

GROUNDWATER AT 7.5 FT. AFTER 17 HRS.

DESCRIPTION AND REMARKS: Trace = 0-10% Little = 10-20% Some = 20-35% And = 35-50%

DEPTH BELOW GND.	CASING BLOWS PER FT.	TYPE & NO.	DEPTH FROM-TO	PEN IN.	REC IN.	BLOWS/6" OR CORE TIME	STRATA DEPTH/ELEV.	DESCRIPTION AND REMARKS
0-5	Pushed, Pushed, 22, 19, 18	SS1	0 to 2	24	12	2-4, 7-9		Brown fine to medium SAND, some silt, trace gravel, trace brick, ash, roots (FILL)
5-10	13, 15, 16, 19, 18	SS2	5 to 7	24	10	5-6, 10-6		Redbrown clayey SILT, little fine to coarse sand, trace gravel (FILL)
10-15	21, 170, 387, 40, 39	SS3	10 to 12	24	18	10-25, 81-15	13.0 / 51.1	Redbrown fine GRAVEL, some fine to medium SAND, some (-) SILT & CLAY (Laboratory Description) (FILL) Sieve-200=21% Water Content=10.5%
15-20		SS4	15 to 16.5	18	7	17-36, 100		Redbrown SILT & CLAY, some fine to medium SAND, little fine gravel. (Laboratory Description) (TILL) Sieve-200=58% Water Content=9.4%
20-25		SS5	20 to 22	24	18	17-29, 39-48		Same
25-30		SS6	25 to 27	25	16	25-47, 50-67		Same
30-35		SS7	30 to 32	24	15	19-31, 42-57		Same
35-40		SS8	35 to 37	24	18	21-40, 61-76		Same
40-45		SS9	40 to 42	24	17	15-24, 33-45		Same
45								Shale and Till 45' to 46'. Top of rock at 46'
45-49		C1	45 to 49	48	31	3 min/ft, 4, 7, 9	46.0 / 18.1	
							49.0 / 15.1	Grey SHALE RQD=36% REC=65% E.O.B. at 49.0'

TYPE A · BORING HW · CASING 0- TO 15 FT THEN No CASING 15 TO 49 FT.

QUANTITIES: 46 L.F. SOIL · 4 L.F. ROCK · 9 SS SAMPLES · 0 US TUBES · 0 L.F. OW PIPE

HOLE NO. SB84-01.7

STORCH ENGINEERS BORING REPORT

DATE STARTED: 4-2-85 · DATE FINISHED: 4-3-85 · SHEET 1 OF 1 · BORING NO. SB84-01.7

CLIENT: Connecticut Department of Transportation (ConnDOT)

PROJECT NAME AND LOCATION: Modernization of Interchange I-84/91, Phase A

PROJECT NO. (S): #63-375 (ConnDOT); #4644 (Storch Engineers)

BORING CONTRACTOR: New England Boring Contractors, Inc. · BORING FOREMAN: H. St. John

SOILS ENGINEER: Storch Engineers · INSPECTOR: S. Curro

EQUIPMENT	CASING	SPLIT SPOON (SS)	UNDISTURBED (US)	CORE BARREL	AUGER	OBS. WELL PIPE	OBS. WELL CAP	DRILLING RIG AND METHOD
TYPE	HW	SS		NX		PVC	Steel	Truck Rig Water Wash
SIZE	4"	1-3/8"		2-1/8"		2"	4"x5'	
HAMMER WT/FALL	300lb./24"	140lb/30"		Diamond BIT				

SURFACE ELEVATION: 48.8 · NORTH COORDINATE: 339,867 · EAST COORDINATE: 617,854

SURFACE CONDITIONS: 28.5' NW of R.R. Track No. 3, 30' SW of Control Box

GROUNDWATER AT 26.5 FT. AFTER 24 HRS. See OW Records

DESCRIPTION AND REMARKS: Trace = 0-10% Little = 10-20% Some = 20-35% And = 35-50%

DEPTH BELOW GND.	CASING BLOWS PER FT.	TYPE & NO.	DEPTH FROM-TO	PEN IN.	REC IN.	BLOWS/6" OR CORE TIME	STRATA DEPTH/ELEV.	DESCRIPTION AND REMARKS
0-5	15, 26, 19, 67, 18	SS1	0 to 2	24	6	5-8, 11-22		Brown fine to coarse SAND, little silt, ash, roots (FILL)
5-10	46, 62, 62, 61, 54	SS2	5 to 7	24	3	31-42, 45-69	10.0 / 38.8	Redbrown fine to coarse SAND, little gravel, little silty clay (FILL)
10-15	56, 46, 36, 34, 30	SS3	10 to 12	24	20	26-39, 51-76		Redbrown fine SAND, some silty clay, trace gravel (TILL)
15-20	71, 44, 53, 82, 108	C1	15 to 20	60	58	2 min/ft, 2 min/ft, 1 min/ft, 1 min/ft, 1 min/ft		Cored through till REC=97%
25			25 to 27	24	0	53-64, 68-92		No Recovery
32-37		C2	32 to 37	60	60	3½ min/ft, 3, 4, 3½, 4½	32.0 / 16.8	Grey SHALE and Redbrown SILTSTONE RQD= 37% REC=100%
							37.0 / 11.8	E.O.B. Installed observation well. Bottom of 5' screen at 30'

TYPE A · BORING HW · CASING 0 TO 20 FT THEN No CASING 20 TO 37 FT.

QUANTITIES: 32 L.F. SOIL · 5 L.F. ROCK · 3 SS SAMPLES · 0 US TUBES · 31 L.F. OW PIPE

HOLE NO. SB84-01.8

STORCH ENGINEERS BORING REPORT

DATE STARTED: 4-2-85 · DATE FINISHED: 4-3-85 · SHEET 1 OF 1 · BORING NO. SB84-01.8

CLIENT: Connecticut Department of Transportation (ConnDOT)

PROJECT NAME AND LOCATION: Modernization of Interchange I-84/91, Phase A

PROJECT NO. (S): #63-375 (ConnDOT); #4644 (Storch Engineers)

BORING CONTRACTOR: New England Boring Contractors, Inc. · BORING FOREMAN: J. Wilson

SOILS ENGINEER: Storch Engineers · INSPECTOR: S. Tassone

EQUIPMENT	CASING	SPLIT SPOON (SS)	UNDISTURBED (US)	CORE BARREL	AUGER	OBS. WELL PIPE	OBS. WELL CAP	DRILLING RIG AND METHOD
TYPE	HW	SS		NX		PVC	Steel	Truck Rig Water Wash
SIZE	4"	1-3/8"		2-1/8"		2"	4"x5'	
HAMMER WT/FALL	300lb./24"	140lb/30"		Diamond BIT				

SURFACE ELEVATION: 48.2 · NORTH COORDINATE: 339,950 · EAST COORDINATE: 618,000

SURFACE CONDITIONS: Top of 1.5H:1V Brushy slope, 2' NE of RR Bridge, 23' NW of Track No. 3

GROUNDWATER AT FT. AFTER HRS. See OW Records

DESCRIPTION AND REMARKS: Trace = 0-10% Little = 10-20% Some = 20-35% And = 35-50%

DEPTH BELOW GND.	CASING BLOWS PER FT.	TYPE & NO.	DEPTH FROM-TO	PEN IN.	REC IN.	BLOWS/6" OR CORE TIME	STRATA DEPTH/ELEV.	DESCRIPTION AND REMARKS
0-5	15, 11, 16, 25, 24	SS1	0 to 2	32	10	4-4, 3-5		Brown fine to medium SAND (TOPSOIL)
5-10	24, 25, 32, 42, 68	SS2	5 to 7	24	18	20-21, 10-8		Brown fine to medium SAND, trace silt (Laboratory Description) (FILL) Sieve-200=8% Water Content=14.4%
10-15	42, 96, 175, 226	SS3	10 to 12	24	16	12-18, 20-37	11.0 / 37.2	Redbrown CLAY & SILT and fine to medium SAND, little fine gravel (Laboratory Description) TILL Sieve-200=52% Water Content=11.8%
15-18		SS4	15 to 16.8	21	12	17-29, 37-100/3		Same. Drag bit to refusal @ 18'
18-23		C1	18 to 23	60	55	8 min/ft, 11 min/ft, 13 min/ft, 13 min/ft, 15 min/ft	18.0 / 30.2	Redbrown SHALE REC=92% RQD=58%
							23.0 / 25.2	E.O.B. at 23' Installed observation well. Bottom of 5' screen at 13.5'

TYPE A · BORING HW · CASING 0 TO 14 FT THEN No CASING 14 TO 23 FT.

QUANTITIES: 18 L.F. SOIL · 5 L.F. ROCK · 4 SS SAMPLES · 0 US TUBES · 15 L.F. OW PIPE

HOLE NO. SB84-01.10

STORCH ENGINEERS BORING REPORT

DATE STARTED: 4-2-85 · DATE FINISHED: 4-3-85 · SHEET 1 OF 1 · BORING NO. SB84-01.10

CLIENT: Connecticut Department of Transportation (ConnDOT)

PROJECT NAME AND LOCATION: Modernization of Interchange I-84/91, Phase A

PROJECT NO. (S): #63-375 (ConnDOT); #4644 (Storch Engineers)

BORING CONTRACTOR: New England Boring Contractors, Inc. · BORING FOREMAN: J. Wilson

SOILS ENGINEER: Storch Engineers · INSPECTOR: S. Tassone

EQUIPMENT	CASING	SPLIT SPOON (SS)	UNDISTURBED (US)	CORE BARREL	AUGER	OBS. WELL PIPE	OBS. WELL CAP	DRILLING RIG AND METHOD
TYPE	HW	SS		NX				Bombadier Model 45C Water Wash
SIZE	4"	1-3/8"		2-1/8"				
HAMMER WT/FALL	300lb./24"	140lb/30"		Diamond BIT				

SURFACE ELEVATION: 50.6 · NORTH COORDINATE: 340,025 · EAST COORDINATE: 618,085

SURFACE CONDITIONS: 28' NW of RR track No. 3, bottom of 2H:1V slope, overhead trees and brushes

GROUNDWATER AT FT. AFTER HRS. FT. AFTER HRS.

DESCRIPTION AND REMARKS: Trace = 0-10% Little = 10-20% Some = 20-35% And = 35-50%

DEPTH BELOW GND.	CASING BLOWS PER FT.	TYPE & NO.	DEPTH FROM-TO	PEN IN.	REC IN.	BLOWS/6" OR CORE TIME	STRATA DEPTH/ELEV.	DESCRIPTION AND REMARKS
0-5	9, 11, 17, 17, 22	SS1	0 to 2	24	10	1-2, 3-3	5.0 / 45.6	Brown fine to medium SAND and SILT, trace wood, ash, roots (FILL)
5-10	41, 59, 84, 180	SS2	5 to 7	24	14	12-9, 11-16		Redbrown SILT, some fine to medium gravel, little fine to medium sand, trace roots (TILL)
10-15		SS3	10 to 12	24	16	27-24, 29-36		Redbrown SILT and fine to coarse SAND, little fine to coarse gravel, trace mica (TILL)
15-20		SS4	15 to 17	22	12	17-35, 49-100/4		Redbrown clayey SILT, some fine to coarse sand, some fine to coarse gravel, grey siltstone chips (TILL)
20			20	0	0	100/0	20.6 / 30.6	Top of rock
20-25		C1	20 to 25	60	52	8.5 min, 9.5 min, 13.5 min, 14.5 min, 10.0 min		Redbrown SHALE RQD=42% REC=87%
							25.0 / 25.6	E.O.B. at 25.0

TYPE A · BORING HW · CASING 0 TO 9 FT THEN No CASING 9 TO 25 FT.

QUANTITIES: 20 L.F. SOIL · 5 L.F. ROCK · 4 SS SAMPLES · 0 US TUBES · 0 L.F. OW PIPE

THIS SHEET NOT CORRECTED

THE INFORMATION, INCLUDING ESTIMATED QUANTITIES OF WORK SHOWN ON THESE SHEETS IS BASED ON LIMITED INVESTIGATIONS BY THE STATE AND IS IN NO WAY WARRANTED TO INDICATE THE TRUE CONDITIONS OR ACTUAL QUANTITIES OR DISTRIBUTION OF QUANTITIES OF WORK WHICH WILL BE REQUIRED.

NO.	DATE	DESCRIPTION
REVISIONS		

STATE OF CONNECTICUT
DEPARTMENT OF TRANSPORTATION

HARTFORD

INTERSTATE ROUTE 84
RAMPS "W" & "Y"
OVER
BROAD ST, CONRAIL, AMTRAK & RAMP "Z"

BORING SHEET

ENGINEER BERGER, LEHMAN ASSOCIATES, P.C. · BY STORCH ENGINEERS

DESIGNER G.J.G. · DRAFTER J.J. · CHECKER J.J.B.

APPROVED [signature] · DATE 4-12-85

STRUCTURE NO. 63-409-1

FIGURE 13

63-409

295-01

FHWA REGION	STATE	TOWN	FED. AID PROJ. NO.	PROJ. NO.	YEAR	ROUTE NO.	SHEET NO.	TOTAL SHEETS
	CONN.	HARTFORD	I-84-4(122)61	63-409	1986	I-84	114	169

FORM NO. ENG 15A (10-86)

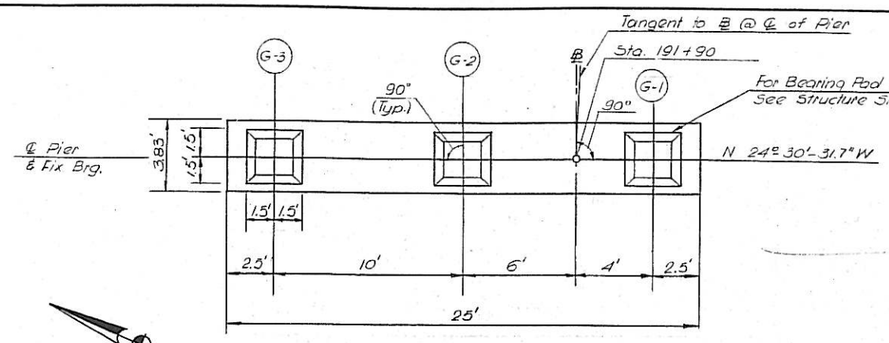

PLAN

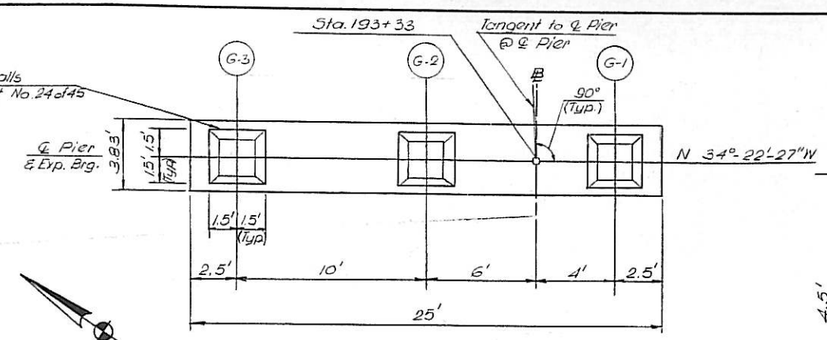

PLAN

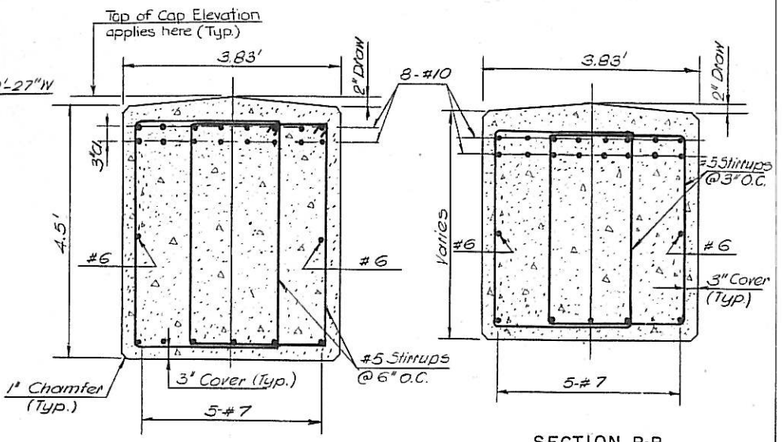

SECTION A-A
SCALE: 3/4" = 1'-0"

SECTION B-B
SCALE: 3/4" = 1'-0"

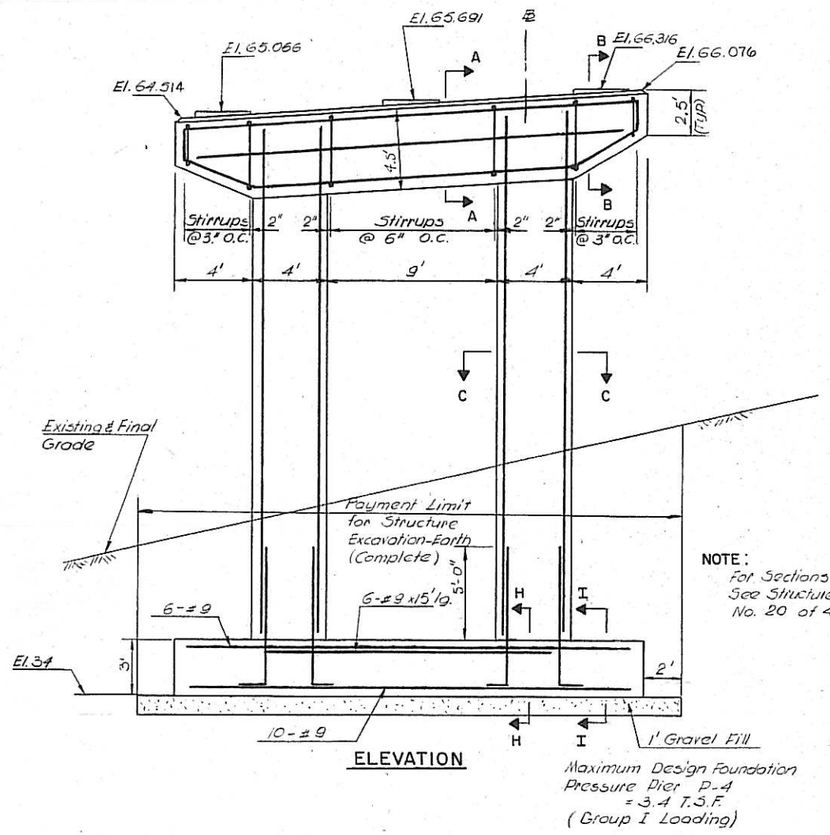

ELEVATION

NOTE:
For Sections I-I, & H-H See Structure Sheet No. 20 of 45

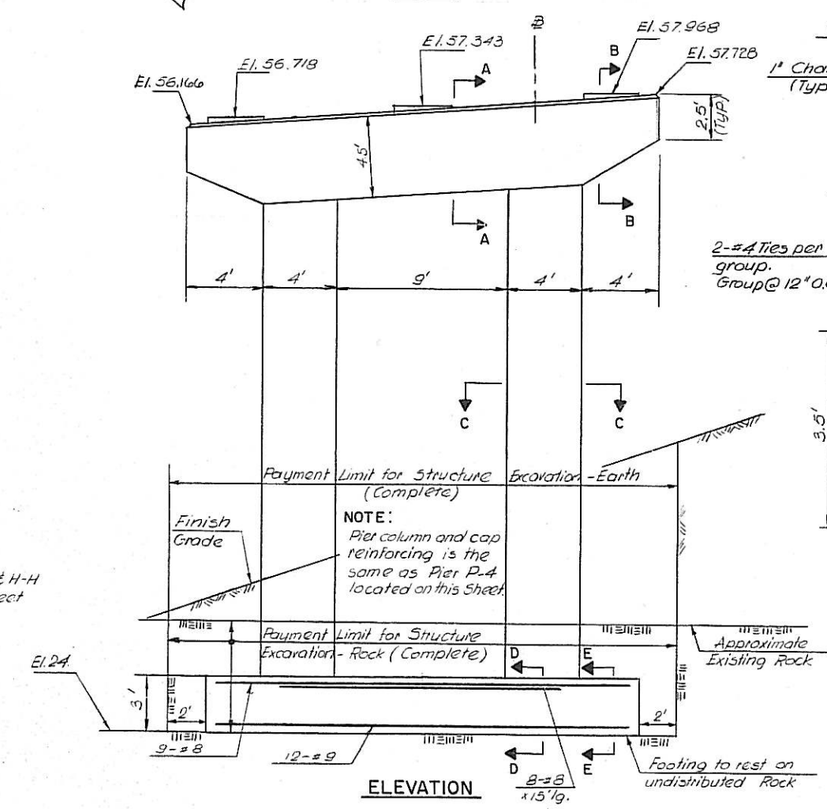

ELEVATION

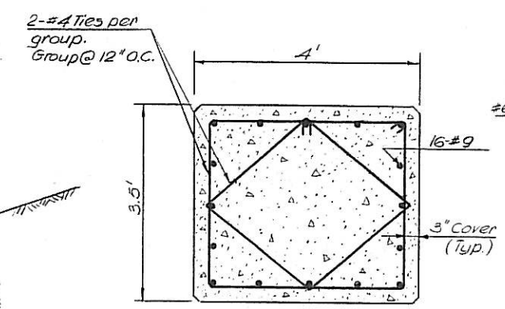

SECTION C-C
SCALE: 3/4" = 1'-0"

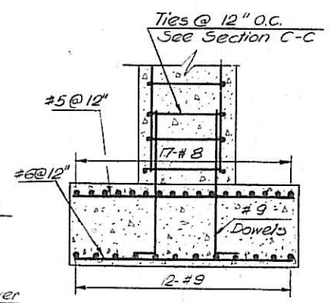

SECTION D-D
SCALE: 3/8" = 1'-0"

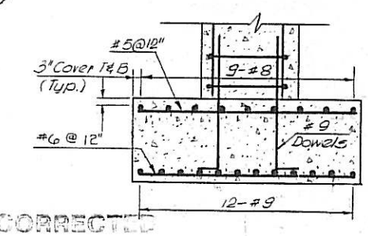

SECTION E-E
SCALE: 3/8" = 1'-0"

THIS SHEET NOT CORRECTED

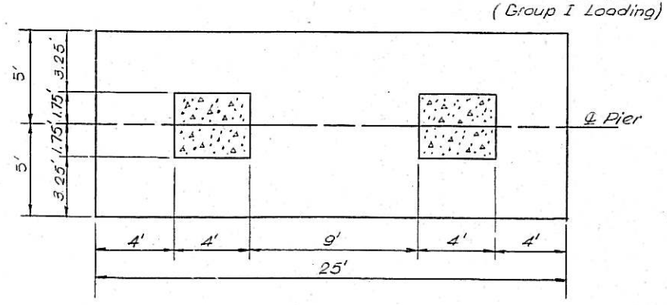

FOUNDATION PLAN
PIER P-4
SCALE: 1/4" = 1'-0"

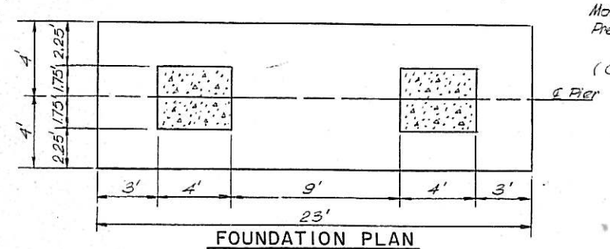

FOUNDATION PLAN
PIER P-5
SCALE: 1/4" = 1'-0"

Maximum Design Foundation Pressure Pier P-5 = 4.5 T.S.F. (Group I Loading)

THE INFORMATION, INCLUDING ESTIMATED QUANTITIES OF WORK SHOWN ON THESE SHEETS IS BASED ON LIMITED INVESTIGATIONS BY THE STATE AND IS IN NO WAY WARRANTED TO INDICATE THE TRUE CONDITIONS OR ACTUAL QUANTITIES OR DISTRIBUTION OF QUANTITIES OF WORK WHICH WILL BE REQUIRED.

NO.	DATE	DESCRIPTION

REVISIONS

STATE OF CONNECTICUT
DEPARTMENT OF TRANSPORTATION

HARTFORD

INTERSTATE ROUTE 84
RAMPS "W" & "Y"
OVER
BROAD ST., CONRAIL, AMTRAK & RAMP "Z"

PIER P-4 AND P-5

ENGINEER BERGER, LEHMAN ASSOCIATES, P.C.		BY STORCH ENGINEERS
DESIGNER P.M.G.	DRAFTER F.M.W.	CHECKER J.J.B. / G.J.G.
APPROVED [illegible]		DATE 11-12-85
STRUCTURE NO. 63-409-1		

63-409

FIGURE 14

FORM NO. ENG. 11A ED. 4-83

F.H.W.A. REGION NO.	STATE	TOWN	FED. AID PROJ. NO.	PROJ. NO.	YEAR	ROUTE NO.	SHEET NO.	TOTAL SHEETS
1	CONN.	HARTFORD	I-84-4(122)61	63-409	1986	I-84	2	169

INDEX PLAN

I-84 RAMPS TO ASYLUM STREET

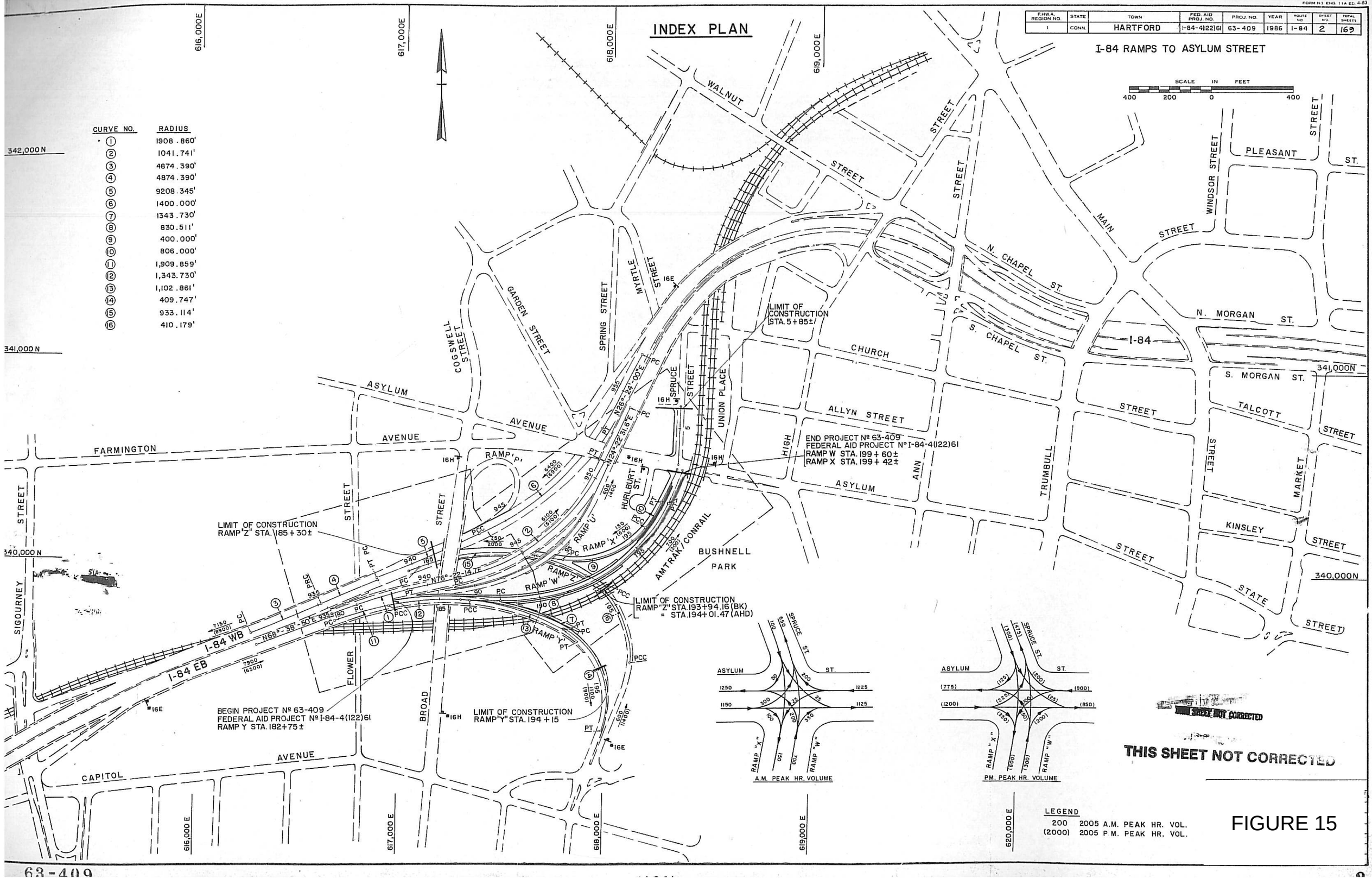

CURVE NO.	RADIUS
1	1908.860'
2	1041.741'
3	4874.390'
4	4874.390'
5	9208.345'
6	1400.000'
7	1343.730'
8	830.511'
9	400.000'
10	806.000'
11	1,909.859'
12	1,343.730'
13	1,102.861'
14	409.747'
15	933.114'
16	410.179'

LEGEND

200 2005 A.M. PEAK HR. VOL.
(2000) 2005 P.M. PEAK HR. VOL.

FIGURE 15

INSERT
GREEN SHEET
HERE

New Britain - Hartford Busway
CT DOT State Project 63-H137
GeoDesign Project Number: 0331-14
Roadway and Retaining Walls

Table 1 : Atterberg Limits - New (2009) and Existing (2003) Results

Boring	Sample	From	To	Nat. Water Content	LL	PL	PI	Soil Consistency
RW-101-1	S-5	10	12	38	61	26	35	Very Stiff
RW-102-1	S-3	5	7	51	54	27	27	Stiff
RW-102-1	S-5	15	17	64	57	24	33	Very Soft
RW-102-3	S-7	20	22	60	59	27	32	Soft
RW-102-5	S-5	15	17	47	60	26	34	Medium
RW-102-7	S-4	10	12	37	41	20	21	Medium
RW-103-2	S-3	5	7	36	43	22	21	Stiff
SB-88	S-18	70	71.5	26.3	28	19		Very Soft
SB-88	S-6	16.5	18	33.9	57	28		Very Stiff
SB-88	S-12	40	41.5	49.7	36	24		Very Soft
SB-89	S-5	13.5	15	35.2	42	25		Stiff
SB-90	S-6	16.5	18	22.6	51	24		Very Stiff
SB-90	S-11	35	36.5	47	42	25		Very Soft
SB-91	S-3	7.5	9	8.5	18	15		Hard
SB-91	S-7	16.5	18	11.7	23	17		V. Dense
SB-92	S-2	4.5	6	30.8	45	24		Very Stiff
SB-93	S-4	10	11.5	9.1	23	14		V. Dense
SB-94	S-3	4.5	6	10.7	26	17		Dense
SB-95	S-2	4.5	6	11.5	20	19		M. Dense
SB-96	S-2	4.5	6	17.2	NP	NP		M. Dense
SB-97	S-8	25	26.5	9.9	23	14		V. Dense
SB-98	S-3	7.5	9	2.3	NP	NP		M. Dense
SB-99	S-9	25	26.5	37.4	35	20		Medium

New Britain - Hartford Busway
CT DOT State Project 63-H137
GeoDesign Project Number: 0331-14
Roadway and Retaining Walls

Table 2 - Existing Water Contents from Pilot Borings for Busway North

*Sorted by Strata, Water Content, then Depth

Depth	Boring	Water Content	Strata
22.5	RB-42	10.4	Clay
4.5	SB-94	10.7	Clay
16.5	SB-90	22.6	Clay
19.5	SB-99	23.2	Clay
7.5	SB-88	23.6	Clay
70	SB-88	26.3	Clay
22.5	SB-99	30.3	Clay
4.5	SB-92	30.8	Clay
16.5	SB-88	33.9	Clay
13.5	SB-89	35.2	Clay
25	SB-99	37.4	Clay
10.5	SB-90	40.3	Clay
16.5	RB-42	40.8	Clay
35	SB-90	47.0	Clay
40	SB-88	49.7	Clay
7.5	RB-42	10.6	Fill
16.5	SB-99	11.6	Fill
4.5	SB-96	17.2	Fill
7.5	SB-98	2.3	Sand
7.5	SB-91	8.5	Sand/Gravel/Silt
10	SB-93	9.1	Silt/Sand
13.5	SB-97	9.7	Silt/Sand
25	SB-97	9.9	Silt/Sand
28.5	SB-99	11.0	Till
16.5	SB-98	11.1	Sand
4.5	SB-95	11.5	Sand/Silt
16.5	SB-91	11.7	Sand/Gravel/Silt
19.5	SB-93	14.1	Silt/Sand

**Sorted by Strata, Depth, then Water Content

Depth	Boring	Water Content	Strata
4.5	SB-94	10.7	Clay
4.5	SB-92	30.8	Clay
7.5	SB-88	23.6	Clay
10.5	SB-90	40.3	Clay
13.5	SB-89	35.2	Clay
16.5	SB-90	22.6	Clay
16.5	SB-88	33.9	Clay
16.5	RB-42	40.8	Clay
19.5	SB-99	23.2	Clay
22.5	RB-42	10.4	Clay
22.5	SB-99	30.3	Clay
25	SB-99	37.4	Clay
35	SB-90	47.0	Clay
40	SB-88	49.7	Clay
70	SB-88	26.3	Clay
4.5	SB-96	17.2	Fill
7.5	RB-42	10.6	Fill
16.5	SB-99	11.6	Fill
4.5	SB-95	11.5	Sand/Silt
7.5	SB-98	2.3	Sand
7.5	SB-91	8.5	Sand/Gravel/Silt
10	SB-93	9.1	Silt/Sand
13.5	SB-97	9.7	Silt/Sand
16.5	SB-98	11.1	Sand
16.5	SB-91	11.7	Sand/Gravel/Silt
19.5	SB-93	14.1	Silt/Sand
25	SB-97	9.9	Silt/Sand
28.5	SB-99	11.0	Till

New Britain - Hartford Busway
CT DOT State Project 63-H137
GeoDesign Project Number: 0331-14
Roadway and Retaining Walls

Table 3: Summary of Sieve/Hydrometer Testing

Boring	Sample	From	To	Strata	Sieve/Hyd	Gravel	Sand	Silt/Clay	Silt	Clay
R-01	S-1	1	3	Fill	Sieve	22.6	57.8	19.6	19.6	
R-03	S-1	1	3	Fill	Sieve	11.7	71.2	17.1	17.1	
R-04	S-2	2	4	Fill	Hyd	9.2	64.2	26.6	19.6	7
R-05	S-1	0	2	Fill	Sieve	9.3	64	26.7	26.7	
R-06	S-1	1	3	Fill	Sieve	11	49.2	39.8	39.8	
R-07	S-1	1.5	3.5	Fill	Sieve	4.2	66.1	29.7	29.7	
R-14	S-1	0	2	Fill	Sieve	10.8	60.8	28.4	28.4	
R-16	S-1	0.5	2.5	Fill	Sieve	11.5	66.4	22.1	22.1	
R-18	S-1	0	2	Fill	Sieve	17.5	66.8	15.7	15.7	
R-20	S-2	2	4	Fill	Sieve	5.2	59.3	35.5	35.5	
R-21	S-2	2	4	Fill	Hyd	13.6	39.6	46.8	33.8	13
R-22	S-2	2	4	Fill	Sieve	6	36.5	57.5	57.5	
R-23	S-1	1	3	Fill	Sieve	18.5	61.4	20.1	20.1	
R-24	S-1	1	3	Fill	Sieve	10.7	62.1	27.2	27.2	
RW-101-1	S-2	2.5	4.5	Fill	Sieve	0.8	27.1	72.1	72.1	
RW-101-1	S-1	0.5	2.5	Fill	Sieve	2.3	14.8	82.9	82.9	
RW-103-2	S-1	0	2	Fill	Sieve	6.8	63	30.2	30.2	
RW-103-2	S-3	5	7	Fill	S/H		10	90	60	30
RW-105-2	S-1	0	2	Fill	Hyd	3.5	33.7	62.8	39.8	23
RW-106-1	S-1	0	2	Fill	Sieve	10.1	53.8	36.1	36.1	
RW-106-2	S-2	2.5	4.5	Fill	Sieve		95.8	4.2	4.2	
RW-107-2	S-4	7	9	Fill	Sieve	7.2	69.7	23.1	23.1	
RW-108-2	S-1	1	3	Fill	Sieve	10.3	76.1	13.6	13.6	
RW-108-2	S-2	3	5	Fill	Sieve	16.1	60.7	23.2	23.2	
RW-108-3	S-1	1	3	Fill	Sieve	16.9	60.9	22.2	22.2	
RW-108-3	S-3	5	7	Fill	Hyd	18.5	45.9	35.6	22.6	13
RW-106-3	S-4	7	9	GT	Sieve	5.8	69.4	24.8	24.8	
RW-111-4	S-2	3	4.3	GT	Sieve	10.8	60.5	28.7	28.7	
RW-110-2	S-1	1	3	GT	Sieve	16.2	55	28.8	28.8	
RW-110-3	S-1	1	3	GT	Sieve	11.8	58.8	29.4	29.4	
RW-106-1	S-3	5	7	GT	Hyd	10.7	35.7	53.6	33.6	20
RW-110-2	S-3	5	7	GT	Hyd	6.2	32.5	61.3	41.3	20
RW-103-2	S-6	15	16.3	GT	Sieve		2.8	97.2	97.2	

New Britain - Hartford Busway
CT DOT State Project 63-H137
GeoDesign Project Number: 0331-14
Roadway and Retaining Walls

Table 3: Summary of Sieve/Hydrometer Testing

Boring	Sample	From	To	Strata	Sieve/Hyd	Gravel	Sand	Silt/Clay	Silt	Clay
RW-112-2	S-1	1	3	Sand Fill	Sieve	12.5	63	24.5	24.5	
RW-102-5	S-5	15	17	VC	S/H			100	30	70
RW-102-1	S-3	5	7	VC	Hyd		1.5	98.5	38.5	60
RW-102-3	S-7	20	22	VC	S/H			100	40	60
RW-101-1	S-5	10	12	VC	S/H			100	45	55
RW-102-7	S-4	10	12	VC	Hyd		2.8	97.2	47.2	50
RW-102-1	S-5	15	17	VC	S/H			100	50	50

	FILL		
	Full Range	Remove Top and Bottom Outliers	Remove Top and Bottom Two Outliers
Gravel Range	0 to 22.6%	0 to 19%	1 to 18%
Sand Range	10 to 95.8%	15 to 75%	27 to 71 %
Silt/Clay Range:	4.2 to 90%	14 to 83%	16 to 72%

	Glacial Till	
	Full Range	Remove Top and Bottom Outliers
Gravel Range	0 to 16%	6 to 12%
Sand Range	3 to 70%	33 to 60%
Silt/Clay Range:	25 to 97%	29 to 61%

	Varved Clay	
	Full Range	Remove Top and Bottom Outliers
Gravel Range	0%	0%
Sand Range	1.5 to 2.8%	0%
Silt	30 to 50%	39 to 47%
Clay	50 to 70%	50 to 60%

New Britain - Hartford Busway

CT DOT State Project 63-H137
GeoDesign Project Number: 0331-14
Roadway and Retaining Walls

Table 4 - Summary of Soil Strata

Boring	Approximate Strata Thickness (feet)								Refusal Depth (feet)	Refusal (Inferred Rock) Elevation	Rock Core	Groundwater Depth (feet)	Groundwater Elevation (feet)	Well
	Asphalt/ Concrete	Topsoil	Crushed Stone	Fill	Sand	Clay	Glacial Till	Weathered Bedrock						
R-01	1			2.5		14+						n/a		
R-02	1			4.5		12+						n/a		
R-03	1			15		1+						n/a		
R-04				10		7+						n/a		
R-05				10		9+						14	54.7	
R-06	1.5			2.5		13+						n/a		
R-07	1			4.5		12+						9	59.9	
R-08				10		7+						8	52.6	
R-09	1			4.5		12+						15	37.7	
R-10				2		15+						9	47.6	
R-11				4		13+						n/a		
R-12				6		11+						n/a		
R-13			1.5	2.5		3.5	10+					14	33.9	
R-14				4.5		10.5	5+					5	43.5	
R-15	1			2.5		7	5.5+					n/a		
R-16	1			6.5		6.5	3.5+					5	43.3	
R-17	1			3.5		3	5		12	35		n/a		
R-18				4			12.5+					n/a		
R-19	1			2.5				4.5	8	22		n/a		
R-20				5			9.5	1	15.2	10		n/a		
R-21				9				6.5	15.4	16		n/a		
R-22				24+?					24	17		17	24.1	
R-23	1		1.5	7		2	4+		15.2	23		9	29.7	Yes
R-24	1			4		8		6.5	15.1	24		n/a		
RW-101-1	0.5			7		9.5+						n/a		
RW-102-1			1.5	2		14+						3	49.9	
RW-102-2				3		14+						3	49.8	
RW-102-3				3		26+						3	49.4	
RW-102-4				5		12+						n/a		
RW-102-5			1	1.5		14+						n/a		
RW-102-6			1	2		15+						n/a		
RW-102-7			1	1.5		14+						3	47.1	
RW-103-1				7		7	2+					5	43.9	

New Britain - Hartford Busway

CT DOT State Project 63-H137
GeoDesign Project Number: 0331-14
Roadway and Retaining Walls

Table 4 - Summary of Soil Strata

Boring	Approximate Strata Thickness (feet)								Refusal Depth (feet)	Refusal (Inferred Rock) Elevation	Rock Core	Groundwater Depth (feet)	Groundwater Elevation (feet)	Well
	Asphalt/ Concrete	Topsoil	Crushed Stone	Fill	Sand	Clay	Glacial Till	Weathered Bedrock						
RW-103-2				11			5+					4.5	44.5	
RW-104-1				3			24		27.5	20		4	44	
RW-104-2	1			4			12+					16	47	
RW-105-1				10			6+					7	56.8	Yes
RW-105-2				8			5		13	36		4	45	
RW-106-1				5			12+					4	43.3	
RW-106-2			1	7			8.5+					5	43	
RW-106-3			1	7			9+					8	41.1	
RW-107-1		1		10			6+					n/a		
RW-107-2	1			8			8+					n/a		
RW-108-1			1	12			7.5		20.5	26		12	35.1	
RW-108-2	1			5			10.5+					n/a		
RW-108-3	1			7			7.5	0.2	15.2	29		n/a		
RW-110-1	1		1	2			5		9	29		n/a		
RW-110-2	1		1				8		10.1	29		n/a		
RW-110-3	1		1				8		10.1	29		n/a		
RW-111-1	1		1	1.5			3		7	20		n/a		
RW-111-2	1		1	1.5			11		15	10		14	11.1	
RW-111-3	1		1	1			2		5	21		n/a		
RW-111-4	1		2				2	5	10.1	20		n/a		
RW-111-5				1			9		10.1	23		n/a		
RW-111-6				2			5		6	30		n/a		
RW-112-1				2			3		5	26		n/a		
RW-112-2	1			2			7		10.1	23		n/a		
B-01-3				2.5	5.5	7	12			19	Yes	2.5	44.2	
B-01-4			1.5	2.5			23			19	Yes	3	43.8	
B-02-1				2						20	Yes	13	14.5	
B-02-2				10						17	Yes	n/a		
B-02-3	1			9			4			12	Yes	n/a		
B-02-4				5						23	Yes	n/a		
B-03-1			1.5	7.5			11			30	Yes	7.5	42.6	
B-03-2				10			10			30	Yes	6	43.7	Yes

New Britain - Hartford Busway
CT DOT State Project 63-H137
GeoDesign Project Number: 0331-14

Table 5 - Groundwater Data Summary

Boring*	Approximate Ground Surface Elevation (ft)	Approximate Groundwater Depth (ft)	Approximate Ground Water Elevation	Well
RW-102-1	52.9	3	49.9	
RW-102-2	52.8	3	49.8	
RW-102-3	52.4	3	49.4	
R-09	52.7	15	37.7	
RW-102-4	51.9	10	41.9	
R-08	60.6	8	52.6	
R-10	56.6	9	47.6	
RW-102-7	50.1	3	47.1	
RW-103-1	48.9	5	43.9	
RW-103-2	49.0	4.5	44.5	Yes
R-13	47.9	14	33.9	
R-14	48.5	5	43.5	
R-16	48.3	5	43.3	
RW-104-1	48.0	4	44.0	
RW-104-2	63.0	16	47.0	
B-01-2	70.1	15.5	54.6	
B-01-3	46.7	2.5	44.2	
B-01-4	46.8	3	43.8	
RW-105-1	63.8	7	56.8	Yes
RW-106-1	47.3	4	43.3	
RW-105-2	49.0	4	45.0	
RW-106-2	48.0	5	43.0	
RW-106-3	49.1	8	41.1	
B-03-06	50.2	10	40.2	
B-03-1	50.1	7.5	42.6	
B-03-2	49.7	6	43.7	
RW-108-1	47.1	12	35.1	
R-23	38.7	9	29.7	Yes

*Borings are approximately listed from south to north along the NB & SB Busway Alignments
Refer to boring logs for details including date of readings

INSERT TAB
APPENDIX 2
HERE

Appendix 2

Limitations

GEOTECHNICAL LIMITATIONS

Explorations

1. The analyses and recommendations submitted in this report are based in part upon the data obtained from widely spaced subsurface explorations. The nature and extent of variations between these explorations may not become evident until further explorations are made and construction occurs. If variations then appear evident, it will be necessary to reevaluate the recommendations of this report.

2. The generalized soil and bedrock profile described in the text is intended to convey trends in subsurface conditions. The boundaries between strata are approximate and idealized and have been developed by interpretations of widely spaced explorations and samples; actual soil and bedrock transitions are probably more erratic. For specific information, refer to the boring logs.

3. The geologic and geomorphologic settings at this site are complex and the uncertain historic site usage has resulted in the varied distribution and stress history of compressible soils across the site. Limited spacing of borings and lab testing can at best, only allow for estimates to be developed for duration and magnitude of consolidation settlements.

4. Water level readings have been made in the drill holes at times and under conditions stated on the boring logs. These data have been reviewed and interpretations have been made in the text of this report. However, it must be noted that fluctuations in the level of the groundwater may occur due to variations in river levels, rainfall, temperature, and other factors occurring since the time measurements were made.

Review

5. In the event that any changes in the nature, design or location of the roadway alignment, the conclusions and recommendations contained in this report shall not be considered valid unless the changes are reviewed and conclusions of this report modified or verified in writing by Geo**Design**, Inc. It is recommended that this firm be provided the opportunity for a general review of design and specifications in order that earthwork recommendations may be properly interpreted and implemented in the design and specifications.

Use of Report

6. These reports have been prepared for the exclusive use H.W. Lochner, Inc., the Connecticut Department of Transportation (ConnDOT), and other members of the design team for specific application to the construction of the Busway Roadway for the New Britain - Hartford Busway located in Hartford, Connecticut, in accordance with generally accepted engineering practices. No other warranty, express or implied, is made.

7. This final design Roadway Engineering Report has been prepared for this project by Geo**Design**. This report is for design purposes only and is not sufficient to prepare an accurate bid. Contractors wishing a copy of this report may secure it with the understanding that their scopes are limited to design considerations only.