REPORT ON
NEW BRITAIN-HARTFORD BUSWAY OVER TROUT BROOK
STATE PROJECT NO. 171-305
NEWINGTON TO WEST HARTFORD, CONNECTICUT

by

Haley & Aldrich, Inc.
Parsippany, New Jesey

for

Ammann & Whitney Consulting Engineers
New York, New York

File No. 32669-000
06 August 2010

STATE OF CONNECTICUT
EDWARD M. ZAMISKIE JR.
No. 28228
LICENSED
PROFESSIONAL ENGINEER

Edward M. Zamiskie, Jr., P.E.

HALEY & ALDRICH

Haley & Aldrich, Inc.
299 Cherry Hill Rd.
Suite 105
Parsippany, NJ 07054-1124

Tel: 973.263.3900
Fax: 973.263.2580
HaleyAldrich.com

06 August 2010
File No. 32669-000

Ammann & Whitney Consulting Engineers
96 Morton Street
Floor 8
New York, New York 10014-3326

Attention: Samia Abdou, P.E.

Subject: Revised Final Report
New Britain - Hartford Busway over Trout Brook
State Project No. 171-305
Newington to West Hartford, Connecticut

Ladies and Gentlemen:

This revised report presents our foundation design recommendations for the Proposed Bridge over Trout Brook, part of the New Britain-Hartford Busway in Newington and West Hartford, Connecticut. The bridge will carry the Busway over Trout Brook adjacent to the existing Amtrak Bridge. This report was revised to incorporate comments from the Connecticut Department of Transportation dated 22 January 2010. The bridge location is shown on the Project Locus, Figure 1.

Recommendations in this report have been formulated based on our observations of the site, recent subsurface explorations, the results of laboratory soil testing, and the design information you provided. Design recommendations herein conform to the Connecticut Department of Transportation, Geotechnical Engineering Manual, 2005 Edition, Rev. Feb 2009, and AASHTO LRFD Bridge Design Specifications, 2007, 4th Edition, 2008 Interim Revision.

SUMMARY

Subsurface soils generally consist of fill overlying glaciolacustrine deposits over glacial till and bedrock. We recommend that abutments and wingwalls be supported on steel H-piles driven to end bearing criteria in glacial till or on bedrock.

The new structure will consist of a single span with integral abutments supported on steel H-piles. The proposed structure will abut the existing structure on the west side; widening the current bridge by about 16 feet (ft). The brook channel hydraulics will not be impacted and the new integral abutments will not be subject to scour. Portions of the new Busway will be carried on part of the existing bridge and the new bridge.

The approach embankments for the south and north abutments will be up to 2 ft higher than the existing railroad embankment, in an area underlain by glaciolacustrine deposits. Lightweight fill, Expanded Shale, Clay & Slate (ESCS) (rather than normal-weight embankment fill) will be used to construct the new approach embankments to reduce ground settlements to acceptable levels. By using this fill type there will be a reduced net stress increase in the foundation soils and a reduced unbalanced load. Global stability is satisfied for the pile-supported abutments.

PROPOSED CONSTRUCTION

Proposed construction consists of partial removal of existing concrete headwall and wingwall to allow construction of a bridge structure with integral concrete abutments over Trout Brook with associated wingwalls and retaining walls. The proposed bridge structure and associated wingwalls will be supported on pile foundation with pile caps located above the waterline of the brook. The busway will be completely supported on the new bridge structure. See drawings in Appendix E for layout.

Retaining wall RW109 terminates at the south end of the south wingwall and Retaining wall RW111 terminates at the north end of the north wingwall.

The proposed Busway will consist of two (2) 12-ft lanes with two (2) 4-ft shoulders, approximately 35.8 ft wide and spanning approximately 85 ft.

Elevations are in feet and refer to National Geodetic Vertical Datum of 1929 (NGVD29). Coordinates are in feet and refer to North American Datum if of 1983 (NAD83).

SITE CONDITIONS

The existing bridge carries two (2) Amtrak Railroad lines and a service road over Trout Brook. The bridge is composed of multiple arch segments. From west to east; a cast-in-place concrete arch 17-ft wide, an 11.25-ft wide stone arch, a 6.5-ft wide concrete slab, another 11.25-ft wide stone arch, and a separate 12-ft wide stone arch; totaling 58 ft in width. To the west of the bridge, wingwalls extend northwest and southwest merging with two (2) concrete channel walls connected to a bridge that caries New Park Avenue over Trout Brook. The channel walls are about 21 ft above the Trout Brook water level and run parallel with the brook.

The railroad grade is at about El. 65 sloping down to the west. Toes of the vegetated slopes are about El. 50 south and El. 46 north of the bridge. The water level of Trout Brook is at about El. 36. Existing conditions and proposed structure are shown on drawing titled “General Plan” dated 4/15/2009 included in Appendix E.

SUBSURFACE EXPLORATIONS AND LABORATORY TESTING

Recent Test Borings

Four (4) test borings (TB-101, TB-102(OW), RW-118, and RW-119) were drilled in the vicinity of Trout Brook Bridge by General Borings, Inc., from Prospect, Connecticut between 17 and 22 April 2008. Borings were drilled using a truck-mounted B53 drill rig with 4 ¼-inch (in.). hollow stem augers and 3-in. NW-size casing. Boring depths ranged from 55 to 110 ft below ground surface. Soil samples were obtained at maximum 5 ft intervals using standard split spoon sampler (2-in. O.D., 1 3/8-in. I.D.), in general accordance with ASTM Method D1586. Borings were terminated in the glaciolacustrine deposit, glacial till, or bedrock. Seven feet of bedrock was cored using an NX core barrel in TB-101. An observation well was installed in the completed borehole of TB-102(OW).

Boring locations and elevations were surveyed by the Connecticut Department of Transportation. Test boring locations are shown on Figure 2 and logs are included in Appendix A.

Previous Borings

One (1) test boring (SB-52) was conducted near the existing Trout Brook Bridge as part of the pilot program for the Busway project. The boring was advanced to 110 ft including 10 ft of bedrock core. The boring location is shown on Figure 2 and the log is included in Appendix B.

Previous Laboratory Testing

Three (3) grain size analyses, one (1) water content, three (3) sets of Atterberg Limits tests, a torvane test, and a one-dimensional consolidation test were performed on representative samples from SB-52 to aid in classification and to determine engineering properties. Previous laboratory test results are presented in Appendix D.

Laboratory Testing

Geotesting Services, Inc. of Totowa, New Jersey, performed three (3) grain size analyses, a one-dimensional consolidation test, and a consolidated undrained triaxial compression test to aid in soil classification and to determine engineering properties on representative samples. Laboratory test results are presented in Appendix C.

SUBSURFACE CONDITIONS

Borings generally encountered fill underlain by glaciolacustrine deposits over glacial till and bedrock. Generalized descriptions of soil strata in order of increasing depth below ground surface follow. A profile showing subsurface stratigraphy is provided in Figure 2. A summary of subsurface data is presented in Table I.

Thickness (ft)	Generalized Description
36.5 to 37.5	**Fill** –Upper fill consists of loose to dense brown, coarse to fine SAND, varying amounts of gravel and cobbles, trace silt. Deeper fill consists of medium stiff to very stiff brown CLAY and clayey SILT, varying amounts of sand, gravel, and cobbles, frequent wood pieces and apparent voids, traces of ash, cinders, and brick.
32.0 to 39.1	**Glaciolacustrine Deposits –** Very soft to stiff, brown varved CLAY with brown clayey SILT, occasional trace coarse to fine sand.
34.5	**Glacial Till –** Dense to very dense, red brown, coarse to fine SAND and SILT with varying amounts of gravel to red brown coarse to fine SAND and GRAVEL with varying amounts of silt.

Bedrock – Bedrock was encountered in TB-101 at 103 ft below the ground surface. Recovered cores consist of aphanitic SHALE with thin beds of fine-grained sandstone with good recovery and no RQD, typical of the Portland Arkose Formation.

Groundwater levels were observed in the borings at 31 ft below the ground surface, corresponding from El. 32.5 to El. 32.8. Groundwater will fluctuate with season, precipitation, temperature, construction activity, and other factors.

ENGINEERING PROPERTIES OF SOILS

For purposes of construction, the glaciolacustrine deposit is important since this stratum is thick, of relatively low strength, normally consolidated, relatively compressible and slow to drain. This section describes the recommended values for engineering soil properties applicable to the design of the bridge foundation system. The recommended engineering properties for design were developed based on the results of laboratory tests conducted by Geotesting Services, Inc. and were primarily focused on the glaciolacustrine deposit at the site.

Index Properties and Compressibility of the Glaciolacustrine Deposit

Based on the laboratory test results from the samples collected near Trout Brook, the glaciolacustrine deposit is predominately lean CLAY and SILT with moisture contents near the liquid limits. Based on the consolidation testing, the compressibility of the glaciolacustrine deposit appears to slightly decrease over the depth of the stratum. The recent laboratory test results also indicate that the glaciolacustrine deposit in the area of Trout Brook is normally consolidated, having over consolidation ratios (OCR) ranging about 0.7 to 1.0.

GEOTECHNICAL ENGINEERING RECOMMENDATIONS

Bridge Foundation Type

Based on the design drawings, dated 10/20/2009, included in Appendix E, the bottom of the integral abutment and the wingwall footings/pile cap range between El. 45 and El. 56.75. The top of bedrock was encountered at approximately El. -37 in boring TB-101. The existing fill and glaciolacustrine deposits are not suitable for convention spread footing foundation support. Therefore, the abutments and wingwalls are recommended to be supported on steel H-piles driven to end bearing criteria in glacial till or on bedrock.

A. Axial Capacity

The ultimate axial capacities of steel H-piles (HP10x42, HP12x53, HP12x74, HP14x73 and HP12x74) were estimated using the computer program DRIVEN. It is anticipated that the steel H-piles will be driven to end bearing criteria. We recommend using an HP12x74, driven to end bearing criteria in glacial till or on bedrock with an estimated Factored Bearing Resistance of 245 kips, assuming the pile will be driven to refusal into weathered rock. This is based on a static capacity analysis.

The capacity should be verified with PDA as described in section F. The resistance factor for an end bearing pile on rock, per Connecticut Department of Transportation Geotechnical Engineering Manual 2005 Ed, Section 6.2.2, is 0.65, when the pile capacity is verified by PDA and CAPWAP at a minimum of one (1) test pile per substructure.

C. Pile Spacing

Piles should have a minimum center-to-center spacing of 2.5 times the pile width or 2.5 ft; whichever is greater in accordance with AASHTO requirements. For frost protection, the bottom of pile caps should be at least 4 ft below the lowest proposed adjacent grade.

D. Settlement

It is anticipated that piles will settle approximately ½ in. due to elastic compression of the pile. Settlement will occur during construction as bridge loads are applied. Post-construction differential settlement of the approach embankment relative to the abutment is estimated to be on the order of ½ to 1 in. Design the bridge with approach slabs to provide a smooth transition between pile-supported abutments and approach embankments.

E. Downdrag

Glaciolacustrine deposits were encountered below the abutments. Placement of approach embankment lightweight fill will result in approximately 2-in. settlement due to primary consolidation and secondary compression of the glaciolacustrine deposits. Therefore piles supporting the south and north abutments will experience approximately 57 kips downdrag load.

F. Pile Installation

It is anticipated that the H-piles may have to be driven to refusal on bedrock bearing at approximately El. -37 (±5ft) to achieve the required capacity. However, there is a thick, dense glacial till layer above the bedrock and the piles may achieve required capacity before encountering the bedrock. Based on the pile cutoff elevation provided by Ammann & Whitney, The test pile order lengths should be as follows:

Abutments 1	Test pile length - 105 ft
Abutments 2	Test pile length - 110 ft

The production pile lengths for the two (2) abutments and the four (4) wingwalls cannot be accurately predicted at this time and will be determined after the test pile installation.

Based on the design pile loads provided by Ammann & Whitney for the following structures and the Consulting Engineers General Memorandum 09-07 by the Connecticut Department of Transportation, Bureau of Engineering and Highway Operations, Office of Engineering as a revision to Bridge Design Standard Practices, Ultimate Pile Capacity for each substructure is listed below. A resistance factor of 0.65 has been used.

Abutment 1 and 2	333 kips
Wingwall 1A	333 kips
Wingwall 2A	333 kips
Wingwall 1B and 2B	333 kips

The wingwall piles should be installed to the same capacity as the abutments even though their load demand is less.

Drive a total of two (2) test piles, one (1) at each abutment, to confirm lengths. We also recommended that the pile tips be used to protect the piles during final drive to refusal and that high strain dynamic load testing performed on 2 to 5 percent of the production piles. A Pile Driving Analyzer (PDA) should be used to confirm that the piles have been installed to the required ultimate

Pile Capacity. CAPWAP should also be performed to verify the PDA results at depths where the test piles achieve the Ultimate Pile Capacity listed above for adjoining substructures.

Approach Embankment Considerations

Lightweight Fill

Use of light weight fill consisting of Expanded Shale, Clay & Slate (ESCS) is recommended to build up the approach embankments for both the north and south abutments and related wingwalls.

Properties
The following properties can be used for the ESCS:
Compacted in-place moist unit weight - 65 pcf
Friction angle - 35°
Active lateral Earth pressure coefficient (k_a) - 0.245
At-rest lateral Earth pressure coefficient (k_o) - 0.426
Passive lateral Earth pressure coefficient (k_p) – 4.08

Settlement

It is estimated that placement of the approach embankment lightweight fill will result in maximum primary consolidation and post-construction secondary compression of the underlying fill and glaciolacustrine deposits of 1.9 in. and 2.3 in. at the south and north approaches respectively. The glaciolacustrine deposit in this area is expected to be normally consolidated and a compression ratio of 0.14 was used for the consolidation settlement analysis. It is recommended that a waiting period be provided after placement of the approach embankment fill to allow substantial consolidation to take place prior to constructing the final roadway pavement. About 4 months will be needed to limit post-construction settlement to less than 1 in. The actual waiting period should be controlled by a settlement monitoring program.

Lateral Earth Pressures

The wingwalls should be designed for active earth pressures if the walls can rotate (move laterally at the top), and for at-rest earth pressures if restrained from lateral movement. Integral abutments should be designed for passive earth pressures.

Drainage

We recommend the abutment and wingwalls be drained by 4-in. dia. weep holes installed according to CONNDOT specifications. Maximum spacing between weep holes should be 10 ft.

Reuse of Excavated Material

The existing fill is not suitable for reuse as pervious structure backfill or granular fill, but will generally be suitable for embankment fill after removal of deleterious materials.

Glaciolacustrine deposits consist primarily of silt and clay that are highly sensitive to disturbance and fluctuation in moisture content. Therefore, these soils will be very difficult to reuse as compacted fill on-site.

In areas where glaciolacustrine deposits are excavated, we recommend this material be properly disposed of at an off-site location.

CONSTRUCTION CONSIDERATIONS

This section provides comments related to foundation construction and other geotechnical aspects of the project. It will aid those responsible for preparation of contract plans and specifications and those involved with construction monitoring. Contractors should evaluate potential construction problems on the basis of their own knowledge and experience in the area and on the basis of similar localities, taking into account their own proposed construction methods and procedures.

Excavation and Temporary Lateral Support

Excavations for abutments and piers will be in existing fill or glaciolacustrine deposits. Conventional heavy construction equipment appears practical for excavation.

Areas of temporary lateral support for excavations will be required because of the partial demolition of the existing bridges and wingwalls. We anticipate that steel sheet piling or soldier piles and lagging will be feasible temporary lateral support systems.

Excavation geometry should conform to OSHA excavation regulations contained in 29 CFR Part 1926, latest edition. Temporary soil slopes above groundwater of 1V:1.5H (Soil Profile Type C), or flatter, appear appropriate but should be confirmed during construction based on conditions at the time of excavation.

Dewatering

Excavations for north and south abutments will be about 2 ft above the highest groundwater levels observed in the borings at those locations. Therefore, we anticipate that excavation dewatering will be not necessary. However, perched water in glaciolacustrine deposits and the possibility of deeper excavations should be anticipated. If required, a temporary dewatering system may likely consist of pumping from sumps within the excavation.

The contractor should configure excavations and surrounding areas to prevent surface water from entering excavations.

Pile Installation

Piles will be driven to end bearing criteria in glacial till or on bedrock. The maximum hammer energy should be determined by a wave equation analysis by the contractor based on specific hammer characteristics.

Stress wave measurements and Pile Driving Analyzer (PDA) testing should be conducted on 2 percent of piles (test piles and production piles), consistent with field verification factor assumed in pile design.

Contractors should be advised that hard pile driving may be experienced in the fill and glacial till, prior to reaching the required driving resistance. Both recent borings encountered obstructions in the fill. The effects of hard driving on the piles can be reduced by controlling the hammer energy or by pre-augering. Pre-augering, if employed, would be at the contractor's option and expense and should not be specified. If the

contractor chooses to pre-auger, the diameter of the pre-augered hole should be equal to the largest dimension of the H pile and backfilled with sand prior to pile installation.

Settlement Monitoring

We recommend settlement monitoring of the railroad tracks during excavation, temporary excavation support installation, and pile driving. Amtrak should be involved in determining an action level. If at any point the action level is reached, construction should be stopped to reevaluate the installation process to minimize additional settlement.

CLOSING

This report has been prepared for specific application to New Britain - Hartford Busway over Trout Brook, as understood at this time, in accordance with generally accepted geotechnical engineering practice common to the local area. In the event that changes in the nature, design or location of the project elements are planned, the conclusions and recommendations contained in this report should not be considered valid, unless the changes are reviewed by Haley & Aldrich, Inc. and the conclusions of this report modified or verified in writing.

The analyses and recommendations are based, in part, upon data obtained from the referenced subsurface explorations. The nature and extent of variations between explorations may not become evident until construction. If variations then appear, it may be necessary to reevaluate the recommendations of this report.

We appreciate the opportunity to provide engineering services on this project. Please do not hesitate to call if you have any questions or comments.

Sincerely yours,
HALEY & ALDRICH, INC.

STATE OF CONNECTICUT
EDWARD M. ZAMISKIE JR.
No. 28228
LICENSED
PROFESSIONAL ENGINEER

Edward M. Zamiskie, Jr., P.E.
Vice President

Enclosures:

- Table I - Summary of Subsurface Data
- Table II - Summary of Laboratory Data
- Figure 1 - Project Locus
- Figure 2 - Subsurface Exploration Plan and Profile
- Figure 3 - Recommended Lateral Loads
- Appendix A - Recent Test Boring Logs
- Appendix B - Previous Test Boring Logs
- Appendix C - Recent Laboratory Test Data
- Appendix D - Previous Laboratory Test Data
- Appendix E - Design Drawings showing Existing and Proposed Construction

REFERENCES

1. American Association of State Highway Transportation Officials (AASHTO) LRFD Bridge Design Specifications,(2007), 4th Edition with 2008 Interim Revision

2. American Society for Testing and Mateials (1994). Volume 04.08 Soil and Rock (I): D 420 – D 4914

3. Baker Engineering NY, Inc. (2002). "Connecticut Busway Design Manual," prepared for the Connecticut Department of Transportation.

4. Baker Engineering NY, Inc. (2006). "Report on Settlement due to the Glacial Lake Deposits," prepared for the Connecticut Department of Transportation.

5. Connecticut Department of Transportation, Geotechnical Engineering Manual, 2005 Edition, Rev. Feb 2009

6. Ensoft, Inc. (2004). "LPILE Plus 5.0 for Windows," Austin, Texas, July.

7. Federal Highway Administration (1998). "DRIVEN 1.0, A Microsoft Windows Based Program for Determining Ultimate Vertical Static Pile Capacity," FHWA-SA-98-074, Washington, D.C., May.

8. Holtz, R.D. and Kovacs, W.D. (1981). An Introduction to Geotechnical Engineering, Prentice Hall, Englewood Cliffs, New Jersey.

TABLES

TABLE I
SUMMARY OF SUBSURFACE DATA
TROUT BROOK BRIDGE
CONNECTICUT BUSWAY
STATE PROJECT NO. 171-305
HARTFORD, CONNECTICUT

EXPLOR. NUMBER	ELEV. (ft)	DEPTH (ft)	THICKNESS OF SOIL STRATA (ft)						BEDROCK (ft)		WATER LEVEL	
			FILL	LACUSTRINE	ALLUVIAL DEPOSITS	GLACIOLACUSTRINE DEPOSITS	GLACIOFLUVIAL DEPOSITS	GLACIAL TILL	DEPTH	ELEV.	DEPTH	ELEV.
Retaining Walls (RW)												
RW118	64.40	55.00	23.00	--	--	> 32.00	--	--	--	--	10.00	54.40
RW119	63.41	60.00	34.50	--	--	> 25.70	--	--	--	--	15.00	48.41
Trout Brook Culvert/Bridge (TB)												
TB1/TB-101	63.75	110.00 (C)	36.50	--	--	32.00	--	34.50	103.00	-39.25	31.00	32.75
TB2/TB-102	63.51	80.00	37.50	--	--	39.10	--	> 2.20	--	--	31.00	32.51
Previous Borings (SB)												
SB-52	64.20	110.00 (C)	13.50	--	--	56.50	--	30.00	100.00	-35.80	28.00	36.20

Notes:
1. "--" indicates not encountered or unknown.
2. ">" indicates stratum thickness is greater than number indicated since the boring was terminated within the stratum.
3. Elevations are in feet and refer to the NGVD.
4. Refer to boring logs for detailed soil and rock descriptions.
5. Water levels were measured shortly after drilling and may not represent stabilized groundwater.
6. "(C)" indicates bedrock core sample, "(R)" indicates auger refusal.

TABLE II
SUMMARY OF LABORATORY DATA
NEW BRITAIN - HARTFORD BUSWAY OVER TROUT BROOK
STATE PROJECT NO. 171-305
NEWINGTON - WEST HARTFORD, CONNECTICUT

Boring Number	Sample No.	Depth of sample	USCS Classification	Moisture Content	Organic Content	Atterberg Limits			Dry Unit Weight	Total Unit Weight	Grain Size Analysis						Consolidated Undrained Triaxial Compression				Lab Vane			Consolidation Tests				
						Liquid Limit	Plastic Limit	Plasticity Index			Gravel (%)		Sand (%)			% Finer than #200	Confining Stress	Peak Shear Stress	Axial Strain @ Peak Stress	Results	Peak Shear Stress	Residual Shear Stress	Sensitivity	Initial Void Ratio	CR	RR	Maximum Past Pressure	Estimated OCR
		(ft bgs)		(%)	(%)	(%)	(%)	(%)	(pcf)	(pcf)	Coarse	Fine	Coarse	Medium	Fine		(ksf)	(ksf)	(%)		(ksf)	(ksf)					(tsf)	
RW-118	S-1	0.0 -2.0	SP	2.5							7.2	39	5.5	27.3	18.2	2.8												
RW-118	S-6	15.0 - 17.0	CL	28.8	3.1	35	20	15																				
RW-118	S-7	20.0 - 22.0	CL	25	2.5	29	18	11																				
RW-119	S-5	10.0 - 12.0	CL	21.1							-	2.2	3	13.1	25.3	56.4												
RW-119	S-7	20.0 - 22.0	CL	23		30	20	10																				
RW-119	S-8	25.0 - 27.0	CL	30.7	2.4	36	21	15																				
RW-119	S-9	30.0 - 31.2	CL	31.5		48	24	24																				
TB-101	S-2	2.0 - 4.0	SP-SM	2.9							-	38.2	10.7	27	16.8	7.3												
TB-101	S-7	20.0 - 22.0	SP-SM	6.5							9.1	9.5	6.1	22.7	43.7	8.9												
TB-102	S-6	15.0 - 17.0	SP-SM	6.7							-	1.1	3.4	45	44.6	5.9												
TB-102	U-3	55.0 - 57.0								110.3																		
TB-102	U-3D	56.45	ML	48.8					75.1	111.7							4.3	1.6	16.8	-								
TB-102	U-3E	56.85	ML	45.3		37	25	12	78.7	114.3														1.317	0.102	0.023	2.2	1.03
TB-102	U-3E	56.85		66																	0.32	0.08	4.1					

Notes:
1. All soil laboratory tests were performed in general conformance with applicable ASTM standards.

FIGURES

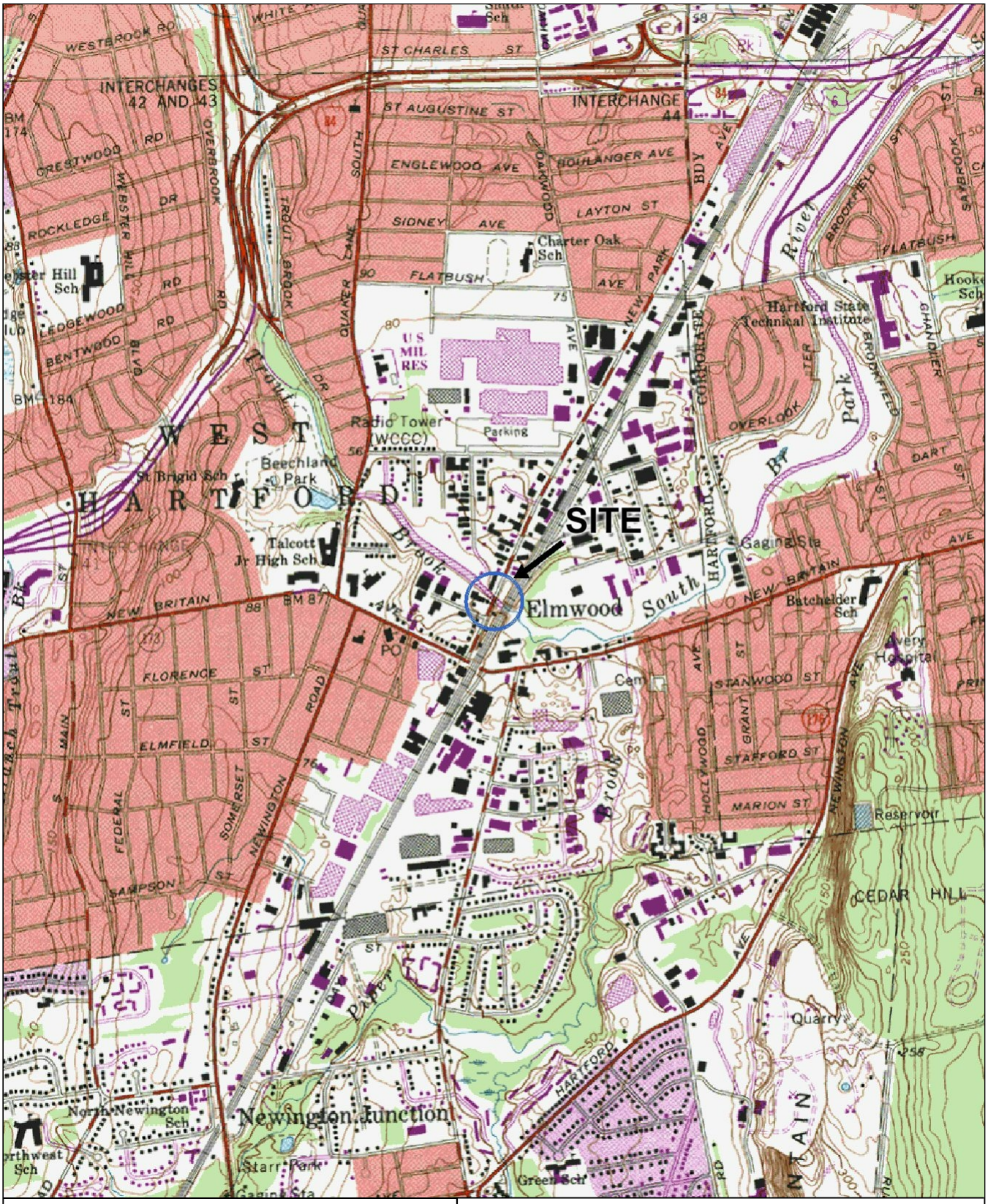

SITE COORDINATES:41°43'56"N 72°43'28"W

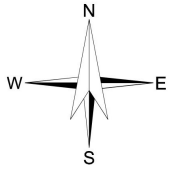

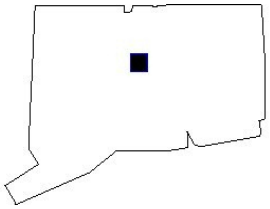

U.S.G.S. QUADRANGLE: HARTFORD SOUTH, CT

HALEY & ALDRICH

NEW BRITAIN - HARTFORD BUSWAY
OVER TROUT BROOK
NEWINGTON - WEST HARTFORD, CONNECTICUT

PROJECT LOCUS

SCALE: 1:24,000
JULY 2008

FIGURE 1

32669-000 1.PDF

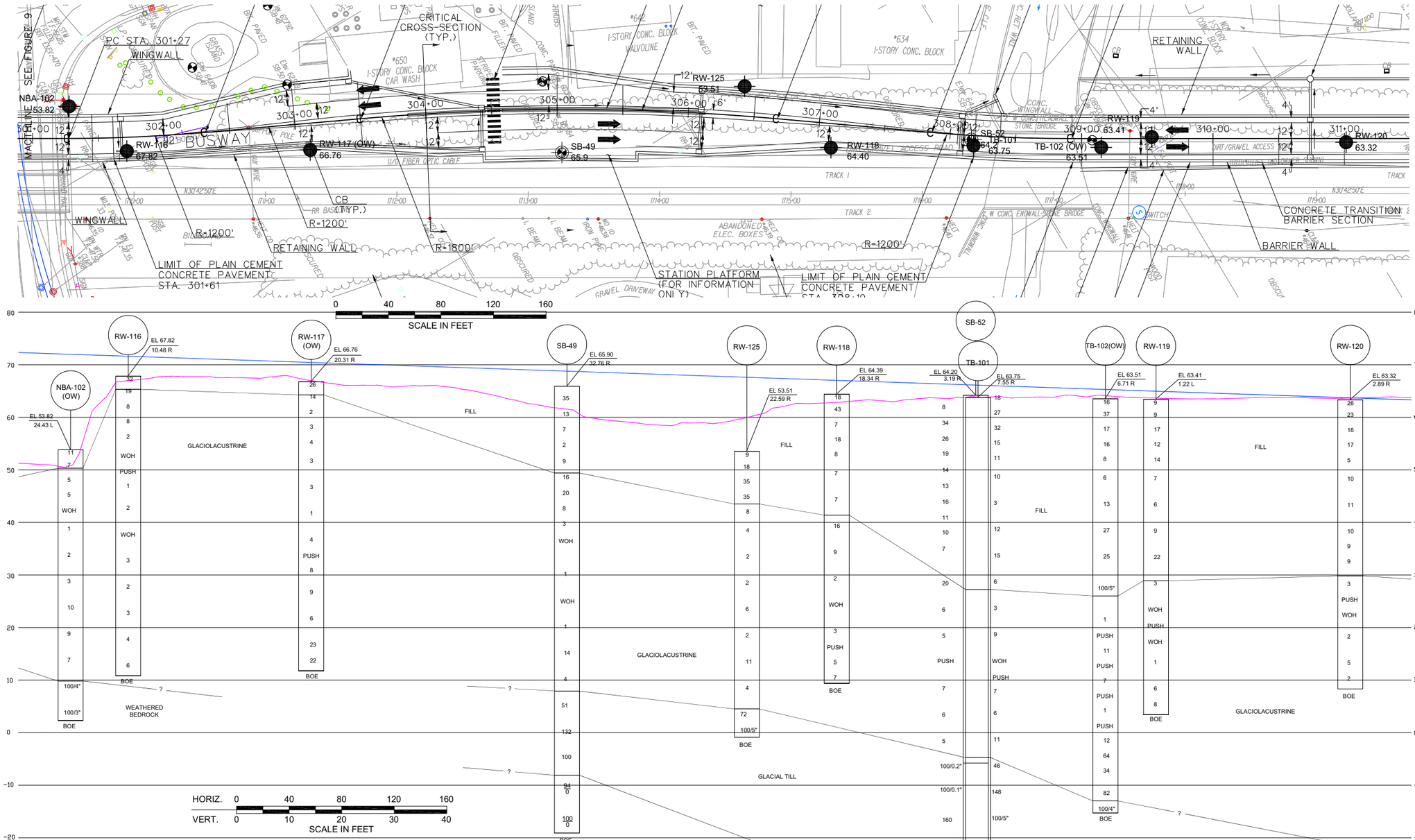

NBA-102 (OW) — BORING DESIGNATION; "OW" INDICATES OBSERVATION WELL INSTALLED IN COMPLETED TEST BORING.

EL 53.82 / 22.32 R — APPROXIMATE GROUND SURFACE ELEVATION; BORING OFFSET FROM CENTERLINE.

4 — APPROXIMATE LOCATION OF SOIL SAMPLE AND STANDARD PENETRATION RESISTANCE, "N"

WOH — WEIGHT OF HAMMER

PUSH — APPROXIMATE LOCATION OF SHELBY TUBE SAMPLE

INTERPRETED GEOLOGIC STRATUM INTERFACE

INFERRED GEOLOGIC STRATUM INTERFACE

100 / 40 — % RECOVERY / % RQD

BOE — BOTTOM OF EXPLORATION

LEGEND

RB-101 / 69.35 — LOCATION, DESIGNATION AND ELEVATION OF RECENT TEST BORINGS DRILLED BY GENERAL BORINGS, INC., OF PROSPECT, CONNECTICUT DURING THE PERIODS BETWEEN 18 AND 22 OCTOBER 2007 AND 9 AND 29 APRIL 2008.

SB-46 / 68.2 — LOCATION, DESIGNATION AND ELEVATION OF PREVIOUS PILOT BORINGS BY OTHERS.

EXISTING GROUND SURFACE ALONG CENTERLINE

PROPOSED ROADWAY ELEVATION ALONG CENTERLINE

NOTES:

1. COORDINATE SYSTEM IS IN FEET AND REFERS TO THE CONNECTICUT COORDINATE SYSTEM BASED ON NAD 83.
2. ELEVATIONS ARE IN FEET AND REFER TO NGVD 1929.
3. REFER TO THE REPORT APPENDICES FOR TEST BORING LOGS.
4. THE STANDARD PENETRATION RESISTANCE, "N", IS DEFINED AS THE NUMBER OF BLOWS OF A 140-LB HAMMER FALLING THROUGH A VERTICAL DISTANCE OF 30 INCHES REQUIRED TO DRIVE A 2-INCH O.D., 1-3/8-INCH I.D. SPLITS POON SAMPLER 12 INCHES.
5. THE ROCK QUALTIY DESIGNATION (RQD) IS DEFINED AS THE SUM OF ALL PIECES OF ROCK CORE, 4 INCHES IN LENGTH OR LONGER, DIVIDED BY THE TOTAL LENGTH IN INCHES OF THE CORE DRILLED IN THE GIVEN RUN, EXPRESSED AS A PERCENTAGE. IF THE CORE IS BROKEN BY HANDLING OR DRILLING PROCEDURES, THE PIECES OF THE CORE ARE FITTED TOGETHER AND COUNTED AS ONE PIECE, PROVIDED THEY CONSTITUTE THE REQUIRED 4-INCH LENGTH.
6. REFER TO THE REPORT TEXT FOR MORE DETAILED SOIL STRATUM DESCRIPTIONS AND THE TEST BORING LOGS FOR DETAILED SAMPLE DESCRIPTIONS.
7. SUBSURFACE PROFILES DEPICT THE GENERAL GEOLOGIC CONDITIONS AT THE SITE AND ARE BASED ON INTERPRETATION OF DATA ENCOUNTERED IN THE EXPLORATIONS. LINES REPRESENTING INTERFACES BETWEEN STRATA ON THE PROFILE ARE BASED ON ADJACENT BORINGS. THE BORING STICKS SHOW THE INTERPRETED SEQUENCE OF STRATA ENCOUNTERED AT THAT LOCATION. ACTUAL SOIL CONDITIONS AND INTERFACES BETWEEN EXPLORATIONS MAY VARY FROM THOSE INDICATED ON THE PROFILE.

HALEY & ALDRICH

NEW BRITAIN - HARTFORD BUSWAY
OVER TROUT BROOK
NEWINGTON - WEST HARTFORD, CONNECTICUT

SUBSURFACE EXPLORATION PLAN AND PROFILE

SCALE: AS SHOWN
JULY 2008

FIGURE 2

G:\32669-CT BUSWAY\0041CAD\DRAWINGS\32669-000-0D03-SEP.DWG

G:\32669-CT BUSWAY\004\CAD\DRAWINGS\32669-000-0A04-LATLOADS.DWG

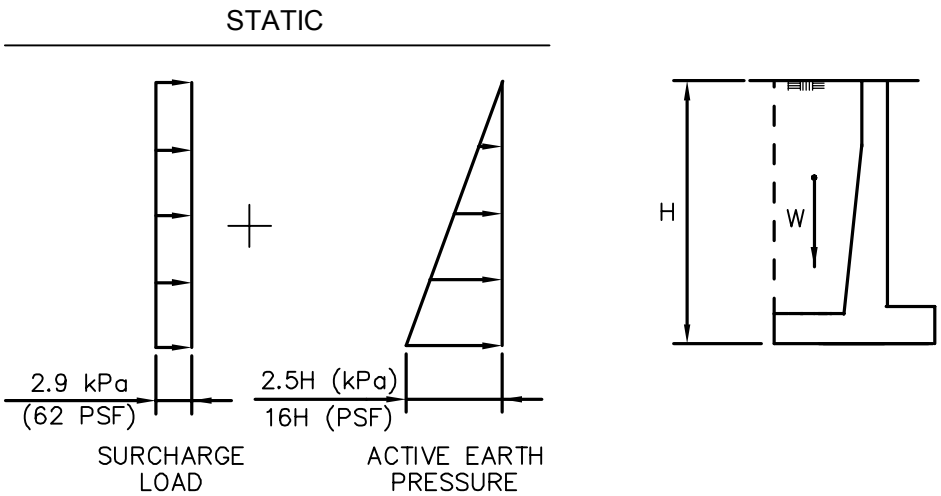

NOTES:

1. H IS IN METERS FOR S.I. CALCULATIONS AND FT. FOR ENGLISH CALCULATIONS.
2. THE WALL SHOULD BE DRAINED BY PERVIOUS STRUCTURE BACKFILL AND A STRUCTURE UNDERDRAIN OR WEEPHOLES, THEREFORE A HYDROSTATIC PRESSURE DIAGRAM IS OMITTED FROM THIS FIGURE.
3. THESE PRESSURE DISTRIBUTIONS ASSUME HORIZONTAL BACKFILL BEHIND THE WALL.
4. ASSUME 2 FT. THICK REGULAR GRANULAR FILL (BULK DENSITY = 125 PCF) FOR SURCHARGE LOAD

HALEY & ALDRICH

NEW BRITAIN - HARTFORD BUSWAY
NEWINGTON - WEST HARTFORD, CONNECTICUT

RECOMMENDED ACTIVE LATERAL EARTH PRESSURE LOADS ON ESCS BACKFILLED RETAINING WALLS AND ABUTMENTS

SCALE: NOT TO SCALE
NOVEMBER 2009

FIGURE 3

APPENDIX A

Recent Test Boring Logs

Driller:	T. McGovern	**Connecticut DOT Boring Report**		Hole No.:	TB-101
Inspector:	S. Poff	Town:	Newington to West Hartford	Stat./Offset:	308+18.42/7.55R
Engineer:	Haley & Aldrich, Inc.	Project No.:	171-305	Northing:	827378.897167
Start Date:	4-17-08	Route No.:		Easting:	1007126.269904
Finish Date:	4-22-08	Bridge No.:		Surface Elevation:	63.75

Project Description: Connecticut DOT Busway Final Design - Haley & Aldrich Project No. 32669-000

Casing Size(in.)/Type: 4.25/3; HSA/NW	Sampler Type/Size: SS; 1 3/8 in.	Core Barrel Type: NX
Hammer Wt.: -/300 lb Fall: -/24 in.	Hammer Wt.: 140 lb Fall: 30 in.	

Groundwater Observations: @ approximately 31.0 ft b.g.s

Depth (ft)	SAMPLES Sample Type/No.	Blows on Sampler per 6 inches	Pen. (ft.)	Rec. (in.)	RQD %	Core Times per 12"	Generalized Strata Description	Material Description and Notes	Elevation (ft)
0	S-1	9 9 9 10	2	12			FILL	Medium dense brown to dark brown coarse to fine SAND, some coarse to fine gravel, trace silt, coal cinders, no odor, dry	
	S-2	9 9 18 17	2	6				Medium dense brown to yellow-brown coarse to fine SAND and medium to fine GRAVEL, trace silt, coarse gravel, few cobbles, no odor, dry; rounded gravel and cobbles	60
5	S-3	14 16 16 11	2	0				No recovery (pushing gravel) (cuttings similar to S2)	
	S-4	12 6 9 15	2	8				Similar to S2	55
								Note: Switched to NW casing at 10.0 ft	
10	S-5	6 4 7 8	2	10				Similar to S4	50
15	S-6	3 5 5 5	2	12				Loose light brown to yellow-brown coarse to fine SAND, trace medium to fine gravel, silt, no odor, dry	
								Note: Roller bit grinding approximately 18.0 to 19.0 ft. Refusal at 19.0 ft. No cuttings indicated type of obstruction, however slight creosote odor suggests possible railroad ties. Moved 5 ft south-southwest and redrilled.	45
20	S-7	1 1 2 3	2	12				Very loose brown to orange-brown coarse to fine SAND, little medium to fine gravel, trace silt, coal particles, no odor, moist	

Sample Type: S = Split Spoon C = Core UP = Undisturbed Piston V = Vane Shear Test

Proportions Used: Trace = 1 - 10%, Little = 10 - 20%, Some = 20 - 35%, And = 35 - 50%

Total Penetration in Earth: 103.0 ft Rock: 7.0 ft	NOTES:	Sheet 1 of 5
No. of Soil Samples: 23 No. of Core Runs: 2		SM-001-M REV. 1/02

Driller: T. McGovern	**Connecticut DOT Boring Report**		Hole No.: TB-101
Inspector: S. Poff	Town: Newington to West Hartford		Stat./Offset: 308+18.42/7.55R
Engineer: Haley & Aldrich, Inc.	Project No.: 171-305		Northing: 827378.897167
Start Date: 4-17-08	Route No.:		Easting: 1007126.269904
Finish Date: 4-22-08	Bridge No.:		Surface Elevation: 63.75
Project Description: Connecticut DOT Busway Final Design - Haley & Aldrich Project No. 32669-000			
Casing Size(in.)/Type: 4.25/3; HSA/NW	Sampler Type/Size: SS; 1 3/8 in.		Core Barrel Type: NX
Hammer Wt.: -/300 lb Fall: -/24 in.	Hammer Wt.: 140 lb Fall: 30 in.		
Groundwater Observations: @ approximately 31.0 ft b.g.s			

Depth (ft)	SAMPLES Sample Type/No.	Blows on Sampler per 6 inches	Pen. (ft.)	Rec. (in.)	RQD %	Core Times per 12"	Generalized Strata Description	Material Description and Notes	Elevation (ft)
							FILL *(con't)*		40
25	S-8	3 6 6 7	2	4				Medium dense brown coarse to fine SAND and COBBLES, little silt, gravel, no odor, wet; poor recovery, mainly sandstone cobble fragments. Note: Drill action suggests cobbles and sand from 27.0 to 30.0 ft	
30	S-9	7 7 8 8	2	8				Stiff brown clayey SILT, some coarse to fine gravel, little coarse to fine sand, no odor, wet; trace wood in spoon (fill cuttings), actual depth (between 27.0 and 30.0 ft) of wood location could not be determined	35
35	S-10	4 3 3 2	2	11				Medium stiff CLAY varved with gray-brown clayey SILT, no odor, wet; top 5 in. of sample contains wood fragments (disturbed)	30
							GLACIO-LACUSTRINE DEPOSITS		25
40	S-11	1 1 2 2	2	20				Soft brown CLAY varved with gray-brown clayey SILT, no odor, wet; varve couplets typically 1.0 to 2.0 in. thick, clay dominant; one clay layer 6 in. thick from approximately 40.3 to 40.8 ft	20
45	S-12	1 3 6 3	2	20				Similar to S11, except stiff, layer of red-brown SILT, some fine sand at approximately 46.6 to 46.8 ft	

Sample Type: S = Split Spoon C = Core UP = Undisturbed Piston V = Vane Shear Test

Proportions Used: Trace = 1 - 10%, Little = 10 - 20%, Some = 20 - 35%, And = 35 - 50%

Total Penetration in Earth: 103.0 ft Rock: 7.0 ft	NOTES:	Sheet 2 of 5
No. of Soil Samples: 23 No. of Core Runs: 2		SM-001-M REV. 1/02

Driller: T. McGovern	**Connecticut DOT Boring Report**	Hole No.: TB-101	
Inspector: S. Poff	Town: Newington to West Hartford	Stat./Offset: 308+18.42/7.55R	
Engineer: Haley & Aldrich, Inc.	Project No.: 171-305	Northing: 827378.897167	
Start Date: 4-17-08	Route No.:	Easting: 1007126.269904	
Finish Date: 4-22-08	Bridge No.:	Surface Elevation: 63.75	
Project Description: Connecticut DOT Busway Final Design - Haley & Aldrich Project No. 32669-000			
Casing Size(in.)/Type: 4.25/3; HSA/NW	Sampler Type/Size: SS; 1 3/8 in.	Core Barrel Type: NX	
Hammer Wt.: -/300 lb Fall: -/24 in.	Hammer Wt.: 140 lb Fall: 30 in.		
Groundwater Observations: @ approximately 31.0 ft b.g.s			

Depth (ft)	Sample Type/No.	Blows on Sampler per 6 inches	Pen. (ft.)	Rec. (in.)	RQD %	Core Times per 12"	Generalized Strata Description	Material Description and Notes	Elevation (ft)
							GLACIO-LACUSTRINE DEPOSITS *(con't)*		
50	S-13	1 1/12 - 2	2	23				Very soft red-brown to brown CLAY varved with brown clayey SILT, trace coarse to fine sand, no odor, wet; clay layer thicknesses vary from approximately 0.5 to 3.0 in., silt thicknesses vary from approximately 0.25 to 2.0 in.; trace coarse to fine sand and fine gravel-sized dropstones	15
	UP-1	p u s h	2	24				Note: Piston tube sample from 53.0 to 55.0 ft	10
55	S-14	3 3 4 3	2	24				Similar to S13	
									5
60	S-15	3 2 4 3	2	24				Medium stiff brown laminated clayey SILT, occasional clay layers generally 0.25 to 0.5 in. thick, trace coarse sand to fine gravel-sized dropstones, no odor, wet	
									0
65	S-16	6 6 5 2	2	24				Similar to S15, except stiff	
								Note: Drill action suggests stiffer/coarser material at approximately 68.5 ft	
							GLACIAL TILL		-5

Sample Type: S = Split Spoon C = Core UP = Undisturbed Piston V = Vane Shear Test

Proportions Used: Trace = 1 - 10%, Little = 10 - 20%, Some = 20 - 35%, And = 35 - 50%

Total Penetration in Earth: 103.0 ft Rock: 7.0 ft	NOTES:	Sheet 3 of 5
No. of Soil Samples: 23 No. of Core Runs: 2		SM-001-M REV. 1/02

Driller: T. McGovern	**Connecticut DOT Boring Report**		Hole No.: TB-101
Inspector: S. Poff	Town: Newington to West Hartford		Stat./Offset: 308+18.42/7.55R
Engineer: Haley & Aldrich, Inc.	Project No.: 171-305		Northing: 827378.897167
Start Date: 4-17-08	Route No.:		Easting: 1007126.269904
Finish Date: 4-22-08	Bridge No.:		Surface Elevation: 63.75
Project Description: Connecticut DOT Busway Final Design - Haley & Aldrich Project No. 32669-000			
Casing Size(in.)/Type: 4.25/3; HSA/NW	Sampler Type/Size: SS; 1 3/8 in.		Core Barrel Type: NX
Hammer Wt.: -/300 lb Fall: -/24 in.	Hammer Wt.: 140 lb Fall: 30 in.		
Groundwater Observations: @ approximately 31.0 ft b.g.s			

Depth (ft)	Sample Type/No.	Blows on Sampler per 6 inches	Pen. (ft.)	Rec. (in.)	RQD %	Core Times per 12"	Generalized Strata Description	Material Description and Notes	Elevation (ft)
							GLACIAL TILL *(con't)*		
70	S-17	21 21 25 21	2	16				Hard red-brown SILT, little coarse to fine sand, coarse to fine gravel, no odor, wet; gravel present in layers at approximately 69.5 to 69.7 ft and 70.3 to 70.5 ft, some stratification, possible flow-till Note: Few cobbles from 72.0 to 75.0 ft	
									-10
75	S-18	19 54 94 98	2	15				Very dense red-brown coarse to fine SAND and SILT, some coarse to fine gravel, trace clay, few cobbles, no odor, wet; compact and well-bonded in-situ; bottom 6 in. of sample is brown siltstone fragments (cobble)	
									-15
80	S-19	96 100/5	0.9	10				Similar to S18, composed primarily of horizontal red-brown shale flakes	
									-20
85	S-20	100/5	0.4	4				Very dense red-brown coarse to fine SAND and fine GRAVEL, some silt, little coarse to medium gravel, no odor, wet; well-bonded in-situ	
									-25
90	S-21	100/4	0.3	4				Similar to S20	

Sample Type: S = Split Spoon C = Core UP = Undisturbed Piston V = Vane Shear Test

Proportions Used: Trace = 1 - 10%, Little = 10 - 20%, Some = 20 - 35%, And = 35 - 50%

Total Penetration in Earth: 103.0 ft Rock: 7.0 ft	NOTES:	Sheet 4 of 5
No. of Soil Samples: 23 No. of Core Runs: 2		SM-001-M REV. 1/02

Driller: T. McGovern	**Connecticut DOT Boring Report**		Hole No.: TB-101
Inspector: S. Poff	Town: Newington to West Hartford		Stat./Offset: 308+18.42/7.55R
Engineer: Haley & Aldrich, Inc.	Project No.: 171-305		Northing: 827378.897167
Start Date: 4-17-08	Route No.:		Easting: 1007126.269904
Finish Date: 4-22-08	Bridge No.:		Surface Elevation: 63.75
Project Description: Connecticut DOT Busway Final Design - Haley & Aldrich Project No. 32669-000			
Casing Size(in.)/Type: 4.25/3; HSA/NW	Sampler Type/Size: SS; 1 3/8 in.		Core Barrel Type: NX
Hammer Wt.: -/300 lb Fall: -/24 in.	Hammer Wt.: 140 lb Fall: 30 in.		
Groundwater Observations: @ approximately 31.0 ft b.g.s			

Depth (ft)	SAMPLES Sample Type/No.	Blows on Sampler per 6 inches	Pen. (ft.)	Rec. (in.)	RQD %	Core Times per 12"	Generalized Strata Description	Material Description and Notes	Elevation (ft)
							GLACIAL TILL *(con't)*		
									-30
95	S-22	56 100/4	0.8	9				Similar to S21, gravel lithologies in sample dominated by siltstone but includes basalt, wet	
									-35
100	S-23	56 100/6	1	9			BEDROCK	Similar to S22	
	C-1		2	24	0			Very dense/soft red-brown decomposed SHALE, no odor, wet Note: Roller bit refusal at 103.0 Moderately hard, highly to moderately weathered, brown, fine-grained to aphanitic SHALE with occasional thin beds of fine-grained sandstone up to 2 in. thick. Bedding is low angle, planar, laminated with frequent depositional features. Primary joints low angle along bedding, extremely to very close, smooth, planar to slightly undulating, slightly disintegrated, open. Secondary joints high angle to vertical, close (or wider) spacing, rough, stepped, slightly disintegrated to open, with small calcite-lined vugs (largest vug observed measured 1.5 in. long vertical, 0.25 in. wide, approximately 0.5 in. deep)	-40
105	C-2		5	54	0	1 1.5 1.5 2 2			-45
110								-PORTLAND ARKOSE FORMATION- Note: Core terminated at 110.0 ft due to refusal and destruction of core bit by metal fragments (casing shoe fragments)	
								END OF BORING 110 ft	-50
115									

Sample Type: S = Split Spoon C = Core UP = Undisturbed Piston V = Vane Shear Test

Proportions Used: Trace = 1 - 10%, Little = 10 - 20%, Some = 20 - 35%, And = 35 - 50%

Total Penetration in Earth: 103.0 ft Rock: 7.0 ft	NOTES:	Sheet 5 of 5
No. of Soil Samples: 23 No. of Core Runs: 2		SM-001-M REV. 1/02

Driller: T. McGovern	**Connecticut DOT Boring Report**		Hole No.: TB-102(OW)
Inspector: S. Poff	Town: Newington to West Hartford		Stat./Offset: 309+15.00/6.71R
Engineer: Haley & Aldrich, Inc.	Project No.: 171-305		Northing: 827461.702129
Start Date: 4-22-08	Route No.:		Easting: 1007177.191157
Finish Date: 4-24-08	Bridge No.:		Surface Elevation: 63.51
Project Description: Connecticut DOT Busway Final Design - Haley & Aldrich Project No. 32669-000			
Casing Size(in.)/Type: 4.25/4; HSA/HW	Sampler Type/Size: SS; 1 3/8 in.		Core Barrel Type: None
Hammer Wt.: -/300 lb Fall: -/24 in.	Hammer Wt.: 140 lb Fall: 30 in.		
Groundwater Observations: @ approximately 31.0 ft b.g.s after 7 days			

Depth (ft)	Sample Type/No.	Blows on Sampler per 6 inches	Pen. (ft.)	Rec. (in.)	RQD %	Generalized Strata Description	Material Description and Notes	Elevation (ft)
0	S-1	5 7 9 13	2	12		FILL	Medium dense brown to light brown coarse to fine SAND and COAL CINDERS, some coarse to fine gravel, trace silt, no odor, dry	
	S-2	11 16 21 21	2	7			Dense brown coarse to fine SAND and coarse to fine GRAVEL, trace silt, no odor, dry; rounded gravel	60
5	S-3	6 9 8 12	2	10			Similar to S2, except medium dense Note: Frequent cobbles from 5.0 to 10.0 ft	
	S-4	7 7 9 10	2	12			Similar to S3 Note: Switched to NW casing at 10.0 ft	55
10	S-5	2 4 4 5	2	15			Loose light brown fine SAND, some coal cinders (layer approximately 11.5 to 11.8 ft), little coarse sand, medium to gravel, trace silt, no odor, dry	50
15	S-6	2 3 3 2	2	15			Loose light brown coarse to fine SAND, trace silt, fine gravel, no odor, dry Note: Auger grinding approximately 18.0 to 19.0 ft. Refusal at 19.0 ft. Offset 5 ft north-northeast and re-drill to 20.0 ft Note: Switched to HW casing at 20.0 ft	45
20	S-7	3 4 9 7	2	14			Similar to S6, except medium dense, little gravel	

Sample Type: S = Split Spoon C = Core UP = Undisturbed Piston V = Vane Shear Test

Proportions Used: Trace = 1 - 10%, Little = 10 - 20%, Some = 20 - 35%, And = 35 - 50%

Total Penetration in Earth: 80.0 ft Rock: - ft	NOTES:	Sheet 1 of 4
No. of Soil Samples: 19 No. of Core Runs: -		SM-001-M REV. 1/02

Driller: T. McGovern	**Connecticut DOT Boring Report**		Hole No.: TB-102(OW)
Inspector: S. Poff	Town: Newington to West Hartford		Stat./Offset: 309+15.00/6.71R
Engineer: Haley & Aldrich, Inc.	Project No.: 171-305		Northing: 827461.702129
Start Date: 4-22-08	Route No.:		Easting: 1007177.191157
Finish Date: 4-24-08	Bridge No.:		Surface Elevation: 63.51
Project Description: Connecticut DOT Busway Final Design - Haley & Aldrich Project No. 32669-000			
Casing Size(in.)/Type: 4.25/4; HSA/HW	Sampler Type/Size: SS; 1 3/8 in.		Core Barrel Type: None
Hammer Wt.: -/300 lb Fall: -/24 in.	Hammer Wt.: 140 lb Fall: 30 in.		
Groundwater Observations: @ approximately 31.0 ft b.g.s after 7 days			

Depth (ft)	Sample Type/No.	Blows on Sampler per 6 inches	Pen. (ft.)	Rec. (in.)	RQD %	Generalized Strata Description	Material Description and Notes	Elevation (ft)
						FILL *(con't)*		40
25	S-8	11 12 15 15	2	12			Medium dense brown to dark brown coarse to fine SAND, some coarse to fine gravel, little silt, trace wood (branches), no odor, dry Note: Drill through wood (treated lumber) from approximately 28.0 to 29.0 ft. Roller bit grinding through hard material 29.0 to 35.0 ft (possible granite block wall-cuttings include flecks of muscovite and biotite, fine quartz sand and white powder that does not react with acid (ground orthoclase). Borehole abandoned after refusal.	35
30	S-9	6 7 18 21	2	8			Off set 7 ft north-northeast and re-drilled, wood at approximately 28.5 to 29.5 ft Very stiff gray CLAY with wood, gravel, cobbles, boulders, wood lumber odor, dry Note: Drill action suggests frequent voids approximately 3 to 4 in. diameter on average, but occasionally greater than 12 in., dense materials between voids from 32.0 to 36.0 ft	30
35			1				Possible void from 35. to 36.0 ft	
	S-10	8 100/5	0.9	4			Very dense brown coarse to fine GRAVEL, little coarse to fine sand, trace silt, no odor, wet (poor recovery) Note: Drill action suggests gravel and cobbles from 36.0 to 37.5 ft	
						GLACIO-LACUSTRINE DEPOSITS		25
40							Note: Roller bit released from drill head and swivel at 40.0 ft. Sank to approximately 41.0 ft under weight of rods Very soft brown to red-brown CLAY varved with brown to gray-brown clayey SILT, no odor, wet; clay and silt layers approximately 0.5 to 1.0 in. thick each on average, with occasional clay layers up to 3 in. thick	
	S-11	1/12 - 1 2	2	19				20
45	UP-1	p u s h	2	24			Note: Piston tube sample 45.0 to 47.0 ft	

Sample Type: S = Split Spoon C = Core UP = Undisturbed Piston V = Vane Shear Test

Proportions Used: Trace = 1 - 10%, Little = 10 - 20%, Some = 20 - 35%, And = 35 - 50%

Total Penetration in Earth: 80.0 ft Rock: - ft	NOTES:	Sheet 2 of 4
No. of Soil Samples: 19 No. of Core Runs: -		SM-001-M REV. 1/02

Driller: T. McGovern	**Connecticut DOT Boring Report**	Hole No.: TB-102(OW)	
Inspector: S. Poff	Town: Newington to West Hartford	Stat./Offset: 309+15.00/6.71R	
Engineer: Haley & Aldrich, Inc.	Project No.: 171-305	Northing: 827461.702129	
Start Date: 4-22-08	Route No.:	Easting: 1007177.191157	
Finish Date: 4-24-08	Bridge No.:	Surface Elevation: 63.51	
Project Description: Connecticut DOT Busway Final Design - Haley & Aldrich Project No. 32669-000			
Casing Size(in.)/Type: 4.25/4; HSA/HW	Sampler Type/Size: SS; 1 3/8 in.	Core Barrel Type: None	
Hammer Wt.: -/300 lb Fall: -/24 in.	Hammer Wt.: 140 lb Fall: 30 in.		
Groundwater Observations: @ approximately 31.0 ft b.g.s after 7 days			

Depth (ft)	Sample Type/No.	Blows on Sampler per 6 inches	Pen. (ft.)	Rec. (in.)	RQD %	Generalized Strata Description	Material Description and Notes	Elevation (ft)
	S-12	2 3 8 8	2	22		GLACIO-LACUSTRINE DEPOSITS *(con't)*	Similar to S11, except stiff with occasional layer of red-brown SILT and fine SAND	15
50	UP-2	p u s h	2	24			Note: Piston tube sample 50.0 to 52.0 ft	
	S-13	2 3 4 4	2	10			Similar to S12, except medium stiff, no fine sand layers, all brown	10
55	UP-3	p u s h	2	22			Note: Piston tube sample 55.0 to 57.0 ft	
	S-14	1/12 - 1 2	2	6			Similar to S13, except very loose	5
60	UP-4	p u s h	2	24			Note: Piston tube sample 60.0 to 62.0 ft	
	S-15	2 4 8 15	2	16			Similar to S14, except stiff	0
65	S-16	26 34 30 37	2	10			Hard brown laminated SILT with frequent seams of brown clay and light brown fine sand, no odor, wet	-5

Sample Type: S = Split Spoon C = Core UP = Undisturbed Piston V = Vane Shear Test

Proportions Used: Trace = 1 - 10%, Little = 10 - 20%, Some = 20 - 35%, And = 35 - 50%

Total Penetration in Earth: 80.0 ft Rock: - ft	NOTES:	Sheet 3 of 4
No. of Soil Samples: 19 No. of Core Runs: -		SM-001-M REV. 1/02

Driller: T. McGovern	**Connecticut DOT Boring Report**	Hole No.: TB-102(OW)	
Inspector: S. Poff	Town: Newington to West Hartford	Stat./Offset: 309+15.00/6.71R	
Engineer: Haley & Aldrich, Inc.	Project No.: 171-305	Northing: 827461.702129	
Start Date: 4-22-08	Route No.:	Easting: 1007177.191157	
Finish Date: 4-24-08	Bridge No.:	Surface Elevation: 63.51	
Project Description: Connecticut DOT Busway Final Design - Haley & Aldrich Project No. 32669-000			
Casing Size(in)/Type: 4.25/4; HSA/HW	Sampler Type/Size: SS; 1 3/8 in.	Core Barrel Type: None	
Hammer Wt.: -/300 lb Fall: -/24 in.	Hammer Wt.: 140 lb Fall: 30 in.		
Groundwater Observations: @ approximately 31.0 ft b.g.s after 7 days			

Depth (ft)	Sample Type/No.	Blows on Sampler per 6 inches	Pen. (ft.)	Rec. (in.)	RQD %	Generalized Strata Description	Material Description and Notes	Elevation (ft)
70	S-17	13 16 18 23	2	14		GLACIO-LACUSTRINE DEPOSITS *(con't)*	Similar to S16, except dense, trace coarse to fine sand, occasional seams of clayey silt	
								-10
75	S-18	23 31 51 100/1	1.6	9			Hard brown SILT, trace coarse to fine sand, no odor, wet; massive, with 0.5 in. of red-brown clayey SILT and coarse to fine SAND, little fine gravel in spoon tip	
						GLACIAL TILL		
	S-19	95 100/4	0.8	6			Very dense red-brown coarse to fine SAND and coarse to fine GRAVEL, some clayey silt, no odor, wet; well-bonded in-situ	-15
							Note: Well installed in completed borehole	
80							END OF BORING 78.8 ft	
								-20
85								
								-25
90								

Sample Type: S = Split Spoon C = Core UP = Undisturbed Piston V = Vane Shear Test

Proportions Used: Trace = 1 - 10%, Little = 10 - 20%, Some = 20 - 35%, And = 35 - 50%

Total Penetration in Earth: 80.0 ft Rock: - ft	NOTES:	Sheet 4 of 4
No. of Soil Samples: 19 No. of Core Runs: -		SM-001-M REV. 1/02

HALEY & ALDRICH

OBSERVATION WELL INSTALLATION REPORT

Well No. TB-102(OW)

Boring No. TB-102(OW)

PROJECT	Connecticut DOT Busway	H&A FILE NO.	32669-000
LOCATION	Newington/West Hartford, Connecticut	PROJECT MGR.	J. Salsgiver
CLIENT	Ammann & Whitney, Inc.	FIELD REP.	S. Poff
CONTRACTOR	General Borings, Inc.	DATE INSTALLED	4/24/2008
DRILLER	T. McGovern	WATER LEVEL	31.0 ft after 7 days

Ground El. 63.51 ft
El. Datum NGVD29

Location See Plan

☑ Guard Pipe
☐ Roadway Box

SOIL/ROCK CONDITIONS	BOREHOLE BACKFILL	
	PIPE & CONCRETE	1
FILL	PIPE & CUTTINGS	25
	PIPE & SEAL	28
	PIPE & SAND	30
GLACIOLUSTRINE DEPOSITS	SCREEN & SAND	40
GLACIAL TILL	SAND & CUTTINGS	80
80 (Bottom of Exploration)		

(Numbers refer to depth from ground surface in feet)

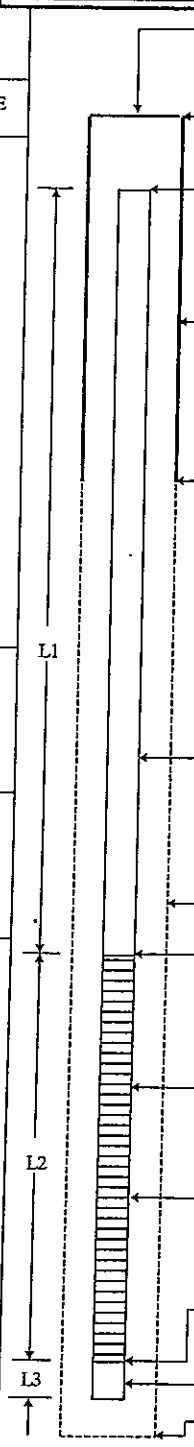

(Not to Scale)

Type of protective cover/lock	Steel Guard Pipe	
Height of top of guard pipe above ground surface	3.0	ft
Height of top of riser pipe above ground surface	2.93	ft
Type of protective casing:	Steel Guard Pipe	
Length	3.5	ft
Inside Diameter	6.0	in
Depth of bottom of guard pipe	0.6	ft

Type of Seals	Top of Seal (ft)	Thickness (ft)
Concrete	0.0	1.0
Bentonite Seal	25.0	3.0

Type of riser pipe:	Schedule 40 PVC	
Inside diameter of riser pipe	2.0	in
Type of backfill around riser	Cuttings/Bentonite/Sand	
Diameter of borehole	6.0	in
Depth to top of well screen	30.0	ft
Type of screen	Schedule 40 PVC	
Screen gauge or size of openings	0.010	in
Diameter of screen	2.0	in
Type of backfill around screen	Filter Sand	
Depth of bottom of well screen	40.0	ft
Bottom of Silt trap	40.3	ft
Depth of bottom of borehole	80.0	ft

COMMENTS:

Form 2007: G:\32669 CT Busway\000\Databases\2008-0501-HAI-32669000 wells

HALEY & ALDRICH

GROUNDWATER MONITORING REPORT

OW/PZ NUMBER
TB-102(OW)

PROJECT	Connecticut DOT Busway Project	H&A FILE NO.	32669-000
LOCATION	Newington/West Hartford, CT	PROJECT MGR.	J. Salsgiver
CLIENT	Connecticut DOT	FIELD REP.	S. Poff
CONTRACTOR	General Borings, Inc.	DATE	See below
ELEVATION OF REFERENCE POINT	63.51		

DESCRIPTION OF REFERENCE POINT ☐ PVC ☐ Roadway / Casing ☑ Ground Surface ☐ Other:

Date	Time	Elapsed Time (days)	Depth to Water from Reference Point	Elevation of Water	Remarks	Read By
1-May-08	1320	7	30.92	32.59	PVC Stick-up = 2.39ft	SWP
25-Jun-08	1120	62	30.92	32.59		SWP

Form #3170

Driller: E. DelPriore	**Connecticut DOT Boring Report**	Hole No.: RW-118	
Inspector: S. Poff	Town: Newington to West Hartford	Stat./Offset: 307+10.44/18.34R	
Engineer: Haley & Aldrich, Inc.	Project No.: 171-305	Northing: 827284.770257	
Start Date: 4-17-08	Route No.:	Easting: 1007072.189525	
Finish Date: 4-17-08	Bridge No.:	Surface Elevation: 64.39	

Project Description: Connecticut DOT Busway Final Design - Haley & Aldrich Project No. 32669-000

Casing Size(in.)/Type: 4.25/3; HSA/NW	Sampler Type/Size: SS; 1 3/8 in.	Core Barrel Type: None
Hammer Wt.: -/300 lb Fall: -/24 in.	Hammer Wt.: 140 lb Fall: 30 in.	

Groundwater Observations: @ approximately 10.0 ft b.g.s

Depth (ft)	SAMPLES Sample Type/No.	Blows on Sampler per 6 inches	Pen. (ft.)	Rec. (in.)	RQD %	Generalized Strata Description	Material Description and Notes	Elevation (ft)
0	S-1	8 9 9 18	2	5		FILL	Medium dense brown to tan coarse to fine SAND and medium to fine GRAVEL, trace silt, no odor, dry	
	S-2	21 23 20 17	2	6			Dense brown coarse to fine SAND, some coarse to fine gravel, trace silt, coal cinders, no odor, dry	
5	S-3	3 3 4 9	2	14			Stiff brown to gray to yellow-brown clayey SILT, trace fine sand, no odor, moist; mottled	60
	S-4	9 9 9 10	2	4			Similar to S3, except very stiff, poor recovery; piece of gravel pushed through clay Note: Switched to NW casing at 10.0 ft	
10	S-5	4 4 4 6	2	20			Medium stiff dark brown to dark gray-brown clayey SILT, trace fine sand, organic fibers, slight organic odor, wet	55
15	S-6	3 3 4 5	2	21			Medium stiff dark brown to dark gray-brown clayey SILT and ORGANIC SILT, trace fine sand, organics, organic odor, wet; stratified	50
20	S-7	2 4 3 4	2	18			Similar to S6, except slight organic odor	45

Sample Type: S = Split Spoon C = Core UP = Undisturbed Piston V = Vane Shear Test

Proportions Used: Trace = 1 - 10%, Little = 10 - 20%, Some = 20 - 35%, And = 35 - 50%

Total Penetration in Earth: 55.0 ft Rock: - ft	NOTES:	Sheet 1 of 3
No. of Soil Samples: 14 No. of Core Runs: -		SM-001-M REV. 1/02

Driller: E. DelPriore	**Connecticut DOT Boring Report**	Hole No.: RW-118	
Inspector: S. Poff	Town: Newington to West Hartford	Stat./Offset: 307+10.44/18.34R	
Engineer: Haley & Aldrich, Inc.	Project No.: 171-305	Northing: 827284.770257	
Start Date: 4-17-08	Route No.:	Easting: 1007072.189525	
Finish Date: 4-17-08	Bridge No.:	Surface Elevation: 64.39	

Project Description: Connecticut DOT Busway Final Design - Haley & Aldrich Project No. 32669-000

Casing Size(in.)/Type: 4.25/3; HSA/NW	Sampler Type/Size: SS; 1 3/8 in.	Core Barrel Type: None
Hammer Wt.: -/300 lb Fall: -/24 in.	Hammer Wt.: 140 lb Fall: 30 in.	

Groundwater Observations: @ approximately 10.0 ft b.g.s

Depth (ft)	SAMPLES Sample Type/No.	Blows on Sampler per 6 inches	Pen. (ft.)	Rec. (in.)	RQD %	Generalized Strata Description	Material Description and Notes	Elevation (ft)
						GLACIO-LACUSTRINE DEPOSITS *(con't)*		
25	S-8	7 8 8 7	2	24			Very stiff red-brown CLAY varved with brown SILT, trace fine sand, no odor, wet; varve couplets generally 0.25 to 0.75 in. thick on average	40
30	S-9	4 5 4 4	2	24			Similar to S8, except stiff; varve couplets average approximately 1.0 to 1.5 in. thick	35
35	S-10	1 1 1 2	2	24			Very soft brown to red-brown CLAY varved with brown to gray-brown clayey SILT, no odor, wet; varve couplets approximately 1.0 to 2.0 in. thick on average	30
40	S-11	woh/18 - - 2	2	24			Similar to S10	25
45	S-12	3 2 1 1	2	24			Similar to S11, except soft	20

Sample Type: S = Split Spoon C = Core UP = Undisturbed Piston V = Vane Shear Test

Proportions Used: Trace = 1 - 10%, Little = 10 - 20%, Some = 20 - 35%, And = 35 - 50%

Total Penetration in Earth: 55.0 ft Rock: - ft	NOTES:	Sheet 2 of 3
No. of Soil Samples: 14 No. of Core Runs: -		SM-001-M REV. 1/02

Driller: E. DelPriore	**Connecticut DOT Boring Report**	Hole No.: RW-118	
Inspector: S. Poff	Town: Newington to West Hartford	Stat./Offset: 307+10.44/18.34R	
Engineer: Haley & Aldrich, Inc.	Project No.: 171-305	Northing: 827284.770257	
Start Date: 4-17-08	Route No.:	Easting: 1007072.189525	
Finish Date: 4-17-08	Bridge No.:	Surface Elevation: 64.39	
Project Description: Connecticut DOT Busway Final Design - Haley & Aldrich Project No. 32669-000			
Casing Size(in.)/Type: 4.25/3; HSA/NW	Sampler Type/Size: SS; 1 3/8 in.	Core Barrel Type: None	
Hammer Wt.: -/300 lb Fall: -/24 in.	Hammer Wt.: 140 lb Fall: 30 in.		
Groundwater Observations: @ approximately 10.0 ft b.g.s			

Depth (ft)	SAMPLES Sample Type/No.	Blows on Sampler per 6 inches	Pen. (ft.)	Rec. (in.)	RQD %	Generalized Strata Description	Material Description and Notes	Elevation (ft)
						GLACIO-LACUSTRINE DEPOSITS *(con't)*		
	UP-1	p u s h	2	24			Note: Piston tube sample at 48.0 to 50.0 ft	
50								15
	S-13	4 2 3 4	2	24			Similar to S12, except medium stiff, brown (both clay and silt), trace sand	
	S-14	3 3 4 5	2	24			Similar to S13	
55								10
							END OF BORING 55 ft	
60								5
65								0

Sample Type: S = Split Spoon C = Core UP = Undisturbed Piston V = Vane Shear Test

Proportions Used: Trace = 1 - 10%, Little = 10 - 20%, Some = 20 - 35%, And = 35 - 50%

Total Penetration in Earth: 55.0 ft Rock: - ft	NOTES:	Sheet 3 of 3
No. of Soil Samples: 14 No. of Core Runs: -		SM-001-M REV. 1/02

Driller: E. DelPriore	**Connecticut DOT Boring Report**	Hole No.: RW-119	
Inspector: S. Poff	Town: Newington to West Hartford	Stat./Offset: 309+53.52/1.22L	
Engineer: Haley & Aldrich, Inc.	Project No.: 171-305	Northing: 827498.865187	
Start Date: 4-19-08	Route No.:	Easting: 1007190.063762	
Finish Date: 4-21-08	Bridge No.:	Surface Elevation: 63.41	

Project Description: Connecticut DOT Busway Final Design - Haley & Aldrich Project No. 32669-000

Casing Size(in.)/Type: 4.25/3; HSA/NW	Sampler Type/Size: SS; 1 3/8 in.	Core Barrel Type: None
Hammer Wt.: -/300 lb Fall: -/24 in.	Hammer Wt.: 140 lb Fall: 30 in.	

Groundwater Observations: @ approximately 15.0 ft b.g.s

Depth (ft)	SAMPLES: Sample Type/No.	Blows on Sampler per 6 inches	Pen. (ft.)	Rec. (in.)	RQD %	Generalized Strata Description	Material Description and Notes	Elevation (ft)
0	S-1	4 5 4 6	2	6		FILL	Loose dark brown coarse to fine SAND, some coarse to fine gravel,little silt, trace roots, leaves, slight organic (topsoil) odor, dry	
	S-2	7 5 4 4	2	13			Loose red-brown coarse to fine SAND, some coal cinders, little coarse to fine gravel, silt, no odor, dry	60
5	S-3	7 8 9 9	2	11			Similar to S2, except medium dense, little coal cinders, trace medium to fine gravel	
	S-4	6 5 7 9	2	15			Similar to S3, except no coal cinders	55
							Note: Switched to NW casing at 10.0 ft	
10	S-5	6 8 6 9	2	12			Medium dense dark brown coarse to fine sandy silty CLAY, trace fine gravel	50
15	S-6	3 4 3 3	2	24			Medium stiff brown SILT, some fine sand, trace coarse sand, organic fibers, no odor, wet	45
20	S-7	3 3 3 4	2	24			Medium stiff, predominantly gray-brown with small brown, blue-gray, green, gray and red-brown specks, SILT, some coarse to fine sand, trace clay, fine gravel, organic fibers, very slight organic odor, wet	

Sample Type: S = Split Spoon C = Core UP = Undisturbed Piston V = Vane Shear Test

Proportions Used: Trace = 1 - 10%, Little = 10 - 20%, Some = 20 - 35%, And = 35 - 50%

Total Penetration in Earth: 60.0 ft Rock: - ft	NOTES:	Sheet 1 of 3
No. of Soil Samples: 15 No. of Core Runs: -		SM-001-M REV. 1/02

Driller: E. DelPriore	**Connecticut DOT Boring Report**	Hole No.: RW-119	
Inspector: S. Poff	Town: Newington to West Hartford	Stat./Offset: 309+53.52/1.22L	
Engineer: Haley & Aldrich, Inc.	Project No.: 171-305	Northing: 827498.865187	
Start Date: 4-19-08	Route No.:	Easting: 1007190.063762	
Finish Date: 4-21-08	Bridge No.:	Surface Elevation: 63.41	
Project Description: Connecticut DOT Busway Final Design - Haley & Aldrich Project No. 32669-000			
Casing Size(in)/Type: 4.25/3; HSA/NW	Sampler Type/Size: SS; 1 3/8 in.	Core Barrel Type: None	
Hammer Wt.: -/300 lb Fall: -/24 in.	Hammer Wt.: 140 lb Fall: 30 in.		
Groundwater Observations: @ approximately 15.0 ft b.g.s			

Depth (ft)	Sample Type/No.	Blows on Sampler per 6 inches	Pen. (ft.)	Rec. (in.)	RQD %	Generalized Strata Description	Material Description and Notes	Elevation (ft)
						FILL *(con't)*		40
25	S-8	3 3 6 4	2	24			Similar to S7, except interbedded SILT and CLAY, trace fine sand (25.0 to 25.6 ft and 26.7 to 27.0 ft) with SILT and fine SAND (25.6 to 26.7 ft), no odor, wet; frequent lenticular deposits	35
30	S-9	5 7 15 12	2	22		GLACIO-LACUSTRINE DEPOSITS	Very stiff brown to red-brown SILT, some coarse to fine sand, little fine gravel grading to coarse to fine SAND, some medium to fine gravel, little silt, no odor, wet	30
35	S-10	woh 1 2 2	2	24			Soft brown to red-brown CLAY varved with brown to gray-brown SILT, no odor, wet; varve couplets generally 1 to 2 in. thick	25
40	S-11	woh woh woh 1	2	24			Similar to S10, except very soft; varve thicknesses reduce to approximately 1/8 to 1/4 in. thick on average at approximately 41.0 ft	
	UP-1	p u s h	2	24			Note: Piston tube sample from 43.0 to 45.0 ft	20
45	S-12	woh woh woh 2	2	16			Similar to S11, except varve couplets 1.5 to 2.5 in. thick on average; occasional sand to fine gravel-sized dropstones	

Sample Type: S = Split Spoon C = Core UP = Undisturbed Piston V = Vane Shear Test

Proportions Used: Trace = 1 - 10%, Little = 10 - 20%, Some = 20 - 35%, And = 35 - 50%

Total Penetration in Earth: 60.0 ft Rock: - ft	NOTES:	Sheet 2 of 3
No. of Soil Samples: 15 No. of Core Runs: -		SM-001-M REV. 1/02

Driller: E. DelPriore	**Connecticut DOT Boring Report**	Hole No.: RW-119	
Inspector: S. Poff	Town: Newington to West Hartford	Stat./Offset: 309+53.52/1.22L	
Engineer: Haley & Aldrich, Inc.	Project No.: 171-305	Northing: 827498.865187	
Start Date: 4-19-08	Route No.:	Easting: 1007190.063762	
Finish Date: 4-21-08	Bridge No.:	Surface Elevation: 63.41	
Project Description: Connecticut DOT Busway Final Design - Haley & Aldrich Project No. 32669-000			
Casing Size(in.)/Type: 4.25/3; HSA/NW	Sampler Type/Size: SS; 1 3/8 in.	Core Barrel Type: None	
Hammer Wt.: -/300 lb Fall: -/24 in.	Hammer Wt.: 140 lb Fall: 30 in.		
Groundwater Observations: @ approximately 15.0 ft b.g.s			

Depth (ft)	SAMPLES Sample Type/No.	Blows on Sampler per 6 inches	Pen. (ft.)	Rec. (in.)	RQD %	Generalized Strata Description	Material Description and Notes	Elevation (ft)
						GLACIO-LACUSTRINE DEPOSITS *(con't)*		15
50	S-13	woh woh 1 2	2	20			Similar to S12	10
55	S-14	3 3 3 4	2	24			Medium stiff brown to red-brown irregularly interbedded CLAY and clayey SILT, trace coarse to fine sand in occasional layers, no odor, wet	
	S-15	3 3 5 5	2	24			Similar to S14	5
60							END OF BORING 60 ft	0
65								-5

Sample Type: S = Split Spoon C = Core UP = Undisturbed Piston V = Vane Shear Test

Proportions Used: Trace = 1 - 10%, Little = 10 - 20%, Some = 20 - 35%, And = 35 - 50%

Total Penetration in Earth: 60.0 ft Rock: - ft	NOTES:	Sheet 3 of 3
No. of Soil Samples: 15 No. of Core Runs: -		SM-001-M REV. 1/02

APPENDIX B

Previous Test Boring Logs

Driller: Mike St. John/NEBC	**Connecticut DOT Boring Report**	Hole No.: SB-52
Inspector: Ryan Tinsley	Town: West Hartford / Hartford, CT	Stat./Offset:
Engineer: Baker Engineering	Project No.: 171-0305	Northing: 827379.8
Start Date: 7-8-03	Route No.:	Easting: 1007121.6
Finish Date: 7-9-03	Bridge No.:	Surface Elevation: 64.2
Project Description: New Britain to Hartford Busway		
Casing Type/Size: HW 4" ID	Sampler Type/Size: SS/ 1-3/8 " ID	Core Barrel Type: NQ/1 7/8" ID
Hammer Wt.: 300 Fall: 24	Hammer Wt.: 140 Fall: 30	

Groundwater Obs. @ 18.0' after: 0 hours, @29.2 after: 24 hours, @28.0 after: 48 hours

Baker Info: S.O. Number: B25624LPDSOIL41802/42002 File: northern Template: CDOT E (LD4 1/03)

Depth (ft.)	SAMPLES Sample Type/No.	Blows on Sampler per 0.5 ft.	Pen. (ft.)	Rec. (ft./%)	RQD (ft./%)	Generalized Strata Description	Material Description and Notes	Elevation (ft.)
0–1	A-N		1.5					64
2	S-1	6 5 3	1.5	1.3			WELL-GRADED SAND WITH GRAVEL (SW) - brown, black and tan fine to coarse sand, some fine to coarse gravel; dry, loose, NP; (FILL).	63
3–4	A-N		1.5					62
5	S-2	12 16 18	1.5	1.0			WELL-GRADED SAND WITH GRAVEL (SW) - brown, black and tan fine to coarse sand, some fine to coarse gravel; dry, dense, NP; (FILL).	61
6–7	A-N		1.5					60
8	S-3	13 15 11	1.5	1.5			WELL-GRADED SAND WITH GRAVEL (SW) - brown, black and tan fine to coarse sand, some fine to coarse gravel; dry, medium dense, NP; (FILL).	59
9	A-N		1.0					58
10–11	S-4	10 10 9	1.5	0.2			WELL-GRADED SAND WITH GRAVEL (SW) - brown, black and tan fine to coarse sand, some fine to coarse gravel; dry, medium dense, NP; (FILL).	57
12–13	W-N		2.0					56
						13.5'	ELEV. 50.7	55
14	S-5	6 6 8	1.5	1.0			WELL-GRADED SAND WITH GRAVEL (SW) - tan, brown and black fine to coarse sand, some fine to coarse rounded gravel; moist, medium dense, NP; (ALLUVIUM).	54
15–16	W-N		1.5					53
17	S-6	5 6 7	1.5	0.7			WELL-GRADED SAND WITH GRAVEL (SW) - tan, brown and black fine to coarse sand, some fine to coarse rounded gravel; moist, medium dense, NP; (ALLUVIUM).	52
18–19	W-N		1.5					51
		11					WELL-GRADED SAND WITH GRAVEL (SW) - tan,	50
								49
								48
								47
								46
								45

Sample Type: S=Split Spoon C=Core UP=Undisturbed Piston V=Vane Shear Test A=Auger
Proportions Used: Trace = 1 - 10%, Little = 10 -20%, Some = 20 - 35%, And = 35 - 50%

Total Penetration in Earth: 100.0' Rock: 10.0' No. of Samples: 22	NOTES:	Sheet 1 of 6 SM-001-M REV. 1/02

Driller: Mike St. John/NEBC	**Connecticut DOT Boring Report**	Hole No.: **SB-52**
Inspector: Ryan Tinsley	Town: West Hartford / Hartford, CT	Stat./Offset:
Engineer: Baker Engineering	Project No.: 171-0305	Northing: 827379.8
Start Date: 7-8-03	Route No.:	Easting: 1007121.6
Finish Date: 7-9-03	Bridge No.:	Surface Elevation: 64.2
Project Description: New Britain to Hartford Busway		
Casing Type/Size: HW 4" ID	Sampler Type/Size: SS/ 1-3/8 " ID	Core Barrel Type: NQ/1 7/8" ID
Hammer Wt.: 300 Fall: 24	Hammer Wt.: 140 Fall: 30	
Groundwater Obs. @ 18.0' after: 0 hours, @29.2 after: 24 hours, @28.0 after: 48 hours		

Baker Info: S.O. Number: B25624LPDSOIL41802/42002 File: northern Template: CDOT E (LD4 1/03)

Depth (ft.)	Sample Type/No.	Blows on Sampler per 0.5 ft.	Pen. (ft.)	Rec. (ft./%)	RQD (ft./%)	Generalized Strata Description	Material Description and Notes	Elevation (ft.)
20	S-7	8 8	1.5	0.7			brown and black fine sand, some fine to coarse rounded gravel, some silt; moist, medium dense, NP; (ALLUVIUM).	44
21								43
22	W-N		1.5					42
23	S-8	12 6 5	1.5	0.5			WELL-GRADED SAND WITH GRAVEL (SW) - tan, brown and black fine to coarse sand, some fine to coarse gravel; moist, medium dense, NP; (ALLUVIUM).	41
24	W-N		1.0					40
25						25.0'	ELEV. 39.2	39
26	S-9	6 5 5	1.5	0.3			WELL-GRADED GRAVEL WITH SAND (GW) - tan to brown and black fine to coarse gravel, little fine to coarse sand; moist, loose, NP; (ALLUVIUM).	38
27	W-N		2.0					37
28						28.5'	ELEV. 35.7	36
29	S-10	4 4 3	1.5	1.0			SILTY CLAY WITH GRAVEL (CL-ML) - red and brown clay, some silt; moist, medium stiff, +PL.	35
30								34
31								33
32	W-N		5.0					32
33								31
34								30
35						35.0'	ELEV. 29.2	29
36	S-11	6 8 12	1.5	0.7			WELL-GRADED GRAVEL (GW) - reddish brown fine to coarse gravel; moist to wet, medium dense, NP.	28
37								27
38	W-N		3.5					26
39								25

Sample Type: S=Split Spoon C=Core UP=Undisturbed Piston V=Vane Shear Test A=Auger
Proportions Used: Trace = 1 - 10%, Little = 10 -20%, Some = 20 - 35%, And = 35 - 50%

Total Penetration in Earth: 100.0' Rock: 10.0' No. of Samples: 22	NOTES:	Sheet 2 of 6 SM-001-M REV. 1/02

Driller: Mike St. John/NEBC	**Connecticut DOT Boring Report**	Hole No.: **SB-52**
Inspector: Ryan Tinsley	Town: West Hartford / Hartford, CT	Stat./Offset:
Engineer: Baker Engineering	Project No.: 171-0305	Northing: 827379.8
Start Date: 7-8-03	Route No.:	Easting: 1007121.6
Finish Date: 7-9-03	Bridge No.:	Surface Elevation: 64.2
Project Description: New Britain to Hartford Busway		
Casing Type/Size: HW 4" ID	Sampler Type/Size: SS/ 1-3/8 " ID	Core Barrel Type: NQ/1 7/8" ID
Hammer Wt.: 300 Fall: 24	Hammer Wt.: 140 Fall: 30	
Groundwater Obs. @ 18.0' after: 0 hours, @29.2 after: 24 hours, @28.0 after: 48 hours		

Baker Info: S.O. Number: B25624LPDSOIL41802/42002 File: northern Template: CDOT E (LD4 1/03)

Depth (ft.)	SAMPLES Sample Type/No.	Blows on Sampler per 0.5 ft.	Pen. (ft.)	Rec. (ft./%)	RQD (ft./%)	Generalized Strata Description	Material Description and Notes	Elevation (ft.)
40						40.0'	ELEV. 24.2	24
41	S-12	2 3 3	1.5	1.3			SILTY CLAY (CL-ML) - red and brown clay, some silt; moist, medium stiff, +PL; (GLACIAL LAKE DEPOSIT).	23
42								22
43	W-N		3.5					21
44								20
45								
46	S-13	2 2 3	1.5	1.0			SILTY CLAY (CL-ML) - red and brown clay, some silt; moist, medium stiff, +PL; (GLACIAL LAKE DEPOSIT).	19 18
47								17
48	W-N		3.5					16
49								15
50								14
51	ST-1		2.0	1.3				13
52								12
53	W-N		3.0					11
54								10
55								9
56	S-14	2 3 4	1.5	1.5			SILTY CLAY (CL-ML) - red and brown clay, some silt; moist, medium stiff, +PL; (GLACIAL LAKE DEPOSIT).	8
57								7
58	W-N		3.5					6
59								5

Sample Type: S=Split Spoon C=Core UP=Undisturbed Piston V=Vane Shear Test A=Auger
Proportions Used: Trace = 1 - 10%, Little = 10 -20%, Some = 20 - 35%, And = 35 - 50%

Total Penetration in Earth: 100.0' Rock: 10.0' No. of Samples: 22	NOTES:	Sheet 3 of 6 SM-001-M REV. 1/02

Driller: Mike St. John/NEBC	**Connecticut DOT Boring Report**	Hole No.: **SB-52**
Inspector: Ryan Tinsley	Town: West Hartford / Hartford, CT	Stat./Offset:
Engineer: Baker Engineering	Project No.: 171-0305	Northing: 827379.8
Start Date: 7-8-03	Route No.:	Easting: 1007121.6
Finish Date: 7-9-03	Bridge No.:	Surface Elevation: 64.2
Project Description: New Britain to Hartford Busway		
Casing Type/Size: HW 4" ID	Sampler Type/Size: SS/ 1-3/8 " ID	Core Barrel Type: NQ/1 7/8" ID
Hammer Wt.: 300 Fall: 24	Hammer Wt.: 140 Fall: 30	
Groundwater Obs. @ 18.0' after: 0 hours, @29.2 after: 24 hours, @28.0 after: 48 hours		

Baker Info: S.O. Number: B25624LPDSOIL41802/42002 File: northern Template: CDOT_E (LD4 1/03)

Depth (ft.)	Sample Type/No.	Blows on Sampler per 0.5 ft.	Pen. (ft.)	Rec. (ft./%)	RQD (ft./%)	Generalized Strata Description	Material Description and Notes	Elevation (ft.)
60	S-15	3 3 3	1.5	1.5			SILTY CLAY (CL-ML) - red and brown clay, some silt; moist, medium stiff, +PL; (GLACIAL LAKE DEPOSIT).	4
61								3
62	W-N		3.5					2
63								1
64								0
65	S-16	2 2 3	1.5	1.3			SILTY CLAY (CL-ML) - red and brown clay, some silt; moist, medium stiff, +PL; (GLACIAL LAKE DEPOSIT).	-1
66								-2
67	W-N		3.5					-3
68								-4
69								-5
70	S-17	55 80 100/.2	1.2	1.0		70.0'	ELEV. -5.8 SILTY SAND WITH GRAVEL (SM) - red to brown fine to medium sand, little silt, little fine to coarse gravel; moist, very dense, NP (TILL).	-6
71								-7
72	W-N		3.7					-8
73								-9
74								-10
75	S-18	100/0.1	0.1	0.0			NO RECOVERY	-11
76	W-N		4.9					-12
77								-13
78								-14
79								-15

Sample Type: S=Split Spoon C=Core UP=Undisturbed Piston V=Vane Shear Test A=Auger
Proportions Used: Trace = 1 - 10%, Little = 10 -20%, Some = 20 - 35%, And = 35 - 50%

Total Penetration in Earth: 100.0' Rock: 10.0' No. of Samples: 22	NOTES:	Sheet 4 of 6

SM-001-M REV. 1/02

Driller: Mike St. John/NEBC	**Connecticut DOT Boring Report**	Hole No.: **SB-52**
Inspector: Ryan Tinsley	Town: West Hartford / Hartford, CT	Stat./Offset:
Engineer: Baker Engineering	Project No.: 171-0305	Northing: 827379.8
Start Date: 7-8-03	Route No.:	Easting: 1007121.6
Finish Date: 7-9-03	Bridge No.:	Surface Elevation: 64.2
Project Description: New Britain to Hartford Busway		
Casing Type/Size: HW 4" ID	Sampler Type/Size: SS/ 1-3/8 " ID	Core Barrel Type: NQ/1 7/8" ID
Hammer Wt.: 300 Fall: 24	Hammer Wt.: 140 Fall: 30	
Groundwater Obs. @ 18.0' after: 0 hours, @29.2 after: 24 hours, @28.0 after: 48 hours		

Baker Info: S.O. Number: B25624LPDSOIL41802/42002 File: northern Template: CDOT E (LD4 1/03)

Depth (ft.)	SAMPLES Sample Type/No.	Blows on Sampler per 0.5 ft.	Pen. (ft.)	Rec. (ft./%)	RQD (ft./%)	Generalized Strata Description	Material Description and Notes	Elevation (ft.)
80						80.0'	ELEV. -15.8	-16
81	S-19	27 65 95	1.5	0.7			GRAVELLY SILT WITH SAND (ML) - reddish brown silt, some fine to coarse gravel, some fine to coarse sand; moist, very dense, NP; (TILL).	-17
82								-18
83	W-N		3.5					-19
84								-20
85	S-20	120/0.3	0.3	0.2			GRAVELLY SILT WITH SAND (ML) - reddish brown silt, some fine to coarse gravel, some fine to coarse sand; moist, very dense, NP; (TILL).	-21
86								-22
87	W-N		4.7					-23
88								-24
89								-25
90	S-21	120/0.2	0.2	0.2			Lost drill water at 90.0'. GRAVELLY SILT WITH SAND (ML) - reddish brown silt, some fine to coarse gravel, some fine to coarse sand; moist, very dense, NP; (TILL).	-26
91								-27
92	W-N		4.8					-28
93								-29
94								-30
95	S-22	120/0.1	0.1	0.0			NO RECOVERY	-31
96								-32
97	W-N		4.9					-33
98								-34
99								-35

Sample Type: S=Split Spoon C=Core UP=Undisturbed Piston V=Vane Shear Test A=Auger
Proportions Used: Trace = 1 - 10%, Little = 10 -20%, Some = 20 - 35%, And = 35 - 50%

Total Penetration in Earth: 100.0' Rock: 10.0' No. of Samples: 22	NOTES:	Sheet 5 of 6 SM-001-M REV. 1/02

Driller: Mike St. John/NEBC	**Connecticut DOT Boring Report**	Hole No.: **SB-52**
Inspector: Ryan Tinsley	Town: West Hartford / Hartford, CT	Stat./Offset:
Engineer: Baker Engineering	Project No.: 171-0305	Northing: 827379.8
Start Date: 7-8-03	Route No.:	Easting: 1007121.6
Finish Date: 7-9-03	Bridge No.:	Surface Elevation: 64.2
Project Description: New Britain to Hartford Busway		
Casing Type/Size: HW 4" ID	Sampler Type/Size: SS/ 1-3/8 " ID	Core Barrel Type: NQ/1 7/8" ID
Hammer Wt.: 300 Fall: 24	Hammer Wt.: 140 Fall: 30	
Groundwater Obs. @ 18.0' after: 0 hours, @29.2 after: 24 hours, @28.0 after: 48 hours		

Baker Info: S.O. Number: B25624LPDSOIL41802/42002 File: northern Template: CDOT_E (LD4 1/03)

Depth (ft.)	SAMPLES: Sample Type/No.	Blows on Sampler per 0.5 ft.	Pen. (ft.)	Rec. (ft./%)	RQD (ft./%)	Generalized Strata Description	Material Description and Notes	Elevation (ft.)
100				5.0	0.0	100.0'	ELEV. -35.8	-36
101							SILTSTONE WITH INTERBEDDED SANDSTONE; fine grained, red, hard, fresh to slightly weathered, calcite inclusions present.	-37
102	C-1		5.0					-38
103								-39
104								-40
105				100%	0%			-41
				4.5	0.0		SILTSTONE WITH INTERBEDDED SANDSTONE; fine-grained, red, hard, fresh to slightly weathered, calcite inclusions present. BASALT SEAM at 105.1'	-42
106								-43
107	C-2		5.0					-44
108								-45
109								-46
110				90%	0%		ELEV. -45.8	-47
							END OF BORING AT 110.0'	-48
111								-49
112								-50
113								-51
114								-52
115								-53
116								-54
117								-55
118								
119								

Sample Type: S=Split Spoon C=Core UP=Undisturbed Piston V=Vane Shear Test A=Auger
Proportions Used: Trace = 1 - 10%, Little = 10 -20%, Some = 20 - 35%, And = 35 - 50%

Total Penetration in Earth: 100.0' Rock: 10.0' No. of Samples: 22	NOTES:	Sheet 6 of 6 SM-001-M REV. 1/02

APPENDIX C

Recent Laboratory Test Data

Haley & Aldrich - #32669-000
Connecticut Busway
LABORATORY TESTING DATA SUMMARY

BORING NO.	SAMPLE NO.	DEPTH (ft)	IDENTIFICATION TESTS							REMARKS
			WATER CONTENT (%)	LIQUID LIMIT (-)	PLASTIC LIMIT (-)	PLAS. INDEX (-)	USCS SYMB. (1)	SIEVE MINUS NO. 200 (%)	ORGANIC CONTENT (burnoff) (%)	
CB-101	S-4	7-9	26.5				SC	41.1		
CB-103	S-3	5-7	8.1				SM	17.3		
NBA-101	S-2	3-5	5.7				SP-SM	8.1		
RB-101	S-4	7-9	25.8				SM	14.4		
RB-102	S-2	2-4	9.8				SM	17.8		
RB-103	S-4	6-8	14.9				SW-SM	8.2		
RB-104	S-1	1-3	11.9				SC	24.1		
RB-105	S-4	7-9	16.6				SC	25.0		
RB-107	S-1	0-2	4.9				SP-SM	5.8		
RB-107	S-4	7-9	12.9				SM	20.7		
RB-110	S-2	2-4	11.7				SM	28.4		
RB-120	S-1	0-2	6.8				SM	44.7		
RB-122	S-2	2-4	11.9				SM	14.4		
RB-124	S-3	5-7	202.5	271	137	134	PT		50.5	
RB-124	S-4	7-9	146.0	181	108	73	OH		23.9	
RB-124	S-5	10-12	61.4	66	42	24	OH		5.2	
RW-101	S-3	5-7	9.6				SC	36.2		
RW-105	S-1	0-2	7.7				SM	27.8		
RW-110	S-1	1-2	13.3				SM	14.1		
RW-112	S-2	3-5	9.2				SM	21.0		
RW-114	S-3	5-7	11.6				SM	13.2		
RW-114	S-6	15-17	27.9	29	23	6	ML		2.3	
RW-114	S-7	20-22	56.1	54	39	15	OH		8.9	
RW-118	S-1	0-2	2.5				SP	2.8		
RW-118	S-6	15-17	28.8	35	20	15	CL		3.1	
RW-118	S-7	20-22	25.0	29	18	11	CL		2.5	
RW-119	S-6	16-17								missing
RW-119	S-7	20-22	23.0	30	20	10	CL			
RW-119	S-8	25-27	30.7	36	21	15	CL		2.4	
RW-119	S-9	30-31.2	31.5	48	24	24	CL			
RW-119	S-5	10-12	21.1				CL	56.4		
RW-120	S-4	7-9	4.2				SP	3.1		
RW-124	S-5	10-12	18.5				SM	20.8		
TB-101	S-2	2-4	2.9				SP-SM	7.3		
TB-101	S-7	20-22	6.5				SP-SM	8.9		
TB-102	S-6	15-17	6.7				SP-SM	5.9		

Note: (1) USCS symbol based on visual observation and Sieve and Atterberg limits reported.

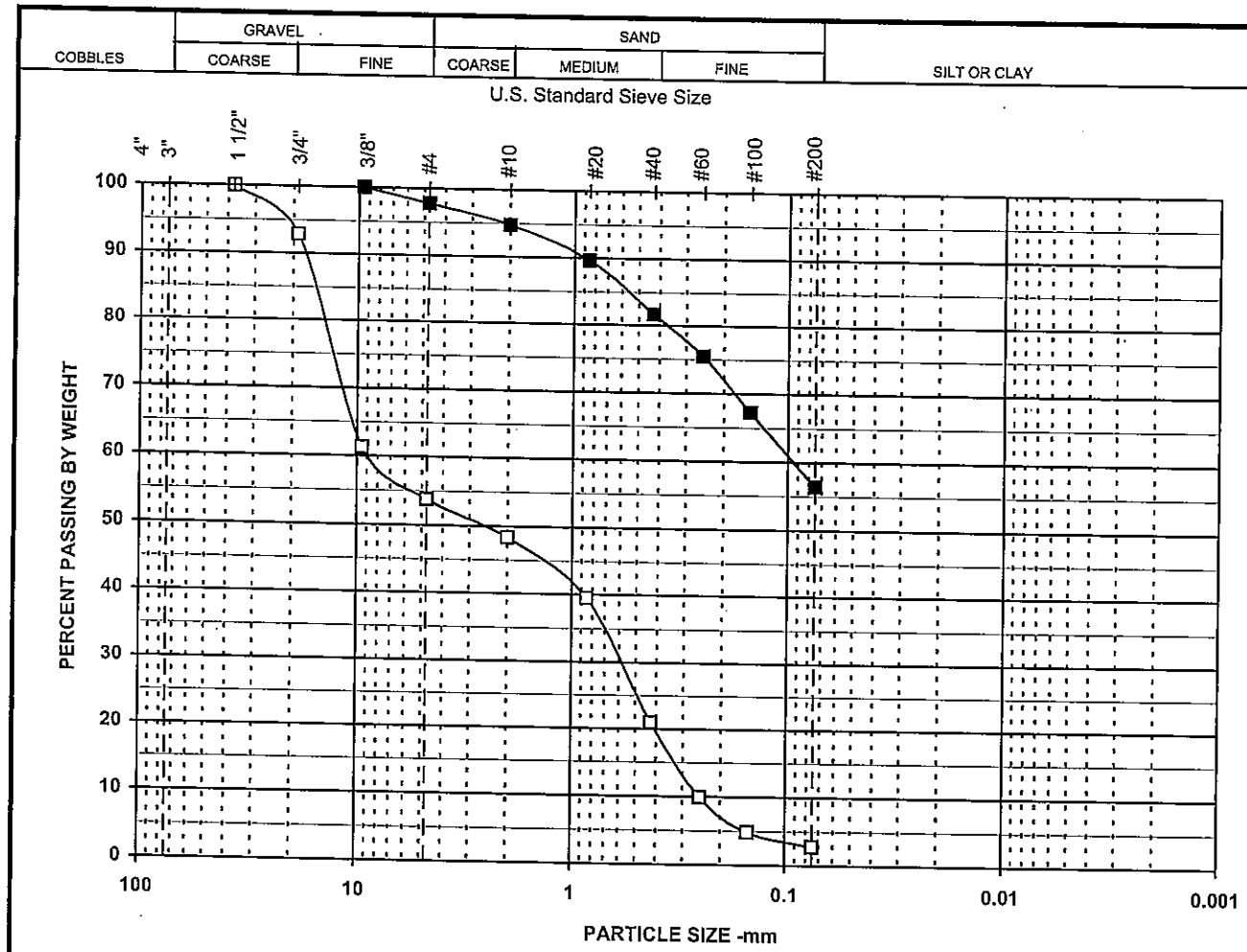

SYMBOL	DESCRIPTION AND REMARKS
□	brown gravelly c-f SAND, trace silt.
■	brown c-f sandy silty CLAY, trace f. gravel.
○	

Symbol	□	■	○
Boring	RW-118	RW-119	
Sample	S-1	S-5	
Spec			
Depth	0-2	10-12	
% +3"			
% Gravel	46.2	2.2	
% SAND	51.0	41.4	
% FINES	2.8	56.4	
% -2μ			
Cc	0.2		
Cu	34.7		
LL			
PL			
PI			
USCS	SP	CL	
w (%)	2.5	21.1	

Particle Size	PERCENT FINER		
(Sieve #)	□	■	○
4"			
3"			
1 1/2"	100.0		
3/4"	92.8		
3/8"	61.2	100.0	
4	53.8	97.8	
10	48.3	94.8	
20	39.5	89.6	
40	21.0	81.7	
60	9.9	75.5	
100	4.9	67.2	
200	2.8	56.4	

PARTICLE SIZE DISTRIBUTION

H&A #32669-000 - Connecticut Busway

Project No.		
31737788-805	May 2008	Figure

Geotesting Services, Inc.

sievj09.xls 5/19/2008

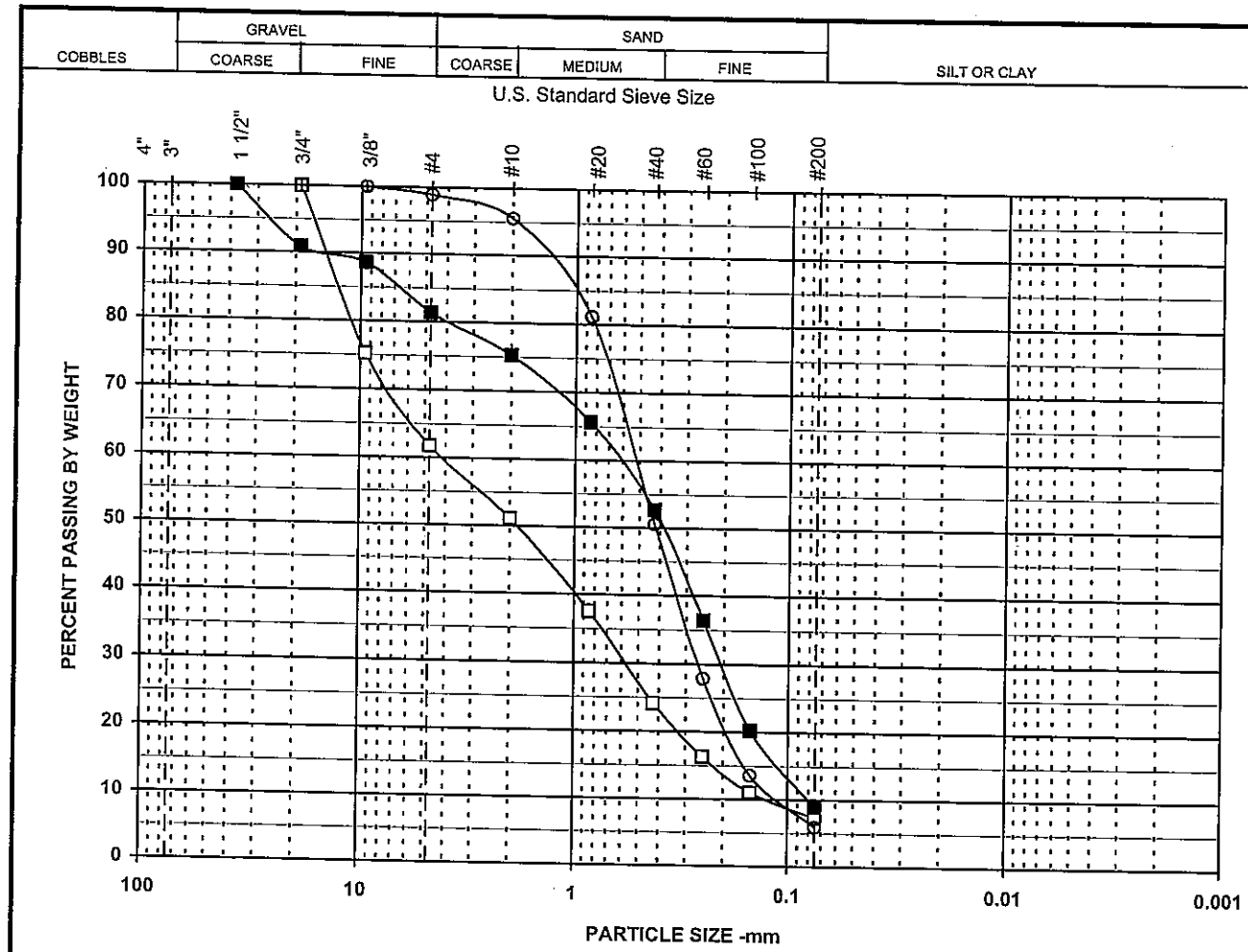

SYMBOL	DESCRIPTION AND REMARKS
□	yellowish-brown gravelly c-f SAND, trace silt.
■	yellowish-brown c-f SAND, some gravel, trace silt.
○	brown c-f SAND, trace f. gravel, silt.

Symbol	□	■	○
Boring	TB-101	TB-101	TB-102
Sample	S-2	S-7	S-6
Spec			
Depth	2-4	20-22	15-17
% +3"			
% Gravel	38.2	18.6	
% SAND	54.5	72.5	
% FINES	7.3	8.9	5.9
% -2μ			
Cc	0.7	0.8	1.1
Cu	33.3	8.1	4.8
LL			
PL			
PI			
USCS	SP-SM	SP-SM	SP-SM
w (%)	2.9	6.5	6.7

Particle Size	PERCENT FINER		
(Sieve #)	□	■	○
4"			
3"			
1 1/2"		100.0	
3/4"	100.0	90.9	
3/8"	75.2	88.6	100.0
4	61.8	81.4	98.9
10	51.1	75.3	95.5
20	37.6	65.7	81.1
40	24.1	52.6	50.5
60	16.3	36.4	27.9
100	11.0	20.2	13.6
200	7.3	8.9	5.9

PARTICLE SIZE DISTRIBUTION

H&A #32669-000 - Connecticut Busway

Project No.		Figure
31737788-805	May 2008	

Geotesting Services, Inc.

sievj11.xls 5/19/2008

Haley & Aldrich - #32669-000
Connecticut Busway
LABORATORY TESTING DATA SUMMARY

BORING NO.	SAMPLE NO.	DEPTH (ft)	IDENTIFICATION TESTS							STRENGTH					CONSOLIDATION INITIAL CONDITIONS		REMARKS
			WATER CONTENT (%)	LIQUID LIMIT (-)	PLASTIC LIMIT (-)	PLAS. INDEX (-)	USCS SYMB. (1)	TOTAL UNIT WEIGHT (pcf)	DRY UNIT WEIGHT (pcf)	Test Type @ STRESS (ksf)	PEAK SHEAR STRESS (ksf)	AXIAL STRAIN @ PEAK STRESS (%)	RESIDUAL SHEAR STRESS (ksf)	SENSITIVITY	VOID RATIO (-)	SATUR-ATION (%)	
RW-116		18-20						105.1									
RW-116	A	18.25	63.7				CH	104.8	64.0	CIU'@1.4	0.7	4.9					T2873
RW-116	B	18.75	60.7				CH	104.8	65.2	CIU'@2.9	1.1	2.6					T2874
RW-116	C	19.25	60.5				CH	104.4	65.0	CIU'@5.8	1.5	2.6					T2875
RW-116	D	19.75	60.7	69	29	40	CH	104.6	65.1						1.706	100	C08052
RW-116	D	19.75	65.3							LV	0.68		0.18	3.7			bottom
RW-121	U-1	43-45						108.5									
RW-121	U-1A	43.15	41.8							LV	0.32		0.08	4.10			
RW-121	U-1B	43.55	52.2				CL	109.4	71.9	CIU'@3.3	1.0	11.9					T2867
RW-121	U-1C	44.05	47.9				CL	109.9	74.3	CIU'@6.6	1.9	18.1					T2868
RW-121	U-1D	44.5	49.3				CL	110.4	73.9	CIU'@13.3	3.1	5.0					T2869
RW-121	U-1E	45.05	52.5	41	25	16	CL	107.1	70.3						1.444	100	C08049
TB-102	U-3	55-57						110.3									
TB-102	U-3A	55.1															disturbed
TB-102	U-3B	55.45															disturbed
TB-102	U-3C	55.95															disturbed
TB-102	U-3D	56.45	48.8				ML	111.7	75.1	CIU'@4.3	1.6	16.8					T2883
TB-102	U-3E	56.85	45.3	37	25	12	ML	114.3	78.7						1.317	100^{+}	C08050
TB-102	U-3E	56.85	66.0							LV	0.32		0.08	4.1			

Note: (1) USCS symbol based on visual observation and Sieve and Atterberg limits reported.

Prepared by: JR Reviewed by: GET Date: 5/28/2008

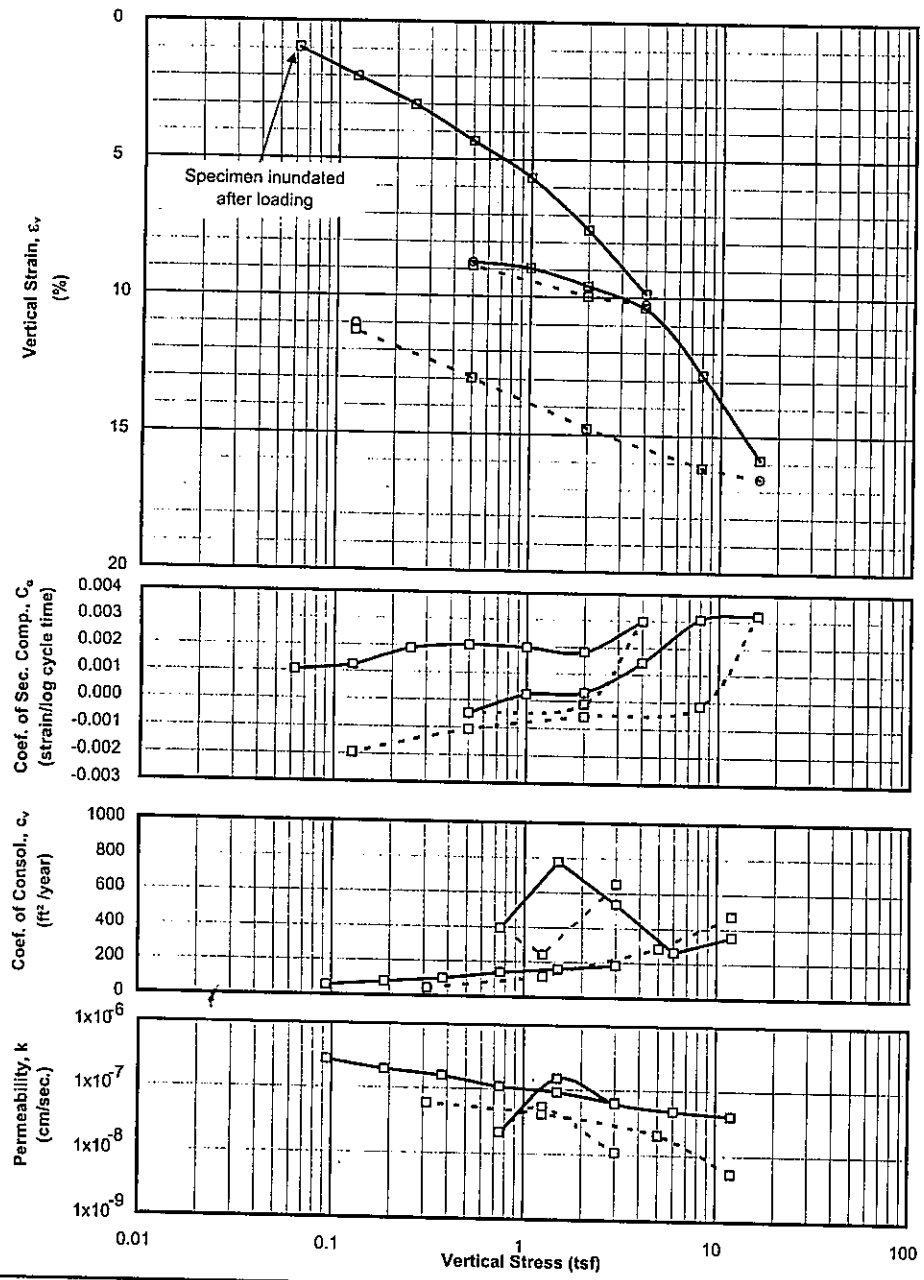

SAMPLE INFORMATION

Boring: TB-102
Sample: U-3E
Depth: 56.85 feet
Elevation:
Type: 3-inch thin wall tube
Description: ML, reddish-brown varved clayey SILT, trace f. sand.

LL = 37, PL = 25, PI = 12

SPECIMEN INFORMATION

(NOTE: Initial and final states refer to beginning and end of test)

Initial height: 0.62 inch
Diameter: 2.50 inch

Initial water content:	45.3	%
Initial total unit weight:	114.3	pcf
Initial dry unit weight:	78.7	pcf
Initial void ratio:	1.317	
Initial degree of saturation:	101	%
Final water content:	38.8	%
Final total unit weight:	118.5	pcf
Final dry unit weight:	85.4	pcf
Final void ratio:	1.134	
Final degree of saturation:	100	%

(assumed specific gravity = 2.92)

TEST SUMMARY

Construction Method:	Casagrande (Log)
Estimated preconsolidation stress (tsf):	2.2 (Range: 1.9 to 2.5)
Estimated in situ effective overburden stress (tsf):	
Compression Ratio (strain per log cycle stress):	0.102
Compression Index (void ratio per log cycle stress):	0.236
Swell Ratio (strain per log cycle stress):	0.018
Swell Index (void ratio per log cycle stress):	0.042
Recompression Ratio (strain per log cycle stress):	0.023
Recompression Index (void ratio per log cycle stress):	0.053
Remarks:	

LEGEND: ☐ End of primary ○ End of Stage ——— Loading - - - - - - Unloading

Test Date: 5/1/08 Tested By: CMJ Checked By: GET

Haley & Aldrich	H&A #32669-000 Connecticut Busway	ONE DIMENSIONAL CONSOLIDATION TEST Boring: TB-102 Depth: 56.85 feet
Geotesting Services, Inc.	Project No. 31737788-805	May 2008

PROJECT:	H&A
PROJECT NO.:	31737788-805
BORING:	TB-102
SAMPLE:	U-3E
TEST:	C08050
DEPTH, feet:	56.85
BY:	CMJ
TEST DATE:	5/1/2008

Initial height:	0.616 inch
Initial water content:	45.3 %
Initial dry density:	78.7 pcf
Initial total density:	114.3 pcf
Initial saturation:	101 %
Initial void ratio:	1.317

Final height:	0.567 inch
Final water content:	38.8 %
Final dry density:	85.4 pcf
Final total density:	118.5 pcf
Final saturation:	100 %
Final void ratio:	1.134
Final strain:	7.9 %

EQUIPMENT:
Load Frame No.: 4
Ring Diameter: 2.5 inch

SPECIMEN DESCRIPTION: ML, reddish-brown varved clayey SILT, trace f. sand.

G	LL	PL	PI
2.92	37	25	12

Load No.	Load (tsf)	d_{100} (inch)	t_{100} Strain (%)	t_{100} Void Ratio (-)	Final Strain (%)	Final Void Ratio (-)	c_v (ft²/year)	C_α (strain/logt)	Constrained Modulus (tsf)	Permeability (cm/sec)
1	0.063	0.0060	0.969	1.294	1.089	1.291	78.08	0.0011	6.45	3.65E-07
2	0.125	0.0123	2.004	1.270	2.253	1.265	54.48	0.0013	6.04	2.72E-07
3	0.250	0.0187	3.028	1.247	3.242	1.242	78.99	0.0019	12.21	1.95E-07
4	0.500	0.0268	4.347	1.216	4.567	1.211	99.05	0.0020	18.96	1.58E-07
5	1.00	0.0349	5.661	1.186	5.893	1.180	136.98	0.0020	38.03	1.09E-07
6	2.00	0.0465	7.551	1.142	7.740	1.137	160.04	0.0018	52.92	9.12E-08
7	4.00	0.0608	9.867	1.088	10.240	1.079	183.29	0.0030	86.37	6.40E-08
8	2.00	0.0615	9.977	1.086	9.942	1.086	653.95	-0.0001	1806.90	1.09E-08
9	0.500	0.0546	8.872	1.111	8.745	1.114	241.92	-0.0005	135.65	5.38E-08
10	1.00	0.0552	8.960	1.109	9.031	1.108	393.73	0.0002	564.29	2.11E-08
11	2.00	0.0591	9.592	1.095	9.667	1.093	779.61	0.0003	158.33	1.49E-07
12	4.00	0.0639	10.370	1.076	10.650	1.070	536.46	0.0014	257.04	6.30E-08
13	8.00	0.0788	12.790	1.020	13.357	1.007	263.98	0.0031	165.25	4.82E-08
14	16.0	0.0978	15.874	0.949	16.572	0.933	352.90	0.0032	259.45	4.10E-08
15	8.00	0.0997	16.177	0.942	16.137	0.943	474.77	-0.0001	2636.76	5.43E-09
16	2.00	0.0909	14.758	0.975	14.657	0.977	284.78	-0.0006	422.82	2.03E-08
17	0.500	0.0798	12.958	1.017	12.839	1.019	114.98	-0.0011	83.30	4.16E-08
18	0.125	0.0694	11.261	1.056	11.020	1.061	43.44	-0.0020	22.11	5.93E-08

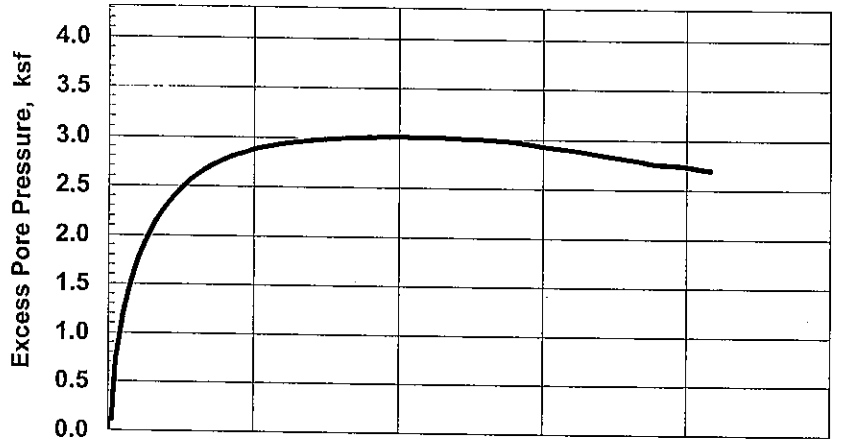

SAMPLE INFORMATION

Boring: TB-102 Sample: U-3D Depth: 56.45 ft
Type: Intact 0
Description: ML, reddish brown VARVED clayey SILT, trace f. sand.

SPECIMEN INFORMATION (Initial)

Height: 5.99 inch Diameter: 2.87 inch Area: 6.46 in²
Water Content: 48.8 % Total Unit Weight: 111.7 pcf

TEST SUMMARY

Consolidation Stresses: 4.32 ksf vertical, 4.32 ksf lateral
Water Content: 38.5 % Total Unit Weight: 118.9 pcf
B Coefficient: Strain Rate: 0.022 %/min
Peak Shear Strength: 1.60 ksf @ 16.8 % Strain
Peak Effective Friction Angle: 32.7°

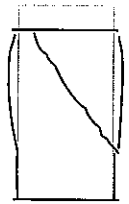

Failure Sketch

REMARKS:

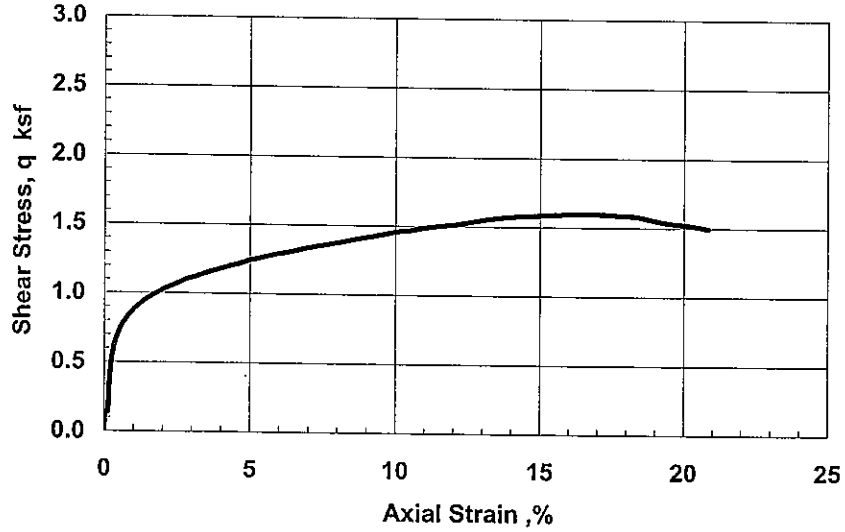

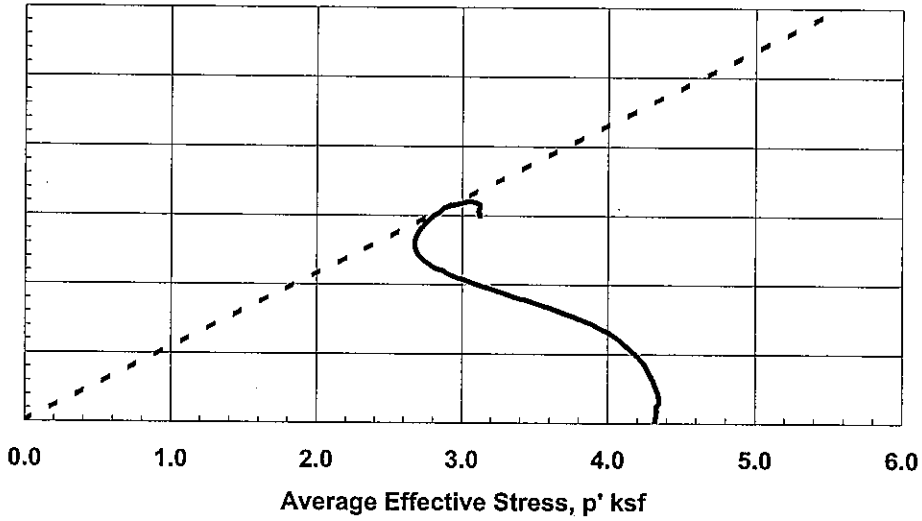

Test by: DT	Project No. 31737788-805	Haley & Aldrich - #32669-000 Connecticut Busway	CONSOLIDATED UNDRAINED TRIAXIAL COMPRESSION with Pore Pressure Measurements
Checked by: GET	Geotesting Services, Inc.		Boring TB-102 Sample U-3D @ 56.45 ft
			May-08

APPENDIX D

Previous Laboratory Test Data

LABORATORY TESTING DATA SHEET

Project Name: NEW BRITAIN-HARTFORD BUSWAY CONNECTICUT
Project No.: L17828
Project Engineer: D. SCHULZE
Assigned By: D. GAFFNEY
Date: NOV.03
Reviewed By: Matthew Colby
Date Reviewed: 11/11/03

Boring/ Test Pit No.	Sample No.	Depth ft.	Lab No.	Identification Tests: Water Content %	LL %	PL %	Sieve -200 %	Hyd -2μ %	ORG %	G_s	Dry unit wt. pcf	Density: γ_d MAX (pcf) / W_{opt} (%)	Permeability cm/sec	Strength Tests: Torvane or Type Test	$\bar{\sigma}_c$ psf	Failure Criteria	$\sigma_1 - \sigma_3$ or τ psf	Strain %	Consol. $\frac{C_c}{1+e_0}$	Laboratory Log and Soil Description
SB-50	S-2	4.5-6.0	289	32.6																
SB-50	S-10	28.5-30.0	290	55.5																
SB-51	S-5	13.5-15.0	291	49.0																
SB-51	S-13	45.0-46.5	292	21.1																
SB-52	S-10	28.5-30.0	293	23.8																
SB-53	S-13	45.0-46.5	294	41.2																
SB-54	S-21	85.0-86.5	295	24.3																
SB-55	S-10	28.5-30.0	296	54.9																
SB-55	S-25	105.0-106.5	297	20.9																
SB-56	S-19	75.0-76.5	298	27.3																
SB-57	S-10	28.5-30.0	299	57.1																
SB-57	S-22	90.0-91.5	300	22.5																
SB-58	S-4	10.0-11.5	301	32.7																
SB-58	S-11	35.0-36.5	302	59.5																

Classifications

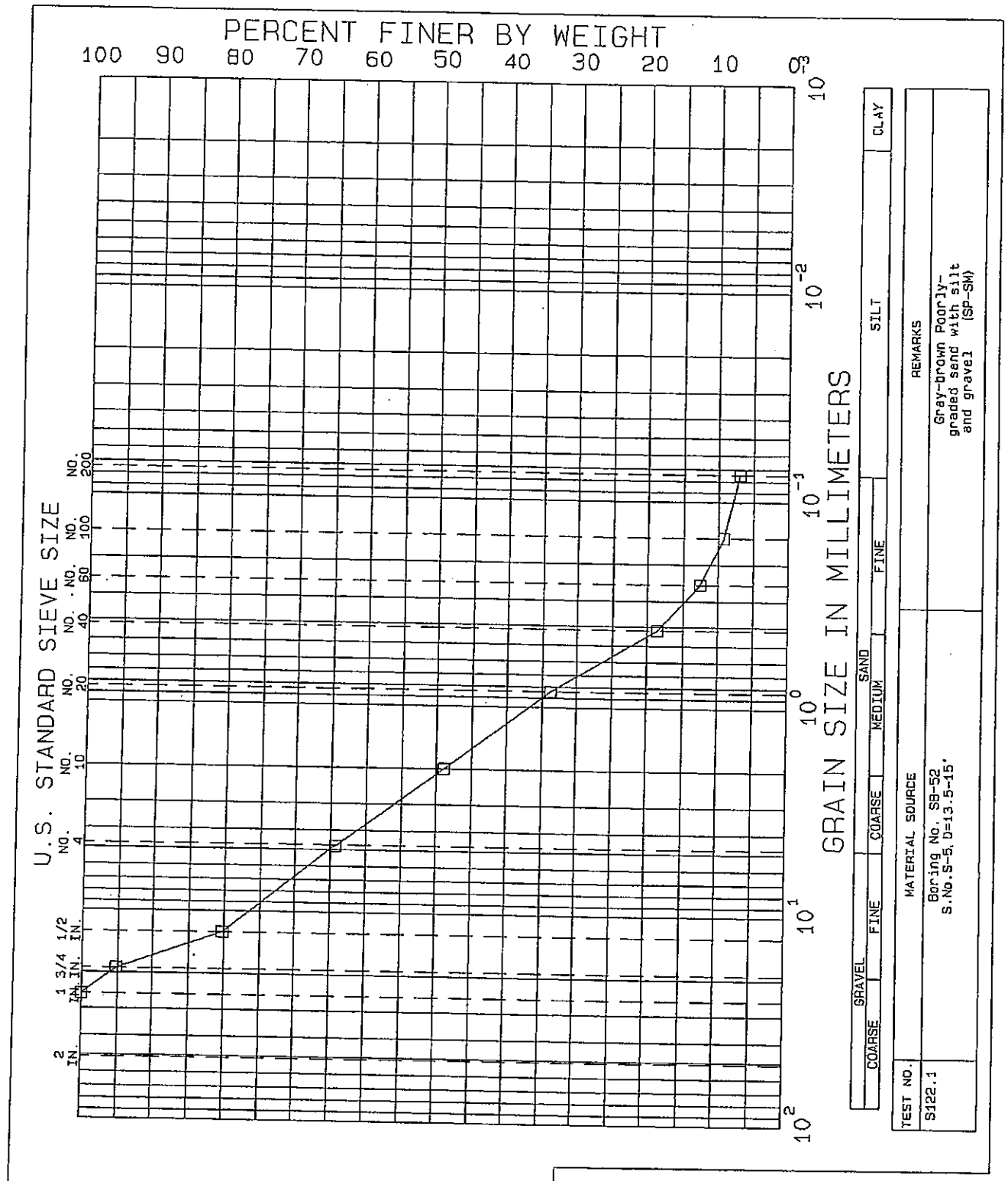

NEW BRITAIN-HARTFORD BUSWAY

CONNECTICUT

GRADATION TESTS

BORING NO. SB-52
SAMPLE S-5
DEPTH 13.5-15'
TECH. PEC
REVIEWER MBP

TEST SERIES
NO. 122
DATE Nov.03

FILE L17828

GZA GEOENVIRONMENTAL, INC.
ENGINEERS AND SCIENTISTS

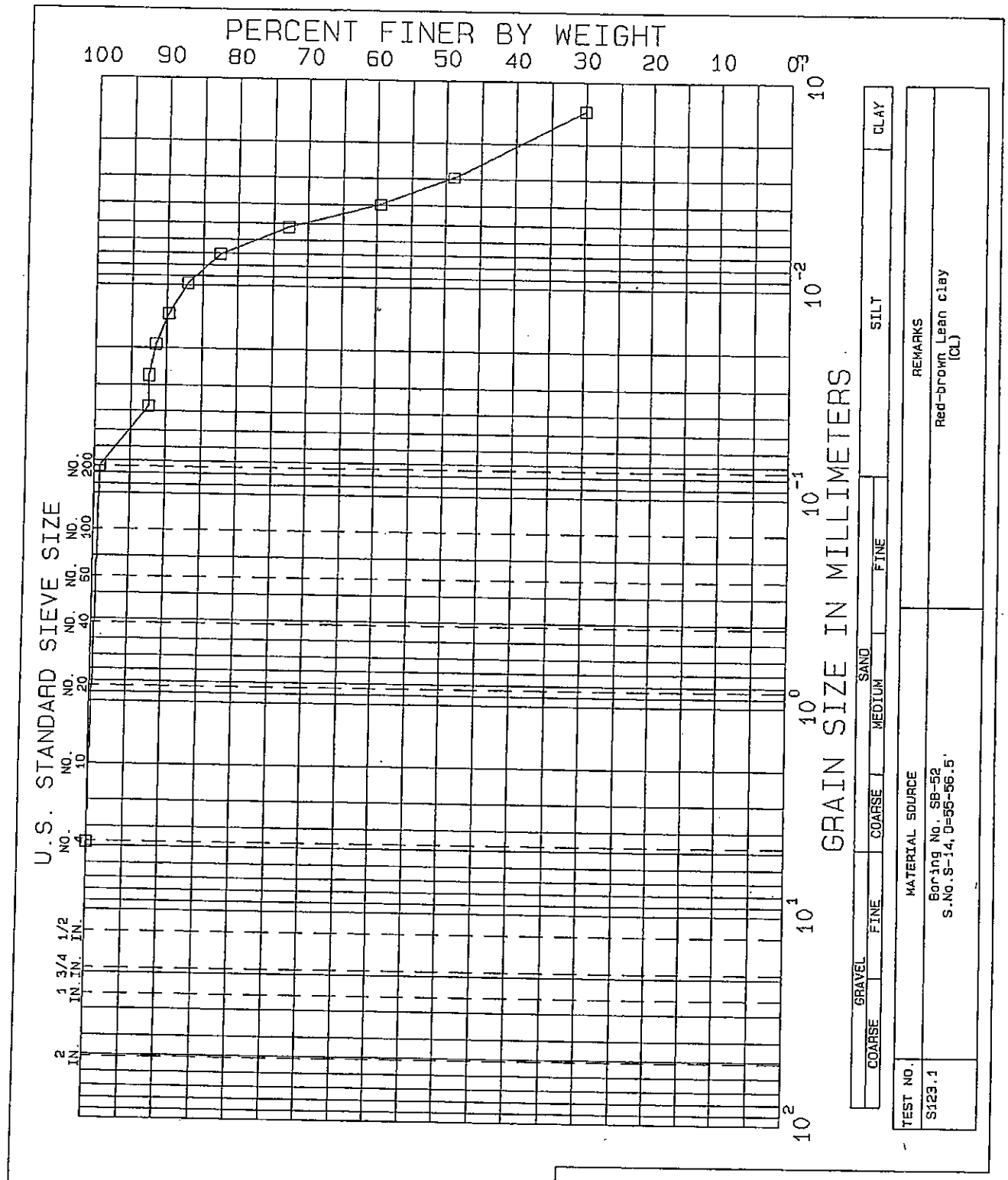

NEW BRITAIN-HARTFORD BUSWAY

CONNECTICUT

GRADATION TESTS

BORING NO. SB-52
SAMPLE S-14
DEPTH 55-56.5'
TECH. CAG
REVIEWER MBP

TEST SERIES
NO. 123
DATE Nov.03

FILE L17628

GZA GEOENVIRONMENTAL, INC.
ENGINEERS AND SCIENTISTS

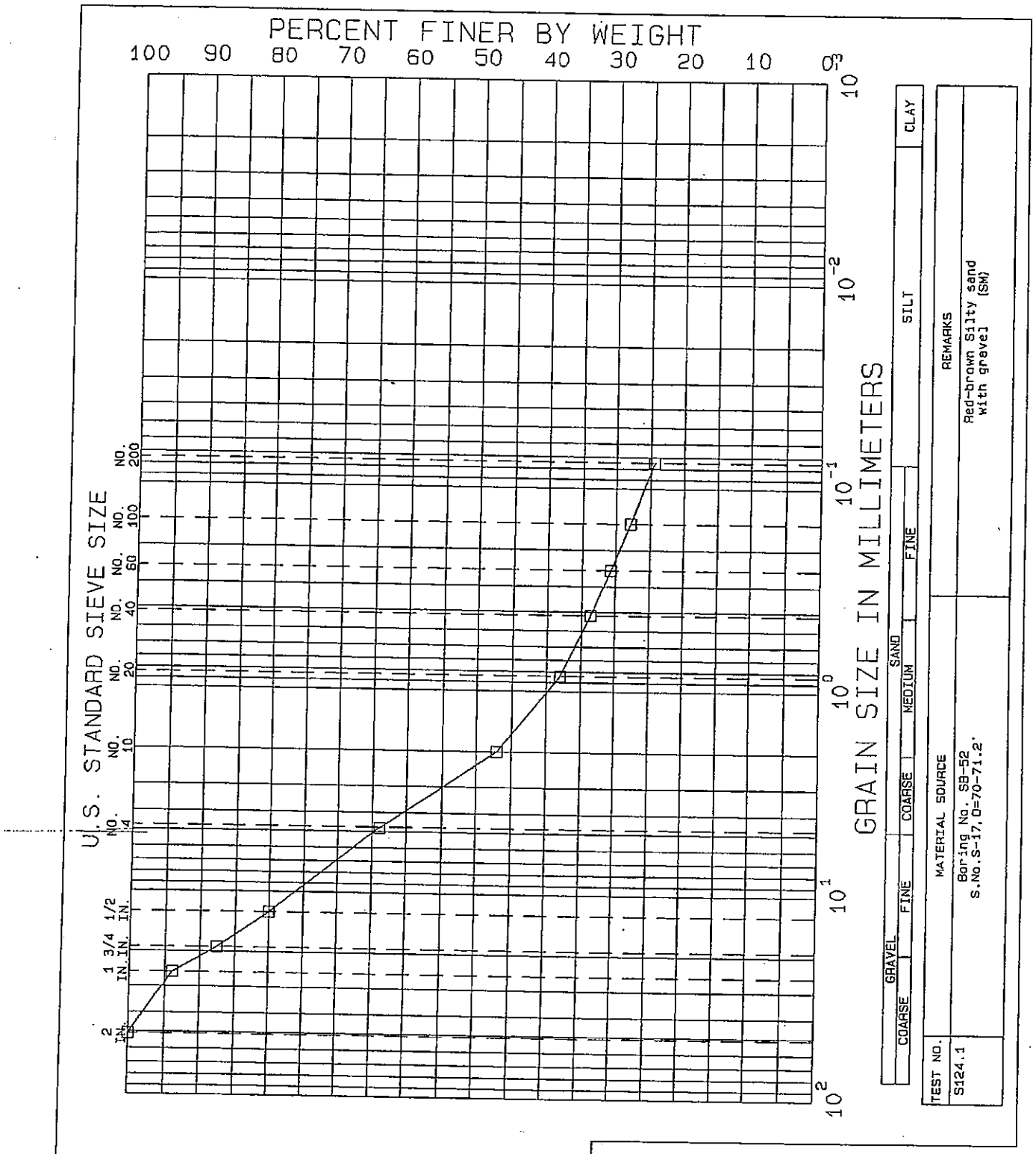

NEW BRITAIN-HARTFORD BUSWAY

CONNECTICUT

GRADATION TESTS

BORING NO. SB-52
SAMPLE S-17
DEPTH 70-71.2'
TECH. PEC
REVIEWER MBP

TEST SERIES
NO. 124
DATE Nov.03

FILE L17828

GZA GEOENVIRONMENTAL, INC.
ENGINEERS AND SCIENTISTS

Consolidation and Triaxial Tests

LABORATORY TESTING DATA SHEET

Project Name: NEW BRITAIN-HARTFORD BUSWAY CONNECTICUT
Project No.: L17828
Project Engineer: D. SCHULZE
Assigned By: D. Gaffney
Date: Feb.03
Reviewed By: [illegible]
Date Reviewed: 2/23/04

Boring/ Test Pit No.	Sample No.	Depth ft.	Lab No.	Identification Tests: Water Content %	LL %	PL %	Sieve -200 %	Hyd -2μ %	ORG %	G_s	Dry unit wt. pcf	Density: γ_d MAX (pcf) W_{opt} (%)	Permeability cm/sec	Strength Tests: Torvane or Type Test	$\bar{\sigma}_c$ psf	Failure Criteria	$\sigma_1 - \sigma_3$ or τ psf	Strain %	Consol. $\frac{\Delta e}{1+e_0}$	Laboratory Log and Soil Description
SB-52	ST-1	50.0-52.0	399		Average Total Unit Weight (50.0-51.3') = 117.8 Pcf															Red-brown Varved Soil as follows:
		50.1		48.7	(Clay Portion)									Tv= 0.24 tsf						Lean Clay (CL) grading to Silt (ML)
		50.5		23.2	(Silt Portion)									Tv= 0.20 tsf						
		50.5-50.6		43.7							79.3								0.15	Varve thickness varies from 0.25-0.5" Clay portion varies from 0.125-.25"
		50.7		41.6	(entire varve)									Tv= 0.25 tsf						in thickness and comprises approx. 35-50% of total varve
		50.0-51.3*		47.3	40	23														
		50.0-51.3*					100	47												* Note: Hydrometer, Specific Gravity, and Atterberg Limit samples taken from clay layers throughout the tube sample
		50.0-51.3*								2.83										

GZA GeoEnvironmental, Inc.
Q:\NEWTON\LAB\LABFORM7.XLS

labform1.xls

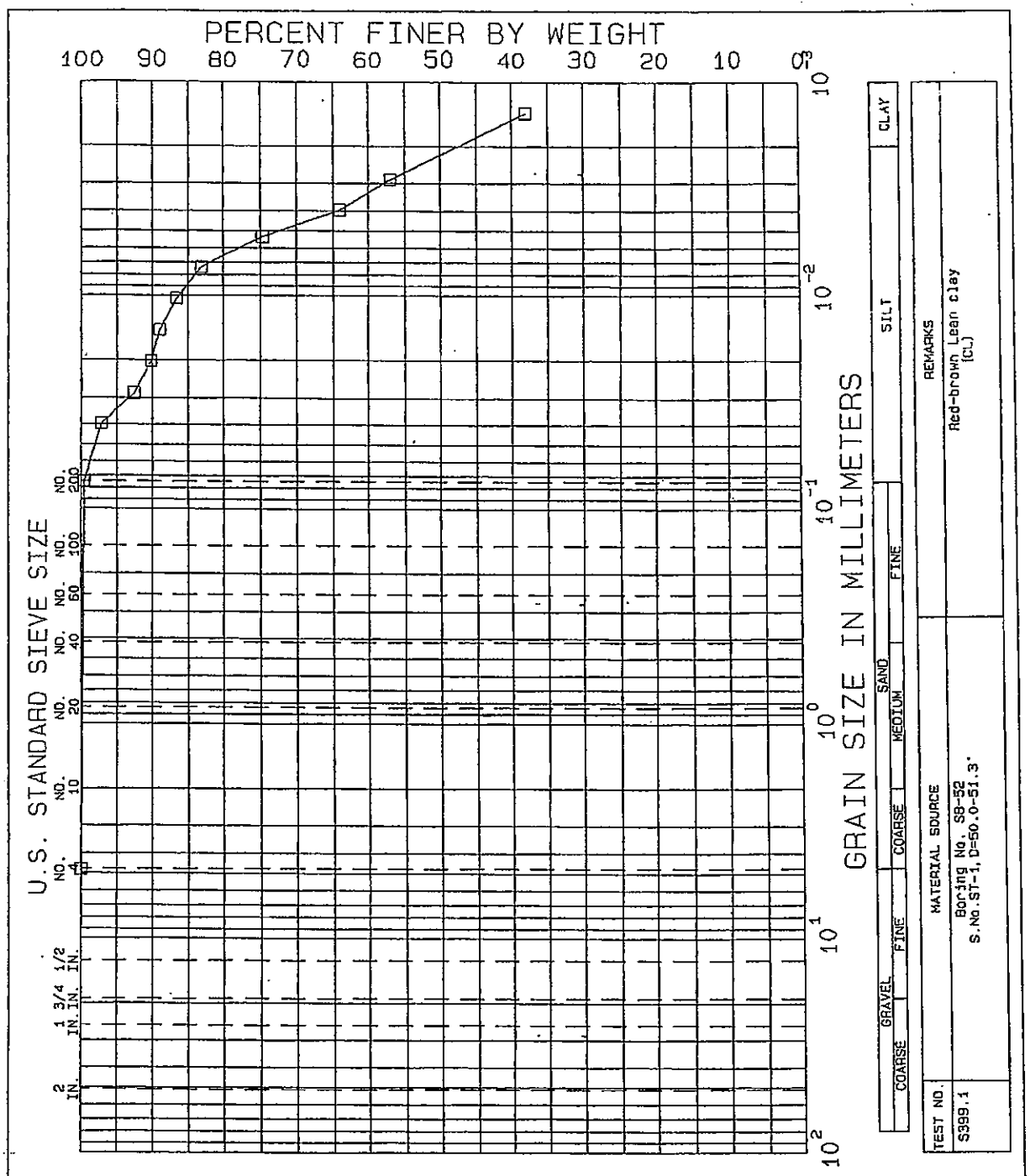

NEW BRITAIN-HARTFORD BUSWAY

CONNECTICUT

GRADATION TESTS

BORING NO.	SB-52	TEST SERIES	
SAMPLE	ST-1	NO.	399
DEPTH	50.0-51.3'	DATE	Feb.04
TECH.	PEC		
REVIEWER	MBP	FILE	L17828

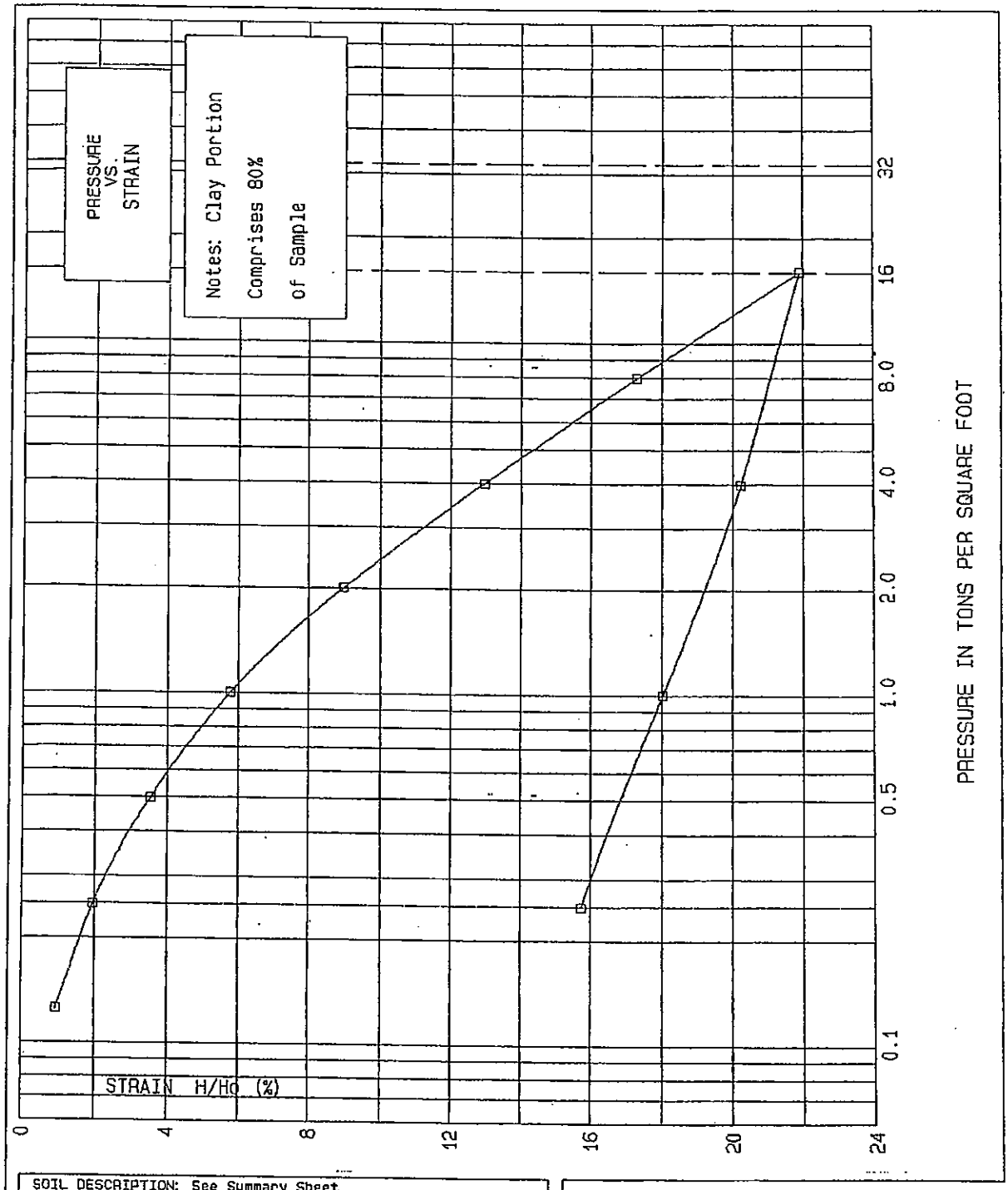

SOIL DESCRIPTION: See Summary Sheet

SAMPLE DIAM. 2.5 IN.	LIQUID LIMIT 0 %	PLASTIC LIMIT 0 %	SPECIFIC GRAVITY 2.83 -

	WATER CONTENT, %	DRY UNIT WEIGHT, pcf	VOID RATIO	SATURATION, %	SAMPLE HEIGHT, INCH
INITIAL	43.70	79.26			0.80
FINAL	32.20	94.07			0.67

New Britain-Hartford Busway

CONSOLIDATION TEST

BORING NO.	SB-52	TEST SERIES NO.	C399.1
SAMPLE	ST-1	DATE	2/23/04
DEPTH	50.5-50.6'		
TECH.	MST		
REVIEWER	DAS	FILE	L17828

FIGURE

GZA GEOENVIRONMENTAL, INC.
ENGINEERS AND SCIENTISTS

Job Number L17828
Project Name ..... New Britain-Hartford Busway
Test Number C399.1
Sample Description .. See Summary Sheet
Boring Number SB-52
Sample Number ST-1
Depth ..... 50.5-50.6'

Technician ..... MST
Reviewer ..... DAS

NOTES: Clay Portion
Comprises 80%
of Sample

Specific Gravity ..... 2.8300E+00
Sample Dry Weight ..... 8.1700E+01
Sample Diameter ..... 2.5000E+00
Initial Void Ratio ..... 0.0000E+00
Initial Sample Height 8.0000E-01
Final Sample Height 6.7400E-01
Initial Water Content .... 4.3700E+01
Final Water Content ..... 3.2200E+01
Liquid Limit ..... 0.0000E+00
Plastic Limit ..... 0.0000E+00
Initial Saturation ..... 0.0000E+00
Final Saturation ..... 0.0000E+00
T50 data excluded
T90 data included

Increment umber	Pressure (TSF)	Final Dial	Percent Strain	Void Ratio	T90 (min)	Cv (T90) (/10000)	C_α
1	0.000	0.0	0.00	1.228			
2	0.125	75.0	0.94	1.207			
3	0.250	158.0	1.97	1.184	12.9	10.98	
4	0.500	283.0	3.54	1.149	12.3	11.22	0.0018
5	1.000	462.0	5.77	1.099	6.3	21.05	0.0024
6	2.000	719.0	8.99	1.028	8.4	14.90	
7	4.000	1036.0	12.95	0.940	6.3	18.36	
8	8.000	1384.0	17.30	0.843	6.3	16.68	
9	16.000	1752.0	21.90	0.740	4.0	23.58	0.0041
10	4.000	1619.0	20.24	0.777			
11	1.000	1443.0	18.04	0.826			
12	0.250	1259.0	15.74	0.877			

APPENDIX E

Design Drawings showing Existing and Proposed Construction

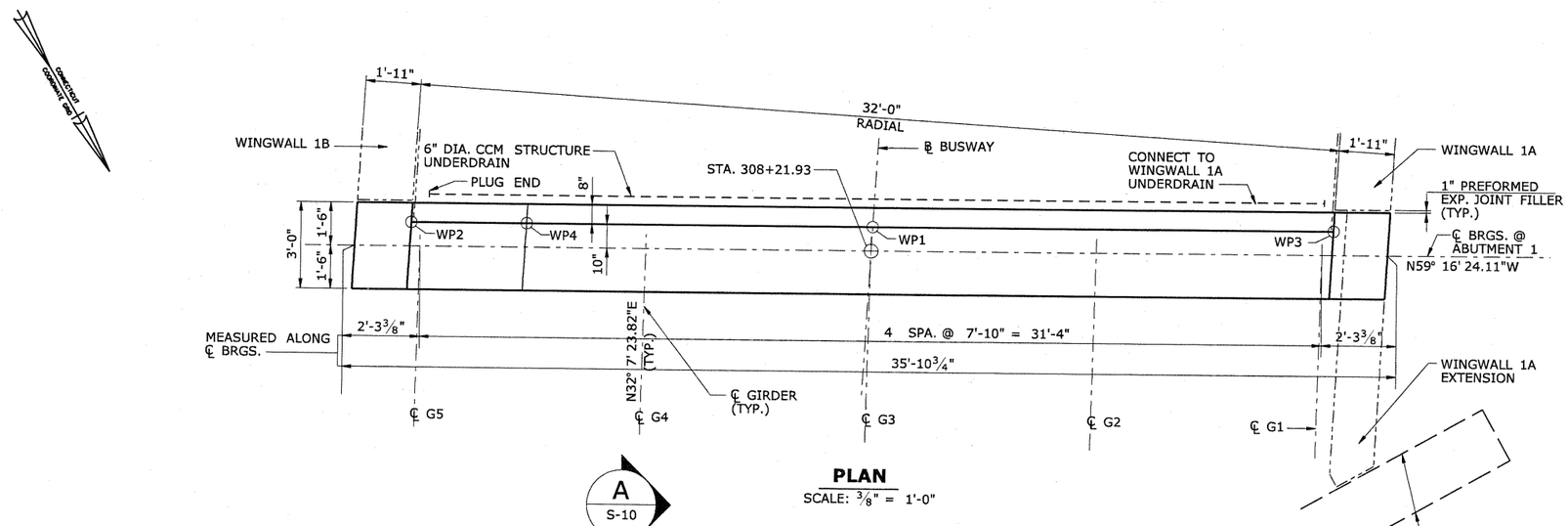

PLAN

SCALE: ⅜" = 1'-0"

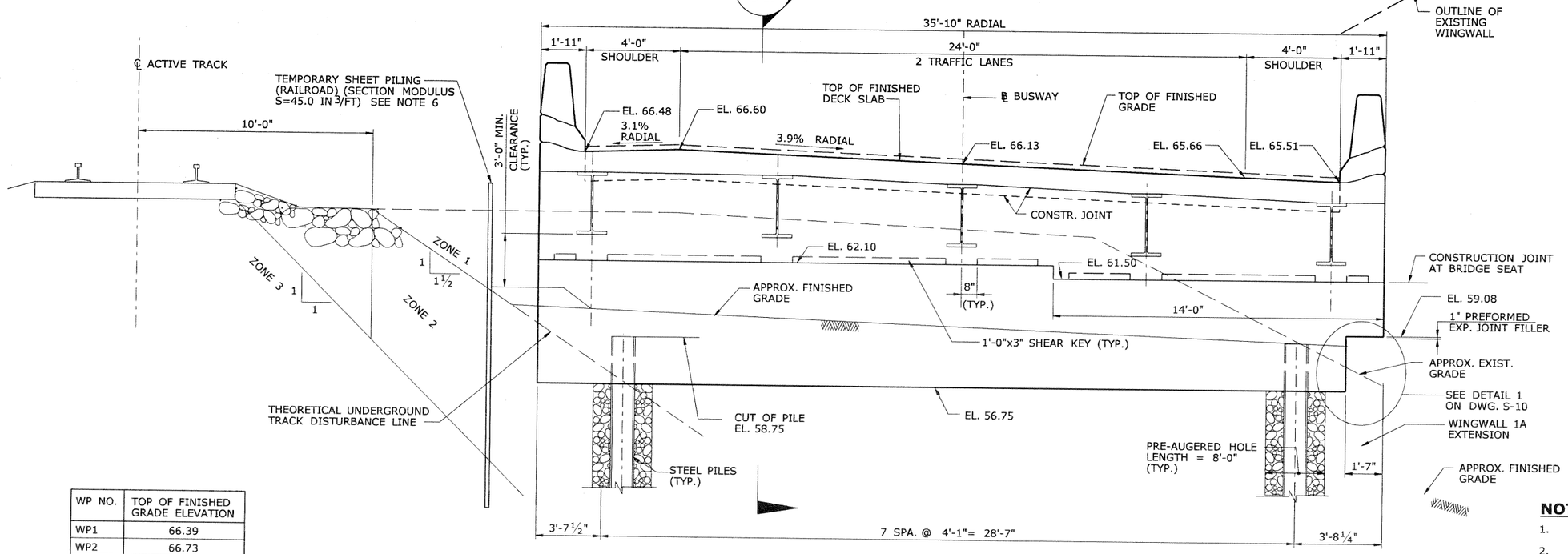

ELEVATION

SCALE: ⅜" = 1'-0"

WP NO.	TOP OF FINISHED GRADE ELEVATION
WP1	66.39
WP2	66.73
WP3	65.76
WP4	66.86

NOTE: THOSE ELEVATIONS ARE APPLIED AT THE END OF DECK SLAB

SUGGESTED INTEGRAL ABUTMENT CONSTRUCTION PROCEDURE

1. EXCAVATE EXISTING SOIL AT ELEVATION SHOWN ON PLAN.
2. DRIVE PILES AND CUT OFF PILES AT ELEVATION SHOW ON PLAN.
3. PLACE ABUTMENT STEM CONCRETE TO BRIDGE SEAT ELEVATION.
4. BACKFILL WITH LIGHTWEIGHT MATERIAL ABUTMENT STEM TO 6" BELOW THE BRIDGE SEAT ELEVATION. NO BACKFILL OF THE ABUTMENT STEMS ALLOWED UNTIL THE ABUTMENTS HAVE CURED FOR 7 DAYS.
5. PLACE LIGHTWEIGHT FILL IN FRONT OF THE ABUTMENT (BETWEEN NEW INTEGRAL ABUT. AND EXIST. WINGWALL) AS SHOWN ON DWG. S-10 FOR ABUT. 1 OR S-16 FOR ABUT. 2.
6. ERECT GIRDERS AND INSTALL ALL DIAPHRAGMS. GIRDERS SHALL BE ERECTED PLUMB AND THE DIAPHRAGMS FABRICATED FOR THE STEEL DEAD LOAD POSITION.
7. PLACE ABUTMENT BACKWALL CONCRETE TO TOP OF GIRDERS.
8. BACKFILL ABUTMENT BACKWALL WITH LIGHTWEIGHT MATERIAL. NO BACKFILLING OF THE ABUTMENT IS ALLOWED UNTIL BACKWALL HAVE CURED FOR 7 DAYS.
9. PLACE CONCRETE FOR DECK SLAB. DECK SLAB SHALL NOT BE PLACED UNTIL BACKWALLS HAVE CURED FOR 7 DAYS.
10. PLACE CONCRETE FOR APPROACH SLABS.

NOTES:

1. ELEVATIONS SHOWN AT TOP OF DECK SLAB ARE AT ℄ BRGS.
2. WORK THIS DWG. WITH DWG. NO. S-10.
3. FOR REINFORCING DETAILS, SEE DWG. NO. S-11.
4. FOR SHEAR KEY DETAIL, SEE DWG. NO. S-10.
5. FOR WINGWALL 1A & 1B DETAILS, SEE DWG. NOS. S-12, S-13 & S-14.
6. CONTRACTOR SHALL SUBMIT SHOP DRAWING DETAILS, MEMBER SIZES AND CALCULATIONS FOR ALL RAILROAD TEMPORARY SHEETING WORK, TO THE ENGINEER FOR REVIEW.

FINAL PLANS FOR REVIEW (90%)

REV.	DATE	REVISION DESCRIPTION	SHEET NO.

Plotted: 10/20/2009
Border Version: 5/31/07
THE INFORMATION, INCLUDING ESTIMATED QUANTITIES OF WORK, SHOWN ON THESE SHEETS IS BASED ON LIMITED INVESTIGATIONS BY THE STATE AND IS IN NO WAY WARRANTED TO INDICATE THE CONDITIONS OF ACTUAL QUANTITIES OF WORK WHICH WILL BE REQUIRED.
Filename: h:\cadd\ctdot\1728\093..h046\struct..bridge\Trout..Brook\SB..MSH..0093..0046..TBS09.dgn
Date Plotted: 5/25/2010

DESIGNER/DRAFTER: Y. BARON
CHECKED BY: M. CARAMICHAEL
SCALE AS NOTED

STATE OF CONNECTICUT
DEPARTMENT OF TRANSPORTATION

ENGINEER: AMMANN & WHITNEY
APPROVED BY: -
DATE: -

PROJECT TITLE:
NEW BRITAIN - HARTFORD BUSWAY OVER TROUT BROOK

TOWN: WEST HARTFORD
DRAWING TITLE: ABUTMENT 1 PLAN AND ELEVATION

PROJECT NO. 93-H046
DRAWING NO. S-09
SHEET NO. 200

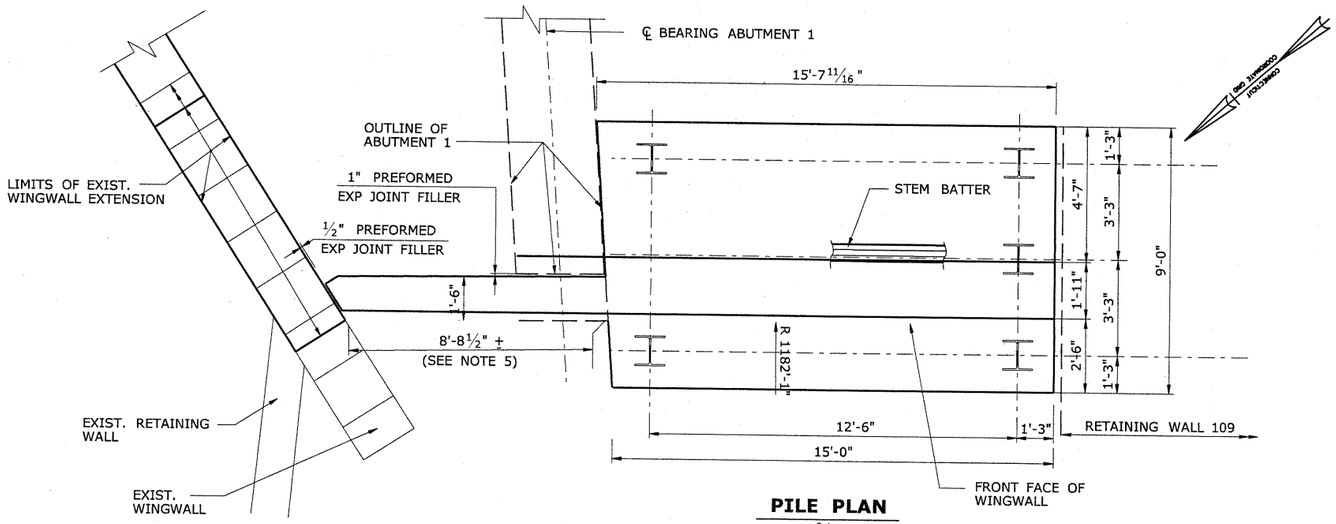

PILE PLAN

SCALE: 3/8" = 1'-0"

DESIGN PILE LOADS	
LIMIT STATE	MAXIMUM DESIGN PILE LOAD
STRENGTH I	122 KIPS
SERVICE I	91 KIPS

PILE CAPACITY	
SUBSTRUCTURE UNIT	ULTIMATE PILE CAPACITY
WINGWALL 1A	KIPS

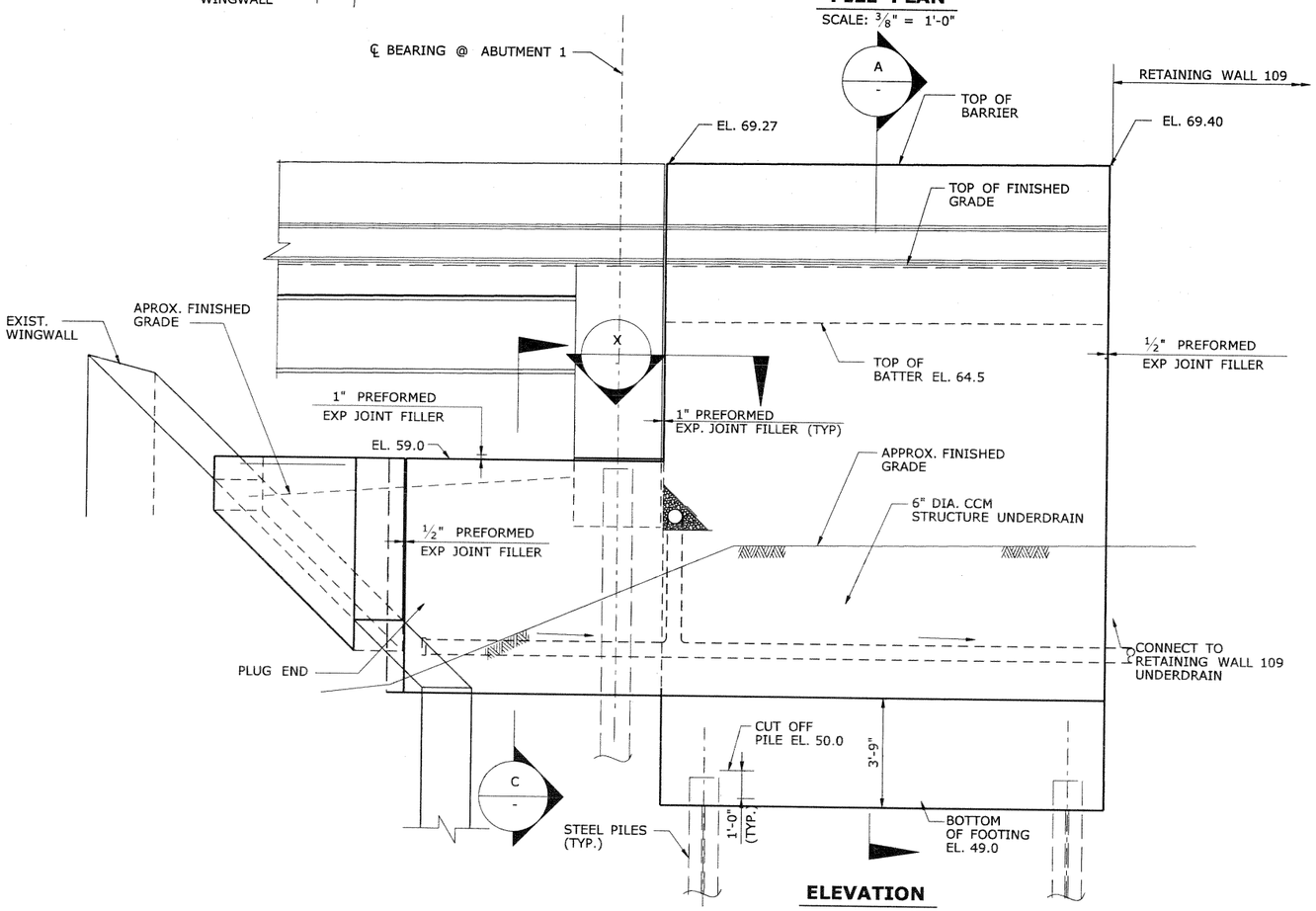

ELEVATION

SCALE: 3/8" = 1'-0"

WINGWALL 1A

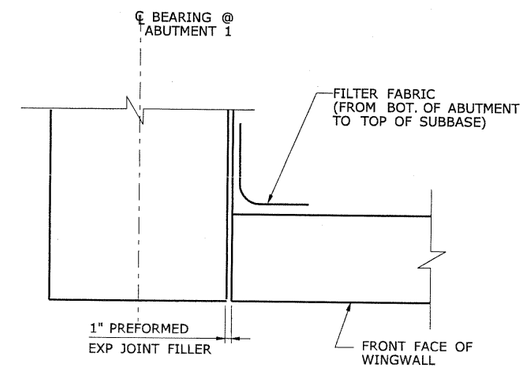

SECTION

SCALE: 1" = 1'-0"

X

-

NOTES:

1. FOR STEEL PILES NOTES AND LEGEND SEE DWG. NO. S-10.
2. THE ESTIMATED PILE LENGTH IS 95.0 FEET. THE ESTIMATED PILE LENGTH IS TO BE USED AS THE PILE ORDER LENGTH.
3. FOR ABUTMENT 1 DETAILS, SEE DWG. NOS. S-09 AND S-10.
4. FOR SOUTH EXISTING WINGWALL EXTENSION DETAILS, SEE DWG. NO. S-06.
5. THE CONTRACTOR SHALL FIELD VERIFY ALL REQUIRED DIMENSIONS PRIOR TO CONSTRUCTING THE WINGWALL.
6. FOR APPROACH SLAB DETAILS, SEE DWG. NO. S-27.
7. FOR SECTIONS A AND C SEE DETAILS ON DWG. S-13.

FINAL PLANS FOR REVIEW (90%)

REV.	DATE	REVISION DESCRIPTION	SHEET NO.

Plotted: 5/25/2010
Border Version: 5/31/07

THE INFORMATION, INCLUDING ESTIMATED QUANTITIES OF WORK, SHOWN ON THESE SHEETS IS BASED ON LIMITED INVESTIGATIONS BY THE STATE AND IS IN NO WAY WARRANTED TO INDICATE THE CONDITIONS OF ACTUAL QUANTITIES OF WORK WHICH WILL BE REQUIRED.

Date Plotted: 5/25/2010

Filename: h:\cadd\ctdot\1728\093_h046\struct_bridge\Trout_Brook\SB_MSH_0093_0046_TBS12.dgn

DESIGNER/DRAFTER: D. BELCASTRO
CHECKED BY: M. CARAMICHAEL
SCALE AS NOTED

STATE OF CONNECTICUT DEPARTMENT OF TRANSPORTATION

ENGINEER: AMMANN & WHITNEY
APPROVED BY: -
DATE: -

PROJECT TITLE: **NEW BRITAIN - HARTFORD BUSWAY OVER TROUT BROOK**

TOWN: WEST HARTFORD

DRAWING TITLE: WINGWALL 1A PLAN AND ELEVATION

PROJECT NO. 93-H046
DRAWING NO. S-12
SHEET NO. 203

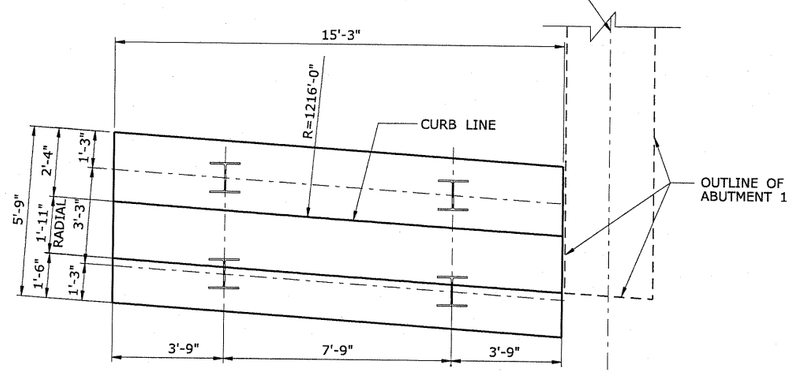

PILE PLAN

SCALE: 3/8" = 1'-0"

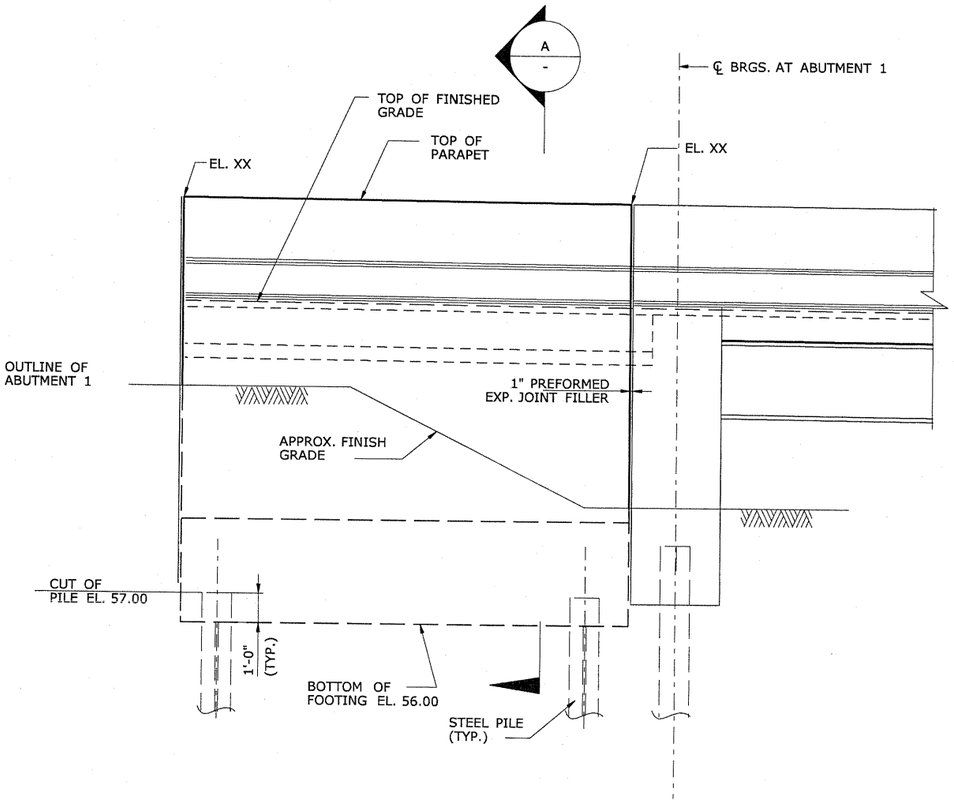

ELEVATION

SCALE: 3/8" = 1'-0"

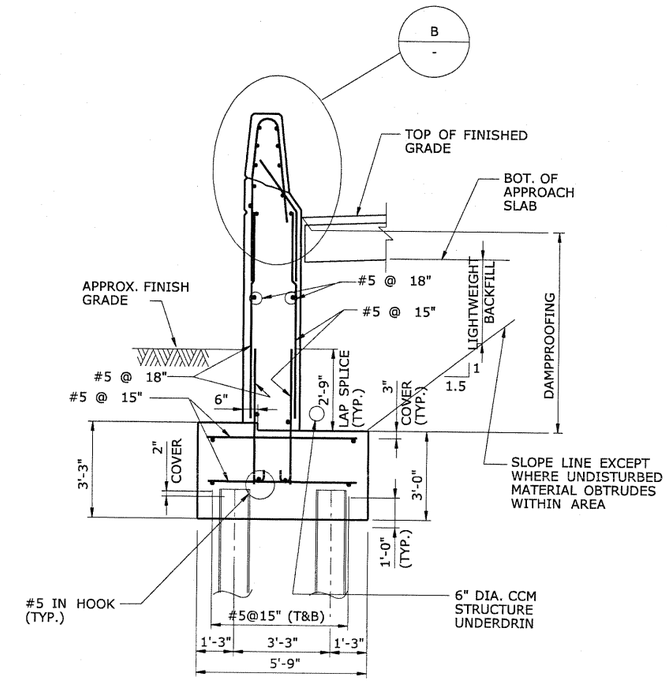

SECTION A

SCALE: 3/8" = 1'-0"

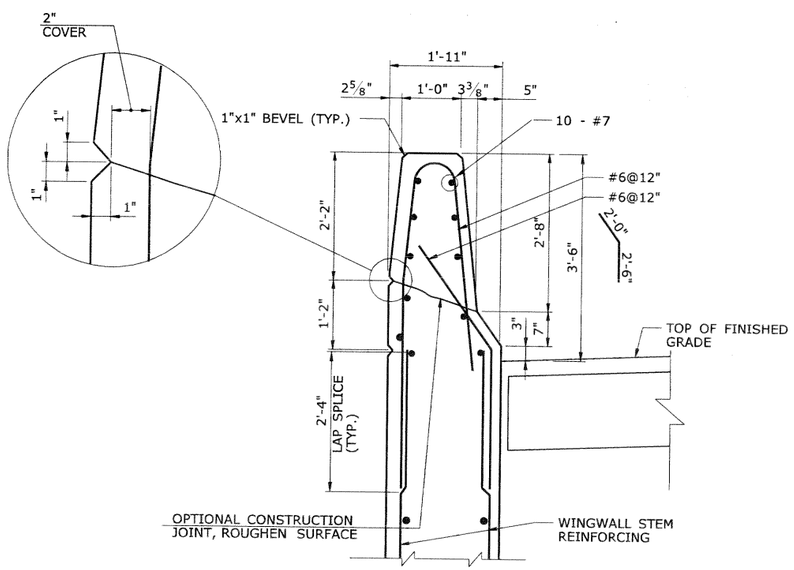

DETAIL B

SCALE: 3/4" = 1'-0"

DESIGN PILE LOADS	
LIMIT STATE	MAXIMUM DESIGN PILE LOAD
STRENGTH I	63.0 KIPS
SERVICE I	KIPS

PILE CAPACITY	
SUBSTRUCTURE UNIT	ULTIMATE PILE CAPACITY
WINGWALL 1B	KIPS

NOTES:

1. FOR STEEL PILES NOTES AND LEGEND SEE DWG. NO. S-10.
2. THE ESTIMATED PILE LENGTH IS 103.0 FEET. THE ESTIMATED PILE LENGTH IS TO BE USED AS THE PILE ORDER LENGTH.
3. FOR ABUTMENT 1 DETAILS, SEE DWG. NO. S-09 & S-10.
4. FOR APPROACH SLAB DETAILS, SEE DWG. NO. S-27.

WINGWALL 2B

FINAL PLANS FOR REVIEW (90%)

REV.	DATE	REVISION DESCRIPTION	SHEET NO.

Filename: h:\cadd\ctdot\1728\093_h046\struct_bridge\Trout_Brook\SB_MSH_0093_0046_TBWW1B.dgn

Plotted: 5/25/2010
Border Version: 5/31/07

THE INFORMATION, INCLUDING ESTIMATED QUANTITIES OF WORK, SHOWN ON THESE SHEETS IS BASED ON LIMITED INVESTIGATIONS BY THE STATE AND IS IN NO WAY WARRANTED TO INDICATE THE CONDITIONS OF ACTUAL QUANTITIES OF WORK WHICH WILL BE REQUIRED.

Date Plotted: 5/25/2010

DESIGNER/DRAFTER: D. BELCASTRO
CHECKED BY: M. CARAMICHAEL
SCALE AS NOTED

STATE OF CONNECTICUT
DEPARTMENT OF TRANSPORTATION

ENGINEER: AMMANN & WHITNEY
APPROVED BY: -
DATE: -

PROJECT TITLE: NEW BRITAIN - HARTFORD BUSWAY OVER TROUT BROOK

TOWN: WEST HARTFORD

DRAWING TITLE: WINGWALL 1B PLAN AND ELEVATION

PROJECT NO. 93-H046
DRAWING NO. S-14
SHEET NO. --

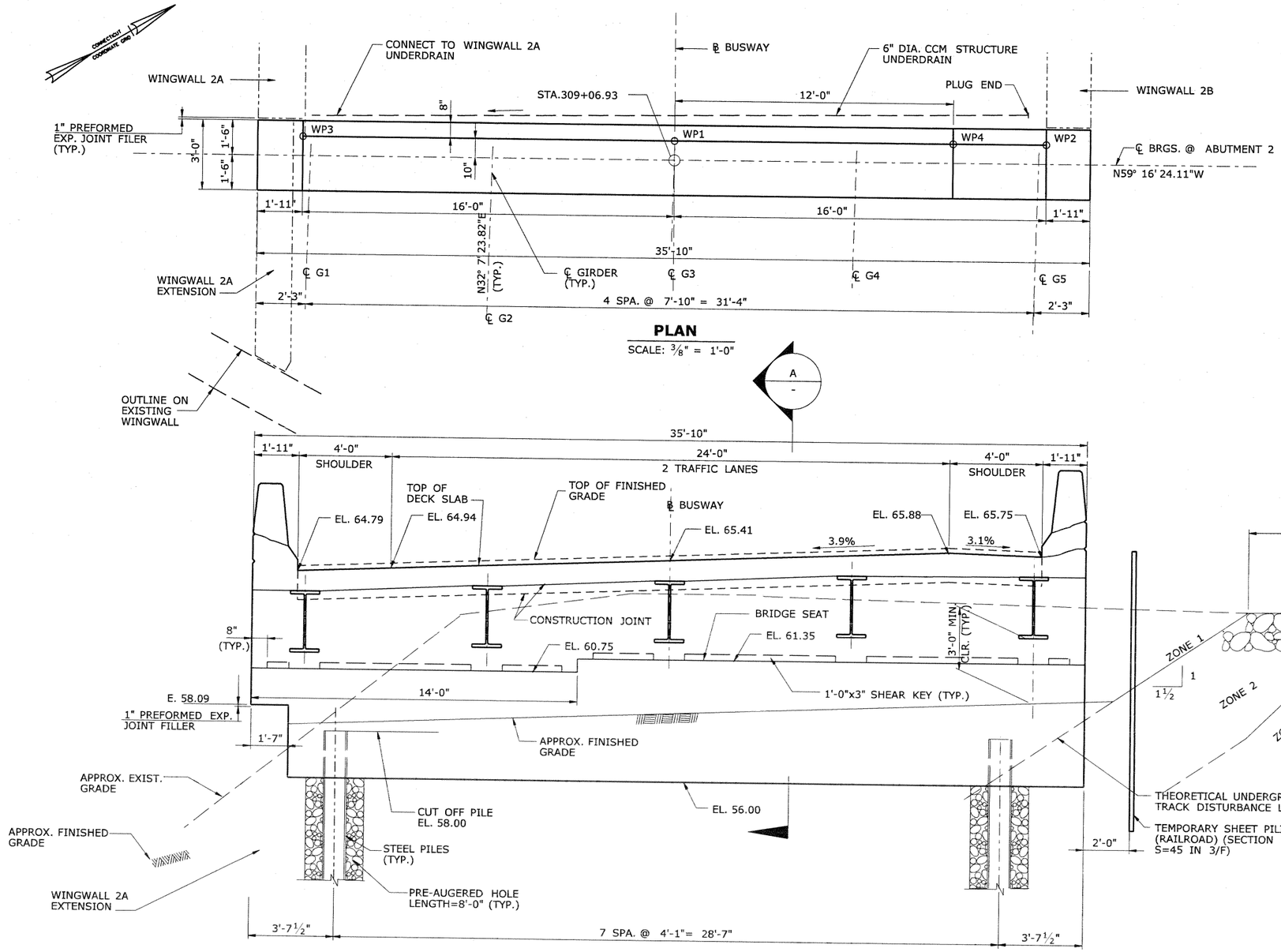

WP NO.	TOP OF FINISHED GRADE ELEVATION
WP1	65.65
WP2	66.00
WP3	65.03
WP4	66.12

NOTE: THOSE ELEVATIONS ARE APPLIED AT THE END OF DECK SLAB

NOTES:

1. ELEVATIONS SHOWN AT TOP OF DECK ARE AT ℄ BRGS.
2. WORK THIS DWG. WITH DWG. NO. S-16
3. FOR SUGGESTED INTEGRAL ABUTMENT CONSTRUCTION SEE DWG. NO. S-09
4. FOR REINFORCING DETAILS SEE DWG. NO. S-17
5. FOR SHEAR KEY DETAIL SEE DWG. NO. S-16
6. FOR WINGWALL 2A & 2B DETAILS SEE DWG. NO. S-18 THRU S-20
7. CONSTRACTOR SHALL SUBMIT SHOP DRAWING DETAILS MEMBER SIZES AND CALCULATIONS FOR ALL TEMPORARY SHEETING WORK, TO THE ENGINEER FOR REVIEW.

ABUTMENT 2

FINAL PLANS FOR REVIEW (90%)

REV.	DATE	REVISION DESCRIPTION	SHEET NO.

Filename: h:\cadd\ctdot\1728\093.h046\struct.bridge\Trout.Brook\SB.MSH.0093.0046.TBS14.dgn

Plotted: 10/20/2009
Border Version: 5/31/07
THE INFORMATION, INCLUDING ESTIMATED QUANTITIES OF WORK, SHOWN ON THESE SHEETS IS BASED ON LIMITED INVESTIGATIONS BY THE STATE AND IS IN NO WAY WARRANTED TO INDICATE THE CONDITIONS OF ACTUAL QUANTITIES OF WORK WHICH WILL BE REQUIRED.
Date Plotted: 5/25/2010

DESIGNER/DRAFTER: D. BELCASTRO
CHECKED BY: M. CARAMICHAEL
SCALE AS NOTED

STATE OF CONNECTICUT
DEPARTMENT OF TRANSPORTATION

ENGINEER: AMMANN & WHITNEY
APPROVED BY: -
DATE: -

PROJECT TITLE:
NEW BRITAIN - HARTFORD BUSWAY OVER TROUT BROOK

TOWN: WEST HARTFORD
DRAWING TITLE: ABUTMENT 2 PLAN AND ELEVATION

PROJECT NO. 93-H046
DRAWING NO. S-15
SHEET NO. 204

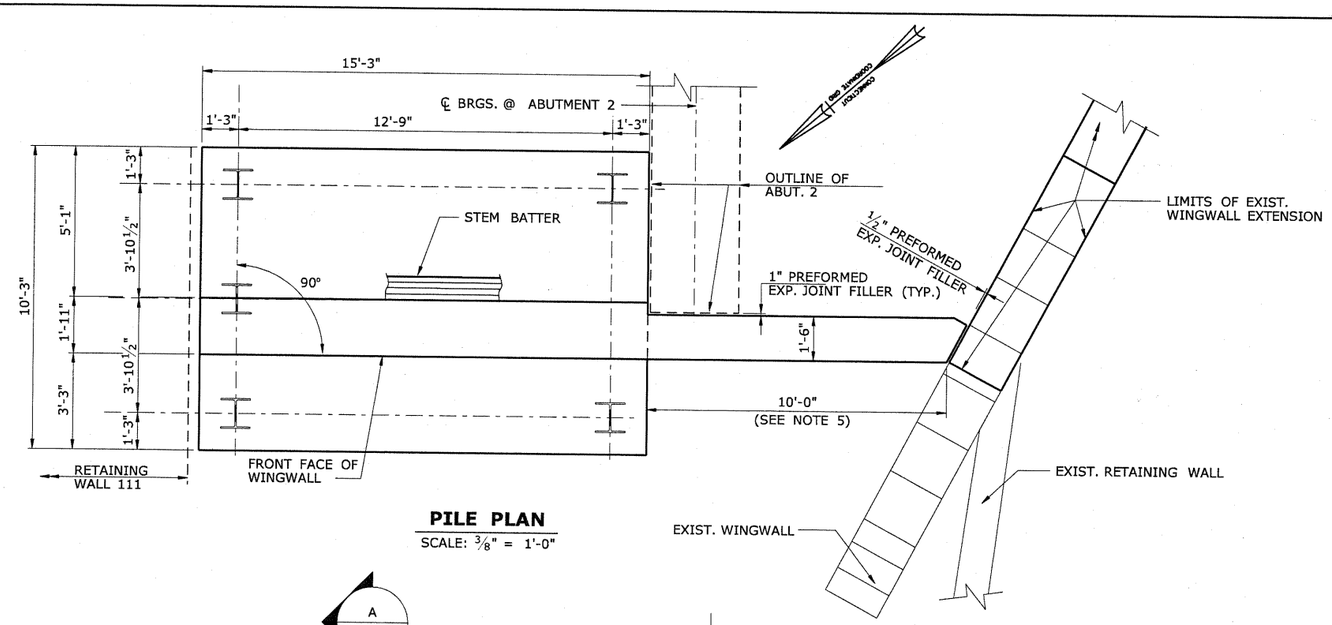

PILE PLAN

SCALE: ⅜" = 1'-0"

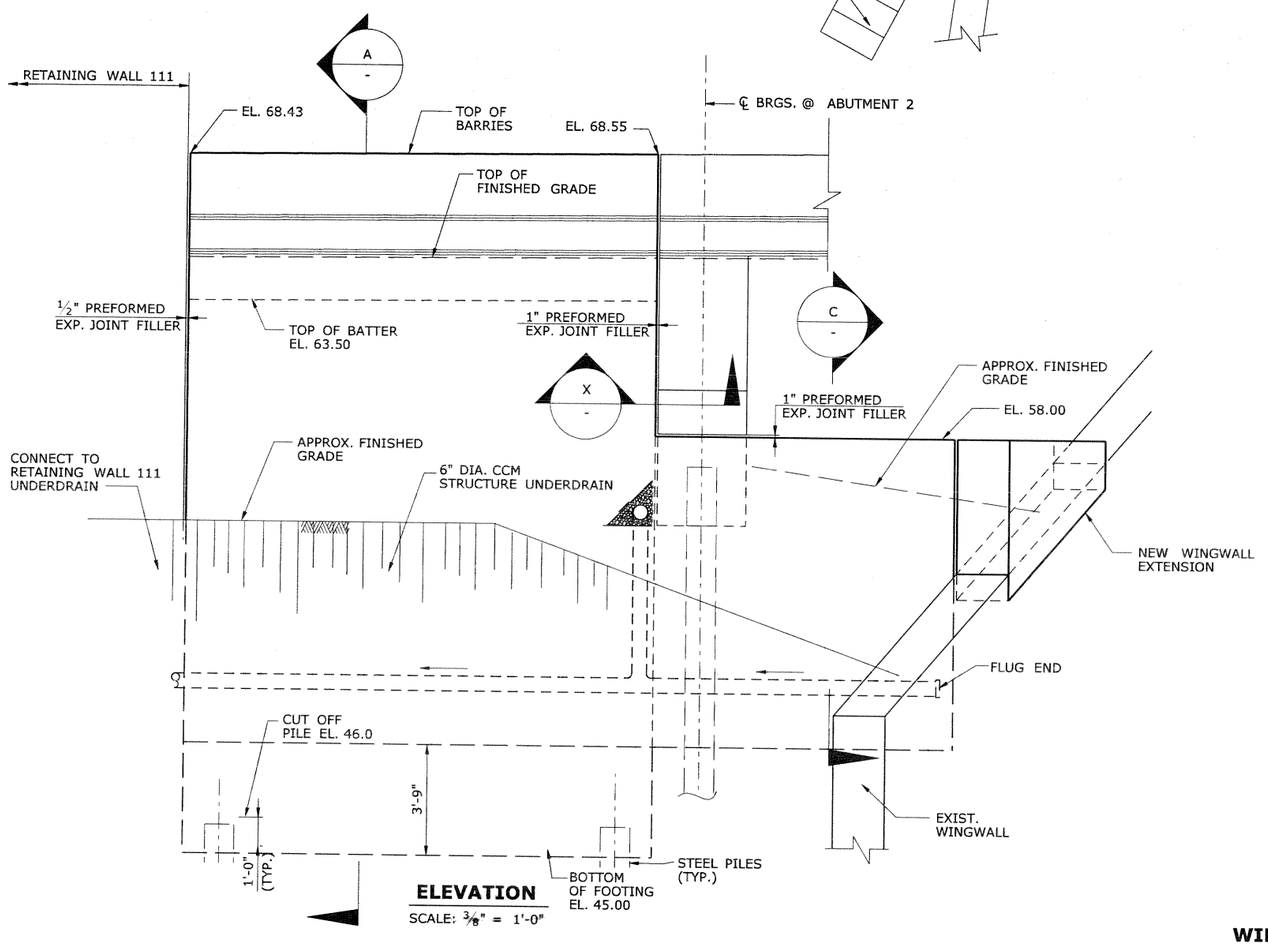

ELEVATION

SCALE: ⅜" = 1'-0"

DESIGN PILE LOADS	
LIMIT STATE	MAXIMUM DESIGN PILE LOAD
STRENGTH I	159.5 KIPS
SERVICE I	121.5 KIPS

PILE CAPACITY	
SUBSTRUCTURE UNIT	ULTIMATE PILE CAPACITY
ABUTMENT 2A	KIPS

NOTES:

1. FOR STEEL PILES NOTES AND LEGEND SEE DWG. NO.S-10
2. THE ESTIMATED PILE LENGTH IS 90.0 FEET. THE ESTIMATED PILE LENGTH IS TO BE USED AS THE PILE ORDER LENGTH. THE ESTIMATED LENGTH OF PILES IS 85.0"
3. FOR NORTH INTEGRAL ABUTMENT 2 DETAILS SEE DWG. NO. S-15 AND S-16
4. FOR WINGWALL EXTENSION DETAILS SEE DWG. NO S-07
5. THE CONTRACTOR SHALL FIELD VERIFY ALL REQUIRED DIMENSIONS PRIOR CONSTRUCTING THE WINGWALL
6. FOR APPROACH SLAB DETAILS SEE DWG. NO. S-27
7. FOR SECTIONS A & C SEE DWG. NO. S-19

WINGWALL 2A

FINAL PLANS FOR REVIEW (90%)

REV.	DATE	REVISION DESCRIPTION	SHEET NO.

Filename: h:\cadd\ctdot\1728\093_h046\struct_bridge\Trout_Brook\SB_MSH_0093_0046_TBS17.dgn

Plotted: 5/25/2010
Border Version: 5/31/07

THE INFORMATION, INCLUDING ESTIMATED QUANTITIES OF WORK, SHOWN ON THESE SHEETS IS BASED ON LIMITED INVESTIGATIONS BY THE STATE AND IS IN NO WAY WARRANTED TO INDICATE THE CONDITIONS OF ACTUAL QUANTITIES OF WORK WHICH WILL BE REQUIRED.

Date Plotted: 5/25/2010

DESIGNER/DRAFTER: D. BELCASTRO
CHECKED BY: M. CARAMICHAEL
SCALE AS NOTED

STATE OF CONNECTICUT
DEPARTMENT OF TRANSPORTATION

ENGINEER: AMMANN & WHITNEY
APPROVED BY: -
DATE: -

PROJECT TITLE:
NEW BRITAIN - HARTFORD BUSWAY OVER TROUT BROOK

TOWN: WEST HARTFORD

DRAWING TITLE: WINGWALL 2A PLAN AND ELEVATION

PROJECT NO. 93-H046
DRAWING NO. S-18
SHEET NO. 208

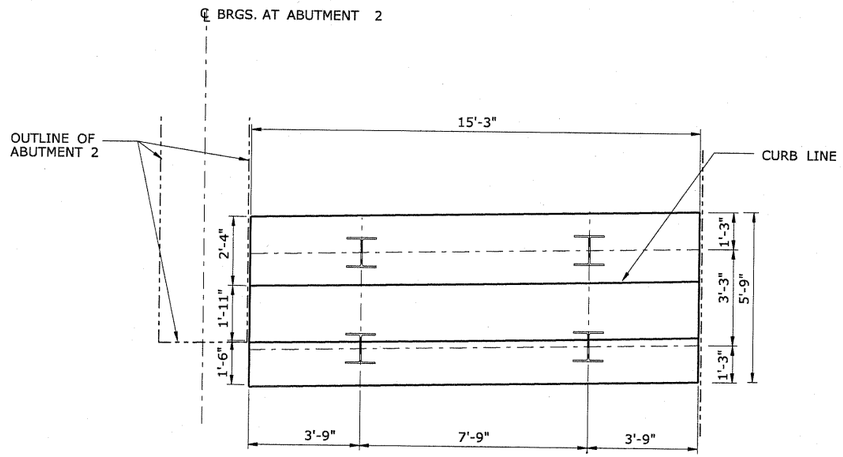

PILE PLAN
SCALE: 3/8" = 1'-0"

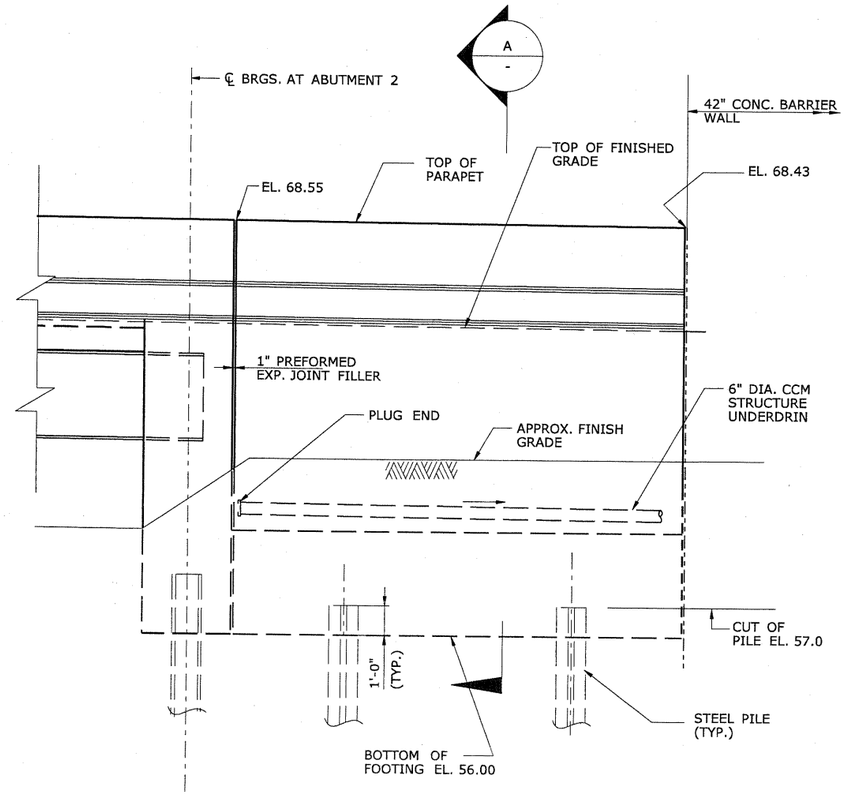

ELEVATION
SCALE: 3/8" = 1'-0"

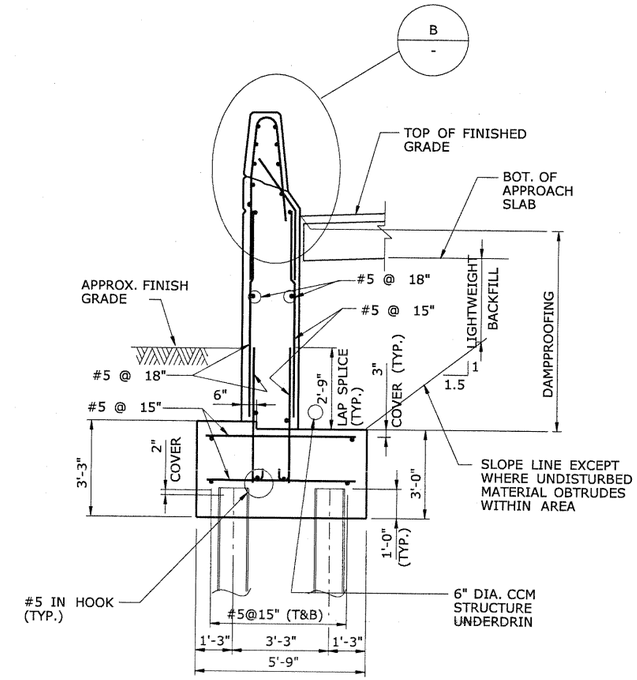

SECTION A
SCALE: 3/8" = 1'-0"

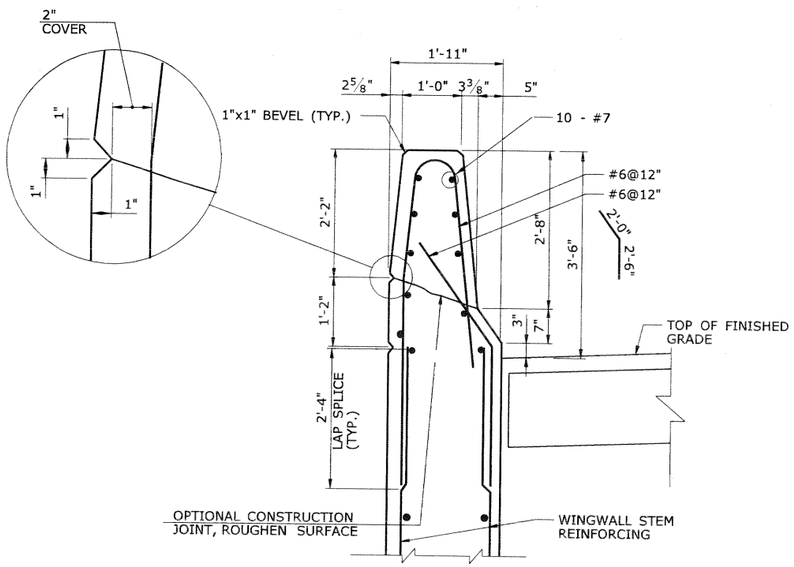

DETAIL B
SCALE: 3/4" = 1'-0"

DESIGN PILE LOADS	
LIMIT STATE	MAXIMUM DESIGN PILE LOAD
STRENGTH I	63.0 KIPS
SERVICE I	KIPS

PILE CAPACITY	
SUBSTRUCTURE UNIT	ULTIMATE PILE CAPACITY
WINGWALL 2B	KIPS

NOTES:

1. FOR STEEL PILES NOTES AND LEGEND SEE DWG. NO. S-16.
2. THE ESTIMATED PILE LENGTH IS 103.0 FEET. THE ESTIMATED PILE LENGTH IS TO BE USED AS THE PILE ORDER LENGTH.
3. FOR ABUTMENT 2 DETAILS, SEE DWG. NO. S-15 & S-16.
4. FOR APPROACH SLAB DETAILS, SEE DWG. NO. S-27.

WINGWALL 2B

FINAL PLANS FOR REVIEW (90%)

REV.	DATE	REVISION DESCRIPTION	SHEET NO.

Filename: h:\cadd\ctdot\1728\093_h046\struct_bridge\Trout_Brook\SB_MSH_0093_0046_TBS19.dgn

Plotted: 5/25/2010
Border Version: 5/31/07
THE INFORMATION, INCLUDING ESTIMATED QUANTITIES OF WORK, SHOWN ON THESE SHEETS IS BASED ON LIMITED INVESTIGATIONS BY THE STATE AND IS IN NO WAY WARRANTED TO INDICATE THE CONDITIONS OF ACTUAL QUANTITIES OF WORK WHICH WILL BE REQUIRED.
Date Plotted: 5/25/2010

DESIGNER/DRAFTER: D. BELCASTRO
CHECKED BY: M. CARAMICHAEL
SCALE AS NOTED

STATE OF CONNECTICUT
DEPARTMENT OF TRANSPORTATION

ENGINEER: AMMANN & WHITNEY
APPROVED BY: -
DATE: -

PROJECT TITLE: NEW BRITAIN - HARTFORD BUSWAY OVER TROUT BROOK

TOWN: WEST HARTFORD
DRAWING TITLE: WINGWALL 2B PLAN AND ELEVATION

PROJECT NO. 93-H046
DRAWING NO. S-20
SHEET NO. 210