Structure No. 03291

Route 9 South Bound

over

Nedobity Road

Haddam

Mile Point 18.67

Routine Inspection
on
27-Feb-07

Inspected By Team No. 7

For Area No. 10

TEAM:	Forwarded to T.E. 3: D PAWLIKOWSKI	Date: 4.17.07
T.E. 3:	Reviewed By T.E. 3: D PAWLIKOWSKI	Date: 4.18.07
	BMM Required	NO
	Town Structure	NO
	Rating <= 5 {Item Nos. 58, 59, 60, 61 or 62}	YES
	Forwarded to Supervisor: J KOZLOWSKI	Date: 4.18.07
	Forwarded to "To Be Copied Drawer"	Date:
	Date BRI-19 Entered 4.18.07	
SUPERVISOR:	Reviewed By Supervisor: [signature]	Date: April 19 2007
Support:	Date Copies Made: 5/10/07	BMM No.
	Town Letter:	Memo: Trans

NBIS: Yes

Last Inspection: September 31, 2004

STATE OF CONNECTICUT
DEPARTMENT OF TRANSPORTATION
BUREAU OF HIGHWAYS

INSPECTION REPORT TRANSMITTAL FORM
Form BRI-27, Rev. 6/00

Structure No.	03291	Town	HADDAM
Inspection Date	2/27/2007	Inspectors	Team 7

TABLE OF CONTENTS

Loose Forms (not bound in report)

		Number of Sheets Enclosed
Maintenance Memo		0
Flagging Memos		0
PONTIS Element Data Collection Form		2
Plan Sheets	Already on file ☐	0

Bound Report Pages

Title Cover Sheet		1
Table of Contents		1
Executive Summary		0
Field Notes		5
Calculations:	Load Rating Evaluation	0
	Quantities & Cost Estimate	0
Photo Sheets		7
Photo Images		13

Forms

BRI-10, Concrete Deterioration Worksheet	1
BRI-12, Fracture Critical Inspection Sheet	3
BRI-17, Joint Measurement Sheet	1
BRI-18, Bridge Inspection Form	5
BRI-19, Highway Bridge Inventory Form	2

Comments:

(1) Vertical clearance

Bridge Number **03291**

Inspected By: _____ & _____

Sufficiency Rating 83.58

Previous Inspection Date 8/31/2004

BS&E Received ☐ Data Entry By: DP

Copies Made ☐ Data Entry Date: 4.18.07

STATE OF CONNECTICUT
DEPARTMENT OF TRANSPORTATION
BRIDGE SAFETY & EVALUATION

STRUCTURE EVALUATION

SHEET 1 OF 2 FORM BRI-19 REV 10/00

SHEET_____ OF_____ (INSP. REPORT)

90) Inspection Date	Inspection Team	91) Frequency	Class
02 27 07	7	24	01
Indepth Insp	**Deck Survey**	**Access**	**Flagman**
9/10/2002	2/28/1989	21	0

CRITICAL FEATURE INSPECTIONS

	Type	Frequency	Team	Date
Fracture:				
Uwater:				
Special:				

RED FLAG ☐

IDENTIFICATION

Bridge Name

Town Name HADDAM Town Code 35230

5) Inventory Route:

A) Record Type 1 D) Route Number 00009

B) Signing Prefix 3 State Highway E) Directional Suffix 0 NA SOUTH 3

C) Level of Service 1 Mainline

6) Feature Intersected NEDOBITY ROAD

7) Facility Carried ROUTE 9 SOUTHBOUND

9) Location .25MI WEST OF ROUTE 154

8.9 MI N OF ROUTE 81

11) Milepoint 18.67 Miles

16) Latitude 41 deg 30 min 18.00 sec deg min sec

17) Longitude 72 deg 35 min 12.00 sec deg min sec

98) Border Bridge:

A) State Code B) Percent Responsibility %

C) Border Town Name

99) Border Bridge Structure No

STRUCTURE TYPE AND MATERIAL

43) Structure Type, Main:

A) Material 3 Steel B) Design Type 2 Stringer/Multi-beam

44) Structure Type, Approach:

A) Material 0 Other B) Design Type 0 Other

45) Number of Spans, Main Unit 3

46) Number of Approach Spans 0

107) Deck Structure Type 1 Concrete Cast-in-Place

108) Wearing Surface/Protective System:

A) Type of Wearing Surface 6 Bituminous

B) Type of Membrane 2 Preformed Fabric SHEET

C) Type of Deck Protection 0 None

AGE AND SERVICE

27) Year Built 1965 106) Year Reconstructed 0000

42) Type of Service:

A) On 1 Highway B) Under 1 HIGHWAY

28) Number of Lanes:

A) On 2 B) Under 2

29) Average Daily Traffic 16500 016300 Half ADT?: Yes

109) Percent Truck 6 %

30) Year of ADT 2003 2005

19) Bypass, Detour Length 1 miles

GEOMETRIC DATA

48) Length of Max Span 55 ft 54.92 FT

49) Structure Length 132 ft 132.42 FT

50) Curb or Sidewalk Widths:

A) Left 1.5 ft B) Right 1.5 ft

51) Brg Rdwy width,curb-curb 38.0 ft 38.00 FT

52) Deck Width, Out-Out 43.5 ft 43.50 FT

32) Approach Roadway Width 38 ft

33) Bridge Median 0 No Median OPEN GRATE 2

Deck Area 132.42 FT 5742 sqft 5760.3 SF 5760 sqf

34) Skew Angle * 43.50 FT 0 deg 0°-00'-00"

35) Structure Flared 0

10) Inv. Rte. Min. Vert Clearance 99 ft 99 in ft in

47) Log Inv. Rte. Total Horiz Clr.: 38.0 ft 38.00 FT

47) RLog Inv. Rte. Total Horiz. Clr.: ft

53) Min Vert Clearance Over Bridge 99 ft 99 in ft in

54) Min Vert Under Clearance H Ref 14 ft 7 in H Ref 14 ft 06 in

55) Min Lat Under Clearance on Right H Ref 11.5 ft Ref

56) Min Lat Under Clearance on Left 0.0 ft

CURB HEIGHT 10"

BRIDGE COMMENTS

Check work completed in BMM 05-249 during 2006 inspection (JCK June 16 2005)

EAST SIDE – MID SPAN – WEST SIDE

CURB HEIGHT 10 inches

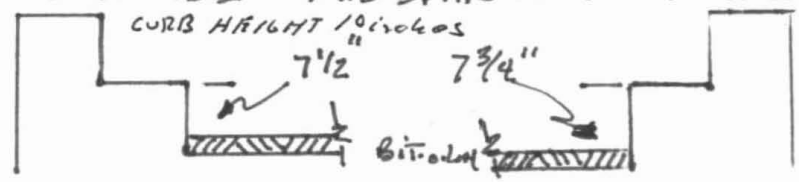

STRUCTURE EVALUATION

SHEET 2 OF 2 FORM BRI-19 REV 10/00

SHEET_____ OF_____ (INSP. REPORT

Bridge Number	03291	NBIS Length
Town Name	HADDAM	Yes 132
Facility Carried	ROUTE 9 SOUTHBOUND	
Feature Crossed	NEDOBITY ROAD	

Inspected By: _____ & _____

CLASSIFICATION

112) NBIS Bridge Length	Yes	
104) Highway System	1	On System
26) Functional Class	12	Urban Principal Arterial - Other
100) Defense Highway	1	Defense Highway
101) Parallel Structure	L	Left structure of parallel bridges
102) Direction of Traffic	1	1-way traffic
103) Temporary Structure		
110) Designated National Network	1	On national network
20) Toll	3	On Free Road
21) Maintain	1	State Highway Agency
22) Owner	1	State Highway Agency
Report Class	S	STATE
37) Historical Significance	5	Bridge is not eligible for National Register

WATERWAY

DrainageBasinCode

38) Navigation Control

39) Navigation Vert Clr. 40) Navigation Horiz Clr.

116) Vert-Lift Brg Nav Min

111) Pier Abutment Protection

PROPOSED IMPROVEMENTS

75A) Type of Work Proposed

75B) Work Done By

76) Length of Struct. Improvement ft ft

94) Bridge Improvement Cost $

95) Roadway Improvement Cost $

96) Total Project Cost $

97) Year of Improvement Cost Est.

114) Future ADT 115) Year Future ADT

List No. Project No. Advertised

POSTED SIGNS & UTILITIES

Other Posted Signs 1	0				
Other Posted Signs 2	0				
Actual P.L. Single Unit Truck	tons		Actual P.L. 4Axle Truck	tons	
Rec. P.L. Single Unit Truck	tons		Rec. P.L. 4Axle Truck	tons	
Actual P.L. Semi-TrailerTruck	tons		Actual P.L. 3S2 Truck	tons	
Rec. P.L. Semi-TrailerTruck	tons		Rec. P.L. 3S2 Truck	tons	
Rec. P.L. All Vehicles	tons		Actual P.L. All Vehicles	tons	
Posted Vert Clearance On Bridge	ft	in		ft	In
Posted Vert UnderClearance	ft	in		ft	In
Posted Speed Limit	mph			65	mph
Utility					

LOAD RATING AND POSTING

31) Design Load	5	Evaluation Code	L	
63) Operating Rating Type	1	Year of Evaluation	1999	
64) Operating Rating	62.1	70) Bridge Posting	5	
65) Inventory Rating Type	1	41) Structure Status	A	
66) Inventory Rating	37.3	Open, no restriction		

CONDITION

	Rating	By
58) Deck	7	6 ML
59) Superstructure	6	ML
60) Substructure	5	ML
61) Channel & Chan. Protection	N	ML
62) Culverts	N	ML

APPRAISALS

	Rating	By
67) Structure Evaluation	5	5 DO
68) Deck Geometry	6	ML
69) Under Clear Vert & Horiz	6	ML
71) Waterway Adequacy	N	ML
72) Approach Rdwy Alignment	8	ML
113) Scour Critical		

Items 58 Thru 72 Checked By: _____

36) Traffic Safety Features:

A) Bridge Railings	1	0
B) Transitions	0	
C) Approach Guardrail	0	
D) Approach Guardrail End	0	

OTHER FEATURES

Fence Required	No	Barrel Ladder	No	
Fence Present	No	Stand Pipes	No	
Fence Height	0.0 ft	Cat Walks	No	
Fence Type		Movable Inspection System	No	
Fence Material		Loose Concrete Checked?	Yes	
Fence Top Type				

INSPECTION COMMENTS

Proposed Next Indepth Insp Year	2012
Senior	debishopk
Supervisor	kozlowskijc

REVIEWED BY _____ Date _____

Connecticut Department of Transportation

Bridge Inspection Report BRI-18

BRIDGE #: 03291 **INSPECTION DATE:** 2/27/2007

INSPECTION TYPE: Routine **PREVIOUS INSPECTION DATE:** 8/31/2004 **SNOOPER REQUIRED:** No

INSPECTION PERFORMED BY: Team 7 **SNOOPER USED:** No

TOWN: HADDAM **FEATURE CARRIED:** ROUTE 9 SOUTHBOUND **YEAR BUILT:** 1965

LOCATION: .25MI WEST OF ROUTE 154 **FEATURE INTERSECTED** NEDOBITY ROAD **YEAR REBUILT:** 0

MAIN MATERIAL: Steel **MAIN DESIGN:** Stringer/Multi-beam or Gird

INSPECTION VISITS:

Inspection Date:	2/27/2007	**Start Time:**	11:20 AM
Temperature:	° F	**End Time:**	12:00 PM
Inspection Date:	2/27/2007	**Start Time:**	12:30 PM
Temperature:	° F	**End Time:**	1:35 PM

INSPECTORS:

Inspector:	M. Long	**Task:**	
Inspector:	M. Glynn	**Task:**	

58. DECK

OVERALL RATING 6

	RATING	
OVERLAY	6	BITUMINOUS CONCRETE WITH MEMBRANE - TRANSVERSE, LONGITUDINAL AND RANDOM CRACKING. SOME CRACKS SEALED. MINOR RAVELING.
DECK STR. CONDITION	7	DECK UNDERSIDE - MINOR HAIRLINE CRACKING RANDOM LOCATIONS. UNDERSIDE OF JOINTS OVER PIER SHOW SPALLING AND HOLLOW AREAS THROUGHOUT.
CURBS	7	CONCRETE SAFETYWALKS WITH GRANITE CURBS - MINOR HAIRLINE CRACKING IN RANDOM LOCATIONS. EAST CURB - HEAVY TO SEVERE SCALE AREA APPROXIMATELY 75 FT. LONG X 10 IN. WIDE X UP TO 1 IN. DEEP. GENERAL NOTE : SAFETYWALKS AND CURBS SNOW COVERED THIS INSPECTION.
MEDIAN	N	
SIDEWALKS	N	
PARAPET	7	VERTICAL HAIRLINE CRACKING SOME WITH EFFLORESENCE AT RANDOM LOCATIONS. MINOR AREAS OF LIGHT SCALE.
RAILING	7	STANDARD TWO PIE RAIL WITH H-POSTS - RANDOM AREAS OF GALVANIZE WORN OFF WITH LIGHT RUST.
PAINT	N	
FENCE	n	
DRAINS	8	PVC WEEPS.
LIGHTING STANDARD	N	
UTILITIES TYPE/SIZE	N	
CONSTRUCTION JOINTS	N	
EXPANSION JOINTS	4	SAW CUT JOINTS OVER ABUTMENT #1 -MINOR RAVELING ALONG SAW CUT JOINT IN SHOULDERS (DECK SIDE). BITUMINOUS SPALLING IN SLOW SPEED LANE 17 IN. LONG X 7 IN. WIDE X UP TO 1 IN. DEEP. COMPRESSION SEALS OVER ABUTMENT #2 AND PIERS - COMPRESSION SEALS SEPERATING FROM HEADERS IN RANDOM LOCATIONS.

Connecticut Department of Transportation

Bridge Inspection Report BRI-18

BRIDGE #: 03291 **INSPECTION DATE:** 2/27/2007

58. DECK **OVERALL RATING** 6

CONCRETE HEADERS - MINOR SPALLING FROM PLOW DAMAGE. HEADER OVER PIER #2 SHOWS SOME REPAIRS AND SPALLING APPROXIMATELY 2 LINEAR FEET X X UP TO 3 IN. WIDE.

59. SUPERSTRUCTURE **OVERALL RATING** 6

	RATING	
BEARING DEVICES	5	BEARINGS OVER ABUTMENTS SHOW AREAS OF LIGHT RUST. BEARINGS OVER PIERS SHOW HEAVY LAMINATING RUST SOME WITH ANCHOR BOLTS WHICH HAVE RUSTED OFF. RANDOM BEARING HAVE HAD KEEPER PLATES ADDED IN THE PAST.
STRINGERS	N	
GIRDERS	6	ROLLED BEAMS - BEAM ENDS OVER PIERS SHOW AREAS OF HEAVY LAMINATING RUST WITH MINOR SECTION LOSS.
FLOOR BEAMS	N	
TRUSSES-GENERAL	N	
TRUSSES-PORTALS	N	
TRUSSES-BRACING	N	
PAINT	5	WORN AREAS AND LIGHT RUST THROUGHOUT. ALL STRUCTURAL STEEL UNDER PIER JOINTS SHOW HEAVY RUSTING.
RUST	6	SEE ABOVE ITEMS.
MACHINERY MOV SPAN	N	
RIVETS & BOLTS	N	
WELDS & CRACKS	8	PARTIAL LENGTH COVERPLATES IN SPAN #2 ONLY - ALL COVERPLATE ENDS CHECKED HANDS ON.
TIMBER DECAY	N	
CONCRETE CRACKING	N	
COLLISION DAMAGE	8	
MEMBER ALIGNMENT	8	
DEFLECT. UNDER LOAD	N	
VIBR. UNDER LOAD	N	
STAND PIPES	N	
BARREL LADDERS	N	

ARE BARREL LADDERS OSHA COMPLIANT? NA

60. SUBSTRUCTURE **OVERALL RATING** 5

	RATING	
ABUTMENTS-STEM	7	BOTH ABUTMENTS SHOW OLD CONCRETE REPAIR AREAS -

Connecticut Department of Transportation

Bridge Inspection Report BRI-18

BRIDGE #: 03291 **INSPECTION DATE:** 2/27/2007

60. SUBSTRUCTURE **OVERALL RATING** 5

ABUTMENT #1 - (2) SPALLED AREAS WITH ADJACENT HOLLOW AREAS.
(1) 12 IN ROUND X UP TO 1/4 IN. DEEP.
(2) 16 IN. HIGH X 16 IN. WIDE X UP TO 1/4 IN. DEEP.

SEE ABUTMENT SKETCHES

ABUTMENTS-BACKWALL	4	BOTH BACKWALLS SHOW LARGE AREAS OF SPALLING AND POTENTIAL SPALLING (SEE ABUTMENT SKETCH). THERE HAVE BEEN NO CHANGES IN THIS CONDITION FOR 20 PLUS YEARS. See photos 8 & 9 there is active leakage through the spalled areas
ABUTMENTS-FOOTINGS	N	NOT VISIBLE
ABUT.-SETTLEMENT	8	
ABUTMENTS-WINGWALLS	8	
PIERS/BENTS-CAPS	6	BOTH PIER CAPS SHOW LIGHT SCALE AND MINOR HAIRLINE CARCKS. PIER #1, BAY #2 - HOLLOW AREA 15 IN. LONG X 8 IN. WIDE. SPAN #3, PAD #2 AT PIER #2 (EAST SIDE) - VERTICAL AND TRANSVERSE CRACK OPEN UP TO 1/16 INCH IN LINE WITH ANCHOR BOLT. VERTICAL AND TRANSVERSE CRACK NOTED ON BEARING SPAN #3, PAD #3 AT PIER #2 HAS BEEN REPAIRED (SEE SKETCH) JOK 4/19/07
PIERS/BENTS-PILE BENT	N	
PIERS/BENTS-COLUMN	7	PIER COLUMNS SHOW OLD CONCRETE REPAIRS AREAS. SOME CONCRETE REPAIRS SHOW CRACKING. ALSO NOTED SHALLOW RE-WIRE AT RANDOM LOCATIONS.
PIERS/BENTS-FOOTINGS	N	
PIERS/BENTS-SETTLEMent	8	
EROSION-SCOUR	8	
CONCRETE CRACK-SPALL	4	SEE ABOVE ITEMS.
STEEL CORROSION	N	
PAINT	N	
TIMBER DECAY	N	
COLLISION DAMAGE	8	
DEBRIS	7	LIGHT SAND AND CONCRETE DEBRIS.

61. CHANNEL PROTECTION **OVERALL RATING** N

62. CULVERTS & RETAINING WALL **OVERALL RATING** N

APPROACH CONDITION **OVERALL RATING** 7

RATING

Connecticut Department of Transportation

Bridge Inspection Report BRI-18

BRIDGE #: 03291 **INSPECTION DATE:** 2/27/2007

APPROACH CONDITION **OVERALL RATING** 7

APPROACH SLAB	N	NOT VISIBLE.
RELIEF JOINTS	8	
APPROACH GUIDE RAIL	8	METAL BEAM RAIL WITH STEE POSTS AT LEADING ENDS - MINOR COLLISION DAMAGE TO RAIL. WIRE ROPE RAIL WITH STEEL POST AT TRAILING ENDS.
APPROACH PAVEMENT	7	BITUMINOUS CONCRETE - TRANSVERSE, LONGITUDINAL AND RANDOM CRACKING - SOME CRACKS HAVE BEEN SEALED. MINOR RAVELING.
APPROACH EMBANKMENT	8	

TRAFFIC SAFETY FEATURES:

BRIDGE RAILINGS	~~1~~ → 0	
TRANSITIONS	0	
APPROACH GUARDRAILS	0	
APPR. GUARDRAIL ENDS	0	

LOAD POSTING

SINGLE UNIT (TONS)		
HS (TONS)		
4 AXLE (TONS)		
3S2 (TONS)		
ADVANCE WARNING Y/N		
LEGIBILITY		
VISIBILITY/LOCATION		

MISC.

MIN VERT. UNDERCLR.	14' 6"	
POSTED CLR. UNDER BRIDGE	' "	
POSTED CLR. ON BRIDGE	' "	
ADVANCE WARNING (Y/N)	No	
SPEED LIMIT (IF ANY)	MPH	
CHARACTER OF TRAFFIC	Moderate to heavy volume.	

ADDITIONAL NOTES

ADDITIONAL COMMENTS:

Connecticut Department of Transportation

Bridge Inspection Report BRI-18

BRIDGE #: 03291 **INSPECTION DATE:** 2/27/2007

Inspectors' Signatures:

1) _____ Date: 02/27/07

2) _____ Date: 2/27/07

3) _____ Date: __/__/__

4) _____ Date: __/__/__

P.E. Signature: _____ Date: 4/18/07

P.E.#: 20851

Reviewed by: _____ CDOT Date: 4/18/07

NO.	DATE	DESCRIPTION
–	3/31/04	No Change

REVISIONS

Bridge No.: 3291 Date: 9-10-02 Prepared By: T-10

CONCRETE DETERIORATION WORKSHEET

Form BRI-10, Rev. 9/97

	Deterioration By Span - In Square Meters										
	Span Number										
Deterioration Type	1	2	3	4	5	6	7	8	9	0	Total
Spalled and Delaminated Areas	Top:	Top:	Top:	Top:	Top:	Top:	Top:	Top:	Top:	Top:	Top:
	Bot: 35	Bot: 36	Bot: 35	Bot:	Bot:	Bot:	Bot:	Bot:	Bot:	Bot:	Bot: 106
Scale (Moderate to Severe Only)	Top:	Top:	Top:	Top:	Top:	Top:	Top:	Top:	Top:	Top:	Top:
	Bot:	Bot:	Bot:	Bot:	Bot:	Bot:	Bot:	Bot:	Bot:	Bot:	Bot:
Cracks: w/Efflorescence (use 150 mm width x length)	Bot:	Bot:	Bot:	Bot:	Bot:	Bot:	Bot:	Bot:	Bot:	Bot:	Bot:
without Efflo. (use 75 mm width x length)	Top:	Top: 7	Top: 3	Top:	Top:	Top:	Top:	Top:	Top:	Top:	Top: 10
	Bot: 8	Bot: 14	Bot: 5	Bot:	Bot:	Bot:	Bot:	Bot:	Bot:	Bot:	Bot: 27
Map Cracking: w/Efflorescence (use full area)	Bot:	Bot:	Bot:	Bot:	Bot:	Bot:	Bot:	Bot:	Bot:	Bot:	Bot:
without Efflo. (use 50% of area)	Top:	Top:	Top:	Top:	Top:	Top:	Top:	Top:	Top:	Top:	Top:
	Bot:	Bot:	Bot:	Bot:	Bot:	Bot:	Bot:	Bot:	Bot:	Bot:	Bot:
Honeycombed Areas (only areas more than 40 mm deep)	Bot:	Bot:	Bot:	Bot:	Bot:	Bot:	Bot:	Bot:	Bot:	Bot:	Bot:
											Deterioration 143
Span Area	1653	~~2455~~ 2454.3 SF	1653								Deck 5759 AREA
% Spalled and Delaminated on Top											
% Deterioration on Bottom	2.6%	~~2.5%~~ 2.0%	~~2.6~~ 2.8%								2.4%

REVISIONS
APR 1 8 2007
CTDOT - D. PAWLIKOWSKI, PE
BRIDGE SAFETY

Figure 6.1.2a - Concrete Deterioration Worksheet

Bridge No: 03291

Town of Haddam
Route 9 South Bound over Nedobity Road

CONCRETE DETERIORATION WORKSHEET

Form BRI-10, Rev. 12/04

Deterioration Type	Deterioration by Span - in Square Feet			
	Span No. 1	Span No. 2	Span No. 3	
Spalled and Delaminated Areas	Top: 0.0	Top: 0.0	Top: 0.0	Top:
	Bottom: 35.0	Bottom: 36.0	Bottom: 35.0	Bottom:
Scale {Moderate to Severe Only}	Top: 0.0	Top: 0.0	Top: 0.0	Top:
	Bottom: 0.0	Bottom: 0.0	Bottom: 0.0	Bottom:
Cracks with Efflorescence {use 6 inch width X length}				
	Bottom: 0.0	Bottom: 0.0	Bottom: 0.0	Bottom:
Cracks without Efflorescence {use 3 inch width X length}	Top: 0.0	Top: 0.0	Top: 0.0	Top:
	Bottom: 8.0	Bottom: 14.0	Bottom: 5.0	Bottom:
Map Cracking with Efflorescence {use full area}				
	Bottom: 0.0	Bottom: 0.0	Bottom: 0.0	Bottom:
Map Cracking without Efflorescence {use 50% area}	Top: 0.0 1/2 Area 0.0	Top: 0.0 1/2 Area 0.0	Top: 0.0 1/2 Area 0.0	Top: 1/2 Area
	Bottom: 0.0 1/2 Area 0.0	Bottom: 0.0 1/2 Area 0.0	Bottom: 0.0 1/2 Area 0.0	Bottom: 1/2 Area
Honeycomb Area {only areas more than 1 1/2 inches deep}				
	Bottom: 0.0	Bottom: 0.0	Bottom: 0.0	Bottom:
Totals: Bottom	43.0	50.0	40.0	
% Surface Scaling {up to 1/2 inch deep} on Top	Top: 0.0	Top: 0.0	Top: 0.0	Top:
% Spalled & Delaminated on Top	Top: 0.0	Top: 0.0	Top: 0.0	Top:
% Deterioration on Bottom	Bottom: 2.6	Bottom: 2.0	Bottom: 2.4	Bottom:
Span Area	1653.0	2454.3	1653.0	

Prepared By: David Pawlikowski, P.E. on April 18, 2007

DATE PREPARED 9-16-02	PREPARED BY Trotchaud	State of Connecticut Department of Transportation Bureau of Engineering & Highway Operations DES-003 REV 1-93 (302-06-0225) COMPUTATION SHEET	ORGANIZATION UNIT NO. 1317	WORK ORDER NO. Note
DATE CHECKED	CHECKED BY			SHEET NO.

SUBJECT:
BR 3291 Rt 9 SB -o- Nedobity Road, Haddam,
FRAMING PLAN Deck Underside Condition N.T.S

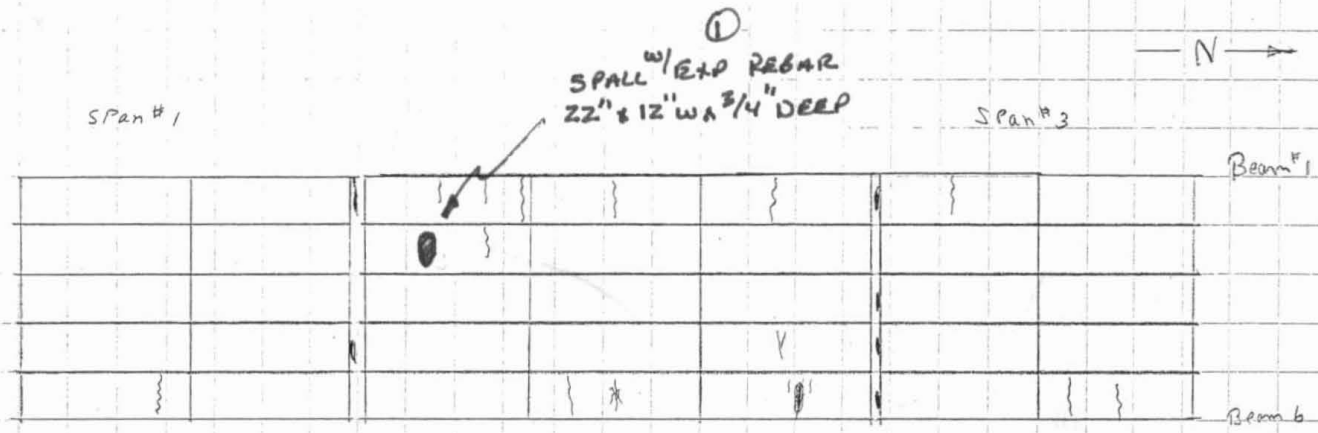

Key:
= Hairline TV. Cracks w/ light efflorescence 96 Linear by .5' W = 48 sq FT.

* = Spall w/exposed rebar. mostly @ deck ends -o- Piers. Average size 1 sq.ft

Deck Underside shows areas of Curing type cracks, left off sketch for sketch clarity.

* Deck ends -o- Piers also sound Hollow generally thru out 2' x 35' = 70 sq FT x 2 = 140 sq.FT spall and Hollow.

NO.	DATE	DESCRIPTION
-	8/31/04	N.C.
1	2/27/07	NOTE CHANGE

REVISIONS

Printed on Recycled or Recovered Paper

DATE PREPARED	PREPARED BY	State of Connecticut Department of Transportation Bureau of Engineering & Highway Operations DES-003 REV 1-93 (302-06-0225) COMPUTATION SHEET	ORGANIZATION UNIT NO.	WORK ORDER NO.
9-16-02	Trotochaud		1307	Note
DATE CHECKED	CHECKED BY			SHEET NO.

SUBJECT:
BR 3291 Rt 9 SB -o- NEDOBITY ROAD, HADDAM

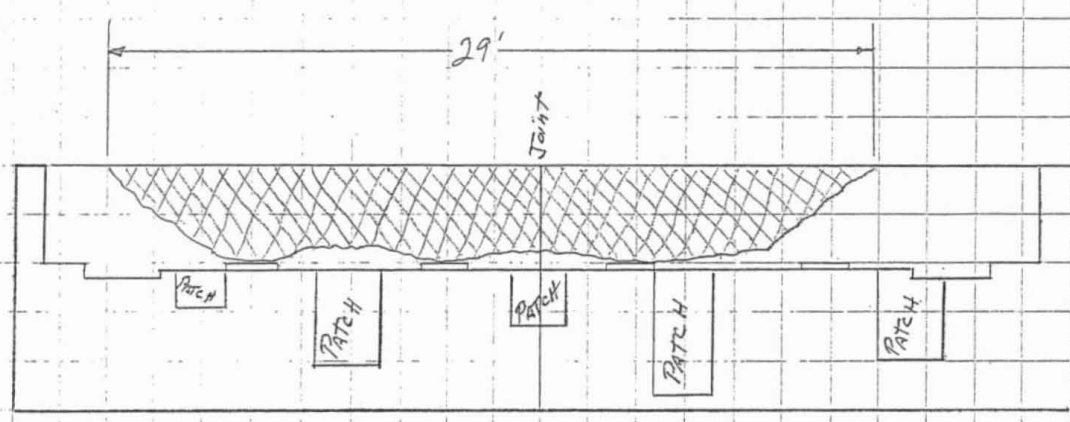

Abutment 2 Elevation View. Not to SCALE

Both Backwalls cracked and Potential spall 24" to 30" W x 29' to 30' Long OLD CONDITIONS +15 years
X 2" DEEP

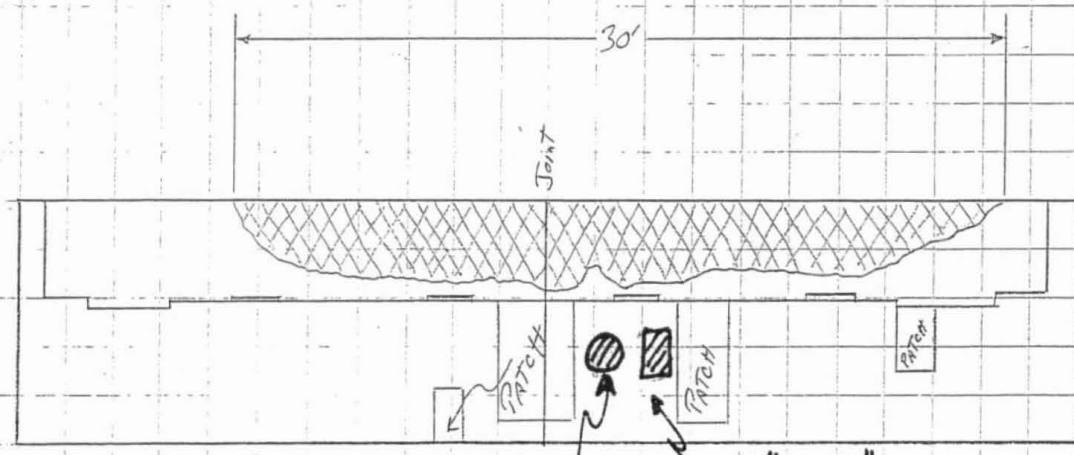

Abutment #1 Elevation View SPALLING W/ HA UP TO 1/4" DEEP ①

NO.	DATE	DESCRIPTION
—	8/31/04	N.C.
1	8/31/04	NOTE CHANGE
—	2/27/07	NO CHANGE

REVISIONS

Printed on Recycled or Recovered Paper

DATE PREPARED 9-10-02	PREPARED BY Trotochaud	State of Connecticut Department of Transportation Bureau of Engineering & Highway Operations DES-003 REV 1-93 (302-06-0225) COMPUTATION SHEET	ORGANIZATION UNIT NO. 1307	WORK ORDER NO. Note
DATE CHECKED	CHECKED BY			SHEET NO.

SUBJECT: BR 3291 Rt 9 SB -o- NEDOBITY ROAD, HADDAM,

PIER #1 PLAN VIEW N.T.S.

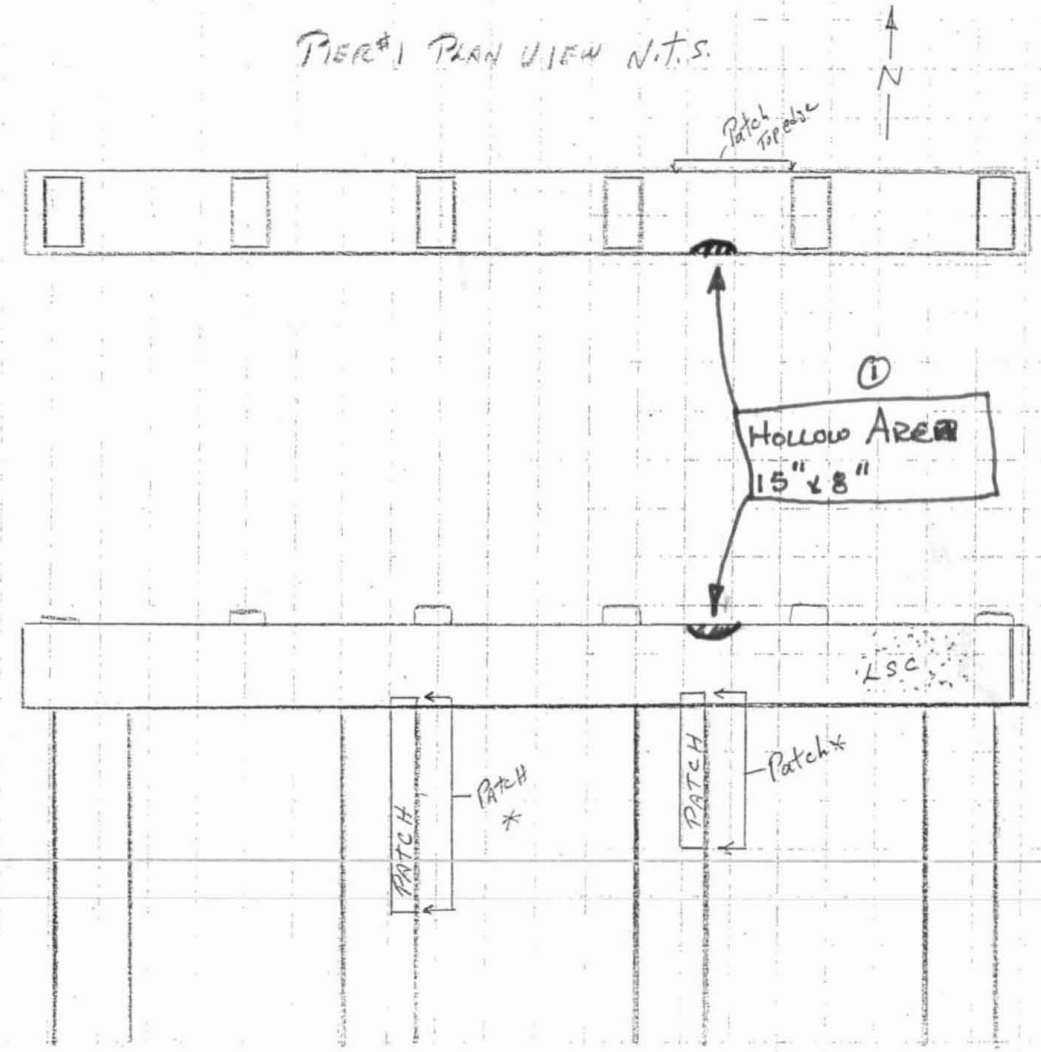

PIER #1 SOUTH ELEV. VIEW

* Patches East side of columns

Some Columns show form wire debris embedded. left off sketch for sketch clarity.

NO.	DATE	DESCRIPTION
–	8/31/04	N.C.
1	2/27/07	NOTE CHANGE

REVISIONS

DATE PREPARED	PREPARED BY	State of Connecticut Department of Transportation Bureau of Engineering & Highway Operations DES-003 REV 1-93 (302-06-0225) COMPUTATION SHEET	ORGANIZATION UNIT NO.	WORK ORDER NO.
9-10-02	Trotochaud		1307	Note
DATE CHECKED	CHECKED BY			SHEET NO.

SUBJECT: BR 3291 RT 9 SB -o- NEDDBITY ROAD, HADDAM

PIER 2 PLAN VIEW N.T.S

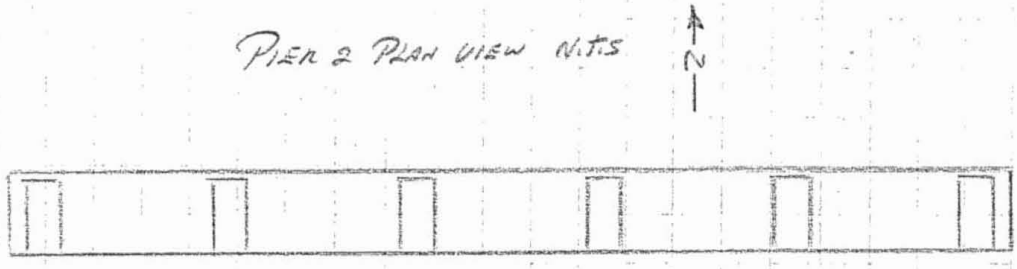

PIER 2 ELEV. VIEW Looking North

Remarks:

* Patch 3 Sides North, East, South Corners.

Repairs show shrinkage cracks

Some Columns show minor areas of dsc and some embedded formwire debris left off sketch for sketch clarity.

NO.	DATE	DESCRIPTION
–	8/31/04	N.C.
–	2/27/07	NO CHANGE

REVISIONS

Printed on Recycled or Recovered Paper

DATE PREPARED	PREPARED BY	State of Connecticut Department of Transportation Bureau of Engineering & Highway Operations DES-003 REV 1-93 (302-06-0225) COMPUTATION SHEET	ORGANIZATION UNIT NO.	WORK ORDER NO.
9-10-02	Trotochaud		1307	Note
DATE CHECKED	CHECKED BY			SHEET NO.

SUBJECT:
BR 3291 RT 9 SB -o- NEDOBITY ROAD, HADDAM

CRACK BEARING PAD 3 @ PIER 2

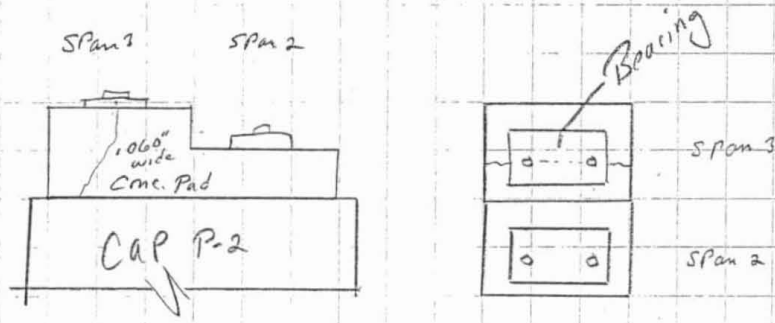

— REPAIRED 2/27/07 —

NO.	DATE	DESCRIPTION
—	8/31/04	N.C.
	2/27/07	REPAIRED

REVISIONS

Printed on Recycled or Recovered Paper

DATE PREPARED	PREPARED BY	State of Connecticut Department of Transportation Bureau of Engineering & Highway Operations DES-003 REV 1-93 (302-06-0225) COMPUTATION SHEET	ORGANIZATION UNIT NO.	WORK ORDER NO.
DATE CHECKED	CHECKED BY			SHEET NO.

SUBJECT: BR# 03291 HADDAM, RTE 9 SOUTHBOUND @ NEDOBITY RD

N.T.S.

REVISIONS			
NO.	DATE	DESCRIPTION	
1	2/27/07	NOTE CHANGE	

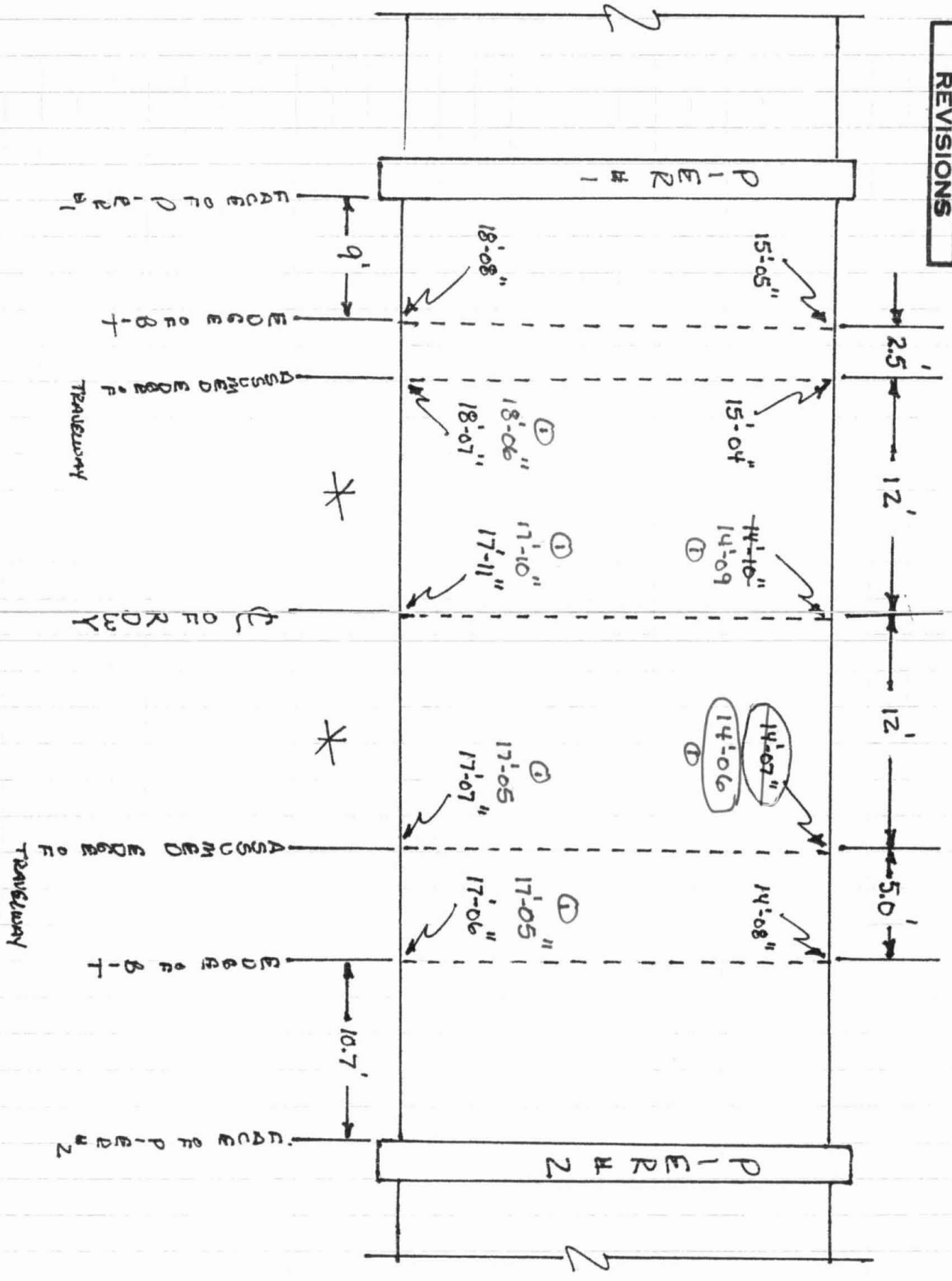

KEY
* = TRAVELLWAY

Printed on Recycled or Recovered Paper

JOINT MEASUREMENT

Form BRI-17, Rev 6/99

Bridge #: 03291 Location: ROUTE 9 S.B. O/ NEDOBITY RD. Town 0f: HADDAM

Deck Joint Location	Deck Joint Type	Effect Span (ft.)	Winter Measurement			Summer Measurement			Differential Movements			Comment	Difference between Actual & Calc. Movements	
			TEMP deg	Date.. 02/27/07 Left (in)	Right (in)	TEMP deg	Date.. 08/31/04 Left (in)	Right (in)	Actual Left	Right	by Formula		Left (in)	Right (in)
ABUT #1	S&S	0.0	38	1- 5/16	1-13/16	85	1-12/16	1- 4/16	- 7/16	9/16	0	FIX	- 7/16	0
PIER #1	C.H	35.0	38	1	1- 9/16	85	14/16	1	0	9/16	0	EXP/FIX	0	9/16
PIER#2	C.H	54.9	38	1- 8/16	14/16	85	1- 4/16	1- 2/16	4/16	- 4/16	3/16	EXP/FIX	1/16	- 7/16
ABUT #2	C.H	35.0	38	1	1-12/16	85	1-12/16	1	- 12/16	12/16	2/16	EXP	- 14/16	10/16
									0	0	0		0	0

GEN. NOTE: DECK JT TYPE

S&S = SAW CUT & SEALED JT

C.H = CONCRETE HEADER W/ COMPRESSION SEALS

Printed On : 4/16/2007

JOINT MEASUREMENT

Form BRI-17, Rev 6/99

Bridge #: 03291 Location: Route 9 South Bound over Nedobity Road Town 0f: Haddam

Deck Joint Location	Deck Joint Type	Effect Span (ft.)	Winter Measurement TEMP deg	Winter Measurement Date.. 12/19/00 Left (in)	Winter Measurement Date.. 12/19/00 Right (in)	Summer Measurement TEMP deg	Summer Measurement Date.. 08/31/04 Left (in)	Summer Measurement Date.. 08/31/04 Right (in)	Differential Movements Actual Left	Differential Movements Actual Right	Differential Movements by Formula	Comment	Difference between Actual & Calc. Movements Left (in)	Difference between Actual & Calc. Movements Right (in)
A-1	S & S	0.00	36	1-12/16	1- 5/16	85	1-12/16	1- 4/16	0	1/16	0	fix	0	1/16
P-1	C.H.	35.00	36	13/16	15/16	85	14/16	1	- 1/16	- 1/16	2/16	exp/fix	- 3/16	- 3/16
P-2	C.H.	54.92	36	1- 9/16	1- 8/16	85	1- 4/16	1- 2/16	5/16	6/16	3/16	exp/fix	2/16	3/16
A-2	C.H.	35.00	36	1-14/16	1- 1/16	85	1-12/16	1	2/16	1/16	2/16	exp	-0	- 1/16

* Note: Place the higher temperature measurements to the right side of the table.
A negative differential movement indicates possible abnormal movement.
The "Effective Span" is the length contributing to expansion at the joint. This should be 0 at fixed joints.

Prepared By: David Pawlikowski, P.E. on September 15, 2004

C.H. - Concrete Header w/ Compression Seal
S. & S. - Sawed & Sealed

Printed On : 4/18/2007

JOINT MEASUREMENT

Form BRI-17, Rev 6/99

Bridge #: 03291 Location: Route 9 South Bound over Nedobity Road Town 0f: Haddam

Deck Joint Location	Deck Joint Type	Effect Span (ft.)	Winter Measurement			Summer Measurement			Differential Movements			Comment	Difference between Actual & Calc. Movements	
			TEMP	Date..	02/27/07	TEMP	Date..	08/31/04	Actual		by			
			deg	Left (in)	Right (in)	deg	Left (in)	Right (in)	Left	Right	Formula		Left (in)	Right (in)
A-1	S & S	0.00	38	1- 5/16	1-13/16	85	1-12/16	1- 4/16	- 7/16	9/16	0	fix	- 7/16	9/16
P-1	C.H.	35.00	38	1	1- 9/16	85	14/16	1	2/16	9/16	2/16	exp/fix	-0	7/16
P-2	C.H.	54.92	38	1- 8/16	14/16	85	1- 4/16	1- 2/16	4/16	- 4/16	3/16	exp/fix	1/16	- 7/16
A-2	C.H.	35.00	38	1	1-12/16	85	1-12/16	1	- 12/16	12/16	2/16	exp	- 14/16	10/16

* Note: Place the higher temperature measurements to the right side of the table.
A negative differential movement indicates possible abnormal movement.
The "Effective Span" is the length contributing to expansion at the joint. This should be 0 at fixed joints.

Prepared By: David Pawlikowski, P.E. on April 18, 2007

C.H. - Concrete Header w/ Compression Seal
S. & S. - Sawed & Sealed

Printed On : 4/18/2007

CONNECTICUT DEPARTMENT OF TRANSPORTATION
FRACTURE CRITICAL MEMBERS/FATIGUE PRONE DETAILS
INSPECTION DATA SHEET

Form BRI12, Rev 9/97

ILLUSTRATIVE EXAMPLE 7

MEMBER/DETAIL TYPE # M

Member/Detail Type: PARTIAL LENGTH WELDED COVER PLATES

☐ Fracture Critical

Fatigue Category: E' Steel Type: ASTM A36

☑ Fatigue Prone

Description: ROUNDED CORNER PARTIAL LENGTH WELDED COVER PLATES - FILLET WELD - SPAN NO. 2 STRINGER NOS 1 thru 7

Inspection Procedure:

Built-Up Members W33x130 FLANGE THICKNESS 7/8 inch (0.855 inch)	Base metal and weld metal in members of built-up plates or shapes (without attachments) connected by continuous full penetration groove welds (with backing bars removed) or by continuous fillet welds parallel to the direction of applied stress.	T or Rev	B	3,4,5,7
	Base metal and weld metal in members of built-up plates or shapes (without attachments) connected by continuous full penetration groove welds with backing bars not removed, or by continuous partial penetration groove welds parallel to the direction of applied stress.	T or Rev	B'	3,4,5,7
	Calculated flexural stress at the toe of transverse stiffener welds on girder webs or flanges.	T or Rev	C	6
	Base metal at ends of partial length welded coverplates with high-strength bolted slip-critical end connections. (See Note f.)	T or Rev	B	22
	Base metal at ends of partial length welded coverplates narrower than the flange having square or tapered ends, with or without welds across the ends, or wider than flange with welds across the ends:			
	(a) Flange thickness ≤ 0.8 in.	T or Rev	E	7
	(b) Flange thickness > 0.8 in.	T or Rev	E'	7
	Base metal at ends of partial length welded coverplates wider than the flange without welds across the ends.	T or Rev	E'	7

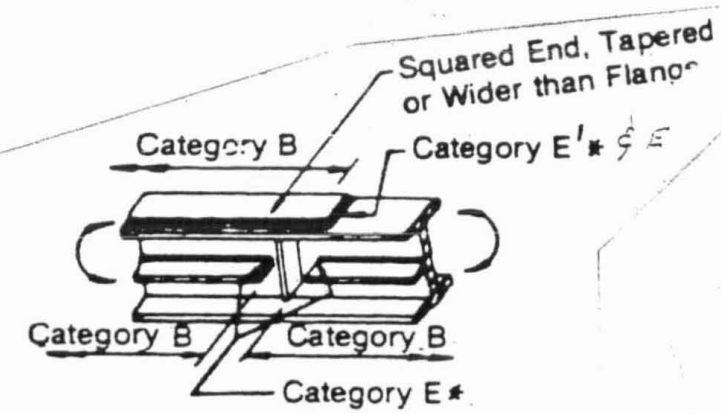

CONNECTICUT DEPARTMENT OF TRANSPORTATION
FRACTURE CRITICAL MEMBERS/FATIGUE PRONE DETAILS
INSPECTION DATA SHEET

Form BRI12, Rev 9/97

MEMBER/DETAIL TYPE # 7

Member/Detail Type: PARTIAL LENGTH WELDED COVERPLATES

☐ Fracture Critical

Fatigue Category: E

Steel Type:

☑ Fatigue Prone

Description:

Inspection Procedure: HANDS ON

MEMBER/DETAIL TYPE

Member/Detail Type:

☐ Fracture Critical

Fatigue Category:

Steel Type:

☐ Fatigue Prone

Description:

Inspection Procedure:

MEMBER/DETAIL TYPE

Member/Detail Type:

☐ Fracture Critical

Fatigue Category:

Steel Type:

☐ Fatigue Prone

Description:

Inspection Procedure:

MEMBER/DETAIL TYPE

Member/Detail Type:

☐ Fracture Critical

Fatigue Category:

Steel Type:

☐ Fatigue Prone

Description:

Inspection Procedure:

CONNECTICUT DEPARTMENT OF TRANSPORTATION
FRACTURE CRITICAL MEMBERS/FATIGUE PRONE DETAILS
INSPECTION DATA SHEET

Form BRI12, Rev 9/97

Bridge No: 03291

Year Built: 1965

Fracture Critical Inspection Date:

FC Insp Freq: Months FC Type Code:

Town: HADDAM

ADT: Year of ADT:

Facility Carried: ROUTE 9 SB

Structure Type: 302 % Truck:

Feature Intersected: NEDOBITY ROAD

Access Equipment Needed:

Traffic Control Required:

Reference to Plans: PROJECT NO. 82-118 BRIDGE SHEET NO. 1, 8 & 9

CONNECTICUT DEPARTMENT OF TRANSPORTATION
FRACTURE CRITICAL MEMBERS/FATIGUE PRONE DETAILS
INSPECTION DATA SHEET

Form BRI12, Rev 9/97

Bridge No: 03291

Year Built: 1965

Fracture Critical Inspection Date:

FC Insp Freq: Months FC Type Code:

Town: HADDAM

ADT: Year of ADT:

Facility Carried: ROUTE 9. SOUTH BOUND

Structure Type: 302 % Truck:

Feature Intersected: NEDORITY ROAD

Access Equipment Needed:

Traffic Control Required:

Reference to Plans: PROJECT NO 82-118 BRIDGE SHEET NOS. 1, 8 & 9.

CONNECTICUT DEPARTMENT OF TRANSPORTATION
FRACTURE CRITICAL MEMBERS/FATIGUE PRONE DETAILS
INSPECTION DATA SHEET

Form BRI12, Rev 9/97

MEMBER/DETAIL TYPE # M

Member/Detail Type: PARTIAL LENGTH WELDED COVER PLATES

☐ Fracture Critical

Fatigue Category: E'

Steel Type: ASTM A36

☑ Fatigue Prone

Description: ROUNDED CORNER PARTIAL LENGTH WELDED COVER PLATES - FILLET WELDS - SPAN NO 2 STRINGER NOS. 1 thru 7

Inspection Procedure:

FLANGE THICKNESS
W33 x 130
7/8 inch
(0.875 inch)

MEMBER/DETAIL TYPE H

Member/Detail Type: HIGHLY FATIGUE PRONE DETAILS IN THE-SIDE AREA

☐ Fracture Critical

Fatigue Category: C

Steel Type: ASTM A36

☑ Fatigue Prone

Description: DIAPHRAGM/STRINGER WEB & FLANGE CONNECTION PLATES - FILLET WELDS -

Inspection Procedure:

NOTE:
Reinf. Bars & Shear Connectors not shown. Concrete End Bearing Haunch to be poured integrally with slab.

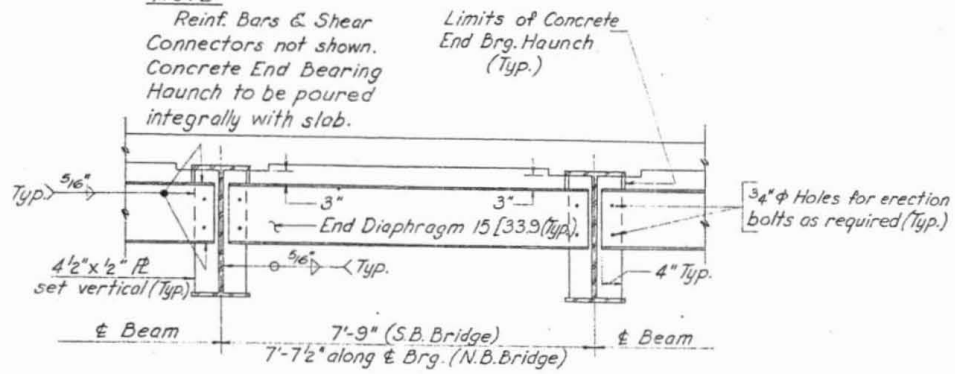

SECTION E-E
(Typical at End Diaphragms)
No Scale

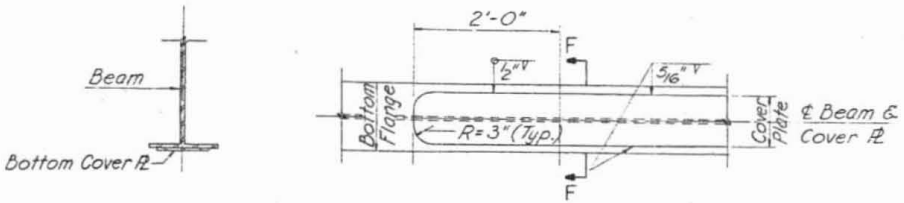

SECTION F-F PLAN

BOTTOM FLANGE COVER PLATE END DETAIL
No Scale

GENERAL NOTES

Specifications: Conn. State Highway Department Form 808 (Jan. 1955) and Special Provisions.

Design Specifications: Standard Specifications for Highway Bridges (A.A.S.H.O. 1957) except as modified by the Bureau of Public Roads "Policy on Interstate System Projects." (Aug. 1956) and as supplemented by the Conn. State Highway Department Bridge Manual July 1961.

Live Load: H20-S16-44. Alt. 24,000# dual axle at 4'-0" o.c.

Future Paving Allowance: 25# p.s.f.

Composite Construction: No temporary intermediate supports shall be used during the pouring and setting of the concrete deck slab. Temporary supports may be used for structural steel erection only. Live and superimposed dead loads shall be permitted when directed by the Engineer but not less than 10 days after the slab has been poured.

Class "A" Concrete: Class "A" concrete shall be used for the entire substructure. See Special Provisions.

Class "C" Concrete: Class "C" concrete shall be used for bridge decks including concrete curbs and parapets. See Special Provisions.

Exposed Edges: Exposed edges shall be beveled 1"x1" unless dimensioned otherwise.

Reinforcing Steel: See Special Provision for Deformed Steel Bars.

Structural Steel: See Bridge Sheets No. 7 and 8 for A.S.T.M. designations.

Welding & Weld Inspection: See Special Provisions for Structural Steel.

Painting: See Special Provisions for Structural Steel and Metal Bridge Rail.

Joint Seal: See Special Provisions.

Felt: The cost of furnishing and placing 15 lb. Felt is included in the item for class "A" concrete.

Paraffin: The cost of furnishing and applying paraffin is included in the item for class "C" concrete.

Foundation Pressures: The various Group Loadings noted on the substructure plan sheets refer to the Group Loads as given in subsection 1.4.1 of A.A.S.H.O. Standard Specifications for Highway Bridges.

FED. AID PROJ. NO. F-57 (11)

CONNECTICUT
STATE HIGHWAY DEPARTMENT
TOWN OF HADDAM
RELOCATION OF ROUTE 9
OVER
RELOCATED NEDOBITY ROAD
℄ STA. 335+89.00
GENERAL PLAN

REVISIONS		
NO.	DATE	DESCRIPTION

DESIGNED BY JAMES P. PURCELL ASSOCIATES
SCALES As Noted
MADE BY LAC & GJZ DATE 12-20-61
CHECKED BY PLR & YG DATE 12-20-61
APPROVED J. P. Purcell DATE 12-20-61
PROJECT NO. 82-118
BRIDGE SHEET NO. 1 OF 12

A 343 01

90

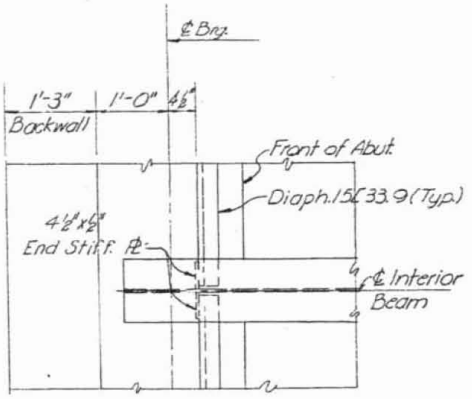

DETAIL "A"
(Typical at Abutments)
Scale: ¾"=1'-0"

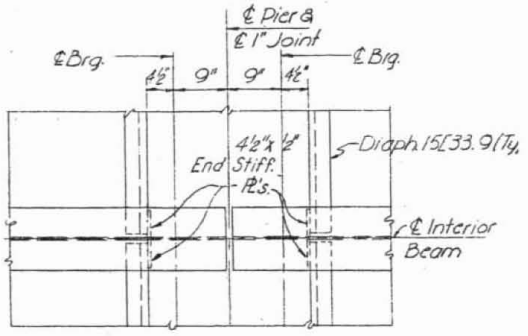

DETAIL "C"
(Typical at Piers)
Scale: ¾"=1'-0"

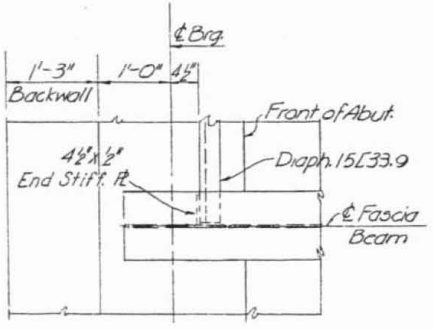

DETAIL "B"
(Typical at Abutments)
Scale: ¾"=1'-0"

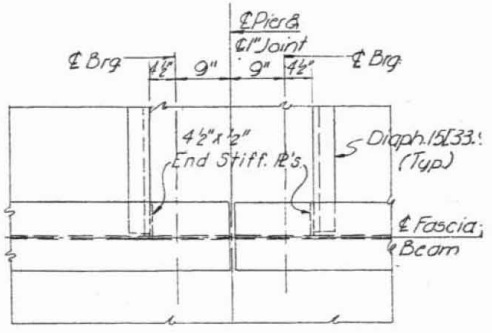

DETAIL "D"
(Typical at Piers)
Scale: ¾"=1'-0"

Notes:
For General Notes see Bridge Sheet No. 1 of 12.
For Sections A-A to D-D inclusive see Bridge Sheet No. 10 of 12.
For Section E-E see Bridge Sheet No. 9 of 12.
Camber shall be in conformance with requirements of the Special Provision entitled "Steel Bridges".
Spiral lengths given do not include any allowance for laps. For welding of spirals, studs and cover plates to beams, see Bridge Sheet No. 9 of 12.
All diaphragm connection plates and ends of beams shall be vertical when beams are in final erected position.
Do not paint top and sides of top flange or any other surface in contact with concrete.
All steel shall conform to A.S.T.M. A-36-62T unless otherwise noted. See Special Provisions.

FED. AID PROJ. NO. F-57 (11)

CONNECTICUT
STATE HIGHWAY DEPARTMENT

TOWN OF HADDAM

RELOCATION OF ROUTE 9
OVER
RELOCATED NEDOBITY ROAD
℄ STA. 335+89.00
SOUTHBOUND BRIDGE
FRAMING PLAN AND DETAILS

REVISIONS		
NO.	DATE	DESCRIPTION

DESIGNED BY JAMES P. PURCELL ASSOCIATES
SCALES As Noted.
MADE BY L.A.C. & G.J.Z. DATE 12-20-61
CHECKED BY P.L.R. DATE 12-20-61
APPROVED [signature] DATE 12-20-61
PROJECT NO. 82-118
BRIDGE SHEET NO. 7 OF 12

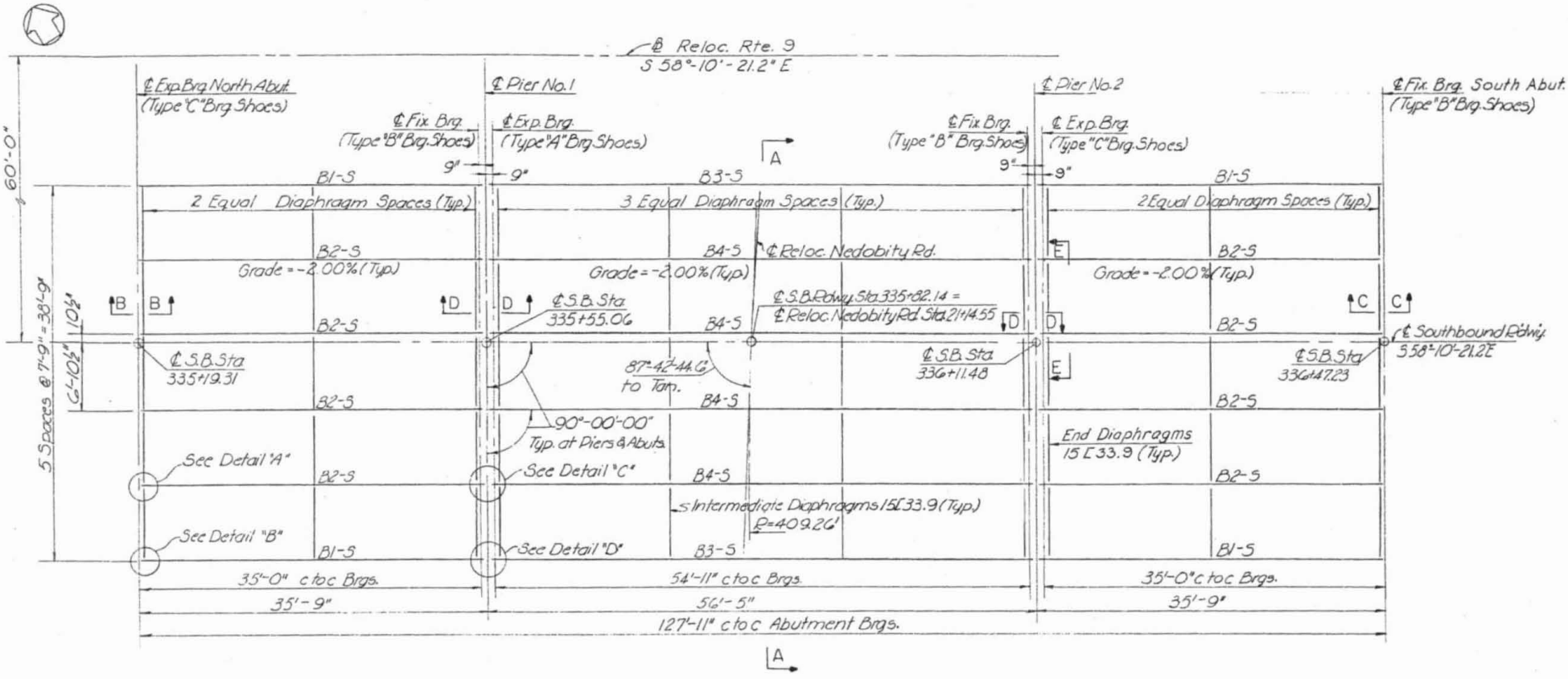

FRAMING PLAN

Scale: 1/8" = 1'-0"

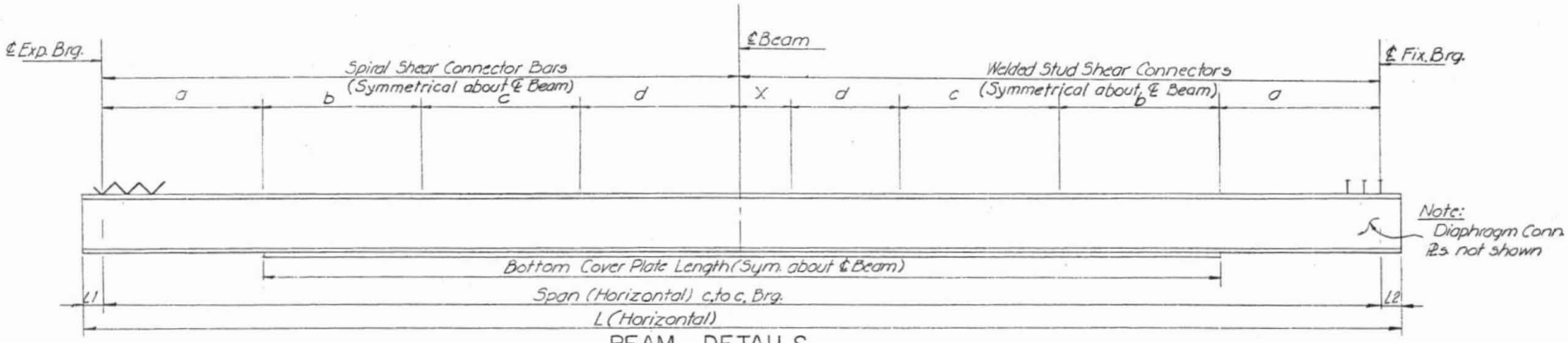

BEAM DETAILS
No Scale

BEAM SCHEDULE

BEAM	NO	SPAN	L	L1	L2	SIZE	BOTTOM COVER PLATE		SPIRAL SHEAR CONNECTOR BAR SPACING								WELDED STUD SHEAR CONNECTOR SPACING				
									a		b		c		d		a	b	c	d	x
							SIZE	LENGTH	PITCH	LENGTH	PITCH	LENGTH	PITCH	LENGTH	PITCH	LENGTH					
B1-S	4	35'-0"	36'-5"	8½"	8½"	33WF118	—	—	—	—	—	—	—	—	—	—	—	—	—	—	—
B2-S	8	35'-0"	35'-9"	4½"	4½"	30WF116	—	—	—	—	—	—	—	—	—	—	—	—	—	—	—
B3-S	2	54'-11"	56'-4"	8½"	8½"	33WF130	10"x⅞"	40'-3"	4½"	6'-0"	5½"	6'-5"	7"	7'-7"	9"	7'-5½"	17@5"=7'-1"	14@6"=7'-0"	9@9"=6'-9"	7@10½"=6'-1½"	6"
B4-S	4	54'-11"	55'-11"	7½"	4½"	33WF130	10"x⅞"	40'-3"	4½"	6'-0"	5½"	6'-5"	7"	7'-7"	9"	7'-5½"	17@5"=7'-1"	14@6"=7'-0"	9@9"=6'-9"	7@10½"=6'-1½"	6"

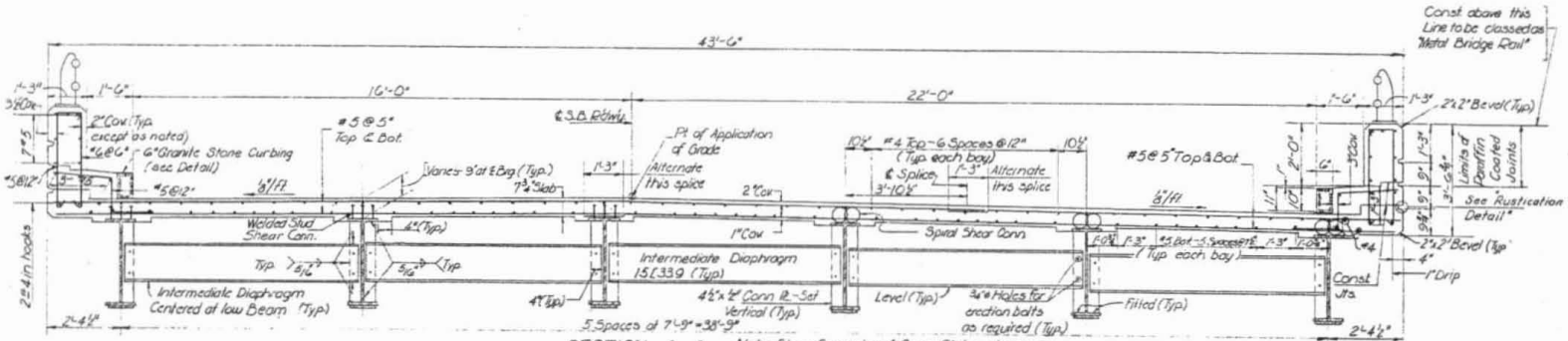

SECTION A-A
Scale: ½"=1'-0"

Note: Shear Connectors & Cover Plates shown are for Center Span only.
Curbs & Parapets shall be poured not less than 10 days after slab pour in Center Span & 7 days after slab pour in End Spans.

FED. AID PROJ. NO. F-57(11)

CONNECTICUT
STATE HIGHWAY DEPARTMENT

TOWN OF HADDAM

RELOCATION OF ROUTE 9

OVER

RELOCATED NEDOBITY ROAD
℄ STA. 335+89.00
SOUTHBOUND BRIDGE
DECK PLAN & DETAILS

REVISIONS		
NO.	DATE	DESCRIPTION

DESIGNED BY JAMES P. PURCELL ASSOCIATES

SCALES As Noted
MADE BY P.L.R. & G.J.Z. DATE 12-20-61
CHECKED BY L.A.C. & Y.G. DATE 12-20-61
APPROVED [signature] DATE 12-20-61

PROJECT NO. 82-118

BRIDGE SHEET NO. 10 OF 12

Structure Inventory and Appraisal Sheet (English Units)

Bridge Key: 03291 | Agency ID: 03291 | Sufficiency Rating: 83.2

IDENTIFICATION

State 1:	09 Connecticut	Struc Num 8:	03291
Facility Carried 7:	ROUTE 9 SOUTHBOUND	Location 9:	.25MI WEST OF ROUTE 154
Rte.(On/Under)5A:	Route On Structure	Rte. Signing Prefix 5B:	3 State Hwy
Level of Service 5C:	1 Mainline	Rte. Number 5D:	00009
Directional Suffix 5E:	0 N/A (NBI)	% Responsibility :	0
SHD District 2:	02	County Code 3:	Middlesex
Place Code 4:	HADDAM	Mile Post 11:	18.666 mi
Feature Intersected 6:	NEDOBITY ROAD		
Latitude 16:	41d 30' 18"	Longitude 17:	072d 35' 12"
Border Bridge Code 98:	Unknown (P)		
Border Bridge Number 99:	NA		

INSPECTION

Frequency 91:	24 months	Inspection Date 90:	2/27/2007	Next Inspection:	02/27/2009
FC Frequency 92A:	NA	FC Inspection Date 93A:	NA	Next FC Inspection:	NA
UW Frequency 92B:	NA	UW Inspection Date 93B:	NA	Next UW Inspection:	NA
SI Frequency 92C:	NA	SI Date 93C:	NA	Next SI:	NA
Element Frequency:	24 months	Element Inspection Date:	02/27/2007	Next Elem. Insp. Due:	02/27/2009

CLASSIFICATION

Defense Highway 100:	1 STRAHNET hwy	Parallel Structure 101:	Left of || bridge
Direction of Traffic 102:	1 1-way traffic	Temporary Structure 103:	Unknown (NBI)
Highway System 104:	1 On the NHS	NBIS Length 112:	Long Enough
Toll Facility 20:	3 On free road	Functional Class 26:	12 Urban Fwy/Expwy
Historical Significance 37:	5 Not eligible for NRHP		
Owner 22:	01 01		
Custodian 21:	01 01		

STRUCTURE TYPE AND MATERIALS

Number of Approach Spans 46: 0 Number of Spans Main Unit 45: 3

Main Span Material/Design 43A/B:

3 Steel 02

Deck Type 107:	1 Concrete-Cast-in-Place
Wearing Surface 108A:	6 Bituminous
Membrane 108B:	2 Preformed Fabric
Deck Protection 108C:	None

CONDITION

Deck 58:	7 Good	Super 59:	6 Satisfactory	Sub 60:	5 Fair
Culvert 62:	N N/A (NBI)	Channel/Channel Protection 61:	N N/A (NBI)		

LOAD RATING AND POSTING

Inventory Rating Method 65:	1 LF Load Factor	Operating Rating Method 63:	1 LF Load Factor
Inventory Rating 66:	HS20.6	Operating Rating 64:	HS34.2
Design Load 31:	5 MS 18 (HS 20)	Posting 70:	5 At/Above Legal Loads
Posting status 41:	A Open, no restriction		

AGE AND SERVICE

Year Built 27:	1965	Year Reconstructed 106:	Unknown
Type of Service on 42A:	1 Highway		
Type of Service under 42B:	1 Highway		
Lanes on 28A: 2	Lanes Under 28B: 2	Detour Length 19:	1.2 mi
ADT 29: 16,500	Truck ADT 109: 6 %	Year of ADT 30:	2003

APPRAISAL

Bridge Rail 36A:	1 Meets Standards	Approach Rail 36C:	0 Substandard
Transition 36B:	0 Substandard	Approach Rail Ends 36D:	0 Substandard
Str. Evaluation 67:	5	Deck Geometry 68:	6 Equal Min Criteria
Underclearance, Vertical and Horizontal 69:	6 Equal Minimum		
Waterway Adequacy 71:	N Not applicable	Approach Alignment 72:	8 Equal Desirable Crit
Scour Critical 113:	N Not Over Waterway		

GEOMETRIC DATA

Length Max Span 48:	55.1 ft	Structure Length 49:	131.9 ft
Curb/Sdwlk Wdth L 50A:	1.6 ft	Curb/Sidewalk Width R 50B:	1.6 ft
Width Curb to Curb 51:	38.1 ft	Width Out to Out 52:	43.6 ft
Approach Roadway Width 32: (w/ shoulders)	38.1 ft	Median 33:	0 No median
Deck Area:	5,737.2 sq. ft		
Skew 34:	0.00 °	Structure Flared 35:	0 No flare
Minimum Vertical Clearance Over Bridge 53:		328.1 ft	
Minimum Vertical Underclearance Reference 54A:		H Hwy beneath struct	
Minimum Vertical Underclearance 54B:		14.6 ft	
Minimum Lateral Underclearance Reference R 55A:		H Hwy beneath struct	
Minimum Lateral Undrclearance R 55:		11.5 ft	
Minimum Lateral Undrclearance L 56:		0.0 ft	

PROPOSED IMPROVEMENTS

Bridge Cost 94:	$ 1,000	Type of Work 75:	38 Other Structural
Roadway Cost 95:	$ 1,000	Length of Improvment 76:	0.3 ft
Total Cost 96:	$ 2,000	Future ADT 114:	8,250
Year of Cost Estimate 97:	2000	Year of Future ADT 115:	2024

NAVIGATION DATA

Navigation Control 38:	N NA-no waterway		
Vertical Clearance 39:	0.0 ft	Horizontal Clearance 40:	0.0 ft
Pier Protection 111:	Unknown (NBI)	Lift Bridge Vertical Clearance 116:	0.0 ft

ELEMENT CONDITION STATE DATA

Str Unit	Elm/Env	Description	Units	Total Qty	% in 1	Qty. St. 1	% in 2	Qty. St. 2	% in 3	Qty. St. 3	% in 4	Qty. St. 4	% in 5	Qty. St. 5
UNIT0	14/3	P Conc Deck/AC Ovly	(SF)	5,737	100 %	5,737	0 %	0	0 %	0	0 %	0	0 %	0
UNIT0	107/3	Paint Stl Opn Girder	(LF)	945	0 %	0	53 %	499	45 %	427	2 %	20	0 %	0
UNIT0	205/3	R/Conc Column	(EA)	8	100 %	8	0 %	0	0 %	0	0 %	0	0 %	0
UNIT0	215/3	R/Conc Abutment	(LF)	89	62 %	56	3 %	3	35 %	30	0 %	0	0 %	0
UNIT0	234/3	R/Conc Cap	(LF)	85	100 %	85	0 %	0	0 %	0	0 %	0	0 %	0
UNIT0	301/3	Pourable Joint Seal	(LF)	39	100 %	39	0 %	0	0 %	0	0 %	0	0 %	0

Structure Inventory and Appraisal Sheet (English Units)

Str Unit	Elm/Env	Description	Units	Total Qty	% in 1	Qty. St. 1	% in 2	Qty. St. 2	% in 3	Qty. St. 3	% in 4	Qty. St. 4	% in 5	Qty. St. 5
UNIT0	302/3	Compressn Joint Seal	(LF)	112	0 %	0	0 %	0	100 %	112	0 %	0	0 %	0
UNIT0	311/3	Moveable Bearing	(EA)	18	33 %	6	33 %	6	33 %	6	0 %	0	0 %	0
UNIT0	313/3	Fixed Bearing	(EA)	18	67 %	12	33 %	6	0 %	0	0 %	0	0 %	0
UNIT0	330/3	Metal Rail Uncoated	(LF)	272	100 %	272	0 %	0	0 %	0	0 %	0	0 %	0

Bridge No.	**03291**	**Inspected by:**	**MIKE LONG**
Town:	**HADDAM**	**Inspected by:**	**MIKE GLYNN**
Feature Carried:	**RPUTE 9 SOUTHBOUND**	**Date Inspected:**	**2/27/07**
Feature Crossed:	**NEDOBITY ROAD**	**Project No.:**	

PHOTO # 1 GENERAL VIEW LOOKING SOUTH.

PHOTO # 2 GENERAL VIEW LOOKING NORTH.

Bridge No.	**03291**	**Inspected by:**	**MIKE LONG**
Town:	**HADDAM**	**Inspected by:**	**MIKE GLYNN**
Feature Carried:	**RPUTE 9 SOUTHBOUND**	**Date Inspected:**	**2/27/07**
Feature Crossed:	**NEDOBITY ROAD**	**Project No.:**	

PHOTO # 3 GENERAL CONDITION OF BITUMINOUS OVERLAY.

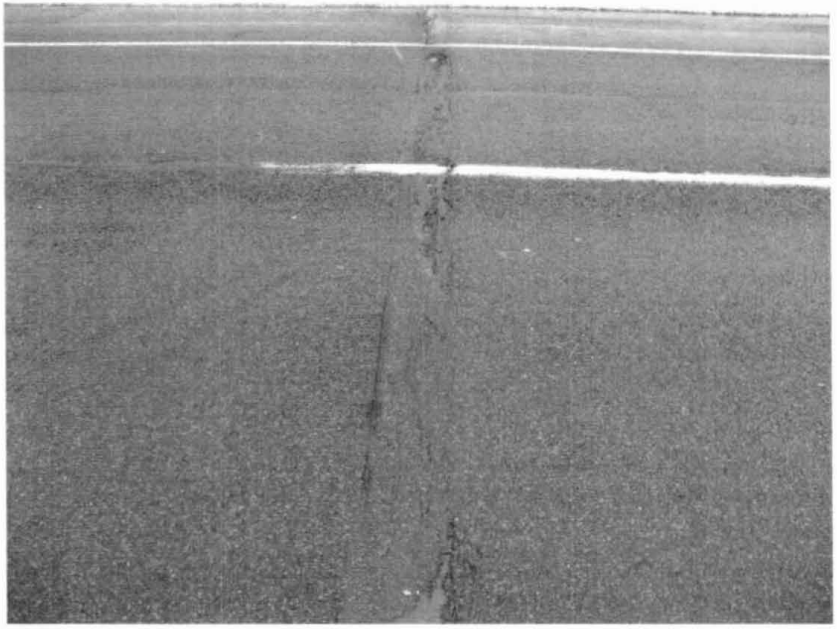

PHOTO # 4 GENERAL CONDITION OF JOINT OVER ABUTMENT #1.

Bridge No.	**03291**	**Inspected by:**	**MIKE LONG**
Town:	**HADDAM**	**Inspected by:**	**MIKE GLYNN**
Feature Carried:	**RPUTE 9 SOUTHBOUND**	**Date Inspected:**	**2/27/07**
Feature Crossed:	**NEDOBITY ROAD**	**Project No.:**	

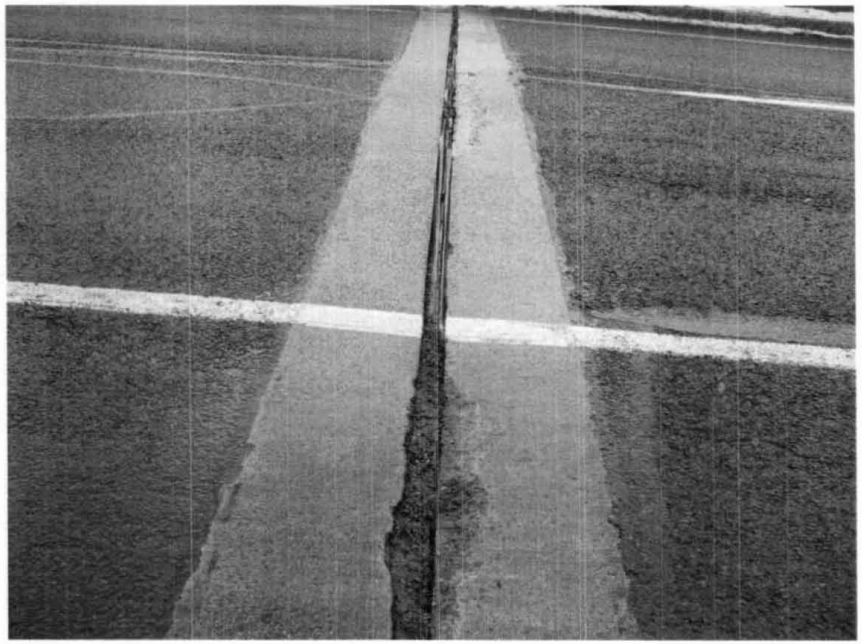

PHOTO # 5 GENERAL CONDITION OF JOINT OVER PIER #2.

PHOTO # 6 GENERAL CONDITION OF APPROACH RAIL ROADSIDE (LEADING ENDS ONLY).

Bridge No.	**03291**	**Inspected by:**	**MIKE LONG**
Town:	**HADDAM**	**Inspected by:**	**MIKE GLYNN**
Feature Carried:	**RPUTE 9 SOUTHBOUND**	**Date Inspected:**	**2/27/07**
Feature Crossed:	**NEDOBITY ROAD**	**Project No.:**	

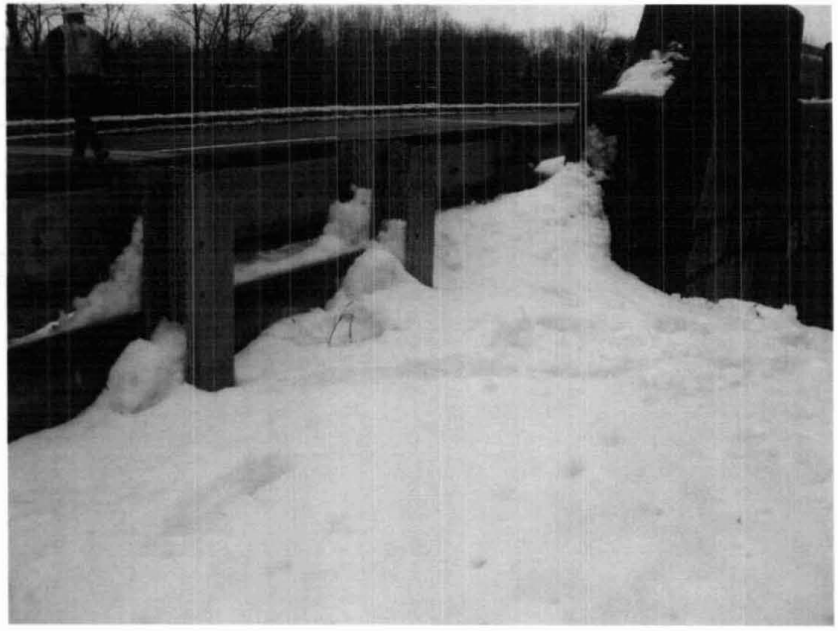

PHOTO # 7 GENERAL CONDITION OF APPROACH RAIL BACKSIDE (LEADING ENDS ONLY).

PHOTO # 8 BACKWALL #1 – SPALLING AND HOLLOW AREA.

Note leakage through spall in back wall!

Bridge No.	**03291**	**Inspected by:**	**MIKE LONG**
Town:	**HADDAM**	**Inspected by:**	**MIKE GLYNN**
Feature Carried:	**RPUTE 9 SOUTHBOUND**	**Date Inspected:**	**2/27/07**
Feature Crossed:	**NEDOBITY ROAD**	**Project No.:**	

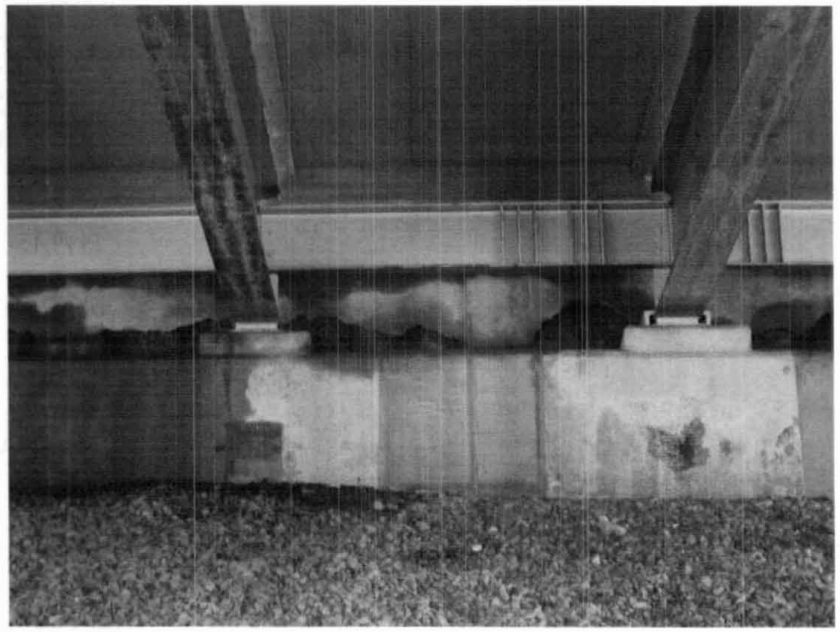

PHOTO # 9 BACKWALL #2 – SPALLING AND HOLLOW AREA. Note leakage through spall

PHOTO # 10 GENERAL UNDERSIDE.

Bridge No.	**03291**	**Inspected by:**	**MIKE LONG**
Town:	**HADDAM**	**Inspected by:**	**MIKE GLYNN**
Feature Carried:	**RPUTE 9 SOUTHBOUND**	**Date Inspected:**	**2/27/07**
Feature Crossed:	**NEDOBITY ROAD**	**Project No.:**	

PHOTO # 11 TYPICAL CONDITION OF PIERS.

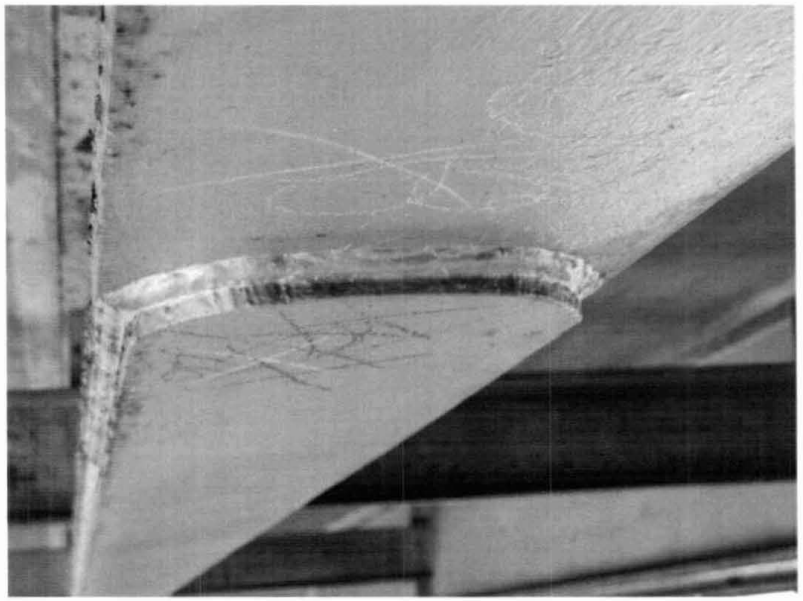

PHOTO # 12 TYPICAL COVERPLATE ENDS.

Bridge No.	**03291**	**Inspected by:**	**MIKE LONG**
Town:	**HADDAM**	**Inspected by:**	**MIKE GLYNN**
Feature Carried:	**RPUTE 9 SOUTHBOUND**	**Date Inspected:**	**2/27/07**
Feature Crossed:	**NEDOBITY ROAD**	**Project No.:**	

PHOTO # 13 TYPICAL CONDITION OF BEARINGS OVER PIERS.