04 - STRUCTURES
INDEX OF DRAWINGS

DRAWING NUMBER	DRAWING TITLE	DRAWING NUMBER	DRAWING TITLE
STR-1	INDEX OF DRAWINGS	S-26	FRAMING PLANS
S-1	GENERAL NOTES & QUANTITIES	S-27	DECK UNIT DATA
S-2	03330 - GENERAL PLAN & ELEVATION	S-28	DECK UNIT DETAILS - 1
S-3	03331 - GENERAL PLAN & ELEVATION	S-29	DECK UNIT DETAILS - 2
S-4	03330 - TYPICAL SECTIONS	S-30	DECK UNIT DETAILS - 3
S-5	03331 - TYPICAL SECTIONS	S-31	BEARING DETAILS
S-6	LAYOUT PLAN	S-32	DECK PLANS
S-7	PROFILES	S-33	DECK DETAILS
S-8	03330 - STAGE 1 CONSTRUCTION	S-34	03330 - APPROACH SLAB PLANS
S-9	03330 - STAGE 2 CONSTRUCTION	S-35	03331 - APPROACH SLAB PLANS
S-10	03331 - STAGE 1 CONSTRUCTION	S-36	APPROACH SLAB & RPW DETAILS
S-11	03331 - STAGE 2 CONSTRUCTION	S-37	EXPANSION JOINT DETAILS
S-12	STAGE CONSTRUCTION SECTIONS	S-38	METAL BRIDGE RAIL (SOLID PANEL) - 1
S-13	03330 - ABUTMENT DEMOLITION & REPAIR	S-39	METAL BRIDGE RAIL (SOLID PANEL) - 2
S-14	03331 - ABUTMENT DEMOLITION & REPAIR	S-40	METAL BRIDGE RAIL (SOLID PANEL) - 3
S-15	03330 - PIER DEMOLITION & REPAIR	S-41	MBR TYPE R-B 350 PARAPET ATTACHMENT
S-16	03331 - PIER DEMOLITION & REPAIR	S-42	ELECTRICAL DETAILS
S-17	SUBSTRUCTURE REPAIR DETAILS	S-43	EXPANSION FITTINGS
S-18	03330 - ABUTMENT 1 PLAN & ELEVATION	S-44	TEMPORARY PRECAST CONCRETE BARRIER CURB
S-19	03330 - ABUTMENT 2 PLAN & ELEVATION	S-45	EXISTING PLANS 1 OF 7
S-20	03331 - ABUTMENT 1 PLAN & ELEVATION	S-46	EXISTING PLANS 2 OF 7
S-21	03331 - ABUTMENT 2 PLAN & ELEVATION	S-47	EXISTING PLANS 3 OF 7
S-22	ABUTMENT SECTIONS & DETAILS	S-48	EXISTING PLANS 4 OF 7
S-23	03330 - PIERS 1 & 2 PLANS & ELEVATIONS	S-49	EXISTING PLANS 5 OF 7
S-24	03331 - PIERS 1 & 2 PLANS & ELEVATIONS	S-50	EXISTING PLANS 6 OF 7
S-25	PIER SECTIONS & DETAILS	S-51	EXISTING PLANS 7 OF 7

many page number references are incorrect

DESIGNED BY:
LOCHNER
H.W. LOCHNER, INC
55 Hartland Street, Suite 401
East Hartford, CT 06108

90% DESIGN REVIEW 03/09/2016

REV.	DATE	REVISION DESCRIPTION	SHEET NO.
-	-	-	-
-	-	-	-
-	-	-	-
-	-	-	-

THE INFORMATION, INCLUDING ESTIMATED QUANTITIES OF WORK, SHOWN ON THESE SHEETS IS BASED ON LIMITED INVESTIGATIONS BY THE STATE AND IS IN NO WAY WARRANTED TO INDICATE THE CONDITIONS OF ACTUAL QUANTITIES OF WORK WHICH WILL BE REQUIRED.

PLOTTED: 3/9/2016

DESIGNER/DRAFTER: K.HARLEY
CHECKED BY: B.BYRNE

STATE OF CONNECTICUT
DEPARTMENT OF TRANSPORTATION

FILENAME: ...\SB_MSH_BR_0058-0332_IDX-01.dgn

LOCHNER
H.W. LOCHNER, INC
55 Hartland Street
East Hartford, CT 06108

PROJECT TITLE:
RECONSTRUCTION OF ROUTE 349 NB AND SB OVER AMTRAK RAILROAD

TOWN: **GROTON**

DRAWING TITLE: **INDEX OF DRAWINGS**

PROJECT NO. **058-332**
DRAWING NO. **STR-1**
SHEET NO.

TABLE OF QUANTITIES

ITEM	UNIT	BR. 03330 QUANTITY	BR. 03331 QUANTITY	TOTAL QUANTITY
STRUCTURE EXCAVATION - EARTH (COMPLETE)	CY	190	190	380
STRUCTURE EXCAVATION - ROCK (COMPLETE)	CY	2	2	4
COMPACTED GRANULAR FILL	CY	40	40	80
PERVIOUS STRUCTURE BACKFILL	CY	110	105	215
HMA S0.5	TON	130	130	260
HMA S0.25	TON	65	65	130
REMOVAL OF SUPERSTRUCTURE (SITE NO. 1)	LS	LS	-	LS
REMOVAL OF SUPERSTRUCTURE (SITE NO. 2)	LS	-	LS	LS
PRESTRESSED DECK UNITS (3'-0'X 2'-3")	LF	-	160	160
PRESTRESSED DECK UNITS (4'-0'X 2'-3")	LF	2080	1920	4000
PREFORMED JOINT SEAL	LF	100	100	200
STEEL-LAMINATED ELASTOMERIC BEARING PADS	CI	23900	23900	47800
ROADWAY PARAPET WALL	LF	80	80	160
VARIABLE DEPTH PATCH	CF	16	14	30
EPOXY INJECTION CRACK REPAIR	LF	150	140	290
CLASS "F" CONCRETE	CY	470	460	930
DEFORMED STEEL BARS	LB	15500	15300	30800
DEFORMED STEEL BARS - EPOXY COATED	LB	65000	64000	129000
DOWEL BAR SPLICER SYSTEM	EA	16	16	32
DOWEL BAR SPLICER SYSTEM - EPOXY COATED	EA	259	259	518
DRILLING AND GROUTING REINFORCING BARS	LF	725	725	1450
MEMBRANE WATERPROOFING (COLD LIQUID ELASTOMERIC)	SY	1100	1070	2170
DAMPPROOFING	SF	495	485	980
TEMPORARY EARTH RETAINING SYSTEM	SF	100	150	250
EARTH RETAINING SYTEM LEFT IN PLACE	SF	20	30	50
TEMPORARY PRECAST CONCRETE BARRIER CURB (STRUCTURE)	LF	200	200	400
RELOCATED TEMPORARY PRECAST CONCRETE BARRIER CURB (STRUCTURE)	LF	200	200	400
TEMPORARY PROTECTIVE FENCE (BRIDGE)	LF	160	160	320
METAL BRIDGE RAIL (SOLID PANEL) (8' HIGH)	LF	155	155	310
REMOVE OF EXISTING MASONRY	CY	50	50	100
2" RIGID METAL CONDUIT IN STRUCTURE	LF	240	250	490
18" X 12" X 8" CAST IRON JUNCTION BOX	EA	4	4	8

CONCRETE DISTRIBUTION

BRIDGE 03330 (SITE NO. 1)		
SUPERSTRUCTURE	C.Y.	390
SUBSTRUCTURE	C.Y.	80
FOOTINGS	C.Y.	0
BRIDGE 03331 (SITE NO. 2)		
SUPERSTRUCTURE	C.Y.	385
SUBSTRUCTURE	C.Y.	75
FOOTINGS	C.Y.	0
TOTAL	C.Y.	930

TRANSPORTATION DIMENSIONS AND WEIGHT DATA

MEMBER	SHIPPING LENGTH	SHIPPING HEIGHT	SHIPPING WIDTH	SHIPPING WEIGHT
SPAN 2 BEAM	73.2'	2.25'	4.0'	55,000 LBS

INSPECTION OF FIELD WELDS

METHOD	UNIT	QUANTITY
ULTRASONIC	INCH	NONE
MAGNETIC PARTICLE	FEET	NONE

NOTICE TO BRIDGE INSPECTORS

THE DEPARTMENT'S BRIDGE SAFETY PROCEDURES REQUIRE THIS BRIDGE TO BE INSPECTED FOR, BUT NOT LIMITED TO, ALL APPLICABLE COMPONENTS INDICATED IN THE GOVERNING MANUALS FOR BRIDGE INSPECTION. ATTENTION MUST BE GIVEN TO INSPECTING THE FOLLOWING SPECIAL COMPONENTS AND DETAILS. (THE LISTING OF COMPONENTS FOR SPECIFIC ATTENTION SHALL NOT BE CONSTRUED TO REDUCE THE IMPORTANCE OF INSPECTION OF ANY OTHER COMPONENT OF THE STRUCTURE). THE FREQUENCY OF INSPECTION OF THIS STRUCTURE SHALL BE IN ACCORDANCE WITH THE GOVERNING MANUALS FOR BRIDGE INSPECTION, UNLESS OTHERWISE DIRECTED BY THE MANAGER OF BRIDGE SAFETY AND EVALUATION.

COMPONENT OR DETAIL	STRUCTURE SHEET REFERENCE
NONE	------

GENERAL NOTES

can use Jan 2016

SPECIFICATIONS:
CONNECTICUT DEPARTMENT OF TRANSPORTATION STANDARD SPECIFICATIONS FORM 816 (2004), SUPPLEMENTAL SPECIFICATIONS DATED JULY 2015, AND SPECIAL PROVISIONS.

DESIGN SPECIFICATIONS:
LRFD BRIDGE DESIGN SPECIFICATIONS (AASHTO - 7TH EDITION 2014, INTERIM REVISIONS 2015), AS SUPPLEMENTED BY THE CONNECTICUT DEPARTMENT OF TRANSPORTATION BRIDGE DESIGN MANUAL (2003 WITH REVISIONS UP TO AND INCLUDING 2011).

ALLOWABLE DESIGN STRESSES:
CLASS "F" CONCRETE BASED ON f'c = 4000 psi

THE SPECIFIED CONCRETE STRENGTH USED IN DESIGN, f'c, OF THE CONCRETE COMPONENTS IS NOTED ABOVE. THE MINIMUM COMPRESSIVE STRENGTH OF THE CONCRETE IN THE CONSTRUCTED COMPONENTS SHALL CONFORM TO THE REQUIREMENTS OF "SECTION 6.01 CONCRETE FOR STRUCTURES".

REINFORCEMENT ASTM A615 GRADE 60 fy = 60 KSI

LIVE LOAD: DESIGN VEHICLES ARE AS FOLLOWS:
STANDARD DESIGN VEHICLE: HL 93
OVERLOAD VEHICLES CONSIDERED UNDER AASHTO LOAD GROUP STRENGTH II INCLUDE: CT-P204 AND CT-P380 PERMIT VEHICLES

FUTURE PAVING ALLOWANCE:
NONE

BITUMINOUS CONCRETE OVERLAY:
THIS SHALL CONSIST OF TWO LIFTS. THE FIRST SHALL BE HMA S0.25 (1" THICK) AND THE SECOND SHALL BE HMA S0.5 (2" THICK).

DIMENSIONS:
WHEN DECIMAL DIMENSIONS ARE GIVEN TO LESS THAN THREE DECIMAL PLACES, THE OMITTED DIGITS SHALL BE ASSUMED TO BE ZEROS.

ELEVATIONS:
ALL ELEVATIONS ARE GIVEN IN FEET AND ARE REFERENCED TO NAVD-88. WHEN ELEVATIONS ARE GIVEN TO LESS THAN THREE DECIMAL PLACES, THE OMITTED DIGITS SHALL BE ASSUMED TO BE ZEROES.

EXISTING DIMENSIONS:
DIMENSIONS OF THE EXISTING STRUCTURES SHOWN ON THESE PLANS ARE FOR GENERAL REFERENCE ONLY. THEY HAVE BEEN TAKEN FROM THE ORIGINAL DRAWINGS AND ARE NOT GUARANTEED. THE CONTRACTOR SHALL TAKE ALL FIELD MEASUREMENTS NECESSARY TO ASSURE PROPER FIT OF THE FINISHED WORK AND SHALL ASSUME FULL RESPONSIBILITY FOR THEIR ACCURACY. WHEN SHOP DRAWINGS BASED ON FIELD MEASUREMENTS ARE SUBMITTED, FOR APPROVAL, THE FIELD MEASUREMENTS SHALL ALSO BE SUBMITTED FOR REFERENCE BY THE REVIEWER.

CONCRETE NOTES

COMPOSITE CONSTRUCTION:
NO TEMPORARY INTERMEDIATE SUPPORTS SHALL BE USED DURING THE PLACING AND SETTING OF THE CONRETE TOPPING. CONSTRUCTION LOADS AND DEAD LOADS WILL BE PERMITTED WHEN DIRECTED BY THE ENGINEER BUT ONLY WHEN THE CONCRETE HAS REACHED A STRENGTH OF f'c=3,500 psi. LIVE LOADS (TRAFFIC) WILL BE PERMITTED ON THE STRUCTURE AFTER THE CONCRETE HAS REACHED A STRENGTH OF f'c = 4,000 psi.

Class "A" is specified in Roadway Parapet Wall specs - please review

CLASS " F" CONCRETE:
ALL CONCRETE SHALL BE CLASS "F" CONCRETE.

JOINT SEAL:
SEE SPECIAL PROVISIONS.

EXPOSED EDGES:
EXPOSED EDGES OF CONCRETE SHALL BE BEVELED 1" x 1" UNLESS DIMENSIONED OTHERWISE.

CONCRETE COVER:
ALL REINFORCEMENT SHALL HAVE 2 INCHES COVER UNLESS DIMENSIONED OTHERWISE.

REINFORCEMENT:
ALL REINFORCEMENT SHALL BE ASTM A615, GRADE 60, UNLESS NOTED OTHERWISE.

EPOXY COATED REINFORCING BARS:
ALL REINFORCEMENT IN THE SUPERSTRUCTURE INCLUDING THE CONCRETE TOPPING, PARAPETS, SLEEPER SLABS AND IN THE TOP MAT OF APPROACH SLABS SHALL BE EPOXY COATED UNLESS OTHERWISE NOTED. THESE BARS SHALL BE INCLUDED IN THE PAY ITEM "DEFORMED STEEL BARS - EPOXY COATED".

PREFORMED EXPANSION JOINT FILLER:
THE COST OF FURNISHING AND INSTALLING PREFORMED EXPANSION JOINT FILLER SHALL BE INCLUDED IN THE COST OF THE ITEM "CLASS "F" CONCRETE".

CONSTRUCTION JOINTS:
CONSTRUCTION JOINTS, OTHER THAN THOSE SHOWN ON THE PLANS, WILL NOT BE PERMITTED WITHOUT PRIOR APPROVAL OF THE ENGINEER.

90% DESIGN REVIEW 03/09/2016

REV.	DATE	REVISION DESCRIPTION	SHEET NO.
-	-	-	-
-	-	-	-
-	-	-	-
-	-	-	-

THE INFORMATION, INCLUDING ESTIMATED QUANTITIES OF WORK, SHOWN ON THESE SHEETS IS BASED ON LIMITED INVESTIGATIONS BY THE STATE AND IS IN NO WAY WARRANTED TO INDICATE THE CONDITIONS OF ACTUAL QUANTITIES OF WORK WHICH WILL BE REQUIRED.

PLOTTED: 3/9/2016

DESIGNER/DRAFTER: K.HARLEY/C.RICH
CHECKED BY: B.BYRNE
SCALE AS NOTED

STATE OF CONNECTICUT
DEPARTMENT OF TRANSPORTATION

FILENAME: ...\SB_MSH_BR_0058-0332_GEN-NOTES.dgn

LOCHNER
H.W. LOCHNER, INC
55 Hartland Street
East Hartford, CT 06108
APPROVED BY: DATE:

PROJECT TITLE:
RECONSTRUCTION OF ROUTE 349 NB AND SB OVER AMTRAK RAILROAD

TOWN: **GROTON**

DRAWING TITLE: **GENERAL NOTES & QUANTITIES**

PROJECT NO. **058-332**
DRAWING NO. **S-1**
SHEET NO.

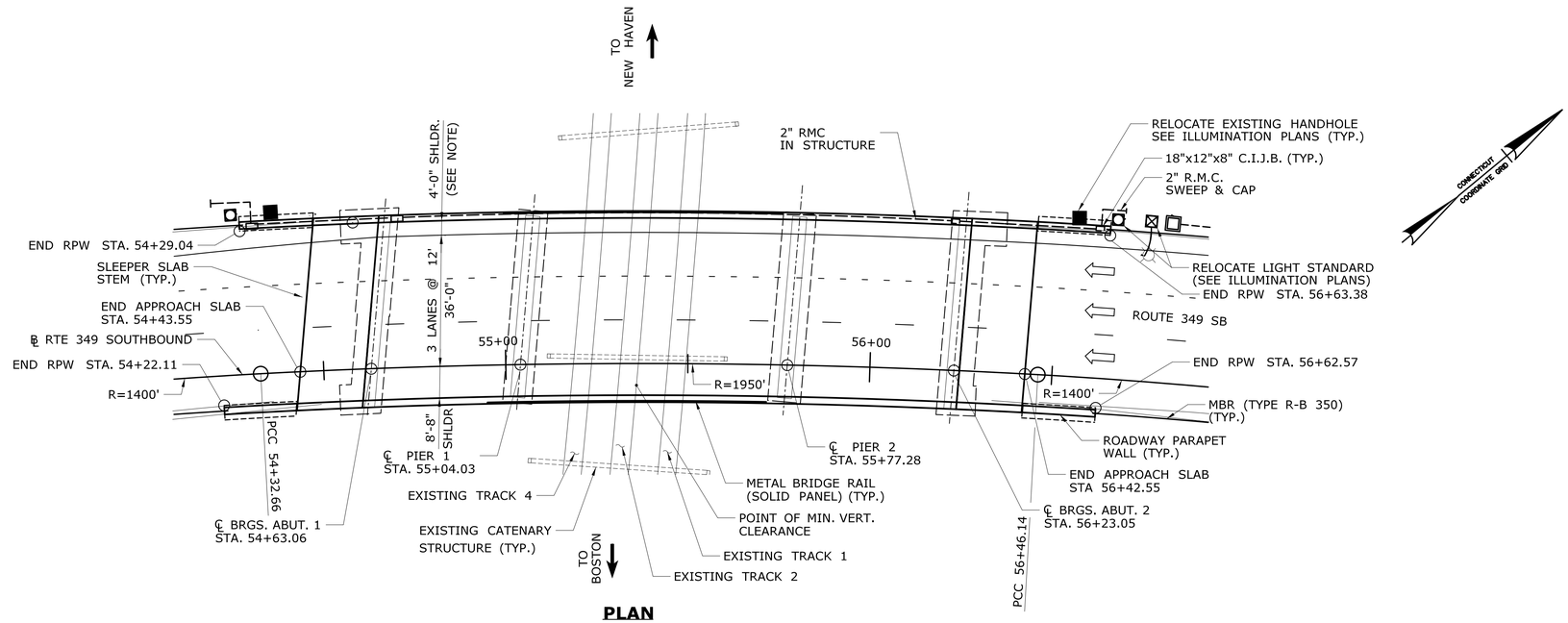

PLAN

NOTES

1. SEE LAYOUT PLAN FOR SKEWS AT SUBSTRUCTURES.
2. SEE HIGHWAY PLANS FOR LANE TAPER LOCATION.

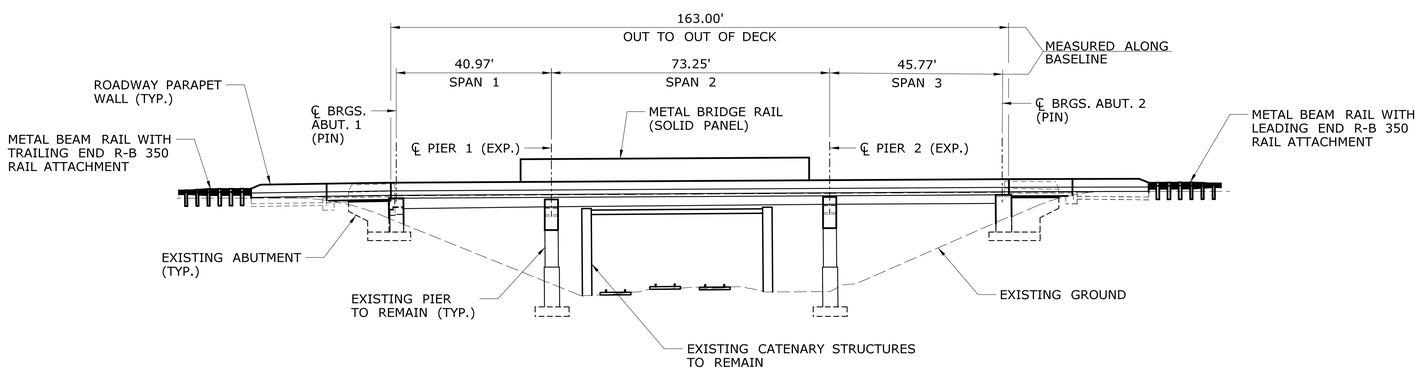

ELEVATION

SOUTHBOUND - BRIDGE 03330

SCALE: 1"=20'

90% DESIGN REVIEW 03/09/2106

REV.	DATE	REVISION DESCRIPTION	SHEET NO.
-	-	-	-
-	-	-	-
-	-	-	-
-	-	-	-

THE INFORMATION, INCLUDING ESTIMATED QUANTITIES OF WORK, SHOWN ON THESE SHEETS IS BASED ON LIMITED INVESTIGATIONS BY THE STATE AND IS IN NO WAY WARRANTED TO INDICATE THE CONDITIONS OF ACTUAL QUANTITIES OF WORK WHICH WILL BE REQUIRED.

PLOTTED: 3/9/2016

DESIGNER/DRAFTER: K.HARLEY
CHECKED BY: B.BYRNE
SCALE AS NOTED

STATE OF CONNECTICUT
DEPARTMENT OF TRANSPORTATION

FILENAME: ...\SB_MSH_BR_0058-0332_GEN-PLAN-01.dgn

LOCHNER
H.W. LOCHNER, INC
55 Hartland Street
East Hartford, CT 06108

APPROVED BY: DATE:

PROJECT TITLE:
RECONSTRUCTION OF ROUTE 349 NB AND SB OVER AMTRAK RAILROAD

TOWN: **GROTON**

DRAWING TITLE: **03330 - GENERAL PLAN & ELEVATION**

PROJECT NO. **058-332**
DRAWING NO. **S-2**
SHEET NO.

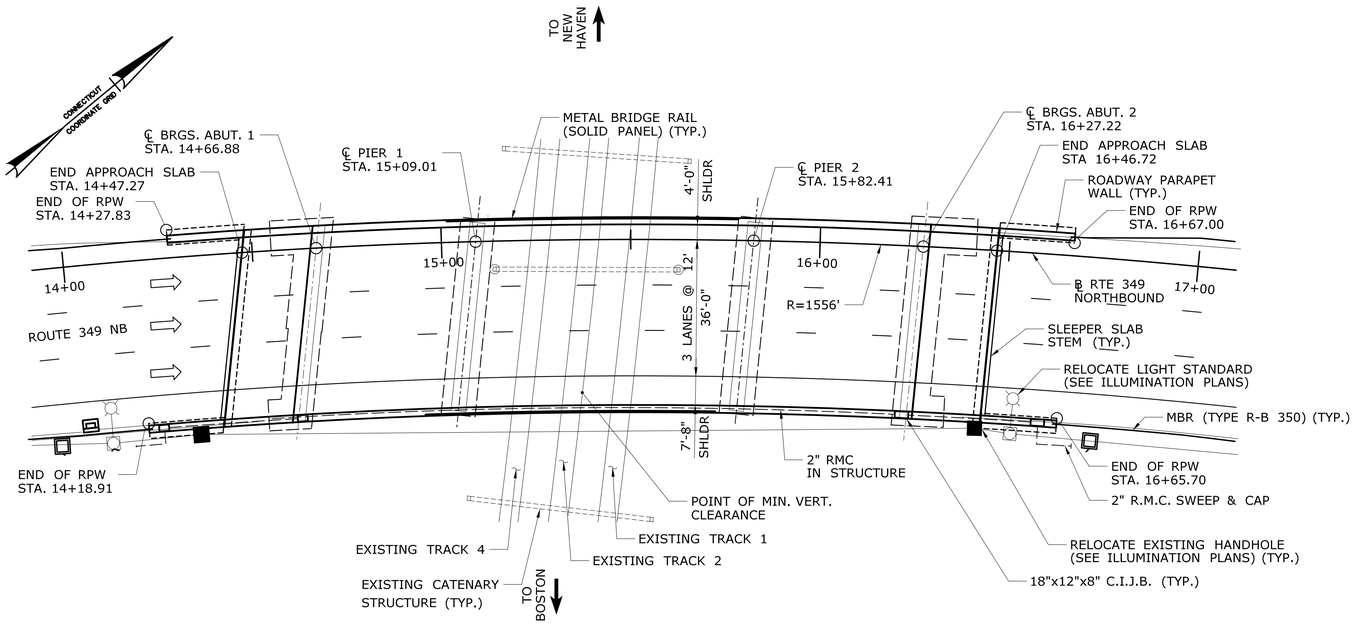

PLAN

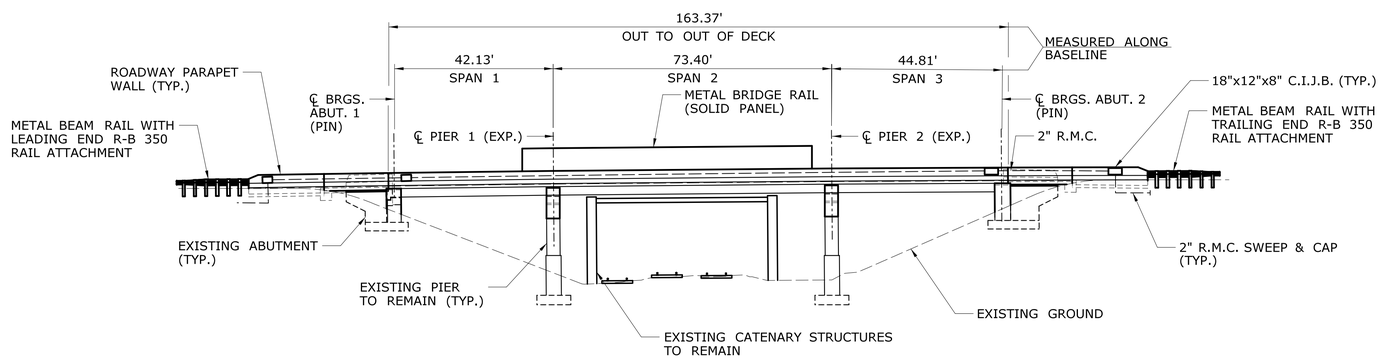

ELEVATION

NORTHBOUND - BRIDGE 03331

SCALE: 1"=20'

NOTE

1. SEE LAYOUT PLAN FOR SKEWS AT SUBSTRUCTURES.

90% DESIGN REVIEW 03/09/2016

REV.	DATE	REVISION DESCRIPTION	SHEET NO.
-	-	-	-
-	-	-	-
-	-	-	-
-	-	-	-
-	-	-	-
-	-	-	-

THE INFORMATION, INCLUDING ESTIMATED QUANTITIES OF WORK, SHOWN ON THESE SHEETS IS BASED ON LIMITED INVESTIGATIONS BY THE STATE AND IS IN NO WAY WARRANTED TO INDICATE THE CONDITIONS OF ACTUAL QUANTITIES OF WORK WHICH WILL BE REQUIRED.

PLOTTED: 3/9/2016

DESIGNER/DRAFTER: K.HARLEY
CHECKED BY: B.BYRNE
SCALE AS NOTED

STATE OF CONNECTICUT
DEPARTMENT OF TRANSPORTATION

FILENAME: ...\SB_MSH_BR_0058-0332_GEN-PLAN-02.dgn

LOCHNER
H.W. LOCHNER, INC
55 Hartland Street
East Hartford, CT 06108

APPROVED BY: - DATE: -

PROJECT TITLE: RECONSTRUCTION OF ROUTE 349 NB AND SB OVER AMTRAK RAILROAD

TOWN: GROTON

DRAWING TITLE: 03331 - GENERAL PLAN & ELEVATION

PROJECT NO. 058-332
DRAWING NO. S-3
SHEET NO.

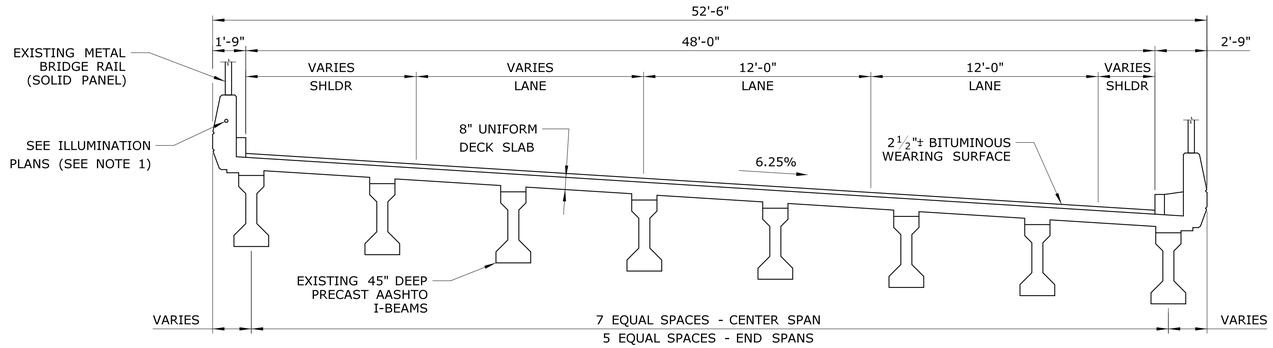

EXISTING SECTION

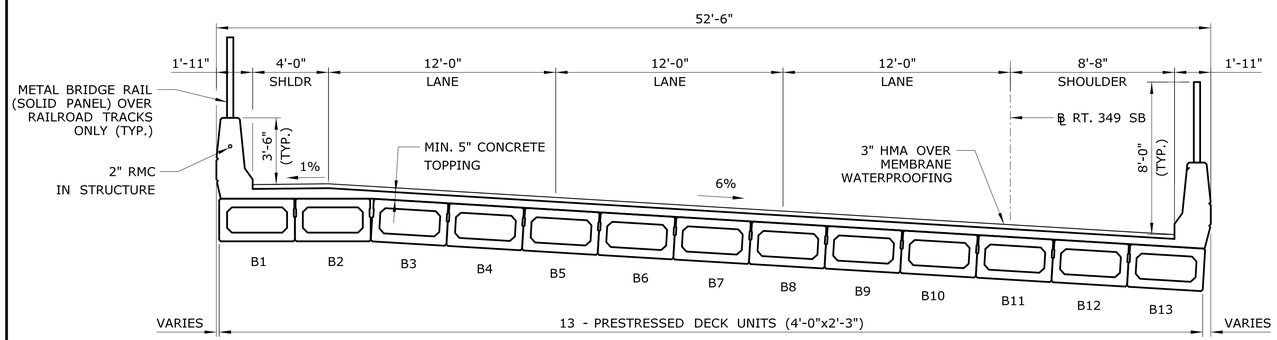

PROPOSED SECTION

SOUTHBOUND - BRIDGE 03330

SCALE: ¼" = 1'-0"

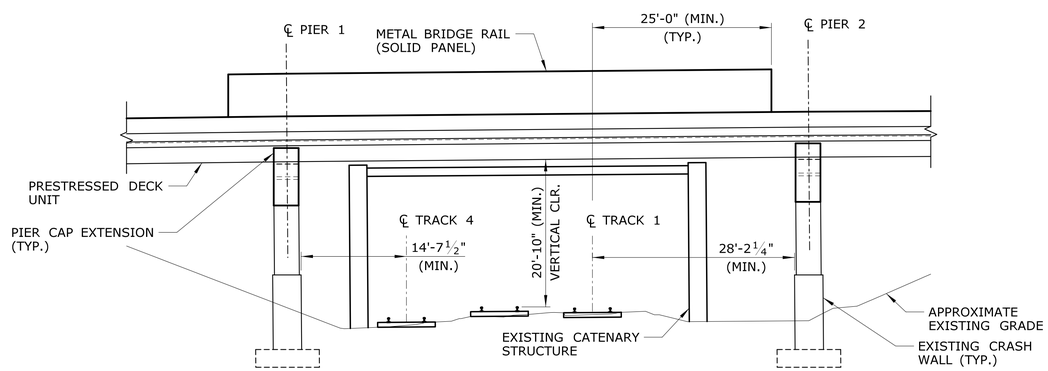

PROPOSED RAILROAD CLEARANCE DIAGRAM

SCALE: N.T.S.

NOTE: NO CHANGES TO EXISTING HORIZONTAL CLEARANCES.

NOTE:

1. EXISTING POWER CONDUIT MAY BE CUT AFTER TEMPORARY ILLUMINATION CIRCUITS HAVE BEEN ESTABLISHED.

90% DESIGN REVIEW 03/09/2016

REV.	DATE	REVISION DESCRIPTION	SHEET NO.
-	-	-	-
-	-	-	-
-	-	-	-
-	-	-	-
-	-	-	-
-	-	-	-

THE INFORMATION, INCLUDING ESTIMATED QUANTITIES OF WORK, SHOWN ON THESE SHEETS IS BASED ON LIMITED INVESTIGATIONS BY THE STATE AND IS IN NO WAY WARRANTED TO INDICATE THE CONDITIONS OF ACTUAL QUANTITIES OF WORK WHICH WILL BE REQUIRED.

PLOTTED: 3/9/2016

DESIGNER/DRAFTER: K. HARLEY

CHECKED BY: B. BYRNE

SCALE AS NOTED

STATE OF CONNECTICUT
DEPARTMENT OF TRANSPORTATION

FILENAME: ...\SB_MSH_BR_0058-0332_TYP-SEC-01.dgn

LOCHNER
H.W. LOCHNER, INC
55 Hartland Street
East Hartford, CT 06108

APPROVED BY: - DATE: -

PROJECT TITLE:
RECONSTRUCTION OF ROUTE 349 NB AND SB OVER AMTRAK RAILROAD

TOWN: **GROTON**

DRAWING TITLE: **03330 - TYPICAL SECTIONS**

PROJECT NO. **058-332**

DRAWING NO. **S-4**

SHEET NO.

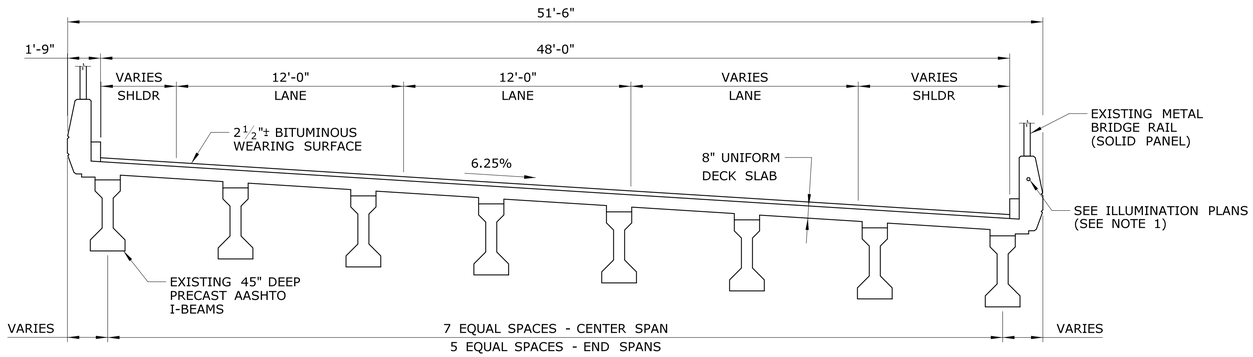

EXISTING SECTION

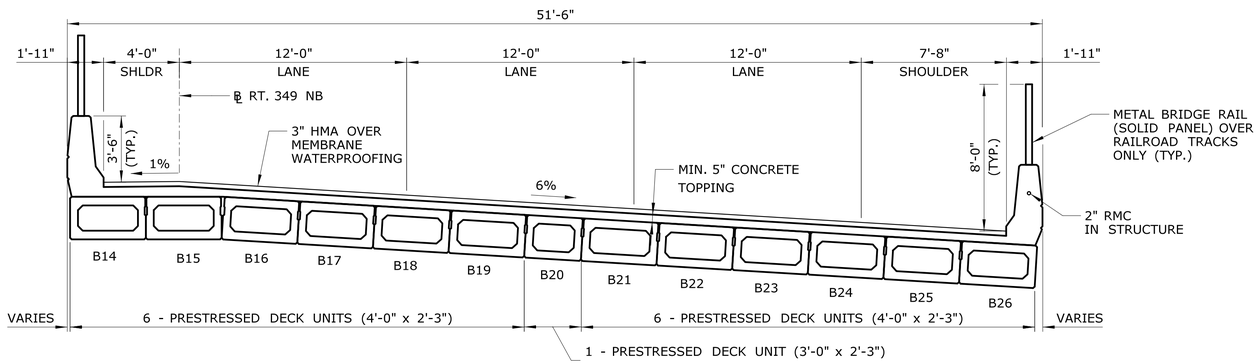

PROPOSED SECTION

NORTHBOUND - BRIDGE 03331

SCALE: ¼" = 1'-0"

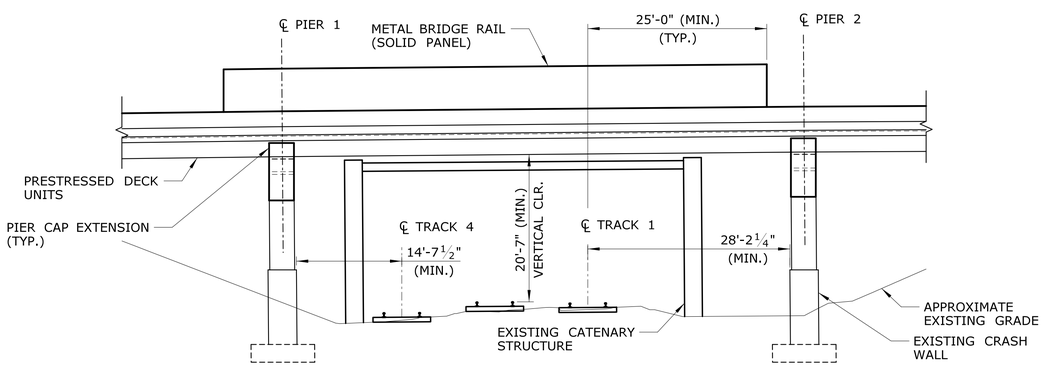

PROPOSED RAILROAD CLEARANCE DIAGRAM

SCALE: N.T.S.

NOTE: NO CHANGES TO EXISTING HORIZONTAL CLEARANCES.

NOTE:

1. EXISTING POWER CONDUIT MAY BE CUT AFTER TEMPORARY ILLUMINATION CIRCUITS HAVE BEEN ESTABLISHED.

90% DESIGN REVIEW 03/09/2016

REV.	DATE	REVISION DESCRIPTION	SHEET NO.
-	-	-	-
-	-	-	-
-	-	-	-
-	-	-	-
-	-	-	-
-	-	-	-

THE INFORMATION, INCLUDING ESTIMATED QUANTITIES OF WORK, SHOWN ON THESE SHEETS IS BASED ON LIMITED INVESTIGATIONS BY THE STATE AND IS IN NO WAY WARRANTED TO INDICATE THE CONDITIONS OF ACTUAL QUANTITIES OF WORK WHICH WILL BE REQUIRED.

PLOTTED: 3/9/2016

DESIGNER/DRAFTER: K.HARLEY

CHECKED BY: B.BYRNE

SCALE AS NOTED

STATE OF CONNECTICUT
DEPARTMENT OF TRANSPORTATION

FILENAME: ...\SB_MSH_BR_0058-0332_TYP-SEC-02.dgn

LOCHNER
H.W. LOCHNER, INC
55 Hartland Street
East Hartford, CT 06108

APPROVED BY: - DATE: -

PROJECT TITLE:
RECONSTRUCTION OF ROUTE 349 NB AND SB OVER AMTRAK RAILROAD

TOWN: **GROTON**

DRAWING TITLE: **03331 - TYPICAL SECTIONS**

PROJECT NO. **058-332**

DRAWING NO. **S-5**

SHEET NO.

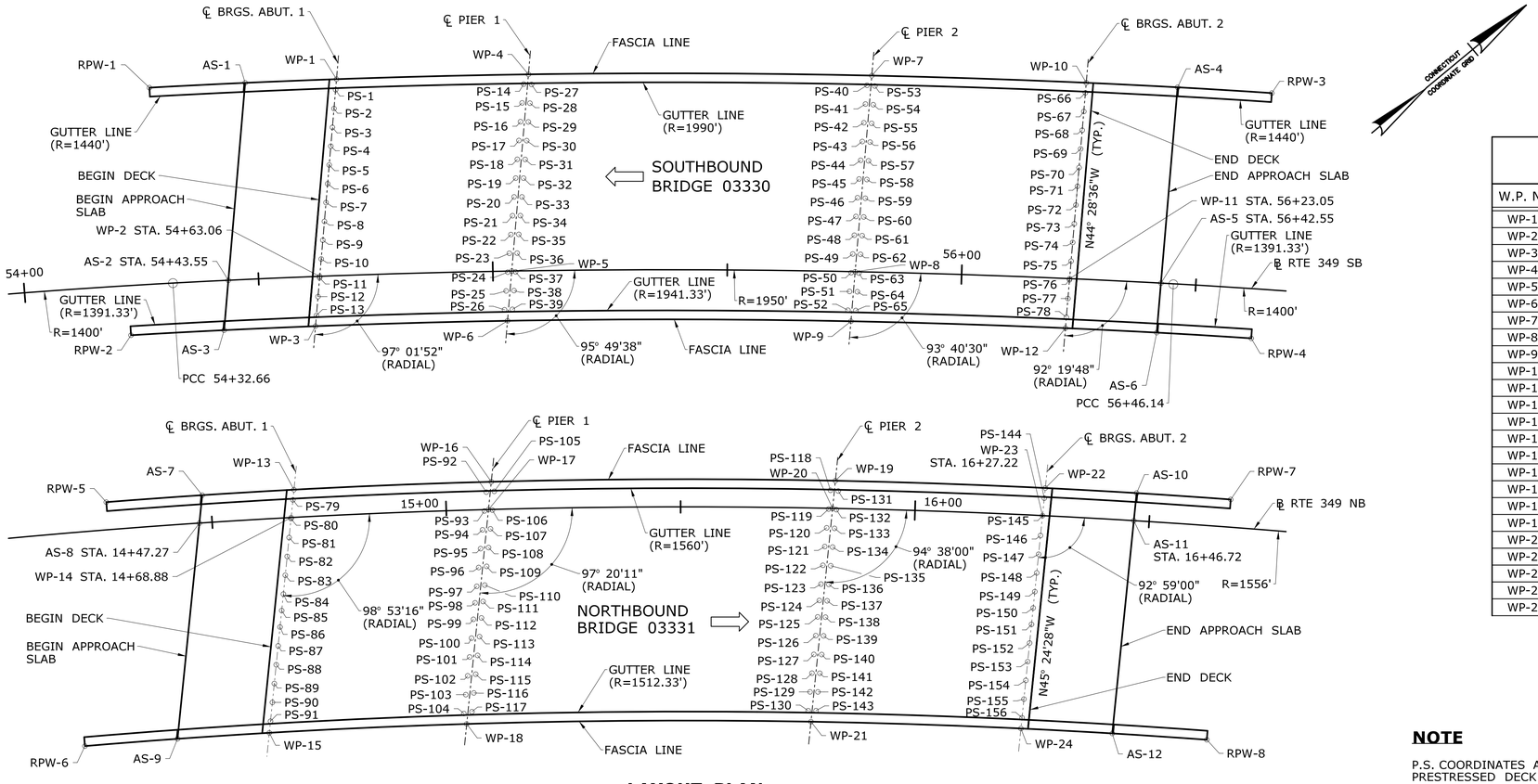

LAYOUT PLAN

WOW

WORKING POINT COORDINATES		
W.P. NO.	NORTHING	EASTING
WP-1	692006.26	1187083.29
WP-2	691976.68	1187113.42
WP-3	691969.21	1187121.03
WP-4	692038.45	1187108.61
WP-5	692008.94	1187138.67
WP-6	692001.48	1187146.26
WP-7	692094.70	1187155.51
WP-8	692065.28	1187185.48
WP-9	692057.85	1187193.05
WP-10	692128.96	1187185.86
WP-11	692099.57	1187215.80
WP-12	692092.15	1187223.35
WP-13	691943.42	1187144.97
WP-14	691939.15	1187149.17
WP-15	691906.29	1187181.57
WP-16	691976.92	1187170.51
WP-17	691972.67	1187174.70
WP-18	691939.93	1187206.97
WP-19	692033.60	1187217.14
WP-20	692029.37	1187221.31
WP-21	691996.80	1187253.42
WP-22	692067.10	1187246.90
WP-23	692062.88	1187251.06
WP-24	692030.37	1187283.11

APPROACH SLAB COORDINATES		
W.P. NO.	NORTHING	EASTING
AS-1	691990.75	1187071.46
AS-2	691961.13	1187101.63
AS-3	691953.65	1187109.25
AS-4	692143.34	1187199.03
AS-5	692113.96	1187228.95
AS-6	692106.55	1187236.51
AS-7	691927.60	1187133.39
AS-8	691923.33	1187137.61
AS-9	691890.39	1187170.08
AS-10	692081.41	1187260.15
AS-11	692077.19	1187264.31
AS-12	692044.70	1187296.33

ROADWAY PARAPET WALL COORDINATES		
W.P. NO.	NORTHING	EASTING
RPW-1	691974.37	1187059.24
RPW-2	691937.66	1187097.42
RPW-3	692158.04	1187212.80
RPW-4	692121.30	1187250.31
RPW-5	691910.89	1187121.49
RPW-6	691874.19	1187158.68
RPW-7	692095.99	1187274.00
RPW-8	692059.38	1187310.24

NOTE

P.S. COORDINATES ARE LOCATED AT CENTERLINE OF PRESTRESSED DECK UNIT AND CENTERLINE OF BEARING.

DECK UNIT COORDINATES		
W.P. NO.	NORTHING	EASTING
PS-1	692004.67	1187084.91
PS-2	692001.85	1187087.78
PS-3	691999.03	1187090.65
PS-4	691996.21	1187093.53
PS-5	691993.39	1187096.40
PS-6	691990.57	1187099.27
PS-7	691987.75	1187102.15
PS-8	691984.92	1187105.02
PS-9	691982.10	1187107.89
PS-10	691979.28	1187110.76
PS-11	691976.46	1187113.64
PS-12	691973.64	1187116.51
PS-13	691970.82	1187119.38
PS-14	692036.35	1187109.56
PS-15	692033.53	1187112.43
PS-16	692030.71	1187115.30
PS-17	692027.89	1187118.18
PS-18	692025.07	1187121.05
PS-19	692022.25	1187123.92
PS-20	692019.42	1187126.80
PS-21	692016.60	1187129.67
PS-22	692013.78	1187132.54
PS-23	692010.96	1187135.42
PS-24	692008.14	1187138.29
PS-25	692005.32	1187141.16
PS-26	692002.50	1187144.04

DECK UNIT COORDINATES		
W.P. NO.	NORTHING	EASTING
PS-27	692037.59	1187110.68
PS-28	692034.78	1187113.54
PS-29	692031.96	1187116.41
PS-30	692029.15	1187119.27
PS-31	692026.34	1187122.13
PS-32	692023.53	1187125.00
PS-33	692020.72	1187127.86
PS-34	692017.90	1187130.72
PS-35	692015.09	1187133.59
PS-36	692012.28	1187136.45
PS-37	692009.47	1187139.32
PS-38	692006.66	1187142.18
PS-39	692003.84	1187145.04
PS-40	692092.60	1187156.46
PS-41	692089.79	1187159.33
PS-42	692086.98	1187162.19
PS-43	692084.17	1187165.05
PS-44	692081.36	1187167.92
PS-45	692078.54	1187170.78
PS-46	692075.73	1187173.64
PS-47	692072.92	1187176.51
PS-48	692070.11	1187179.37
PS-49	692067.30	1187182.24
PS-50	692064.48	1187185.10
PS-51	692061.67	1187187.96
PS-52	692058.86	1187190.83

DECK UNIT COORDINATES		
W.P. NO.	NORTHING	EASTING
PS-53	692093.79	1187157.64
PS-54	692090.98	1187160.50
PS-55	692088.17	1187163.35
PS-56	692085.37	1187166.21
PS-57	692082.56	1187169.07
PS-58	692079.75	1187171.93
PS-59	692076.95	1187174.79
PS-60	692074.14	1187177.64
PS-61	692071.33	1187180.50
PS-62	692068.53	1187183.36
PS-63	692065.72	1187186.22
PS-64	692062.92	1187189.08
PS-65	692060.11	1187191.93
PS-66	692127.46	1187187.40
PS-67	692124.65	1187190.25
PS-68	692121.84	1187193.11
PS-69	692119.04	1187195.97
PS-70	692116.23	1187198.83
PS-71	692113.42	1187201.69
PS-72	692110.62	1187204.54
PS-73	692107.81	1187207.40
PS-74	692105.01	1187210.26
PS-75	692102.20	1187213.12
PS-76	692099.39	1187215.98
PS-77	692096.59	1187218.84
PS-78	692093.78	1187221.69

DECK UNIT COORDINATES		
W.P. NO.	NORTHING	EASTING
PS-79	691941.86	1187146.50
PS-80	691938.98	1187149.34
PS-81	691936.11	1187152.18
PS-82	691933.23	1187155.01
PS-83	691930.35	1187157.85
PS-84	691927.47	1187160.69
PS-85	691924.96	1187163.17
PS-86	691922.44	1187165.65
PS-87	691919.56	1187168.49
PS-88	691916.69	1187171.32
PS-89	691913.81	1187174.16
PS-90	691910.93	1187176.99
PS-91	691908.05	1187179.83
PS-92	691974.69	1187171.54
PS-93	691971.81	1187174.37
PS-94	691968.94	1187177.21
PS-95	691966.06	1187180.05
PS-96	691963.18	1187182.88
PS-97	691960.30	1187185.72
PS-98	691957.79	1187188.20
PS-99	691955.27	1187190.68
PS-100	691952.39	1187193.52
PS-101	691949.52	1187196.36
PS-102	691946.64	1187199.19
PS-103	691943.76	1187202.03
PS-104	691940.88	1187204.86

DECK UNIT COORDINATES		
W.P. NO.	NORTHING	EASTING
PS-105	691976.10	1187172.48
PS-106	691973.24	1187175.31
PS-107	691970.37	1187178.13
PS-108	691967.51	1187180.95
PS-109	691964.65	1187183.78
PS-110	691961.78	1187186.60
PS-111	691959.28	1187189.07
PS-112	691956.77	1187191.54
PS-113	691953.91	1187194.37
PS-114	691951.04	1187197.19
PS-115	691948.18	1187200.01
PS-116	691945.31	1187202.84
PS-117	691942.45	1187205.66
PS-118	692031.49	1187218.05
PS-119	692028.62	1187220.88
PS-120	692025.76	1187223.70
PS-121	692022.90	1187226.52
PS-122	692020.03	1187229.35
PS-123	692017.17	1187232.17
PS-124	692014.66	1187234.64
PS-125	692012.16	1187237.11
PS-126	692009.29	1187239.93
PS-127	692006.43	1187242.76
PS-128	692003.56	1187245.58
PS-129	692000.70	1187248.40
PS-130	691997.84	1187251.23

DECK UNIT COORDINATES		
W.P. NO.	NORTHING	EASTING
PS-131	692032.67	1187219.22
PS-132	692029.82	1187222.04
PS-133	692026.97	1187224.85
PS-134	692024.11	1187227.67
PS-135	692021.26	1187230.48
PS-136	692018.40	1187233.29
PS-137	692015.90	1187235.76
PS-138	692013.41	1187238.22
PS-139	692010.55	1187241.03
PS-140	692007.70	1187243.85
PS-141	692004.84	1187246.66
PS-142	692001.99	1187249.48
PS-143	691999.13	1187252.29
PS-144	692065.55	1187248.42
PS-145	692062.88	1187251.06
PS-146	692059.84	1187254.05
PS-147	692056.98	1187256.87
PS-148	692054.13	1187259.68
PS-149	692051.28	1187262.50
PS-150	692048.78	1187264.96
PS-151	692046.28	1187267.42
PS-152	692043.42	1187270.24
PS-153	692040.57	1187273.05
PS-154	692037.71	1187275.86
PS-155	692034.86	1187278.68
PS-156	692032.01	1187281.49

90% DESIGN REVIEW 03/09/2016

REV.	DATE	REVISION DESCRIPTION	SHEET NO.
-	-	-	-
-	-	-	-
-	-	-	-
-	-	-	-
-	-	-	-
-	-	-	-

THE INFORMATION, INCLUDING ESTIMATED QUANTITIES OF WORK, SHOWN ON THESE SHEETS IS BASED ON LIMITED INVESTIGATIONS BY THE STATE AND IS IN NO WAY WARRANTED TO INDICATE THE CONDITIONS OF ACTUAL QUANTITIES OF WORK WHICH WILL BE REQUIRED.

PLOTTED: 3/9/2016

DESIGNER/DRAFTER: K. HARLEY
CHECKED BY: B. BYRNE
NOT TO SCALE

STATE OF CONNECTICUT
DEPARTMENT OF TRANSPORTATION

FILENAME: ...\SB_MSH_BR_0058-0332_LAYOUT.dgn

LOCHNER
H.W. LOCHNER, INC
55 Hartland Street
East Hartford, CT 06108

APPROVED BY: - DATE: -

PROJECT TITLE:
RECONSTRUCTION OF ROUTE 349 NB AND SB OVER AMTRAK RAILROAD

TOWN: GROTON

DRAWING TITLE: LAYOUT PLAN

PROJECT NO. 058-332
DRAWING NO. S-6
SHEET NO.

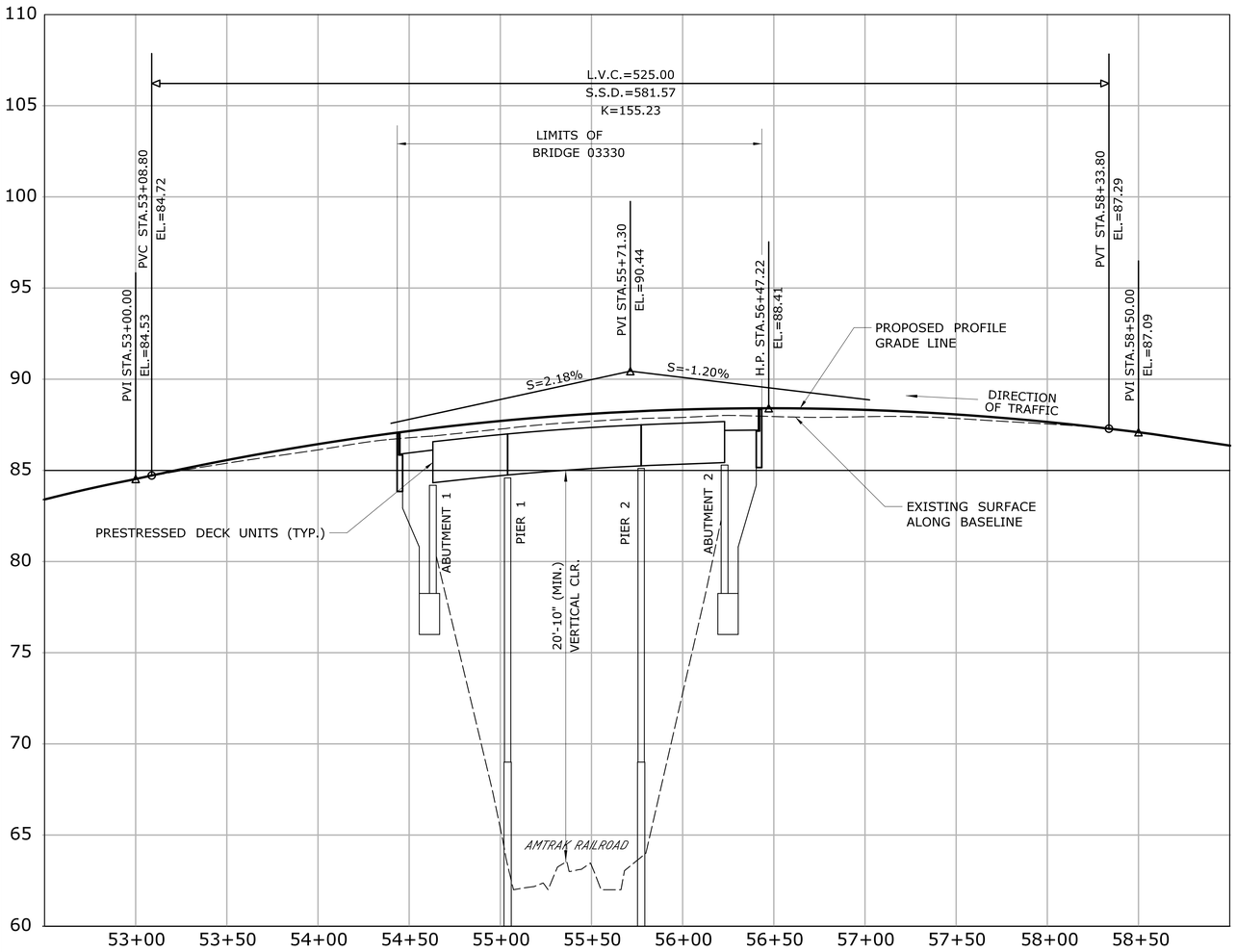

ROUTE 349 SOUTHBOUND PROFILE

SCALE HORIZ.: 1"=40'
VERT. : 1"=4'

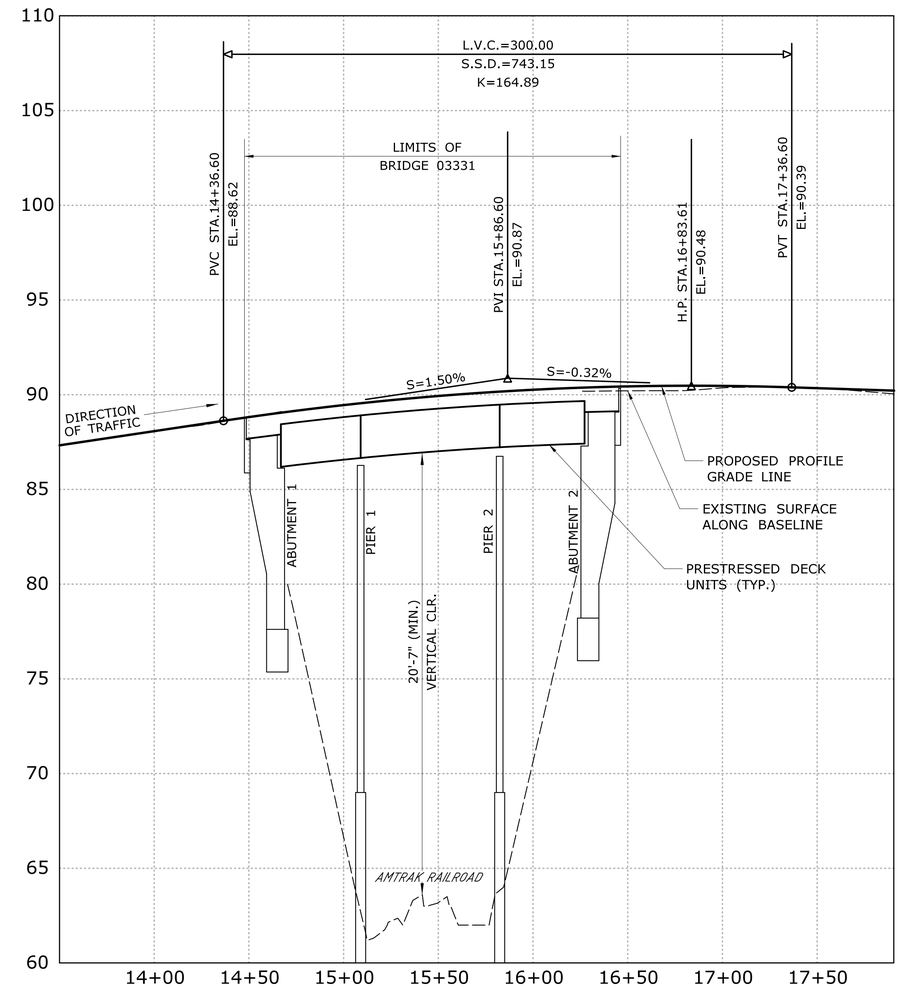

ROUTE 349 NORTHBOUND PROFILE

SCALE HORIZ.: 1"=40'
VERT. : 1"=4'

90% DESIGN REVIEW 03/09/2016

REV.	DATE	REVISION DESCRIPTION	SHEET NO.
-	-	-	-
-	-	-	-
-	-	-	-
-	-	-	-
-	-	-	-
-	-	-	-

THE INFORMATION, INCLUDING ESTIMATED QUANTITIES OF WORK, SHOWN ON THESE SHEETS IS BASED ON LIMITED INVESTIGATIONS BY THE STATE AND IS IN NO WAY WARRANTED TO INDICATE THE CONDITIONS OF ACTUAL QUANTITIES OF WORK WHICH WILL BE REQUIRED.

PLOTTED: 3/9/2016

DESIGNER/DRAFTER: K.HARLEY
CHECKED BY: B.BYRNE
SCALE AS NOTED

STATE OF CONNECTICUT
DEPARTMENT OF TRANSPORTATION

FILENAME: ...\SB_MSH_BR_0058-0332_PROFILE.dgn

LOCHNER
H.W. LOCHNER, INC
55 Hartland Street
East Hartford, CT 06108

APPROVED BY: - DATE: -

PROJECT TITLE:
RECONSTRUCTION OF ROUTE 349 NB AND SB OVER AMTRAK RAILROAD

TOWN: **GROTON**

DRAWING TITLE: **PROFILES**

PROJECT NO. **058-332**
DRAWING NO. **S-7**
SHEET NO.

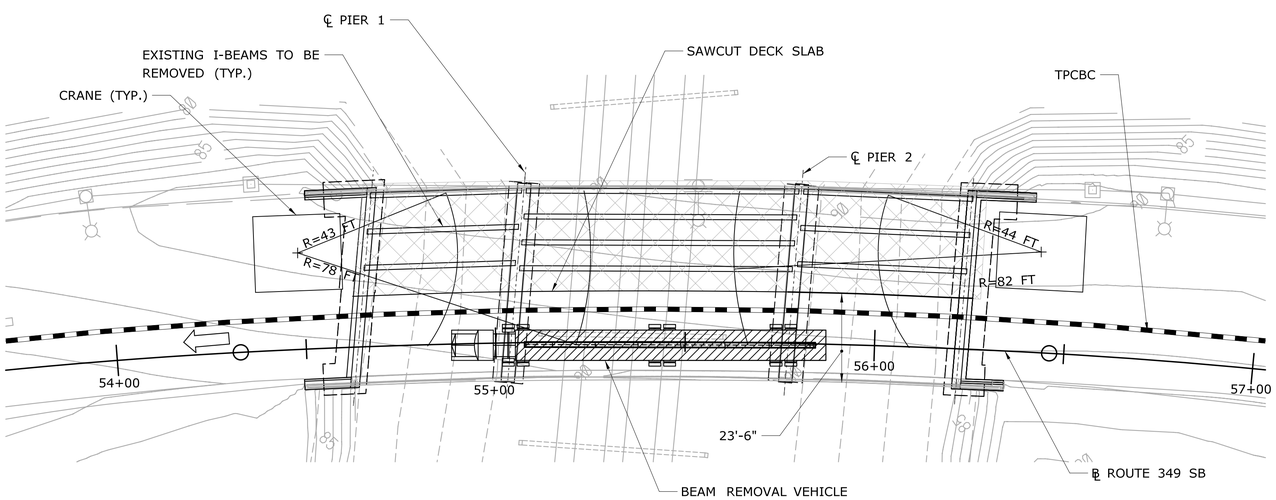

STAGE 1 - REMOVAL OF SUPERSTRUCTURE

Stage Construction Notes 8 & 9: Plans need to show the railroad ROW. Foul times need to be determined and listed.

LEGEND

REMOVAL OF EXISTING SUPERSTRUCTURE

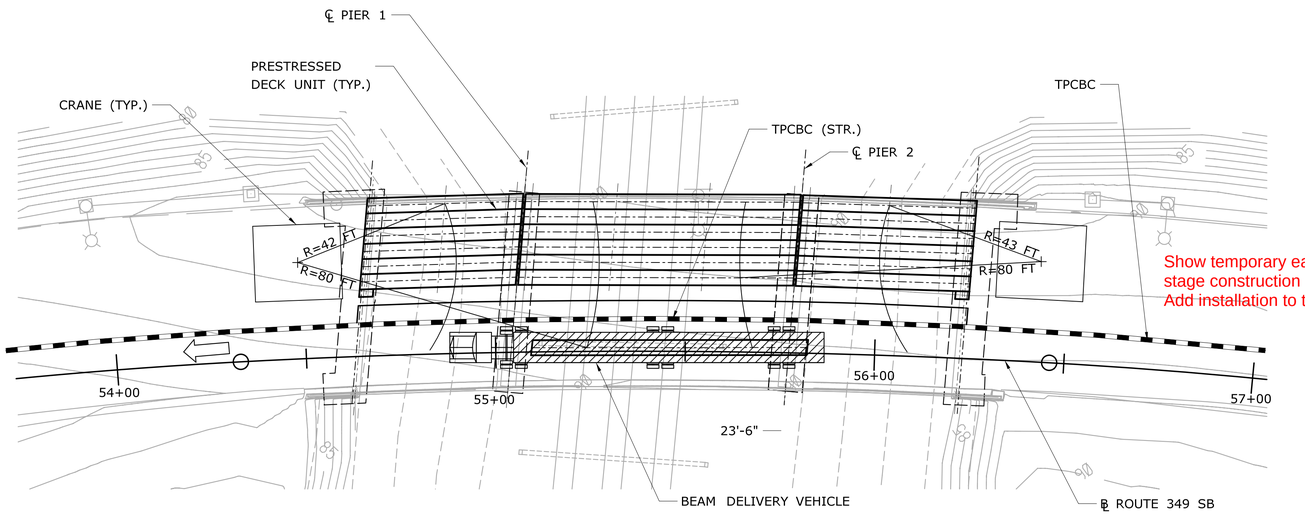

Show temporary earth retaining system on the stage construction plans (S-8, S-9, S10 & S-11). Add installation to the construction sequence.

STAGE 1 - SUPERSTRUCTURE ERECTION

SOUTHBOUND - BRIDGE 03330

SCALE: 1"=20'

NOTE:
AMTRAK HAS YET TO REVIEW PLANS.
CONCEPT SHOWN IS PRELIMINARY
UNTIL AMTRAK HAS REVIEWED.

STAGE CONSTRUCTION NOTES:

1. THE SUPERSTRUCTURE REMOVAL AND ERECTION PLANS SHOWN REPRESENT ONE SUGGESTED METHOD FOR REMOVAL OF THE EXISTING SUPERSTRUCTURE AND ERECTING THE PRESTRESSED DECK UNITS. THE INFORMATION GIVEN ON THESE DRAWINGS IS APPLICABLE TO THIS METHOD, BUT MAY NOT BE APPLICABLE TO OTHER METHODS OF ERECTION.
2. THE CONTRACTOR SHALL DEVELOP HIS OWN METHOD OF REMOVAL AND ERECTION. THE CONTRACTOR SHALL PREPARE AND SUBMIT WORKING DRAWINGS AND CALCULATIONS AS INDICATED IN THE SPECIAL PROVISIONS.
3. THE CONTRACTOR'S REMOVAL AND ERECTION PROCEDURES MUST BE COMPATIBLE WITH THE MAINTENANCE OF TRAFFIC PROVISIONS IN THE CONTRACT DOCUMENTS.
4. THROUGHOUT ALL STAGES OF THE WORK, THE CONTRACTOR SHALL TAKE THE PROPER PRECAUTIONS TO ENSURE THE STABILITY OF ALL STRUCTURAL ELEMENTS UNTIL THE TOTAL STRUCTURE IS IN BEING.
5. IT IS THE CONTRACTOR'S RESPONSIBILITY TO COORDINATE HIS REMOVAL AND ERECTION OPERATIONS AND ASSOCIATED WORK WITH THE RAILROAD.
6. FOR CRANE PICKS OVER THE RAILROAD R.O.W., CRANE SHALL BE ADEQUATE FOR 150% OF THE CALCULATED PICK WEIGHT.
7. CONTRACTOR TO VERIFY WEIGHT OF ALL CRANE PICKS.
8. ALL WORK WITHIN RAILROAD R.O.W. SHALL BE PERFORMED DURING FOUL TIME WITH THE POWER DE-ENERGIZED.
9. A DEBRIS SHIELD IS REQUIRED FOR ALL DEMO AND ERECTION OVER THE RAILROAD RIGHT-OF-WAY. SUBMIT STAMPED DESIGN OF DEBRIS SHIELD FOR REVIEW AND ACCEPTANCE BY THE ENGINEER AND AMTRAK PRIOR TO COMMENCEMENT OF WORK.
10. REFER TO GROUNDING AND BONDING SUBSET FOR ADDITIONAL STAGING INFORMATION.
11. TEMPORARY PROTECTIVE FENCE (BRIDGE) SHALL EXTEND A MINIMUM OF 25 FEET BEYOND THE CENTERLINES OF TRACKS 1 AND 4.

STAGE 1 EXISTING SUPERSTRUCTURE REMOVAL

1. INSTALL DEBRIS SHIELD TO PROTECT THE TRACKS AND CATENARY.
2. INSTALL TEMPORARY PROTECTIVE FENCE (BRIDGE).
3. INSTALL TEMPORARY GROUNDING AND BONDING.
4. REMOVE EXISTING BITUMINOUS WEARING SURFACE WITHIN THE LIMITS OF STAGE 1 SUPERSTRUCTURE REMOVAL.
5. EXISTING I-BEAMS SHALL BE STABILIZED PRIOR TO DECK REMOVAL.
6. SAWCUT EXISTING DECK.
7. REMOVE DECK SLAB.
8. REMOVE EXISTING I-BEAMS USING SHORT-TERM CLOSURES OF ROUTE 349 SB.
9. ESTIMATED PICK WEIGHT; INCLUDES WEIGHT OF DECK SLAB DIRECTLY ABOVE TOP FLANGE, DOES NOT INCLUDE RIGGING:
   SPAN 1=32.0 KIPS (SINGLE CRANE PICK)
   SPAN 2=56.0 KIPS (TWO-CRANE PICK)
   SPAN 3=35.0 KIPS (SINGLE CRANE PICK)
10. PERFORM SUBSTRUCTURE MODIFICATIONS.

State that the short term closure is listed in section 1.08 Prosecution and Progress (not to exceed 10 minutes).

STAGE 1 ERECTION

1. ERECT DECK UNITS B1 THROUGH B6, USING SHORT-TERM CLOSURES OF ROUTE 349 SB.
2. ESTIMATED PICK WEIGHT; DOES NOT INCLUDE RIGGING:
   SPAN 1=31.0 KIPS (SINGLE CRANE PICK)
   SPAN 2=55.0 KIPS (TWO-CRANE PICK)
   SPAN 3=35.0 KIPS (SINGLE CRANE PICK)
3. CONNECT GROUNDING AND BONDING, AT END OF EACH SHIFT.
4. INSTALL AND TENSION TRANSVERSE TIES IN STAGE 1 SLEEVES. SEE DECK UNIT DETAILS SHEET FOR PROCEDURE.
5. CONSTRUCT END DIAPHRAGMS AND PLACE CONCRETE FOR TOPPING SLAB.
6. CONSTRUCT STAGE 1 PARAPET.
7. INSTALL PERMANENT METAL BEAM RAIL (SOLID PANEL).
8. COMPLETE STAGE 1 SUBSTRUCTURE MODIFICATIONS.
9. CONSTRUCT APPROACH SLABS WITH PARAPETS.

90% DESIGN REVIEW 03/09/2016

REV.	DATE	REVISION DESCRIPTION	SHEET NO.
-	-	-	-
-	-	-	-
-	-	-	-
-	-	-	-
-	-	-	-
-	-	-	-

THE INFORMATION, INCLUDING ESTIMATED QUANTITIES OF WORK, SHOWN ON THESE SHEETS IS BASED ON LIMITED INVESTIGATIONS BY THE STATE AND IS IN NO WAY WARRANTED TO INDICATE THE CONDITIONS OF ACTUAL QUANTITIES OF WORK WHICH WILL BE REQUIRED.

PLOTTED: 3/9/2016

DESIGNER/DRAFTER: D.HORVATH
CHECKED BY: D.GEISSERT
SCALE AS NOTED

STATE OF CONNECTICUT
DEPARTMENT OF TRANSPORTATION

FILENAME: ...\SB_MSH_BR_0058-0332_STG-CNSTR-01.dgn

LOCHNER
H.W. LOCHNER, INC
55 Hartland Street
East Hartford, CT 06108

APPROVED BY: - DATE: -

PROJECT TITLE: RECONSTRUCTION OF ROUTE 349 NB AND SB OVER AMTRAK RAILROAD

TOWN: GROTON

DRAWING TITLE: 03330 - STAGE 1 CONSTRUCTION

PROJECT NO. 058-332

DRAWING NO. S-8

SHEET NO.

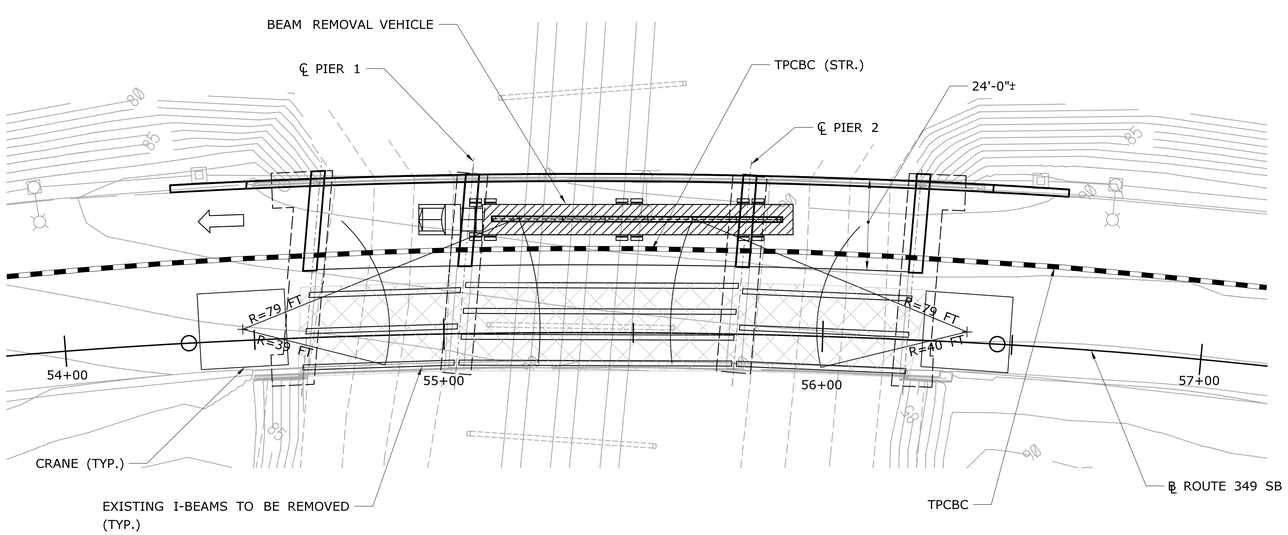

STAGE 2 - REMOVAL OF SUPERSTRUCTURE

LEGEND

REMOVE EXISTING SUPERSTRUCTURE

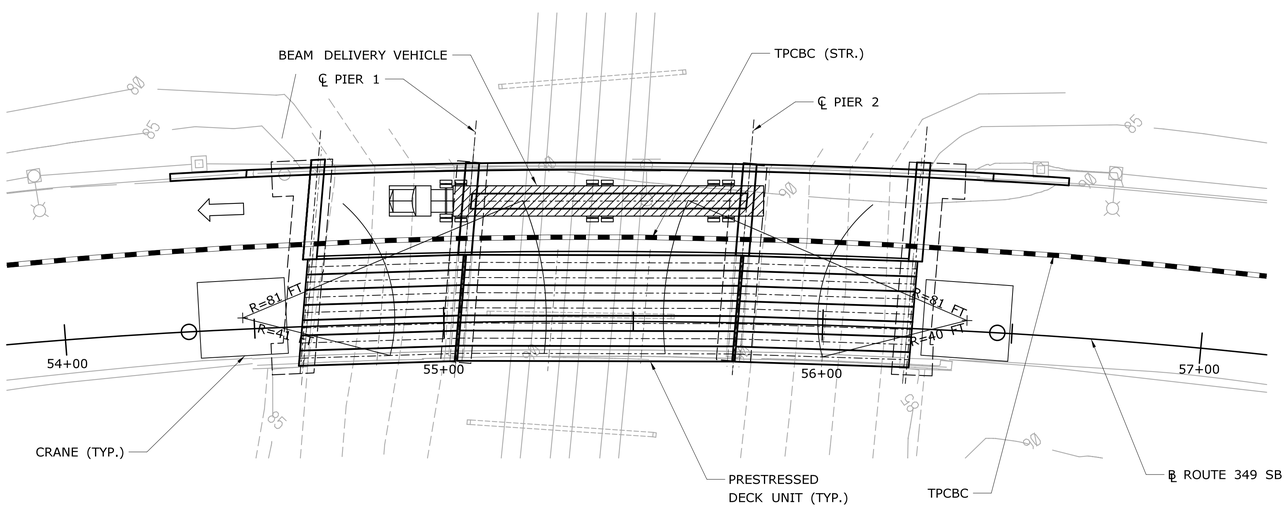

STAGE 2 - SUPERSTRUCTURE ERECTION

SOUTHBOUND - BRIDGE 03330

SCALE: 1"=20'

STAGE 2 EXISTING SUPERSTRUCTURE REMOVAL

1. INSTALL DEBRIS SHIELD TO PROTECT THE TRACKS AND CATENARY.
2. INSTALL TEMPORARY PROTECTIVE FENCE (BRIDGE).
3. INSTALL TEMPORARY GROUNDING AND BONDING.
4. REMOVE EXISTING BITUMINOUS WEARING SURFACE WITHIN THE LIMITS OF STAGE 2 SUPERSTRUCTURE REMOVAL.
5. EXISTING I-BEAMS SHALL BE STABILIZED PRIOR TO DECK REMOVAL.
6. REMOVE REMAINING DECK SLAB.
7. REMOVE EXISTING I-BEAMS USING SHORT-TERM CLOSURES OF ROUTE 349 SB.
8. ESTIMATED PICK WEIGHT; INCLUDES WEIGHT OF DECK SLAB DIRECTLY ABOVE TOP FLANGE, DOES NOT INCLUDE RIGGING:
   SPAN 1=32.0 KIPS (SINGLE CRANE PICK)
   SPAN 2=56.0 KIPS (TWO-CRANE PICK)
   SPAN 3=35.0 KIPS (SINGLE CRANE PICK)
9. PERFORM SUBSTRUCTURE MODIFICATIONS.

STAGE 2 ERECTION

1. ERECT DECK UNITS B7 THROUGH B13, USING SHORT-TERM CLOSURES OF ROUTE 349 SB.
2. ESTIMATED PICK WEIGHT; DOES NOT INCLUDE RIGGING:
   SPAN 1=31.0 KIPS (SINGLE CRANE PICK)
   SPAN 2=55.0 KIPS (TWO-CRANE PICK)
   SPAN 3=35.0 KIPS (SINGLE CRANE PICK)
3. CONNECT GROUNDING AND BONDING, AT END OF EACH SHIFT.
4. INSTALL AND TENSION TRNASVERSE TIES IN STAGE 2 SLEEVES. SEE DECK UNIT DETAILS SHEET FOR PROCEDURE.
5. CONSTRUCT END DIAPHRAGMS AND PLACE CONCRETE FOR TOPPING SLAB.
6. CONSTRUCT STAGE 2 PARAPET.
7. INSTALL PERMANENT METAL BEAM RAIL (SOLID PANEL).
8. COMPLETE STAGE 2 SUBSTRUCTURE MODIFICATIONS.
9. CONSTRUCT APPROACH SLABS WITH PARAPETS.

NOTE:
AMTRAK HAS YET TO REVIEW PLANS.
CONCEPT SHOWN IS PRELIMINARY
UNTIL AMTRAK HAS REVIEWED.

90% DESIGN REVIEW 03/09/2016

REV.	DATE	REVISION DESCRIPTION	SHEET NO.
-	-	-	-
-	-	-	-
-	-	-	-
-	-	-	-
-	-	-	-
-	-	-	-

THE INFORMATION, INCLUDING ESTIMATED QUANTITIES OF WORK, SHOWN ON THESE SHEETS IS BASED ON LIMITED INVESTIGATIONS BY THE STATE AND IS IN NO WAY WARRANTED TO INDICATE THE CONDITIONS OF ACTUAL QUANTITIES OF WORK WHICH WILL BE REQUIRED.

PLOTTED: 3/9/2016

DESIGNER/DRAFTER: D.HORVATH
CHECKED BY: D.GEISSERT
SCALE AS NOTED

STATE OF CONNECTICUT
DEPARTMENT OF TRANSPORTATION

FILENAME: ...\SB_MSH_BR_0058-0332_STG-CNSTR-02.dgn

LOCHNER
H.W. LOCHNER, INC
55 Hartland Street
East Hartford, CT 06108

APPROVED BY: - DATE: -

PROJECT TITLE:
RECONSTRUCTION OF ROUTE 349 NB AND SB OVER AMTRAK RAILROAD

TOWN: **GROTON**

DRAWING TITLE: **03330 - STAGE 2 CONSTRUCTION**

PROJECT NO. **058-332**
DRAWING NO. **S-9**
SHEET NO.

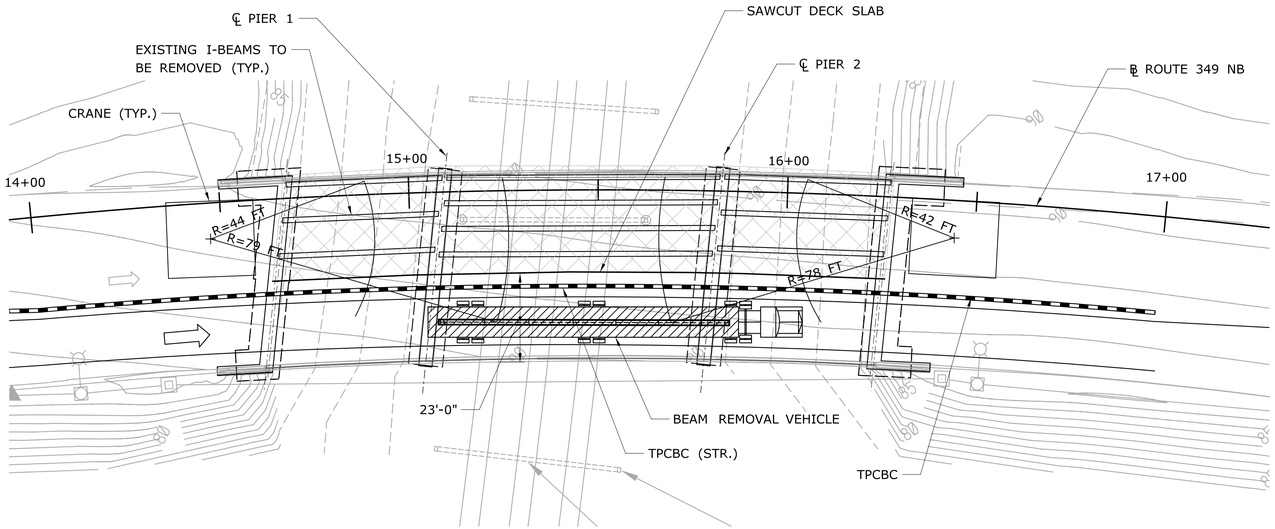

STAGE 1 - REMOVAL OF SUPERSTRUCTURE

LEGEND

REMOVAL OF EXISTING SUPERSTRUCTURE

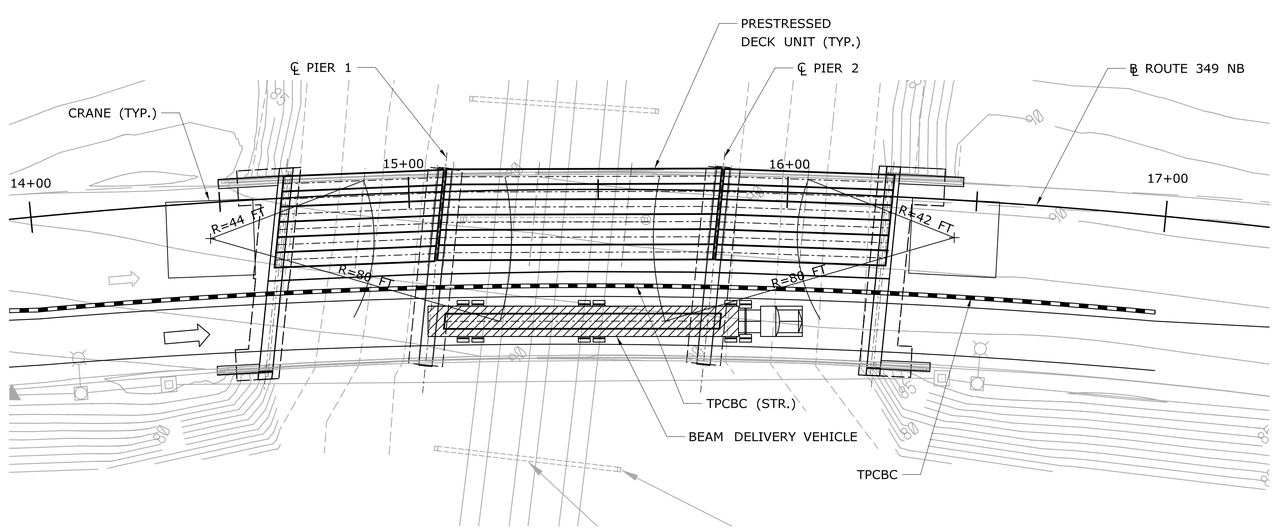

STAGE 1 - SUPERSTRUCTURE ERECTION

NORTHBOUND - BRIDGE 03331

SCALE: 1"=20'

STAGE 1 EXISTING SUPERSTRUCTURE REMOVAL

1. INSTALL DEBRIS SHIELD TO PROTECT THE TRACKS AND CATENARY.
2. INSTALL TEMPORARY PROTECTIVE FENCE (BRIDGE).
3. INSTALL TEMPORARY GROUNDING AND BONDING.
4. REMOVE EXISTING BITUMINOUS WEARING SURFACE WITHIN THE LIMITS OF STAGE 1 SUPERSTRUCTURE REMOVAL.
5. EXISTING I-BEAMS SHALL BE STABILIZED PRIOR TO DECK REMOVAL.
6. SAWCUT EXISTING DECK.
7. REMOVE DECK SLAB.
8. REMOVE EXISTING I-BEAMS USING SHORT-TERM CLOSURES OF ROUTE 349 NB.
9. ESTIMATED PICK WEIGHT; INCLUDES WEIGHT OF DECK SLAB DIRECTLY ABOVE TOP FLANGE, DOES NOT INCLUDE RIGGING:
   SPAN 1=33.0 KIPS (SINGLE CRANE PICK)
   SPAN 2=56.0 KIPS (TWO-CRANE PICK)
   SPAN 3=36.0 KIPS (SINGLE CRANE PICK)
10. PERFORM SUBSTRUCTURE MODIFICATIONS.

STAGE 1 ERECTION

1. ERECT DECK UNITS B14 THROUGH B19, USING SHORT-TERM CLOSURES OF ROUTE 349 NB.
2. ESTIMATED PICK WEIGHT; DOES NOT INCLUDE RIGGING:
   SPAN 1=32.0 KIPS (SINGLE CRANE PICK)
   SPAN 2=55.0 KIPS (TWO-CRANE PICK)
   SPAN 3=34.0 KIPS (SINGLE CRANE PICK)
3. CONNECT GROUNDING AND BONDING, AT END OF EACH SHIFT.
4. INSTALL AND TENSION TRANSVERSE TIES IN STAGE 1 SLEEVES. SEE DECK UNIT DETAILS SHEET FOR PROCEDURE.
5. CONSTRUCT END DIAPHRAGMS AND PLACE CONCRETE FOR TOPPING SLAB.
6. CONSTRUCT STAGE 1 PARAPET.
7. INSTALL PERMANENT METAL BEAM RAIL (SOLID PANEL).
8. COMPLETE STAGE 1 SUBSTRUCTURE MODIFICATIONS.
9. CONSTRUCT APPROACH SLABS WITH PARAPETS.

NOTE:
AMTRAK HAS YET TO REVIEW PLANS.
CONCEPT SHOWN IS PRELIMINARY
UNTIL AMTRAK HAS REVIEWED.

90% DESIGN REVIEW 03/09/2016

REV.	DATE	REVISION DESCRIPTION	SHEET NO.
-	-	-	-
-	-	-	-
-	-	-	-
-	-	-	-
-	-	-	-
-	-	-	-

THE INFORMATION, INCLUDING ESTIMATED QUANTITIES OF WORK, SHOWN ON THESE SHEETS IS BASED ON LIMITED INVESTIGATIONS BY THE STATE AND IS IN NO WAY WARRANTED TO INDICATE THE CONDITIONS OF ACTUAL QUANTITIES OF WORK WHICH WILL BE REQUIRED.

PLOTTED: 3/9/2016

DESIGNER/DRAFTER: D.HORVATH
CHECKED BY: D.GEISSERT
SCALE AS NOTED

STATE OF CONNECTICUT
DEPARTMENT OF TRANSPORTATION

FILENAME: ...\SB_MSH_BR_0058-0332_STG-CNSTR-03.dgn

LOCHNER
H.W. LOCHNER, INC
55 Hartland Street
East Hartford, CT 06108

APPROVED BY: - DATE: -

PROJECT TITLE:
RECONSTRUCTION OF ROUTE 349 NB AND SB OVER AMTRAK RAILROAD

TOWN: **GROTON**

DRAWING TITLE: **03331 - STAGE 1 CONSTRUCTION**

PROJECT NO. **058-332**
DRAWING NO. **S-10**
SHEET NO.

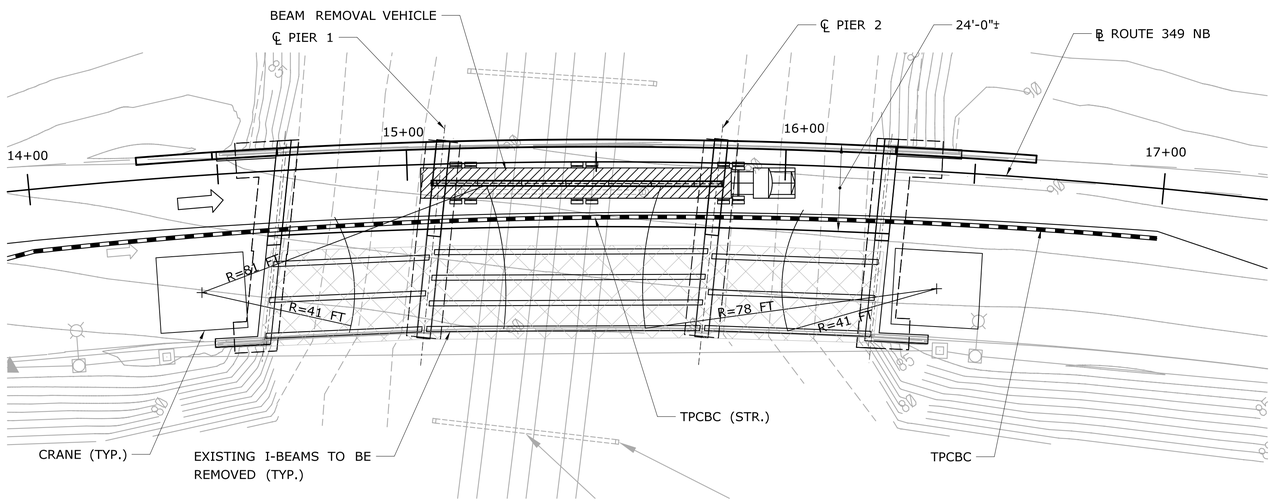

STAGE 2 - REMOVAL OF SUPERSTRUCTURE

LEGEND

REMOVE EXISTING SUPERSTRUCTURE

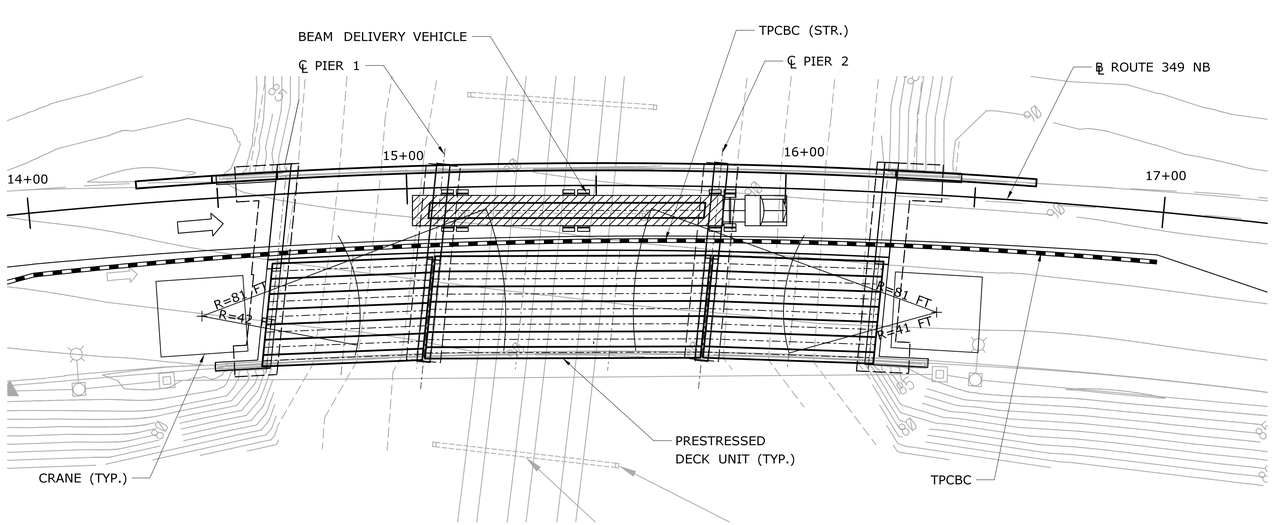

STAGE 2 - SUPERSTRUCTURE ERECTION

NORTHBOUND - BRIDGE 03331

SCALE: 1"=20'

STAGE 2 EXISTING SUPERSTRUCTURE REMOVAL

1. INSTALL DEBRIS SHIELD TO PROTECT THE TRACKS AND CATENARY.
2. INSTALL TEMPORARY PROTECTIVE FENCE (BRIDGE).
3. INSTALL TEMPORARY GROUNDING AND BONDING.
4. REMOVE EXISTING BITUMINOUS WEARING SURFACE WITHIN THE LIMITS OF STAGE 2 SUPERSTRUCTURE REMOVAL.
5. EXISTING I-BEAMS SHALL BE STABILIZED PRIOR TO DECK REMOVAL.
6. REMOVE REMAINING DECK SLAB.
7. REMOVE EXISTING I-BEAMS USINGG SHORT-TERM CLOSURES OF ROUTE 349 NB.
8. ESTIMATED PICK WEIGHT; INCLUDES WEIGHT OF DECK SLAB DIRECTLY ABOVE TOP FLANGE, DOES NOT INCLUDE RIGGING:
   SPAN 1=33.0 KIPS (SINGLE CRANE PICK)
   SPAN 2=56.0 KIPS (TWO-CRANE PICK)
   SPAN 3=36.0 KIPS (SINGLE CRANE PICK)
9. PERFORM SUBSTRUCTURE MODIFICATIONS.

STAGE 2 ERECTION

1. ERECT DECK UNITS B20 THROUGH B26, USING SHORT-TERM CLOSURES OF ROUTE 349 NB.
2. ESTIMATED PICK WEIGHT; DOES NOT INCLUDE RIGGING:
   SPAN 1=32.0 KIPS (SINGLE CRANE PICK)
   SPAN 2=55.0 KIPS (TWO-CRANE PICK)
   SPAN 3=34.0 KIPS (SINGLE CRANE PICK)
3. CONNECT GROUNDING AND BONDING. AT EACH END OF SHIFT.
4. INSTALL AND TENSION TRANSVERSE TIES IN STAGE 2 SLEEVES. SEE DECK UNIT DETAILS SHEET FOR PROCEDURE.
5. CONSTRUCT END DIAPHRAGMS AND PLACE CONCRETE FOR TOPPING SLAB.
6. CONSTRUCT STAGE 2 PARAPET.
7. INSTALL PERMANENT METAL BEAM RAIL (SOLID PANEL).
8. COMPLETE STAGE 2 SUBSTRUCTURE MODIFICATIONS.
9. CONSTRUCT APPROACH SLABS WITH PARAPETS.

NOTE:
AMTRAK HAS YET TO REVIEW PLANS.
CONCEPT SHOWN IS PRELIMINARY
UNTIL AMTRAK HAS REVIEWED.

90% DESIGN REVIEW 03/09/2016

REV.	DATE	REVISION DESCRIPTION	SHEET NO.
-	-	-	-
-	-	-	-
-	-	-	-
-	-	-	-
-	-	-	-
-	-	-	-

THE INFORMATION, INCLUDING ESTIMATED QUANTITIES OF WORK, SHOWN ON THESE SHEETS IS BASED ON LIMITED INVESTIGATIONS BY THE STATE AND IS IN NO WAY WARRANTED TO INDICATE THE CONDITIONS OF ACTUAL QUANTITIES OF WORK WHICH WILL BE REQUIRED.

PLOTTED: 3/9/2016

DESIGNER/DRAFTER: D.HORVATH
CHECKED BY: D.GEISSERT
SCALE AS NOTED

STATE OF CONNECTICUT
DEPARTMENT OF TRANSPORTATION

FILENAME: ...\SB_MSH_BR_0058-0332_STG-CNSTR-04.dgn

LOCHNER
H.W. LOCHNER, INC
55 Hartland Street
East Hartford, CT 06108

APPROVED BY: - DATE: -

PROJECT TITLE: RECONSTRUCTION OF ROUTE 349 NB AND SB OVER AMTRAK RAILROAD

TOWN: GROTON

DRAWING TITLE: 03331 - STAGE 2 CONSTRUCTION

PROJECT NO. 058-332
DRAWING NO. S-11
SHEET NO.

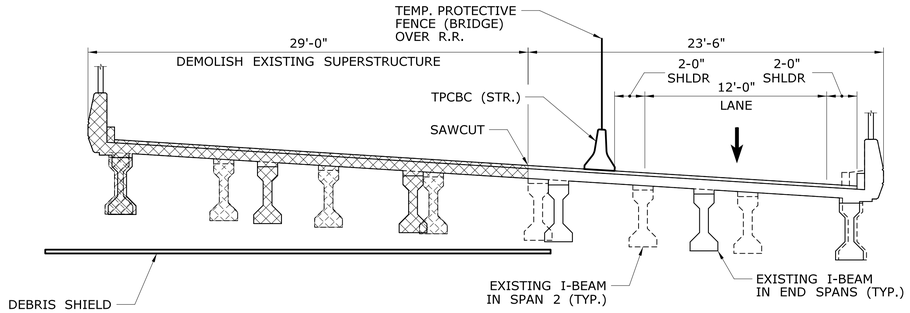

STAGE 1 - REMOVAL OF SUPERSTRUCTURE

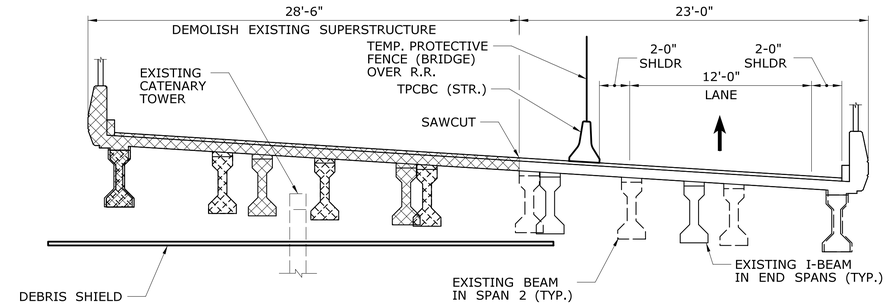

STAGE 1 - REMOVAL OF SUPERSTRUCTURE

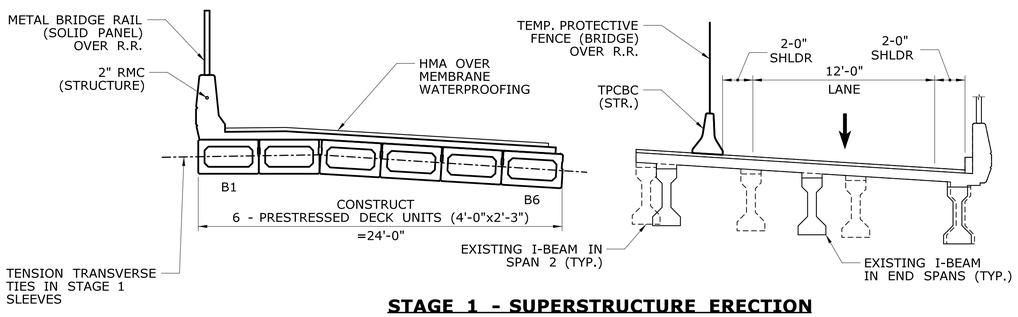

STAGE 1 - SUPERSTRUCTURE ERECTION

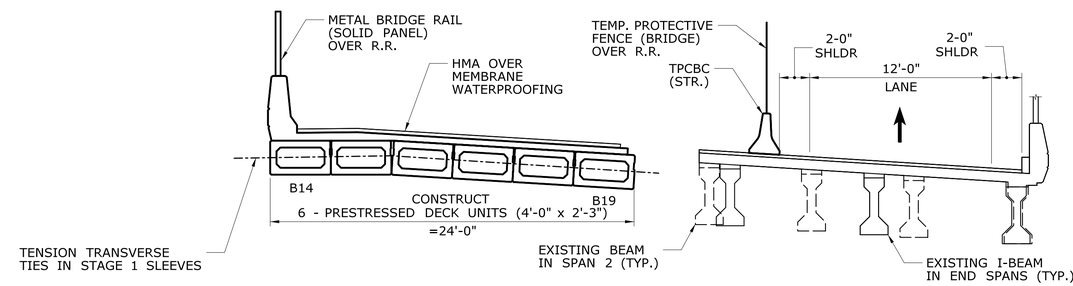

STAGE 1 - SUPERSTRUCTURE ERECTION

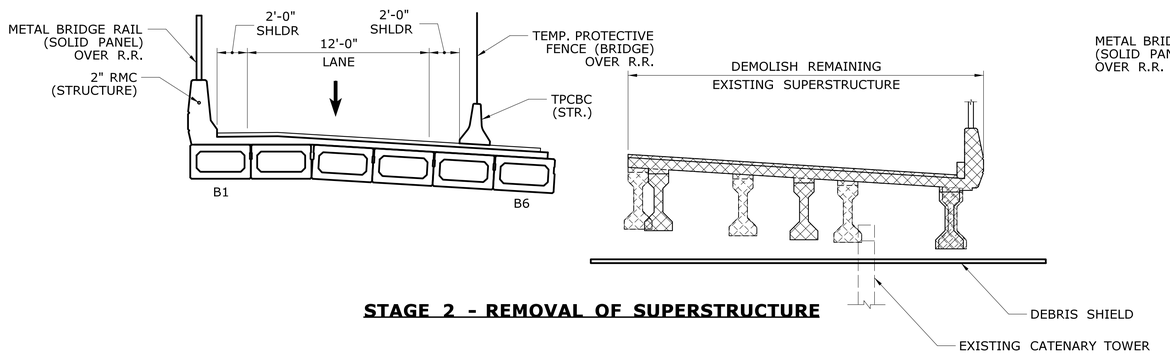

STAGE 2 - REMOVAL OF SUPERSTRUCTURE

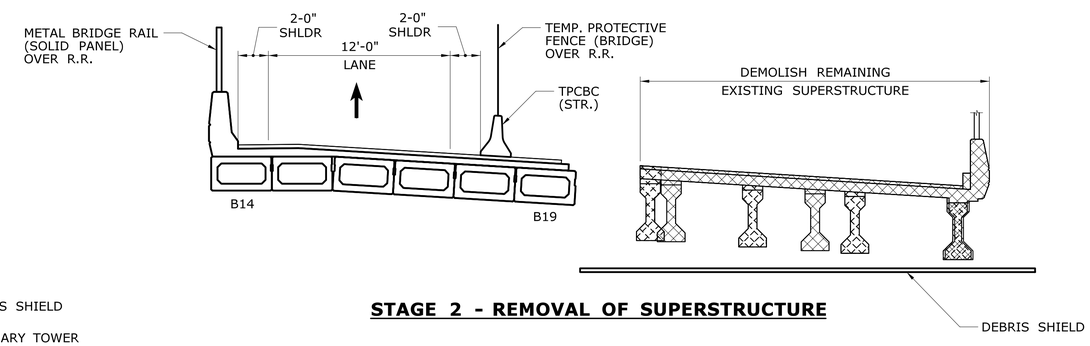

STAGE 2 - REMOVAL OF SUPERSTRUCTURE

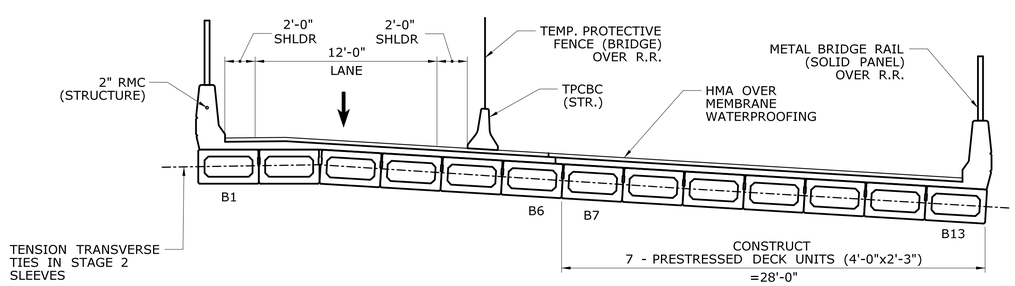

STAGE 2 - SUPERSTRUCTURE ERECTION
SOUTHBOUND - BRIDGE 03330

SCALE: 1" = 10'

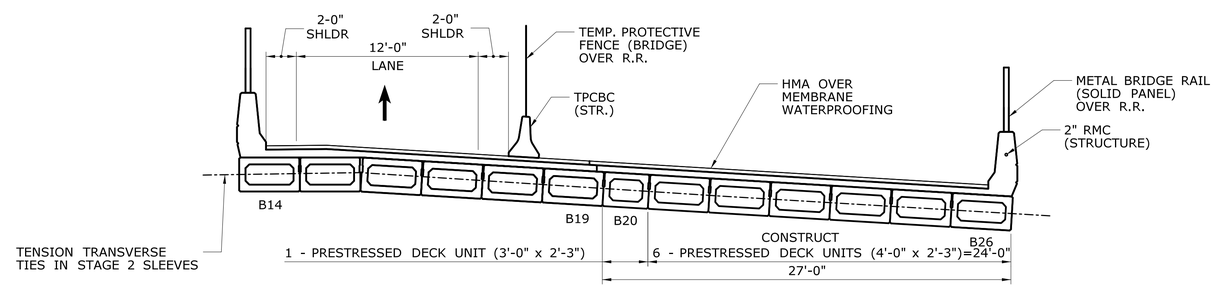

STAGE 2 - SUPERSTRUCTURE ERECTION
NORTHBOUND - BRIDGE 03331

SCALE: 1" = 10'

NOTES

1. DEBRIS SHIELD SHALL BE DESIGNED BY THE CONTRACTOR AND SHALL PROVIDE A MINIMUM OF 18'-6" TO TOP OF RAIL.
2. DEBRIS SHIELD PAID FOR UNDER THE ITEM "REMOVAL OF SUBSTRUCTURE (SITE NO. X).

90% DESIGN REVIEW 03/09/2016

REVISION DATE	REVISION DATE	REVISION DATE	REVISION DATE
-	-	-	-
-	-	-	-
-	-	-	-
-	-	-	-
-	-	-	-
-	-	-	-

SHEET NO.

THE INFORMATION, INCLUDING ESTIMATED QUANTITIES OF WORK, SHOWN ON THESE SHEETS IS BASED ON LIMITED INVESTIGATIONS BY THE STATE AND IS IN NO WAY WARRANTED TO INDICATE THE CONDITIONS OF ACTUAL QUANTITIES OF WORK WHICH WILL BE REQUIRED.

PLOTTED: 3/9/2016

DESIGNER/DRAFTER: K. HARLEY
CHECKED BY: D. GEISSERT
SCALE AS NOTED

STATE OF CONNECTICUT
DEPARTMENT OF TRANSPORTATION

FILENAME: ...\SB_MSH_BR_0058-0332_STG-CNSTR-SEC.dgn

LOCHNER
H.W. LOCHNER, INC
55 Hartland Street
East Hartford, CT 06108

APPROVED BY: -
DATE: -

PROJECT TITLE:
RECONSTRUCTION OF ROUTE 349 NB AND SB OVER AMTRAK RAILROAD

TOWN: **GROTON**

DRAWING TITLE:
STAGE CONSTRUCTION SECTIONS

PROJECT NO. **058-332**
DRAWING NO. **S-12**
SHEET NO.

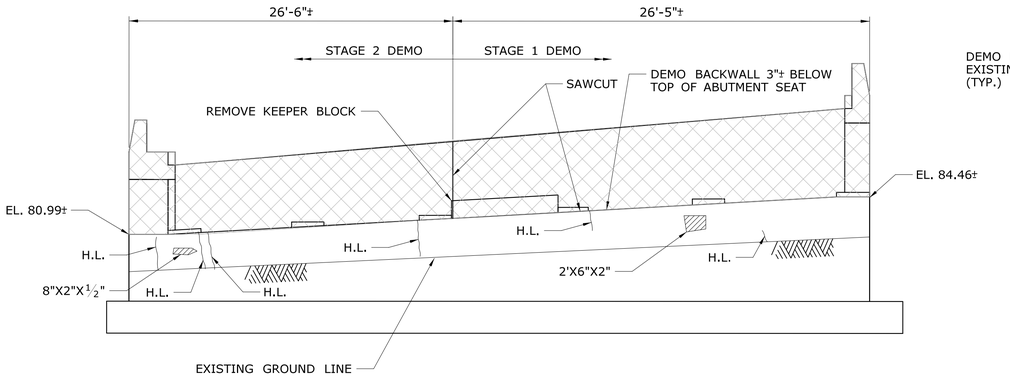

ABUTMENT 1

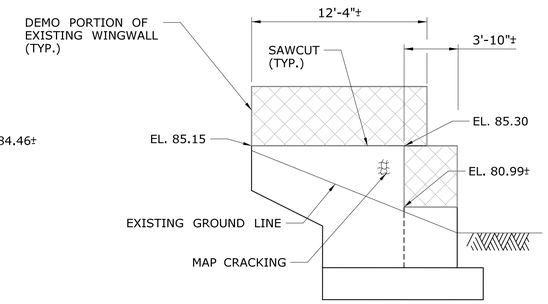

WINGWALL 1B

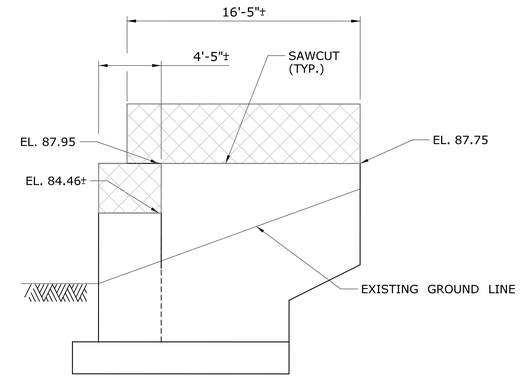

WINGWALL 1A

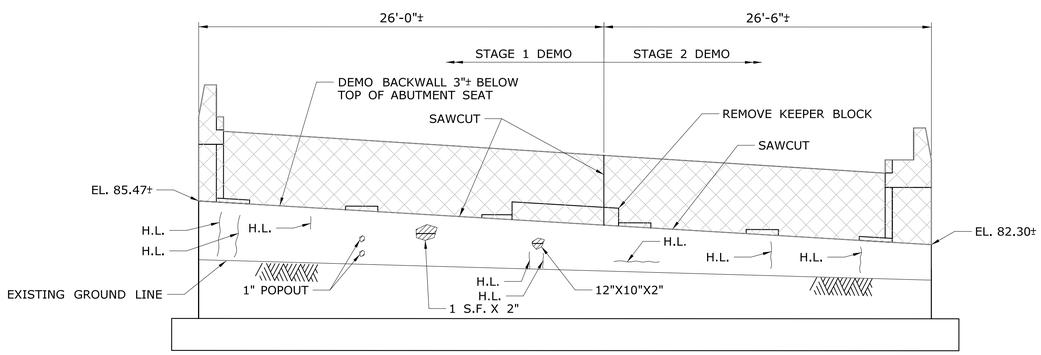

ABUTMENT 2

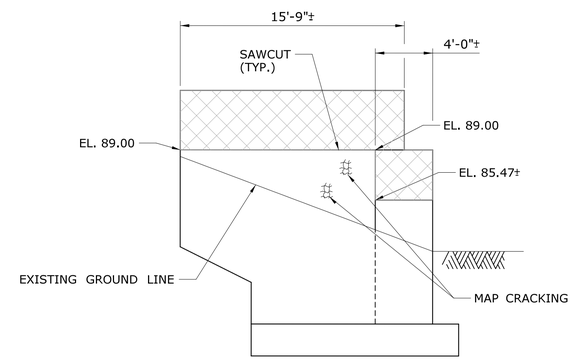

WINGWALL 2A

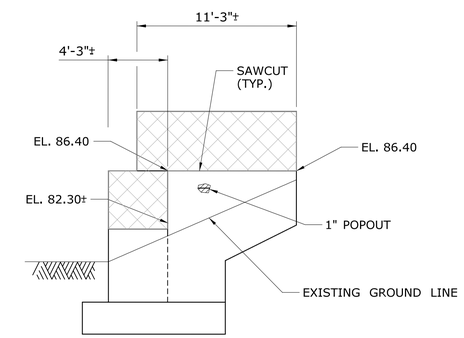

WINGWALL 2B

CONCRETE DETERIORATION LEGEND	
HOLLOW AREA (HA)	
SPALL	
SPALL WITH EXPOSED REBAR	
LIMITS OF DEMOLITION	
MAP CRACKING	
EPOXY CRACK SEALING	6'
HAIRLINE CRACK - NOT TO BE SEALED	H.L.

NOTES

1. FOR SUBSTRUCTURE REPAIR NOTES, SEE SUBSTUCTURE REPAIR DETAILS SHEET.
2. ABBREVIATIONS:
   FH=FULL HEIGHT
   FL=FULL LENGTH
3. SEE ABUTMENT PLAN & ELEVATION SHEETS TO SET STAGE LIMITS FOR DEMOLITION.

ABUTMENT ELEVATIONS
SOUTHBOUND - BRIDGE 03330
SCALE: 3/16" = 1'-0"

90% DESIGN REVIEW 03/09/2016

REV.	DATE	REVISION DESCRIPTION	SHEET NO.
-	-		-
-	-	-	-
-	-	-	-
-	-	-	-
-	-	-	-
-			-

THE INFORMATION, INCLUDING ESTIMATED QUANTITIES OF WORK, SHOWN ON THESE SHEETS IS BASED ON LIMITED INVESTIGATIONS BY THE STATE AND IS IN NO WAY WARRANTED TO INDICATE THE CONDITIONS OF ACTUAL QUANTITIES OF WORK WHICH WILL BE REQUIRED.

PLOTTED: 3/9/2016

DESIGNER/DRAFTER: R.BRAZZALLE/E.FINOWICKI
CHECKED BY: J.ADAMS
SCALE AS NOTED

STATE OF CONNECTICUT
DEPARTMENT OF TRANSPORTATION

FILENAME: ...\SB_MSH_BR_0058-0332_ABUT-DEMO-01.dgn

LOCHNER
H.W. LOCHNER, INC
55 Hartland Street
East Hartford, CT 06108

APPROVED BY: - DATE: -

PROJECT TITLE: RECONSTRUCTION OF ROUTE 349 NB AND SB OVER AMTRAK RAILROAD

TOWN: GROTON

DRAWING TITLE: 03330 - ABUTMENT DEMOLITION & REPAIR

PROJECT NO. 058-332
DRAWING NO. S-13
SHEET NO.

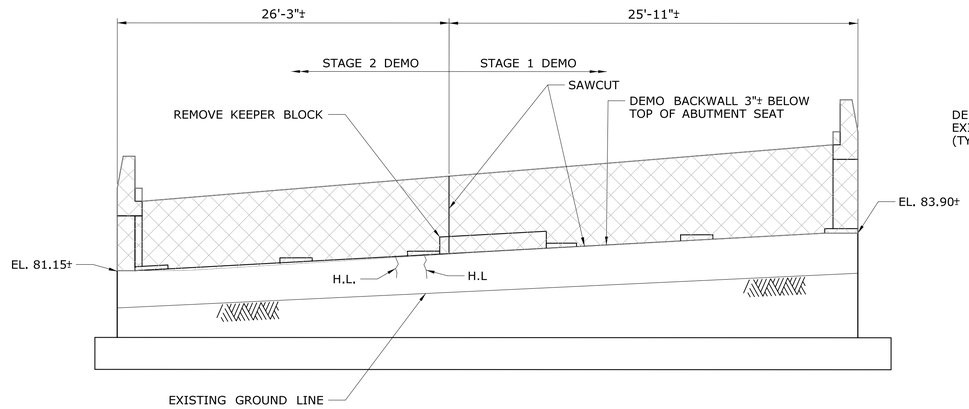

ABUTMENT 1

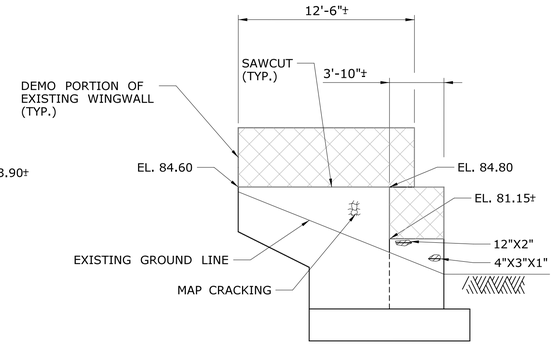

WINGWALL 1B

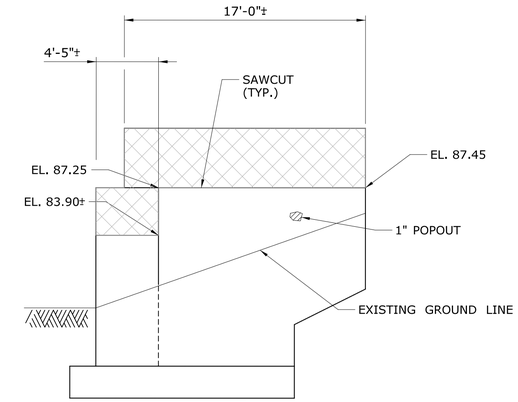

WINGWALL 1A

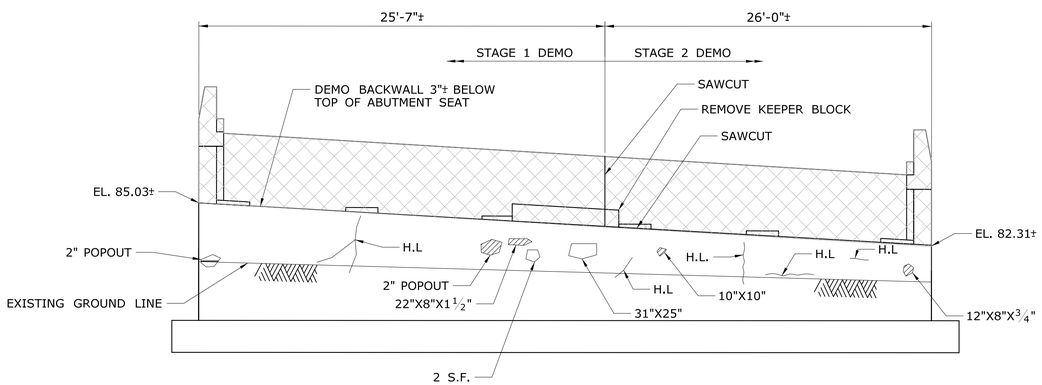

ABUTMENT 2

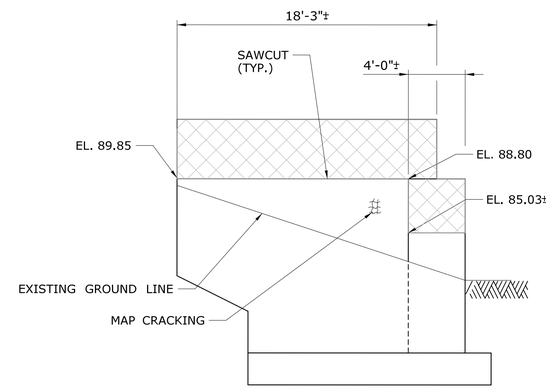

WINGWALL 2A

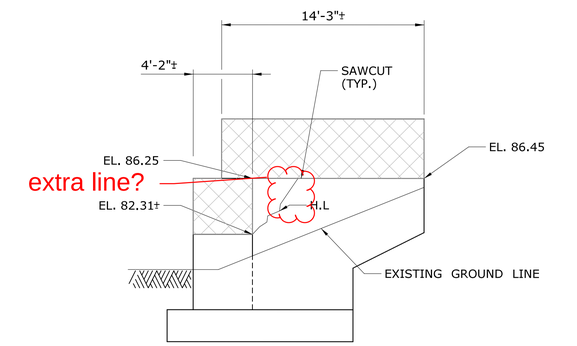

WINGWALL 2B

CONCRETE DETERIORATION LEGEND	
HOLLOW AREA (HA)	
SPALL	
SPALL WITH EXPOSED REBAR	
LIMITS OF DEMOLITION	
MAP CRACKING	
EPOXY CRACK SEALING	6'
HAIRLINE CRACK - NOT TO BE SEALED	H.L.

NOTES

1. FOR SUBSTRUCTURE REPAIR NOTES, SEE SUBSTUCTURE REPAIR DETAILS SHEET.
2. ABBREVIATIONS:
   FH=FULL HEIGHT
   FL=FULL LENGTH
3. SEE ABUTMENT PLAN & ELEVATION SHEETS TO SET STAGE LIMITS FOR DEMOLITION.

ABUTMENT ELEVATIONS

NORTHBOUND - BRIDGE 03331

SCALE: 3/16" = 1'-0"

90% DESIGN REVIEW 03/09/2016

REV.	DATE	REVISION DESCRIPTION	SHEET NO.
-	-		-
-	-	-	-
-	-	-	-
-	-	-	-
-	-	-	-
-			-

THE INFORMATION, INCLUDING ESTIMATED QUANTITIES OF WORK, SHOWN ON THESE SHEETS IS BASED ON LIMITED INVESTIGATIONS BY THE STATE AND IS IN NO WAY WARRANTED TO INDICATE THE CONDITIONS OF ACTUAL QUANTITIES OF WORK WHICH WILL BE REQUIRED.

PLOTTED: 3/9/2016

DESIGNER/DRAFTER: R.BRAZZALLE/E.FINOWICKI
CHECKED BY: J.ADAMS
SCALE AS NOTED

STATE OF CONNECTICUT
DEPARTMENT OF TRANSPORTATION

FILENAME: ...\SB_MSH_BR_0058-0332_ABUT-DEMO-02.dgn

LOCHNER
H.W. LOCHNER, INC
55 Hartland Street
East Hartford, CT 06108

APPROVED BY: - DATE: -

PROJECT TITLE: RECONSTRUCTION OF ROUTE 349 NB AND SB OVER AMTRAK RAILROAD

TOWN: GROTON

DRAWING TITLE: 03331 - ABUTMENT DEMOLITION & REPAIR

PROJECT NO. 058-332

DRAWING NO. S-14

SHEET NO.

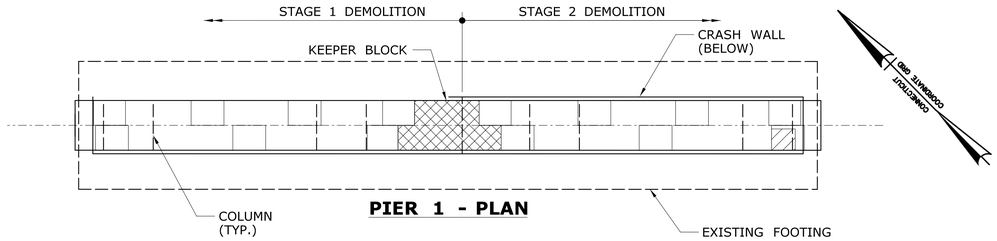

PIER 1 - PLAN

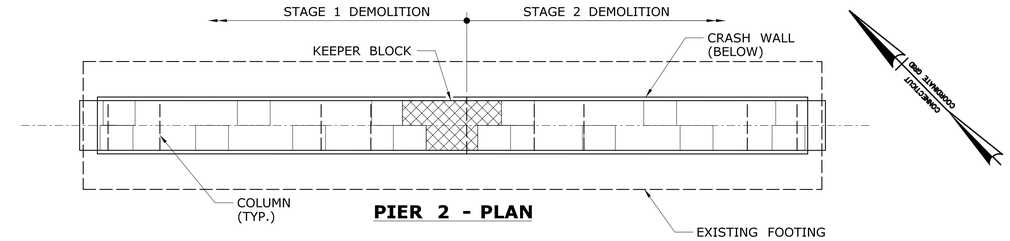

PIER 2 - PLAN

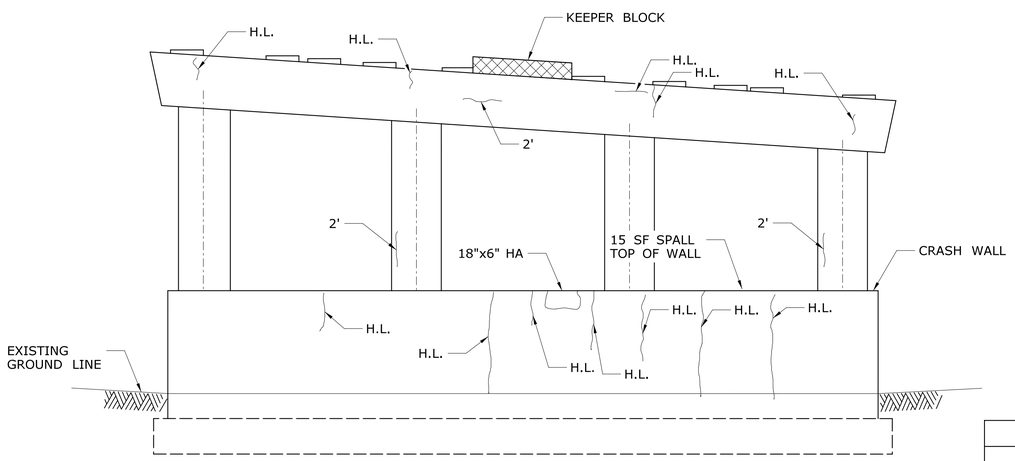

PIER 1 - SOUTH ELEVATION

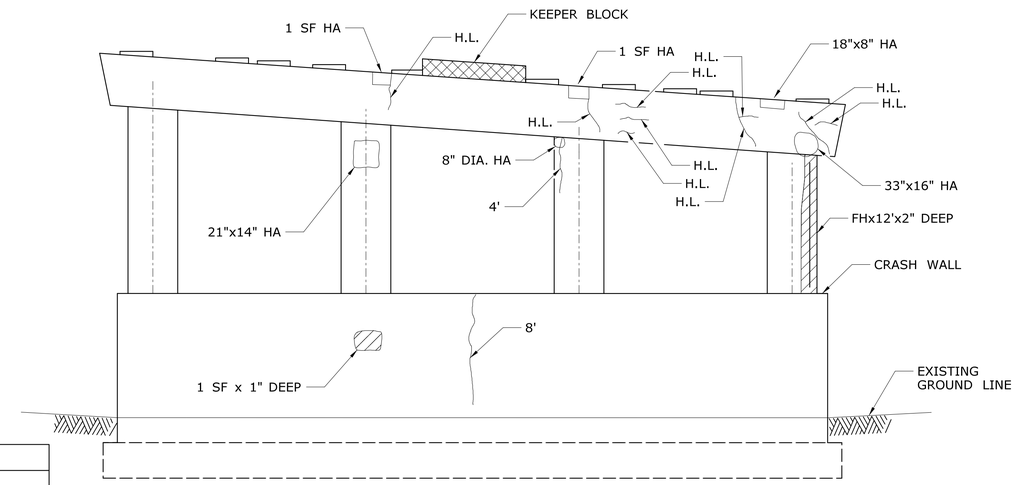

PIER 2 - SOUTH ELEVATION

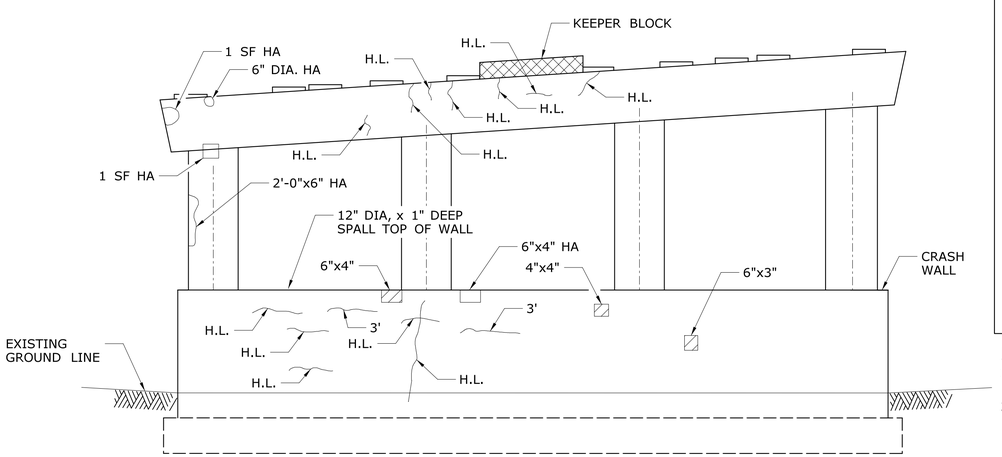

PIER 1 - NORTH ELEVATION

CONCRETE DETERIORATION LEGEND	
HOLLOW AREA (HA)	
SPALL	
SPALL WITH EXPOSED REBAR	
LIMITS OF DEMOLITION	
MAP CRACKING	
EPOXY CRACK SEALING	6'
HAIRLINE CRACK - NOT TO BE SEALED	H.L.

NOTES

1. FOR SUBSTRUCTURE REPAIR NOTES, SEE SUBSTRUCTURE REPAIR DETAILS SHEET.
2. ABBREVIATIONS:
   FH=FULL HEIGHT
   FL=FULL LENGTH

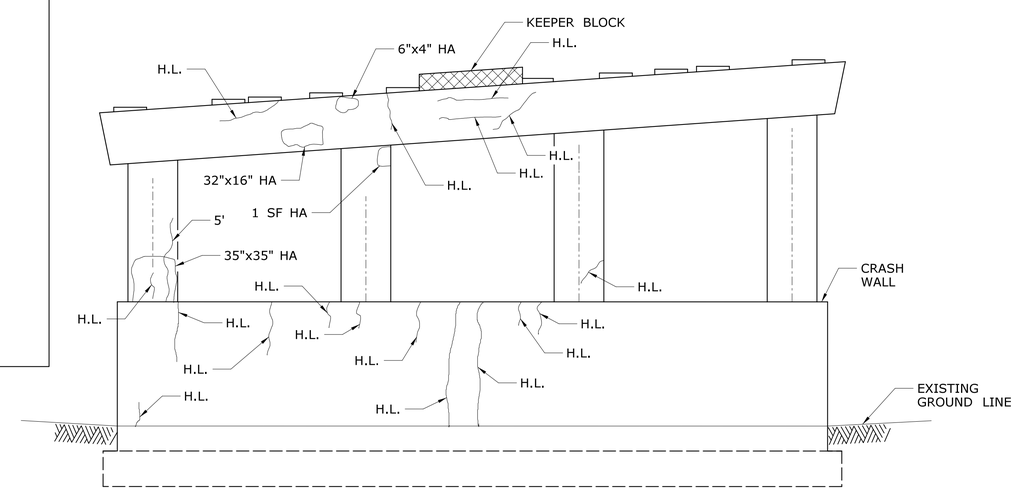

PIER 2 - NORTH ELEVATION

SOUTHBOUND - BRIDGE 03330

SCALE: 3/16" = 1'-0"

90% DESIGN REVIEW 03/09/2016

REV.	DATE	REVISION DESCRIPTION	SHEET NO.
-	-	-	-
-	-	-	-
-	-	-	-
-	-	-	-
-	-	-	-
-	-	-	-

THE INFORMATION, INCLUDING ESTIMATED QUANTITIES OF WORK, SHOWN ON THESE SHEETS IS BASED ON LIMITED INVESTIGATIONS BY THE STATE AND IS IN NO WAY WARRANTED TO INDICATE THE CONDITIONS OF ACTUAL QUANTITIES OF WORK WHICH WILL BE REQUIRED.

PLOTTED: 3/9/2016

DESIGNER/DRAFTER: R.BRAZZALLE/E.FINOWICKI

CHECKED BY: J.ADAMS

SCALE AS NOTED

STATE OF CONNECTICUT
DEPARTMENT OF TRANSPORTATION

FILENAME: ...\SB_MSH_BR_0058-0332_PIER-DEMO-01.dgn

LOCHNER
H.W. LOCHNER, INC
55 Hartland Street
East Hartford, CT 06108

- -

PROJECT TITLE:
RECONSTRUCTION OF ROUTE 349 NB AND SB OVER AMTRAK RAILROAD

TOWN: **GROTON**

DRAWING TITLE: **03330 - PIER DEMOLITION & REPAIR**

PROJECT NO. **058-332**

DRAWING NO. **S-15**

SHEET NO.

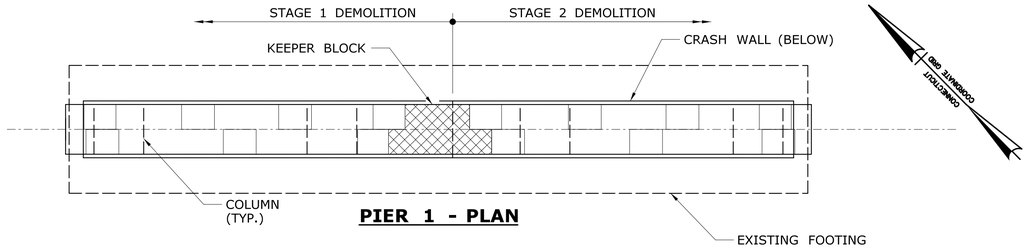

PIER 1 - PLAN

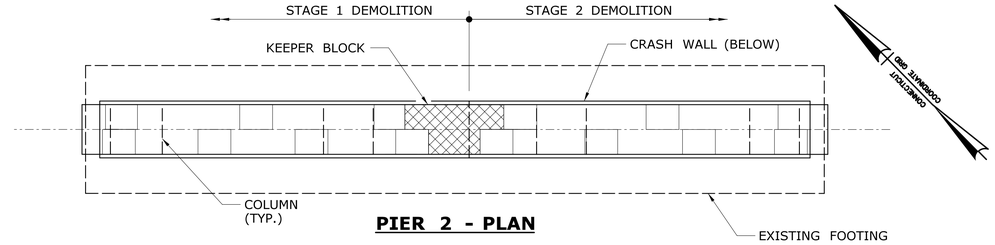

PIER 2 - PLAN

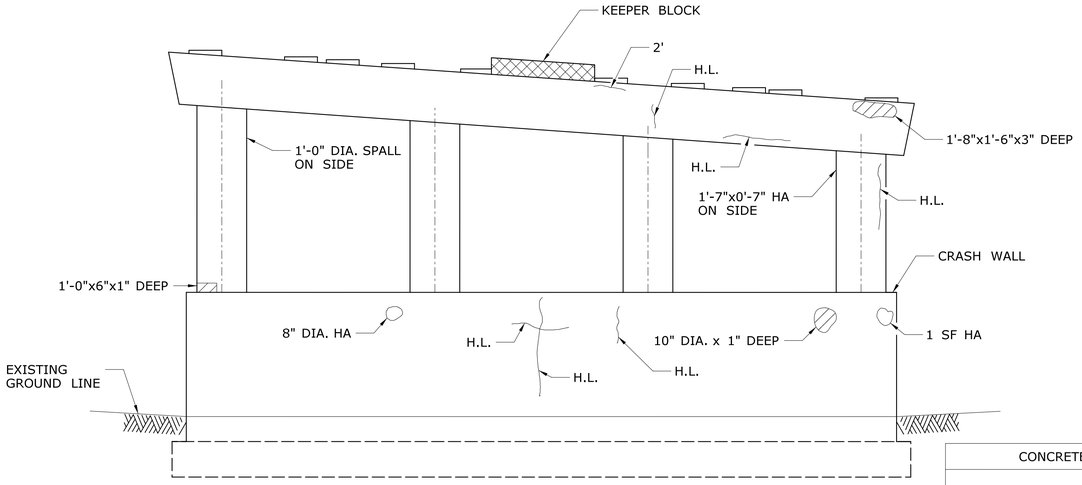

PIER 1 - SOUTH ELEVATION

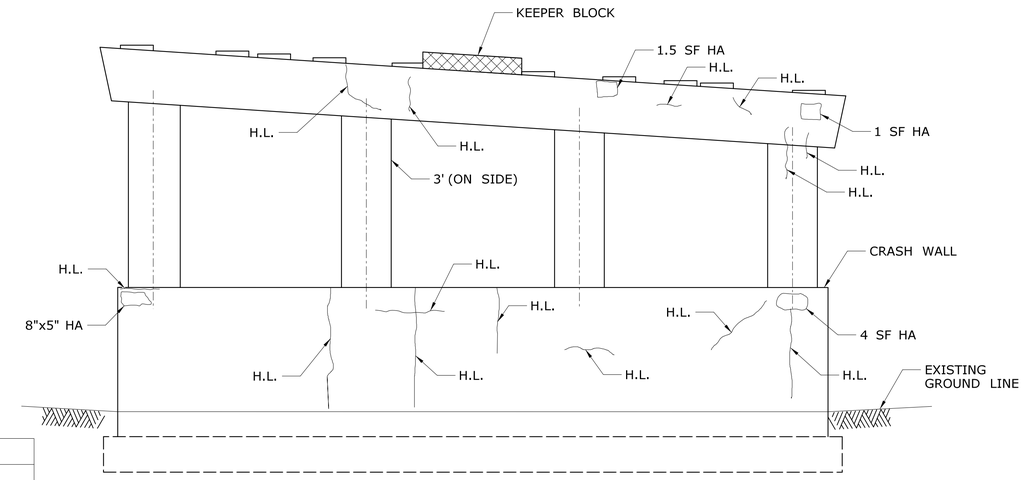

PIER 2 - SOUTH ELEVATION

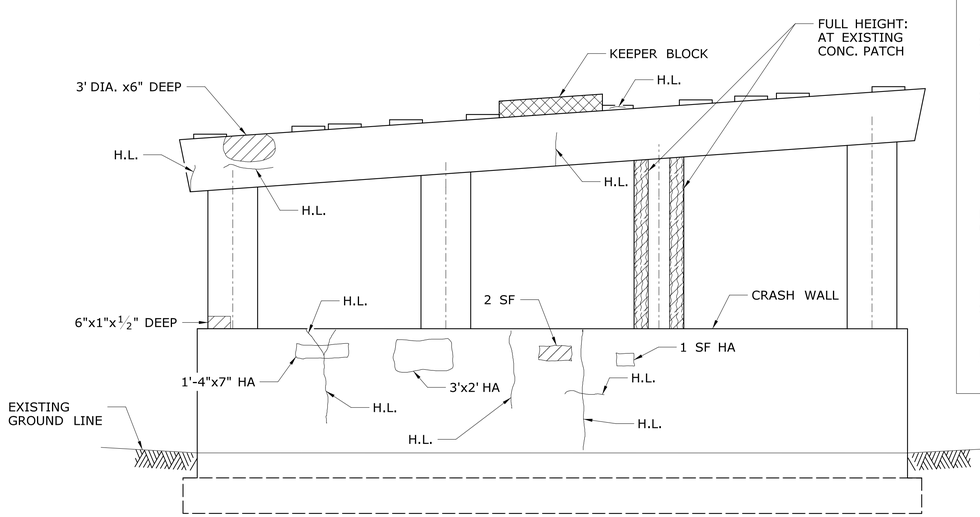

PIER 1 - NORTH ELEVATION

CONCRETE DETERIORATION LEGEND

HOLLOW AREA (HA)	
SPALL	
SPALL WITH EXPOSED REBAR	
LIMITS OF DEMOLITION	
MAP CRACKING	
EPOXY CRACK SEALING	6'
HAIRLINE CRACK - NOT TO BE SEALED	H.L.

NOTES

1. FOR SUBSTRUCTURE REPAIR NOTES, SEE SUBSTRUCTURE REPAIR DETAILS SHEET.
2. ABBREVIATIONS:
   FH=FULL HEIGHT
   FL=FULL LENGTH

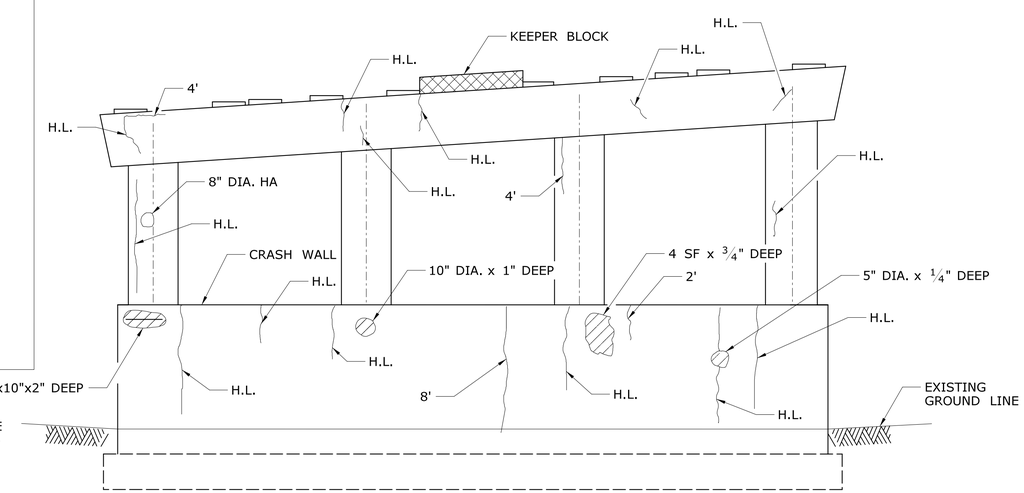

PIER 2 - NORTH ELEVATION

NORTHBOUND - BRIDGE 03331

SCALE: 3/16" = 1'-0"

90% DESIGN REVIEW 03/09/2016

REV.	DATE	REVISION DESCRIPTION	SHEET NO.
-	-	-	-
-	-	-	-
-	-	-	-
-	-	-	-
-	-	-	-
-	-	-	-

THE INFORMATION, INCLUDING ESTIMATED QUANTITIES OF WORK, SHOWN ON THESE SHEETS IS BASED ON LIMITED INVESTIGATIONS BY THE STATE AND IS IN NO WAY WARRANTED TO INDICATE THE CONDITIONS OF ACTUAL QUANTITIES OF WORK WHICH WILL BE REQUIRED.

PLOTTED: 3/9/2016

DESIGNER/DRAFTER: R.BRAZZALLE/E.FINOWICKI
CHECKED BY: J.ADAMS
SCALE AS NOTED

STATE OF CONNECTICUT
DEPARTMENT OF TRANSPORTATION

FILENAME: ...\SB_MSH_BR_0058-0332_PIER-DEMO-02.dgn

LOCHNER
H.W. LOCHNER, INC
55 Hartland Street
East Hartford, CT 06108

- -

PROJECT TITLE:
RECONSTRUCTION OF ROUTE 349 NB AND SB OVER AMTRAK RAILROAD

TOWN: **GROTON**

DRAWING TITLE: **03331 - PIER DEMOLITION & REPAIR**

PROJECT NO. **058-332**
DRAWING NO. **S-16**
SHEET NO.

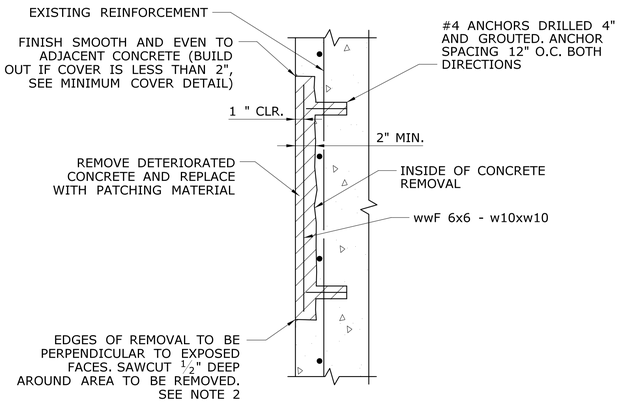

SPALL REPAIR - NO EXPOSED REINFORCING

N.T.S.

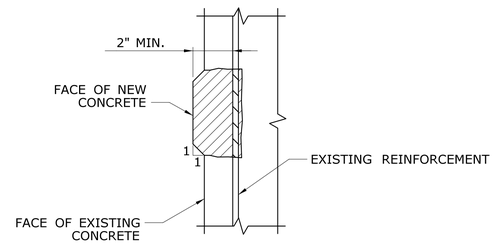

MINIMUM COVER DETAIL

N.T.S.

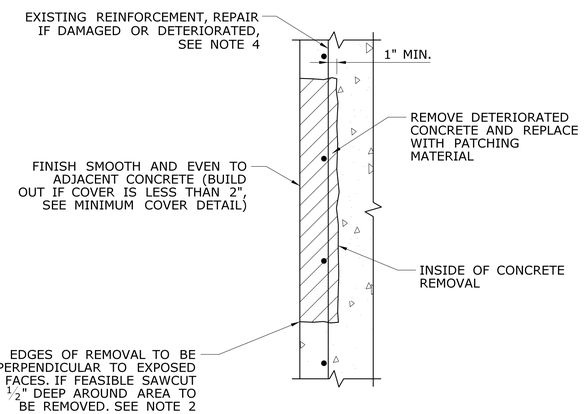

SPALL REPAIR - EXPOSED REINFORCING

N.T.S.

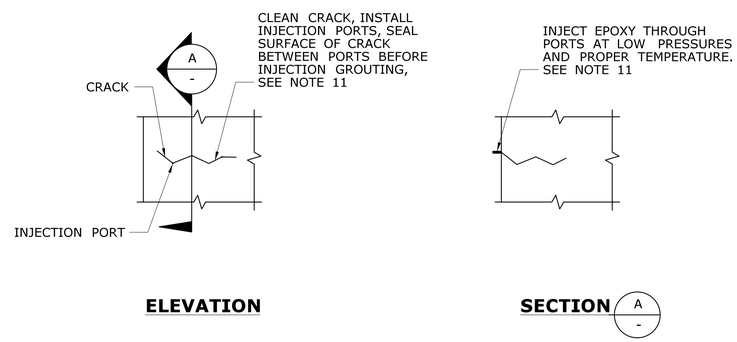

CRACK REPAIR DETAILS

N.T.S.

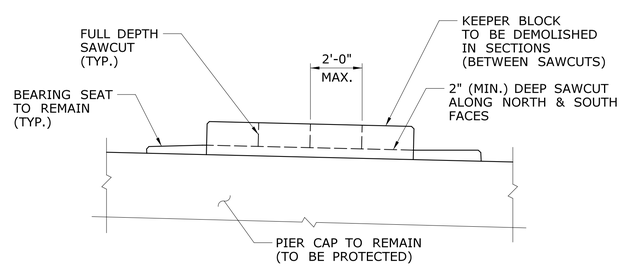

KEEPER BLOCK DEMOLITION DETAIL

N.T.S.

NOTES:
1. CUT AND REMOVE REINFORCING STEEL FOR KEEPER BLOCK.
2. KEEPER BLOCK TO BE REMOVED IN SECTIONS.

SUBSTRUCTURE REPAIR NOTES:

1. CONTRACTOR SHALL ESTABLISH LIMITS OF VARIOUS REPAIRS AS SHOWN AND AT THE DIRECTION OF THE ENGINEER. THE EXTENT, LOCATION AND REPAIR TYPE OF ALL CONCRETE REPAIRS ARE TO BE FIELD VERIFIED AND APPROVED BY THE ENGINEER AFTER THE CONTRACTOR HAS SOUNDED AND MARKED OUT THE REPAIR AREAS. REPAIR CONFIGURATIONS SHOULD BE KEPT AS SIMPLE AS POSSIBLE, PREFERABLY WITH SQUARE CORNERS.

2. THE LIMITS OF THE REPAIRS SHALL BE SAWCUT ALONG NEAT LINES TO A DEPTH OF 1/2" WHERE PRACTICAL TO PRODUCE A CLEAN EDGE. THE COST FOR THE 1/2" DEEP SAWCUT SHALL BE INCLUDED IN THE CONTRACT BID ITEM PRICE FOR APPLICABLE REPAIR ITEM.

3. REMOVE ALL DETERIORATED AND UNSOUND CONCRETE. IF AFTER CONCRETE REMOVAL, THE REINFORCING STEEL HAS AT LEAST ONE HALF OF ITS SURFACE AREA EXPOSED, THE CONCRETE SHALL BE FURTHER REMOVED A MINIMUM OF 1" BEYOND THE BAR. UNDERCUT EXPOSED REINFORCEMENT STEEL TO PROVIDE MINIMUM CLEARANCE OF 1" AROUND BARS. REMOVE ADDITIONAL CONCRETE AS NECESSARY TO PROVIDE MINIMUM REQUIRED THICKNESS OF REPAIR MATERIAL.

4. MISSING OR DETERIORATED REINFORCING STEEL SHALL BE REPLACED AS DIRECTED BY THE ENGINEER AND WILL BE PAID FOR UNDER THE "DEFORMED STEEL BARS - EPOXY COATED" ITEM. MINIMUM LENGTH OF SPLICE SHALL BE 30 BAR DIAMETERS. MECHANICAL SPLICES MAY BE USED IF AUTHORIZED BY THE ENGINEER.

5. FOR ALL REPAIRS WHERE REINFORCEMENT HAS BEEN EXPOSED 1" ALL AROUND THE BAR, USE MATERIAL REQUIRED UNDER "VARIABLE DEPTH PATCH."

6. IF REINFORCING STEEL IS EXPOSED, THEN CLEAN BY MECHANICAL MEANS AND HIGH PRESSURE WASHING WITH WATER THAT CONTAINS NO DETERGENTS OR BOND INHIBITING CHEMICALS. WHERE ACTIVE CORROSION HAS OCCURRED (THAT WHICH WOULD INHIBIT BONDING) SANDBLAST REINFORCING TO WHITE METAL FINISH.

7. THE SURFACE OF EXISTING OR PREVIOUSLY CAST CONCRETE SHALL BE BLAST CLEANED, ROUGHENED, WETTED WITH CLEAN WATER, AND THEN FLUSHED WITH A MORTAR COMPOSED OF EQUAL PARTS OF THE CEMENT AND SAND SPECIFIED FOR THE NEW CONCRETE, BEFORE NEW CONCRETE IS PLACED ADJACENT THERETO. NEW CONCRETE SHALL BE PLACED BEFORE MORTAR HAS TAKEN INITIAL SET. TO BE PAID FOR UNDER THE ITEM "VARIABLE DEPTH PATCH."

8. IN LIEU OF THE MORTAR, AN EPOXY ADHESIVE SUITABLE FOR BONDING FRESH CONCRETE TO HARDENED CONCRETE FOR LOAD BEARING APPLICATIONS MAY BE USED. THE EPOXY ADHESIVE SHALL CONFORM TO AASHTO M 235 TYPE V AND SHALL BE APPLIED IN ACCORDANCE WITH THE MANUFACTURER'S RECOMMENDATIONS. TO BE PAID FOR UNDER THE ITEM "VARIABLE DEPTH PATCH."

9. IF THE AREA OF REMOVAL IS MORE THAN TWICE THAT INDICATED ON THE DRAWINGS OR DEPTH OF REMOVAL IS MORE THAN 6 INCHES, THE ENGINEER SHALL BE NOTIFIED IMMEDIATELY BEFORE CONTINUING REMOVAL WORK. ALL VISIBLE DETERIORATED AREAS, EVEN IF NOT SHOWN ON THE PLANS, SHALL BE REPAIRED.

10. ALL SURFACES SHALL BE RUBBED TO PRODUCE A SMOOTH FINISH, AND BLENDED WITH ADJACENT EXISTING CONCRETE SURFACES.

11. REPAIR OF CRACKS SHALL BE INCLUDED IN THE CONTRACT BID ITEM PRICE FOR "EPOXY INJECTION CRACK REPAIR" (SEE SPECIAL PROVISIONS).

12. COVER OVER EXISTING REINFORCEMENT SHALL BE A MINIMUM OF 2". FACE OF PATCHED AREA MAY BE "BUMPED OUT" TO MEET THIS REQUIREMENT, IF NECESSARY (SEE "MINIMUM COVER DETAIL" ON THIS SHEET).

13. THE MAXIMUM EXPOSED SURFACE AREA OF PIER COLUMN OR PIER FACE REPAIR AT ONE TIME IS 20 SQUARE FEET. IN ADDITION, DO NOT EXPOSE MORE THAN 1/3 OF THE PERIMETER OF THE COLUMN.

14. THE LOCATION AND EXTENT OF SUBSTRUCTURE DETERIORATION SHOWN ON THESE DRAWINGS IS BASED ON A RECENT INSPECTION REPORT AND LIMITED FIELD INVESTIGATION. IT IS INTENDED TO BE USED AS A GUIDE AND DOES NOT NECESSARILY REFLECT THE CURRENT CONDITION OF THE STRUCTURE.

15. THE EXISTING STRUCTURE INFORMATION, INCLUDING DIMENSIONS SHOWN ON THESE DRAWINGS IS BASED ON ORIGINAL DESIGN DRAWINGS AND SUBSEQUENT REPAIR DRAWINGS AND IS NOT GUARANTEED.

16. APPLY ANTI - CORROSION PRIMER/BONDING AGENT TO EXPOSED REINFORCING PRIOR TO SPALL REPAIR.

90% DESIGN REVIEW 03/09/2016

REV.	DATE	REVISION DESCRIPTION	SHEET NO.

THE INFORMATION, INCLUDING ESTIMATED QUANTITIES OF WORK, SHOWN ON THESE SHEETS IS BASED ON LIMITED INVESTIGATIONS BY THE STATE AND IS IN NO WAY WARRANTED TO INDICATE THE CONDITIONS OF ACTUAL QUANTITIES OF WORK WHICH WILL BE REQUIRED.

Plotted Date: 3/9/2016

DESIGNER/DRAFTER: C.RICH
CHECKED BY: B.BYRNE
NOT TO SCALE

STATE OF CONNECTICUT
DEPARTMENT OF TRANSPORTATION

Filename: ...\SB_MSH_BR_0058-0332_SUB-RPR.dgn

SIGNATURE/BLOCK:
LOCHNER
H.W. LOCHNER, INC
55 Hartland Street, Suite 401
East Hartford, CT 06108

PROJECT TITLE:
RECONSTRUCTION OF ROUTE 349 NB AND SB OVER AMTRAK RAILROAD

TOWN: GROTON

DRAWING TITLE: SUBSTRUCTURE REPAIR DETAILS

PROJECT NO. 058-332
DRAWING NO. S-17
SHEET NO.

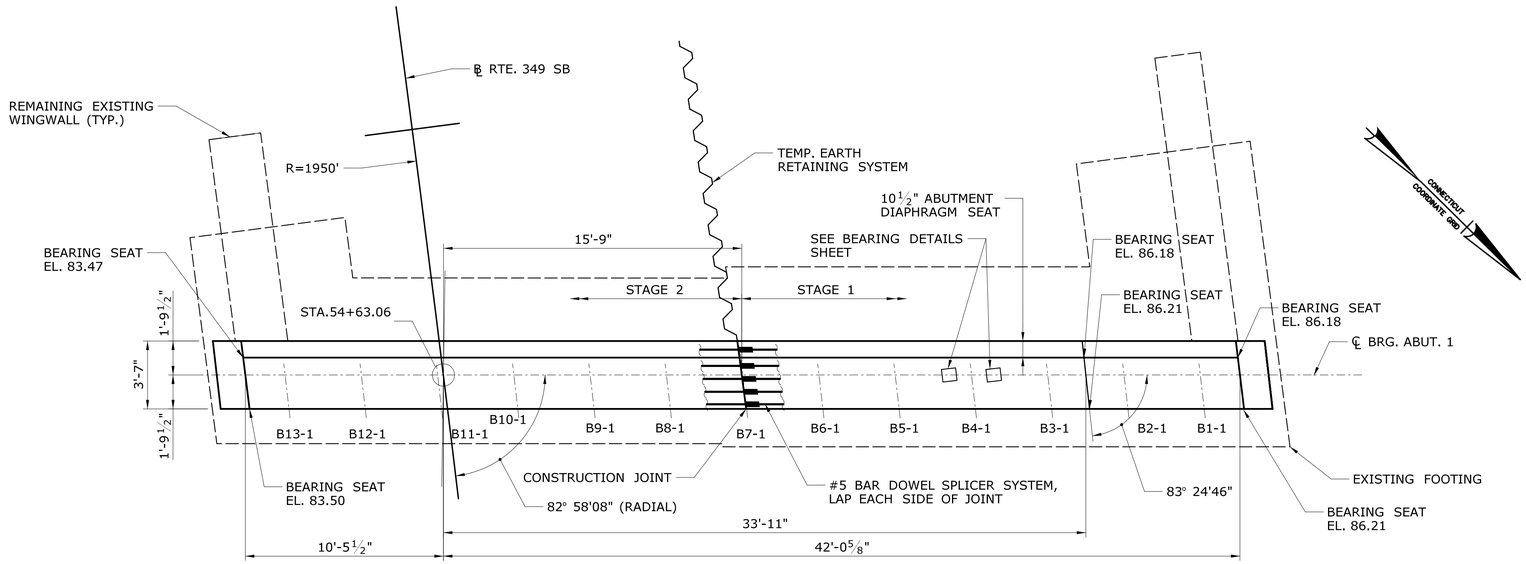

PLAN

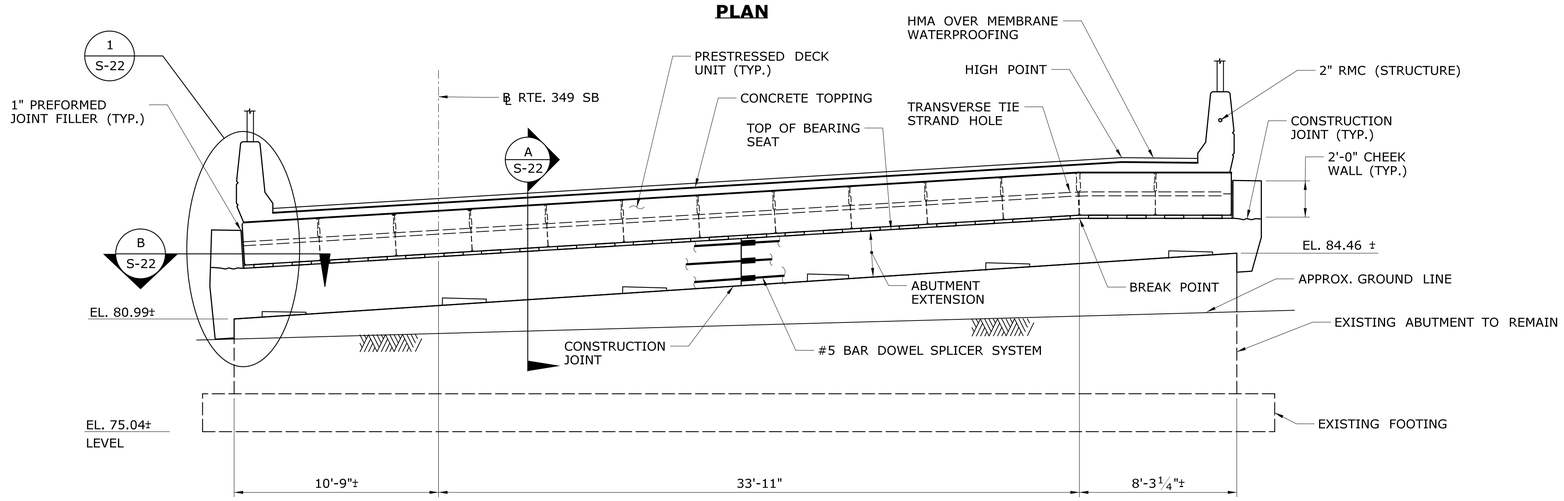

ELEVATION

ABUTMENT 1
SOUTHBOUND - BRIDGE 03330
SCALE: ¼"=1'-0"

90% DESIGN REVIEW 03/09/2016

REV.	DATE	REVISION DESCRIPTION	SHEET NO.
-	-	-	-
-	-	-	-
-	-	-	-
-	-	-	-
-	-	-	-
-	-	-	-

THE INFORMATION, INCLUDING ESTIMATED QUANTITIES OF WORK, SHOWN ON THESE SHEETS IS BASED ON LIMITED INVESTIGATIONS BY THE STATE AND IS IN NO WAY WARRANTED TO INDICATE THE CONDITIONS OF ACTUAL QUANTITIES OF WORK WHICH WILL BE REQUIRED.

PLOTTED: 3/9/2016

DESIGNER/DRAFTER: T. PARKER
CHECKED BY: B.BYRNE
SCALE AS NOTED

STATE OF CONNECTICUT
DEPARTMENT OF TRANSPORTATION

FILENAME: ...\SB_MSH_BR_0058-0332_ABUT-01.dgn

LOCHNER
H.W. LOCHNER, INC
55 Hartland Street
East Hartford, CT 06108

APPROVED BY: - DATE: -

PROJECT TITLE:
RECONSTRUCTION OF ROUTE 349 NB AND SB OVER AMTRAK RAILROAD

TOWN: **GROTON**

DRAWING TITLE:
03330 - ABUTMENT 1 PLAN & ELEVATION

PROJECT NO. **058_332**
DRAWING NO. **S-18**
SHEET NO.

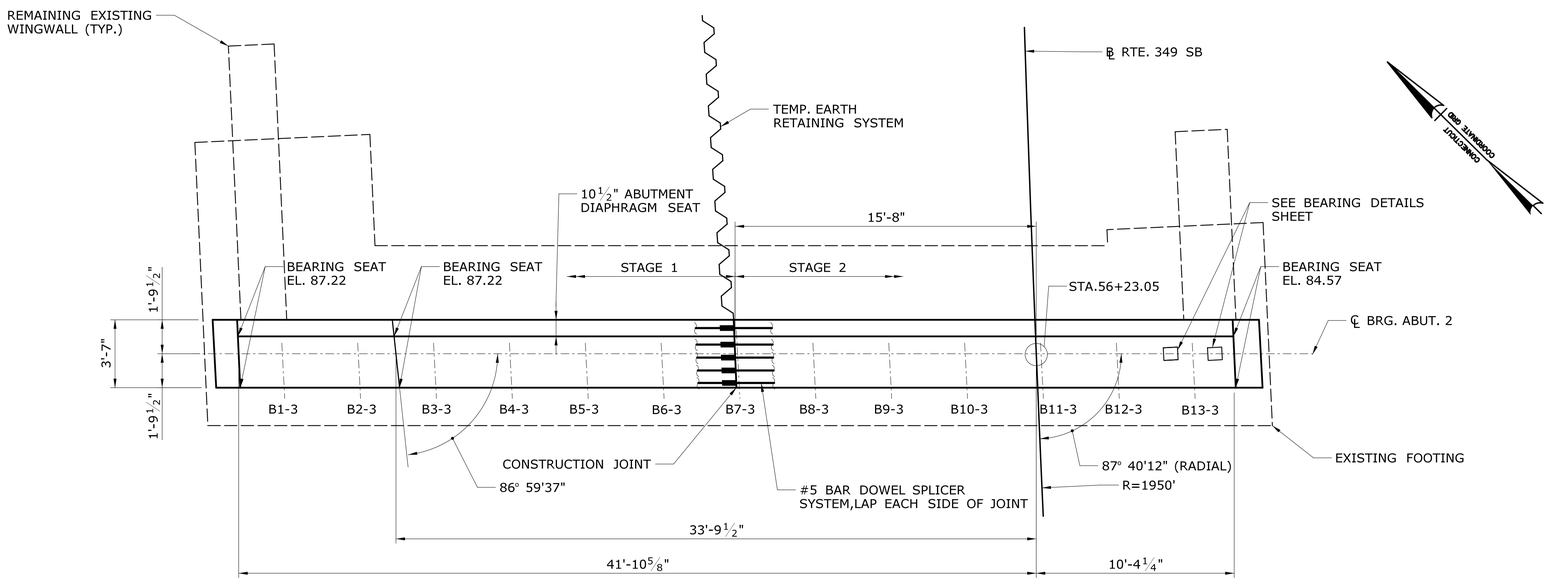

PLAN

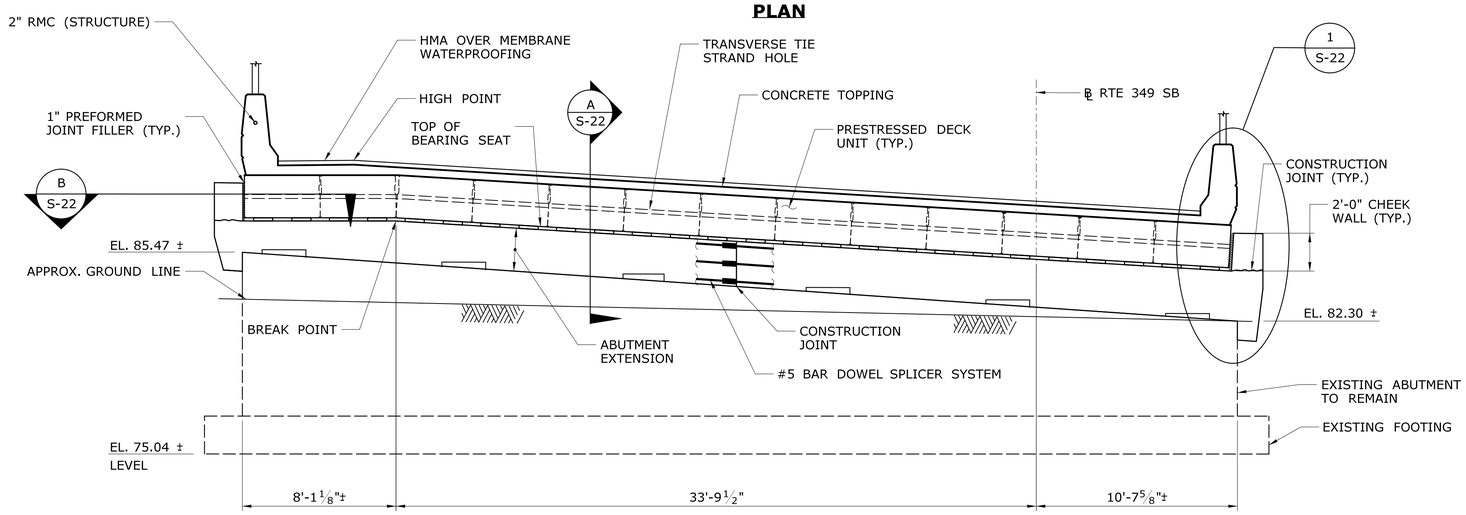

ELEVATION

ABUTMENT 2
SOUTHBOUND - BRIDGE 03330
SCALE: ¼"=1'-0"

90% DESIGN REVIEW 03/09/2016

REV.	DATE	REVISION DESCRIPTION	SHEET NO.
-	-	-	-
-	-	-	-
-	-	-	-
-	-	-	-
-	-	-	-
-	-	-	-

THE INFORMATION, INCLUDING ESTIMATED QUANTITIES OF WORK, SHOWN ON THESE SHEETS IS BASED ON LIMITED INVESTIGATIONS BY THE STATE AND IS IN NO WAY WARRANTED TO INDICATE THE CONDITIONS OF ACTUAL QUANTITIES OF WORK WHICH WILL BE REQUIRED.

PLOTTED: 3/9/2016

DESIGNER/DRAFTER: T. PARKER
CHECKED BY: B.BYRNE
SCALE AS NOTED

STATE OF CONNECTICUT
DEPARTMENT OF TRANSPORTATION

FILENAME: ...\SB_MSH_BR_0058-0332_ABUT-02.dgn

LOCHNER
H.W. LOCHNER, INC
55 Hartland Street
East Hartford, CT 06108

APPROVED BY: - DATE: -

PROJECT TITLE:
RECONSTRUCTION OF ROUTE 349 NB AND SB OVER AMTRAK RAILROAD

TOWN: **GROTON**

DRAWING TITLE: **03330 - ABUTMENT 2 PLAN & ELEVATION**

PROJECT NO. **058-332**
DRAWING NO. **S-19**
SHEET NO.

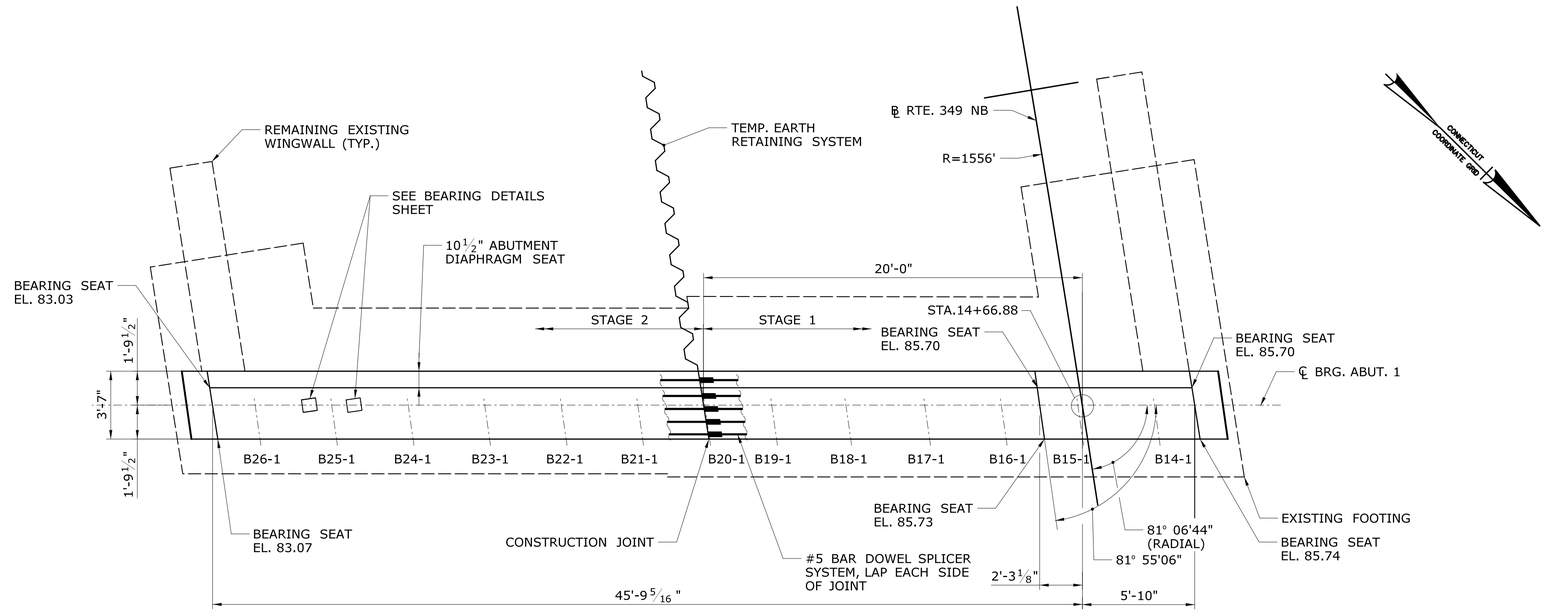

PLAN

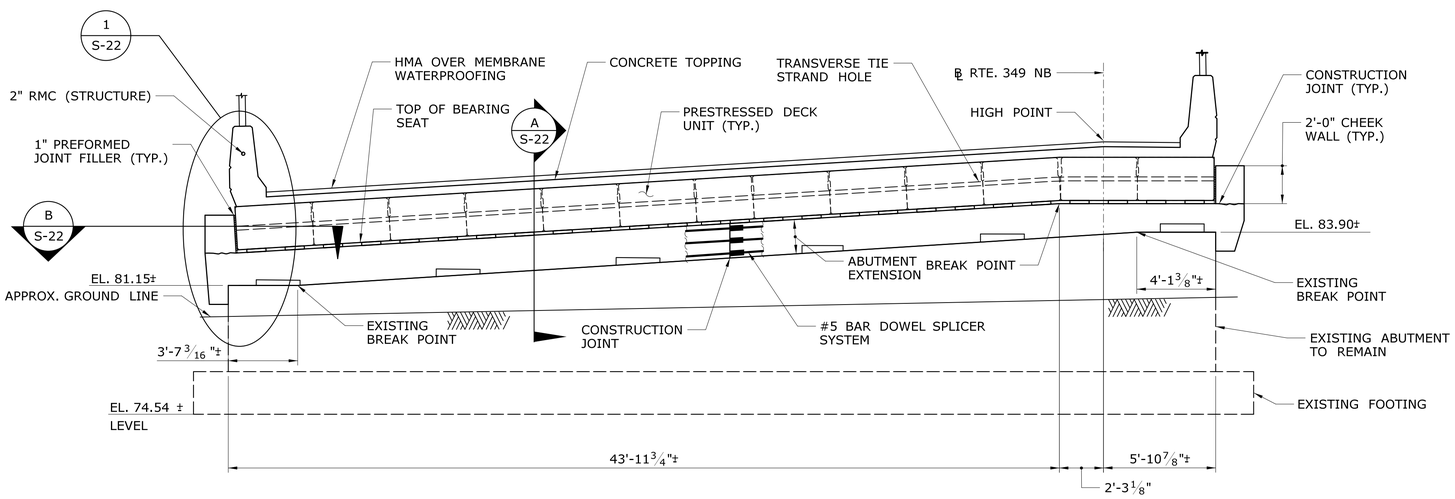

ELEVATION

ABUTMENT 1

NORTHBOUND - BRIDGE 03331

SCALE: ¼"=1'-0'

90% DESIGN REVIEW 03/09/2016

REV.	DATE	REVISION DESCRIPTION	SHEET NO.
-	-	-	-
-	-	-	-
-	-	-	-
-	-	-	-
-	-	-	-
-	-	-	-

THE INFORMATION, INCLUDING ESTIMATED QUANTITIES OF WORK, SHOWN ON THESE SHEETS IS BASED ON LIMITED INVESTIGATIONS BY THE STATE AND IS IN NO WAY WARRANTED TO INDICATE THE CONDITIONS OF ACTUAL QUANTITIES OF WORK WHICH WILL BE REQUIRED.

PLOTTED: 3/9/2016

DESIGNER/DRAFTER: T. PARKER

CHECKED BY: B.BYRNE

SCALE AS NOTED

STATE OF CONNECTICUT
DEPARTMENT OF TRANSPORTATION

FILENAME: ...\SB_MSH_BR_0058-0332_ABUT-03.dgn

LOCHNER
H.W. LOCHNER, INC
55 Hartland Street
East Hartford, CT 06108

APPROVED BY: - DATE: -

PROJECT TITLE:
RECONSTRUCTION OF ROUTE 349 NB AND SB OVER AMTRAK RAILROAD

TOWN: **GROTON**

DRAWING TITLE: **03331 - ABUTMENT 1 PLAN & ELEVATION**

PROJECT NO. **058-332**

DRAWING NO. **S-20**

SHEET NO.

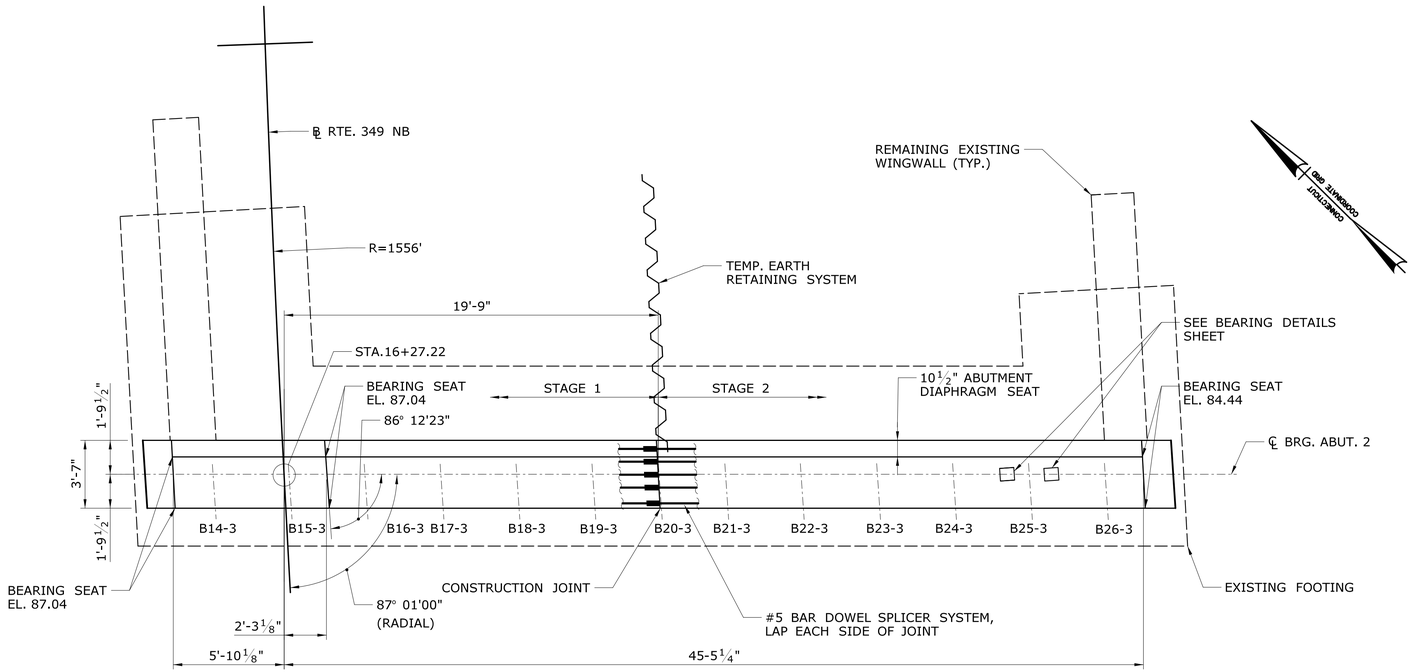

PLAN

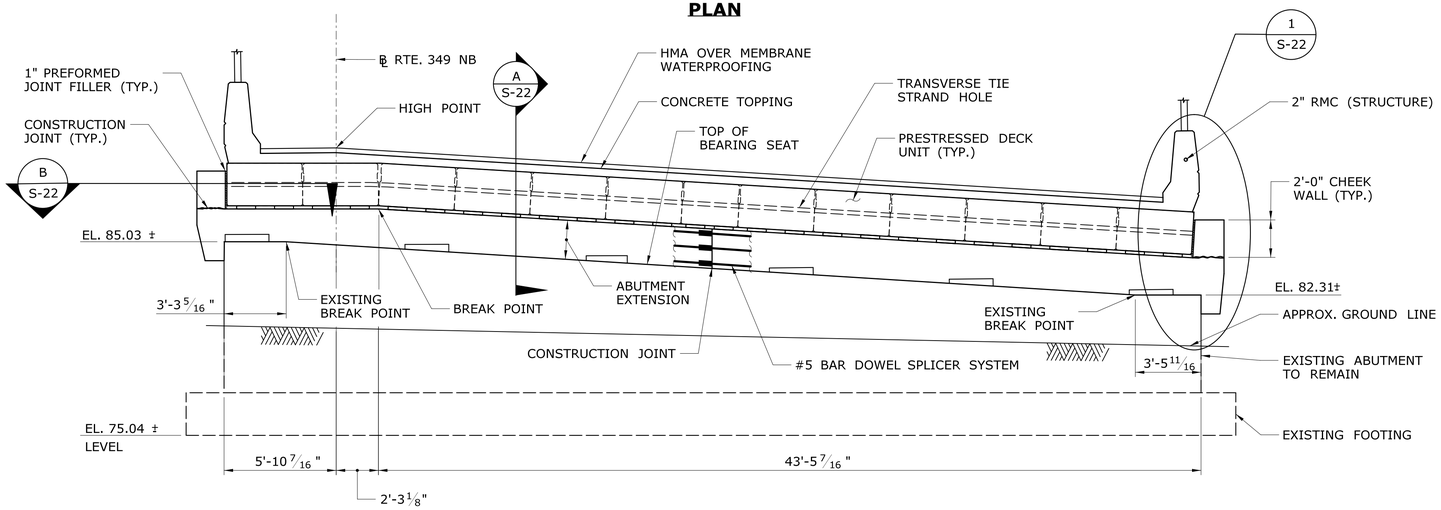

ELEVATION

ABUTMENT 2

NORTHBOUND - BRIDGE 03331

SCALE: ¼"=1'-0"

90% DESIGN REVIEW 03/09/2016

REV.	DATE	REVISION DESCRIPTION	SHEET NO.
-	-	-	-
-	-	-	-
-	-	-	-
-	-	-	-
-	-	-	-
-	-	-	-

THE INFORMATION, INCLUDING ESTIMATED QUANTITIES OF WORK, SHOWN ON THESE SHEETS IS BASED ON LIMITED INVESTIGATIONS BY THE STATE AND IS IN NO WAY WARRANTED TO INDICATE THE CONDITIONS OF ACTUAL QUANTITIES OF WORK WHICH WILL BE REQUIRED.

PLOTTED: 3/9/2016

DESIGNER/DRAFTER: T. PARKER

CHECKED BY: B.BYRNE

SCALE AS NOTED

STATE OF CONNECTICUT
DEPARTMENT OF TRANSPORTATION

FILENAME: ...\SB_MSH_BR_0058-0332_ABUT-04.dgn

LOCHNER
H.W. LOCHNER, INC
55 Hartland Street
East Hartford, CT 06108

APPROVED BY: - DATE: -

PROJECT TITLE:
RECONSTRUCTION OF ROUTE 349 NB AND SB OVER AMTRAK RAILROAD

TOWN: **GROTON**

DRAWING TITLE: **03331 - ABUTMENT 2 PLAN & ELEVATION**

PROJECT NO. **058-332**

DRAWING NO. **S-21**

SHEET NO.

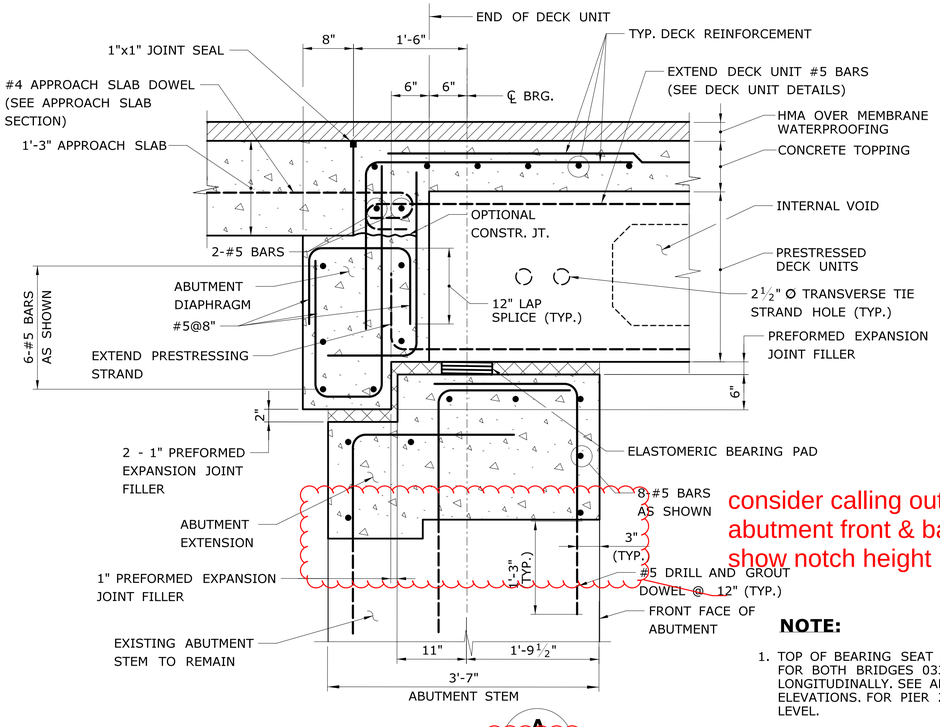

consider calling out sawcuts at abutment front & back faces; show notch height

SECTION A
SCALE: ½"=1'-0"

S-18 S-20 S-19 S-21

check sheet numbers

NOTE:

1. TOP OF BEARING SEAT FOR ABUTMENT 1 AND PIER 1 FOR BOTH BRIDGES 03330 & 03331 ARE SLOPED LONGITUDINALLY. SEE ABUTMENT 1 & PIER SHEETS FOR ELEVATIONS. FOR PIER 2 & ABUTMENT 2, BEARING SEAT IS LEVEL.

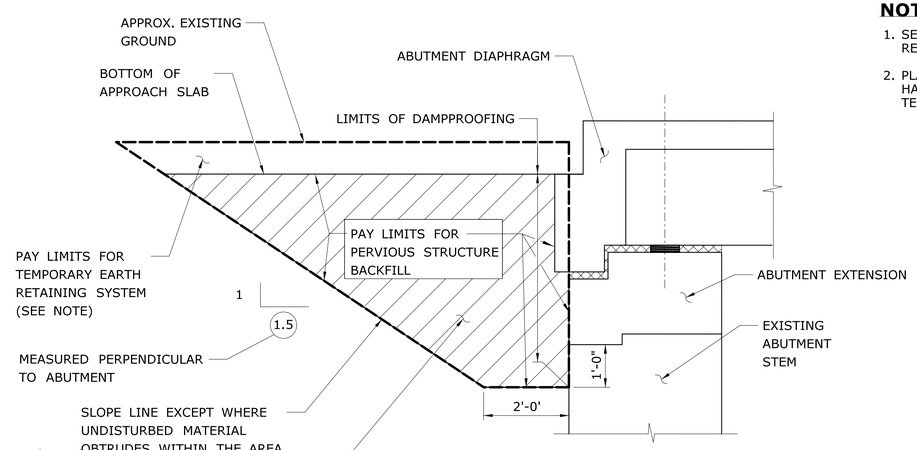

TYPICAL EXCAVATION & BACKFILL AT ABUTMENTS
NOT TO SCALE

NOTES:

1. SEE SPECIFICATIONS FOR "TEMPORARY EARTH RETAINING SYSTEM" VERTICAL PAY LIMIT.
2. PLACE CHEEK WALLS AFTER ADJACENT DECK UNIT HAS BEEN SET, AND TRANSVERSE TIE HAS HAS BEEN TENSIONED AND APPROVED.

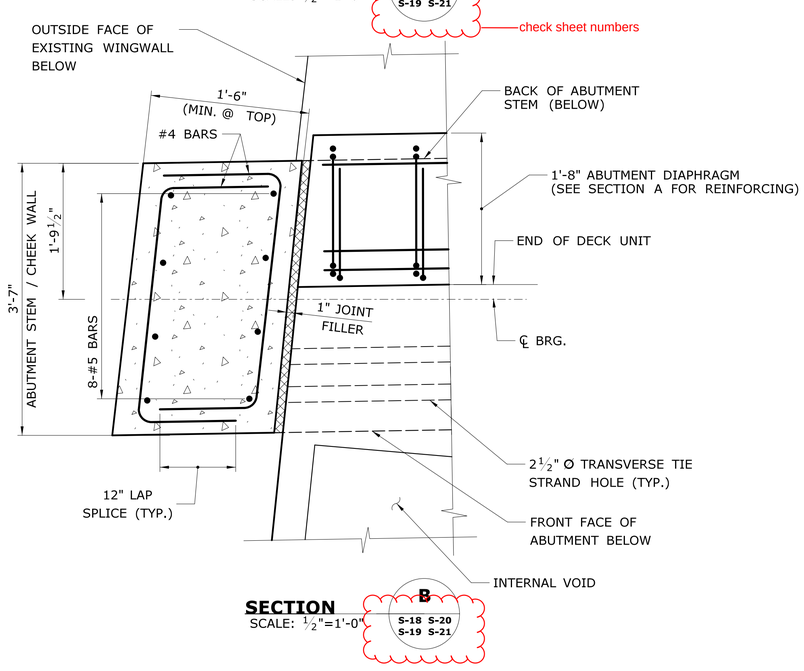

SECTION B
SCALE: ½"=1'-0"

S-18 S-20 S-19 S-21

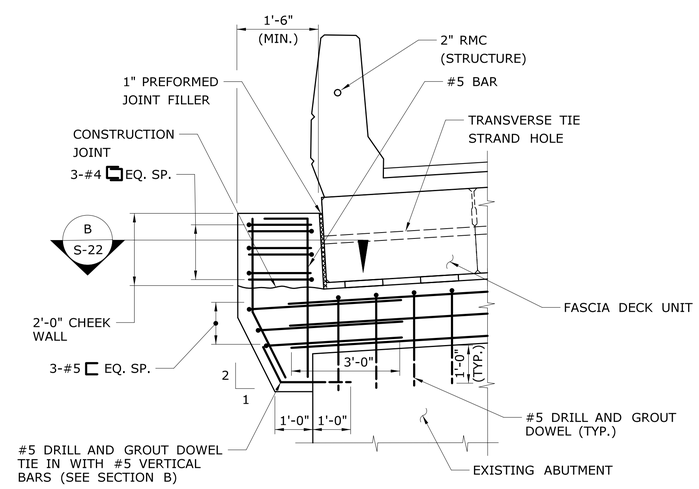

TYPICAL CHEEKWALL DETAIL
SCALE: ½"=1'-0"

S-18 S-20 S-19 S-21

90% DESIGN REVIEW 03/09/2016

REV.	DATE	REVISION DESCRIPTION	SHEET NO.
-	-	-	-
-	-	-	-
-	-	-	-
-	-	-	-
-	-	-	-
-	-	-	-

THE INFORMATION, INCLUDING ESTIMATED QUANTITIES OF WORK, SHOWN ON THESE SHEETS IS BASED ON LIMITED INVESTIGATIONS BY THE STATE AND IS IN NO WAY WARRANTED TO INDICATE THE CONDITIONS OF ACTUAL QUANTITIES OF WORK WHICH WILL BE REQUIRED.

PLOTTED: 3/9/2016

DESIGNER/DRAFTER: T. PARKER
CHECKED BY: B.BYRNE
SCALE AS NOTED

STATE OF CONNECTICUT
DEPARTMENT OF TRANSPORTATION

FILENAME: ...\SB_MSH_BR_0058-0332_ABUT-SEC.dgn

LOCHNER
H.W. LOCHNER, INC
55 Hartland Street
East Hartford, CT 06108

APPROVED BY: - DATE: -

PROJECT TITLE: RECONSTRUCTION OF ROUTE 349 NB AND SB OVER AMTRAK RAILROAD

TOWN: GROTON

DRAWING TITLE: ABUTMENT SECTIONS & DETAILS

PROJECT NO. 058-332
DRAWING NO. S-22
SHEET NO.

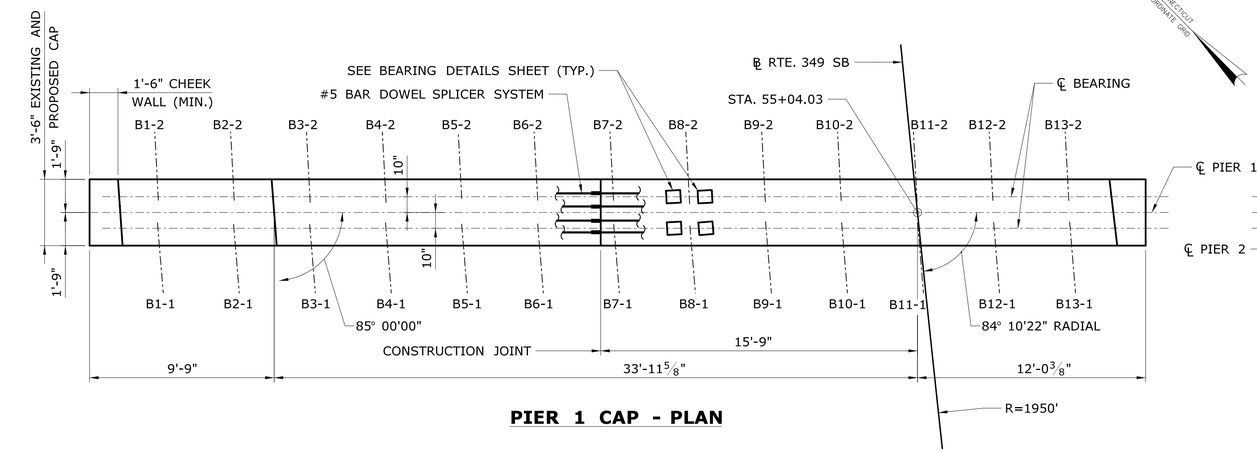

PIER 1 CAP - PLAN

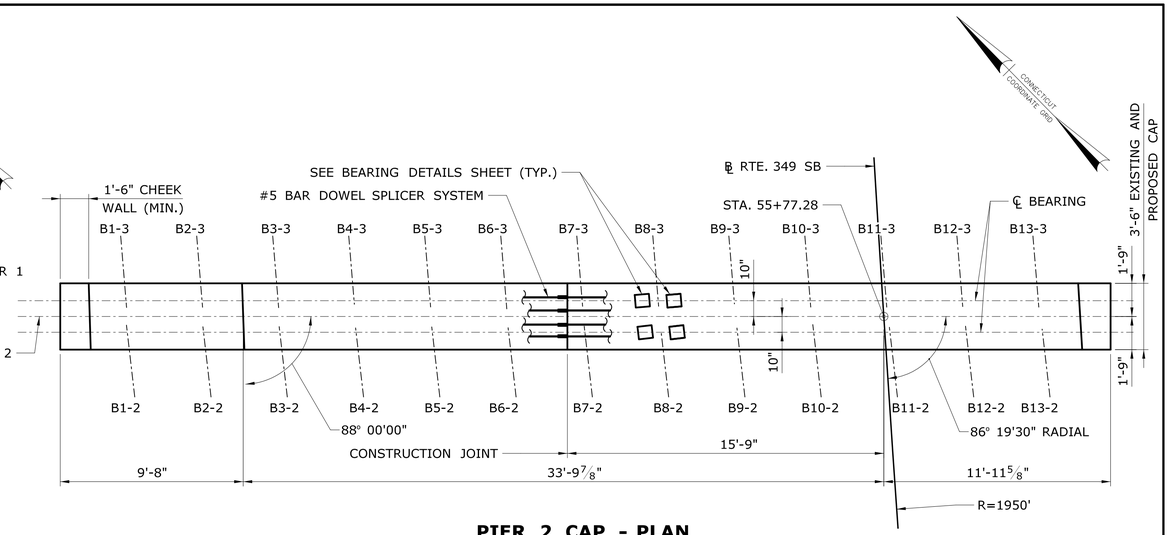

PIER 2 CAP - PLAN

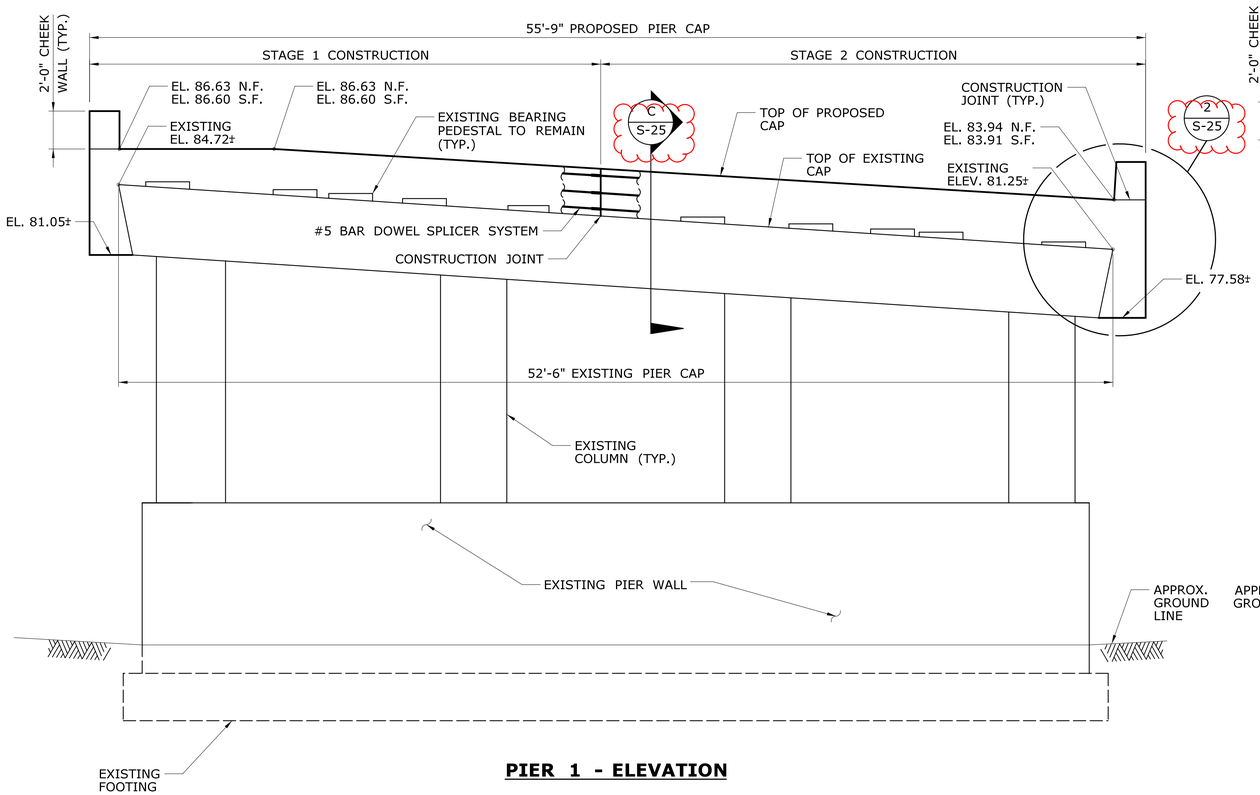

PIER 1 - ELEVATION

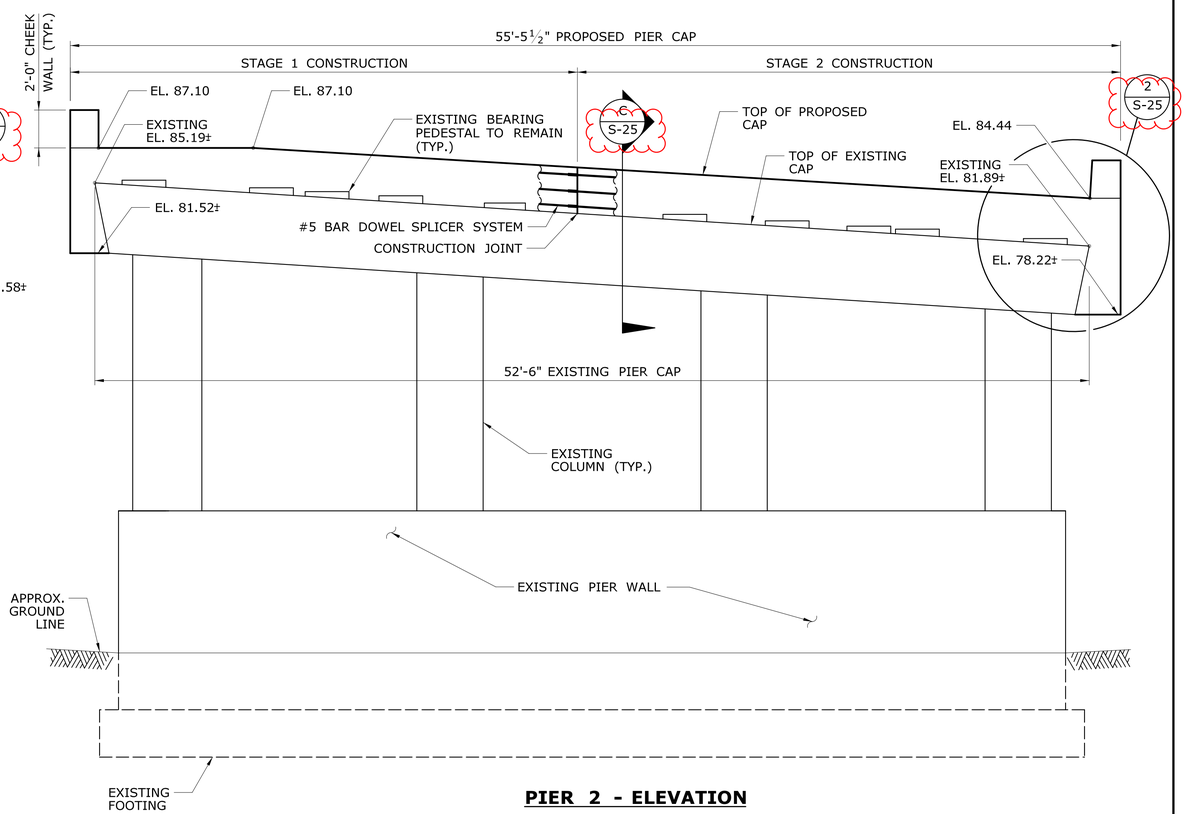

PIER 2 - ELEVATION

N.F. = NORTH FACE
S.F. = SOUTH FACE

SOUTHBOUND - BRIDGE 03330

SCALE: 1/4" = 1'-0"

90% DESIGN REVIEW 03/09/16

REV.	DATE	REVISION DESCRIPTION	SHEET NO.
-	-	-	-
-	-	-	-
-	-	-	-
-	-	-	-
-	-	-	-
-	-	-	-

THE INFORMATION, INCLUDING ESTIMATED QUANTITIES OF WORK, SHOWN ON THESE SHEETS IS BASED ON LIMITED INVESTIGATIONS BY THE STATE AND IS IN NO WAY WARRANTED TO INDICATE THE CONDITIONS OF ACTUAL QUANTITIES OF WORK WHICH WILL BE REQUIRED.

PLOTTED: 3/9/2016

DESIGNER/DRAFTER: R.BRAZZALE/E.FINOWICKI
CHECKED BY: J. ADAMS
SCALE AS NOTED

STATE OF CONNECTICUT
DEPARTMENT OF TRANSPORTATION

FILENAME: ...\SB_MSH_BR_0058-0332_PIER-01.dgn

LOCHNER
H.W. LOCHNER, INC
55 Hartland Street
East Hartford, CT 06108

- -

PROJECT TITLE:
RECONSTRUCTION OF ROUTE 349 NB AND SB OVER AMTRAK RAILROAD

TOWN: **GROTON**

DRAWING TITLE: **03330 - PIERS 1 & 2 PLANS & ELEVATIONS**

PROJECT NO. **058-332**
DRAWING NO. **S-23**
SHEET NO.

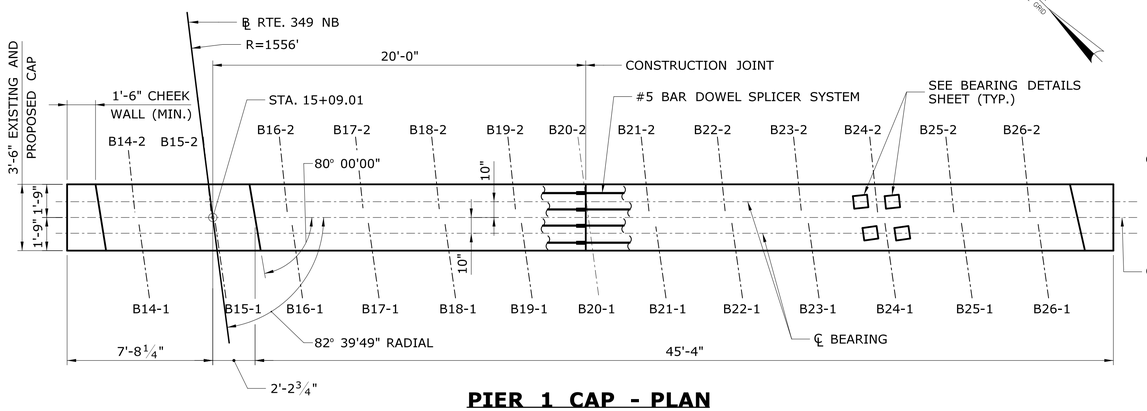

PIER 1 CAP - PLAN

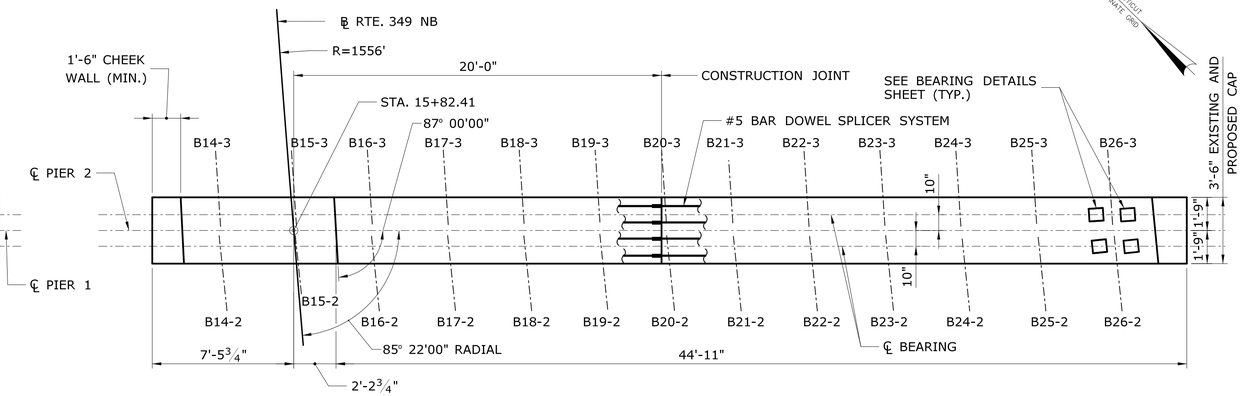

PIER 2 CAP - PLAN

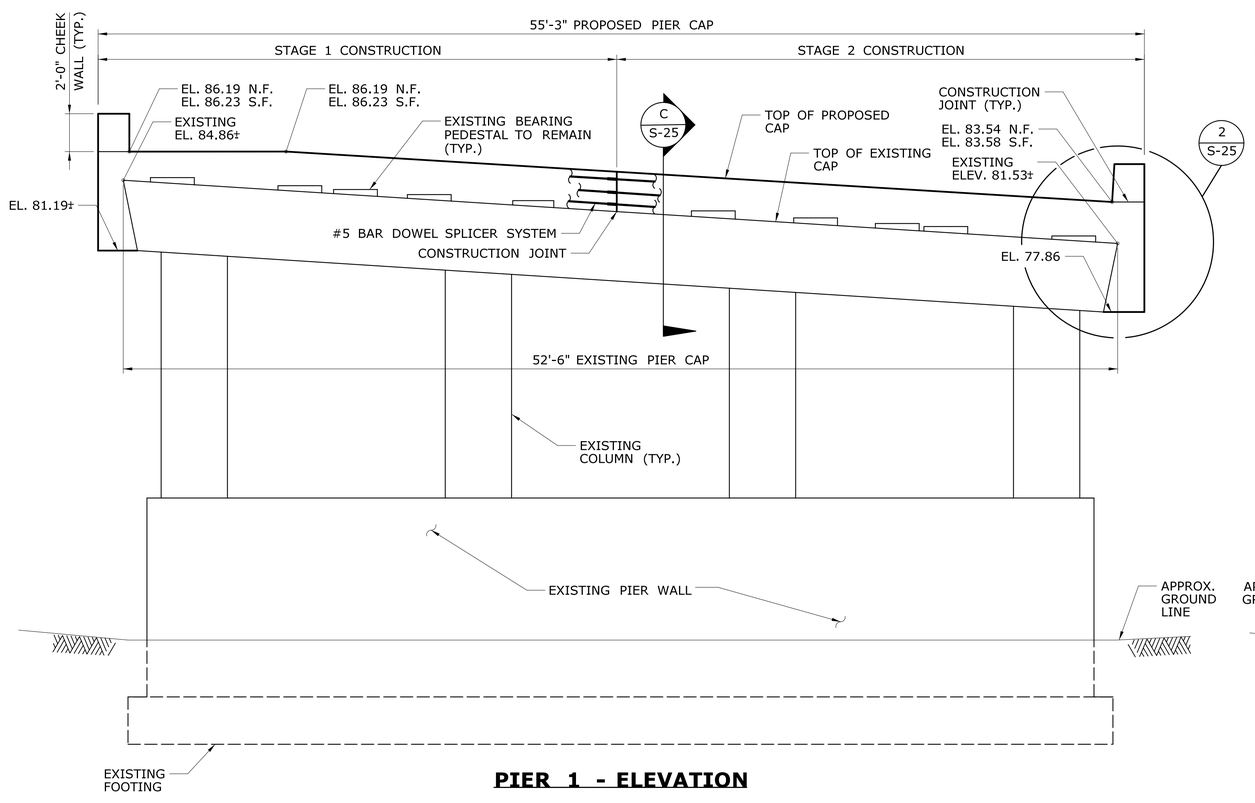

PIER 1 - ELEVATION

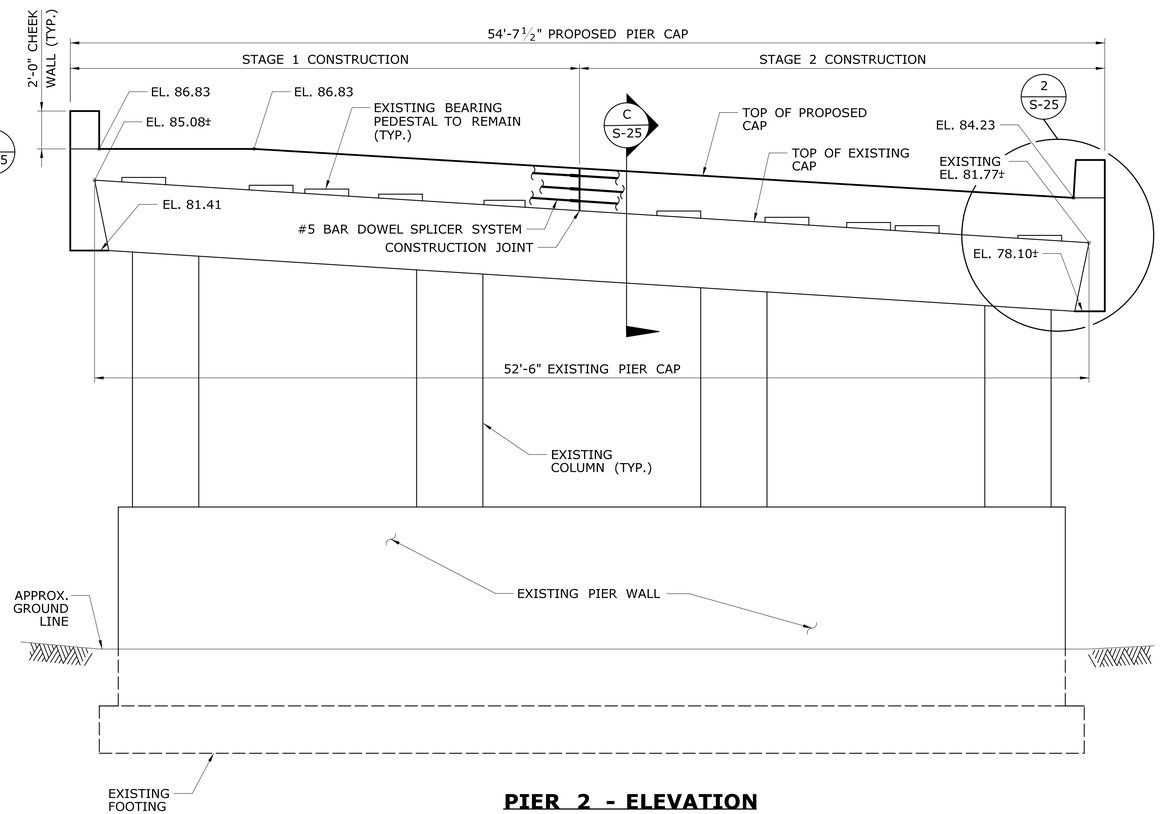

PIER 2 - ELEVATION

N.F. = NORTH FACE
S.F. = SOUTH FACE

NORTHBOUND - BRIDGE 03331

SCALE: 1/4" = 1'-0"

90% DESIGN REVIEW 03/09/16

REV.	DATE	REVISION DESCRIPTION	SHEET NO.
-	-	-	-
-	-	-	-
-	-	-	-
-	-	-	-
-	-	-	-
-	-	-	-

THE INFORMATION, INCLUDING ESTIMATED QUANTITIES OF WORK, SHOWN ON THESE SHEETS IS BASED ON LIMITED INVESTIGATIONS BY THE STATE AND IS IN NO WAY WARRANTED TO INDICATE THE CONDITIONS OF ACTUAL QUANTITIES OF WORK WHICH WILL BE REQUIRED.

PLOTTED: 3/9/2016

DESIGNER/DRAFTER: R.BRAZZALE/E.FINOWICKI
CHECKED BY: J. ADAMS
SCALE AS NOTED

STATE OF CONNECTICUT
DEPARTMENT OF TRANSPORTATION

FILENAME: ...\SB_MSH_BR_0058-0332_PIER-02.dgn

LOCHNER
H.W. LOCHNER, INC
55 Hartland Street
East Hartford, CT 06108

- -

PROJECT TITLE:
RECONSTRUCTION OF ROUTE 349 NB AND SB OVER AMTRAK RAILROAD

TOWN: **GROTON**

DRAWING TITLE: **03331 - PIERS 1 & 2 PLANS & ELEVATIONS**

PROJECT NO. **058-332**
DRAWING NO. **S-24**
SHEET NO.

NOTE:

1. PLACE CHEEK WALLS AFTER ADJACENT DECK UNIT HAS BEEN SET AND TRANSVERSE TIE HAS BEEN TENSIONED AND APPROVED.

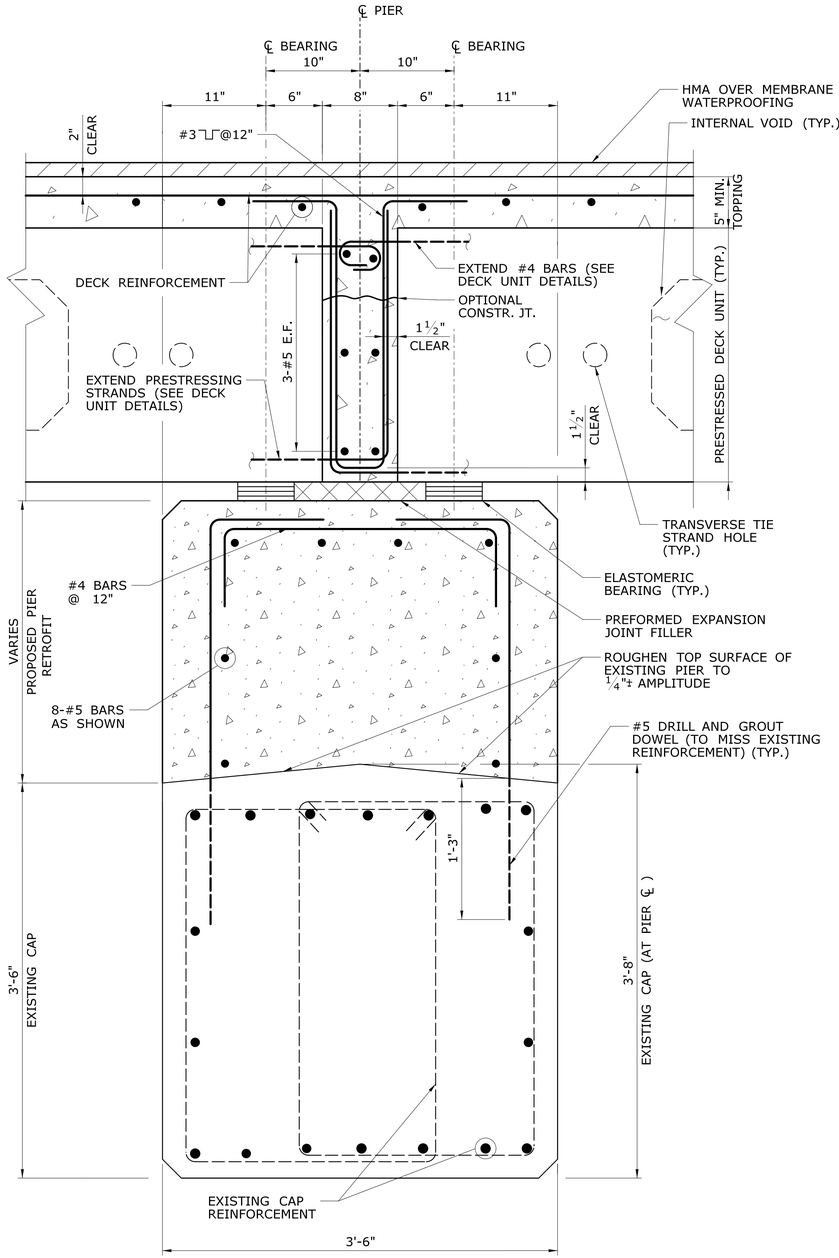

PIER CAP SECTION C / S-23 S-24
SCALE: 1½"=1'-0"

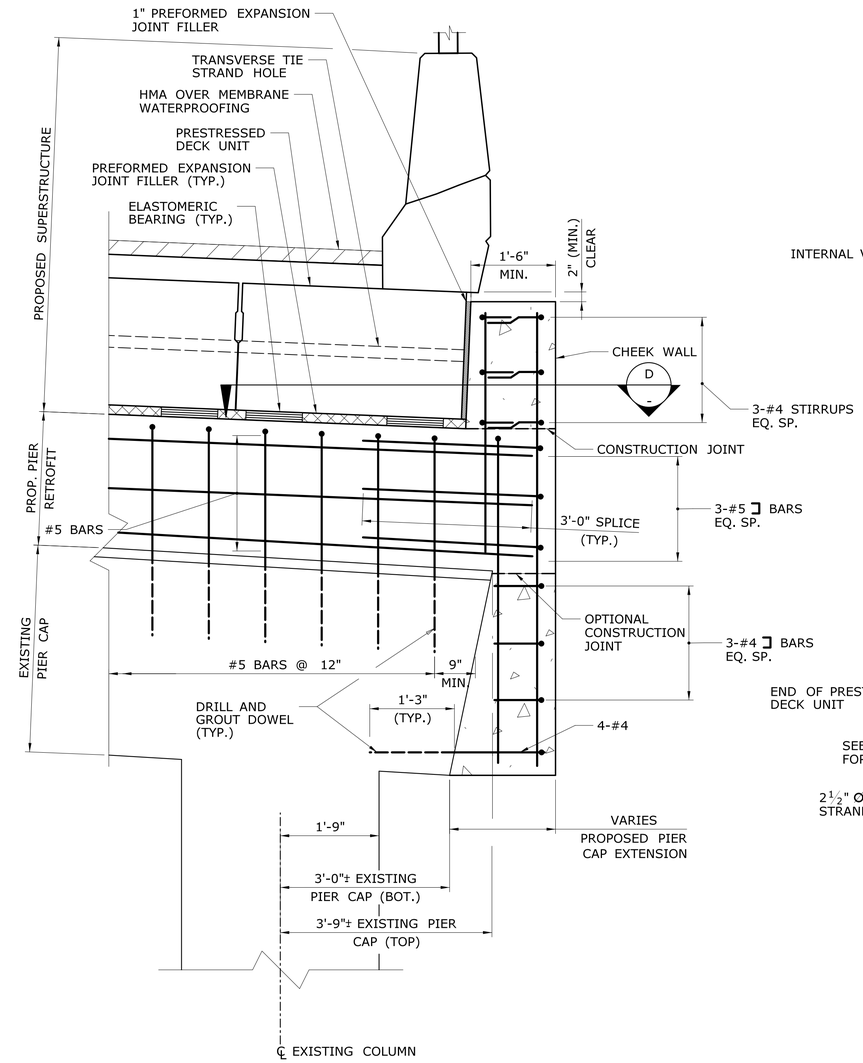

CHEEK WALL DETAIL 2 / S-23 S-24
SCALE: ¾"=1'-0"

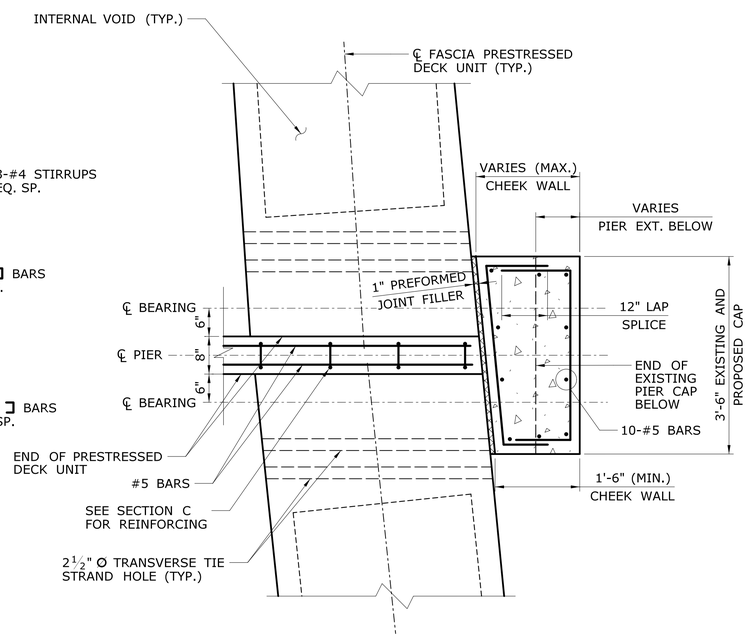

CHEEK WALL SECTION D / -
SCALE: ¾"=1'-0"

90% DESIGN REVIEW 03/09/2016

REV.	DATE	REVISION DESCRIPTION	SHEET NO.
-	-	-	-
-	-	-	-
-	-	-	-
-	-	-	-
-	-	-	-
-	-	-	-

THE INFORMATION, INCLUDING ESTIMATED QUANTITIES OF WORK, SHOWN ON THESE SHEETS IS BASED ON LIMITED INVESTIGATIONS BY THE STATE AND IS IN NO WAY WARRANTED TO INDICATE THE CONDITIONS OF ACTUAL QUANTITIES OF WORK WHICH WILL BE REQUIRED.

PLOTTED: 3/9/2016

DESIGNER/DRAFTER: R.BRAZZALE/E.FINOWICKI
CHECKED BY: J. ADAMS
SCALE AS NOTED

STATE OF CONNECTICUT
DEPARTMENT OF TRANSPORTATION

FILENAME: ...\SB_MSH_BR_0058-0332_PIER-SEC.dgn

LOCHNER
H.W. LOCHNER, INC
55 Hartland Street
East Hartford, CT 06108

- -

PROJECT TITLE:
RECONSTRUCTION OF ROUTE 349 NB AND SB OVER AMTRAK RAILROAD

TOWN: **GROTON**

DRAWING TITLE: **PIER SECTIONS & DETAILS**

PROJECT NO. **058-332**
DRAWING NO. **S-25**
SHEET NO.

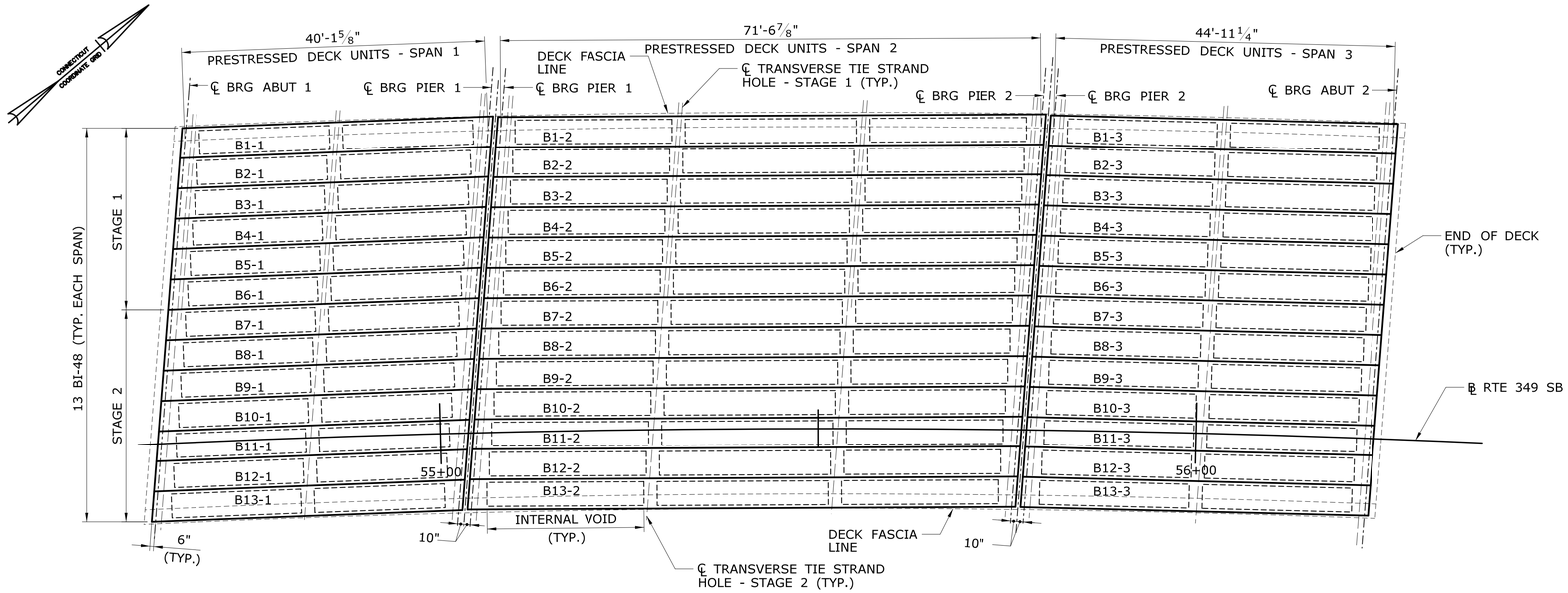

BRIDGE 03330 - FRAMING PLAN

SCALE: 1"=10'

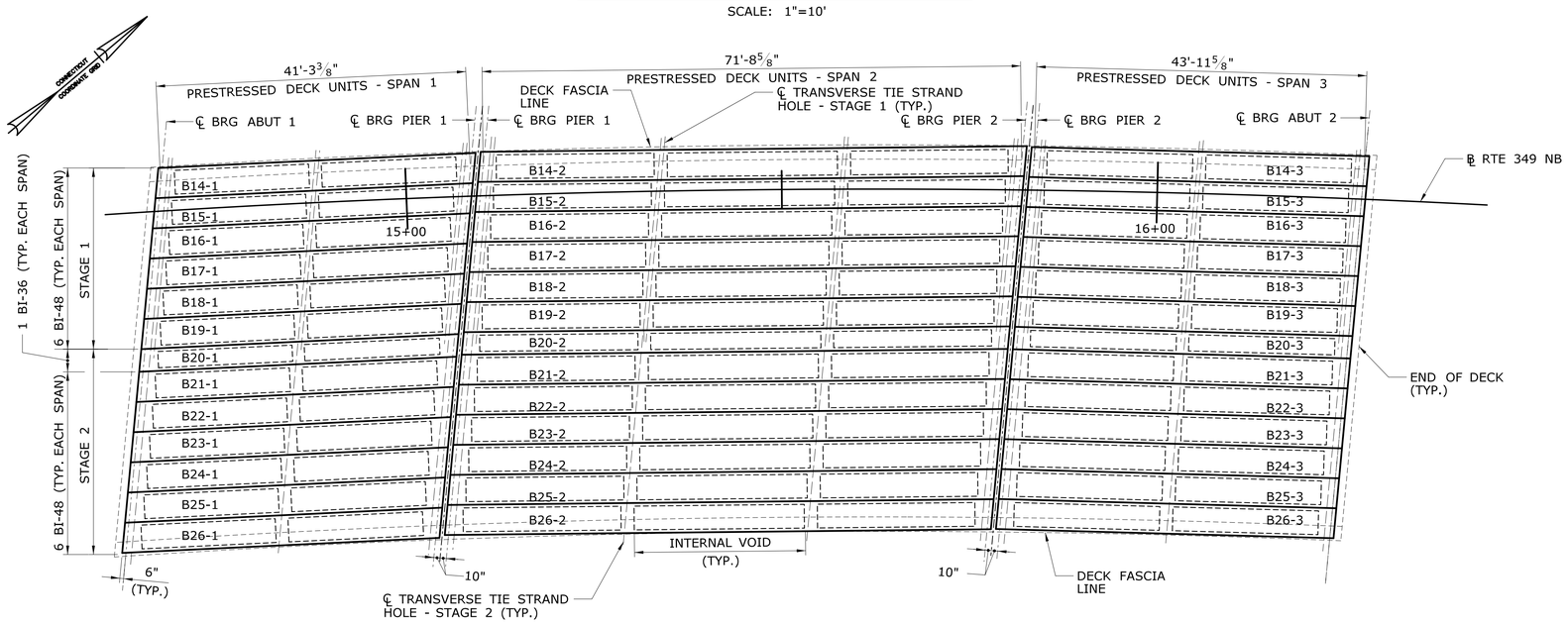

BRIDGE 03331 - FRAMING PLAN

SCALE: 1"=10'

PRESTRESSED CONCRETE NOTES:

1. PRESTRESSED CONCRETE SHALL CONFORM TO THE FOLLOWING REQUIREMENTS:
   MINIMUM COMPRESSIVE STRENGTH AT TRANSFER f'ci = 6,000 PSI
   MINIMUM 28 DAY COMPRESSIVE STRENGTH f'c = 8,000 PSI

2. PRESTRESSING STRANDS SHALL BE 1/2" DIA., 7 WIRE, UNCOATED, LOW RELAXATION STRANDS CONFORMING TO THE REQUIREMENTS OF AASHTO M203 (ASTM A416), GRADE 270, AND SHALL CONFORM TO THE FOLLOWING REQUIREMENTS:
   ULTIMATE TENSILE STRENGTH f's = 270 KSI
   INITIAL JACKING TENSION:
   B1-B19, B21-B26
   fi= 309.8 kips PER BEAM - SPAN 1
   fi= 526.7 kips PER BEAM - SPAN 2
   fi= 340.8 kips PER BEAM - SPAN 3
   B20
   fi= 247.9 kips PER BEAM - SPAN 1
   fi= 526.7 kips PER BEAM - SPAN 2
   fi= 278.8 kips PER BEAM - SPAN 3

3. PRESTRESSING STRANDS SHALL BE PLACED AT 2" ON CENTER MINIMUM, SHALL HAVE A MINIMUM COVER OF 1 1/2", SHALL BE DISTRIBUTED OVER THE BEAM WIDTH AS EVENLY AS POSSIBLE, AND SHALL HAVE STRAND PATTERNS THAT ARE SYMMETRICAL ABOUT THE CENTERLINE OF THE BEAM.

4. DEBONDED STRANDS SHALL BE SYMMETRICALLY DISTRIBUTED ABOUT THE CENTERLINE OF THE BEAM. EXTERIOR STRANDS OF EACH HORIZONTAL ROW SHALL BE FULLY BONDED. ADJACENT STRANDS IN THE SAME ROW SHALL NOT BE DEBONDED.

5. ALL NON-PRESTRESSED REINFORCEMENT SHALL CONFORM TO ASTM A615 GRADE 60 AND SHALL HAVE A MINIMUM COVER OF 2" UNLESS OTHERWISE NOTED.

6. ALL NON-PRESTRESSED REINFORCEMENT IN THE PRESTRESSED DECK UNITS EXTENDING INTO THE DECK TOPPING INCLUDING STIRRUPS, BAR TIES AND CHAIRS SHALL BE EPOXY COATED AND SHALL BE INCLUDED IN THE ITEMS "PRESTRESSED DECK UNITS (4'-0" x 2'-3") AND "PRESTRESSED DECK UNITS (3'-0" x 2'-3") AS APPLICABLE.

7. ENDS OF THE PRESTRESSED DECK UNITS SHALL BE VERTICAL UPON APPLICATION OF FULL DEAD LOADS.

8. IT IS NOT INTENDED THAT THE DECK UNITS BE INSTALLED IN CONTACT WITH EACH OTHER, BUT RATHER THAT THE CENTERLINE DISTANCE BETWEEN EACH BE 4'-0" OR 3'-0" AS APPLICABLE.

9. THE DRILLING OF HOLES IN OR THE USE OF POWER ACTUATED TOOLS ON THE BEAMS WILL NOT BE PERMITTED. INSTALL INSERTS AS NEEDED FOR TEMPORARY PRECAST BARRIER CURB.

10. POCKETS FOR TRANSVERSE TIE ANCHORAGE SHALL BE DRY PACKED WITH NON-SHRINK GROUT FLUSH WITH THE EXTERIOR SURFACE OF THE FASCIA BEAM AFTER TRANSFER OF TENSIONING HAS BEEN COMPLETED.

11. THE CONTRACTOR MAY SUBMIT FOR REVIEW AN ALTERNATE PRESTRESSED DECK UNIT DESIGN USING DEBONDED AND/OR DRAPED STRANDS. THE MAXIMUM NUMBER OF DEBONDED STRANDS SHALL BE 25% OF THE TOTAL NUMBER OF STRANDS. ALL DEBONDING SHALL BE LOCATED WITHIN A DISTANCE OF 15% OF THE SPAN LENGTH FROM THE END OF THE MEMBER. IF DRAPED STRANDS ARE USED, THE TOTAL HOLD DOWN FORCE OF ALL THE DRAPED STRANDS SHALL NOT EXCEED 75% OF THE TOTAL WEIGHT OF THE MEMBER. SEE SPECIAL PROVISIONS FOR THE DESIGN AND PLAN SUBMISSION REQUIREMENTS.

12. DECK UNITS SHALL ACCOMODATE TEMPORARY BOND WIRE FOR TEMPORARY METAL PROTECTIVE FENCING PANELS. SEE DWG. NOS. BBG-04 AND BBG-05.

13. COORDINATE INSERTS FOR GROUNDING PLATES WITH DWG. NO. BBG-06 AND DECK UNIT DETAILS SHEET.

14. SEE LOCATION PLAN TO SET DECK UNIT LOCATIONS ALONG CENTERLINES OF BEARINGS.

90% DESIGN REVIEW 03/09/2016

REV.	DATE	REVISION DESCRIPTION	SHEET NO.
-	-	-	-
-	-	-	-
-	-	-	-
-	-	-	-
-	-	-	-
-	-	-	-

THE INFORMATION, INCLUDING ESTIMATED QUANTITIES OF WORK, SHOWN ON THESE SHEETS IS BASED ON LIMITED INVESTIGATIONS BY THE STATE AND IS IN NO WAY WARRANTED TO INDICATE THE CONDITIONS OF ACTUAL QUANTITIES OF WORK WHICH WILL BE REQUIRED.

PLOTTED: 3/9/2016

DESIGNER/DRAFTER: K. HARLEY
CHECKED BY: B. BYRNE
SCALE AS NOTED

STATE OF CONNECTICUT
DEPARTMENT OF TRANSPORTATION

FILENAME: ...\SB_MSH_BR_0058-0332_FR-PLAN.dgn

LOCHNER
H.W. LOCHNER, INC
55 Hartland Street
East Hartford, CT 06108

APPROVED BY: - DATE: -

PROJECT TITLE: RECONSTRUCTION OF ROUTE 349 NB AND SB OVER AMTRAK RAILROAD

TOWN: GROTON

DRAWING TITLE: FRAMING PLANS

PROJECT NO. 058-332

DRAWING NO. S-26

SHEET NO.

PRESTRESSED DECK UNIT DATA

BRIDGE	SPAN NO.	DECK UNIT MARK	STRAND DATA TYPE	STRAND DATA NO. OF STRANDS	AT MIDSPAN Ycg (IN.)	AT END Ycg (IN.)	DEBOND NO. OF DEBONDED STRANDS	DEBOND DEBONDING LENGTH (FT)	ESTIMATED CAMBER AT MIDSPAN (D) AT TRANSFER* (IN.)	ESTIMATED CAMBER AT MIDSPAN (D) AT ERECTION (28 DAYS) (IN.)	ESTIMATED CAMBER AT MIDSPAN (D) FINAL (LONG TERM) (IN.)	HAUNCH H1 AT END (IN.)	HAUNCH H2 AT MIDSPAN (IN.)	NOMINAL WIDTH	DECK UNIT LENGTH**	SKEW ANGLE	INTERNAL VOID LENGTH**	STIRRUP EMBEDMENT (E) MIN E1 AT END (IN.)	STIRRUP EMBEDMENT (E) MAX. E2 AT MIDSPAN (IN.)
03330	1	B1-1	STRAIGHT	10	2	2	0	0	0.18	0.27	0.27	2.35	2.24	4'-0"	41'-1 5/8"	6° 35' 14"	17'-4 3/8"	5 1/4"	5 1/4"
		B2-1	"	"	"	"	"	"	"	"	"	2.25	2.05	"	"	"	"	5 1/4"	5 1/4"
		B3-1 THRU B13-1	"	"	"	"	"	"	"	"	"	1.19	1.00	"	"	"	"	4"	4"
	2	B1-2	STRAIGHT	17	2	2	2	2 END	0.29	-0.16	-1.13	2.24	3.88	4'-0"	72'-6 7/8"	4° 42' 38"	21'-5 5/8"	5 1/4"	6 3/4"
		B2-2	"	"	"	"	"	"	"	"	"	2.05	3.43	"	"	"	"	5	6 1/2"
		B3-2 THRU B13-2	"	"	"	"	"	"	"	"	"	1.00	2.38	"	"	"	"	4	5 1/2"
	3	B1-3	STRAIGHT	11	2	2	2	2 END	0.22	0.31	0.26	2.29	2.24	4'-0"	45'-11 1/4"	3° 00' 23"	19'-9 1/8"	5 1/4"	5 1/4"
		B2-3	"	"	"	"	"	"	"	"	"	2.21	2.05	"	"	"	"	5 1/4"	5 1/4"
		B3-3 THRU B13-3	"	"	"	"	"	"	"	"	"	1.16	1.00	"	"	"	"	4"	4"
03331	1	B14-1	STRAIGHT	10	2	2	0	0	0.18	0.27	0.25	2.32	2.24	4'-0"	42'-3 3/8"	8° 04' 54"	17'-11 1/4"	5 1/4"	5 1/4"
		B15-1	"	"	"	"	"	"	"	"	"	2.25	2.05	"	"	"	"	5 1/4"	5 1/4"
		B16-1 THRU B19-1, B21-1 THRU B26-1	"	"	"	"	"	"	"	"	"	1.19	1.00	"	"	"	"	4 1/4"	4 1/4"
		B20-1	STRAIGHT	8	2	2	2	2 END	0.19	0.28	0.27	1.21	1.00	3'-0"	42'-3 3/8"	8° 04' 54"	17'-11 1/4"	4 1/4"	4 1/4"
	2	B14-2	STRAIGHT	17	2	2	2	2 END	0.28	-0.18	-1.15	2.24	3.90	4'-0"	72'-8 5/8"	5° 57' 42"	21'-6 1/4"	5 1/4"	6 3/4"
		B15-2	"	"	"	"	"	"	"	"	"	2.05	3.37	"	"	"	"	5	6 1/2"
		B16-2 THRU B19-2, B21-2 THRU B26-2	"	"	"	"	"	"	"	"	"	1.00	2.33	"	"	"	"	4	5 1/2"
		B20-2	STRAIGHT	T 2 B 15	T 23.75 B 2	T 23.75 B 2	T 2 B 3	T 24 MID B 4 END	0.39	-0.06	-1.25	1.00	2.43	3'-0"	72'-8 5/8"	5° 57' 42"	21'-6 1/4"	4	5 1/2"
	3	B14-3	STRAIGHT	11	2	2	2	2 END	0.22	-0.31	0.28	2.32	2.24	4'-0"	"	"	"	5 1/4"	5 1/4"
		B15-3	"	"	"	"	"	"	"	"	"	2.27	2.05	"	44'-11 5/8"	3° 47' 37"	19'-3 3/8"	5 1/4"	5 1/4"
		B16-3 THRU B19-3, B21-3 THRU B26-3	"	"	"	"	"	"	"	"	"	1.21	1.00	"	"	"	"	4 1/4"	4 1/4"
		B20-3	STRAIGHT	9	2	2	2	4 END	0.24	0.35	0.32	1.25	1.00	3'-0"	44'-11 5/8"	3° 47' 37"	19'-3 3/8"	4 1/4"	4 1/4"

* ESTIMATED CAMBER EQUALS CAMBER DUE TO PRESTRESSING FORCE AT TRANSFER MINUS DEFLECTION DUE TO INITIAL DEAD WEIGHT OF THE BEAM.

** MEASURED ALONG CENTERLINE OF DECK UNIT

T = TOP STRAND, B = BOTTOM STRAND, END = DEBOND BOTTOM STRANDS FROM END OF BEAM, MID = DEBOND TOP STRANDS IN MID-SECTION OF BEAM.

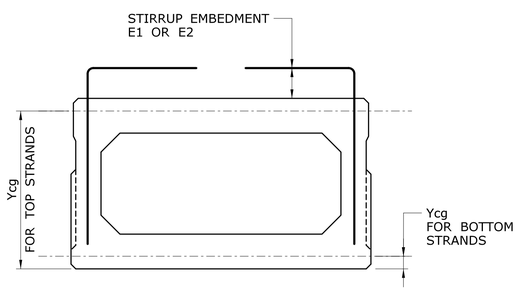

SECTION

NOT TO SCALE

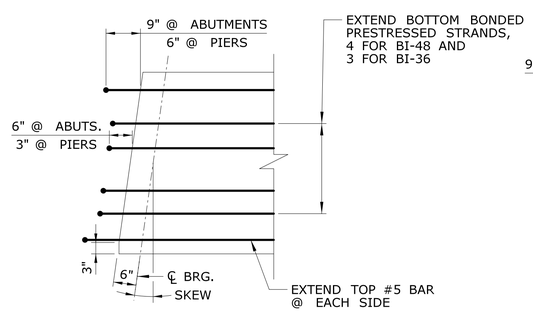

PLAN

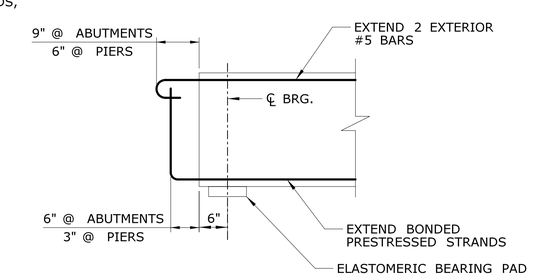

ELEVATION

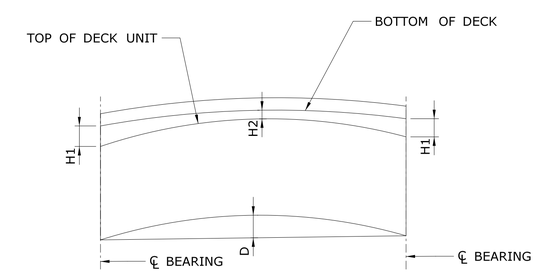

HAUNCH DIAGRAM

NOT TO SCALE

DECK UNIT END DETAIL

SCALE: 3/4" = 1'-0"

NOTES:

1. CAMBERS SHOWN AS POSITIVE ARE UPWARDS. NEGATIVE CAMBERS ARE DOWNWARD.
2. BEAM LINES B1, B2, B14 & B15 HAVE ADDITIONAL DEAD LOAD FROM THE DECK TOPPING, DUE TO THE BREAK IN GRADE. THEREFORE, HAUNCHES AND STIRRUP EMBEDMENTS ARE SOMEWHAT DIFFERENT THAN THE REMAINDER OF THE DECK UNITS.

90% DESIGN REVIEW 03/09/16

REV.	DATE	REVISION DESCRIPTION	SHEET NO.
-	-	-	-
-	-	-	-
-	-	-	-
-	-	-	-
-	-	-	-
-	-	-	-

THE INFORMATION, INCLUDING ESTIMATED QUANTITIES OF WORK, SHOWN ON THESE SHEETS IS BASED ON LIMITED INVESTIGATIONS BY THE STATE AND IS IN NO WAY WARRANTED TO INDICATE THE CONDITIONS OF ACTUAL QUANTITIES OF WORK WHICH WILL BE REQUIRED.

PLOTTED: 3/9/2016

DESIGNER/DRAFTER: K. HARLEY/C. RICH

CHECKED BY: B. BYRNE

SCALE AS NOTED

STATE OF CONNECTICUT
DEPARTMENT OF TRANSPORTATION

FILENAME: ...\SB_MSH_BR_0058-0332_DECK UNIT-DATA.dgn

LOCHNER
H.W. LOCHNER, INC
55 Hartland Street
East Hartford, CT 06108

APPROVED BY: - DATE: -

PROJECT TITLE: RECONSTRUCTION OF ROUTE 349 NB AND SB OVER AMTRAK RAILROAD

TOWN: GROTON

DRAWING TITLE: DECK UNIT DATA

PROJECT NO. 058-332

DRAWING NO. S-27

SHEET NO.

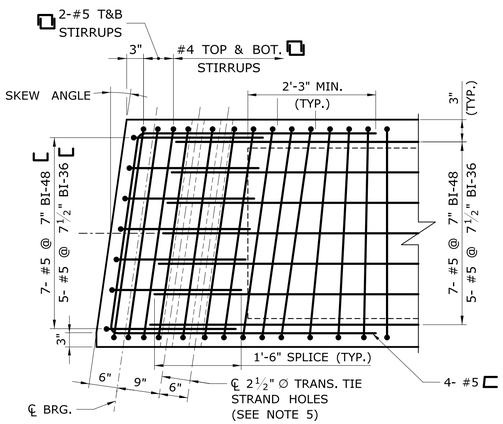

END DIAPHRAGM PLAN

SCALE: ¾" = 1'

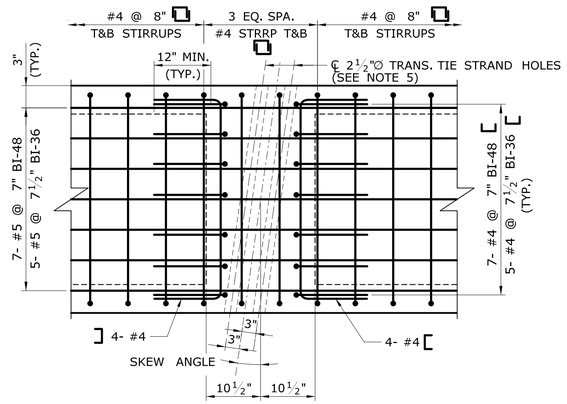

DIAPHRAGM PLAN

SCALE: ¾" = 1'

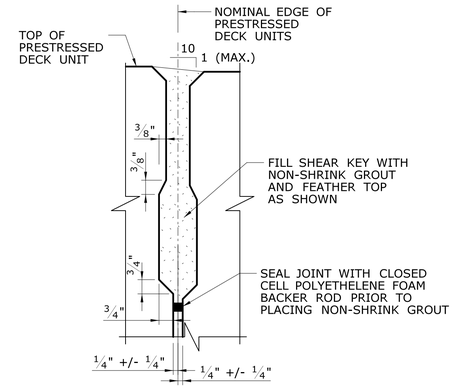

TYPICAL LONGITUDINAL JOINT

SCALE: 3" = 1'

NOTES:

1. THE DECK UNITS SHALL BE PLACED AT THE NOMINAL SPACING SHOWN ON THE PLAN WITH A GAP BETWEEN THE UNITS. THE WIDTH OF THE GAPS WILL VARY DUE TO THE SWEEP OF THE UNITS.
2. GROUT FOR SHEAR KEYS SHALL BE RODDED OR VIBRATED TO ENSURE THAT ALL VOIDS IN THE SHEAR KEYS ARE FILLED.
3. TRANSVERSE TIES SHALL BE COVERED BY A SEAMLESS POLYPROPYLENE SHEATH, WITH CORROSION INHIBITING GREASE BETWEEN THE STRAND AND SHEATH, FOR THE FULL LENGTH OF THE STRAND EXCEPT AT THE ANCHORAGE LOCATION.
4. OTHER TRANSVERSE ANCHORAGE SYSTEMS MAY BE SUBSTITUTED WITH THE APPROVAL OF THE ENGINEER. ALTERNATE ANCHORAGE SYSTEMS SHALL BE WATERTIGHT AND CORROSION PROOF.
5. DECK UNIT B1-B6 & B14-B19 AS SHOWN. B7-B13 & B20-B26 ONLY 1 TIE STRAND HOLE IS REQUIRED. SEE FRAMING PLAN FOR LOCATIONS.

TRANSVERSE TIE TENSIONING PROCEDURE:

1. AFTER ERECTING STAGE 1 DECK UNITS, INSTALL AND TENSION TRANSVERSE TIES IN STAGE 1 SLEEVES. AFTER ERECTING STAGE 2 DECK UNITS, INSTALL AND TENSION TRANSVERSE TIES ON STAGE 2 SLEEVES.
2. TENSION TRANSVERSE TIE STRANDS INITIALLY TO 5 KIPS.
3. FILL ALL SHEAR KEYS WITH NON-SHRINK GROUT. THE CONTRACTOR SHALL COVER AND PROTECT THE SHEAR KEYS FROM THE WEATHER AND DEBRIS UNTIL THEY ARE FILLED.
4. WHEN GROUT HAS ATTAINED A COMPRESSIVE STRENGTH OF 1,500 PSI (BASED ON THE GROUT MANUFACTURER'S RECOMMENDATIONS), TENSION TRANSVERSE TIE STRAND TO 30 KIPS EACH. NO TRAFFIC OR HEAVY EQUIPMENT WILL BE PERMITTED ON THE BEAMS UNTIL ALL TIES HAVE BEEN FULLY TENSIONED.
5. CONCRETE FOR SLAB AND PARAPETS SHALL NOT BE PLACED UNTIL THE TRANSVERSE TIES HAVE BEEN FULLY TENSIONED AND THE GROUT IN THE LONGITUDINAL SHEAR KEYS HAS A SEVEN DAY COMPRESSIVE STRENGTH OF 4,500 PSI.
6. PROVIDE TIE STRANDS CONFORMING TO ASTM A449 HIGH STRENGTH STRANDS.

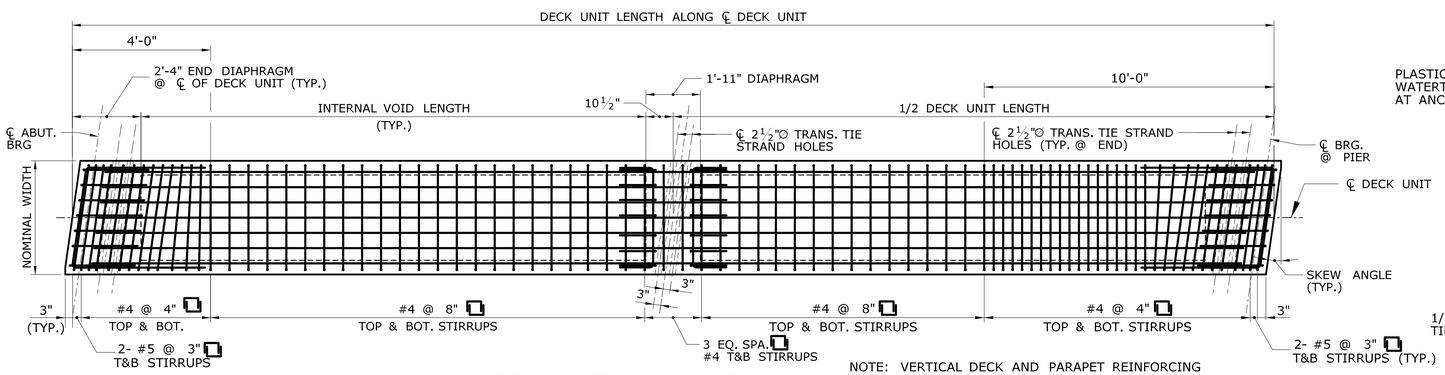

DECK UNIT PLAN - SPAN 1

SCALE: ⅜" = 1'

BI-48 IN SPAN 1 AS SHOWN
B-48 IN SPAN 3 OPPOSITE
(BI-36 SIMILAR)

NOTE: VERTICAL DECK AND PARAPET REINFORCING BARS ARE NOT SHOWN FOR CLARITY

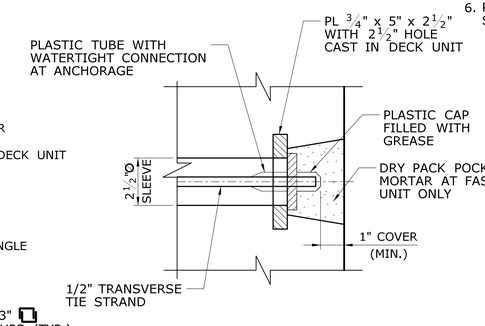

TRANSVERSE TIE POCKET DETAIL

SCALE: 3" = 1'

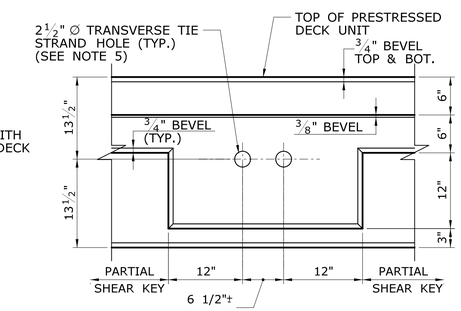

SHEAR KEY AT DIAPHRAGMS

SCALE: 1" = 1'

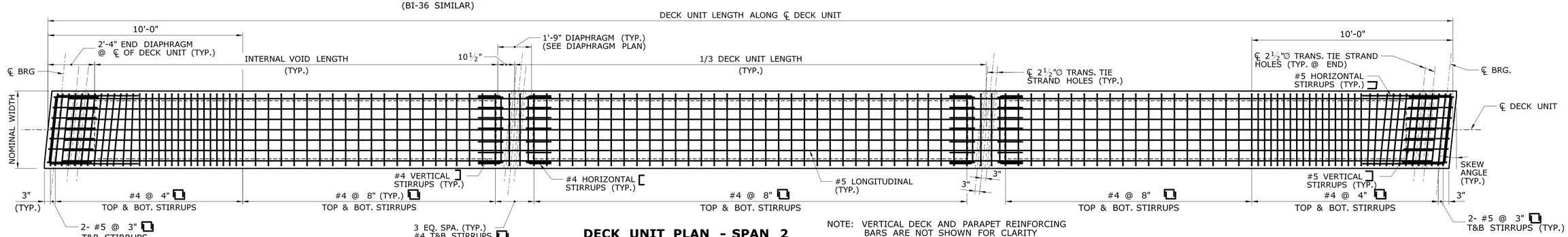

DECK UNIT PLAN - SPAN 2

SCALE: ⅜" = 1'

BI-48 AS SHOWN (BI-36 SIMILAR)

NOTE: VERTICAL DECK AND PARAPET REINFORCING BARS ARE NOT SHOWN FOR CLARITY

90% DESIGN REVIEW 03/09/16

REV.	DATE	REVISION DESCRIPTION	SHEET NO.
-	-	-	-
-	-	-	-
-	-	-	-
-	-	-	-
-	-	-	-
-	-	-	-

THE INFORMATION, INCLUDING ESTIMATED QUANTITIES OF WORK, SHOWN ON THESE SHEETS IS BASED ON LIMITED INVESTIGATIONS BY THE STATE AND IS IN NO WAY WARRANTED TO INDICATE THE CONDITIONS OF ACTUAL QUANTITIES OF WORK WHICH WILL BE REQUIRED.

PLOTTED: 3/9/2016

DESIGNER/DRAFTER: K. HARLEY
CHECKED BY: B. BYRNE
SCALE AS NOTED

STATE OF CONNECTICUT
DEPARTMENT OF TRANSPORTATION

FILENAME: ...\SB_MSH_BR_0058-0332_DECK UNIT-DET-01.dgn

LOCHNER
H.W. LOCHNER, INC
55 Hartland Street
East Hartford, CT 06108

APPROVED BY: - DATE: -

PROJECT TITLE: RECONSTRUCTION OF ROUTE 349 NB AND SB OVER AMTRAK RAILROAD

TOWN: GROTON

DRAWING TITLE: DECK UNIT DETAILS - 1

PROJECT NO. 058-332

DRAWING NO. S-28

SHEET NO.

NOTES:

1. FOR NOTES, SEE "FRAMING PLAN" AND "DECK UNIT DETAILS" SHEETS.
2. FOR EMBEDMENT HEIGHT 'E', SEE PRESTRESSED DECK UNIT DATA TABLE.

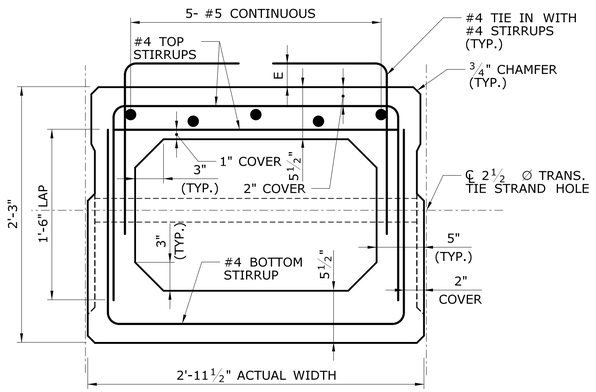

BI-36 AT VOID
B20 ONLY

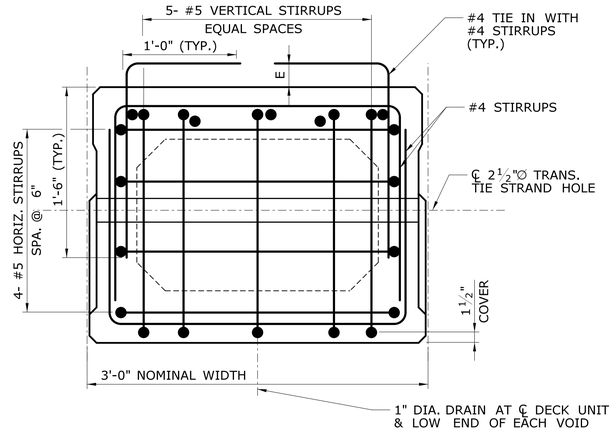

BI-36 AT END
B20 ONLY

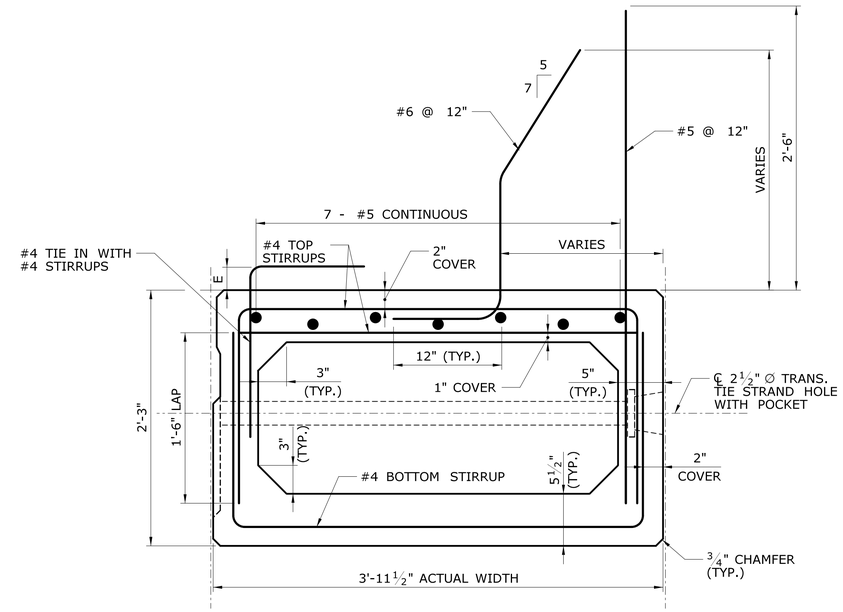

BI-48 AT VOID
B13 & B26 SHOWN B1 & B14 SIMILAR AND OPPOSITE

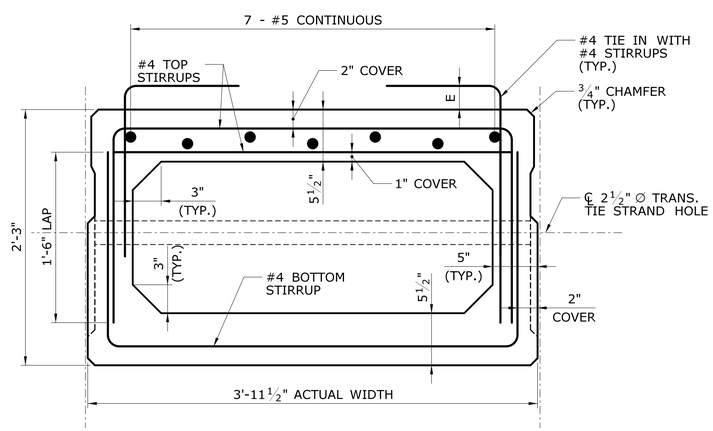

BI-48 AT VOID
B2 TO B5, B7 TO B12
B15 TO B18, B21 TO B25*

*NOTE: B6 & B19 - SIMILAR TIE STRAND HOLE WITH POCKET

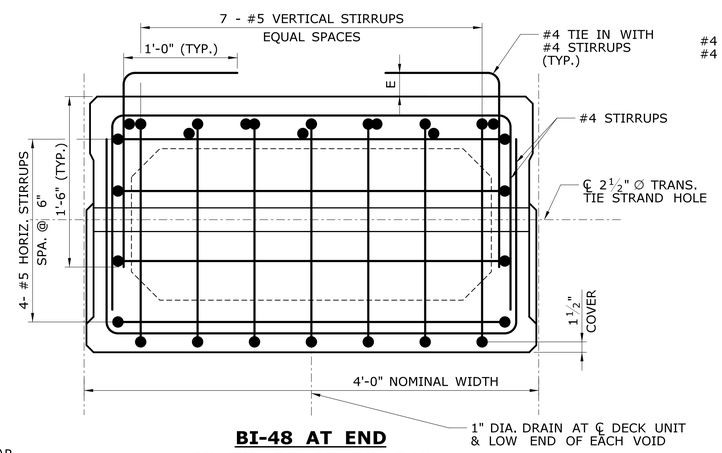

BI-48 AT END
B2 TO B5, B7 TO B12
B15 TO B18, B21 TO B25*

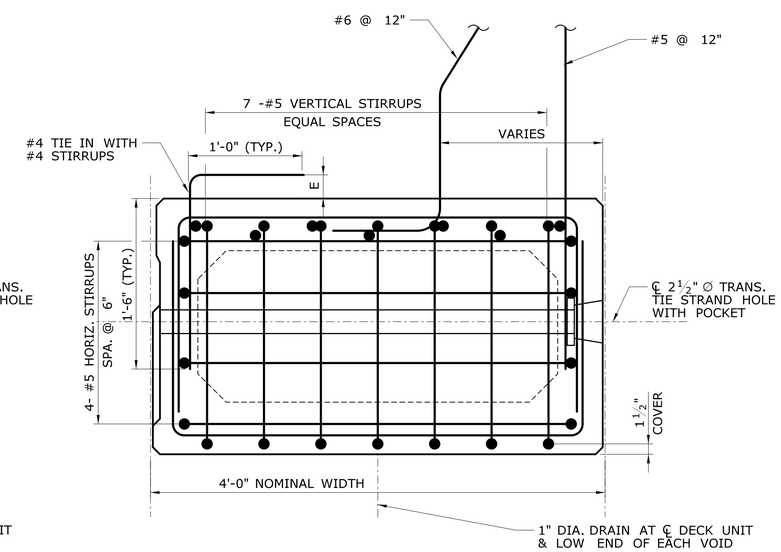

BI-48 AT END
B13 & B26 SHOWN B1 & B14 SIMILAR AND OPPOSITE

90% DESIGN REVIEW 03/09/16

REV.	DATE	REVISION DESCRIPTION	SHEET NO.
-	-	-	-
-	-	-	-
-	-	-	-
-	-	-	-
-	-	-	-
-	-	-	-

THE INFORMATION, INCLUDING ESTIMATED QUANTITIES OF WORK, SHOWN ON THESE SHEETS IS BASED ON LIMITED INVESTIGATIONS BY THE STATE AND IS IN NO WAY WARRANTED TO INDICATE THE CONDITIONS OF ACTUAL QUANTITIES OF WORK WHICH WILL BE REQUIRED.

PLOTTED: 3/9/2016

DESIGNER/DRAFTER: K. HARLEY
CHECKED BY: B. BYRNE
SCALE: 1 1/2" = 1'-0"

STATE OF CONNECTICUT
DEPARTMENT OF TRANSPORTATION

FILENAME: ...\SB_MSH_BR_0058-0332_DECK UNIT-DET-02.dgn

LOCHNER
H.W. LOCHNER, INC
55 Hartland Street
East Hartford, CT 06108

APPROVED BY: - DATE: -

PROJECT TITLE: RECONSTRUCTION OF ROUTE 349 NB AND SB OVER AMTRAK RAILROAD

TOWN: GROTON

DRAWING TITLE: DECK UNIT DETAILS - 2

PROJECT NO. 058-332
DRAWING NO. S-29
SHEET NO.

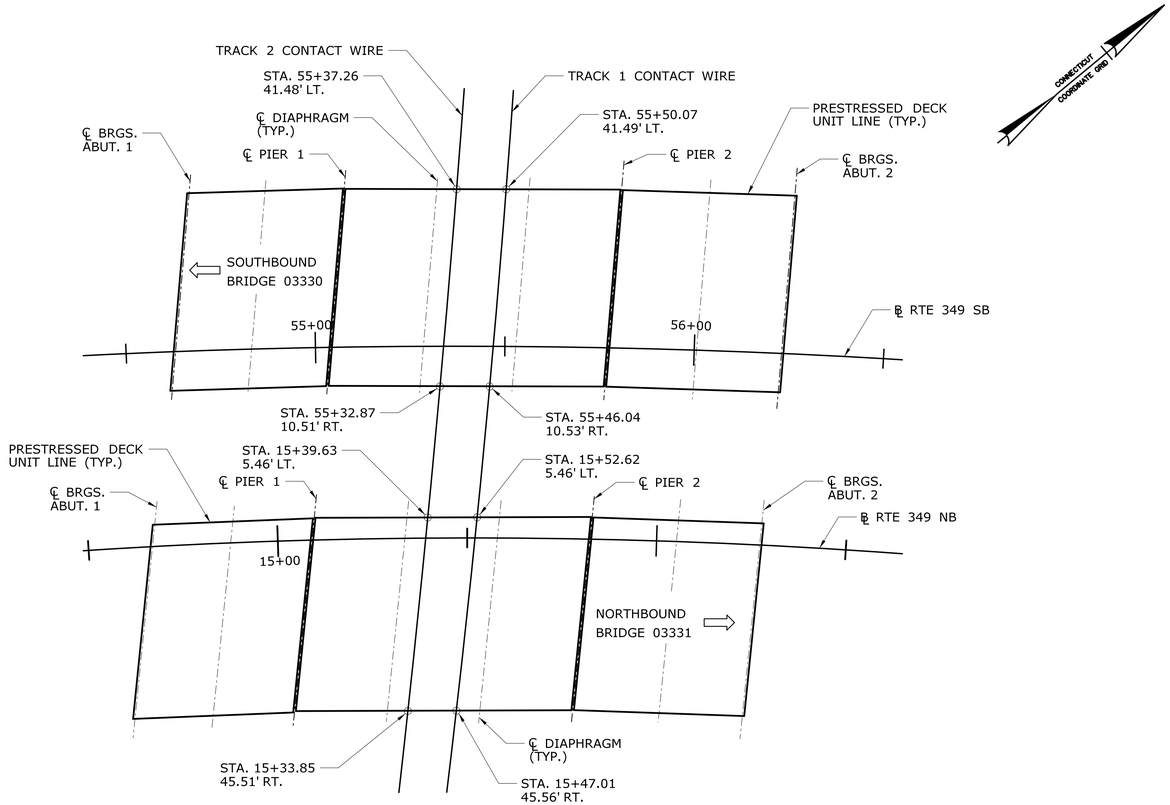

PLAN
SCALE: 1"=20'

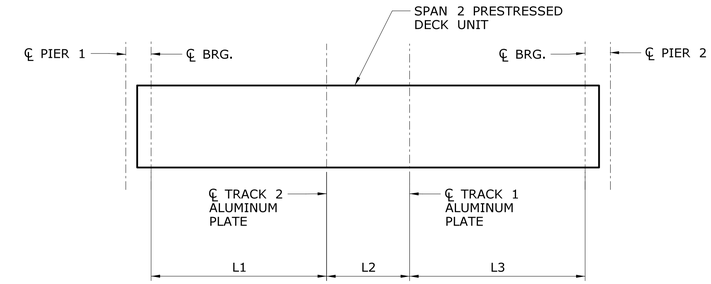

DECK UNIT NO.	L1	L2	L3
B1-2	28.55	12.90	31.13
B2-3	28.55	12.90	31.13
B3-2	28.55	12.91	31.12
B4-2	28.55	12.92	31.11
B5-2	28.54	12.93	31.11
B6-2	28.54	12.94	31.10
B7-2	28.54	12.95	31.09
B8-2	28.53	12.96	31.09
B9-2	28.53	12.97	31.08
B10-2	28.53	12.98	31.07
B11-2	28.53	12.98	31.07
B12-2	28.52	13.00	31.06
B13-2	28.52	13.01	31.05
B14-2	28.66	13.10	30.97
B15-2	28.63	13.10	31.00
B16-2	28.60	13.10	31.03
B17-2	28.58	13.09	31.06
B18-2	28.55	13.09	31.09
B19-2	28.52	13.10	31.11
B20-2	28.49	13.10	31.14
B21-2	28.47	13.09	31.17
B22-2	28.44	13.09	31.20
B23-2	28.41	13.09	31.23
B24-2	28.39	13.08	31.26
B25-2	28.36	13.09	31.28
B26-2	28.33	13.09	31.31

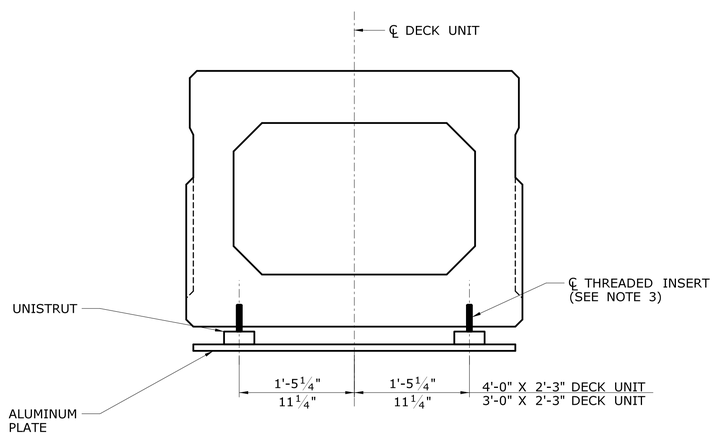

SECTION
NOT TO SCALE

NOTES:

1. CONTACT WIRE LOCATIONS SHOWN ARE BASED ON AVAILABLE SURVEY FROM DESIGN. CONTRACTOR SHALL SURVEY WIRES AND CONFIRM STATIONS AND OFFSETS SHOWN PRIOR TO SUBMITTING SHOP DRAWINGS, FOR DECK UNITS AND GROUNDING AND BONDING SYSTEM.
2. SEE DWG. NO. BBG-06 FOR ALUMINUM PLATE SIZING AND INSERT LOCATIONS.
3. THREADED INSERTS SHALL BE CAST INTO THE DECK UNITS TO RECEIVE A ½" DIAMETER GALVANIZED BOLT. INSERTS SHALL BE SELECTED TO HAVE A MINIMUM SAFE WORKING LOAD OF 500 POUNDS AND SHALL HAVE A MINIMUM EMBEDED LENGTH OF 1½".
4. ADJUST THREADED INSERT LOCATIONS TO AVOID PRESTRESSED STRANDS AND COORDINATE WITH ALUMINUM PLATE FABRICATION, IF CHANGES ARE MADE.
5. ALUMINUM PLATES, UNISTRUT, AND ATTACHMENT BOLTS SHALL BE INCIDENTAL TO "GROUNDING AND BONDING".
6. THREADED INSERTS SHALL BE INCIDENTAL TO "PRESTRESSED DECK UNITS".

90% DESIGN REVIEW 03/09/2016

REV.	DATE	REVISION DESCRIPTION	SHEET NO.
-	-	-	-
-	-	-	-
-	-	-	-
-	-	-	-
-	-	-	-
-	-	-	-

THE INFORMATION, INCLUDING ESTIMATED QUANTITIES OF WORK, SHOWN ON THESE SHEETS IS BASED ON LIMITED INVESTIGATIONS BY THE STATE AND IS IN NO WAY WARRANTED TO INDICATE THE CONDITIONS OF ACTUAL QUANTITIES OF WORK WHICH WILL BE REQUIRED.

PLOTTED: 3/9/2016

DESIGNER/DRAFTER: K. HARLEY/C. RICH
CHECKED BY: B. BYRNE
SCALE AS NOTED

STATE OF CONNECTICUT
DEPARTMENT OF TRANSPORTATION

FILENAME: ...\SB_MSH_BR_0058-0332_DECK UNIT-DET-03.dgn

LOCHNER
H.W. LOCHNER, INC
55 Hartland Street
East Hartford, CT 06108

APPROVED BY: - DATE: -

PROJECT TITLE:
RECONSTRUCTION OF ROUTE 349 NB AND SB OVER AMTRAK RAILROAD

TOWN: **GROTON**

DRAWING TITLE: **DECK UNIT DETAILS - 3**

PROJECT NO. **058-332**
DRAWING NO. **S-30**
SHEET NO.

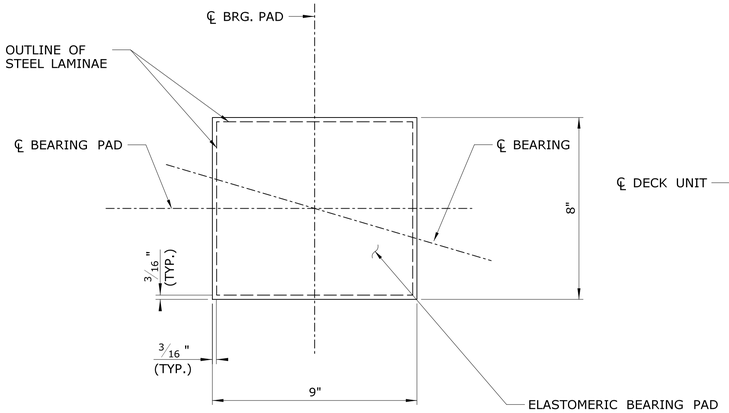

PLAN

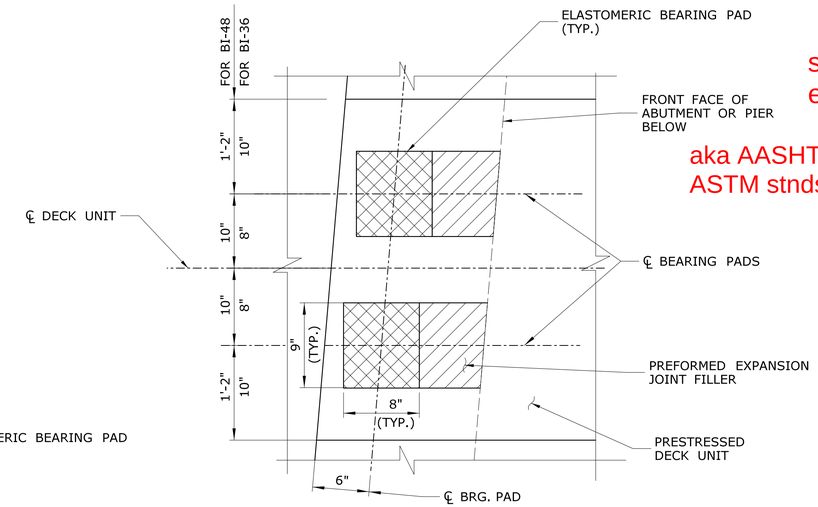

PLAN

BEARING SEAT DETAILS

SCALE: 1½" = 1'-0"

BI-36 AS SHOWN
BI-48 SIMILAR

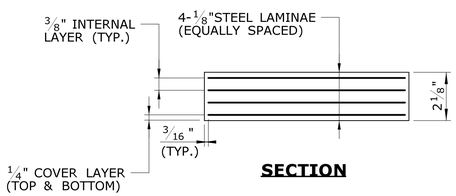

SECTION

ELASTOMERIC BEARING PAD

NOT TO SCALE

NOTES:

1. FURNISHING AND INSTALLING ELASTOMERIC BEARING PADS SHALL BE PAID FOR UNDER THE ITEM "STEEL-LAMINATED ELASTOMERIC BEARINGS".
2. ELASTOMERIC SHALL BE GRADE 3 VIRGIN NEOPRENE WITH SHORE 'A' DUROMETER HARDNESS OF 50.
3. THE STEEL LAMINAE USED IN THE ELASTOMERIC BEARING SHALL CONFORM TO ASSHTO M270, GRADE 36 AND SHALL BE PAID FOR UNDER THE ITEM "STEEL-LAMINATED ELASTOMERIC BEARINGS".
4. ELASTOMERIC BEARING SHALL BE INSTALLED AT AN AMBIENT TEMPERATURE BETWEEN 40° TO 80° . ELASTOMERIC BEARINGS SHALL BE SET SUCH THAT THEY WILL BE VERTICAL AT 50° .
5. IN NO CASE SHALL THE ELASTOMER OR VULCANIZED BOND BE SUBJECTED TO TEMPERATURE HIGHER THAN 250° .
6. BEARING DESIGN METHOD: AASHTO LRFD SECTION 14, METHOD A.
7. BEARING DESIGN LOADS (SERVICE)
   DC=50 KIPS
   LL=65 KIPS

spec has 60 for elastomeric shims

aka AASHTO - specs have ASTM stnds, please review

90% DESIGN REVIEW 03/09/2016

REV.	DATE	REVISION DESCRIPTION	SHEET NO.
-	-	-	-
-	-	-	-
-	-	-	-
-	-	-	-
-	-	-	-
-	-	-	-

THE INFORMATION, INCLUDING ESTIMATED QUANTITIES OF WORK, SHOWN ON THESE SHEETS IS BASED ON LIMITED INVESTIGATIONS BY THE STATE AND IS IN NO WAY WARRANTED TO INDICATE THE CONDITIONS OF ACTUAL QUANTITIES OF WORK WHICH WILL BE REQUIRED.

PLOTTED: 3/9/2016

DESIGNER/DRAFTER: K. HARLEY/C. RICH
CHECKED BY: B. BYRNE
SCALE AS NOTED

STATE OF CONNECTICUT
DEPARTMENT OF TRANSPORTATION

FILENAME: ...\SB_MSH_BR_0058-0332_BRG-DET.dgn

LOCHNER
H.W. LOCHNER, INC
55 Hartland Street
East Hartford, CT 06108

APPROVED BY: - DATE: -

PROJECT TITLE: RECONSTRUCTION OF ROUTE 349 NB AND SB OVER AMTRAK RAILROAD

TOWN: GROTON

DRAWING TITLE: BEARING DETAILS

PROJECT NO. 058-332
DRAWING NO. S-31
SHEET NO.

NOTES:

1. ELEVATIONS SHOWN ON PLAN VIEW ARE AT THE TOP OF FINAL RIDING SURFACE (HMA).
2. SEE APPROACH SLAB PLANS SHEET FOR APPROACH SLAB DETAILS.
3. SEE METAL BRIDGE RAIL (SOLID PANEL) SHEETS FOR RAIL DETAILS.
4. REINFORCEMENT NOTED TO BE PAID FOR UNDER THE ITEM "PRESTRESSED DECK UNITS". SEE DECK UNIT DETAILS.
5. SEE DECK DETAILS SHEET FOR PARAFFIN COATED JOINT DETAILS.

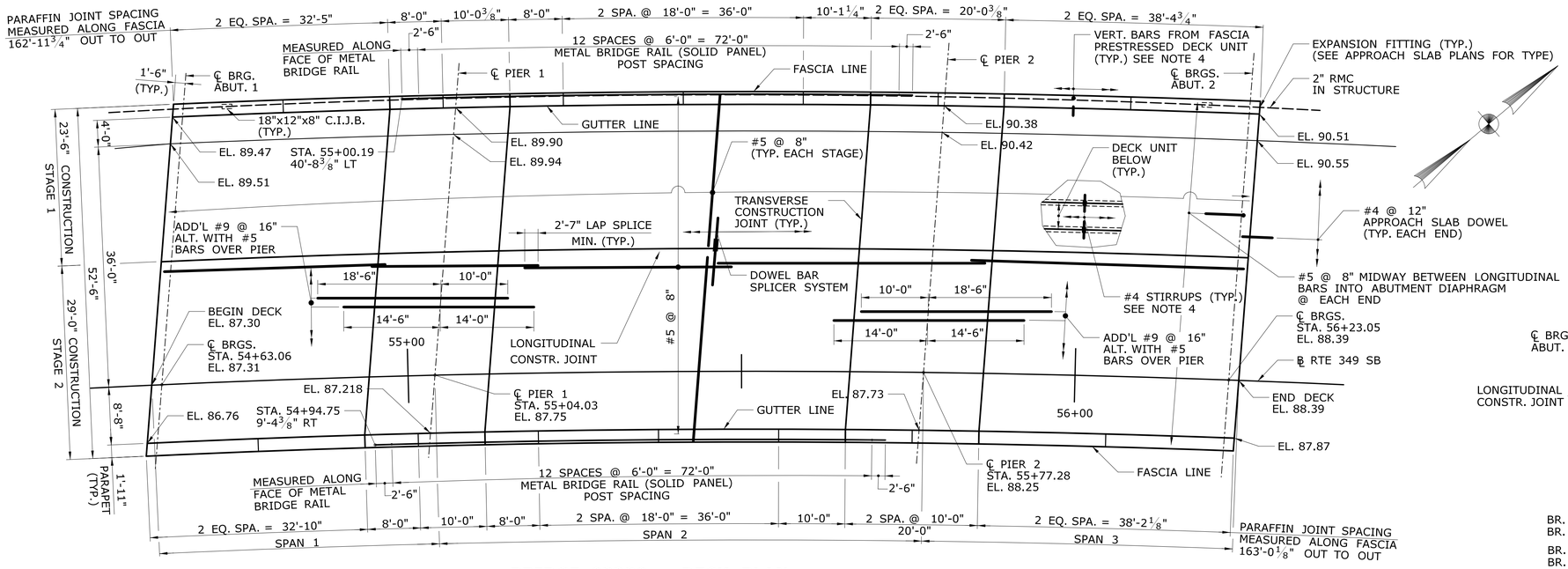

BRIDGE 03330 - DECK PLAN

SCALE: 1"=10'

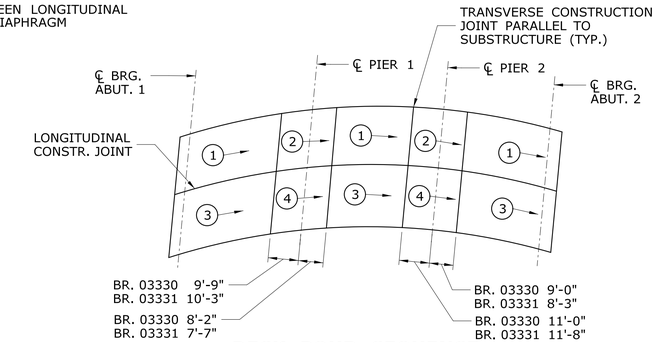

DECK POUR SEQUENCE

NOT TO SCALE

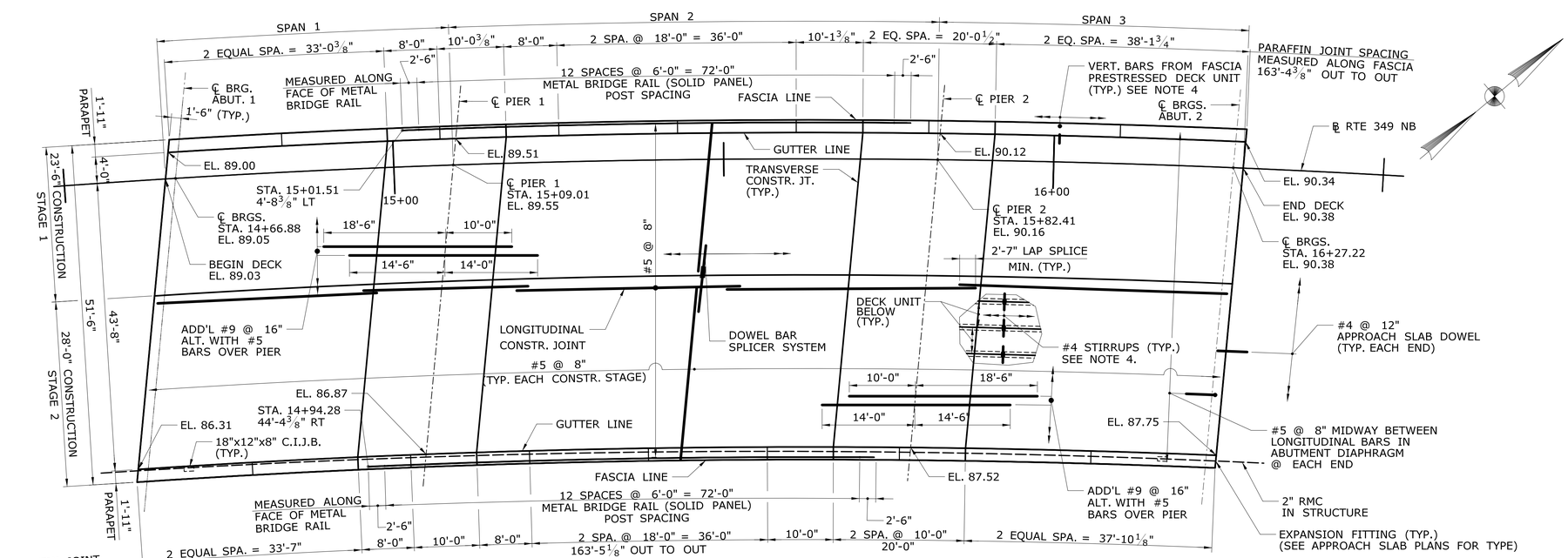

BRIDGE 03331 - DECK PLAN

SCALE: 1"=10'

POUR SEQUENCE NOTES:

1. (1) → INDICATES SEQUENCE AND DIRECTION OF POUR.
2. A MINIMUM OF 2,000 PSI STRENGTH SHALL BE ACHIEVED PRIOR TO ANY CONSECUTIVE POURS.
3. ALL CONCRETE IN A GIVEN POUR SHALL BE KEPT IN A FLUID CONDITION UNTIL THE ENTIRE POUR IS COMPLETED.
4. CONCRETE FOR THE DECK SHALL BE POURED IN A UNIFORM MANNER ACROSS THE ENTIRE WIDTH OF THE POUR. STARTING FROM THE LOW END TO THE HIGH END. NO HEAVY CONCENTRATION OF WET CONCRETE SHALL BE ALLOWED.
5. SLAB POURS SHALL FOLLOW THE NUMERICAL SEQUENCE SHOWN. POURING SEQUENCES OTHER THAN THAT SHOWN ON THE PLAN SHALL BE SUBMITTED BY THE CONTRACTOR FOR APPROVAL BY THE ENGINEER.

90% DESIGN REVIEW 03/09/2016

REV.	DATE	REVISION DESCRIPTION	SHEET NO.
-	-	-	-
-	-	-	-
-	-	-	-
-	-	-	-
-	-	-	-
-	-	-	-

THE INFORMATION, INCLUDING ESTIMATED QUANTITIES OF WORK, SHOWN ON THESE SHEETS IS BASED ON LIMITED INVESTIGATIONS BY THE STATE AND IS IN NO WAY WARRANTED TO INDICATE THE CONDITIONS OF ACTUAL QUANTITIES OF WORK WHICH WILL BE REQUIRED.

PLOTTED: 3/9/2016

DESIGNER/DRAFTER: K.HARLEY/C.RICH
CHECKED BY: B.BYRNE
SCALE AS NOTED

STATE OF CONNECTICUT
DEPARTMENT OF TRANSPORTATION

FILENAME: ...\SB_MSH_BR_0058-0332_DECK-PLAN.dgn

LOCHNER
H.W. LOCHNER, INC
55 Hartland Street
East Hartford, CT 06108

APPROVED BY: - DATE: -

PROJECT TITLE: RECONSTRUCTION OF ROUTE 349 NB AND SB OVER AMTRAK RAILROAD

TOWN: GROTON

DRAWING TITLE: DECK PLANS

PROJECT NO. 058-332
DRAWING NO. S-32
SHEET NO.

SOUTHBOUND - BRIDGE 03330

TOP OF CONCRETE TOPPING ELEVATIONS - SPAN 1											
	℄ ABUT. 1	L/10 PT	2L/10 PT	3L/10 PT	4L/10 PT	5L/10 PT	6L/10 PT	7L/10 PT	8L/10 PT	9L/10 PT	℄ PIER 1
WEST GUTTER	89.241	89.287	89.332	89.375	89.418	89.460	89.501	89.540	89.579	89.616	89.653
HIGH POINT	89.275	89.322	89.367	89.411	89.454	89.495	89.536	59.576	89.615	89.653	89.689
BL RT 395 SB	87.064	87.112	87.159	87.205	87.250	87.294	87.337	87.378	87.419	87.458	87.497
EAST GUTTER	86.532	86.580	86.628	86.674	86.719	86.764	86.807	86.849	86.890	86.930	86.968

TOP OF CONCRETE TOPPING ELEVATIONS - SPAN 2											
	℄ PIER 1	L/10 PT	2L/10 PT	3L/10 PT	4L/10 PT	5L/10 PT	6L/10 PT	7L/10 PT	8L/10 PT	9L/10 PT	℄ PIER 2
WEST GUTTER	89.653	89.716	89.775	89.831	89.884	89.934	89.980	90.023	90.062	90.098	90.131
HIGH POINT	89.689	89.752	89.812	89.869	89.922	89.971	90.018	90.061	90.101	90.137	90.170
BL RT 395 SB	87.497	87.562	87.625	87.684	87.739	87.791	87.840	87.885	87.927	87.965	88.000
EAST GUTTER	86.968	87.035	87.098	87.158	87.214	87.266	87.316	87.361	87.404	87.442	87.477

TOP OF CONCRETE TOPPING ELEVATIONS - SPAN 3											
	℄ PIER 2	L/10 PT	2L/10 PT	3L/10 PT	4L/10 PT	5L/10 PT	6L/10 PT	7L/10 PT	8L/10 PT	9L/10 PT	℄ ABUT. 2
WEST GUTTER	90.131	90.150	90.168	90.184	90.199	901.213	901.225	90.236	90.246	90.254	90.264
HIGH POINT	90.170	90.189	90.207	90.2236	90.238	90.252	90.265	90.276	90.286	90.294	90.304
BL RT 395 SB	88.000	88.020	88.039	88.056	88.072	88.086	88.100	88.112	88.122	88.131	88.142
EAST GUTTER	87.477	87.498	87.517	87.534	87.550	87.565	87.579	87.591	87.601	87.611	87.621

NORTHBOUND - BRIDGE 03331

TOP OF CONCRETE TOPPING ELEVATIONS - SPAN 1											
	℄ ABUT. 1	L/10 PT	2L/10 PT	3L/10 PT	4L/10 PT	5L/10 PT	6L/10 PT	7L/10 PT	8L/10 PT	9L/10 PT	℄ PIER 1
WEST GUTTER	88.765	88.819	88.873	88.925	88.977	89.027	89.076	89.124	89.171	89.218	89.263
BL RT 395 NB	88.796	88.851	88.905	88.958	89.010	89.060	89.110	89.158	89.206	89.252	89.297
EAST GUTTER	86.061	86.141	86.198	86.254	86.309	86.363	86.415	86.467	86.517	86.567	86.615

TOP OF CONCRETE TOPPING ELEVATIONS - SPAN 2											
	℄ PIER 1	L/10 PT	2L/10 PT	3L/10 PT	4L/10 PT	5L/10 PT	6L/10 PT	7L/10 PT	8L/10 PT	9L/10 PT	℄ PIER 2
WEST GUTTER	89.263	89.339	89.413	89.483	89.550	89.613	89.673	89.730	89.784	89.834	89.880
BL RT 395 NB	89.297	89.373	89.446	89.516	89.582	89.646	89.705	89.762	89.815	89.865	89.912
EAST GUTTER	86.615	86.696	86.773	86.847	86.918	86.985	87.049	87.109	87.166	87.220	87.269

TOP OF CONCRETE TOPPING ELEVATIONS - SPAN 3											
	℄ PIER 2	L/10 PT	2L/10 PT	3L/10 PT	4L/10 PT	5L/10 PT	6L/10 PT	7L/10 PT	8L/10 PT	9L/10 PT	℄ ABUT. 2
WEST GUTTER	89.880	89.906	89.931	89.955	89.977	89.999	90.019	90.038	90.056	90.072	90.088
BL RT 395 NB	89.912	89.939	89.965	89.990	90.013	90.035	90.056	90.075	90.094	90.111	90.127
EAST GUTTER	87.269	87.298	87.326	87.352	87.377	87.400	87.423	87.444	87.463	87.482	87.499

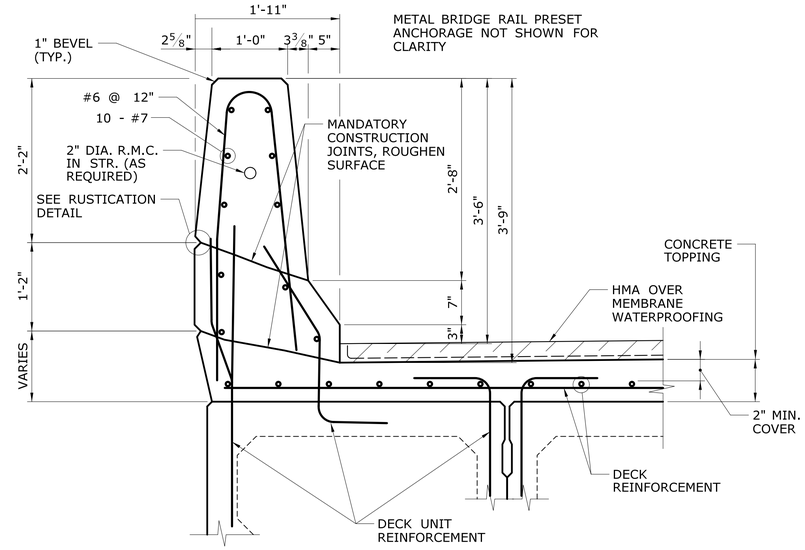

PARAPET DETAIL
SCALE: 1"=1'-0"

NOTES:

1. SEE APPROACH SLAB PLANS SHEETS FOR SLAB DETAILS.
2. SEE METAL BRIDGE RAIL (SOLID PANEL) SHEETS FOR RAIL DETAILS.

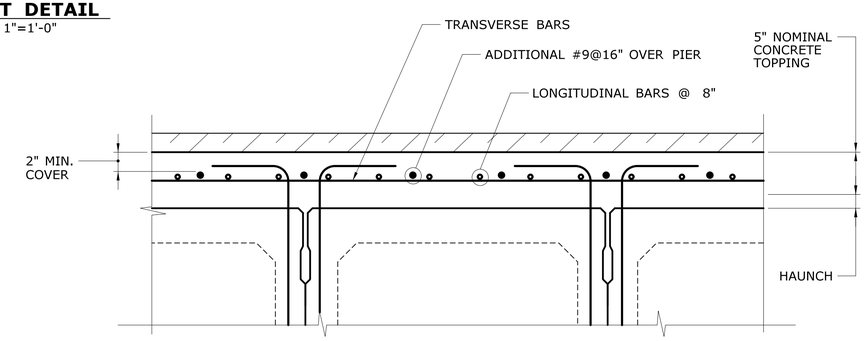

TYPICAL DECK SECTION
SCALE: 1"=1'-0"

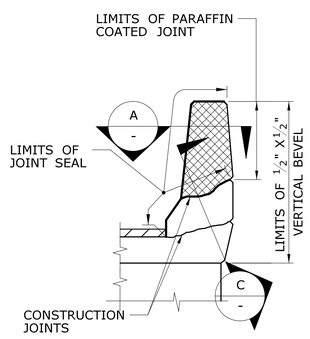

NEGATIVE MOMENT REGIONS
POURS 2 & 4

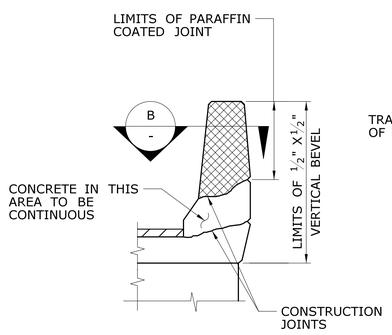

POSITIVE MOMENT REGIONS
POURS 1 & 3

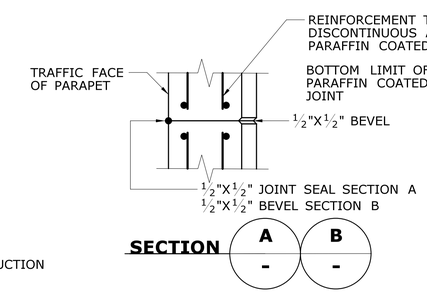

THE COST OF PARAFFIN COATED JOINTS IS INCIDENTAL TO THE CONTRACT ITEM CLASS F CONCRETE

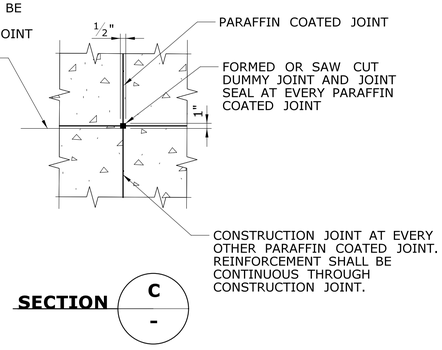

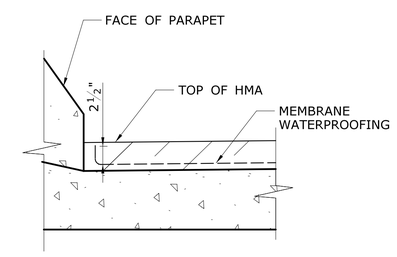

MEMBRANE WATERPROOFING AT GUTTER
SCALE: 1"=1'-0"

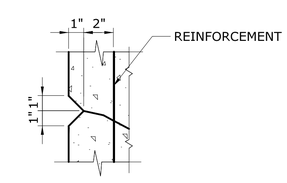

RUSTICATION DETAIL
NOT TO SCALE

STANDARD PARAFFIN COATED JOINT DETAILS

NOT TO SCALE

90% DESIGN REVIEW 03/09/2016

REV.	DATE	REVISION DESCRIPTION	SHEET NO.
-	-	-	-
-	-	-	-
-	-	-	-
-	-	-	-
-	-	-	-
-	-	-	-

THE INFORMATION, INCLUDING ESTIMATED QUANTITIES OF WORK, SHOWN ON THESE SHEETS IS BASED ON LIMITED INVESTIGATIONS BY THE STATE AND IS IN NO WAY WARRANTED TO INDICATE THE CONDITIONS OF ACTUAL QUANTITIES OF WORK WHICH WILL BE REQUIRED.

PLOTTED: 3/9/2016

DESIGNER/DRAFTER: K. HARLEY/C. RICH
CHECKED BY: B. BYRNE
SCALE AS NOTED

STATE OF CONNECTICUT
DEPARTMENT OF TRANSPORTATION

FILENAME: ...\SB_MSH_BR_0058-0332_DECK-DET.dgn

LOCHNER
H.W. LOCHNER, INC
55 Hartland Street
East Hartford, CT 06108

APPROVED BY: - DATE: -

PROJECT TITLE: RECONSTRUCTION OF ROUTE 349 NB AND SB OVER AMTRAK RAILROAD

TOWN: GROTON

DRAWING TITLE: DECK DETAILS

PROJECT NO. 058-332
DRAWING NO. S-33
SHEET NO.

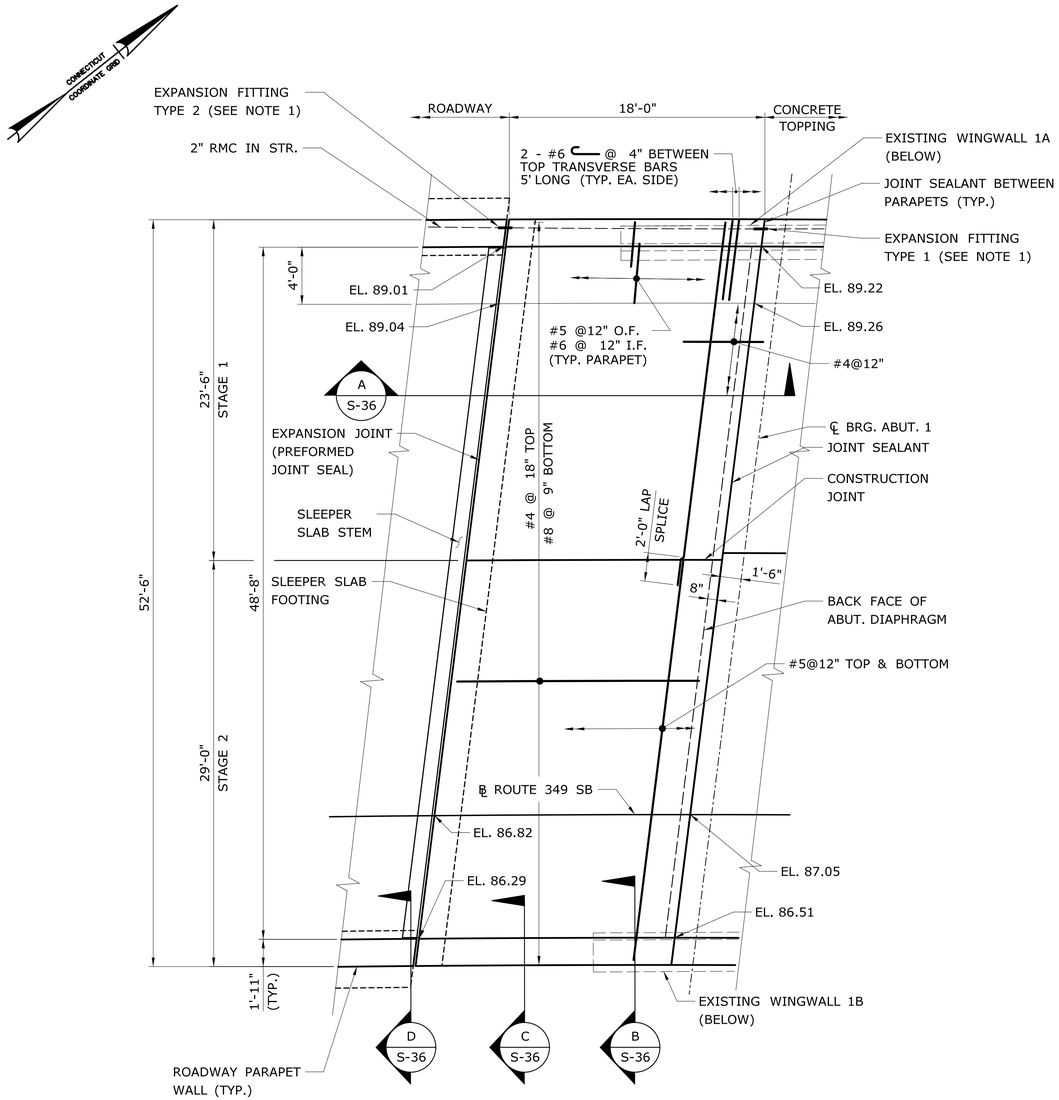

ABUT. 1 APPROACH SLAB PLAN

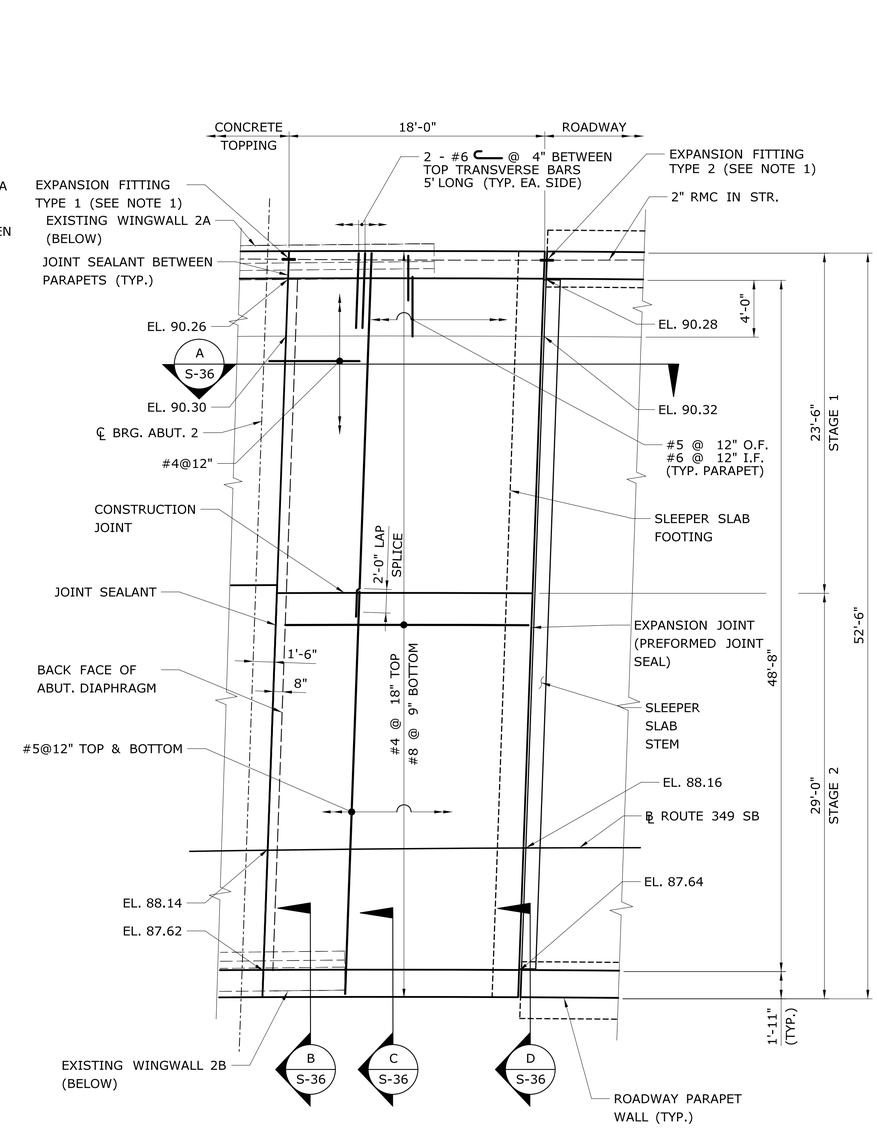

ABUT. 2 APPROACH SLAB PLAN

NOTES:

1. FOR EXPANSION FITTING DETAILS, SEE EXPANSION FITTINGS SHEET.
2. FOR JOINT SEALANT DETAIL, SEE APPROACH SLAB & RPW DETAILS SHEET.
3. FOR EXPANSION JOINT DETAILS, SEE EXPANSION JOINT DETAILS SHEET.
4. ELEVATIONS SHOWN ON PLAN VIEW ARE AT TOP OF CONCRETE.

SOUTHBOUND - BRIDGE 03330

90% DESIGN REVIEW 03/09/2016

REV.	DATE	REVISION DESCRIPTION	SHEET NO.
-	-	-	-
-	-	-	-
-	-	-	-
-	-	-	-
-	-	-	-
-	-	-	-

THE INFORMATION, INCLUDING ESTIMATED QUANTITIES OF WORK, SHOWN ON THESE SHEETS IS BASED ON LIMITED INVESTIGATIONS BY THE STATE AND IS IN NO WAY WARRANTED TO INDICATE THE CONDITIONS OF ACTUAL QUANTITIES OF WORK WHICH WILL BE REQUIRED.

PLOTTED: 3/9/2016

DESIGNER/DRAFTER: T. PARKER
CHECKED BY: B.BYRNE
NOT TO SCALE

STATE OF CONNECTICUT
DEPARTMENT OF TRANSPORTATION

FILENAME: ...\SB_MSH_BR_0058-0332_APP-SLAB-01.dgn

LOCHNER
H.W. LOCHNER, INC
55 Hartland Street
East Hartford, CT 06108

APPROVED BY: - DATE: -

PROJECT TITLE: RECONSTRUCTION OF ROUTE 349 NB AND SB OVER AMTRAK RAILROAD

TOWN: GROTON

DRAWING TITLE: 03330 - APPROACH SLAB PLANS

PROJECT NO. 058-332
DRAWING NO. S-34
SHEET NO.

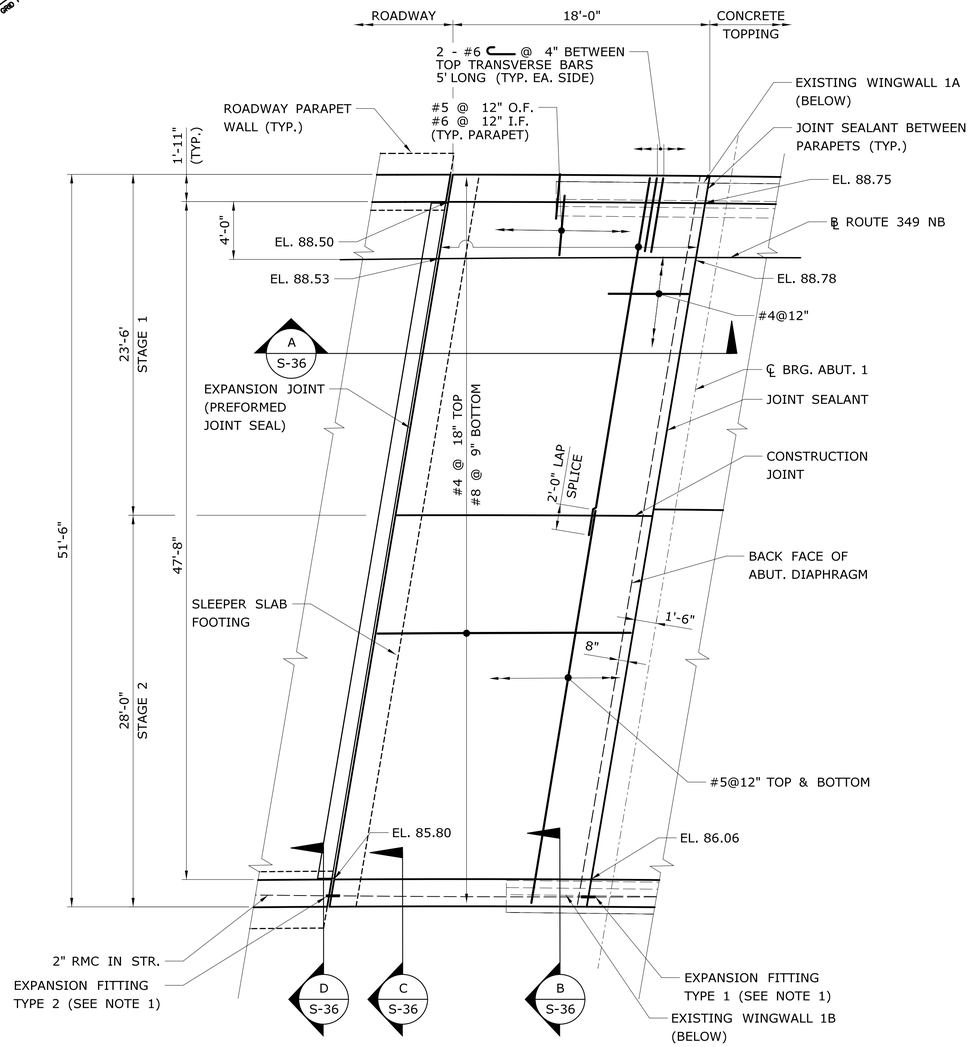

ABUT. 1 APPROACH SLAB PLAN

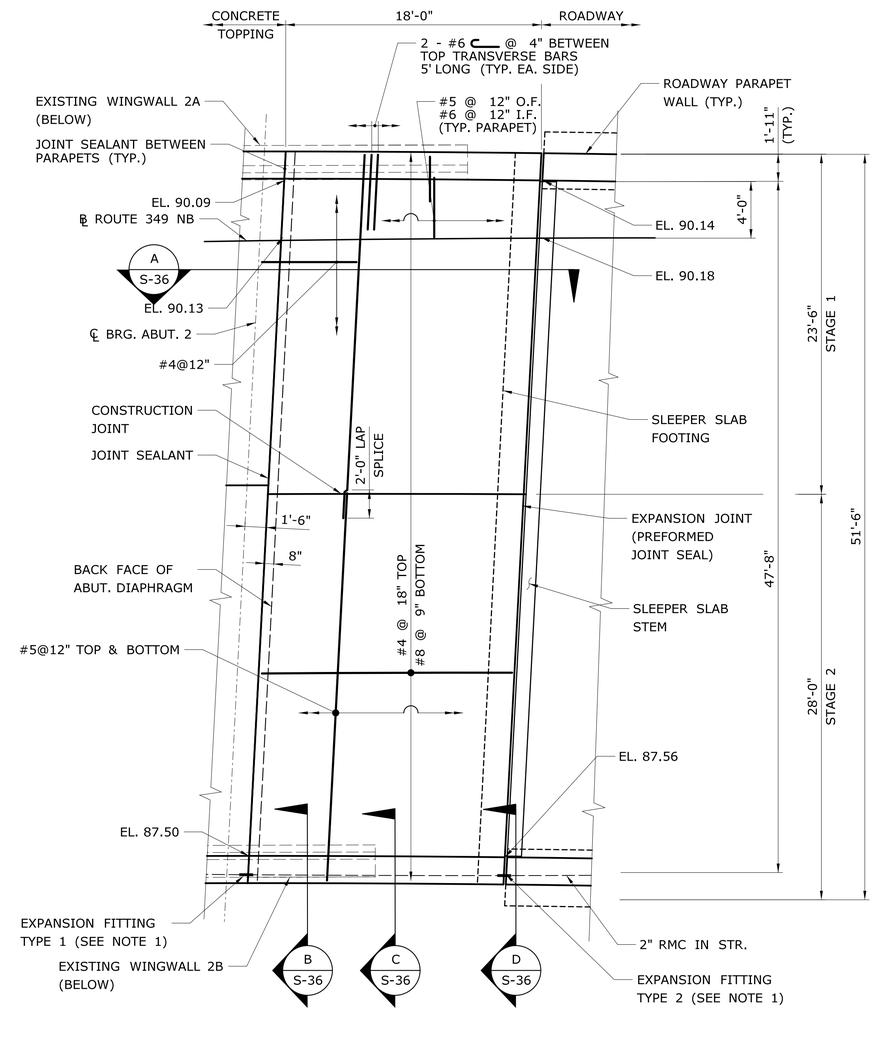

ABUT. 2 APPROACH SLAB PLAN

NORTHBOUND - BRIDGE 03331

NOTES:

1. FOR EXPANSION FITTING DETAILS, SEE EXPANSION FITTINGS SHEET.
2. FOR JOINT SEALANT DETAIL, SEE APPROACH SLAB & RPW DETAILS SHEET.
3. FOR EXPANSION JOINT DETAILS, SEE EXPANSION JOINT DETAILS SHEET.
4. ELEVATIONS SHOWN ON PLAN ARE AT TOP OF CONCRETE.

90% DESIGN REVIEW 03/09/2016

REV.	DATE	REVISION DESCRIPTION	SHEET NO.
-	-	-	-
-	-	-	-
-	-	-	-
-	-	-	-
-	-	-	-
-	-	-	-

THE INFORMATION, INCLUDING ESTIMATED QUANTITIES OF WORK, SHOWN ON THESE SHEETS IS BASED ON LIMITED INVESTIGATIONS BY THE STATE AND IS IN NO WAY WARRANTED TO INDICATE THE CONDITIONS OF ACTUAL QUANTITIES OF WORK WHICH WILL BE REQUIRED.

PLOTTED: 3/9/2016

DESIGNER/DRAFTER: T. PARKER
CHECKED BY: B.BYRNE
NOT TO SCALE

STATE OF CONNECTICUT
DEPARTMENT OF TRANSPORTATION

FILENAME: ..\SB_MSH_BR_0058-0332_APP-SLAB-02.dgn

LOCHNER
H.W. LOCHNER, INC
55 Hartland Street
East Hartford, CT 06108

APPROVED BY: - DATE: -

PROJECT TITLE: RECONSTRUCTION OF ROUTE 349 NB AND SB OVER AMTRAK RAILROAD

TOWN: GROTON

DRAWING TITLE: 03331 - APPROACH SLAB PLANS

PROJECT NO. 058-332
DRAWING NO. S-35
SHEET NO.

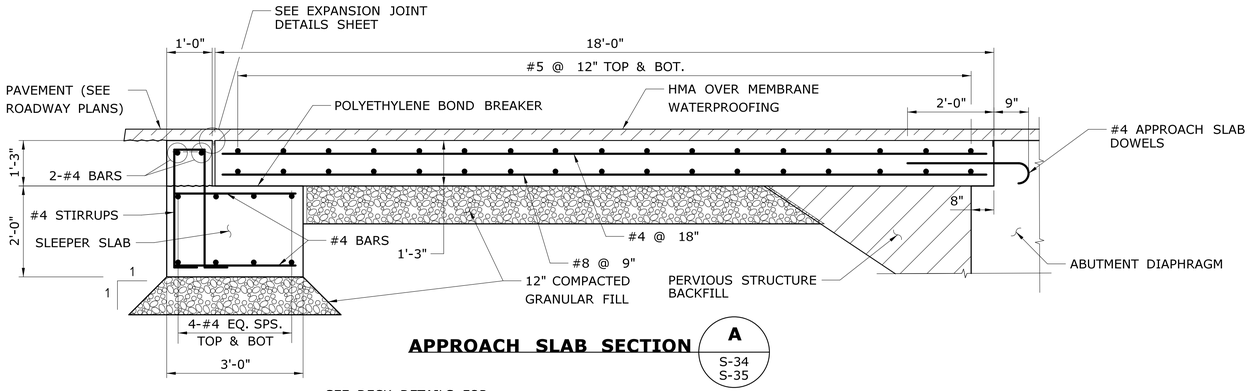

APPROACH SLAB SECTION A (S-34, S-35)

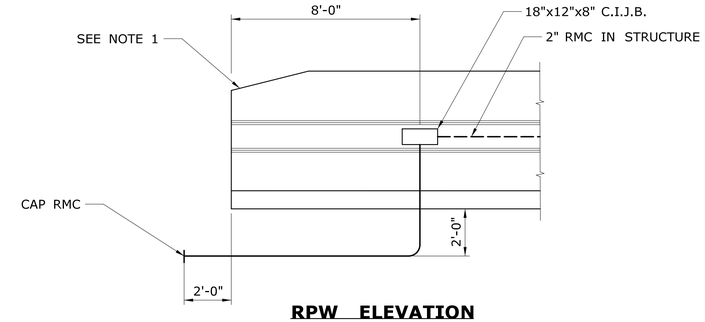

RPW ELEVATION

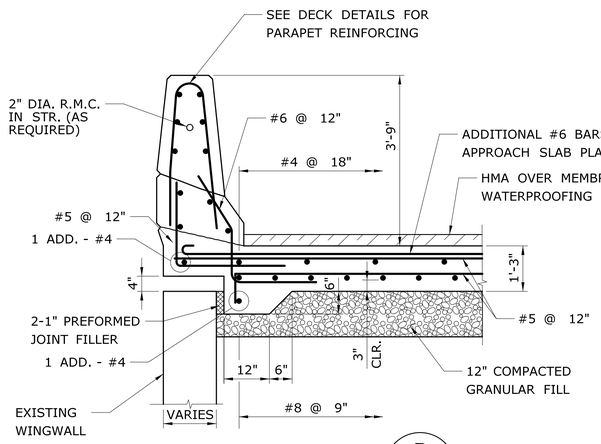

SECTION AT WINGWALL B (S-34, S-35)

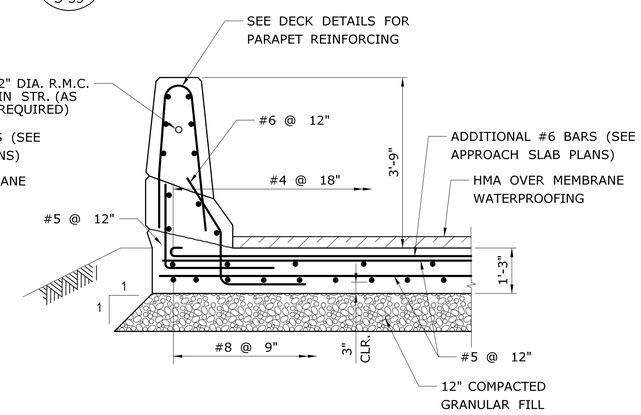

SECTION AT GRADE C (S-34, S-35)

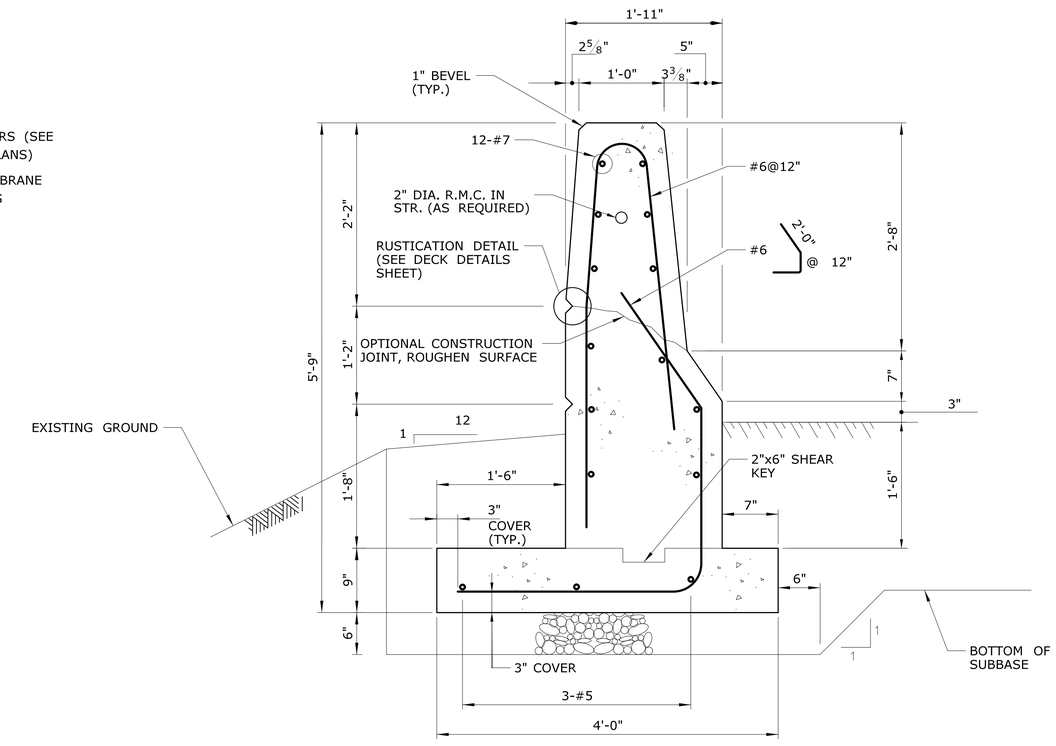

ROADWAY PARAPET WALL

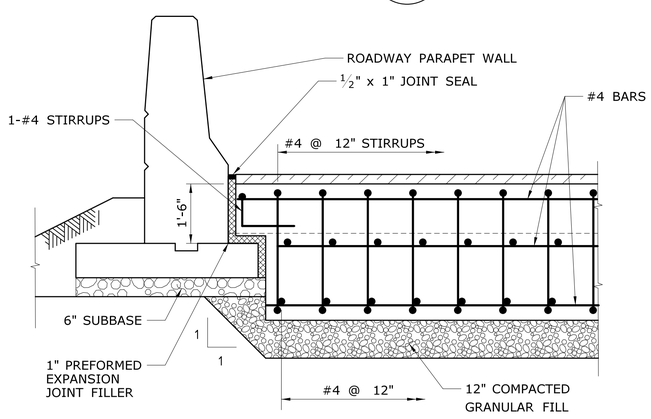

SLEEPER SLAB SECTION D (S-34, S-35)

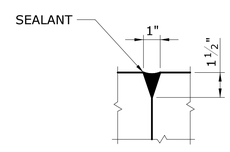

JOINT SEALANT DETAIL

NOTE:

1. FOR TAPERED END DETAILS, SEE MBR TYPE R-B 350 PARAPET ATTACHMENT SHEET.

90% DESIGN REVIEW 03/09/2016

REV.	DATE	REVISION DESCRIPTION	SHEET NO.
-	-	-	-
-	-	-	-
-	-	-	-
-	-	-	-
-	-	-	-
-	-	-	-

THE INFORMATION, INCLUDING ESTIMATED QUANTITIES OF WORK, SHOWN ON THESE SHEETS IS BASED ON LIMITED INVESTIGATIONS BY THE STATE AND IS IN NO WAY WARRANTED TO INDICATE THE CONDITIONS OF ACTUAL QUANTITIES OF WORK WHICH WILL BE REQUIRED.

PLOTTED: 3/9/2016

DESIGNER/DRAFTER: T. PARKER
CHECKED BY: B.BYRNE
NOT TO SCALE

STATE OF CONNECTICUT
DEPARTMENT OF TRANSPORTATION

FILENAME: ...\SB_MSH_BR_0058-0332_APP-SLAB-SEC.dgn

LOCHNER
H.W. LOCHNER, INC
55 Hartland Street
East Hartford, CT 06108

APPROVED BY: - DATE: -

PROJECT TITLE: RECONSTRUCTION OF ROUTE 349 NB AND SB OVER AMTRAK RAILROAD

TOWN: GROTON

DRAWING TITLE: APPROACH SLAB & RPW DETAILS

PROJECT NO. 058-332
DRAWING NO. S-36
SHEET NO.

PREFORMED JOINT SEAL SYSTEM NOTES:

1. PREFORMED JOINT SEALS SHALL BE INSTALLED AT ENDS OF APPROACH SLABS. REMOVE NEW BITUMINOUS CONCRETE OVERLAY AND MEMBRANE WATERPROOFING, INSTALL NEW ELASTOMERIC CONCRETE HEADER AND PREFORMED JOINT SEALER.
2. JOINTS SHALL BE SUPPLIED BY ONLY ONE MANUFACTURER.
3. THE JOINT DETAILS SHOWN ON THIS SHEET ARE BASED ON SILICOFLEX SF225 MANUFACTURED BY RJ WATSON, INC.
4. PREFORMED SEAL SHALL BE INSTALLED WHEN THE AMBIENT AIR TEMPERATURE IS BETWEEN 40° F AND 80° F.
5. THE ELASTOMERIC CONCRETE HEADER AND PREFORMED JOINT SEAL SHALL BE INSTALLED AFTER THE PAVEMENT HAS BEEN PLACED ON THE BRIDGE AND THE DESIGNATED AREA HAS BEEN SAW CUT AND REMOVED.
6. THE ELASTOMERIC CONCRETE HEADERS SHALL BE BEVELED $\frac{1}{8}$" ALONG THE OPENING OF THE JOINT AND SHALL BE RECESSED $\frac{1}{8}$" BELOW THE BITUMINOUS OVERLAY.
7. ANY PORTION OF THE PREFORMED JOINT SEAL IS PUNCTURED, RUPTURED, DEBONDED, DELIMINATED, OR DAMAGED IN ANY OTHER WAY SHALL BE REMOVED AND REPLACED BY THE CONTRACTOR AT NO ADDITIONAL COST TO THE STATE.
8. ALL WORK SHALL BE DONE IN ACCORDANCE WITH THE SPECIAL PROVISIONS FOR "MAINTENANCE AND PROTECTION OF TRAFFIC" AND "PROSECUTION AND PROGRESS" (SEE SPECIAL PROVISIONS).
9. PLACE BOND BREAKER OVER EXTENT SHOWN, PRIOR TO PLACING MEMBRANE WATERPROOFING. REMOVE BOND BREAKER BEFORE PLACING ELASTOMERIC CONCRETE HEADER.

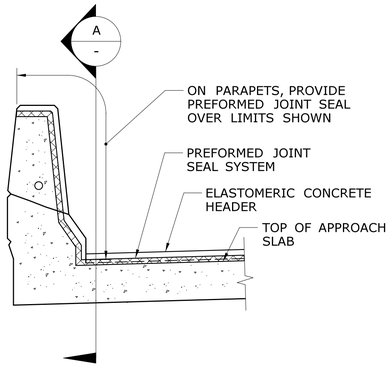

JOINT TREATMENT AT CONCRETE PARAPET

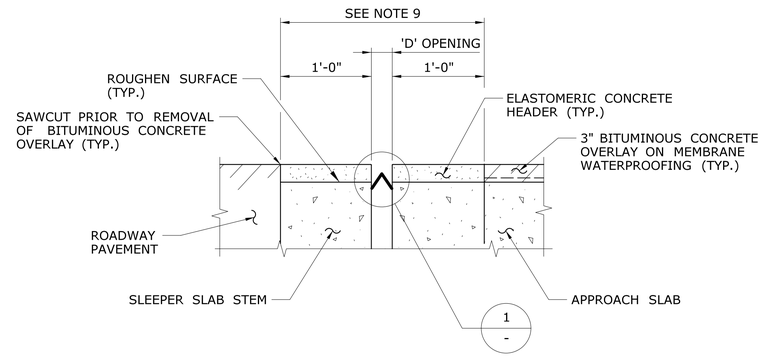

JOINT SECTION

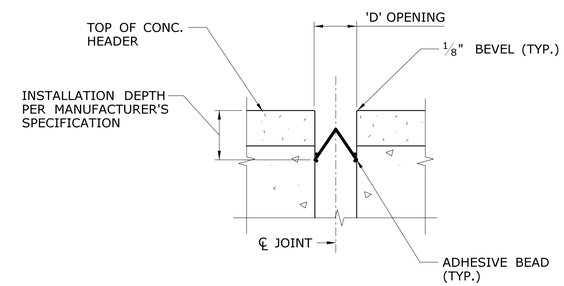

DETAIL 1 / -

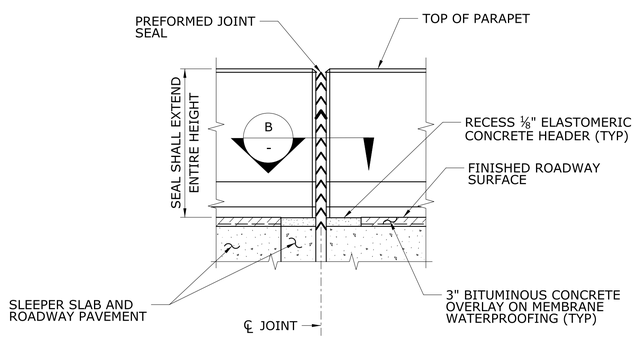

VIEW A / -

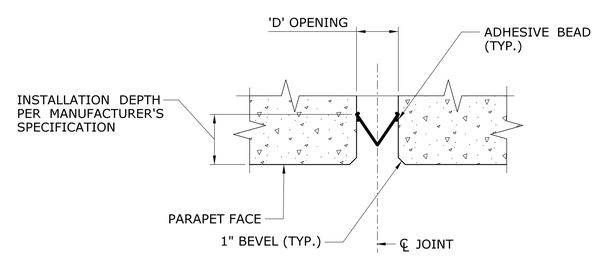

SECTION B / -

DIMENSION 'D' FOR VARIOUS INSTALLATION TEMPERATURES							
TEMPERATURE (° F)	-10°	40°	50°	60°	70°	80°	110°
JOINT OPENING (IN.)	2.46	2.08	2.00	1.92	1.85	1.77	1.54

NOTE: LINEAR INTERPOLATION ALLOWED FOR TEMPERATURES IN BETWEEN THOSE IN TABLE

90% DESIGN REVIEW 03/09/2016

REV.	DATE	REVISION DESCRIPTION	SHEET NO.
-	-	-	-
-	-	-	-
-	-	-	-
-	-	-	-
-	-	-	-
-	-	-	-

THE INFORMATION, INCLUDING ESTIMATED QUANTITIES OF WORK, SHOWN ON THESE SHEETS IS BASED ON LIMITED INVESTIGATIONS BY THE STATE AND IS IN NO WAY WARRANTED TO INDICATE THE CONDITIONS OF ACTUAL QUANTITIES OF WORK WHICH WILL BE REQUIRED.

PLOTTED: 3/9/2016

DESIGNER/DRAFTER: K. HARLEY/C. RICH
CHECKED BY: B. BYRNE
NOT TO SCALE

STATE OF CONNECTICUT
DEPARTMENT OF TRANSPORTATION

FILENAME: ...\SB_MSH_BR_0058-0332_EXP-JT-DET.dgn

LOCHNER
H.W. LOCHNER, INC
55 Hartland Street
East Hartford, CT 06108

APPROVED BY: - DATE: -

PROJECT TITLE: RECONSTRUCTION OF ROUTE 349 NB AND SB OVER AMTRAK RAILROAD

TOWN: GROTON

DRAWING TITLE: EXPANSION JOINT DETAILS

PROJECT NO. 058-332
DRAWING NO. S-37
SHEET NO.

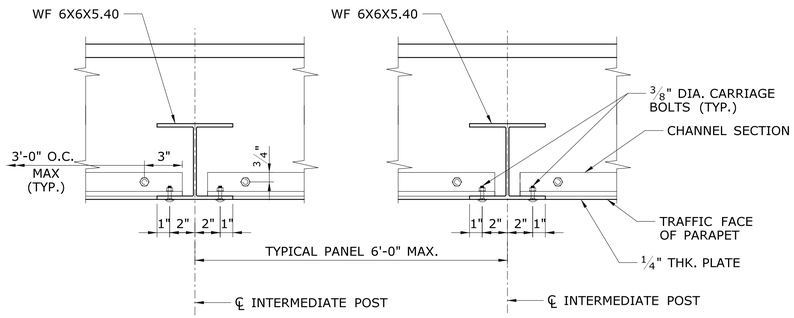

SECTION A -

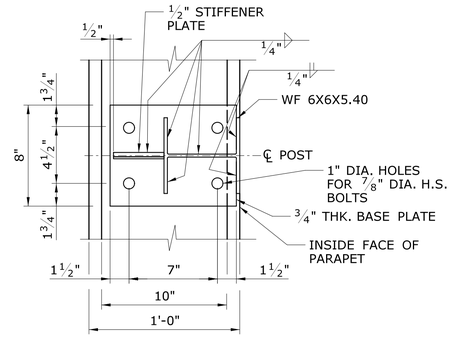

SECTION C -

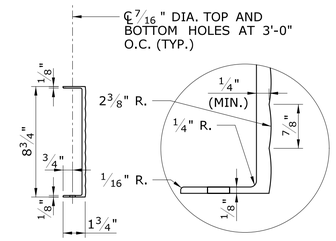

SPECIAL CHANNEL SECTION

AN ALTERNATE APPROVED EQUAL, OR BETTER CHANNEL SECTION MAY BE SUBSTITUTED WITH ENGINEER'S APPROVAL

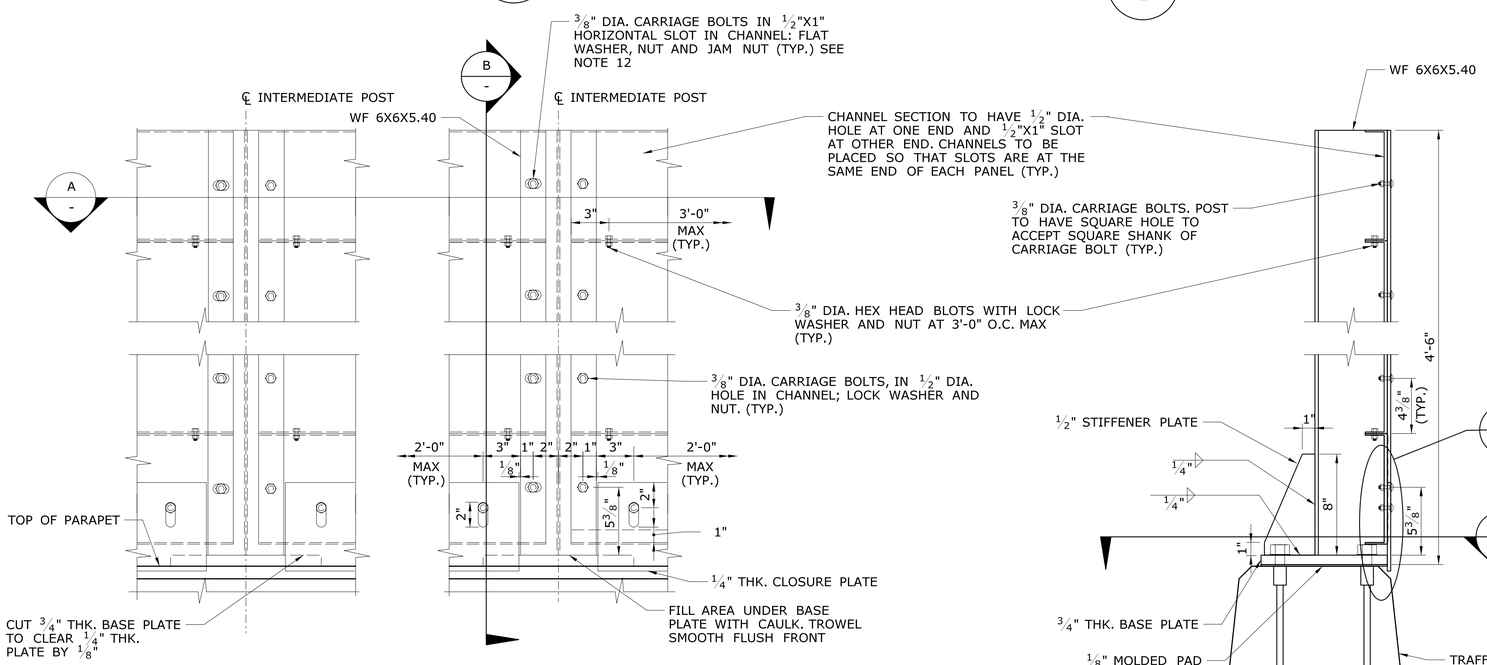

INTERMEDIATE PANEL ELEVATION

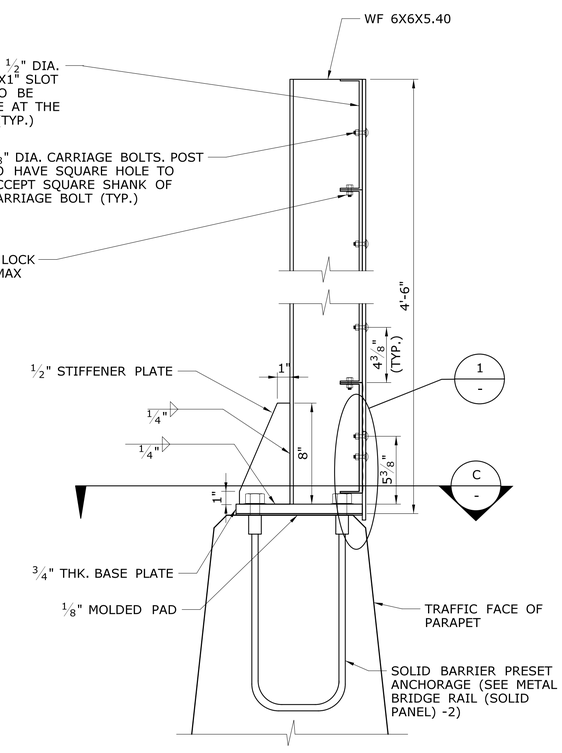

SECTION B -

NOTES:

1. ALL NEW STRUCTURAL COMPONENTS TO BE ANODIZED ALUMINUM DESIGNATION 6061-T6, EXCEPT AS NOTED.
2. ALUMINUM BOLTS, NUTS AND WASHERS SHALL BE OF ALUMINUM ALLOY 2024-T4: 6061-T6: 6062-T9, AND/OR 7075-T6, UNLESS NOTED OTHERWISE.
3. ALUMINUM RIVETS OR BLIND FASTENERS SHALL BE OF ALUMINUM ALLOY 6061-T6, 1100, 2024-T4, OR 7075, UNLESS OTHERWISE NOTED.
4. STAINLESS STEEL FASTENER HARDWARE, WHICH IS TO BE IN CONTACT WITH ALUMINUM, SHALL BE OF AISI TYPE 304 UNLESS OTHERWISE NOTED.
5. ORDINARY STEEL BOLTS, NUTS, AND WASHERS SHALL BE PER ASTM A307, UNLESS A325 IS SPECIFIED, AND ALL SHALL BE HOT DIP GALVANIZED, PER ASTM A153. IF A307 BOLTS ARE USED, LOCK WASHERS SHALL BE USED.
6. WELDING OF ALUMINUM SHALL CONFORM TO REQUIREMENT OF AWS "STRUCTURAL WELDING CODE", D1.2-(LATEST EDITION). ELECTRODES SHALL BE 4043 FILLER ALLOY.
7. WELDING OF STEEL SHALL CONFORM TO THE REQUIREMENT OF AWS "STRUCTURAL WELDING CODE", D1.1-(LATEST EDITION). ELECTRODES SHALL BE E-70XX SERIES.
8. ISOLATION PADS SHALL BE OF 1/8" THICK (MINIMUM), SOLID, RIGID SHEET PVC, CPVC, POLYETHYLENE, POLYPROPYLENE, OR HIGH IMPACT STYRENE.
9. ALL STEEL COMPONENTS SHALL BE PER ASTM-A709, HOT DIPPED GALVANIZED AFTER FABRICATION, AND AS SPECIFIED.
10. WHERE APPLICABLE, DOME HEAD OF CARRIAGE BOLTS SHALL BE ON TRAFFIC SIDE OF THE BARRIER.
11. WHERE CARRIAGE BOLTS CONNECT BARRIER COMPONENTS, COMPONENT NEAREST BOLT HEAD SHALL HAVE SQUARE HOLE SIZED TO ACCEPT SQUARE SHANK OF CARRIAGE BOLT.
12. UNLESS OTHERWISE NOTED, BOLT ASSEMBLY THROUGH HORIZONTAL SLOT SHALL BE LOCKED, BUT PERMIT SLIDING OF THE MEMBER. THIS SHALL BE DONE BY PLACING FLAT WASHER, THEN ONE NUT, SET FINGER TIGHT, AND THEN JAMMED IN THAT POSITION WITH SECOND NUT.
13. BOLTS AT STANDARD HOLES IN MEMBERS SHALL BE LOCKED TIGHT BY PLACING LOCK WASHER AND THEN ONE NUT, TURNED TIGHT AGAINST THE WASHER.
14. BOLT ASSEMBLIES IF USED, SHALL BE PER ASTM A325 AND HOT-DIP GALVANIZED, WITH NUTS PER A194, GRADE 2H, AND WASHERS AT BOLT HEAD AND NUT, PER F436. TIGHTEN NUT "SNUG TIGHT", PLUS NUMBER OF TURNS INDICATED FOR EACH DETAIL.
15. ALL POSTS SHALL BE FABRICATED AND ERECTED SO AS TO BE VERTICAL AND PARALLEL TO EACH OTHER, EXCEPT AS OTHERWISE NOTED.
16. CHANNELS AND PLATES BETWEEN POSTS SHALL GENERALLY BE DETAILED, FABRICATED, AND ERECTED TO FOLLOW THE LOCAL SLOPE OF THE BRIDGE PARAPET.
17. ANY NEW ALUMINUM COMPONENTS, WHICH ARE TO BE IN CONTACT WITH CONCRETE OR STEEL, SHALL BE PROTECTED AND PREPARED PER SPECIFICATIONS.
18. ALL DETAILING SHALL BE DESIGNED SO AS TO BE VANDAL RESISTANT.

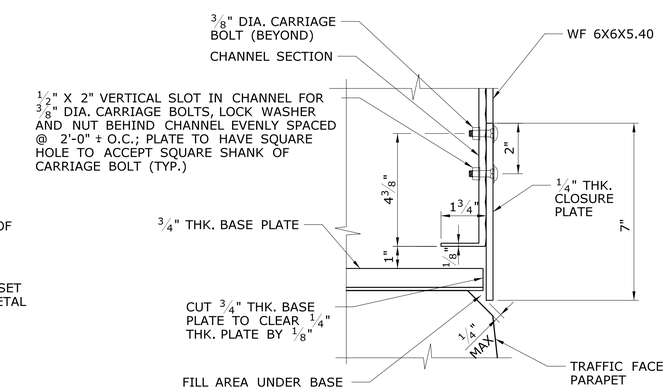

DETAIL 1 -

90% DESIGN REVIEW 03/09/2016

REV.	DATE	REVISION DESCRIPTION	SHEET NO.
-	-	-	-
-	-	-	-
-	-	-	-
-	-	-	-
-	-	-	-
-	-	-	-

THE INFORMATION, INCLUDING ESTIMATED QUANTITIES OF WORK, SHOWN ON THESE SHEETS IS BASED ON LIMITED INVESTIGATIONS BY THE STATE AND IS IN NO WAY WARRANTED TO INDICATE THE CONDITIONS OF ACTUAL QUANTITIES OF WORK WHICH WILL BE REQUIRED.

PLOTTED: 3/9/2016

DESIGNER/DRAFTER: T. PARKER
CHECKED BY: B.BYRNE
NOT TO SCALE

STATE OF CONNECTICUT
DEPARTMENT OF TRANSPORTATION

FILENAME: ...\SB_MSH_BR_0058-0332_MBR-01.dgn

LOCHNER
H.W. LOCHNER, INC
55 Hartland Street
East Hartford, CT 06108

APPROVED BY: - DATE: -

PROJECT TITLE: RECONSTRUCTION OF ROUTE 349 NB AND SB OVER AMTRAK RAILROAD

TOWN: GROTON

DRAWING TITLE: METAL BRIDGE RAIL (SOLID PANEL) - 1

PROJECT NO. 058-332
DRAWING NO. S-38
SHEET NO.

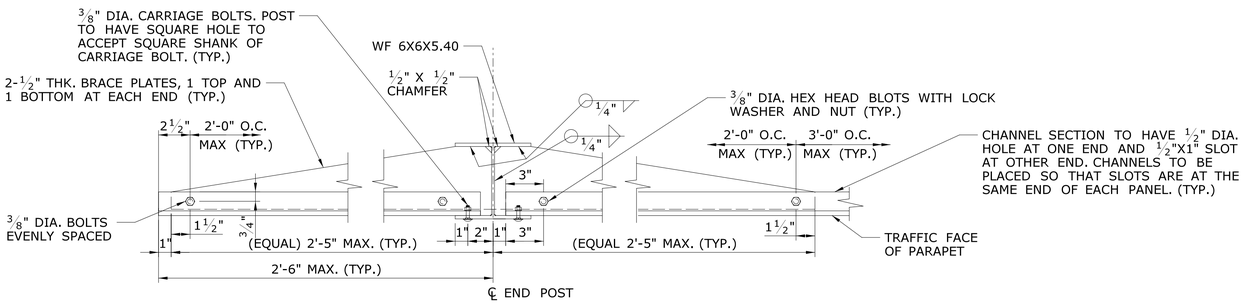

SECTION D -

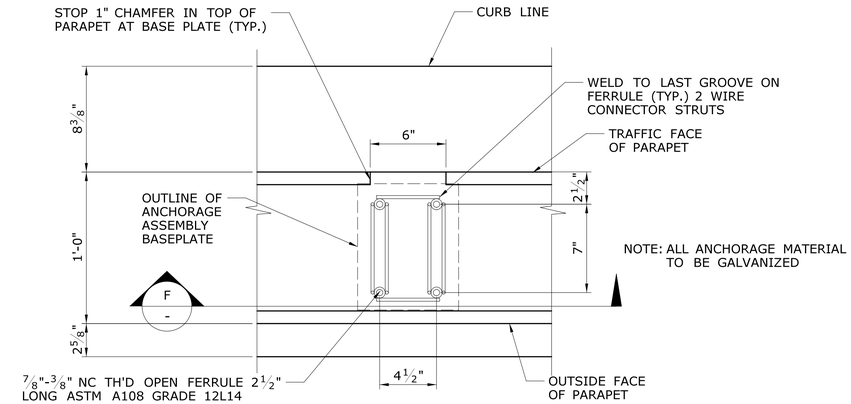

SOLID BARRIER PRESET ANCHORAGE

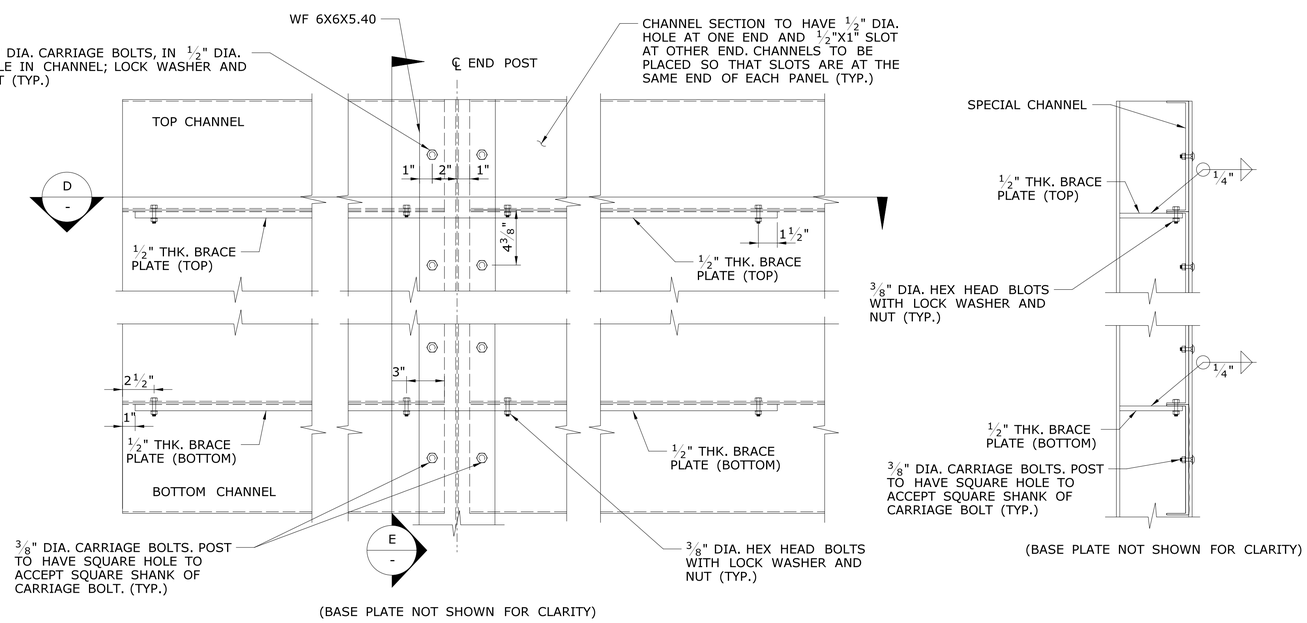

END PANEL ELEVATION

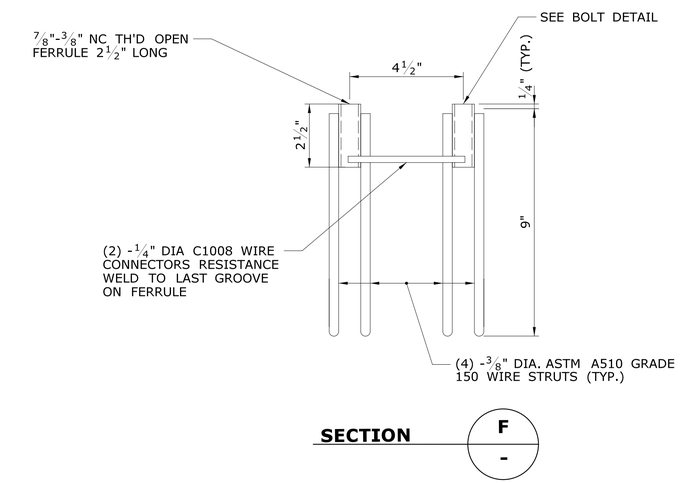

SECTION F -

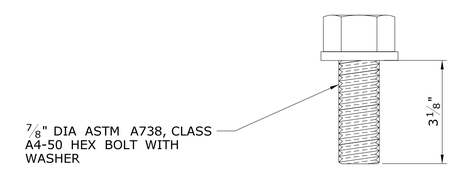

BOLT FOR PRESET ANCHORAGE

90% DESIGN REVIEW 03/09/2016

REV.	DATE	REVISION DESCRIPTION	SHEET NO.
-	-	-	-
-	-	-	-
-	-	-	-
-	-	-	-
-	-	-	-
-	-	-	-

THE INFORMATION, INCLUDING ESTIMATED QUANTITIES OF WORK, SHOWN ON THESE SHEETS IS BASED ON LIMITED INVESTIGATIONS BY THE STATE AND IS IN NO WAY WARRANTED TO INDICATE THE CONDITIONS OF ACTUAL QUANTITIES OF WORK WHICH WILL BE REQUIRED.

PLOTTED: 3/9/2016

DESIGNER/DRAFTER: T. PARKER
CHECKED BY: B.BYRNE
NOT TO SCALE

STATE OF CONNECTICUT
DEPARTMENT OF TRANSPORTATION

FILENAME: ...\SB_MSH_BR_0058-0332_MBR-02.dgn

LOCHNER
H.W. LOCHNER, INC
55 Hartland Street
East Hartford, CT 06108

APPROVED BY: - DATE: -

PROJECT TITLE:
RECONSTRUCTION OF ROUTE 349 NB AND SB OVER AMTRAK RAILROAD

TOWN: **GROTON**

DRAWING TITLE:
METAL BRIDGE RAIL (SOLID PANEL) - 2

PROJECT NO. **058-332**
DRAWING NO. **S-39**
SHEET NO.

NOTES:

1. SEE "DECK PLANS" DRAWING FOR POST SPACING.
2. INSTALL CHANNELS AND CLOSURE PLATES ALONG A STRAIGHT CHORD BETWEEN POSTS, GIVEN LARGE RADII OF BRIDGES.

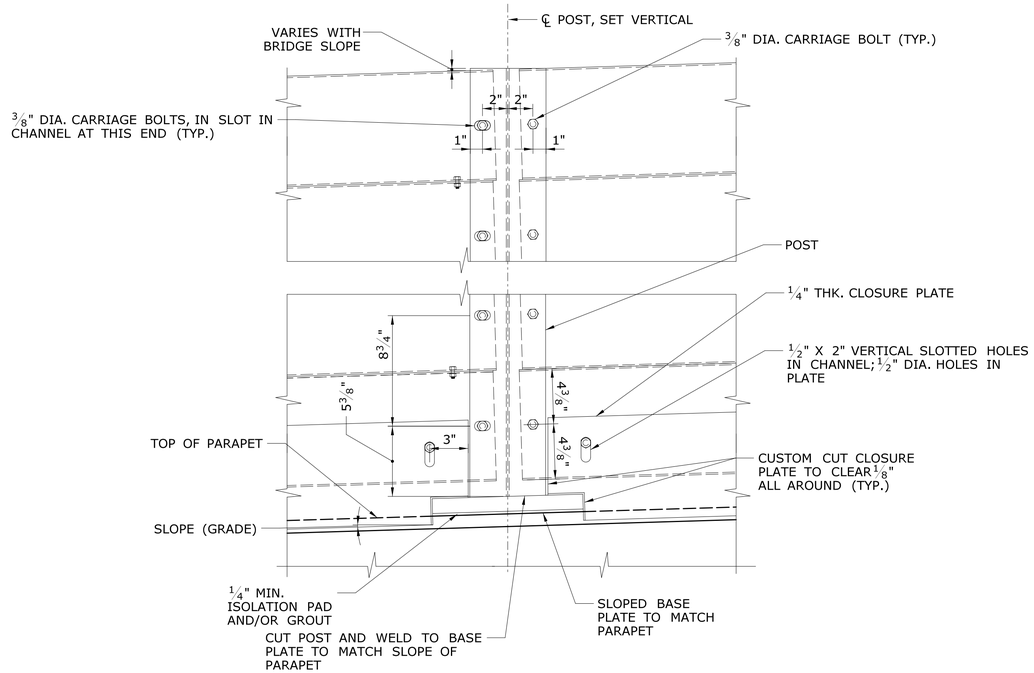

POST ELEVATION (OPTION 1)

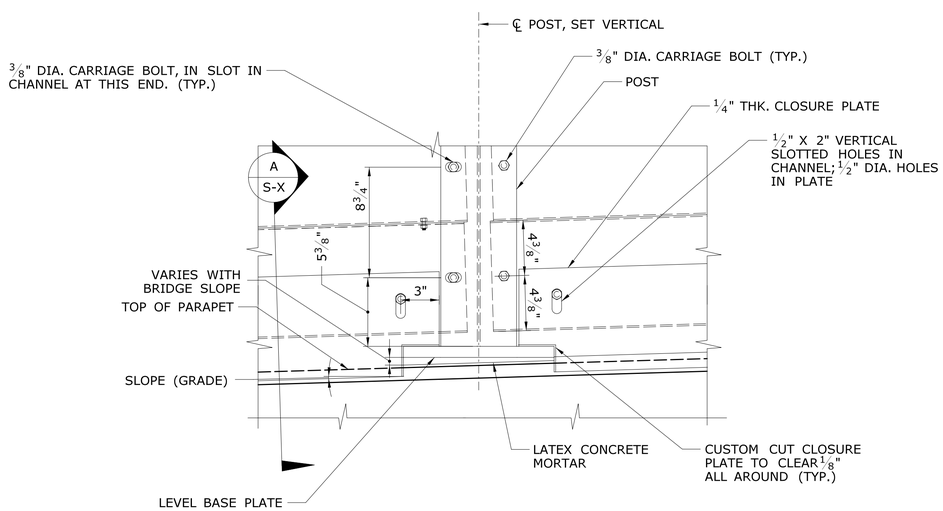

POST ELEVATION (OPTION 2)

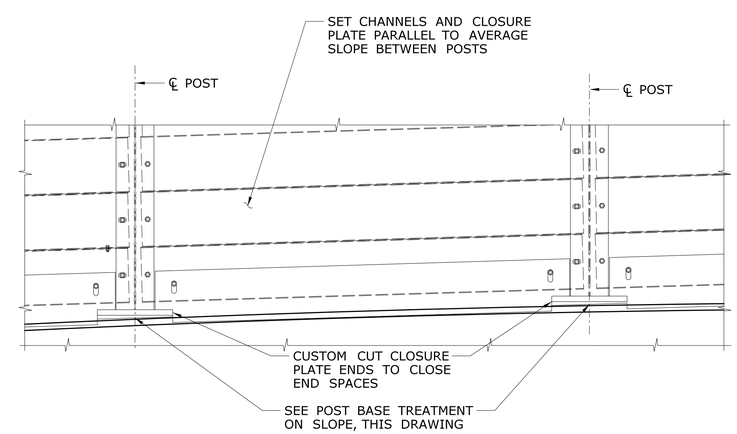

ELEVATION FOR CREST CURVE

POST BASE TREATMENT ON SLOPE

90% DESIGN REVIEW 03/09/2016

REV.	DATE	REVISION DESCRIPTION	SHEET NO.
-	-	-	-
-	-	-	-
-	-	-	-
-	-	-	-
-	-	-	-
-	-	-	-

THE INFORMATION, INCLUDING ESTIMATED QUANTITIES OF WORK, SHOWN ON THESE SHEETS IS BASED ON LIMITED INVESTIGATIONS BY THE STATE AND IS IN NO WAY WARRANTED TO INDICATE THE CONDITIONS OF ACTUAL QUANTITIES OF WORK WHICH WILL BE REQUIRED.

PLOTTED: 3/9/2016

DESIGNER/DRAFTER: T. PARKER
CHECKED BY: B. BYRNE
NOT TO SCALE

STATE OF CONNECTICUT
DEPARTMENT OF TRANSPORTATION

FILENAME: ...\SB_MSH_BR_0058-0332_MBR-03.dgn

LOCHNER
H.W. LOCHNER, INC
55 Hartland Street
East Hartford, CT 06108

APPROVED BY: - DATE: -

PROJECT TITLE: RECONSTRUCTION OF ROUTE 349 NB AND SB OVER AMTRAK RAILROAD

TOWN: GROTON

DRAWING TITLE: METAL BRIDGE RAIL (SOLID PANEL) - 3

PROJECT NO. 058-332
DRAWING NO. S-40
SHEET NO.

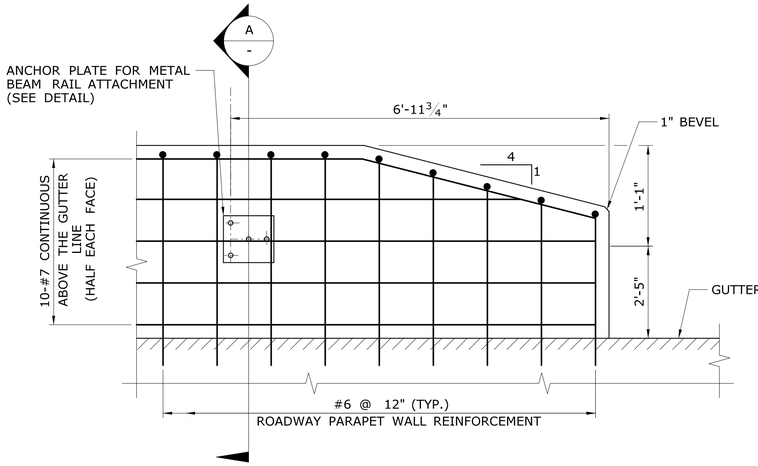

PARAPET DETAIL LEADING END

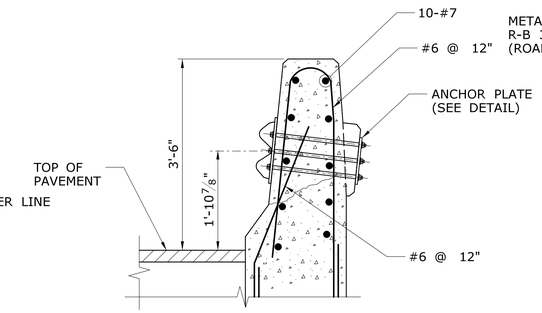

SECTION A -

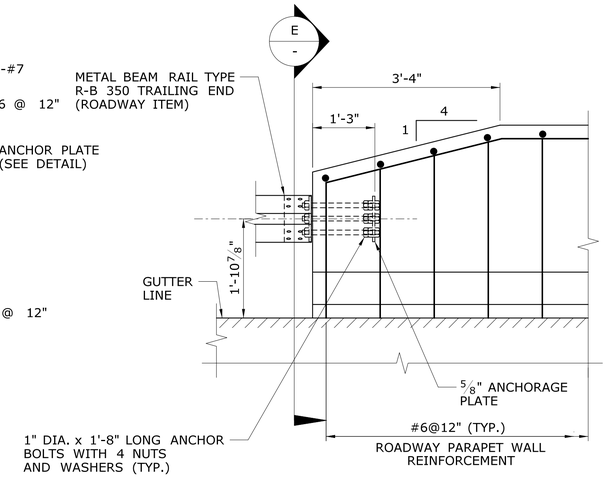

PARAPET DETAIL TRAILING END

NOTES

1. FOR LOCATION AND TYPE OF R-B 350 ATTACHMENTS, SEE GENERAL PLANS.
2. THE LEADING END ATTACHMENT FOR THE METAL BEAM RAIL SHALL BE PAID FOR UNDER THE ITEM "R-B 350 BRIDGE ATTACHMENT - TO SAFETY SHAPE PARAPET".
3. THE TRAILING END ATTACHMENT FOR THE METAL BEAM RAIL SHALL BE PAID FOR UNDER THE ITEM "R-B 350 BRIDGE ATTACHMENT - TRAILING END".
4. STEEL PLATES SHALL CONFORM TO THE REQUIREMENTS OF ASTM A36. THE STEEL PLATES SHALL BE HOT-DIP GALVANIZED IN ACCORDANCE WITH THE REQUIREMENTS OF ASTM A123.
5. THE ANCHOR BOLTS SHALL CONFORM TO THE REQUIREMENTS OF ASTM A325. MECHANICALLY GALVANIZED AND IN ACCORDANCE WITH ASTM A153.
6. NUTS SHALL BE HEAVY HEX AND CONFORM TO THE REQUIREMENTS OF ASTM A563 PROPERTY CLASS 10S.
7. WASHERS SHALL BE CIRCULAR, HARDENED WASHERS CONFORMING TO THE REQUIREMENTS OF ASTM F436.
8. 1" DIA. PIPE SHALL CONFORM TO ASTM A53 GRADE B OR ASTM A501 AND SHALL BE GALVANIZED IN ACCORDANCE WITH THE REQUIREMENTS OF ASTM A123.
9. DIMENSIONS TAKEN FROM TOP OF PARAPET TO INTERSECTION OF ANCHOR BOLT CENTERLINE AND FACE OF BUILD-OUT.

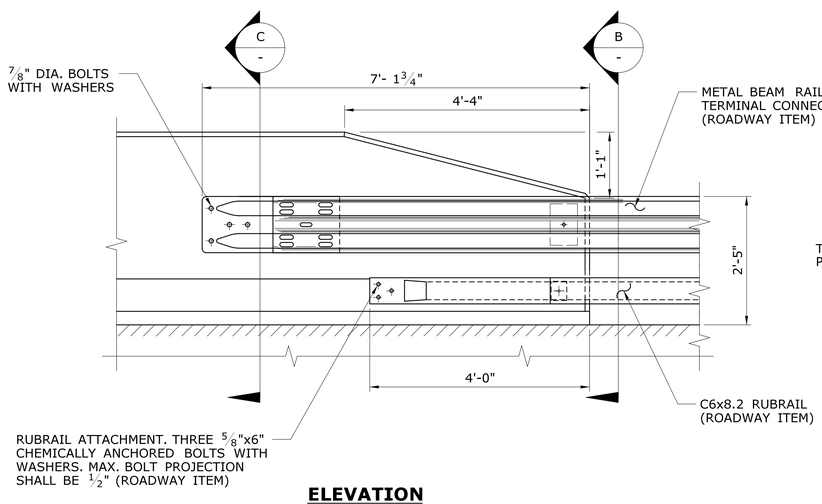

ELEVATION

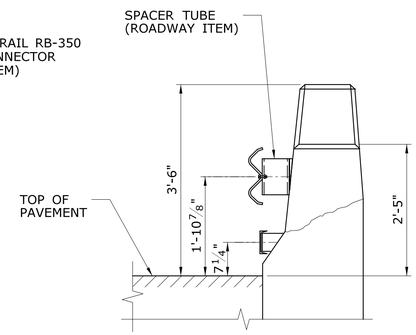

SECTION B -

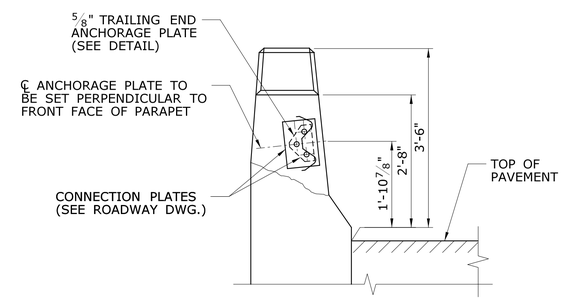

SECTION E -

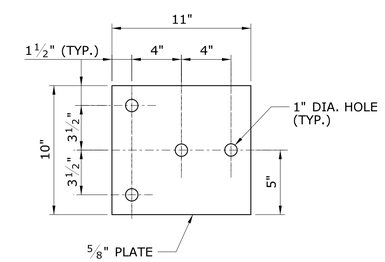

LEADING END ANCHOR PLATE DETAIL

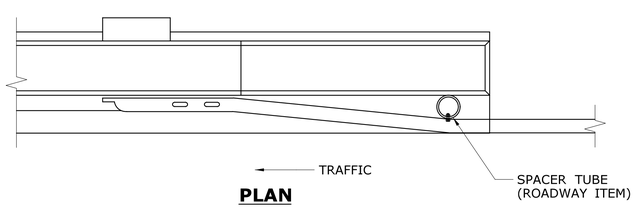

PLAN

LEADING END R-B 350 RAIL ATTACHMENT

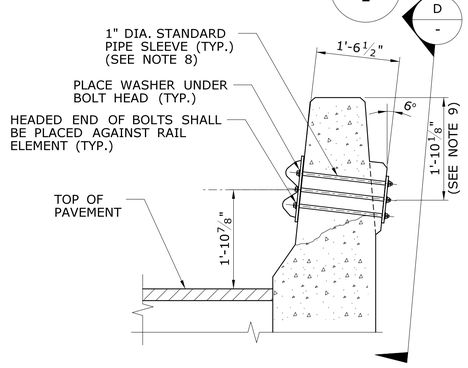

SECTION C -

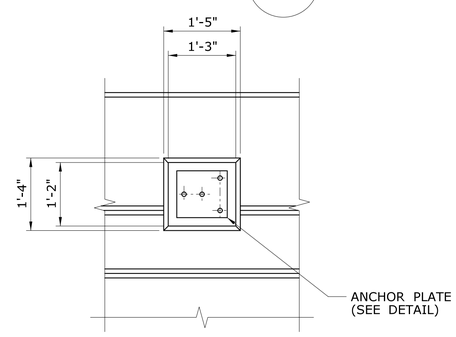

SECTION D -

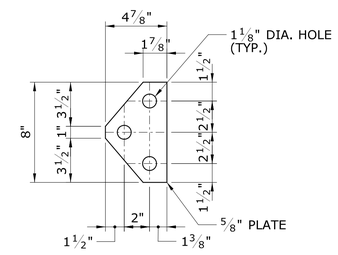

TRAILING END ANCHOR PLATE DETAIL

90% DESIGN REVIEW 03/09/2016

REV.	DATE	REVISION DESCRIPTION	SHEET NO.
-	-	-	-
-	-	-	-
-	-	-	-
-	-	-	-
-	-	-	-
-	-	-	-

THE INFORMATION, INCLUDING ESTIMATED QUANTITIES OF WORK, SHOWN ON THESE SHEETS IS BASED ON LIMITED INVESTIGATIONS BY THE STATE AND IS IN NO WAY WARRANTED TO INDICATE THE CONDITIONS OF ACTUAL QUANTITIES OF WORK WHICH WILL BE REQUIRED.

PLOTTED: 3/9/2016

DESIGNER/DRAFTER: K. HARLEY/C. RICH
CHECKED BY: B. BYRNE
NOT TO SCALE

STATE OF CONNECTICUT
DEPARTMENT OF TRANSPORTATION

FILENAME: ...\SB_MSH_BR_0058-0332_MBR-04.dgn

LOCHNER
H.W. LOCHNER, INC
55 Hartland Street
East Hartford, CT 06108

APPROVED BY: - DATE: -

PROJECT TITLE: RECONSTRUCTION OF ROUTE 349 NB AND SB OVER AMTRACK RAILROAD

TOWN: GROTON

DRAWING TITLE: MBR TYPE R-B 350 PARAPET ATTACHMENT

PROJECT NO. 058-332
DRAWING NO. S-41
SHEET NO.

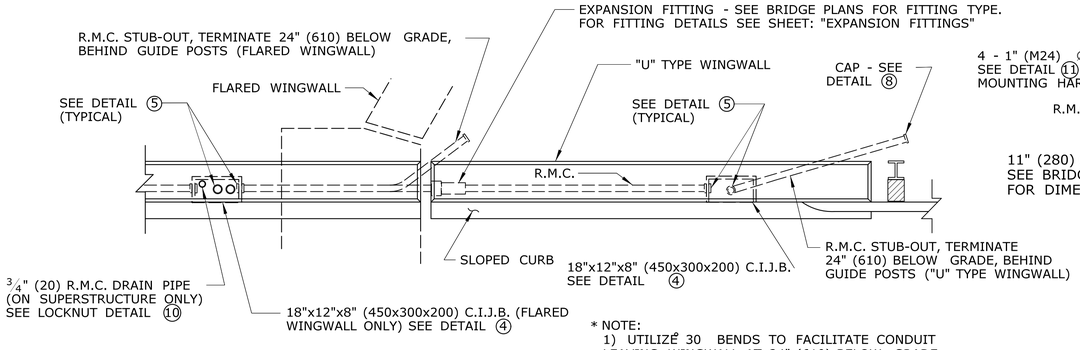

* NOTE:
1) UTILIZE 30° BENDS TO FACILITATE CONDUIT LEAVING WINGWALL AT 24" (610) BELOW GRADE
2) CONDUIT BENDS SHALL HAVE A RADIUS OF NOT LESS THAN 6 TIMES THE TRADE SIZE OF THE CONDUIT

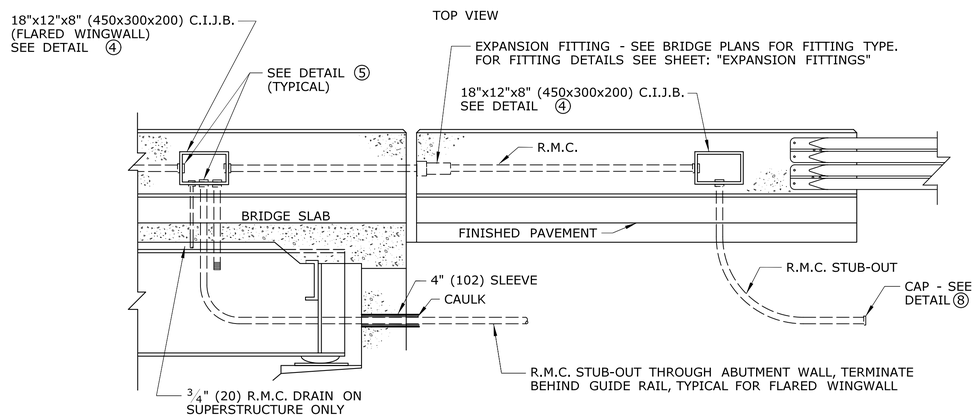

① CONDUIT PARAPET TO FILL

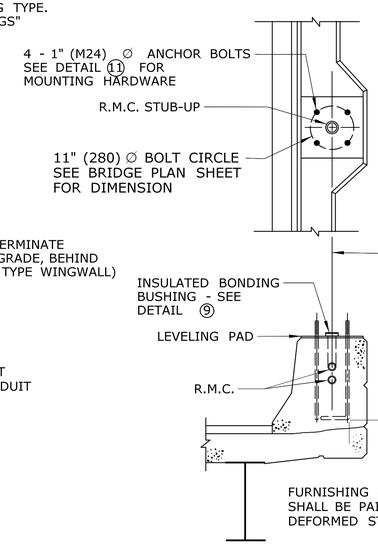

NOTE:
FOR LEVELING PAD DETAILS, PARAPET DETAILS AND REINFORCING AT LIGHT STANDARD - SEE APPROPRIATE STRUCTURE SHEETS

BOLT ∅	A	B
1" (M24)	36" (915)	4" (102)
1¼" (M30)	42" (1067)	6" (152)

③ PARAPET TREATMENT AT LIGHT STANDARD

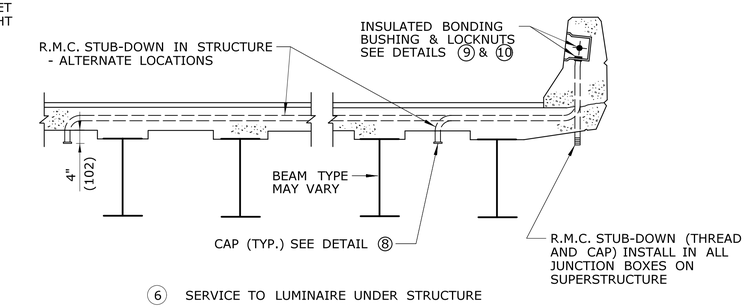

⑥ SERVICE TO LUMINAIRE UNDER STRUCTURE

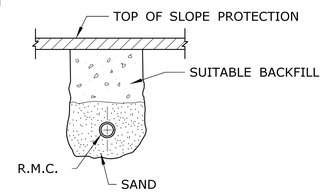

⑦ RIGID METAL CONDUIT
UNDER SLOPE PROTECTION

⑧ MALLEABLE IRON CAP

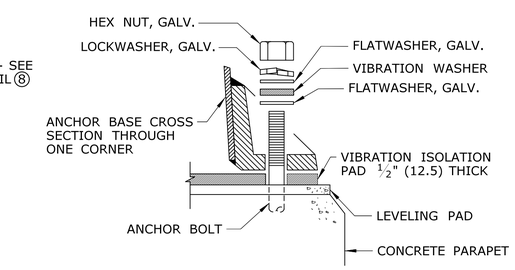

⑪ ANCHOR BASE LIGHT STANDARD
MOUNTING HARDWARE

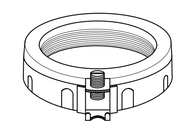

⑨ INSULATED BONDING BUSHING
WITH GROUND LUG

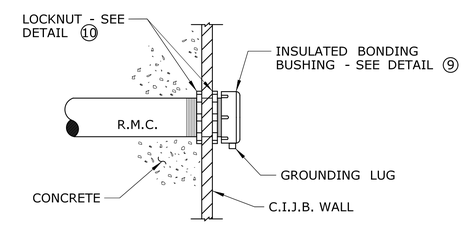

⑤ CONDUIT ENTRY INTO CAST
IRON JUNCTION BOX

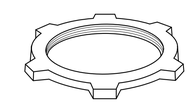

⑩ LOCKNUT

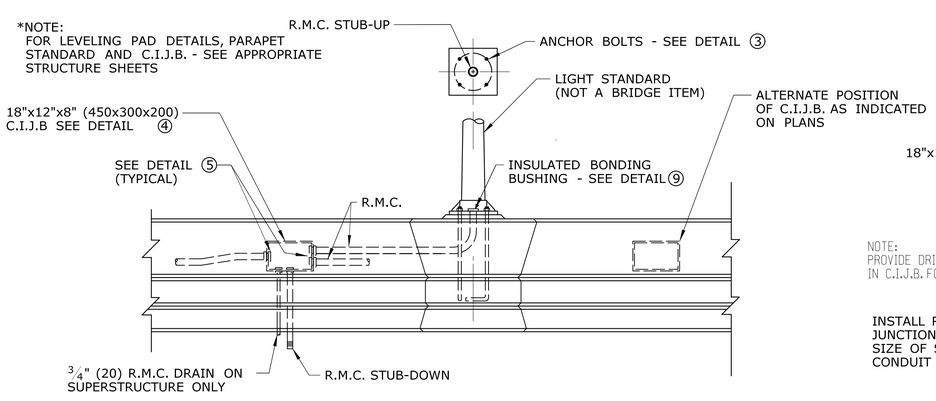

② LIGHT STANDARD ON PARAPET WALL

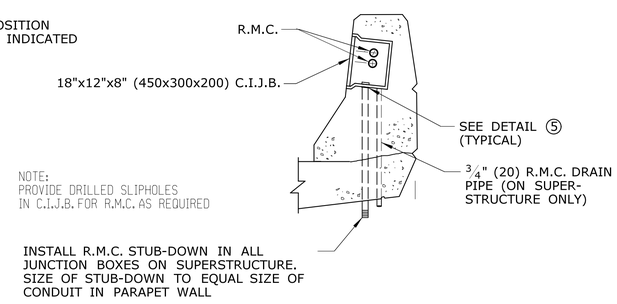

NOTE:
PROVIDE DRILLED SLIPHOLES
IN C.I.J.B. FOR R.M.C. AS REQUIRED

④ JUNCTION BOX INSTALLATION

NOTES:

1) SEE BRIDGE PLANS FOR SPECIFIC CONSTRUCTION DETAILS AND LOCATIONS.
2) DIAMETER OF RIGID METAL CONDUIT SHALL BE AS CALLED FOR ON BRIDGE PLANS.
3) R.M.C. STUB-UPS TO LIGHT STANDARDS, STUB-OUTS TO FILL, AND STUB-DOWNS TO UNDERBRIDGE LUMINAIRES, SHALL BE OF THE SAME DIAMETER AS THE R.M.C. CAST IN THE PARAPET WALL.
4) INSTALL ONE R.M.C. STUB-DOWN IN ALL JUNCTION BOXES ON SUPERSTRUCTURE. ADDITIONAL STUB-DOWNS SHALL BE INSTALLED WHERE INDICATED ON THE PLANS.
5) USE APPLICABLE DETAILS.

90% DESIGN REVIEW 03/09/2016

REV.	DATE	REVISION DESCRIPTION	SHEET NO.
-	-	-	-
-	-	-	-
-	-	-	-
-	-	-	-
-	-	-	-
-	-	-	-

THE INFORMATION, INCLUDING ESTIMATED QUANTITIES OF WORK, SHOWN ON THESE SHEETS IS BASED ON LIMITED INVESTIGATIONS BY THE STATE AND IS IN NO WAY WARRANTED TO INDICATE THE CONDITIONS OF ACTUAL QUANTITIES OF WORK WHICH WILL BE REQUIRED.

PLOTTED: 3/9/2016

DESIGNER/DRAFTER: MSB
CHECKED BY: SJN
SCALE AS NOTED

STATE OF CONNECTICUT
DEPARTMENT OF TRANSPORTATION

FILENAME: ...\SB_MSH_BR_0058-0332_ELEC-DET.dgn

LOCHNER
H.W. LOCHNER, INC
55 Hartland Street
East Hartford, CT 06108

APPROVED BY: - DATE: -

PROJECT TITLE:
RECONSTRUCTION OF ROUTE 349 NB AND SB OVER AMTRACK RAILROAD

TOWN: **GROTON**

DRAWING TITLE: **ELECTRICAL DETAILS**

PROJECT NO. **058-332**
DRAWING NO. **S-42**
SHEET NO.

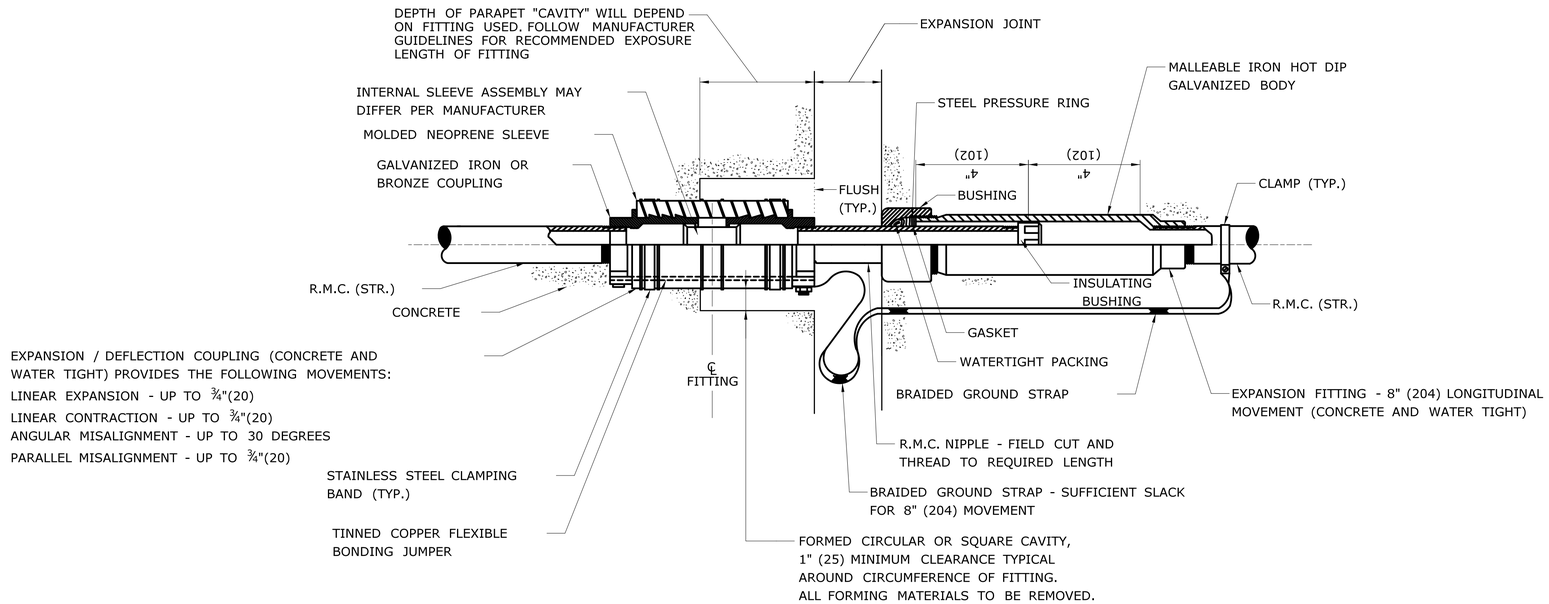

EXPANSION FITTING TYPE 2

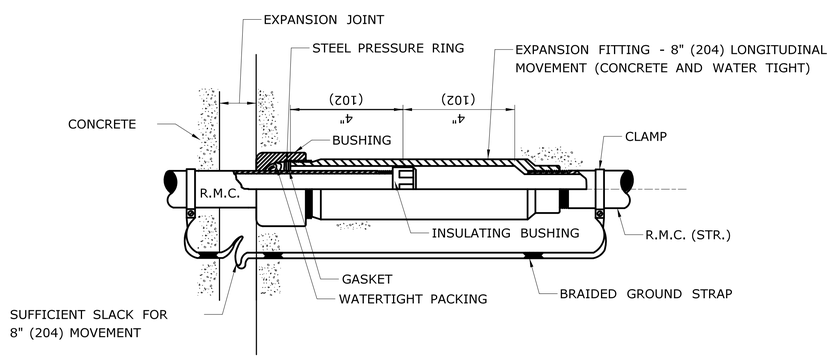

EXPANSION FITTING TYPE 1

NOTES:

1) TYPE 1 CONDUIT EXPANSION FITTINGS SHALL BE REQUIRED AT ALL EXPANSION JOINT LOCATIONS IN CAST-IN-PLACE CONCRETE RETAINING WALLS SHARING COMMON PILE SUPPORTED FOOTINGS.

2) TYPE 2 CONDUIT EXPANSION FITTINGS SHALL BE REQUIRED AT ALL BRIDGE EXPANSION JOINTS. TYPE 2 CONDUIT EXPANSION FITTINGS ARE SUITABLE AT ALL BRIDGE JOINT LOCATIONS WITH TOTAL LONGITUDINAL THERMAL MOVEMENTS OF 8" (200mm) OR LESS AND TRANSVERSE MOVEMENTS OF 1.5" (38mm) OR LESS.

3) TYPE 2 CONDUIT EXPANSION FITTINGS SHALL BE REQUIRED AT ALL EXPANSION JOINT LOCATIONS IN CAST-IN-PLACE RETAINING WALLS WHERE THE FOUNDATION TRANSITIONS FROM A PILE SUPPORTED FOUNDATION TO A SPREAD FOOTING FOUNDATION.

4) ORIENTATION OF CONDUIT EXPANSION FITTING SHALL BE FIELD DETERMINED.

90% DESIGN REVIEW 03/09/2016

REV.	DATE	REVISION DESCRIPTION	SHEET NO.
-	-	-	-
-	-	-	-
-	-	-	-
-	-	-	-
-	-	-	-
-	-	-	-

THE INFORMATION, INCLUDING ESTIMATED QUANTITIES OF WORK, SHOWN ON THESE SHEETS IS BASED ON LIMITED INVESTIGATIONS BY THE STATE AND IS IN NO WAY WARRANTED TO INDICATE THE CONDITIONS OF ACTUAL QUANTITIES OF WORK WHICH WILL BE REQUIRED.

PLOTTED: 3/9/2016

DESIGNER/DRAFTER: MSB
CHECKED BY: JA
NOT TO SCALE

STATE OF CONNECTICUT
DEPARTMENT OF TRANSPORTATION

FILENAME: ...\SB_MSH_BR_0058-0332_EXP-FIT.dgn

LOCHNER
H.W. LOCHNER, INC
55 Hartland Street
East Hartford, CT 06108

APPROVED BY: DATE: -

PROJECT TITLE: RECONSTRUCTION OF ROUTE 349 NB AND SB OVER AMTRAK RAILROAD

TOWN: GROTON

DRAWING TITLE: EXPANSION FITTINGS

PROJECT NO. 058-332

DRAWING NO. S-43

SHEET NO.

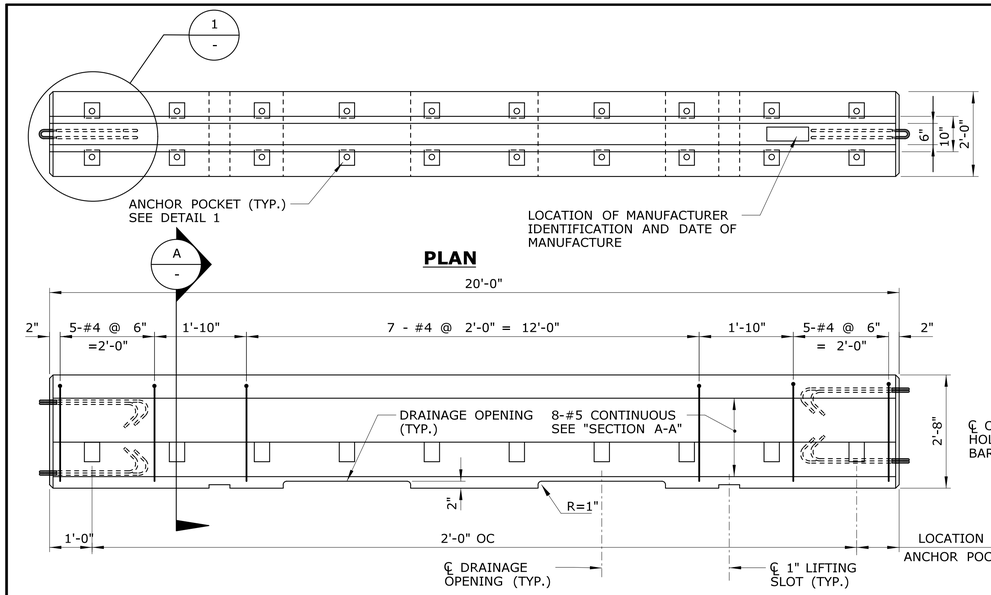

PLAN

ELEVATION
PRECAST BARRIER UNIT (STRUCTURE)

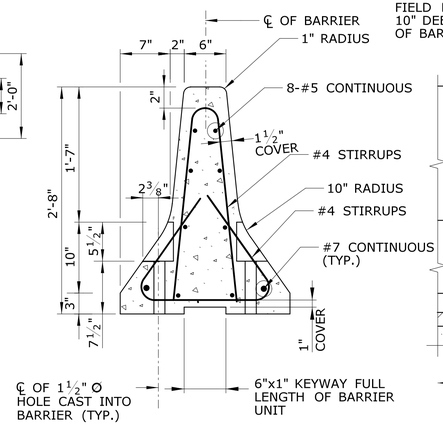

SECTION A-A

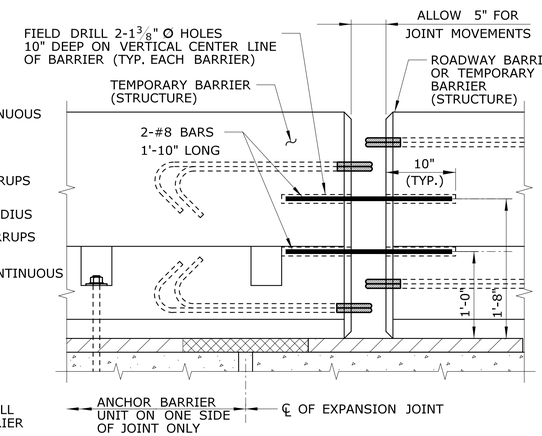

CONNECTION DETAILS AT EXPANSION JOINTS (CASE II)

NOTES:

1. THE TEMPORARY BARRIER SHOWN ON THIS SHEET SHALL BE ANCHORED ONTO BRIDGE DECKS (SEE "TEMPORARY ANCHORAGE SYSTEM") WHEN IT IS USED TO PROTECT A VERTICAL DROP-OFF. THE TEMPORARY ANCHORAGE SYSTEM SHALL CONFORM TO THE FOLLOWING:
   A) PRESTRESSED DECK UNITS: THREADED INSERTS SHALL BE USED FOR SECURING TEMPORARY BARRIER (STRUCTURE) TO PRESTRESSED DECK UNITS. THE THREADED INSERTS SHALL BE CAST INTO THE DECK UNITS DURING FABRICATION AND SHALL BE LOCATED AS REQUIRED TO ACCOMMODATE THE STAGE CONSTRUCTION. SEE SPECIAL PROVISIONS FOR ADDITIONAL INFORMATION.
   B) CHEMICAL ANCHORING: THIS CONSISTS OF DRILLING HOLES IN EXISTING CONCRETE, PLACING THREADED ANCHORS IN THE HOLES, AND SECURING THE ANCHORS WITH A PRE-APPROVED CHEMICAL ANCHOR MATERIAL WHICH CONFORMS TO M.03.01-15 OF THE STANDARD SPECIFICATIONS. HOLE DIAMETER SHALL BE DETERMINED BY THE MANUFACTURER OF THE CHEMICAL ANCHORING MATERIAL.
   C) THROUGH-BOLTING: THIS CONSISTS OF DRILLING THROUGH EXISTING DECK SLABS AND SECURING REMOVABLE ANCHORS ON THE UNDERSIDE WITH PLATE WASHERS AND NUTS. THROUGH-BOLTING IS NOT PERMITTED ON NEW CONSTRUCTION OR PRESTRESSED CONCRETE. MAXIMUM HOLE SIZE IN SLAB = 1 1/2".
2. NUMBER OF ANCHORS: ON THE TRAFFIC SIDE OF A TYPICAL BARRIER, ANCHORS SHALL BE INSTALLED IN ALL POCKETS. AT BARRIER UNITS WHICH STRADDLE BRIDGE EXPANSION JOINTS THE ANCHOR AND CONNECTION DETAILS SHALL CONFORM TO TABLE "A".
3. THE WORK DONE ON THIS SHEET INCLUDING PROVIDING DRAINAGE OPENINGS, WITH THE EXCEPTION OF THE DELINEATORS, SHALL BE PAID FOR UNDER THE ITEM "TEMPORARY PRECAST CONCRETE BARRIER CURB (STRUCTURE)".

DELINEATORS:

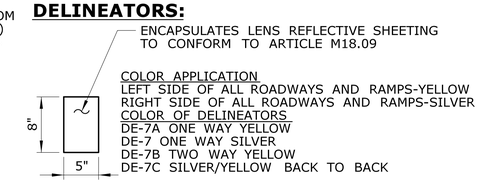

COLOR APPLICATION
LEFT SIDE OF ALL ROADWAYS AND RAMPS-YELLOW
RIGHT SIDE OF ALL ROADWAYS AND RAMPS-SILVER
COLOR OF DELINEATORS
DE-7A ONE WAY YELLOW
DE-7 ONE WAY SILVER
DE-7B TWO WAY YELLOW
DE-7C SILVER/YELLOW BACK TO BACK

DELINEATORS SHALL BE MOUNTED IN THE CENTER OF TEMPORARY BARRIERS AS REQUIRED.
SPACING OF DELINEATORS
ON LEADING TAPERED SECTIONS - EVERY UNIT (20').
ON THE FIRST 100' OF PARALLEL SECTIONS - EVERY UNIT (20').
ON THE REMAINING LENGTH - EVERY FIFTH (5TH) UNIT (100').
MINIMUM OF 2 IF LESS THAN 100'.
ALTERNATING ONE WAY TRAFFIC - EVERY UNIT (20').
ALL OTHER ROADWAYS SHALL BE DELINEATED IN ACCORDANCE WITH M.U.T.C.D.
PAID FOR UNDER ITEM "DELINEATORS"

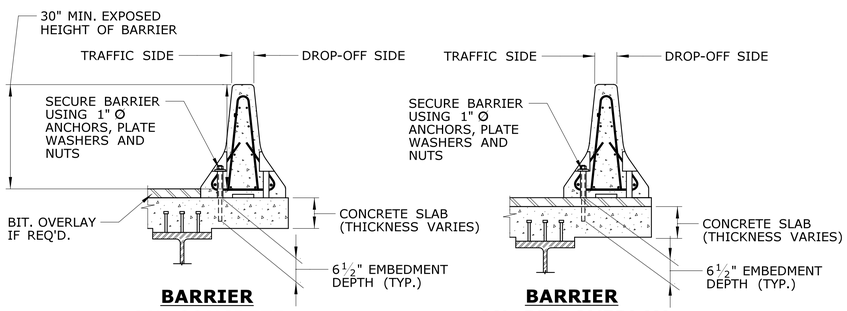

BARRIER ON CONCRETE | **BARRIER ON BIT. OVERLAY**

CHEMICAL ANCHORING OPTION

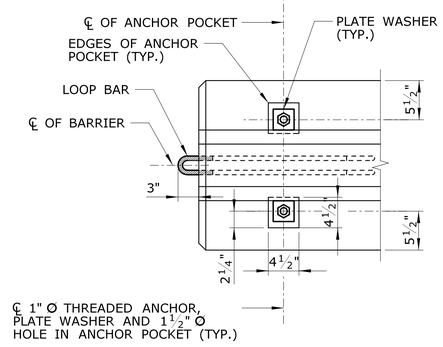

DETAIL 1

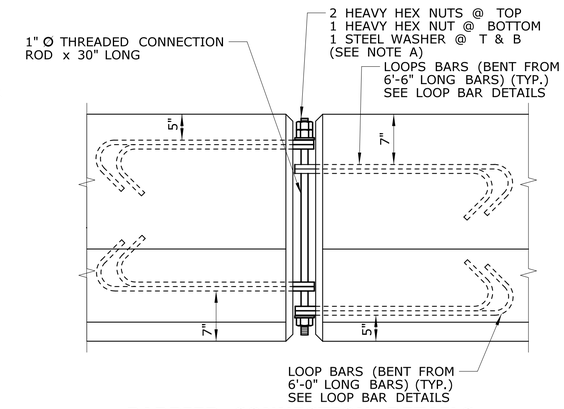

BARRIER CONNECTION DETAILS

NOTES:

1. FOR ANCHORING INTO DECK UNITS SEE NOTE 1A.
2. EXISTING REINFORCING BARS IN SLAB NOT DRAWN FOR CLARITY. AVOID DAMAGING THE REINFORCING BARS IN ALL NEWLY CONSTRUCTED SLABS.

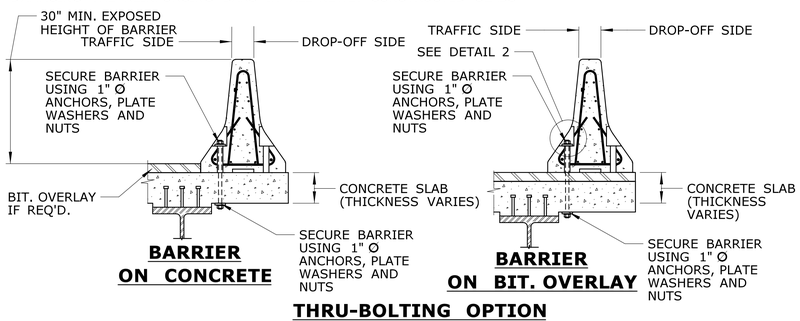

BARRIER ON CONCRETE | **BARRIER ON BIT. OVERLAY**

THRU-BOLTING OPTION
(SEE NOTE 1C)

TEMPORARY ANCHORAGE SYSTEM

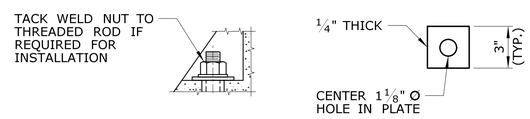

DETAIL 2 | **PLATE WASHER**

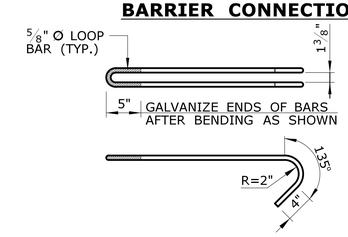

LOOP BAR DETAILS

NOTES FOR CONNECTION ROD DETAILS:

A. PLAIN CIRCULAR STEEL WASHERS SHALL BE MANUFACTURED WITH THE FOLLOWING DIMENSIONS:
OUTSIDE DIAMETER = 2 3/4"(+1/4", -0")
INSIDE DIAMETER = 1 3/16" (±1/8")
THICKNESS = 3/16"

B. THE NUTS ON THE CONNECTION ROD SHALL BE TURNED UNTIL THE BOTTOM WASHER IS DRAWN UP AGAINST THE LOOP BAR. THE LOOP BARS SHALL NOT BE BENT DUE TO THE TIGHTENING PROCESS.

C. FOR EASE OF REMOVAL THE THREADS ON THE CONNECTION RODS AND NUTS SHALL BE WAXED.

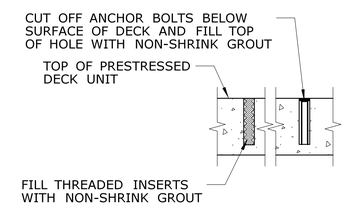

FILLING OF ANCHOR HOLES

TABLE "A": BARRIER UNITS AT EXP JOINTS

CASE	SPAN LENGTH CONTRIBUTING TO MOVEMENT AT THE EXPANSION JOINT.	METHOD OF END CONNECTION TO ABUTTING BARRIER UNIT. (WHERE MOVEMENT WILL OCCUR)	ANCHOR REQUIREMENTS FOR THE BARRIER UNIT WHICH STRADDLES THE BRIDGE JOINT
I.	UP TO 100 FEET	USE 1" CONNECTION ROD BUT DO NOT OVER TIGHTEN THE NUTS AND ALLOW ROOM FOR EXPANSION AROUND THE ROD AND LOOPS.	ON ONE SIDE OF THE JOINT ONLY, INSTALL AS MANY ANCHORS AS POSSIBLE ON THE TRAFFIC SIDE OF THE BARRIER. ON THE OTHER SIDE OF THE JOINT DO NOT INSTALL ANCHORS.
II.	100 TO 425 FEET	FIELD DRILL HOLES IN ENDS OF BOTH UNITS AND CONNECT WITH 2 - #8 BARS. FOR DETAILS SEE "BARRIER CONNECTION DETAILS".	ON ONE SIDE OF THE JOINT ONLY, INSTALL A TOTAL OF 10 ANCHORS. FILL THE POCKETS ON THE TRAFFIC SIDE BEFORE FILLING THE POCKETS ON THE DROP-OFF SIDE. IF THIS CANNOT BE ACHIEVED SEE III BELOW.
III.	OVER 425 FEET AND BARRIER LAYOUTS WHICH DO NOT SATISFY II.	TO BE DESIGNED BY CONTRACTOR AND REVIEWED BY ENGINEER. COSTOF DESIGNING AND FURNISHING SPECIAL BARRIER UNITS OR ATTACHMENTS PAID FOR UNDER "TPCBC (STRUCTURE)".	TO BE DESIGNED BY CONTRACTOR AND REVIEWED BY ENGINEER. COSTOF DESIGNING AND FURNISHING SPECIAL BARRIER UNITS OR ATTACHMENTS PAID FOR UNDER "TPCBC (STRUCTURE)".

90% DESIGN REVIEW 03/09/2016

REV.	DATE	REVISION DESCRIPTION	SHEET NO.
-	-	-	-
-	-	-	-
-	-	-	-
-	-	-	-
-	-	-	-
-	-	-	-

THE INFORMATION, INCLUDING ESTIMATED QUANTITIES OF WORK, SHOWN ON THESE SHEETS IS BASED ON LIMITED INVESTIGATIONS BY THE STATE AND IS IN NO WAY WARRANTED TO INDICATE THE CONDITIONS OF ACTUAL QUANTITIES OF WORK WHICH WILL BE REQUIRED.

PLOTTED: 3/9/2016

DESIGNER/DRAFTER:
CHECKED BY:
NOT TO SCALE

STATE OF CONNECTICUT
DEPARTMENT OF TRANSPORTATION

FILENAME: ...\SB_MSH_BR_0058-0332_TEMP-BARR.dgn

LOCHNER
H.W. LOCHNER, INC
55 Hartland Street
East Hartford, CT 06108

APPROVED BY: - DATE: -

PROJECT TITLE:
RECONSTRUCTION OF ROUTE 349 NB AND SB OVER AMTRAK RAILROAD

TOWN: GROTON

DRAWING TITLE:
TEMPORARY PRECAST CONCRETE BARRIER CURB

PROJECT NO. 058-332
DRAWING NO. S-44
SHEET NO.

PUB. ROAD DIV. NO.	STATE	TOWN	FED. AID PROJ. NO.	PROJ. NO.	YEAR	ROAD NO.	SHEET NO.	TOT SHE
1	CONN.	GROTON	SU-143(2) I-95-4(24)96	58-117 58-119	1964	R649	1	25

FORM NO. ENG. 6 ED. 3-5

CONNECTICUT
STATE HIGHWAY DEPARTMENT
PLAN
FOR
CONSTRUCTION
OF

GROTON DEFENSE ACCESS HIGHWAY (S.R.649)
IN THE TOWN OF
GROTON

FROM STA. SEE BELOW **TO STA.** SEE BELOW

LENGTH SEE BELOW FT.

HIGHWAY DESIGN SCALES
- PLAN 1 IN. = 40 FT.
- PROFILE HOR. 1 IN. = 40 FT. VERT. 1 IN. = 4 FT.
- CROSS SECTIONS 1 IN. = 5&10 FT.
- OTHER SCALES AS NOTED

TO BE MAINTAINED BY THE STATE

FEDERAL AID PROJECT NO. SU-143 (2)
FEDERAL AID PROJECT NO. I-95-4(24)96

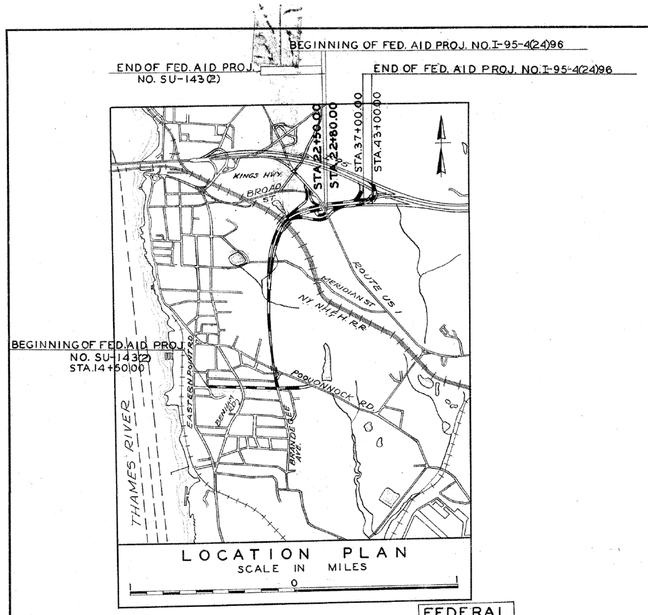

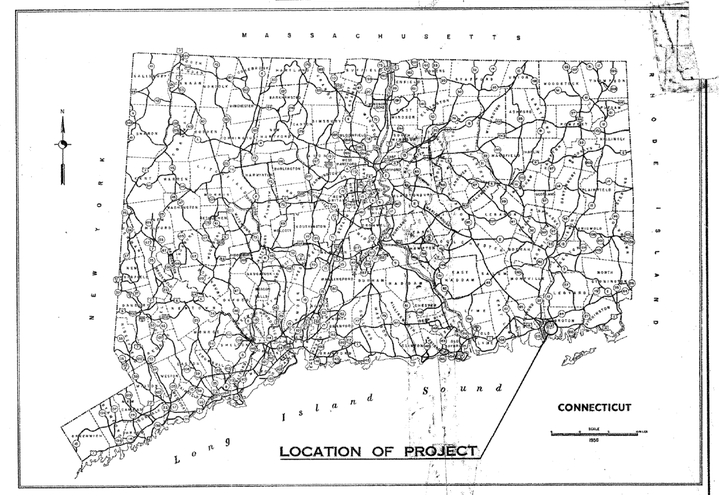

STATE PROJECT NO.	FED. AID PROJECT NO.	STA. TO STA.	FEDERAL AID LENGTH OF PROJECT	LENGTH OF PROJECT
58-117	SU-143(2)	14+50.00 N.B. 22+80.00 S.B. 22+50.00	9228.06 Ft.	9228.06 Ft.
58-119	I-95-4(24)96	N.B. 22+80.00-43+00.00 S.B. 22+50.00-37+00.00	00.00 Ft.	1735.00 Ft.

1963 SPECIFICATIONS, FORM NO. 809, INCLUDING SUPPLEMENT THERETO DATED APRIL 1963 GOVERN ALL ELEVATIONS ON THIS PROJECT BASED ON U.S.C & G.S. DATUM

TOWN NO. 58 58
PROJECT NO. 117 119

1963 GEOMETRIC HIGHWAY DESIGN STANDARDS

FED. AID SECONDARY SYSTEM

Intersection of Chester & Mumford Sts. to Meridian Street.

Design Classification - Urban Street
Limited Access
Assumed Design Speed - 60 M.P.H
A.D.T. 1990 - 11,900
D.D.H.V. 1990 - 3500

Meridian St. to end of Project
Design Classification - F Urban (Residential) Modified
Limited Access
Assumed Design Speed - 60 M.P.H.
A.D.T. 1990 - 13,300
D.D.H.V. 1990 - 3600

FED. AID INTERSTATE SYSTEM

Design Classification - "F" Urban (Residential) Modified
Limited Access
Assumed Design Speed - 60 M.P.H.
A.D.T. 1985 - 11,300
D.D.H.V. 1985 - 2800

Construction Started 4-12-65
Construction Completed 3-27-67
Plans Revised BY F.M.H. 8-9-71
Plans Checked BY G.A.R. 8-9-71

LIST OF DRAWINGS

SHEET NO.	TITLE	SHEET NO.	STANDARD SHEETS	B.P.R. APPROVAL DATE
1	Title Sheet	217-B	Two-Cable Guide Railing ("C" & Comp. Anchor, Single Post)	5-7-62
2-6	Index Plans, Index Profiles, Traffic Movements	217-C	Three-Cable Guide Railing (A-3 & B-3 Anchorages	5-7-62
7-8	Turf Establishment Plans	217-D	Wire Rope Railing-Three-Cable (Wood Posts) A-3 W & B-3 W Anchorages	5-7-62
9-14	Detailed Estimate Sheets	217-E	Standard Fittings for Three-Cable Guide Railing & Wire Rope	
15-23	Typical Cross Sections		Railing - Three - Cable (Wood Posts)	5-7-62
24-78	Plan and Profile Sheets	220-A	Metal Beam Type Rail (Type R-B) & (Type MD-B)	5-7-62
79-85	Bridge Plans - Main Line over Poquonnock Road	221-F	Stand. Endwalls, Wing Type Endwalls, Slope Paved Inlets & Outlets	5-7-62
86-103	Bridge Plans - N.B. & S.B. over R.R.	221-G	"DG, L" Endwalls, Reinforced Concrete Pipe	5-7-62
104-113	Bridge Plans - Relocation Route U.S. 1 over N.B. & S.B.	221-H	Foundation U drain, U drain & Perforated Pipe	9-28-62
114-129	Bridge Plans - Line "B" over Line "H" & E.B. I-95	222-B	Concrete Sidewalk, Paved Ditch	5-7-62
130-246	Cross Sections	222-C	Curbing	5-7-62
247-252	City of Groton - Dept of Utilities	223-A	Manhole, Frame & Cover	5-7-62
253-254	Town of Groton - Utilities	226-A	A.C.C.M. Pipe, Elbow	5-7-62
255	Federal-Aid Construction-Identification	228-A	Type "C" Catch Basin	5-7-62
	Signs	228-B	Type "CG" Catch Basin	5-7-62
256A SUPP. 256B SUPP.	Cross Sections	228-C	Type "C-L" Catch Basin	5-7-62
B1 - B5	Southern New England Telephone Co	228-D	Frame & Grate for Type "C", "C-G" & "C-L" Catch Basin	
C1 - C6	City of Groton - Dept of Utilities	712-B	Fences	5-7-62
D-1	New York, New Haven & Hartford Railroad	712-C	Barricades, Service Bridges	

SHEET NO.	DESCRIPTION	DATE
19A	Added For Change order	2/1/65
21A-21A	" " " "	"
35A	" " " "	"
121A-122A	" " " "	"
52A	" " " "	3/15/65
20B-20A-20A	" " " "	2/1/65
52C-135A	" " " "	"
136A	" " " "	"
54A-107A	" " " "	11-17-65
54A-106A	" " " "	1-10-66
28A, 30C	" " " "	5-16-66
39C, 52D	" " " "	"
53B-54A	" " " "	"
781-789	Added For Traffic Signal/Institute	6-21-66
30D-13A-14A	Added For Change	8-10-66
39D-42A-4A-49A-44A	" " " "	9-21-66

Please Note — These sheets added 2/1/65

Deleted 781-789 8-19-66 F.R.P.

STANDARD CONVENTIONS

Hedge; Guide Rail; Curb Stated whether Stone, mixed or Conc.; Stone Wall; Concrete Walk; Walk - Tar, Gravel or Earth; Conn. Co.; Present Tracks; Proposed Tracks; Taking Line; Property Line; Town Line; Grape Arbor; Wire Fence; Picket Fence; Board Fence; Retaining Wall; Open Ditch Flowing Stream; Open Ditch Dry; Telegraph, Telephone or Electric Light Poles; Trolley Poles; Ledge or Rock; Trees; Hydrant; Pole; Ft. Ft.; Rivers, Lakes etc.; North Point; Present Culvert; Proposed Culvert; House; Barn; Buildings; Swamp; Gas Pump; Random Stone; Highway Mon. "C.H.D. Marker"; Present C.B.; Proposed C.B.; Present Travel Path

DEPARTMENT OF COMMERCE
BUREAU OF PUBLIC ROADS

APPROVED:

[redacted]
DIVISION ENGINEER DATE

SUBMITTED October 28th 1964
Wesley J. Brandt
ENGINEER OF DESIGN

APPROVAL RECOMMENDED October 28 1964
CHIEF OF DESIGN

APPROVED Oct 28 1964
DIRECTOR OF PLANNING & DESIGN

58 117 58 119

354-01

354-01

90% DESIGN REVIEW 03/09/2106

REV.	DATE	REVISION DESCRIPTION	SHEET NO.
-	-	-	-
-	-	-	-
-	-	-	-
-	-	-	-
-	-	-	-
-	-	-	-

THE INFORMATION, INCLUDING ESTIMATED QUANTITIES OF WORK, SHOWN ON THESE SHEETS IS BASED ON LIMITED INVESTIGATIONS BY THE STATE AND IS IN NO WAY WARRANTED TO INDICATE THE CONDITIONS OF ACTUAL QUANTITIES OF WORK WHICH WILL BE REQUIRED.

PLOTTED: 3/9/2016

DESIGNER/DRAFTER: R.BRAZZALLE/E.FINOWICKI
CHECKED BY: J.ADAMS
SCALE AS NOTED

STATE OF CONNECTICUT
DEPARTMENT OF TRANSPORTATION

FILENAME: ...\SB_MSH_BR_0058-0332_EX-01.dgn

LOCHNER
H.W. LOCHNER, INC
55 Hartland Street
East Hartford, CT 06108

PROJECT TITLE: RECONSTRUCTION OF ROUTE 349 NB AND SB OVER AMTRAK RAILROAD

TOWN: GROTON

DRAWING TITLE: EXISTING PLANS 1 OF 7

PROJECT NO. 058-332
DRAWING NO. S-45
SHEET NO.

FORM NO. ENG. 15A

PUB. ROAD DIV. NO.	STATE	TOWN	FED. AID PROJ. NO.	PROJ. NO.	YEAR	ROUTE NO.	SHEET NO.	TOTAL SHEETS
1	CONN.	Groton	SU-183-(2)	58-117	1964	649	86	255

R.R. Curve Data Mon. ℄
Δ = 49°-58'-30"
D = 1°-30'-00"
T = 1,780.20'
L = 3,331.67'
R = 3,819.83'
P.C. Sta. 100+65.05
P.T. Sta. 133+96.72

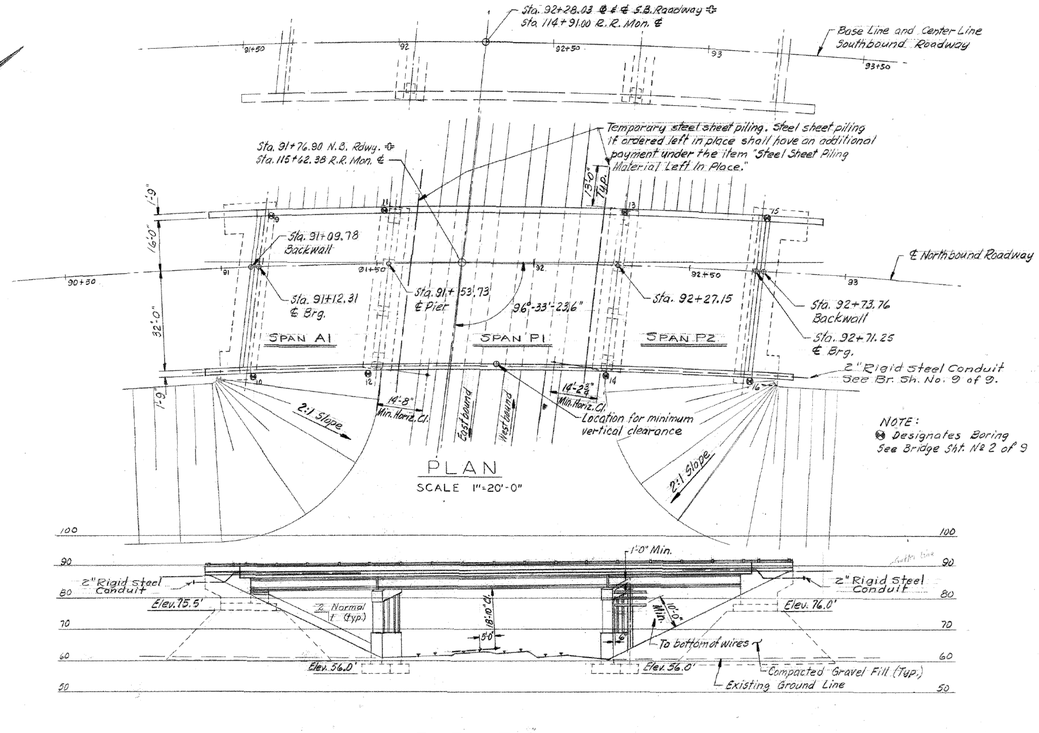

Northbound Centerline Curve Data.
Δ = 54°-59'-45.0"
D = 3°-39'-31.2"
T = 815.148'
L = 1503.160'
R = 1566.023'
E = 199.450'
P.C.C. = 89+00.756

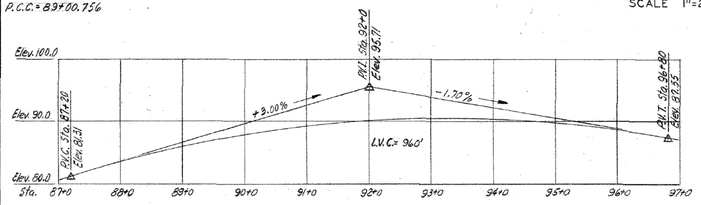

PROFILE ℄ NORTHBOUND ROADWAY
HORIZ. 1"=100'-0"
VERT. 1"=10'-0"

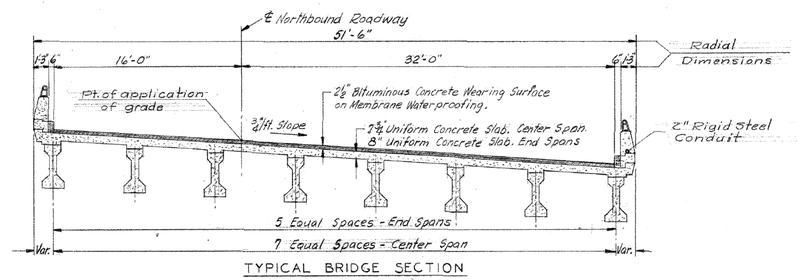

TYPICAL BRIDGE SECTION
SCALE 3/16" = 1'-0"

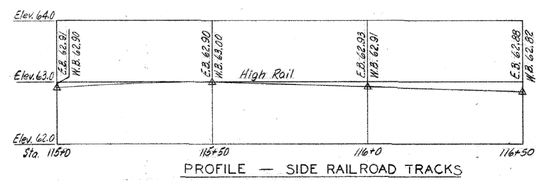

PROFILE — SIDE RAILROAD TRACKS
HORIZ. 1"=20'-0"
VERT. 1"=1'-0"

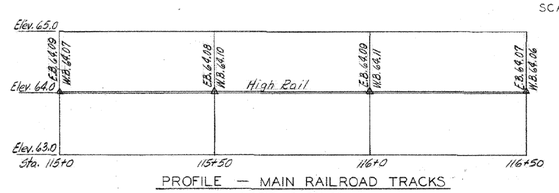

PROFILE — MAIN RAILROAD TRACKS
HORIZ 1"=20'-0"
VERT 1"=1'-0"

QUANTITY		
Structure Excavation Earth (Complete)	c.y.	830
Soil Loading Test	ea.	1
Temporary Steel Sheet Piles	l.f.	161
Steel Sheet Piling Material Left in Place	l.f.	161
Class "A" Concrete	c.y.	595
Class "C" Concrete	c.y.	280
½" Pref. Expan. Joint Filler for Bridges	s.f.	130
Deformed Steel Bars	lb.	126,500
Membrane Waterproofing (woven glass fabric)	s.y.	835
Dampproofing	s.y.	185
Metal Bridge Rail (9" high)	l.f.	382
Compacted Gravel Fill	c.y.	3600
Pervious Structure Backfill	c.y.	375
Bituminous Concrete Wearing Surface	ton	112
6"×12" Granite Stone Curbing for Bridges	l.f.	385
Elastomeric Bearing Pads	c.i.	11,925
Neoprene Plate for Bridge Expan. Jt.	l.f.	210
2" Rigid Steel Conduit in Structure	l.f.	200
1½" Wrought Iron Pipe	l.f.	12
Prestressed Beams - Pretensiond Type III	l.f.	1,110
Protective Compound for Bridges	s.y.	24

GENERAL NOTES

SPECIFICATIONS: Connecticut State Highway Department Form 609 (Jan. 1963) and Special Provisions.

DESIGN SPECIFICATIONS: Standard Specifications for Highway Bridges (A.A.S.H.O. 1961) as supplemented by the Connecticut State Highway Department Bridge Manual (July 1961).

LIVE LOAD: HS 20-44

FUTURE PAVING ALLOWANCE: None

CLASS "A" CONCRETE: Class "A" Concrete shall be used for entire substructure and the parapets of the U-Type wings.

CLASS "C" CONCRETE: Class "C" Concrete shall be used for bridge slab including concrete parapets.

JOINT SEAL: See Special Provisions.

PARAFFIN: The cost of furnishing and applying paraffin and caulking paraffin joints is included in the item for Class "C" Concrete.

EXPOSED EDGES: Exposed edges shall be beveled 1"×1" unless dimensioned otherwise.

FOUNDATION PRESSURE: The various Group Loadings noted on the substructure plan sheets refer to the Group Loads as given in subsection 1.4.1 of the A.A.S.H.O. Standard Specifications for Highway Bridges.

COMPOSITE CONSTRUCTION: No temporary intermediate supports shall be used prior to and during the pouring and setting of the concrete deck slab. Live and superimposed dead loads will be permitted when directed by the Engineer but not less than 10 days after the slab has been poured.

PRESTRESSED CONCRETE: Materials and construction for Prestressed Concrete shall conform to the requirements of the Special Provisions.

CONSTRUCTION JOINTS: Construction joints, other than those shown on the plans, will not be permitted without prior approval of the Engineer.

INSPECTION OF FIELD WELDS		
METHOD	UNIT	QUANTITY
Radiographic	in.	0.0
Magnetic Particle	l.f.	0.0

CONCRETE DISTRIBUTION		
Superstructure	C.Y.	280
Substructure	C.Y.	410
Footings	C.Y.	185
TOTAL	C.Y.	875

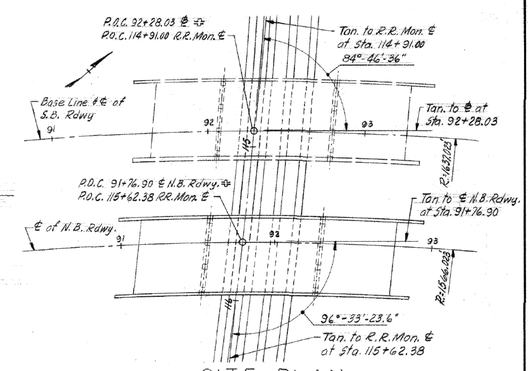

SITE PLAN
SCALE 1"=40'-0"

BR. No. 03331

CONNECTICUT
STATE HIGHWAY DEPARTMENT
TOWN OF GROTON
GROTON DEFENSE ACCESS HWY.
NORTHBOUND ROADWAY
OVER
N.Y., N.H. & H.R.R.
STA. 91+76.90
GENERAL PLAN

REVISIONS		
NO.	DATE	DESCRIPTION

DESIGNED BY W.R.P.
SCALES As noted
MADE BY WRP DATE 4-20-64
CHECKED BY W.R.P. DATE 4/23/64
APPROVED E. J. Koenig DATE 5/4/64
PROJECT NO. 58-117-03A
BRIDGE SHEET NO. 1 OF 2

THE INFORMATION, INCLUDING ESTIMATED QUANTITIES OF WORK SHOWN ON THESE SHEETS IS BASED ON LIMITED INVESTIGATIONS BY THE STATE AND IS IN NO WAY WARRANTED TO INDICATE THE TRUE CONDITIONS OR ACTUAL QUANTITIES OR DISTRIBUTION OF QUANTITIES OF WORK WHICH WILL BE REQUIRED.

DIETZGEN 13GN-3 Agaproof Drafting Film 7781

58 117 58 119

M354 01

86

90% DESIGN REVIEW 03/09/2016

REV.	DATE	REVISION DESCRIPTION	SHEET NO.
-	-	-	-
-	-	-	-
-	-	-	-
-	-	-	-
-	-	-	-
-	-	-	-

THE INFORMATION, INCLUDING ESTIMATED QUANTITIES OF WORK, SHOWN ON THESE SHEETS IS BASED ON LIMITED INVESTIGATIONS BY THE STATE AND IS IN NO WAY WARRANTED TO INDICATE THE CONDITIONS OF ACTUAL QUANTITIES OF WORK WHICH WILL BE REQUIRED.

PLOTTED: 3/9/2016

DESIGNER/DRAFTER:
CHECKED BY:
SCALE AS NOTED

STATE OF CONNECTICUT
DEPARTMENT OF TRANSPORTATION

FILENAME: ...\SB_MSH_BR_0058-0332_EX-02.dgn

LOCHNER
H.W. LOCHNER, INC
55 Hartland Street
East Hartford, CT 06108

PROJECT TITLE:
RECONSTRUCTION OF ROUTE 349 NB AND SB OVER AMTRAK RAILROAD

TOWN: GROTON

DRAWING TITLE: EXISTING PLANS 2 OF 7

PROJECT NO. 058-332
DRAWING NO. S-46
SHEET NO.

FORM NO. ENG. 15A

PUB. ROAD SYS. NO.	STATE	TOWN	FED. AID PROJ. NO.	PROJ. NO.	YEAR	ROUTE NO.	SHEET NO.	TOTAL SHEETS
1	CONN.	Groton	SU-183(2)	58-117	1964	649	95	255

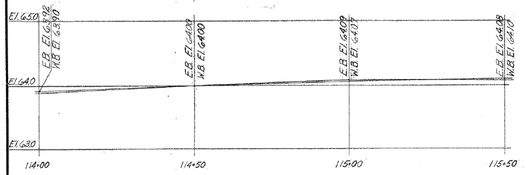

PROFILE — MAIN R.R. TRACKS
Horiz. 1" = 20'-0"
Vert. 1" = 1'-0"

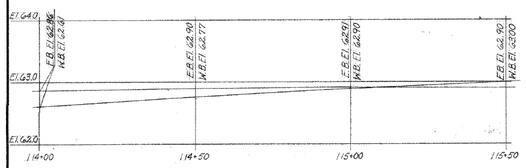

PROFILE — SIDE R.R. TRACKS
Horiz. 1" = 20'-0"
Vert. 1" = 1'-0"

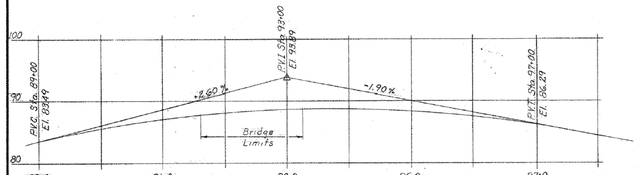

PROFILE ℄ SOUTHBOUND ROADWAY
Horiz. 1" = 100'-0"
Vert. 1" = 10'-0"

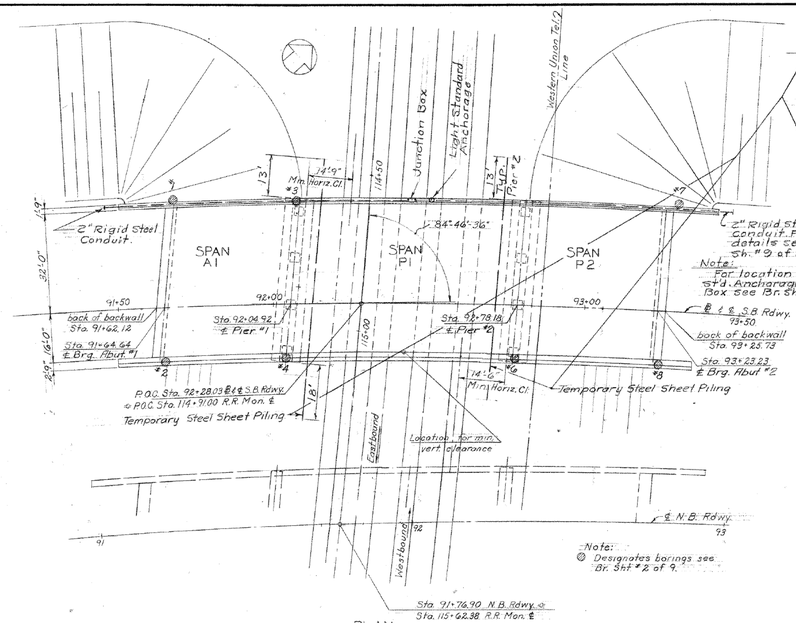

PLAN
Scale 1" = 20'

R.R. Curve Data Mon. ℄
Δ = 49°-58'-30"
D = 1°-30'-00"
T = 1780.20'
L = 3331.67'
R = 3819.83'
P.C. Sta. 100+05.05
P.T. Sta. 133+96.72

Note:
For location of Light Std. Anchorage & Junction Box see Br. Sh. No. 6 of 9.

Southbound Center Line Curve Data
Δ = 59°-36'-28"
D = 3°-30'-00"
T = 937.679'
L = 1703.079'
R = 1637.023'
E = 249.331'

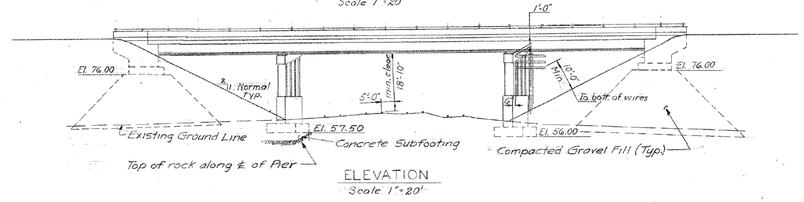

ELEVATION
Scale 1" = 20'

Structure Excavation Earth (complete)	c.y.	726
Structure Excavation Rock (complete)	c.y.	10
Soil Loading Test	ea.	1
Temporary Steel Sheet Piling	l.f.	161
Steel Sheet Piling Material Left in Place	l.f.	161
Class "A" Concrete	c.y.	525
Class "C" Concrete	c.y.	288
½" Preformed Expansion Joint Filler for Bridges	s.f.	160
Deformed Steel Bars	lb.	128000
Membrane Waterproofing (woven glass fabric)	s.y.	846
Dampproofing	s.y.	171
Metal Bridge Rail (9" high)	l.f.	375
Compacted Gravel Fill	c.y.	3810
Pervious Structure Backfill	c.y.	396
Bituminous Concrete Wearing Surface	Ton	114
6"x12" Granite Stone Curbing for Bridges	l.f.	380
Elastomeric Bearing Pads	c.i.	71925
Neoprene Plate for Bridge Expansion Joint	l.f.	209
2" Rigid Steel Conduit in Structure	l.f.	210
18"x12"x8" Cast Iron Junction Box	ea.	1
1½" Wrought Iron Pipe	l.f.	12
Prestressed Beams - Pretensioned - Type III	l.f.	1103
Protective Compound for Bridges	s.y.	45

Specifications: Connecticut State Highway Department Form 809 (1963) and Special Provisions.
Design Specifications: Standard Specifications for Highway Bridges (AASHO-1961) as supplemented by the Connecticut State Highway Department Bridge Manual (1961)

Live Load: HS-20-44
Future Paving Allowance: None
Composite Construction: No temporary intermediate supports shall be used prior to and during the pouring and setting of the concrete deck slab. Live and superimposed dead loads will be permitted when directed by the Engineer but not less than 10 days after the slab has been poured.
Class "A" Concrete: Class "A" Concrete shall be used for the entire substructure and the safety walks and parapets of the U-Type wings.
Class "C" Concrete: Class "C" Concrete shall be used for bridge slabs including concrete safety walks, and parapets.
Prestressed Concrete: Materials and construction for Prestressed Concrete shall conform to the requirements of the Special Provisions.
Joint Seal: See Special Provisions
Paraffin: The cost of furnishing and applying paraffin and caulking paraffin joints is included in the item for Class "C" Concrete.
Exposed Edges: Exposed edges shall be beveled 1"x1" unless dimensioned otherwise.

Foundation Pressures: The various Group Loadings noted on the substructure plan sheets refer to the Group Loads as given in subsection 1.4.1 of the AASHO Standard Specifications for Highway Bridges.
Construction Joints: Construction joints, other than those shown on the plans, will not be permitted without prior approval of the Engineer.

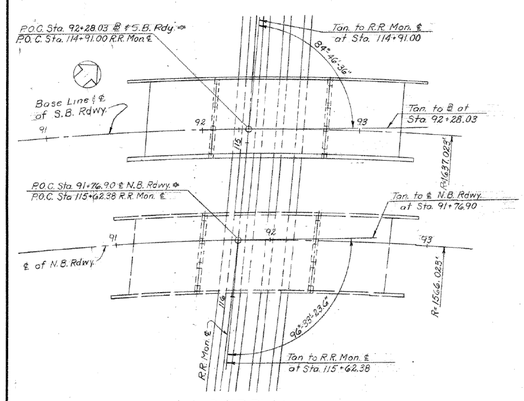

SITE PLAN
Scale 1" = 40'

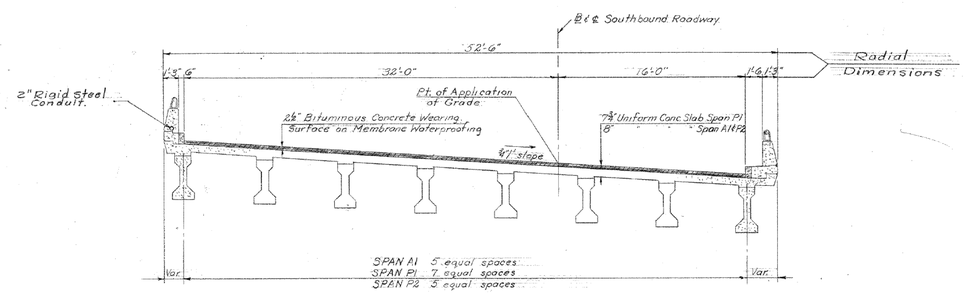

TYPICAL BRIDGE SECTION
Scale 3/16" = 1'-0"

INSPECTION OF FIELD WELDS		
Method	Unit	Quantity
Magnetic Particle	l.f.	0.0
Radiographic	in.	0.0

CONCRETE DISTRIBUTION		
Footings	c.y.	207
Substructure	c.y.	388
Superstructure	c.y.	288
Total	c.y.	883

Br. No. 03330

THE INFORMATION, INCLUDING ESTIMATED QUANTITIES OF WORK SHOWN ON THESE SHEETS IS BASED ON LIMITED INVESTIGATIONS BY THE STATE AND IS IN NO WAY WARRANTED TO INDICATE THE TRUE CONDITIONS OR ACTUAL QUANTITIES OR DISTRIBUTION OF QUANTITIES OF WORK WHICH WILL BE REQUIRED.

REVISIONS		
NO.	DATE	DESCRIPTION

CONNECTICUT
STATE HIGHWAY DEPARTMENT
TOWN OF GROTON
GROTON DEFENSE ACCESS HWY.
SOUTHBOUND ROADWAY
OVER
N.Y., N.H. & H.R.R.
STA. 92 + 28.03
GENERAL PLAN

DESIGNED BY W.F.D
SCALES as noted
MADE BY T.S.R DATE 4-28-64
CHECKED BY W.F.D DATE 5-4-64
APPROVED E. J. Keany DATE 5/9/64
PROJECT NO. 58-117-03C
BRIDGE SHEET NO. 1 OF 9

DIETZGEN 130M-3 Agaproof Drafting Film 7781

58 117 58 110

M354 01

95

90% DESIGN REVIEW 03/09/2016

REV.	DATE	REVISION DESCRIPTION	SHEET NO.
-	-	-	-
-	-	-	-
-	-	-	-
-	-	-	-
-	-	-	-
-	-	-	-

THE INFORMATION, INCLUDING ESTIMATED QUANTITIES OF WORK, SHOWN ON THESE SHEETS IS BASED ON LIMITED INVESTIGATIONS BY THE STATE AND IS IN NO WAY WARRANTED TO INDICATE THE CONDITIONS OF ACTUAL QUANTITIES OF WORK WHICH WILL BE REQUIRED.

PLOTTED: 3/9/2016

DESIGNER/DRAFTER:
CHECKED BY:
SCALE AS NOTED

STATE OF CONNECTICUT
DEPARTMENT OF TRANSPORTATION

FILENAME: ...\SB_MSH_BR_0058-0332_EX-03.dgn

LOCHNER
H.W. LOCHNER, INC
55 Hartland Street
East Hartford, CT 06108

- -

PROJECT TITLE:
RECONSTRUCTION OF ROUTE 349 NB AND SB OVER AMTRAK RAILROAD

TOWN: **GROTON**

DRAWING TITLE: **EXISTING PLANS 3 OF 7**

PROJECT NO. **058-332**
DRAWING NO. **S-47**
SHEET NO.

FORM NO. ENG. 15A

PUB. ROAD DIV. NO.	STATE	TOWN	FED. AID PROJ. NO.	PROJ. NO.	YEAR	ROUTE NO.	SHEET NO.	TOTAL SHEETS
1	CONN.	Groton	SU-143(2)	58-117	1964	649	89	255

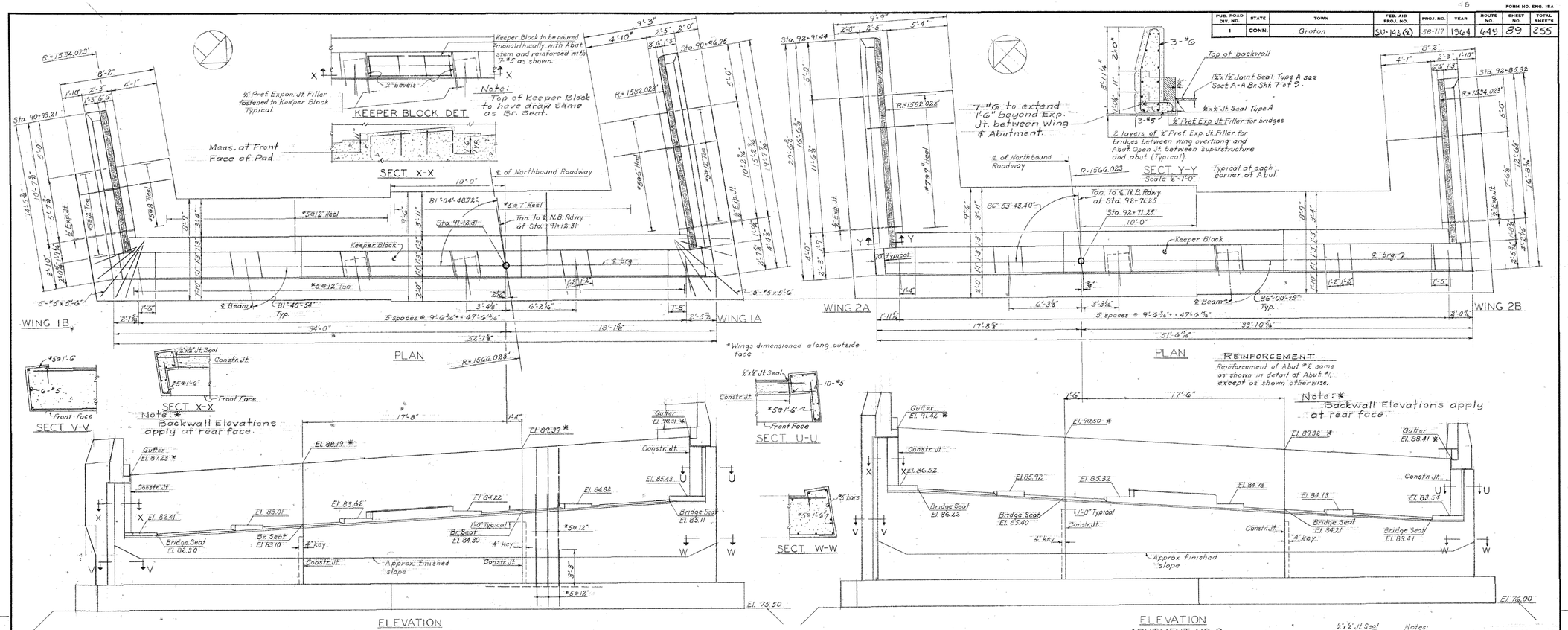

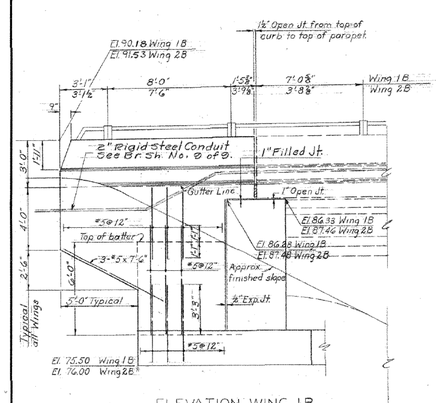

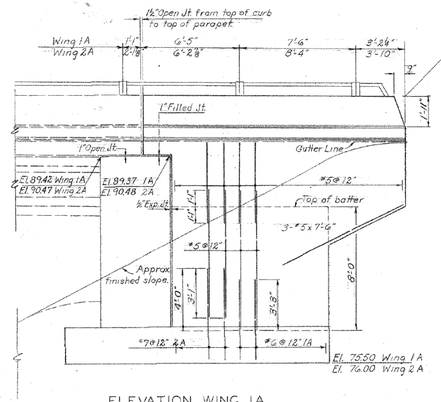

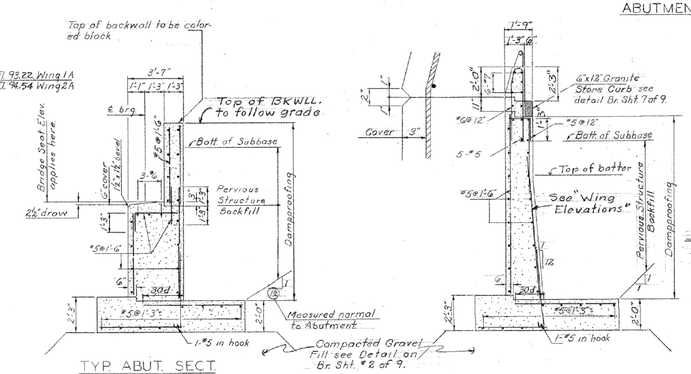

Notes: Footing Reinforcement to have 3" cover. All other reinforcement to have 2" cover except where dimensioned otherwise. All longitudinal bars to be spliced 20d except those in top of heel which shall be spliced 30d.

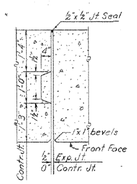

Notes:
Abutment: Joint Seal to extend from top of heel to top of backwall.
Wing: Joint Seal to extend from top of heel to top of backwall including horizontal joint between wing overhang and Abutment where encountered.
No reinforcement shall pass thru expansion joints.
Reinforcement shall pass thru construction joints.
No key in expansion joints.

JOINT DETAILS
Not to Scale

DESIGN FOUNDATION PRESS.	
ABUT. GROUP #1	2.3 T.S.F.
WINGS GROUP #1	2.0 T.S.F.

THE INFORMATION, INCLUDING ESTIMATED QUANTITIES OF WORK SHOWN ON THESE SHEETS IS BASED ON LIMITED INVESTIGATIONS BY THE STATE AND IS IN NO WAY WARRANTED TO INDICATE THE TRUE CONDITIONS OR ACTUAL QUANTITIES OR DISTRIBUTION OF QUANTITIES OF WORK WHICH WILL BE REQUIRED.

REVISIONS		
NO.	DATE	DESCRIPTION

CONNECTICUT
STATE HIGHWAY DEPARTMENT
TOWN OF GROTON
GROTON DEFENSE ACCESS HWY.
NORTHBOUND ROADWAY
OVER
N.Y. N.H. & H.R.R.
STA. 91 + 76.90
ABUTMENTS

DESIGNED BY W.F.D.
SCALES 1/4"=1'-0" except as noted
MADE BY T.S.R. DATE 5-14-64
CHECKED BY W.R.P. DATE 6-9-64
APPROVED E. J. Kenny DATE 7/10/64
PROJECT NO. 058-117-03A
BRIDGE SHEET NO. 4 OF 9

58 117 58 119

N 354 01

89

90% DESIGN REVIEW 03/09/2016

REV.	DATE	REVISION DESCRIPTION	SHEET NO.
-	-	-	-
-	-	-	-
-	-	-	-
-	-	-	-
-	-	-	-
-	-	-	-

THE INFORMATION, INCLUDING ESTIMATED QUANTITIES OF WORK, SHOWN ON THESE SHEETS IS BASED ON LIMITED INVESTIGATIONS BY THE STATE AND IS IN NO WAY WARRANTED TO INDICATE THE CONDITIONS OF ACTUAL QUANTITIES OF WORK WHICH WILL BE REQUIRED.

PLOTTED: 3/9/2016

DESIGNER/DRAFTER:
CHECKED BY:
SCALE AS NOTED

STATE OF CONNECTICUT
DEPARTMENT OF TRANSPORTATION

FILENAME: ...\SB_MSH_BR_0058-0332_EX-04.dgn

LOCHNER
H.W. LOCHNER, INC
55 Hartland Street
East Hartford, CT 06108

PROJECT TITLE:
RECONSTRUCTION OF ROUTE 349 NB AND SB OVER AMTRAK RAILROAD

TOWN: GROTON

DRAWING TITLE: EXISTING PLANS 4 OF 7

PROJECT NO. 058-332
DRAWING NO. S-48
SHEET NO.

FORM NO. ENG. 19A

PUB. ROAD DIV. NO.	STATE	TOWN	FED. AID PROJ. NO.	PROJ. NO.	YEAR	ROUTE NO.	SHEET NO.	TOTAL SHEETS
1	CONN.	Groton	SU-143(2)	58-117	1964	649	98	255

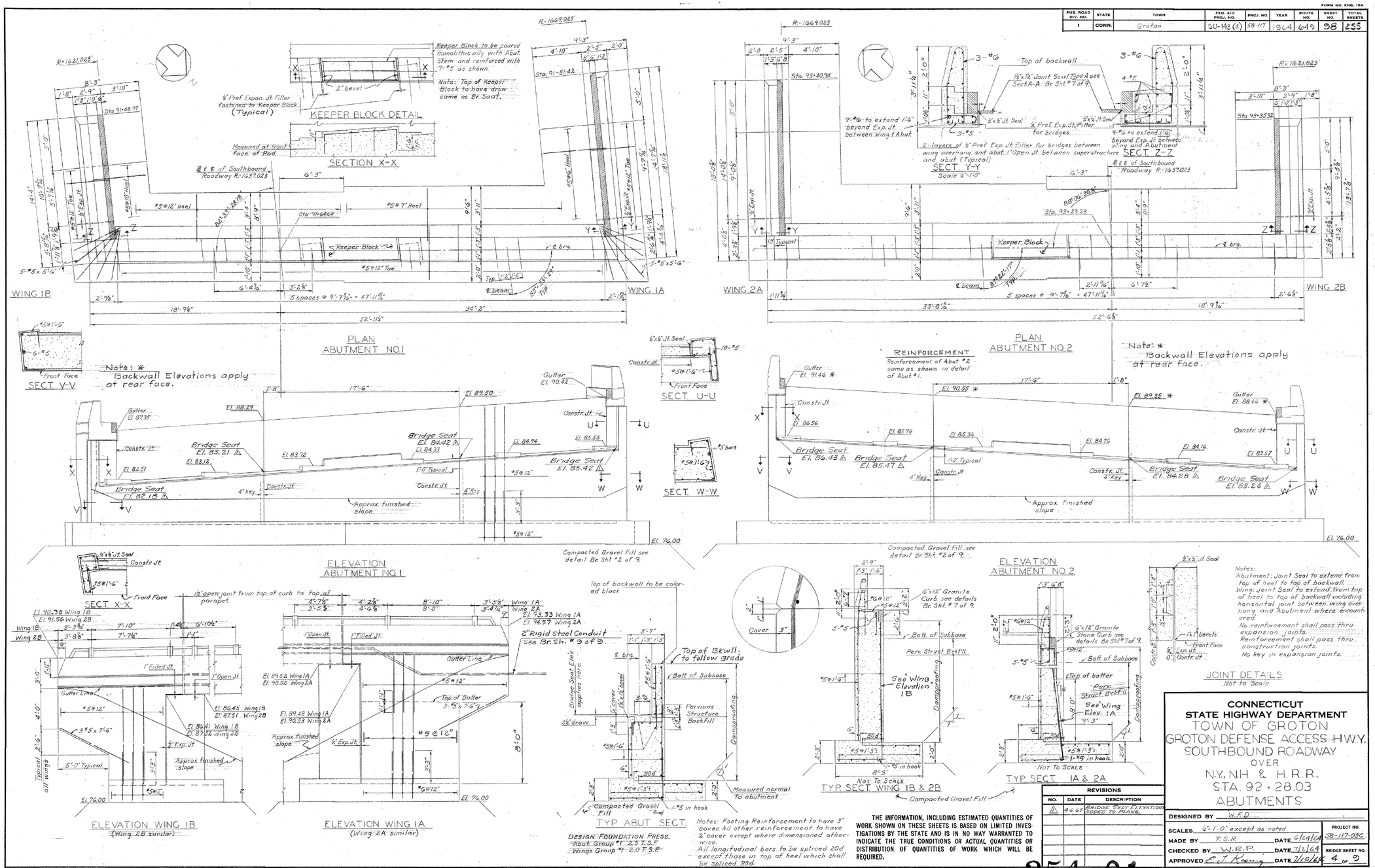

DESIGN: FOUNDATION PRESS.
Abut. Group #1 2.3 T.S.F.
Wings Group #1 2.0 T.S.F.

Notes: Footing Reinforcement to have 3" cover. All other reinforcement to have 2" cover except where dimensioned otherwise. All longitudinal bars to be spliced 20d except those in top of heel which shall be spliced 30d.

THE INFORMATION, INCLUDING ESTIMATED QUANTITIES OF WORK SHOWN ON THESE SHEETS IS BASED ON LIMITED INVESTIGATIONS BY THE STATE AND IS IN NO WAY WARRANTED TO INDICATE THE TRUE CONDITIONS OR ACTUAL QUANTITIES OR DISTRIBUTION OF QUANTITIES OF WORK WHICH WILL BE REQUIRED.

REVISIONS		
NO.	DATE	DESCRIPTION
1	4-6-65	BRIDGE SEAT ELEVATIONS ADDED TO PLANS.

CONNECTICUT
STATE HIGHWAY DEPARTMENT
TOWN OF GROTON
GROTON DEFENSE ACCESS H.W.Y.
SOUTHBOUND ROADWAY
OVER
N.Y., N.H. & H.R.R.
STA. 92 + 28.03
ABUTMENTS

DESIGNED BY W.F.D.
SCALES 1/4" = 1'-0" except as noted
MADE BY T.S.R. DATE 6/24/64
CHECKED BY W.R.P. DATE 7/2/64
APPROVED E. J. Koenig DATE 7/10/64
PROJECT NO. 58-117-030
BRIDGE SHEET NO. 4 OF 9

DIETZGEN 130M-3 Approoof Drafting Film 7761

58 117 58 119

M354 01

98

90% DESIGN REVIEW 03/09/2016

REV.	DATE	REVISION DESCRIPTION	SHEET NO.
-	-	-	-
-	-	-	-
-	-	-	-
-	-	-	-
-	-	-	-
-	-	-	-

THE INFORMATION, INCLUDING ESTIMATED QUANTITIES OF WORK, SHOWN ON THESE SHEETS IS BASED ON LIMITED INVESTIGATIONS BY THE STATE AND IS IN NO WAY WARRANTED TO INDICATE THE CONDITIONS OF ACTUAL QUANTITIES OF WORK WHICH WILL BE REQUIRED.

PLOTTED: 3/9/2016

DESIGNER/DRAFTER:

CHECKED BY:

SCALE AS NOTED

STATE OF CONNECTICUT
DEPARTMENT OF TRANSPORTATION

FILENAME: ...\SB_MSH_BR_0058-0332_EX-05.dgn

LOCHNER
H.W. LOCHNER, INC
55 Hartland Street
East Hartford, CT 06108

PROJECT TITLE:
RECONSTRUCTION OF ROUTE 349 NB AND SB OVER AMTRAK RAILROAD

TOWN: GROTON

DRAWING TITLE: EXISTING PLANS 5 OF 7

PROJECT NO. 058-332

DRAWING NO. S-49

SHEET NO.

PUB. ROAD DIV. NO.	STATE	TOWN	FED. AID PROJ. NO.	PROJ. NO.	YEAR	ROUTE NO.	SHEET NO.	TOTAL SHEETS
1	CONN.	Groton	SU-141 (2)	58-117	1964	695	90	255

FORM NO. ENG. 15A

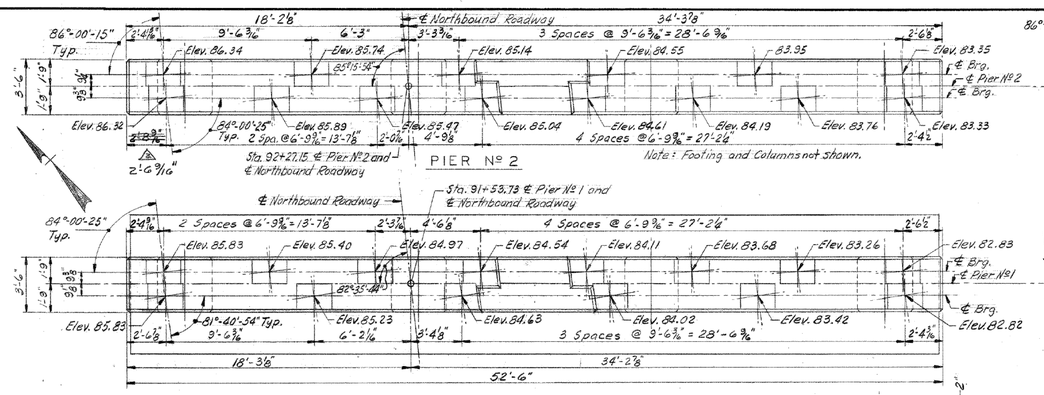

PIER № 1
PLAN
SCALE 1/4" = 1'-0"

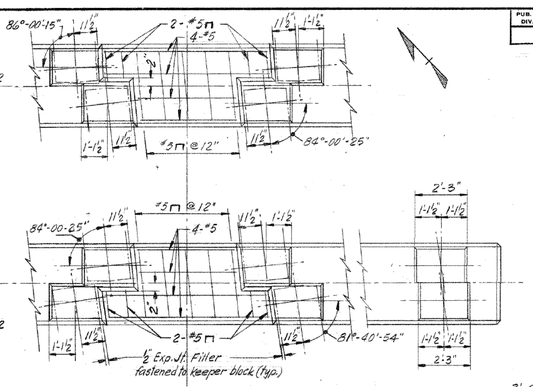

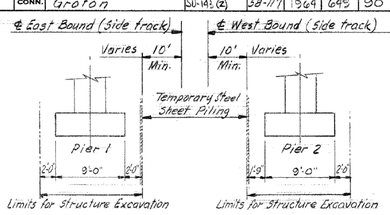

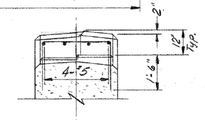

SECTION D-D

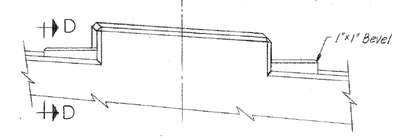

TYPICAL KEEPER BLOCK AND PAD DETAIL
SCALE 3/8" = 1'-0"

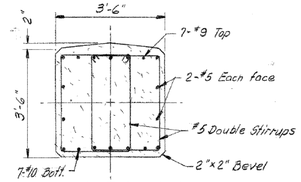

SECTION B-B
SCALE 1/2" = 1'-0"

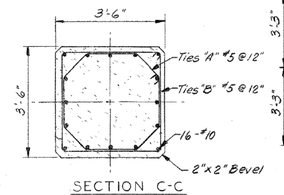

SECTION C-C
SCALE 1/2" = 1'-0"

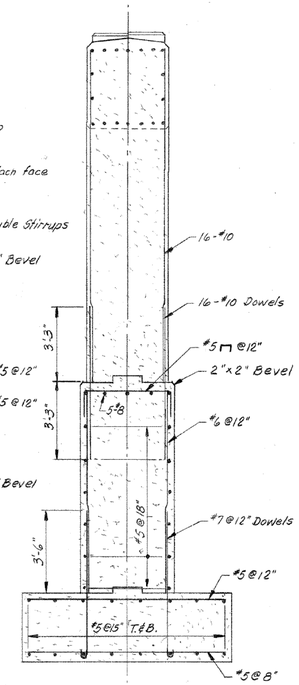

SECTION A-A
SCALE 3/8" = 1'-0"

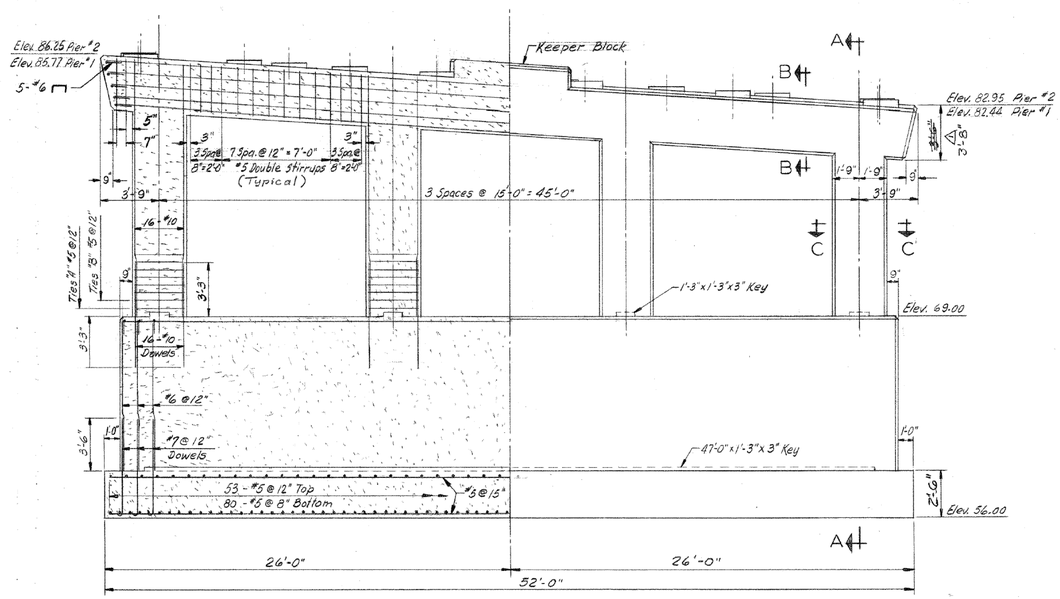

ELEVATION
SCALE 1/4" = 1'-0"

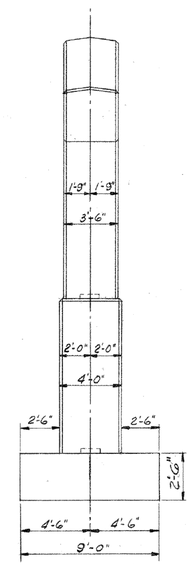

END VIEW

NOTES:

Footing reinforcement to have 3" cover. All other reinforcement to have 2" cover except where dimensioned otherwise.

Design Foundation Pressures
Group #1 2.3 T.S.F.
Group #3 2.8 T.S.F.

THE INFORMATION, INCLUDING ESTIMATED QUANTITIES OF WORK SHOWN ON THESE SHEETS IS BASED ON LIMITED INVESTIGATIONS BY THE STATE AND IS IN NO WAY WARRANTED TO INDICATE THE TRUE CONDITIONS OR ACTUAL QUANTITIES OR DISTRIBUTION OF QUANTITIES OF WORK WHICH WILL BE REQUIRED.

REVISIONS		
NO.	DATE	DESCRIPTION
1	9/23/05	3'-6" changed to 3'-8"
2	9/23/05	2'-8 9/16" changed to 2'-6 9/16"

CONNECTICUT
STATE HIGHWAY DEPARTMENT
TOWN OF GROTON
GROTON DEFENSE ACCESS HWY.
NORTHBOUND ROADWAY
OVER
N.Y., N.H. & H. R.R.
STA. 91 + 76.90
PIERS 1 & 2

DESIGNED BY B.N.
SCALES As Noted
MADE BY Wd. DATE 5-15-64
CHECKED BY W.R.P. DATE 6-2-64
APPROVED E. J. Keeney DATE 7/10/64
PROJECT NO. 58-117-03A
BRIDGE SHEET NO. 5 OF 9

DIETZGEN 1304-3 Approved Drafting Film 7791

58 117 58 119

M354 01

90

90% DESIGN REVIEW 03/09/2016

REV.	DATE	REVISION DESCRIPTION	SHEET NO.
-	-	-	-
-	-	-	-
-	-	-	-
-	-	-	-
-	-	-	-
-	-	-	-

THE INFORMATION, INCLUDING ESTIMATED QUANTITIES OF WORK, SHOWN ON THESE SHEETS IS BASED ON LIMITED INVESTIGATIONS BY THE STATE AND IS IN NO WAY WARRANTED TO INDICATE THE CONDITIONS OF ACTUAL QUANTITIES OF WORK WHICH WILL BE REQUIRED.

PLOTTED: 3/9/2016

DESIGNER/DRAFTER:
CHECKED BY:
SCALE AS NOTED

STATE OF CONNECTICUT
DEPARTMENT OF TRANSPORTATION

FILENAME: ...\SB_MSH_BR_0058-0332_EX-06.dgn

LOCHNER
H.W. LOCHNER, INC
55 Hartland Street
East Hartford, CT 06108

PROJECT TITLE:
RECONSTRUCTION OF ROUTE 349
NB AND SB OVER
AMTRAK RAILROAD

TOWN: GROTON

DRAWING TITLE: EXISTING PLANS 6 OF 7

PROJECT NO. 058-332
DRAWING NO. S-50
SHEET NO.

FORM NO. ENG. 15A

PUB. ROAD DIV. NO.	STATE	TOWN	FED. AID PROJ. NO.	PROJ. NO.	YEAR	ROUTE NO.	SHEET NO.	TOTAL SHEETS
1	CONN.	Groton	SU-143(2)	58-117	1964	I-49	99	255

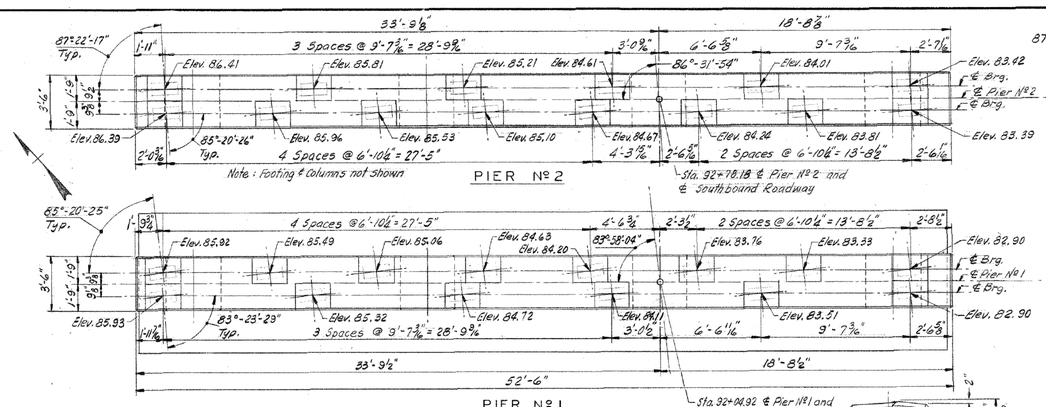

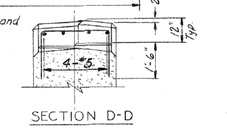

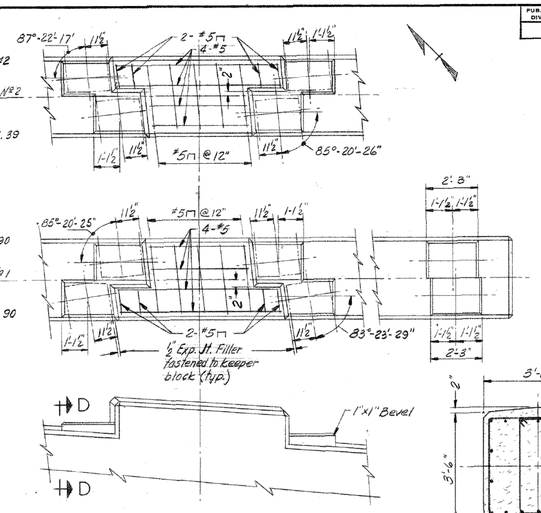

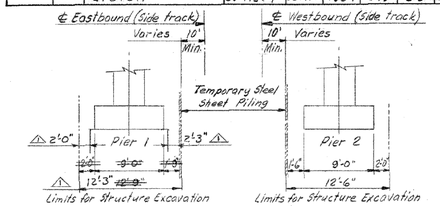

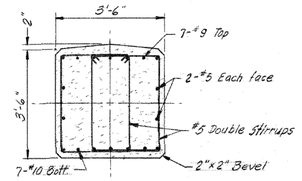

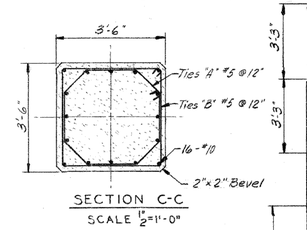

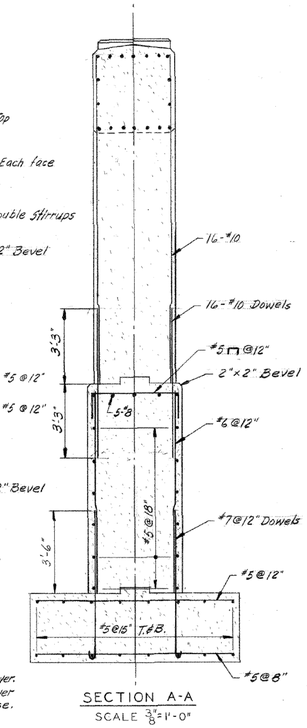

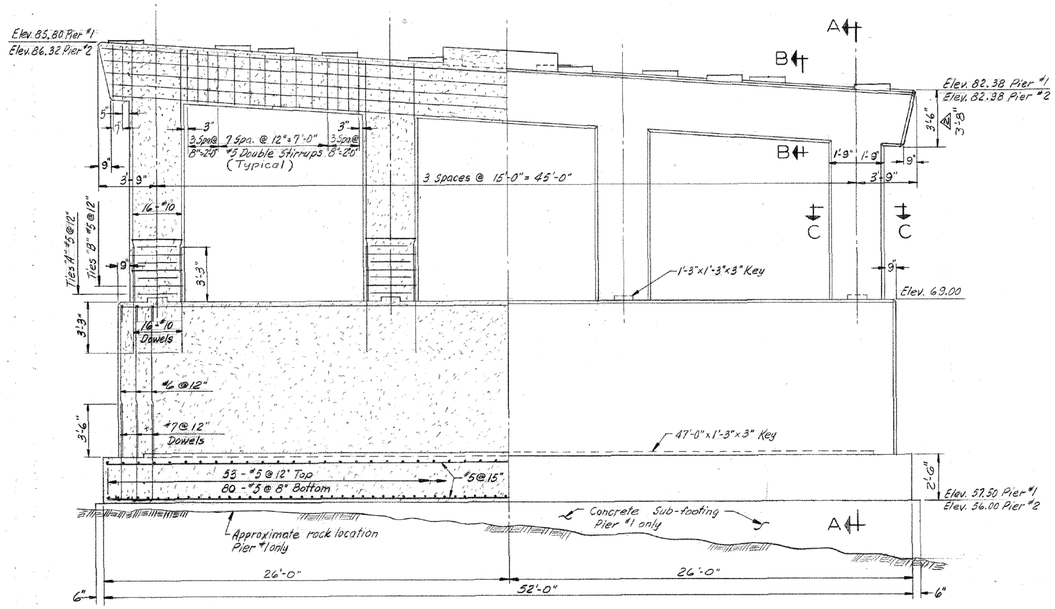

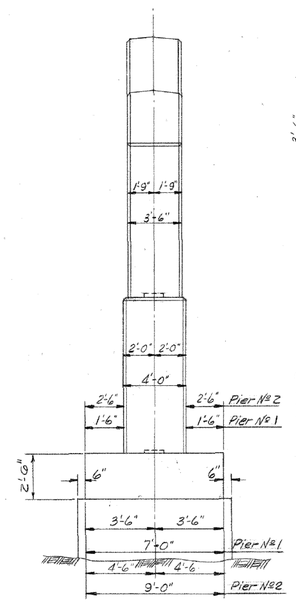

NOTES:
Footing reinforcement to have 3" cover.
All other reinforcement to have 2" cover except where dimensioned otherwise.

Design Foundation Pressure
Pier Nº1
Group 1 2.6 T.S.F.
Group 3 4.3 T.S.F.
Pier Nº2
Group 1 2.3 T.S.F.
Group 3 2.8 T.S.F.

THE INFORMATION, INCLUDING ESTIMATED QUANTITIES OF WORK SHOWN ON THESE SHEETS IS BASED ON LIMITED INVESTIGATIONS BY THE STATE AND IS IN NO WAY WARRANTED TO INDICATE THE TRUE CONDITIONS OR ACTUAL QUANTITIES OR DISTRIBUTION OF QUANTITIES OF WORK WHICH WILL BE REQUIRED.

REVISIONS		
NO.	DATE	DESCRIPTION
1	4/6/05	Revision of Sheet Piling Clearances
		Pier No. 1.
2	4/29/05	3'-6" changed to 3'-8"

CONNECTICUT
STATE HIGHWAY DEPARTMENT
TOWN OF GROTON
GROTON DEFENSE ACCESS HGWY.
SOUTHBOUND ROADWAY
OVER
N.Y., N.H. & H. R.R.
STA. 92+28.03
PIERS 1 & 2

DESIGNED BY B.N.
SCALES As Noted
MADE BY W.J.
DATE 5-7-64
CHECKED BY WP
DATE 5/2/64
APPROVED E. J. Kenny
DATE 7/10/64
PROJECT NO. 58-117-036
BRIDGE SHEET NO. 5 OF 9

DIETZGEN 130N-3 Approved Drafting Film 7701

58 117 58 119

M354 01

99

90% DESIGN REVIEW 03/09/2016

REV.	DATE	REVISION DESCRIPTION	SHEET NO.
-	-	-	-
-	-	-	-
-	-	-	-
-	-	-	-
-	-	-	-
-	-	-	-

THE INFORMATION, INCLUDING ESTIMATED QUANTITIES OF WORK, SHOWN ON THESE SHEETS IS BASED ON LIMITED INVESTIGATIONS BY THE STATE AND IS IN NO WAY WARRANTED TO INDICATE THE CONDITIONS OF ACTUAL QUANTITIES OF WORK WHICH WILL BE REQUIRED.

PLOTTED: 3/9/2016

DESIGNER/DRAFTER:

CHECKED BY:

SCALE AS NOTED

STATE OF CONNECTICUT
DEPARTMENT OF TRANSPORTATION

FILENAME: ...\SB_MSH_BR_0058-0332_EX-07.dgn

LOCHNER
H.W. LOCHNER, INC
55 Hartland Street
East Hartford, CT 06108

PROJECT TITLE:
RECONSTRUCTION OF ROUTE 349 NB AND SB OVER AMTRAK RAILROAD

TOWN: GROTON

DRAWING TITLE: EXISTING PLANS 7 OF 7

PROJECT NO. 058-332

DRAWING NO. S-51

SHEET NO.