05 - METRO-NORTH RAILROAD OVER ATLANTIC STREET
INDEX OF DRAWINGS

DRAWING NUMBER	DRAWING TITLE	DRAWING NUMBER	DRAWING TITLE	DRAWING NUMBER	DRAWING TITLE
S-01	GENERAL PLAN & LONGITUDINAL SECTION	S-39	PIER COLUMN DETAILS	S-65	DECK WATERPROOFING & DRAINAGE
S-02	GENERAL NOTES - 1	S-40	PIER STAGE CONSTRUCTION	S-66	GROUNDING & BONDING
S-03	GENERAL NOTES - 2	S-41 THRU S-47	WINGWALL 1B	S-67	SAFETY WALK DETAILS
S-04	EXISTING & PROPOSED TYPICAL SECTIONS	S-48	BRIDGE ARCHITECTURAL DETAILS	S-68	JUMP SPANS / GENERAL PLAN
S-05	LAYOUT PLAN	S-49	BEARING LAYOUT	S-69	JUMP SPANS / TYPICAL SECTION
S-06	TRACK PROFILES - 1	S-50	BEARING DETAILS	S-70	JUMP SPANS / PILE LAYOUT PLAN
S-07	TRACK PROFILES - 2	S-51	FRAMING PLAN 1 / TRACKS 5 & 7, SPAN 1	S-71	JUMP SPANS / SHORING DETAILS - 1
S-08	TRACK PROFILES - 3	S-52	FRAMING PLAN 2 / TRACKS 5 & 7, SPAN 2	S-72	JUMP SPANS / SHORING DETAILS - 2
S-09 THRU S-27	STAGE CONSTRUCTION	S-53	FRAMING PLAN 3 / TRACKS 1 & 3, SPAN 1	S-73	JUMP SPANS / SHORING DETAILS - 3
S-28	MICROPILE PLAN / ABUTMENT 1	S-54	FRAMING PLAN 4 / TRACKS 1 & 3, SPAN 2	S-74	JUMP SPANS / FRAMING TYPE 1
S-29	MICROPILE PLAN / ABUTMENT 2	S-55	FRAMING PLAN 5 / TRACKS 2 & 4, SPAN 1	S-75	JUMP SPANS / FRAMING TYPE 2
S-30	MICROPILE PLAN / PIER	S-56	FRAMING PLAN 6 / TRACKS 2 & 4, SPAN 2	S-76	JUMP SPANS / FRAMING DETAILS
S-31	MICROPILE DETAILS	S-57	GIRDER & DIAPHRAGM DETAILS	S-77	JUMP SPANS / DECK PLANS
S-32	ABUTMENT 1 PLAN & ELEVATION	S-58	CAP BEAM DETAILS	S-78	JUMP SPANS / LAYDOWN PLAN
S-33	ABUTMENT 2 PLAN & ELEVATION	S-59	TYPICAL DECK SECTION / TRACKS 5 & 7	S-79 THRU S-81	STAGE CLOSURE WALL
S-34	ABUTMENT DETAILS - 1	S-60	TYPICAL DECK SECTION / TRACKS 1 & 3	S-82 THRU S-93	ASSEMBLY AREAS AND SPMT ROUTES
S-35	ABUTMENT DETAILS - 2	S-61	TYPICAL DECK SECTION / TRACKS 2 & 4	S-94 THRU S-109	RECORD PLANS
S-36	ABUTMENT DETAILS - 3	S-62	DECK PLAN		
S-37	PIER PLAN, ELEVATION & SECTION	S-63	DECK DETAILS		
S-38	PIER REINFORCEMENT DETAILS	S-64	JOINT DETAILS		

AECOM
500 ENTERPRISE DRIVE
ROCKY HILL, CT 06067

FINAL PLANS FOR REVIEW

REV.	DATE	REVISION DESCRIPTION	SHEET NO.
-	-	-	-
-	-	-	-
-	-	-	-
-	-	-	-
-	-	-	-
-	-	-	-

THE INFORMATION, INCLUDING ESTIMATED QUANTITIES OF WORK, SHOWN ON THESE SHEETS IS BASED ON LIMITED INVESTIGATIONS BY THE STATE AND IS IN NO WAY WARRANTED TO INDICATE THE CONDITIONS OF ACTUAL QUANTITIES OF WORK WHICH WILL BE REQUIRED.

Plotted Date: 3/28/2016

DESIGNER/DRAFTER: J. IVES
CHECKED BY: K. BARKER

STATE OF CONNECTICUT
DEPARTMENT OF TRANSPORTATION

Filename: ...\SB..MSH..0135..0301..TSH-V1-S05.dgn

SIGNATURE/
BLOCK:

PROJECT TITLE:
REPLACEMENT OF MNRR BRIDGE OVER ATLANTIC STREET PHASE 2

TOWN: **STAMFORD**

DRAWING TITLE: **MNRR OVER ATLANTIC ST INDEX OF DRAWINGS**

PROJECT NO. **135-301**
DRAWING NO. **IND-00**
SHEET NO. **01.05.000**

3/28/2016
P:\Projects\Connbot\36938292\500 CADD-GIS-Graphics\510 CADD\510.04 Struc.Bridge\MSta.Contract.Sheet.Files\SB.MSH.0135.0301.TSH-V1-S05.dgn

Border Version: 11/14/08

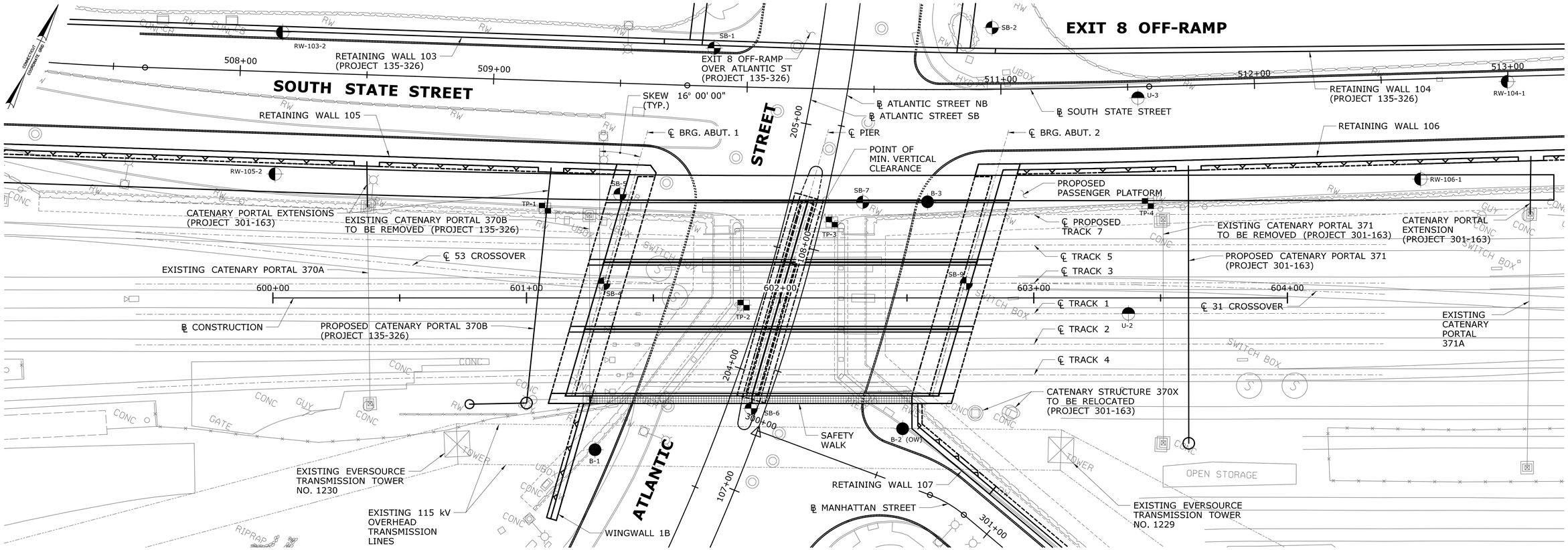

PLAN

SCALE: 1" = 20'

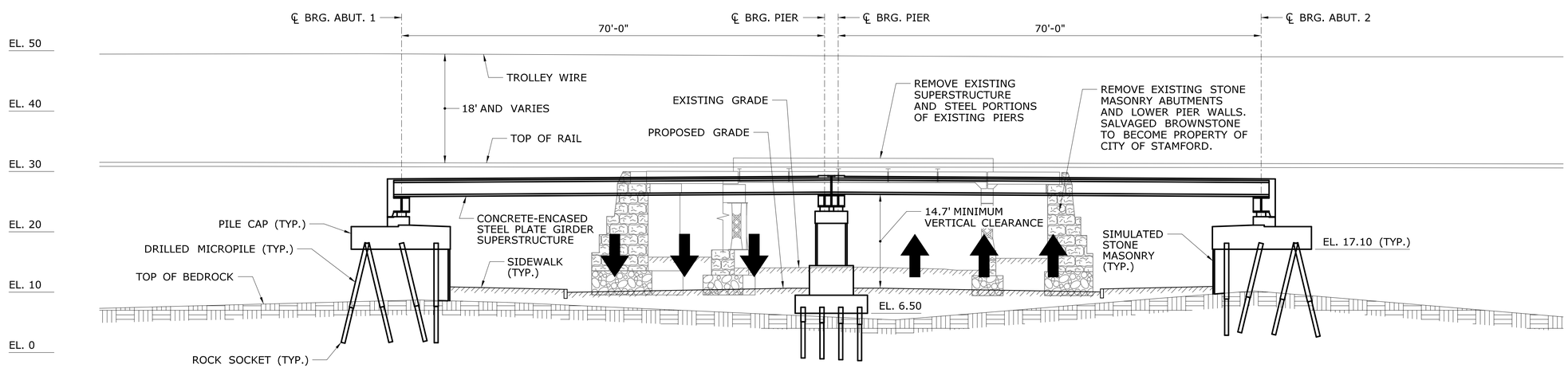

TRACK 1 LONGITUDINAL SECTION

SCALE: 1" = 10'

FINAL PLANS FOR REVIEW

REV.	DATE	REVISION DESCRIPTION	SHEET NO.
-	-	-	-
-	-	-	-
-	-	-	-
-	-	-	-
-	-	-	-
-	-	-	-

THE INFORMATION, INCLUDING ESTIMATED QUANTITIES OF WORK, SHOWN ON THESE SHEETS IS BASED ON LIMITED INVESTIGATIONS BY THE STATE AND IS IN NO WAY WARRANTED TO INDICATE THE CONDITIONS OF ACTUAL QUANTITIES OF WORK WHICH WILL BE REQUIRED.

Plotted Date: 3/28/2016

DESIGNER/DRAFTER: J. IVES
CHECKED BY: K. BARKER
SCALE AS NOTED

STATE OF CONNECTICUT
DEPARTMENT OF TRANSPORTATION

Filename: ...\SB_MSH_Br08012R_0135_0301_GPN.dgn

SIGNATURE/
BLOCK:

PROJECT TITLE:
REPLACEMENT OF MNRR BRIDGE OVER ATLANTIC STREET PHASE 2

TOWN: **STAMFORD**

DRAWING TITLE: **GENERAL PLAN & LONGITUDINAL SECTION**

PROJECT NO. 135-301
DRAWING NO. S-01
SHEET NO. 01.05.001

3/28/2016
P:\Projects\ConnDot\36938292\500 CADD-GIS-Graphics\510 CADD\510.04 Struc. Bridge\MSta. Contract. Sheet. Files\SB_MSH_Br08012R_0135_0301_GPN.dgn

Border Version: 11/14/08

GENERAL NOTES

SPECIFICATIONS: CONNECTICUT DEPARTMENT OF TRANSPORTATION FORM 816 (2004), SUPPLEMENTAL SPECIFICATIONS DATED JULY 2015 AND SPECIAL PROVISIONS.

DESIGN SPECIFICATIONS: AMERICAN RAILWAY ENGINEERING AND MAINTENANCE OF WAY ASSOCIATION (AREMA) MANUAL FOR RAILWAY ENGINEERING (2014), AS SUPPLEMENTED BY THE AASHTO STANDARD SPECIFICATIONS FOR HIGHWAY BRIDGES (2002) AND BY THE CONNECTICUT DEPARTMENT OF TRANSPORTATION BRIDGE DESIGN MANUAL (2003).

ALLOWABLE DESIGN STRESSES:
ALLOWABLE STRESSES SHALL CONFORM TO THE AREMA MANUAL FOR RAILWAY ENGINEERING AND SHALL BE BASED ON THE FOLLOWING MATERIAL PROPERTIES:

CONCRETE:	
CLASS "A" CONCRETE	BASED ON f'c = 3000 PSI
CLASS "F" CONCRETE	BASED ON f'c = 4000 PSI
PORTLAND CEMENT CONCRETE FOR DRILLED SHAFTS	BASED ON f'c = 3000 psi
REINFORCEMENT:	
ASTM A615 GRADE 60	BASED ON fy = 60,000 PSI
STRUCTURAL STEEL:	
AASHTO M270, GRADE 50	BASED ON Fy = 50,000 PSI
TRANSVERSE TIE STRANDS:	
AASHTO M203, GRADE 270	BASED ON fu = 270,000 PSI

THE SPECIFIED CONCRETE STRENGTH USED IN DESIGN, f'c, OF THE CONCRETE COMPONENTS IS NOTED ABOVE. THE MINIMUM COMPRESSIVE STRENGTH OF THE CONCRETE IN THE CONSTRUCTED COMPONENTS SHALL CONFORM TO THE REQUIREMENTS OF "SECTION 6.01 CONCRETE FOR STRUCTURES."

LIVE LOAD:

PERMANENT RAILROAD STRUCTURE (STRENGTH):	COOPER E-80
PERMANENT RAILROAD STRUCTURE (DEFLECTION):	COOPER E-67
TEMPORARY RAILROAD STRUCTURE:	COOPER E-60
PASSENGER PLATFORM:	150 PSF
SAFETY WALK:	85 PSF

STRUCTURAL STEEL: SEE STRUCTURAL STEEL NOTES FOR DESIGNATIONS AND REQUIREMENTS.

PAINT: PAINT SHALL CONFORM TO THE REQUIREMENTS OF THE SPECIAL PROVISION, "STRUCTURAL STEEL (SITE NO. 1)." THE COLOR OF THE TOPCOAT MATERIAL ON THE STRUCTURAL STEEL SHALL CONFORM TO FEDERAL STANDARD COLOR NO. TBD (TBD).

FOUNDATION PRESSURES AND PILE LOADS: THE VARIOUS GROUP LOADINGS NOTED ON THE SUBSTRUCTURE PLAN SHEETS REFER TO THE GROUP LOADS AS GIVEN IN THE AREMA MANUAL FOR RAILWAY ENGINEERING.

BORING LOGS: FOR BORING LOGS, SEE SUBSET 9.

DIMENSIONS: WHEN DECIMAL DIMENSIONS ARE GIVEN TO LESS THAN THREE DECIMAL PLACES, THE OMITTED DIGITS SHALL BE ASSUMED TO BE ZEROS.

EXISTING DIMENSIONS: DIMENSIONS OF THE EXISTING STRUCTURE SHOWN ON THESE PLANS ARE FOR GENERAL REFERENCE ONLY. THEY HAVE BEEN TAKEN FROM THE ORIGINAL DESIGN DRAWINGS AND ARE NOT GUARANTEED. THE CONTRACTOR SHALL TAKE ALL FIELD MEASUREMENTS NECESSARY TO ASSURE PROPER FIT OF THE FINISHED WORK AND SHALL ASSUME FULL RESPONSIBILITY FOR THEIR ACCURACY. WHEN SHOP DRAWINGS BASED ON FIELD MEASUREMENTS ARE SUBMITTED FOR APPROVAL, THE FIELD MEASUREMENTS SHALL ALSO BE SUBMITTED FOR REFERENCE BY THE REVIEWER.

BALLAST: THE CONTRACTOR SHALL PROVIDE BALLAST TO 4" BELOW THE BOTTOM OF THE TIES. METRO-NORTH RAILROAD WILL PROVIDE THE REMAINDER OF THE BALLAST AND INSTALL THE TRACKS. ALIGNMENT AND TAMPING WILL BE DONE BY METRO-NORTH RAILROAD.

NOISE POLLUTION: THE CONTRACTOR SHALL EMPLOY ALL POSSIBLE METHODS TO MINIMIZE NOISE POLLUTION CAUSED BY CONSTRUCTION EQUIPMENT, INCLUDING BUT NOT LIMITED TO EQUIPMENT USED FOR DRILLING, EXCAVATING AND HAULING. ALL UNITS SHALL BE MUFFLED SO AS TO REDUCE NOISE TO AN ACCEPTABLE LEVEL AS DEFINED HEREIN. ALL METHODS AND DEVICES EMPLOYED TO MINIMIZE NOISE LEVELS SHALL BE SUBJECT TO THE CONTINUING APPROVAL OF THE ENGINEER. THE MAXIMUM ALLOWABLE LEVEL OF NOISE AT THE NEAREST RESIDENCE OR OCCUPIED BUILDING SHALL BE 90 DECIBELS ON THE "A" WEIGHTED SCALE.

CONCRETE NOTES

REMAIN-IN-PLACE FORMS: THE USE OF REMAIN-IN-PLACE FORMS IS NOT ALLOWED, EXCEPT AS INDICATED ON THE PLANS. WHERE INDICATED, THE STRUCTURES HAVE BEEN DESIGNED FOR THE ADDITIONAL WEIGHT OF 5 POUNDS PER SQUARE FOOT FOR THE REMAIN-IN-PLACE FORMS.

COMPOSITE CONSTRUCTION: NO TEMPORARY INTERMEDIATE SUPPORTS SHALL BE USED DURING THE PLACING AND SETTING OF SUPERSTRUCTURE CONCRETE. TEMPORARY SUPPORTS MAY BE USED FOR STRUCTURAL STEEL ERECTION ONLY. CONSTRUCTION LOADS AND DEAD LOADS WILL BE PERMITTED WHEN DIRECTED BY THE ENGINEER BUT ONLY WHEN THE CONCRETE HAS REACHED A STRENGTH OF F'C = 3500 PSI. LIVE LOADS (TRAFFIC) WILL BE PERMITTED ON THE STRUCTURE AFTER THE CONCRETE HAS REACHED A STRENGTH OF f'c = 4000 PSI.

CLASS "A" CONCRETE: CLASS "A" CONCRETE SHALL BE USED THROUGHOUT WINGWALL 1B WITH THE EXCEPTION OF THE CLASS "F" CONCRETE USED IN THE PRECAST LAGGING AND THE CONCRETE USED IN THE DRILLED SHAFTS.

CLASS "F" CONCRETE: CLASS "F" CONCRETE SHALL BE USED FOR THE ENTIRE BRIDGE WITH THE EXCEPTION OF THE CLASS "A" CONCRETE AND PORTLAND CEMENT CONCRETE FOR DRILLED SHAFTS USED FOR WINGWALL 1B.

PORTLAND CEMENT CONCRETE FOR DRILLED SHAFTS: THE COST OF PORTLAND CEMENT CONCRETE FOR DRILLED SHAFTS SHALL BE PAID FOR UNDER THE ITEM "DRILLED SHAFT (2.0' DIAMETER)."

JOINT SEAL: SEE SPECIAL PROVISIONS.

EXPOSED EDGES: EXPOSED EDGES OF CONCRETE SHALL BE BEVELED 1" X 1" UNLESS DIMENSIONED OTHERWISE.

CONCRETE COVER: ALL REINFORCEMENT SHALL HAVE TWO INCHES COVER UNLESS DIMENSIONED OTHERWISE.

REINFORCEMENT: ALL REINFORCEMENT SHALL BE ASTM A615 GRADE 60 UNLESS NOTED OTHERWISE.

EPOXY COATED REINFORCING BARS: ALL REINFORCEMENT IN THE SUPERSTRUCTURE INCLUDING THE CONCRETE DECK SLAB, CONCRETE FILL AND BALLAST RETAINERS SHALL BE EPOXY COATED UNLESS OTHERWISE NOTED. THESE BARS SHALL BE INCLUDED IN THE PAY ITEM FOR "DEFORMED STEEL BARS (EPOXY COATED)."

FELT: THE COST OF FURNISHING 15-POUND ROOFING FELT IS INCLUDED IN THE ITEMS "CLASS 'A' CONCRETE" AND "CLASS 'F' CONCRETE."

PREFORMED EXPANSION JOINT FILLER: THE COST OF FURNISHING AND INSTALLING PREFORMED EXPANSION JOINT FILLER SHALL BE INCLUDED IN THE COST OF THE ITEM "1/2" PREFORMED EXPANSION JOINT FILLER FOR BRIDGES."

CLOSED CELL ELASTOMER: THE COST OF FURNISHING AND INSTALLING CLOSED CELL ELASTOMER SHALL BE INCLUDED IN THE COST OF THE ITEMS "CLASS 'A' CONCRETE" AND "CLASS 'F' CONCRETE."

CONSTRUCTION JOINTS: CONSTRUCTION JOINTS, OTHER THAN THOSE SHOWN ON THE PLANS, WILL NOT BE PERMITTED WITHOUT THE PRIOR APPROVAL OF THE ENGINEER.

STRUCTURAL STEEL NOTES

1. STRUCTURAL STEEL (LOW ALLOY) SHALL CONFORM TO AASHTO M270, GRADE 50 T2 UNLESS OTHERWISE NOTED. STRUCTURAL STEEL (LOW ALLOY) FOR THE PEDESTRIAN PLATFORM STRUCTURE SHALL CONFORM TO AASHTO M270, GRADE 50 F2.
2. BRIDGE FABRICATION SHALL BE IN ACCORDANCE WITH THE AREMA MANUAL FOR RAILWAY ENGINEERING. WELDING DETAILS, PROCEDURES AND TESTING METHODS NOT COVERED BY THE MANUAL FOR RAILWAY ENGINEERING SHALL CONFORM TO THE AASHTO/AWS D1.5M/D1.5:2010 BRIDGE WELDING CODE.
3. BOLTED FIELD SPLICES, OTHER THAN THOSE INDICATED ON THE PLANS, WILL NOT BE ALLOWED EXCEPT WITH THE WRITTEN PERMISSION OF THE ENGINEER PRIOR TO THE SUBMISSION OF SHOP PLANS. IF ALLOWED, THESE SPLICES SHALL BE DESIGNED BY THE CONTRACTOR AND APPROVED BY THE ENGINEER. THE COST OF THESE SPLICES, INCLUDING THE COST OF DESIGN, SHALL BE AT NO EXTRA EXPENSE TO THE STATE. WELDED FIELD SPLICES WILL NOT BE ALLOWED.
4. ALL WEB TO FLANGE, WEB TO BEARING STIFFENER AND BEARING STIFFENER TO FLANGE FILLET WELDS SHALL BE INSPECTED BY THE MAGNETIC PARTICLE METHOD.
5. MULTIPLE PASS WELDS, INSPECTED BY THE MAGNETIC PARTICLE METHOD SHALL HAVE EACH PASS OR LAYER INSPECTED AND ACCEPTED BEFORE PROCEEDING TO THE NEXT PASS OR LAYER, AS DETERMINED BY THE ENGINEER.
6. SHOP WEB SPLICES SHALL BE LOCATED WITHIN THE MIDDLE THIRD OF THE SPAN.
7. SHOP FLANGE SPLICES SHALL BE LOCATED A MINIMUM OF SIX INCHES FROM WEB SPLICES.
8. FLANGE OR WEB SPLICES SHALL BE LOCATED A MINIMUM OF SIX INCHES FROM STIFFENERS AND CONNECTION PLATES.
9. BEARING AND INTERMEDIATE STIFFENERS AND THE ENDS OF GIRDERS SHALL BE VERTICAL AFTER THE APPLICATION OF FULL DEAD LOADS.
10. THE STRUCTURAL STEEL FABRICATORS SHALL BE CERTIFIED UNDER THE AISC QUALITY CONTROL PROGRAM NOTED BELOW:
    CATEGORY MBrF – MAJOR STEEL BRIDGES
11. THE CONTRACTOR SHALL TAKE THE PROPER PRECAUTIONS TO ENSURE THE STABILITY OF ALL STRUCTURAL ELEMENTS UNTIL THE TOTAL STRUCTURE IS IN BEING.

DEMOLITION AND ERECTION NOTES

1. THE CONTRACTOR SHALL FIELD VERIFY AND LOCATE ALL OVERHEAD AND UNDERGROUND PUBLIC AND RAILROAD UTILITIES. PRIOR TO COMMENCEMENT OF THE WORK, THE ENGINEER, RAILROAD AND UTILITY COMPANIES MUST BE NOTIFIED IN ACCORDANCE WITH FORM 816, ARTICLE 1.05.06.
2. THE CONTRACTOR SHALL PROTECT, PRESERVE, INCORPORATE, TEMPORARILY RELOCATE AND, IF NECESSARY, SUPPORT ALL EXISTING UTILITIES AND ITEMS TO REMAIN. THE CONTRACTOR SHALL REPAIR OR REPLACE ANY ITEM DAMAGED DURING THE COURSE OF THE WORK AT NO ADDITIONAL COST, TO THE SATISFACTION OF THE ENGINEER.
3. THE CONTRACTOR SHALL CONSULT THE ENGINEER FOR RESOLVING ANY CONFLICT IN MAINTAINING WIRE HEIGHTS AT A PARTICULAR LOCATION.
4. THE CONTRACTOR SHALL TAKE ADEQUATE MEASURES TO PROTECT AERIAL CABLES, TRANSMISSION LINES, WIRES AND CONDUCTORS FROM ANY DAMAGE DURING THE DEMOLITION OF THE EXISTING BRIDGE AND CONSTRUCTION OF THE NEW BRIDGE.
5. THE CONTRACTOR SHALL SURVEY RESPECTIVE LOCATIONS OF ALL WIRES IN ORDER TO PREPARE DEMOLITION AND ERECTION DRAWINGS.
6. PRINTS OF THE ORIGINAL DRAWINGS OF THE EXISTING BRIDGE MAY BE OBTAINED FROM THE CONNECTICUT DEPARTMENT OF TRANSPORTATION. THEY ARE NOT "AS BUILT" DRAWINGS AND THEREFORE SOME DETAILS MAY NOT BE ACCURATE.
7. ALL MATERIALS RELATED TO THE DEMOLITION SHALL BECOME THE PROPERTY OF THE CONTRACTOR. THE CONTRACTOR SHALL REMOVE ALL MATERIALS FROM THE SITE AND LEGALLY DISPOSE OF THEM.
8. ALL DEMOLITION AND ERECTION WORK SHALL BE CARRIED OUT IN A MANNER NOT TO INTERFERE WITH ROADWAYS, RAIL SERVICE AND EXISTING UTILITIES EXCEPT AS SHOWN ON THE PLANS.
9. FOR DEMOLITION AND ERECTION, THE CONTRACTOR MAY USE THE "SUGGESTED DEMOLITION" AND "SUGGESTED ERECTION" METHODS SHOWN SCHEMATICALLY ON THE PLANS. THE CONTRACTOR MAY PROPOSE A DIFFERENT METHOD, AT NO ADDITIONAL COST TO THE STATE, SUBJECT TO REVIEW AND APPROVAL BY THE ENGINEER.
10. THE CONTRACTOR SHALL BE RESPONSIBLE FOR MAINTAINING PORTIONS OF THE EXISTING SUBSTRUCTURE AND SUPERSTRUCTURE SUPPORTING RAILROAD TRAFFIC DURING STAGE CONSTRUCTION.

FINAL PLANS FOR REVIEW

REV.	DATE	REVISION DESCRIPTION	SHEET NO.
-	-	-	-
-	-	-	-
-	-	-	-
-	-	-	-
-	-	-	-
-	-	-	-

THE INFORMATION, INCLUDING ESTIMATED QUANTITIES OF WORK, SHOWN ON THESE SHEETS IS BASED ON LIMITED INVESTIGATIONS BY THE STATE AND IS IN NO WAY WARRANTED TO INDICATE THE CONDITIONS OF ACTUAL QUANTITIES OF WORK WHICH WILL BE REQUIRED.

Plotted Date: 3/28/2016

DESIGNER/DRAFTER: J. IVES
CHECKED BY: K. BARKER

STATE OF CONNECTICUT
DEPARTMENT OF TRANSPORTATION

Filename: ...\SB_MSH_Br08012R_0135_0301_GN-1.dgn

SIGNATURE/
BLOCK:

PROJECT TITLE:
REPLACEMENT OF MNRR BRIDGE OVER ATLANTIC STREET PHASE 2

TOWN: **STAMFORD**

DRAWING TITLE: **GENERAL NOTES - 1**

PROJECT NO. **135-301**
DRAWING NO. **S-02**
SHEET NO. **01.05.002**

3/28/2016
P:\Projects\ConnDot\36938292\500 CADD-GIS-Graphics\510 CADD\510.04 Struc.Bridge\MSta.Contract.Sheet.Files\SB.MSH.Br08012R.0135.0301.GN-1.dgn

Border Version: 11/14/08

RATING SUMMARY TABLE

ELEMENT	RATING FORCE	COOPER E80 RATING	
		NORMAL	MAXIMUM
GIRDER	MOMENT	TBD	TBD
	SHEAR	TBD	TBD

GIRDER SHIPPING DATA

GIRDER TYPE	HEIGHT	WIDTH	LENGTH	WEIGHT (LBS)
RAILROAD	2'-8"	1'-8"	72'	40,000
PASSENGER PLATFORM	5'-10"	1'-6"	108'	38,000

INSPECTION OF FIELD WELDS

METHOD	UNIT	QUANTITY
ULTRASONIC	INCHES	NONE
MAGNETIC PARTICLE	FEET	NONE

CONCRETE DISTRIBUTION

SUPERSTRUCTURE	TBD	CY
SUBSTRUCTURE	TBD	CY
FOOTINGS	TBD	CY
TOTAL	TBD	CY

NOTICE TO BRIDGE INSPECTORS

THE DEPARTMENT'S BRIDGE SAFETY PROCEDURES REQUIRE THIS BRIDGE TO BE INSPECTED FOR, BUT NOT LIMITED TO, ALL APPROPRIATE COMPONENTS INDICATED IN THE GOVERNING MANUALS FOR BRIDGE INSPECTION. ATTENTION MUST BE GIVEN TO INSPECTING THE FOLLOWING SPECIAL COMPONENTS AND DETAILS. (THE LISTING FOR COMPONENTS FOR SPECIFIC ATTENTION SHALL NOT BE CONSTRUED TO REDUCE THE IMPORTANCE OF INSPECTION OF ANY OTHER COMPONENT OF THE STRUCTURE.) THE FREQUENCY OF INSPECTION OF THIS STRUCTURE SHALL BE IN ACCORDANCE WITH THE GOVERNING MANUALS FOR BRIDGE INSPECTION, UNLESS OTHERWISE DIRECTED BY THE MANAGER OF BRIDGE SAFETY AND EVALUATION.

COMPONENT OR DETAIL	BRIDGE SHEET REFERENCE
NONE	

TABLE OF BRIDGE QUANTITIES

DESCRIPTION	UNIT	QTY
STRUCTURE EXCAVATION-EARTH (COMPLETE)	CY	3,600
STRUCTURE EXCAVATION-ROCK (COMPLETE)	CY	10
BALLAST	CY	150
SUBBALLAST	CY	TBD
BALLAST MAT	SF	10,400
PERVIOUS STRUCTURE BACKFILL	CY	835
REMOVAL OF SUPERSTRUCTURE	LS	1
GROUND ANCHOR	EA	4
PERFORMANCE TEST FOR GROUND ANCHOR	EA	1
PROOF TEST FOR GROUND ANCHOR	EA	3
WELDED STUDS	EA	1,475
8" HALF ROUND STEEL DRAINAGE PIPE	LF	775
POT, SPHERICAL OR DISC BEARINGS (600 KIPS)	EA	60
CLASS "A" CONCRETE	CY	85
SIMULATED STONE MASONRY	SY	640
CLASS "F" CONCRETE	CY	2,450
PRECAST SUBSTRUCTURE ELEMENTS	CY	TBD
½" PREFORMED EXPANSION JOINT FILLER FOR BRIDGES	SF	190
1" PREFORMED EXPANSION JOINT FILLER FOR BRIDGES	SF	1,000
DEFORMED STEEL BARS	LB	125,000
DEFORMED STEEL BARS-EPOXY COATED	LB	15,200
DEFORMED STEEL BARS-WELDABLE	LB	TBD
DOWEL BAR SPLICER SYSTEM	EA	260
STRUCTURAL STEEL (SITE NO. 1)	LS	1
STRUCTURAL STEEL (SITE NO. 2)	LS	1
STRUCTURAL STEEL (LOW ALLOY)	CWT	TBD
TEMPORARY SUPPORT SYSTEM (SITE NO. 1)	LS	1
TEMPORARY SUPPORT SYSTEM (SITE NO. 2)	LS	1
ERECTION EQUIPMENT-COMPLETE	LS	1
POST-TENSIONING TENDONS	LB	TBD
SAFETY WALK	SF	390
FURNISHING DRILLED SHAFT DRILLING EQUIPMENT	LS	*
DRILLED SHAFT (2.0' DIAMETER)	LF	150
DRILLED SHAFT EARTH EXCAVATION (2.0' DIAMETER)	LF	120
DRILLED SHAFT ROCK EXCAVATION (2.0' DIAMETER)	LF	30
PERMANENT CASING (2.0' DIAMETER)	LF	120
MICROPILES	EA	282
VERIFICATION TEST FOR MICROPILES	EA	TBD
PROOF TEST FOR MICROPILES	EA	TBD
MICROPILE LENGTH ADJUSTMENT	LF	TBD
FURNISHING STEEL PILES	LB	22,800
MEMBRANE WATERPROOFING (COLD LIQUID ELASTOMERIC)	SY	1,150
MEMBRANE WATERPROOFING (SHEET)	SY	TBD
DAMPPROOFING	SY	40
LAGGING	SF	TBD
TEMPORARY SHEET PILING (RAILROAD)	SF	5,000
TEMPORARY SOLDIER PILE AND LAGGING (RAILROAD)	SF	3,130
SOLDIER PILE AND LAGGING LEFT IN PLACE (RAILROAD)	SF	1,565
TEMPORARY EARTH RETAINING SYSTEM	SF	TBD
EARTH RETAINING SYSTEM LEFT IN PLACE	SF	TBD
6'' STRUCTURE UNDERDRAIN	LF	250
6" OUTLET FOR UNDERDRAIN	LF	TBD
GEOCOMPOSITE SHEET DRAIN	SF	165
GEOTEXTILE (SEPARATION-HIGH SURVIVABILITY)	SY	200
6' CHAIN LINK FENCE (BRIDGE)	LF	50
REMOVAL OF EXISTING MASONRY	CY	TBD
GROUNDING AND BONDING	LS	1

*THE LUMP SUM ITEM "FURNISHING DRILLED SHAFT DRILLING EQUIPMENT" INCLUDES WORK AT BRIDGE 08012R AND WALLS 105, 106 AND 107.

FINAL PLANS FOR REVIEW

REV.	DATE	REVISION DESCRIPTION	SHEET NO.
-	-	-	-
-	-	-	-
-	-	-	-
-	-	-	-
-	-	-	-
-	-	-	-

THE INFORMATION, INCLUDING ESTIMATED QUANTITIES OF WORK, SHOWN ON THESE SHEETS IS BASED ON LIMITED INVESTIGATIONS BY THE STATE AND IS IN NO WAY WARRANTED TO INDICATE THE CONDITIONS OF ACTUAL QUANTITIES OF WORK WHICH WILL BE REQUIRED.

Plotted Date: 3/28/2016

DESIGNER/DRAFTER: J. IVES
CHECKED BY: K. BARKER

STATE OF CONNECTICUT
DEPARTMENT OF TRANSPORTATION

Filename: ...\SB_MSH_Br08012R_0135_0301_GN-2.dgn

SIGNATURE/
BLOCK:

PROJECT TITLE:
REPLACEMENT OF MNRR BRIDGE OVER ATLANTIC STREET PHASE 2

TOWN: **STAMFORD**

DRAWING TITLE: **GENERAL NOTES - 2**

PROJECT NO. **135-301**
DRAWING NO. **S-03**
SHEET NO. **01.05.003**

3/28/2016
P:\Projects\ComDot\36938292\500 CADD-GIS-Graphics\510 CADD\510.04 Struc.Bridge\WSta.Contract.Sheet.Files\SB_MSH_Br08012R_0135_0301_GN-2.dgn

Border Version: 11/14/08

NOTES

1. FOR FURTHER DETAILS OF THE EXISTING BRIDGE, REFER TO THE RECORD PLAN DRAWINGS INCLUDED ELSEWHERE IN THESE PLANS.
2. DIMENSIONS NOTED AS "AND VARIES" ARE THE APPROXIMATE DIMENSIONS AT THE CENTER OF THE PROPOSED BRIDGE.

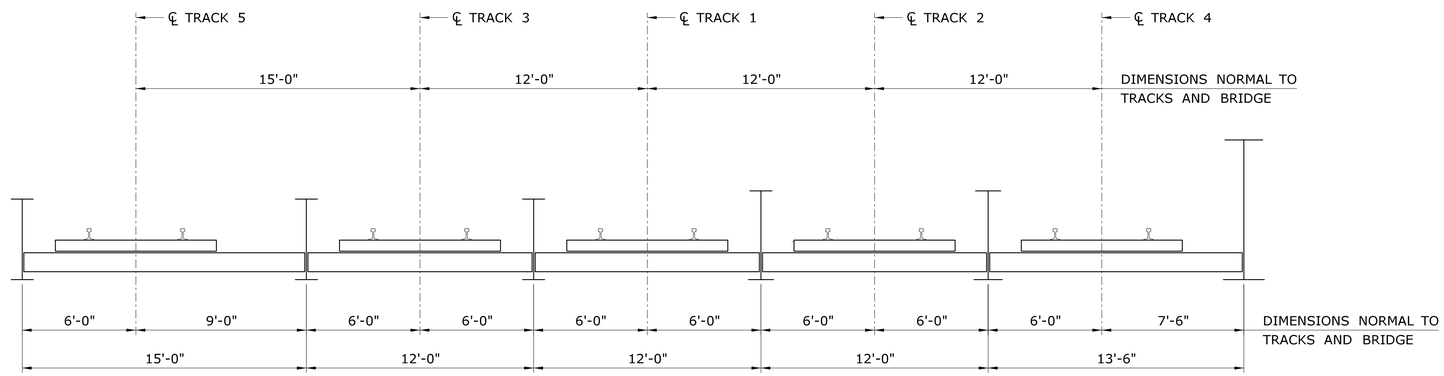

EXISTING TYPICAL SECTION (SPAN 2)

SCALE: 1/4" = 1'-0"

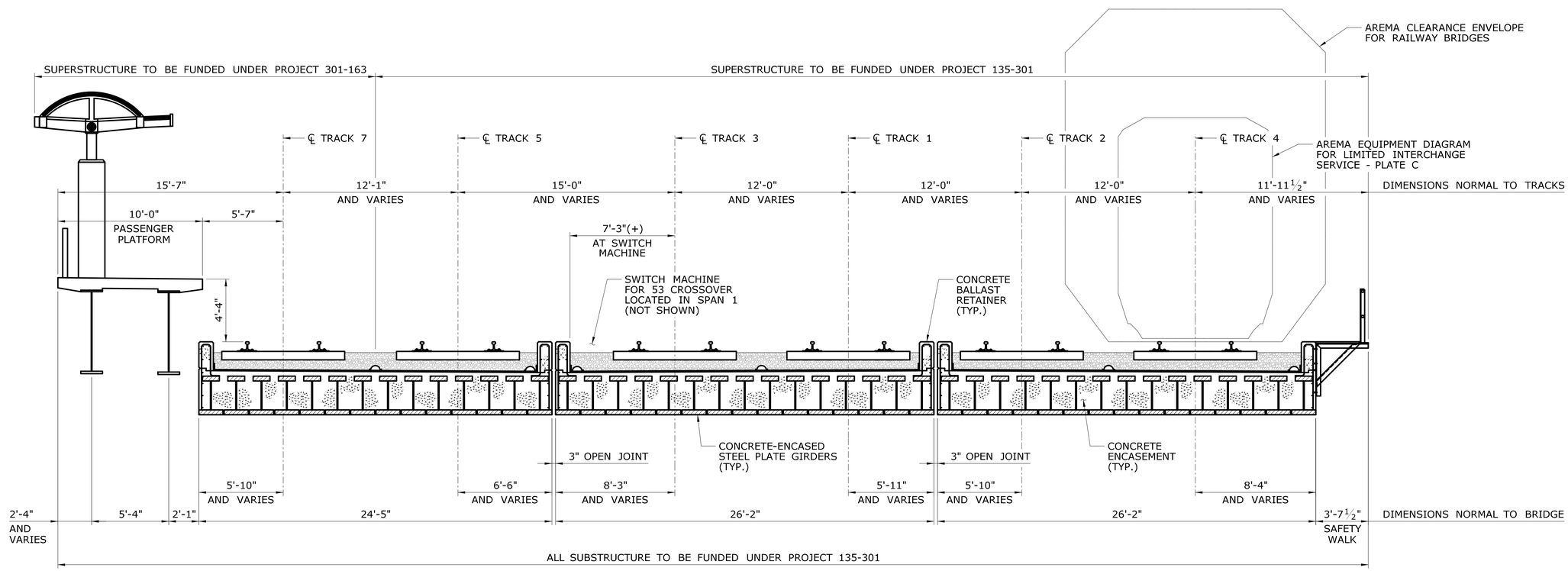

PROPOSED TYPICAL SECTION

SCALE: 1/4" = 1'-0"

FINAL PLANS FOR REVIEW

REV.	DATE	REVISION DESCRIPTION	SHEET NO.
-	-	-	-
-	-	-	-
-	-	-	-
-	-	-	-
-	-	-	-
-	-	-	-

THE INFORMATION, INCLUDING ESTIMATED QUANTITIES OF WORK, SHOWN ON THESE SHEETS IS BASED ON LIMITED INVESTIGATIONS BY THE STATE AND IS IN NO WAY WARRANTED TO INDICATE THE CONDITIONS OF ACTUAL QUANTITIES OF WORK WHICH WILL BE REQUIRED.

Plotted Date: 3/28/2016

DESIGNER/DRAFTER: J. IVES
CHECKED BY: D. COSTELLO
SCALE AS NOTED

STATE OF CONNECTICUT
DEPARTMENT OF TRANSPORTATION

Filename: ...\SB_MSH_Br08012R_0135_0301_TYP.dgn

SIGNATURE/ BLOCK:

PROJECT TITLE:
REPLACEMENT OF MNRR BRIDGE OVER ATLANTIC STREET PHASE 2

TOWN: **STAMFORD**

DRAWING TITLE: **EXISTING & PROPOSED TYPICAL SECTIONS**

PROJECT NO. **135-301**
DRAWING NO. **S-04**
SHEET NO. **01.05.004**

3/28/2016
P:\Projects\CommDot\36938292\500 CADD-GIS-Graphics\510 CADD\510.04 Struc. Bridge\WSta. Contract Sheet_Files\SB_MSH_Br08012R_0135_0301_TYP.dgn

Border Version: 11/14/08

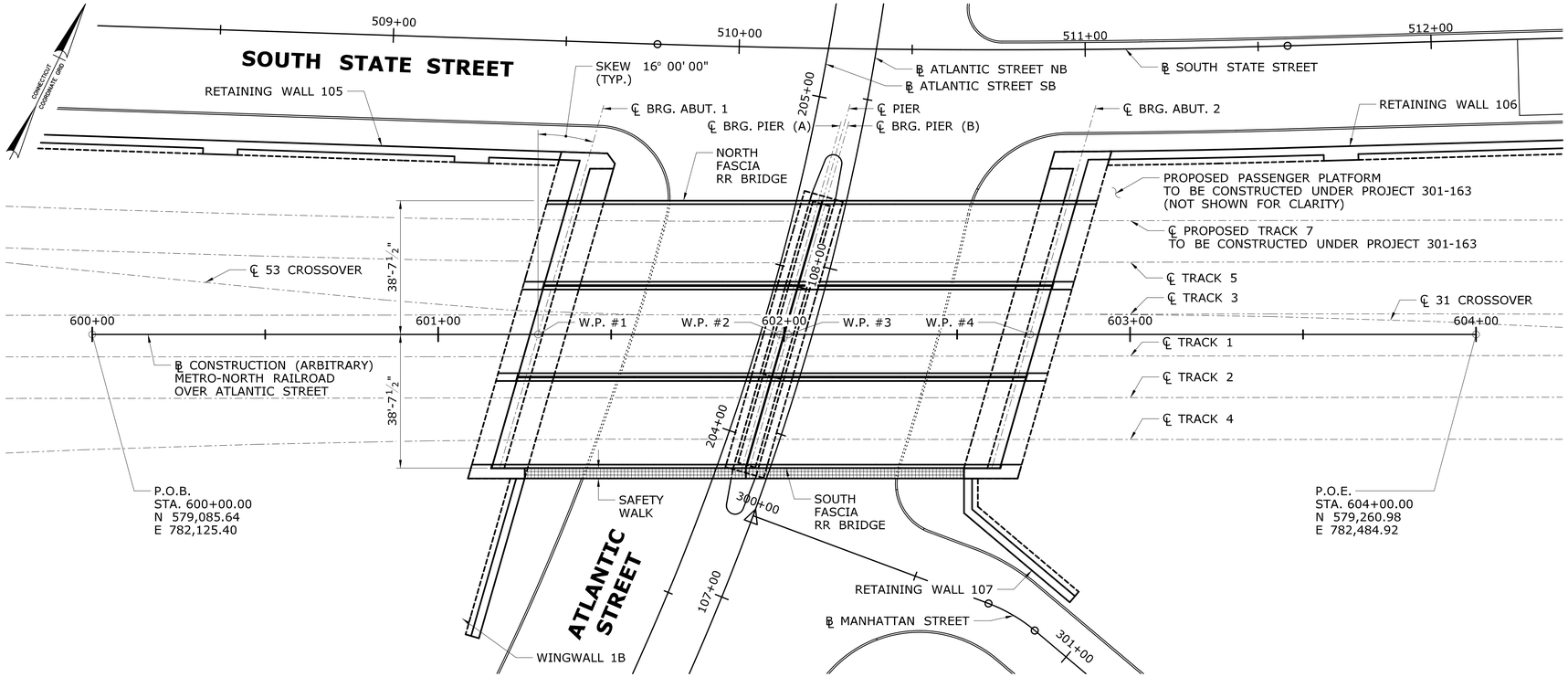

LAYOUT PLAN

SCALE: 1" = 20'

NOTES

1. SEE ROADWAY PLANS FOR ROADWAY BASELINE GEOMETRY.
2. SEE DRAWINGS "MICROPILE PLAN / ABUTMENT 1", "MICROPILE PLAN / ABUTMENT 2", "MICROPILE PLAN / PIER", AND "WINGWALL 1B PLAN AND ELEVATION" FOR BRIDGE SUBSTRUCTURE LAYOUT WORKING POINTS.
3. SEE TRACK PROFILE DRAWINGS FOR RAILROAD PROFILE.

WORKING POINT COORDINATES

W.P. #	NORTHING	EASTING
1	579,142.13	782,241.23
2	579,172.82	782,304.15
3	579,173.80	782,306.17
4	579,204.49	782,369.09

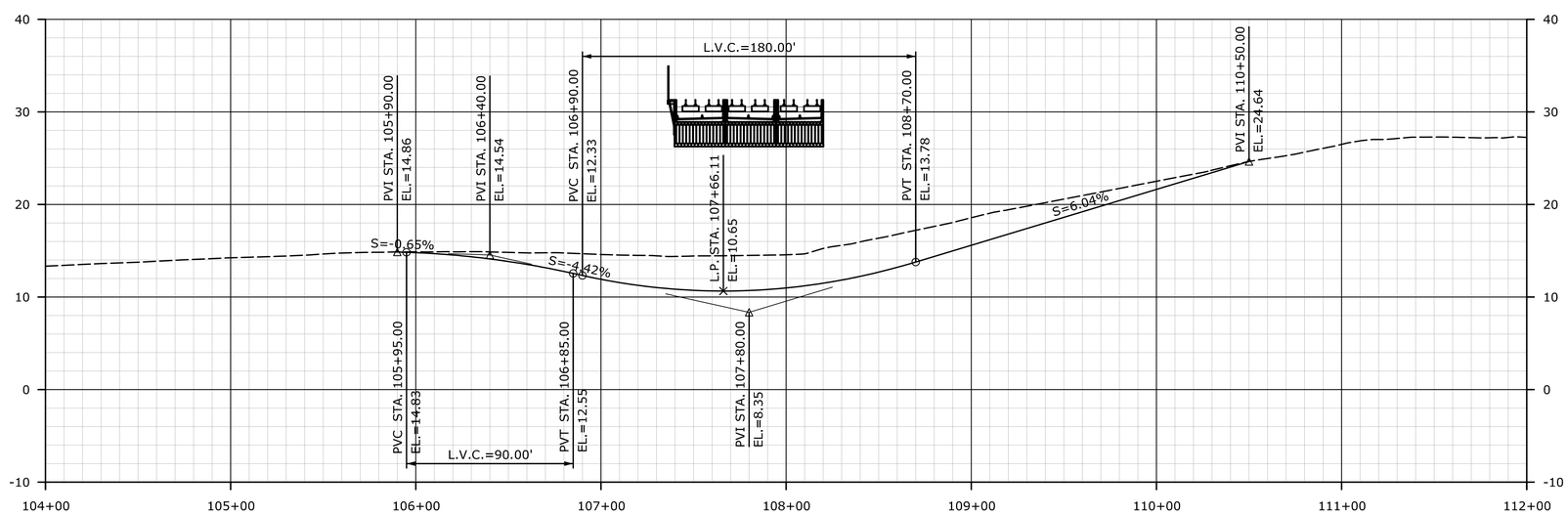

ATLANTIC STREET PROFILE

HORIZONTAL SCALE: 1" = 40'
VERTICAL SCALE: 1" = 8'

FINAL PLANS FOR REVIEW

REV.	DATE	REVISION DESCRIPTION	SHEET NO.
-	-	-	-
-	-	-	-
-	-	-	-
-	-	-	-
-	-	-	-
-	-	-	-

THE INFORMATION, INCLUDING ESTIMATED QUANTITIES OF WORK, SHOWN ON THESE SHEETS IS BASED ON LIMITED INVESTIGATIONS BY THE STATE AND IS IN NO WAY WARRANTED TO INDICATE THE CONDITIONS OF ACTUAL QUANTITIES OF WORK WHICH WILL BE REQUIRED.

Plotted Date: 3/28/2016

DESIGNER/DRAFTER: J. IVES
CHECKED BY: D. COSTELLO
SCALE AS NOTED

STATE OF CONNECTICUT
DEPARTMENT OF TRANSPORTATION

Filename: ...\SB_MSH_Br08012R_0135_0301_LAY.dgn

SIGNATURE/ BLOCK:

PROJECT TITLE: REPLACEMENT OF MNRR BRIDGE OVER ATLANTIC STREET PHASE 2

TOWN: STAMFORD

DRAWING TITLE: LAYOUT PLAN

PROJECT NO. 135-301
DRAWING NO. S-05
SHEET NO. 01.05.005

3/28/2016
P:\Projects\CommDot\36938292\500 CADD-GIS-Graphics\510 CADD\510.04 Struc. Bridge\WSta. Contract Sheet Files\SB_MSH_Br08012R_0135_0301_LAY.dgn

Border Version: 11/14/08

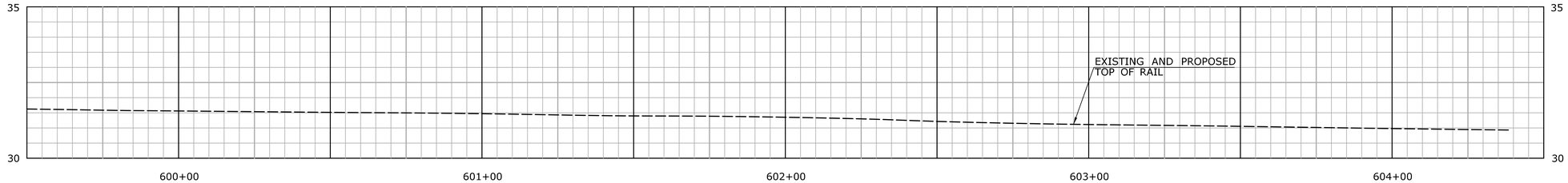

TRACK 5 TOP OF NORTH RAIL

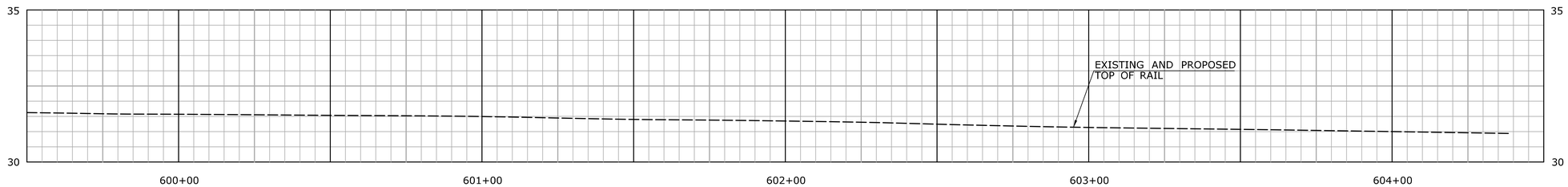

TRACK 5 TOP OF SOUTH RAIL

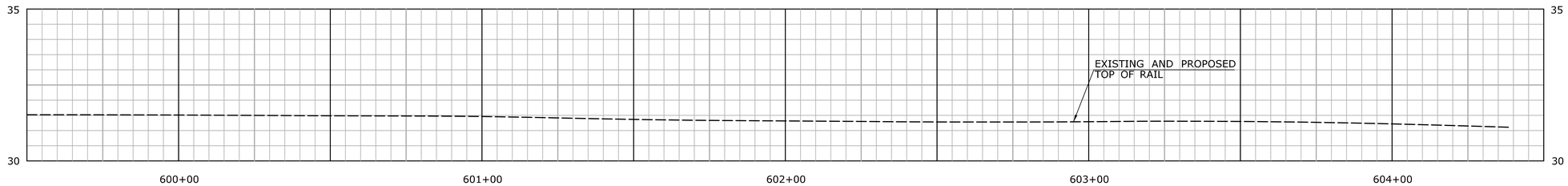

TRACK 3 TOP OF NORTH RAIL

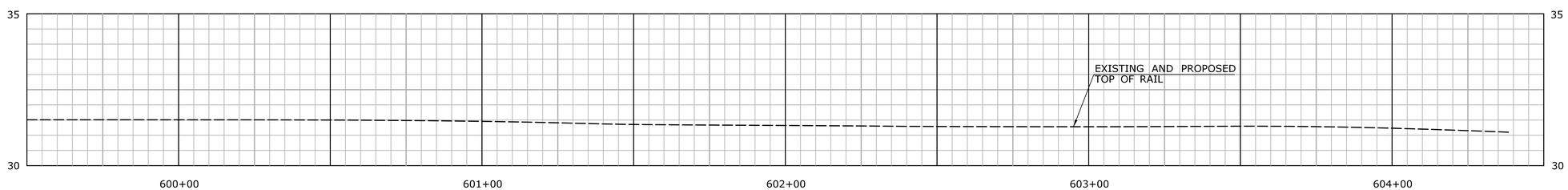

TRACK 3 TOP OF SOUTH RAIL

FINAL PLANS FOR REVIEW

REV.	DATE	REVISION DESCRIPTION	SHEET NO.
-	-	-	-
-	-	-	-
-	-	-	-
-	-	-	-
-	-	-	-
-	-	-	-

THE INFORMATION, INCLUDING ESTIMATED QUANTITIES OF WORK, SHOWN ON THESE SHEETS IS BASED ON LIMITED INVESTIGATIONS BY THE STATE AND IS IN NO WAY WARRANTED TO INDICATE THE CONDITIONS OF ACTUAL QUANTITIES OF WORK WHICH WILL BE REQUIRED.

Plotted: 3/28/2016

DESIGNER/DRAFTER: K. BARKER

CHECKED BY: J. IVES

HORIZ. SCALE IN FEET 0 20 40

VERT. SCALE IN FEET 0 2 4

STATE OF CONNECTICUT
DEPARTMENT OF TRANSPORTATION

Filename: ...\SB_MSH_Br08012R_0135_0301_PRO-1.dgn

SIGNATURE/
BLOCK:

PROJECT TITLE:
REPLACEMENT OF MNRR BRIDGE OVER ATLANTIC STREET PHASE 2

TOWN: **STAMFORD**

DRAWING TITLE: **TRACK PROFILES - 1**

PROJECT NO. **135-301**

DRAWING NO. **S-06**

SHEET NO. **01.05.006**

3/28/2016
P:\Projects\ConnDot\36938292\500 CADD-GIS-Graphics\510 CADD\510.04 Struc Bridge\MSta Contract Sheet Files\SB_MSH_Br08012R_0135_0301_PRO-1.dgn

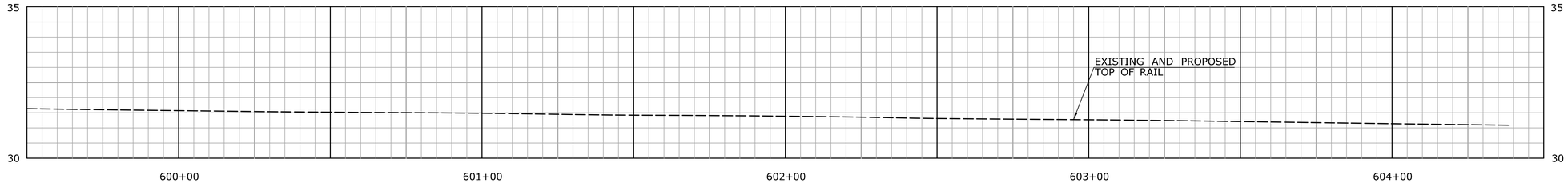

TRACK 1 TOP OF NORTH RAIL

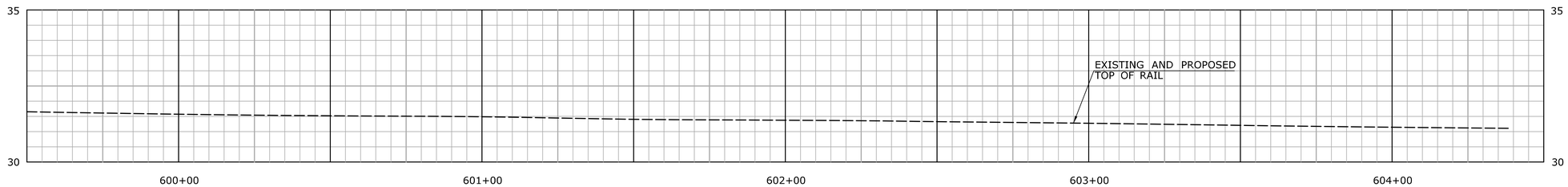

TRACK 1 TOP OF SOUTH RAIL

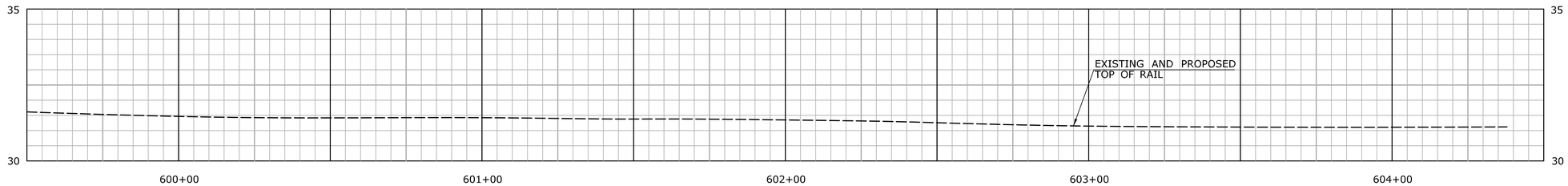

TRACK 2 TOP OF NORTH RAIL

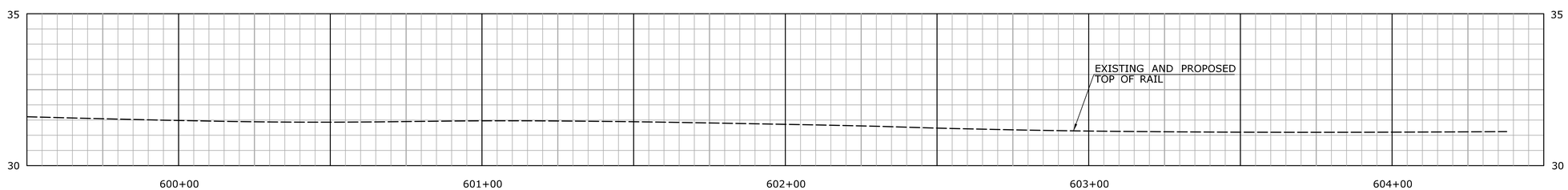

TRACK 2 TOP OF SOUTH RAIL

FINAL PLANS FOR REVIEW

REV.	DATE	REVISION DESCRIPTION	SHEET NO.
-	-	-	-
-	-	-	-
-	-	-	-
-	-	-	-
-	-	-	-
-	-	-	-

THE INFORMATION, INCLUDING ESTIMATED QUANTITIES OF WORK, SHOWN ON THESE SHEETS IS BASED ON LIMITED INVESTIGATIONS BY THE STATE AND IS IN NO WAY WARRANTED TO INDICATE THE CONDITIONS OF ACTUAL QUANTITIES OF WORK WHICH WILL BE REQUIRED.

Plotted: 3/28/2016

DESIGNER/DRAFTER: K. BARKER

CHECKED BY: J. IVES

HORIZ. SCALE IN FEET 0 20 40

VERT. SCALE IN FEET 0 2 4

STATE OF CONNECTICUT
DEPARTMENT OF TRANSPORTATION

Filename: ...\SB_MSH_Br08012R_0135_0301_PRO-2.dgn

SIGNATURE/
BLOCK:

PROJECT TITLE:
REPLACEMENT OF MNRR BRIDGE OVER ATLANTIC STREET PHASE 2

TOWN: **STAMFORD**

DRAWING TITLE: **TRACK PROFILES - 2**

PROJECT NO. **135-301**

DRAWING NO. **S-07**

SHEET NO. **01.05.007**

3/28/2016
P:\Projects\ConnDot\36938292\500 CADD-GIS-Graphics\510 CADD\510.04 Struc Bridge\MSta Contract Sheet Files\SB_MSH_Br08012R_0135_0301_PRO-2.dgn

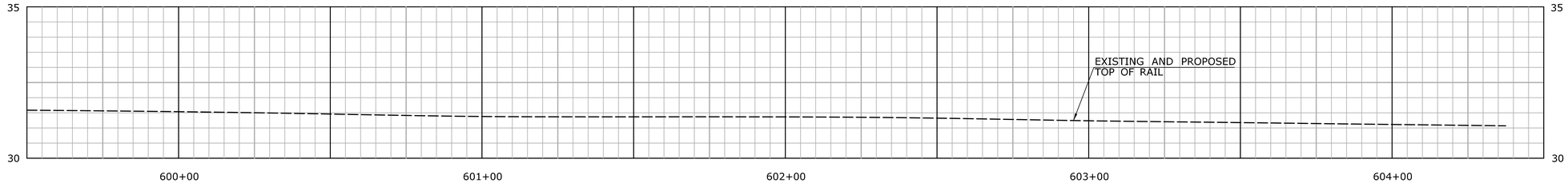

TRACK 4 TOP OF NORTH RAIL

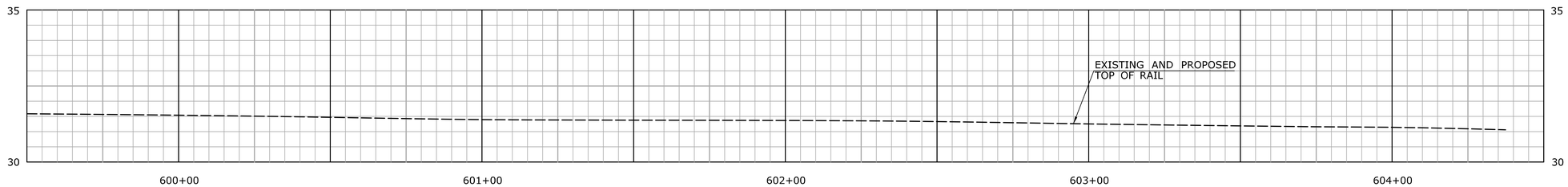

TRACK 4 TOP OF SOUTH RAIL

FINAL PLANS FOR REVIEW

REV.	DATE	REVISION DESCRIPTION	SHEET NO.
-	-	-	-
-	-	-	-
-	-	-	-
-	-	-	-
-	-	-	-
-	-	-	-

THE INFORMATION, INCLUDING ESTIMATED QUANTITIES OF WORK, SHOWN ON THESE SHEETS IS BASED ON LIMITED INVESTIGATIONS BY THE STATE AND IS IN NO WAY WARRANTED TO INDICATE THE CONDITIONS OF ACTUAL QUANTITIES OF WORK WHICH WILL BE REQUIRED.

Plotted: 3/28/2016

DESIGNER/DRAFTER: K. BARKER

CHECKED BY: J. IVES

HORIZ. SCALE IN FEET 0 20 40

VERT. SCALE IN FEET 0 2 4

STATE OF CONNECTICUT
DEPARTMENT OF TRANSPORTATION

Filename: ...\SB_MSH_Br08012R_0135_0301_PRO-3.dgn

SIGNATURE/
BLOCK:

PROJECT TITLE:
REPLACEMENT OF MNRR BRIDGE OVER ATLANTIC STREET PHASE 2

TOWN: **STAMFORD**

DRAWING TITLE: **TRACK PROFILES - 3**

PROJECT NO. **135-301**

DRAWING NO. **S-08**

SHEET NO. **01.05.008**

3/28/2016
P:\Projects\ConnDot\36938292\500 CADD-GIS-Graphics\510 CADD\510.04 Struc Bridge\MSka Contract Sheet Files\SB_MSH_Br08012R_0135_0301_PRO-3.dgn

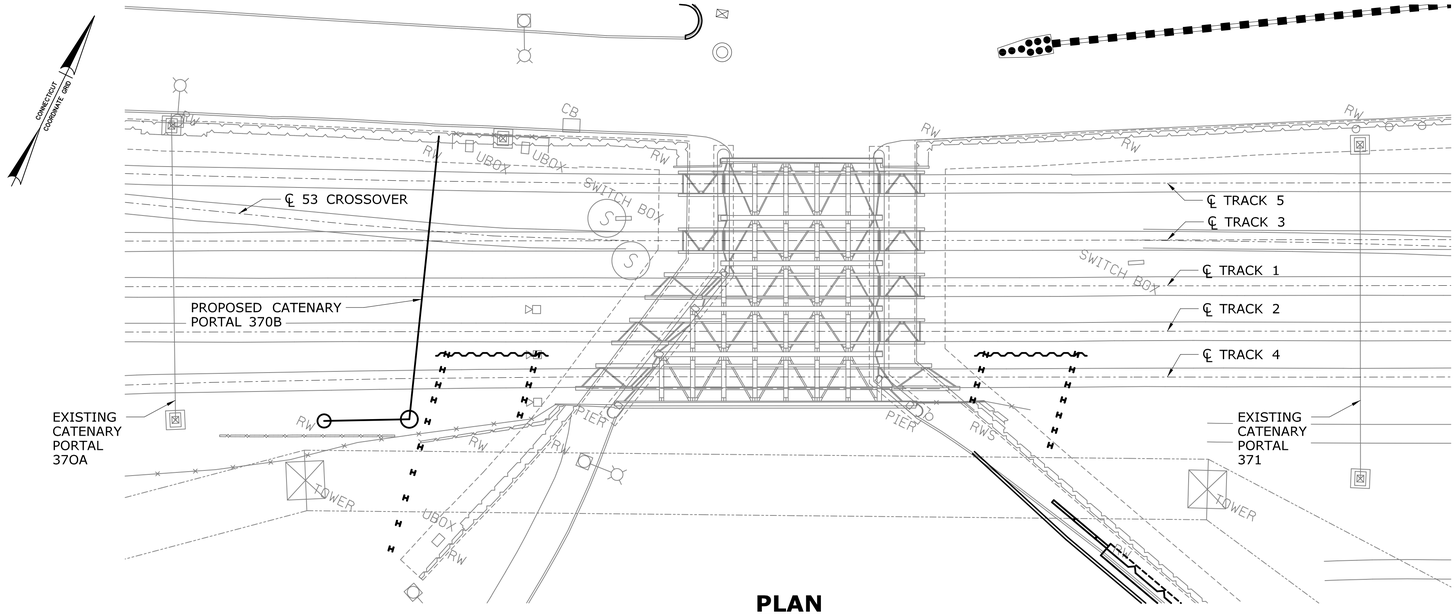

PLAN

SCALE: 1" = 20'

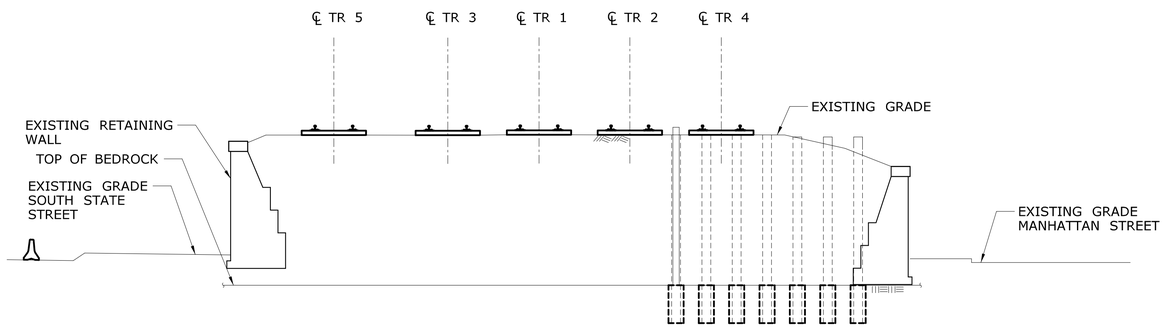

EAST JUMP SPAN SHORING ELEVATION

SCALE: 1" = 10'

STAGE B1A CONSTRUCTION

WORK ACTIVITY	RESPONSIBLE PARTY	TRACK OUTAGES					ROAD CLOSURES	
		5	3	1	2	4	SOUTH STATE ST	ATLANTIC ST
PERFORM SURVEY STAKEOUT FOR JUMP SPAN SHORING WALLS. MARK TRACK SPLICE LOCATIONS FOR JUMP SPANS.	CONTRACTOR	*	*	*	*	*	-	-
CUT RAILS AND INSTALL BOLTED SPLICES AT ALL JUMP SPAN LOCATIONS	MNR	*	*	*	*	*	-	-
INSTALL SOLDIER PILES FOR JUMP SPAN SHORING WALLS SOUTH OF TRACK 4.	CONTRACTOR	-	-	-	-	F	-	-
REMOVE TRACK PANELS AS REQUIRED TO INSTALL SOLDIER PILES AT TRACK 4.	MNR	-	-	-	C	C	-	-
INSTALL SOLDIER PILES FOR JUMP SPAN SHORING WALLS AT TRACK 4. TWO DRILL RIGS AND CREWS SHALL BE MOBILIZED FOR THE DURATION OF THE WORK.	CONTRACTOR	-	-	-	C	C	-	-
INSTALL SOLDIER PILES AND SHEET PILING BETWEEN TRACKS 2 AND 4. TWO DRILL RIGS AND CREWS SHALL BE MOBILIZED FOR THE DURATION OF THE WORK.	CONTRACTOR	-	-	-	C	C	-	-
RESTORE TRACK 4 RAILBED.	CONTRACTOR	-	-	-	C	C	-	-
RESTORE TRACK 4.	MNR	-	-	-	C	C	-	-

TRACK OUTAGE KEY
C CONTINUOUS
F FOUL TIME
* TO BE DETERMINED BY MNR

HIGHWAY, BRIDGE AND RAILROAD STAGING

DISCIPLINE	PROJECT	COMPONENT	STAGE									
HIGHWAY	135-301	ALL	1				2					3
BRIDGE	135-301	MNR BRIDGE & WALLS 105 - 107	B1A-B1E	B2A-B2F	B3	B4	B5A	B5B	B5C	B5D	B5E	B6
		MNR BRIDGE PIER			P1-P2			P3-P4		P3-P4		P5-P6
	301-163	TRACK 7 SUPERSTRUCTURE & PASSENGER PLATFORM									B5E	B6
RAILROAD	135-301	ALL	1A-1E	2A-2F		3	4A		4B		4C	5A-5C
	301-163	ALL	1A-1F									2A-3I

FINAL PLANS FOR REVIEW

REV.	DATE	REVISION DESCRIPTION	SHEET NO.
-	-	-	-
-	-	-	-
-	-	-	-
-	-	-	-
-	-	-	-
-	-	-	-

THE INFORMATION, INCLUDING ESTIMATED QUANTITIES OF WORK, SHOWN ON THESE SHEETS IS BASED ON LIMITED INVESTIGATIONS BY THE STATE AND IS IN NO WAY WARRANTED TO INDICATE THE CONDITIONS OF ACTUAL QUANTITIES OF WORK WHICH WILL BE REQUIRED.

Plotted Date: 3/24/2016

DESIGNER/DRAFTER: J. IVES / K. BARKER
CHECKED BY: D. COSTELLO
SCALE AS NOTED

STATE OF CONNECTICUT
DEPARTMENT OF TRANSPORTATION

Filename: ...\SB_MSH_Br08012R_0135_0301_STG-B1A.dgn

SIGNATURE/ BLOCK:

PROJECT TITLE: REPLACEMENT OF MNRR BRIDGE OVER ATLANTIC STREET PHASE 2

TOWN: STAMFORD

DRAWING TITLE: STAGE B1A CONSTRUCTION

PROJECT NO. 135-301
DRAWING NO. S-09
SHEET NO. 01.05.009

3/24/2016
P:\Projects\ConnDot\36938292\500 CADD-GIS-Graphics\510 CADD\510.04 Struc: Bridge\MSta. Contract: Sheet. Files\SB_MSH_Br08012R_0135_0301_STG-B1A.dgn

Border Version: 11/14/08

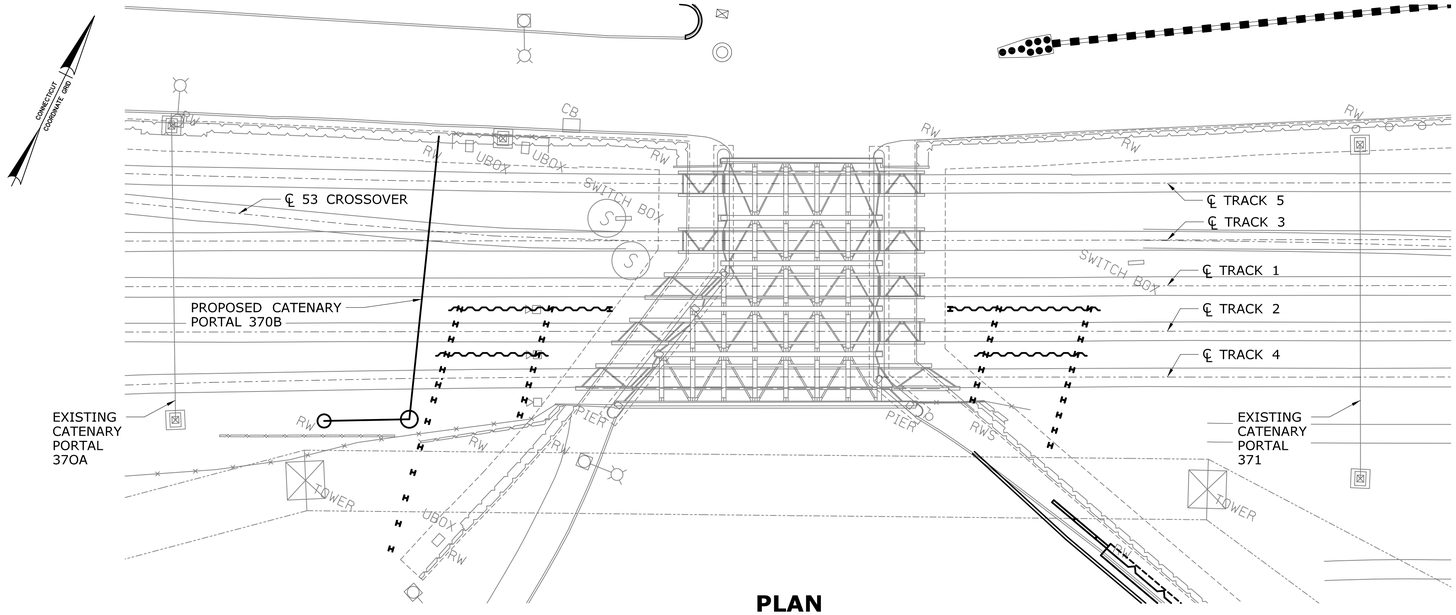

PLAN

SCALE: 1" = 20'

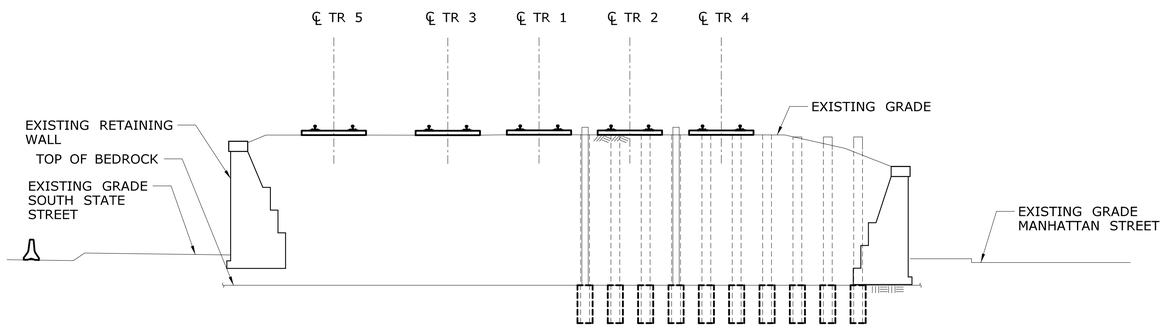

EAST JUMP SPAN SHORING ELEVATION

SCALE: 1" = 10'

STAGE B1B CONSTRUCTION

WORK ACTIVITY	RESPONSIBLE PARTY	TRACK OUTAGES					ROAD CLOSURES	
		5	3	1	2	4	SOUTH STATE ST	ATLANTIC ST
REMOVE TRACK PANELS AS REQUIRED TO INSTALL SOLDIER PILES AT TRACK 2.	MNR	-	-	C	C	C	-	-
INSTALL SOLDIER PILES FOR JUMP SPAN SHORING WALLS AT TRACK 2. TWO DRILL RIGS AND CREWS SHALL BE MOBILIZED FOR THE DURATION OF THE WORK.	CONTRACTOR	-	-	C	C	C	-	-
INSTALL SOLDIER PILES AND SHEET PILING BETWEEN TRACKS 1 AND 2. TWO DRILL RIGS AND CREWS SHALL BE MOBILIZED FOR THE DURATION OF THE WORK.	CONTRACTOR	-	-	C	C	C	-	-
RESTORE TRACK 2 RAILBED.	CONTRACTOR	-	-	C	C	C	-	-
RESTORE TRACK 2.	MNR	-	-	C	C	C	-	-

TRACK OUTAGE KEY
C CONTINUOUS
F FOUL TIME
* TO BE DETERMINED BY MNR

HIGHWAY, BRIDGE AND RAILROAD STAGING

DISCIPLINE	PROJECT	COMPONENT	STAGE									
HIGHWAY	135-301	ALL	1				2					3
BRIDGE	135-301	MNR BRIDGE & WALLS 105 - 107	B1A-B1E	B2A-B2F	B3	B4	B5A	B5B	B5C	B5D	B5E	B6
		MNR BRIDGE PIER			P1-P2			P3-P4		P3-P4		P5-P6
	301-163	TRACK 7 SUPERSTRUCTURE & PASSENGER PLATFORM									B5E	B6
RAILROAD	135-301	ALL	1A-1E	2A-2F		3	4A		4B		4C	5A-5C
	301-163	ALL	1A-1F									2A-3I

FINAL PLANS FOR REVIEW

REV.	DATE	REVISION DESCRIPTION	SHEET NO.
-	-	-	-
-	-	-	-
-	-	-	-
-	-	-	-
-	-	-	-
-	-	-	-

THE INFORMATION, INCLUDING ESTIMATED QUANTITIES OF WORK, SHOWN ON THESE SHEETS IS BASED ON LIMITED INVESTIGATIONS BY THE STATE AND IS IN NO WAY WARRANTED TO INDICATE THE CONDITIONS OF ACTUAL QUANTITIES OF WORK WHICH WILL BE REQUIRED.

Plotted Date: 3/24/2016

DESIGNER/DRAFTER: J. IVES / K. BARKER
CHECKED BY: D. COSTELLO
SCALE AS NOTED

STATE OF CONNECTICUT
DEPARTMENT OF TRANSPORTATION

Filename: ...\SB_MSH_Br08012R_0135_0301_STG-B1B.dgn

SIGNATURE/ BLOCK:

PROJECT TITLE: REPLACEMENT OF MNRR BRIDGE OVER ATLANTIC STREET PHASE 2

TOWN: STAMFORD

DRAWING TITLE: STAGE B1B CONSTRUCTION

PROJECT NO. 135-301
DRAWING NO. S-10
SHEET NO. 01.05.010

3/24/2016
P:\Projects\ConnDot\36938292\500 CADD-GIS-Graphics\510 CADD\510.04 Struc: Bridge\MSta. Contract Sheet Files\SB_MSH_Br08012R_0135_0301_STG-B1B.dgn

Border Version: 11/14/08

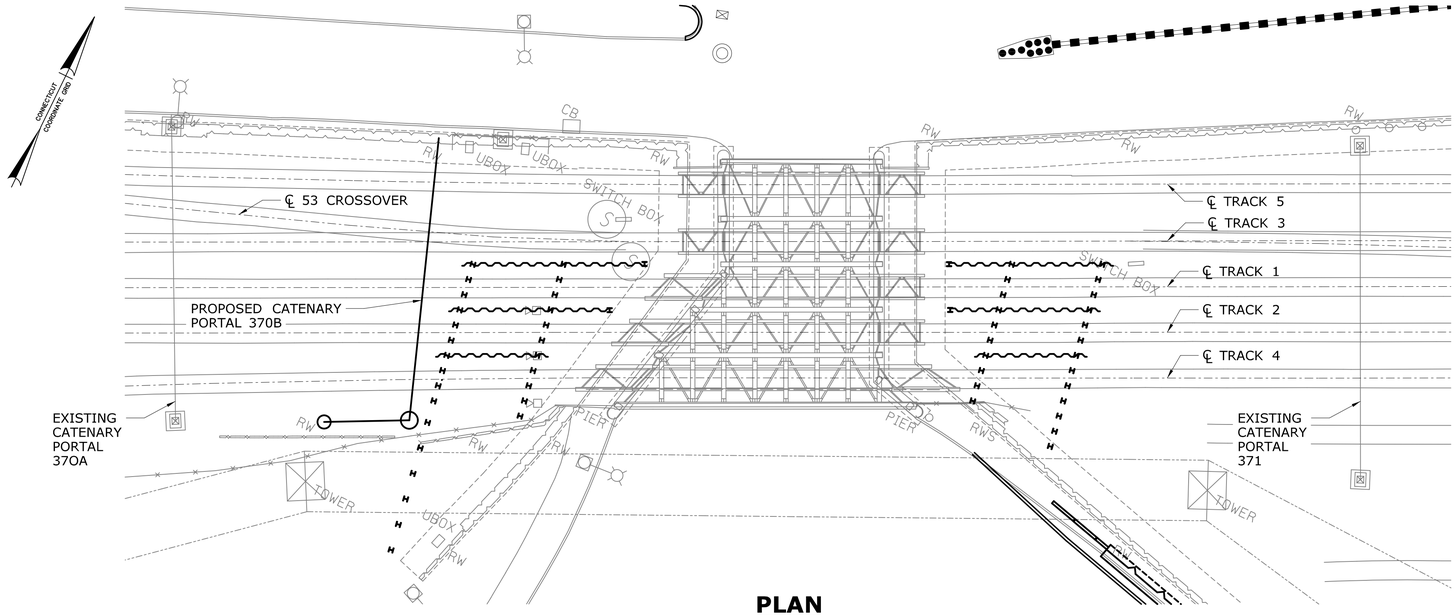

PLAN

SCALE: 1" = 20'

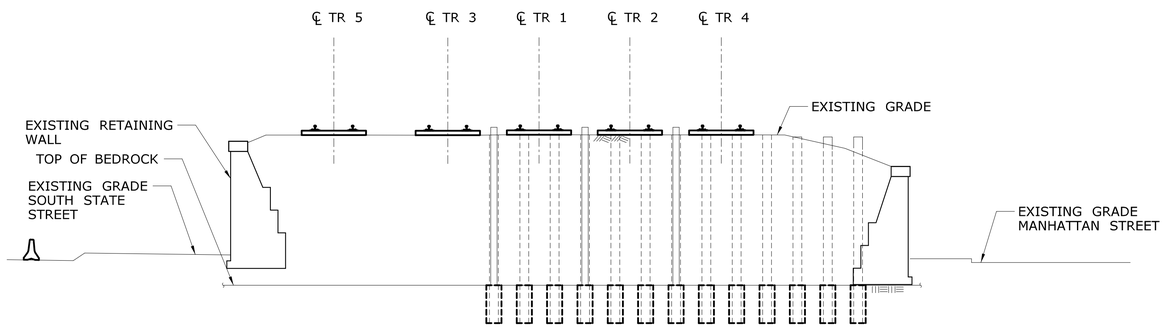

EAST JUMP SPAN SHORING ELEVATION

SCALE: 1" = 10'

STAGE B1C CONSTRUCTION

WORK ACTIVITY	RESPONSIBLE PARTY	TRACK OUTAGES					ROAD CLOSURES	
		5	3	1	2	4	SOUTH STATE ST	ATLANTIC ST
REMOVE TRACK PANELS AS REQUIRED TO INSTALL SOLDIER PILES AT TRACK 1.	MNR	-	C	C	C	-	-	-
INSTALL SOLDIER PILES FOR JUMP SPAN SHORING WALLS AT TRACK 1. TWO DRILL RIGS AND CREWS SHALL BE MOBILIZED FOR THE DURATION OF THE WORK.	CONTRACTOR	-	C	C	C	-	-	-
INSTALL SOLDIER PILES AND SHEET PILING BETWEEN TRACKS 1 AND 3. TWO DRILL RIGS AND CREWS SHALL BE MOBILIZED FOR THE DURATION OF THE WORK.	CONTRACTOR	-	C	C	C	-	-	-
RESTORE TRACK 1 RAILBED.	CONTRACTOR	-	C	C	C	-	-	-
RESTORE TRACK 1.	MNR	-	C	C	C	-	-	-

TRACK OUTAGE KEY
C CONTINUOUS
F FOUL TIME
* TO BE DETERMINED BY MNR

HIGHWAY, BRIDGE AND RAILROAD STAGING

DISCIPLINE	PROJECT	COMPONENT	STAGE									
HIGHWAY	135-301	ALL	1				2					3
BRIDGE	135-301	MNR BRIDGE & WALLS 105 - 107	B1A-B1E	B2A-B2F	B3	B4	B5A	B5B	B5C	B5D	B5E	B6
		MNR BRIDGE PIER			P1-P2			P3-P4		P3-P4		P5-P6
	301-163	TRACK 7 SUPERSTRUCTURE & PASSENGER PLATFORM									B5E	B6
RAILROAD	135-301	ALL	1A-1E	2A-2F		3	4A		4B		4C	5A-5C
	301-163	ALL	1A-1F									2A-3I

FINAL PLANS FOR REVIEW

REV.	DATE	REVISION DESCRIPTION	SHEET NO.
-	-	-	-
-	-	-	-
-	-	-	-
-	-	-	-
-	-	-	-
-	-	-	-

THE INFORMATION, INCLUDING ESTIMATED QUANTITIES OF WORK, SHOWN ON THESE SHEETS IS BASED ON LIMITED INVESTIGATIONS BY THE STATE AND IS IN NO WAY WARRANTED TO INDICATE THE CONDITIONS OF ACTUAL QUANTITIES OF WORK WHICH WILL BE REQUIRED.

Plotted Date: 3/24/2016

DESIGNER/DRAFTER: J. IVES / K. BARKER
CHECKED BY: D. COSTELLO
SCALE AS NOTED

STATE OF CONNECTICUT
DEPARTMENT OF TRANSPORTATION

Filename: ...\SB_MSH_Br08012R_0135_0301_STG-B1C.dgn

SIGNATURE/ BLOCK:

PROJECT TITLE:
REPLACEMENT OF MNRR BRIDGE OVER ATLANTIC STREET PHASE 2

TOWN: **STAMFORD**

DRAWING TITLE: **STAGE B1C CONSTRUCTION**

PROJECT NO. **135-301**
DRAWING NO. **S-11**
SHEET NO. **01.05.011**

3/24/2016
P:\Projects\ConnDot\36938292\500 CADD-GIS-Graphics\510 CADD\510.04 Struc: Bridge\MSta. Contract Sheet Files\SB_MSH_Br08012R_0135_0301_STG-B1C.dgn

Border Version: 11/14/08

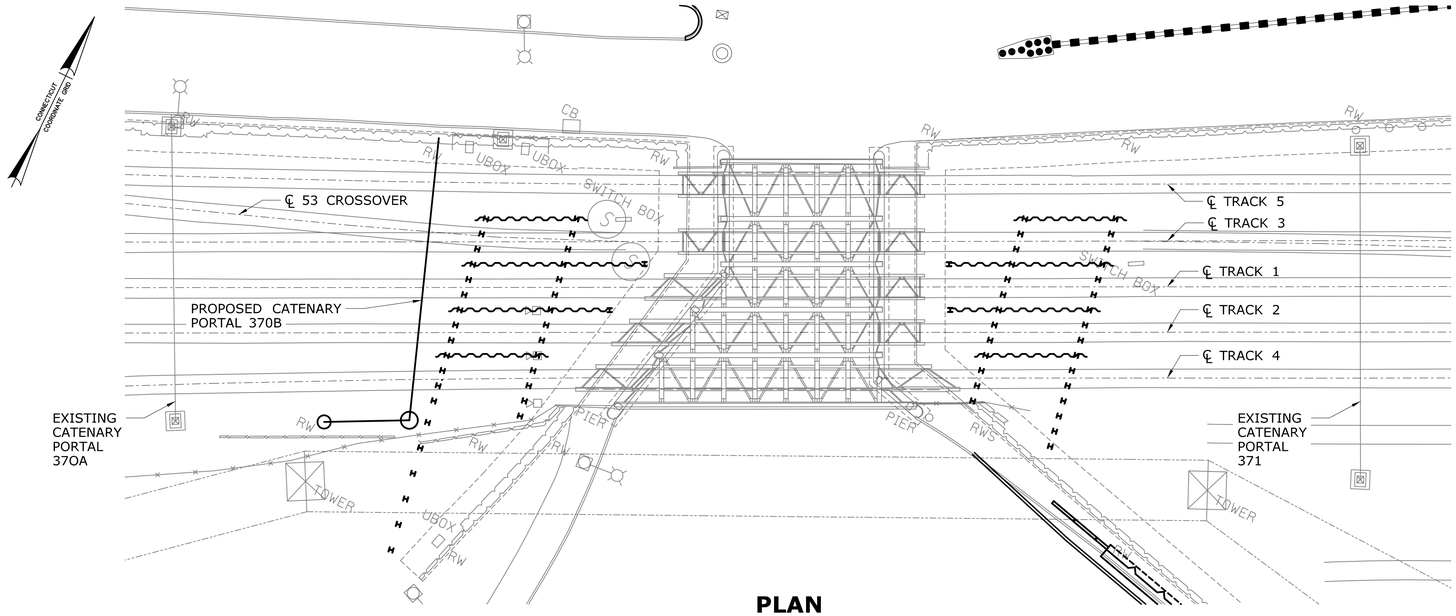

PLAN

SCALE: 1" = 20'

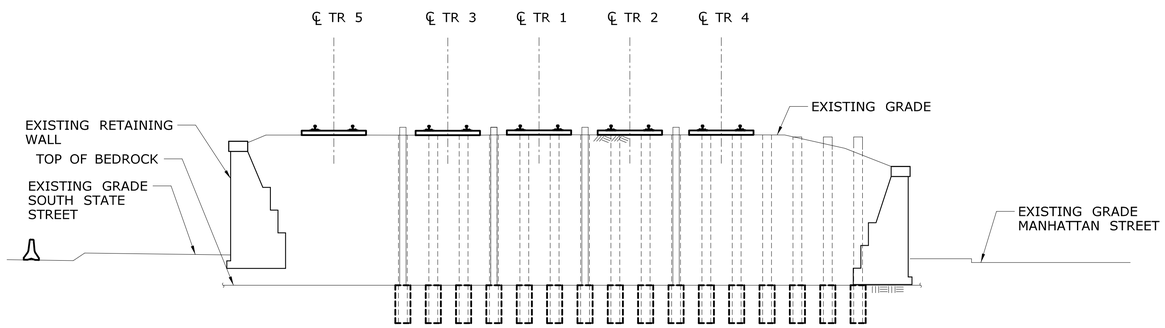

EAST JUMP SPAN SHORING ELEVATION

SCALE: 1" = 10'

STAGE B1D CONSTRUCTION

WORK ACTIVITY	RESPONSIBLE PARTY	TRACK OUTAGES					ROAD CLOSURES	
		5	3	1	2	4	SOUTH STATE ST	ATLANTIC ST
REMOVE TRACK PANELS AS REQUIRED TO INSTALL SOLDIER PILES AT TRACK 3.	MNR	C	C	C	-	-	-	-
INSTALL SOLDIER PILES FOR JUMP SPAN SHORING WALLS AT TRACK 3. TWO DRILL RIGS AND CREWS SHALL BE MOBILIZED FOR THE DURATION OF THE WORK.	CONTRACTOR	C	C	C	-	-	-	-
INSTALL SOLDIER PILES AND SHEET PILING BETWEEN TRACKS 3 AND 5. TWO DRILL RIGS AND CREWS SHALL BE MOBILIZED FOR THE DURATION OF THE WORK.	CONTRACTOR	C	C	C	-	-	-	-
RESTORE TRACK 3 RAILBED.	CONTRACTOR	C	C	C	-	-	-	-
RESTORE TRACK 3.	MNR	C	C	C	-	-	-	-

TRACK OUTAGE KEY
C CONTINUOUS
F FOUL TIME
* TO BE DETERMINED BY MNR

HIGHWAY, BRIDGE AND RAILROAD STAGING

DISCIPLINE	PROJECT	COMPONENT	STAGE									
HIGHWAY	135-301	ALL	1				2					3
BRIDGE	135-301	MNR BRIDGE & WALLS 105 - 107	B1A-B1E	B2A-B2F	B3	B4	B5A	B5B	B5C	B5D	B5E	B6
		MNR BRIDGE PIER			P1-P2			P3-P4		P3-P4		P5-P6
	301-163	TRACK 7 SUPERSTRUCTURE & PASSENGER PLATFORM									B5E	B6
RAILROAD	135-301	ALL	1A-1E	2A-2F		3	4A		4B		4C	5A-5C
	301-163	ALL	1A-1F									2A-3I

FINAL PLANS FOR REVIEW

REV.	DATE	REVISION DESCRIPTION	SHEET NO.
-	-	-	-
-	-	-	-
-	-	-	-
-	-	-	-
-	-	-	-
-	-	-	-

THE INFORMATION, INCLUDING ESTIMATED QUANTITIES OF WORK, SHOWN ON THESE SHEETS IS BASED ON LIMITED INVESTIGATIONS BY THE STATE AND IS IN NO WAY WARRANTED TO INDICATE THE CONDITIONS OF ACTUAL QUANTITIES OF WORK WHICH WILL BE REQUIRED.

Plotted Date: 3/24/2016

DESIGNER/DRAFTER: J. IVES / K. BARKER
CHECKED BY: D. COSTELLO
SCALE AS NOTED

STATE OF CONNECTICUT
DEPARTMENT OF TRANSPORTATION

Filename: ...\SB_MSH_Br08012R_0135_0301_STG-B1D.dgn

SIGNATURE/ BLOCK:

PROJECT TITLE: REPLACEMENT OF MNRR BRIDGE OVER ATLANTIC STREET PHASE 2

TOWN: STAMFORD

DRAWING TITLE: STAGE B1D CONSTRUCTION

PROJECT NO. 135-301
DRAWING NO. S-12
SHEET NO. 01.05.012

3/24/2016
P:\Projects\ConnDot\36938292\500 CADD-GIS-Graphics\510 CADD\510.04 Struc: Bridge\MSta. Contract Sheet Files\SB_MSH_Br08012R_0135_0301_STG-B1D.dgn

Border Version: 11/14/08

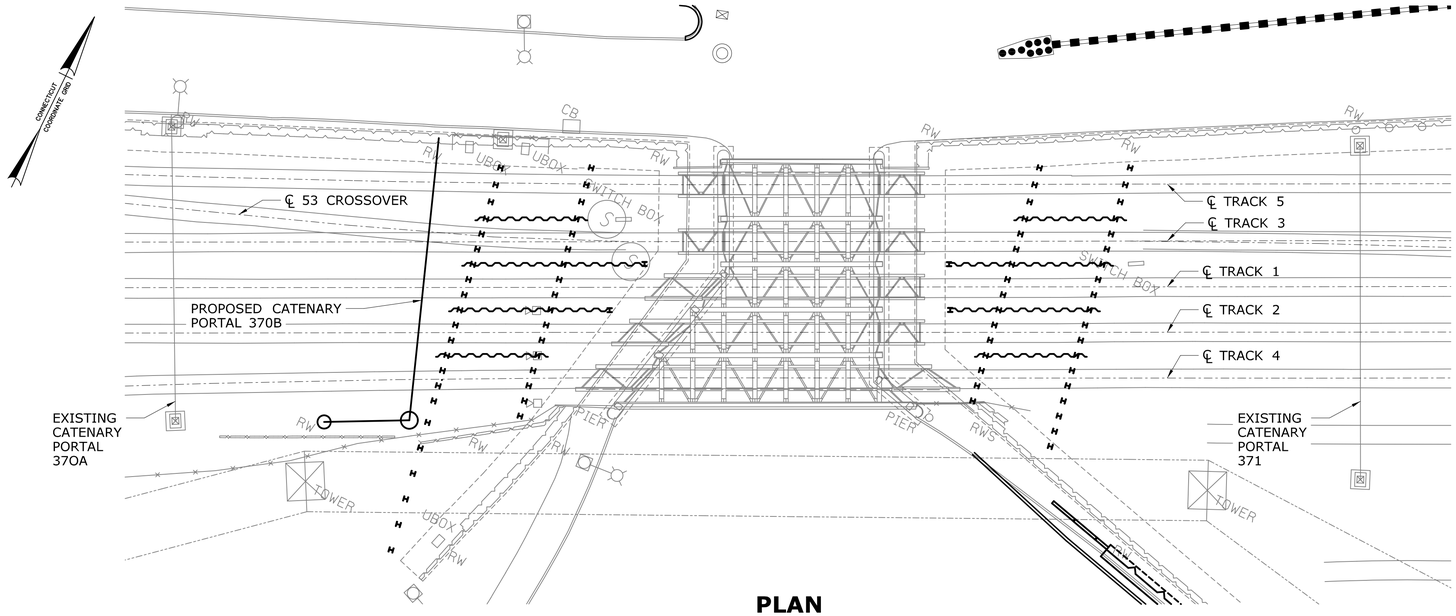

PLAN

SCALE: 1" = 20'

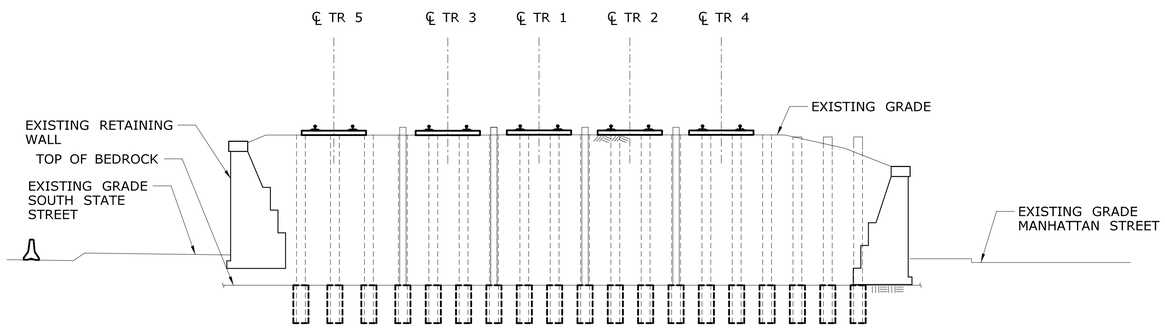

EAST JUMP SPAN SHORING ELEVATION

SCALE: 1" = 10'

STAGE B1E CONSTRUCTION

WORK ACTIVITY	RESPONSIBLE PARTY	TRACK OUTAGES					ROAD CLOSURES	
		5	3	1	2	4	SOUTH STATE ST	ATLANTIC ST
REMOVE TRACK PANELS AS REQUIRED TO INSTALL SOLDIER PILES AT TRACK 5.	MNR	C	C	-	-	-	-	-
INSTALL SOLDIER PILES FOR JUMP SPAN SHORING WALLS AT TRACK 5. TWO DRILL RIGS AND CREWS SHALL BE MOBILIZED FOR THE DURATION OF THE WORK.	CONTRACTOR	C	C	-	-	-	-	-
RESTORE TRACK 5 RAILBED.	CONTRACTOR	C	C	-	-	-	-	-
RESTORE TRACK 5.	MNR	C	C	-	-	-	-	-

TRACK OUTAGE KEY
C CONTINUOUS
F FOUL TIME
* TO BE DETERMINED BY MNR

HIGHWAY, BRIDGE AND RAILROAD STAGING

DISCIPLINE	PROJECT	COMPONENT	STAGE									
HIGHWAY	135-301	ALL	1				2					3
BRIDGE	135-301	MNR BRIDGE & WALLS 105 - 107	B1A-B1E	B2A-B2F	B3	B4	B5A	B5B	B5C	B5D	B5E	B6
		MNR BRIDGE PIER			P1-P2			P3-P4		P3-P4		P5-P6
	301-163	TRACK 7 SUPERSTRUCTURE & PASSENGER PLATFORM									B5E	B6
RAILROAD	135-301	ALL	1A-1E	2A-2F		3	4A		4B		4C	5A-5C
	301-163	ALL	1A-1F									2A-3I

FINAL PLANS FOR REVIEW

REV.	DATE	REVISION DESCRIPTION	SHEET NO.
-	-	-	-
-	-	-	-
-	-	-	-
-	-	-	-
-	-	-	-
-	-	-	-

THE INFORMATION, INCLUDING ESTIMATED QUANTITIES OF WORK, SHOWN ON THESE SHEETS IS BASED ON LIMITED INVESTIGATIONS BY THE STATE AND IS IN NO WAY WARRANTED TO INDICATE THE CONDITIONS OF ACTUAL QUANTITIES OF WORK WHICH WILL BE REQUIRED.

Plotted Date: 3/24/2016

DESIGNER/DRAFTER: J. IVES / K. BARKER
CHECKED BY: D. COSTELLO
SCALE AS NOTED

STATE OF CONNECTICUT
DEPARTMENT OF TRANSPORTATION

Filename: ...\SB_MSH_Br08012R_0135_0301_STG-B1E.dgn

SIGNATURE/ BLOCK:

PROJECT TITLE: REPLACEMENT OF MNRR BRIDGE OVER ATLANTIC STREET PHASE 2

TOWN: STAMFORD

DRAWING TITLE: STAGE B1E CONSTRUCTION

PROJECT NO. 135-301
DRAWING NO. S-13
SHEET NO. 01.05.013

3/24/2016
P:\Projects\ConnDot\36938292\500 CADD-GIS-Graphics\510 CADD\510.04 Struc: Bridge\MSta. Contract Sheet Files\SB_MSH_Br08012R_0135_0301_STG-B1E.dgn

Border Version: 11/14/08

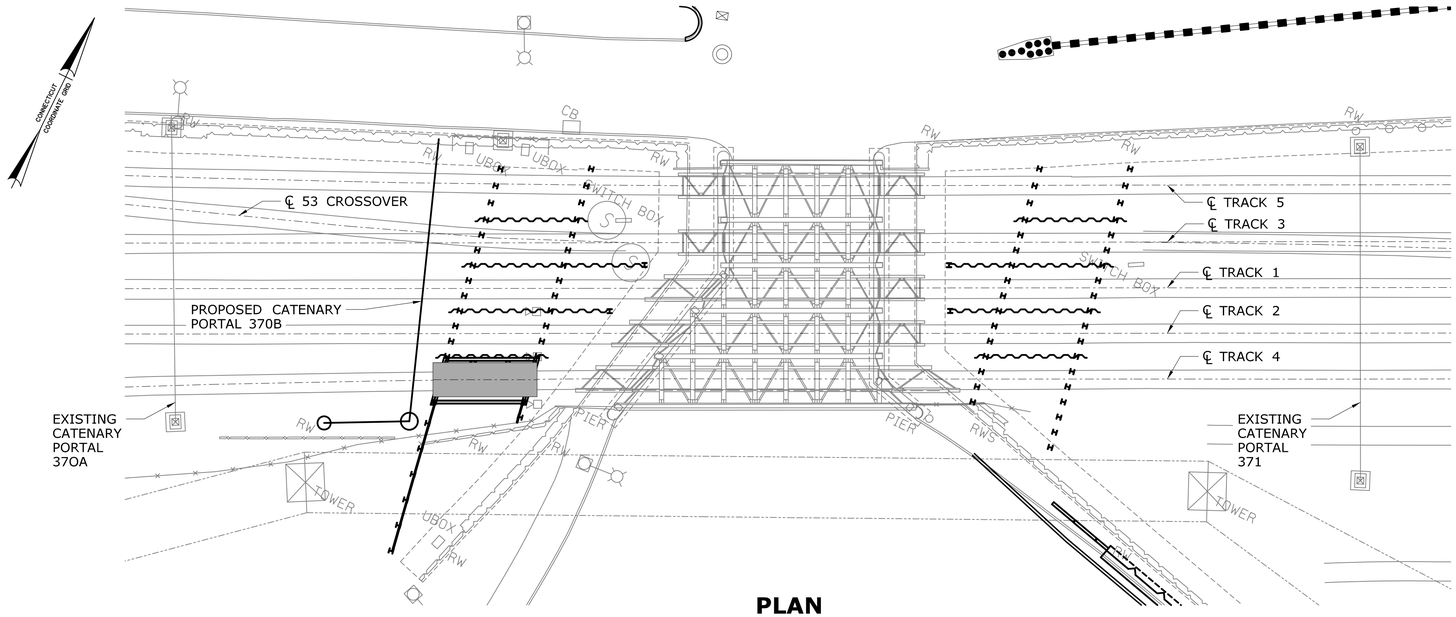

PLAN

SCALE: 1" = 20'

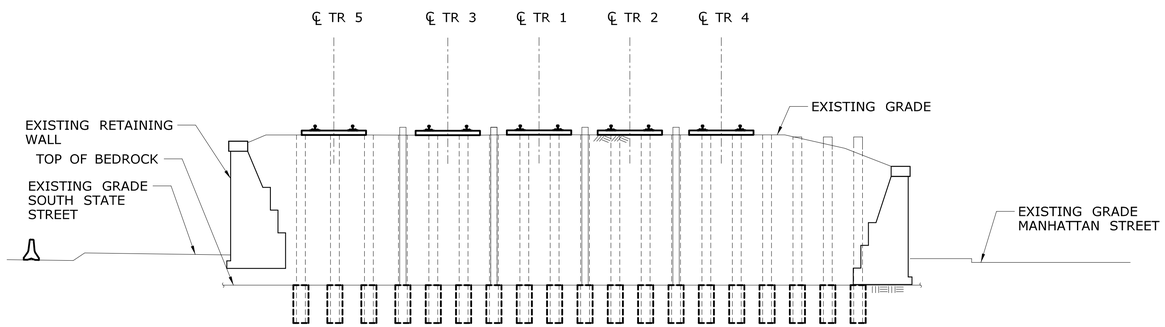

EAST JUMP SPAN SHORING ELEVATION

SCALE: 1" = 10'

STAGE B2A CONSTRUCTION

WORK ACTIVITY	RESPONSIBLE PARTY	TRACK OUTAGES					ROAD CLOSURES	
		5	3	1	2	4	SOUTH STATE ST	ATLANTIC ST
DELIVER THE TRACK 4 WEST JUMP SPAN AND FLATCAR-MOUNTED GANRTY TO THE SITE USING DIESEL LOCOMOTIVE(S). STORE ON THE TRACK 4 JUMP SPAN APPROACHES.	CONTRACTOR	-	-	-	C	C	-	-
EXCAVATE THE RAILBED AT THE TRACK 4 WEST JUMP SPAN, INSTALLING LAGGING AND BRACING AS THE EXCAVATION PROCEEDS DOWNWARD.	CONTRACTOR	-	-	-	C	C	-	-
PREPARE THE RAILBED AT THE TRACK 4 WEST JUMP SPAN APPROACHES.	CONTRACTOR	-	-	-	C	C	-	-
USING THE FLATCAR-MOUNTED GANTRY, PICK THE TRACK 4 WEST JUMP SPAN AND SET IT IN PLACE.	CONTRACTOR	-	-	-	C	C	-	-
ADJUST RAIL GRADE USING SHIM PLATES BENEATH THE JUMP SPAN. FASTEN THE JUMP SPAN TO THE SHORING WALLS BELOW.	CONTRACTOR	-	-	-	C	C	-	-
SPLICE THE JUMP SPAN RAILS TO THE APPROACH RAILS.	MNR	-	-	-	C	C	-	-

TRACK OUTAGE KEY
C CONTINUOUS
F FOUL TIME
* TO BE DETERMINED BY MNR

HIGHWAY, BRIDGE AND RAILROAD STAGING

DISCIPLINE	PROJECT	COMPONENT	STAGE									
HIGHWAY	135-301	ALL	1				2					3
BRIDGE	135-301	MNR BRIDGE & WALLS 105 - 107	B1A-B1E	B2A-B2F	B3	B4	B5A	B5B	B5C	B5D	B5E	B6
		MNR BRIDGE PIER			P1-P2			P3-P4		P3-P4		P5-P6
	301-163	TRACK 7 SUPERSTRUCTURE & PASSENGER PLATFORM									B5E	B6
RAILROAD	135-301	ALL	1A-1E	2A-2F		3	4A		4B		4C	5A-5C
	301-163	ALL	1A-1F									2A-3I

FINAL PLANS FOR REVIEW

REV.	DATE	REVISION DESCRIPTION	SHEET NO.
-	-	-	-
-	-	-	-
-	-	-	-
-	-	-	-
-	-	-	-
-	-	-	-

THE INFORMATION, INCLUDING ESTIMATED QUANTITIES OF WORK, SHOWN ON THESE SHEETS IS BASED ON LIMITED INVESTIGATIONS BY THE STATE AND IS IN NO WAY WARRANTED TO INDICATE THE CONDITIONS OF ACTUAL QUANTITIES OF WORK WHICH WILL BE REQUIRED.

Plotted Date: 3/24/2016

DESIGNER/DRAFTER: J. IVES / K. BARKER
CHECKED BY: D. COSTELLO
SCALE AS NOTED

STATE OF CONNECTICUT
DEPARTMENT OF TRANSPORTATION

Filename: ...\SB_MSH_Br08012R_0135_0301_STG-B2A.dgn

SIGNATURE/ BLOCK:

PROJECT TITLE:
REPLACEMENT OF MNRR BRIDGE OVER ATLANTIC STREET PHASE 2

TOWN: **STAMFORD**

DRAWING TITLE: **STAGE B2A CONSTRUCTION**

PROJECT NO. **135-301**
DRAWING NO. **S-14**
SHEET NO. **01.05.014**

3/24/2016
P:\Projects\ConnDot\36938292\500 CADD-GIS-Graphics\510 CADD\510.04 Struc: Bridge\MSta. Contract Sheet Files\SB_MSH_Br08012R_0135_0301_STG-B2A.dgn

Border Version: 11/14/08

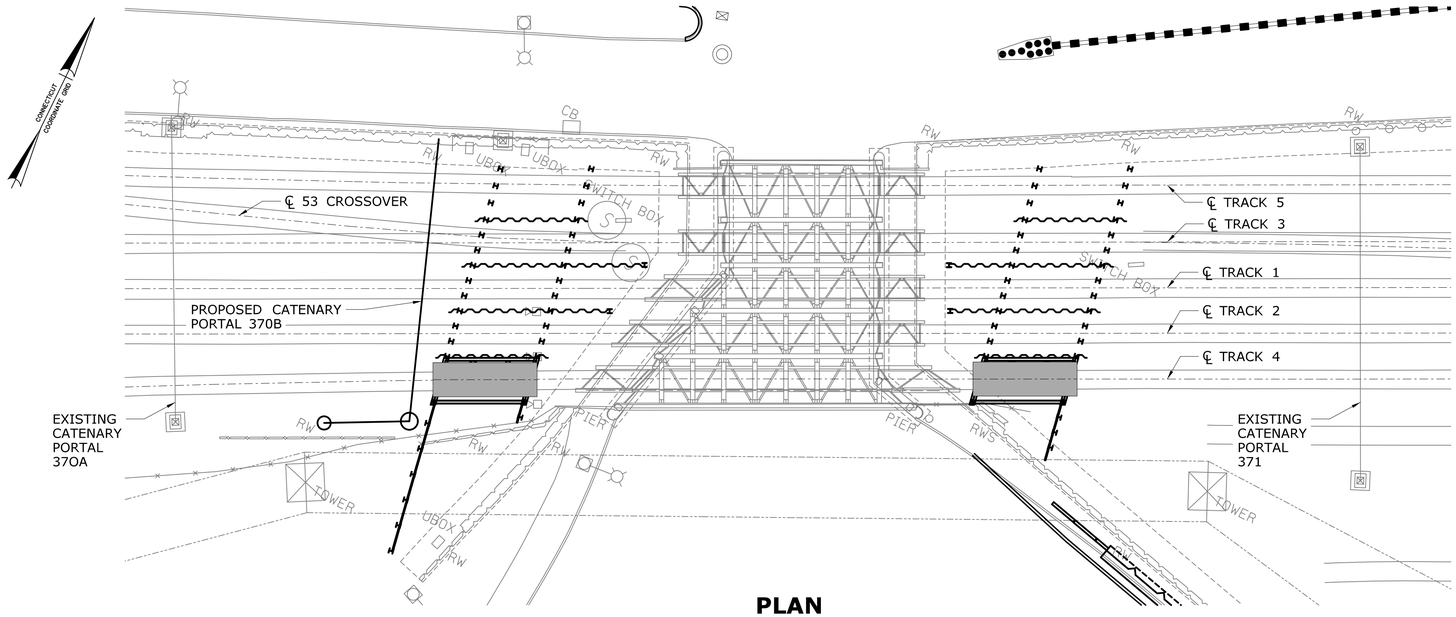

PLAN

SCALE: 1" = 20'

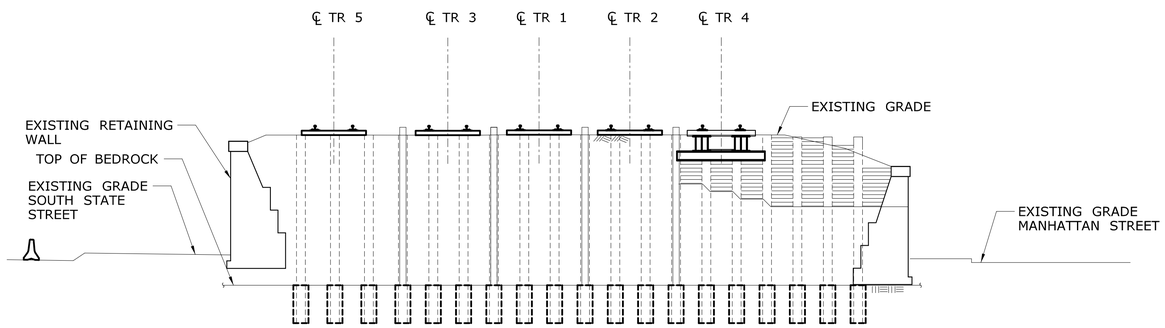

EAST JUMP SPAN SHORING ELEVATION

SCALE: 1" = 10'

STAGE B2B CONSTRUCTION

WORK ACTIVITY	RESPONSIBLE PARTY	TRACK OUTAGES					ROAD CLOSURES	
		5	3	1	2	4	SOUTH STATE ST	ATLANTIC ST
DELIVER THE TRACK 4 EAST JUMP SPAN AND FLATCAR-MOUNTED GANRTY TO THE SITE USING DIESEL LOCOMOTIVE(S). STORE ON THE TRACK 4 JUMP SPAN APPROACHES.	CONTRACTOR	-	-	-	C	C	-	-
EXCAVATE THE RAILBED AT THE TRACK 4 EAST JUMP SPAN, INSTALLING LAGGING AND BRACING AS THE EXCAVATION PROCEEDS DOWNWARD.	CONTRACTOR	-	-	-	C	C	-	-
REMOVE A PORTION OF THE EXISTING BRIDGE 08012R ABUTMENT ALONG MANHATTAN STREET AS REQUIRED TO COMPLETE INSTALLATION OF THE JUMP SPAN SHORING WALLS.	CONTRACTOR	-	-	-	C	C	-	-
PREPARE THE RAILBED AT THE TRACK 4 EAST JUMP SPAN APPROACHES.	CONTRACTOR	-	-	-	C	C	-	-
USING THE FLATCAR-MOUNTED GANTRY, PICK THE TRACK 4 EAST JUMP SPAN AND SET IT IN PLACE.	CONTRACTOR	-	-	-	C	C	-	-
ADJUST RAIL GRADE USING SHIM PLATES BENEATH THE JUMP SPAN. FASTEN THE JUMP SPAN TO THE SHORING WALLS BELOW.	CONTRACTOR	-	-	-	C	C	-	-
SPLICE THE JUMP SPAN RAILS TO THE APPROACH RAILS.	MNR	-	-	-	C	C	-	-

TRACK OUTAGE KEY
C CONTINUOUS
F FOUL TIME
* TO BE DETERMINED BY MNR

HIGHWAY, BRIDGE AND RAILROAD STAGING

DISCIPLINE	PROJECT	COMPONENT	STAGE									
HIGHWAY	135-301	ALL	1				2					3
BRIDGE	135-301	MNR BRIDGE & WALLS 105 - 107	B1A-B1E	B2A-B2F	B3	B4	B5A	B5B	B5C	B5D	B5E	B6
		MNR BRIDGE PIER			P1-P2			P3-P4		P3-P4		P5-P6
	301-163	TRACK 7 SUPERSTRUCTURE & PASSENGER PLATFORM									B5E	B6
RAILROAD	135-301	ALL	1A-1E	2A-2F		3	4A		4B		4C	5A-5C
	301-163	ALL	1A-1F									2A-3I

FINAL PLANS FOR REVIEW

REV.	DATE	REVISION DESCRIPTION	SHEET NO.
-	-	-	-
-	-	-	-
-	-	-	-
-	-	-	-
-	-	-	-
-	-	-	-

THE INFORMATION, INCLUDING ESTIMATED QUANTITIES OF WORK, SHOWN ON THESE SHEETS IS BASED ON LIMITED INVESTIGATIONS BY THE STATE AND IS IN NO WAY WARRANTED TO INDICATE THE CONDITIONS OF ACTUAL QUANTITIES OF WORK WHICH WILL BE REQUIRED.

Plotted Date: 3/24/2016

DESIGNER/DRAFTER: J. IVES / K. BARKER
CHECKED BY: D. COSTELLO
SCALE AS NOTED

STATE OF CONNECTICUT
DEPARTMENT OF TRANSPORTATION

Filename: ...\SB_MSH_Br08012R_0135_0301_STG-B2B.dgn

SIGNATURE/ BLOCK:

PROJECT TITLE:
REPLACEMENT OF MNRR BRIDGE OVER ATLANTIC STREET PHASE 2

TOWN: **STAMFORD**

DRAWING TITLE: **STAGE B2B CONSTRUCTION**

PROJECT NO. **135-301**
DRAWING NO. **S-15**
SHEET NO. **01.05.015**

3/24/2016
P:\Projects\ConnDot\36938292\500 CADD-GIS-Graphics\510 CADD\510.04 Struc: Bridge\MSta. Contract Sheet Files\SB_MSH_Br08012R_0135_0301_STG-B2B.dgn

Border Version: 11/14/08

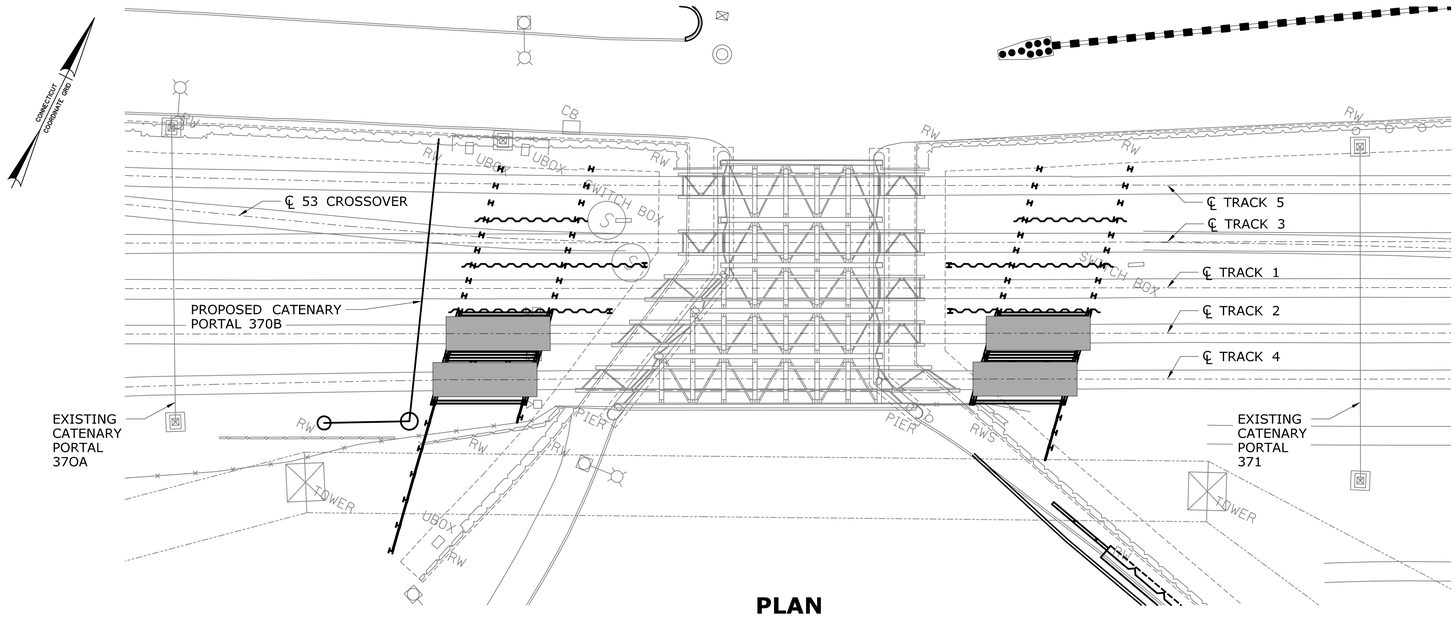

PLAN

SCALE: 1" = 20'

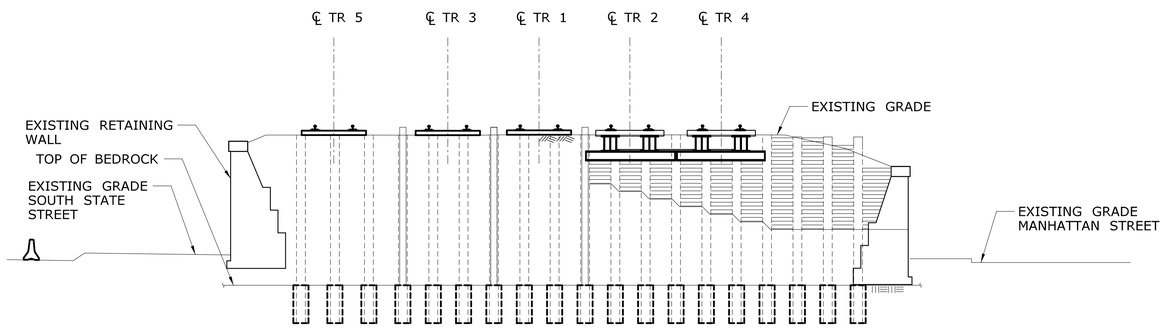

EAST JUMP SPAN SHORING ELEVATION

SCALE: 1" = 10'

STAGE B2C CONSTRUCTION

WORK ACTIVITY	RESPONSIBLE PARTY	TRACK OUTAGES					ROAD CLOSURES	
		5	3	1	2	4	SOUTH STATE ST	ATLANTIC ST
DELIVER THE TRACK 2 JUMP SPANS AND FLATCAR-MOUNTED GANTRIES TO THE SITE USING DIESEL LOCOMOTIVES. STORE ON THE TRACK 2 JUMP SPAN APPROACHES.	CONTRACTOR	-	-	C	C	C	-	-
EXCAVATE THE RAILBED AT THE TRACK 2 JUMP SPANS, INSTALLING LAGGING AND BRACING AS THE EXCAVATIONS PROCEED DOWNWARD.	CONTRACTOR	-	-	C	C	C	-	-
PREPARE THE RAILBED AT THE TRACK 2 JUMP SPAN APPROACHES.	CONTRACTOR	-	-	C	C	C	-	-
USING THE FLATCAR-MOUNTED GANTRIES, PICK THE TRACK 2 JUMP SPANS AND SET THEM IN PLACE.	CONTRACTOR	-	-	C	C	C	-	-
ADJUST RAIL GRADE USING SHIM PLATES BENEATH THE JUMP SPANS. FASTEN THE JUMP SPANS TO THE SHORING WALLS BELOW.	CONTRACTOR	-	-	C	C	C	-	-
SPLICE THE JUMP SPAN RAILS TO THE APPROACH RAILS.	MNR	-	-	C	C	C	-	-

TRACK OUTAGE KEY
C CONTINUOUS
F FOUL TIME
* TO BE DETERMINED BY MNR

NOTE:
THE EAST AND WEST JUMP SPANS SHALL BE INSTALLED CONCURRENTLY, EXCEPT AS FOLLOWS: THE JUMP SPANS MAY BE INSTALLED CONSECUTIVELY IF THE CONTRACTOR DEMONSTRATES DURING PRIOR STAGES THAT THERE IS SUFFICENT TIME TO DO SO WITHIN THE WORK WINDOW PROVIDED.

HIGHWAY, BRIDGE AND RAILROAD STAGING

DISCIPLINE	PROJECT	COMPONENT	STAGE									
HIGHWAY	135-301	ALL	1				2					3
BRIDGE	135-301	MNR BRIDGE & WALLS 105 - 107	B1A-B1E	B2A-B2F	B3	B4	B5A	B5B	B5C	B5D	B5E	B6
		MNR BRIDGE PIER			P1-P2			P3-P4		P3-P4		P5-P6
	301-163	TRACK 7 SUPERSTRUCTURE & PASSENGER PLATFORM									B5E	B6
RAILROAD	135-301	ALL	1A-1E	2A-2F		3	4A		4B		4C	5A-5C
	301-163	ALL	1A-1F									2A-3I

FINAL PLANS FOR REVIEW

REV.	DATE	REVISION DESCRIPTION	SHEET NO.
-	-	-	-
-	-	-	-
-	-	-	-
-	-	-	-
-	-	-	-
-	-	-	-

THE INFORMATION, INCLUDING ESTIMATED QUANTITIES OF WORK, SHOWN ON THESE SHEETS IS BASED ON LIMITED INVESTIGATIONS BY THE STATE AND IS IN NO WAY WARRANTED TO INDICATE THE CONDITIONS OF ACTUAL QUANTITIES OF WORK WHICH WILL BE REQUIRED.

Plotted Date: 3/24/2016

DESIGNER/DRAFTER: J. IVES / K. BARKER
CHECKED BY: D. COSTELLO
SCALE AS NOTED

STATE OF CONNECTICUT
DEPARTMENT OF TRANSPORTATION

Filename: ...\SB_MSH_Br08012R_0135_0301_STG-B2C.dgn

SIGNATURE/ BLOCK:

PROJECT TITLE:
REPLACEMENT OF MNRR BRIDGE OVER ATLANTIC STREET PHASE 2

TOWN: **STAMFORD**

DRAWING TITLE: **STAGE B2C CONSTRUCTION**

PROJECT NO. **135-301**
DRAWING NO. **S-16**
SHEET NO. **01.05.016**

3/24/2016
P:\Projects\ConnDot\36938292\500 CADD-GIS-Graphics\510 CADD\510.04 Struc. Bridge\MSta. Contract. Sheet. Files\SB_MSH_Br08012R_0135_0301_STG-B2C.dgn

Border Version: 11/14/08

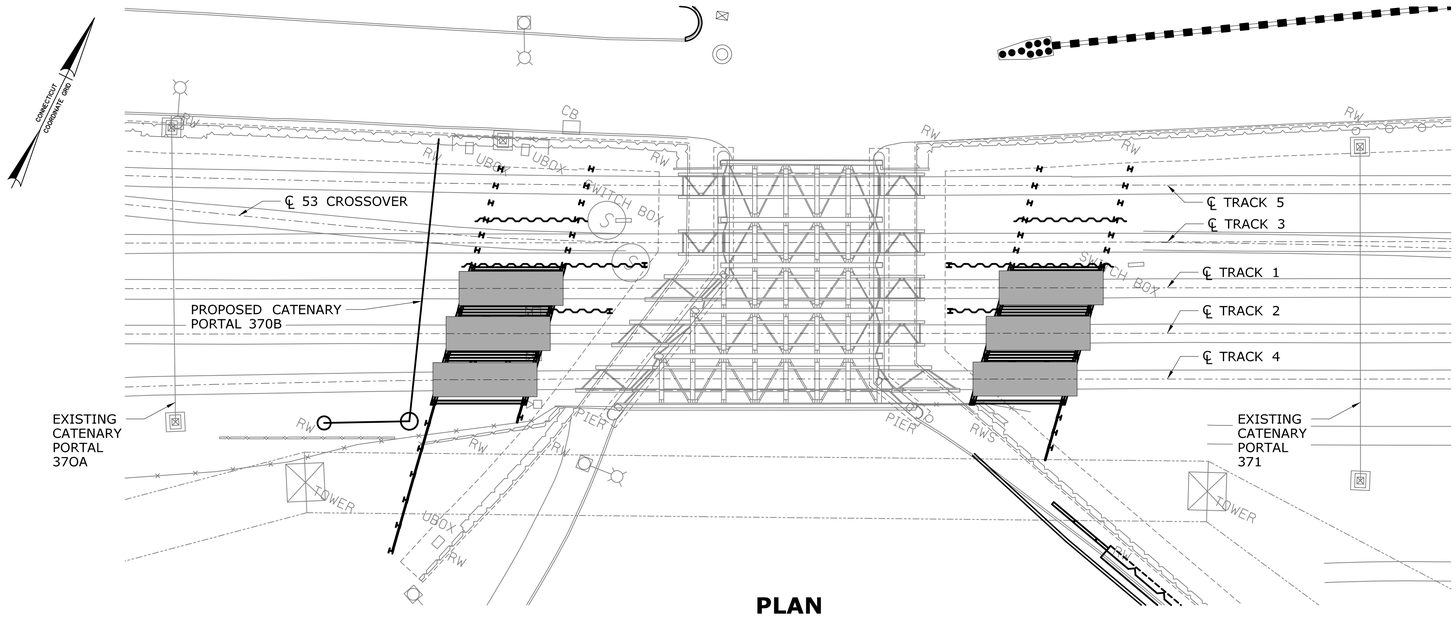

PLAN

SCALE: 1" = 20'

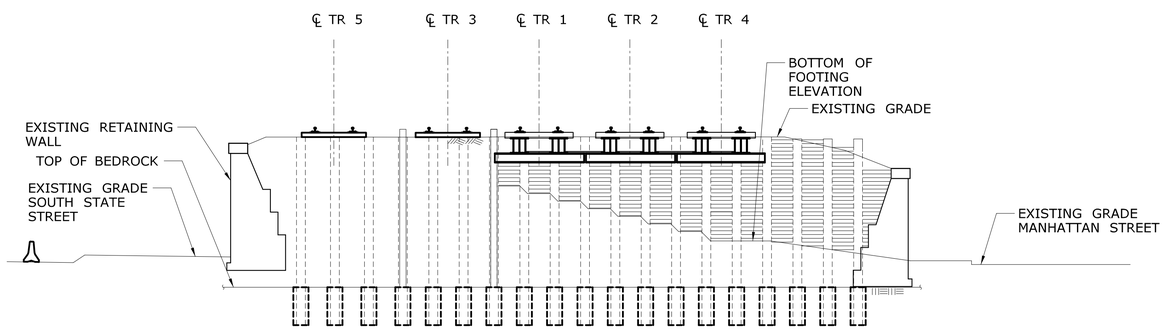

EAST JUMP SPAN SHORING ELEVATION

SCALE: 1" = 10'

STAGE B2D CONSTRUCTION

WORK ACTIVITY	RESPONSIBLE PARTY	TRACK OUTAGES					ROAD CLOSURES	
		5	3	1	2	4	SOUTH STATE ST	ATLANTIC ST
DELIVER THE TRACK 1 JUMP SPANS AND FLATCAR-MOUNTED GANTRIES TO THE SITE USING DIESEL LOCOMOTIVES. STORE ON THE TRACK 1 JUMP SPAN APPROACHES.	CONTRACTOR	-	C	C	C	-	-	-
EXCAVATE THE RAILBED AT THE TRACK 1 JUMP SPANS, INSTALLING LAGGING AND BRACING AS THE EXCAVATIONS PROCEED DOWNWARD.	CONTRACTOR	-	C	C	C	-	-	-
PREPARE THE RAILBED AT THE TRACK 1 JUMP SPAN APPROACHES.	CONTRACTOR	-	C	C	C	-	-	-
USING THE FLATCAR-MOUNTED GANTRIES, PICK THE TRACK 1 JUMP SPANS AND SET THEM IN PLACE.	CONTRACTOR	-	C	C	C	-	-	-
ADJUST RAIL GRADE USING SHIM PLATES BENEATH THE JUMP SPANS. FASTEN THE JUMP SPANS TO THE SHORING WALLS BELOW.	CONTRACTOR	-	C	C	C	-	-	-
SPLICE THE JUMP SPAN RAILS TO THE APPROACH RAILS.	MNR	-	C	C	C	-	-	-

TRACK OUTAGE KEY
C CONTINUOUS
F FOUL TIME
* TO BE DETERMINED BY MNR

NOTE:
THE EAST AND WEST JUMP SPANS SHALL BE INSTALLED CONCURRENTLY, EXCEPT AS FOLLOWS: THE JUMP SPANS MAY BE INSTALLED CONSECUTIVELY IF THE CONTRACTOR DEMONSTRATES DURING PRIOR STAGES THAT THERE IS SUFFICENT TIME TO DO SO WITHIN THE WORK WINDOW PROVIDED.

HIGHWAY, BRIDGE AND RAILROAD STAGING

DISCIPLINE	PROJECT	COMPONENT	STAGE									
HIGHWAY	135-301	ALL	1				2					3
BRIDGE	135-301	MNR BRIDGE & WALLS 105 - 107	B1A-B1E	B2A-B2F	B3	B4	B5A	B5B	B5C	B5D	B5E	B6
		MNR BRIDGE PIER			P1-P2			P3-P4		P3-P4		P5-P6
	301-163	TRACK 7 SUPERSTRUCTURE & PASSENGER PLATFORM									B5E	B6
RAILROAD	135-301	ALL	1A-1E	2A-2F		3	4A		4B		4C	5A-5C
	301-163	ALL	1A-1F									2A-3I

FINAL PLANS FOR REVIEW

REV.	DATE	REVISION DESCRIPTION	SHEET NO.
-	-	-	-
-	-	-	-
-	-	-	-
-	-	-	-
-	-	-	-
-	-	-	-

THE INFORMATION, INCLUDING ESTIMATED QUANTITIES OF WORK, SHOWN ON THESE SHEETS IS BASED ON LIMITED INVESTIGATIONS BY THE STATE AND IS IN NO WAY WARRANTED TO INDICATE THE CONDITIONS OF ACTUAL QUANTITIES OF WORK WHICH WILL BE REQUIRED.

Plotted Date: 3/24/2016

DESIGNER/DRAFTER: J. IVES / K. BARKER
CHECKED BY: D. COSTELLO
SCALE AS NOTED

STATE OF CONNECTICUT
DEPARTMENT OF TRANSPORTATION

Filename: ...\SB_MSH_Br08012R_0135_0301_STG-B2D.dgn

SIGNATURE/ BLOCK:

PROJECT TITLE: REPLACEMENT OF MNRR BRIDGE OVER ATLANTIC STREET PHASE 2

TOWN: STAMFORD

DRAWING TITLE: STAGE B2D CONSTRUCTION

PROJECT NO. 135-301
DRAWING NO. S-17
SHEET NO. 01.05.017

3/24/2016
P:\Projects\ConnDot\36938292\500 CADD-GIS-Graphics\510 CADD\510.04 Struc: Bridge\MSta. Contract Sheet Files\SB_MSH_Br08012R_0135_0301_STG-B2D.dgn

Border Version: 11/14/08

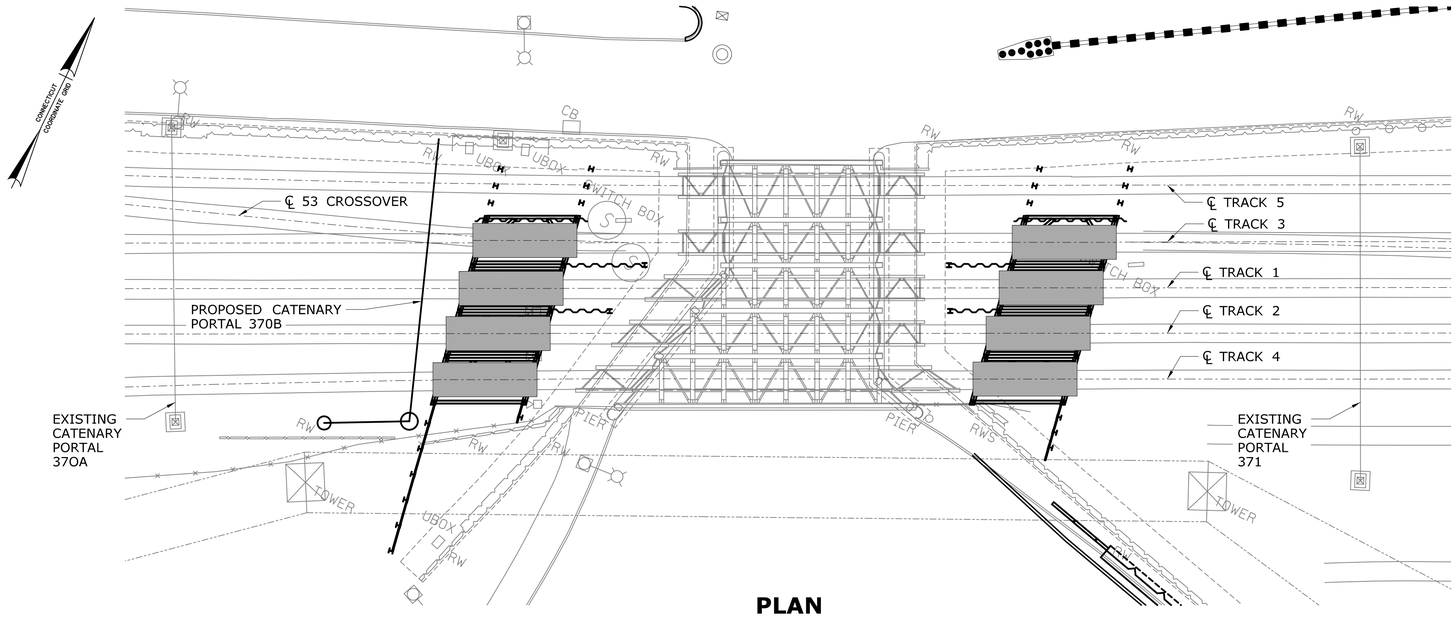

PLAN

SCALE: 1" = 20'

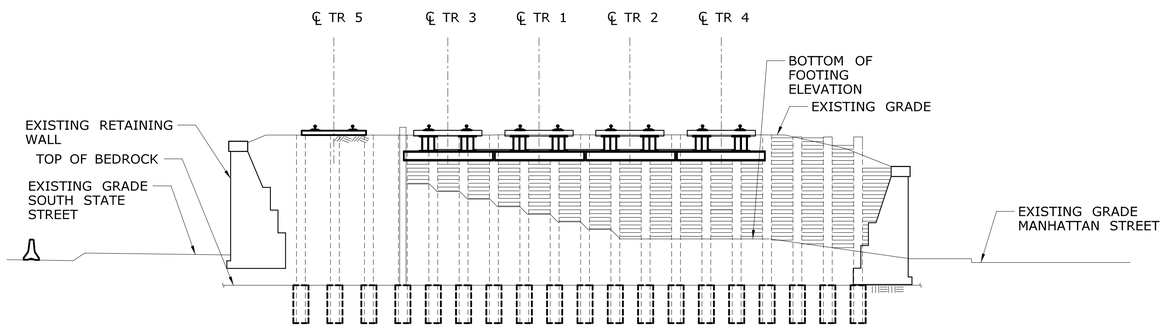

EAST JUMP SPAN SHORING ELEVATION

SCALE: 1" = 10'

STAGE B2E CONSTRUCTION

WORK ACTIVITY	RESPONSIBLE PARTY	TRACK OUTAGES					ROAD CLOSURES	
		5	3	1	2	4	SOUTH STATE ST	ATLANTIC ST
DELIVER THE TRACK 3 JUMP SPANS AND FLATCAR-MOUNTED GANTRIES TO THE SITE USING DIESEL LOCOMOTIVES. STORE ON THE TRACK 3 JUMP SPAN APPROACHES.	CONTRACTOR	C	C	C	-	-	-	-
EXCAVATE THE RAILBED AT THE TRACK 3 JUMP SPANS, INSTALLING LAGGING AND BRACING AS THE EXCAVATIONS PROCEED DOWNWARD.	CONTRACTOR	C	C	C	-	-	-	-
PREPARE THE RAILBED AT THE TRACK 3 JUMP SPAN APPROACHES.	CONTRACTOR	C	C	C	-	-	-	-
USING THE FLATCAR-MOUNTED GANTRIES, PICK THE TRACK 3 JUMP SPANS AND SET THEM IN PLACE.	CONTRACTOR	C	C	C	-	-	-	-
ADJUST RAIL GRADE USING SHIM PLATES BENEATH THE JUMP SPANS. FASTEN THE JUMP SPANS TO THE SHORING WALLS BELOW.	CONTRACTOR	C	C	C	-	-	-	-
SPLICE THE JUMP SPAN RAILS TO THE APPROACH RAILS. THE JUMP SPANS SHALL BE CONFIGURED FOR TRACK 3 ONLY (NO CROSSOVERS).	MNR	C	C	C	-	-	-	-
RESTORE THE 53 CROSSOVER. NOTE: THIS WORK ACTIVITY IS NOT PART OF THE WEEKEND WORK. TIMING TO BE DETERMINED BY MNR.	MNR	C	C	C	-	-	-	-

TRACK OUTAGE KEY
C CONTINUOUS
F FOUL TIME
* TO BE DETERMINED BY MNR

NOTE:
THE EAST AND WEST JUMP SPANS SHALL BE INSTALLED CONCURRENTLY, EXCEPT AS FOLLOWS: THE JUMP SPANS MAY BE INSTALLED CONSECUTIVELY IF THE CONTRACTOR DEMONSTRATES DURING PRIOR STAGES THAT THERE IS SUFFICENT TIME TO DO SO WITHIN THE WORK WINDOW PROVIDED.

HIGHWAY, BRIDGE AND RAILROAD STAGING

DISCIPLINE	PROJECT	COMPONENT	STAGE									
HIGHWAY	135-301	ALL	1				2					3
BRIDGE	135-301	MNR BRIDGE & WALLS 105 - 107	B1A-B1E	B2A-B2F	B3	B4	B5A	B5B	B5C	B5D	B5E	B6
		MNR BRIDGE PIER			P1-P2			P3-P4		P3-P4		P5-P6
	301-163	TRACK 7 SUPERSTRUCTURE & PASSENGER PLATFORM									B5E	B6
RAILROAD	135-301	ALL	1A-1E	2A-2F		3	4A		4B		4C	5A-5C
	301-163	ALL	1A-1F									2A-3I

FINAL PLANS FOR REVIEW

REV.	DATE	REVISION DESCRIPTION	SHEET NO.
-	-	-	-
-	-	-	-
-	-	-	-
-	-	-	-
-	-	-	-
-	-	-	-

THE INFORMATION, INCLUDING ESTIMATED QUANTITIES OF WORK, SHOWN ON THESE SHEETS IS BASED ON LIMITED INVESTIGATIONS BY THE STATE AND IS IN NO WAY WARRANTED TO INDICATE THE CONDITIONS OF ACTUAL QUANTITIES OF WORK WHICH WILL BE REQUIRED.

Plotted Date: 3/24/2016

DESIGNER/DRAFTER: J. IVES / K. BARKER
CHECKED BY: D. COSTELLO
SCALE AS NOTED

STATE OF CONNECTICUT
DEPARTMENT OF TRANSPORTATION

Filename: ...\SB_MSH_Br08012R_0135_0301_STG-B2E.dgn

SIGNATURE/ BLOCK:

PROJECT TITLE:
REPLACEMENT OF MNRR BRIDGE OVER ATLANTIC STREET PHASE 2

TOWN: **STAMFORD**

DRAWING TITLE: **STAGE B2E CONSTRUCTION**

PROJECT NO. **135-301**
DRAWING NO. **S-18**
SHEET NO. **01.05.018**

3/24/2016
P:\Projects\ConnDot\36938292\500 CADD-GIS-Graphics\510 CADD\510.04 Struc. Bridge\MSta. Contract. Sheet. Files\SB_MSH_Br08012R_0135_0301_STG-B2E.dgn

Border Version: 11/14/08

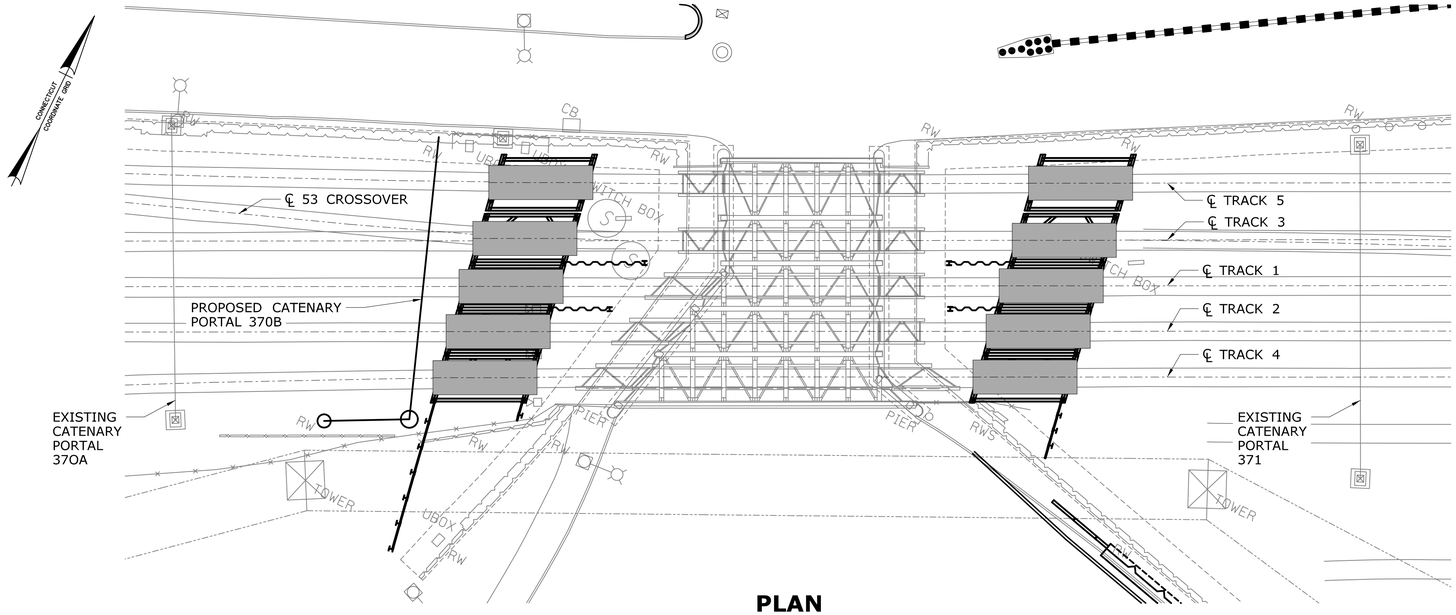

PLAN

SCALE: 1" = 20'

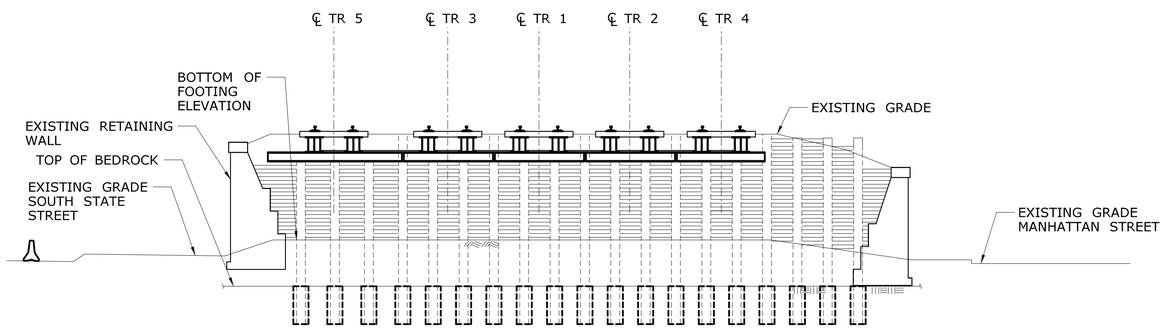

EAST JUMP SPAN SHORING ELEVATION

SCALE: 1" = 10'

STAGE B2F CONSTRUCTION

WORK ACTIVITY	RESPONSIBLE PARTY	TRACK OUTAGES					ROAD CLOSURES	
		5	3	1	2	4	SOUTH STATE ST	ATLANTIC ST
DELIVER THE TRACK 5 JUMP SPANS AND FLATCAR-MOUNTED GANTRIES TO THE SITE USING DIESEL LOCOMOTIVES. STORE ON THE TRACK 5 JUMP SPAN APPROACHES.	CONTRACTOR	C	C	-	-	-	-	-
EXCAVATE THE RAILBED AT THE TRACK 5 JUMP SPANS, INSTALLING LAGGING AND BRACING AS THE EXCAVATIONS PROCEED DOWNWARD.	CONTRACTOR	C	C	-	-	-	-	-
PREPARE THE RAILBED AT THE TRACK 5 JUMP SPAN APPROACHES.	CONTRACTOR	C	C	-	-	-	-	-
USING THE FLATCAR-MOUNTED GANTRIES, PICK THE TRACK 5 JUMP SPANS AND SET THEM IN PLACE.	CONTRACTOR	C	C	-	-	-	-	-
ADJUST RAIL GRADE USING SHIM PLATES BENEATH THE JUMP SPANS. FASTEN THE JUMP SPANS TO THE SHORING WALLS BELOW.	CONTRACTOR	C	C	-	-	-	-	-
SPLICE THE JUMP SPAN RAILS TO THE APPROACH RAILS.	MNR	C	C	-	-	-	-	-

TRACK OUTAGE KEY
C CONTINUOUS
F FOUL TIME
* TO BE DETERMINED BY MNR

NOTE:
THE EAST AND WEST JUMP SPANS SHALL BE INSTALLED CONCURRENTLY, EXCEPT AS FOLLOWS: THE JUMP SPANS MAY BE INSTALLED CONSECUTIVELY IF THE CONTRACTOR DEMONSTRATES DURING PRIOR STAGES THAT THERE IS SUFFICENT TIME TO DO SO WITHIN THE WORK WINDOW PROVIDED.

HIGHWAY, BRIDGE AND RAILROAD STAGING

DISCIPLINE	PROJECT	COMPONENT	STAGE									
HIGHWAY	135-301	ALL	1				2					3
BRIDGE	135-301	MNR BRIDGE & WALLS 105 - 107	B1A-B1E	B2A-B2F	B3	B4	B5A	B5B	B5C	B5D	B5E	B6
		MNR BRIDGE PIER			P1-P2			P3-P4		P3-P4		P5-P6
	301-163	TRACK 7 SUPERSTRUCTURE & PASSENGER PLATFORM									B5E	B6
RAILROAD	135-301	ALL	1A-1E	2A-2F		3	4A		4B		4C	5A-5C
	301-163	ALL	1A-1F									2A-3I

FINAL PLANS FOR REVIEW

REV.	DATE	REVISION DESCRIPTION	SHEET NO.
-	-	-	-
-	-	-	-
-	-	-	-
-	-	-	-
-	-	-	-
-	-	-	-

THE INFORMATION, INCLUDING ESTIMATED QUANTITIES OF WORK, SHOWN ON THESE SHEETS IS BASED ON LIMITED INVESTIGATIONS BY THE STATE AND IS IN NO WAY WARRANTED TO INDICATE THE CONDITIONS OF ACTUAL QUANTITIES OF WORK WHICH WILL BE REQUIRED.

Plotted Date: 3/24/2016

DESIGNER/DRAFTER: J. IVES / K. BARKER
CHECKED BY: D. COSTELLO
SCALE AS NOTED

STATE OF CONNECTICUT
DEPARTMENT OF TRANSPORTATION

Filename: ...\SB.MSH.Br08012R.0135.0301.STG-B2F.dgn

SIGNATURE/ BLOCK:

PROJECT TITLE: REPLACEMENT OF MNRR BRIDGE OVER ATLANTIC STREET PHASE 2

TOWN: STAMFORD

DRAWING TITLE: STAGE B2F CONSTRUCTION

PROJECT NO. 135-301
DRAWING NO. S-19
SHEET NO. 01.05.019

3/24/2016
P:\Projects\ConnDot\36938292\500 CADD-GIS-Graphics\510 CADD\510.04 Struc. Bridge\MSta. Contract. Sheet. Files\SB.MSH.Br08012R.0135.0301.STG-B2F.dgn

Border Version: 11/14/08

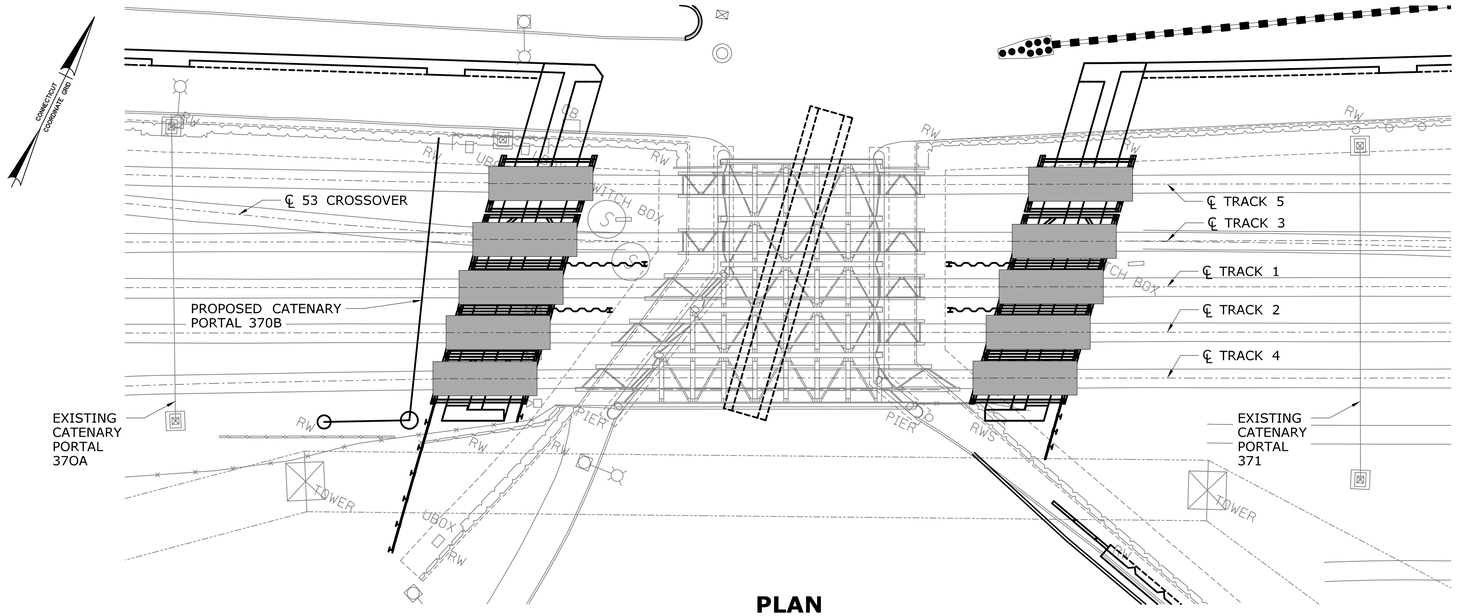

PLAN

SCALE: 1" = 20'

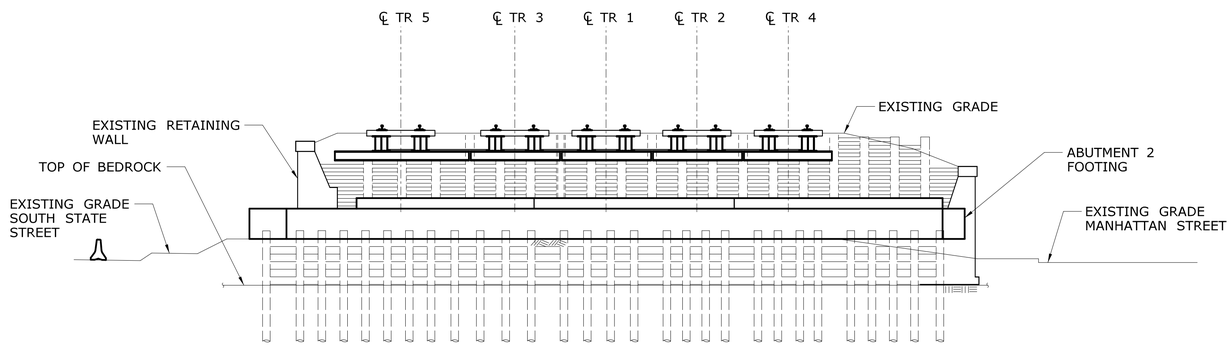

EAST JUMP SPAN SHORING ELEVATION

SCALE: 1" = 10'

STAGE B3 CONSTRUCTION

WORK ACTIVITY	RESPONSIBLE PARTY	TRACK OUTAGES					ROAD CLOSURES	
		5	3	1	2	4	SOUTH STATE ST	ATLANTIC ST
REMOVE PORTIONS OF THE EXISTING RETAINING WALLS ALONG SOUTH STATE STREET THAT ARE IN CONFLICT WITH THE PROPOSED ABUTMENTS.	CONTRACTOR	-	-	-	-	-	-	-
INSTALL MICROPILES FOR THE PROPOSED ABUTMENTS. CONSTRUCT THE PROPOSED ABUTMENT PILE CAPS AND BRIDGE SEATS.	CONTRACTOR	-	-	-	-	-	-	-
BRACE THE JUMP SPAN SHORING WALLS TO THE PROPOSED ABUTMENT. SEE JUMP SPAN DRAWINGS FOR DETAILS.								
CONCURRENT WITH THE ABOVE, INSTALL THE MICROPILES FOR THE PROPOSED PIER. CONSTRUCT THE PIER CAP AND LOWER PEDESTAL WALL. SEE PIER DRAWINGS FOR CONSTRUCTION SEQUENCE.	CONTRACTOR	-	-	-	-	-	-	NIGHTTIME
CONCURRENT WITH THE ABOVE, CONSTRUCT WALLS 105 AND 106.	CONTRACTOR	-	-	-	-	-	-	-

HIGHWAY, BRIDGE AND RAILROAD STAGING

DISCIPLINE	PROJECT	COMPONENT	STAGE									
HIGHWAY	135-301	ALL	1				2					3
BRIDGE	135-301	MNR BRIDGE & WALLS 105 - 107	B1A-B1E	B2A-B2F	B3	B4	B5A	B5B	B5C	B5D	B5E	B6
		MNR BRIDGE PIER			P1-P2			P3-P4		P3-P4		P5-P6
	301-163	TRACK 7 SUPERSTRUCTURE & PASSENGER PLATFORM									B5E	B6
RAILROAD	135-301	ALL	1A-1E	2A-2F		3	4A		4B		4C	5A-5C
	301-163	ALL	1A-1F									2A-3I

FINAL PLANS FOR REVIEW

REV.	DATE	REVISION DESCRIPTION	SHEET NO.
-	-	-	-
-	-	-	-
-	-	-	-
-	-	-	-
-	-	-	-
-	-	-	-

THE INFORMATION, INCLUDING ESTIMATED QUANTITIES OF WORK, SHOWN ON THESE SHEETS IS BASED ON LIMITED INVESTIGATIONS BY THE STATE AND IS IN NO WAY WARRANTED TO INDICATE THE CONDITIONS OF ACTUAL QUANTITIES OF WORK WHICH WILL BE REQUIRED.

Plotted Date: 3/24/2016

DESIGNER/DRAFTER: J. IVES / K. BARKER

CHECKED BY: D. COSTELLO

SCALE AS NOTED

STATE OF CONNECTICUT
DEPARTMENT OF TRANSPORTATION

Filename: ...\SB_MSH_Br08012R_0135_0301_STG-B3.dgn

SIGNATURE/ BLOCK:

PROJECT TITLE: REPLACEMENT OF MNRR BRIDGE OVER ATLANTIC STREET PHASE 2

TOWN: STAMFORD

DRAWING TITLE: STAGE B3 CONSTRUCTION

PROJECT NO. 135-301

DRAWING NO. S-20

SHEET NO. 01.05.020

3/24/2016
P:\Projects\Conn0at\36938292\500 CADD-GIS-Graphics\510 CADD\510.04 Struc. Bridge\MSta. Contract. Sheet. Files\SB_MSH_Br08012R_0135_0301_STG-B3.dgn

Border Version: 11/14/08

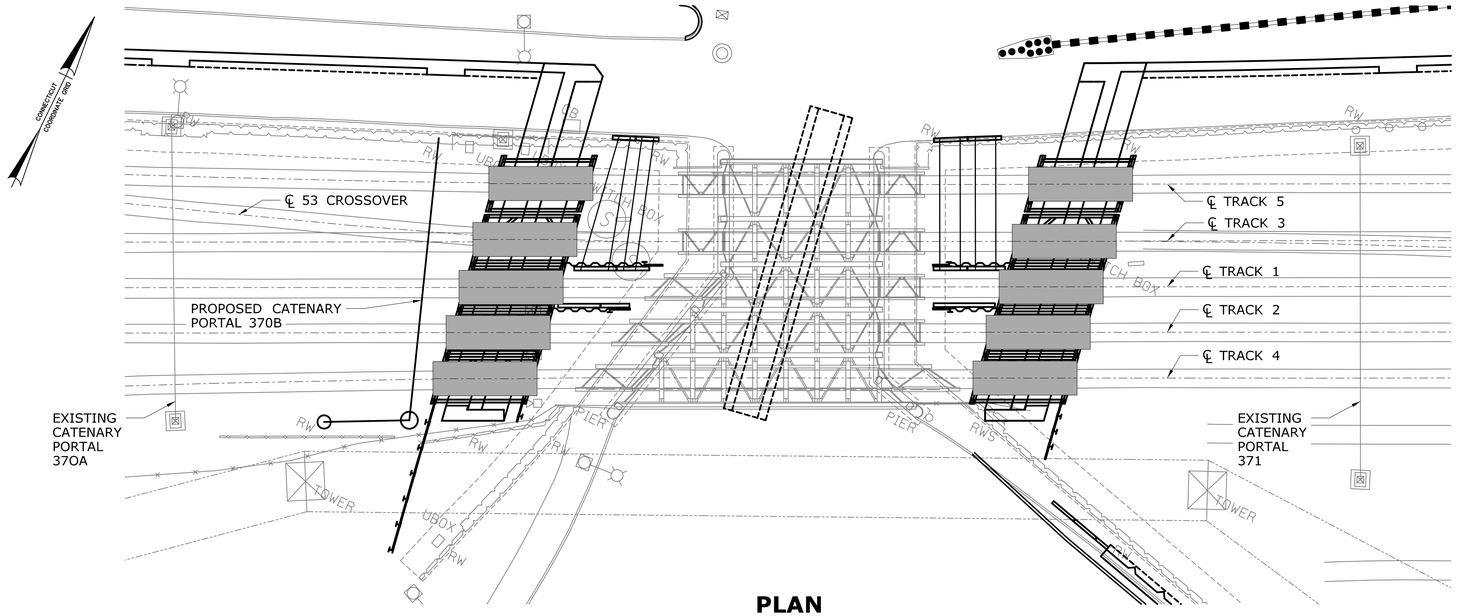

PLAN

SCALE: 1" = 20'

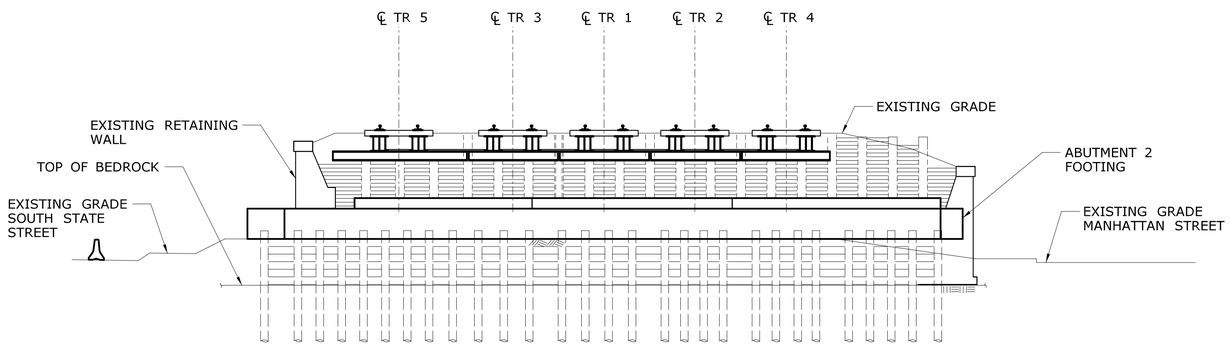

EAST JUMP SPAN SHORING ELEVATION

SCALE: 1" = 10'

STAGE B4 CONSTRUCTION

WORK ACTIVITY	RESPONSIBLE PARTY	TRACK OUTAGES					ROAD CLOSURES	
		5	3	1	2	4	SOUTH STATE ST	ATLANTIC ST
CONSTRUCT STAGE CLOSURE WALL. SEE CLOSURE WALL DRAWINGS FOR CONSTRUCTION SEQUENCE.	CONTRACTOR	-	C	C	C	-	-	-

TRACK OUTAGE KEY
C CONTINUOUS
F FOUL TIME
* TO BE DETERMINED BY MNR

HIGHWAY, BRIDGE AND RAILROAD STAGING

DISCIPLINE	PROJECT	COMPONENT	STAGE									
HIGHWAY	135-301	ALL	1				2					3
BRIDGE	135-301	MNR BRIDGE & WALLS 105 - 107	B1A-B1E	B2A-B2F	B3	B4	B5A	B5B	B5C	B5D	B5E	B6
		MNR BRIDGE PIER			P1-P2			P3-P4		P3-P4		P5-P6
	301-163	TRACK 7 SUPERSTRUCTURE & PASSENGER PLATFORM									B5E	B6
RAILROAD	135-301	ALL	1A-1E	2A-2F		3	4A		4B		4C	5A-5C
	301-163	ALL	1A-1F									2A-3I

FINAL PLANS FOR REVIEW

REV.	DATE	REVISION DESCRIPTION	SHEET NO.
-	-	-	-
-	-	-	-
-	-	-	-
-	-	-	-
-	-	-	-
-	-	-	-

THE INFORMATION, INCLUDING ESTIMATED QUANTITIES OF WORK, SHOWN ON THESE SHEETS IS BASED ON LIMITED INVESTIGATIONS BY THE STATE AND IS IN NO WAY WARRANTED TO INDICATE THE CONDITIONS OF ACTUAL QUANTITIES OF WORK WHICH WILL BE REQUIRED.

Plotted Date: 3/24/2016

DESIGNER/DRAFTER: J. IVES / K. BARKER
CHECKED BY: D. COSTELLO
SCALE AS NOTED

STATE OF CONNECTICUT
DEPARTMENT OF TRANSPORTATION

Filename: ...\SB_MSH_Br08012R_0135_0301_STG-B4.dgn

SIGNATURE/ BLOCK:

PROJECT TITLE:
REPLACEMENT OF MNRR BRIDGE OVER ATLANTIC STREET PHASE 2

TOWN: **STAMFORD**

DRAWING TITLE: **STAGE B4 CONSTRUCTION**

PROJECT NO. **135-301**
DRAWING NO. **S-21**
SHEET NO. **01.05.021**

3/24/2016
P:\Projects\Conn0at\36938292\500 CADD-GIS-Graphics\510 CADD\510.04 Struc. Bridge\MSta. Contract. Sheet. Files\SB_MSH_Br08012R_0135_0301_STG-B4.dgn

Border Version: 11/14/08

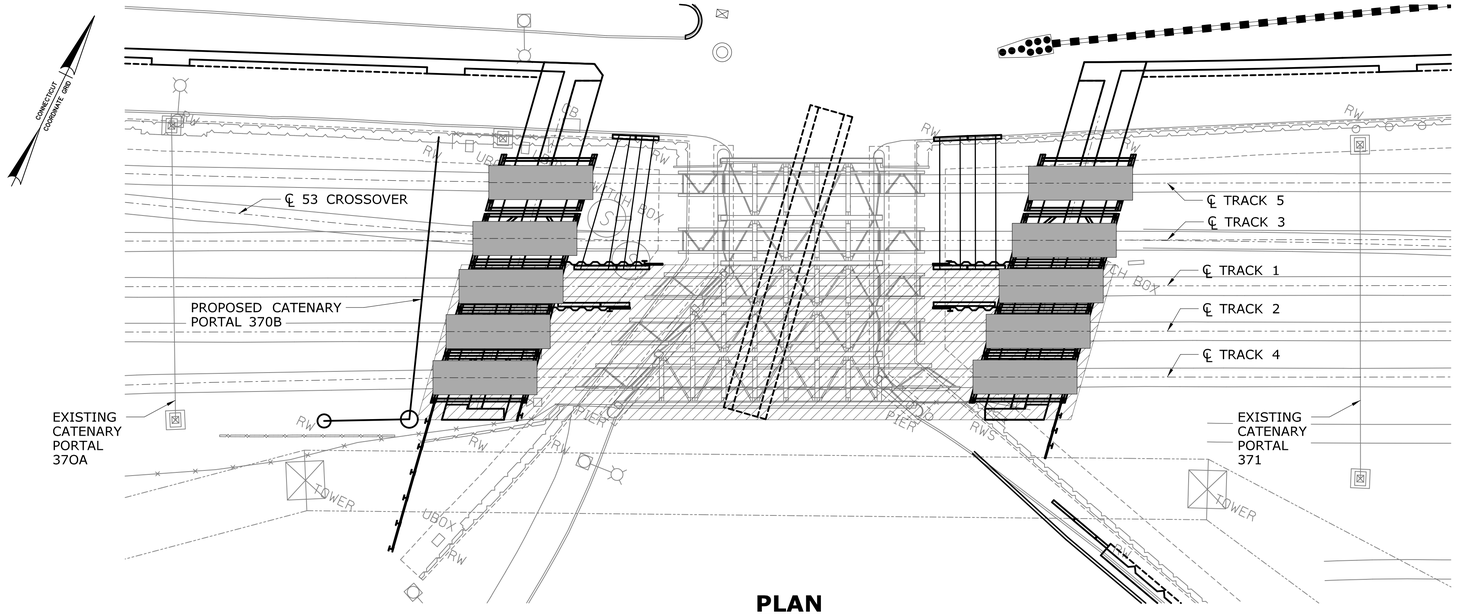

PLAN

SCALE: 1" = 20'

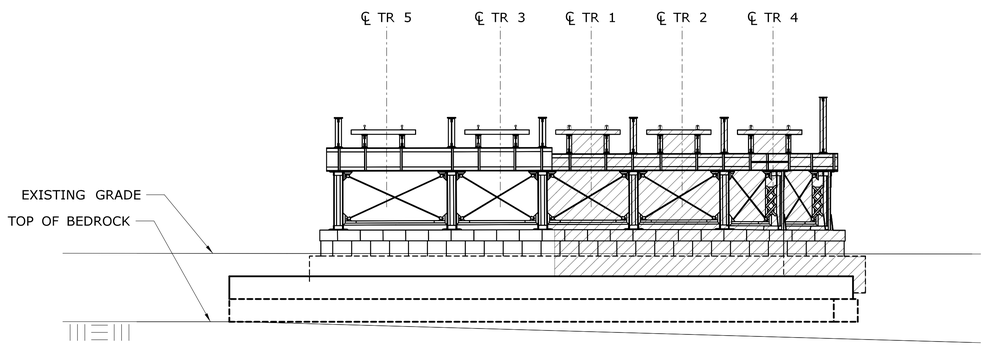

PIER ELEVATION

SCALE: 1" = 10'

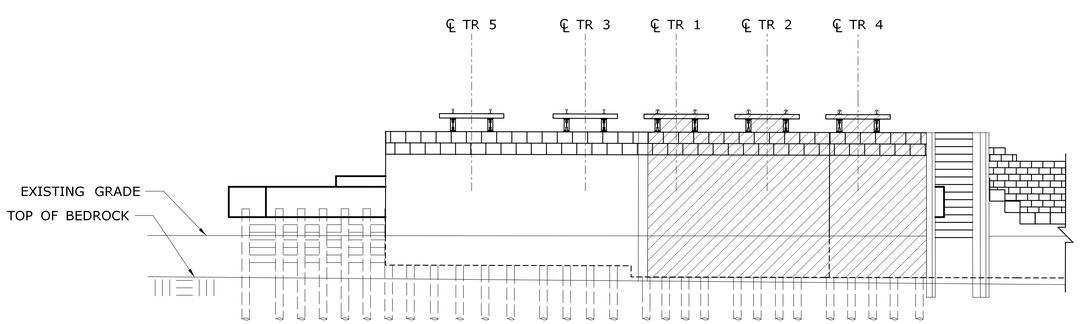

EAST ABUTMENT ELEVATION

SCALE: 1" = 10'

STAGE B5A CONSTRUCTION

WORK ACTIVITY	RESPONSIBLE PARTY	TRACK OUTAGES					ROAD CLOSURES	
		5	3	1	2	4	SOUTH STATE ST	ATLANTIC ST
REMOVE THE TRACK 1, 2 AND 4 JUMP SPANS AND TRANSPORT TO STORAGE SITE AS DIRECTED BY THE ENGINEER. JUMP SPANS TO BECOME PROPERTY OF CTDOT RAILS.	CONTRACTOR	-	-	C	C	C	CLOSED	CLOSED
REMOVE THE EXISTING BRIDGE 08012R SUPERSTRUCTURE AND PIERS TO THE LIMITS SHOWN.	CONTRACTOR	-	-	C	C	C	CLOSED	CLOSED
WORKING FROM THE TOP DOWN, REMOVE THE EXISTING BRIDGE 08012R ABUTMENTS, THE TRACK 1, 2 AND 4 JUMP SPAN SHORING, AND THE EARTH ENCLOSED THEREIN TO THE LIMITS SHOWN. TRANSPORT SALVAGED BROWNSTONE TO STORAGE SITE AS DIRECTED BY THE ENGINEER. SALVAGED BROWNSTONE TO BECOME PROPERTY OF THE CITY OF STAMFORD.	CONTRACTOR	-	-	C	C	C	CLOSED	CLOSED
INSTALL CONCRETE LAGGING ALONG THE FACE OF THE PROPOSED ABUTMENTS.	CONTRACTOR	-	-	C	C	C	CLOSED	CLOSED

TRACK OUTAGE KEY
C CONTINUOUS
F FOUL TIME
* TO BE DETERMINED BY MNR

NOTE:
STAGES B5A THROUGH B5D SHALL BE COMPLETED CONSECUTIVELY WITH ZERO DURATION BETWEEN STAGES.

HIGHWAY, BRIDGE AND RAILROAD STAGING

DISCIPLINE	PROJECT	COMPONENT	STAGE									
HIGHWAY	135-301	ALL	1				2					3
BRIDGE	135-301	MNR BRIDGE & WALLS 105 - 107	B1A-B1E	B2A-B2F	B3	B4	B5A	B5B	B5C	B5D	B5E	B6
		MNR BRIDGE PIER			P1-P2			P3-P4		P3-P4		P5-P6
	301-163	TRACK 7 SUPERSTRUCTURE & PASSENGER PLATFORM									B5E	B6
RAILROAD	135-301	ALL	1A-1E	2A-2F		3	4A		4B		4C	5A-5C
	301-163	ALL	1A-1F									2A-3I

FINAL PLANS FOR REVIEW

REV.	DATE	REVISION DESCRIPTION	SHEET NO.
-	-	-	-
-	-	-	-
-	-	-	-
-	-	-	-
-	-	-	-
-	-	-	-

THE INFORMATION, INCLUDING ESTIMATED QUANTITIES OF WORK, SHOWN ON THESE SHEETS IS BASED ON LIMITED INVESTIGATIONS BY THE STATE AND IS IN NO WAY WARRANTED TO INDICATE THE CONDITIONS OF ACTUAL QUANTITIES OF WORK WHICH WILL BE REQUIRED.

Plotted Date: 3/24/2016

DESIGNER/DRAFTER: J. IVES / K. BARKER
CHECKED BY: D. COSTELLO
SCALE AS NOTED

STATE OF CONNECTICUT
DEPARTMENT OF TRANSPORTATION

Filename: ...\SB.MSH.Br08012R.0135.0301.STG-B5A.dgn

SIGNATURE/ BLOCK:

PROJECT TITLE:
REPLACEMENT OF MNRR BRIDGE OVER ATLANTIC STREET PHASE 2

TOWN: **STAMFORD**

DRAWING TITLE: **STAGE B5A CONSTRUCTION**

PROJECT NO. **135-301**
DRAWING NO. **S-22**
SHEET NO. **01.05.022**

3/24/2016
P:\Projects\ConnDot\36938292\500 CADD-GIS-Graphics\510 CADD\510.04 Struc. Bridge\MSta. Contract. Sheet. Files\SB.MSH.Br08012R.0135.0301.STG-B5A.dgn

Border Version: 11/14/08

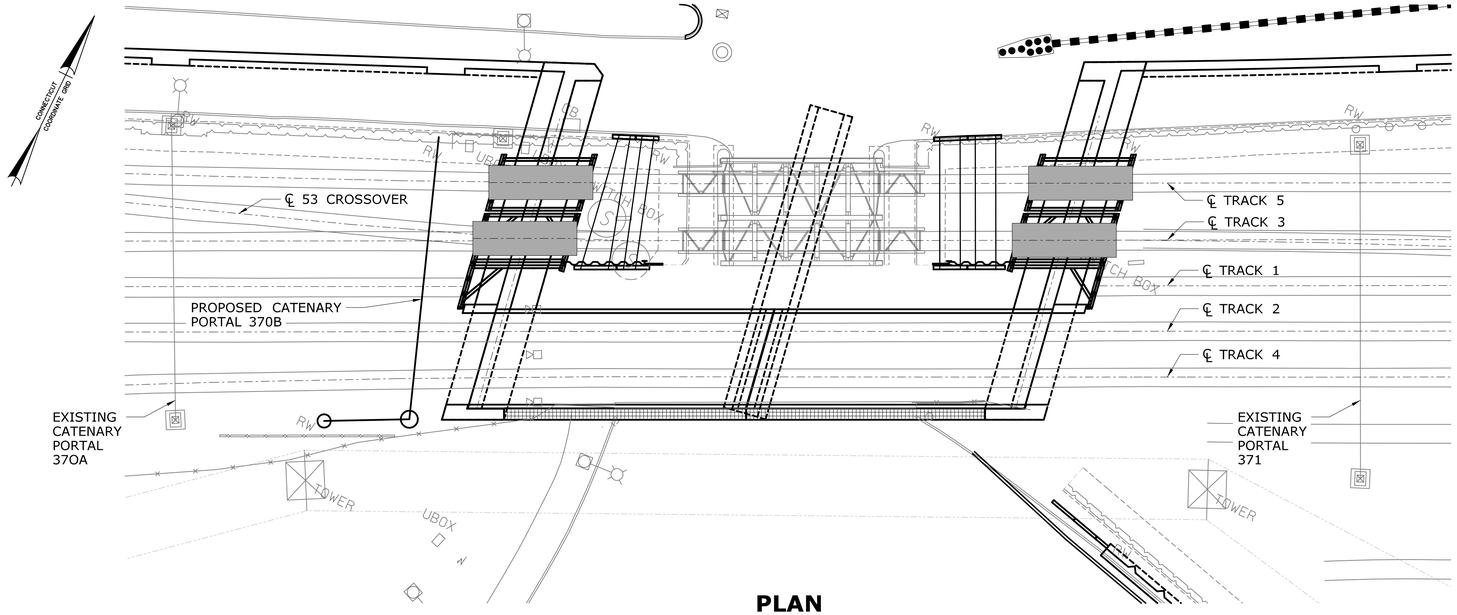

PLAN

SCALE: 1" = 20'

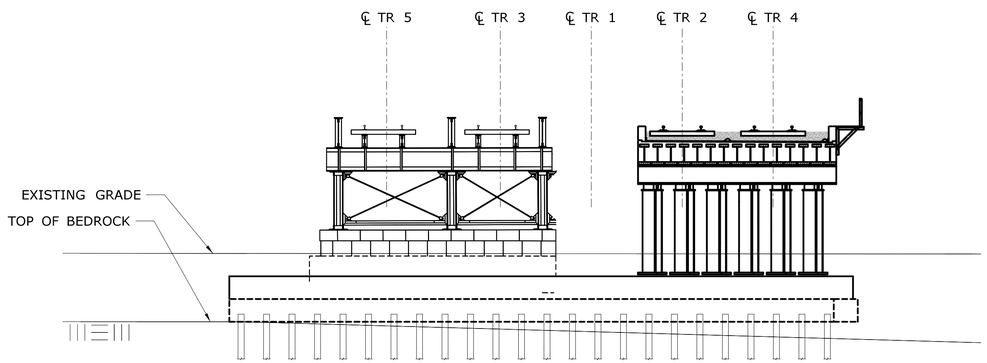

PIER ELEVATION

SCALE: 1" = 10'

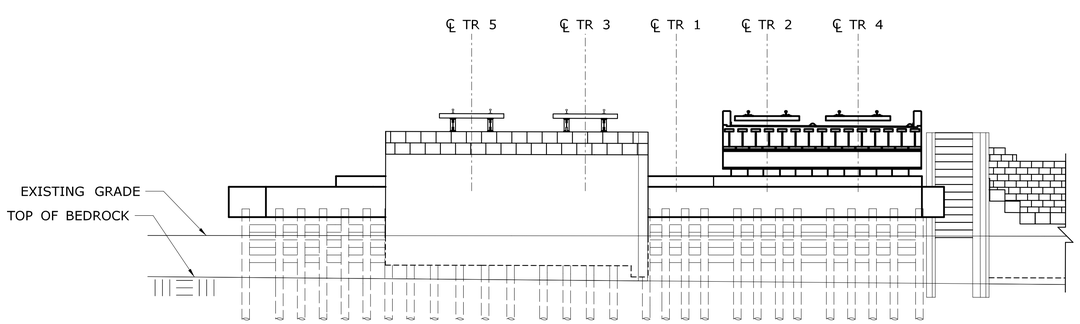

EAST ABUTMENT ELEVATION

SCALE: 1" = 10'

STAGE B5B CONSTRUCTION

WORK ACTIVITY	RESPONSIBLE PARTY	TRACK OUTAGES					ROAD CLOSURES	
		5	3	1	2	4	SOUTH STATE ST	ATLANTIC ST
ERECT THE PIER COLUMNS AND BEARINGS TO SUPPORT TRACKS 2 AND 4. SEE PIER DRAWINGS FOR CONSTRUCTION SEQUENCE. TRANSPORT THE SUPERSTRUCTURE FOR TRACKS 2 AND 4 TO THE SITE USING SPMT'S.	CONTRACTOR	-	-	C	C	C	CLOSED	CLOSED
SET THE SPAN 1 SUPERSTRUCTURE IN PLACE, FOLLOWED BY SPAN 2. KEEP THE SPMT'S IN PLACE BENEATH BOTH SPANS UNTIL FINAL ALIGNMENT OF THE STRUCTURE IS ACHIEVED.	CONTRACTOR	-	-	C	C	C	CLOSED	CLOSED
WELD THE BEARINGS TO THE CAP GIRDERS. INSTALL THE ABUTMENT CLOSURE WALLS.	CONTRACTOR	-	-	C	C	C	CLOSED	CLOSED
INSTALL THE PLATED JOINT OVER THE PIER. INSTALL THE ANGLED PLATES AT THE ABUTMENT CLOSURE WALLS.	CONTRACTOR	-	-	C	C	C	CLOSED	CLOSED
INSTALL THE SHEET WATERPROOFING AT THE PIER AND ABUTMENTS.	CONTRACTOR	-	-	C	C	C	CLOSED	CLOSED
INSTALL THE BALLAST MATS.	CONTRACTOR	-	-	C	C	C	CLOSED	CLOSED
INSTALL THE DECK DRAINAGE AND CONNECT TO THE ABUTMENT UNDERDRAINS.	CONTRACTOR	-	-	C	C	C	CLOSED	CLOSED
BACKFILL BEHIND THE SUPERSTRUCTURE.	CONTRACTOR	-	-	C	C	C	CLOSED	CLOSED
INSTALL BALLAST UP TO 4" BELOW TIES.	CONTRACTOR	-	-	C	C	C	CLOSED	CLOSED
INSTALL TIES, COMPLETE WITH CLIPS.	MNR	-	-	C	C	C	CLOSED	CLOSED
WORKING FROM THE APPROACHES, PULL RAILS OVER THE PROPOSED BRIDGE AND FASTEN TO TIES.	MNR	-	-	C	C	C	CLOSED	CLOSED
RAISE TRACKS TO PROFILE GRADE AND INSTALL FINAL BALLAST.	MNR	-	-	C	C	C	CLOSED	CLOSED
SPLICE RAILS. INSTALL REMAINING RAILROAD APPURTENANCES.	MNR	-	-	C	C	C	CLOSED	CLOSED

TRACK OUTAGE KEY
C CONTINUOUS
F FOUL TIME
* TO BE DETERMINED BY MNR

NOTE:
STAGES B5A THROUGH B5D SHALL BE COMPLETED CONSECUTIVELY WITH ZERO DURATION BETWEEN STAGES.

HIGHWAY, BRIDGE AND RAILROAD STAGING

DISCIPLINE	PROJECT	COMPONENT	STAGE									
HIGHWAY	135-301	ALL	1				2					3
BRIDGE	135-301	MNR BRIDGE & WALLS 105 - 107	B1A-B1E	B2A-B2F	B3	B4	B5A	B5B	B5C	B5D	B5E	B6
		MNR BRIDGE PIER			P1-P2			P3-P4		P3-P4		P5-P6
	301-163	TRACK 7 SUPERSTRUCTURE & PASSENGER PLATFORM									B5E	B6
RAILROAD	135-301	ALL	1A-1E	2A-2F		3	4A		4B		4C	5A-5C
	301-163	ALL	1A-1F									2A-3I

FINAL PLANS FOR REVIEW

REV.	DATE	REVISION DESCRIPTION	SHEET NO.
-	-	-	-
-	-	-	-
-	-	-	-
-	-	-	-
-	-	-	-
-	-	-	-

THE INFORMATION, INCLUDING ESTIMATED QUANTITIES OF WORK, SHOWN ON THESE SHEETS IS BASED ON LIMITED INVESTIGATIONS BY THE STATE AND IS IN NO WAY WARRANTED TO INDICATE THE CONDITIONS OF ACTUAL QUANTITIES OF WORK WHICH WILL BE REQUIRED.

Plotted Date: 3/24/2016

DESIGNER/DRAFTER: J. IVES / K. BARKER
CHECKED BY: D. COSTELLO
SCALE AS NOTED

STATE OF CONNECTICUT
DEPARTMENT OF TRANSPORTATION

Filename: ...\SB.MSH.Br08012R.0135.0301.STG-B5B.dgn

SIGNATURE/ BLOCK:

PROJECT TITLE:
REPLACEMENT OF MNRR BRIDGE OVER ATLANTIC STREET PHASE 2

TOWN: **STAMFORD**

DRAWING TITLE: **STAGE B5B CONSTRUCTION**

PROJECT NO. **135-301**
DRAWING NO. **S-23**
SHEET NO. **01.05.023**

3/24/2016
P:\Projects\ConnDot\36938292\500 CADD-GIS-Graphics\510 CADD\510.04 Struc. Bridge\MSta. Contract. Sheet. Files\SB.MSH.Br08012R.0135.0301.STG-B5B.dgn

Border Version: 11/14/08

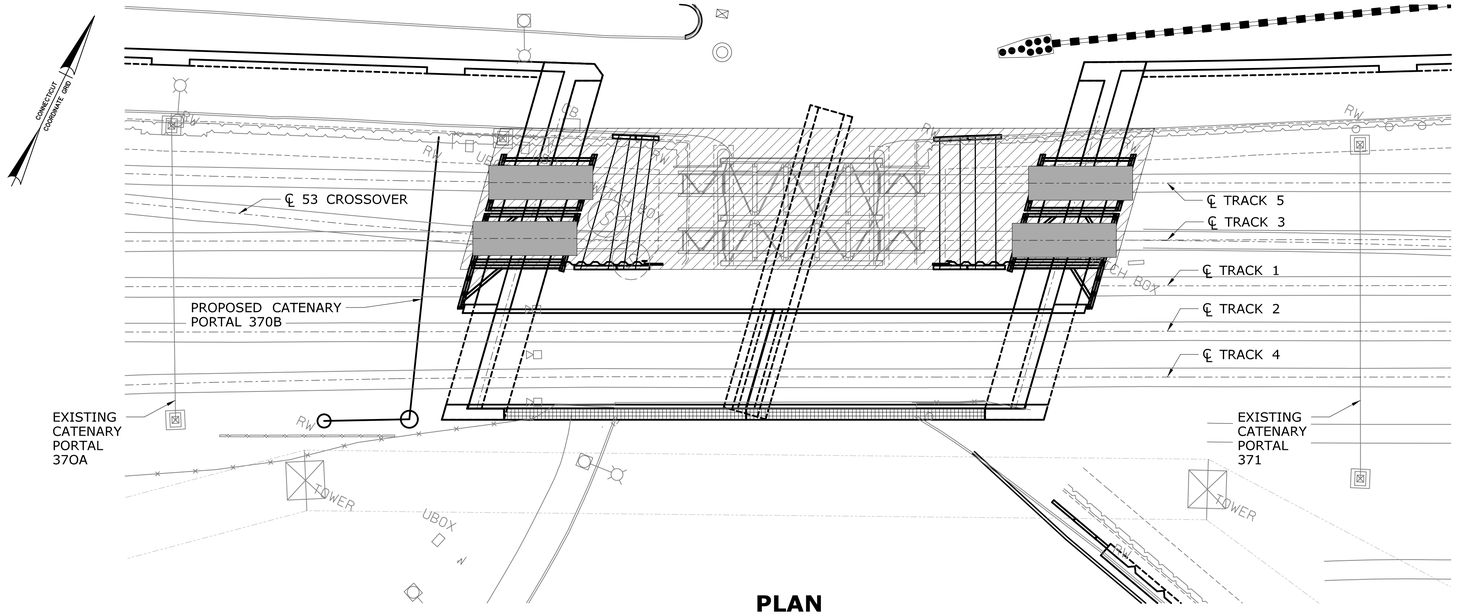

PLAN

SCALE: 1" = 20'

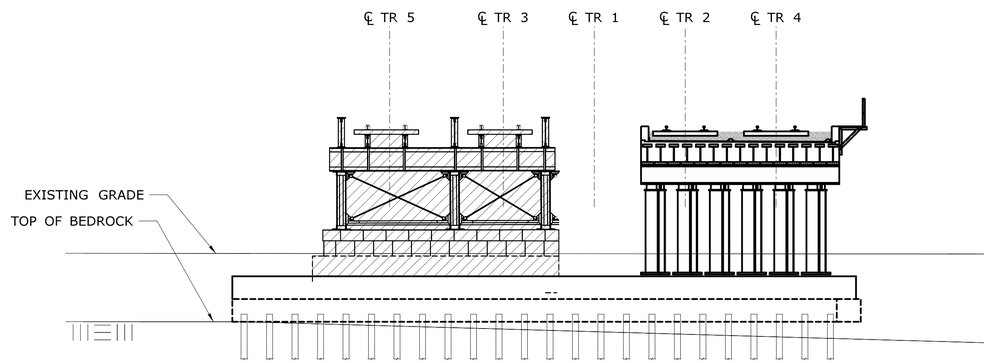

PIER ELEVATION

SCALE: 1" = 10'

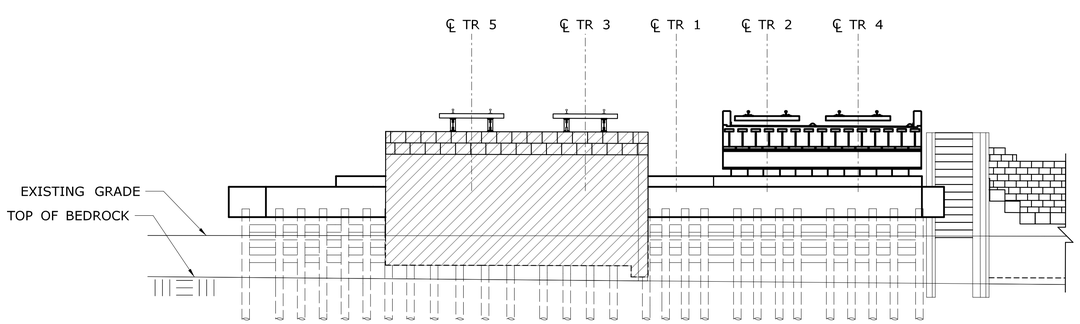

EAST ABUTMENT ELEVATION

SCALE: 1" = 10'

STAGE B5C CONSTRUCTION

WORK ACTIVITY	RESPONSIBLE PARTY	TRACK OUTAGES					ROAD CLOSURES	
		5	3	1	2	4	SOUTH STATE ST	ATLANTIC ST
REMOVE THE TRACK 3 AND 5 JUMP SPANS AND TRANSPORT TO STORAGE SITE AS DIRECTED BY THE ENGINEER. JUMP SPANS TO BECOME PROPERTY OF CTDOT RAILS.	CONTRACTOR	C	C	C	-	-	CLOSED	CLOSED
REMOVE THE REMAINDER OF THE EXISTING BRIDGE 08012R SUPERSTRUCTURE AND PIERS.	CONTRACTOR	C	C	C	-	-	CLOSED	CLOSED
WORKING FROM THE TOP DOWN, REMOVE THE REMAINDER OF THE EXISTING BRIDGE 08012R ABUTMENTS, THE TRACK 3 AND 5 JUMP SPAN SHORING, THE STAGE CLOSURE WALL AND THE EARTH ENCLOSED THEREIN. TRANSPORT SALVAGED BROWNSTONE TO STORAGE SITE AS DIRECTED BY THE ENGINEER. SALVAGED BROWNSTONE TO BECOME PROPERTY OF THE CITY OF STAMFORD.	CONTRACTOR	C	C	C	-	-	CLOSED	CLOSED
INSTALL CONCRETE LAGGING ALONG THE FACE OF THE PROPOSED ABUTMENTS.	CONTRACTOR	C	C	C	-	-	CLOSED	CLOSED

TRACK OUTAGE KEY
C CONTINUOUS
F FOUL TIME
* TO BE DETERMINED BY MNR

NOTE:
STAGES B5A THROUGH B5D SHALL BE COMPLETED CONSECUTIVELY WITH ZERO DURATION BETWEEN STAGES.

HIGHWAY, BRIDGE AND RAILROAD STAGING

DISCIPLINE	PROJECT	COMPONENT	STAGE									
HIGHWAY	135-301	ALL	1				2					3
BRIDGE	135-301	MNR BRIDGE & WALLS 105 - 107	B1A-B1E	B2A-B2F	B3	B4	B5A	B5B	B5C	B5D	B5E	B6
		MNR BRIDGE PIER			P1-P2			P3-P4		P3-P4		P5-P6
	301-163	TRACK 7 SUPERSTRUCTURE & PASSENGER PLATFORM									B5E	B6
RAILROAD	135-301	ALL	1A-1E	2A-2F		3	4A		4B		4C	5A-5C
	301-163	ALL	1A-1F									2A-3I

FINAL PLANS FOR REVIEW

REV.	DATE	REVISION DESCRIPTION	SHEET NO.
-	-	-	-
-	-	-	-
-	-	-	-
-	-	-	-
-	-	-	-
-	-	-	-

THE INFORMATION, INCLUDING ESTIMATED QUANTITIES OF WORK, SHOWN ON THESE SHEETS IS BASED ON LIMITED INVESTIGATIONS BY THE STATE AND IS IN NO WAY WARRANTED TO INDICATE THE CONDITIONS OF ACTUAL QUANTITIES OF WORK WHICH WILL BE REQUIRED.

Plotted Date: 3/24/2016

DESIGNER/DRAFTER: J. IVES / K. BARKER
CHECKED BY: D. COSTELLO
SCALE AS NOTED

STATE OF CONNECTICUT
DEPARTMENT OF TRANSPORTATION

Filename: ...\SB.MSH.Br08012R.0135.0301.STG-B5C.dgn

SIGNATURE/ BLOCK:

PROJECT TITLE:
REPLACEMENT OF MNRR BRIDGE OVER ATLANTIC STREET PHASE 2

TOWN: **STAMFORD**

DRAWING TITLE: **STAGE B5C CONSTRUCTION**

PROJECT NO. **135-301**
DRAWING NO. **S-24**
SHEET NO. **01.05.024**

3/24/2016
P:\Projects\ConnDot\36938292\500 CADD-GIS-Graphics\510 CADD\510.04 Struc. Bridge\MSta. Contract. Sheet. Files\SB.MSH.Br08012R.0135.0301.STG-B5C.dgn

Border Version: 11/14/08

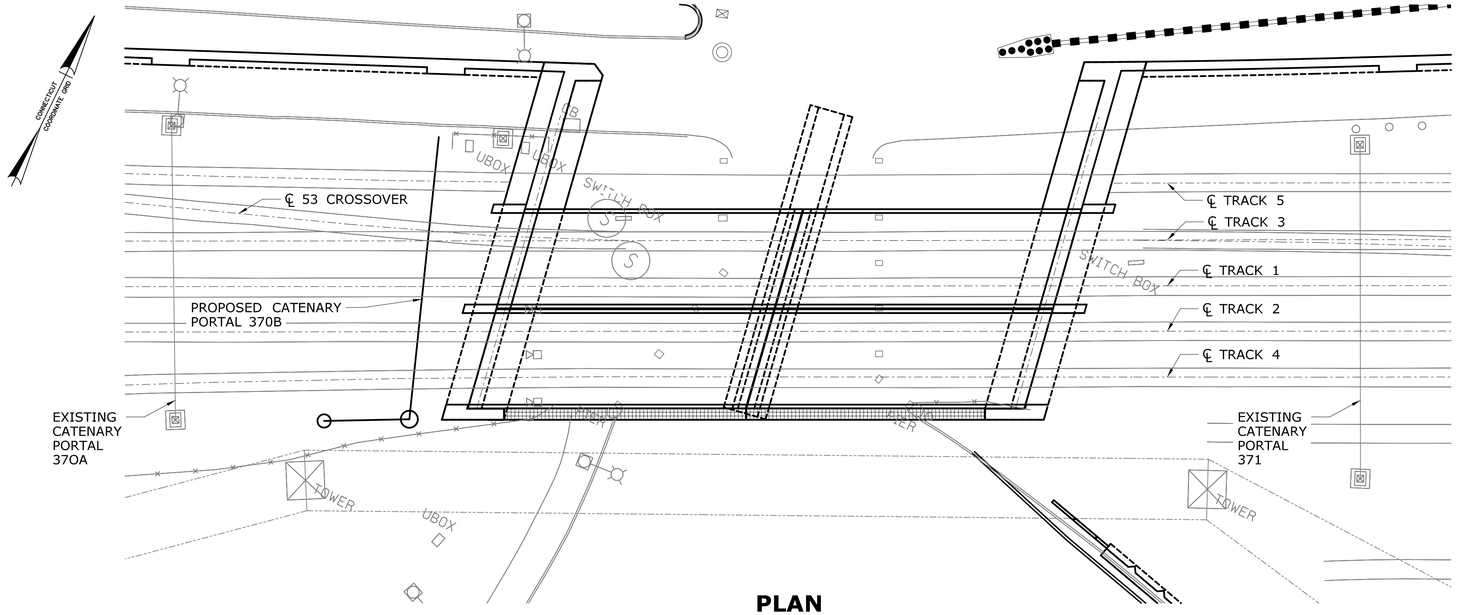

PLAN

SCALE: 1" = 20'

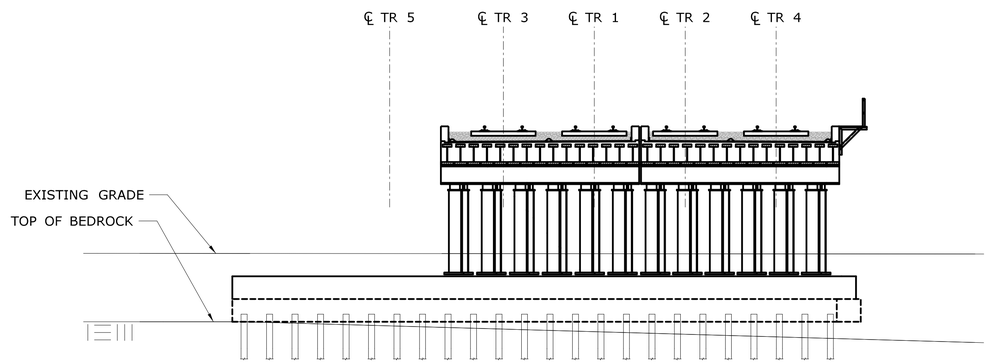

PIER ELEVATION

SCALE: 1" = 10'

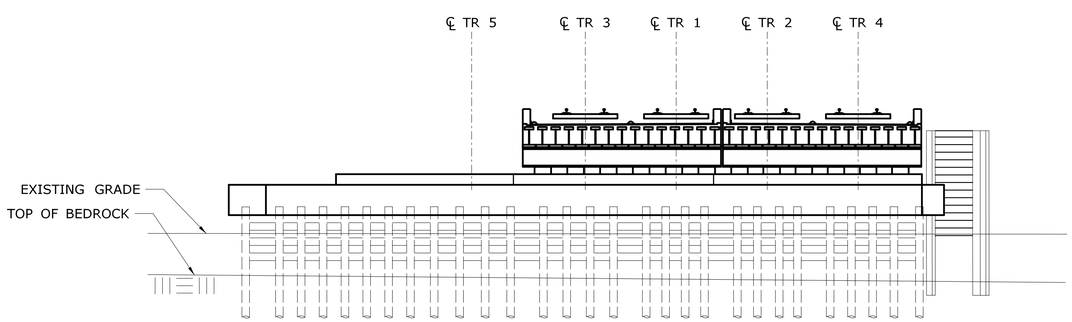

EAST ABUTMENT ELEVATION

SCALE: 1" = 10'

STAGE B5D CONSTRUCTION

WORK ACTIVITY	RESPONSIBLE PARTY	TRACK OUTAGES					ROAD CLOSURES	
		5	3	1	2	4	SOUTH STATE ST	ATLANTIC ST
ERECT THE PIER COLUMNS AND BEARINGS TO SUPPORT TRACKS 1 AND 3. SEE PIER DRAWINGS FOR CONSTRUCTION SEQUENCE. TRANSPORT THE SUPERSTRUCTURE FOR TRACKS 1 AND 3 TO THE SITE USING SPMT'S.	CONTRACTOR	C	C	C	-	-	CLOSED	CLOSED
SET THE SPAN 1 SUPERSTRUCTURE IN PLACE, FOLLOWED BY SPAN 2. KEEP THE SPMT'S IN PLACE BENEATH BOTH SPANS UNTIL FINAL ALIGNMENT OF THE STRUCTURE IS ACHIEVED.	CONTRACTOR	C	C	C	-	-	CLOSED	CLOSED
COMPLETE STAGE B5E CONCURRENTLY WITH THE REMAINING STAGE B5D WORK ACTIVITIES.	CONTRACTOR	C	C	C	-	-	CLOSED	CLOSED
WELD THE BEARINGS TO THE CAP GIRDERS. INSTALL THE ABUTMENT CLOSURE WALLS.	CONTRACTOR	C	C	C	-	-	CLOSED	CLOSED
INSTALL THE PLATED JOINT OVER THE PIER. INSTALL THE ANGLED PLATES AT THE ABUTMENT CLOSURE WALLS.	CONTRACTOR	C	C	C	-	-	CLOSED	CLOSED
INSTALL THE SHEET WATERPROOFING AT THE PIER AND ABUTMENTS.	CONTRACTOR	C	C	C	-	-	CLOSED	CLOSED
INSTALL THE BALLAST MATS.	CONTRACTOR	C	C	C	-	-	CLOSED	CLOSED
INSTALL THE DECK DRAINAGE AND CONNECT TO THE ABUTMENT UNDERDRAINS.	CONTRACTOR	C	C	C	-	-	CLOSED	CLOSED
BACKFILL BEHIND THE SUPERSTRUCTURE.	CONTRACTOR	C	C	C	-	-	CLOSED	CLOSED
INSTALL BALLAST UP TO 4" BELOW TIES.	CONTRACTOR	C	C	C	-	-	CLOSED	CLOSED
INSTALL TIES, COMPLETE WITH CLIPS.	MNR	C	C	C	-	-	CLOSED	CLOSED
WORKING FROM THE APPROACHES, PULL RAILS OVER THE PROPOSED BRIDGE AND FASTEN TO TIES.	MNR	C	C	C	-	-	CLOSED	CLOSED
RAISE TRACKS TO PROFILE GRADE AND INSTALL FINAL BALLAST.	MNR	C	C	C	-	-	CLOSED	CLOSED
SPLICE RAILS. INSTALL REMAINING RAILROAD APPURTENANCES.	MNR	C	C	C	-	-	CLOSED	CLOSED

TRACK OUTAGE KEY
C CONTINUOUS
F FOUL TIME
* TO BE DETERMINED BY MNR

NOTES:
1. STAGES B5A THROUGH B5D SHALL BE COMPLETED CONSECUTIVELY WITH ZERO DURATION BETWEEN STAGES.
2. WORK ACTIVITIES IN STAGE B5E SHALL BEGIN IMMEDIATELY AFTER IDENTICAL WORK ACTIVITIES IN STAGE B5D, TO THE GREATEST EXTENT POSSIBLE.

HIGHWAY, BRIDGE AND RAILROAD STAGING

DISCIPLINE	PROJECT	COMPONENT	STAGE									
HIGHWAY	135-301	ALL	1				2					3
BRIDGE	135-301	MNR BRIDGE & WALLS 105 - 107	B1A-B1E	B2A-B2F	B3	B4	B5A	B5B	B5C	B5D	B5E	B6
		MNR BRIDGE PIER			P1-P2			P3-P4		P3-P4		P5-P6
	301-163	TRACK 7 SUPERSTRUCTURE & PASSENGER PLATFORM									B5E	B6
RAILROAD	135-301	ALL	1A-1E	2A-2F		3	4A		4B		4C	5A-5C
	301-163	ALL	1A-1F									2A-3I

FINAL PLANS FOR REVIEW

REV.	DATE	REVISION DESCRIPTION	SHEET NO.
-	-	-	-
-	-	-	-
-	-	-	-
-	-	-	-
-	-	-	-
-	-	-	-

THE INFORMATION, INCLUDING ESTIMATED QUANTITIES OF WORK, SHOWN ON THESE SHEETS IS BASED ON LIMITED INVESTIGATIONS BY THE STATE AND IS IN NO WAY WARRANTED TO INDICATE THE CONDITIONS OF ACTUAL QUANTITIES OF WORK WHICH WILL BE REQUIRED.

Plotted Date: 3/24/2016

DESIGNER/DRAFTER: J. IVES / K. BARKER
CHECKED BY: D. COSTELLO
SCALE AS NOTED

STATE OF CONNECTICUT
DEPARTMENT OF TRANSPORTATION

Filename: ...\SB..MSH..Br08012R..0135..0301..STG-B5D.dgn

SIGNATURE/ BLOCK:

PROJECT TITLE:
REPLACEMENT OF MNRR BRIDGE OVER ATLANTIC STREET PHASE 2

TOWN: **STAMFORD**

DRAWING TITLE: **STAGE B5D CONSTRUCTION**

PROJECT NO. **135-301**
DRAWING NO. **S-25**
SHEET NO. **01.05.025**

3/24/2016
P:\Projects\ConnDot\36938292\500 CADD-GIS-Graphics\510 CADD\510.04 Struc.Bridge\MSta.Contract.Sheet.Files\SB.MSH.Br08012R.0135.0301.STG-B5D.dgn

Border Version: 11/14/08

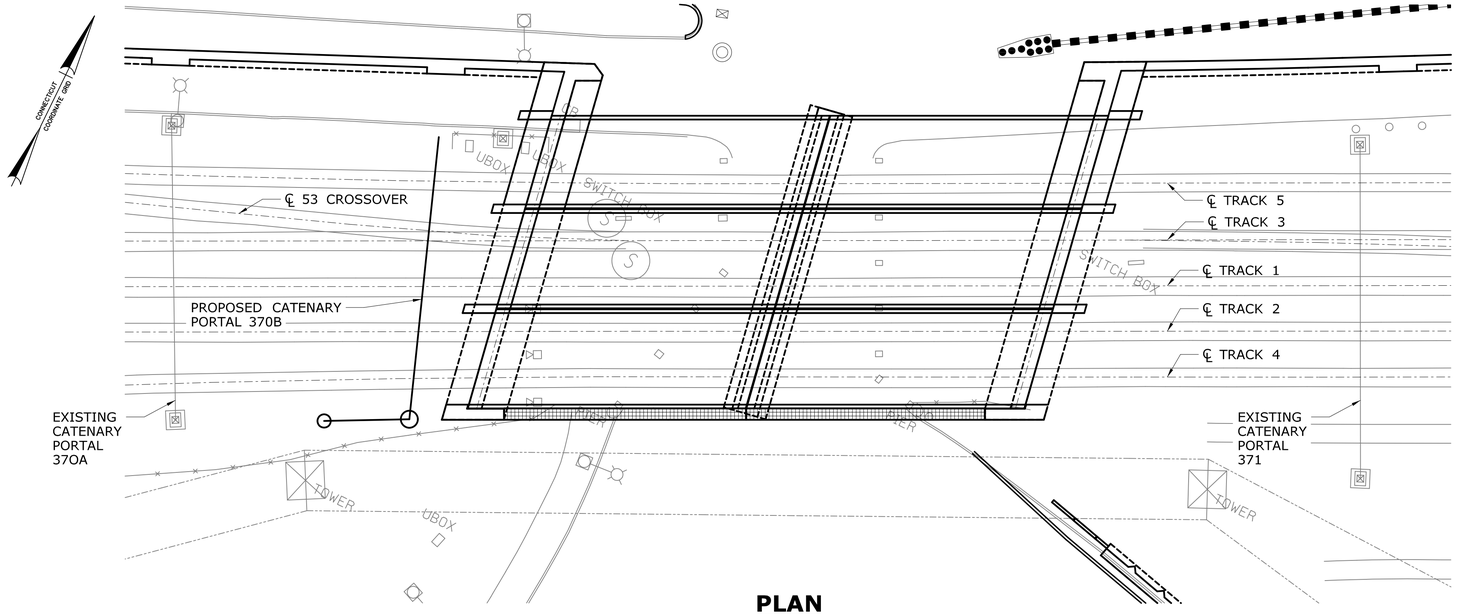

PLAN

SCALE: 1" = 20'

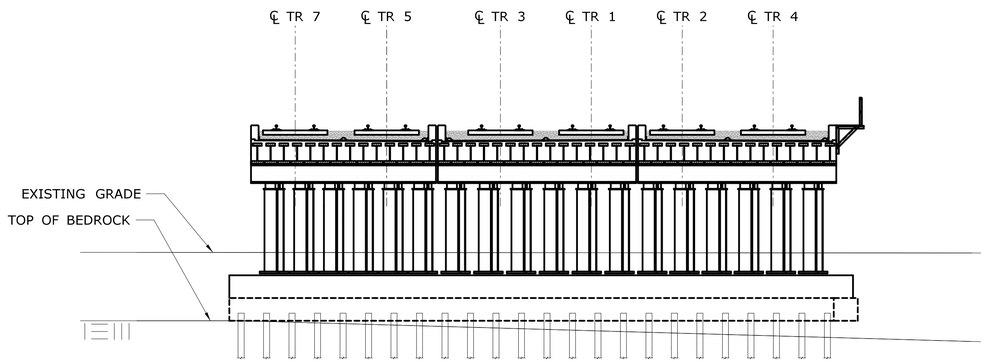

PIER ELEVATION

SCALE: 1" = 10'

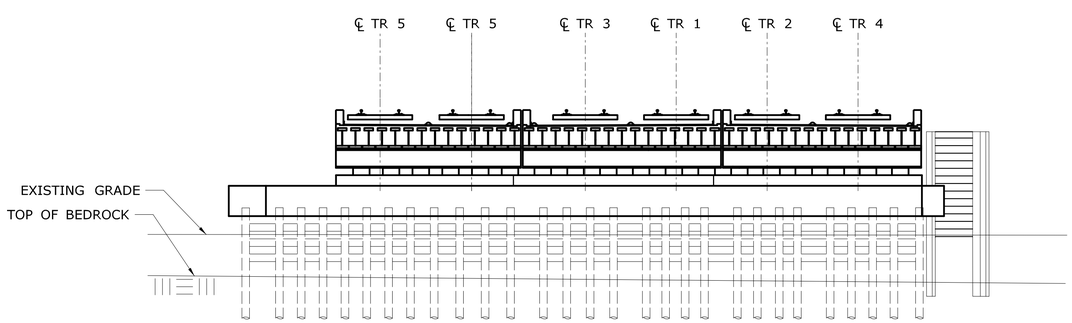

EAST ABUTMENT ELEVATION

SCALE: 1" = 10'

STAGE B5E CONSTRUCTION

WORK ACTIVITY	RESPONSIBLE PARTY	TRACK OUTAGES					ROAD CLOSURES	
		5	3	1	2	4	SOUTH STATE ST	ATLANTIC ST
ERECT THE PIER COLUMNS AND BEARINGS TO SUPPORT TRACKS 5 AND 7. SEE PIER DRAWINGS FOR CONSTRUCTION SEQUENCE. TRANSPORT THE SUPERSTRUCTURE FOR TRACKS 5 AND 7 TO THE SITE USING SPMT'S.	CONTRACTOR	C	C	C	-	-	CLOSED	CLOSED
SET THE SPAN 1 SUPERSTRUCTURE IN PLACE, FOLLOWED BY SPAN 2. KEEP THE SPMT'S IN PLACE BENEATH BOTH SPANS UNTIL FINAL ALIGNMENT OF THE STRUCTURE IS ACHIEVED.	CONTRACTOR	C	C	C	-	-	CLOSED	CLOSED
WELD THE BEARINGS TO THE CAP GIRDERS. INSTALL THE ABUTMENT CLOSURE WALLS.	CONTRACTOR	C	C	C	-	-	CLOSED	CLOSED
INSTALL THE PLATED JOINT OVER THE PIER. INSTALL THE ANGLED PLATES AT THE ABUTMENT CLOSURE WALLS.	CONTRACTOR	C	C	C	-	-	CLOSED	CLOSED
INSTALL THE SHEET WATERPROOFING AT THE PIER AND ABUTMENTS.	CONTRACTOR	C	C	C	-	-	CLOSED	CLOSED
INSTALL THE BALLAST MATS.	CONTRACTOR	C	C	C	-	-	CLOSED	CLOSED
INSTALL THE DECK DRAINAGE AND CONNECT TO THE ABUTMENT UNDERDRAINS.	CONTRACTOR	C	C	C	-	-	CLOSED	CLOSED
BACKFILL BEHIND THE SUPERSTRUCTURE.	CONTRACTOR	C	C	C	-	-	CLOSED	CLOSED
INSTALL BALLAST UP TO 4" BELOW TIES.	CONTRACTOR	C	C	C	-	-	CLOSED	CLOSED
INSTALL TIES, COMPLETE WITH CLIPS.	MNR	C	*	*	-	-	CLOSED	CLOSED
WORKING FROM THE APPROACHES, PULL TRACK 5 RAILS OVER THE PROPOSED BRIDGE AND FASTEN TO TIES.	MNR	C	*	*	-	-	CLOSED	CLOSED
RAISE TRACK 5 TO PROFILE GRADE AND INSTALL FINAL BALLAST.	MNR	C	*	*	-	-	CLOSED	CLOSED
SPLICE TRACK 5 RAILS. INSTALL REMAINING RAILROAD APPURTENANCES.	MNR	C	*	*	-	-	CLOSED	CLOSED

TRACK OUTAGE KEY
C CONTINUOUS
F FOUL TIME
* TO BE DETERMINED BY MNR

NOTE:
WORK ACTIVITIES IN STAGE B5E SHALL BEGIN IMMEDIATELY AFTER IDENTICAL WORK ACTIVITIES IN STAGE B5D, TO THE GREATEST EXTENT POSSIBLE.

HIGHWAY, BRIDGE AND RAILROAD STAGING

DISCIPLINE	PROJECT	COMPONENT	STAGE									
HIGHWAY	135-301	ALL	1				2					3
BRIDGE	135-301	MNR BRIDGE & WALLS 105 - 107	B1A-B1E	B2A-B2F	B3	B4	B5A	B5B	B5C	B5D	B5E	B6
		MNR BRIDGE PIER			P1-P2			P3-P4		P3-P4		P5-P6
	301-163	TRACK 7 SUPERSTRUCTURE & PASSENGER PLATFORM									B5E	B6
RAILROAD	135-301	ALL	1A-1E	2A-2F		3	4A		4B		4C	5A-5C
	301-163	ALL	1A-1F									2A-3I

FINAL PLANS FOR REVIEW

REV.	DATE	REVISION DESCRIPTION	SHEET NO.
-	-	-	-
-	-	-	-
-	-	-	-
-	-	-	-
-	-	-	-
-	-	-	-

THE INFORMATION, INCLUDING ESTIMATED QUANTITIES OF WORK, SHOWN ON THESE SHEETS IS BASED ON LIMITED INVESTIGATIONS BY THE STATE AND IS IN NO WAY WARRANTED TO INDICATE THE CONDITIONS OF ACTUAL QUANTITIES OF WORK WHICH WILL BE REQUIRED.

Plotted Date: 3/24/2016

DESIGNER/DRAFTER: J. IVES / K. BARKER
CHECKED BY: D. COSTELLO
SCALE AS NOTED

STATE OF CONNECTICUT
DEPARTMENT OF TRANSPORTATION

Filename: ...\SB.MSH.Br08012R.0135.0301.STG-B5E.dgn

SIGNATURE/ BLOCK:

PROJECT TITLE: REPLACEMENT OF MNRR BRIDGE OVER ATLANTIC STREET PHASE 2

TOWN: STAMFORD

DRAWING TITLE: STAGE B5E CONSTRUCTION

PROJECT NO. 135-301
DRAWING NO. S-26
SHEET NO. 01.05.026

3/24/2016
P:\Projects\ConnDot\36938292\500 CADD-GIS-Graphics\510 CADD\510.04 Struc. Bridge\MSts. Contract Sheet. Files\SB.MSH.Br08012R.0135.0301.STG-B5E.dgn

Border Version: 11/14/08

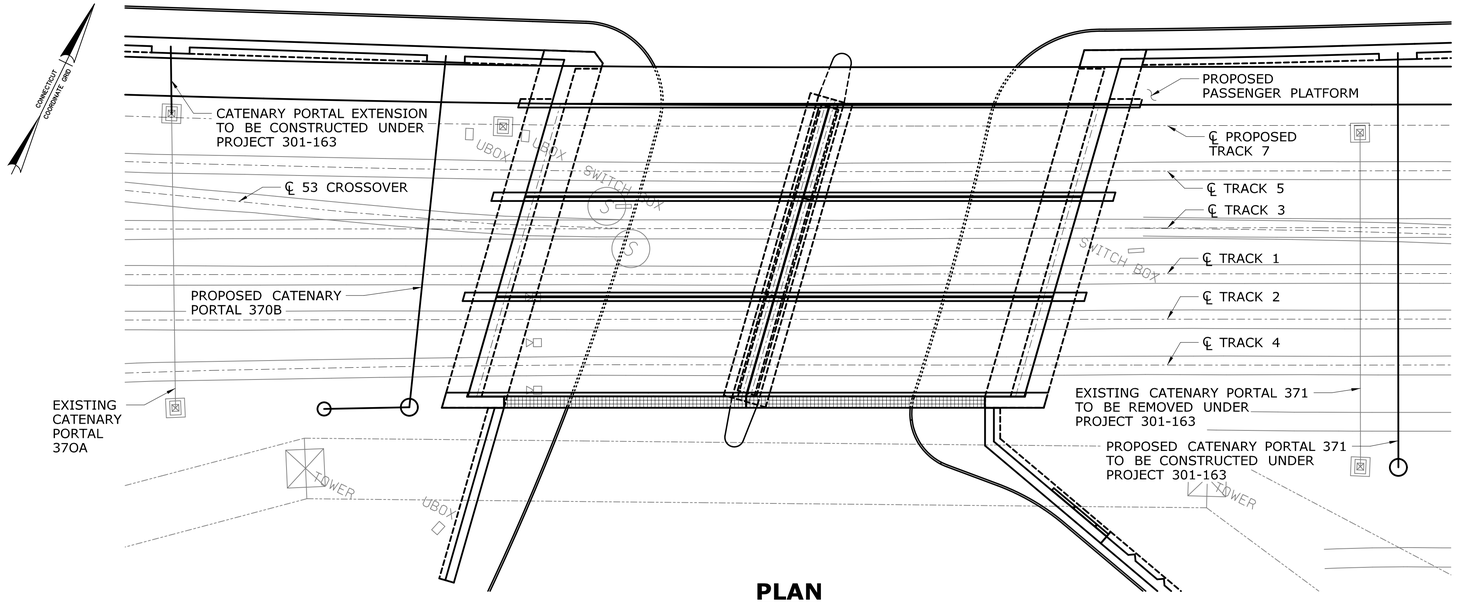

PLAN

SCALE: 1" = 20'

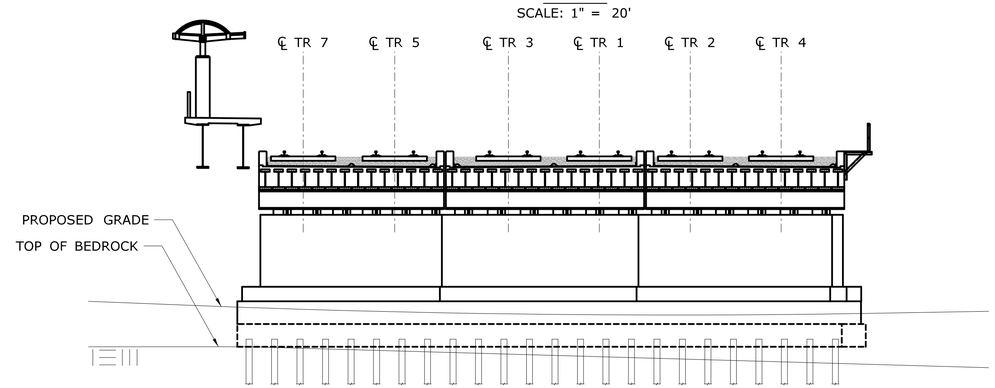

PIER ELEVATION

SCALE: 1" = 10'

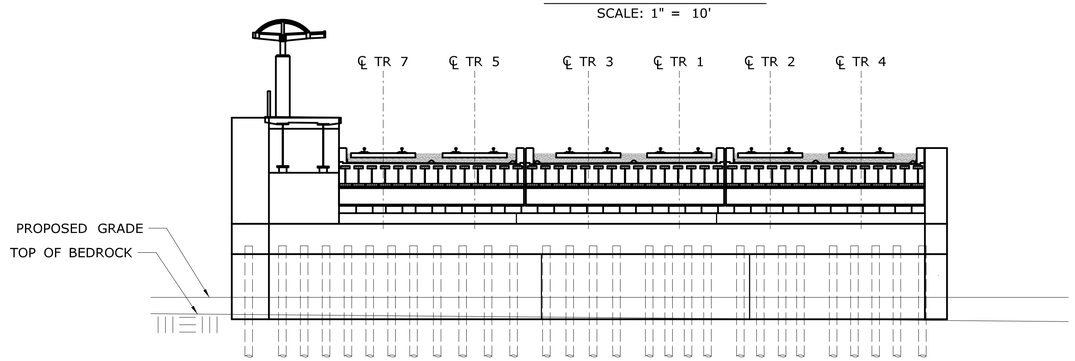

EAST ABUTMENT ELEVATION

SCALE: 1" = 10'

STAGE B6 CONSTRUCTION

WORK ACTIVITY	RESPONSIBLE PARTY	TRACK OUTAGES					ROAD CLOSURES	
		5	3	1	2	4	SOUTH STATE ST	ATLANTIC ST
COMPLETE CONSTRUCTION OF THE PROPOSED ABUTMENTS.	CONTRACTOR	-	-	-	-	-	-	-
CONSTRUCT THE CAST-IN-PLACE CONCRETE ENCASEMENT OF THE PROPOSED PIER COLUMNS BENEATH TRACKS 2 AND 4. SEE PIER DRAWINGS FOR CONSTRUCTION SEQUENCE.	CONTRACTOR	-	-	-	C	C	-	-
CONSTRUCT THE CAST-IN-PLACE CONCRETE ENCASEMENT OF THE PROPOSED PIER COLUMNS BENEATH TRACKS 1 AND 3. SEE PIER DRAWINGS FOR CONSTRUCTION SEQUENCE.	CONTRACTOR	-	C	C	-	-	-	-
CONSTRUCT THE CAST-IN-PLACE CONCRETE ENCASEMENT OF THE PROPOSED PIER COLUMNS BENEATH TRACKS 5 AND 7. SEE PIER DRAWINGS FOR CONSTRUCTION SEQUENCE.	CONTRACTOR	C	-	-	-	-	-	-
CONCURRENT WITH THE ABOVE, CONSTRUCT WINGWALL 1B AND WALL 107.	CONTRACTOR	-	-	-	-	-	-	-
CONSTRUCT THE PASSENGER PLATFORM BRIDGE.	CONTRACTOR	-	-	-	-	-	NIGHTTIME	NIGHTTIME

TRACK OUTAGE KEY
C CONTINUOUS
F FOUL TIME
* TO BE DETERMINED BY MNR

HIGHWAY, BRIDGE AND RAILROAD STAGING

DISCIPLINE	PROJECT	COMPONENT	STAGE									
HIGHWAY	135-301	ALL	1				2					3
BRIDGE	135-301	MNR BRIDGE & WALLS 105 - 107	B1A-B1E	B2A-B2F	B3	B4	B5A	B5B	B5C	B5D	B5E	B6
		MNR BRIDGE PIER			P1-P2			P3-P4		P3-P4		P5-P6
	301-163	TRACK 7 SUPERSTRUCTURE & PASSENGER PLATFORM									B5E	B6
RAILROAD	135-301	ALL	1A-1E	2A-2F		3	4A		4B		4C	5A-5C
	301-163	ALL	1A-1F									2A-3I

FINAL PLANS FOR REVIEW

REV.	DATE	REVISION DESCRIPTION	SHEET NO.
-	-	-	-
-	-	-	-
-	-	-	-
-	-	-	-
-	-	-	-
-	-	-	-

THE INFORMATION, INCLUDING ESTIMATED QUANTITIES OF WORK, SHOWN ON THESE SHEETS IS BASED ON LIMITED INVESTIGATIONS BY THE STATE AND IS IN NO WAY WARRANTED TO INDICATE THE CONDITIONS OF ACTUAL QUANTITIES OF WORK WHICH WILL BE REQUIRED.

Plotted Date: 3/24/2016

DESIGNER/DRAFTER: J. IVES / K. BARKER
CHECKED BY: D. COSTELLO
SCALE AS NOTED

STATE OF CONNECTICUT
DEPARTMENT OF TRANSPORTATION

Filename: ...\SB.MSH.Br08012R.0135.0301.STG-B6.dgn

SIGNATURE/ BLOCK:

PROJECT TITLE: REPLACEMENT OF MNRR BRIDGE OVER ATLANTIC STREET PHASE 2

TOWN: STAMFORD

DRAWING TITLE: STAGE B6 CONSTRUCTION

PROJECT NO. 135-301
DRAWING NO. S-27
SHEET NO. 01.05.027

3/24/2016
P:\Projects\ConnDot\36938292\500 CADD-GIS-Graphics\510 CADD\510.04 Struc. Bridge\MSta. Contract. Sheet. Files\SB.MSH.Br08012R.0135.0301.STG-B6.dgn

Border Version: 11/14/08

NOTES:

1. DIMENSIONS SHOWN ARE TAKEN AT ELEVATION 18.10 (PILE CUT-OFF ELEVATION).
2. SEE DRAWING "MICROPILE DETAILS" FOR PILE DETAILS.

LEGEND

- BATTERED MICROPILE (BATTERED IN THE DIRECTION OF ARROW) 1:4 BATTER
- VERTICAL MICROPILES

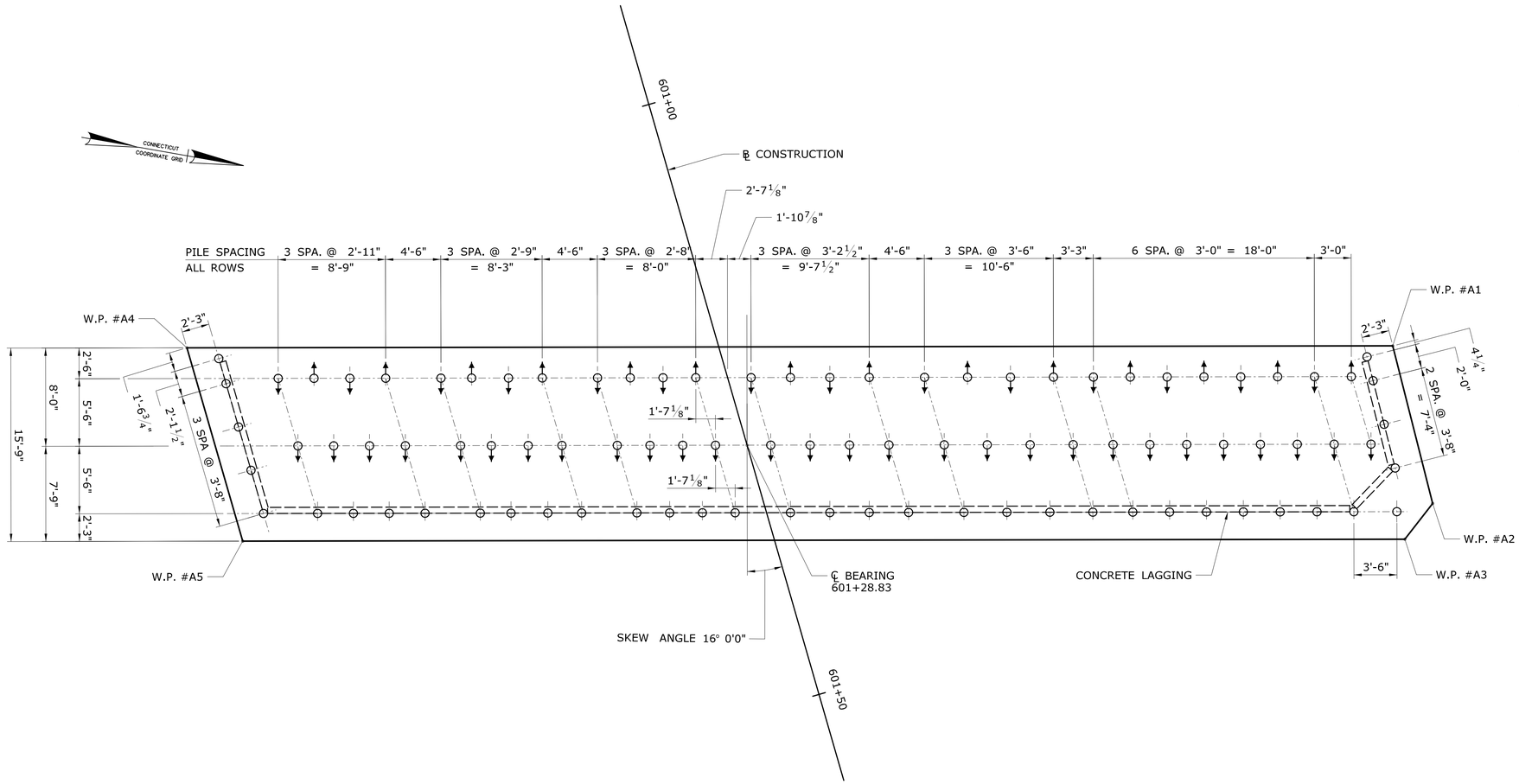

ABUTMENT 1 PLAN

SCALE: 3/16" = 1'-0"

WORKING POINT COORDINATES

WP #	NORTHING	EASTING
A1	579192.53	782224.22
A2	579197.93	782236.31
A3	579196.21	782239.57
A4	579095.84	782241.27
A5	579103.02	782256.00

FINAL PLANS FOR REVIEW

REV.	DATE	REVISION DESCRIPTION	SHEET NO.
-	-	-	-
-	-	-	-
-	-	-	-
-	-	-	-
-	-	-	-
-	-	-	-

THE INFORMATION, INCLUDING ESTIMATED QUANTITIES OF WORK, SHOWN ON THESE SHEETS IS BASED ON LIMITED INVESTIGATIONS BY THE STATE AND IS IN NO WAY WARRANTED TO INDICATE THE CONDITIONS OF ACTUAL QUANTITIES OF WORK WHICH WILL BE REQUIRED.

Plotted Date: 3/28/2016

DESIGNER/DRAFTER: C. CHUANG
CHECKED BY: D. COSTELLO
SCALE AS NOTED

STATE OF CONNECTICUT
DEPARTMENT OF TRANSPORTATION

Filename: ...\SB_MSH_Br08012R_0135_0301_MPP-1.dgn

SIGNATURE/ BLOCK:

PROJECT TITLE: REPLACEMENT OF MNRR BRIDGE OVER ATLANTIC STREET PHASE 2

TOWN: STAMFORD

DRAWING TITLE: MICROPILE PLAN ABUTMENT 1

PROJECT NO. 135-301
DRAWING NO. S-28
SHEET NO. 01.05.028

3/28/2016
P:\Projects\ConnDot\36938292\500 CADD-GIS-Graphics\510 CADD\510.04 Struc. Bridge\MSSa. Contract Sheet Files\SB_MSH_Br08012R_0135_0301_MPP-1.dgn

Border Version: 11/14/08

NOTES:

1. DIMENSIONS SHOWN ARE TAKEN AT ELEVATION 18.10 (PILE CUT-OFF ELEVATION).
2. SEE DRAWING "MICROPILE DETAILS" FOR PILE DETAILS.

LEGEND

- BATTERED MICROPILE (BATTERED IN THE DIRECTION OF ARROW) 1:4 BATTER
- VERTICAL MICROPILES

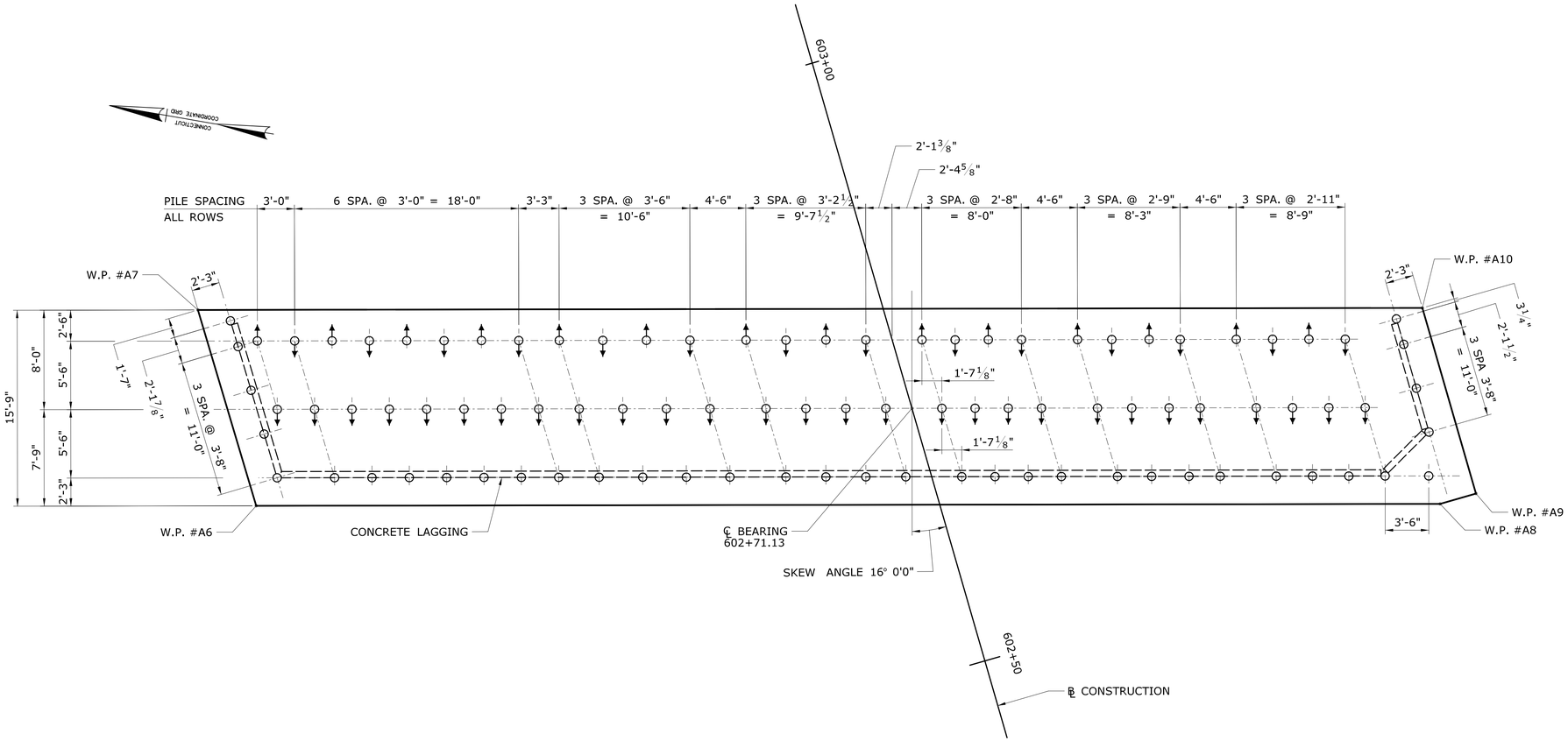

ABUTMENT 2 PLAN

SCALE: 3/16" = 1'-0"

WORKING POINT COORDINATES		
WP #	NORTHING	EASTING
A6	579255.02	782352.31
A7	579262.34	782367.01
A8	579161.38	782368.82
A9	579158.69	782370.13
A10	579165.49	782384.09

FINAL PLANS FOR REVIEW

REV.	DATE	REVISION DESCRIPTION	SHEET NO.
-	-	-	-
-	-	-	-
-	-	-	-
-	-	-	-
-	-	-	-
-	-	-	-

THE INFORMATION, INCLUDING ESTIMATED QUANTITIES OF WORK, SHOWN ON THESE SHEETS IS BASED ON LIMITED INVESTIGATIONS BY THE STATE AND IS IN NO WAY WARRANTED TO INDICATE THE CONDITIONS OF ACTUAL QUANTITIES OF WORK WHICH WILL BE REQUIRED.

Plotted Date: 3/28/2016

DESIGNER/DRAFTER: C. CHUANG
CHECKED BY: D. COSTELLO
SCALE AS NOTED

STATE OF CONNECTICUT
DEPARTMENT OF TRANSPORTATION

Filename: ...\SB_MSH_Br08012R_0135_0301_MPP-2.dgn

SIGNATURE/ BLOCK:

PROJECT TITLE: REPLACEMENT OF MNRR BRIDGE OVER ATLANTIC STREET PHASE 2

TOWN: STAMFORD

DRAWING TITLE: MICROPILE PLAN ABUTMENT 2

PROJECT NO. 135-301
DRAWING NO. S-29
SHEET NO. 01.05.029

3/28/2016
P:\Projects\ConnDot\36936292\500 CADD-GIS-Graphics\510 CADD\510.04 Struc. Bridge\MSs. Contract. Sheet. Files\SB_MSH_Br08012R_0135_0301_MPP-2.dgn

Border Version: 11/14/08

NOTES

1. SEE DRAWING "MICROPILE DETAILS" FOR PILE DETAILS.
2. SEE "PIER PLAN, ELEVATION, AND SECTION" FOR ADDITIONAL INFORMATION.

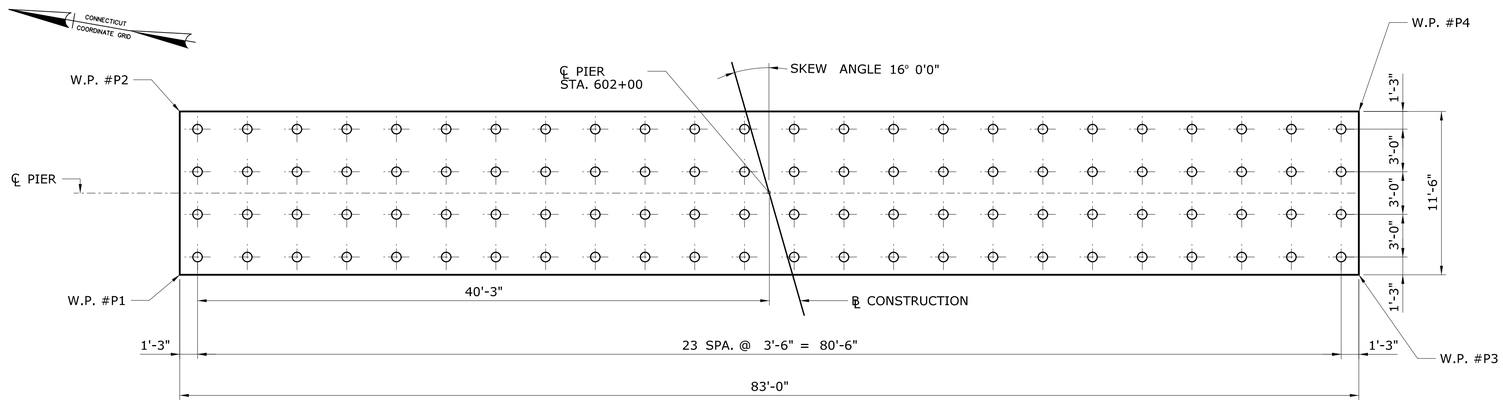

PIER MICROPILE PLAN

SCALE: 3/16" = 1'-0"

WORKING POINT COORDINATES		
WP#	NORTHING	EASTING
P1	579213.18	782292.29
P2	579215.18	782303.62
P3	579131.44	782306.70
P4	579133.44	782318.03

FINAL PLANS FOR REVIEW

REV.	DATE	REVISION DESCRIPTION	SHEET NO.
-	-	-	-
-	-	-	-
-	-	-	-
-	-	-	-
-	-	-	-
-	-	-	-

THE INFORMATION, INCLUDING ESTIMATED QUANTITIES OF WORK, SHOWN ON THESE SHEETS IS BASED ON LIMITED INVESTIGATIONS BY THE STATE AND IS IN NO WAY WARRANTED TO INDICATE THE CONDITIONS OF ACTUAL QUANTITIES OF WORK WHICH WILL BE REQUIRED.

Plotted Date: 3/28/2016

DESIGNER/DRAFTER: K. BARKER
CHECKED BY: D. COSTELLO
SCALE AS NOTED

STATE OF CONNECTICUT
DEPARTMENT OF TRANSPORTATION

Filename: ...\SB_MSH_Br08012R_0135_0301_MPP-3.dgn

SIGNATURE/ BLOCK:

PROJECT TITLE:
REPLACEMENT OF MNRR BRIDGE OVER ATLANTIC STREET PHASE 2

TOWN: **STAMFORD**

DRAWING TITLE: **MICROPILE PLAN PIER**

PROJECT NO. **135-301**
DRAWING NO. **S-30**
SHEET NO. **01.05.030**

3/28/2016
P:\Projects\ConnDot\36938292\500 CADD-GIS-Graphics\510 CADD\510.04 Struc.Bridge\WSta.Contract.Sheet.Files\SB_MSH_Br08012R_0135_0301_MPP-3.dgn

Border Version: 11/14/08

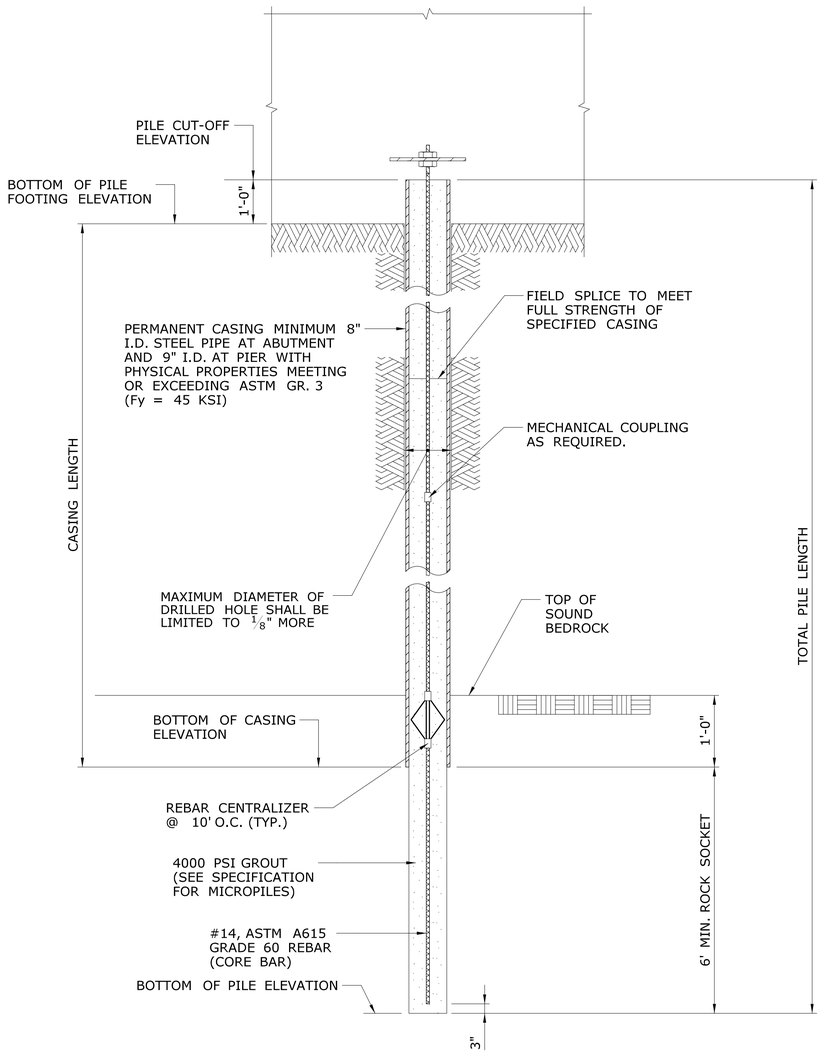

MICROPILE ELEVATION

NOT TO SCALE

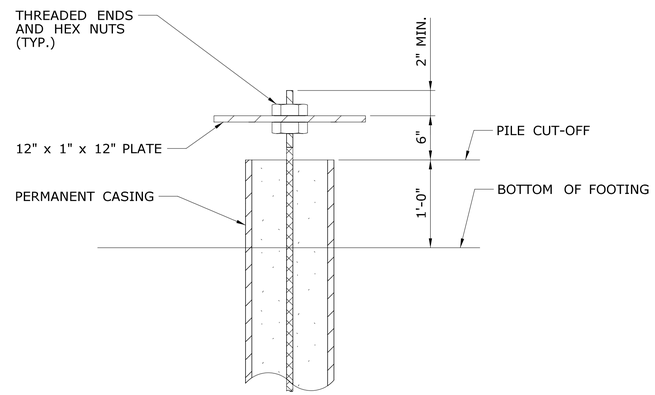

TYPICAL MICROPILE EMBEDMENT DETAIL

NOT TO SCALE

NOTES

1. MICROPILES SHALL BE DRILLED THRU ALL MATERIALS ENCOUNTERED.
2. THE CONTRACTOR IS ADVISED TO THE POSSIBLE PRESENCE OF BOULDERS, RUBBLE AND OTHER MISCELLANEOUS MATERIALS WITHIN THE EXISTING RAILROAD EMBANKMENT AND BELOW STREET LEVEL. REFER TO SOIL BORING LOGS.
3. THE CONTRACTOR SHALL PROPERLY DISPOSE OF ALL MATERIALS (CUTTINGS, ETC.)
4. MICROPILES SHALL BE DESIGNED BY A MICROPILE CONTRACTOR IN ACCORDANCE WITH PROJECT SPECIFICATIONS AND MEET THE FOLLOWING DESIGN LOADS:

   ABUTMENT
   85 TONS COMPRESSION (GROUP 1)

   PIER
   102 TONS COMPRESSION (GROUP 1)
   4 TONS TENSION (GROUP 1)

5. CONTRACTOR SHALL NOT INSTALL ANY PRODUCTION MICROPILES UNTIL MICROPILE VERIFICATION TESTS ARE PERFORMED AND APPROVED BY THE ENGINEER.
6. PILE INSTALLATION TOLERANCES (SEE SPECIFICATION FOR MICROPILES) APPLY TO THE LEVEL OF FINAL PILE CUT-OFF.

MICROPILE LOCATION / ELEVATIONS (FT)	ABUTMENT 1	PIER	ABUTMENT 2
BOTT. OF PILE FOOTING ELEV.	17.1	6.5	17.1
PILE CUT-OFF ELEVATION	18.1	7.5	18.1
ESTIMATED CASING LENGTH (FT)	10.1*	3.1*	10.1*
TOTAL NUMBER OF PILES	93	96	93

* ESTIMATED AVERAGE CASING LENGTHS SHOWN.

FINAL PLANS FOR REVIEW

REV.	DATE	REVISION DESCRIPTION	SHEET NO.
-	-	-	-
-	-	-	-
-	-	-	-
-	-	-	-
-	-	-	-
-	-	-	-

THE INFORMATION, INCLUDING ESTIMATED QUANTITIES OF WORK, SHOWN ON THESE SHEETS IS BASED ON LIMITED INVESTIGATIONS BY THE STATE AND IS IN NO WAY WARRANTED TO INDICATE THE CONDITIONS OF ACTUAL QUANTITIES OF WORK WHICH WILL BE REQUIRED.

Plotted Date: 3/28/2016

DESIGNER/DRAFTER: J. IVES
CHECKED BY: D. COSTELLO
SCALE AS NOTED

STATE OF CONNECTICUT
DEPARTMENT OF TRANSPORTATION

Filename: ...\SB_MSH_Br08012R_0135_0301_PILE.dgn

SIGNATURE/ BLOCK:

PROJECT TITLE: REPLACEMENT OF MNRR BRIDGE OVER ATLANTIC STREET PHASE 2

TOWN: STAMFORD

DRAWING TITLE: MICROPILE DETAILS

PROJECT NO. 135-301
DRAWING NO. S-31
SHEET NO. 01.05.031

3/28/2016
P:\Projects\ConnDot\36938292\500 CADD-GIS-Graphics\510 CADD\510.04 Struc. Bridge\MSta. Contract. Sheet. Files\SB_MSH_Br08012R_0135_0301_PILE.dgn

Border Version: 11/14/08

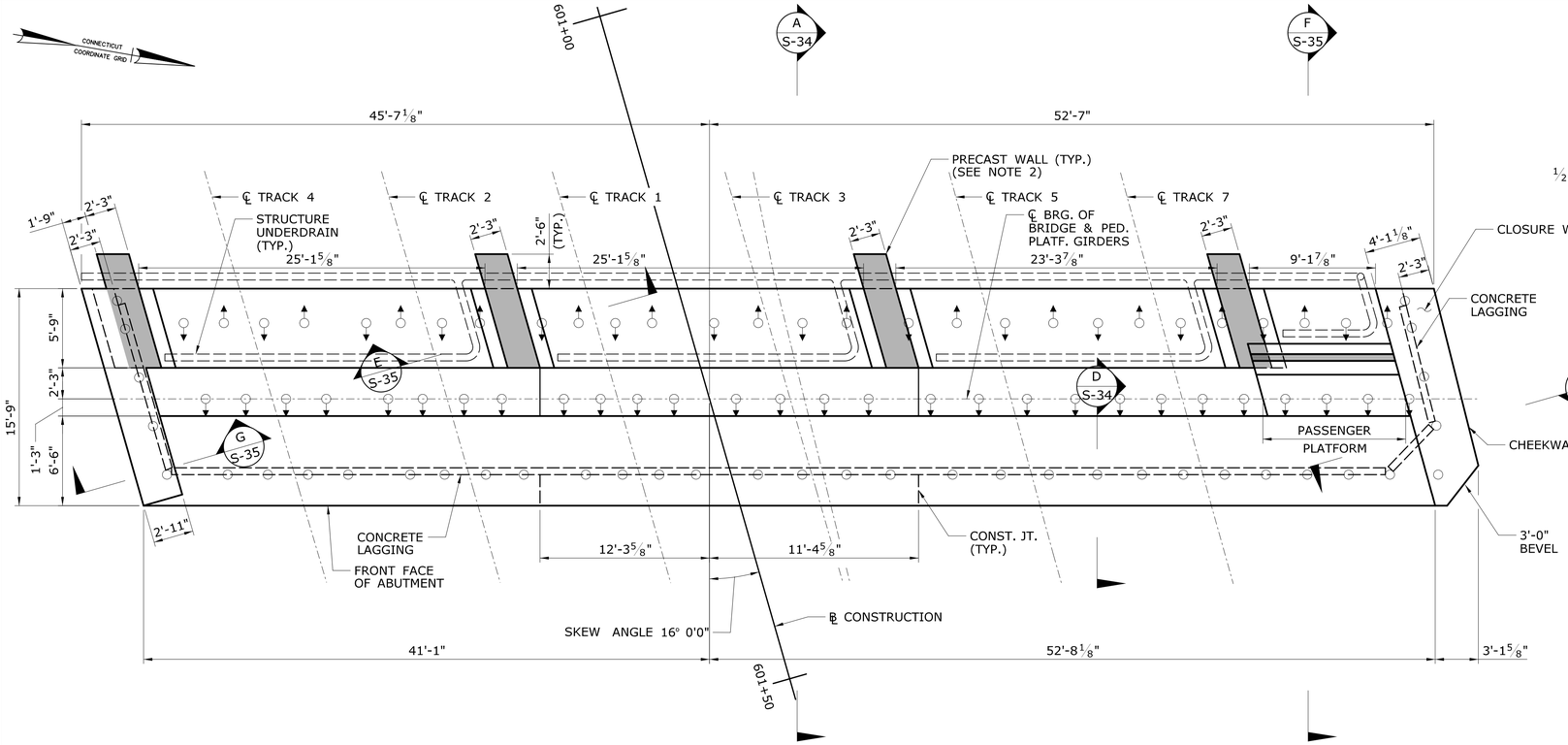

PLAN

SCALE: 3/16" = 1'-0"

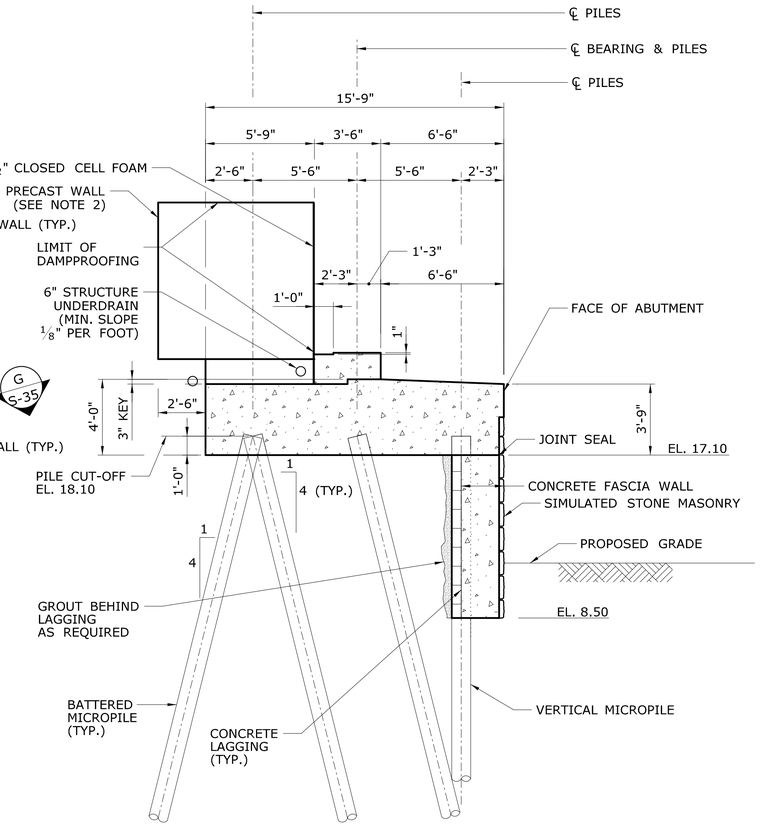

SECTION - RAILROAD BRIDGE

SCALE: 1/4" = 1'-0"

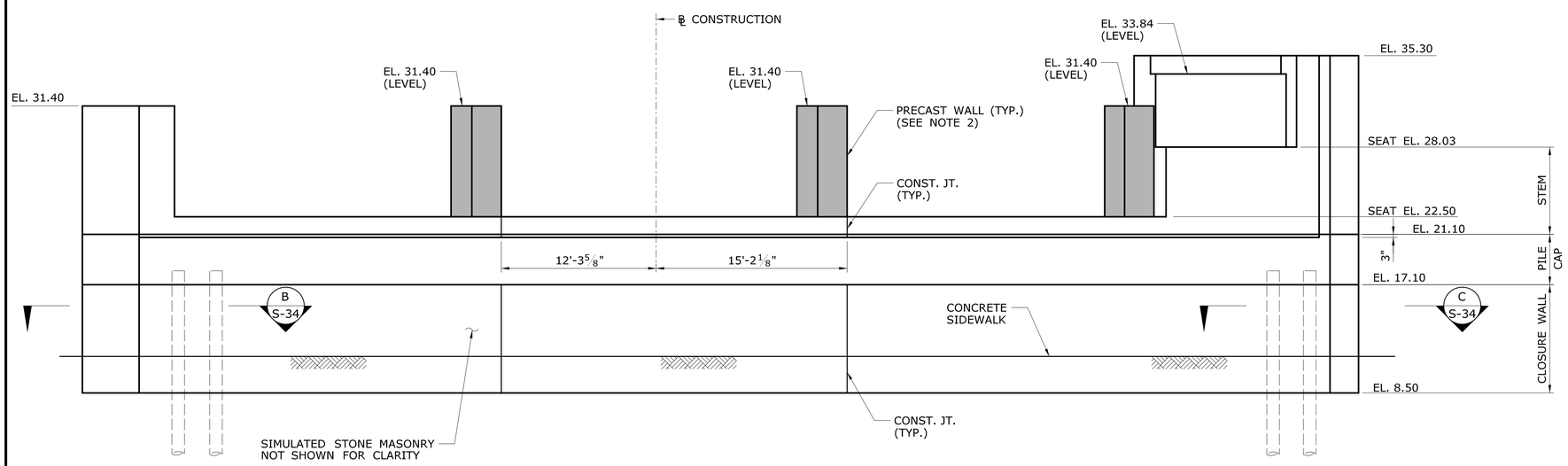

ELEVATION

SCALE: 3/16" = 1'-0"

NOTES:

1. FOR SIMULATED STONE MASONRY LIMITS, SEE DRAWING "BRIDGE ARCHITECTURAL DETAILS".
2. PRECAST WALL SHOWN SCHEMATICALLY. SEE DRAWINGS "ABUTMENT DETAILS - 2" AND "ABUTMENT DETAILS - 3".
3. FOR ABUTMENT SECTION TAKEN THROUGH PASSENGER PLATFORM, SEE DRAWING "ABUTMENT 2 PLAN & ELEVATION".

FINAL PLANS FOR REVIEW

REV.	DATE	REVISION DESCRIPTION	SHEET NO.
-	-	-	-
-	-	-	-
-	-	-	-
-	-	-	-
-	-	-	-
-	-	-	-

THE INFORMATION, INCLUDING ESTIMATED QUANTITIES OF WORK, SHOWN ON THESE SHEETS IS BASED ON LIMITED INVESTIGATIONS BY THE STATE AND IS IN NO WAY WARRANTED TO INDICATE THE CONDITIONS OF ACTUAL QUANTITIES OF WORK WHICH WILL BE REQUIRED.

Plotted Date: 3/28/2016

DESIGNER/DRAFTER: C. CHUANG
CHECKED BY: D. COSTELLO
SCALE AS NOTED

STATE OF CONNECTICUT
DEPARTMENT OF TRANSPORTATION

Filename: ...\SB_MSH_Br08012R_0135_0301_ABT1.dgn

SIGNATURE/ BLOCK:

PROJECT TITLE:
REPLACEMENT OF MNRR BRIDGE OVER ATLANTIC STREET PHASE 2

TOWN: **STAMFORD**

DRAWING TITLE: **ABUTMENT 1 PLAN & ELEVATION**

PROJECT NO. **135-301**
DRAWING NO. **S-32**
SHEET NO. **01.05.032**

3/28/2016
P:\Projects\CommDot\36938292\500 CADD-GIS-Graphics\510 CADD\510.04 Struc_Bridge\MSha_Contract_Sheet_Files\SB_MSH_Br08012R_0135_0301_ABT1.dgn

Border Version: 11/14/08

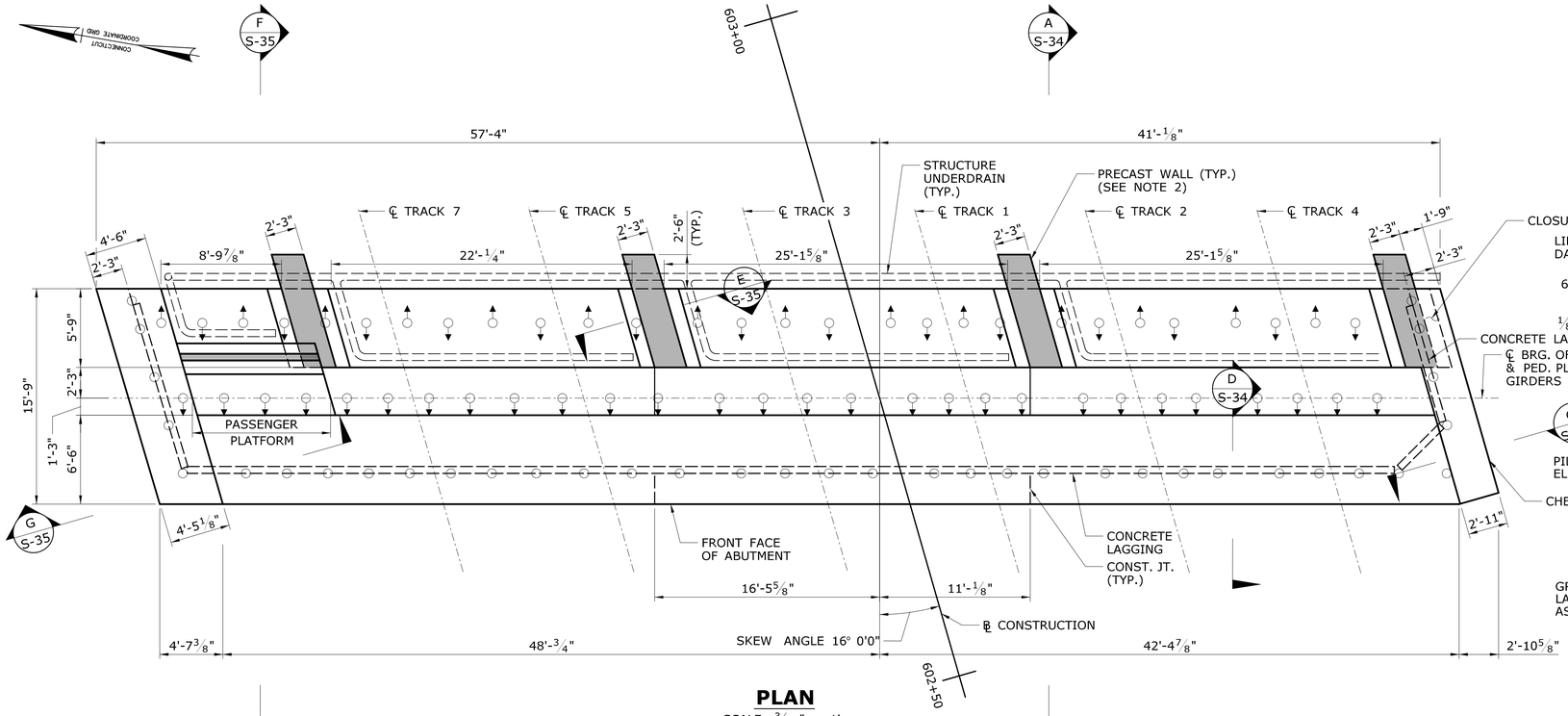

PLAN

SCALE: 3/16" = 1'

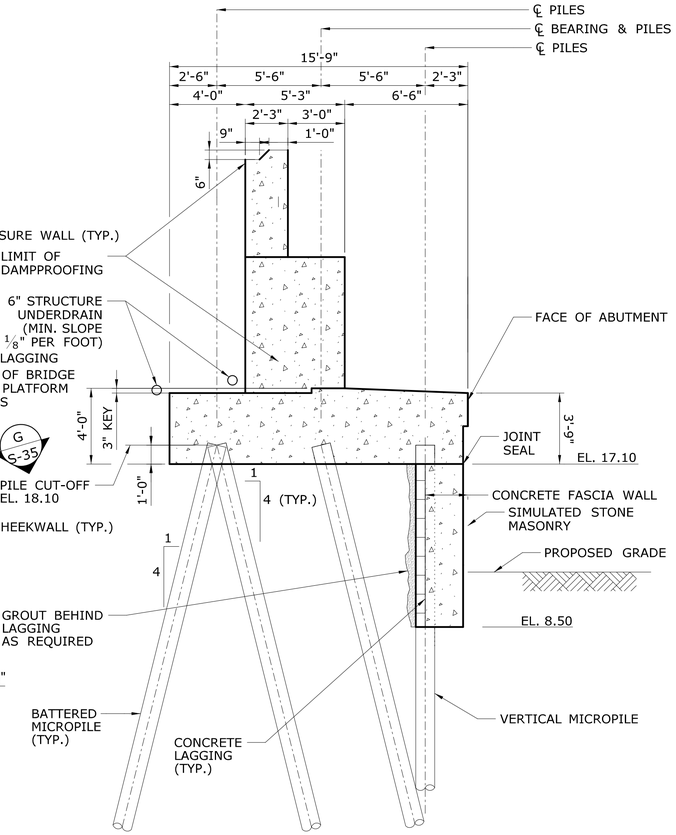

SECTION - PASSENGER PLATFORM

SCALE: 1/4" = 1'-0"

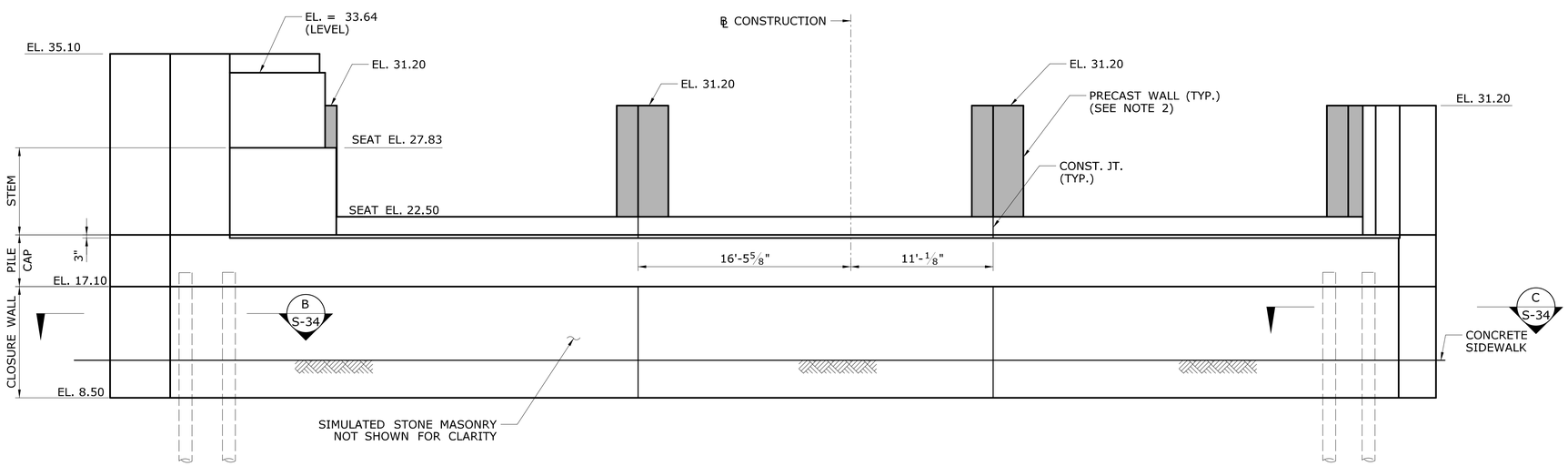

ELEVATION

SCALE: 3/16" = 1'

NOTES:

1. FOR SIMULATED STONE MASONRY LIMITS, SEE DRAWING "BRIDGE ARCHITECTURAL DETAILS".
2. PRECAST WALL SHOWN SCHEMATICALLY. SEE DRAWINGS "ABUTMENT DETAILS - 2" AND ABUTMENT DETAILS - 3".
3. FOR ABUTMENT SECTION TAKEN THROUGH RAILROAD BRIDGE, SEE DRAWING "ABUTMENT 1 PLAN & ELEVATION".

FINAL PLANS FOR REVIEW

REV.	DATE	REVISION DESCRIPTION	SHEET NO.
-	-	-	-
-	-	-	-
-	-	-	-
-	-	-	-
-	-	-	-
-	-	-	-

THE INFORMATION, INCLUDING ESTIMATED QUANTITIES OF WORK, SHOWN ON THESE SHEETS IS BASED ON LIMITED INVESTIGATIONS BY THE STATE AND IS IN NO WAY WARRANTED TO INDICATE THE CONDITIONS OF ACTUAL QUANTITIES OF WORK WHICH WILL BE REQUIRED.

Plotted Date: 3/28/2016

DESIGNER/DRAFTER: C. CHUANG
CHECKED BY: D. COSTELLO
SCALE AS NOTED

STATE OF CONNECTICUT
DEPARTMENT OF TRANSPORTATION

Filename: ...\SB..MSH..Br08012R..0135..0301..ABT2.dgn

SIGNATURE/ BLOCK:

PROJECT TITLE: REPLACEMENT OF MNRR BRIDGE OVER ATLANTIC STREET PHASE 2

TOWN: STAMFORD

DRAWING TITLE: ABUTMENT 2 PLAN & ELEVATION

PROJECT NO. 135-301
DRAWING NO. S-33
SHEET NO. 01.05.033

3/28/2016
P:\Projects\CommDot\36938292\500 CADD-GIS-Graphics\510 CADD\510.04 Struc. Bridge\WSta. Contract. Sheet. Files\SB.MSH.Br08012R.0135.0301.ABT2.dgn

Border Version: 11/14/08

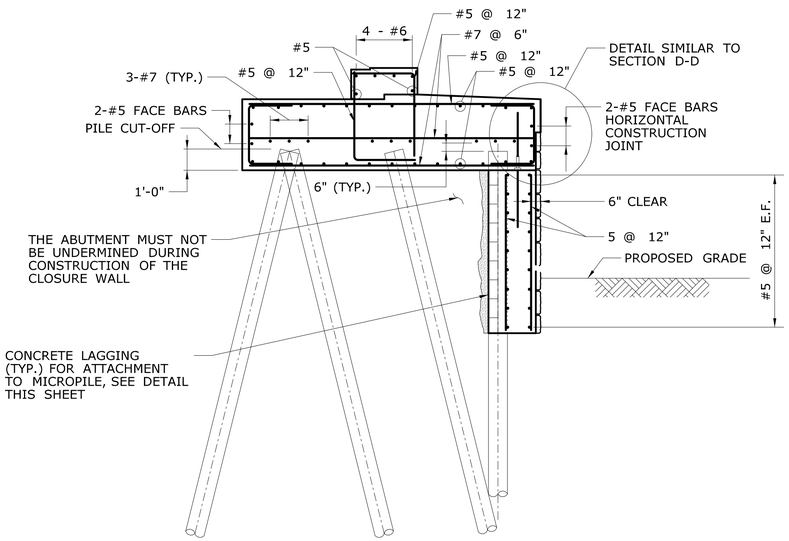

A A / S-32 S-33 SECTION
SCALE: 1/4" = 1'-0"

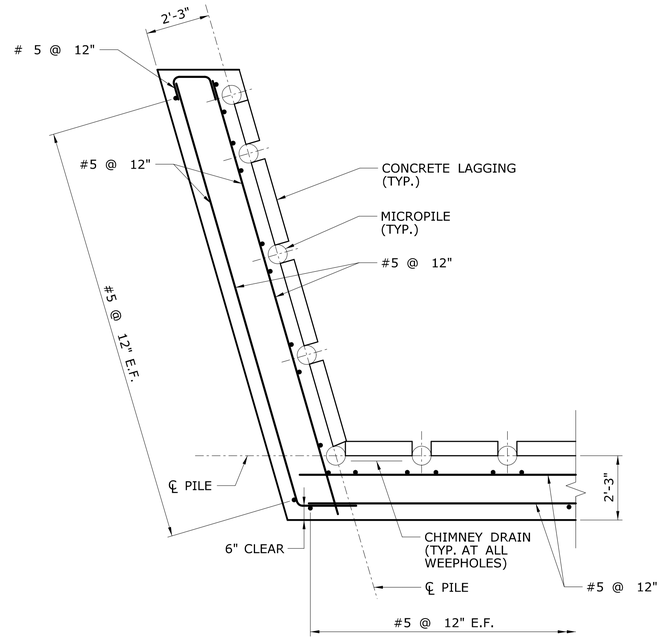

B B / S-32 S-33 SECTION
SCALE: 1/4" = 1'-0"

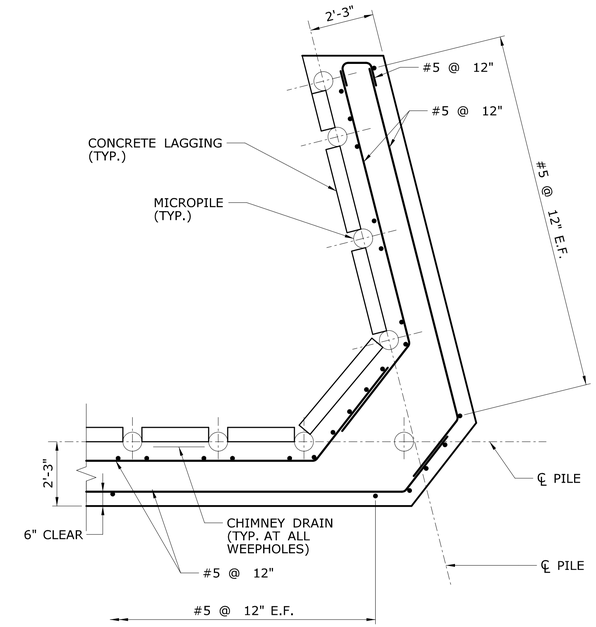

C C / S-32 S-33 SECTION
SCALE: 1/4" = 1'-0"

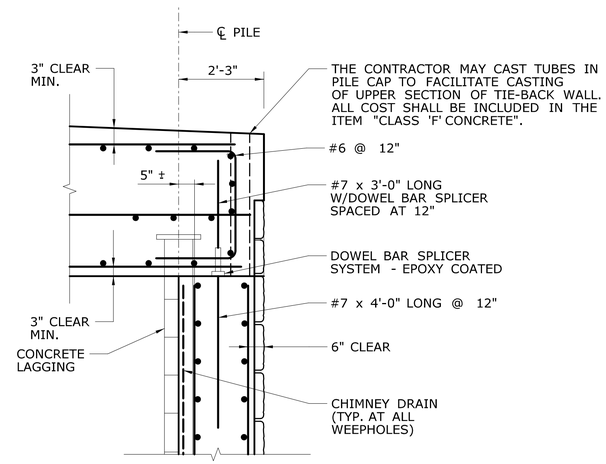

D D / S-32 S-33 SECTION
SCALE: 1/2" = 1'-0"

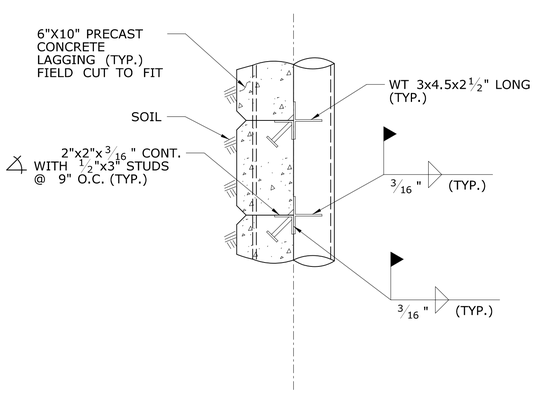

ELEVATION

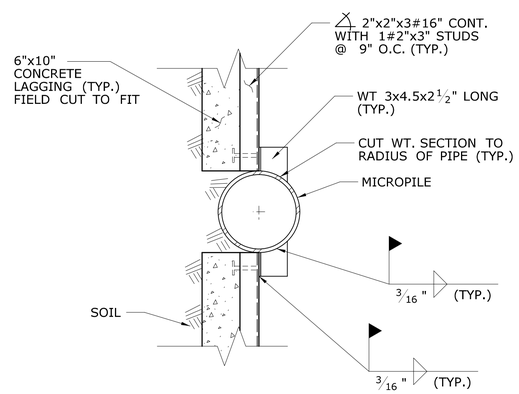

PLAN

CONCRETE LAGGING ATTACHMENT TO MICROPILE DETAILS
SCALE: 1 1/2" = 1'-0"

FINAL PLANS FOR REVIEW

REV.	DATE	REVISION DESCRIPTION	SHEET NO.
-	-	-	-
-	-	-	-
-	-	-	-
-	-	-	-
-	-	-	-
-	-	-	-

THE INFORMATION, INCLUDING ESTIMATED QUANTITIES OF WORK, SHOWN ON THESE SHEETS IS BASED ON LIMITED INVESTIGATIONS BY THE STATE AND IS IN NO WAY WARRANTED TO INDICATE THE CONDITIONS OF ACTUAL QUANTITIES OF WORK WHICH WILL BE REQUIRED.

Plotted Date: 3/28/2016

DESIGNER/DRAFTER: C. CHUANG
CHECKED BY: D. COSTELLO
SCALE AS NOTED

STATE OF CONNECTICUT
DEPARTMENT OF TRANSPORTATION

Filename: ...\SB.MSH.Br08012R.0135.0301.ABDET-1.dgn

SIGNATURE/ BLOCK:

PROJECT TITLE: REPLACEMENT OF MNRR BRIDGE OVER ATLANTIC STREET PHASE 2

TOWN: STAMFORD

DRAWING TITLE: ABUTMENT DETAILS - 1

PROJECT NO. 135-301
DRAWING NO. S-34
SHEET NO. 01.05.034

3/28/2016
P:\Projects\CommDot\36938292\500 CADD-GIS-Graphics\510 CADD\510.04 Struc. Bridge\MSta. Contract Sheet. Files\SB.MSH.Br08012R.0135.0301.ABDET-1.dgn

Border Version: 11/14/08

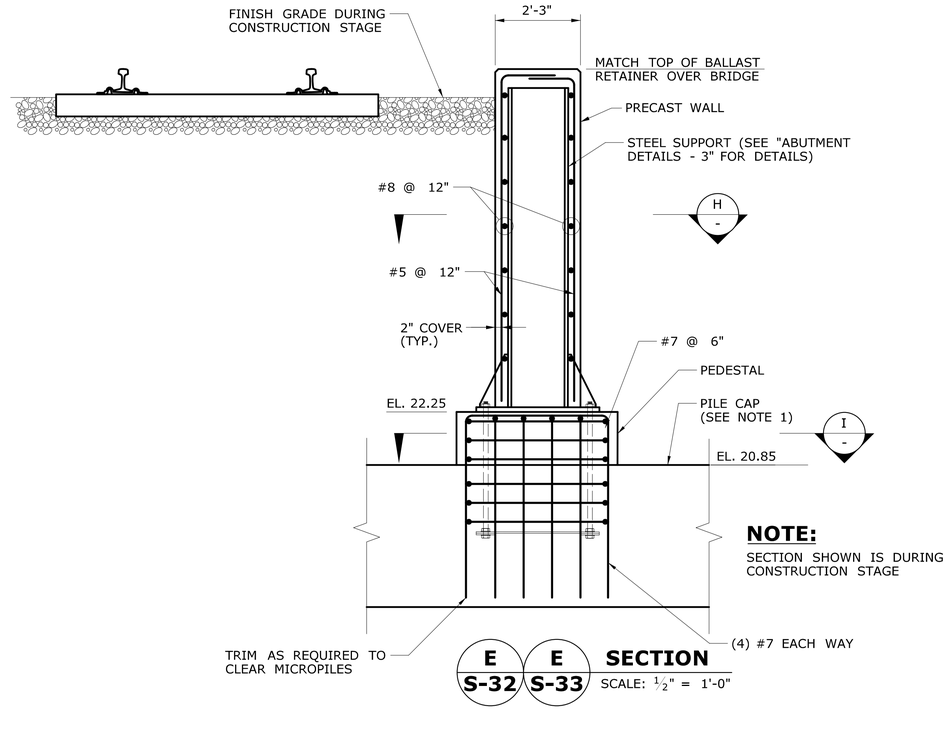

NOTE:

SECTION SHOWN IS DURING CONSTRUCTION STAGE

E E / S-32 S-33 **SECTION**

SCALE: 1/2" = 1'-0"

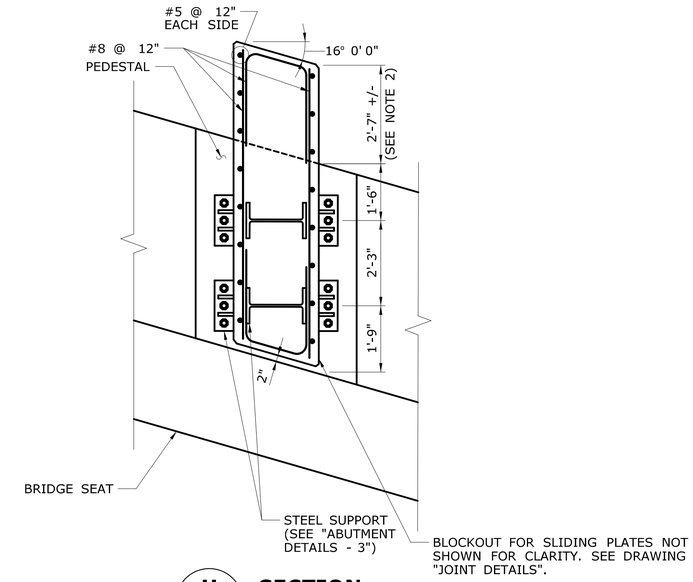

H - **SECTION**

SCALE: 1/2" = 1'-0"

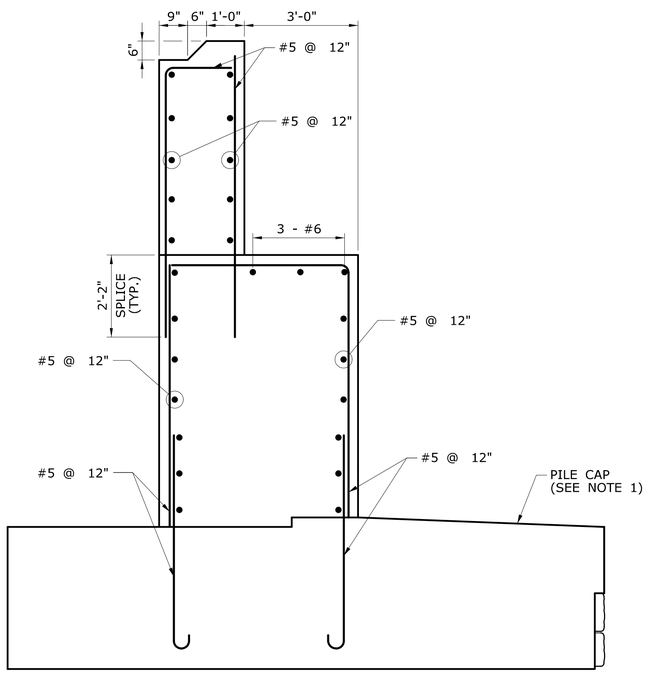

F F / S-32 S-33 **SECTION**

SCALE: 1/2" = 1'-0"

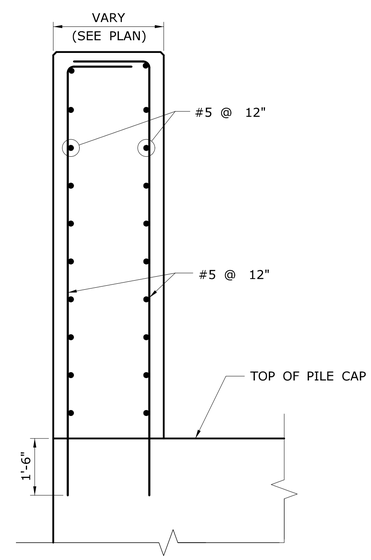

G G / S-32 S-33 **SECTION**

SCALE: 1/2" = 1'-0"

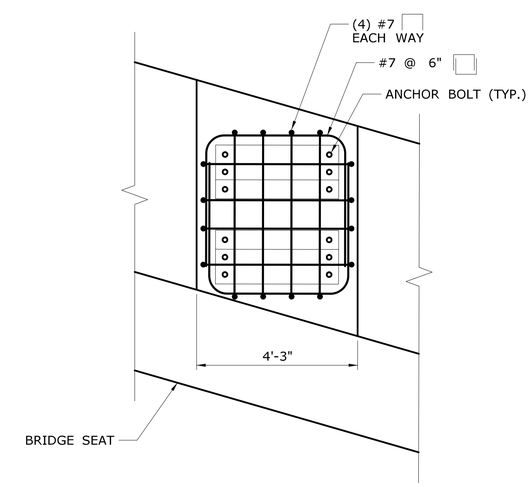

I - **SECTION**

SCALE: 1/2" = 1'-0"

NOTES:

1. PILE CAP REINFORCING, PILES & CLOSURE WALL ARE NOT SHOWN FOR CLARITY.
2. VERIFY DIMENSION WITH AS-BUILD LOCATION OF JUMP SPAN SHORING.

FINAL PLANS FOR REVIEW

REV.	DATE	REVISION DESCRIPTION	SHEET NO.
-	-	-	-
-	-	-	-
-	-	-	-
-	-	-	-
-	-	-	-
-	-	-	-

THE INFORMATION, INCLUDING ESTIMATED QUANTITIES OF WORK, SHOWN ON THESE SHEETS IS BASED ON LIMITED INVESTIGATIONS BY THE STATE AND IS IN NO WAY WARRANTED TO INDICATE THE CONDITIONS OF ACTUAL QUANTITIES OF WORK WHICH WILL BE REQUIRED.

Plotted Date: 3/28/2016

DESIGNER/DRAFTER: K. BARKER

CHECKED BY: J. IVES

SCALE AS NOTED

STATE OF CONNECTICUT
DEPARTMENT OF TRANSPORTATION

Filename: ...\SB..MSH..Br08012R..0135..0301..ABDET-2.dgn

SIGNATURE/ BLOCK:

PROJECT TITLE: **REPLACEMENT OF MNRR BRIDGE OVER ATLANTIC STREET PHASE 2**

TOWN: **STAMFORD**

DRAWING TITLE: **ABUTMENT DETAILS - 2**

PROJECT NO. **135-301**

DRAWING NO. **S-35**

SHEET NO. **01.05.035**

3/28/2016
P:\Projects\ConnDot\36938292\500 CADD-GIS-Graphics\510 CADD\510.04 Struc.Bridge\MSta.Contract.Sheet.Files\SB.MSH.Br08012R.0135.0301.ABDET-2.dgn

Border Version: 11/14/08

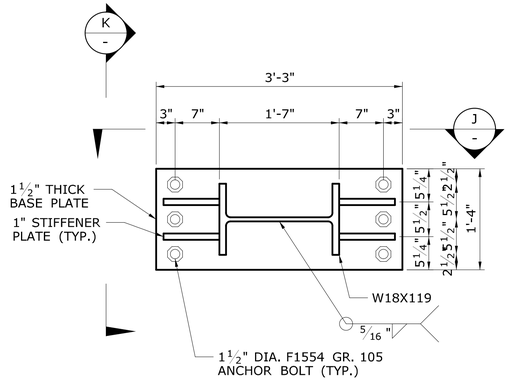

PLAN

SCALE: 1" = 1'-0"

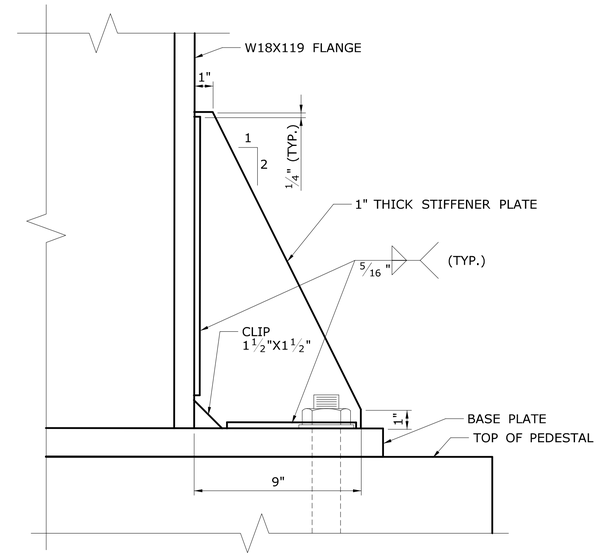

STIFFENER PLATE DETAIL

SCALE: 3" = 1'-0"

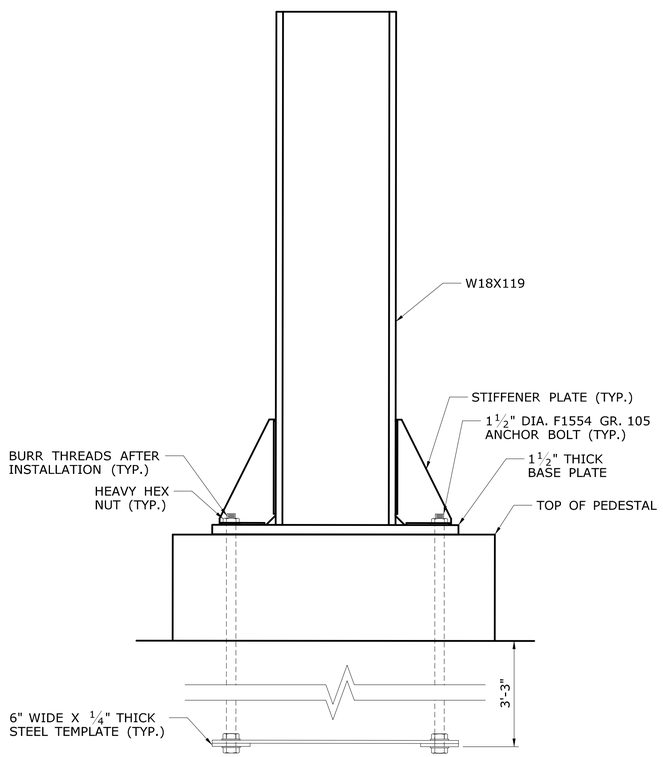

J - VIEW

SCALE: 1" = 1'-0"

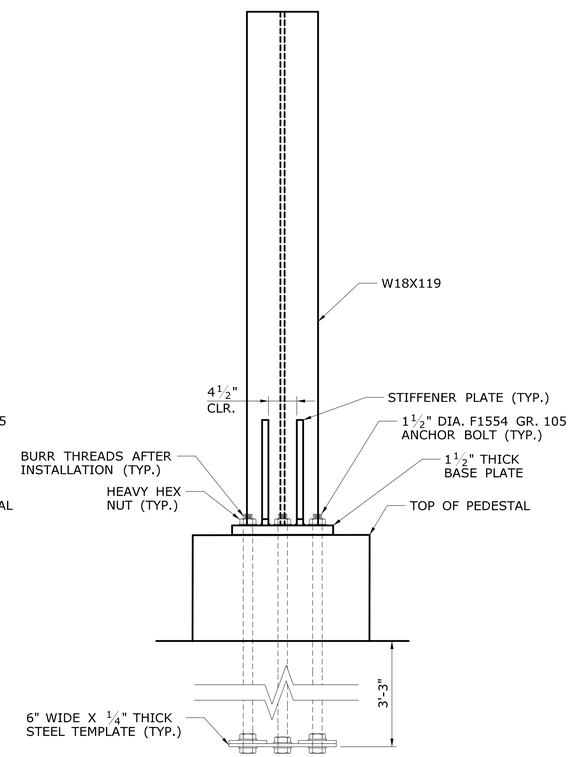

K - VIEW

SCALE: 1" = 1'-0"

FINAL PLANS FOR REVIEW

REV.	DATE	REVISION DESCRIPTION	SHEET NO.
-	-	-	-
-	-	-	-
-	-	-	-
-	-	-	-
-	-	-	-
-	-	-	-

THE INFORMATION, INCLUDING ESTIMATED QUANTITIES OF WORK, SHOWN ON THESE SHEETS IS BASED ON LIMITED INVESTIGATIONS BY THE STATE AND IS IN NO WAY WARRANTED TO INDICATE THE CONDITIONS OF ACTUAL QUANTITIES OF WORK WHICH WILL BE REQUIRED.

Plotted Date: 3/28/2016

DESIGNER/DRAFTER: K. BARKER
CHECKED BY: J. IVES
SCALE AS NOTED

STATE OF CONNECTICUT
DEPARTMENT OF TRANSPORTATION

Filename: ...\SB_MSH_Br08012R_0135_0301_ABDET-3.dgn

SIGNATURE/
BLOCK:

PROJECT TITLE:
REPLACEMENT OF MNRR BRIDGE OVER ATLANTIC STREET PHASE 2

TOWN: **STAMFORD**

DRAWING TITLE: **ABUTMENT DETAILS - 3**

PROJECT NO. **135-301**
DRAWING NO. **S-36**
SHEET NO. **01.05.036**

3/28/2016
P:\Projects\ConnDot\36938292\500 CADD-GIS-Graphics\510 CADD\510.04 Struc. Bridge\MSta. Contract. Sheet. Files\SB_MSH_Br08012R_0135_0301_ABDET-3.dgn

Border Version: 11/14/08

NOTES

1. SEE DRAWING "MICROPILE PLAN / PIER" FOR MICROPILE LAYOUT.
2. SEE DRAWING "MICROPILE DETAILS" FOR PILE DETAILS.
3. SEE DRAWING "PIER REINFORCEMENT DETAILS" FOR PIER REINFORCEMENT.
4. SEE DRAWING "PIER COLUMN DETAILS" FOR COLUMN, PLATE AND ANCHOR BOLT DETAILS.
5. SEE DRAWING "BRIDGE ARCHITECTURAL DETAILS" FOR SIMULATED STONE MASONRY LIMITS AND DETAILS.
6. SEE DRAWING "PIER STAGE CONSTRUCTION" FOR SUGGESTED CONSTRUCTION SEQUENCE.

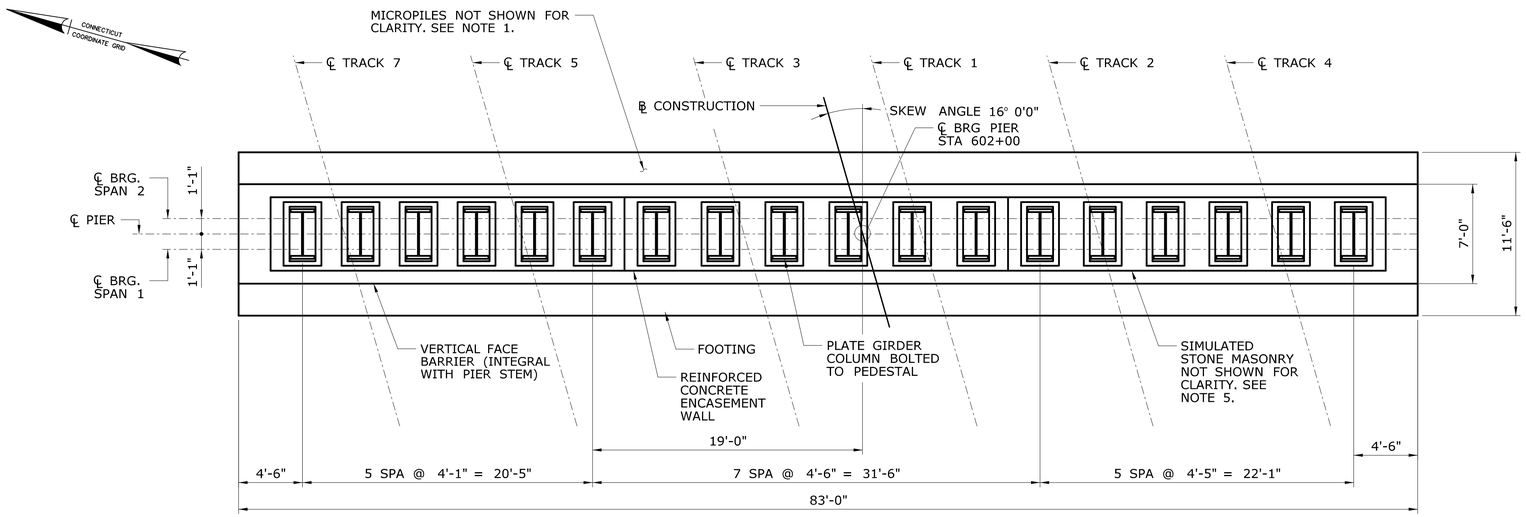

PLAN

SCALE: 3/16" = 1'-0"

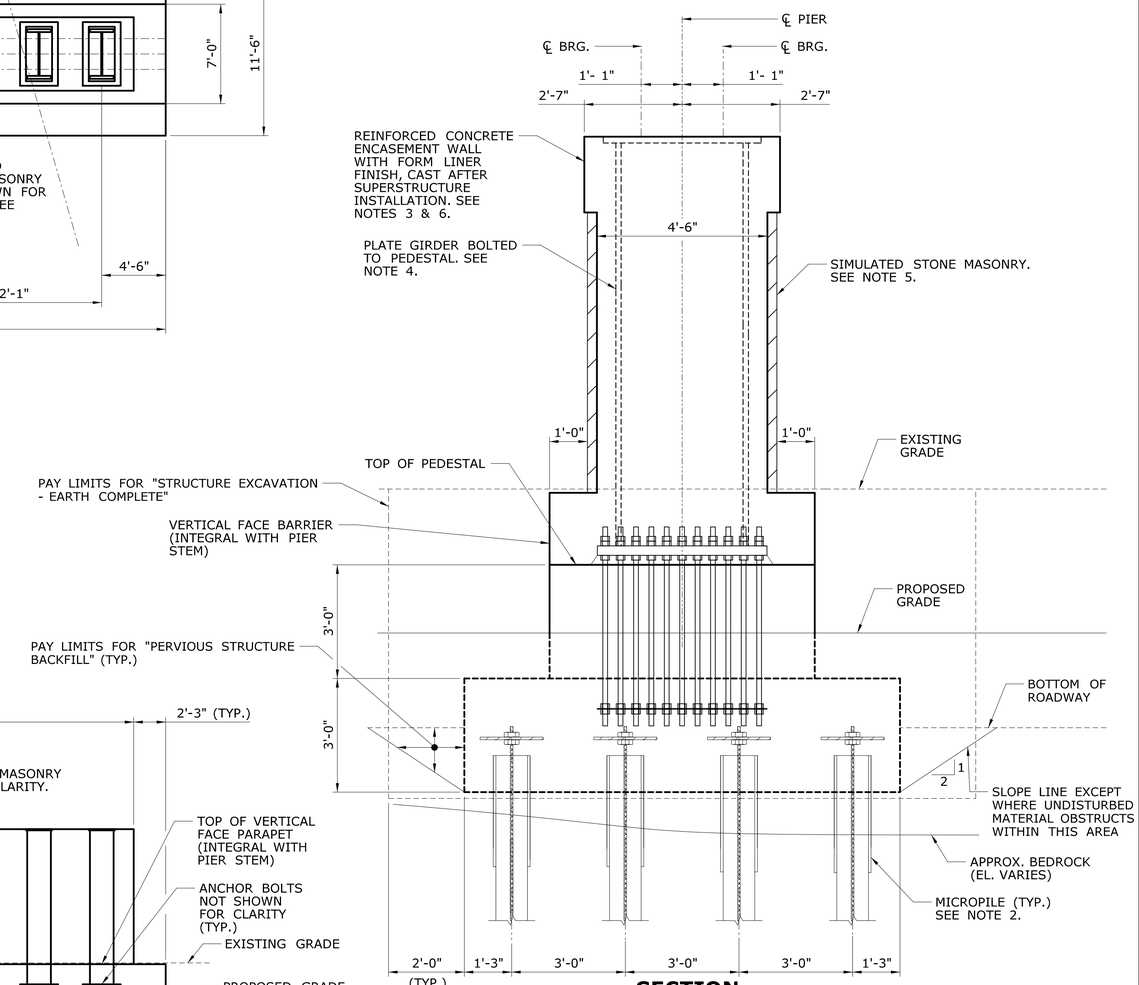

SECTION

SCALE: 1/2" = 1'-0"

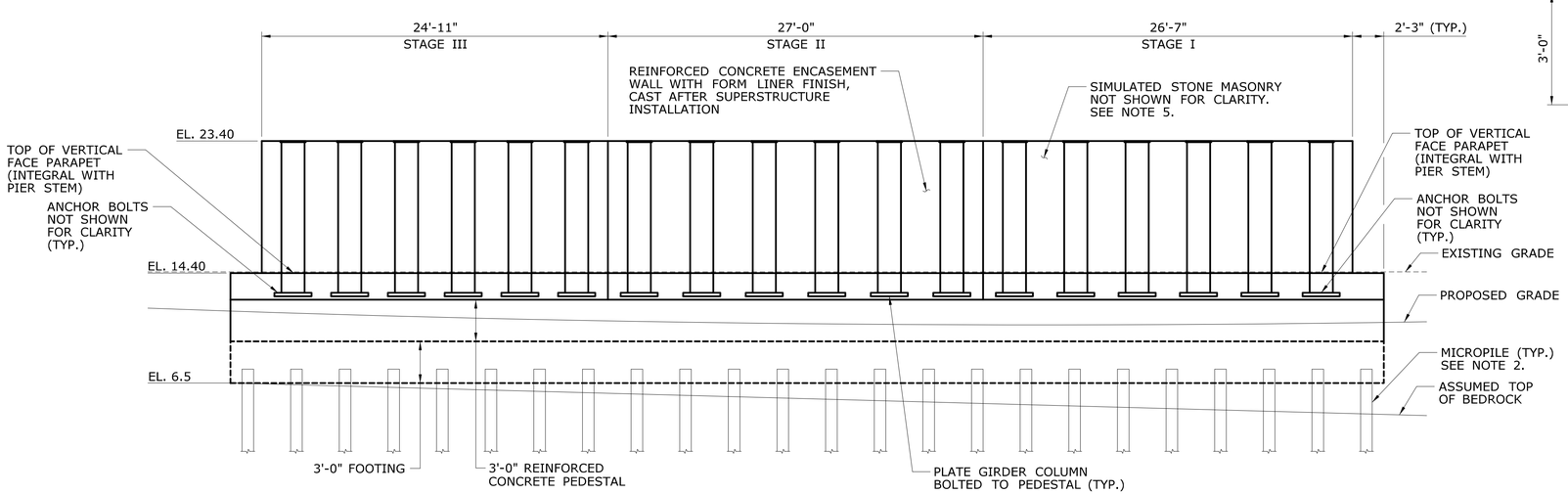

ELEVATION

SCALE: 3/16" = 1'-0"

FINAL PLANS FOR REVIEW

REV.	DATE	REVISION DESCRIPTION	SHEET NO.
-	-	-	-
-	-	-	-
-	-	-	-
-	-	-	-
-	-	-	-
-	-	-	-

THE INFORMATION, INCLUDING ESTIMATED QUANTITIES OF WORK, SHOWN ON THESE SHEETS IS BASED ON LIMITED INVESTIGATIONS BY THE STATE AND IS IN NO WAY WARRANTED TO INDICATE THE CONDITIONS OF ACTUAL QUANTITIES OF WORK WHICH WILL BE REQUIRED.

Plotted Date: 3/28/2016

DESIGNER/DRAFTER: K. BARKER
CHECKED BY: D. COSTELLO
SCALE AS NOTED

STATE OF CONNECTICUT
DEPARTMENT OF TRANSPORTATION

Filename: ...\SB_MSH_Br08012R_0135_0301_PIER-1.dgn

SIGNATURE/ BLOCK:

PROJECT TITLE: REPLACEMENT OF MNRR BRIDGE OVER ATLANTIC STREET PHASE 2

TOWN: STAMFORD

DRAWING TITLE: PIER PLAN, ELEVATION & SECTION

PROJECT NO. 135-301
DRAWING NO. S-37
SHEET NO. 01.05.037

3/28/2016
P:\Projects\ConnDot\36938292\500 CADD-GIS-Graphics\510 CADD\510.04 Struc. Bridge\MSta. Contract. Sheet. Files\SB. MSH. Br08012R. 0135. 0301. PIER-1.dgn

Border Version: 11/14/08

NOTES

1. FOOTING CONCRETE SHALL BE CLASS "A" CONCRETE. ALL OTHER CONCRETE SHALL BE CLASS "F" CONCRETE.
2. SEE "ARCHITECTURAL DETAILS" FOR SIMULATED STONE MASONRY LIMITS AND DETAILS.
3. SEE "MICROPILE PLAN/PIER" FOR MICROPILE LAYOUT. SEE "MICROPILE DETAILS" FOR PILE DETAILS.
4. SEE "PIER PLAN, ELEVATION, AND SECTION" FOR PIER DIMENSIONS AND ADDITIONAL INFORMATION.

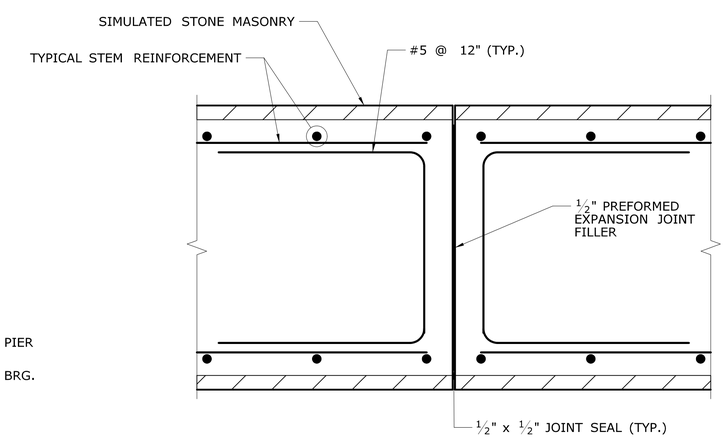

STAGE CONSTRUCTION JOINT DETAIL
SCALE: ¾" = 1'-0"

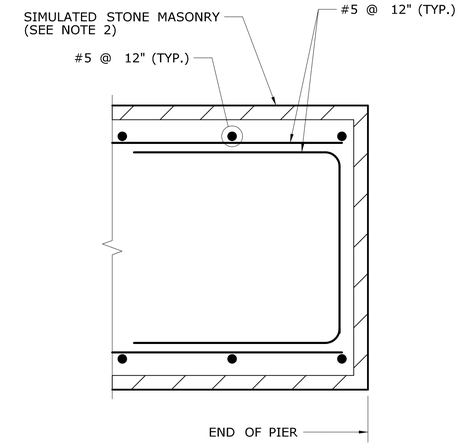

PIER END DETAIL
SCALE: ¾" = 1'-0"

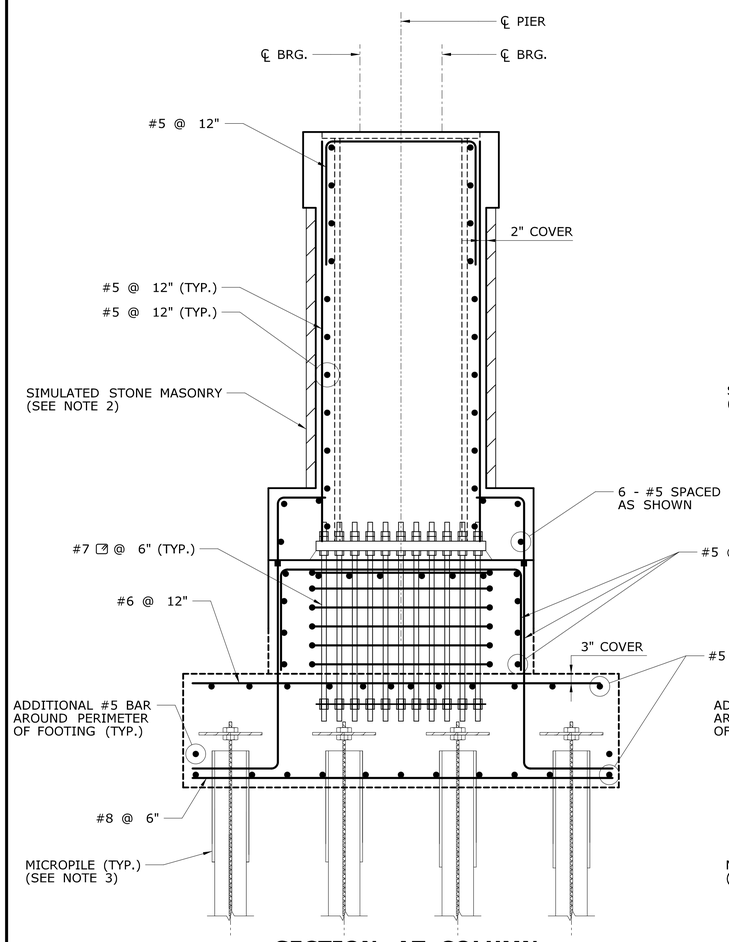

SECTION AT COLUMN
SCALE: ½" = 1'-0"

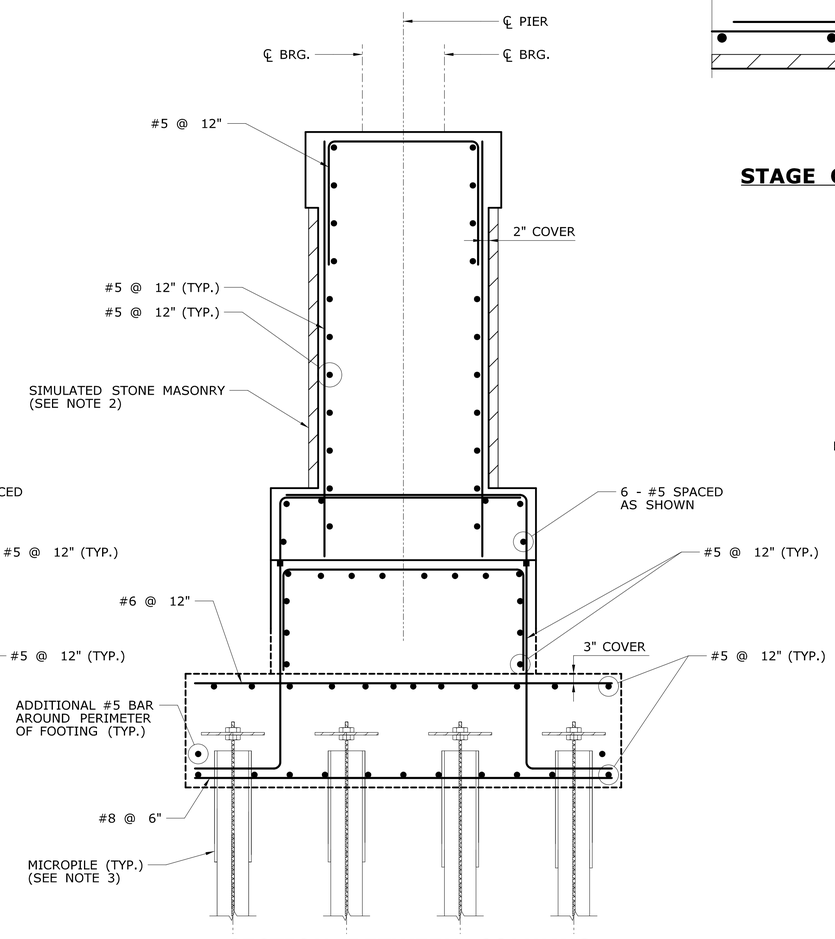

SECTION BETWEEN COLUMNS
SCALE: ½" = 1'-0"

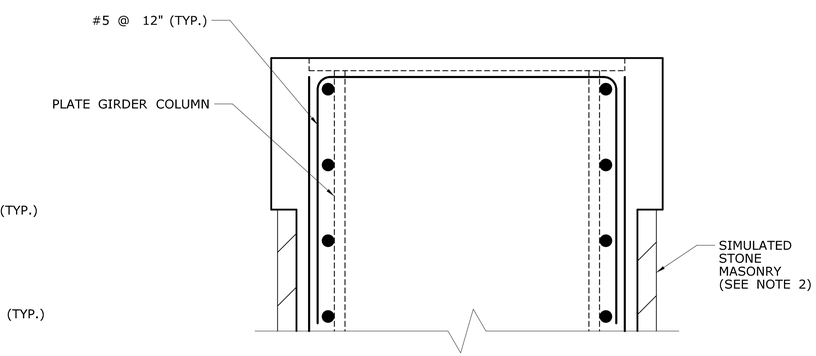

TOP OF PIER STEM DETAIL
SCALE: 1" = 1'-0"

FINAL PLANS FOR REVIEW

REV.	DATE	REVISION DESCRIPTION	SHEET NO.
-	-	-	
-	-	-	-
-	-	-	-
-	-	-	-
-	-	-	-
-	-	-	-

THE INFORMATION, INCLUDING ESTIMATED QUANTITIES OF WORK, SHOWN ON THESE SHEETS IS BASED ON LIMITED INVESTIGATIONS BY THE STATE AND IS IN NO WAY WARRANTED TO INDICATE THE CONDITIONS OF ACTUAL QUANTITIES OF WORK WHICH WILL BE REQUIRED.

Plotted Date: 3/28/2016

DESIGNER/DRAFTER: K. BARKER
CHECKED BY: D. COSTELLO
SCALE AS NOTED

STATE OF CONNECTICUT
DEPARTMENT OF TRANSPORTATION

Filename: ...\SB_MSH_Br08012R_0135_0301_PIER-2.dgn

SIGNATURE/ BLOCK:

PROJECT TITLE: REPLACEMENT OF MNRR BRIDGE OVER ATLANTIC STREET PHASE 2

TOWN: STAMFORD

DRAWING TITLE: PIER REINFORCEMENT DETAILS

PROJECT NO. 135-301
DRAWING NO. S-38
SHEET NO. 01.05.038

3/28/2016
P:\Projects\CamDot\36936292\500 CADD-GIS-Graphics\510 CADD\510.04 Struc. Bridge\MSta. Contract. Sheet. Files\SB_MSH_Br08012R_0135_0301_PIER-2.dgn

Border Version: 11/14/08

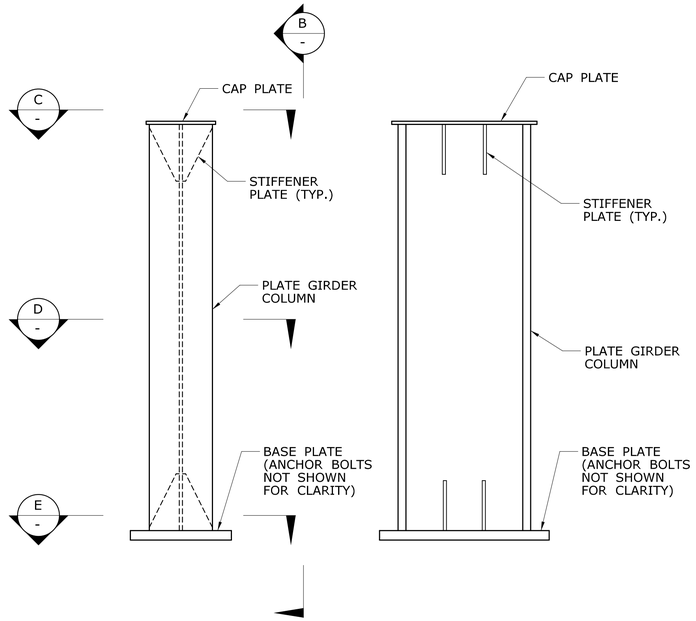

ELEVATION
LOOKING AT FACE OF PIER

VIEW B
LOOKING AT END OF PIER

PLATE GIRDER COLUMN
SCALE: ½" = 1'-0"

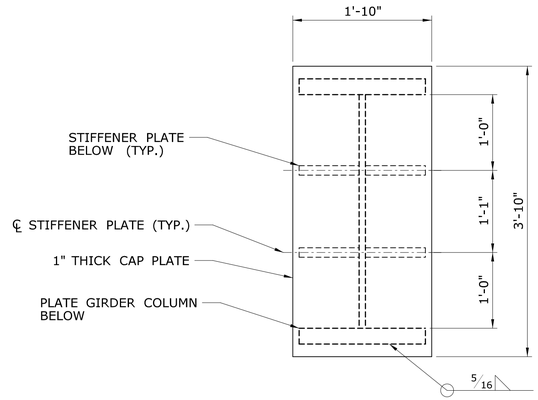

C - VIEW - CAP PLATE
SCALE: 1" = 1'-0"

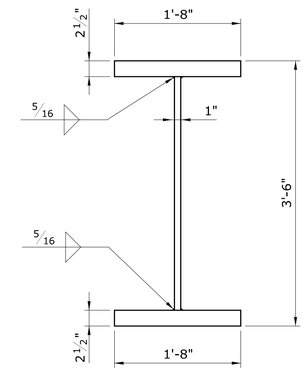

D - SECTION - PLATE GIRDER
SCALE: 1" = 1'-0"

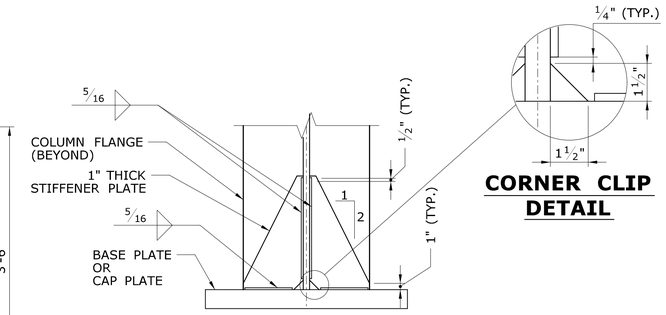

CORNER CLIP DETAIL

STIFFENER PLATE DETAIL
SCALE: 1" = 1'-0"

NOTES

1. SEE "PIER PLAN, ELEVATION, AND SECTION" FOR PIER ELEVATION AND COLUMN SPACING.
2. SEE "GENERAL NOTES - 1" FOR STRUCTURAL STEEL NOTES.
3. ANCHOR BOLTS SHALL CONFORM TO ASTM F1554 GRADE 105.

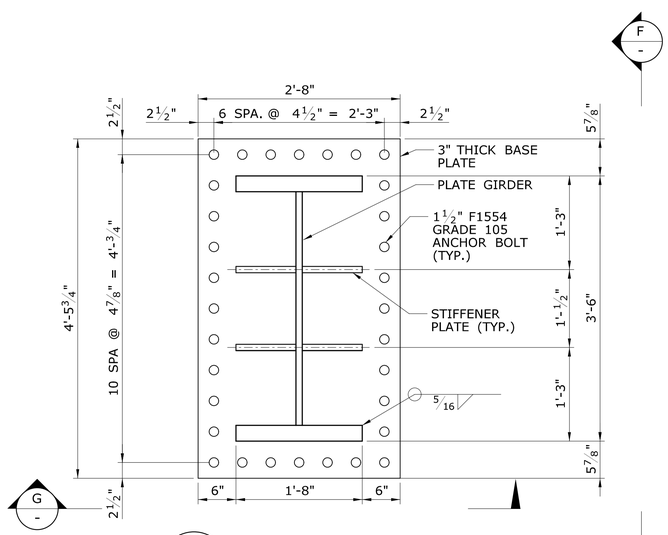

E - VIEW - BASE PLATE
SCALE: 1" = 1'-0"

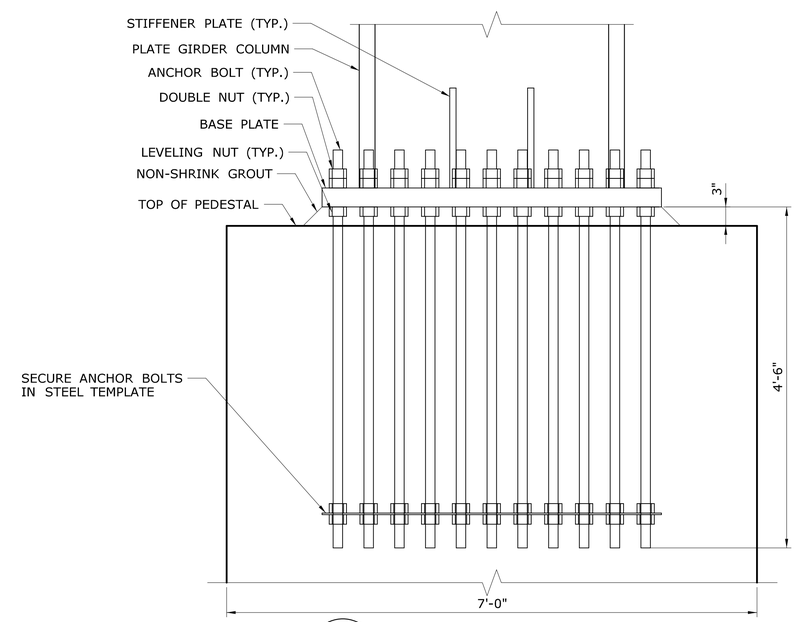

F - VIEW - ANCHOR BOLTS
SCALE: 1" = 1'-0"

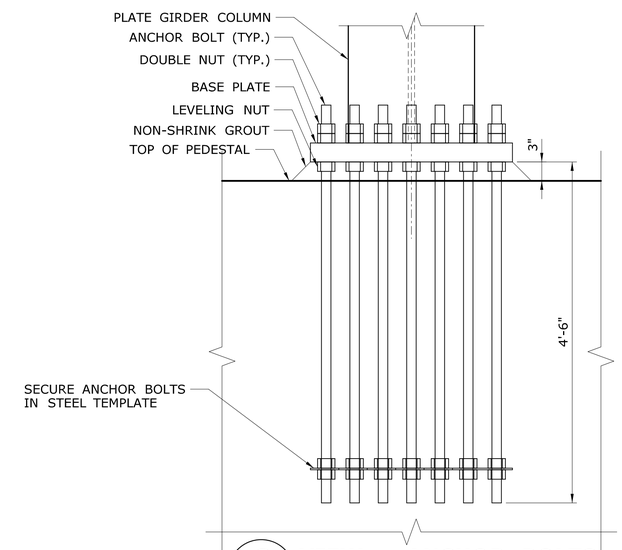

G - VIEW - ANCHOR BOLTS
SCALE: 1" = 1'-0"

FINAL PLANS FOR REVIEW

REV.	DATE	REVISION DESCRIPTION	SHEET NO.
-	-	-	
-	-	-	-
-	-	-	-
-	-	-	-
-	-	-	-
-	-	-	-

THE INFORMATION, INCLUDING ESTIMATED QUANTITIES OF WORK, SHOWN ON THESE SHEETS IS BASED ON LIMITED INVESTIGATIONS BY THE STATE AND IS IN NO WAY WARRANTED TO INDICATE THE CONDITIONS OF ACTUAL QUANTITIES OF WORK WHICH WILL BE REQUIRED.

Plotted Date: 3/28/2016

DESIGNER/DRAFTER: K. BARKER
CHECKED BY: D. COSTELLO
SCALE AS NOTED

STATE OF CONNECTICUT
DEPARTMENT OF TRANSPORTATION

Filename: ...\SB.MSH.Br08012R.0135.0301.PIER-3.dgn

SIGNATURE/ BLOCK:

PROJECT TITLE:
REPLACEMENT OF MNRR BRIDGE OVER ATLANTIC STREET PHASE 2

TOWN: **STAMFORD**

DRAWING TITLE: **PIER COLUMN DETAILS**

PROJECT NO. **135-301**
DRAWING NO. **S-39**
SHEET NO. **01.05.039**

3/28/2016
P:\Projects\ConnDot\36938292\500 CADD-GIS-Graphics\510 CADD\510.04 Struc.Bridge\WSta.Contract.Sheet.Files\SB.MSH.Br08012R.0135.0301.PIER-3.dgn

Border Version: 11/14/08

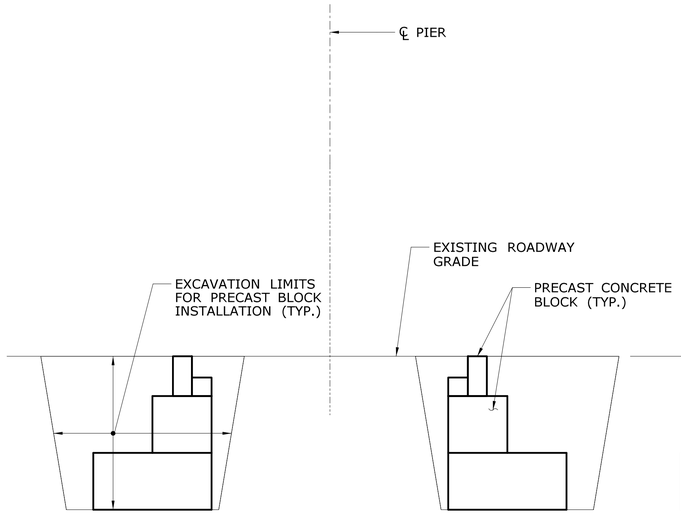

STAGE P1 SECTION

SCALE: 1/4" = 1'-0"

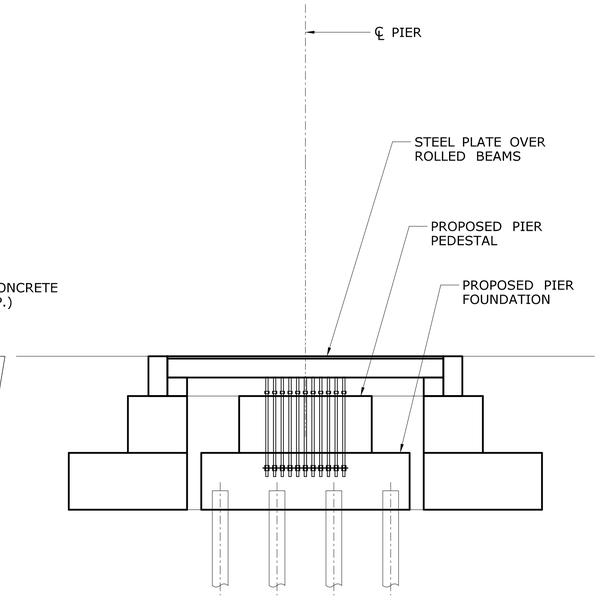

STAGE P2 SECTION

SCALE: 1/4" = 1'-0"

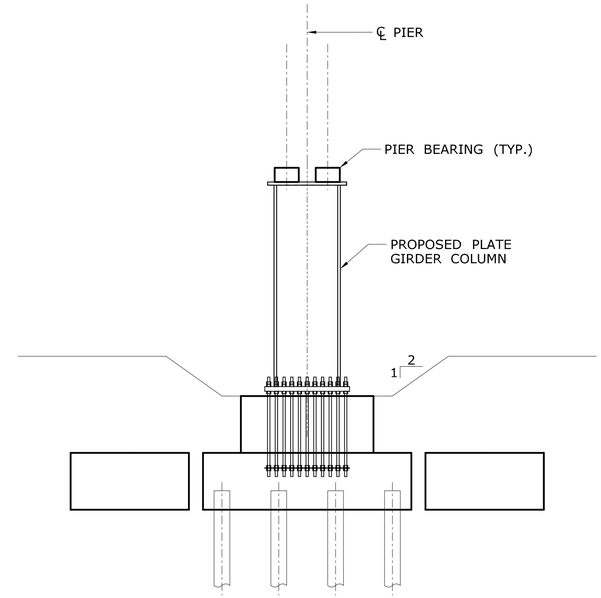

STAGE P3 SECTION

SCALE: 1/4" = 1'-0"

SUGGESTED CONSTRUCTION SEQUENCE

STAGE P1
1. DURING NIGHTTIME ROAD CLOSURES, EXCAVATE AND INSTALL PRECAST CONCRETE BLOCKS ON WEST SIDE OF PROPOSED PIER.
2. REPEAT STEP 1 ON EAST SIDE OF PROPOSED PIER.

STAGE P2
1. DURING NIGHTTIME ROAD CLOSURES, EXCAVATE BETWEEN CONCRETE BLOCKS, INSTALL MICROPILES, AND CONSTRUCT PIER FOOTING AND PEDESTAL. DURING DAYTIME MAINTAIN TRAFFIC BY BRIDGING EXCAVATION WITH STEEL PLATES OVER ROLLED BEAMS SUPPORTED ON PRECAST BLOCKS.

STAGE P3
1. CLOSE ATLANTIC STREET TO TRAFFIC.
2. REMOVE STEEL PLATE BRIDGING AND TOP PRECAST BLOCKS.
3. INSTALL PLATE GIRDER COLUMNS. PLUMB USING LEVELING NUTS.
4. INSTALL PIER BEARINGS.
5. BACKFILL EXCAVATION AS SHOWN.

STAGE P4
1. INSTALL PROPOSED SUPERSTRUCTURE ON STEEL COLUMNS.
2. INSTALL BALLAST AND TRACKS ON SUPERSTRUCTURE.
3. OPEN TRACKS TO TRAIN TRAFFIC.
4. GROUT VOID UNDER BASE PLATES.

STAGE P5
1. INSTALL TEMPORARY PRECAST CONCRETE BARRIER CURB.
2. REESTABLISH TRAFFIC ON ATLANTIC STREET WITH REDUCED VERTICAL CLEARANCE.
3. DURING TRACK OUTAGES, ENCASE STEEL COLUMNS WITH CONCRETE. INSTALL CONCRETE UNDER CLOSED TRACKS, FOLLOWING SUPERSTRUCTURE STAGING.
4. BACKFILL TO MATCH EXISTING ROADWAY GRADE.

STAGE P6
1. REMOVE PRECAST CONCRETE BARRIER CURBS.
2. LOWER ATLANTIC STREET TO FINISHED ROADWAY GRADE.
3. INSTALL IMPACT ATTENUATORS AT END OF PIER (NOT SHOWN).

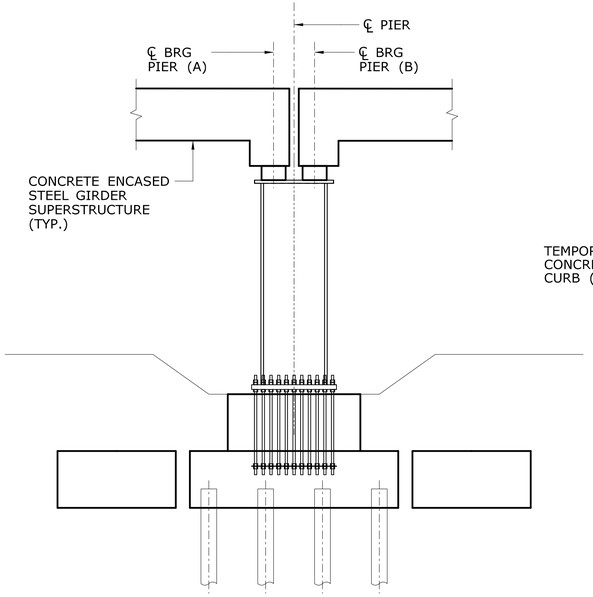

STAGE P4 SECTION

SCALE: 1/4" = 1'-0"

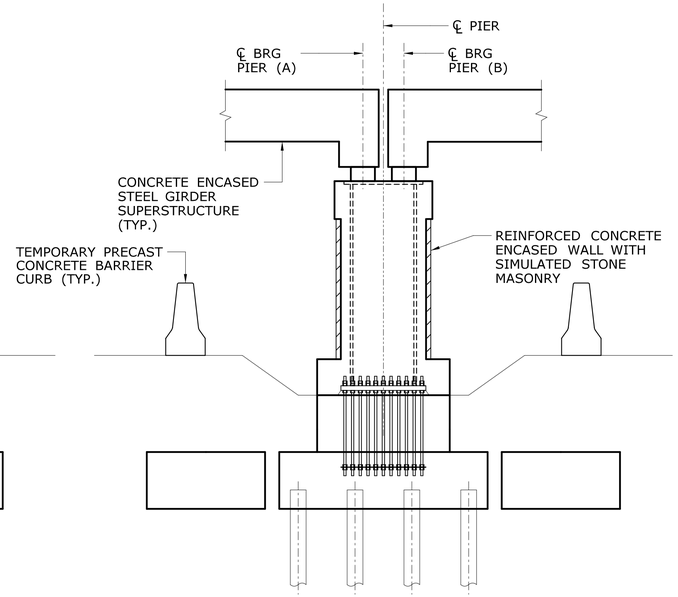

STAGE P5 SECTION

SCALE: 1/4" = 1'-0"

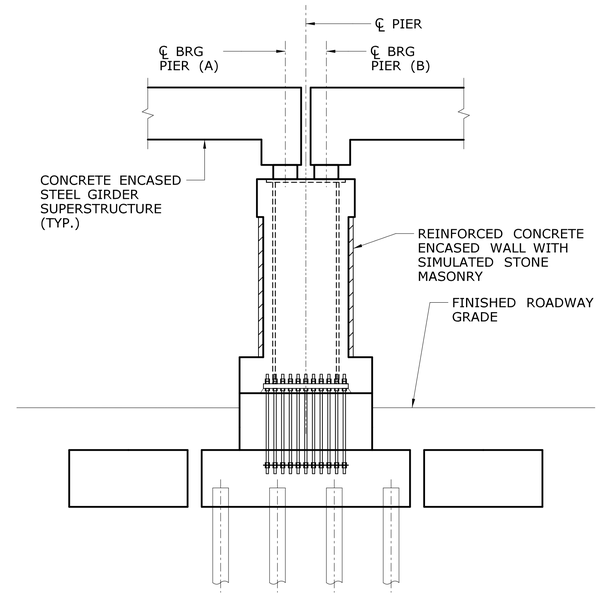

STAGE P6 SECTION

SCALE: 1/4" = 1'-0"

FINAL PLANS FOR REVIEW

REV.	DATE	REVISION DESCRIPTION	SHEET NO.
-	-	-	-
-	-	-	-
-	-	-	-
-	-	-	-
-	-	-	-
-	-	-	-

THE INFORMATION, INCLUDING ESTIMATED QUANTITIES OF WORK, SHOWN ON THESE SHEETS IS BASED ON LIMITED INVESTIGATIONS BY THE STATE AND IS IN NO WAY WARRANTED TO INDICATE THE CONDITIONS OF ACTUAL QUANTITIES OF WORK WHICH WILL BE REQUIRED.

Plotted Date: 3/28/2016

DESIGNER/DRAFTER: K. BARKER
CHECKED BY: D. COSTELLO

STATE OF CONNECTICUT
DEPARTMENT OF TRANSPORTATION

Filename: ...\SB_MSH_Br08012R_0135_0301_PIER-4.dgn

SIGNATURE/ BLOCK:

PROJECT TITLE: REPLACEMENT OF MNRR BRIDGE OVER ATLANTIC STREET PHASE 2

TOWN: STAMFORD

DRAWING TITLE: PIER STAGE CONSTRUCTION

PROJECT NO. 135-301
DRAWING NO. S-40
SHEET NO. 01.05.040

3/28/2016
P:\Projects\CommDot\36938292\500 CADD-GIS-Graphics\510 CADD\510.04 Struc_Bridge\MSha_Contract_Sheet_Files\SB_MSH_Br08012R_0135_0301_PIER-4.dgn

Border Version: 11/14/08

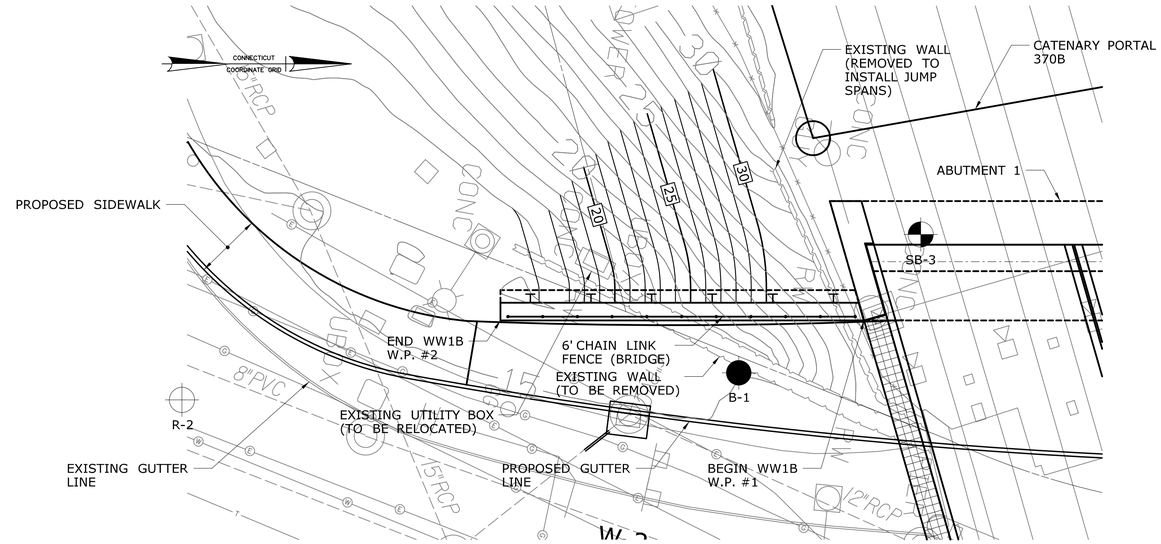

PLAN

SCALE: 1" = 10'-0"

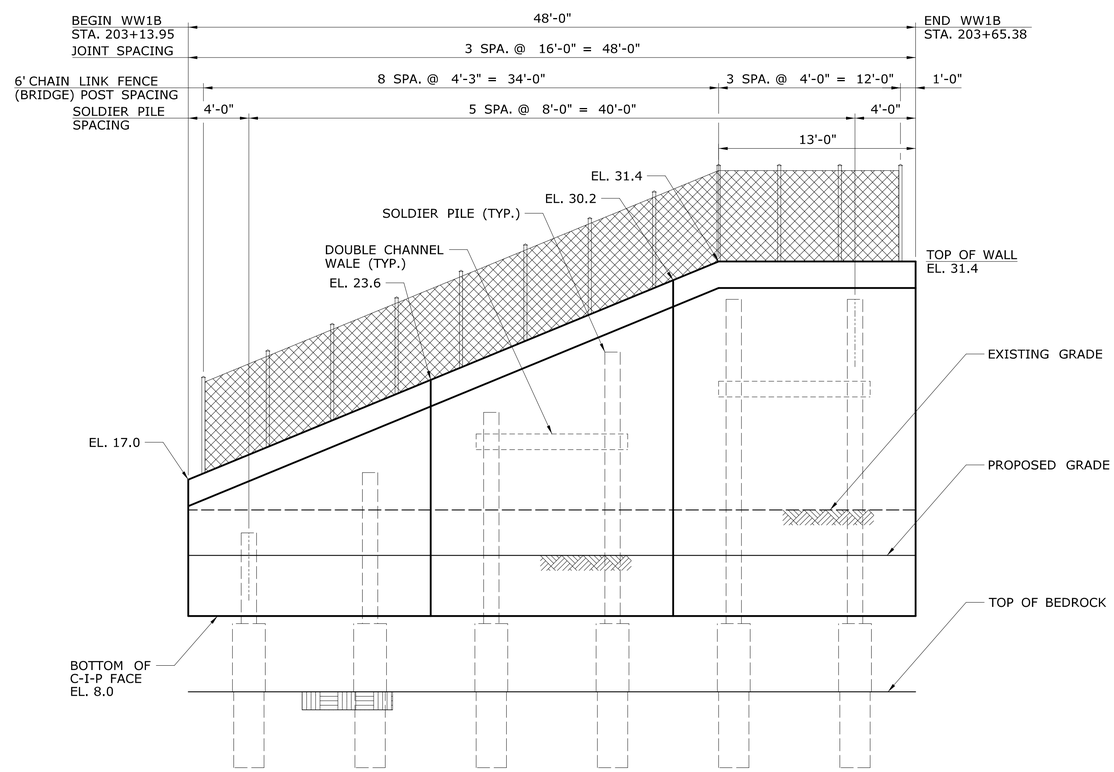

ELEVATION

SCALE: 1" = 5'-0"

NOTES

1. ALL DIMENSIONS ARE MEASURED ALONG FRONT FACE OF WALL.
2. SOLDIER PILES SHALL BE SPACED AT 8'-0" UNLESS OTHERWISE NOTED.
3. ALL JOINTS ARE CONTRACTION JOINTS UNLESS OTHERWISE NOTED.

WORKING POINT COORDINATES

WP #	NORTHING	EASTING
1	579103.02	782256.00
2	579055.75	782264.33

FINAL PLANS FOR REVIEW

REV.	DATE	REVISION DESCRIPTION	SHEET NO.
-	-	-	
-	-	-	-
-	-	-	-
-	-	-	-
-	-	-	-
-	-	-	-

THE INFORMATION, INCLUDING ESTIMATED QUANTITIES OF WORK, SHOWN ON THESE SHEETS IS BASED ON LIMITED INVESTIGATIONS BY THE STATE AND IS IN NO WAY WARRANTED TO INDICATE THE CONDITIONS OF ACTUAL QUANTITIES OF WORK WHICH WILL BE REQUIRED.

Plotted Date: 3/28/2016

DESIGNER/DRAFTER: K. BARKER
CHECKED BY: J. IVES
SCALE AS NOTED

STATE OF CONNECTICUT
DEPARTMENT OF TRANSPORTATION

Filename: ...\SB.MSH.Br08012R.0135.0301.WW1B-1.dgn

SIGNATURE/ BLOCK:

PROJECT TITLE: REPLACEMENT OF MNRR BRIDGE OVER ATLANTIC STREET PHASE 2

TOWN: STAMFORD

DRAWING TITLE: WINGWALL 1B PLAN AND ELEVATION

PROJECT NO. 135-301
DRAWING NO. S-41
SHEET NO. 01.05.041

3/28/2016
P:\Projects\ConnDot\36938292\500 CADD-GIS-Graphics\510 CADD\510.04 Struc.Bridge\MSta.Contract.Sheet.Files\SB.MSH.Br08012R.0135.0301.WW1B-1.dgn

Border Version: 11/14/08

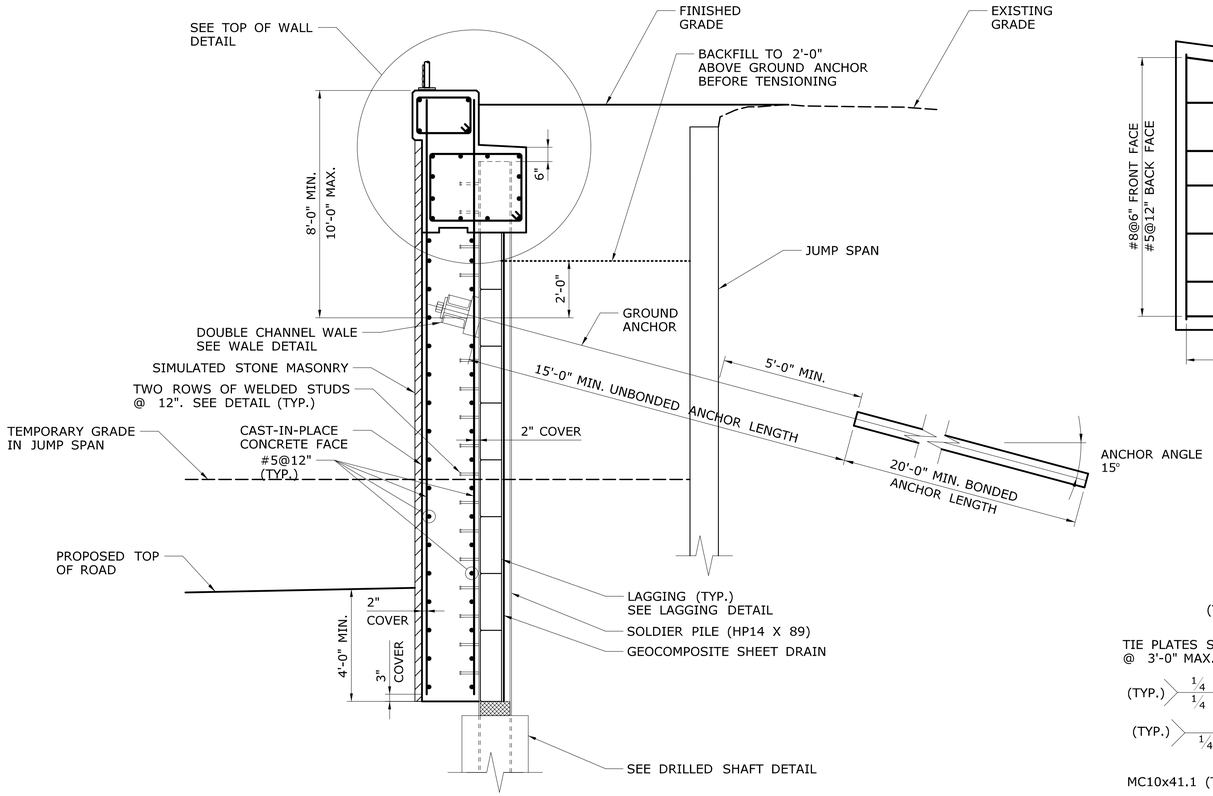

WINGWALL 1B TYPICAL SECTION

SCALE: 3/8" = 1'-0"

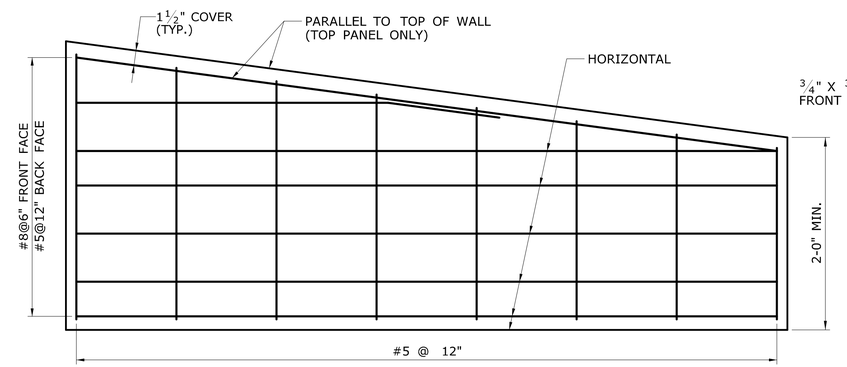

LAGGING ELEVATION

N.T.S.

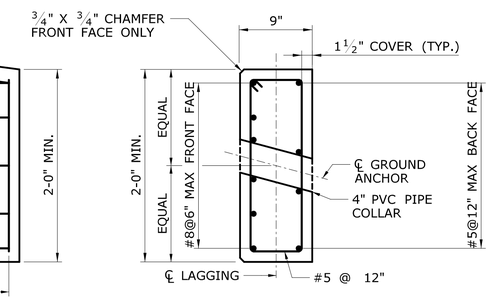

LAGGING DETAIL

N.T.S.

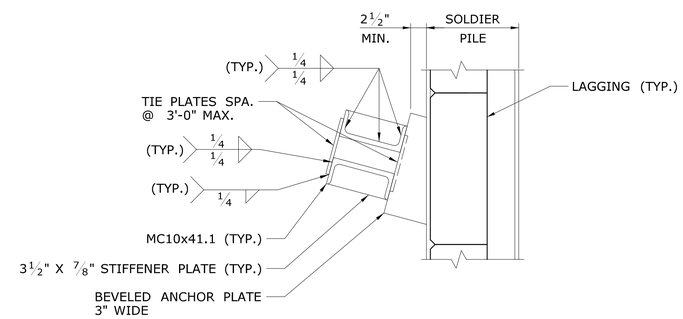

WALE DETAIL AT SOLDIER PILE

N.T.S.

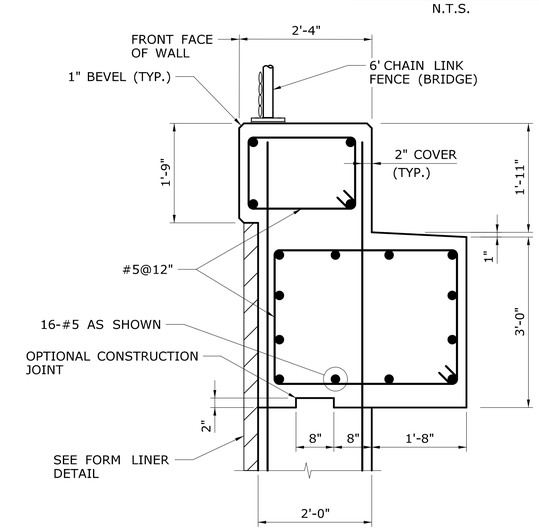

TOP OF WALL DETAIL

SCALE: ¾" = 1'-0"

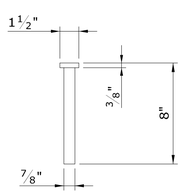

WELDED STUD DETAIL

N.T.S.

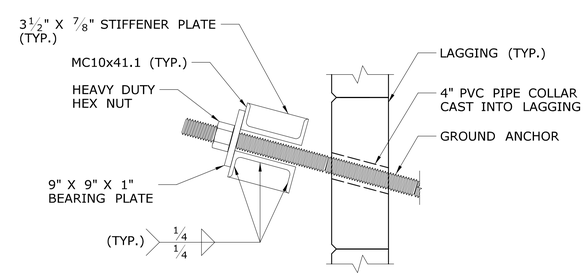

WALE DETAIL AT GROUND ANCHOR

N.T.S.

SOLDIER PILE AND STRUCTURAL STEEL NOTES

1. ALL COSTS ASSOCIATED WITH FURNISHING, ERECTING, PLUMBING AND BRACING THE SOLDIER PILES SHALL BE PAID FOR UNDER THE ITEM "FURNISHING STEEL PILES".
2. DOUBLE-CHANNEL WALES, STIFFENERS, TIE PLATES, BEARING PLATES AND BENT PLATES SHALL BE PAID FOR UNDER THE ITEM "STRUCTURAL STEEL".
3. SOLDIER PILES AND ALL STRUCTURAL STEEL ASSOCIATED WITH WALL CONSTRUCTION SHALL CONFORM TO AASHTO M270, GRADE 50.
4. SOLDIER PILES AND BENT PLATES SHALL BE HOT-DIP GALVANIZED IN ACCORDANCE WITH ASTM A123.
5. REPAIR DAMAGED GALVANIZATION IN FIELD WITH ZINC-RICH PAINT CONFORMING TO TT-P-641, TYPE 1 TO A DRY THICKNESS OF 3 TO 6 MILS. NO PAYMENT SHALL BE MADE FOR REPAIRING DAMAGED GALVANIZATION.

GROUND ANCHOR NOTES

1. CLASS I CORROSION PROTECTION SHALL BE PROVIDED FOR ALL GROUND ANCHORS. WORKING DRAWINGS OF THE FINAL DETAILS OF THE CLASS I CORROSION PROTECTION SHALL BE SUMITTED TO THE ENGINEER FOR APPROVAL. SEE "WINGWALL 1B / WALL DETAILS - 4" FOR SUGGESTED DETAILS.
2. ANCHOR DETAILS (I.E. BAR DIAMETER, STRESSING LENGTH, BOND LENGTH, HOLE DIAMETER, ETC.) SHALL BE DESIGNED BY THE CONTRACTOR AND SUBMITTED TO THE ENGINEER FOR APPROVAL. THE MINIMUM BOND LENGTH SHALL BE 20 FEET. ALL COSTS SHALL BE INCLUDED IN THE ITEM "GROUND ANCHOR". SEE SPECIAL PROVISION.
3. GROUND ANCHORS SHALL BE DESIGNED FOR A SERVICE LOAD OF 145 KIPS PER ANCHOR.
4. A "PERFORMANCE TEST FOR GROUND ANCHOR" SHALL BE PERFORMED ON THE FIRST THREE PRODUCTION ANCHORS AND ON A MINIMUM OF TEN PERCENT OF THE REMAINING PRODUCTION ANCHORS THEREAFTER, AS DIRECTED BY THE ENGINEER. A "PROOF TEST FOR GROUND ANCHOR" SHALL BE PERFORMED ON ALL ANCHORS THAT ARE NOT PERFORMANCE TESTED.

FINAL PLANS FOR REVIEW

REV.	DATE	REVISION DESCRIPTION	SHEET NO.
-	-	-	-
-	-	-	-
-	-	-	-
-	-	-	-
-	-	-	-
-	-	-	-

THE INFORMATION, INCLUDING ESTIMATED QUANTITIES OF WORK, SHOWN ON THESE SHEETS IS BASED ON LIMITED INVESTIGATIONS BY THE STATE AND IS IN NO WAY WARRANTED TO INDICATE THE CONDITIONS OF ACTUAL QUANTITIES OF WORK WHICH WILL BE REQUIRED.

Plotted Date: 3/28/2016

DESIGNER/DRAFTER: K. BARKER
CHECKED BY: J. IVES
SCALE AS NOTED

STATE OF CONNECTICUT
DEPARTMENT OF TRANSPORTATION

Filename: ...\SB..MSH..Br08012R..0135..0301..WW1B-2.dgn

SIGNATURE/ BLOCK:

PROJECT TITLE: REPLACEMENT OF MNRR BRIDGE OVER ATLANTIC STREET PHASE 2

TOWN: STAMFORD

DRAWING TITLE: WINGWALL 1B WALL DETAILS - 1

PROJECT NO. 135-301
DRAWING NO. S-42
SHEET NO. 01.05.042

3/28/2016
P:\Projects\ConnDot\36938292\500 CADD-GIS-Graphics\510 CADD\510.04 Struc. Bridge\MSta. Contract. Sheet. Files\SB. MSH. Br08012R. 0135. 0301. WW1B-2.dgn

Border Version: 11/14/08

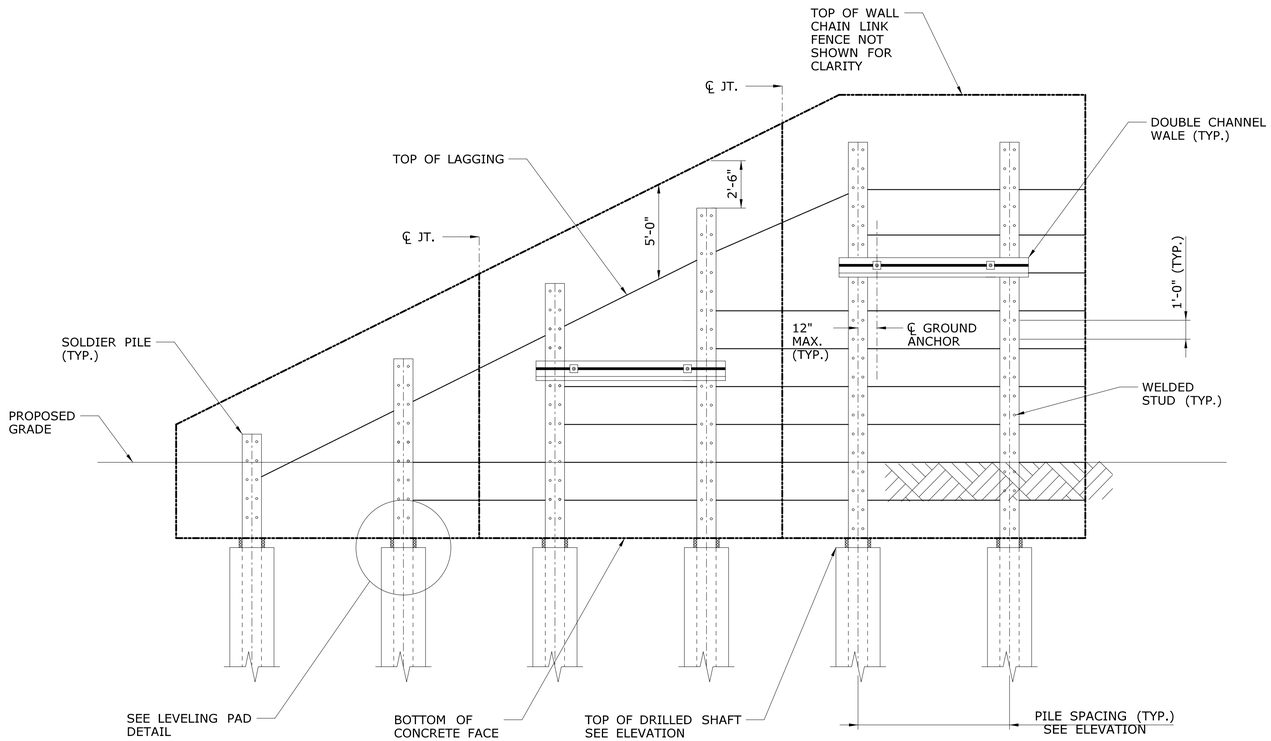

ELEVATION PANEL

SCALE: 1/4" = 1'-0"

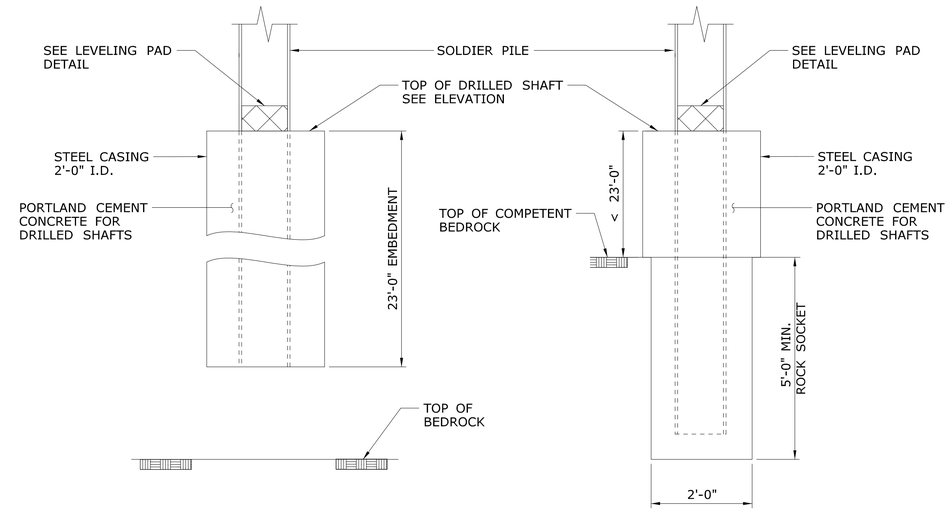

DRILLED SHAFT

DRILLED SHAFT WITH ROCK SOCKET

DRILLED SHAFT DETAIL

N.T.S.

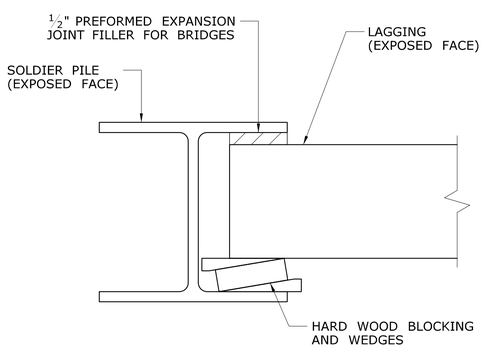

TOP VIEW

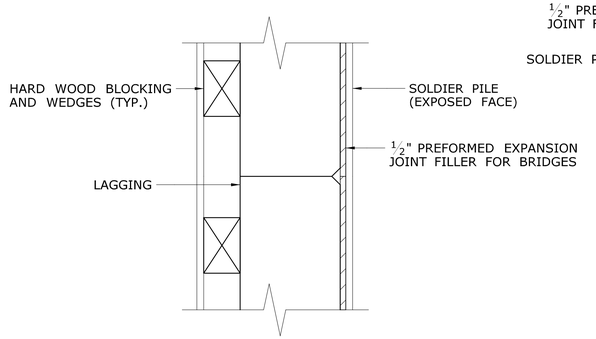

SIDE VIEW

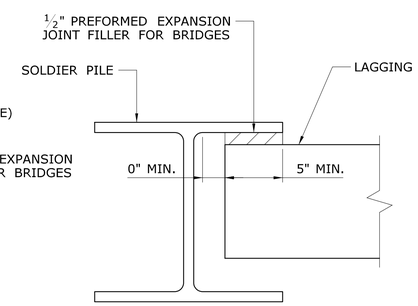

BEARING SURFACE DETAIL

N.T.S.

BLOCKING DETAIL

N.T.S.

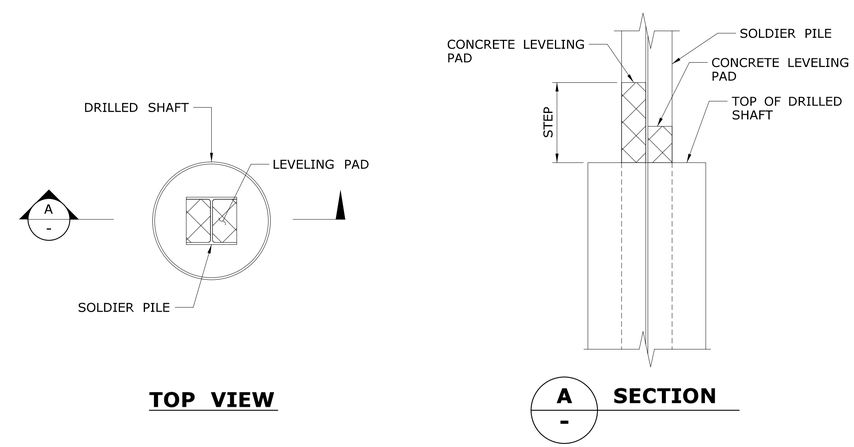

TOP VIEW

LEVELING PAD DETAIL

N.T.S.

FINAL PLANS FOR REVIEW

REV.	DATE	REVISION DESCRIPTION	SHEET NO.
-	-	-	-
-	-	-	-
-	-	-	-
-	-	-	-
-	-	-	-
-	-	-	-

THE INFORMATION, INCLUDING ESTIMATED QUANTITIES OF WORK, SHOWN ON THESE SHEETS IS BASED ON LIMITED INVESTIGATIONS BY THE STATE AND IS IN NO WAY WARRANTED TO INDICATE THE CONDITIONS OF ACTUAL QUANTITIES OF WORK WHICH WILL BE REQUIRED.

Plotted Date: 3/28/2016

DESIGNER/DRAFTER: K. BARKER
CHECKED BY: J. IVES
SCALE AS NOTED

STATE OF CONNECTICUT
DEPARTMENT OF TRANSPORTATION

Filename: ...\SB..MSH..Br08012R..0135..0301..WW1B-3.dgn

SIGNATURE/ BLOCK:

PROJECT TITLE: REPLACEMENT OF MNRR BRIDGE OVER ATLANTIC STREET PHASE 2

TOWN: STAMFORD

DRAWING TITLE: WINGWALL 1B WALL DETAILS - 2

PROJECT NO. 135-301
DRAWING NO. S-43
SHEET NO. 01.05.043

3/28/2016
P:\Projects\ConnDot\36938292\500 CADD-GIS-Graphics\510 CADD\510.04 Struc. Bridge\MSta. Contract. Sheet. Files\SB.MSH.Br08012R.0135.0301.WW1B-3.dgn

Border Version: 11/14/08

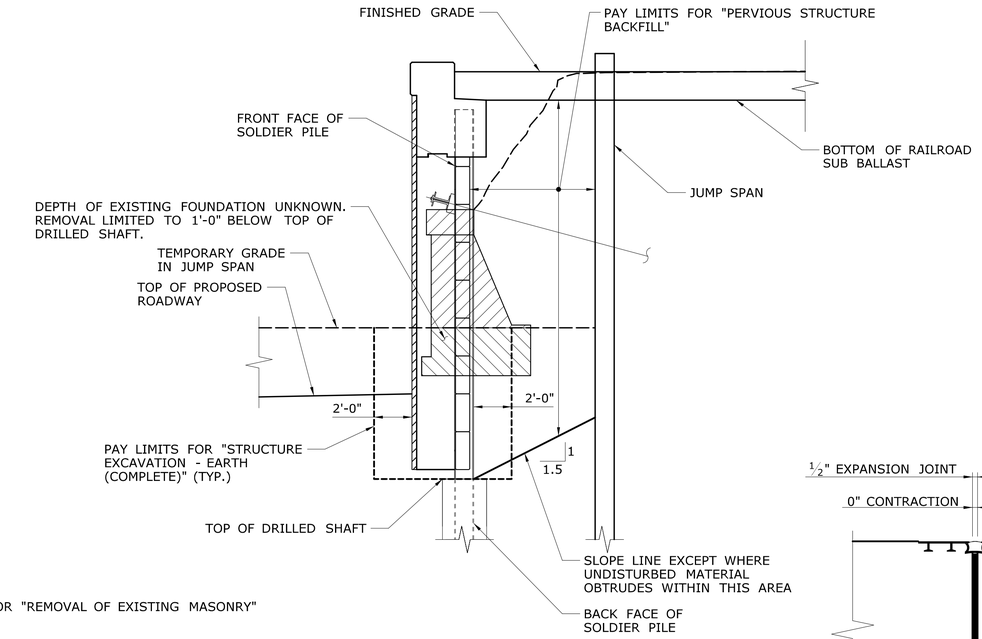

LEGEND

PAY LIMITS FOR "REMOVAL OF EXISTING MASONRY"

PAY LIMIT DETAIL
EXISTING WALL REMOVED

N.T.S.

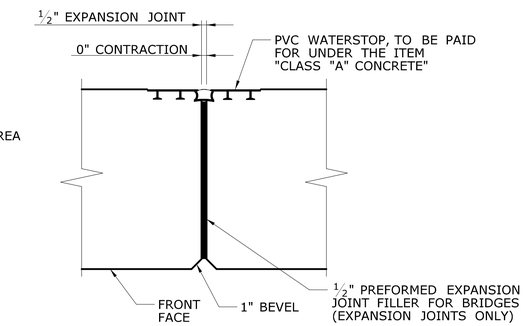

JOINT DETAIL

N.T.S.

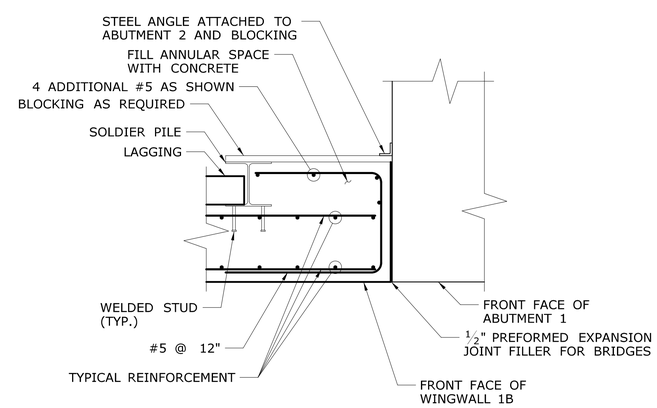

END OF WALL DETAIL

SCALE: N.T.S.

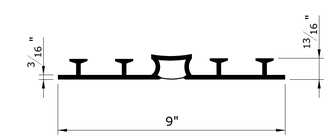

PVC WATERSTOP DETAIL

N.T.S.

FINAL PLANS FOR REVIEW

REV.	DATE	REVISION DESCRIPTION	SHEET NO.
-	-	-	-
-	-	-	-
-	-	-	-
-	-	-	-
-	-	-	-
-	-	-	-

THE INFORMATION, INCLUDING ESTIMATED QUANTITIES OF WORK, SHOWN ON THESE SHEETS IS BASED ON LIMITED INVESTIGATIONS BY THE STATE AND IS IN NO WAY WARRANTED TO INDICATE THE CONDITIONS OF ACTUAL QUANTITIES OF WORK WHICH WILL BE REQUIRED.

Plotted Date: 3/28/2016

DESIGNER/DRAFTER: K. BARKER
CHECKED BY: J. IVES
SCALE AS NOTED

STATE OF CONNECTICUT
DEPARTMENT OF TRANSPORTATION

Filename: ...\SB_MSH_Br08012R_0135_0301_WW1B-4.dgn

SIGNATURE/ BLOCK:

PROJECT TITLE: REPLACEMENT OF MNRR BRIDGE OVER ATLANTIC STREET PHASE 2

TOWN: STAMFORD

DRAWING TITLE: WINGWALL 1B WALL DETAILS - 3

PROJECT NO. 135-301
DRAWING NO. S-44
SHEET NO. 01.05.044

3/28/2016
P:\Projects\CommDot\36938292\500 CADD-GIS-Graphics\510 CADD\510.04 Struc. Bridge\WSta. Contract Sheet_Files\SB_MSH_Br08012R_0135_0301_WW1B-4.dgn

Border Version: 11/14/08

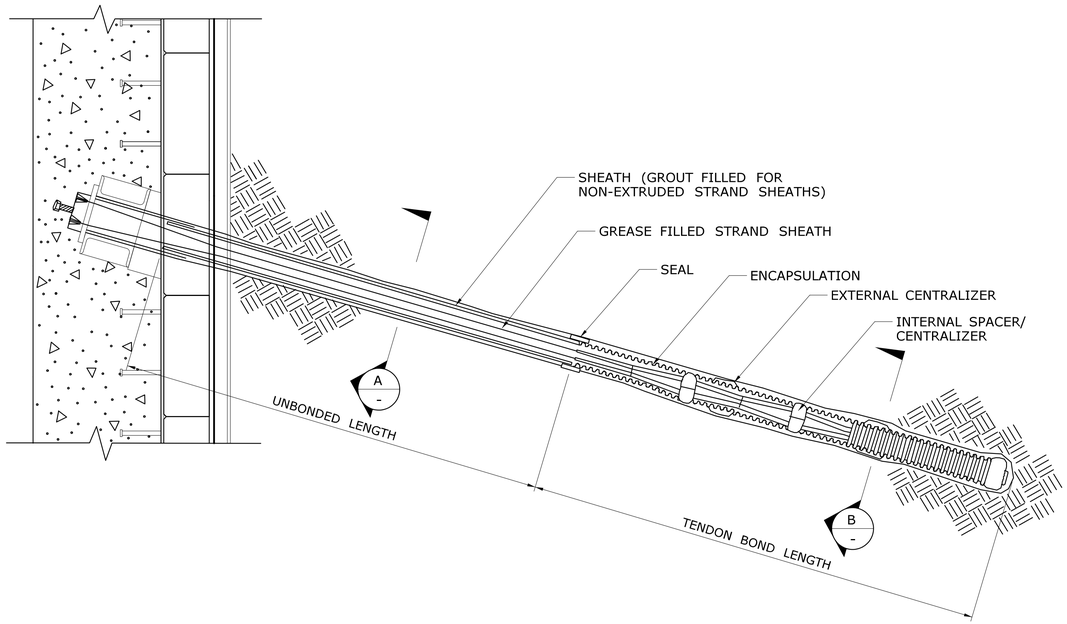

STRAND TENDON
N.T.S.

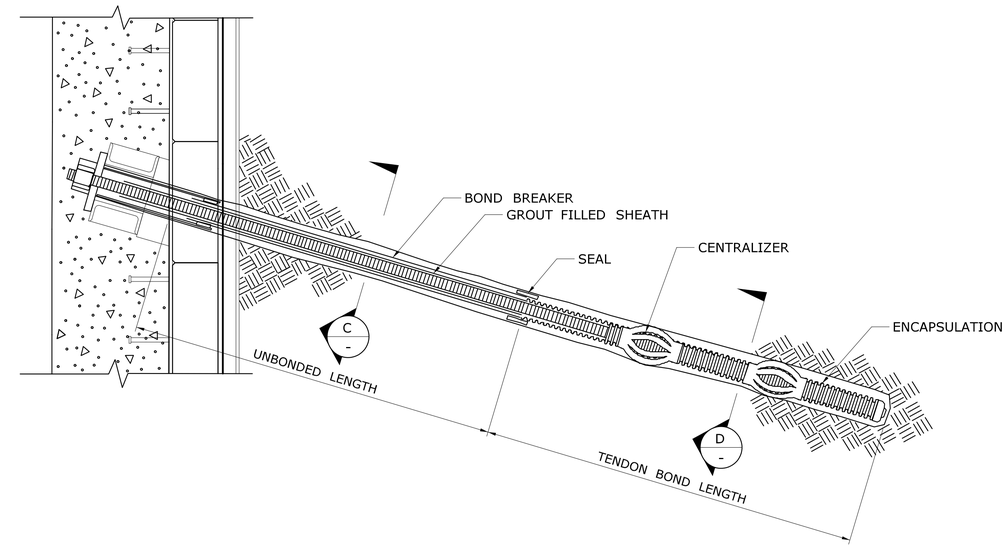

BAR TENDON
N.T.S.

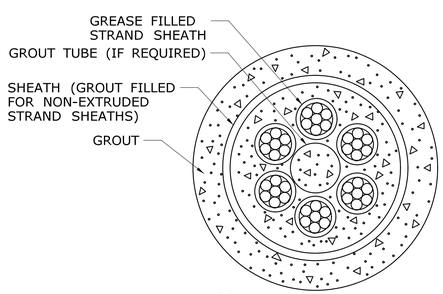

A SECTION
N.T.S.

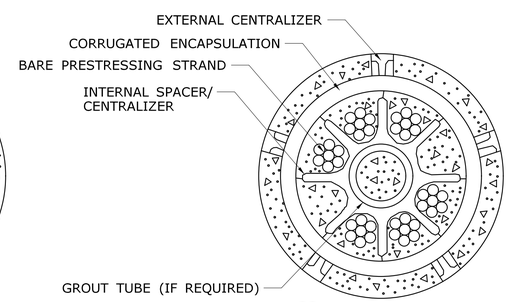

B SECTION
N.T.S.

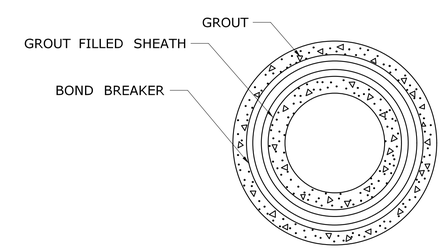

C SECTION
N.T.S.

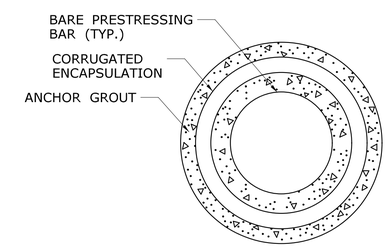

D SECTION
N.T.S.

GROUND ANCHOR CLASS I PROTECTION DETAILS
N.T.S.

FINAL PLANS FOR REVIEW

REV.	DATE	REVISION DESCRIPTION	SHEET NO.
-	-	-	-
-	-	-	-
-	-	-	-
-	-	-	-
-	-	-	-
-	-	-	-

THE INFORMATION, INCLUDING ESTIMATED QUANTITIES OF WORK, SHOWN ON THESE SHEETS IS BASED ON LIMITED INVESTIGATIONS BY THE STATE AND IS IN NO WAY WARRANTED TO INDICATE THE CONDITIONS OF ACTUAL QUANTITIES OF WORK WHICH WILL BE REQUIRED.

Plotted Date: 3/28/2016

DESIGNER/DRAFTER: K. BARKER
CHECKED BY: J. IVES
SCALE AS NOTED

STATE OF CONNECTICUT
DEPARTMENT OF TRANSPORTATION

Filename: ...\SB_MSH_Br08012R_0135_0301_WW1B-5.dgn

SIGNATURE/ BLOCK:

PROJECT TITLE: REPLACEMENT OF MNRR BRIDGE OVER ATLANTIC STREET PHASE 2

TOWN: STAMFORD

DRAWING TITLE: WINGWALL 1B WALL DETAILS - 4

PROJECT NO. 135-301
DRAWING NO. S-45
SHEET NO. 01.05.045

3/28/2016
P:\Projects\ConnDot\36938292\500 CADD-GIS-Graphics\510 CADD\510.04 Struc.Bridge\WSta. Contract.Sheet.Files\SB_MSH_Br08012R_0135_0301_WW1B-5.dgn

Border Version: 11/14/08

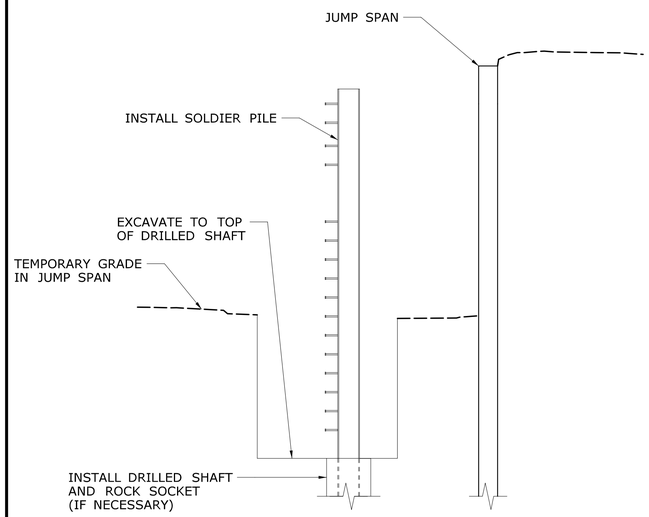

STAGE A
N.T.S.

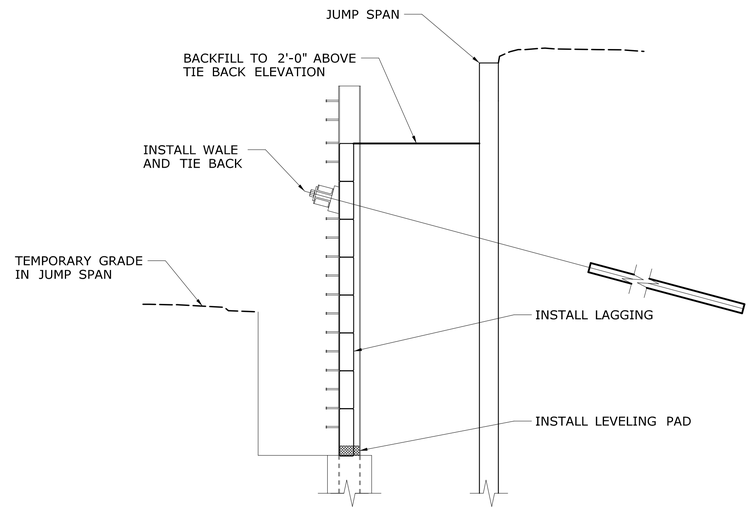

STAGE B
N.T.S.

CONSTRUCTION SEQUENCE

STAGE A
1. EXCAVATE TO TOP OF DRILLED SHAFT.
2. CORE DRILLED SHAFT AND ROCK SOCKET (IF NECESSARY).
3. INSTALL SOLDIER PILE IN DRILLED SHAFT AND ROCK SOCKET (IF NECESSARY).
4. FILL DRILLED SHAFT AND ROCK SOCKET WITH PORTLAND CEMENT CONCRETE.

STAGE B
1. INSTALL LEVELING PAD AND LAGGING AS SHOWN.
2. BACKFILL TO 2'-0" ABOVE GROUND ANCHOR ELEVATION.
3. INSTALL WALE AND GROUND ANCHORS
4. TEST GROUND ANCHORS AS REQUIRED.

STAGE C
1. BACKFILL TO TOP OF LAGGING.
2. INSTALL CONCRETE FACE TO CONSTRUCTION JOINT AT TOP OF LAGGING.

STAGE D
1. INSTALL TOP OF WALL.
2. BACKFILL TO PROPOSED GRADE.

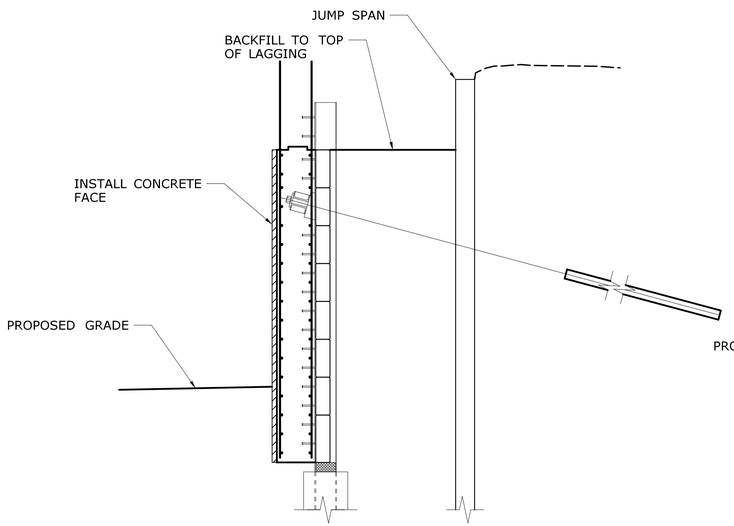

STAGE C
N.T.S.

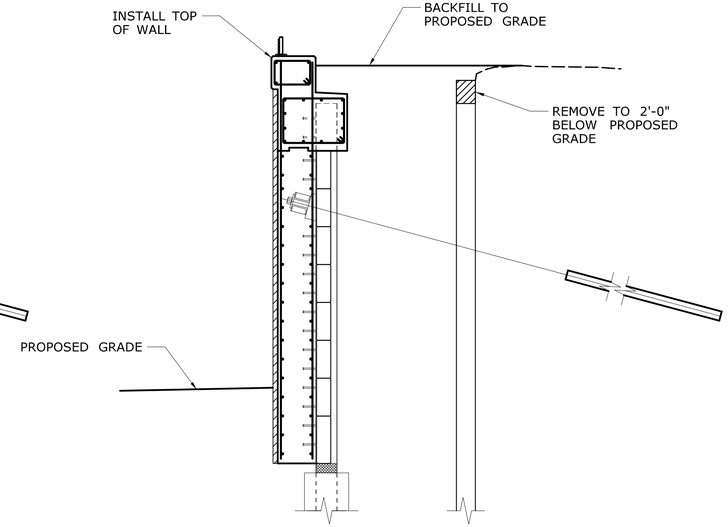

STAGE D
N.T.S.

FINAL PLANS FOR REVIEW

REV.	DATE	REVISION DESCRIPTION	SHEET NO.
-	-	-	-
-	-	-	-
-	-	-	-
-	-	-	-
-	-	-	-
-	-	-	-

THE INFORMATION, INCLUDING ESTIMATED QUANTITIES OF WORK, SHOWN ON THESE SHEETS IS BASED ON LIMITED INVESTIGATIONS BY THE STATE AND IS IN NO WAY WARRANTED TO INDICATE THE CONDITIONS OF ACTUAL QUANTITIES OF WORK WHICH WILL BE REQUIRED.

Plotted Date: 3/28/2016

DESIGNER/DRAFTER: K. BARKER
CHECKED BY: J. IVES
SCALE AS NOTED

STATE OF CONNECTICUT
DEPARTMENT OF TRANSPORTATION

Filename: ...\SB_MSH_Br08012R_0135_0301_WW1B-6.dgn

SIGNATURE/ BLOCK:

PROJECT TITLE:
REPLACEMENT OF MNRR BRIDGE OVER ATLANTIC STREET PHASE 2

TOWN: **STAMFORD**

DRAWING TITLE:
WINGWALL 1B CONSTRUCTION SEQUENCE

PROJECT NO. **135-301**
DRAWING NO. **S-46**
SHEET NO. **01.05.046**

3/28/2016
P:\Projects\ConnDot\36938292\500 CADD-GIS-Graphics\510 CADD\510.04 Struc Bridge\MSta. Contract Sheet Files\SB_MSH_Br08012R_0135_0301_WW1B-6.dgn

Border Version: 11/14/08

PROTECTIVE FENCE (CHAIN LINK)

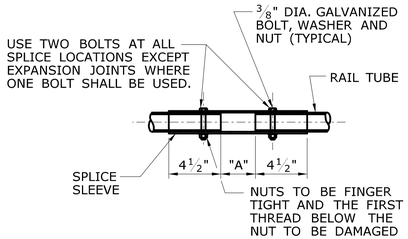

NOTE:
"A" = 1/4" EXCEPT FOR EXPANSION JOINT LOCATIONS WHERE "A" = BRIDGE DECK JOINT + 1/4"(1" MIN.)

TYPICAL RAIL EXPANSION
N.T.S.

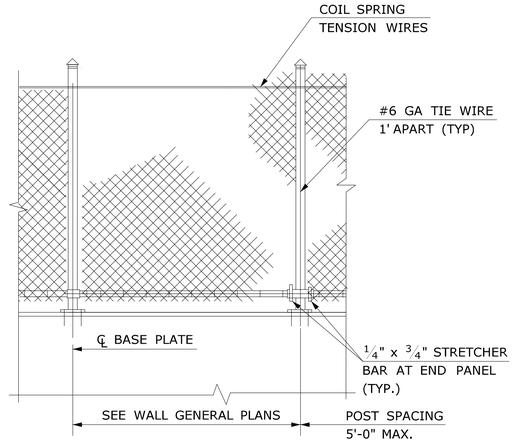

TYPICAL INTERIOR PANEL
SCALE: 1/2" = 1'-0"

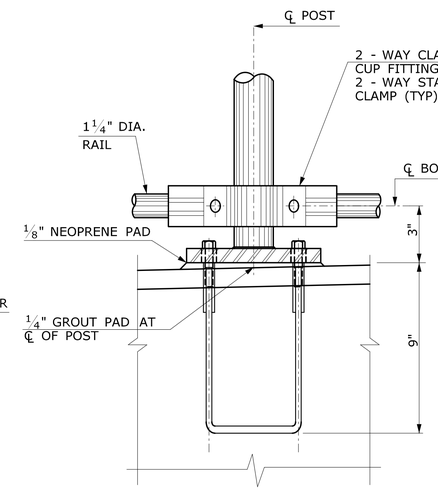

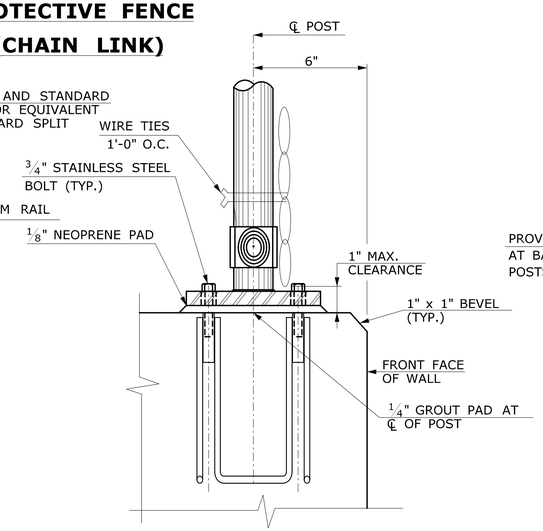

POST ANCHORAGE DETAILS
SCALE: 3" = 1'-0"

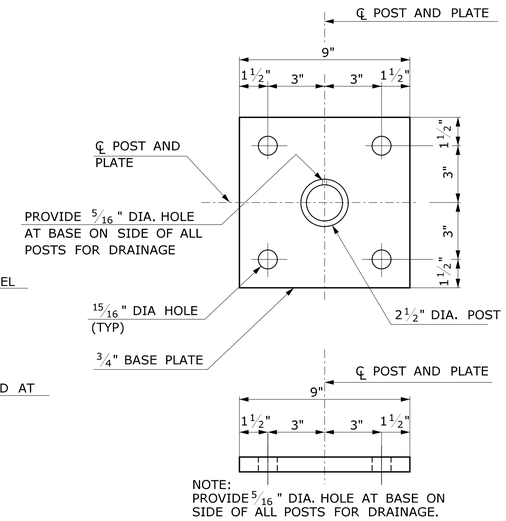

NOTE:
PROVIDE 5/16" DIA. HOLE AT BASE ON SIDE OF ALL POSTS FOR DRAINAGE.

BASE PLATE
SCALE: 3" = 1'-0"

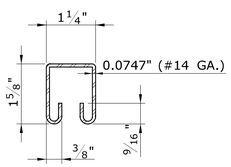

DETAIL "F" BRACE RAIL

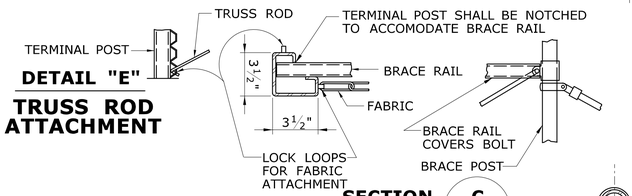

DETAIL "E" TRUSS ROD ATTACHMENT

SECTION C -

FABRIC AND BRACE RAIL ATTACHMENT

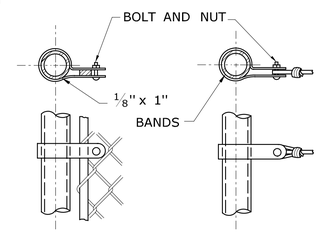

DETAIL "A" STRETCHER BAR AND TENSION WIRE ATTACHMENTS

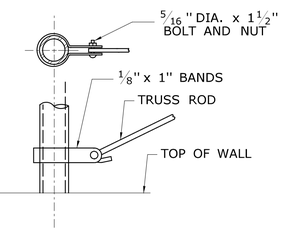

DETAIL "B" TRUSS ROD ATTACHMENT

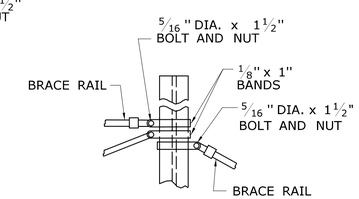

DETAIL "C" ATTACHMENT OF BRACE RAILS TO LINE POSTS (TYPICAL)

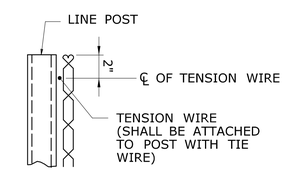

DETAIL "D" LOCATION OF TENSION WIRE

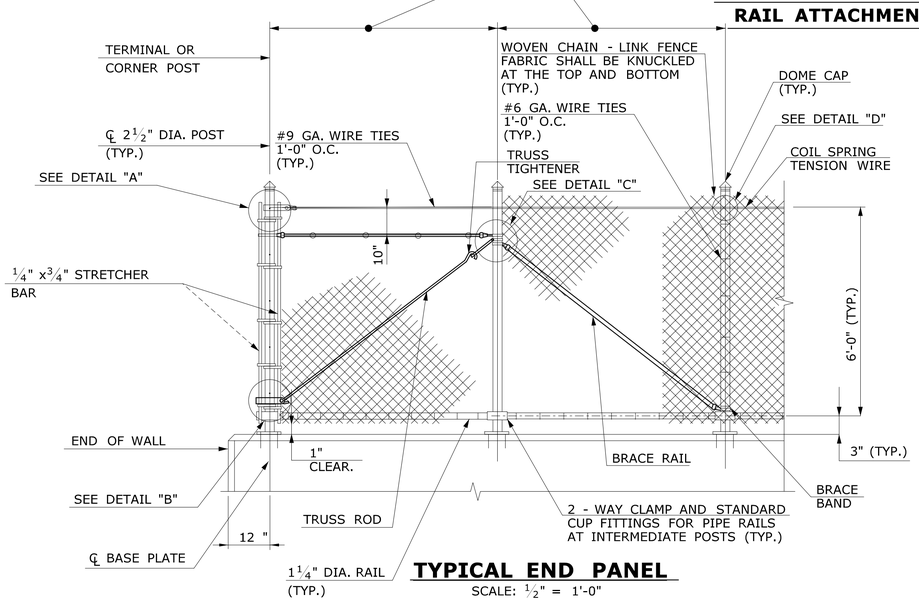

TYPICAL END PANEL
SCALE: 1/2" = 1'-0"

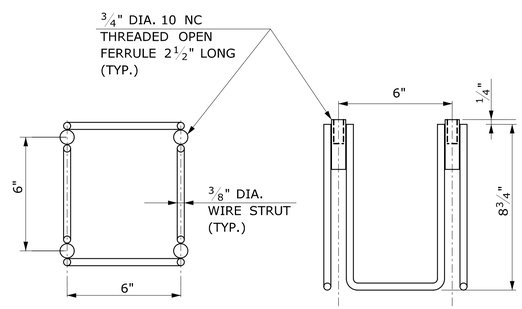

PLAN

ELEVATION

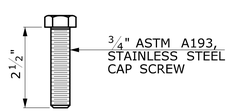

CAP SCREW

PRESET ANCHORAGE SYSTEM
SCALE: 3" = 1'-0"

NOTES:

1. ALL POSTS, RAILS AND ANCHORAGES SHALL BE FABRICATED AND ERECTED SO THAT THE RAILS ARE PARALLEL AND THE POSTS ARE TRULY VERTICAL.
2. CHAIN LINK FENCE FABRIC SHALL BE #9 GAGE STEEL WIRE, GALVANIZED AND PVC-COATED AND WOVEN INTO A 2" MESH.
3. FOR STRUCTURES ON CURVATURES OF 3° OR LESS, THE RAILS MAY BE SPRUNG INTO PLACE. FOR STRUCTURES EXCEEDING 3° IN CURVATURE, RAILS SHALL BE FABRICATED TO FOLLOW THE CURVATURE.
4. EXPOSED SURFACES OF THE ASSEMBLED PROTECTIVE FENCE SHALL BE FREE OF BURRS AND SHARP EDGES.
5. ALL MEASUREMENTS SHALL BE FIELD VERIFIED PRIOR TO FABRICATION OF THE PROTECTIVE FENCE TO ENSURE PROPER FIT AND ALIGNMENT.
6. THE COST OF FURNISHING AND INSTALLING PRESET ANCHORAGE SYSTEM, INCLUDING GROUT PAD AND BASE PLATES, SHALL BE INCLUDED IN THE COST OF EACH RETAINING WALL.
7. FOR ADDITIONAL DETAILS SEE CTDOT STANDARD SHEET, CHAIN LINK FENCE HW-913.01.

FINAL PLANS FOR REVIEW

REV.	DATE	REVISION DESCRIPTION	SHEET NO.
-	-	-	-
-	-	-	-
-	-	-	-
-	-	-	-
-	-	-	-
-	-	-	-

THE INFORMATION, INCLUDING ESTIMATED QUANTITIES OF WORK, SHOWN ON THESE SHEETS IS BASED ON LIMITED INVESTIGATIONS BY THE STATE AND IS IN NO WAY WARRANTED TO INDICATE THE CONDITIONS OF ACTUAL QUANTITIES OF WORK WHICH WILL BE REQUIRED.

Plotted Date: 3/28/2016

DESIGNER/DRAFTER: K. BARKER
CHECKED BY: J. IVES
SCALE AS NOTED

STATE OF CONNECTICUT
DEPARTMENT OF TRANSPORTATION

Filename: ...\SB_MSH_Br08012R_0135_0301_WW1B-7.dgn

SIGNATURE/ BLOCK:

PROJECT TITLE: REPLACEMENT OF MNRR BRIDGE OVER ATLANTIC STREET PHASE 2

TOWN: STAMFORD

DRAWING TITLE: WINGWALL 1B FENCE DETAILS

PROJECT NO. 135-301
DRAWING NO. S-47
SHEET NO. 01.05.047

3/28/2016
P:\Projects\ComDot\36938292\500 CADD-GIS-Graphics\510 CADD\510.04 Struc. Bridge\WSta. Contract. Sheet. Files\SB_MSH_Br08012R_0135_0301_WW1B-7.dgn

Border Version: 11/14/08

ARCHITECTURAL NOTES

1. REFER TO OTHER STRUCTURE DETAILS FOR REINFORCING, DIMENSIONS. ETC.
2. WHERE SHOWN ON THE PLANS, THE CONTRACTOR SHALL UTILIZE CONCRETE FORM LINERS TO SIMULATE STONE MASONRY CONSTRUCTION. THE COST OF THIS WORK SHALL BE INCLUDED IN THE UNIT PRICE FOR "SIMULATED STONE MASONRY".
3. CONCRETE FORM LINERS SHALL CONFORM TO THE REQUIREMENTS OF "SIMULATED STONE MASONRY".
4. THE CONTRACTOR SHALL SUBMIT TO THE ENGINEER FOR APPROVAL LAYOUT DRAWINGS OF ALL FORM LINERS SHOWING STONE SIZES, STONE CONFIGURATIONS, JOINT SPACING, AND ALL DIMENSIONS REQUIRED.
5. IN ADDITION TO THE DETAILS SHOWN ON THESE SHEETS, ALL EXPOSED EDGES SHALL RECEIVE A 1" x 1" BEVEL UNLESS DIMENSIONED OTHERWISE.
6. THE ARCHITECTURAL LINERS SHOWN ARE BASED ON FORM LINERS MANUFACTURED BY CUSTOM ROCK INTERNATIONAL (CRI). STONE PATTERN "A" IS BASED ON CRI PATTERN NO. 1104. FOR FINAL SURFACE FINISH REQUIREMENTS REFER TO THE SPECIAL PROVISION FOR "SIMULATED STONE MASONRY".

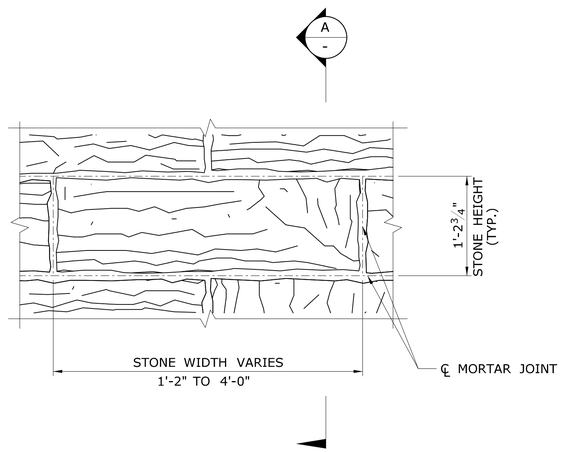

ELEVATION

SIMULATED STONE MASONRY

SCALE: 1" = 1'-0"

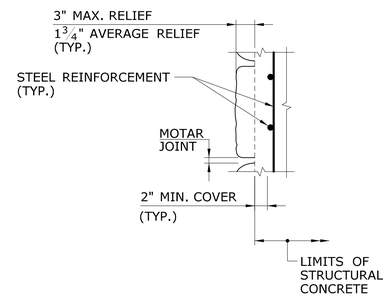

A - SECTION

SCALE: 1" = 1'-0"

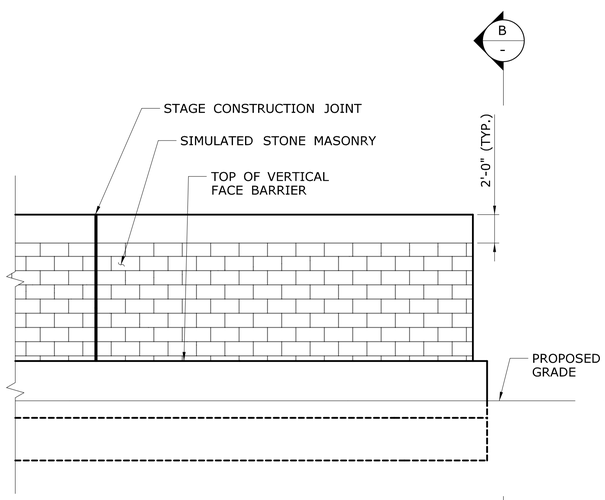

PIER ELEVATION

SCALE: N.T.S.

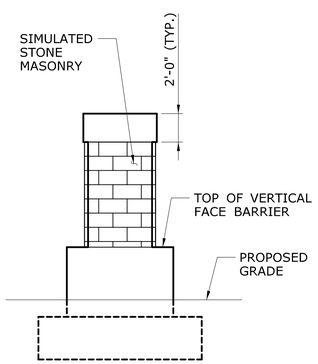

B - VIEW - END OF PIER

N.T.S.

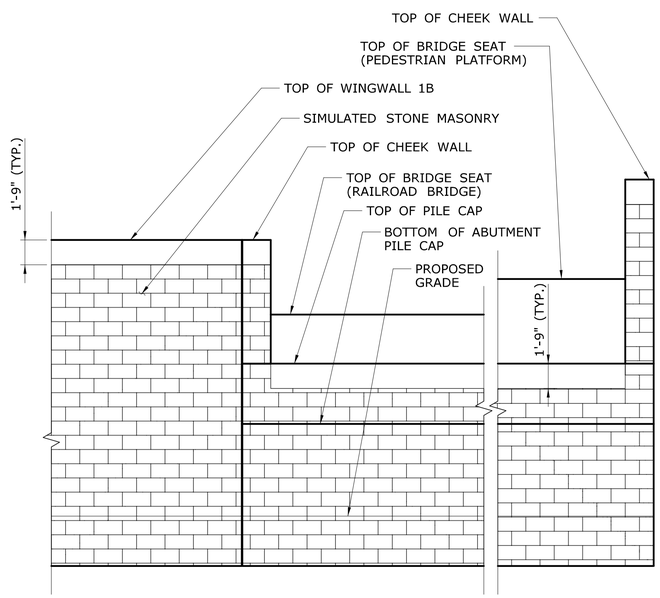

ABUTMENT 1 ELEVATION (ABUTMENT 2 SIMILAR)

SCALE: N.T.S.

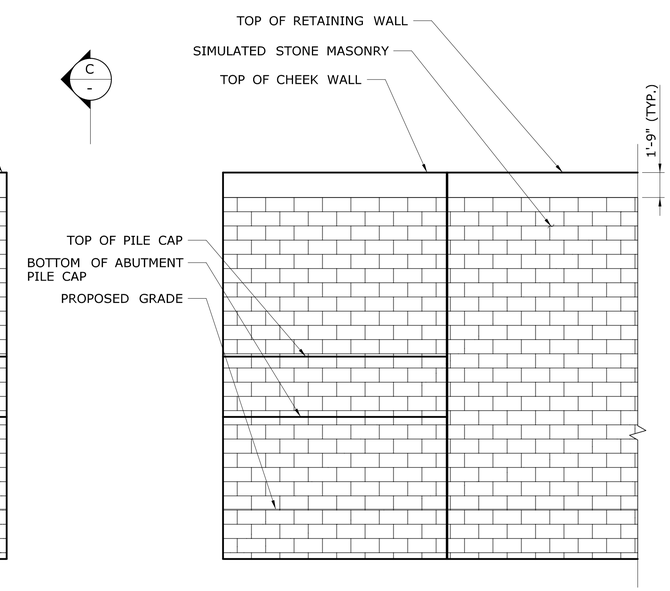

C - VIEW - CHEEK WALL ELEVATION

N.T.S.

FINAL PLANS FOR REVIEW

REV.	DATE	REVISION DESCRIPTION	SHEET NO.
-	-	-	-
-	-	-	-
-	-	-	-
-	-	-	-
-	-	-	-
-	-	-	-

THE INFORMATION, INCLUDING ESTIMATED QUANTITIES OF WORK, SHOWN ON THESE SHEETS IS BASED ON LIMITED INVESTIGATIONS BY THE STATE AND IS IN NO WAY WARRANTED TO INDICATE THE CONDITIONS OF ACTUAL QUANTITIES OF WORK WHICH WILL BE REQUIRED.

Plotted Date: 3/28/2016

DESIGNER/DRAFTER: K. BARKER

CHECKED BY: D. COSTELLO

SCALE AS NOTED

STATE OF CONNECTICUT
DEPARTMENT OF TRANSPORTATION

Filename: ...\SB_MSH_Br08012R_0135_0301_ARC.dgn

SIGNATURE/ BLOCK:

PROJECT TITLE: REPLACEMENT OF MNRR BRIDGE OVER ATLANTIC STREET PHASE 2

TOWN: STAMFORD

DRAWING TITLE: BRIDGE ARCHITECTURAL DETAILS

PROJECT NO. 135-301

DRAWING NO. S-48

SHEET NO. 01.05.048

3/28/2016
P:\Projects\ConnDot\36938292\500 CADD-GIS-Graphics\510 CADD\510.04 Struc. Bridge\MSta. Contract. Sheet. Files\SB_MSH_Br08012R_0135_0301_ARC.dgn

Border Version: 11/14/08

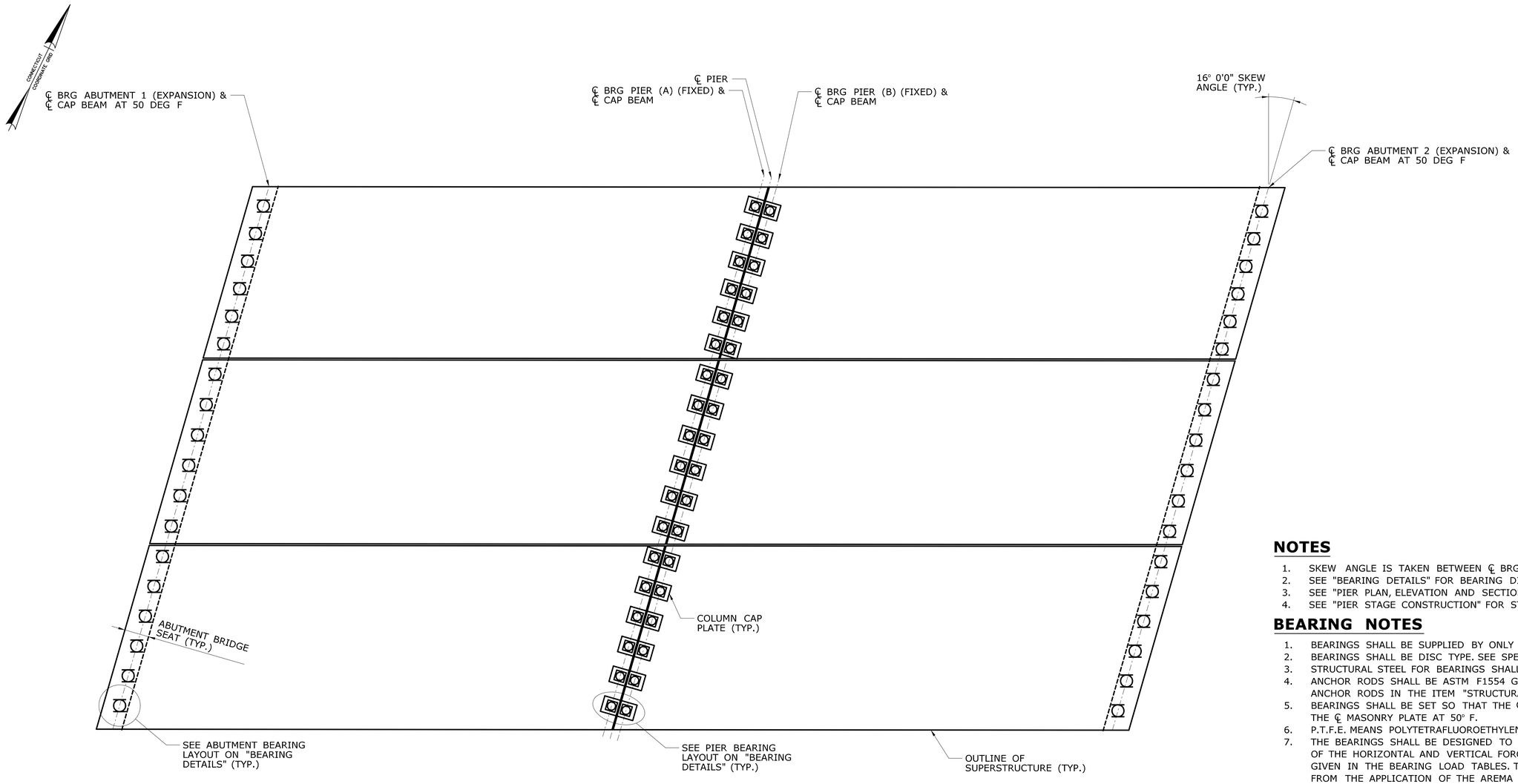

BEARING LAYOUT

SCALE: 1/8" = 1'-0"

LEGEND

FIXED BEARING

LONGITUDINAL GUIDED BEARING

NOTES

1. SKEW ANGLE IS TAKEN BETWEEN ℄ BRG AND SUPERSTRUCTURE.
2. SEE "BEARING DETAILS" FOR BEARING DIMENSIONS.
3. SEE "PIER PLAN, ELEVATION AND SECTION" FOR PIER COLUMN SPACING.
4. SEE "PIER STAGE CONSTRUCTION" FOR STAGING TO CONSTRUCT BRIDGE PIER.

BEARING NOTES

1. BEARINGS SHALL BE SUPPLIED BY ONLY ONE MANUFACTURER.
2. BEARINGS SHALL BE DISC TYPE. SEE SPECIAL PROVISIONS.
3. STRUCTURAL STEEL FOR BEARINGS SHALL BE AASHTO M270 GRADE 50.
4. ANCHOR RODS SHALL BE ASTM F1554 GRADE 55. THE COST OF ANCHOR RODS IN THE ITEM "STRUCTURAL STEEL (SITE NO. 1)".
5. BEARINGS SHALL BE SET SO THAT THE ℄ SOLE PLATE IS COINCIDENT WITH THE ℄ MASONRY PLATE AT 50° F.
6. P.T.F.E. MEANS POLYTETRAFLUOROETHYLENE.
7. THE BEARINGS SHALL BE DESIGNED TO CARRY THE SIMULTANEOUS APPLICATION OF THE HORIZONTAL AND VERTICAL FORCES, AS WELL AS THE MOVEMENTS, GIVEN IN THE BEARING LOAD TABLES. THESE LOADS ARE THE GOVERNING LOADS FROM THE APPLICATION OF THE AREMA MANUAL.
8. THE MASONRY PLATES AND SOLE PLATES SHALL BE FURNISHED BY THE BEARING MANUFACTURER. THE COST OF THESE PLATES SHALL BE INCLUDED IN THE COST OF THE ITEM "DISC BEARINGS (600 KIP)".
9. BEARINGS SHALL BE DESIGNED TO BE EASILY REPLACEABLE WITH A MAXIMUM OF 1/2" OF JACKING.
10. BEARING ASSEMBLIES SHOWN ARE BASED ON PRELIMINARY DESIGN OF "VERSIFLEX HLMR" BEARINGS BY D.S. BROWN. THE CONTRACTOR, AT HIS OPTION, MAY CHOOSE A DIFFERENT APPROVED BEARING MANUFACTURER.
11. FINAL BEARING DESIGN, INCLUDING DESIGN OF THE SOLE PLATE, AUXILIARY PLATE AND MASONRY PLATE SHALL BE THE SOLE RESPONSIBILITY OF THE CONTRACTOR AND MAY RESULT IN DIMENSIONS AND DETAILS DIFFERENT FROM THOSE SHOWN. SHOULD THE FINAL BEARING HEIGHTS BE DIFFERENT THAN THOSE SHOWN, THE CONCRETE PEDESTAL ELEVATIONS, ABUTMENT SEAT ELEVATIONS, AND/OR PIER CAP ELEVATIONS WILL REQUIRE ADJUSTMENT.
12. BEARING WELDS SHALL BE INSPECTED BY THE MAGNETIC PARTICLE METHOD AS FOLLOWS: FOR WELDS LONGER THAN 3', INSPECT AT LEAST 1' OF EVERY 3' IN LENGTH. FOR WELDS SHORTER THAN 1', INSPECT THE ENTIRE LENGTH OF WELD. FOR WELDS BETWEEN 1' AND 3', INSPECT ONE 1' LENGTH OF WELD.

FINAL PLANS FOR REVIEW

REV.	DATE	REVISION DESCRIPTION	SHEET NO.
-	-	-	-
-	-	-	-
-	-	-	-
-	-	-	-
-	-	-	-
-	-	-	-

THE INFORMATION, INCLUDING ESTIMATED QUANTITIES OF WORK, SHOWN ON THESE SHEETS IS BASED ON LIMITED INVESTIGATIONS BY THE STATE AND IS IN NO WAY WARRANTED TO INDICATE THE CONDITIONS OF ACTUAL QUANTITIES OF WORK WHICH WILL BE REQUIRED.

Plotted Date: 3/28/2016

DESIGNER/DRAFTER: K. BARKER

CHECKED BY: D. COSTELLO

SCALE AS NOTED

STATE OF CONNECTICUT
DEPARTMENT OF TRANSPORTATION

Filename: ...\SB_MSH_Br08012R_0135_0301_BRG-1.dgn

SIGNATURE/
BLOCK:

PROJECT TITLE:
REPLACEMENT OF MNRR BRIDGE
OVER ATLANTIC STREET
PHASE 2

TOWN: STAMFORD

DRAWING TITLE: BEARING LAYOUT

PROJECT NO. 135-301

DRAWING NO. S-49

SHEET NO. 01.05.049

3/28/2016
P:\Projects\ConnDot\36938292\500 CADD-GIS-Graphics\510 CADD\510.04 Struc. Bridge\MSta. Contract. Sheet. Files\SB_MSH_Br08012R_0135_0301_BRG-1.dgn

Border Version: 11/14/08

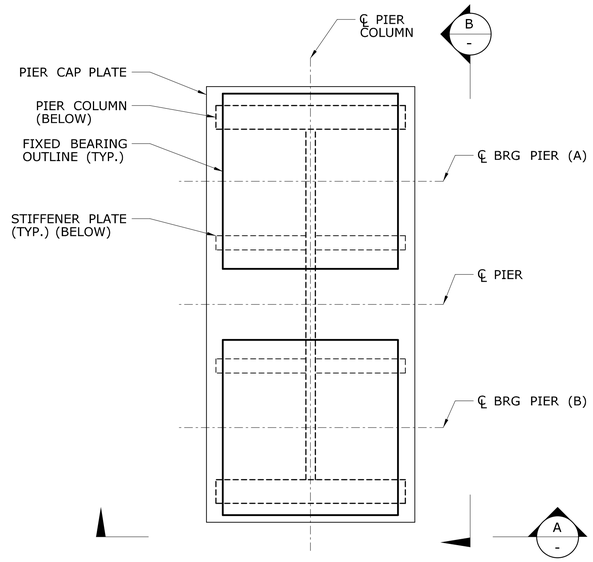

PIER BEARING LAYOUT

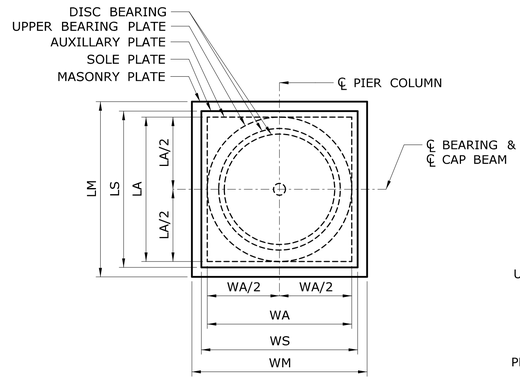

BEARING PLATE LAYOUT

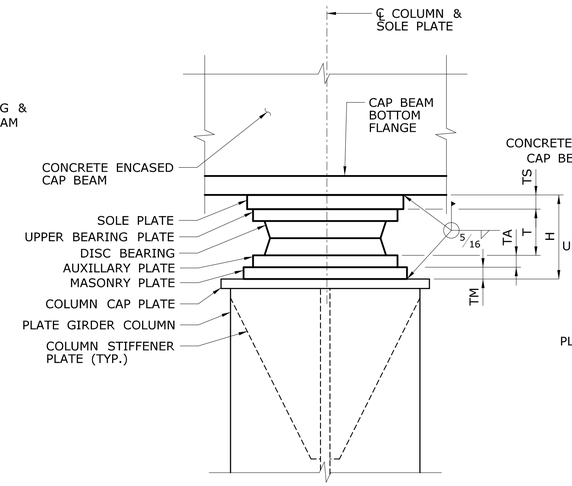

A - VIEW

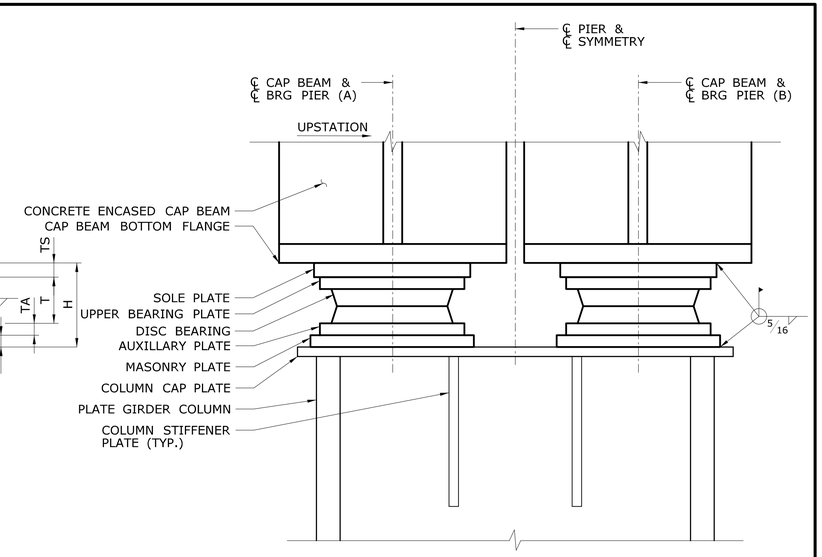

B - VIEW

FIXED BEARINGS (F)

SCALE: 1½' = 1'-0"

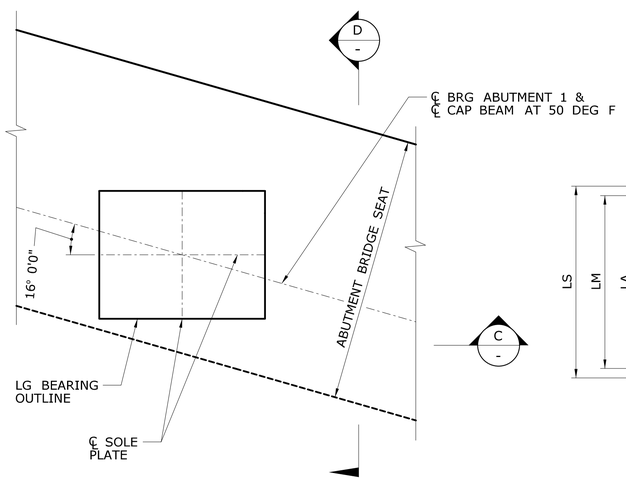

ABUTMENT BEARING LAYOUT

(ABUTMENT 1 SHOWN, ABUTMENT 2 SIMILAR)

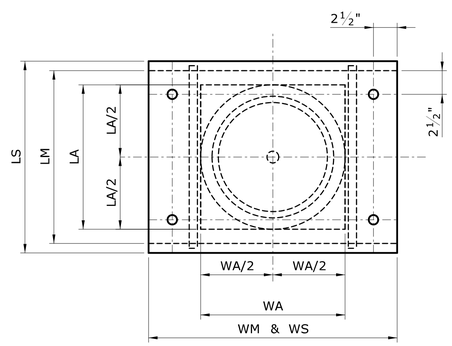

BEARING PLATE LAYOUT

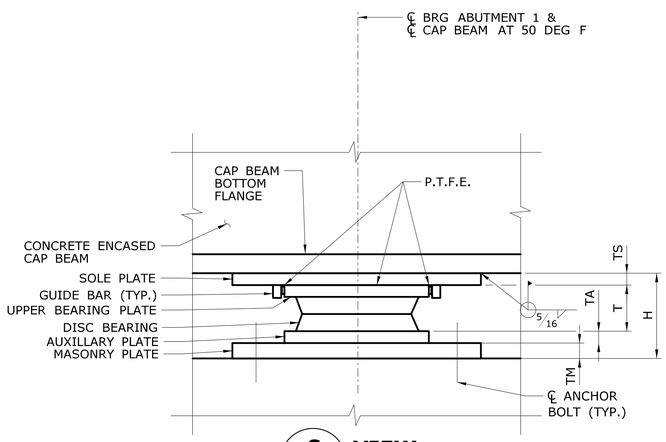

C - VIEW

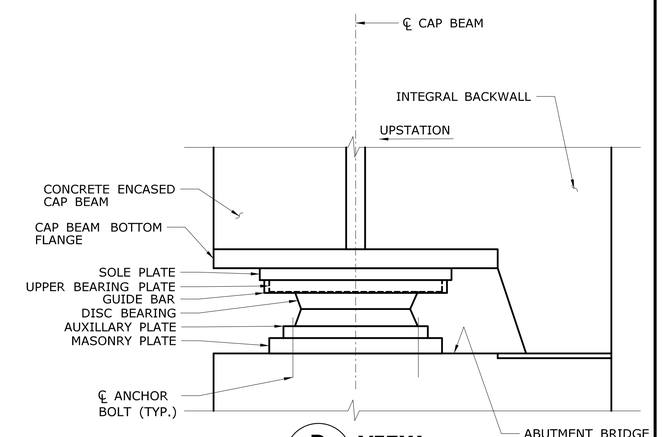

D - VIEW

LONGITUDINALLY GUIDED EXPANSION BEARINGS (LG)

SCALE: 1½' = 1'-0"

BEARING DATA

BEARING TYPE	SERVICE (KIP)			STRENGTH (KIP)			MAX. MOVEMENT (IN)	MAX. LL ROTATION (RAD)	H (IN)	T (IN)	MASONRY PLATE (IN)			AUXILIARY PLATE (IN)			SOLE PLATE (IN)			ANCHOR BOLTS		QUANTITY
	DL	LL+1	TOTAL	DL	LL+1	TOTAL					WM	LM	TM	WA	LA	TA	WS	LS	TS	DIA (IN)	N	
F	XXX	XXX	XXX	XXX	XXX	XXX	0.00	XXX	9.00	3.250	18.50	18.50	3.250	3.250	15.25	1.25	16.50	16.50	1.25	N/A	0	36
LG	XXX	XXX	XXX	XXX	XXX	XXX	0.44	XXX	9.00	4.875	26.25	18.50	1.625	1.625	15.25	1.25	26.25	20.25	1.25	1.00	4	36

BEARING SETTING CHART

LONGITUDINAL MOVEMENTS (IN) AT BEARINGS DUE TO TEMPERATURE CHANGE FROM 50° F

	±15	±30	±45	±60	±75
℄ BRG ABUT 1 & 2	0.08	0.16	0.25	0.33	0.41
℄ BRG PIER (A) & (B)	0.00	0.00	0.00	0.00	0.00

FINAL PLANS FOR REVIEW

REV.	DATE	REVISION DESCRIPTION	SHEET NO.
-	-	-	-
-	-	-	-
-	-	-	-
-	-	-	-
-	-	-	-
-	-	-	-

THE INFORMATION, INCLUDING ESTIMATED QUANTITIES OF WORK, SHOWN ON THESE SHEETS IS BASED ON LIMITED INVESTIGATIONS BY THE STATE AND IS IN NO WAY WARRANTED TO INDICATE THE CONDITIONS OF ACTUAL QUANTITIES OF WORK WHICH WILL BE REQUIRED.

Plotted Date: 3/28/2016

DESIGNER/DRAFTER: K. BARKER
CHECKED BY: D. COSTELLO
SCALE AS NOTED

STATE OF CONNECTICUT
DEPARTMENT OF TRANSPORTATION

Filename: ...\SB_MSH_Br08012R_0135_0301_BRG-2.dgn

SIGNATURE/ BLOCK:

PROJECT TITLE: REPLACEMENT OF MNRR BRIDGE OVER ATLANTIC STREET PHASE 2

TOWN: STAMFORD

DRAWING TITLE: BEARING DETAILS

PROJECT NO. 135-301
DRAWING NO. S-50
SHEET NO. 01.05.050

3/28/2016
P:\Projects\ConnDot\36938292\500 CADD-GIS-Graphics\510 CADD\510.04 Struc.Bridge\WSta.Contract.Sheet.Files\SB.MSH.Br08012R.0135.0301.BRG-2.dgn

Border Version: 11/14/08

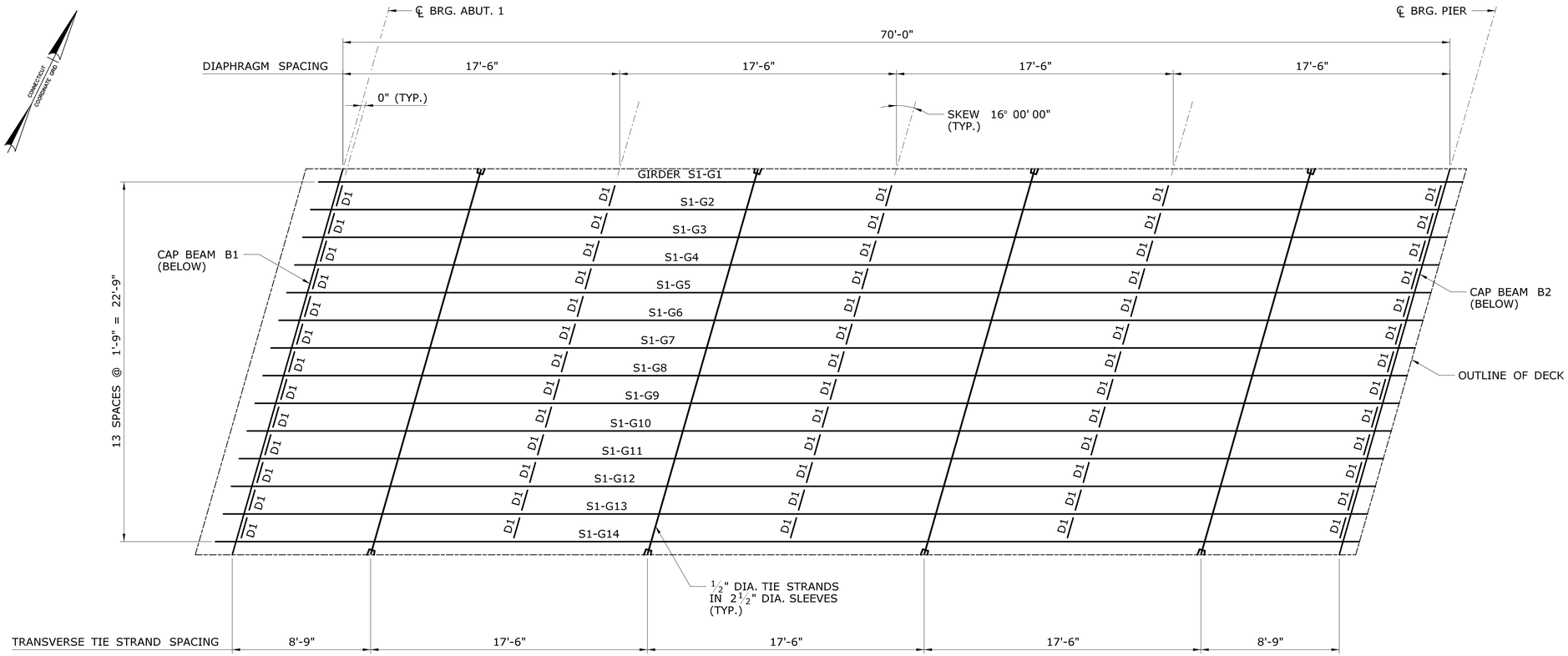

FRAMING PLAN
TRACKS 5 & 7, SPAN 1

SCALE: 1/4" = 1'-0"

NOTES

1. ALL DIMENSIONS ARE HORIZONTAL.
2. FOR STRUCTURAL STEEL NOTES, SEE DRAWING "GENERAL NOTES".
3. FOR STRUCTURAL STEEL DETAILS, SEE DRAWINGS "GIRDER & DIAPHRAGM DETAILS" AND "CAP BEAM DETAILS".

FINAL PLANS FOR REVIEW

REV.	DATE	REVISION DESCRIPTION	SHEET NO.
-	-	-	-
-	-	-	-
-	-	-	-
-	-	-	-
-	-	-	-
-	-	-	-

THE INFORMATION, INCLUDING ESTIMATED QUANTITIES OF WORK, SHOWN ON THESE SHEETS IS BASED ON LIMITED INVESTIGATIONS BY THE STATE AND IS IN NO WAY WARRANTED TO INDICATE THE CONDITIONS OF ACTUAL QUANTITIES OF WORK WHICH WILL BE REQUIRED.

Plotted Date: 3/28/2016

DESIGNER/DRAFTER: J. IVES
CHECKED BY: D. COSTELLO
SCALE AS NOTED

STATE OF CONNECTICUT
DEPARTMENT OF TRANSPORTATION

Filename: ...\SB_MSH_Br08012R_0135_0301_FRM-1.dgn

SIGNATURE/ BLOCK:

PROJECT TITLE: REPLACEMENT OF MNRR BRIDGE OVER ATLANTIC STREET PHASE 2

TOWN: STAMFORD

DRAWING TITLE: FRAMING PLAN 1 TRACKS 5 & 7, SPAN 1

PROJECT NO. 135-301
DRAWING NO. S-51
SHEET NO. 01.05.051

3/28/2016
P:\Projects\ConnDot\36938292\500 CADD-GIS-Graphics\510 CADD\510.04 Struc.Bridge\WSta.Contract.Sheet.Files\SB_MSH_Br08012R_0135_0301_FRM-1.dgn

Border Version: 11/14/08

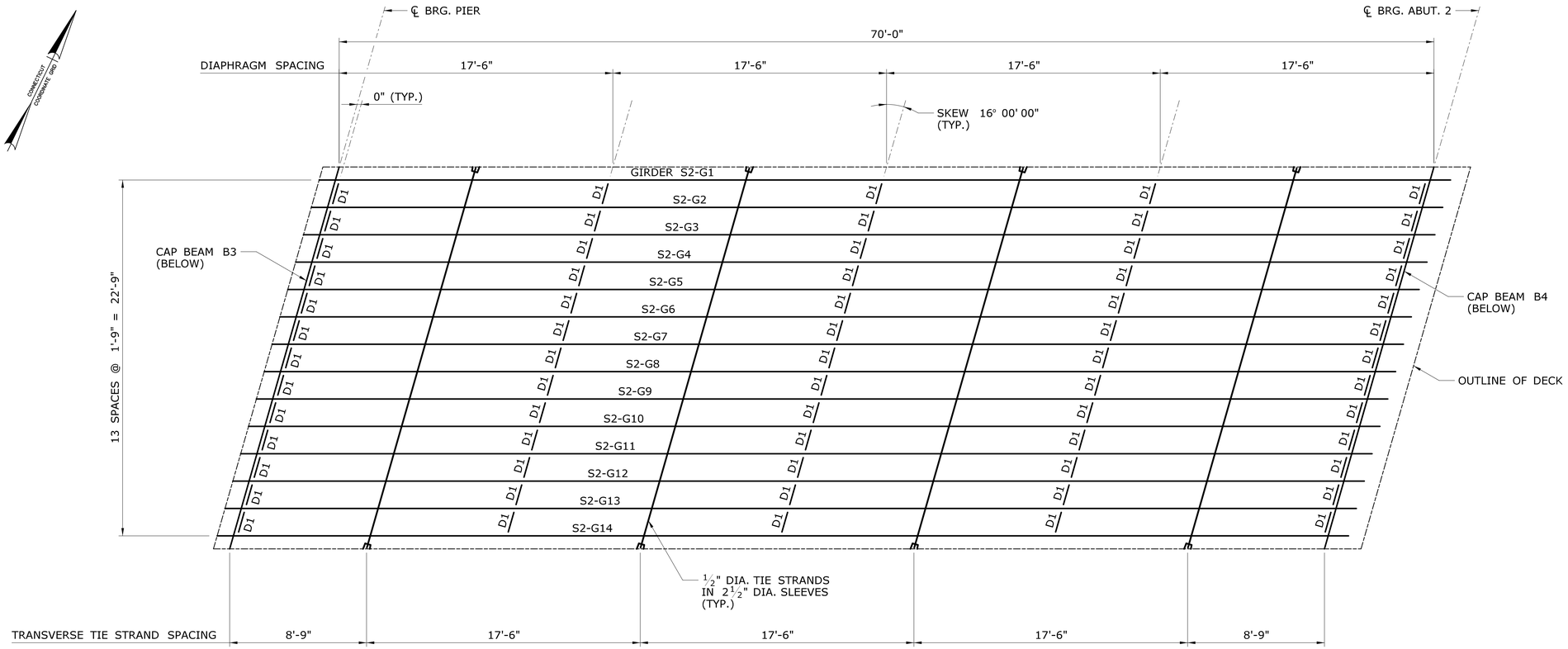

FRAMING PLAN
TRACKS 5 & 7, SPAN 2

SCALE: 1/4" = 1'-0"

NOTES

1. ALL DIMENSIONS ARE HORIZONTAL.
2. FOR STRUCTURAL STEEL NOTES, SEE DRAWING "GENERAL NOTES".
3. FOR STRUCTURAL STEEL DETAILS, SEE DRAWINGS "GIRDER & DIAPHRAGM DETAILS" AND "CAP BEAM DETAILS".

FINAL PLANS FOR REVIEW

REV.	DATE	REVISION DESCRIPTION	SHEET NO.
-	-	-	-
-	-	-	-
-	-	-	-
-	-	-	-
-	-	-	-
-	-	-	-

THE INFORMATION, INCLUDING ESTIMATED QUANTITIES OF WORK, SHOWN ON THESE SHEETS IS BASED ON LIMITED INVESTIGATIONS BY THE STATE AND IS IN NO WAY WARRANTED TO INDICATE THE CONDITIONS OF ACTUAL QUANTITIES OF WORK WHICH WILL BE REQUIRED.

Plotted Date: 3/28/2016

DESIGNER/DRAFTER: J. IVES
CHECKED BY: D. COSTELLO
SCALE AS NOTED

STATE OF CONNECTICUT
DEPARTMENT OF TRANSPORTATION

Filename: ...\SB_MSH_Br08012R_0135_0301_FRM-2.dgn

SIGNATURE/ BLOCK:

PROJECT TITLE:
REPLACEMENT OF MNRR BRIDGE OVER ATLANTIC STREET PHASE 2

TOWN: **STAMFORD**

DRAWING TITLE: **FRAMING PLAN 2 TRACKS 5 & 7, SPAN 2**

PROJECT NO. **135-301**
DRAWING NO. **S-52**
SHEET NO. **01.05.052**

3/28/2016
P:\Projects\ConnDot\36938292\500 CADD-GIS-Graphics\510 CADD\510.04 Struc.Bridge\WSta.Contract.Sheet.Files\SB_MSH_Br08012R_0135_0301_FRM-2.dgn

Border Version: 11/14/08

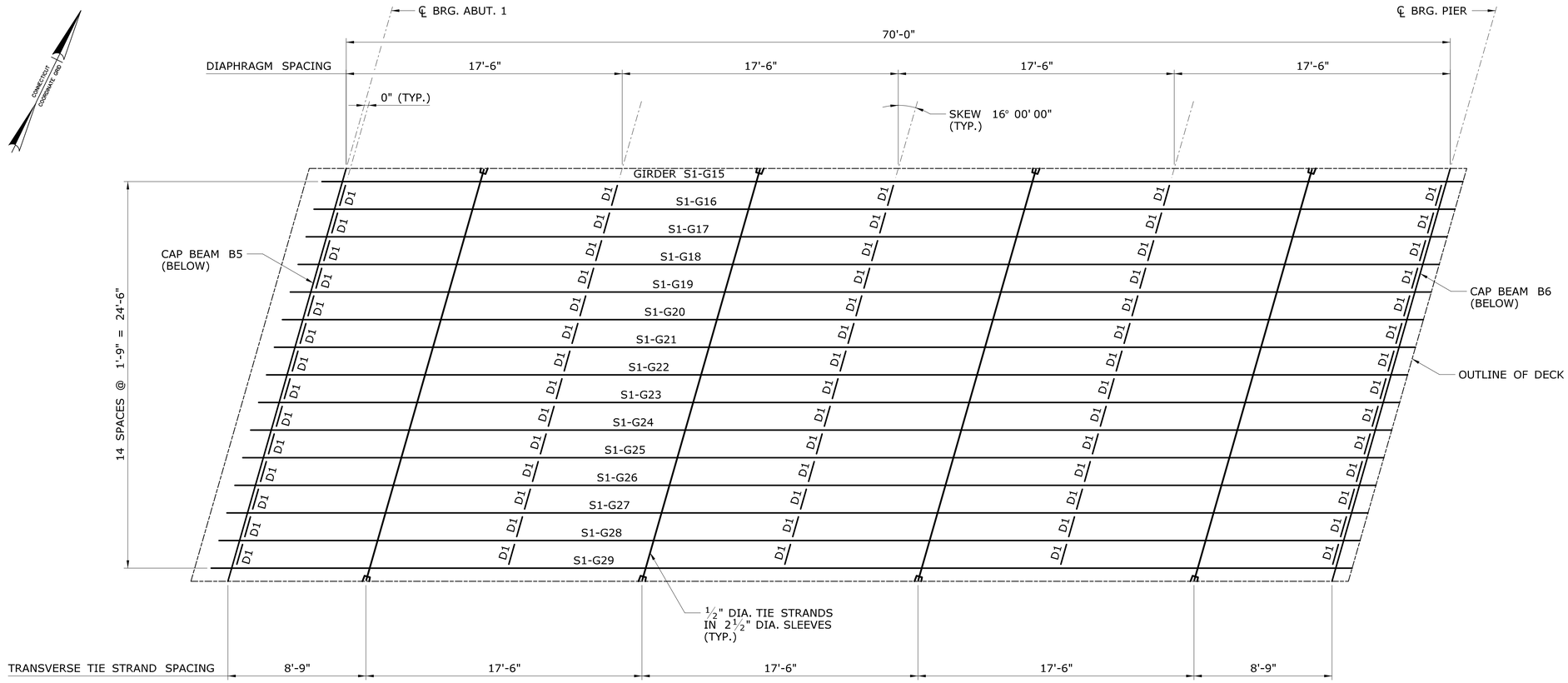

FRAMING PLAN
TRACKS 1 & 3, SPAN 1

SCALE: 1/4" = 1'-0"

NOTES

1. ALL DIMENSIONS ARE HORIZONTAL.
2. FOR STRUCTURAL STEEL NOTES, SEE DRAWING "GENERAL NOTES".
3. FOR STRUCTURAL STEEL DETAILS, SEE DRAWINGS "GIRDER & DIAPHRAGM DETAILS" AND "CAP BEAM DETAILS".

FINAL PLANS FOR REVIEW

REV.	DATE	REVISION DESCRIPTION	SHEET NO.
-	-	-	-
-	-	-	-
-	-	-	-
-	-	-	-
-	-	-	-
-	-	-	-

THE INFORMATION, INCLUDING ESTIMATED QUANTITIES OF WORK, SHOWN ON THESE SHEETS IS BASED ON LIMITED INVESTIGATIONS BY THE STATE AND IS IN NO WAY WARRANTED TO INDICATE THE CONDITIONS OF ACTUAL QUANTITIES OF WORK WHICH WILL BE REQUIRED.

Plotted Date: 3/28/2016

DESIGNER/DRAFTER: J. IVES
CHECKED BY: D. COSTELLO
SCALE AS NOTED

STATE OF CONNECTICUT
DEPARTMENT OF TRANSPORTATION

Filename: ...\SB.MSH.Br08012R.0135.0301.FRM-3.dgn

SIGNATURE/ BLOCK:

PROJECT TITLE:
REPLACEMENT OF MNRR BRIDGE OVER ATLANTIC STREET PHASE 2

TOWN: **STAMFORD**

DRAWING TITLE: **FRAMING PLAN 3 TRACKS 1 & 3, SPAN 1**

PROJECT NO. **135-301**
DRAWING NO. **S-53**
SHEET NO. **01.05.053**

3/28/2016
P:\Projects\ConnDot\36938292\500 CADD-GIS-Graphics\510 CADD\510.04 Struc. Bridge\MSta. Contract Sheet Files\SB.MSH.Br08012R.0135.0301.FRM-3.dgn

Border Version: 11/14/08

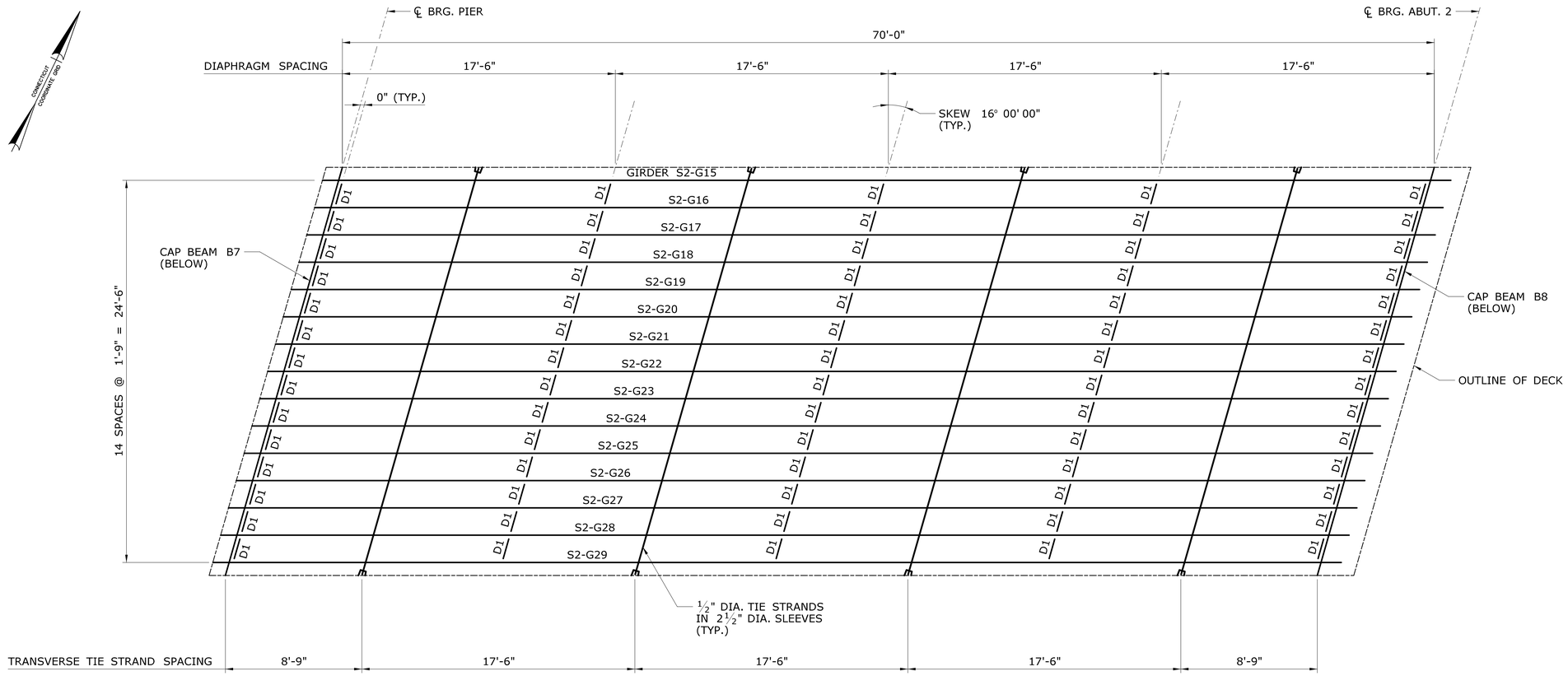

FRAMING PLAN
TRACKS 1 & 3, SPAN 2

SCALE: 1/4" = 1'-0"

NOTES

1. ALL DIMENSIONS ARE HORIZONTAL.
2. FOR STRUCTURAL STEEL NOTES, SEE DRAWING "GENERAL NOTES".
3. FOR STRUCTURAL STEEL DETAILS, SEE DRAWINGS "GIRDER & DIAPHRAGM DETAILS" AND "CAP BEAM DETAILS".

FINAL PLANS FOR REVIEW

REV.	DATE	REVISION DESCRIPTION	SHEET NO.
-	-	-	-
-	-	-	-
-	-	-	-
-	-	-	-
-	-	-	-
-	-	-	-

THE INFORMATION, INCLUDING ESTIMATED QUANTITIES OF WORK, SHOWN ON THESE SHEETS IS BASED ON LIMITED INVESTIGATIONS BY THE STATE AND IS IN NO WAY WARRANTED TO INDICATE THE CONDITIONS OF ACTUAL QUANTITIES OF WORK WHICH WILL BE REQUIRED.

Plotted Date: 3/28/2016

DESIGNER/DRAFTER: J. IVES
CHECKED BY: D. COSTELLO
SCALE AS NOTED

STATE OF CONNECTICUT
DEPARTMENT OF TRANSPORTATION

Filename: ...\SB_MSH_Br08012R_0135_0301_FRM-4.dgn

SIGNATURE/ BLOCK:

PROJECT TITLE:
REPLACEMENT OF MNRR BRIDGE OVER ATLANTIC STREET PHASE 2

TOWN: **STAMFORD**

DRAWING TITLE: **FRAMING PLAN 4 TRACKS 1 & 3, SPAN 2**

PROJECT NO. **135-301**
DRAWING NO. **S-54**
SHEET NO. **01.05.054**

3/28/2016
P:\Projects\ConnDot\36938292\500 CADD-GIS-Graphics\510 CADD\510.04 Struc. Bridge\MSta. Contract Sheet Files\SB_MSH_Br08012R_0135_0301_FRM-4.dgn

Border Version: 11/14/08

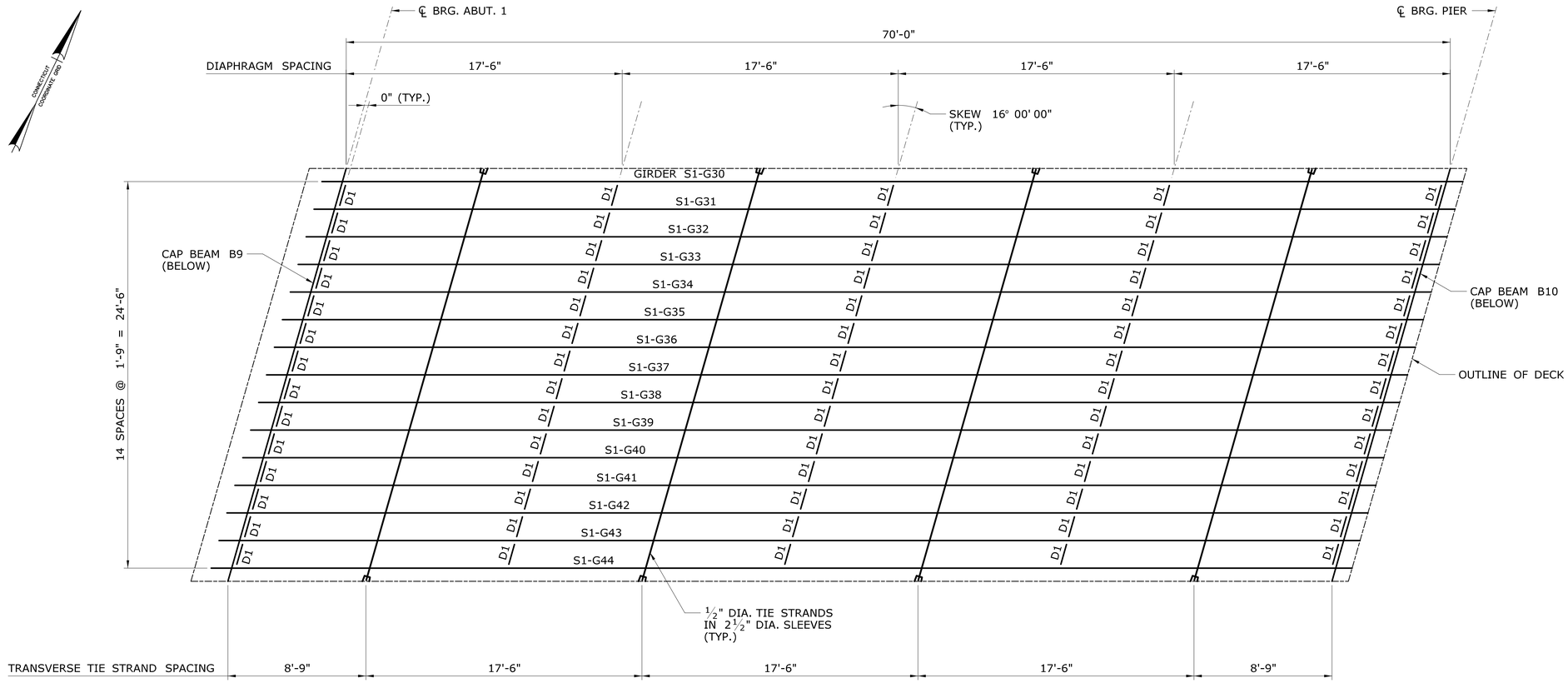

FRAMING PLAN
TRACKS 2 & 4, SPAN 1

SCALE: 1/4" = 1'-0"

NOTES

1. ALL DIMENSIONS ARE HORIZONTAL.
2. FOR STRUCTURAL STEEL NOTES, SEE DRAWING "GENERAL NOTES".
3. FOR STRUCTURAL STEEL DETAILS, SEE DRAWINGS "GIRDER & DIAPHRAGM DETAILS" AND "CAP BEAM DETAILS".

FINAL PLANS FOR REVIEW

REV.	DATE	REVISION DESCRIPTION	SHEET NO.
-	-	-	-
-	-	-	-
-	-	-	-
-	-	-	-
-	-	-	-
-	-	-	-

THE INFORMATION, INCLUDING ESTIMATED QUANTITIES OF WORK, SHOWN ON THESE SHEETS IS BASED ON LIMITED INVESTIGATIONS BY THE STATE AND IS IN NO WAY WARRANTED TO INDICATE THE CONDITIONS OF ACTUAL QUANTITIES OF WORK WHICH WILL BE REQUIRED.

Plotted Date: 3/28/2016

DESIGNER/DRAFTER: J. IVES
CHECKED BY: D. COSTELLO
SCALE AS NOTED

STATE OF CONNECTICUT
DEPARTMENT OF TRANSPORTATION

Filename: ...\SB_MSH_Br08012R_0135_0301_FRM-5.dgn

SIGNATURE/ BLOCK:

PROJECT TITLE:
REPLACEMENT OF MNRR BRIDGE OVER ATLANTIC STREET PHASE 2

TOWN: **STAMFORD**

DRAWING TITLE: **FRAMING PLAN 5 TRACKS 2 & 4, SPAN 1**

PROJECT NO. **135-301**
DRAWING NO. **S-55**
SHEET NO. **01.05.055**

3/28/2016
P:\Projects\CommDot\36938292\500 CADD-GIS-Graphics\510 CADD\510.04 Struc. Bridge\MSta. Contract Sheet Files\SB_MSH_Br08012R_0135_0301_FRM-5.dgn

Border Version: 11/14/08

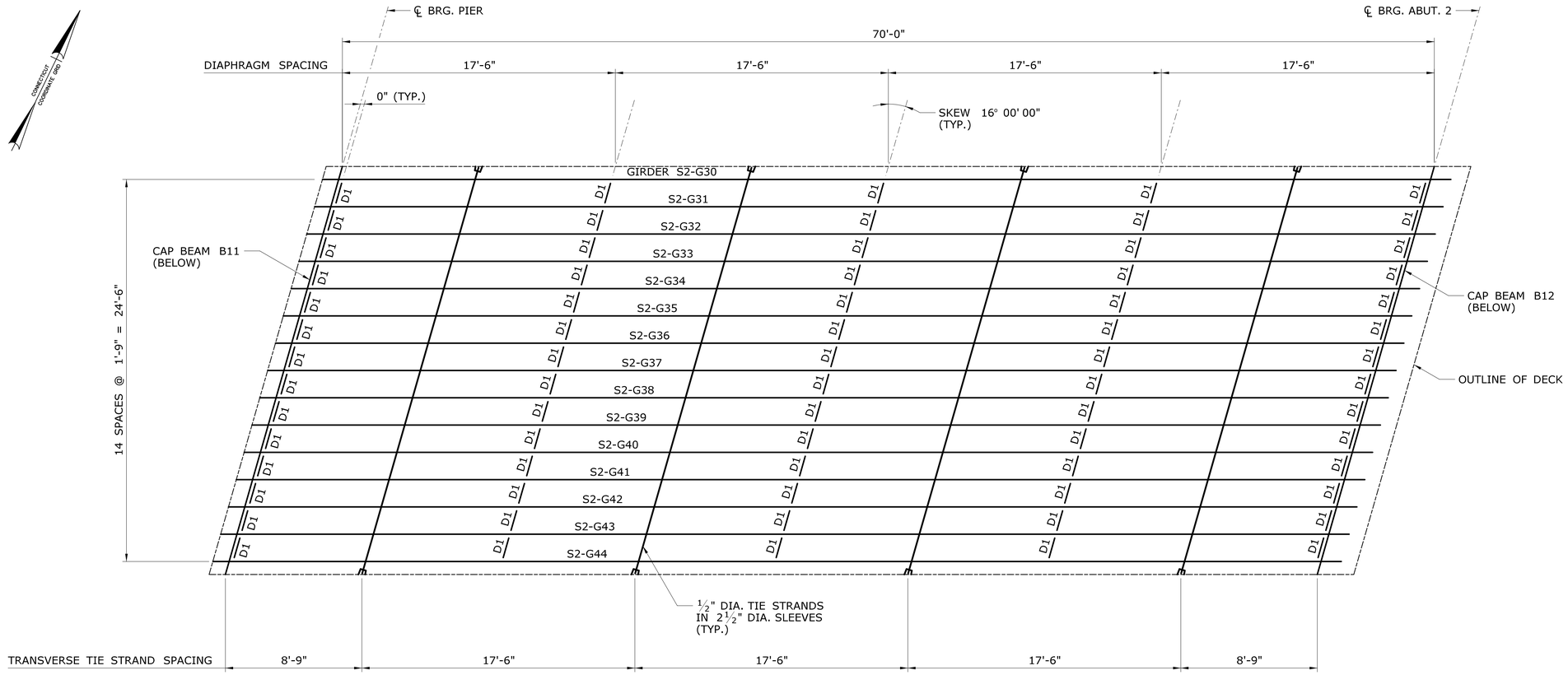

FRAMING PLAN
TRACKS 2 & 4, SPAN 2

SCALE: 1/4" = 1'-0"

NOTES

1. ALL DIMENSIONS ARE HORIZONTAL.
2. FOR STRUCTURAL STEEL NOTES, SEE DRAWING "GENERAL NOTES".
3. FOR STRUCTURAL STEEL DETAILS, SEE DRAWINGS "GIRDER & DIAPHRAGM DETAILS" AND "CAP BEAM DETAILS".

FINAL PLANS FOR REVIEW

REV.	DATE	REVISION DESCRIPTION	SHEET NO.
-	-	-	-
-	-	-	-
-	-	-	-
-	-	-	-
-	-	-	-
-	-	-	-

THE INFORMATION, INCLUDING ESTIMATED QUANTITIES OF WORK, SHOWN ON THESE SHEETS IS BASED ON LIMITED INVESTIGATIONS BY THE STATE AND IS IN NO WAY WARRANTED TO INDICATE THE CONDITIONS OF ACTUAL QUANTITIES OF WORK WHICH WILL BE REQUIRED.

Plotted Date: 3/28/2016

DESIGNER/DRAFTER: J. IVES
CHECKED BY: D. COSTELLO
SCALE AS NOTED

STATE OF CONNECTICUT
DEPARTMENT OF TRANSPORTATION

Filename: ...\SB_MSH_Br08012R_0135_0301_FRM-6.dgn

SIGNATURE/ BLOCK:

PROJECT TITLE:
REPLACEMENT OF MNRR BRIDGE OVER ATLANTIC STREET PHASE 2

TOWN: **STAMFORD**

DRAWING TITLE: **FRAMING PLAN 6 TRACKS 2 & 4, SPAN 2**

PROJECT NO. **135-301**
DRAWING NO. **S-56**
SHEET NO. **01.05.056**

3/28/2016
P:\Projects\ConnDot\36938292\500 CADD-GIS-Graphics\510 CADD\510.04 Struc. Bridge\MSta. Contract Sheet Files\SB_MSH_Br08012R_0135_0301_FRM-6.dgn

Border Version: 11/14/08

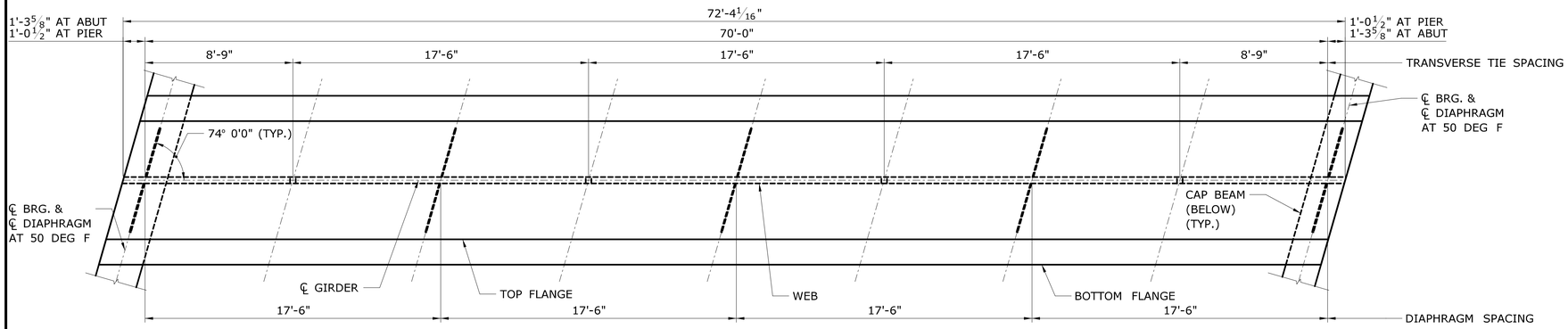

GIRDER PLAN

SCALE: N.T.S.

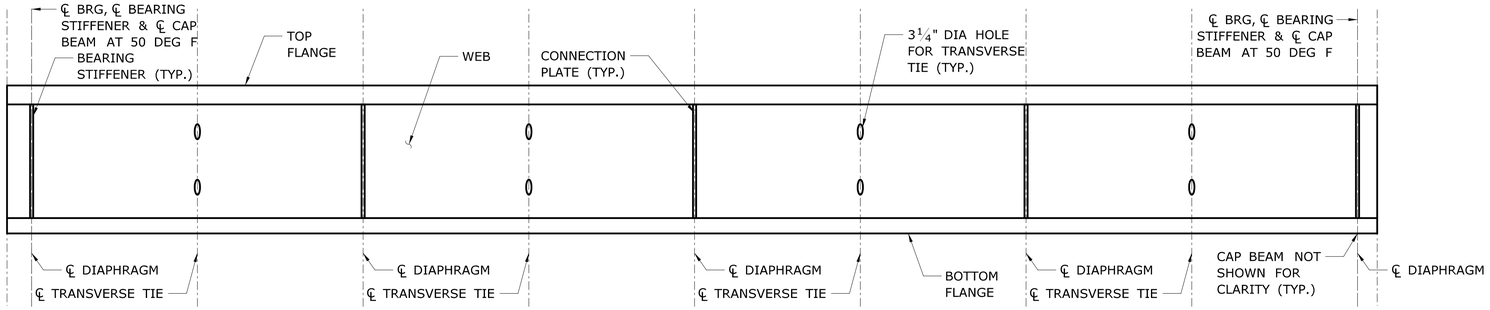

GIRDER ELEVATION (SKEW NOT SHOWN)

SCALE: N.T.S.

CAMBER TABLE

CAMBER AT MIDSPAN (IN)						
	STEEL	CONCRETE	SDL	TOTAL DL	EXTRA CAMBER	TOTAL
INTERIOR GIRDER	XXX	XXX	XXX	XXX	0.70	XXX
EXTERIOR GIRDER	XXX	XXX	XXX	XXX	0.70	XXX

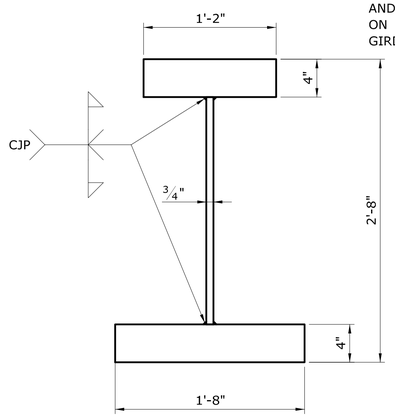

GIRDER TYPICAL SECTION

SCALE: 1 1/2" = 1'-0"

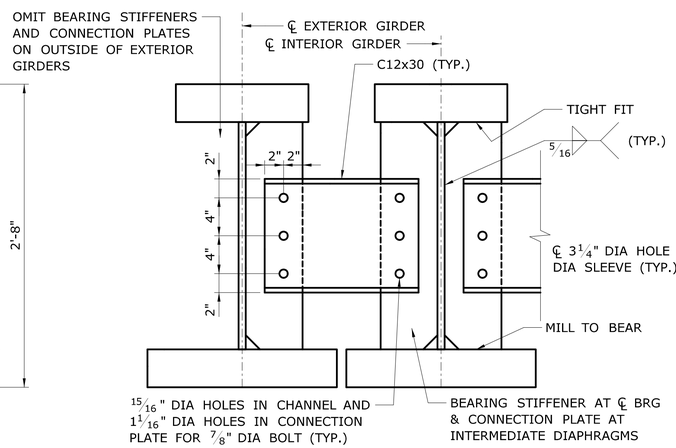

SECTION AT DIAPHRAGM

SCALE: 1 1/2" = 1'-0"

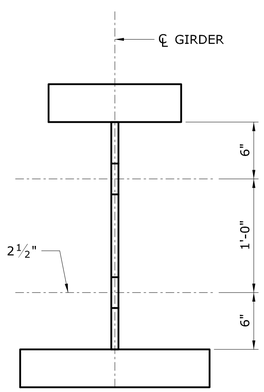

SECTION AT TRANSVERSE TIE

SCALE: 1 1/2" = 1'-0"

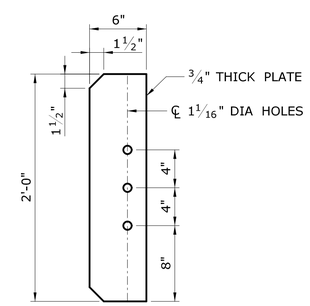

CONNECTION PLATE DETAIL

SCALE: 1 1/2" = 1'-0"

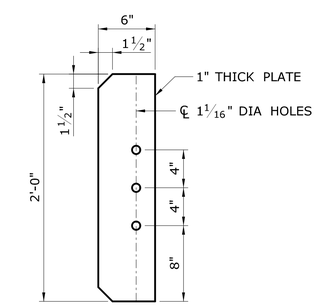

BEARING STIFFENER DETAIL

SCALE: 1 1/2" = 1'-0"

FINAL PLANS FOR REVIEW

REV.	DATE	REVISION DESCRIPTION	SHEET NO.
-	-	-	
-	-	-	-
-	-	-	-
-	-	-	-
-	-	-	-
-	-	-	-

THE INFORMATION, INCLUDING ESTIMATED QUANTITIES OF WORK, SHOWN ON THESE SHEETS IS BASED ON LIMITED INVESTIGATIONS BY THE STATE AND IS IN NO WAY WARRANTED TO INDICATE THE CONDITIONS OF ACTUAL QUANTITIES OF WORK WHICH WILL BE REQUIRED.

Plotted Date: 3/28/2016

DESIGNER/DRAFTER: J. IVES / K. BARKER
CHECKED BY: D. COSTELLO
SCALE AS NOTED

STATE OF CONNECTICUT
DEPARTMENT OF TRANSPORTATION

Filename: ...\SB_MSH_Br08012R_0135_0301_GDR.dgn

SIGNATURE/
BLOCK:

PROJECT TITLE:
REPLACEMENT OF MNRR BRIDGE OVER ATLANTIC STREET PHASE 2

TOWN: **STAMFORD**

DRAWING TITLE: **GIRDER & DIAPHRAGM DETAILS**

PROJECT NO. **135-301**
DRAWING NO. **S-57**
SHEET NO. **01.05.057**

3/28/2016
P:\Projects\ConnDot\36938292\500 CADD-GIS-Graphics\510 CADD\510.04 Struc.Bridge\MSta.Contract.Sheet.Files\SB.MSH.Br08012R.0135.0301.GDR.dgn

Border Version: 11/14/08

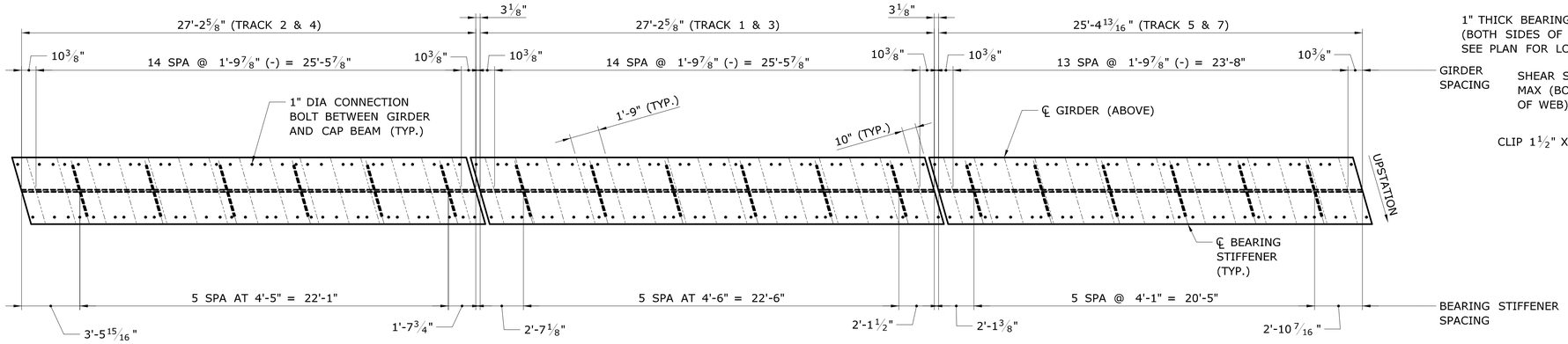

SPAN 1 CAP BEAM PLAN

SCALE: N.T.S.

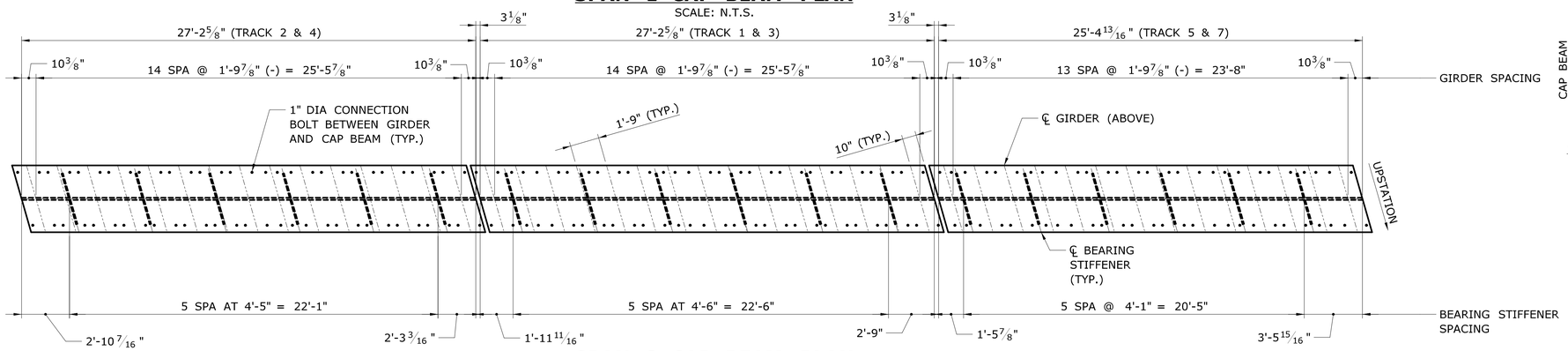

SPAN 2 CAP BEAM PLAN

SCALE: N.T.S.

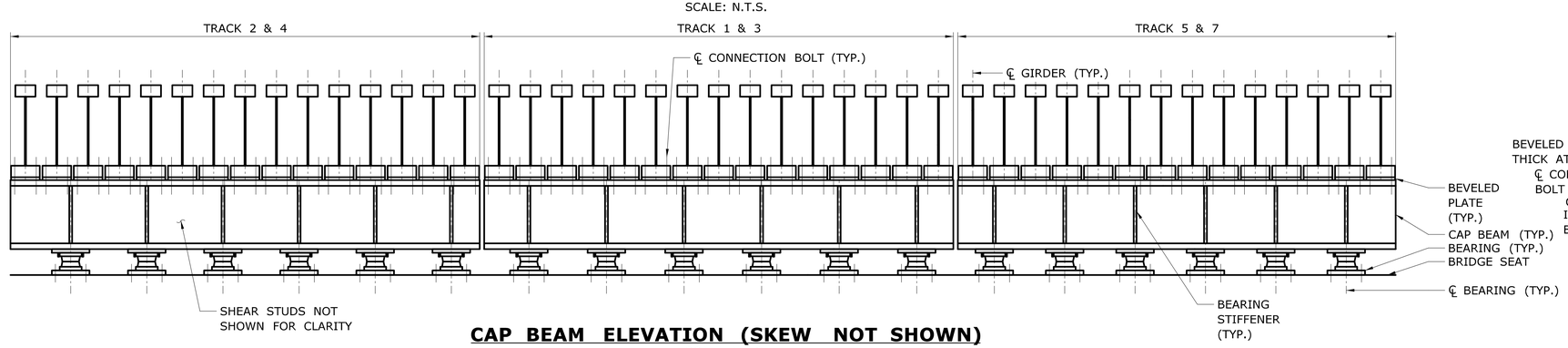

CAP BEAM ELEVATION (SKEW NOT SHOWN)

SCALE: N.T.S.

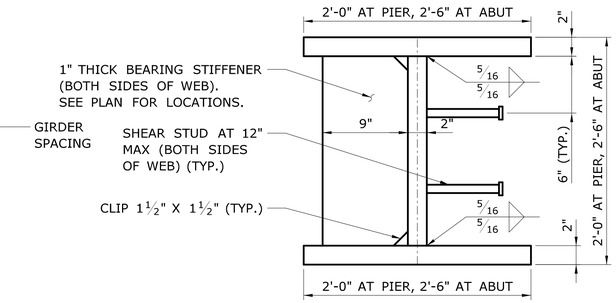

CAP BEAM SECTION

SCALE: 1 1/2" = 1'-0"

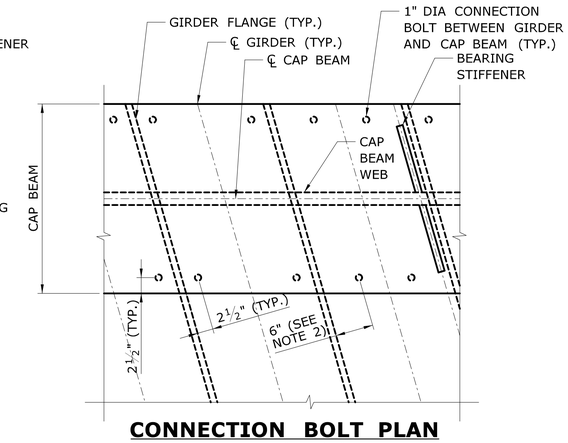

CONNECTION BOLT PLAN

SCALE: 1" = 1'-0"

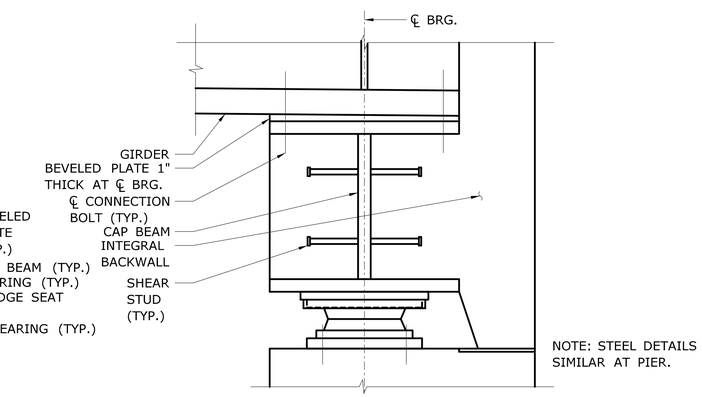

SECTION AT ABUTMENT

SCALE: 1" = 1'-0"

NOTES:

1. STEEL DETAILS SHOWN. CONCRETE ENCASEMENT NOT SHOWN FOR CLARITY. SEE "DECK DETAILS" FOR CONCRETE DETAILS AND REINFORCEMENT.
2. SHIFT CONNECTION BOLTS AS SHOWN TO AVOID BEARING STIFFENERS. SHIFT BOLTS AT GIRDER LINES 4, 7, 13, 16, 21, 26, 30, 35, 38 & 43 IN SPAN 1 AND GIRDER LINES 2, 5, 11, 14, 23, 28 & 36 IN SPAN 2.

FINAL PLANS FOR REVIEW

REV.	DATE	REVISION DESCRIPTION	SHEET NO.
-	-	-	
-	-	-	-
-	-	-	-
-	-	-	-
-	-	-	-
-	-	-	-

THE INFORMATION, INCLUDING ESTIMATED QUANTITIES OF WORK, SHOWN ON THESE SHEETS IS BASED ON LIMITED INVESTIGATIONS BY THE STATE AND IS IN NO WAY WARRANTED TO INDICATE THE CONDITIONS OF ACTUAL QUANTITIES OF WORK WHICH WILL BE REQUIRED.

Plotted Date: 3/28/2016

DESIGNER/DRAFTER: J. IVES / K. BARKER
CHECKED BY: D. COSTELLO
SCALE AS NOTED

STATE OF CONNECTICUT
DEPARTMENT OF TRANSPORTATION

Filename: ...\SB_MSH_Br08012R_0135_0301_CAP.dgn

SIGNATURE/ BLOCK:

PROJECT TITLE: REPLACEMENT OF MNRR BRIDGE OVER ATLANTIC STREET PHASE 2

TOWN: STAMFORD

DRAWING TITLE: CAP BEAM DETAILS

PROJECT NO. 135-301
DRAWING NO. S-58
SHEET NO. 01.05.058

3/28/2016
P:\Projects\CommDot\36938292\500 CADD-GIS-Graphics\510 CADD\510.04 Struc. Bridge\WSta. Contract Sheet Files\SB.MSH.Br08012R.0135.0301.CAP.dgn

Border Version: 11/14/08

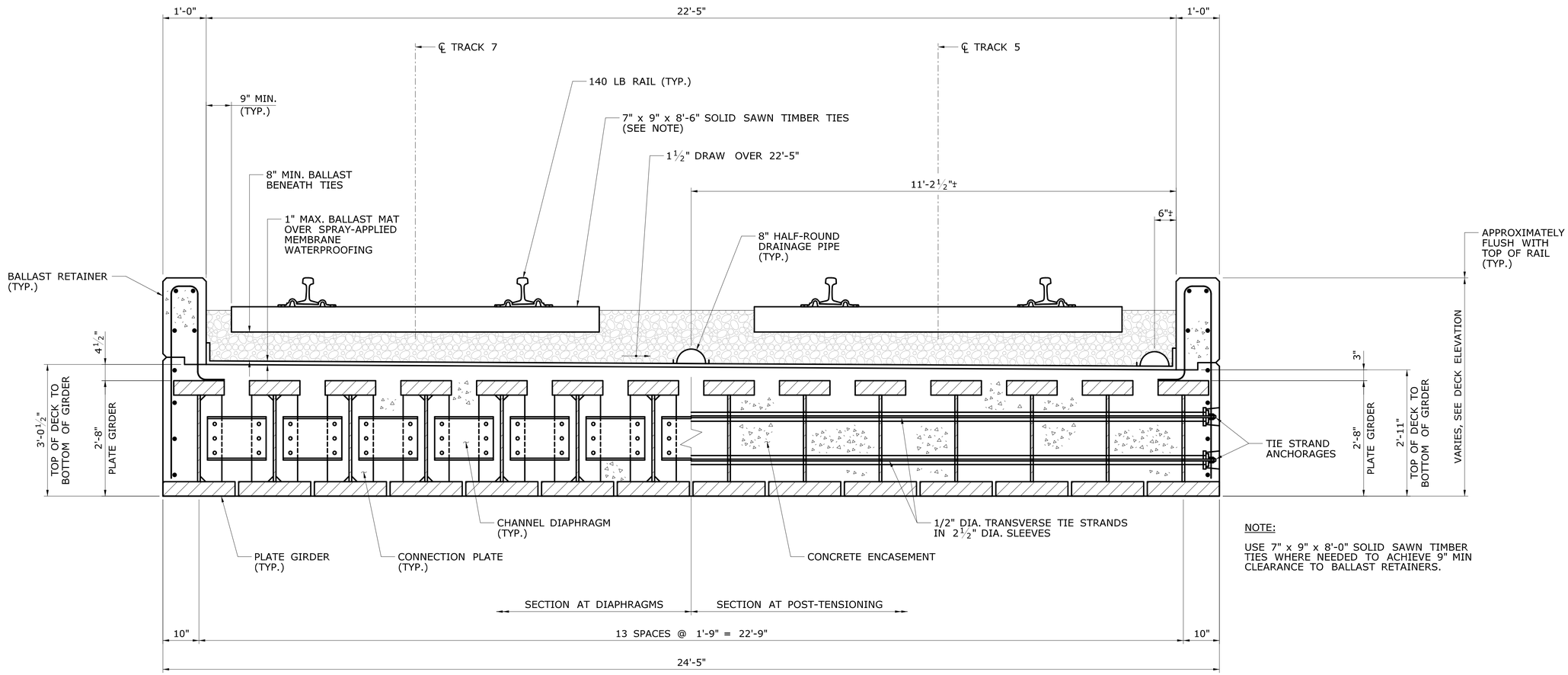

NOTE:

USE 7" x 9" x 8'-0" SOLID SAWN TIMBER TIES WHERE NEEDED TO ACHIEVE 9" MIN CLEARANCE TO BALLAST RETAINERS.

TYPICAL SECTION TRACKS 5 & 7

SCALE: 3/4" = 1'-0"

FINAL PLANS FOR REVIEW

REV.	DATE	REVISION DESCRIPTION	SHEET NO.
-	-	-	-
-	-	-	-
-	-	-	-
-	-	-	-
-	-	-	-
-	-	-	-

THE INFORMATION, INCLUDING ESTIMATED QUANTITIES OF WORK, SHOWN ON THESE SHEETS IS BASED ON LIMITED INVESTIGATIONS BY THE STATE AND IS IN NO WAY WARRANTED TO INDICATE THE CONDITIONS OF ACTUAL QUANTITIES OF WORK WHICH WILL BE REQUIRED.

Plotted Date: 3/28/2016

DESIGNER/DRAFTER: J. IVES

CHECKED BY: D. COSTELLO

SCALE AS NOTED

STATE OF CONNECTICUT
DEPARTMENT OF TRANSPORTATION

Filename: ...\SB..MSH..Br08012R..0135..0301..DECK-1.dgn

SIGNATURE/ BLOCK:

PROJECT TITLE: REPLACEMENT OF MNRR BRIDGE OVER ATLANTIC STREET PHASE 2

TOWN: STAMFORD

DRAWING TITLE: TYPICAL DECK SECTION TRACKS 5 & 7

PROJECT NO. 135-301

DRAWING NO. S-59

SHEET NO. 01.05.059

3/28/2016
P:\Projects\ConnDot\36938292\500 CADD-GIS-Graphics\510 CADD\510.04 Struc. Bridge\MSta. Contract. Sheet. Files\SB. MSH. Br08012R. 0135. 0301. DECK-1.dgn

Border Version: 11/14/08

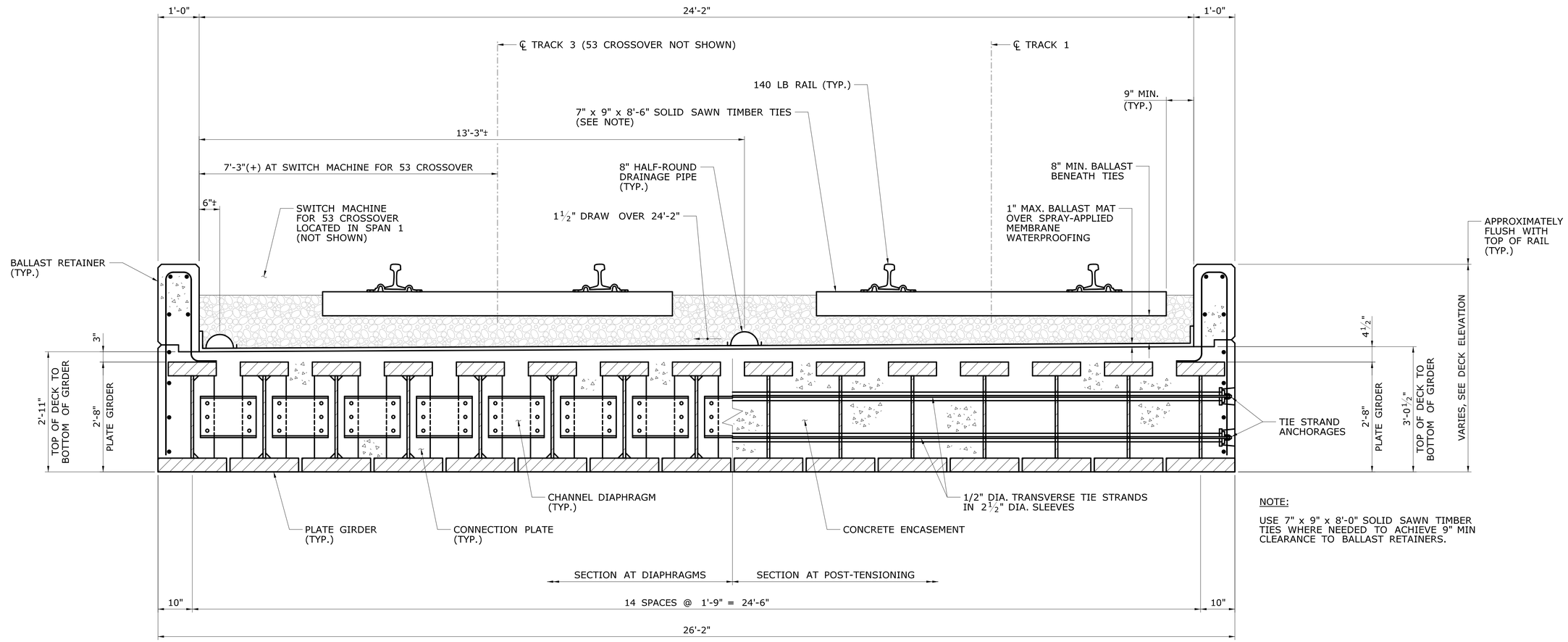

NOTE:

USE 7" x 9" x 8'-0" SOLID SAWN TIMBER TIES WHERE NEEDED TO ACHIEVE 9" MIN CLEARANCE TO BALLAST RETAINERS.

TYPICAL SECTION TRACKS 1 & 3

SCALE: 3/4" = 1'-0"

FINAL PLANS FOR REVIEW

REV.	DATE	REVISION DESCRIPTION	SHEET NO.
-	-	-	-
-	-	-	-
-	-	-	-
-	-	-	-
-	-	-	-
-	-	-	-

THE INFORMATION, INCLUDING ESTIMATED QUANTITIES OF WORK, SHOWN ON THESE SHEETS IS BASED ON LIMITED INVESTIGATIONS BY THE STATE AND IS IN NO WAY WARRANTED TO INDICATE THE CONDITIONS OF ACTUAL QUANTITIES OF WORK WHICH WILL BE REQUIRED.

Plotted Date: 3/28/2016

DESIGNER/DRAFTER: J. IVES

CHECKED BY: D. COSTELLO

SCALE AS NOTED

STATE OF CONNECTICUT
DEPARTMENT OF TRANSPORTATION

Filename: ...\SB_MSH_Br08012R_0135_0301_DECK-2.dgn

SIGNATURE/ BLOCK:

PROJECT TITLE: REPLACEMENT OF MNRR BRIDGE OVER ATLANTIC STREET PHASE 2

TOWN: STAMFORD

DRAWING TITLE: TYPICAL DECK SECTION TRACKS 1 & 3

PROJECT NO. 135-301

DRAWING NO. S-60

SHEET NO. 01.05.060

3/28/2016
P:\Projects\ConnDot\36938292\500 CADD-GIS-Graphics\510 CADD\510.04 Struc. Bridge\MSta. Contract. Sheet. Files\SB. MSH. Br08012R. 0135. 0301. DECK-2.dgn

Border Version: 11/14/08

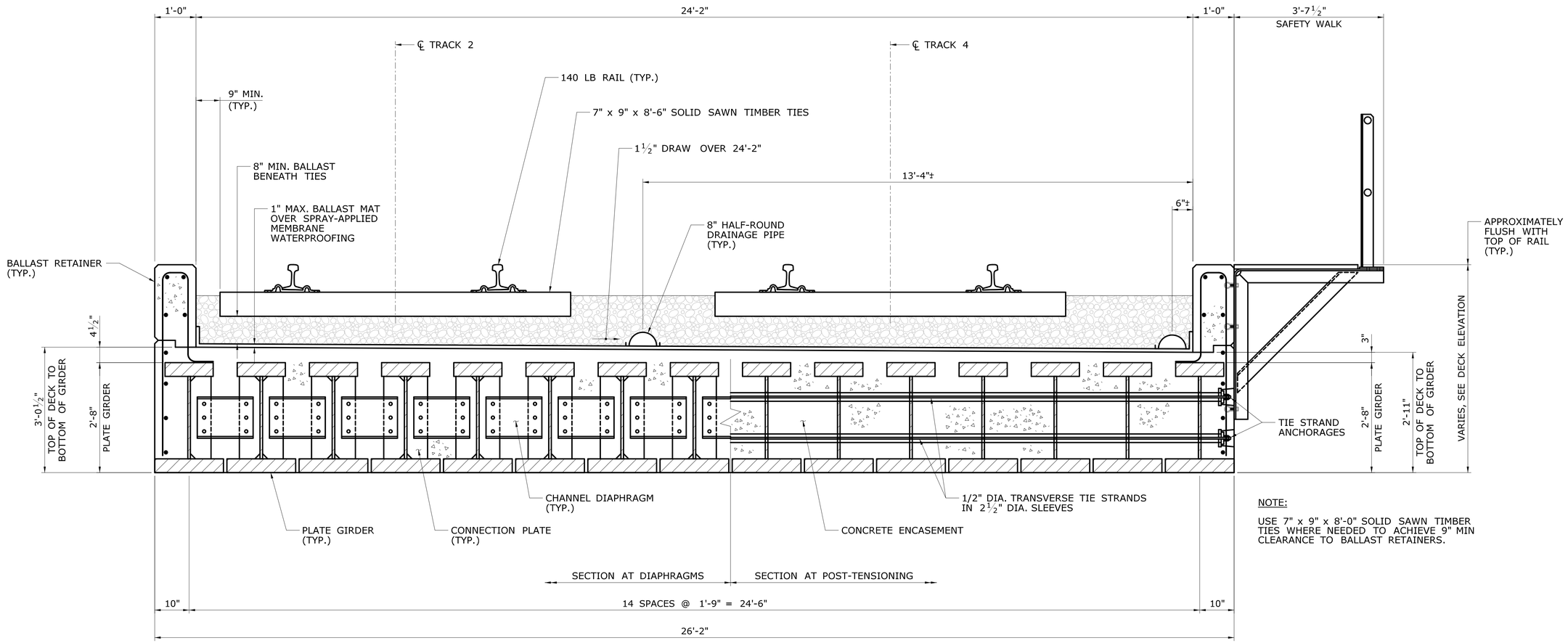

NOTE:

USE 7" x 9" x 8'-0" SOLID SAWN TIMBER TIES WHERE NEEDED TO ACHIEVE 9" MIN CLEARANCE TO BALLAST RETAINERS.

TYPICAL SECTION TRACKS 2 & 4

SCALE: 3/4" = 1'-0"

FINAL PLANS FOR REVIEW

REV.	DATE	REVISION DESCRIPTION	SHEET NO.
-	-	-	-
-	-	-	-
-	-	-	-
-	-	-	-
-	-	-	-
-	-	-	-

THE INFORMATION, INCLUDING ESTIMATED QUANTITIES OF WORK, SHOWN ON THESE SHEETS IS BASED ON LIMITED INVESTIGATIONS BY THE STATE AND IS IN NO WAY WARRANTED TO INDICATE THE CONDITIONS OF ACTUAL QUANTITIES OF WORK WHICH WILL BE REQUIRED.

Plotted Date: 3/28/2016

DESIGNER/DRAFTER: J. IVES

CHECKED BY: D. COSTELLO

SCALE AS NOTED

STATE OF CONNECTICUT
DEPARTMENT OF TRANSPORTATION

Filename: ...\SB..MSH..Br08012R..0135..0301..DECK-3.dgn

SIGNATURE/
BLOCK:

PROJECT TITLE:
REPLACEMENT OF MNRR BRIDGE OVER ATLANTIC STREET PHASE 2

TOWN: **STAMFORD**

DRAWING TITLE: **TYPICAL DECK SECTION TRACKS 2 & 4**

PROJECT NO. **135-301**

DRAWING NO. **S-61**

SHEET NO. **01.05.061**

3/28/2016
P:\Projects\ConnDot\36938292\500 CADD-GIS-Graphics\510 CADD\510.04 Struc. Bridge\MSta. Contract. Sheet. Files\SB. MSH. Br08012R. 0135. 0301. DECK-3.dgn

Border Version: 11/14/08

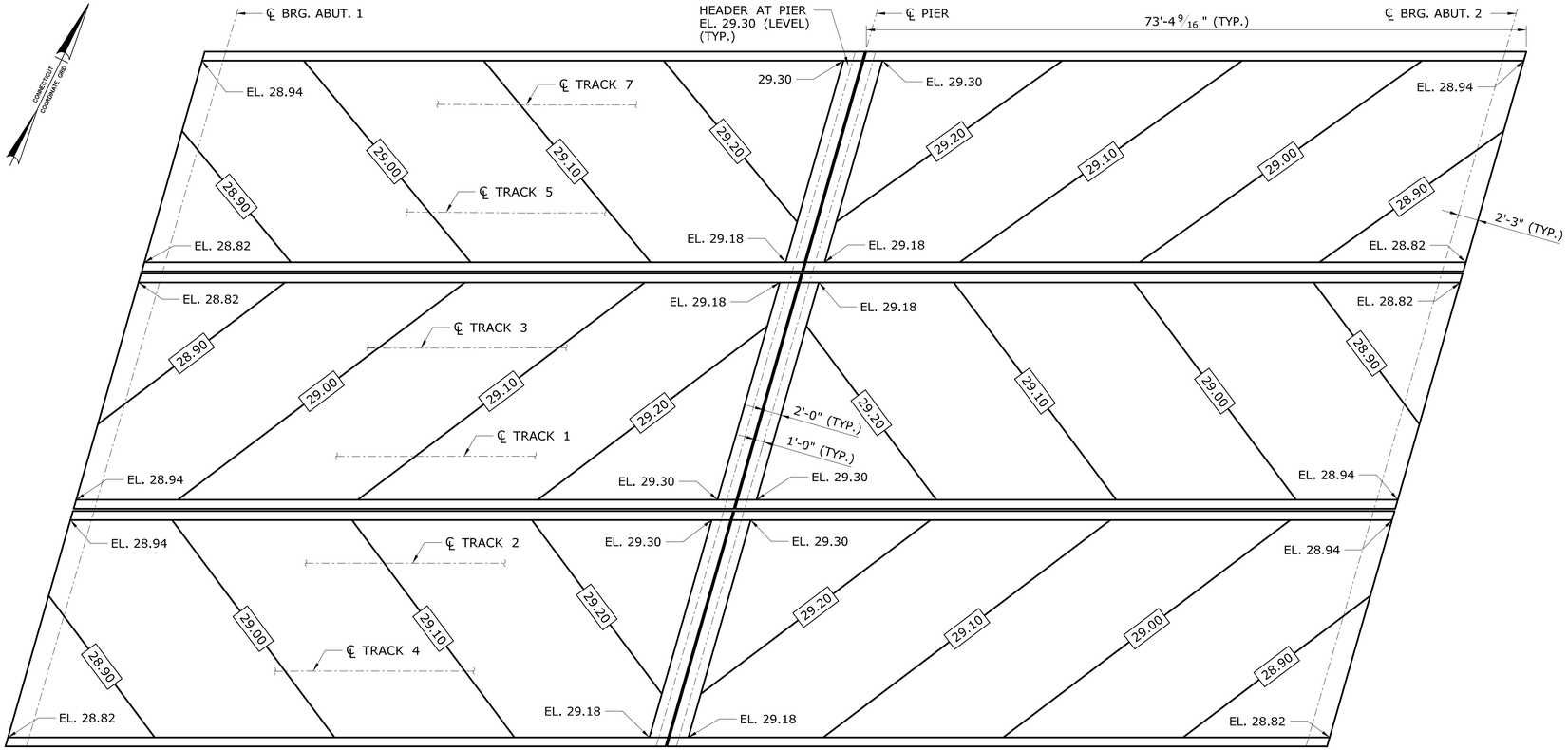

DECK PLAN

SCALE: 1/8" = 1'-0"

NOTES

1. SEE "DECK DETAILS" FOR ABUTMENT SECTION, PIER SECTION, BALLAST RETAINER SECTION AND DECK DETAILS.
2. SEE "DECK WATERPROOFING AND DRAINAGE" FOR BRIDGE DRAINAGE AND JOINT DETAILS.
3. SEE "SAFETY WALK DETAILS" FOR THREADED INSERT FOR SAFETY WALK DETAILS.
4. SEE TYPICAL DECK SECTION SHEETS FOR DECK CROSS SLOPE.
5. SEE FRAMING PLAN SHEETS FOR TRANSVERSE TIE SPACING.

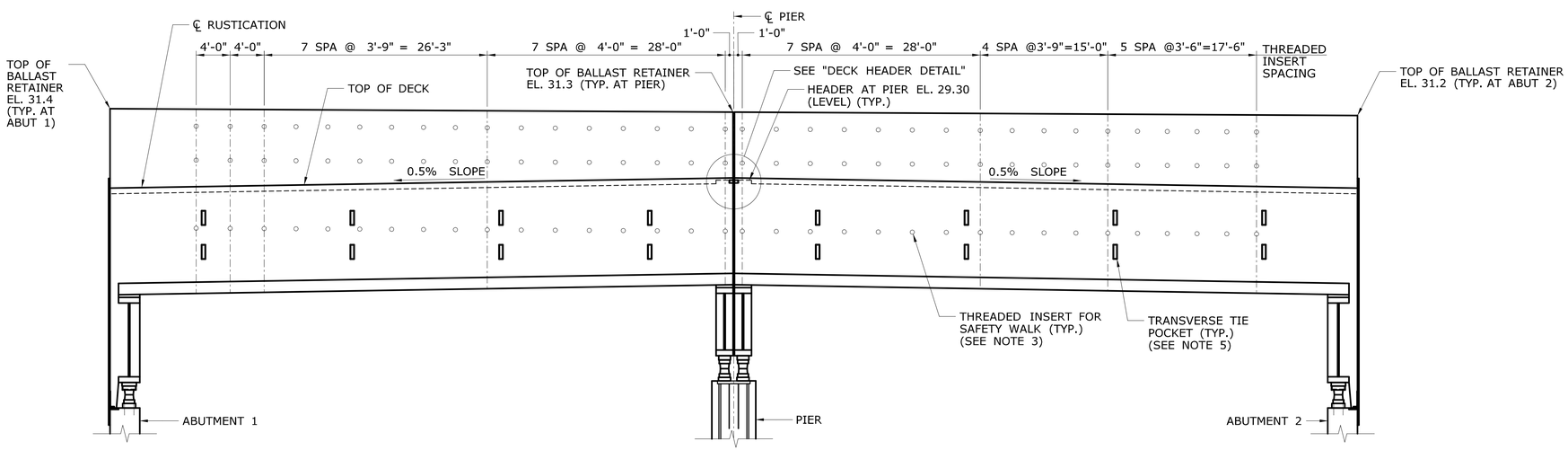

DECK ELEVATION

SCALE: N.T.S.

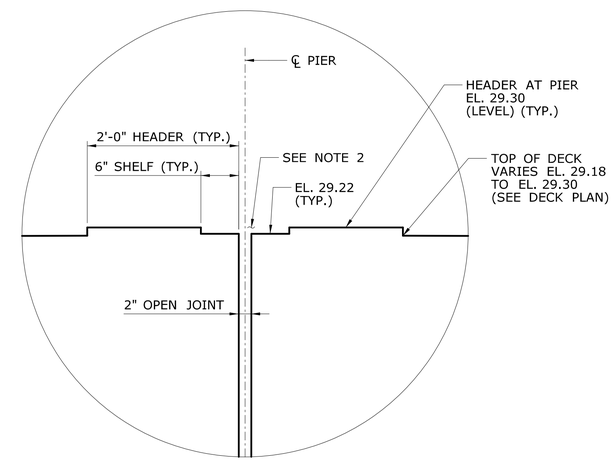

DECK HEADER DETAIL

SCALE: 1" = 1'-0"

FINAL PLANS FOR REVIEW

REV.	DATE	REVISION DESCRIPTION	SHEET NO.
-	-	-	-
-	-	-	-
-	-	-	-
-	-	-	-
-	-	-	-
-	-	-	-

THE INFORMATION, INCLUDING ESTIMATED QUANTITIES OF WORK, SHOWN ON THESE SHEETS IS BASED ON LIMITED INVESTIGATIONS BY THE STATE AND IS IN NO WAY WARRANTED TO INDICATE THE CONDITIONS OF ACTUAL QUANTITIES OF WORK WHICH WILL BE REQUIRED.

Plotted Date: 3/28/2016

DESIGNER/DRAFTER: J. IVES / K. BARKER
CHECKED BY: D. COSTELLO
SCALE AS NOTED

STATE OF CONNECTICUT
DEPARTMENT OF TRANSPORTATION

Filename: ...\SB_MSH_Br08012R_0135_0301_DECK-4.dgn

SIGNATURE/ BLOCK:

PROJECT TITLE: REPLACEMENT OF MNRR BRIDGE OVER ATLANTIC STREET PHASE 2

TOWN: STAMFORD

DRAWING TITLE: DECK PLAN

PROJECT NO. 135-301
DRAWING NO. S-62
SHEET NO. 01.05.062

3/28/2016
P:\Projects\CommDot\36938292\500 CADD-GIS-Graphics\510 CADD\510.04 Struc_Bridge\MSha_Contract_Sheet_Files\SB_MSH_Br08012R_0135_0301_DECK-4.dgn

Border Version: 11/14/08

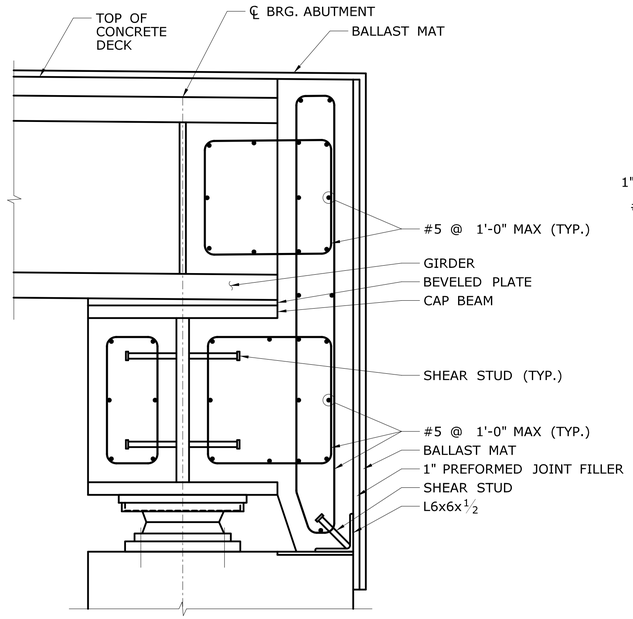

ABUTMENT SECTION

SCALE: 1" = 1'-0"

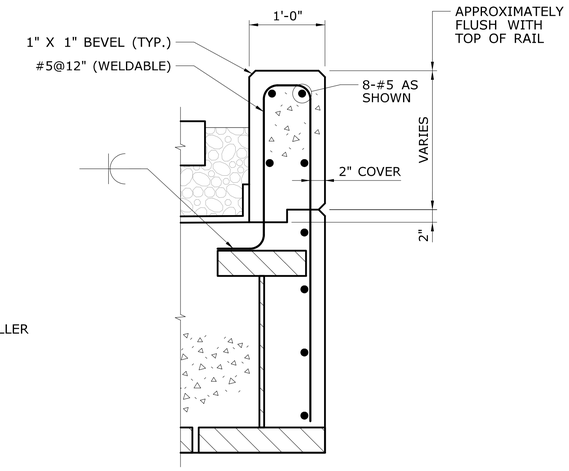

BALLAST RETAINER TYPICAL SECTION

SCALE: 1" = 1'-0"

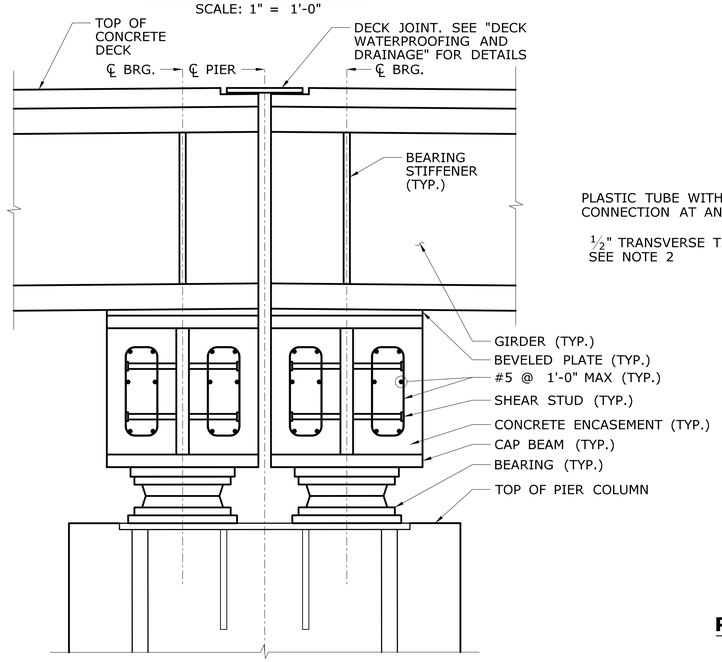

PIER SECTION

SCALE: 1" = 1'-0"

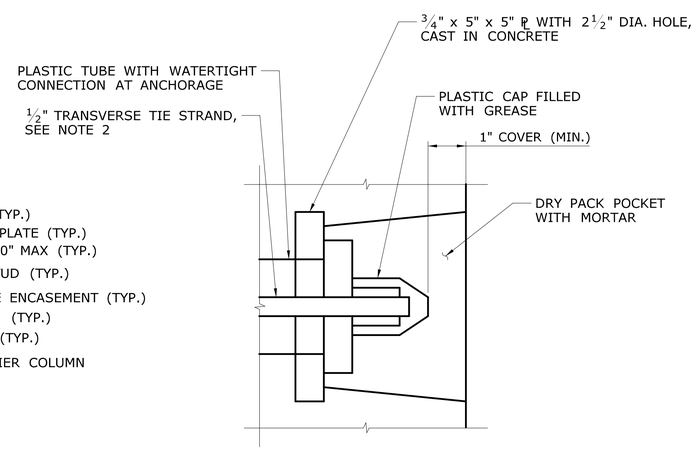

POST TENSIONING ANCHORAGE DETAIL

NTS

NOTES

1. OTHER ANCHORAGE SYSTEMS MAY BE SUBSTITUTED WITH THE APPROVAL OF THE ENGINEER. ALTERNATE ANCHORAGE SYSTEMS SHALL BE WATERTIGHT AND CORROSION PROOF.
2. TRANSVERSE TIES SHALL BE COVERED BY A SEAMLESS POLYPROPYLENE SHEATH WITH CORROSION INHIBITING GREASE BETWEEN THE STRAND AND SHEATH, FOR FULL LENGTH OF THE STRAND EXCEPT AT THE ANCHORAGE LOCATION.
3. AFTER ALL BEAMS HAVE BEEN ERECTED AND CONCRETE ENCASEMENT HAS CURED, TENSION EACH TRANSVERSE TIE TO 30 KIPS.

FINAL PLANS FOR REVIEW

REV.	DATE	REVISION DESCRIPTION	SHEET NO.
-	-	-	-
-	-	-	-
-	-	-	-
-	-	-	-
-	-	-	-
-	-	-	-

THE INFORMATION, INCLUDING ESTIMATED QUANTITIES OF WORK, SHOWN ON THESE SHEETS IS BASED ON LIMITED INVESTIGATIONS BY THE STATE AND IS IN NO WAY WARRANTED TO INDICATE THE CONDITIONS OF ACTUAL QUANTITIES OF WORK WHICH WILL BE REQUIRED.

Plotted Date: 3/28/2016

DESIGNER/DRAFTER: J. IVES / K. BARKER
CHECKED BY: D. COSTELLO
SCALE AS NOTED

STATE OF CONNECTICUT
DEPARTMENT OF TRANSPORTATION

Filename: ...\SB_MSH_Br08012R_0135_0301_DECK-5.dgn

SIGNATURE/ BLOCK:

PROJECT TITLE: REPLACEMENT OF MNRR BRIDGE OVER ATLANTIC STREET PHASE 2

TOWN: STAMFORD

DRAWING TITLE: DECK DETAILS

PROJECT NO. 135-301
DRAWING NO. S-63
SHEET NO. 01.05.063

3/28/2016
P:\Projects\ConnDot\36938292\500 CADD-GIS-Graphics\510 CADD\510.04 Struc. Bridge\WSta. Contract. Sheet. Files\SB_MSH_Br08012R_0135_0301_DECK-5.dgn

Border Version: 11/14/08

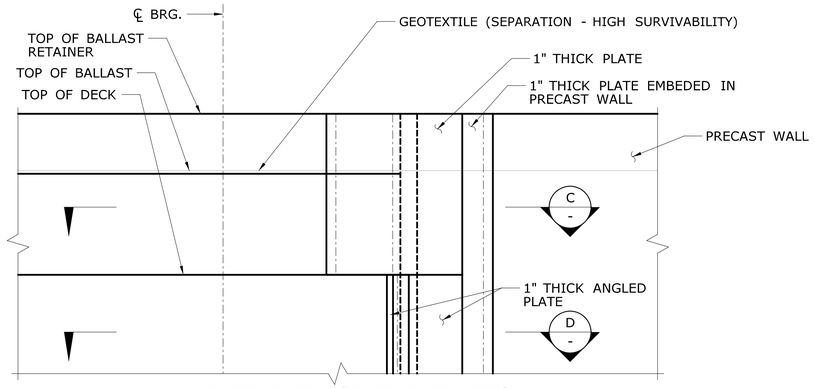

ABUTMENT JOINT ELEVATION

SCALE: 1" = 1'-0"

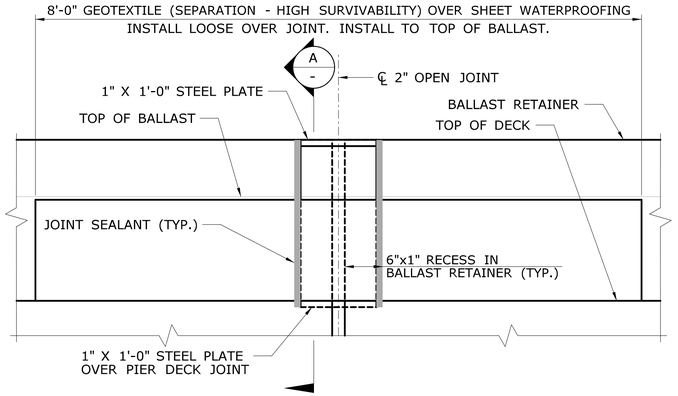

PIER JOINT ELEVATION

SCALE: 1" = 1'-0"

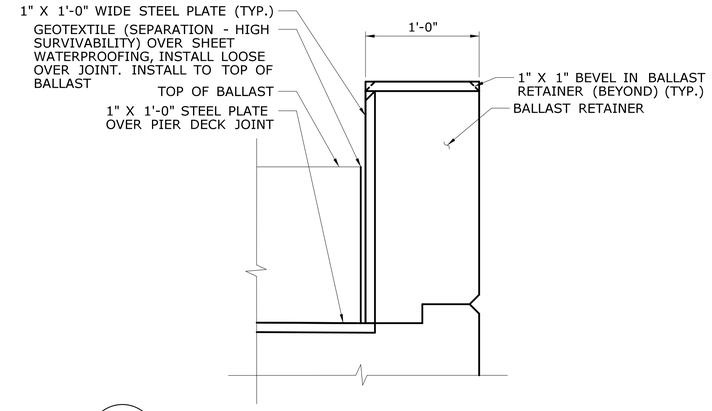

A / - BALLAST RETAINER AT JOINT SECTION

SCALE: 1½" = 1'-0"

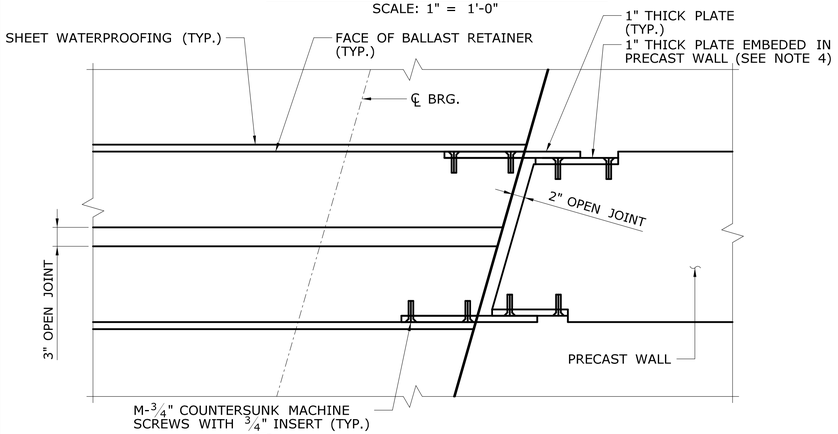

C / - SECTION THRU BALLAST RETAINER

SCALE: 1" = 1'-0"

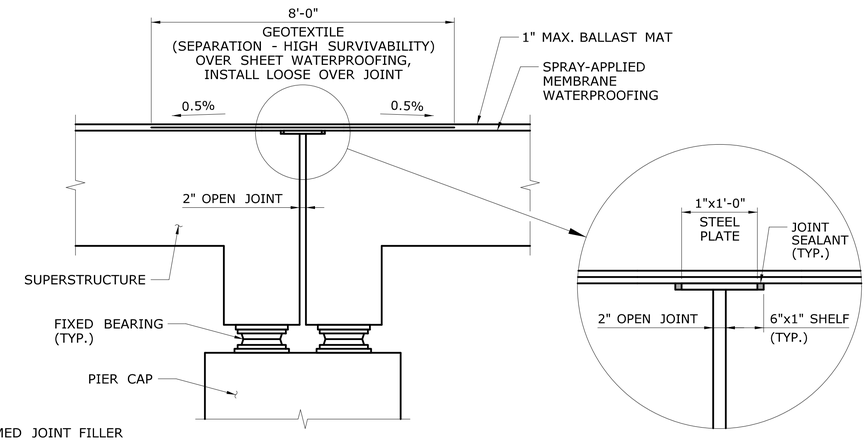

B / S-65 SECTION

SCALE: ½" = 1'-0"

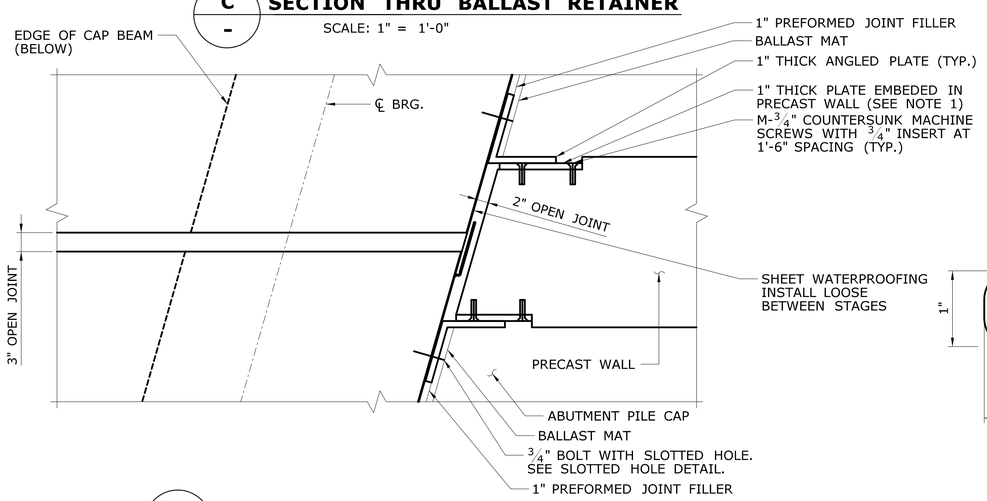

D / - SECTION THRU SUPERSTRUCTURE

SCALE: 1" = 1'-0"

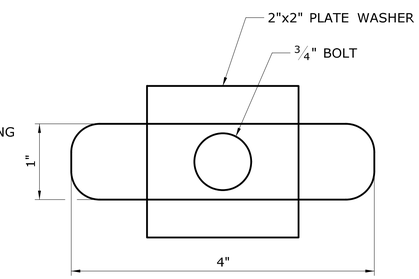

SLOTTED HOLE DETAIL

SCALE: 1" = 1'-0"

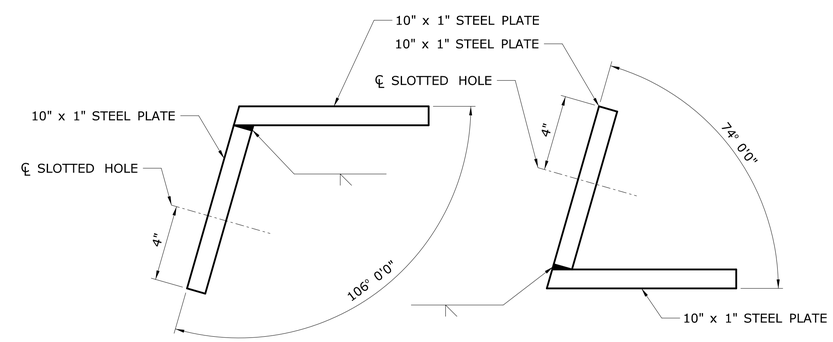

ANGLED PLATE DETAILS

SCALE: ¼" = 1'-0"

NOTES

1. PLATE THICKNESS SHOWN FOR IDEAL CONDITIONS. ADJUST PLATE THICKNESS BASED ON INSTALLATION TOLERANCES.

FINAL PLANS FOR REVIEW

REV.	DATE	REVISION DESCRIPTION	SHEET NO.
-	-	-	-
-	-	-	-
-	-	-	-
-	-	-	-
-	-	-	-
-	-	-	-

THE INFORMATION, INCLUDING ESTIMATED QUANTITIES OF WORK, SHOWN ON THESE SHEETS IS BASED ON LIMITED INVESTIGATIONS BY THE STATE AND IS IN NO WAY WARRANTED TO INDICATE THE CONDITIONS OF ACTUAL QUANTITIES OF WORK WHICH WILL BE REQUIRED.

Plotted Date: 3/28/2016

DESIGNER/DRAFTER: J. IVES / K. BARKER
CHECKED BY: D. COSTELLO
SCALE AS NOTED

STATE OF CONNECTICUT
DEPARTMENT OF TRANSPORTATION

Filename: ...\SB_MSH_Br08012R_0135_0301_JOINT.dgn

SIGNATURE/ BLOCK:

PROJECT TITLE: REPLACEMENT OF MNRR BRIDGE OVER ATLANTIC STREET PHASE 2

TOWN: STAMFORD

DRAWING TITLE: JOINT DETAILS

PROJECT NO. 135-301
DRAWING NO. S-64
SHEET NO. 01.05.064

3/28/2016
P:\Projects\ConnDot\36938292\500 CADD-GIS-Graphics\510 CADD\510.04 Struc. Bridge\MSta. Contract. Sheet. Files\SB.MSH.Br08012R.0135.0301.JOINT.dgn

Border Version: 11/14/08

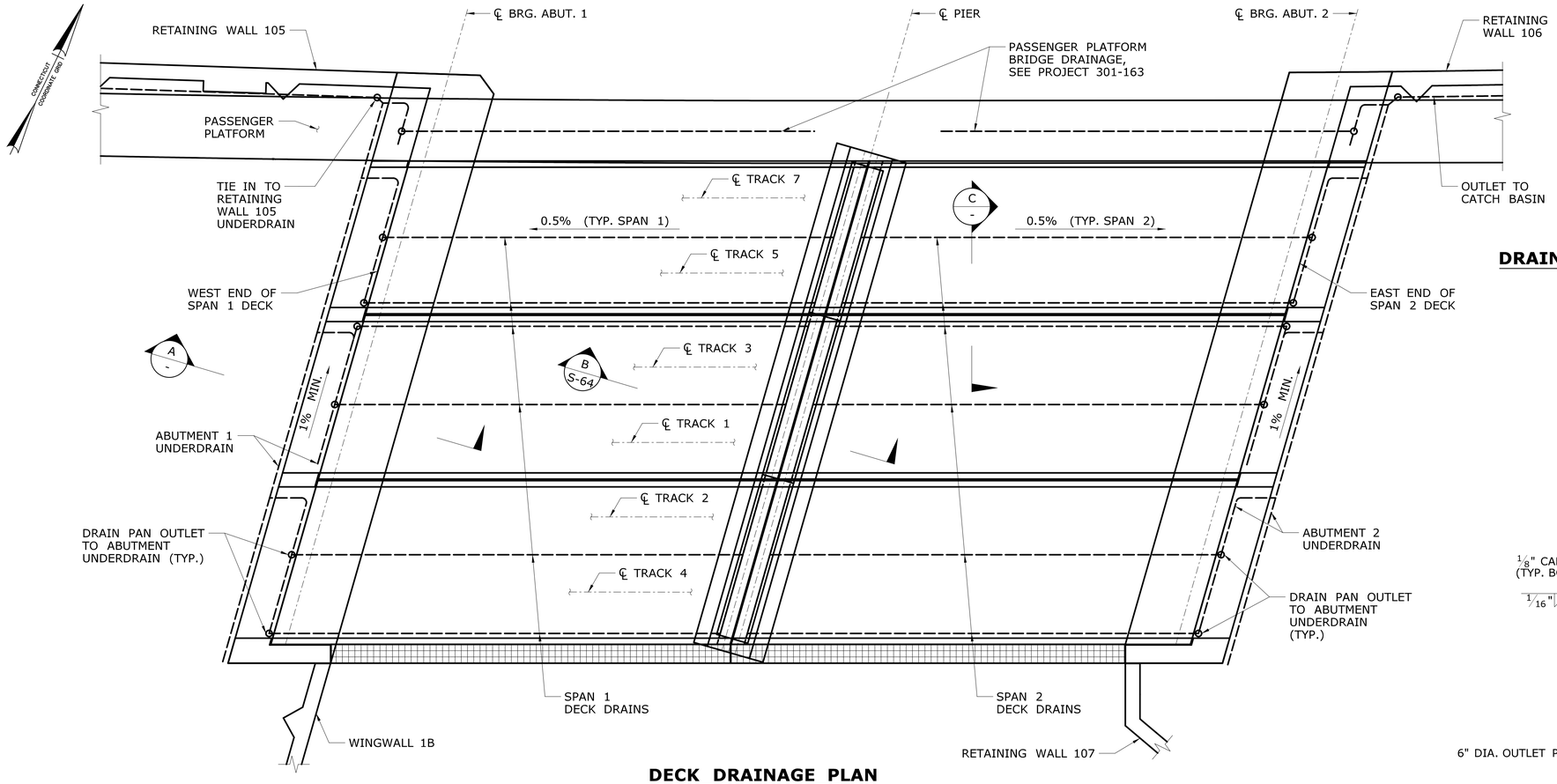

DECK DRAINAGE PLAN

SCALE: 3/32" = 1'-0"

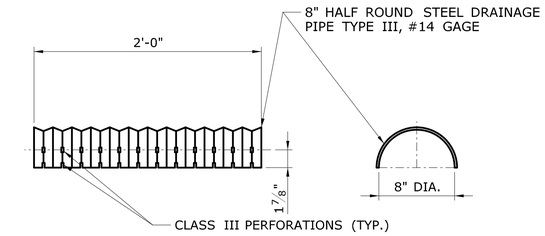

DRAIN COVER (8" HALF ROUND STEEL DRAINAGE PIPE)

SCALE: 1 1/2" = 1'-0"

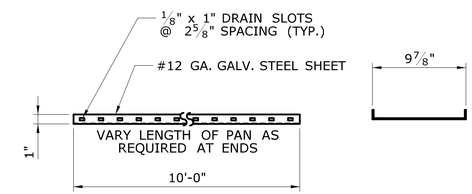

DRAIN PAN

SCALE: 1 1/2" = 1'-0"

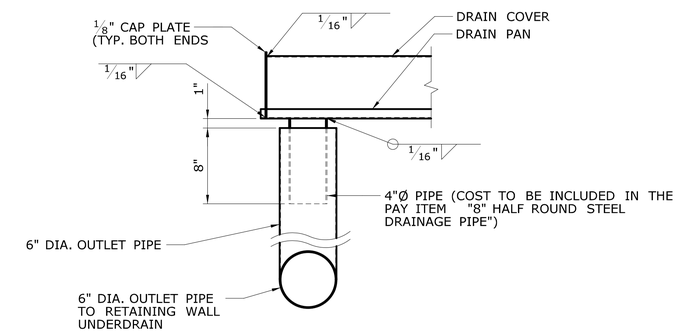

DRAIN PAN OUTLET

SCALE: 1 1/2" = 1'-0"

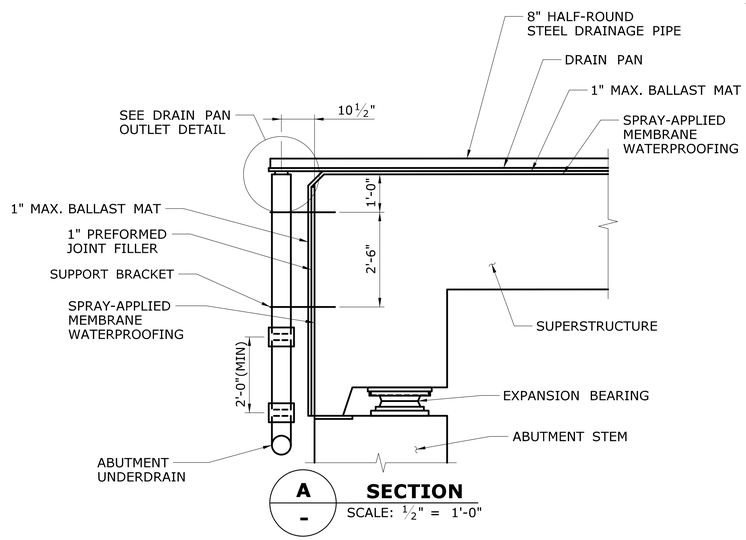

A SECTION

SCALE: 1/2" = 1'-0"

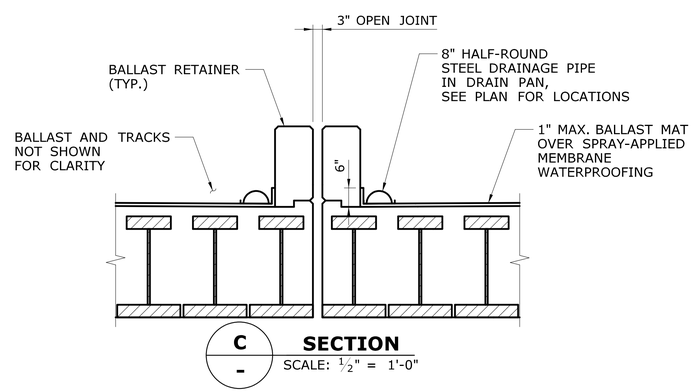

C SECTION

SCALE: 1/2" = 1'-0"

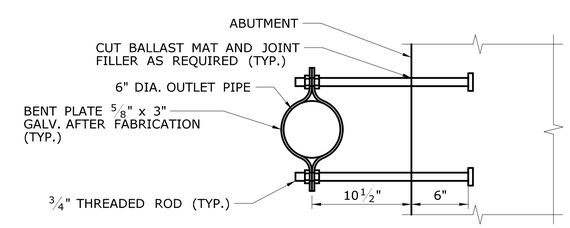

SUPPORT BRACKET DETAIL

SCALE: 1 1/2" = 1'-0"

FINAL PLANS FOR REVIEW

REV.	DATE	REVISION DESCRIPTION	SHEET NO.
-	-	-	-
-	-	-	-
-	-	-	-
-	-	-	-
-	-	-	-
-	-	-	-

THE INFORMATION, INCLUDING ESTIMATED QUANTITIES OF WORK, SHOWN ON THESE SHEETS IS BASED ON LIMITED INVESTIGATIONS BY THE STATE AND IS IN NO WAY WARRANTED TO INDICATE THE CONDITIONS OF ACTUAL QUANTITIES OF WORK WHICH WILL BE REQUIRED.

Plotted Date: 3/28/2016

DESIGNER/DRAFTER: J. IVES
CHECKED BY: D. COSTELLO
SCALE AS NOTED

STATE OF CONNECTICUT
DEPARTMENT OF TRANSPORTATION

Filename: ...\SB_MSH_Br08012R_0135_0301_DRN.dgn

SIGNATURE/ BLOCK:

PROJECT TITLE: REPLACEMENT OF MNRR BRIDGE OVER ATLANTIC STREET PHASE 2

TOWN: STAMFORD

DRAWING TITLE: DECK WATERPROOFING & DRAINAGE

PROJECT NO. 135-301
DRAWING NO. S-65
SHEET NO. 01.05.065

3/28/2016
P:\Projects\ConnDot\36938292\500 CADD-GIS-Graphics\510 CADD\510.04 Struc. Bridge\MSta. Contract. Sheet. Files\SB. MSH. Br08012R. 0135. 0301. DRN.dgn

Border Version: 11/14/08

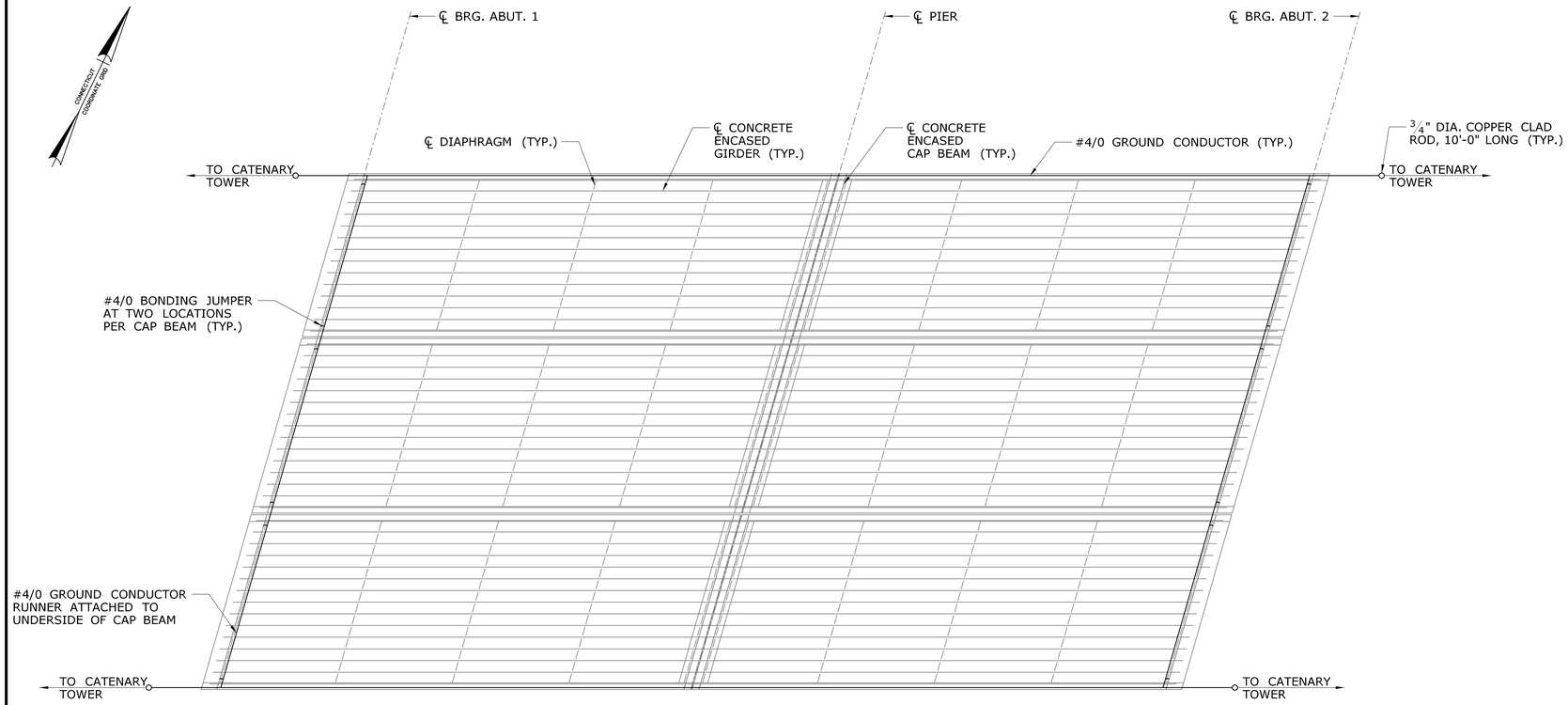

GROUNDING AND BONDING PLAN

SCALE: 3/32" = 1'-0"

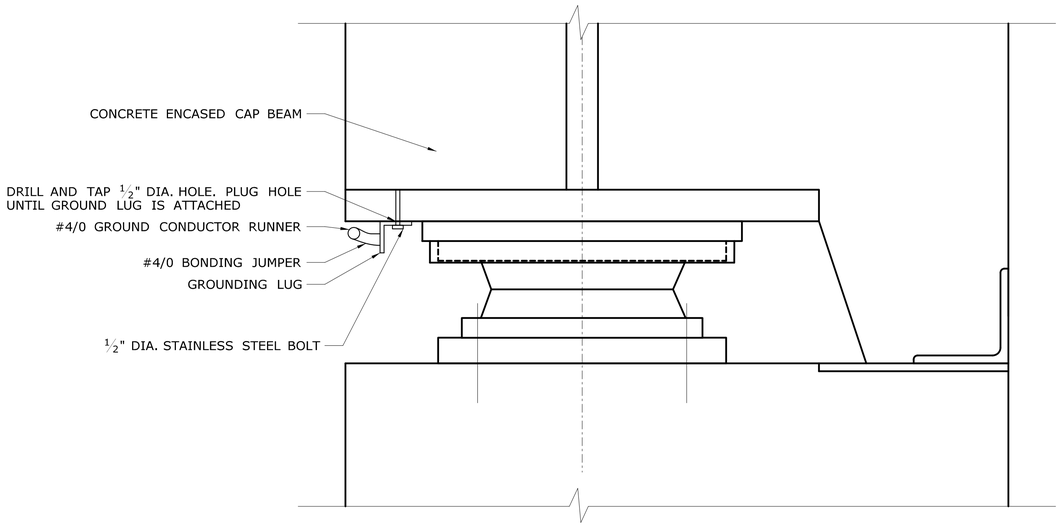

GROUNDING AND BONDING DETAIL

SCALE: N.T.S.

NOTES

1. SEE SPECIAL PROVISION FOR "GROUNDING AND BONDING".
2. THE CONTRACTOR SHALL ENSURE THAT THE GIRDERS ARE GROUNDED AT ALL STAGES OF CONSTRUCTION BY INSTALLING THE GROUNDING AND BONDING SYSTEM IN STAGES. THE GROUND CONDUCTOR SHALL BE CONTINUOUS BETWEEN STAGES AND SPLICES MAY BE MADE USING APPROVED NEC CONNECTORS.

FINAL PLANS FOR REVIEW

REV.	DATE	REVISION DESCRIPTION	SHEET NO.
-	-	-	-
-	-	-	-
-	-	-	-
-	-	-	-
-	-	-	-
-	-	-	-

THE INFORMATION, INCLUDING ESTIMATED QUANTITIES OF WORK, SHOWN ON THESE SHEETS IS BASED ON LIMITED INVESTIGATIONS BY THE STATE AND IS IN NO WAY WARRANTED TO INDICATE THE CONDITIONS OF ACTUAL QUANTITIES OF WORK WHICH WILL BE REQUIRED.

Plotted Date: 3/28/2016

DESIGNER/DRAFTER: K. BARKER
CHECKED BY: D. COSTELLO
SCALE AS NOTED

STATE OF CONNECTICUT
DEPARTMENT OF TRANSPORTATION

Filename: ...\SB_MSH_Br08012R_0135_0301_GRND.dgn

SIGNATURE/ BLOCK:

PROJECT TITLE: REPLACEMENT OF MNRR BRIDGE OVER ATLANTIC STREET PHASE 2

TOWN: STAMFORD

DRAWING TITLE: GROUNDING & BONDING

PROJECT NO. 135-301
DRAWING NO. S-66
SHEET NO. 01.05.066

3/28/2016
P:\Projects\ConnDot\36938292\500 CADD-GIS-Graphics\510 CADD\510.04 Struc.Bridge\MSa.Contract.Sheet.Files\SB_MSH_Br08012R_0135_0301_GRND.dgn

Border Version: 11/14/08

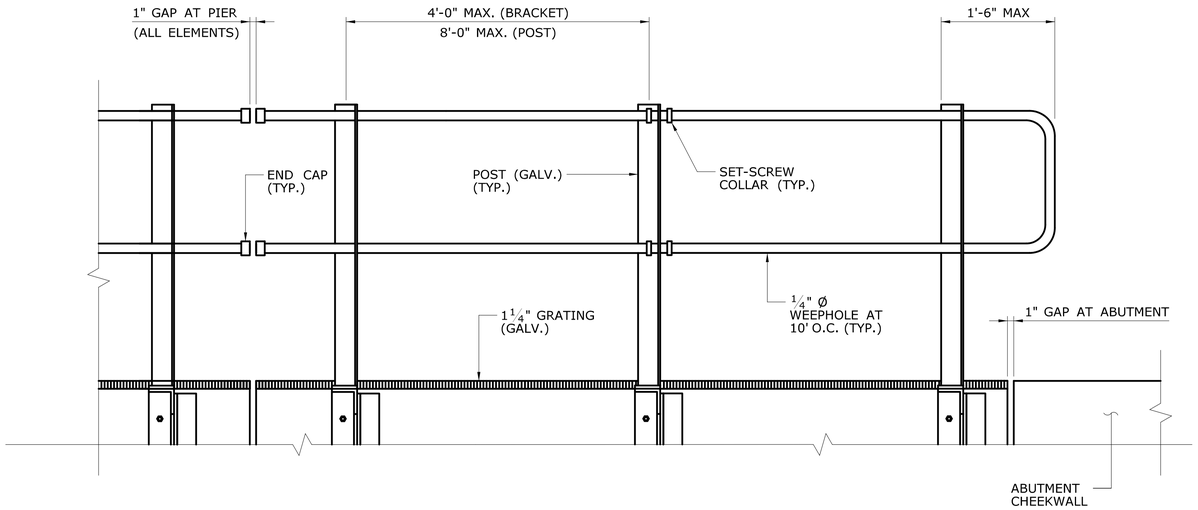

WALKWAY ELEVATION

SCALE: 1" = 1'-0"

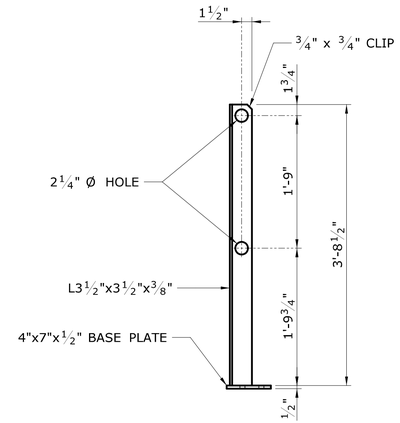

SIDE VIEW

SCALE: 1" = 1'-0"

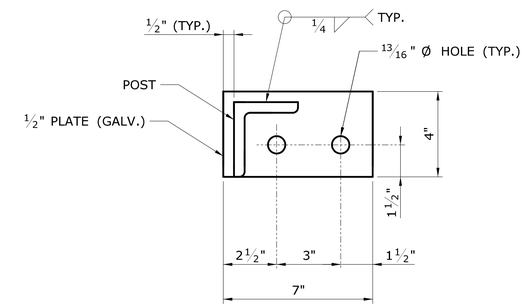

TOP VIEW

N.T.S.

POST DETAILS

AS SHOWN

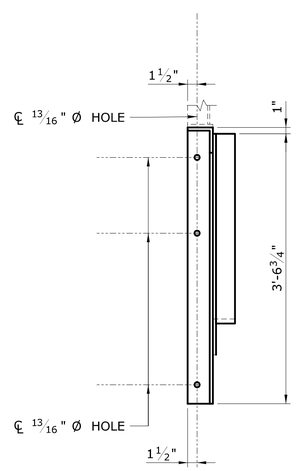

END VIEW

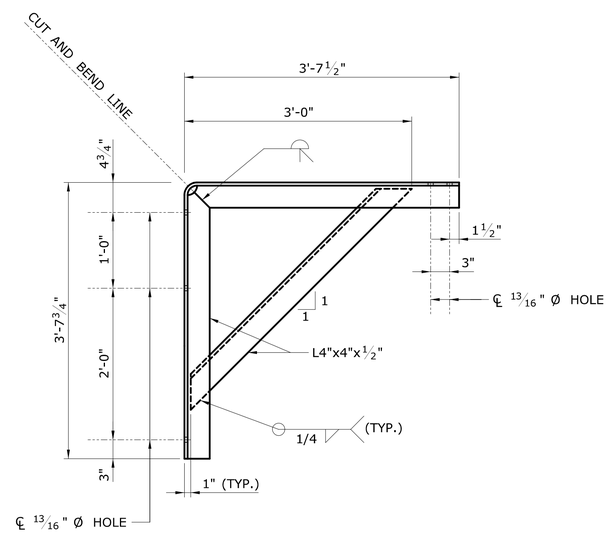

SIDE VIEW

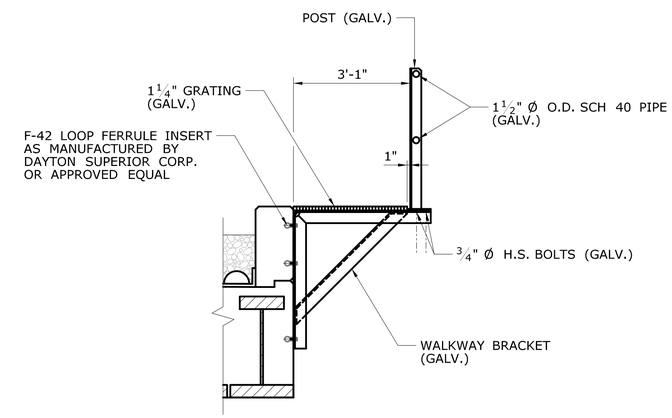

WALKWAY TYPICAL SECTION

SCALE: 1/2" = 1'-0"

BRACKET DETAIL

SCALE: 1" = 1'-0"

FINAL PLANS FOR REVIEW

REV.	DATE	REVISION DESCRIPTION	SHEET NO.
-	-	-	-
-	-	-	-
-	-	-	-
-	-	-	-
-	-	-	-
-	-	-	-

THE INFORMATION, INCLUDING ESTIMATED QUANTITIES OF WORK, SHOWN ON THESE SHEETS IS BASED ON LIMITED INVESTIGATIONS BY THE STATE AND IS IN NO WAY WARRANTED TO INDICATE THE CONDITIONS OF ACTUAL QUANTITIES OF WORK WHICH WILL BE REQUIRED.

Plotted Date: 3/28/2016

DESIGNER/DRAFTER: J. IVES / C. RUSSO
CHECKED BY: D. COSTELLO
SCALE AS NOTED

STATE OF CONNECTICUT
DEPARTMENT OF TRANSPORTATION

Filename: ...\SB..MSH..Br08012R..0135..0301..WALK.dgn

SIGNATURE/
BLOCK:

PROJECT TITLE:
REPLACEMENT OF MNRR BRIDGE OVER ATLANTIC STREET PHASE 2

TOWN: **STAMFORD**

DRAWING TITLE: **SAFETY WALK DETAILS**

PROJECT NO. **135-301**
DRAWING NO. **S-67**
SHEET NO. **01.05.067**

3/28/2016
P:\Projects\ConnDot\36938292\500 CADD-GIS-Graphics\510 CADD\510.04 Struc.Bridge\MSta.Contract.Sheet.Files\SB.MSH.Br08012R.0135.0301.WALK.dgn

Border Version: 11/14/08

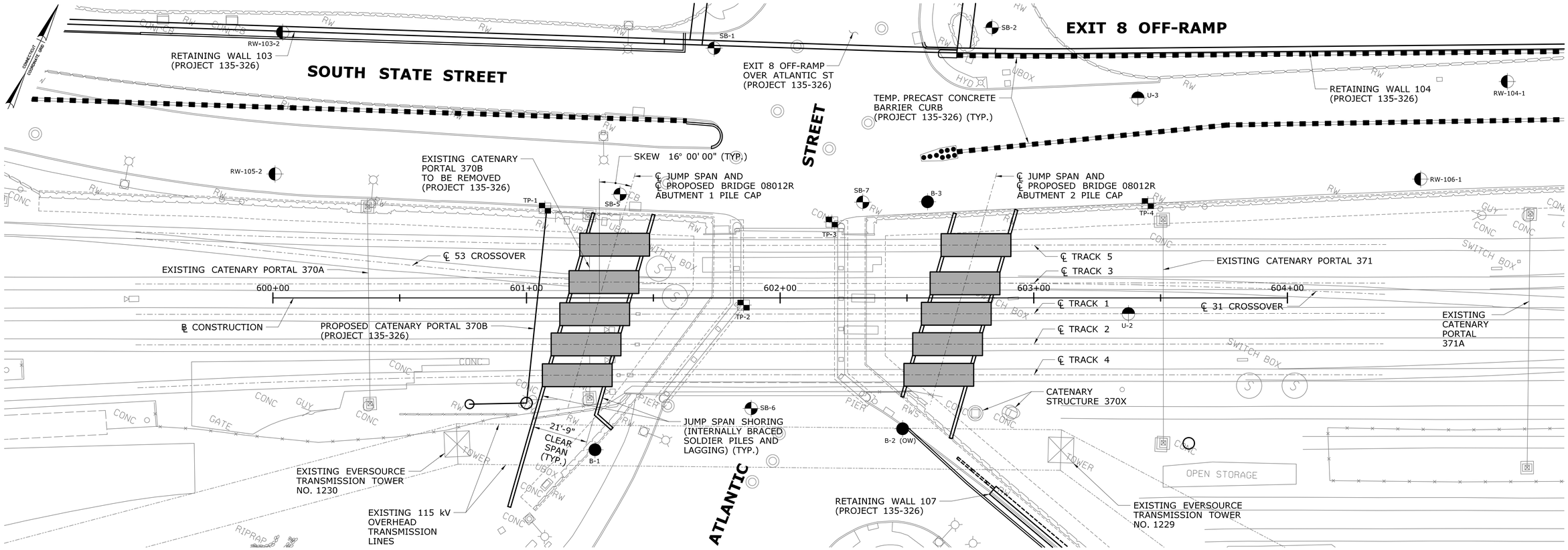

PLAN

SCALE: 1" = 20'

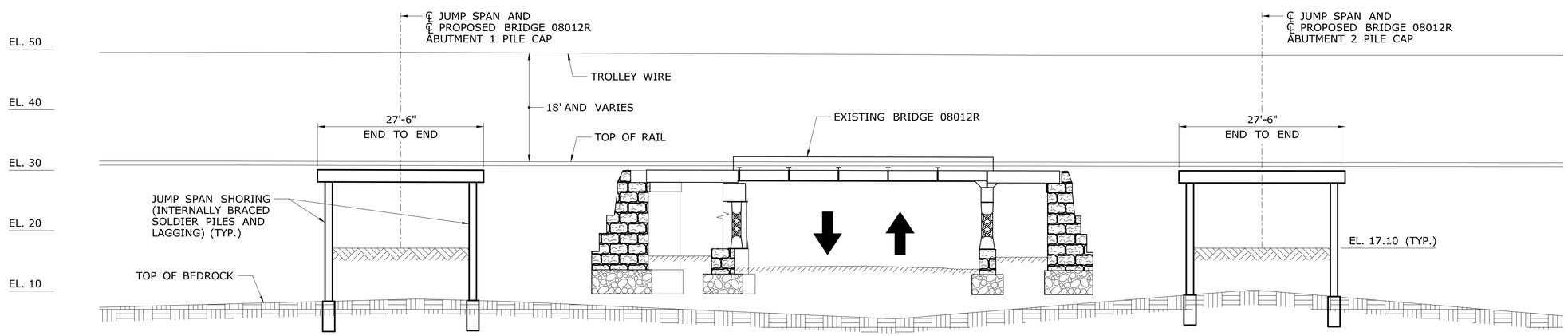

TRACK 1 LONGITUDINAL SECTION

SCALE: 1" = 10'

FINAL PLANS FOR REVIEW

REV.	DATE	REVISION DESCRIPTION	SHEET NO.
-	-	-	-
-	-	-	-
-	-	-	-
-	-	-	-
-	-	-	-
-	-	-	-

THE INFORMATION, INCLUDING ESTIMATED QUANTITIES OF WORK, SHOWN ON THESE SHEETS IS BASED ON LIMITED INVESTIGATIONS BY THE STATE AND IS IN NO WAY WARRANTED TO INDICATE THE CONDITIONS OF ACTUAL QUANTITIES OF WORK WHICH WILL BE REQUIRED.

Plotted Date: 3/28/2016

DESIGNER/DRAFTER: J. IVES
CHECKED BY: K. BARKER
SCALE AS NOTED

STATE OF CONNECTICUT
DEPARTMENT OF TRANSPORTATION

Filename: ...\SB_MSH_Br08012R_0135_0301_JSP-GPN.dgn

SIGNATURE/ BLOCK:

PROJECT TITLE: REPLACEMENT OF MNRR BRIDGE OVER ATLANTIC STREET PHASE 2

TOWN: STAMFORD

DRAWING TITLE: JUMP SPANS GENERAL PLAN

PROJECT NO. 135-301
DRAWING NO. S-68
SHEET NO. 01.05.068

3/28/2016
P:\Projects\ConnDot\36938292\500 CADD-GIS-Graphics\510 CADD\510.04 Struc. Bridge\MSta. Contract. Sheet. Files\SB_MSH_Br08012R_0135_0301_JSP-GPN.dgn

Border Version: 11/14/08

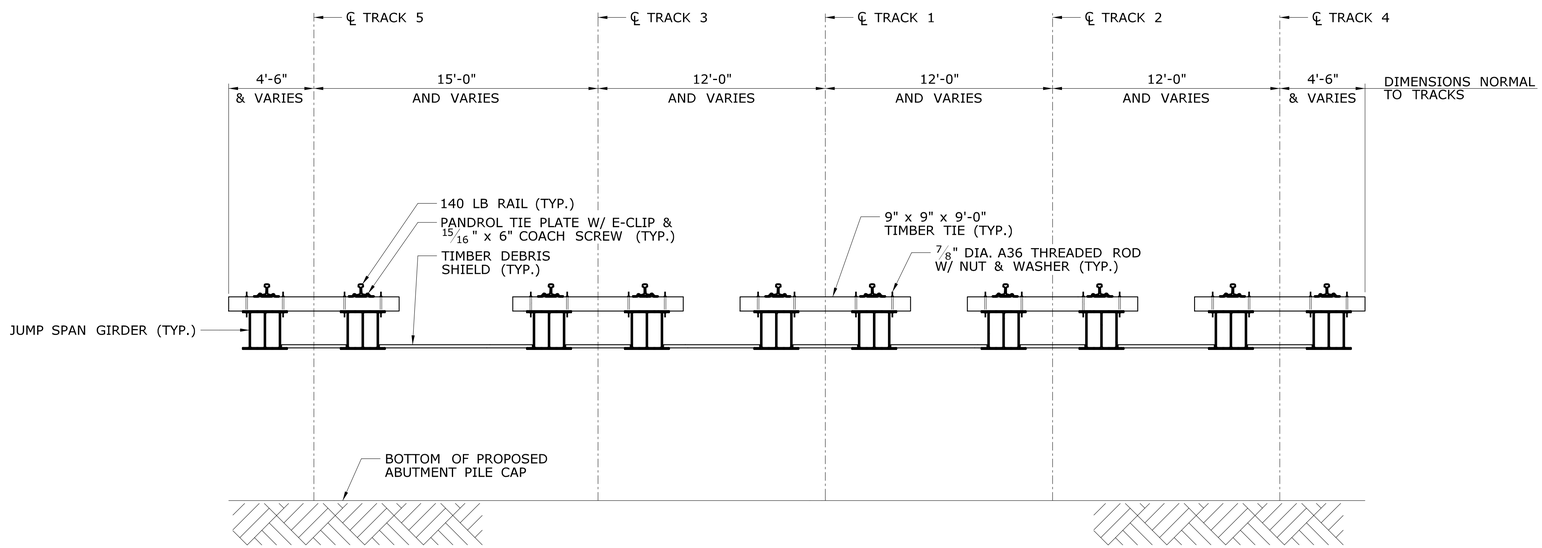

PROPOSED JUMP SPAN TYPICAL SECTION

SCALE: 1/4" = 1'-0"

FINAL PLANS FOR REVIEW

REV.	DATE	REVISION DESCRIPTION	SHEET NO.
-	-	-	-
-	-	-	-
-	-	-	-
-	-	-	-
-	-	-	-
-	-	-	-

THE INFORMATION, INCLUDING ESTIMATED QUANTITIES OF WORK, SHOWN ON THESE SHEETS IS BASED ON LIMITED INVESTIGATIONS BY THE STATE AND IS IN NO WAY WARRANTED TO INDICATE THE CONDITIONS OF ACTUAL QUANTITIES OF WORK WHICH WILL BE REQUIRED.

Plotted Date: 3/28/2016

DESIGNER/DRAFTER: J. IVES

CHECKED BY: D. COSTELLO

SCALE AS NOTED

STATE OF CONNECTICUT
DEPARTMENT OF TRANSPORTATION

Filename: ...\SB..MSH..Br08012R..0135..0301..JSP-TYP.dgn

SIGNATURE/ BLOCK:

PROJECT TITLE:
REPLACEMENT OF MNRR BRIDGE OVER ATLANTIC STREET PHASE 2

TOWN: **STAMFORD**

DRAWING TITLE: **JUMP SPANS TYPICAL SECTION**

PROJECT NO. **135-301**

DRAWING NO. **S-69**

SHEET NO. **01.05.069**

3/28/2016
P:\Projects\ConnDot\36938292\500 CADD-GIS-Graphics\510 CADD\510.04 Struc.Bridge\MSta.Contract.Sheet.Files\SB.MSH.Br08012R.0135.0301.JSP-TYP.dgn

Border Version: 11/14/08

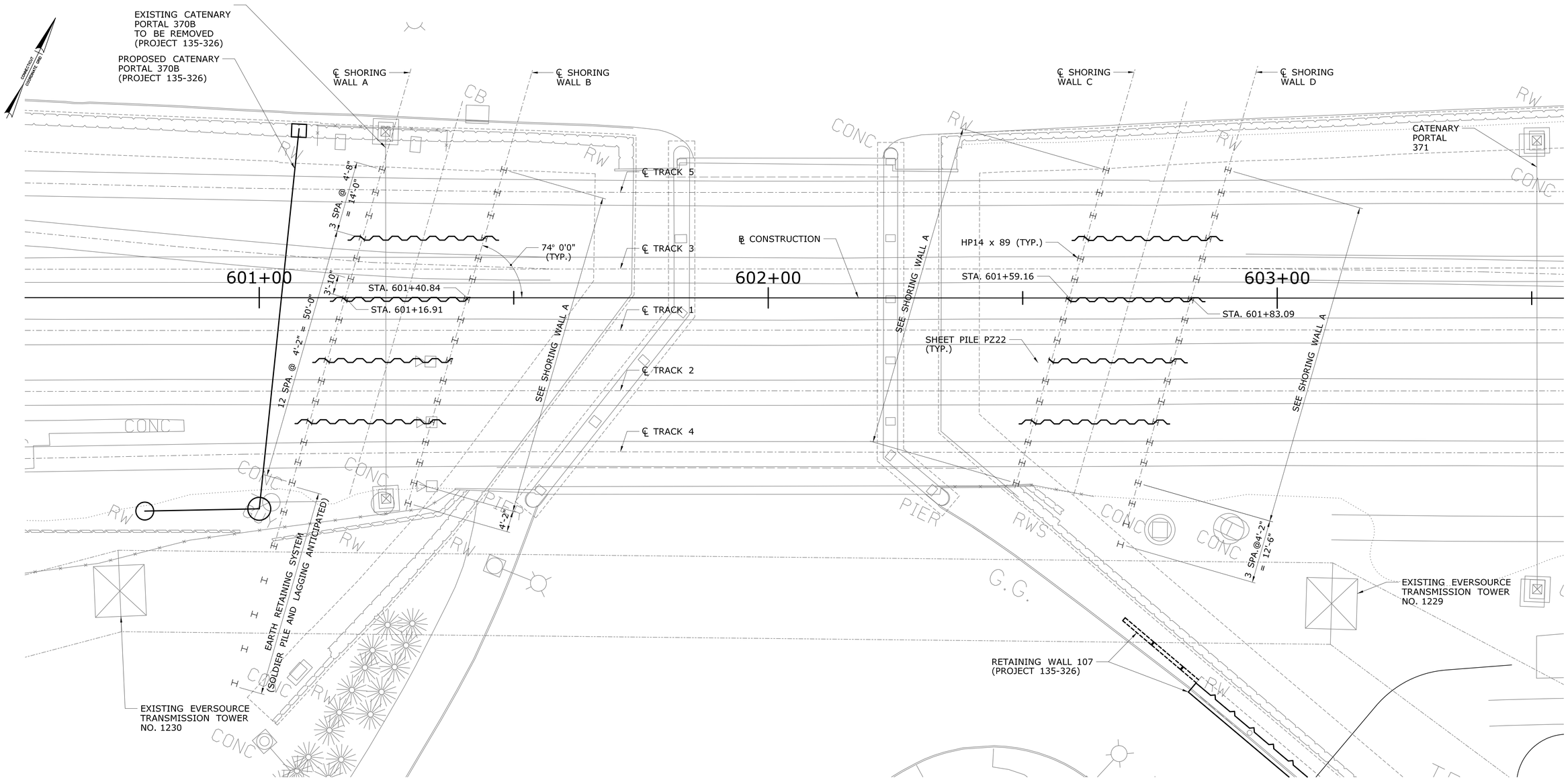

PILE LAYOUT PLAN

SCALE: 1" = 10'-0"

FINAL PLANS FOR REVIEW

REV.	DATE	REVISION DESCRIPTION	SHEET NO.
-	-	-	-
-	-	-	-
-	-	-	-
-	-	-	-
-	-	-	-
-	-	-	-

THE INFORMATION, INCLUDING ESTIMATED QUANTITIES OF WORK, SHOWN ON THESE SHEETS IS BASED ON LIMITED INVESTIGATIONS BY THE STATE AND IS IN NO WAY WARRANTED TO INDICATE THE CONDITIONS OF ACTUAL QUANTITIES OF WORK WHICH WILL BE REQUIRED.

Plotted Date: 3/28/2016

DESIGNER/DRAFTER: J. IVES

CHECKED BY: D. COSTELLO

SCALE AS NOTED

STATE OF CONNECTICUT
DEPARTMENT OF TRANSPORTATION

Filename: ...\SB_MSH_Br08012R_0135_0301_JSP-LAY.dgn

SIGNATURE/ BLOCK:

PROJECT TITLE:
REPLACEMENT OF MNRR BRIDGE OVER ATLANTIC STREET PHASE 2

TOWN: **STAMFORD**

DRAWING TITLE: **JUMP SPANS PILE LAYOUT PLAN**

PROJECT NO. **135-301**

DRAWING NO. **S-70**

SHEET NO. **01.05.070**

3/28/2016
P:\Projects\Conn0at\36938292\500 CADD-GIS-Graphics\510 CADD\510.04 Struc.Bridge\MSta.Contract.Sheet.Files\SB.MSH.Br08012R.0135.0301.JSP-LAY.dgn

Border Version: 11/14/08

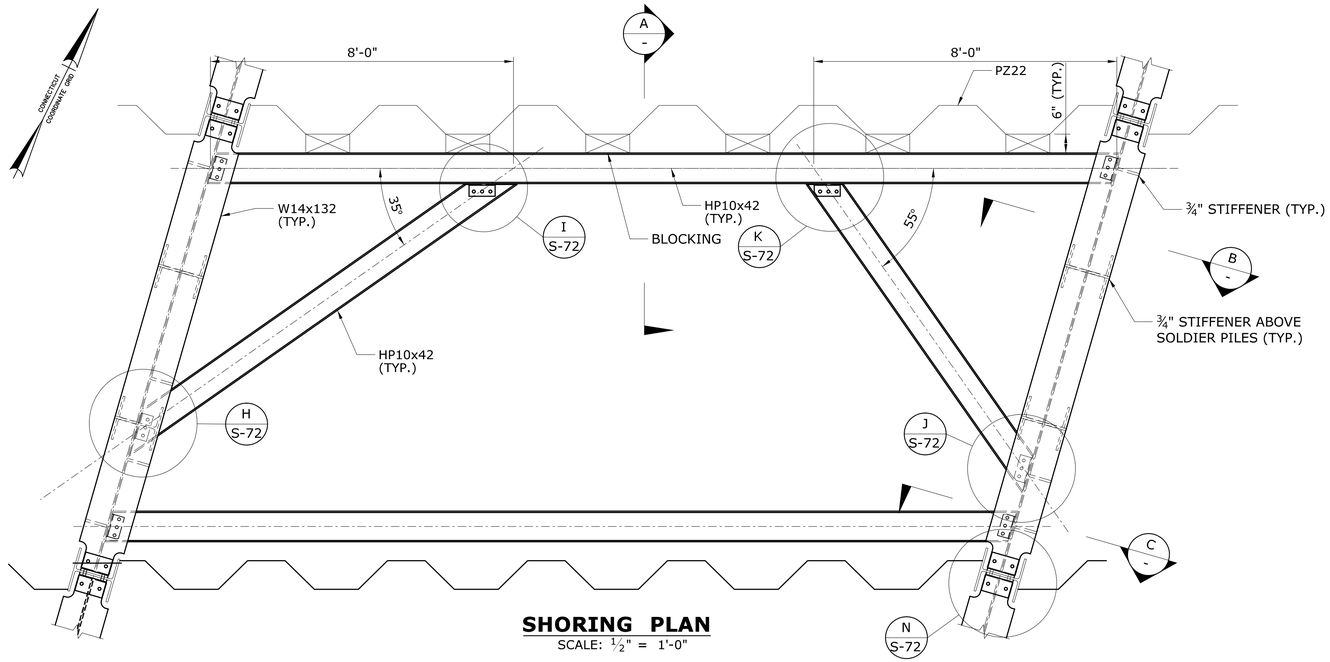

SHORING PLAN
SCALE: ½" = 1'-0"

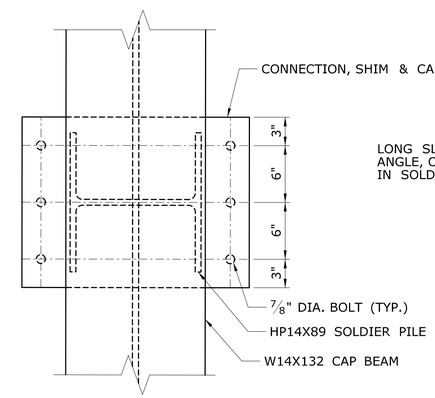

E VIEW
SCALE: 2" = 1'-0"

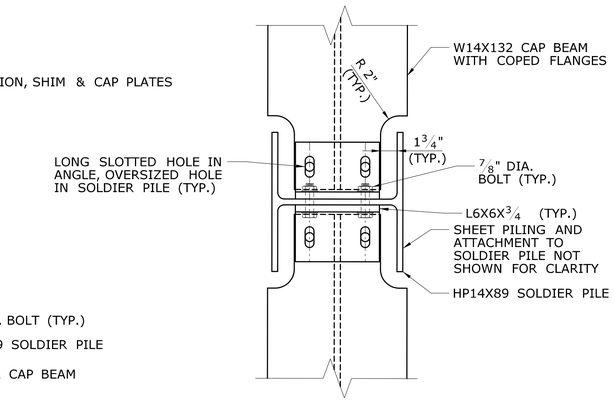

G SECTION
SCALE: 2" = 1'-0"

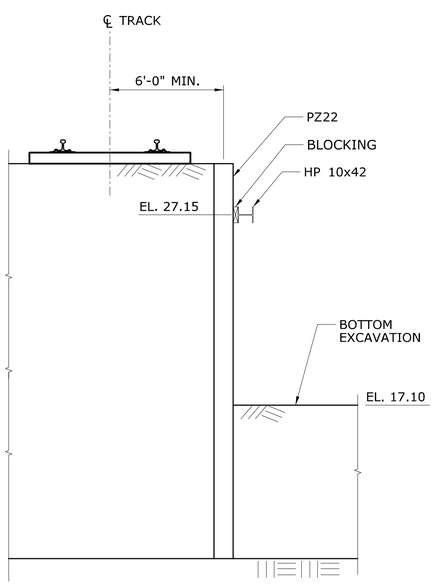

A SECTION
SCALE: ¼" = 1'-0"

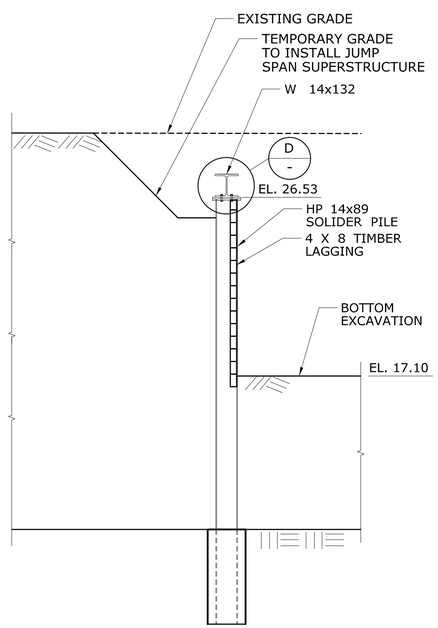

B SECTION
SCALE: ¼" = 1'-0"

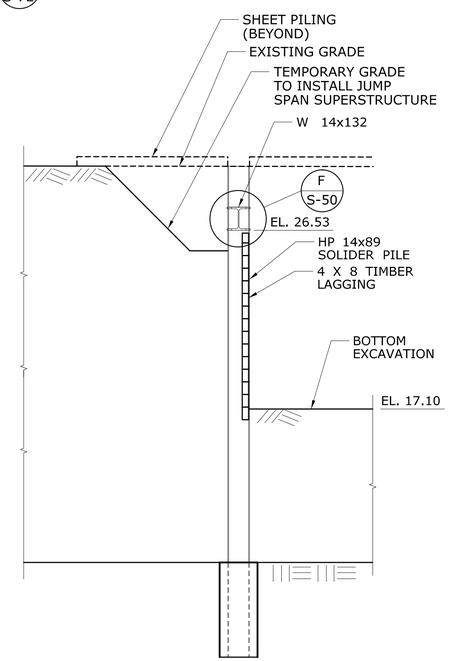

C SECTION
SCALE: ¼" = 1'-0"

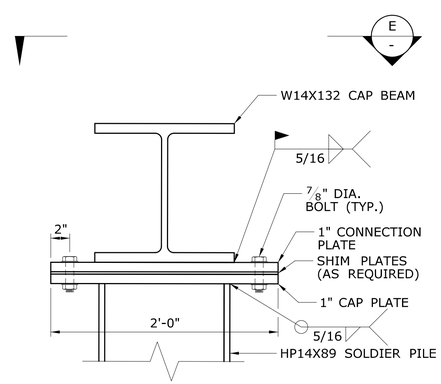

D DETAIL
SCALE: 2" = 1'-0"

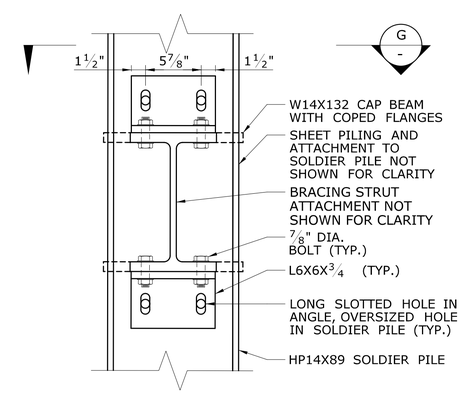

F DETAIL
SCALE: 2" = 1'-0"

FINAL PLANS FOR REVIEW

REV.	DATE	REVISION DESCRIPTION	SHEET NO.
-	-	-	-
-	-	-	-
-	-	-	-
-	-	-	-
-	-	-	-
-	-	-	-

THE INFORMATION, INCLUDING ESTIMATED QUANTITIES OF WORK, SHOWN ON THESE SHEETS IS BASED ON LIMITED INVESTIGATIONS BY THE STATE AND IS IN NO WAY WARRANTED TO INDICATE THE CONDITIONS OF ACTUAL QUANTITIES OF WORK WHICH WILL BE REQUIRED.

Plotted Date: 3/28/2016

DESIGNER/DRAFTER: C. CHUANG
CHECKED BY: D. COSTELLO
SCALE AS NOTED

STATE OF CONNECTICUT
DEPARTMENT OF TRANSPORTATION

Filename: ...\SB_MSH_Br08012R_0135_0301_JSP-SHR-1.dgn

SIGNATURE/ BLOCK:

PROJECT TITLE:
REPLACEMENT OF MNRR BRIDGE OVER ATLANTIC STREET PHASE 2

TOWN: **STAMFORD**

DRAWING TITLE: **JUMP SPANS SHORING DETAILS - 1**

PROJECT NO. **135-301**
DRAWING NO. **S-71**
SHEET NO. **01.05.071**

3/28/2016
P:\Projects\ConnDot\36938292\500 CADD-GIS-Graphics\510 CADD\510.04 Struc. Bridge\MSta. Contract. Sheet. Files\SB. MSH. Br08012R. 0135. 0301. JSP-SHR-1.dgn

Border Version: 11/14/08

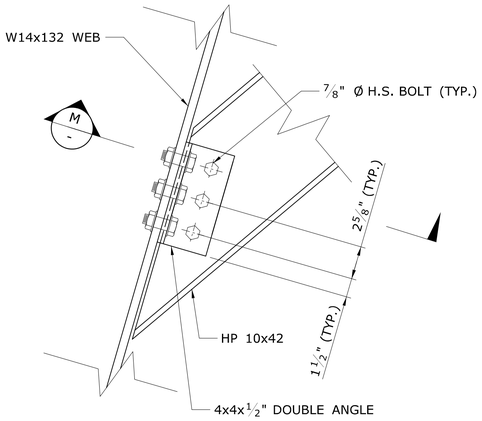

H DETAIL
S-71 SCALE: 2" = 1'-0"

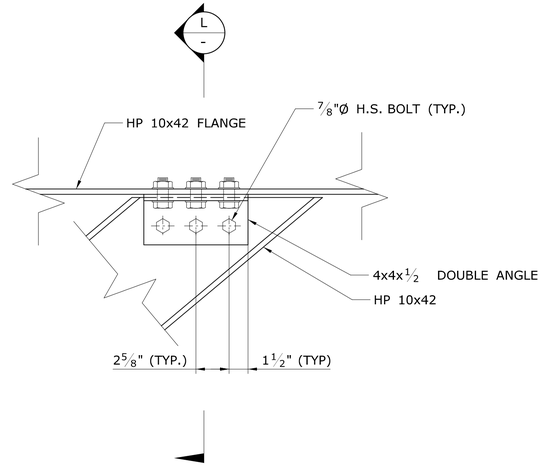

I DETAIL
S-71 SCALE: 2" = 1'-0"

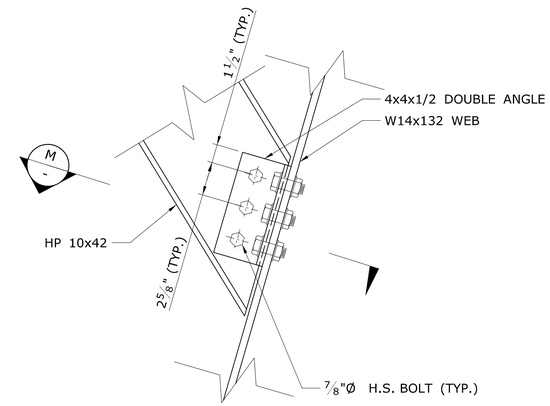

J DETAIL
S-71 SCALE: 2" = 1'-0"

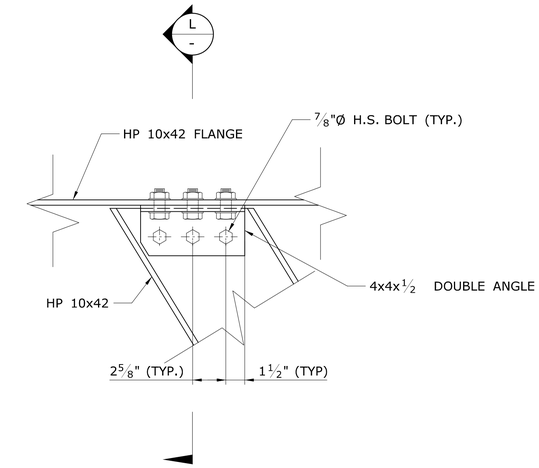

K DETAIL
S-71 SCALE: 2" = 1'-0"

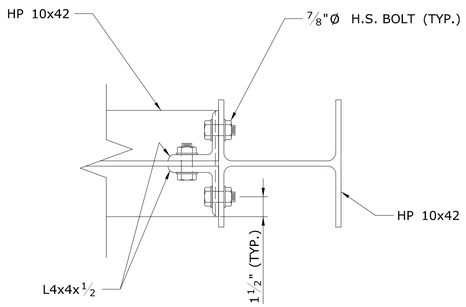

L SECTION
- SCALE: 2" = 1'-0"

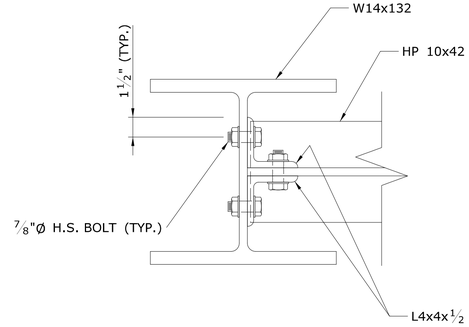

M SECTION
- SCALE: 2" = 1'-0"

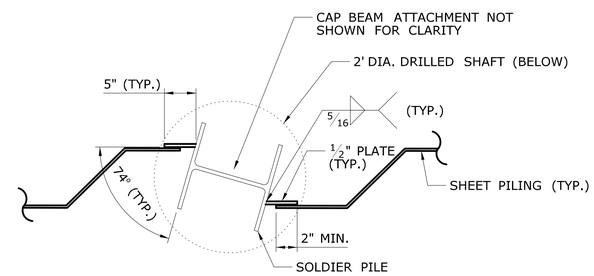

N DETAIL
S-71 SCALE: 1" = 1'-0"

FINAL PLANS FOR REVIEW

REV.	DATE	REVISION DESCRIPTION	SHEET NO.
-	-	-	-
-	-	-	-
-	-	-	-
-	-	-	-
-	-	-	-
-	-	-	-

THE INFORMATION, INCLUDING ESTIMATED QUANTITIES OF WORK, SHOWN ON THESE SHEETS IS BASED ON LIMITED INVESTIGATIONS BY THE STATE AND IS IN NO WAY WARRANTED TO INDICATE THE CONDITIONS OF ACTUAL QUANTITIES OF WORK WHICH WILL BE REQUIRED.

Plotted Date: 3/28/2016

DESIGNER/DRAFTER: C. CHUANG
CHECKED BY: D. COSTELLO
SCALE AS NOTED

STATE OF CONNECTICUT
DEPARTMENT OF TRANSPORTATION

Filename: ...\SB_MSH_Br08012R_0135_0301_JSP-SHR-2.dgn

SIGNATURE/ BLOCK:

PROJECT TITLE:
REPLACEMENT OF MNRR BRIDGE OVER ATLANTIC STREET PHASE 2

TOWN: **STAMFORD**

DRAWING TITLE: **JUMP SPANS SHORING DETAILS - 2**

PROJECT NO. **135-301**
DRAWING NO. **S-72**
SHEET NO. **01.05.072**

3/28/2016
P:\Projects\ConnDot\36938292\500 CADD-GIS-Graphics\510 CADD\510.04 Struc.Bridge\MSta.Contract.Sheet.Files\SB.MSH.Br08012R.0135.0301.JSP-SHR-2.dgn

Border Version: 11/14/08

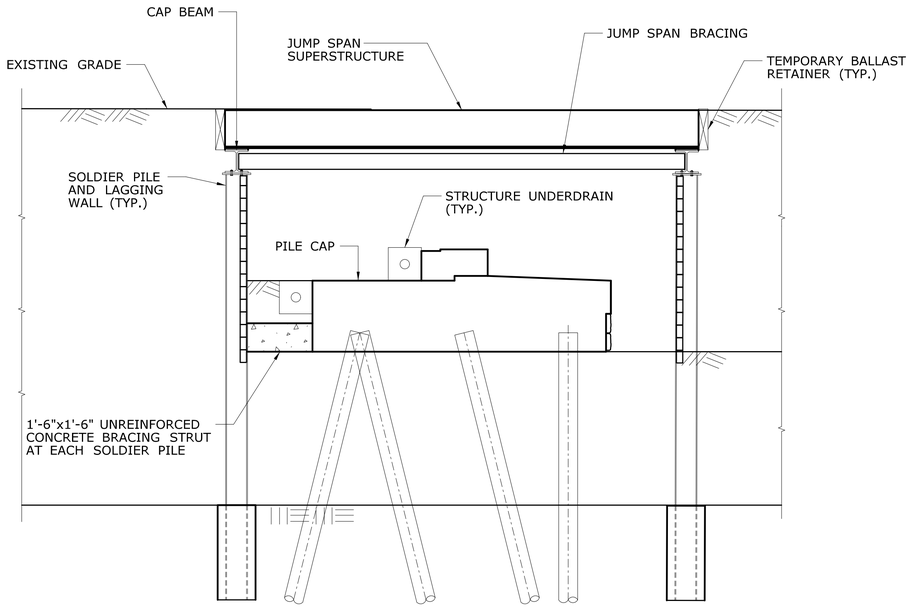

JUMP SPAN STAGE B3 SECTION

SCALE: 1/4" = 1'-0"

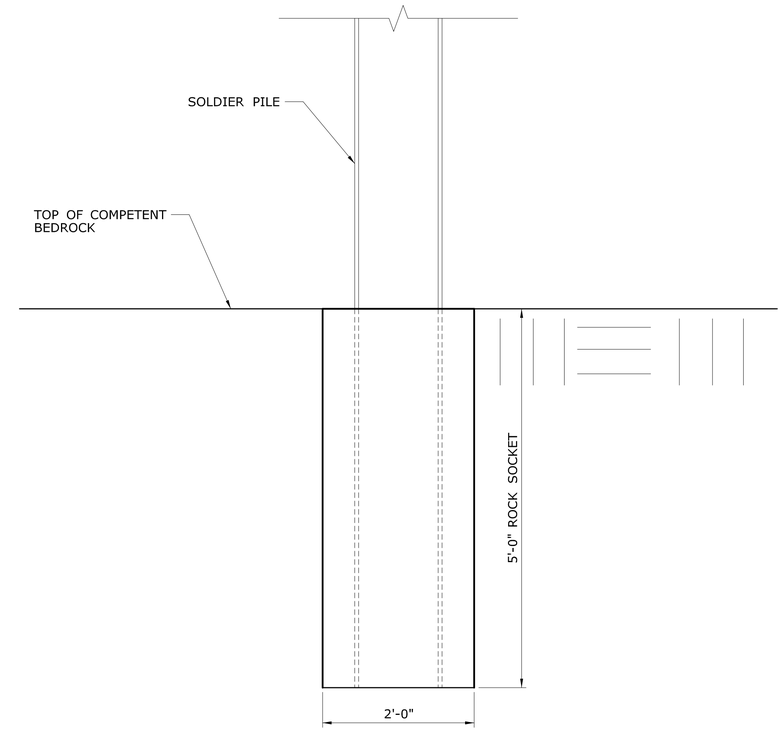

DRILLED SHAFT DETAIL

SCALE: 1" = 1'-0"

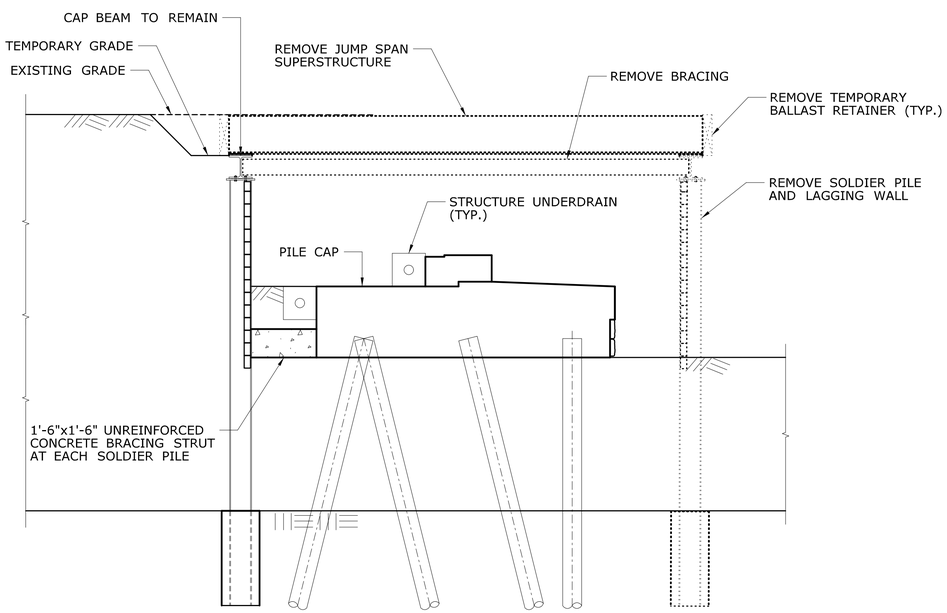

JUMP SPAN STAGE B5A SECTION

SCALE: 1/4" = 1'-0"

FINAL PLANS FOR REVIEW

REV.	DATE	REVISION DESCRIPTION	SHEET NO.
-	-	-	-
-	-	-	-
-	-	-	-
-	-	-	-
-	-	-	-
-	-	-	-

THE INFORMATION, INCLUDING ESTIMATED QUANTITIES OF WORK, SHOWN ON THESE SHEETS IS BASED ON LIMITED INVESTIGATIONS BY THE STATE AND IS IN NO WAY WARRANTED TO INDICATE THE CONDITIONS OF ACTUAL QUANTITIES OF WORK WHICH WILL BE REQUIRED.

Plotted Date: 3/28/2016

DESIGNER/DRAFTER: K. BARKER
CHECKED BY: J. IVES
SCALE AS NOTED

STATE OF CONNECTICUT
DEPARTMENT OF TRANSPORTATION

Filename: ...\SB_MSH_Br08012R_0135_0301_JSP-SHR-3.dgn

SIGNATURE/ BLOCK:

PROJECT TITLE:
REPLACEMENT OF MNRR BRIDGE OVER ATLANTIC STREET PHASE 2

TOWN: **STAMFORD**

DRAWING TITLE: **JUMP SPANS SHORING DETAILS - 3**

PROJECT NO. **135-301**
DRAWING NO. **S-73**
SHEET NO. **01.05.073**

3/28/2016
P:\Projects\Conn0ot\36938292\500 CADD-GIS-Graphics\510 CADD\510.04 Struc. Bridge\MSta. Contract. Sheet. Files\SB_MSH_Br08012R_0135_0301_JSP-SHR-3.dgn

Border Version: 11/14/08

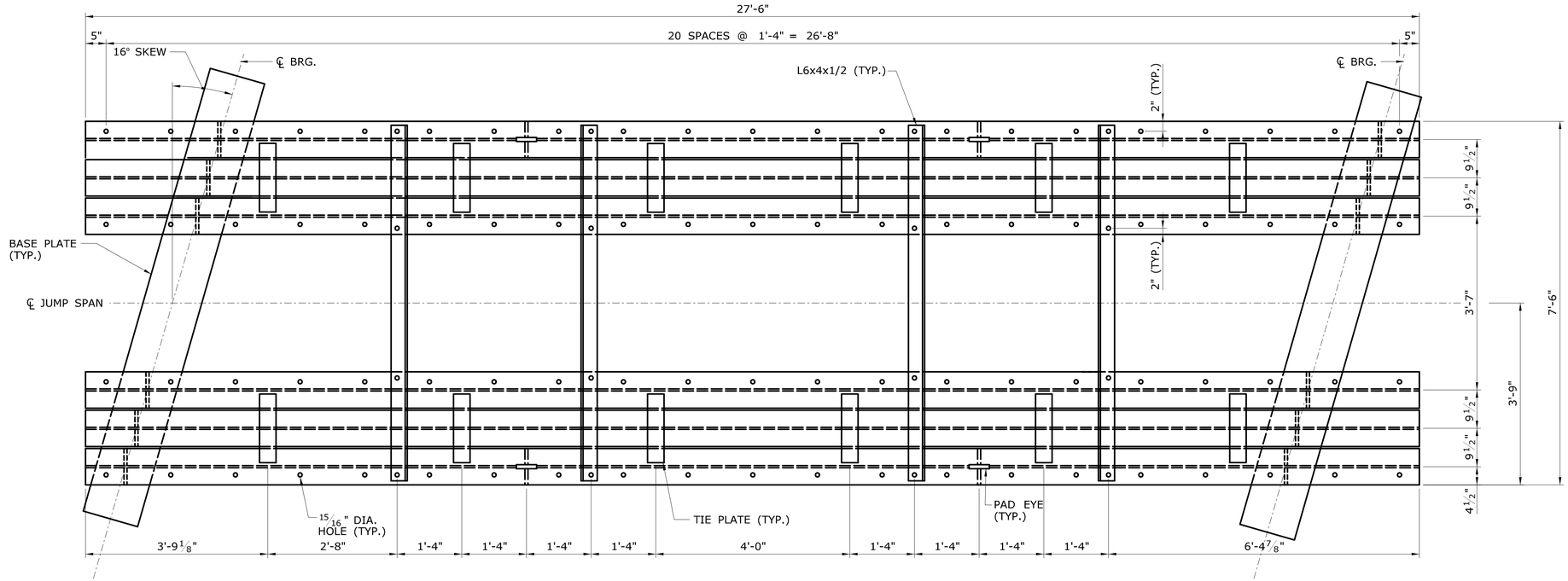

PLAN

SCALE: ¾" = 1'-0"

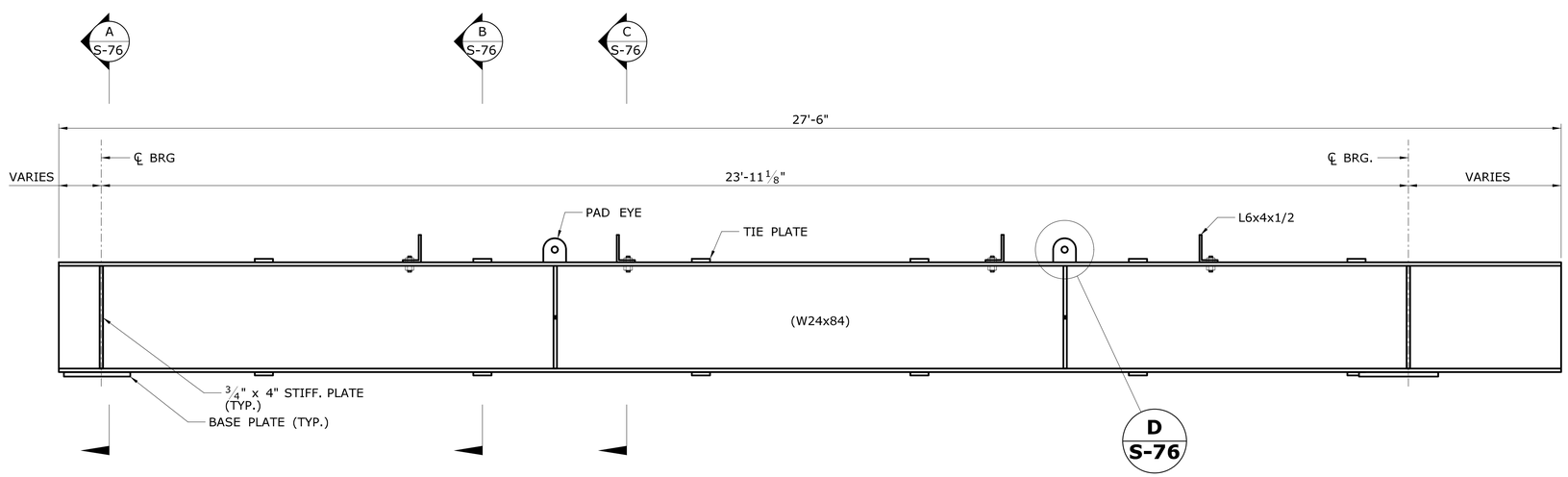

ELEVATION

SCALE: ¾" = 1'-0"

FINAL PLANS FOR REVIEW

REV.	DATE	REVISION DESCRIPTION	SHEET NO.
-	-	-	-
-	-	-	-
-	-	-	-
-	-	-	-
-	-	-	-
-	-	-	-

THE INFORMATION, INCLUDING ESTIMATED QUANTITIES OF WORK, SHOWN ON THESE SHEETS IS BASED ON LIMITED INVESTIGATIONS BY THE STATE AND IS IN NO WAY WARRANTED TO INDICATE THE CONDITIONS OF ACTUAL QUANTITIES OF WORK WHICH WILL BE REQUIRED.

Plotted Date: 3/28/2016

DESIGNER/DRAFTER: J. IVES

CHECKED BY: D. COSTELLO

SCALE AS NOTED

STATE OF CONNECTICUT
DEPARTMENT OF TRANSPORTATION

Filename: ...\SB_MSH_Br08012R_0135_0301_JSP-FRM-1.dgn

SIGNATURE/ BLOCK:

PROJECT TITLE:
REPLACEMENT OF MNRR BRIDGE OVER ATLANTIC STREET PHASE 2

TOWN: **STAMFORD**

DRAWING TITLE: **JUMP SPANS FRAMING TYPE 1**

PROJECT NO. **135-301**

DRAWING NO. **S-74**

SHEET NO. **01.05.074**

3/28/2016
P:\Projects\ConnDot\36938292\500 CADD-GIS-Graphics\510 CADD\510.04 Struc.Bridge\MSta.Contract.Sheet.Files\SB_MSH_Br08012R_0135_0301_JSP-FRM-1.dgn

Border Version: 11/14/08

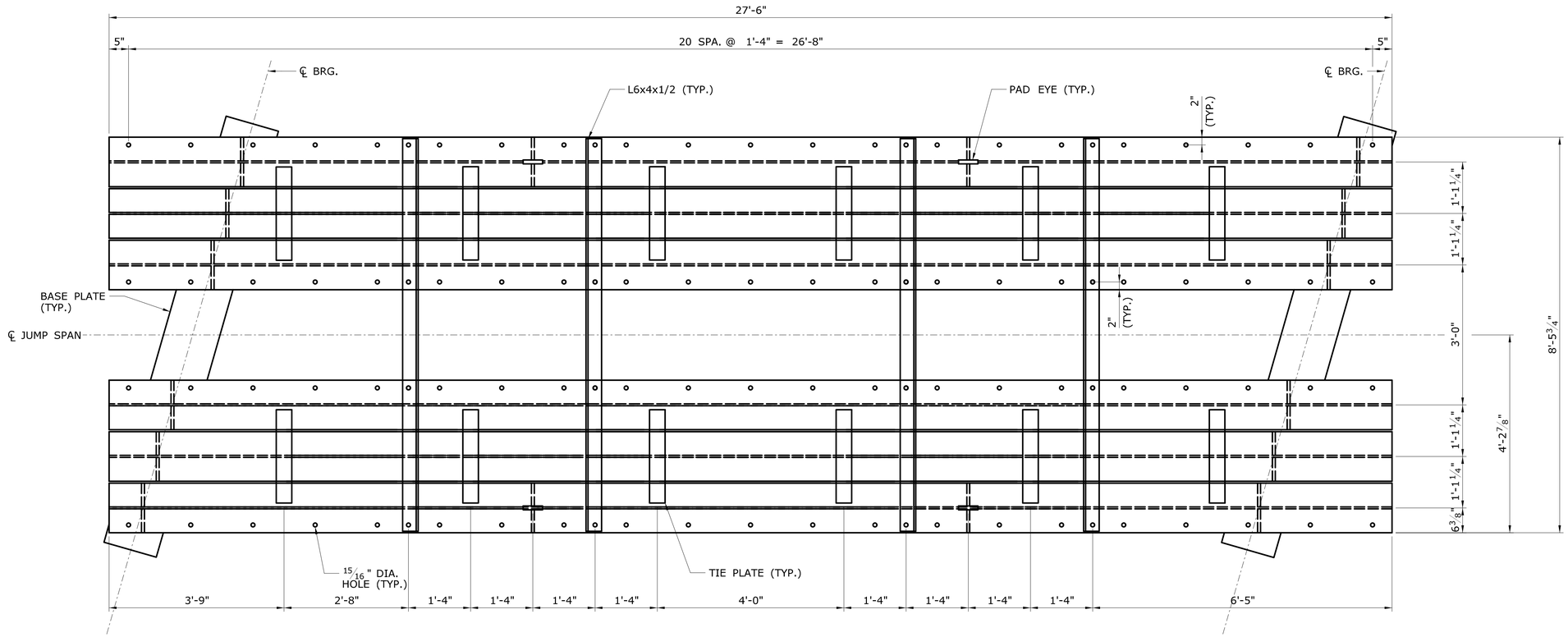

PLAN

SCALE: ¾" = 1'-0"

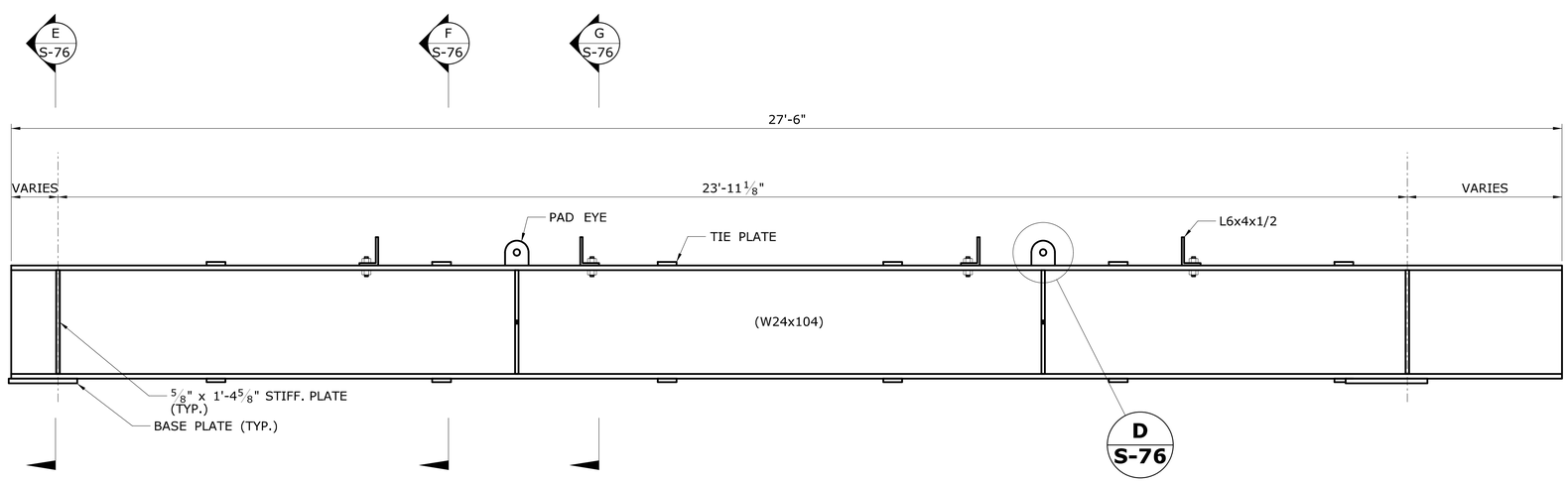

ELEVATION

SCALE: ¾" = 1'-0"

FINAL PLANS FOR REVIEW

REV.	DATE	REVISION DESCRIPTION	SHEET NO.
-	-	-	-
-	-	-	-
-	-	-	-
-	-	-	-
-	-	-	-
-	-	-	-

THE INFORMATION, INCLUDING ESTIMATED QUANTITIES OF WORK, SHOWN ON THESE SHEETS IS BASED ON LIMITED INVESTIGATIONS BY THE STATE AND IS IN NO WAY WARRANTED TO INDICATE THE CONDITIONS OF ACTUAL QUANTITIES OF WORK WHICH WILL BE REQUIRED.

Plotted Date: 3/28/2016

DESIGNER/DRAFTER: J. IVES

CHECKED BY: D. COSTELLO

SCALE AS NOTED

STATE OF CONNECTICUT
DEPARTMENT OF TRANSPORTATION

Filename: ...\SB_MSH_Br08012R_0135_0301_JSP-FRM-2.dgn

SIGNATURE/ BLOCK:

PROJECT TITLE:
REPLACEMENT OF MNRR BRIDGE OVER ATLANTIC STREET PHASE 2

TOWN: **STAMFORD**

DRAWING TITLE: **JUMP SPANS FRAMING TYPE 2**

PROJECT NO. **135-301**

DRAWING NO. **S-75**

SHEET NO. **01.05.075**

3/28/2016
P:\Projects\ConnDot\36938292\500 CADD-GIS-Graphics\510 CADD\510.04 Struc. Bridge\MSta. Contract. Sheet. Files\SB_MSH_Br08012R_0135_0301_JSP-FRM-2.dgn

Border Version: 11/14/08

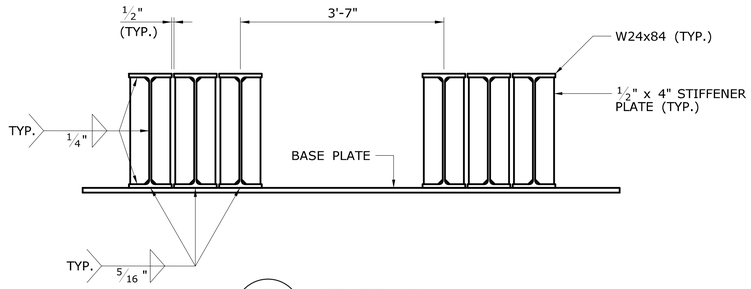

A SECTION S-74 SCALE: 3/4" = 1'-0"

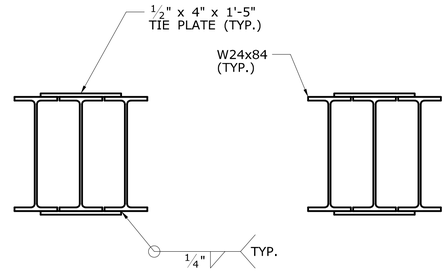

B SECTION S-74 SCALE: 3/4" = 1'-0"

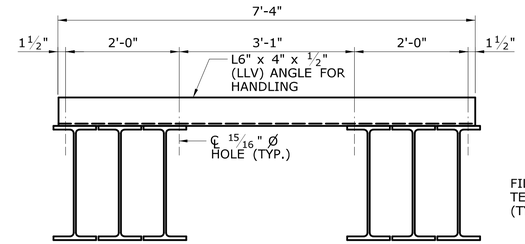

C SECTION S-74 SCALE: 3/4" = 1'-0"

JUMP SPAN FRAMING TYPE 1

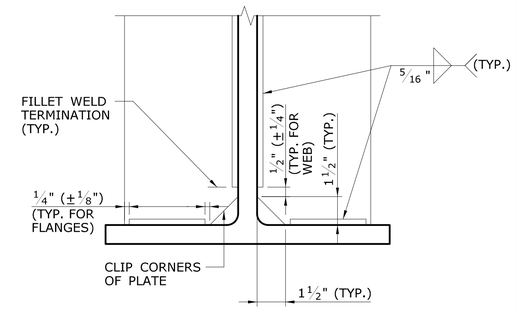

CLIP AND WELD TERMINATION DETAIL

SCALE: 3" = 1'-0"

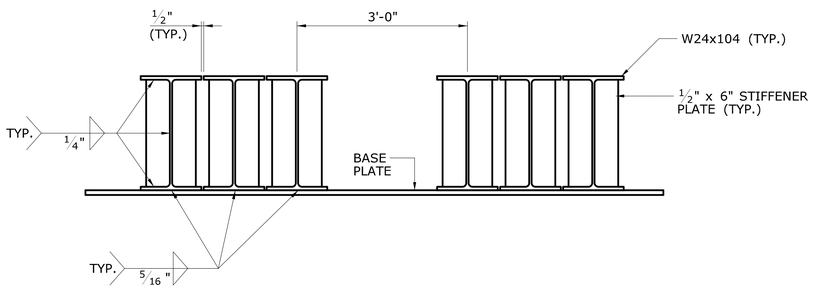

E SECTION S-75 SCALE: 3/4" = 1'-0"

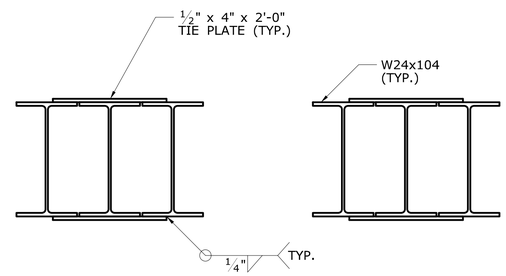

F SECTION S-75 SCALE: 3/4" = 1'-0"

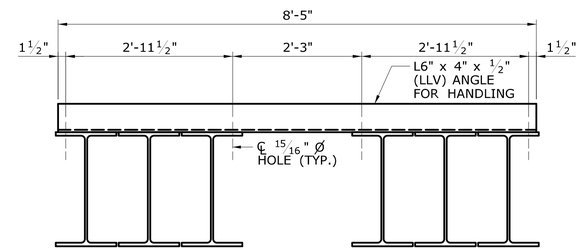

G SECTION S-75 SCALE: 3/4" = 1'-0"

JUMP SPAN FRAMING TYPE 2

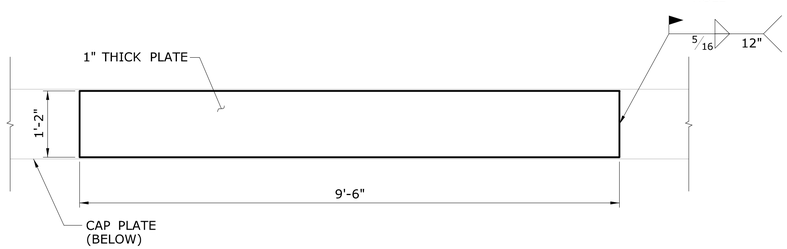

BASE PLATE DETAIL

SCALE: 3/4" = 1'-0"

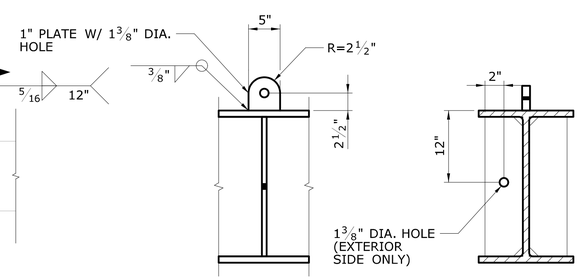

D S-74 / D S-75 PAD EYE DETAIL

N.T.S.

FINAL PLANS FOR REVIEW

REV.	DATE	REVISION DESCRIPTION	SHEET NO.
-	-	-	-
-	-	-	-
-	-	-	-
-	-	-	-
-	-	-	-
-	-	-	-

THE INFORMATION, INCLUDING ESTIMATED QUANTITIES OF WORK, SHOWN ON THESE SHEETS IS BASED ON LIMITED INVESTIGATIONS BY THE STATE AND IS IN NO WAY WARRANTED TO INDICATE THE CONDITIONS OF ACTUAL QUANTITIES OF WORK WHICH WILL BE REQUIRED.

Plotted Date: 3/28/2016

DESIGNER/DRAFTER: J. IVES
CHECKED BY: D. COSTELLO
SCALE AS NOTED

STATE OF CONNECTICUT
DEPARTMENT OF TRANSPORTATION

Filename: ...\SB..MSH..Br08012R..0135..0301..JSP-FRM-3.dgn

SIGNATURE/ BLOCK:

PROJECT TITLE: REPLACEMENT OF MNRR BRIDGE OVER ATLANTIC STREET PHASE 2

TOWN: STAMFORD

DRAWING TITLE: JUMP SPANS FRAMING DETAILS

PROJECT NO. 135-301
DRAWING NO. S-76
SHEET NO. 01.05.076

3/28/2016
P:\Projects\ConnDot\36938292\500 CADD-GIS-Graphics\510 CADD\510.04 Struc.Bridge\MSta.Contract.Sheet.Files\SB.MSH.Br08012R.0135.0301.JSP-FRM-3.dgn

Border Version: 11/14/08

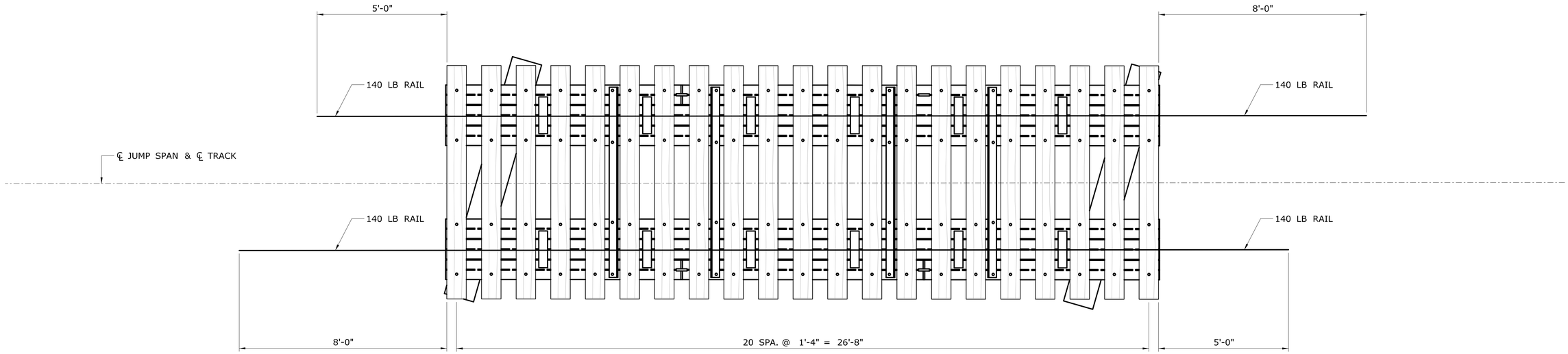

TYPE 1

SCALE: ½" = 1'-0"

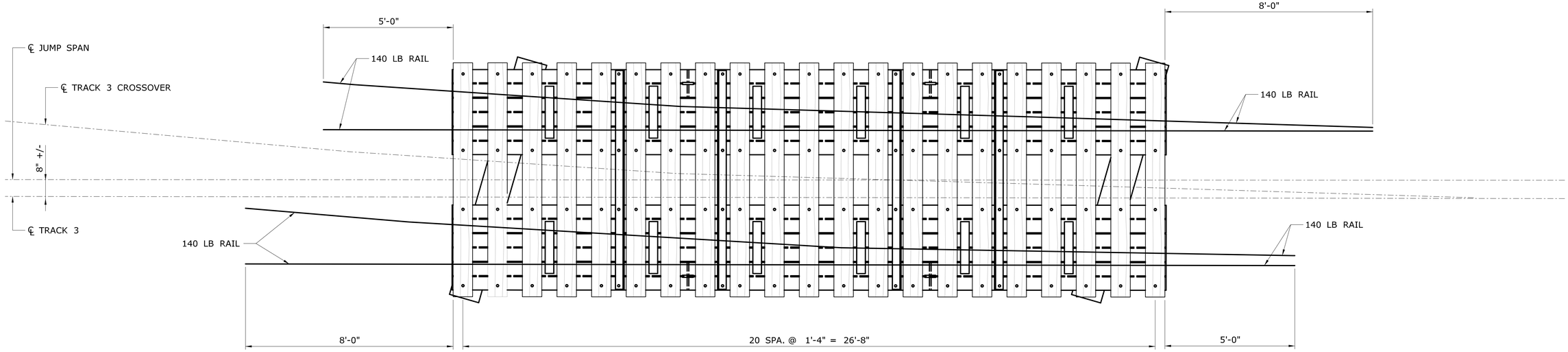

TYPE 2

SCALE: ½" = 1'-0"

FINAL PLANS FOR REVIEW

REV.	DATE	REVISION DESCRIPTION	SHEET NO.
-	-	-	-
-	-	-	-
-	-	-	-
-	-	-	-
-	-	-	-
-	-	-	-

THE INFORMATION, INCLUDING ESTIMATED QUANTITIES OF WORK, SHOWN ON THESE SHEETS IS BASED ON LIMITED INVESTIGATIONS BY THE STATE AND IS IN NO WAY WARRANTED TO INDICATE THE CONDITIONS OF ACTUAL QUANTITIES OF WORK WHICH WILL BE REQUIRED.

Plotted Date: 3/28/2016

DESIGNER/DRAFTER: C. RUSSO

CHECKED BY:

SCALE AS NOTED

STATE OF CONNECTICUT
DEPARTMENT OF TRANSPORTATION

Filename: ...\SB_MSH_Br08012R_0135_0301_JSP-DECK.dgn

SIGNATURE/ BLOCK:

PROJECT TITLE:
REPLACEMENT OF MNRR BRIDGE OVER ATLANTIC STREET PHASE 2

TOWN: **STAMFORD**

DRAWING TITLE: **JUMP SPANS DECK PLANS**

PROJECT NO. **135-301**

DRAWING NO. **S-77**

SHEET NO. **01.05.077**

3/28/2016
P:\Projects\ConnDot\36938292\500 CADD-GIS-Graphics\510 CADD\510.04 Struc. Bridge\MSta. Contract. Sheet. Files\SB_MSH_Br08012R_0135_0301_JSP-DECK.dgn

Border Version: 11/14/08

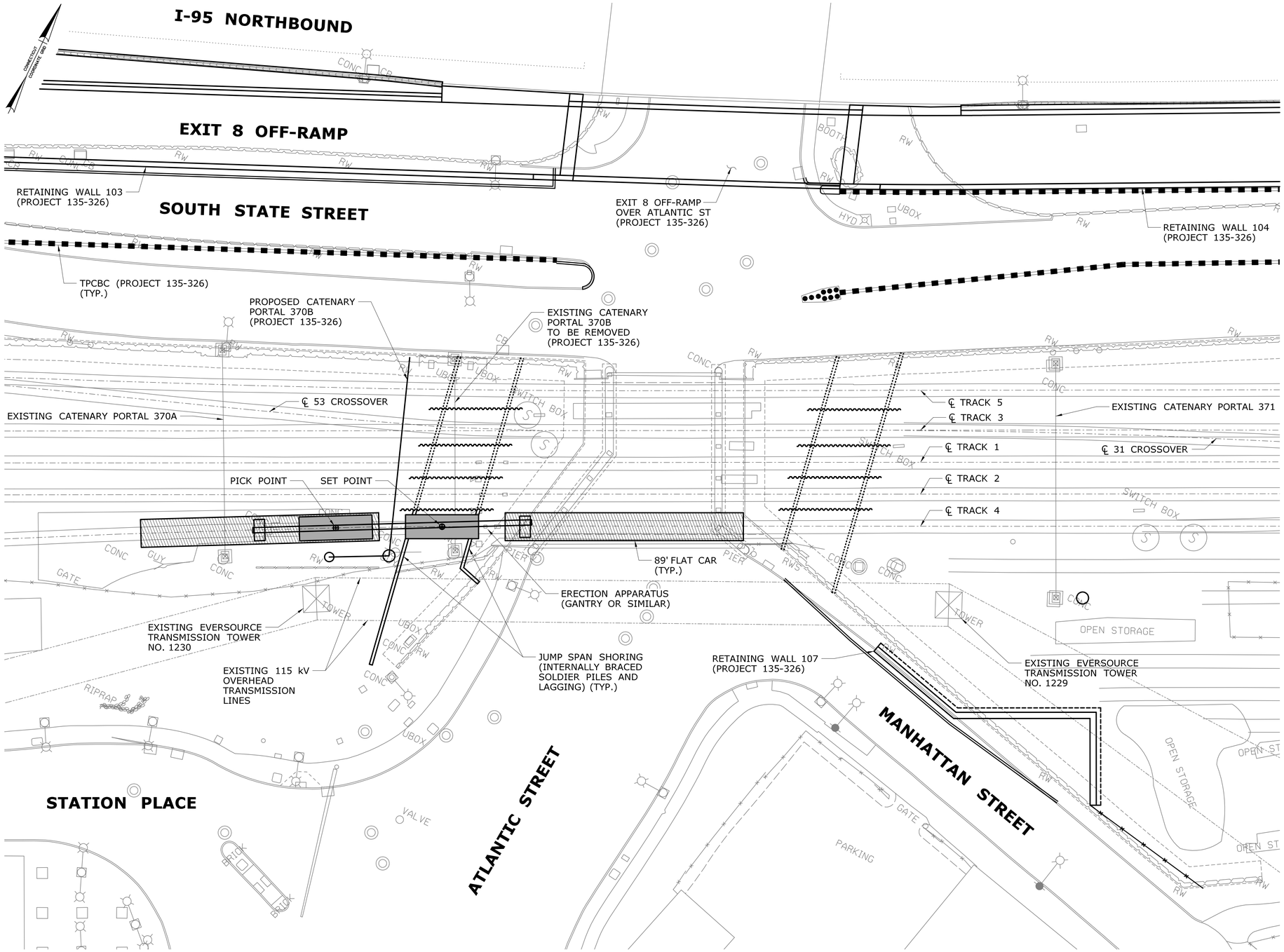

PLAN

SCALE: 1" = 20'

JUMP SPAN ERECTION NOTES

1. TRACK 4 WEST SPAN ERECTION SHOWN, OTHER TRACKS SIMILAR.
2. JUMP SPAN ERECTION SHALL BE SEQUENCED AS FOLLOWS:
   - WEEKEND 1: TRACK 4 WEST SPAN
   - WEEKEND 2: TRACK 4 EAST SPAN
   - WEEKEND 3: TRACK 2 EAST AND WEST SPANS
   - WEEKEND 4: TRACK 1 EAST AND WEST SPANS
   - WEEKEND 5: TRACK 3 EAST AND WEST SPANS
   - WEEKEND 6: TRACK 5 EAST AND WEST SPANS
3. THE ERECTION APPARATUS SHOWN ON THIS DRAWING IS BASED ON THE JUMP SPAN CONFIGURATION SHOWN ELSEWHERE IN THE PROJECT PLANS, AND ON THE FOLLOWING:
   - APPROXIMATE PICK WEIGHT: 28,700 LB EXCEPT AS NOTED.
   - APPROXIMATE PICK WEIGHT AT TRACK 3, WEST SIDE: 32,500 LB.
   - ERECTION SHALL BE ACCOMPLISHED WORKING BENEATH THE OVERHEAD MESSENGER AND TROLLEY WIRES.
4. THE DETAILS OF THE ERECTION APPARATUS HAVE BEEN LEFT GENERAL TO PERMIT DESIGN BY THE CONTRACTOR. SUGGESTED GIRDER CONFIGURATIONS FOR CONSIDERATION INCLUDE THE FOLLOWING:
   - A GANTRY CRANE
   - A SIMPLE SPAN OVERHEAD GIRDER
   - A CANTILEVER OVERHEAD GIRDER

   SUGGESTED LIFTING AND SETTING CONFIGURATIONS FOR CONSIDERATION INCLUDE THE FOLLOWING:
   - ALTERNATING JACKING AT BOTH SUPPORTS
   - A STATIONARY OR MOVEABLE HOIST
5. THIS DRAWING DEPICTS A SUGGESTED JUMP SPAN ERECTION SCENARIO. THE ACTUAL JUMP SPAN ERECTION SCENARIO SHALL BE THE RESPONSIBILITY OF THE CONTRACTOR AND SHALL BE SUBMITTED TO THE ENGINEER FOR REVIEW AS PER THE PROJECT SPECIFICATIONS. THE CONTRACTOR IS ADVISED OF THE FOLLOWING LIMITATIONS AND CONSIDERATIONS REGARDING ALTERNATIVE JUMP SPAN ERECTION SCENARIOS:
   - RUBBER GRADE CROSSINGS, BALLAST DAMS AND CRANE MATS SHALL NOT BE USED WITHIN THE INTERLOCKING, WHICH ENCOMPASSES THE PROJECT LIMITS.
   - THE CONTRACTOR'S EQUIPMENT AND APPURTENANCES SHALL NOT ENCROACH WITHIN 15 FT (HORIZONTAL AND VERTICAL) OF THE 115 kV OVERHEAD TRANSMISSION LINES.
   - THE SUBMISSION SHALL CLEARLY IDENTIFY IMPACTS TO RAILROAD OPERATIONS, LOCAL TRAFFIC AND PROJECT SCHEDULE.
   - RAILROAD CLOSURES MUST BE SECURED BY THE CONTRACTOR BY MEANS OF A WRITTEN AGREEMENT WITH METRO-NORTH RAILROAD. LIQUIDATED DAMAGES MAY BE ASSESSED FOR VIOLATIONS OF AGREED-UPON CLOSURE DURATIONS.
   - THE REJECTION OR APPROVAL OF AN ALTERNATIVE JUMP SPAN ERECTION SCENARIO SHALL BE AT THE SOLE DISCRETION OF THE STATE. IN THE ABSENCE OF AN APPROVED ALTERNATIVE JUMP SPAN ERECTION SCENARIO, THE JUMP SPANS SHALL BE ERECTED AS SHOWN ON THE PROJECT PLANS.

FINAL PLANS FOR REVIEW

REV.	DATE	REVISION DESCRIPTION	SHEET NO.
-	-	-	-
-	-	-	-
-	-	-	-
-	-	-	-
-	-	-	-
-	-	-	-

THE INFORMATION, INCLUDING ESTIMATED QUANTITIES OF WORK, SHOWN ON THESE SHEETS IS BASED ON LIMITED INVESTIGATIONS BY THE STATE AND IS IN NO WAY WARRANTED TO INDICATE THE CONDITIONS OF ACTUAL QUANTITIES OF WORK WHICH WILL BE REQUIRED.

Plotted Date: 3/28/2016

DESIGNER/DRAFTER: J. IVES

CHECKED BY:

SCALE AS NOTED

STATE OF CONNECTICUT
DEPARTMENT OF TRANSPORTATION

Filename: ...\SB_MSH_Br08012R_0135_0301_JSP-STG.dgn

SIGNATURE/
BLOCK:

PROJECT TITLE:
REPLACEMENT OF MNRR BRIDGE OVER ATLANTIC STREET PHASE 2

TOWN: STAMFORD

DRAWING TITLE: JUMP SPANS LAYDOWN PLAN

PROJECT NO. 135-301

DRAWING NO. S-78

SHEET NO. 01.05.078

3/28/2016
P:\Projects\CommDot\36938292\900 CADD-GIS-Graphics\510 CADD\510.04 Struc. Bridge\MSha Contract Sheet Files\SB_MSH_Br08012R_0135_0301_JSP-STG.dgn

Border Version: 11/14/08

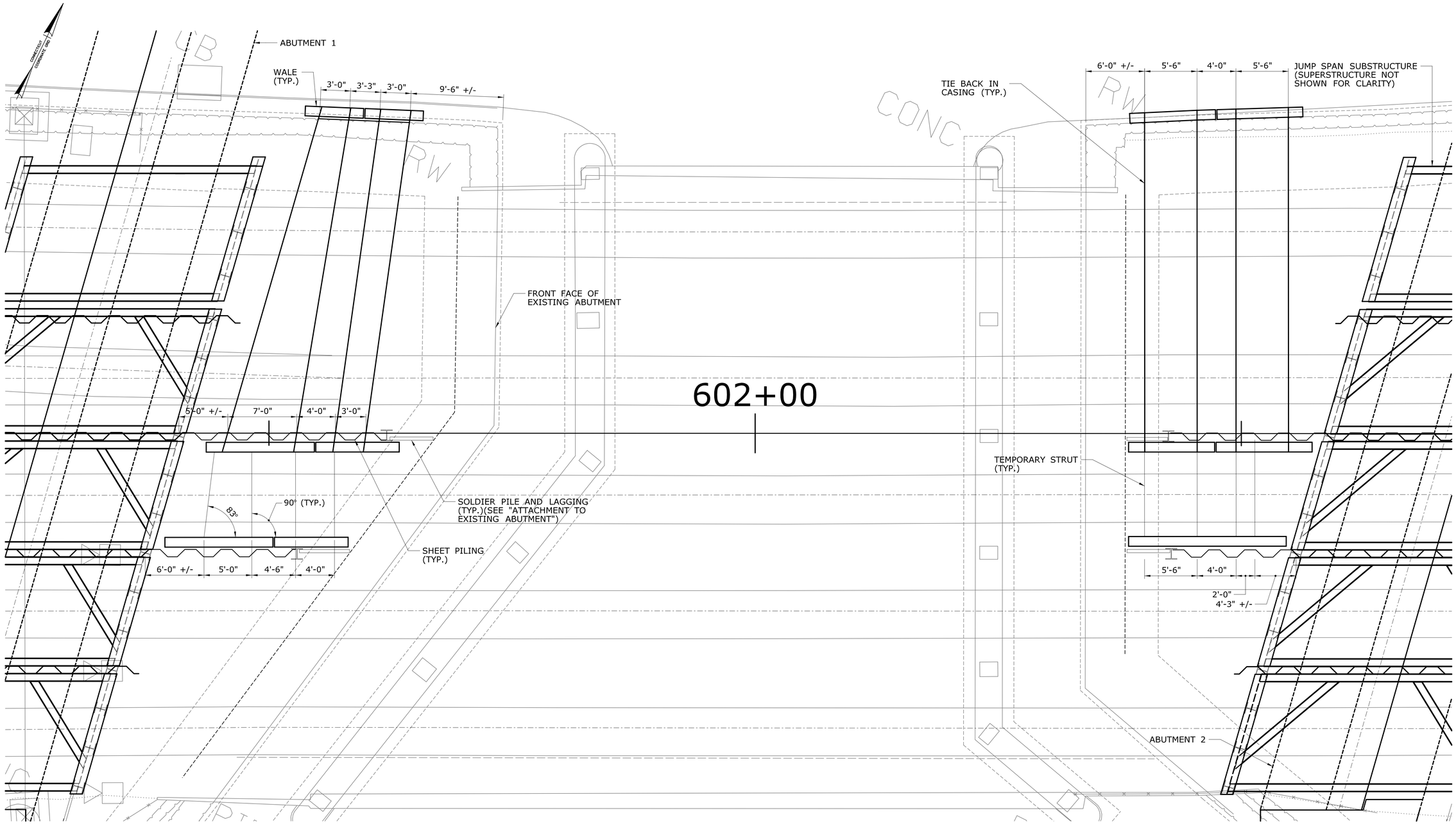

PLAN

SCALE: 1" = 5'-0"

FINAL PLANS FOR REVIEW

REV.	DATE	REVISION DESCRIPTION	SHEET NO.
-	-	-	-
-	-	-	-
-	-	-	-
-	-	-	-
-	-	-	-
-	-	-	-

THE INFORMATION, INCLUDING ESTIMATED QUANTITIES OF WORK, SHOWN ON THESE SHEETS IS BASED ON LIMITED INVESTIGATIONS BY THE STATE AND IS IN NO WAY WARRANTED TO INDICATE THE CONDITIONS OF ACTUAL QUANTITIES OF WORK WHICH WILL BE REQUIRED.

Plotted Date: 3/28/2016

DESIGNER/DRAFTER: K. BARKER

CHECKED BY: J. IVES

SCALE AS NOTED

STATE OF CONNECTICUT
DEPARTMENT OF TRANSPORTATION

Filename: ...\SB..MSH..Br08012R..0135..0301..SCW-GPN.dgn

SIGNATURE/ BLOCK:

PROJECT TITLE:
REPLACEMENT OF MNRR BRIDGE OVER ATLANTIC STREET PHASE 2

TOWN: **STAMFORD**

DRAWING TITLE: **STAGE CLOSURE WALL GENERAL PLAN**

PROJECT NO. **135-301**

DRAWING NO. **S-79**

SHEET NO. **01.05.079**

3/28/2016
P:\Projects\ConnDot\36938292\500 CADD-GIS-Graphics\510 CADD\510.04 Struc. Bridge\MSta. Contract. Sheet. Files\SB. MSH. Br08012R. 0135. 0301. SCW-GPN.dgn

Border Version: 11/14/08

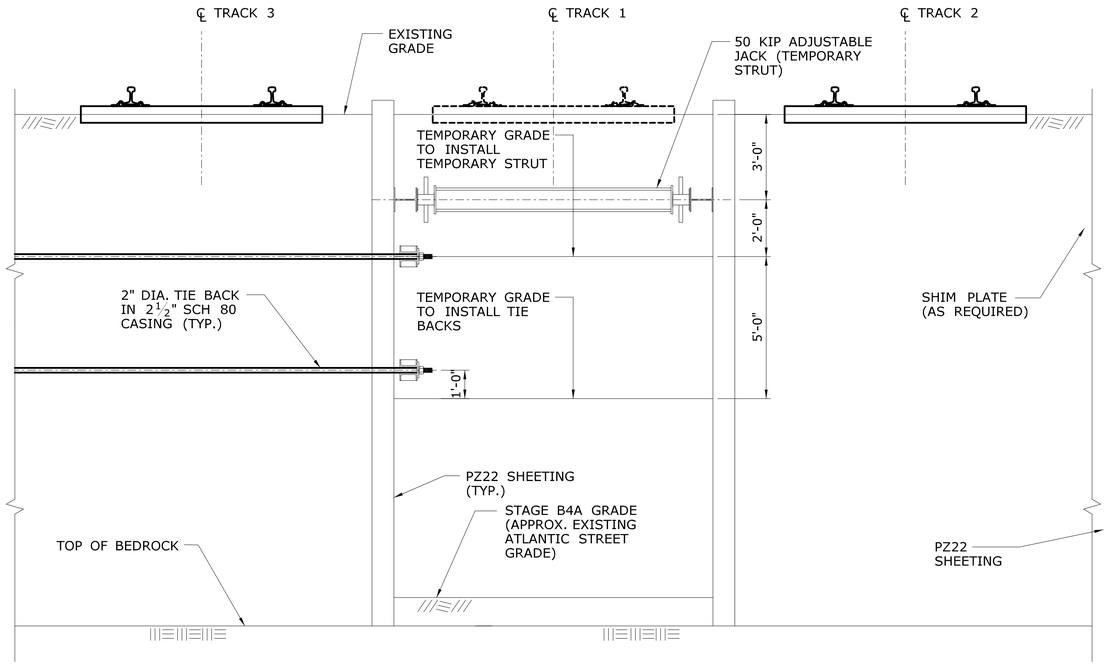

SECTION

SCALE: ⅜" = 1'-0"

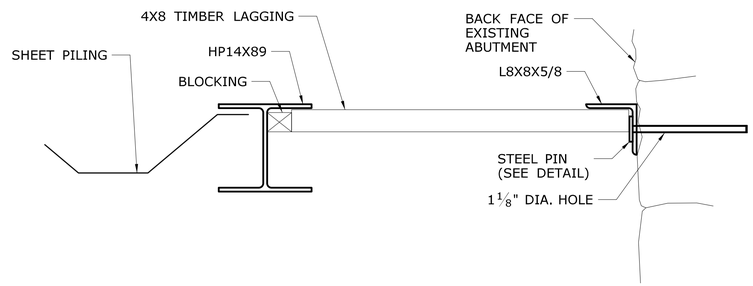

ATTACHMENT TO EXISTING ABUTMENT

SCALE: ⅜" = 1'-0"

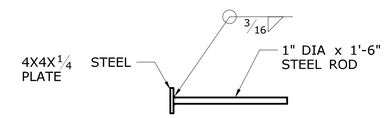

PIN DETAIL

SCALE: ⅜" = 1'-0"

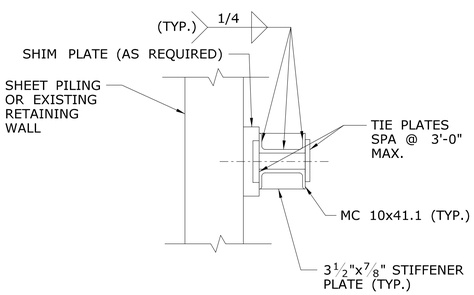

WALE DETAIL

NOT TO SCALE

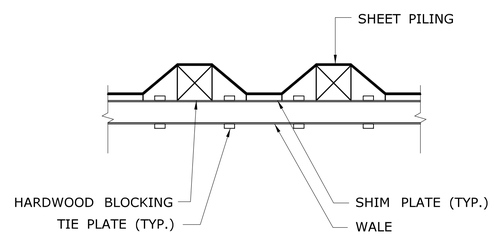

WALE PLAN

NOT TO SCALE

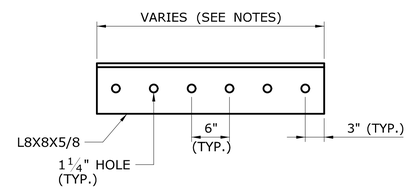

ANGLE DETAIL

SCALE: ⅜" = 1'-0"

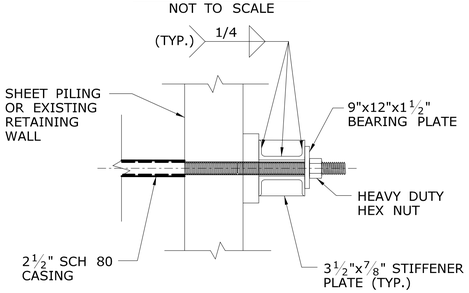

TIE BACK DETAIL

NOT TO SCALE

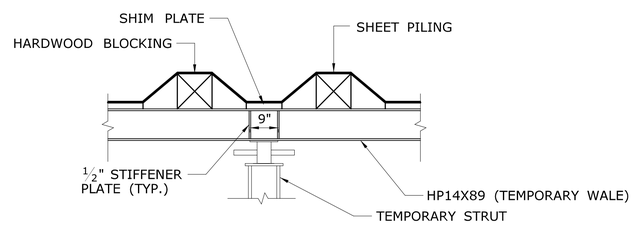

TEMPORARY WALE PLAN

NOT TO SCALE

NOTES

1. CONTRACTOR SHALL HAVE ANGLES OF VARIOUS LENGTHS ON HAND DURING CONSTRUCTION TO ACCOUNT FOR UNKNOWN BACK OF ABUTMENT DIMENSIONS.
2. A MINIMUM OF TWO PINS SHALL BE INSTALLED IN EACH ANGLE.
3. PINS SHALL BE SPACED A MAXIMUM OF 1'-6".
4. PINS SHALL BE PLACED TO AVOID DRILLING BETWEEN STONES OR AT STONE EDGES.
5. BLOCKING AT SOLDIER PILE SHALL BRING TIMBER LAGGING INTO CONTACT WITH PIN.

FINAL PLANS FOR REVIEW

REV.	DATE	REVISION DESCRIPTION	SHEET NO.
-	-	-	-
-	-	-	-
-	-	-	-
-	-	-	-
-	-	-	-
-	-	-	-

THE INFORMATION, INCLUDING ESTIMATED QUANTITIES OF WORK, SHOWN ON THESE SHEETS IS BASED ON LIMITED INVESTIGATIONS BY THE STATE AND IS IN NO WAY WARRANTED TO INDICATE THE CONDITIONS OF ACTUAL QUANTITIES OF WORK WHICH WILL BE REQUIRED.

Plotted Date: 3/28/2016

DESIGNER/DRAFTER: K. BARKER
CHECKED BY: J. IVES

STATE OF CONNECTICUT
DEPARTMENT OF TRANSPORTATION

Filename: ...\SB..MSH..Br08012R..0135..0301..SCW-DET.dgn

SIGNATURE/ BLOCK:

PROJECT TITLE: REPLACEMENT OF MNRR BRIDGE OVER ATLANTIC STREET PHASE 2

TOWN: STAMFORD

DRAWING TITLE: STAGE CLOSURE WALL DETAILS

PROJECT NO. 135-301
DRAWING NO. S-80
SHEET NO. 01.05.080

3/28/2016
P:\Projects\CommDot\36938292\500 CADD-GIS-Graphics\510 CADD\510.04 Struc. Bridge\WSta. Contract. Sheet. Files\SB. MSH. Br08012R. 0135. 0301. SCW-DET.dgn

Border Version: 11/14/08

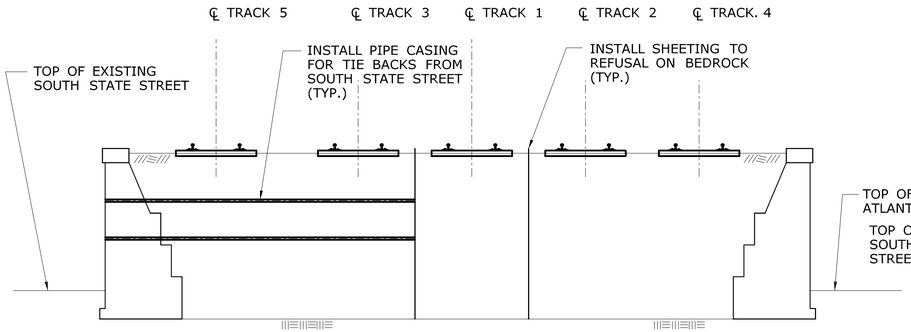

STAGE B1 SECTION

SCALE: 1/8" = 1'-0"

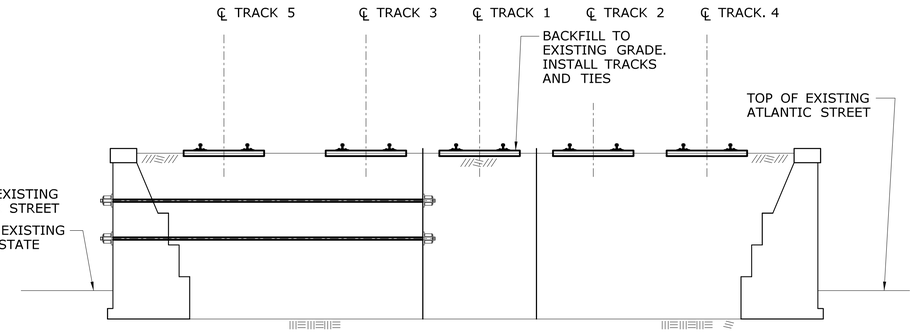

STAGE B4C SECTION

SCALE: 1/8" = 1'-0"

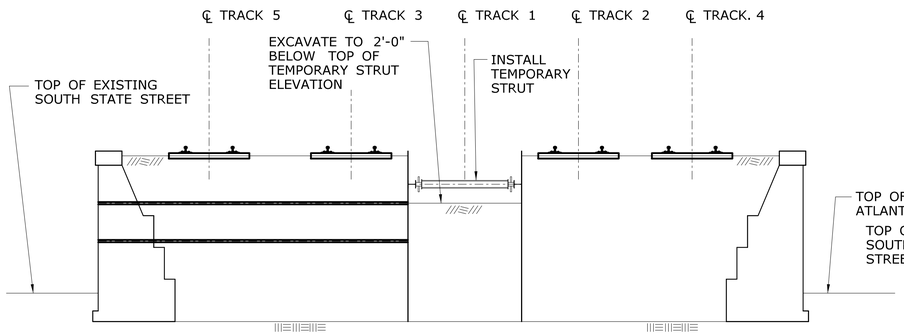

STAGE B4A SECTION

SCALE: 1/8" = 1'-0"

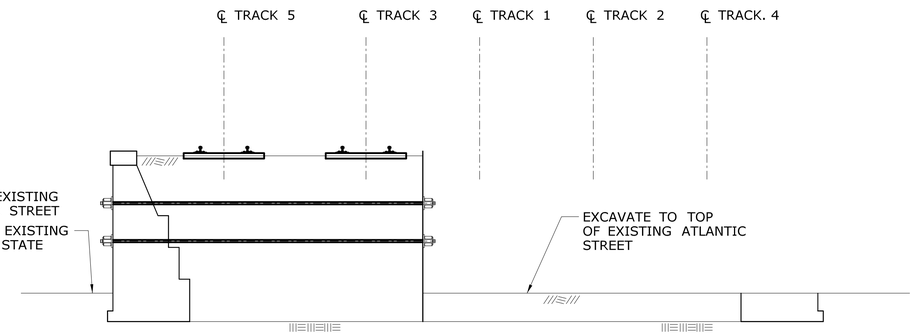

STAGE B5A SECTION

SCALE: 1/8" = 1'-0"

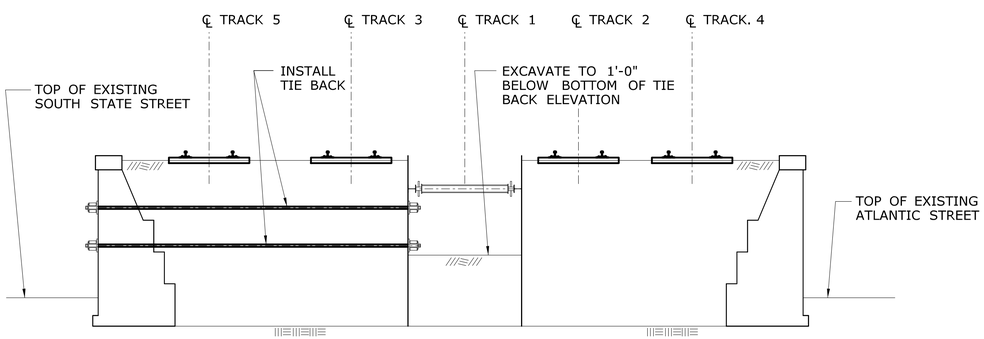

STAGE B4B SECTION

SCALE: 1/8" = 1'-0"

SUGGESTED CONSTRUCTION SEQUENCE

STAGE B1
1. INSTALL SHEETING AND SOLDIER PILES TO REFUSAL ON BEDROCK BETWEEN TRACKS 1 & 2 AND 1 & 3 DURING TRACK OUTAGES FOR JUMP SPAN PILE INSTALLATION.
2. INSTALL PIPE CASING FOR TIE BACK FROM SOUTH STATE STREET AND DRILL HOLES IN SHEETING FOR TIE BACKS.

STAGE B4A
1. EXCAVATE TO 2'-0" BELOW TEMPORARY STRUT ELEVATION.
2. INSTALL TEMPORARY STRUT BETWEEN SHEETING LINES.

STAGE B4B
1. EXCAVATE TO 1'-0" BELOW BOTTOM TIE BACK ELEVATION.
2. INSTALL TIE BACKS.

STAGE B4C
1. REMOVE TEMPORARY STRUT.
2. BACKFILL TO EXISTING GRADE.
3. INSTALL TRACKS AND TIES.

STAGE B5A
1. EXCAVATE TO TOP OF EXISTING ATLANTIC STREET ELEVATION.

FINAL PLANS FOR REVIEW

REV.	DATE	REVISION DESCRIPTION	SHEET NO.
-	-	-	-
-	-	-	-
-	-	-	-
-	-	-	-
-	-	-	-
-	-	-	-

THE INFORMATION, INCLUDING ESTIMATED QUANTITIES OF WORK, SHOWN ON THESE SHEETS IS BASED ON LIMITED INVESTIGATIONS BY THE STATE AND IS IN NO WAY WARRANTED TO INDICATE THE CONDITIONS OF ACTUAL QUANTITIES OF WORK WHICH WILL BE REQUIRED.

Plotted Date: 3/28/2016

DESIGNER/DRAFTER: K. BARKER
CHECKED BY: J. IVES

STATE OF CONNECTICUT
DEPARTMENT OF TRANSPORTATION

Filename: ...\SB_MSH_Br08012R_0135_0301_SCW-STG.dgn

SIGNATURE/ BLOCK:

PROJECT TITLE: REPLACEMENT OF MNRR BRIDGE OVER ATLANTIC STREET PHASE 2

TOWN: STAMFORD

DRAWING TITLE: STAGE CLOSURE WALL STAGE CONSTRUCTION

PROJECT NO. 135-301
DRAWING NO. S-81
SHEET NO. 01.05.081

3/28/2016
P:\Projects\CommDot\36938292\500 CADD-GIS-Graphics\510 CADD\510.04 Struc. Bridge\MSta. Contract Sheet Files\SB_MSH_Br08012R_0135_0301_SCW-STG.dgn

Border Version: 11/14/08

ASSEMBLY AREA AND SPMT ROUTE NOTES

1. THESE DRAWINGS DEPICT SUGGESTED ASSEMBLY AREAS AND SPMT ROUTES. THESE SUGGESTED ASSEMBLY AREAS WILL BE MADE AVAILABLE TO THE CONTRACTOR AT NO COST FOR THE DURATION OF THE PROJECT. ALTERNATIVE ASSEMBLY AREAS AND SPMT ROUTES MAY BE SUBMITTED TO THE ENGINEER FOR REVIEW AS PER THE PROJECT SPECIFICATIONS.

2. THE CONTRACTOR IS ADVISED OF THE FOLLOWING LIMITATIONS AND CONSIDERATIONS REGARDING ALTERNATIVE ASSEMBLY AREAS AND SPMT ROUTES:

   - IMPACTS TO LOCAL TRAFFIC AND PROJECT SCHEDULE WILL WEIGH HEAVILY IN THE STATE'S REVIEW OF ALTERNATIVE ASSEMBLY AREAS.

   - THE SUBMISSION SHALL INCLUDE SITE PLANS FOR EACH ASSEMBLY AREA. THE SITE PLANS SHALL BE PRODUCED ON 20 SCALE DRAWINGS AND SHALL CLEARLY IDENTIFY THE LAYOUT OF PROPOSED GRADING, DRAINAGE STRUCTURES, EARTH RETAINING STRUCTURES, SUPPORT STRUCTURES, SECURITY FENCING, GROUND IMPROVEMENTS, CRANE LOCATIONS AND IMPACTS TO EXISTING UTILITIES. THE PLANS SHALL BE PRODUCED ON SURVEYED BASE MAPPING OF THE PROPERTIES UNDER CONSIDERATION AS WELL AS ALL IMMEDIATELY ADJACENT PROPERTIES.

   - THE SUBMISSION SHALL INCLUDE TRAVEL PATH PLANS FROM EACH ALTERNATIVE ASSEMBLY AREA TO THE BRIDGE SITE. THE TRAVEL PATH PLANS SHALL BE PRODUCED ON DRAWINGS AT A SCALE NOT TO EXCEED 1" = 60' AND SHALL IDENTIFY TEMPORARY AND/OR PERMANENT IMPACTS TO ALL STRUCTURES, SIDEWALKS, CURBING, UTILITIES, SIGNAGE, PAVEMENT AND/OR OTHER APPURTENANCES. THE PLANS SHALL BE PRODUCED ON SURVEYED BASE MAPPING WITH A BANDWIDTH OF AT LEAST 50 FEET ALONG THE TRAVEL PATH.

   - ACCEPTANCE OF THE PROPOSED ASSEMBLY AREAS SHALL BE CONTINGENT UPON THE CONTRACTOR'S ABILITY TO SECURE ANY FEDERAL, STATE AND/OR LOCAL PERMITS AND OTHER APPROVALS THAT MAY BE REQUIRED TO UTILIZE THE PROPOSED ASSEMBLY AREAS AND TRAVEL PATHS.

   - THE REJECTION OR APPROVAL OF ALTERNATIVE ASSEMBLY AREAS SHALL BE AT THE SOLE DISCRETION OF THE STATE. IN THE ABSENCE OF APPROVED ALTERNATIVE ASSEMBLY AREAS, THE STATE RESERVES THE RIGHT TO REQUIRE THE SUPERSTRUCTURE TO BE ASSEMBLED AT THE SUGGESTED SITES SHOWN ON THE CONTRACT PLANS.

3. REGARDLESS OF THE SITES UTILIZED AS ASSEMBLY AREAS, SECURITY AND PREPARATION OF THE SITES SHALL BE PAID FOR UNDER THE ITEM "MOBILIZATION." NO SEPARATE PAYMENT WILL BE MADE FOR RENTAL OR PURCHASE OF THE SITE, CLEARING AND GRUBBING, GRADING, DRAINAGE STRUCTURES, EARTH RETAINING STRUCTURES, SUPPORT STRUCTURES, SECURITY FENCING, GROUND IMPROVEMENTS, OR RESTORATION OF THE SITE UPON COMPLETION OF THE WORK.

4. THE CONTRACTOR SHALL BE RESPONSIBLE FOR THE SAFETY AND PROTECTION OF ALL PUBLIC AND PRIVATE PROPERTY ALONG THE SPMT ROUTE DURING TRANSPORTATION OF THE PROPOSED STRUCTURE. ANY DAMAGE TO EXISTING STRUCTURES, SIDEWALKS, CURBING, UTILITIES, SIGNAGE, PAVEMENT, DRAINAGE STRUCTURES AND/OR OTHER APPURTENANCES SHALL BE REPAIRED IMMEDIATELY AS DIRECTED BY THE ENGINEER.

5. FOLLOWING DELIVERY OF THE PROPOSED SUPERSTRUCTURE, THE ASSEMBLY AREAS SHALL BE RESTORED TO THEIR ORIGINAL CONDITION AS DIRECTED BY THE ENGINEER.

FINAL PLANS FOR REVIEW

REV.	DATE	REVISION DESCRIPTION	SHEET NO.
-	-	-	-
-	-	-	-
-	-	-	-
-	-	-	-
-	-	-	-
-	-	-	-

THE INFORMATION, INCLUDING ESTIMATED QUANTITIES OF WORK, SHOWN ON THESE SHEETS IS BASED ON LIMITED INVESTIGATIONS BY THE STATE AND IS IN NO WAY WARRANTED TO INDICATE THE CONDITIONS OF ACTUAL QUANTITIES OF WORK WHICH WILL BE REQUIRED.

Plotted Date: 3/28/2016

DESIGNER/DRAFTER: J. IVES
CHECKED BY: D. COSTELLO

STATE OF CONNECTICUT
DEPARTMENT OF TRANSPORTATION

Filename: ...\SB_MSH_Br08012R_0135_0301_AARTNO.dgn

SIGNATURE/ BLOCK:

PROJECT TITLE: REPLACEMENT OF MNRR BRIDGE OVER ATLANTIC STREET PHASE 2

TOWN: STAMFORD

DRAWING TITLE: ASSEMBLY AREA & SPMT ROUTE NOTES

PROJECT NO. 135-301
DRAWING NO. S-82
SHEET NO. 01.05.082

3/28/2016
P:\Projects\ConnDot\36938292\500 CADD-GIS-Graphics\510 CADD\510.04 Struc. Bridge\MSta. Contract. Sheet. Files\SB_MSH_Br08012R_0135_0301_AARTNO.dgn

Border Version: 11/14/08

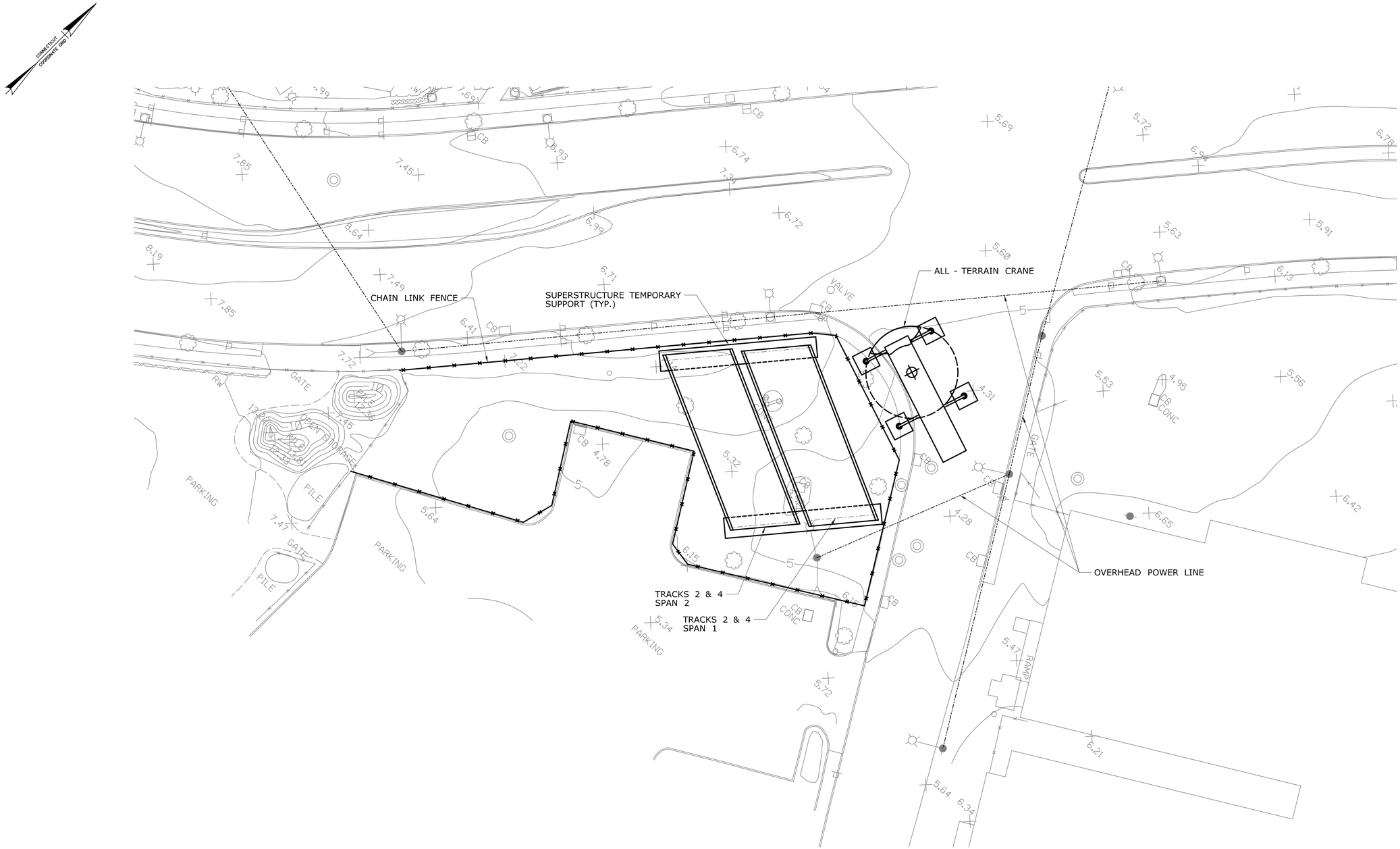

SOUTH ASSEMBLY AREA

SCALE: 1" = 20'-0"

FINAL PLANS FOR REVIEW

REV.	DATE	REVISION DESCRIPTION	SHEET NO.
-	-	-	-
-	-	-	-
-	-	-	-
-	-	-	-
-	-	-	-
-	-	-	-

THE INFORMATION, INCLUDING ESTIMATED QUANTITIES OF WORK, SHOWN ON THESE SHEETS IS BASED ON LIMITED INVESTIGATIONS BY THE STATE AND IS IN NO WAY WARRANTED TO INDICATE THE CONDITIONS OF ACTUAL QUANTITIES OF WORK WHICH WILL BE REQUIRED.

Plotted Date: 3/28/2016

DESIGNER/DRAFTER: J. IVES

CHECKED BY: D. COSTELLO

SCALE AS NOTED

STATE OF CONNECTICUT
DEPARTMENT OF TRANSPORTATION

Filename: ...\SB_MSH_Br08012R_0135_0301_AAS1.dgn

SIGNATURE/ BLOCK:

PROJECT TITLE:
REPLACEMENT OF MNRR BRIDGE OVER ATLANTIC STREET PHASE 2

TOWN: **STAMFORD**

DRAWING TITLE: **SOUTH ASSEMBLY AREA OPTION 1**

PROJECT NO. **135-301**

DRAWING NO. **S-83**

SHEET NO. **01.05.083**

3/28/2016
P:\Projects\CommDot\36938292\500 CADD-GIS-Graphics\510 CADD\510.04 Struc. Bridge\WSta. Contract Sheet Files\SB_MSH_Br08012R_0135_0301_AAS1.dgn

Border Version: 11/14/08

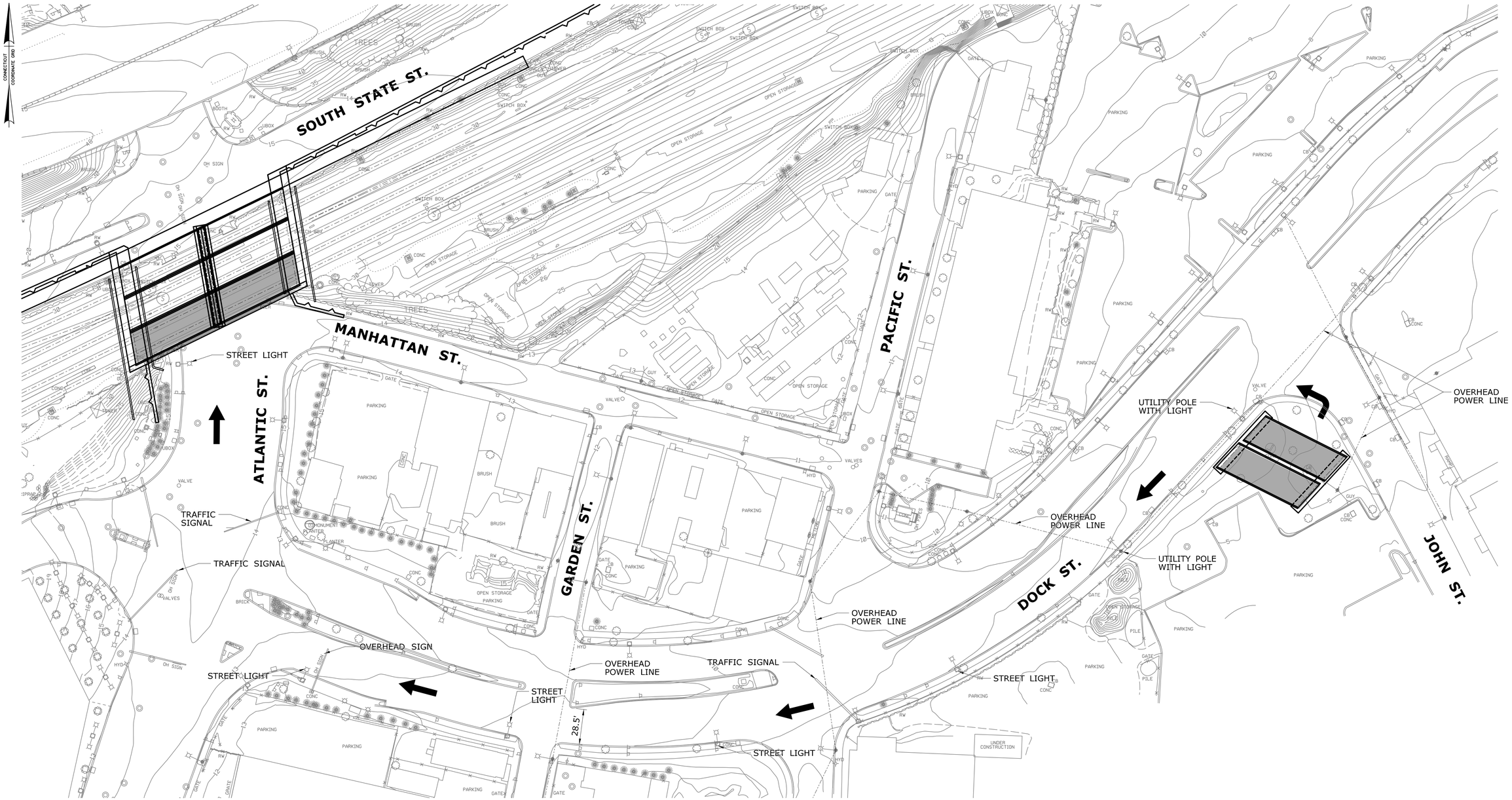

LEGEND

SPMT W/LOAD

TRAVEL PATH PLAN

SCALE: 1" = 40'

FINAL PLANS FOR REVIEW

REV.	DATE	REVISION DESCRIPTION	SHEET NO.
-	-	-	-
-	-	-	-
-	-	-	-
-	-	-	-
-	-	-	-
-	-	-	-

THE INFORMATION, INCLUDING ESTIMATED QUANTITIES OF WORK, SHOWN ON THESE SHEETS IS BASED ON LIMITED INVESTIGATIONS BY THE STATE AND IS IN NO WAY WARRANTED TO INDICATE THE CONDITIONS OF ACTUAL QUANTITIES OF WORK WHICH WILL BE REQUIRED.

Plotted Date: 3/28/2016

DESIGNER/DRAFTER: J. IVES

CHECKED BY: D. COSTELLO

SCALE AS NOTED

STATE OF CONNECTICUT
DEPARTMENT OF TRANSPORTATION

Filename: ...\SB_MSH_Br08012R_0135_0301_RTS.dgn

SIGNATURE/ BLOCK:

PROJECT TITLE:
REPLACEMENT OF MNRR BRIDGE OVER ATLANTIC STREET PHASE 2

TOWN: **STAMFORD**

DRAWING TITLE: **SOUTH SPMT ROUTE**

PROJECT NO. **135-301**

DRAWING NO. **S-86**

SHEET NO. **01.05.086**

3/28/2016
P:\Projects\CommDot\36938292\500 CADD-GIS-Graphics\510 CADD\510.04 Struc_Bridge\MSta_Contract_Sheet_Files\SB_MSH_Br08012R_0135_0301_RTS.dgn

Border Version: 11/14/08

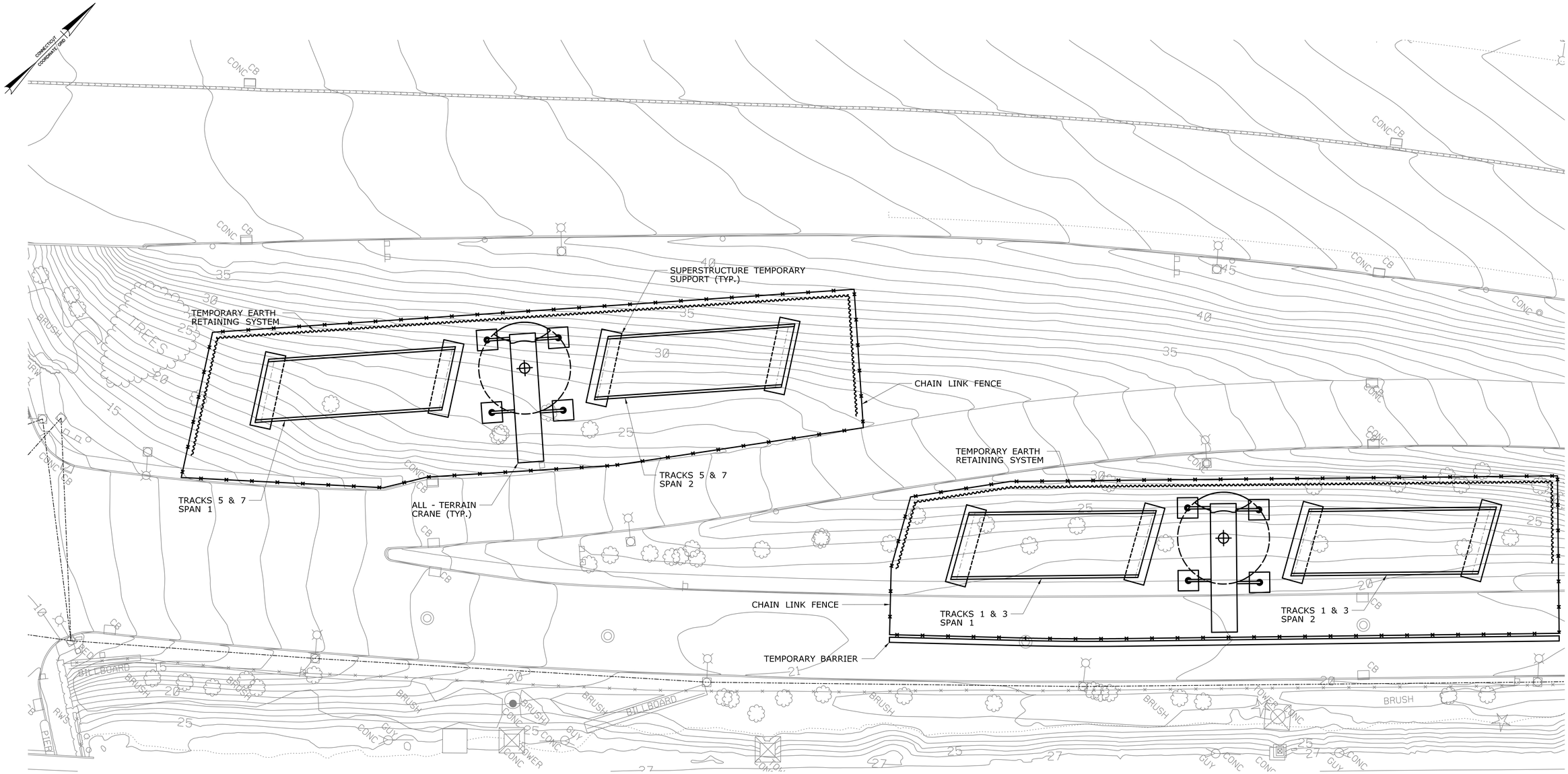

NORTH ASSEMBLY AREA

SCALE: 1" = 20'-0"

FINAL PLANS FOR REVIEW

REV.	DATE	REVISION DESCRIPTION	SHEET NO.
-	-	-	-
-	-	-	-
-	-	-	-
-	-	-	-
-	-	-	-
-	-	-	-

THE INFORMATION, INCLUDING ESTIMATED QUANTITIES OF WORK, SHOWN ON THESE SHEETS IS BASED ON LIMITED INVESTIGATIONS BY THE STATE AND IS IN NO WAY WARRANTED TO INDICATE THE CONDITIONS OF ACTUAL QUANTITIES OF WORK WHICH WILL BE REQUIRED.

Plotted Date: 3/28/2016

DESIGNER/DRAFTER: J. IVES

CHECKED BY: D. COSTELLO

SCALE AS NOTED

STATE OF CONNECTICUT
DEPARTMENT OF TRANSPORTATION

Filename: ...\SB_MSH_Br08012R_0135_0301_AAN1.dgn

SIGNATURE/ BLOCK:

PROJECT TITLE:
REPLACEMENT OF MNRR BRIDGE OVER ATLANTIC STREET PHASE 2

TOWN: **STAMFORD**

DRAWING TITLE: **NORTH ASSEMBLY AREA OPTION 1**

PROJECT NO. **135-301**

DRAWING NO. **S-87**

SHEET NO. **01.05.087**

3/28/2016
P:\Projects\CommDot\36938292\500 CADD-GIS-Graphics\510 CADD\510.04 Struc. Bridge\MSta. Contract. Sheet. Files\SB. MSH. Br08012R. 0135. 0301. AAN1.dgn

Border Version: 11/14/08

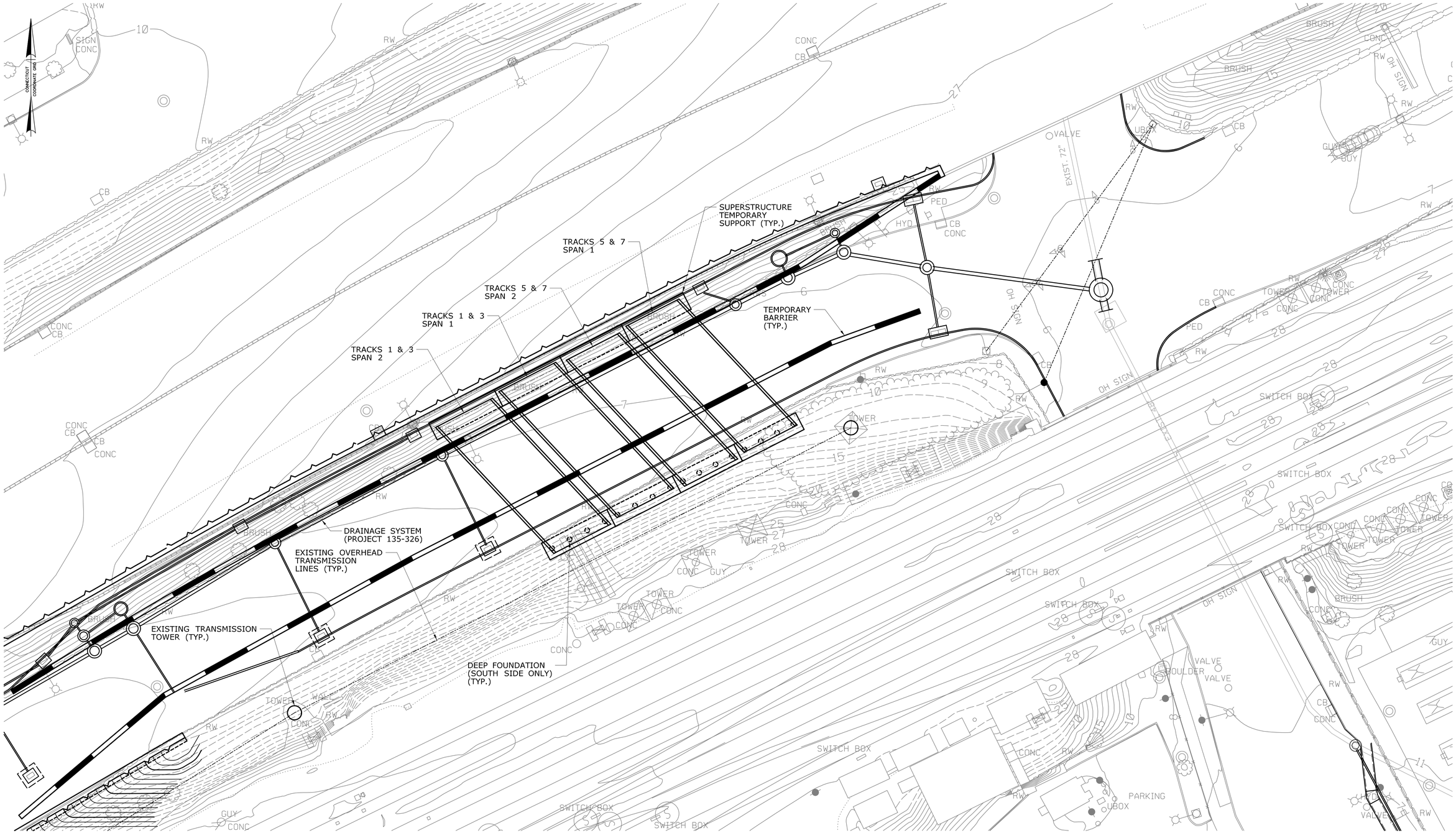

NORTH ASSEMBLY AREA

SCALE: 1" = 20'-0"

FINAL PLANS FOR REVIEW

REV.	DATE	REVISION DESCRIPTION	SHEET NO.
-	-	-	-
-	-	-	-
-	-	-	-
-	-	-	-
-	-	-	-
-	-	-	-

THE INFORMATION, INCLUDING ESTIMATED QUANTITIES OF WORK, SHOWN ON THESE SHEETS IS BASED ON LIMITED INVESTIGATIONS BY THE STATE AND IS IN NO WAY WARRANTED TO INDICATE THE CONDITIONS OF ACTUAL QUANTITIES OF WORK WHICH WILL BE REQUIRED.

Plotted Date: 3/28/2016

DESIGNER/DRAFTER: J. IVES

CHECKED BY:

SCALE AS NOTED

STATE OF CONNECTICUT
DEPARTMENT OF TRANSPORTATION

Filename: ...\SB_MSH_Br08012R_0135_0301_AAN2.dgn

SIGNATURE/ BLOCK:

PROJECT TITLE:
REPLACEMENT OF MNRR BRIDGE OVER ATLANTIC STREET PHASE 2

TOWN: **STAMFORD**

DRAWING TITLE: **NORTH ASSEMBLY AREA OPTION 2**

PROJECT NO. **135-301**

DRAWING NO. **S-88**

SHEET NO. **01.05.088**

3/28/2016
P:\Projects\CommDot\36938292\500 CADD-GIS-Graphics\510 CADD\510.04 Struc. Bridge\MSta. Contract. Sheet. Files\SB. MSH. Br08012R. 0135. 0301. AAN2.dgn

Border Version: 11/14/08

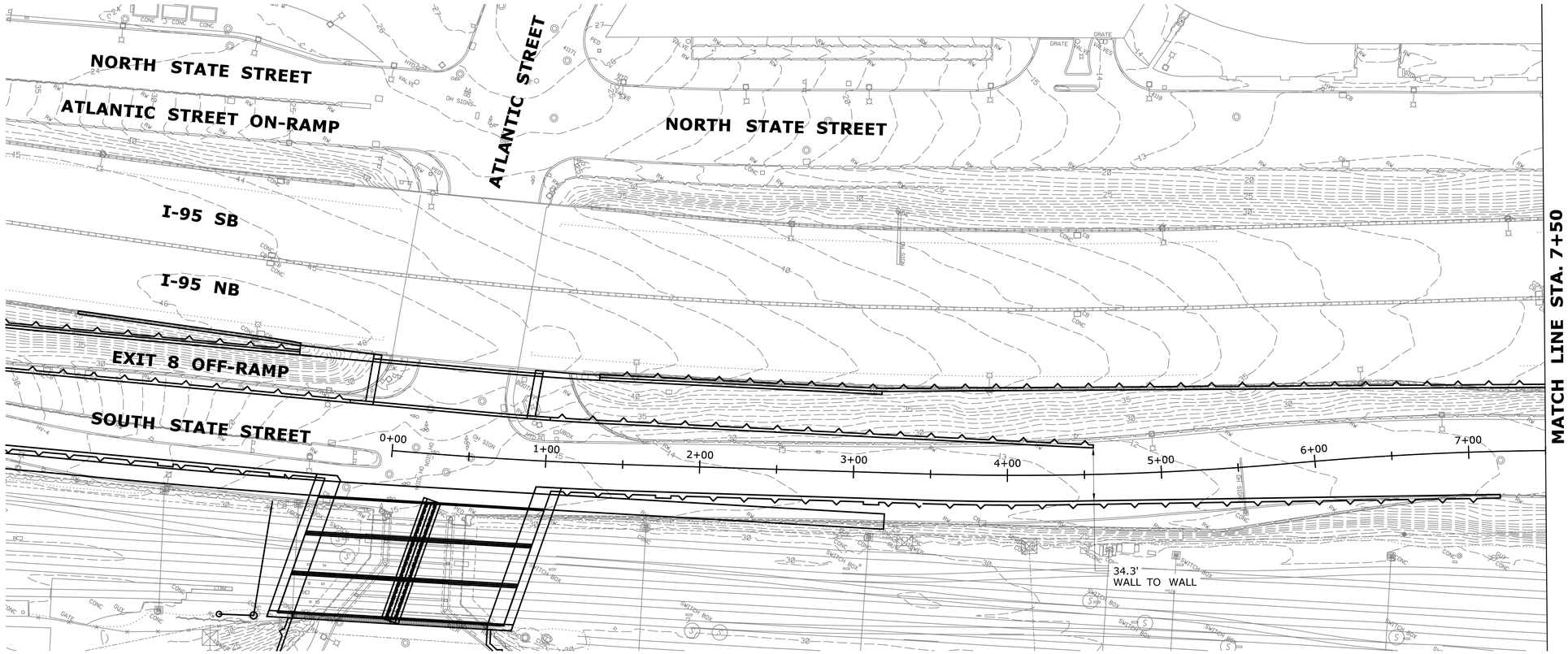

PLAN

SCALE: 1" = 40'

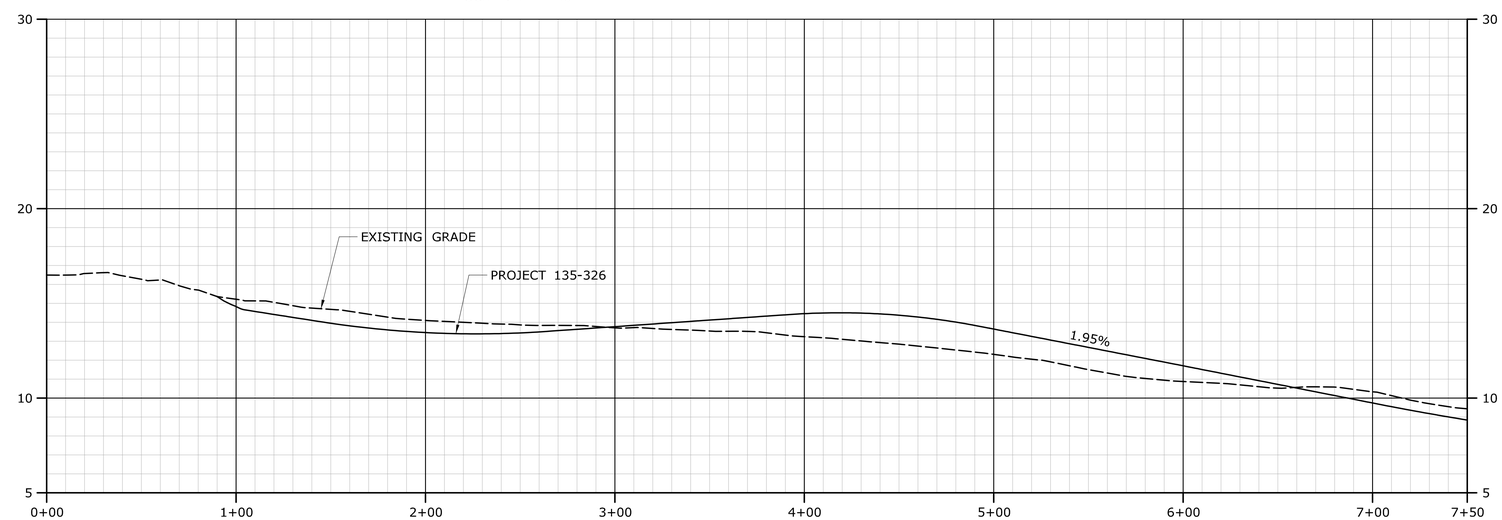

PROFILE

HORIZONTAL SCALE: 1" = 40'
VERTICAL SCALE: 1" = 4'

FOR INFORMATION ONLY

REV.	DATE	REVISION DESCRIPTION	SHEET NO.
-	-	-	-
-	-	-	-
-	-	-	-
-	-	-	-
-	-	-	-
-	-	-	-

THE INFORMATION, INCLUDING ESTIMATED QUANTITIES OF WORK, SHOWN ON THESE SHEETS IS BASED ON LIMITED INVESTIGATIONS BY THE STATE AND IS IN NO WAY WARRANTED TO INDICATE THE CONDITIONS OF ACTUAL QUANTITIES OF WORK WHICH WILL BE REQUIRED.

Plotted Date: 3/28/2016

DESIGNER/DRAFTER: J. IVES
CHECKED BY:
SCALE AS NOTED

STATE OF CONNECTICUT
DEPARTMENT OF TRANSPORTATION

Filename: ...\SB_MSH_Br08012R_0135_0301_RTN1.dgn

SIGNATURE/ BLOCK:

PROJECT TITLE:
REPLACEMENT OF MNRR BRIDGE OVER ATLANTIC STREET PHASE 2

TOWN: **STAMFORD**

DRAWING TITLE: **NORTH SPMT ROUTE (1 OF 4)**

PROJECT NO. **135-301**
DRAWING NO. **S-90**
SHEET NO. **01.05.090**

3/28/2016
P:\Projects\ConnDot\36936292\500 CADD-GIS-Graphics\510 CADD\510.04 Struc. Bridge\MSta. Contract Sheet Files\SB_MSH_Br08012R_0135_0301_RTN1.dgn

Border Version: 11/14/08

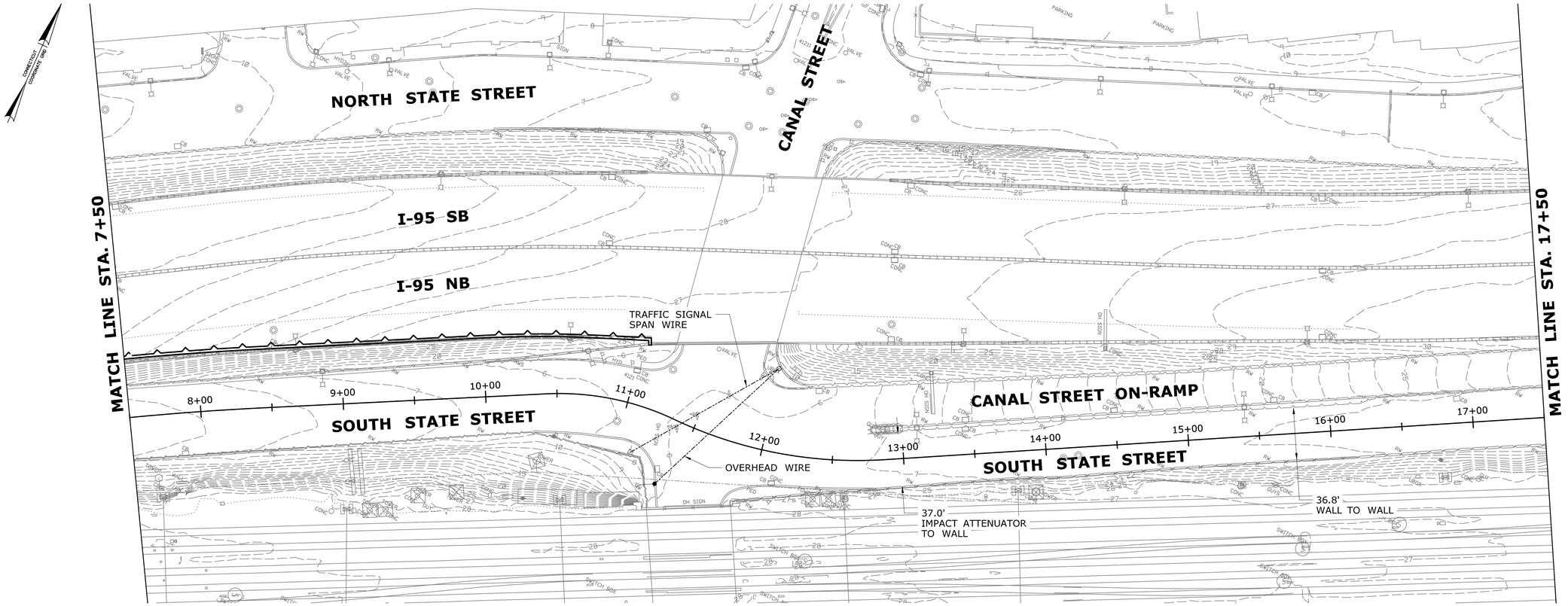

PLAN

SCALE: 1" = 40'

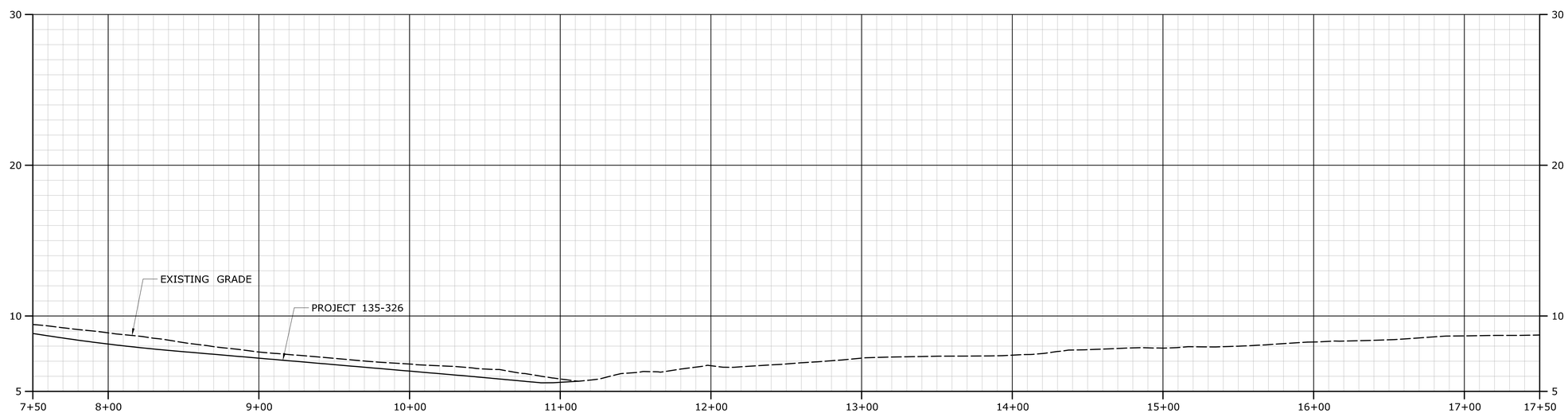

PROFILE

HORIZONTAL SCALE: 1" = 40'
VERTICAL SCALE: 1" = 4'

FOR INFORMATION ONLY

REV.	DATE	REVISION DESCRIPTION	SHEET NO.
-	-	-	-
-	-	-	-
-	-	-	-
-	-	-	-
-	-	-	-
-	-	-	-

THE INFORMATION, INCLUDING ESTIMATED QUANTITIES OF WORK, SHOWN ON THESE SHEETS IS BASED ON LIMITED INVESTIGATIONS BY THE STATE AND IS IN NO WAY WARRANTED TO INDICATE THE CONDITIONS OF ACTUAL QUANTITIES OF WORK WHICH WILL BE REQUIRED.

Plotted Date: 3/28/2016

DESIGNER/DRAFTER: J. IVES
CHECKED BY:
SCALE AS NOTED

STATE OF CONNECTICUT
DEPARTMENT OF TRANSPORTATION

Filename: ...\SB_MSH_Br08012R_0135_0301_RTN2.dgn

SIGNATURE/
BLOCK:

PROJECT TITLE:
REPLACEMENT OF MNRR BRIDGE OVER ATLANTIC STREET PHASE 2

TOWN: **STAMFORD**

DRAWING TITLE: **NORTH SPMT ROUTE (2 OF 4)**

PROJECT NO. **135-301**
DRAWING NO. **S-91**
SHEET NO. **01.05.091**

3/28/2016
P:\Projects\ConnDot\36936292\500 CADD-GIS-Graphics\510 CADD\510.04 Struc. Bridge\MSta. Contract. Sheet. Files\SB_MSH_Br08012R_0135_0301_RTN2.dgn

Border Version: 11/14/08

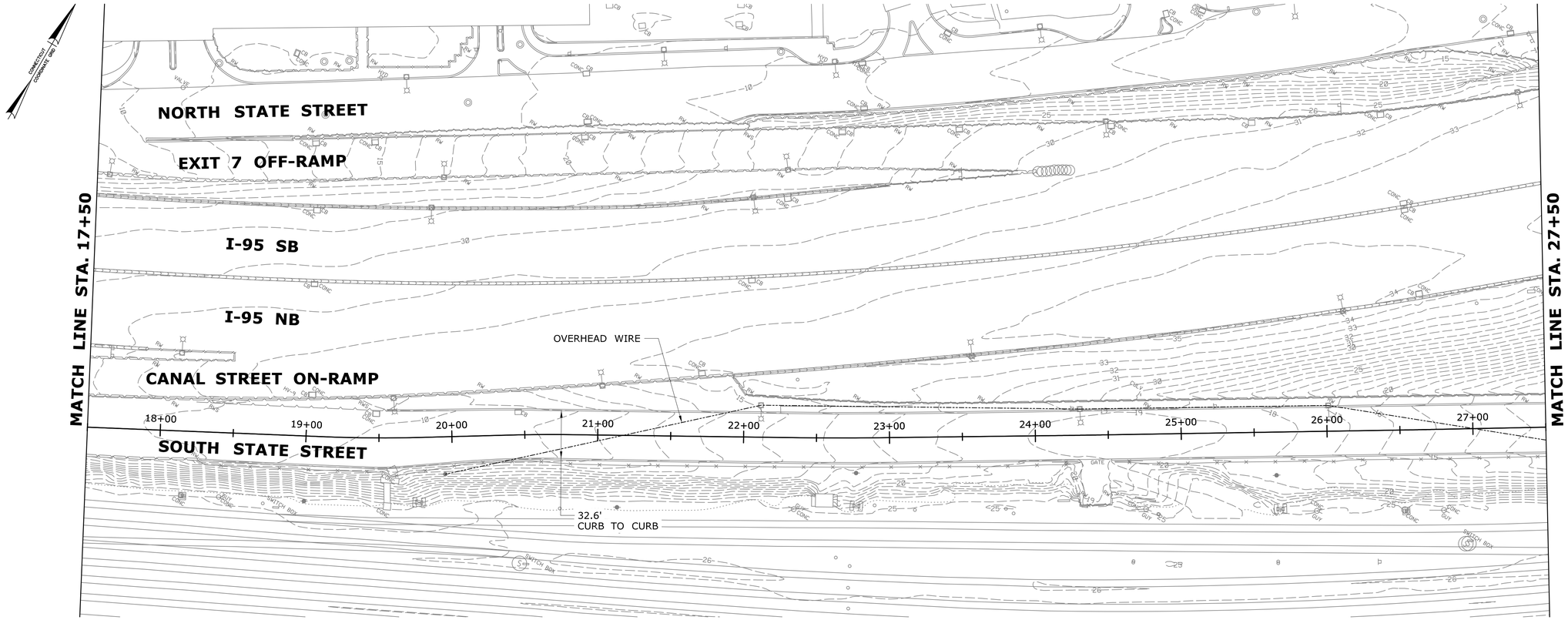

PLAN

SCALE: 1" = 40'

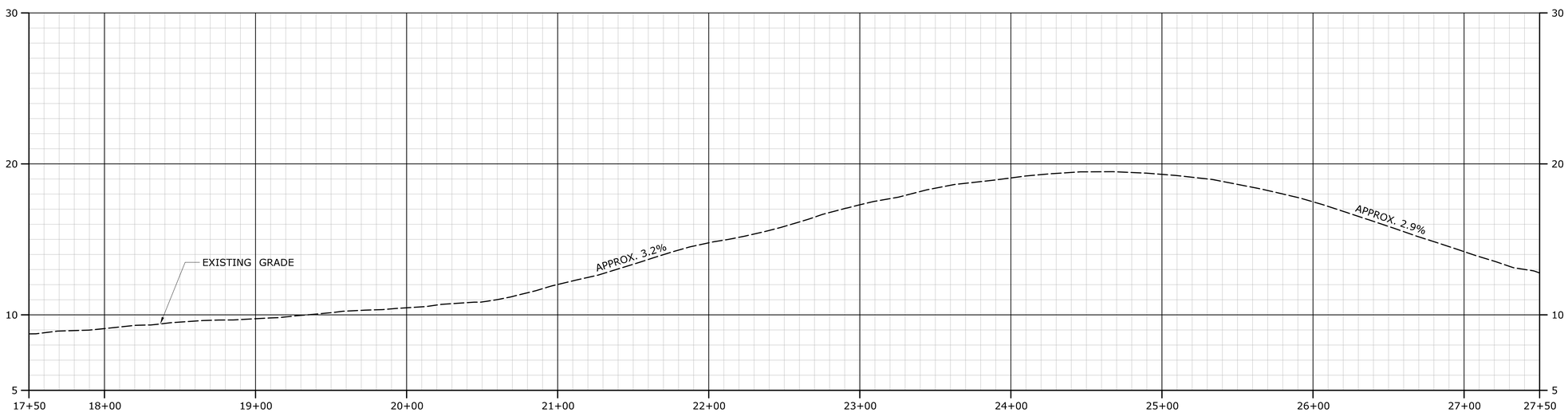

PROFILE

HORIZONTAL SCALE: 1" = 40'
VERTICAL SCALE: 1" = 4'

FOR INFORMATION ONLY

REV.	DATE	REVISION DESCRIPTION	SHEET NO.
-	-	-	-
-	-	-	-
-	-	-	-
-	-	-	-
-	-	-	-
-	-	-	-

THE INFORMATION, INCLUDING ESTIMATED QUANTITIES OF WORK, SHOWN ON THESE SHEETS IS BASED ON LIMITED INVESTIGATIONS BY THE STATE AND IS IN NO WAY WARRANTED TO INDICATE THE CONDITIONS OF ACTUAL QUANTITIES OF WORK WHICH WILL BE REQUIRED.

Plotted Date: 3/28/2016

DESIGNER/DRAFTER: J. IVES
CHECKED BY:
SCALE AS NOTED

STATE OF CONNECTICUT
DEPARTMENT OF TRANSPORTATION

Filename: ...\SB_MSH_Br08012R_0135_0301_RTN3.dgn

SIGNATURE/ BLOCK:

PROJECT TITLE:
REPLACEMENT OF MNRR BRIDGE OVER ATLANTIC STREET PHASE 2

TOWN: **STAMFORD**

DRAWING TITLE: **NORTH SPMT ROUTE (3 OF 4)**

PROJECT NO. **135-301**
DRAWING NO. **S-92**
SHEET NO. **01.05.092**

3/28/2016
P:\Projects\ConnDot\36936292\500 CADD-GIS-Graphics\510 CADD\510.04 Struc. Bridge\MSta. Contract. Sheet. Files\SB_MSH_Br08012R_0135_0301_RTN3.dgn

Border Version: 11/14/08

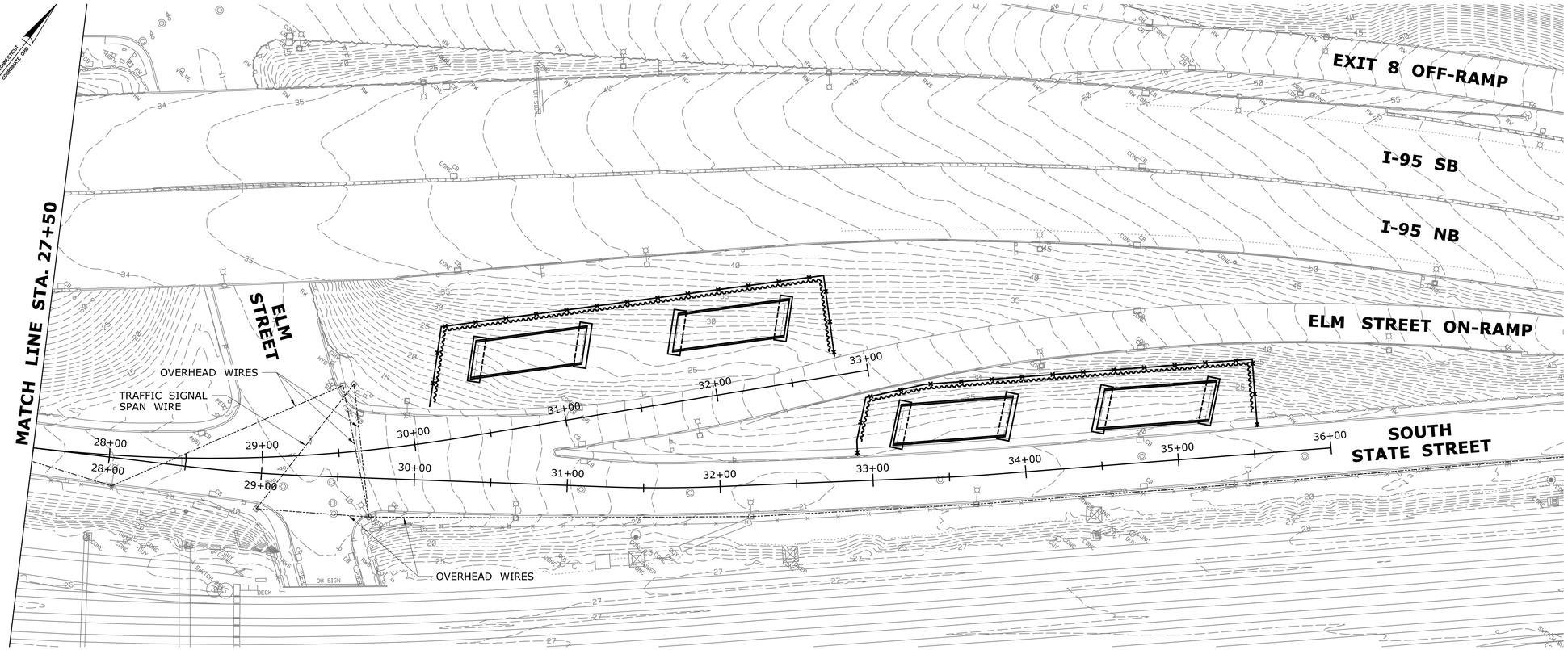

PLAN

SCALE: 1" = 40'

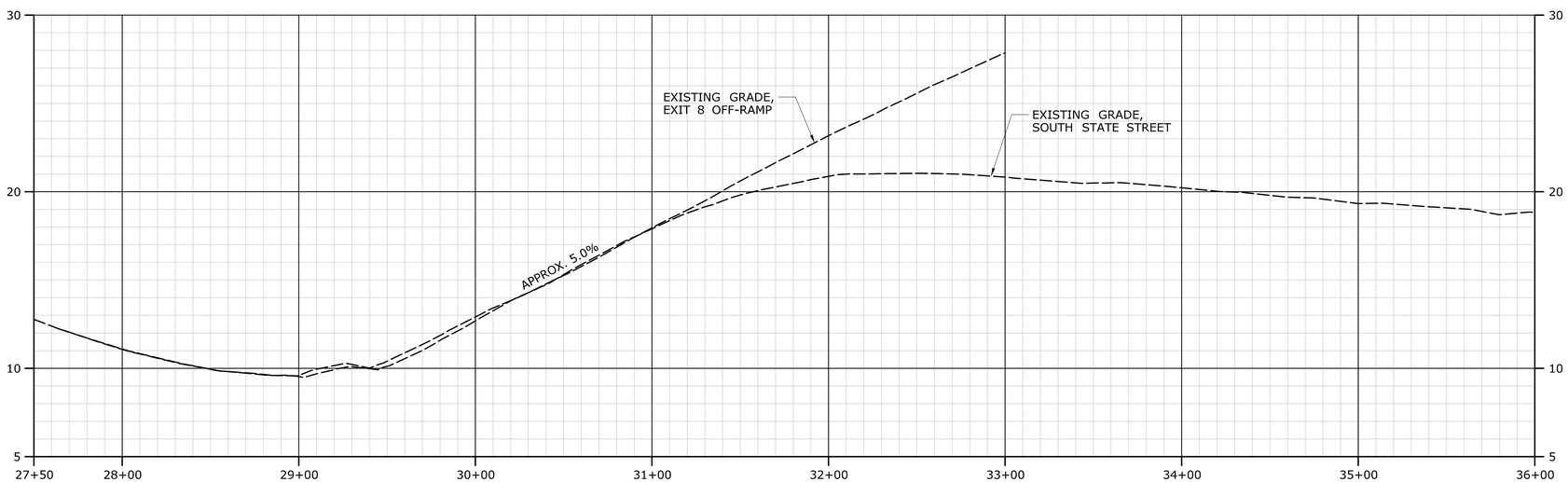

PROFILE

HORIZONTAL SCALE: 1" = 40'
VERTICAL SCALE: 1" = 4'

FOR INFORMATION ONLY

REV.	DATE	REVISION DESCRIPTION	SHEET NO.
-	-	-	-
-	-	-	-
-	-	-	-
-	-	-	-
-	-	-	-
-	-	-	-

THE INFORMATION, INCLUDING ESTIMATED QUANTITIES OF WORK, SHOWN ON THESE SHEETS IS BASED ON LIMITED INVESTIGATIONS BY THE STATE AND IS IN NO WAY WARRANTED TO INDICATE THE CONDITIONS OF ACTUAL QUANTITIES OF WORK WHICH WILL BE REQUIRED.

Plotted Date: 3/28/2016

DESIGNER/DRAFTER: J. IVES
CHECKED BY:
SCALE AS NOTED

STATE OF CONNECTICUT
DEPARTMENT OF TRANSPORTATION

Filename: ...\SB_MSH_Br08012R_0135_0301_RTN4.dgn

SIGNATURE/ BLOCK:

PROJECT TITLE:
REPLACEMENT OF MNRR BRIDGE OVER ATLANTIC STREET PHASE 2

TOWN: **STAMFORD**

DRAWING TITLE: **NORTH SPMT ROUTE (4 OF 4)**

PROJECT NO. **135-301**
DRAWING NO. **S-93**
SHEET NO. **01.05.093**

3/28/2016
P:\Projects\ConnDot\36936292\500 CADD-GIS-Graphics\510 CADD\510.04 Struc. Bridge\MSta. Contract. Sheet. Files\SB_MSH_Br08012R_0135_0301_RTN4.dgn

Border Version: 11/14/08

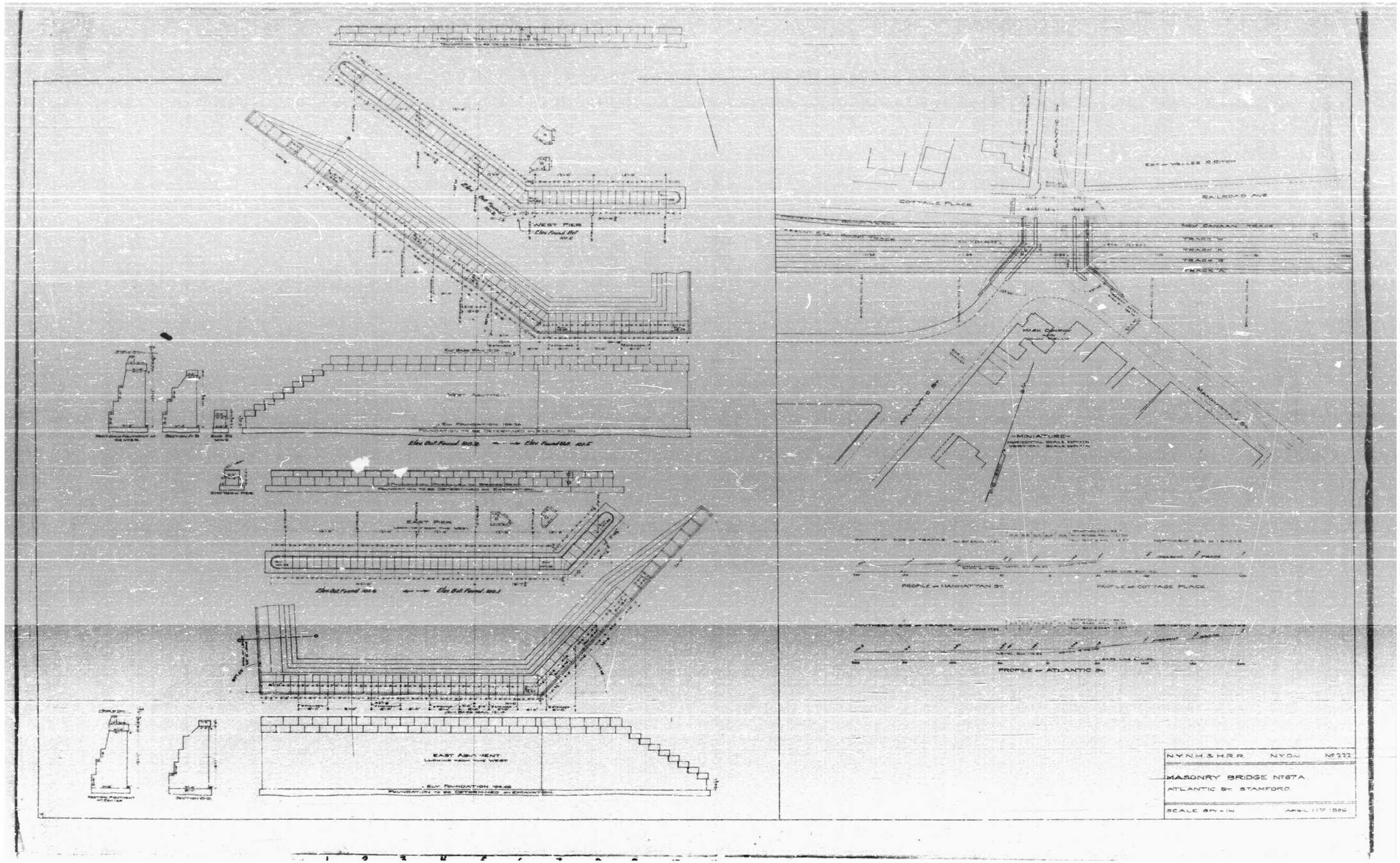

RECORD PLANS / MASONRY

REDUCED COPY (N.T.S.)

FINAL PLANS FOR REVIEW

REV.	DATE	REVISION DESCRIPTION	SHEET NO.
-	-	-	-
-	-	-	-
-	-	-	-
-	-	-	-
-	-	-	-
-	-	-	-

THE INFORMATION, INCLUDING ESTIMATED QUANTITIES OF WORK, SHOWN ON THESE SHEETS IS BASED ON LIMITED INVESTIGATIONS BY THE STATE AND IS IN NO WAY WARRANTED TO INDICATE THE CONDITIONS OF ACTUAL QUANTITIES OF WORK WHICH WILL BE REQUIRED.

Plotted Date: 3/24/2016

DESIGNER/DRAFTER: J. IVES

CHECKED BY: D. COSTELLO

SCALE AS NOTED

STATE OF CONNECTICUT
DEPARTMENT OF TRANSPORTATION

Filename: ...\SB_MSH_0135_0301_RP-01.dgn

SIGNATURE/ BLOCK:

PROJECT TITLE:
REPLACEMENT OF MNRR BRIDGE OVER ATLANTIC STREET PHASE 2

TOWN: **STAMFORD**

DRAWING TITLE: **RECORD PLANS MASONRY**

PROJECT NO. **135-301**

DRAWING NO. **S-94**

SHEET NO. **01.05.094**

3/24/2016
P:\Projects\CommDot\36938292\500 CADD-GIS-Graphics\510 CADD\510.04 Struc. Bridge\MSta. Contract. Sheet. Files\SB. MSH. 0135. 0301. RP-01.dgn

Border Version: 11/14/08

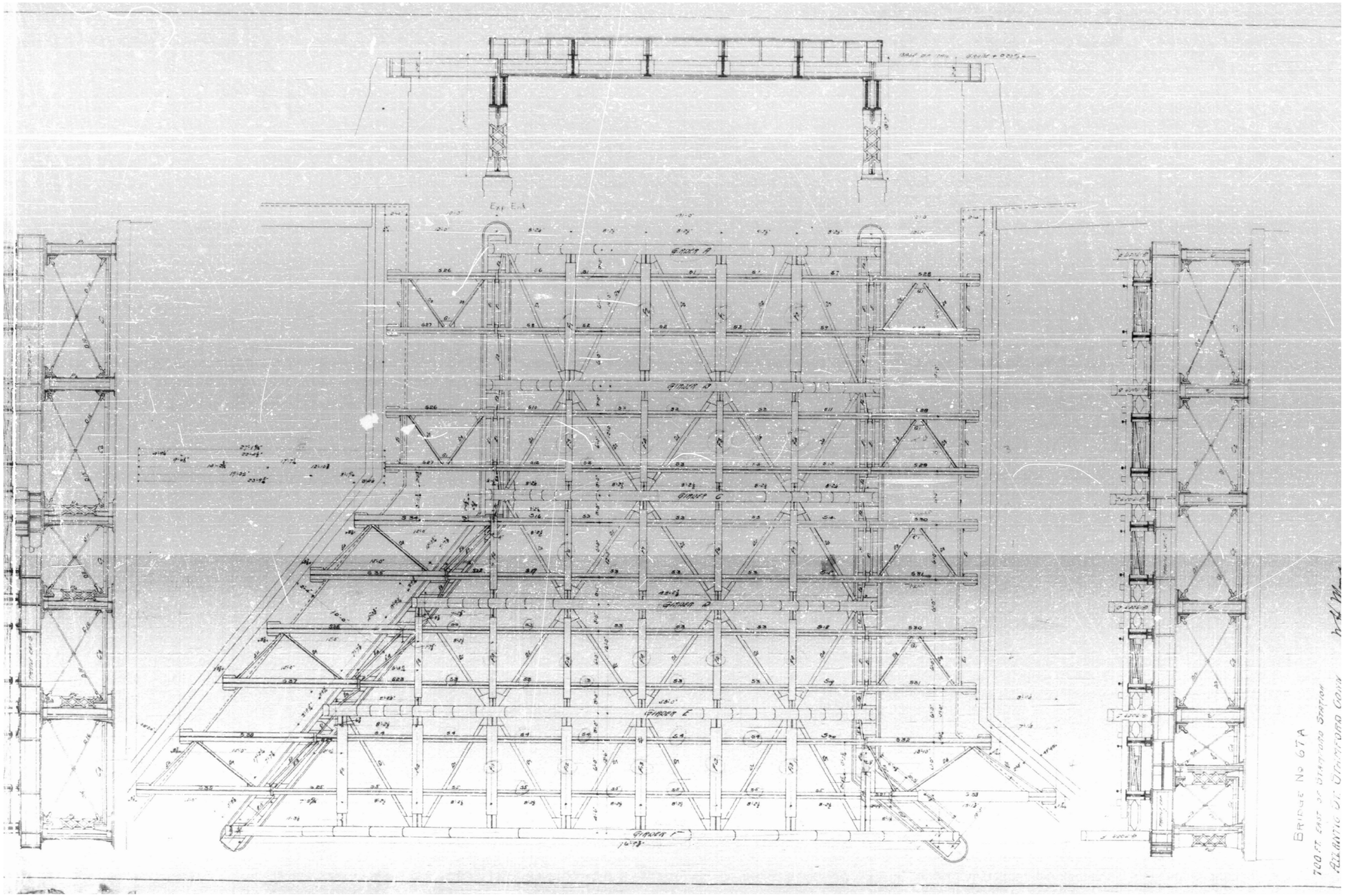

RECORD PLANS / GENERAL PLAN

REDUCED COPY (N.T.S.)

FINAL PLANS FOR REVIEW

REV.	DATE	REVISION DESCRIPTION	SHEET NO.
-	-	-	-
-	-	-	-
-	-	-	-
-	-	-	-
-	-	-	-
-	-	-	-

THE INFORMATION, INCLUDING ESTIMATED QUANTITIES OF WORK, SHOWN ON THESE SHEETS IS BASED ON LIMITED INVESTIGATIONS BY THE STATE AND IS IN NO WAY WARRANTED TO INDICATE THE CONDITIONS OF ACTUAL QUANTITIES OF WORK WHICH WILL BE REQUIRED.

Plotted Date: 3/24/2016

DESIGNER/DRAFTER: J. IVES

CHECKED BY: D. COSTELLO

SCALE AS NOTED

STATE OF CONNECTICUT
DEPARTMENT OF TRANSPORTATION

Filename: ...\SB_MSH_0135_0301_RP-02.dgn

SIGNATURE/ BLOCK:

PROJECT TITLE:
REPLACEMENT OF MNRR BRIDGE OVER ATLANTIC STREET PHASE 2

TOWN: **STAMFORD**

DRAWING TITLE: **RECORD PLANS GENERAL PLAN**

PROJECT NO. **135-301**

DRAWING NO. **S-95**

SHEET NO. **01.05.095**

3/24/2016
P:\Projects\ConnDot\36938292\500 CADD-GIS-Graphics\510 CADD\510.04 Struc. Bridge\MSs. Contract Sheet. Files\SB_MSH_0135_0301_RP-02.dgn

Border Version: 11/14/08

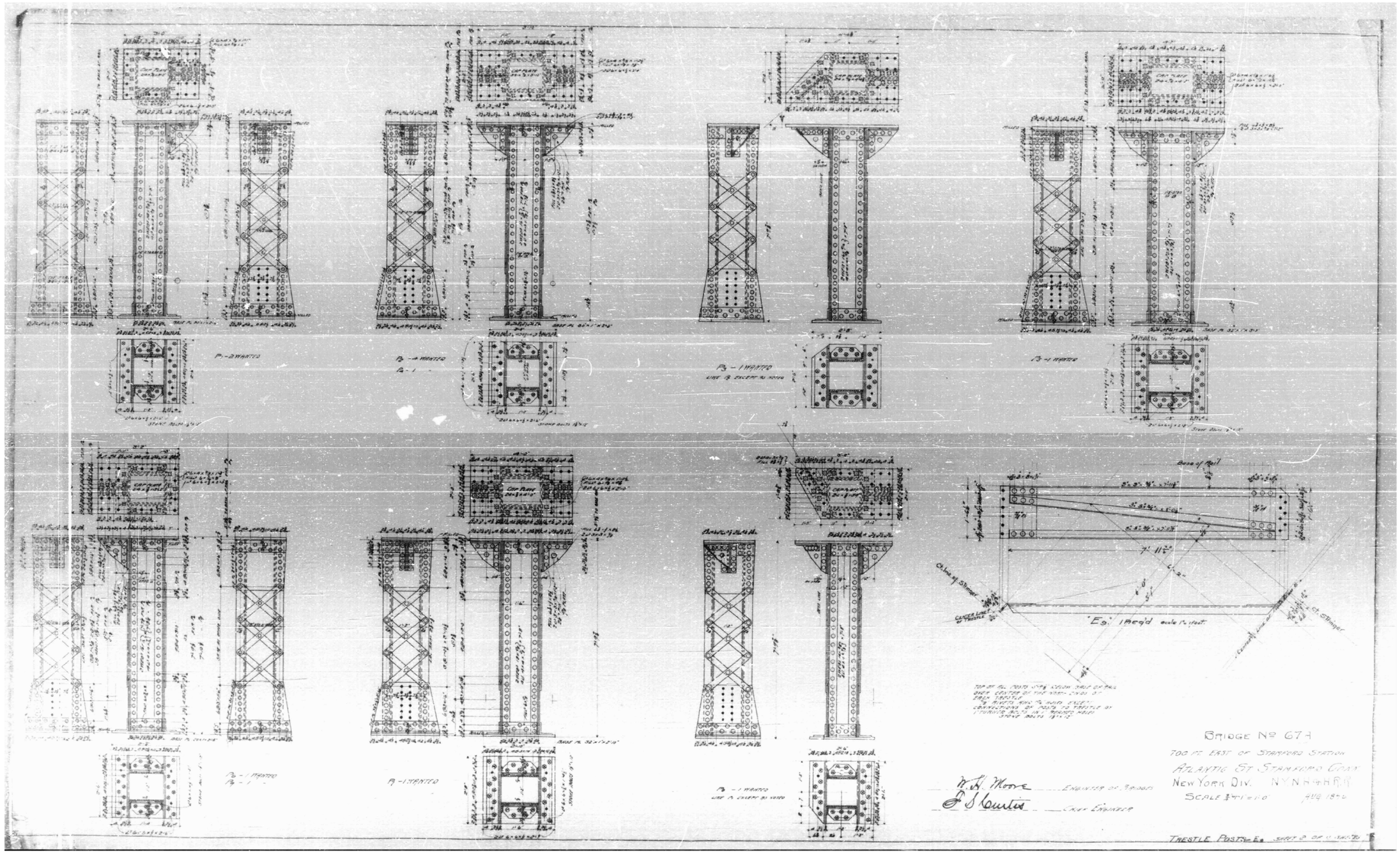

RECORD PLANS / PIER COLUMNS

REDUCED COPY (N.T.S.)

FINAL PLANS FOR REVIEW

REV.	DATE	REVISION DESCRIPTION	SHEET NO.
-	-	-	-
-	-	-	-
-	-	-	-
-	-	-	-
-	-	-	-
-	-	-	-

THE INFORMATION, INCLUDING ESTIMATED QUANTITIES OF WORK, SHOWN ON THESE SHEETS IS BASED ON LIMITED INVESTIGATIONS BY THE STATE AND IS IN NO WAY WARRANTED TO INDICATE THE CONDITIONS OF ACTUAL QUANTITIES OF WORK WHICH WILL BE REQUIRED.

Plotted Date: 3/24/2016

DESIGNER/DRAFTER: J. IVES

CHECKED BY: D. COSTELLO

SCALE AS NOTED

STATE OF CONNECTICUT
DEPARTMENT OF TRANSPORTATION

Filename: ...\SB..MSH..0135..0301..RP-03.dgn

SIGNATURE/ BLOCK:

PROJECT TITLE:
REPLACEMENT OF MNRR BRIDGE OVER ATLANTIC STREET PHASE 2

TOWN: **STAMFORD**

DRAWING TITLE: **RECORD PLANS PIER COLUMNS**

PROJECT NO. **135-301**

DRAWING NO. **S-96**

SHEET NO. **01.05.096**

3/24/2016
P:\Projects\ConnDot\36938292\500 CADD-GIS-Graphics\510 CADD\510.04 Struc. Bridge\MSta. Contract. Sheet. Files\SB. MSH. 0135. 0301. RP-03.dgn

Border Version: 11/14/08

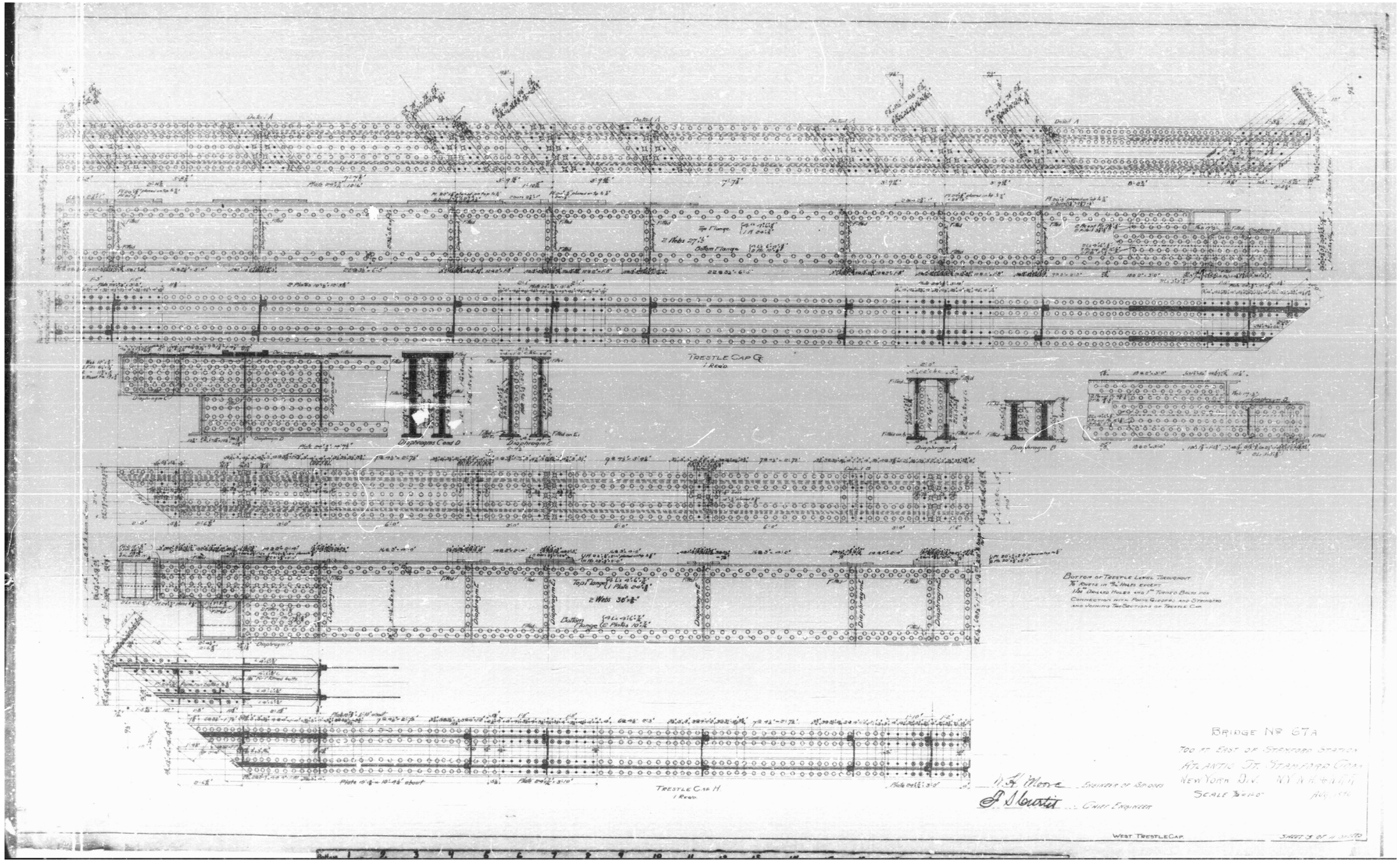

RECORD PLANS / WEST PIER CAP

REDUCED COPY (N.T.S.)

FINAL PLANS FOR REVIEW

REV.	DATE	REVISION DESCRIPTION	SHEET NO.
-	-	-	-
-	-	-	-
-	-	-	-
-	-	-	-
-	-	-	-
-	-	-	-

THE INFORMATION, INCLUDING ESTIMATED QUANTITIES OF WORK, SHOWN ON THESE SHEETS IS BASED ON LIMITED INVESTIGATIONS BY THE STATE AND IS IN NO WAY WARRANTED TO INDICATE THE CONDITIONS OF ACTUAL QUANTITIES OF WORK WHICH WILL BE REQUIRED.

Plotted Date: 3/24/2016

DESIGNER/DRAFTER: J. IVES

CHECKED BY: D. COSTELLO

SCALE AS NOTED

STATE OF CONNECTICUT
DEPARTMENT OF TRANSPORTATION

Filename: ...\SB_MSH_0135_0301_RP-04.dgn

SIGNATURE/ BLOCK:

PROJECT TITLE: **REPLACEMENT OF MNRR BRIDGE OVER ATLANTIC STREET PHASE 2**

TOWN: **STAMFORD**

DRAWING TITLE: **RECORD PLANS WEST PIER CAP**

PROJECT NO. **135-301**

DRAWING NO. **S-97**

SHEET NO. **01.05.097**

3/24/2016
P:\Projects\ConnDot\36938292\500 CADD-GIS-Graphics\510 CADD\510.04 Struc. Bridge\WSta. Contract. Sheet. Files\SB_MSH_0135_0301_RP-04.dgn

Border Version: 11/14/08

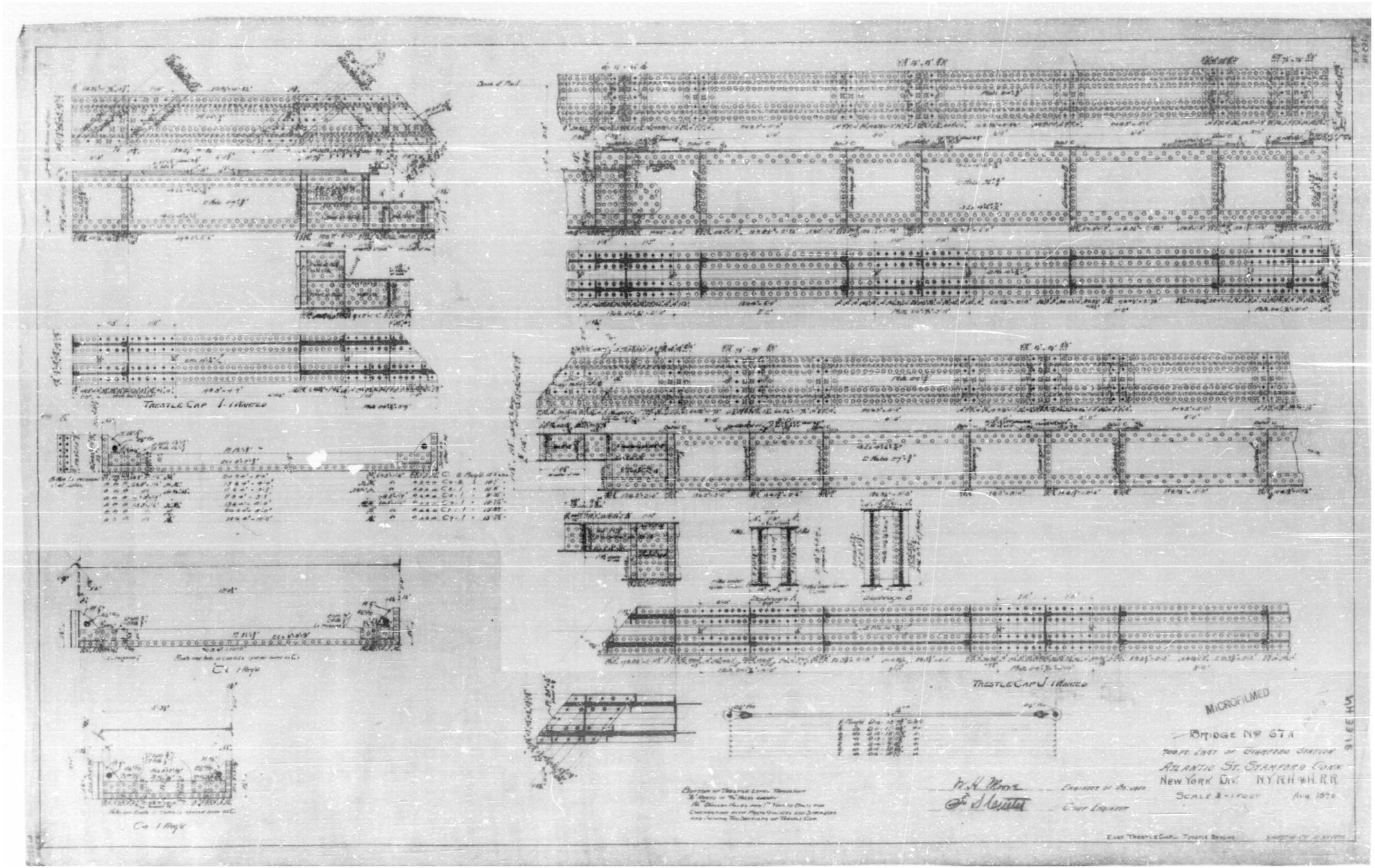

RECORD PLANS / EAST PIER CAP

REDUCED COPY (N.T.S.)

FINAL PLANS FOR REVIEW

REV.	DATE	REVISION DESCRIPTION	SHEET NO.
-	-	-	-
-	-	-	-
-	-	-	-
-	-	-	-
-	-	-	-
-	-	-	-

THE INFORMATION, INCLUDING ESTIMATED QUANTITIES OF WORK, SHOWN ON THESE SHEETS IS BASED ON LIMITED INVESTIGATIONS BY THE STATE AND IS IN NO WAY WARRANTED TO INDICATE THE CONDITIONS OF ACTUAL QUANTITIES OF WORK WHICH WILL BE REQUIRED.

Plotted Date: 3/24/2016

DESIGNER/DRAFTER: J. IVES

CHECKED BY: D. COSTELLO

SCALE AS NOTED

STATE OF CONNECTICUT
DEPARTMENT OF TRANSPORTATION

Filename: ...\SB_MSH_0135_0301_RP-05.dgn

SIGNATURE/ BLOCK:

PROJECT TITLE:
REPLACEMENT OF MNRR BRIDGE OVER ATLANTIC STREET PHASE 2

TOWN: **STAMFORD**

DRAWING TITLE: **RECORD PLANS EAST PIER CAP**

PROJECT NO. **135-301**

DRAWING NO. **S-98**

SHEET NO. **01.05.098**

3/24/2016
P:\Projects\CommDot\36938292\500 CADD-GIS-Graphics\510 CADD\510.04 Struc. Bridge\WSta. Contract. Sheet. Files\SB. MSH. 0135. 0301. RP-05.dgn

Border Version: 11/14/08

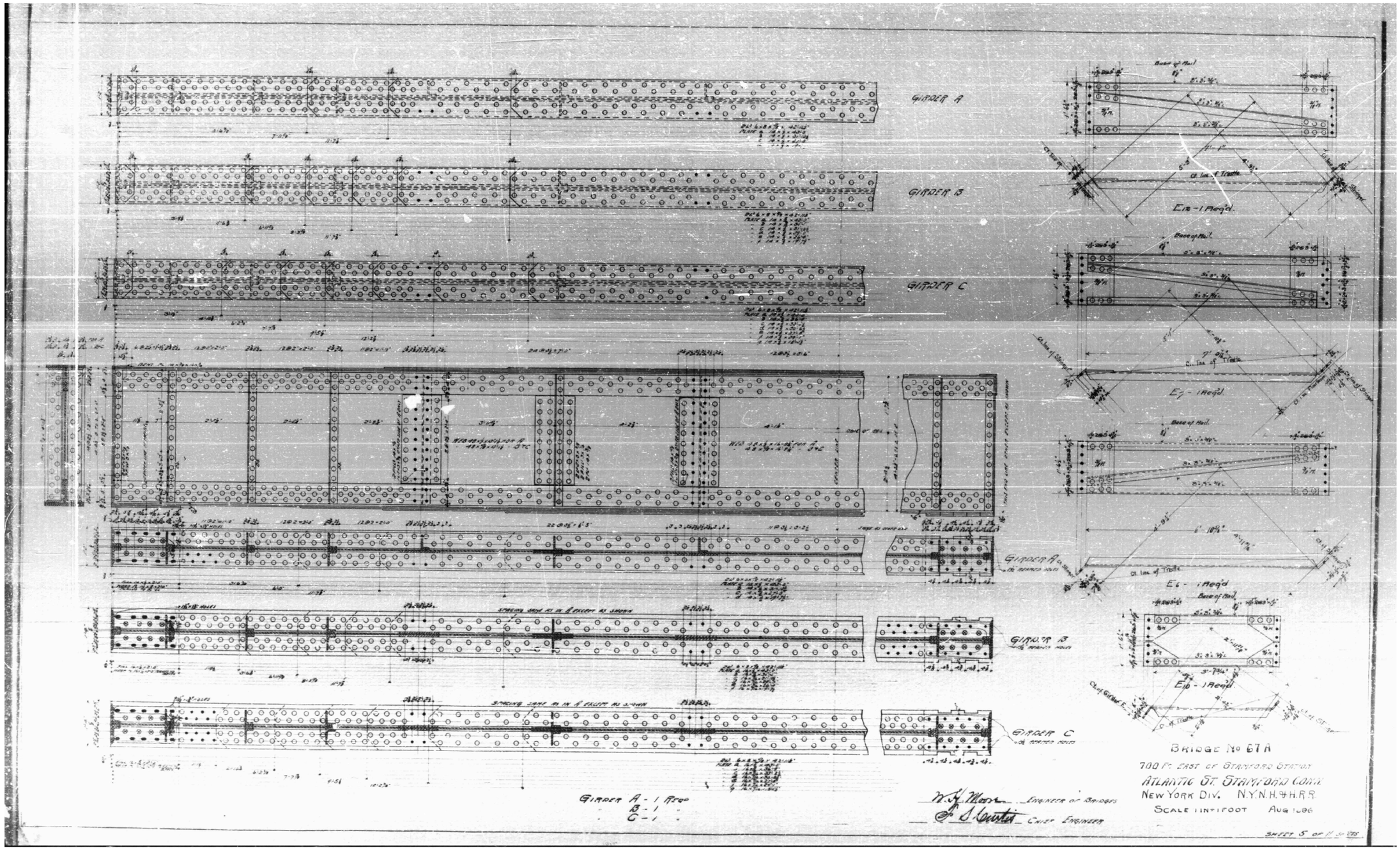

RECORD PLANS / GIRDERS - 1

REDUCED COPY (N.T.S.)

FINAL PLANS FOR REVIEW

REV.	DATE	REVISION DESCRIPTION	SHEET NO.
-	-	-	-
-	-	-	-
-	-	-	-
-	-	-	-
-	-	-	-
-	-	-	-

THE INFORMATION, INCLUDING ESTIMATED QUANTITIES OF WORK, SHOWN ON THESE SHEETS IS BASED ON LIMITED INVESTIGATIONS BY THE STATE AND IS IN NO WAY WARRANTED TO INDICATE THE CONDITIONS OF ACTUAL QUANTITIES OF WORK WHICH WILL BE REQUIRED.

Plotted Date: 3/24/2016

DESIGNER/DRAFTER: J. IVES

CHECKED BY: D. COSTELLO

SCALE AS NOTED

STATE OF CONNECTICUT
DEPARTMENT OF TRANSPORTATION

Filename: ...\SB_MSH_0135_0301_RP-06.dgn

SIGNATURE/ BLOCK:

PROJECT TITLE:
REPLACEMENT OF MNRR BRIDGE OVER ATLANTIC STREET PHASE 2

TOWN: **STAMFORD**

DRAWING TITLE: **RECORD PLANS GIRDERS - 1**

PROJECT NO. **135-301**

DRAWING NO. **S-99**

SHEET NO. **01.05.099**

3/24/2016
P:\Projects\CommDot\36938292\500 CADD-GIS-Graphics\510 CADD\510.04 Struc. Bridge\MSha. Contract. Sheet. Files\SB. MSH. 0135. 0301. RP-06.dgn

Border Version: 11/14/08

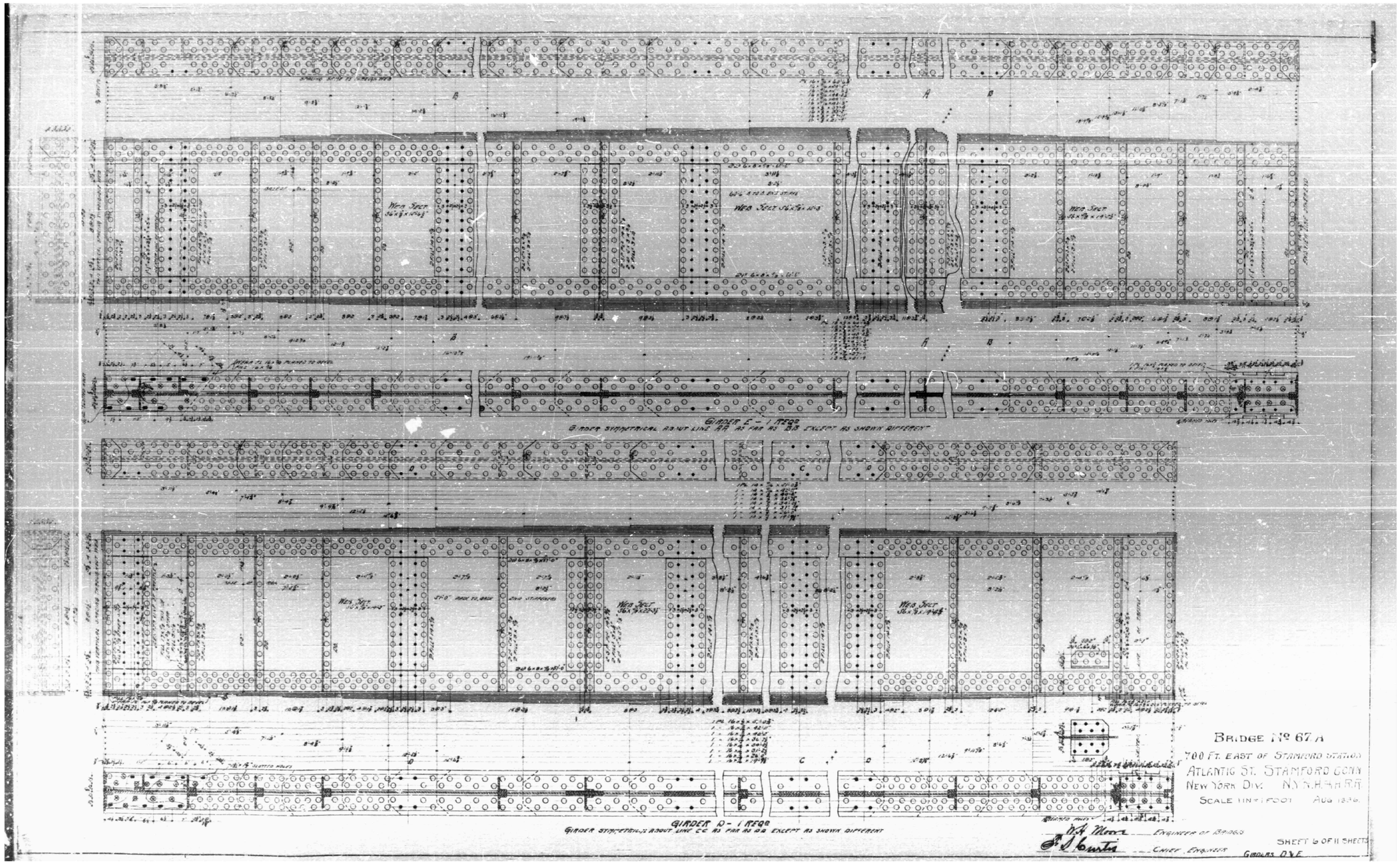

RECORD PLANS / GIRDERS - 2

REDUCED COPY (N.T.S.)

FINAL PLANS FOR REVIEW

REV.	DATE	REVISION DESCRIPTION	SHEET NO.
-	-	-	-
-	-	-	-
-	-	-	-
-	-	-	-
-	-	-	-
-	-	-	-

THE INFORMATION, INCLUDING ESTIMATED QUANTITIES OF WORK, SHOWN ON THESE SHEETS IS BASED ON LIMITED INVESTIGATIONS BY THE STATE AND IS IN NO WAY WARRANTED TO INDICATE THE CONDITIONS OF ACTUAL QUANTITIES OF WORK WHICH WILL BE REQUIRED.

Plotted Date: 3/24/2016

DESIGNER/DRAFTER: J. IVES

CHECKED BY: D. COSTELLO

SCALE AS NOTED

STATE OF CONNECTICUT
DEPARTMENT OF TRANSPORTATION

Filename: ...\SB..MSH..0135..0301..RP-07.dgn

SIGNATURE/ BLOCK:

PROJECT TITLE:
REPLACEMENT OF MNRR BRIDGE OVER ATLANTIC STREET PHASE 2

TOWN: **STAMFORD**

DRAWING TITLE: **RECORD PLANS GIRDERS - 2**

PROJECT NO. **135-301**

DRAWING NO. **S-100**

SHEET NO. **01.05.100**

3/24/2016
P:\Projects\ConnDot\36938292\500 CADD-GIS-Graphics\510 CADD\510.04 Struc. Bridge\MSts. Contract. Sheet. Files\SB..MSH..0135..0301..RP-07.dgn

Border Version: 11/14/08

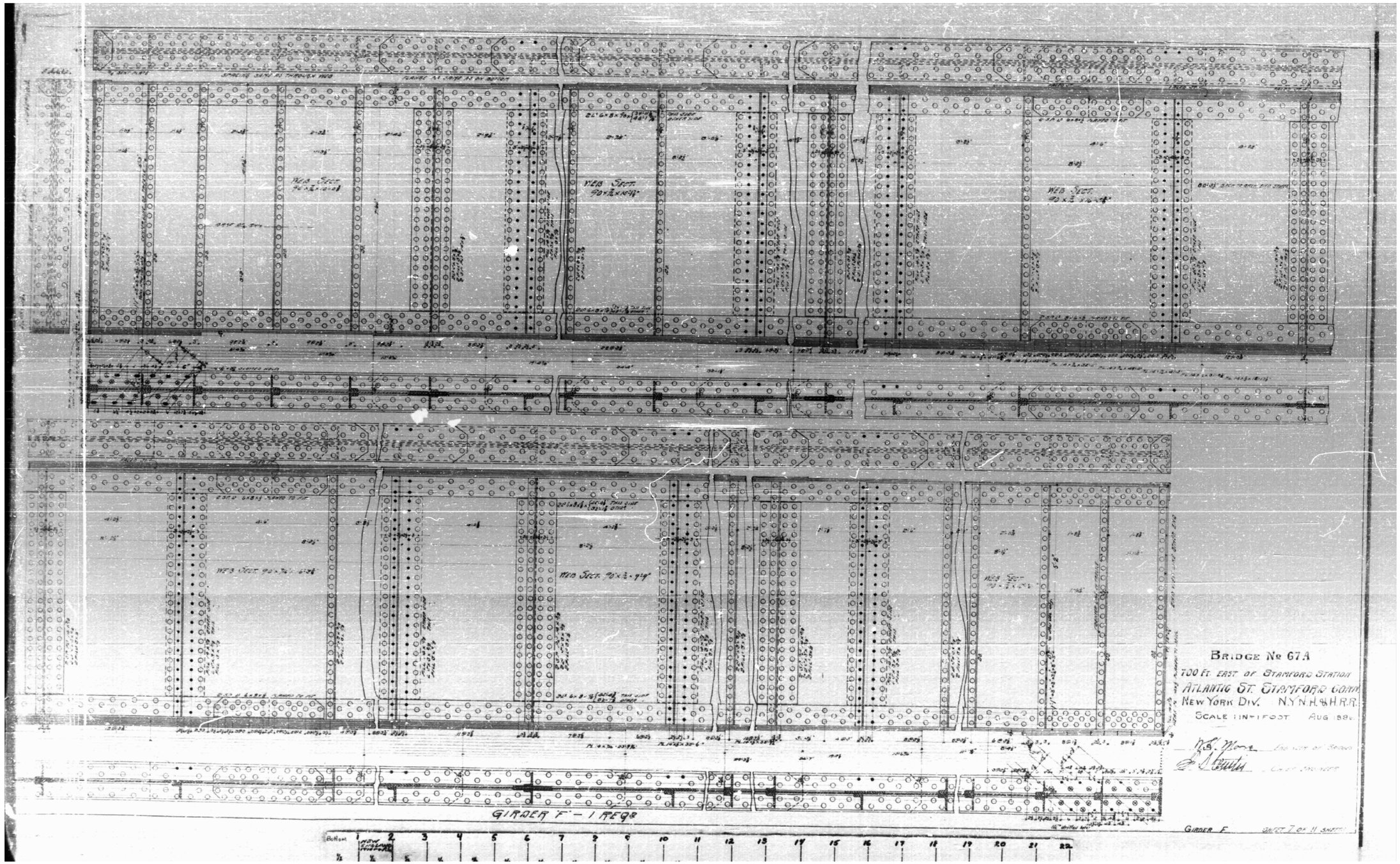

RECORD PLANS / GIRDERS - 3

REDUCED COPY (N.T.S.)

FINAL PLANS FOR REVIEW

REV.	DATE	REVISION DESCRIPTION	SHEET NO.
-	-	-	-
-	-	-	-
-	-	-	-
-	-	-	-
-	-	-	-
-	-	-	-

THE INFORMATION, INCLUDING ESTIMATED QUANTITIES OF WORK, SHOWN ON THESE SHEETS IS BASED ON LIMITED INVESTIGATIONS BY THE STATE AND IS IN NO WAY WARRANTED TO INDICATE THE CONDITIONS OF ACTUAL QUANTITIES OF WORK WHICH WILL BE REQUIRED.

Plotted Date: 3/24/2016

DESIGNER/DRAFTER: J. IVES

CHECKED BY: D. COSTELLO

SCALE AS NOTED

STATE OF CONNECTICUT
DEPARTMENT OF TRANSPORTATION

Filename: ...\SB..MSH..0135..0301..RP-08.dgn

SIGNATURE/ BLOCK:

PROJECT TITLE: **REPLACEMENT OF MNRR BRIDGE OVER ATLANTIC STREET PHASE 2**

TOWN: **STAMFORD**

DRAWING TITLE: **RECORD PLANS GIRDERS - 3**

PROJECT NO. **135-301**

DRAWING NO. **S-101**

SHEET NO. **01.05.101**

3/24/2016
P:\Projects\ConnDot\36938292\500 CADD-GIS-Graphics\510 CADD\510.04 Struc. Bridge\MSta. Contract. Sheet. Files\SB. MSH. 0135. 0301. RP-08.dgn

Border Version: 11/14/08

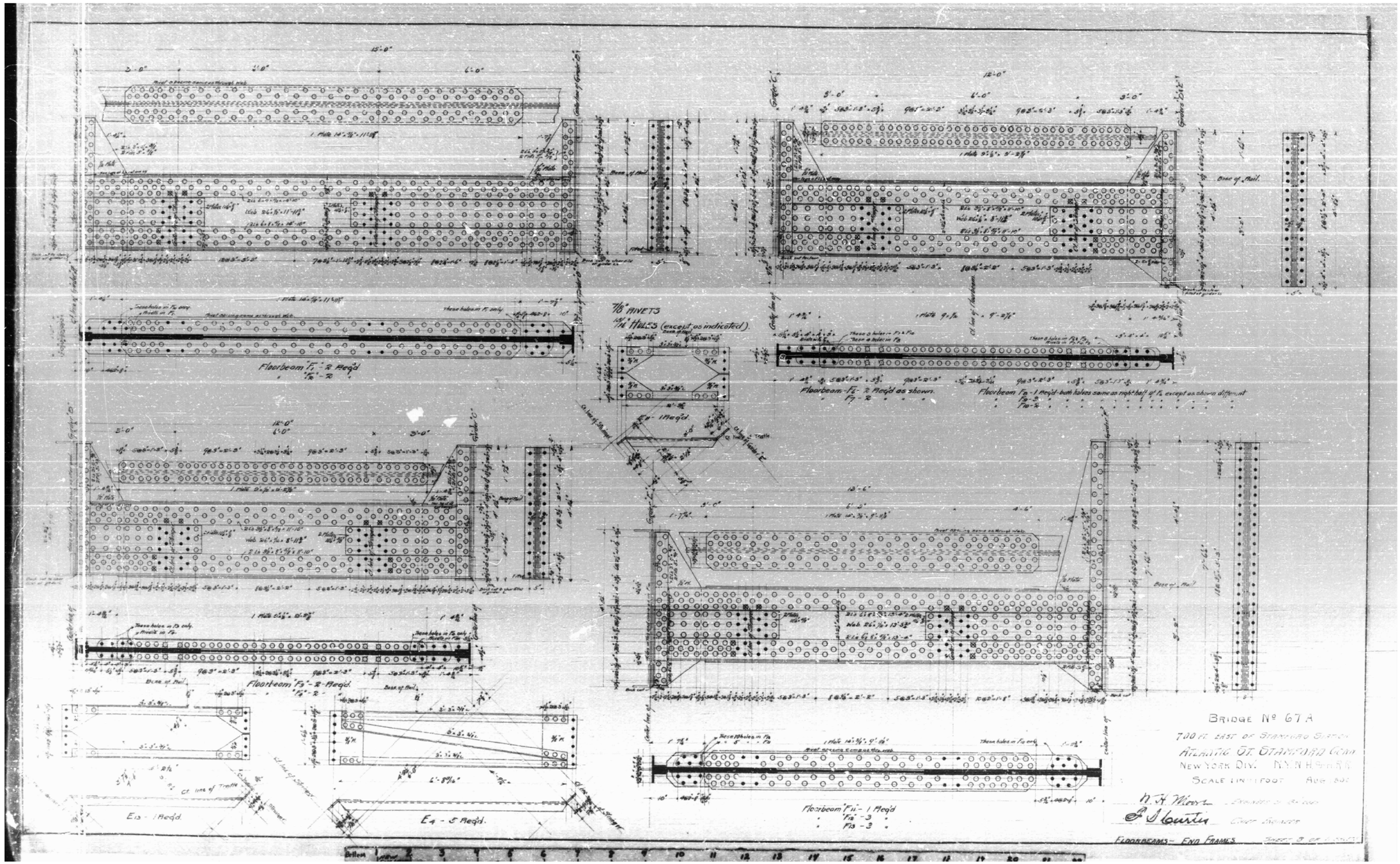

RECORD PLANS / FLOOR SYSTEM - 1

REDUCED COPY (N.T.S.)

FINAL PLANS FOR REVIEW

REV.	DATE	REVISION DESCRIPTION	SHEET NO.
-	-	-	-
-	-	-	-
-	-	-	-
-	-	-	-
-	-	-	-
-	-	-	-

THE INFORMATION, INCLUDING ESTIMATED QUANTITIES OF WORK, SHOWN ON THESE SHEETS IS BASED ON LIMITED INVESTIGATIONS BY THE STATE AND IS IN NO WAY WARRANTED TO INDICATE THE CONDITIONS OF ACTUAL QUANTITIES OF WORK WHICH WILL BE REQUIRED.

Plotted Date: 3/24/2016

DESIGNER/DRAFTER: J. IVES

CHECKED BY: D. COSTELLO

SCALE AS NOTED

STATE OF CONNECTICUT
DEPARTMENT OF TRANSPORTATION

Filename: ...\SB_MSH_0135_0301_RP-09.dgn

SIGNATURE/ BLOCK:

PROJECT TITLE:
REPLACEMENT OF MNRR BRIDGE OVER ATLANTIC STREET PHASE 2

TOWN: **STAMFORD**

DRAWING TITLE: **RECORD PLANS FLOOR SYSTEM - 1**

PROJECT NO. **135-301**

DRAWING NO. **S-102**

SHEET NO. **01.05.102**

3/24/2016
P:\Projects\CommDot\36938292\500 CADD-GIS-Graphics\510 CADD\510.04 Struc. Bridge\WSta. Contract. Sheet. Files\SB. MSH. 0135. 0301. RP-09.dgn

Border Version: 11/14/08

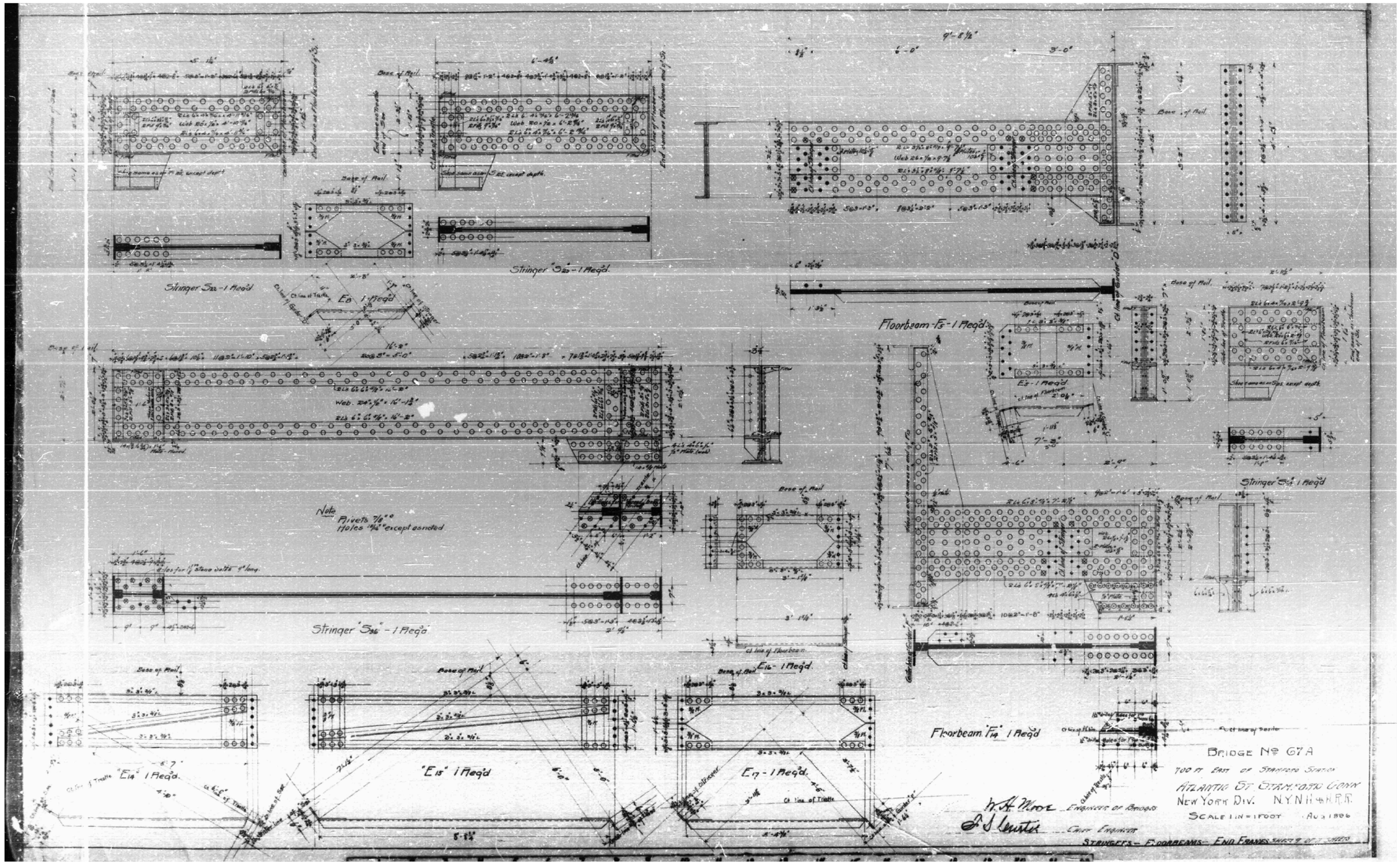

RECORD PLANS / FLOOR SYSTEM - 2

REDUCED COPY (N.T.S.)

FINAL PLANS FOR REVIEW

REV.	DATE	REVISION DESCRIPTION	SHEET NO.
-	-	-	-
-	-	-	-
-	-	-	-
-	-	-	-
-	-	-	-
-	-	-	-

THE INFORMATION, INCLUDING ESTIMATED QUANTITIES OF WORK, SHOWN ON THESE SHEETS IS BASED ON LIMITED INVESTIGATIONS BY THE STATE AND IS IN NO WAY WARRANTED TO INDICATE THE CONDITIONS OF ACTUAL QUANTITIES OF WORK WHICH WILL BE REQUIRED.

Plotted Date: 3/24/2016

DESIGNER/DRAFTER: J. IVES

CHECKED BY: D. COSTELLO

SCALE AS NOTED

STATE OF CONNECTICUT
DEPARTMENT OF TRANSPORTATION

Filename: ...\SB..MSH..0135..0301..RP-10.dgn

SIGNATURE/ BLOCK:

PROJECT TITLE:
REPLACEMENT OF MNRR BRIDGE OVER ATLANTIC STREET PHASE 2

TOWN: **STAMFORD**

DRAWING TITLE: **RECORD PLANS FLOOR SYSTEM - 2**

PROJECT NO. **135-301**

DRAWING NO. **S-103**

SHEET NO. **01.05.103**

3/24/2016
P:\Projects\ConnDot\36938292\500 CADD-GIS-Graphics\510 CADD\510.04 Struc. Bridge\MSta. Contract. Sheet. Files\SB..MSH..0135..0301..RP-10.dgn

Border Version: 11/14/08

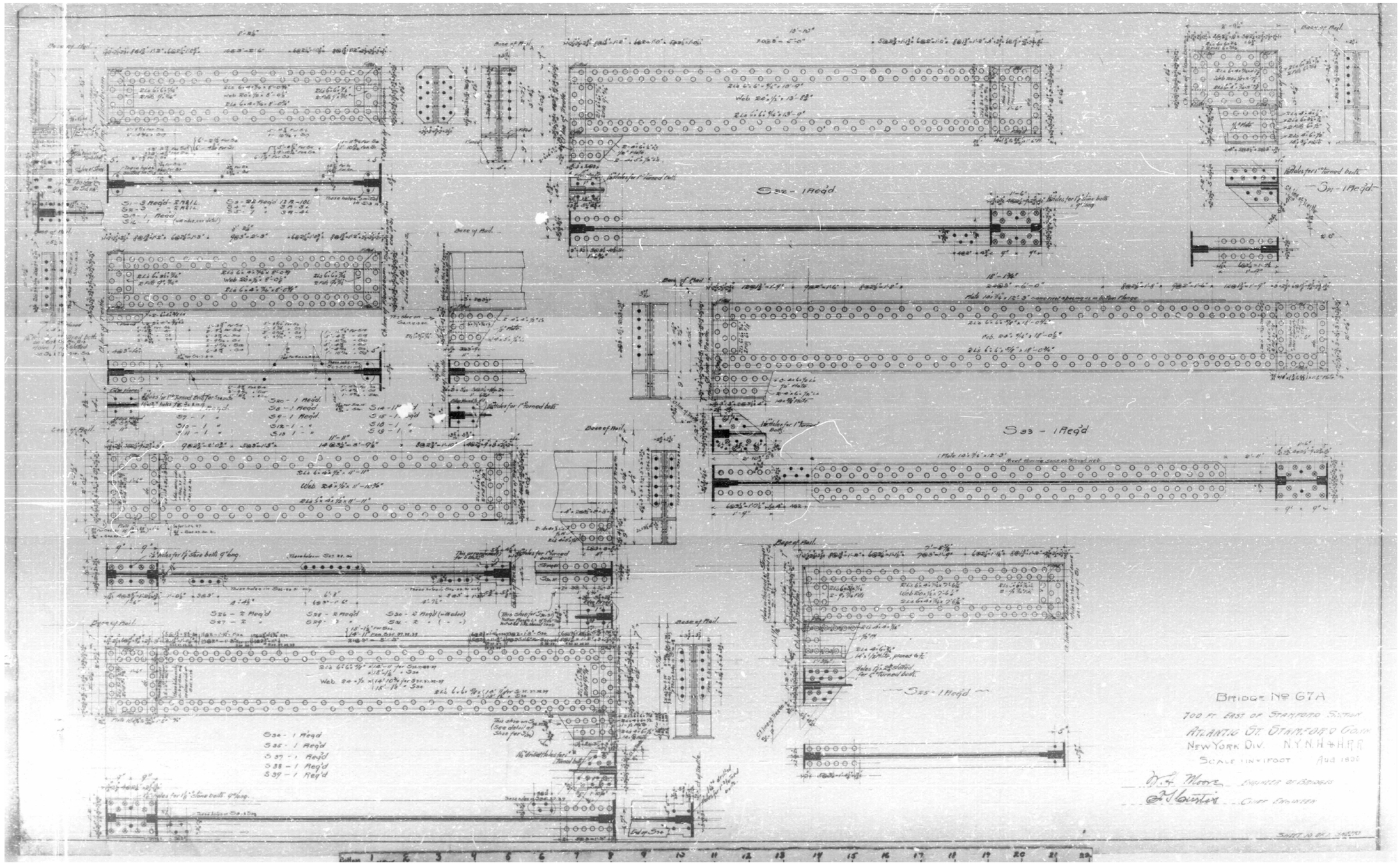

RECORD PLANS / FLOOR SYSTEM - 3

REDUCED COPY (N.T.S.)

FINAL PLANS FOR REVIEW

REV.	DATE	REVISION DESCRIPTION	SHEET NO.
-	-	-	-
-	-	-	-
-	-	-	-
-	-	-	-
-	-	-	-
-	-	-	-

THE INFORMATION, INCLUDING ESTIMATED QUANTITIES OF WORK, SHOWN ON THESE SHEETS IS BASED ON LIMITED INVESTIGATIONS BY THE STATE AND IS IN NO WAY WARRANTED TO INDICATE THE CONDITIONS OF ACTUAL QUANTITIES OF WORK WHICH WILL BE REQUIRED.

Plotted Date: 3/24/2016

DESIGNER/DRAFTER: J. IVES

CHECKED BY: D. COSTELLO

SCALE AS NOTED

STATE OF CONNECTICUT
DEPARTMENT OF TRANSPORTATION

Filename: ...\SB_MSH_0135_0301_RP-11.dgn

SIGNATURE/ BLOCK:

PROJECT TITLE:
REPLACEMENT OF MNRR BRIDGE OVER ATLANTIC STREET PHASE 2

TOWN: **STAMFORD**

DRAWING TITLE: **RECORD PLANS FLOOR SYSTEMS - 3**

PROJECT NO. **135-301**

DRAWING NO. **S-104**

SHEET NO. **01.05.104**

3/24/2016
P:\Projects\ConnDot\36938292\500 CADD-GIS-Graphics\510 CADD\510.04 Struc. Bridge\MSta. Contract. Sheet. Files\SB_MSH_0135_0301_RP-11.dgn

Border Version: 11/14/08

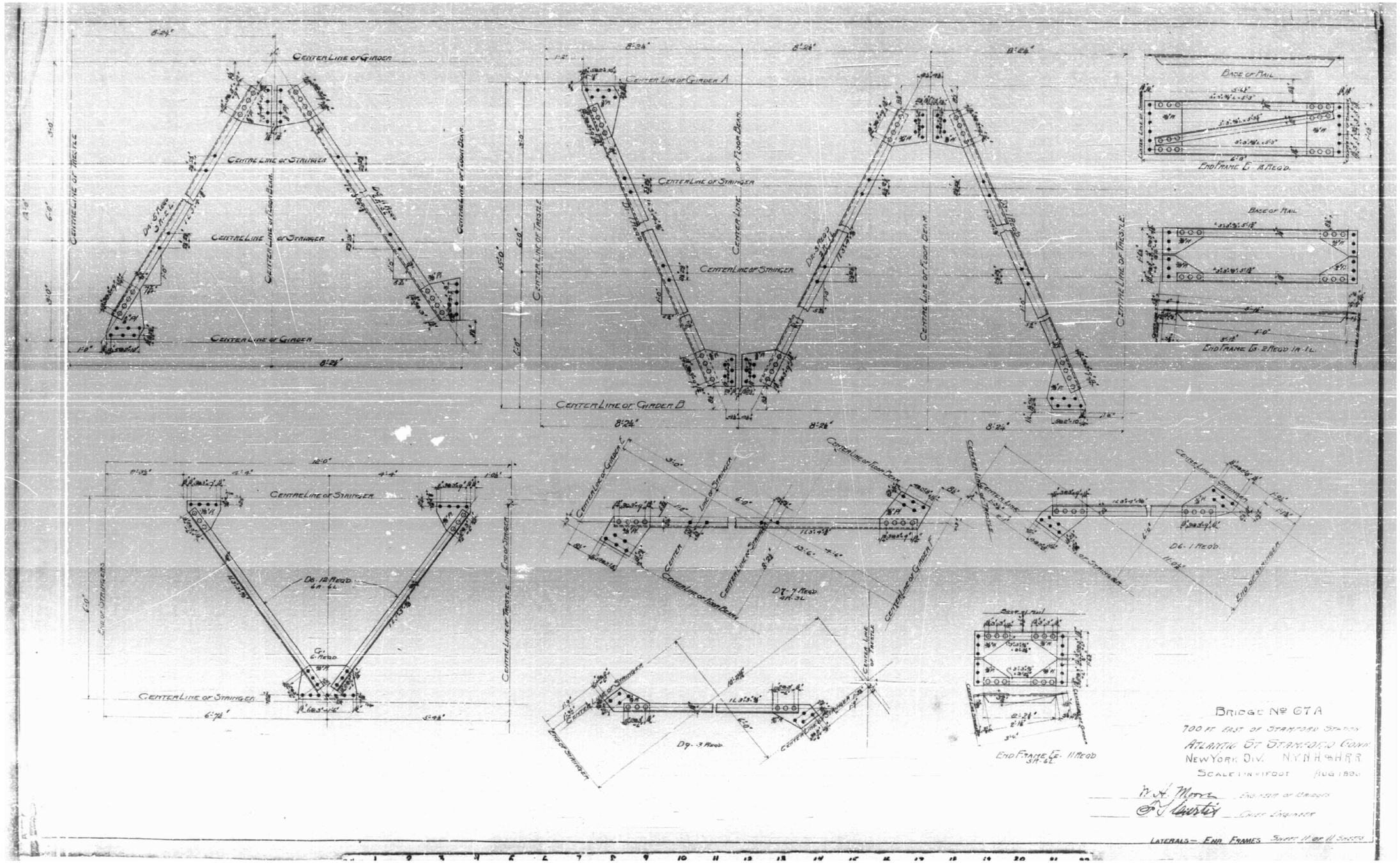

RECORD PLANS / LATERAL BRACING

REDUCED COPY (N.T.S.)

FINAL PLANS FOR REVIEW

REV.	DATE	REVISION DESCRIPTION	SHEET NO.
-	-	-	-
-	-	-	-
-	-	-	-
-	-	-	-
-	-	-	-
-	-	-	-

THE INFORMATION, INCLUDING ESTIMATED QUANTITIES OF WORK, SHOWN ON THESE SHEETS IS BASED ON LIMITED INVESTIGATIONS BY THE STATE AND IS IN NO WAY WARRANTED TO INDICATE THE CONDITIONS OF ACTUAL QUANTITIES OF WORK WHICH WILL BE REQUIRED.

Plotted Date: 3/24/2016

DESIGNER/DRAFTER: J. IVES

CHECKED BY: D. COSTELLO

SCALE AS NOTED

STATE OF CONNECTICUT
DEPARTMENT OF TRANSPORTATION

Filename: ...\SB..MSH..0135..0301..RP-12.dgn

SIGNATURE/
BLOCK:

PROJECT TITLE:
REPLACEMENT OF MNRR BRIDGE OVER ATLANTIC STREET PHASE 2

TOWN: **STAMFORD**

DRAWING TITLE: **RECORD PLANS LATERAL BRACING**

PROJECT NO. **135-301**

DRAWING NO. **S-105**

SHEET NO. **01.05.105**

3/24/2016
P:\Projects\Conn0at\36938292\500 CADD-GIS-Graphics\S10 CADD\S10.04 Struc. Bridge\MSta. Contract. Sheet. Files\SB. MSH. 0135. 0301. RP-12.dgn

Border Version: 11/14/08

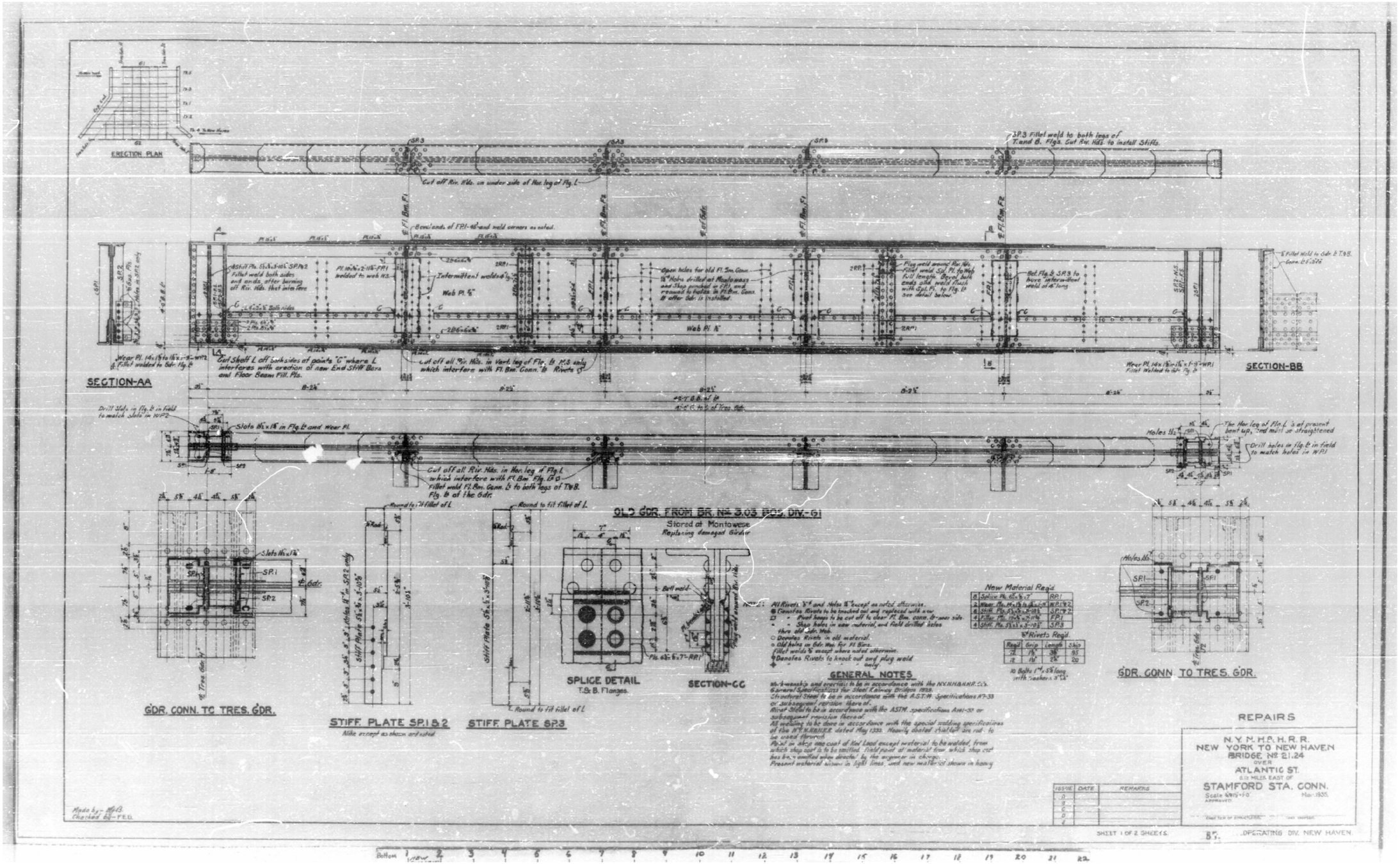

RECORD PLANS / NORTH FASCIA GIRDER REPLACEMENT

REDUCED COPY (N.T.S.)

FINAL PLANS FOR REVIEW

REV.	DATE	REVISION DESCRIPTION	SHEET NO.
-	-	-	-
-	-	-	-
-	-	-	-
-	-	-	-
-	-	-	-
-	-	-	-

THE INFORMATION, INCLUDING ESTIMATED QUANTITIES OF WORK, SHOWN ON THESE SHEETS IS BASED ON LIMITED INVESTIGATIONS BY THE STATE AND IS IN NO WAY WARRANTED TO INDICATE THE CONDITIONS OF ACTUAL QUANTITIES OF WORK WHICH WILL BE REQUIRED.

Plotted Date: 3/24/2016

DESIGNER/DRAFTER: J. IVES
CHECKED BY: D. COSTELLO
SCALE AS NOTED

STATE OF CONNECTICUT
DEPARTMENT OF TRANSPORTATION

Filename: ...\SB..MSH..0135..0301..RP-13.dgn

SIGNATURE/
BLOCK:

PROJECT TITLE:
REPLACEMENT OF MNRR BRIDGE OVER ATLANTIC STREET PHASE 2

TOWN: **STAMFORD**

DRAWING TITLE: **RECORD PLANS N. GIRDER REPLACEMENT**

PROJECT NO. **135-301**
DRAWING NO. **S-106**
SHEET NO. **01.05.106**

3/24/2016
P:\Projects\ConnDot\36938292\500 CADD-GIS-Graphics\510 CADD\510.04 Struc. Bridge\MSta. Contract. Sheet. Files\SB. MSH. 0135. 0301. RP-13.dgn

Border Version: 11/14/08

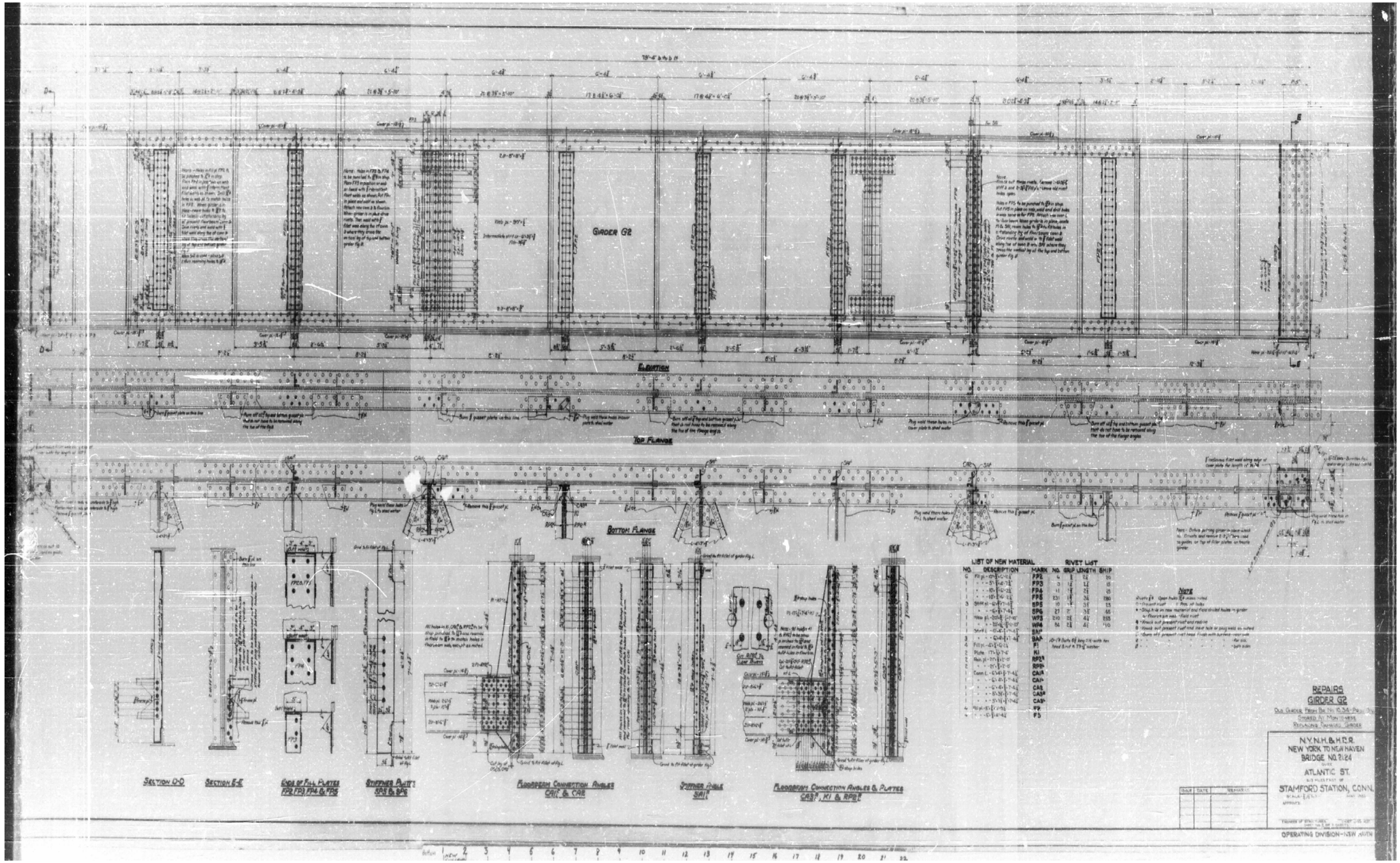

RECORD PLANS / SOUTH FASCIA GIRDER REPLACEMENT

REDUCED COPY (N.T.S.)

FINAL PLANS FOR REVIEW

REV.	DATE	REVISION DESCRIPTION	SHEET NO.
-	-	-	-
-	-	-	-
-	-	-	-
-	-	-	-
-	-	-	-
-	-	-	-

THE INFORMATION, INCLUDING ESTIMATED QUANTITIES OF WORK, SHOWN ON THESE SHEETS IS BASED ON LIMITED INVESTIGATIONS BY THE STATE AND IS IN NO WAY WARRANTED TO INDICATE THE CONDITIONS OF ACTUAL QUANTITIES OF WORK WHICH WILL BE REQUIRED.

Plotted Date: 3/24/2016

DESIGNER/DRAFTER: J. IVES

CHECKED BY: D. COSTELLO

SCALE AS NOTED

STATE OF CONNECTICUT
DEPARTMENT OF TRANSPORTATION

Filename: ...\SB_MSH_0135_0301_RP-14.dgn

SIGNATURE/ BLOCK:

PROJECT TITLE:
REPLACEMENT OF MNRR BRIDGE OVER ATLANTIC STREET PHASE 2

TOWN: **STAMFORD**

DRAWING TITLE: **RECORD PLANS S. GIRDER REPLACEMENT**

PROJECT NO. **135-301**

DRAWING NO. **S-107**

SHEET NO. **01.05.107**

3/24/2016
P:\Projects\ConnDot\36938292\500 CADD-GIS-Graphics\510 CADD\510.04 Struc. Bridge\MSta. Contract. Sheet. Files\SB_MSH_0135_0301_RP-14.dgn

Border Version: 11/14/08

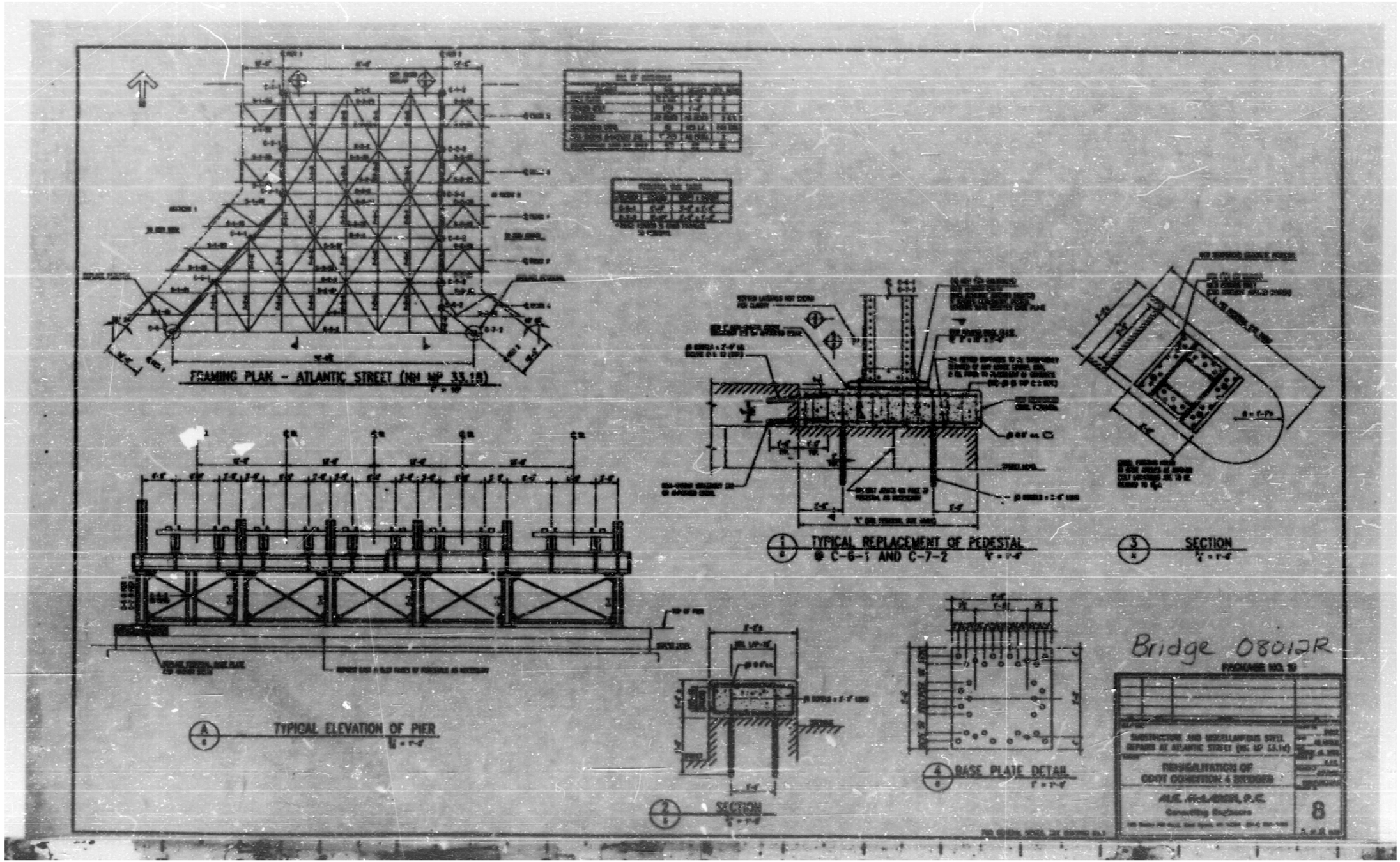

RECORD PLANS / PIER REPAIRS

REDUCED COPY (N.T.S.)

FINAL PLANS FOR REVIEW

REV.	DATE	REVISION DESCRIPTION	SHEET NO.
-	-	-	-
-	-	-	-
-	-	-	-
-	-	-	-
-	-	-	-
-	-	-	-

THE INFORMATION, INCLUDING ESTIMATED QUANTITIES OF WORK, SHOWN ON THESE SHEETS IS BASED ON LIMITED INVESTIGATIONS BY THE STATE AND IS IN NO WAY WARRANTED TO INDICATE THE CONDITIONS OF ACTUAL QUANTITIES OF WORK WHICH WILL BE REQUIRED.

Plotted Date: 3/24/2016

DESIGNER/DRAFTER: J. IVES

CHECKED BY: D. COSTELLO

SCALE AS NOTED

STATE OF CONNECTICUT
DEPARTMENT OF TRANSPORTATION

Filename: ...\SB.MSH.0135.0301.RP-15.dgn

SIGNATURE/ BLOCK:

PROJECT TITLE:
REPLACEMENT OF MNRR BRIDGE OVER ATLANTIC STREET PHASE 2

TOWN: **STAMFORD**

DRAWING TITLE: **RECORD PLANS PIER REPAIRS**

PROJECT NO. **135-301**

DRAWING NO. **S-108**

SHEET NO. **01.05.108**

3/24/2016
P:\Projects\CommDot\36938292\500 CADD-GIS-Graphics\510 CADD\510.04 Struc. Bridge\WSta. Contract Sheet Files\SB.MSH.0135.0301.RP-15.dgn

Border Version: 11/14/08

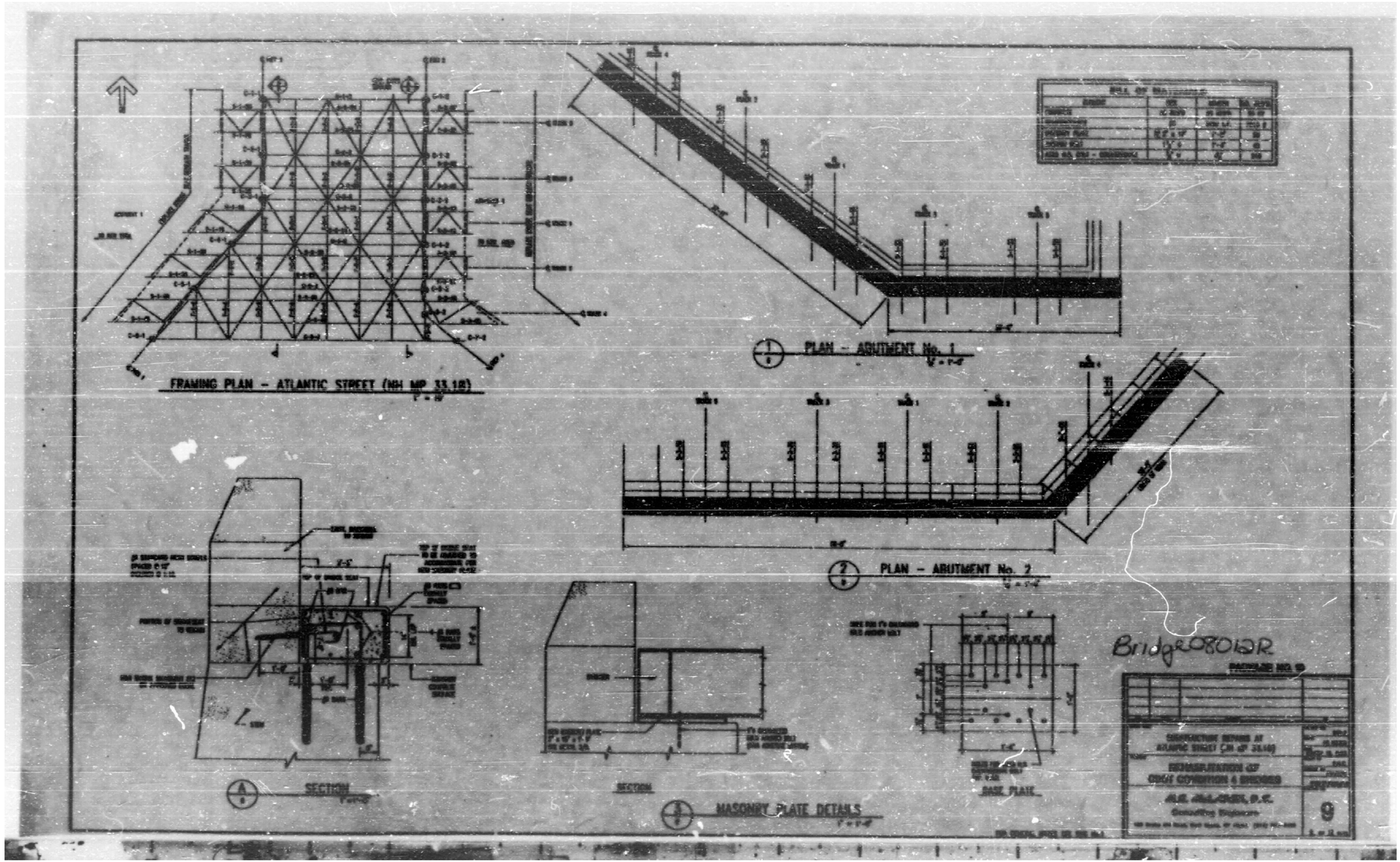

RECORD PLANS / ABUTMENT REPAIRS

REDUCED COPY (N.T.S.)

FINAL PLANS FOR REVIEW

REV.	DATE	REVISION DESCRIPTION	SHEET NO.
-	-	-	-
-	-	-	-
-	-	-	-
-	-	-	-
-	-	-	-
-	-	-	-

THE INFORMATION, INCLUDING ESTIMATED QUANTITIES OF WORK, SHOWN ON THESE SHEETS IS BASED ON LIMITED INVESTIGATIONS BY THE STATE AND IS IN NO WAY WARRANTED TO INDICATE THE CONDITIONS OF ACTUAL QUANTITIES OF WORK WHICH WILL BE REQUIRED.

Plotted Date: 3/24/2016

DESIGNER/DRAFTER: J. IVES

CHECKED BY: D. COSTELLO

SCALE AS NOTED

STATE OF CONNECTICUT
DEPARTMENT OF TRANSPORTATION

Filename: ...\SB_MSH_0135_0301_RP-16.dgn

SIGNATURE/ BLOCK:

PROJECT TITLE:
REPLACEMENT OF MNRR BRIDGE OVER ATLANTIC STREET PHASE 2

TOWN: **STAMFORD**

DRAWING TITLE: **RECORD PLANS ABUTMENT REPAIRS**

PROJECT NO. **135-301**

DRAWING NO. **S-109**

SHEET NO. **01.05.109**

3/24/2016
P:\Projects\CommDot\36938292\500 CADD-GIS-Graphics\510 CADD\510.04 Struc. Bridge\MSta. Contract. Sheet. Files\SB_MSH_0135_0301_RP-16.dgn

Border Version: 11/14/08