Metro-North Railroad

CONTRACT DRAWINGS FOR FURNISHING PRE-WIRED SIGNAL HOUSES AND CASES

NEW HAVEN LINE

GREENWICH, CT TO NORWALK, CT

CONTRACT NO. 1000027511

VOLUME III

AUGUST 29, 2014

100% SUBMISSION - SECTION 1

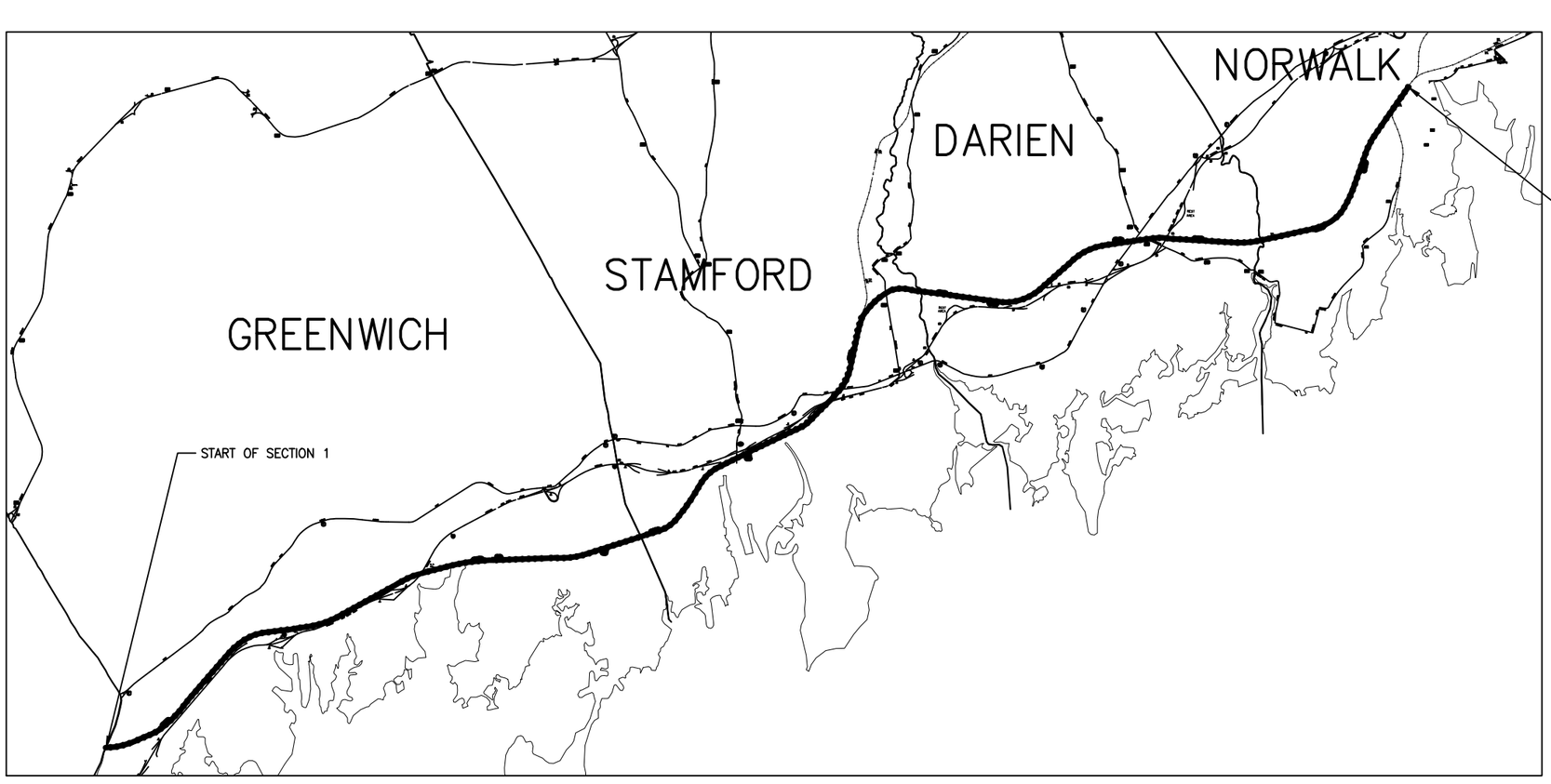

Prepared By:

Gannett Fleming Transit & Rail Systems / CWA

GANNETT FLEMING/CWA, a joint venture
TWO PENN PLAZA, SUITE 552
380 SEVENTH AVENUE
NEW YORK, NY 10121-0101
PRJ: 057664

GENERAL DRAWING INDEX

SHEET #	DRAWING #	TITLE
		COVER
0001	G-001	DRAWING INDEX
0002	G-002	DRAWING INDEX
0003	G-003	DRAWING INDEX
0004	G-004	NOT USED
0005	G-005	NOT USED
0006	G-006	DRAWING INDEX
0007	G-007	CAD STANDARD SYMBOLS RELAYS, CONTACTS & PARTS
0008	G-008	CAD STANDARD ROUTING SYMBOLS

BLOCK PLAN DRAWINGS

SHEET #	DRAWING #	TITLE
0009	BP-101	EXISTING / PROPOSED BLOCK PLAN MP 27.27 TO MP 29.55
0010	BP-102	EXISTING / PROPOSED BLOCK PLAN MP 29.55 TO MP 31.82
0011	BP-103	EXISTING / PROPOSED BLOCK PLAN MP 31.82 TO MP 34.09
0012	BP-104	EXISTING / PROPOSED BLOCK PLAN MP 34.09 TO MP 36.36
0013	BP-105	EXISTING / PROPOSED BLOCK PLAN MP 36.36 TO MP 38.64
0014	BP-106	EXISTING / PROPOSED BLOCK PLAN MP 38.64 TO MP 40.91
0015	BP-107	EXISTING / PROPOSED BLOCK PLAN MP 40.91 TO MP 43.18

SHEETS 0016 TO 0035 ARE NOT USED IN THIS SUBMISSION

ROUTINGS & DIVERGING ROUTES – FINAL

SHEET #	DRAWING #	TITLE
0036	L1001I	MP 12.0 TO MP 42.4 ROUTING INDEX
0037	L1002I	MP 12.0 TO MP 42.4 ROUTING INDEX

SHEETS 0038 TO 0039 ARE NOT USED IN THIS SUBMISSION

0040	L1007E	MP 25.0 TO MP 30.9 ROUTINGS – TRACKS 3 & 1 EAST
0041	L1008E	MP 25.0 TO MP 30.9 ROUTINGS – TRACKS 2 & 4 EAST
0042	L1009E	MP 30.9 TO MP 35.0 ROUTINGS – TRACK 3 CHANGES TO TRACK 5 EAST
0043	L1010E	MP 30.9 TO MP 35.0 ROUTINGS – TRACKS 3 & 1 EAST
0044	L1011E	MP 30.9 TO MP 35.0 ROUTINGS – TRACKS 2 & 4 EAST
0045	L1012E	MP 35.6 TO MP 40.7 ROUTINGS – TRACKS 3 & 1 EAST
0046	L1013E	MP 35.6 TO MP 40.7 ROUTINGS – TRACKS 2 & 4 EAST
0047	L1014E	MP 40.7 TO MP 42.4 ROUTINGS – TRACKS 3 & 1 EAST
0048	L1015E	MP 40.7 TO MP 42.4 ROUTINGS – TRACKS 2 & 4 EAST
0049	L1007W	MP 31.2 TO MP 25.3 ROUTINGS – TRACKS 3 & 1 WEST
0050	L1008W	MP 31.2 TO MP 25.3 ROUTINGS – TRACKS 2 & 4 WEST
0051	L1009W	MP 35.6 TO MP 31.2 ROUTINGS – TRACK 5 CHANGES TO TRACK 3 WEST
0052	L1010W	MP 35.6 TO MP 31.2 ROUTINGS – TRACKS 3 & 1 WEST
0053	L1011W	MP 35.6 TO MP 31.2 ROUTINGS – TRACKS 2 & 4 WEST
0054	L1012W	MP 40.7 TO MP 35.6 ROUTINGS – TRACKS 3 & 1 WEST
0055	L1013W	MP 40.7 TO MP 35.6 ROUTINGS – TRACKS 2 & 4 WEST
0056	L1014W	MP 42.4 TO MP 40.7 ROUTINGS – TRACKS 3 & 1 WEST
0057	L1015W	MP 42.4 TO MP 40.7 ROUTINGS – TRACKS 2 & 4 WEST
0058	L1030X	CP 229 DIVERGING ROUTES – TRACK 3 EAST
0059	L1031X	CP 229 DIVERGING ROUTES – TRACK 1 EAST
0060	L1032X	CP 229 DIVERGING ROUTES – TRACK 2 EAST
0061	L1033X	CP 229 DIVERGING ROUTES – TRACK 4 EAST
0062	L1034X	CP 229 DIVERGING ROUTES – TRACK 3 WEST
0063	L1035X	CP 229 DIVERGING ROUTES – TRACK 1 WEST
0064	L1036X	CP 229 DIVERGING ROUTES – TRACK 2 WEST
0065	L1037X	CP 229 DIVERGING ROUTES – TRACK 4 WEST
0066	L1038X	CP 232 DIVERGING ROUTES – TRACKS 3 & 1 EAST
0067	L1039X	CP 232 DIVERGING ROUTES – TRACKS 2 & 4 EAST
0068	L1040X	CP 232 DIVERGING ROUTES – TRACKS 3 & 1 WEST
0069	L1041X	CP 232 DIVERGING ROUTES – TRACK 2 WEST
0070	L1042X	CP 233 DIVERGING ROUTES – TRACKS 5 & 2 EAST
0071	L1043X	CP 233 DIVERGING ROUTES – TRACKS 7 & 4 WEST
0072	L1044X	CP 234 DIVERGING ROUTES – TRACK 5 EAST
0073	L1045X	CP 234 DIVERGING ROUTES – TRACK 3 EAST
0074	L1046X	CP 234 DIVERGING ROUTES – TRACK 1 EAST
0075	L1047X	CP 234 DIVERGING ROUTES – TRACK 2 EAST
0076	L1048X	CP 234 DIVERGING ROUTES – TRACK 4 EAST
0077	L1049X	CP 234 DIVERGING ROUTES – TRACK 5 WEST
0078	L1050X	CP 234 DIVERGING ROUTES – TRACK 3 WEST
0079	L1051X	CP 234 DIVERGING ROUTES – TRACK 1 WEST
0080	L1052X	CP 234 DIVERGING ROUTES – TRACK 2 WEST
0081	L1053X	CP 234 DIVERGING ROUTES – TRACK 4 WEST
0082	L1054X	CP 234 DIVERGING ROUTES – TRACKS 6 & 7 WEST
0083	L1055X	CP 234 STAMFORD YARD ROUTINGS
0084	L1056X	CP 235 DIVERGING ROUTES – TRACKS 5 & 3 EAST
0085	L1057X	CP 235 DIVERGING ROUTES – TRACKS 3 & 1 WEST
0086	L1058X	CP 240 DIVERGING ROUTES – TRACK 1 EAST
0087	L1059X	CP 240 DIVERGING ROUTES – TRACK 2 EAST
0088	L1060X	CP 240 DIVERGING ROUTES – TRACKS 3 & 1 WEST
0089	L1061X	CP 240 DIVERGING ROUTES – TRACKS 2 & 4 WEST
0090	L1062X	CP 241 DIVERGING ROUTES – TRACK 3 EAST
0091	L1063X	CP 241 DIVERGING ROUTES – TRACK 1 EAST
0092	L1064X	CP 241 DIVERGING ROUTES – TRACK 2 EAST
0093	L1065X	CP 241 DIVERGING ROUTES – TRACK 4 EAST

ROUTINGS & DIVERGING ROUTES – FINAL

SHEET #	DRAWING #	TITLE
0094	L1066X	CP 241 DIVERGING ROUTES – TRACKS 5 & 6 EAST
0095	L1067X	CP 241 DIVERGING ROUTES – TRACK 3 WEST
0096	L1068X	CP 241 DIVERGING ROUTES – TRACK 1 WEST
0097	L1069X	CP 241 DIVERGING ROUTES – TRACK 2 WEST
0098	L1070X	CP 241 DIVERGING ROUTES – TRACK 4 WEST
0099	L1071X	CP 241 DIVERGING ROUTES – TRACK 5 WEST

SHEET 0100 IS NOT USED IN THIS SUBMISSION

ROUTINGS & DIVERGING ROUTES – 270 CODE CUTBACK

SHEET #	DRAWING #	TITLE
0101	L1007E	MP 25.0 TO MP 30.9 ROUTINGS – TRACKS 3 & 1 EAST – 270 CUTBACK
0102	L1008E	MP 25.0 TO MP 30.9 ROUTINGS – TRACKS 2 & 4 EAST – 270 CUTBACK
0103	L1009E	MP 30.9 TO MP 35.0 ROUTINGS – TRACK 3 CHANGES TO TRACK 5 EAST – 270 CUTBACK
0104	L1010E	MP 30.9 TO MP 35.0 ROUTINGS – TRACKS 3 & 1 EAST – 270 CUTBACK
0105	L1011E	MP 30.9 TO MP 35.0 ROUTINGS – TRACKS 2 & 4 EAST – 270 CUTBACK
0106	L1012E	MP 35.6 TO MP 40.7 ROUTINGS – TRACKS 3 & 1 EAST – 270 CUTBACK
0107	L1013E	MP 35.6 TO MP 40.7 ROUTINGS – TRACKS 2 & 4 EAST – 270 CUTBACK
0108	L1014E	MP 40.7 TO MP 42.4 ROUTINGS – TRACKS 3 & 1 EAST – 270 CUTBACK
0109	L1015E	MP 40.7 TO MP 42.4 ROUTINGS – TRACKS 2 & 4 EAST – 270 CUTBACK
0110	L1007W	MP 31.2 TO MP 25.3 ROUTINGS – TRACKS 3 & 1 WEST – 270 CUTBACK
0111	L1008W	MP 31.2 TO MP 25.3 ROUTINGS – TRACKS 2 & 4 WEST – 270 CUTBACK
0112	L1009W	MP 35.6 TO MP 31.2 ROUTINGS – TRACK 5 CHANGES TO TRACK 3 WEST – 270 CUTBACK
0113	L1010W	MP 35.6 TO MP 31.2 ROUTINGS – TRACKS 3 & 1 WEST – 270 CUTBACK
0114	L1011W	MP 35.6 TO MP 31.2 ROUTINGS – TRACKS 2 & 4 WEST – 270 CUTBACK
0115	L1012W	MP 40.7 TO MP 35.6 ROUTINGS – TRACKS 3 & 1 WEST – 270 CUTBACK
0116	L1013W	MP 40.7 TO MP 35.6 ROUTINGS – TRACKS 2 & 4 WEST – 270 CUTBACK
0117	L1014W	MP 42.4 TO MP 40.7 ROUTINGS – TRACKS 3 & 1 WEST – 270 CUTBACK
0118	L1015W	MP 42.4 TO MP 40.7 ROUTINGS – TRACKS 2 & 4 WEST – 270 CUTBACK
0119	L1030X	CP 229 DIVERGING ROUTES – TRACK 3 EAST – 270 CUTBACK
0120	L1031X	CP 229 DIVERGING ROUTES – TRACK 1 EAST – 270 CUTBACK
0121	L1032X	CP 229 DIVERGING ROUTES – TRACK 2 EAST – 270 CUTBACK
0122	L1033X	CP 229 DIVERGING ROUTES – TRACK 4 EAST – 270 CUTBACK
0123	L1034X	CP 229 DIVERGING ROUTES – TRACK 3 WEST – 270 CUTBACK
0124	L1035X	CP 229 DIVERGING ROUTES – TRACK 1 WEST – 270 CUTBACK
0125	L1036X	CP 229 DIVERGING ROUTES – TRACK 2 WEST – 270 CUTBACK
0126	L1037X	CP 229 DIVERGING ROUTES – TRACK 4 WEST – 270 CUTBACK
0127	L1038X	CP 232 DIVERGING ROUTES – TRACKS 3 & 1 EAST – 270 CUTBACK
0128	L1039X	CP 232 DIVERGING ROUTES – TRACKS 2 & 4 EAST – 270 CUTBACK
0129	L1040X	CP 232 DIVERGING ROUTES – TRACKS 3 & 1 WEST – 270 CUTBACK
0130	L1041X	CP 232 DIVERGING ROUTES – TRACK 2 WEST – 270 CUTBACK
0131	L1042X	CP 233 DIVERGING ROUTES – TRACKS 5 & 2 EAST – 270 CUTBACK
0132	L1043X	CP 233 DIVERGING ROUTES – TRACKS 7 & 4 WEST – 270 CUTBACK
0133	L1044X	CP 234 DIVERGING ROUTES – TRACK 5 EAST – 270 CUTBACK
0134	L1045X	CP 234 DIVERGING ROUTES – TRACK 3 EAST – 270 CUTBACK
0135	L1046X	CP 234 DIVERGING ROUTES – TRACK 1 EAST – 270 CUTBACK
0136	L1047X	CP 234 DIVERGING ROUTES – TRACK 2 EAST – 270 CUTBACK
0137	L1048X	CP 234 DIVERGING ROUTES – TRACK 4 EAST – 270 CUTBACK
0138	L1049X	CP 234 DIVERGING ROUTES – TRACK 5 WEST – 270 CUTBACK
0139	L1050X	CP 234 DIVERGING ROUTES – TRACK 3 WEST – 270 CUTBACK
0140	L1051X	CP 234 DIVERGING ROUTES – TRACK 1 WEST – 270 CUTBACK
0141	L1052X	CP 234 DIVERGING ROUTES – TRACK 2 WEST – 270 CUTBACK
0142	L1053X	CP 234 DIVERGING ROUTES – TRACK 4 WEST – 270 CUTBACK
0143	L1054X	CP 234 DIVERGING ROUTES – TRACKS 6 & 7 WEST – 270 CUTBACK
0144	L1055X	CP 234 STAMFORD YARD ROUTINGS – 270 CUTBACK
0145	L1056X	CP 235 DIVERGING ROUTES – TRACKS 5 & 3 EAST – 270 CUTBACK
0146	L1057X	CP 235 DIVERGING ROUTES – TRACKS 3 & 1 WEST – 270 CUTBACK
0147	L1058X	CP 240 DIVERGING ROUTES – TRACK 1 EAST – 270 CUTBACK

DESIGNED RRL
DRAWN CBH
CHECKED JJL
APPROVED XXX

NO.	DATE		DRWN	CHKD	APPVD

REVISIONS

NO.	DATE		DRWN	CHKD	APPVD

REVISIONS

Gannett Fleming Transit & Rail Systems / CWA
GANNETT FLEMING/CWA, a joint venture
TWO PENN PLAZA, SUITE 552
380 SEVENTH AVENUE
NEW YORK, NY 10121-0101
PRJ: 057664

MTA Metro-North Railroad
347 Madison Avenue
New York, N.Y. 10017

TITLE
ENGINEERING AND DESIGN OF
CP 229 – CP 241

DRAWING INDEX

CONTRACT NO. 1000027511
SCALE
DATE 08-29-14
DRAWING NO. G-001
SHEET **0001** OF

ROUTINGS & DIVERGING ROUTES – 270 CODE CUTBACK

SHEET #	DRAWING #	TITLE
0148	L1059X	CP 240 DIVERGING ROUTES – TRACK 2 EAST – 270 CUTBACK
0149	L1060X	CP 240 DIVERGING ROUTES – TRACKS 3 & 1 WEST – 270 CUTBACK
0150	L1061X	CP 240 DIVERGING ROUTES – TRACKS 2 & 4 WEST – 270 CUTBACK
0151	L1062X	CP 241 DIVERGING ROUTES – TRACK 3 EAST – 270 CUTBACK
0152	L1063X	CP 241 DIVERGING ROUTES – TRACK 1 EAST – 270 CUTBACK
0153	L1064X	CP 241 DIVERGING ROUTES – TRACK 2 EAST – 270 CUTBACK
0154	L1065X	CP 241 DIVERGING ROUTES – TRACK 4 EAST – 270 CUTBACK
0155	L1066X	CP 241 DIVERGING ROUTES – TRACKS 5 & 6 EAST – 270 CUTBACK
0156	L1067X	CP 241 DIVERGING ROUTES – TRACK 3 WEST – 270 CUTBACK
0157	L1068X	CP 241 DIVERGING ROUTES – TRACK 1 WEST – 270 CUTBACK
0158	L1069X	CP 241 DIVERGING ROUTES – TRACK 2 WEST – 270 CUTBACK
0159	L1070X	CP 241 DIVERGING ROUTES – TRACK 4 WEST – 270 CUTBACK
0160	L1071X	CP 241 DIVERGING ROUTES – TRACK 5 WEST – 270 CUTBACK

SHEETS 0161 TO 0250 ARE NOT USED IN THIS SUBMISSION

ROUTINGS & DIVERGING ROUTES – EXISTING

SHEET #	DRAWING #	TITLE
0251	L1007E	MP 25.0 TO MP 30.9 ROUTINGS – TRACKS 3 & 1 EAST
0252	L1008E	MP 25.0 TO MP 30.9 ROUTINGS – TRACKS 2 & 4 EAST
0253	L1009E	MP 30.9 TO MP 35.0 ROUTINGS – TRACK 3 CHANGES TO TRACK 5 EAST
0254	L1010E	MP 30.9 TO MP 35.0 ROUTINGS – TRACKS 3 & 1 EAST
0255	L1011E	MP 30.9 TO MP 35.0 ROUTINGS – TRACKS 2 & 4 EAST
0256	L2001E	MP 35.6 TO MP 40.7 ROUTINGS – TRACKS 3 & 1 EAST
0257	L2002E	MP 35.6 TO MP 40.7 ROUTINGS – TRACKS 2 & 4 EAST
0258	L2003E	MP 40.7 TO MP 42.4 ROUTINGS – TRACKS 3 & 1 EAST
0259	L2004E	MP 40.7 TO MP 42.4 ROUTINGS – TRACKS 2 & 4 EAST
0260	L1007W	MP 31.2 TO MP 25.3 ROUTINGS – TRACKS 3 & 1 WEST
0261	L1008W	MP 31.2 TO MP 25.3 ROUTINGS – TRACKS 2 & 4 WEST
0262	L1009W	MP 35.6 TO MP 31.2 ROUTINGS – TRACK 5 CHANGES TO TRACK 3 WEST
0263	L1010W	MP 35.6 TO MP 31.2 ROUTINGS – TRACKS 3 & 1 WEST
0264	L1011W	MP 35.6 TO MP 31.2 ROUTINGS – TRACKS 2 & 4 WEST
0265	L2001W	MP 40.7 TO MP 35.6 ROUTINGS – TRACKS 3 & 1 WEST
0266	L2002W	MP 40.7 TO MP 35.6 ROUTINGS – TRACKS 2 & 4 WEST
0267	L2003W	MP 42.4 TO MP 40.7 ROUTINGS – TRACKS 3 & 1 WEST
0268	L2004W	MP 42.4 TO MP 40.7 ROUTINGS – TRACKS 2 & 4 WEST
0269	L1030X	CP 229 DIVERGING ROUTES – TRACK 3 EAST
0270	L1031X	CP 229 DIVERGING ROUTES – TRACK 1 EAST
0271	L1032X	CP 229 DIVERGING ROUTES – TRACK 2 EAST
0272	L1033X	CP 229 DIVERGING ROUTES – TRACK 4 EAST
0273	L1034X	CP 229 DIVERGING ROUTES – TRACK 3 WEST
0274	L1035X	CP 229 DIVERGING ROUTES – TRACK 1 WEST
0275	L1036X	CP 229 DIVERGING ROUTES – TRACK 2 WEST
0276	L1037X	CP 229 DIVERGING ROUTES – TRACK 4 WEST
0277	L1038X	CP 232 DIVERGING ROUTES – TRACKS 3 & 1 EAST
0278	L1039X	CP 232 DIVERGING ROUTES – TRACKS 2 & 4 EAST
0279	L1040X	CP 232 DIVERGING ROUTES – TRACKS 3 & 1 WEST
0280	L1041X	CP 232 DIVERGING ROUTES – TRACK 2 WEST
0281	L1042X	CP 233 DIVERGING ROUTES
0282	L1043X	CP 234 DIVERGING ROUTES – TRACK 5 EAST
0283	L1044X	CP 234 DIVERGING ROUTES – TRACK 3 EAST
0284	L1045X	CP 234 DIVERGING ROUTES – TRACK 1 EAST
0285	L1046X	CP 234 DIVERGING ROUTES – TRACK 2 EAST
0286	L1047X	CP 234 DIVERGING ROUTES – TRACK 4 EAST
0287	L1048X	CP 234 DIVERGING ROUTES – TRACK 5 WEST
0288	L1049X	CP 234 DIVERGING ROUTES – TRACK 3 WEST
0289	L1050X	CP 234 DIVERGING ROUTES – TRACK 1 WEST

ROUTINGS & DIVERGING ROUTES – EXISTING

SHEET #	DRAWING #	TITLE
0290	L1051X	CP 234 DIVERGING ROUTES – TRACK 2 WEST
0291	L1052X	CP 234 DIVERGING ROUTES – TRACK 4 WEST
0292	L1053X	CP 234 DIVERGING ROUTES – TRACKS 6 & 7 WEST
0293	L1054X	CP 234 STAMFORD YARD ROUTINGS
0294	L1055X	CP 235 DIVERGING ROUTES – TRACKS 5 & 3 EAST
0295	L1056X	CP 235 DIVERGING ROUTES – TRACKS 3 & 1 WEST
0296	L2001X	CP 240 DIVERGING ROUTES
0297	L2002X	CP 241 DIVERGING ROUTES – TRACK 3 EAST
0298	L2003X	CP 241 DIVERGING ROUTES – TRACK 1 EAST
0299	L2004X	CP 241 DIVERGING ROUTES – TRACK 2 EAST
0300	L2005X	CP 241 DIVERGING ROUTES – TRACK 4 EAST
0301	L2006X	CP 241 DIVERGING ROUTES – TRACKS 5 & 6 EAST
0302	L2007X	CP 241 DIVERGING ROUTES – TRACK 3 WEST
0303	L2008X	CP 241 DIVERGING ROUTES – TRACK 1 WEST
0304	L2009X	CP 241 DIVERGING ROUTES – TRACK 2 WEST
0305	L2010X	CP 241 DIVERGING ROUTES – TRACK 4 WEST
0306	L2011X	CP 241 DIVERGING ROUTES – TRACK 5 WEST

SHEETS 0307 TO 0340 ARE NOT USED IN THIS SUBMISSION

ROUTINGS & DIVERGING ROUTES – STAGE 1

SHEET #	DRAWING #	TITLE
0341	L2001E	MP 35.6 TO MP 40.7 ROUTINGS – TRACKS 3 & 1 EAST – STAGE 1
0342	L2002E	MP 35.6 TO MP 40.7 ROUTINGS – TRACKS 2 & 4 EAST – STAGE 1
0343	L2003E	MP 40.7 TO MP 42.4 ROUTINGS – TRACKS 3 & 1 EAST – STAGE 1
0344	L2004E	MP 40.7 TO MP 42.4 ROUTINGS – TRACKS 2 & 4 EAST – STAGE 1
0345	L2001W	MP 40.7 TO MP 35.6 ROUTINGS – TRACKS 3 & 1 WEST – STAGE 1
0346	L2002W	MP 40.7 TO MP 35.6 ROUTINGS – TRACKS 2 & 4 WEST – STAGE 1
0347	L2003W	MP 42.4 TO MP 40.7 ROUTINGS – TRACKS 3 & 1 WEST – STAGE 1
0348	L2004W	MP 42.4 TO MP 40.7 ROUTINGS – TRACKS 2 & 4 WEST – STAGE 1
0349	L2001X	CP 240 DIVERGING ROUTES – STAGE 1
0350	L2002X	CP 241 DIVERGING ROUTES – TRACK 3 EAST – STAGE 1
0351	L2003X	CP 241 DIVERGING ROUTES – TRACK 1 EAST – STAGE 1
0352	L2004X	CP 241 DIVERGING ROUTES – TRACK 2 EAST – STAGE 1
0353	L2005X	CP 241 DIVERGING ROUTES – TRACK 4 EAST – STAGE 1
0354	L2006X	CP 241 DIVERGING ROUTES – TRACKS 5 & 6 EAST – STAGE 1
0355	L2007X	CP 241 DIVERGING ROUTES – TRACK 3 WEST – STAGE 1
0356	L2008X	CP 241 DIVERGING ROUTES – TRACK 1 WEST – STAGE 1
0357	L2009X	CP 241 DIVERGING ROUTES – TRACK 2 WEST – STAGE 1
0358	L2010X	CP 241 DIVERGING ROUTES – TRACK 4 WEST – STAGE 1
0359	L2011X	CP 241 DIVERGING ROUTES – TRACK 5 WEST – STAGE 1

ROUTINGS & DIVERGING ROUTES – STAGE 2

SHEET #	DRAWING #	TITLE
0360	L1007E	MP 25.0 TO MP 30.9 ROUTINGS – TRACKS 3 & 1 EAST – STAGE 2
0361	L1008E	MP 25.0 TO MP 30.9 ROUTINGS – TRACKS 2 & 4 EAST – STAGE 2
0362	L1009E	MP 30.9 TO MP 35.0 ROUTINGS – TRACK 3 CHANGES TO TRACK 5 EAST – STAGE 2
0363	L1010E	MP 30.9 TO MP 35.0 ROUTINGS – TRACKS 3 & 1 EAST – STAGE 2
0364	L1011E	MP 30.9 TO MP 35.0 ROUTINGS – TRACKS 2 & 4 EAST – STAGE 2
0365	L1007W	MP 31.2 TO MP 25.3 ROUTINGS – TRACKS 3 & 1 WEST – STAGE 2
0366	L1008W	MP 31.2 TO MP 25.3 ROUTINGS – TRACKS 2 & 4 WEST – STAGE 2
0367	L1009W	MP 35.6 TO MP 31.2 ROUTINGS – TRACK 5 CHANGES TO TRACK 3 WEST – STAGE 2
0368	L1010W	MP 35.6 TO MP 31.2 ROUTINGS – TRACKS 3 & 1 WEST – STAGE 2
0369	L1011W	MP 35.6 TO MP 31.2 ROUTINGS – TRACKS 2 & 4 WEST – STAGE 2
0370	L1030X	CP 229 DIVERGING ROUTES – TRACK 3 EAST – STAGE 2
0371	L1031X	CP 229 DIVERGING ROUTES – TRACK 1 EAST – STAGE 2
0372	L1032X	CP 229 DIVERGING ROUTES – TRACK 2 EAST – STAGE 2
0373	L1033X	CP 229 DIVERGING ROUTES – TRACK 4 EAST – STAGE 2

ROUTINGS & DIVERGING ROUTES – STAGE 2

SHEET #	DRAWING #	TITLE
0374	L1034X	CP 229 DIVERGING ROUTES – TRACK 3 WEST – STAGE 2
0375	L1035X	CP 229 DIVERGING ROUTES – TRACK 1 WEST – STAGE 2
0376	L1036X	CP 229 DIVERGING ROUTES – TRACK 2 WEST – STAGE 2
0377	L1037X	CP 229 DIVERGING ROUTES – TRACK 4 WEST – STAGE 2

SHEETS 0378 & 0379 ARE NOT USED IN THIS SUBMISSION

ROUTINGS & DIVERGING ROUTES – STAGE 3

SHEET #	DRAWING #	TITLE
0380	L1007E	MP 25.0 TO MP 30.9 ROUTINGS – TRACKS 3 & 1 EAST – STAGE 3
0381	L1008E	MP 25.0 TO MP 30.9 ROUTINGS – TRACKS 2 & 4 EAST – STAGE 3
0382	L1009E	MP 30.9 TO MP 35.0 ROUTINGS – TRACK 3 CHANGES TO TRACK 5 EAST – STAGE 3
0383	L1010E	MP 30.9 TO MP 35.0 ROUTINGS – TRACKS 3 & 1 EAST – STAGE 3
0384	L1011E	MP 30.9 TO MP 35.0 ROUTINGS – TRACKS 2 & 4 EAST – STAGE 3
0385	L1007W	MP 31.2 TO MP 25.3 ROUTINGS – TRACKS 3 & 1 WEST – STAGE 3
0386	L1008W	MP 31.2 TO MP 25.3 ROUTINGS – TRACKS 2 & 4 WEST – STAGE 3
0387	L1009W	MP 35.6 TO MP 31.2 ROUTINGS – TRACK 5 CHANGES TO TRACK 3 WEST – STAGE 3
0388	L1010W	MP 35.6 TO MP 31.2 ROUTINGS – TRACKS 3 & 1 WEST – STAGE 3
0389	L1011W	MP 35.6 TO MP 31.2 ROUTINGS – TRACKS 2 & 4 WEST – STAGE 3
0390	L1030X	CP 229 DIVERGING ROUTES – TRACK 3 EAST – STAGE 3
0391	L1031X	CP 229 DIVERGING ROUTES – TRACK 1 EAST – STAGE 3
0392	L1032X	CP 229 DIVERGING ROUTES – TRACK 2 EAST – STAGE 3
0393	L1033X	CP 229 DIVERGING ROUTES – TRACK 4 EAST – STAGE 3
0394	L1034X	CP 229 DIVERGING ROUTES – TRACK 3 WEST – STAGE 3
0395	L1035X	CP 229 DIVERGING ROUTES – TRACK 1 WEST – STAGE 3
0396	L1036X	CP 229 DIVERGING ROUTES – TRACK 2 WEST – STAGE 3
0397	L1037X	CP 229 DIVERGING ROUTES – TRACK 4 WEST – STAGE 3

SHEETS 0398 TO 0399 ARE NOT USED IN THIS SUBMISSION

ROUTINGS & DIVERGING ROUTES – STAGE 4

SHEET #	DRAWING #	TITLE
0400	L1007E	MP 25.0 TO MP 30.9 ROUTINGS – TRACKS 3 & 1 EAST – STAGE 4
0401	L1008E	MP 25.0 TO MP 30.9 ROUTINGS – TRACKS 2 & 4 EAST – STAGE 4
0402	L1009E	MP 30.9 TO MP 35.0 ROUTINGS – TRACK 3 CHANGES TO TRACK 5 EAST – STAGE 4
0403	L1010E	MP 30.9 TO MP 35.0 ROUTINGS – TRACKS 3 & 1 EAST – STAGE 4
0404	L1011E	MP 30.9 TO MP 35.0 ROUTINGS – TRACKS 2 & 4 EAST – STAGE 4
0405	L1007W	MP 31.2 TO MP 25.3 ROUTINGS – TRACKS 3 & 1 WEST – STAGE 4
0406	L1008W	MP 31.2 TO MP 25.3 ROUTINGS – TRACKS 2 & 4 WEST – STAGE 4
0407	L1009W	MP 35.6 TO MP 31.2 ROUTINGS – TRACK 5 CHANGES TO TRACK 3 WEST – STAGE 4
0408	L1010W	MP 35.6 TO MP 31.2 ROUTINGS – TRACKS 3 & 1 WEST – STAGE 4
0409	L1011W	MP 35.6 TO MP 31.2 ROUTINGS – TRACKS 2 & 4 WEST – STAGE 4
0410	L1038X	CP 232 DIVERGING ROUTES – TRACKS 3 & 1 EAST – STAGE 4
0411	L1039X	CP 232 DIVERGING ROUTES – TRACKS 2 & 4 EAST – STAGE 4
0412	L1040X	CP 232 DIVERGING ROUTES – TRACKS 3 & 1 WEST – STAGE 4
0413	L1041X	CP 232 DIVERGING ROUTES – TRACK 2 WEST – STAGE 4
0414	L1042X	CP 233 DIVERGING ROUTES – STAGE 4

SHEETS 0415 TO 0449 ARE NOT USED IN THIS SUBMISSION

ROUTINGS & DIVERGING ROUTES – STAGE 5

SHEET #	DRAWING #	TITLE
0450	L1007E	MP 25.0 TO MP 30.9 ROUTINGS – TRACKS 3 & 1 EAST – STAGE 5
0451	L1008E	MP 25.0 TO MP 30.9 ROUTINGS – TRACKS 2 & 4 EAST – STAGE 5
0452	L1009E	MP 30.9 TO MP 35.0 ROUTINGS – TRACK 3 CHANGES TO TRACK 5 EAST – STAGE 5
0453	L1010E	MP 30.9 TO MP 35.0 ROUTINGS – TRACKS 3 & 1 EAST – STAGE 5
0454	L1011E	MP 30.9 TO MP 35.0 ROUTINGS – TRACKS 2 & 4 EAST – STAGE 5
0455	L2001E	MP 35.6 TO MP 40.7 ROUTINGS – TRACKS 3 & 1 EAST – STAGE 5
0456	L2002E	MP 35.6 TO MP 40.7 ROUTINGS – TRACKS 2 & 4 EAST – STAGE 5
0457	L1007W	MP 31.2 TO MP 25.3 ROUTINGS – TRACKS 3 & 1 WEST – STAGE 5

DESIGNED	RRL
DRAWN	CBH
CHECKED	JJL
APPROVED	XXX

NO.	DATE		DRWN	CHKD	APPVD
		REVISIONS			

NO.	DATE		DRWN	CHKD	APPVD
		REVISIONS			

Gannett Fleming Transit & Rail Systems / CWA
GANNETT FLEMING/CWA, a joint venture
TWO PENN PLAZA, SUITE 552
380 SEVENTH AVENUE
NEW YORK, NY 10121-0101
PRJ: 057664

Metro-North Railroad
347 Madison Avenue
New York, N.Y. 10017

TITLE
ENGINEERING AND DESIGN OF
CP 229 – CP 241

DRAWING INDEX

CONTRACT NO. 1000027511
SCALE
DATE 08-29-14
DRAWING NO. G-002
SHEET 0002 OF

ROUTINGS & DIVERGING ROUTES – STAGE 5

SHEET #	DRAWING #	TITLE
0458	L1008W	MP 31.2 TO MP 25.3 ROUTINGS – TRACKS 2 & 4 WEST – STAGE 5
0459	L1009W	MP 35.6 TO MP 31.2 ROUTINGS – TRACK 5 CHANGES TO TRACK 3 WEST – STAGE 5
0460	L1010W	MP 35.6 TO MP 31.2 ROUTINGS – TRACKS 3 & 1 WEST – STAGE 5
0461	L1011W	MP 35.6 TO MP 31.2 ROUTINGS – TRACKS 2 & 4 WEST – STAGE 5
0462	L2001W	MP 40.7 TO MP 35.6 ROUTINGS – TRACKS 3 & 1 WEST – STAGE 5
0463	L2002W	MP 40.7 TO MP 35.6 ROUTINGS – TRACKS 2 & 4 WEST – STAGE 5
0464	L1038X	CP 232 DIVERGING ROUTES – TRACKS 3 & 1 EAST – STAGE 5
0465	L1039X	CP 232 DIVERGING ROUTES – TRACKS 2 & 4 EAST – STAGE 5
0466	L1040X	CP 232 DIVERGING ROUTES – TRACKS 3 & 1 WEST – STAGE 5
0467	L1041X	CP 232 DIVERGING ROUTES – TRACK 2 WEST – STAGE 5
0468	L1042X	CP 233 DIVERGING ROUTES – STAGE 5
0469	L1044X	CP 234 DIVERGING ROUTES – TRACK 5 EAST – STAGE 5
0470	L1045X	CP 234 DIVERGING ROUTES – TRACK 3 EAST – STAGE 5
0471	L1046X	CP 234 DIVERGING ROUTES – TRACK 1 EAST – STAGE 5
0472	L1047X	CP 234 DIVERGING ROUTES – TRACK 2 EAST – STAGE 5
0473	L1048X	CP 234 DIVERGING ROUTES – TRACK 4 EAST – STAGE 5
0474	L1049X	CP 234 DIVERGING ROUTES – TRACK 5 WEST – STAGE 5
0475	L1050X	CP 234 DIVERGING ROUTES – TRACK 3 WEST – STAGE 5
0476	L1051X	CP 234 DIVERGING ROUTES – TRACK 1 WEST – STAGE 5
0477	L1052X	CP 234 DIVERGING ROUTES – TRACK 2 WEST – STAGE 5
0478	L1053X	CP 234 DIVERGING ROUTES – TRACK 4 WEST – STAGE 5
0479	L1054X	CP 234 DIVERGING ROUTES – TRACKS 6 & 7 WEST – STAGE 5
0480	L1055X	CP 234 STAMFORD YARD ROUTINGS – STAGE 5

SHEETS 0481 TO 0499 ARE NOT USED IN THIS SUBMISSION

ROUTINGS & DIVERGING ROUTES – STAGE 6

SHEET #	DRAWING #	TITLE
0500	L1009E	MP 30.9 TO MP 35.0 ROUTINGS – TRACK 3 CHANGES TO TRACK 5 EAST – STAGE 6
0501	L1010E	MP 30.9 TO MP 35.0 ROUTINGS – TRACKS 3 & 1 EAST – STAGE 6
0502	L1011E	MP 30.9 TO MP 35.0 ROUTINGS – TRACKS 2 & 4 EAST – STAGE 6
0503	L2001E	MP 35.6 TO MP 40.7 ROUTINGS – TRACKS 3 & 1 EAST – STAGE 6
0504	L2002E	MP 35.6 TO MP 40.7 ROUTINGS – TRACKS 2 & 4 EAST – STAGE 6
0505	L1009W	MP 35.6 TO MP 31.2 ROUTINGS – TRACK 5 CHANGES TO TRACK 3 WEST – STAGE 6
0506	L1010W	MP 35.6 TO MP 31.2 ROUTINGS – TRACKS 3 & 1 WEST – STAGE 6
0507	L1011W	MP 35.6 TO MP 31.2 ROUTINGS – TRACKS 2 & 4 WEST – STAGE 6
0508	L2001W	MP 40.7 TO MP 35.6 ROUTINGS – TRACKS 3 & 1 WEST – STAGE 6
0509	L2002W	MP 40.7 TO MP 35.6 ROUTINGS – TRACKS 2 & 4 WEST – STAGE 6
0510	L1044X	CP 234 DIVERGING ROUTES – TRACK 5 EAST – STAGE 6
0511	L1045X	CP 234 DIVERGING ROUTES – TRACK 3 EAST – STAGE 6
0512	L1046X	CP 234 DIVERGING ROUTES – TRACK 1 EAST – STAGE 6
0513	L1047X	CP 234 DIVERGING ROUTES – TRACK 2 EAST – STAGE 6
0514	L1048X	CP 234 DIVERGING ROUTES – TRACK 4 EAST – STAGE 6
0515	L1049X	CP 234 DIVERGING ROUTES – TRACK 5 WEST – STAGE 6
0516	L1050X	CP 234 DIVERGING ROUTES – TRACK 3 WEST – STAGE 6
0517	L1051X	CP 234 DIVERGING ROUTES – TRACK 1 WEST – STAGE 6
0518	L1052X	CP 234 DIVERGING ROUTES – TRACK 2 WEST – STAGE 6
0519	L1053X	CP 234 DIVERGING ROUTES – TRACK 4 WEST – STAGE 6
0520	L1054X	CP 234 DIVERGING ROUTES – TRACKS 6 & 7 WEST – STAGE 6
0521	L1055X	CP 234 STAMFORD YARD ROUTINGS – STAGE 6
0522	L1056X	CP 235 DIVERGING ROUTES – TRACKS 5 & 3 EAST – STAGE 6
0523	L1057X	CP 235 DIVERGING ROUTES – TRACKS 3 & 1 WEST – STAGE 6

SHEETS 0524 TO 0549 ARE NOT USED IN THIS SUBMISSION

ROUTINGS & DIVERGING ROUTES – STAGE 7

SHEET #	DRAWING #	TITLE
0550	L1009E	MP 30.9 TO MP 35.0 ROUTINGS – TRACK 3 CHANGES TO TRACK 5 EAST – STAGE 7
0551	L1010E	MP 30.9 TO MP 35.0 ROUTINGS – TRACKS 3 & 1 EAST – STAGE 7
0552	L1011E	MP 30.9 TO MP 35.0 ROUTINGS – TRACKS 2 & 4 EAST – STAGE 7
0553	L2001E	MP 35.6 TO MP 40.7 ROUTINGS – TRACKS 3 & 1 EAST – STAGE 7
0554	L2002E	MP 35.6 TO MP 40.7 ROUTINGS – TRACKS 2 & 4 EAST – STAGE 7
0555	L2003E	MP 40.7 TO MP 42.4 ROUTINGS – TRACKS 3 & 1 EAST – STAGE 7
0556	L2004E	MP 40.7 TO MP 42.4 ROUTINGS – TRACKS 2 & 4 EAST – STAGE 7
0557	L1009W	MP 35.6 TO MP 31.2 ROUTINGS – TRACK 5 CHANGES TO TRACK 3 WEST – STAGE 7
0558	L1010W	MP 35.6 TO MP 31.2 ROUTINGS – TRACKS 3 & 1 WEST – STAGE 7
0559	L1011W	MP 35.6 TO MP 31.2 ROUTINGS – TRACKS 2 & 4 WEST – STAGE 7
0560	L2001W	MP 40.7 TO MP 35.6 ROUTINGS – TRACKS 3 & 1 WEST – STAGE 7
0561	L2002W	MP 40.7 TO MP 35.6 ROUTINGS – TRACKS 2 & 4 WEST – STAGE 7
0562	L2003W	MP 42.4 TO MP 40.7 ROUTINGS – TRACKS 3 & 1 WEST – STAGE 7
0563	L2004W	MP 42.4 TO MP 40.7 ROUTINGS – TRACKS 2 & 4 WEST – STAGE 7
0564	L1044X	CP 234 DIVERGING ROUTES – TRACK 5 EAST – STAGE 7
0565	L1045X	CP 234 DIVERGING ROUTES – TRACK 3 EAST – STAGE 7
0566	L1046X	CP 234 DIVERGING ROUTES – TRACK 1 EAST – STAGE 7
0567	L1047X	CP 234 DIVERGING ROUTES – TRACK 2 EAST – STAGE 7
0568	L1048X	CP 234 DIVERGING ROUTES – TRACK 4 EAST – STAGE 7
0569	L1049X	CP 234 DIVERGING ROUTES – TRACK 5 WEST – STAGE 7
0570	L1050X	CP 234 DIVERGING ROUTES – TRACK 3 WEST – STAGE 7
0571	L1051X	CP 234 DIVERGING ROUTES – TRACK 1 WEST – STAGE 7
0572	L1052X	CP 234 DIVERGING ROUTES – TRACK 2 WEST – STAGE 7
0573	L1053X	CP 234 DIVERGING ROUTES – TRACK 4 WEST – STAGE 7
0574	L1054X	CP 234 DIVERGING ROUTES – TRACKS 6 & 7 WEST – STAGE 7
0575	L1055X	CP 234 STAMFORD YARD ROUTINGS – STAGE 7
0576	L1056X	CP 235 DIVERGING ROUTES – TRACKS 5 & 3 EAST – STAGE 7
0577	L1057X	CP 235 DIVERGING ROUTES – TRACKS 3 & 1 WEST – STAGE 7
0578	L2001X	CP 240 DIVERGING ROUTES – STAGE 7
0579	L2002X	CP 241 DIVERGING ROUTES – TRACK 3 EAST – STAGE 7
0580	L2003X	CP 241 DIVERGING ROUTES – TRACK 1 EAST – STAGE 7
0581	L2004X	CP 241 DIVERGING ROUTES – TRACK 2 EAST – STAGE 7
0582	L2005X	CP 241 DIVERGING ROUTES – TRACK 4 EAST – STAGE 7
0583	L2006X	CP 241 DIVERGING ROUTES – TRACKS 5 & 6 EAST – STAGE 7
0584	L2007X	CP 241 DIVERGING ROUTES – TRACK 3 WEST – STAGE 7
0585	L2008X	CP 241 DIVERGING ROUTES – TRACK 1 WEST – STAGE 7
0586	L2009X	CP 241 DIVERGING ROUTES – TRACK 2 WEST – STAGE 7
0587	L2010X	CP 241 DIVERGING ROUTES – TRACK 4 WEST – STAGE 7
0588	L2011X	CP 241 DIVERGING ROUTES – TRACK 5 WEST – STAGE 7

SHEETS 0589 TO 0599 ARE NOT USED IN THIS SUBMISSION

SIGNAL NETWORK BLOCK DIAGRAMS

SHEET #	DRAWING #	TITLE
0600	BT–019	SIGNAL NETWORK OVERVIEW BLOCK DIAGRAM 1 OF 2
0601	BT–020	SIGNAL NETWORK OVERVIEW BLOCK DIAGRAM 2 OF 2

DESIGNED	RRL
DRAWN	CBH
CHECKED	JJL
APPROVED	XXX

NO.	DATE		DRWN	CHKD	APPVD

REVISIONS

NO.	DATE		DRWN	CHKD	APPVD

REVISIONS

Gannett Fleming Transit & Rail Systems / CWA
GANNETT FLEMING/CWA, a joint venture
TWO PENN PLAZA, SUITE 552
380 SEVENTH AVENUE
NEW YORK, NY 10121–0101
PRJ: 057664

Metro-North Railroad
347 Madison Avenue
New York, N.Y. 10017

TITLE
ENGINEERING AND DESIGN OF
CP 229 – CP 241

DRAWING INDEX

CONTRACT NO. 1000027511
SCALE
DATE 08–29–14
DRAWING NO. G-003
SHEET **0003** OF

SIGNAL DESIGN DRAWINGS

SHEET #	DRAWING #	TITLE
1000	NHL2821000	ML–282 TRACK CIRCUIT 2823T
1001	NHL2901000	CP 229 TRACK LAYOUT
1002	NHL2901001	CP 229 CABLE PLAN
1003	NHL2901002	CP 229 MICROPROCESSOR ZONING PLAN
1004	NHL2901003	CP 229 MICROPROCESSOR BLOCK DIAGRAM
1005	NHL2901004	CP 229 NON–VITAL MICROPROCESSOR BLOCK DIAGRAM
1006	NHL2901005	CP 229 INTERLOCKING TRACK CIRCUIT TRACK 1AT
1007	NHL2901006	CP 229 INTERLOCKING TRACK CIRCUIT TRACK 1BT
1008	NHL2901007	CP 229 SWITCH CONTROL AND INDICATION 21
1009	NHL2901008	CP 229 SWITCH CONTROL AND INDICATION 31
1010	NHL2901009	CP 229 SIGNAL LIGHTING 3E, 3W, 1E, 1W
1011	NHL2901010	CP 229 MISCELLANEOUS CIRCUITS
1012	NHL2901011	CP 229 ETHERNET POWER CIRCUITS
1013	NHL2901012	CP 229 CIL 100HZ TRANSFER SWITCH
1014	NHL2901013	CP 229 CIL 100HZ POWER DISTRIBUTION
1015	NHL2901014	CP 229 CIL SWITCH POWER
1016	NHL2901015	CP 229 CIL 60HZ TRANSFER SWITCH
1017	NHL2901016	CP 229 CIL 60HZ POWER DISTRIBUTION
1018	NHL2901017	CP 229 CIL BATTERY AND CHARGER B12, B12–NV
1019	NHL2901018	CP 229 CIL BATTERY AND CHARGER LB12, B12–E
1020	NHL2901019	CP 229 CIL GROUND DETECTOR NETWORK
1021	NHL2901020	CP 229 LOC. A MISCELLANEOUS CIRCUITS
1022	NHL2901021	CP 229 LOC. A POWER CIRCUITS
1023	NHL2901022	CP 229 DC POWER CIRCUITS VITAL MICROPROCESSOR TRACK 3
1024	NHL2901023	CP 229 LOCAL CONTROL POWER CIRCUITS
1025	NHL2901024	CP 229 LOCAL CONTROL OUTPUT CIRCUITS
1026	NHL2901025	CP 229 LOCAL CONTROL INPUT CIRCUITS SHEET 1 OF 5
1027	NHL2901026	CP 229 LOCAL CONTROL INPUT CIRCUITS SHEET 2 OF 5
1028	NHL2901027	CP 229 LOCAL CONTROL INPUT CIRCUITS SHEET 3 OF 5
1029	NHL2901028	CP 229 LOCAL CONTROL INPUT CIRCUITS SHEET 4 OF 5
1030	NHL2901029	CP 229 LOCAL CONTROL INPUT CIRCUITS SHEET 5 OF 5
1031	NHL2901030	CP 229 LOCAL CONTROL PANEL
1032	NHL2901031	CP 229 SERIAL I/O CHART CIL
1033	NHL2901032	CP 229 TEST PANEL CIRCUITS
1034	NHL2901033	CP 229 RACK LAYOUT ZONE 1 VITAL MICROPROCESSOR
1035	NHL2901034	CP 229 RACK LAYOUT ZONE 2 VITAL MICROPROCESSOR
1036	NHL2901035	CP 229 RACK LAYOUT ZONE 3 VITAL MICROPROCESSOR
1037	NHL2901036	CP 229 RACK LAYOUT NON–VITAL MICROPROCESSOR
1038	NHL2901037	CP 229 RACK LAYOUT TRACK 1
1039	NHL2901038	CP 229 RACK LAYOUT TRACK 2
1040	NHL2901039	CP 229 RACK LAYOUT TRACK 3
1041	NHL2901040	CP 229 RACK LAYOUT TRACK 4
1042	NHL2901041	CP 229 WALL LAYOUT SHEET 1 OF 3
1043	NHL2901042	CP 229 WALL LAYOUT SHEET 2 OF 3
1044	NHL2901043	CP 229 WALL LAYOUT SHEET 3 OF 3
1045	NHL2931000	ELECTRIC LOCK 293 TRACK AND CABLE PLAN
1046	NHL2991000	CP 230 TRACK AND CABLE PLAN
1047	NHL2991001	CP 230 MICROPROCESSOR ZONING PLAN
1048	NHL2991002	CP 230 LOC. B MICROPROCESSOR BLOCK DIAGRAM
1049	NHL2991003	CP 230 CIL MICROPROCESSOR BLOCK DIAGRAM

SIGNAL DESIGN DRAWINGS

SHEET #	DRAWING #	TITLE
1050	NHL2991004	CP 230 SWITCH CONTROL AND INDICATION 10A
1051	NHL2991005	CP 230 SWITCH CONTROL AND INDICATION 10B
1052	NHL2991006	CP 230 LOC. B SNOWMELTER CIRCUITS
1053	NHL2991007	CP 230 DRAWBRIDGE CIRCUITS SPAN CONTROL
1054	NHL2991008	CP 230 DRAWBRIDGE SPAN LOCK CIRCUITS
1055	NHL2991009	CP 230 DRAWBRIDGE TRACK 1 EAST RAIL SEAT
1056	NHL2991010	CP 230 DRAWBRIDGE TRACK 1 WEST RAIL SEAT
1057	NHL2991011	CP 230 DRAWBRIDGE CIRCUITS AND POWER DISTRIBUTION
1058	NHL3071000	TCML 308 TRACK AND CABLE PLAN
1059	NHL3071001	TCML 308 TRACK CIRCUITS 3021T/3081T
1060	NHL3121000	ML 312 / TCML 315 TRACK AND CABLE PLAN
1061	NHL3121001	ML 312 MISCELLANEOUS CIRCUITS
1062	NHL3121002	ML 312 100HZ TRANSFER SWITCH
1063	NHL3121003	ML 312 100HZ POWER DISTRIBUTION 1 OF 2
1064	NHL3121004	ML 312 100HZ POWER DISTRIBUTION 2 OF 2
1065	NHL3121005	ML 312 BATTERY CHARGER B12, B12–NV
1066	NHL3121006	ML 312 GROUND DETECTOR NETWORK
1067	NHL3121007	ML 312 DC POWER CIRCUIT MICROPROCESSOR TRACK 3
1068	NHL3121008	TCML 315 POWER CIRCUITS
1069	NHL3181000	ML 318 TRACK AND CABLE PLAN
1070	NHL3181001	ML 318 MICROPROCESSOR ZONING PLAN
1071	NHL3181002	ML 318 VITAL MICROPROCESSOR BLOCK DIAGRAM
1072	NHL3181003	ML 318 TRACK CIRCUITS 3151T/3181T
1073	NHL3181004	ML 318 LOCAL INDICATION PANEL
1074	NHL3251000	CP 232 TRACK AND CABLE PLAN
1075	NHL3251001	CP 232 CIL – 10' X 40' HOUSE LAYOUT
1076	NHL3291000	CP 233 TRACK AND CABLE PLAN
1077	NHL3291001	CP 233 CIL – 10' X 40' HOUSE LAYOUT
1078	NHL3341000	CP 234 TRACK LAYOUT SHEET 1 OF 2
1079	NHL3341001	CP 234 TRACK LAYOUT SHEET 2 OF 2
1080	NHL3341002	CP 234 CABLE PLAN SHEET 1 OF 2
1081	NHL3341003	CP 234 CABLE PLAN SHEET 2 OF 2
1082	NHL3341004	CP 234 MICROPROCESSOR ZONING PLAN
1083	NHL3341005	CP 234 LOC. B MICROPROCESSOR BLOCK DIAGRAM
1084	NHL3341006	CP 234 CIL MICROPROCESSOR BLOCK DIAGRAM
1085	NHL3341007	CP 234 LOC. G & LOC. J MICROPROCESSOR BLOCK DIAGRAM
1086	NHL3341008	CP 234 SIGNAL LIGHTING 66E, 66W
1087	NHL3371000	ELECTRIC LOCK 337 TRACK AND CABLE PLAN
1088	NHL3401000	ELECTRIC LOCK 340 TRACK AND CABLE PLAN
1089	NHL3401001	ELECTRIC LOCK 340 CIRCUITS
1090	NHL3451000	CP 235 TRACK AND CABLE PLAN
1091	NHL3451001	CP 235 CIL – 10' X 40' HOUSE LAYOUT
1092	NHL3541000	ML 354 TRACK AND CABLE PLAN
1093	NHL3601000	ML 360 / TCML 364 TRACK AND CABLE PLAN
1094	NHL3691000	ML/EL 369 TRACK AND CABLE PLAN
1095	NHL3791000	TCML 375 / ML 379 TRACK AND CABLE PLAN
1096	NHL3841000	ML 384 TRACK AND CABLE PLAN
1097	NHL3931000	ML 393 TRACK AND CABLE PLAN
1098	NHL4011000	TCML 401 TRACK AND CABLE PLAN
1099	NHL4081000	CP 240 TRACK AND CABLE PLAN

SIGNAL DESIGN DRAWINGS

SHEET #	DRAWING #	TITLE
1100	NHL4081001	CP 240 TRACK AND CABLE PLAN
1101	NHL4081002	CP 240 CIL – 10' X 46' HOUSE LAYOUT
1102	NHL4081003	CP 240 BLOCK DIAGRAM
1103	NHL4131000	CP 241 TRACK AND CABLE PLAN SHEET 1 OF 2
1104	NHL4131001	CP 241 TRACK AND CABLE PLAN SHEET 2 OF 2
1105	NHL4131002	CP 241 MICROPROCESSOR ZONING PLAN
1106	NHL4131003	CP 241 INTERLOCKING TRACK CIRCUIT TRACK 1AT

DESIGNED RRL
DRAWN CBH
CHECKED JJL
APPROVED XXX

NO.	DATE		DRWN	CHKD	APPVD

REVISIONS

NO.	DATE		DRWN	CHKD	APPVD

REVISIONS

Gannett Fleming Transit & Rail Systems / CWA
GANNETT FLEMING/CWA, a joint venture
TWO PENN PLAZA, SUITE 552
380 SEVENTH AVENUE
NEW YORK, NY 10121–0101
PRJ: 057664

Metro-North Railroad
347 Madison Avenue
New York, N.Y. 10017

TITLE
ENGINEERING AND DESIGN OF
CP 229 – CP 241

DRAWING INDEX

CONTRACT NO. 1000027511
SCALE
DATE 08–29–14
DRAWING NO. G-006
SHEET 0006 OF

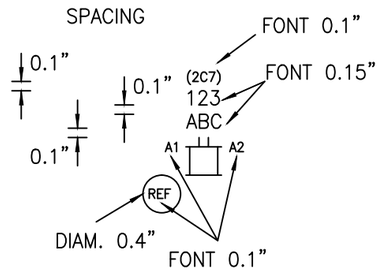

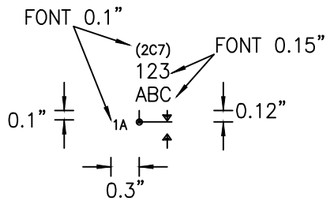

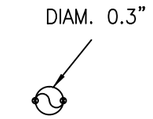

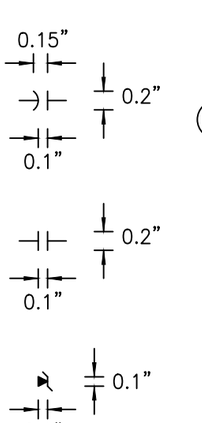

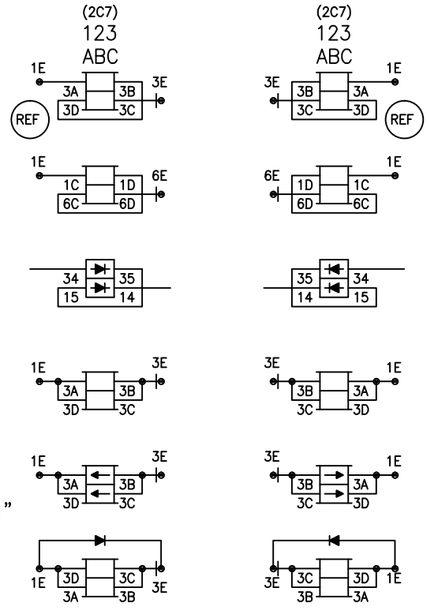

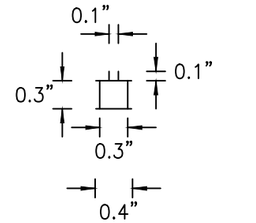

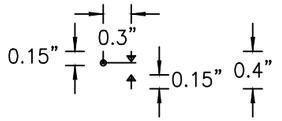

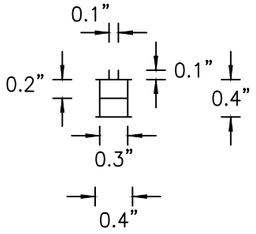

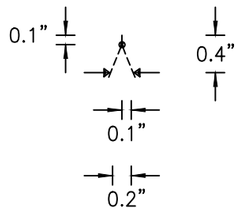

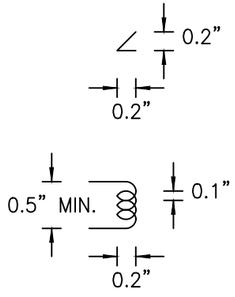

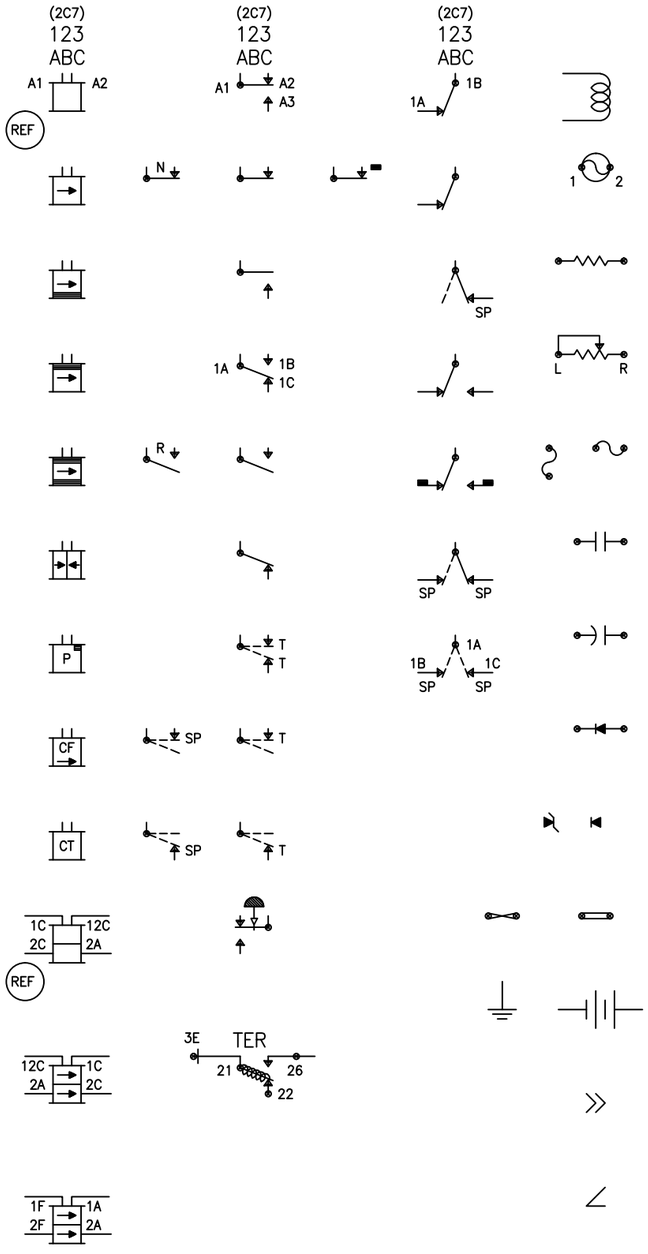

GENERAL NOTES:

FONT FOR RELAY AND CONTACT NAMES AND FUNCTIONS MUST BE 0.15 INCH.
FONT FOR LOCATION NAMES AND OR NUMBERS MUST BE 0.15 INCH.
FONT FOR ALL OTHERS MUST BE 0.10 INCH.
HORIZONTAL SPACING BETWEEN EACH ELEMENT MUST BE 1 INCH MINIMUM.
VERTICAL SPACING BETWEEN EACH ELEMENT MUST BE 1 INCH MINIMUM.

SCALE 1 : 1

CIRCUIT ENGINEER	SR. SIGNAL ENGR.–DESIGN & STANDARDS	DIRECTOR C&S SYSTEMS	MTA Metro–North Railroad	METRO–NORTH RAILROAD CAD STANDARD SYMBOLS RELAYS, CONTACTS & PARTS	ISSUE DATE: G–007 NHS REV. SHEET 7 NHS /users/signal/CS4 CS4–2000 S20001

Gannett Fleming/CWA

CONTRACT #	PROJECT SHEET #
1000027511	0007

CROSSOVERS (DIVERGING)

≤ #15

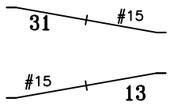

#20

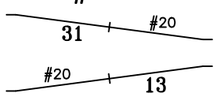

> #20

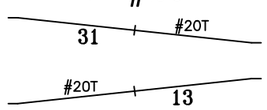

ANGLES (DIVERGING)

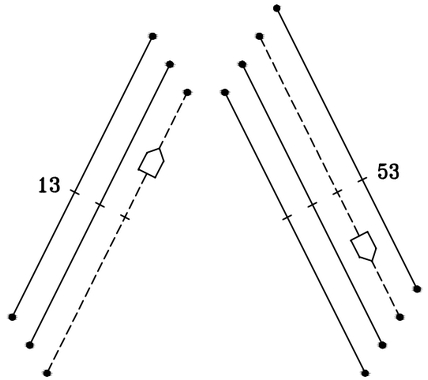

ARROWS (BOTH)

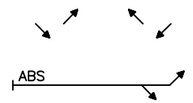

TRAINS (BOTH)

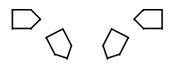

CROSSOVERS (NON-DIVERGING)

< #15

#20

> #20

CODES WITH TIMERS (BOTH)

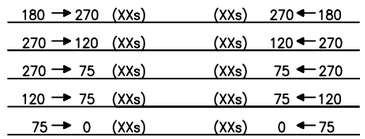

CODES WITHOUT TIMERS (BOTH)

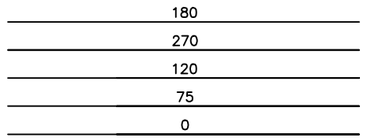

ANGLES (NON-DIVERGING)

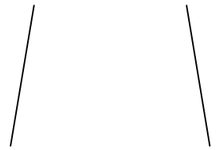

EQS (NON-DIVERGING)

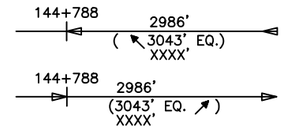

STANDARD TEXT (DIVERGING)

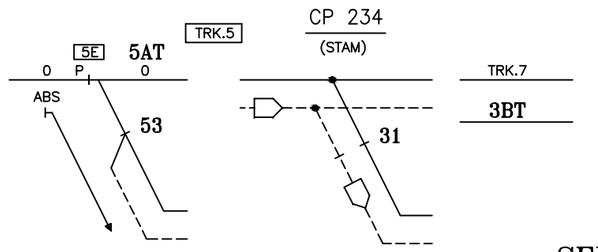

EQS (DIVERGING)

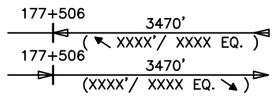

EXITING WWD (DIVERGING)

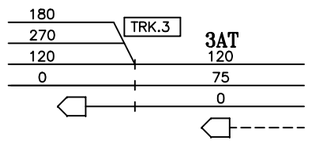

SEE SHEET (BOTH)

SEE SH. 10W FOR 3W TO 1W ROUTINGS

① = PREFERRED ROUTING 2 TO 4 OVER E24

SIGNALS (BOTH)

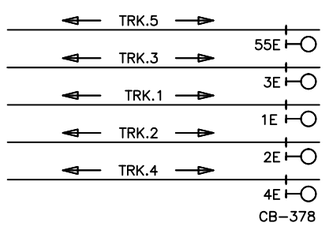

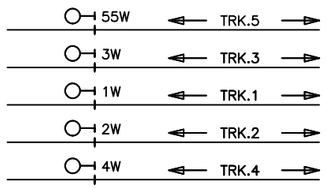

STANDARD TEXT (NON-DIVERGING)

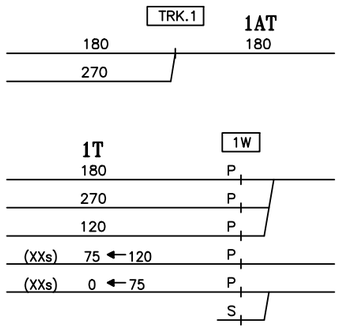

EXITING EWD (DIVERGING)

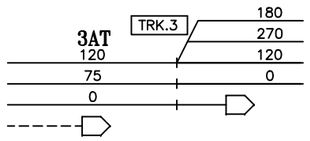

CODE CHANGE POINTS (BOTH)

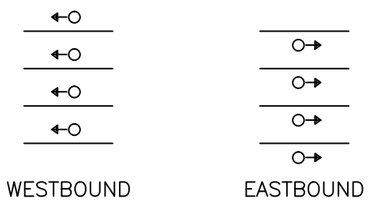

PLATFORMS AND BRIDGES (NON-DIV.)

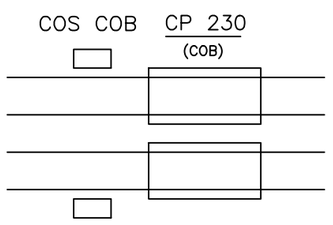

CIRCUIT ENGINEER	SR. SIGNAL ENGR.–DESIGN & STANDARDS	DIRECTOR C&S SYSTEMS	Metro–North Railroad	METRO–NORTH RAILROAD CAD STANDARD ROUTING SYMBOLS	ISSUE DATE: G–008 NHS REV. SHEET 8 NHS /users/signal/RTG NHL1

Gannett Fleming/CWA

CONTRACT # 1000027511 | PROJECT SHEET # 0008

EXISTING

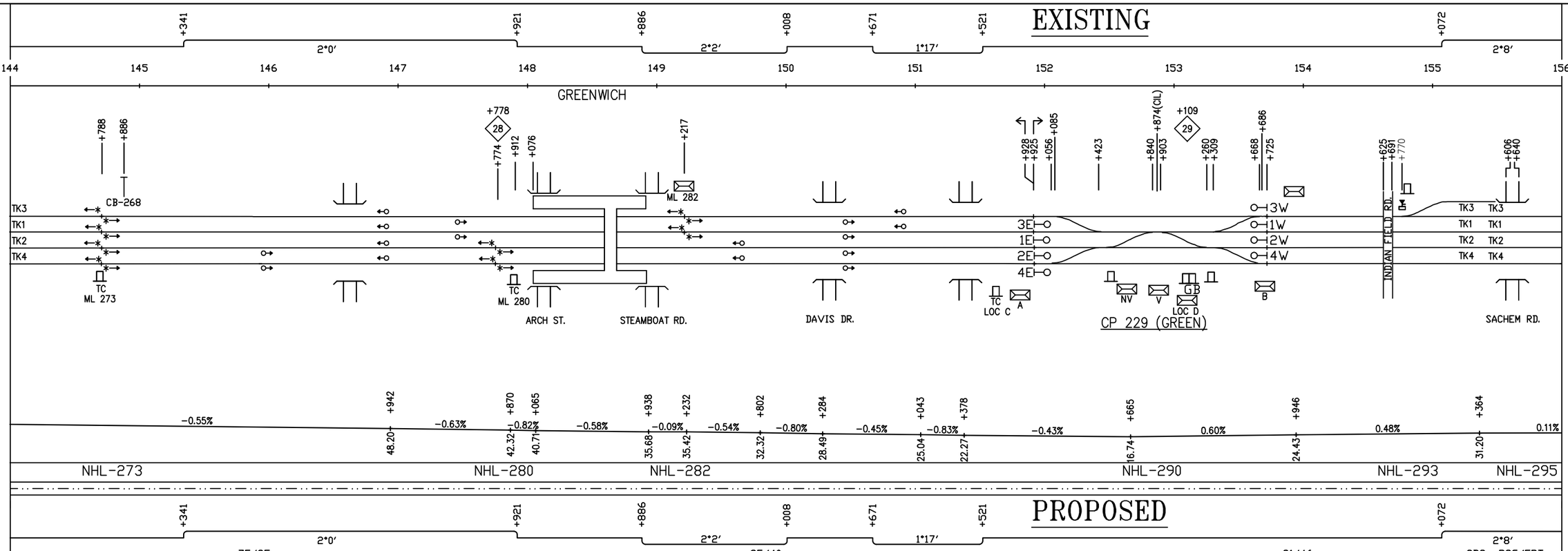

PROPOSED

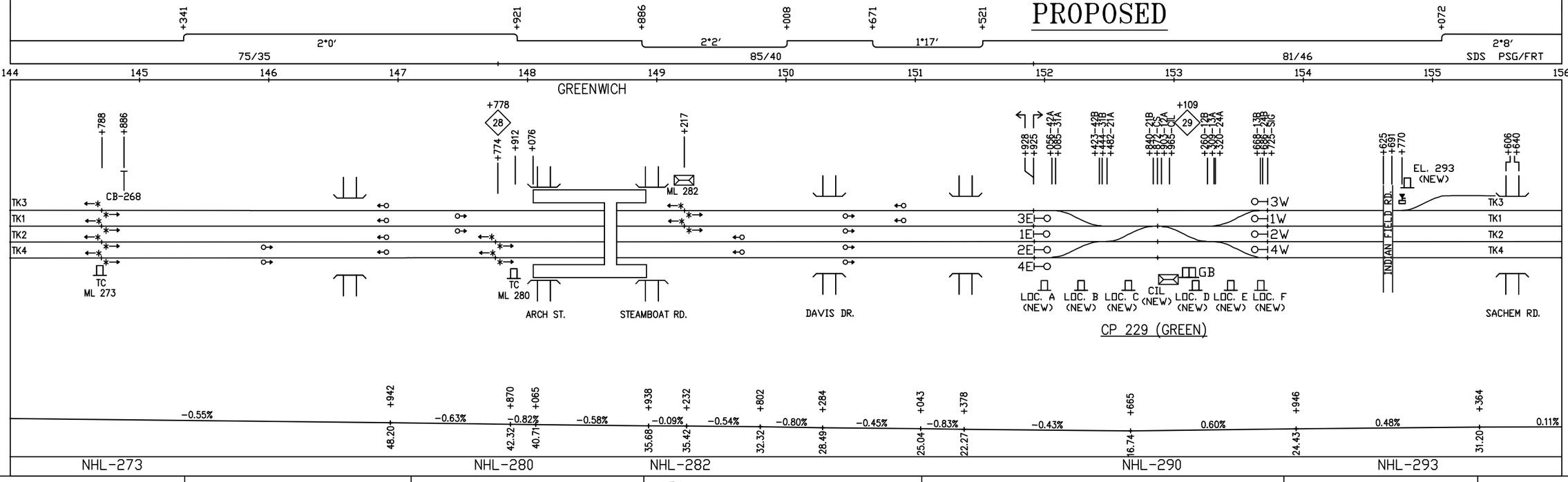

CIRCUIT ENGINEER

SR. SIGNAL ENGR.–DESIGN & STANDARDS

DIRECTOR C&S SYSTEMS

MTA Metro–North Railroad

NEW HAVEN LINE
EXISTING / PROPOSED BLOCK PLAN
MP 27.27 TO MP 29.55

ISSUE DATE:		BP–NHL
GF	REV.	SHEET BP–101
GF	/users/signal/BP	BPNHL BP–101

Gannett Fleming/CWA

CONTRACT #	PROJECT SHEET #
1000027511	0009

EXISTING

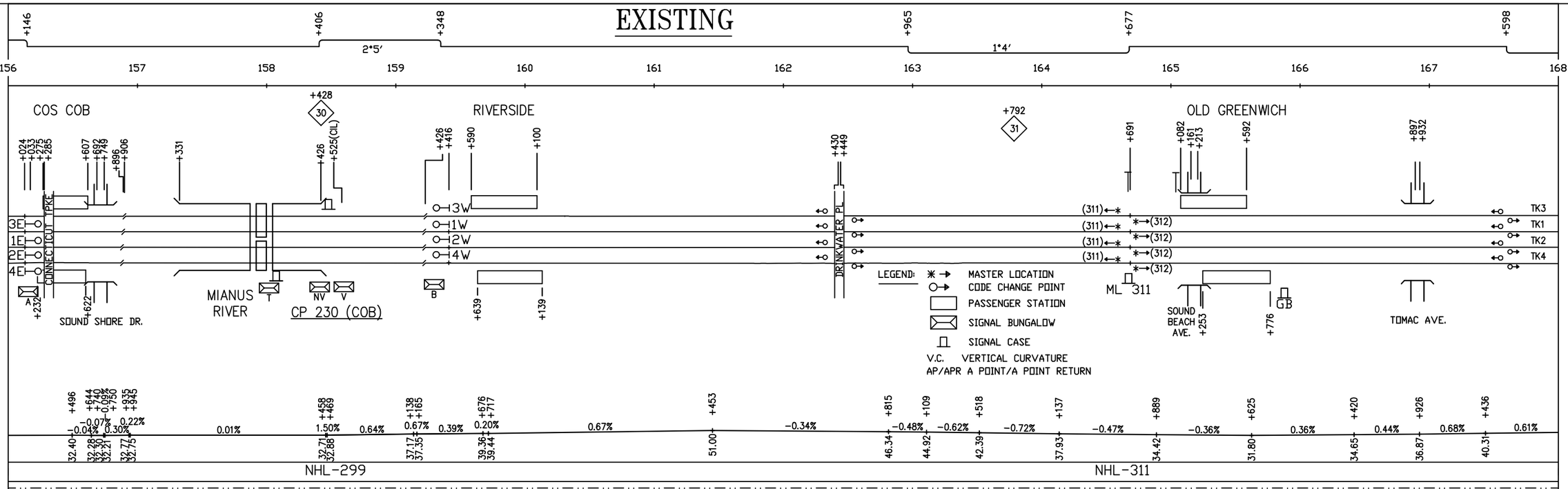

PROPOSED

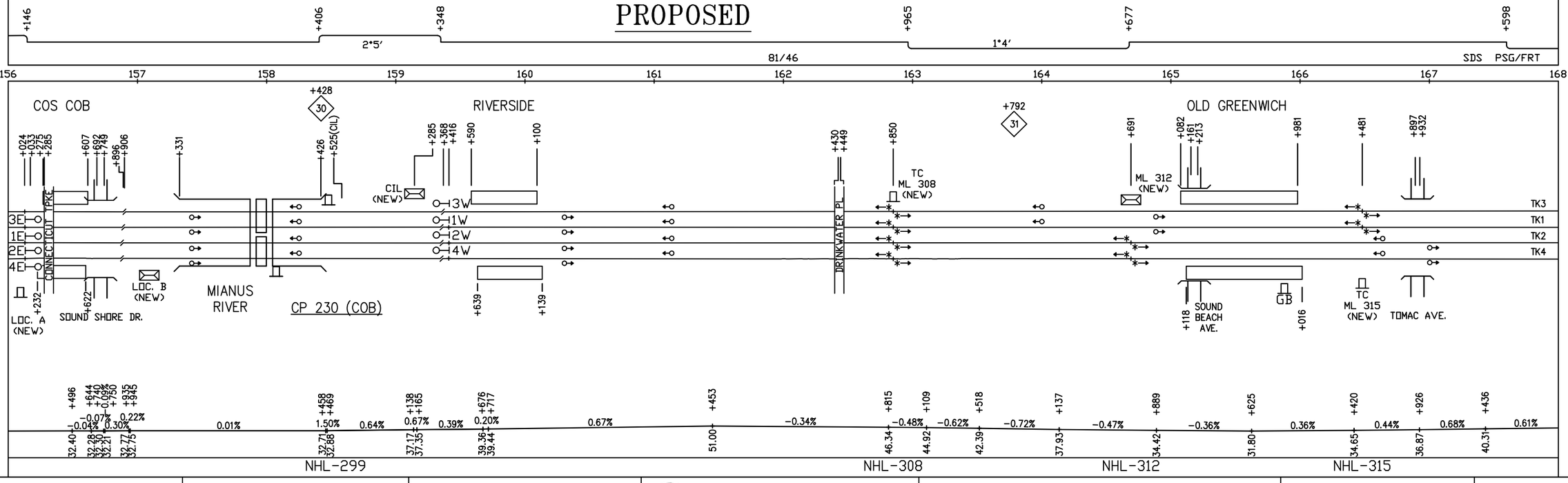

CIRCUIT ENGINEER	SR. SIGNAL ENGR.–DESIGN & STANDARDS	DIRECTOR C&S SYSTEMS	MTA Metro–North Railroad	NEW HAVEN LINE EXISTING / PROPOSED BLOCK PLAN MP 29.55 TO MP 31.82	ISSUE DATE: BP–NHL GF REV. SHEET BP–102 GF /users/signal/BP BPNHL BP–102

Gannett Fleming / CWA

CONTRACT #	PROJECT SHEET #
1000027511	0010

EXISTING

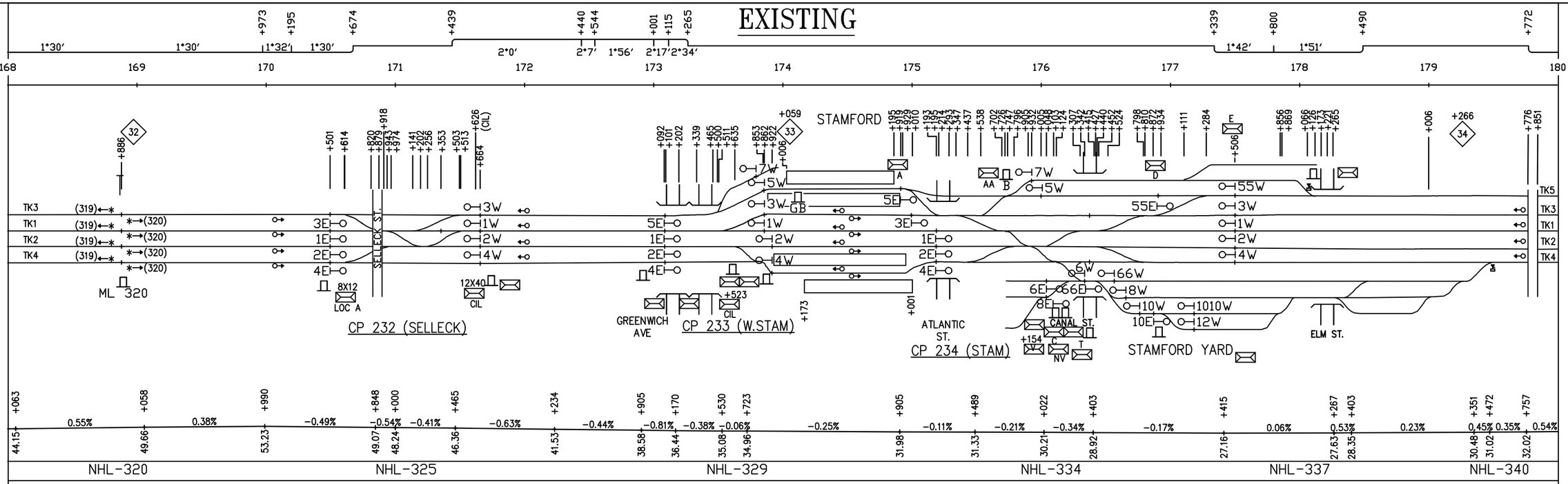

PROPOSED

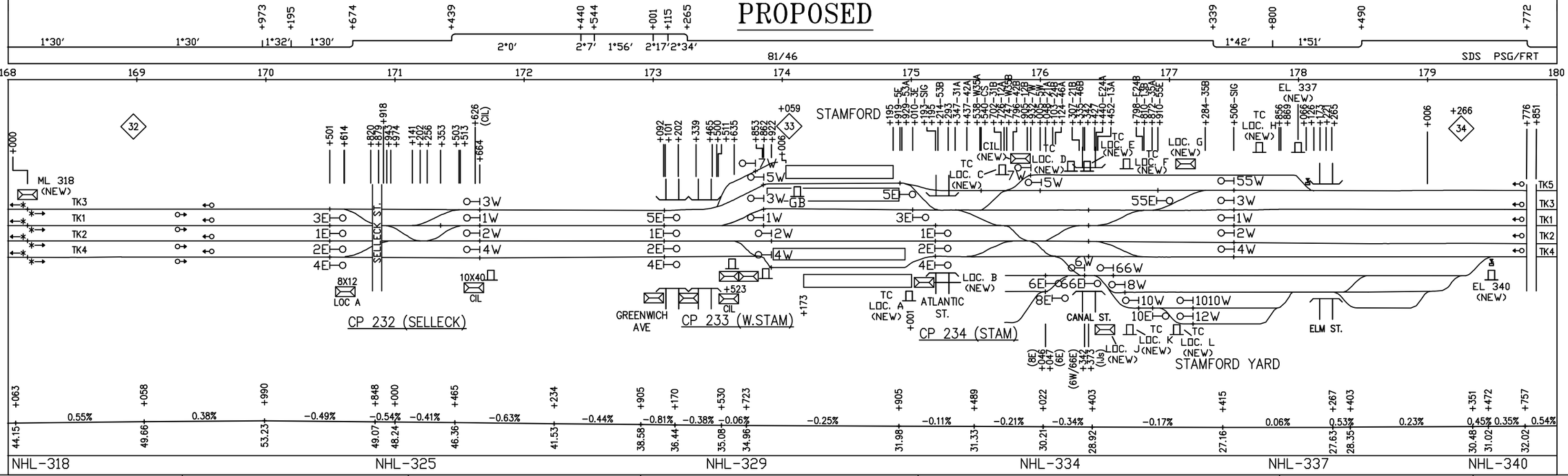

CIRCUIT ENGINEER	SR. SIGNAL ENGR.–DESIGN & STANDARDS	DIRECTOR C&S SYSTEMS	MTA Metro–North Railroad	NEW HAVEN LINE EXISTING / PROPOSED BLOCK PLAN MP 31.82 TO MP 34.09	ISSUE DATE: BP–NHL GF REV. SHEET BP–103 GF /users/signal/BP BPNHL BP–103

Gannett Fleming / CWA

CONTRACT #	PROJECT SHEET #
1000027511	0011

EXISTING

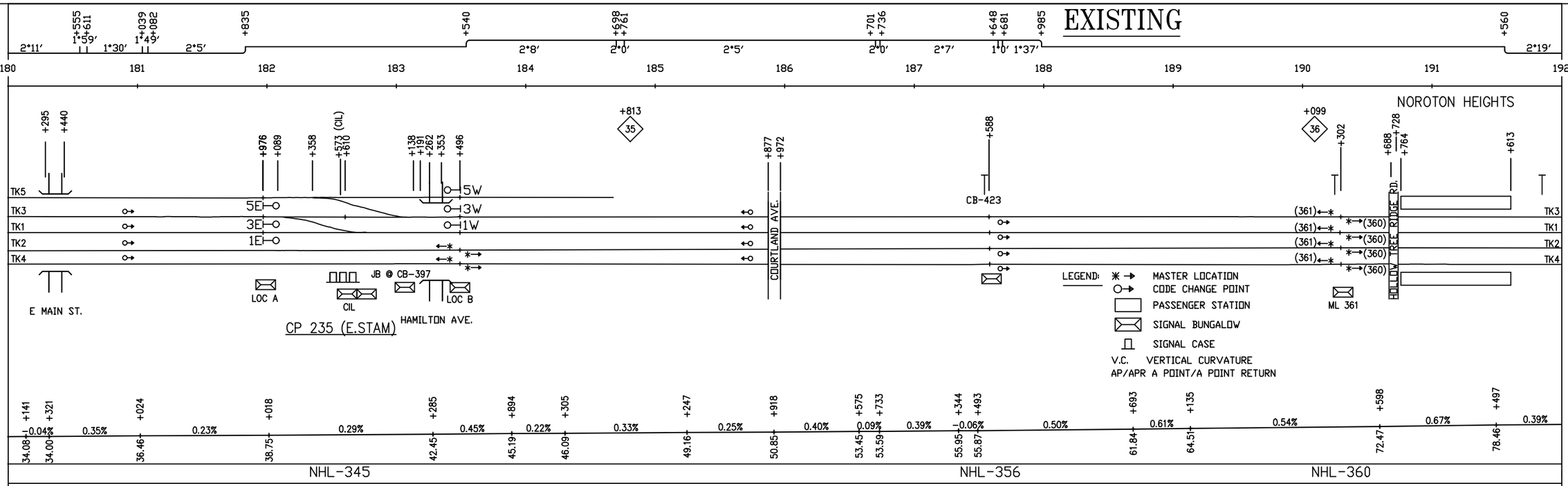

PROPOSED

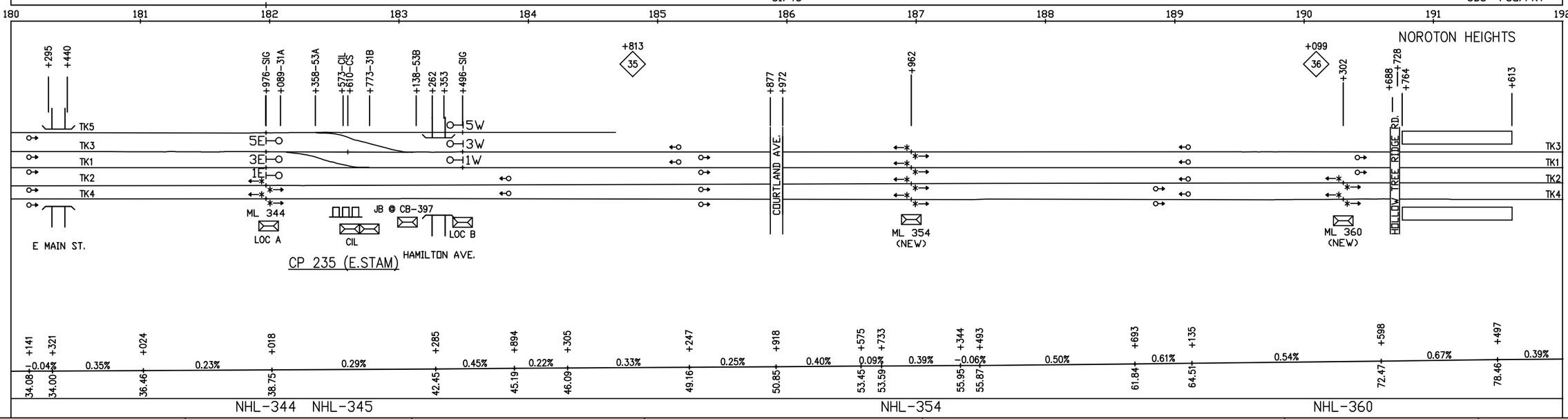

CIRCUIT ENGINEER	SR. SIGNAL ENGR.–DESIGN & STANDARDS	DIRECTOR C&S SYSTEMS	MTA Metro-North Railroad	NEW HAVEN LINE EXISTING / PROPOSED BLOCK PLAN MP 34.09 TO MP 36.36	ISSUE DATE: BP-NHL GF REV. SHEET BP-104 GF /users/signal/BP BPNHL BP-104

Gannett Fleming/CWA

CONTRACT #	PROJECT SHEET #
1000027511	0012

EXISTING

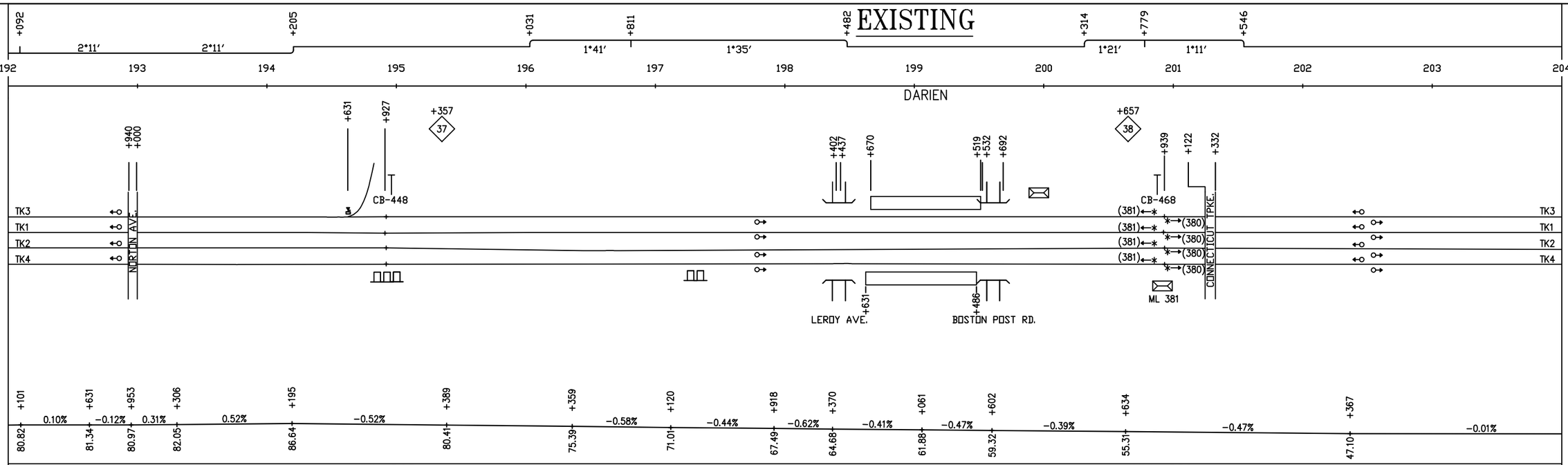

PROPOSED

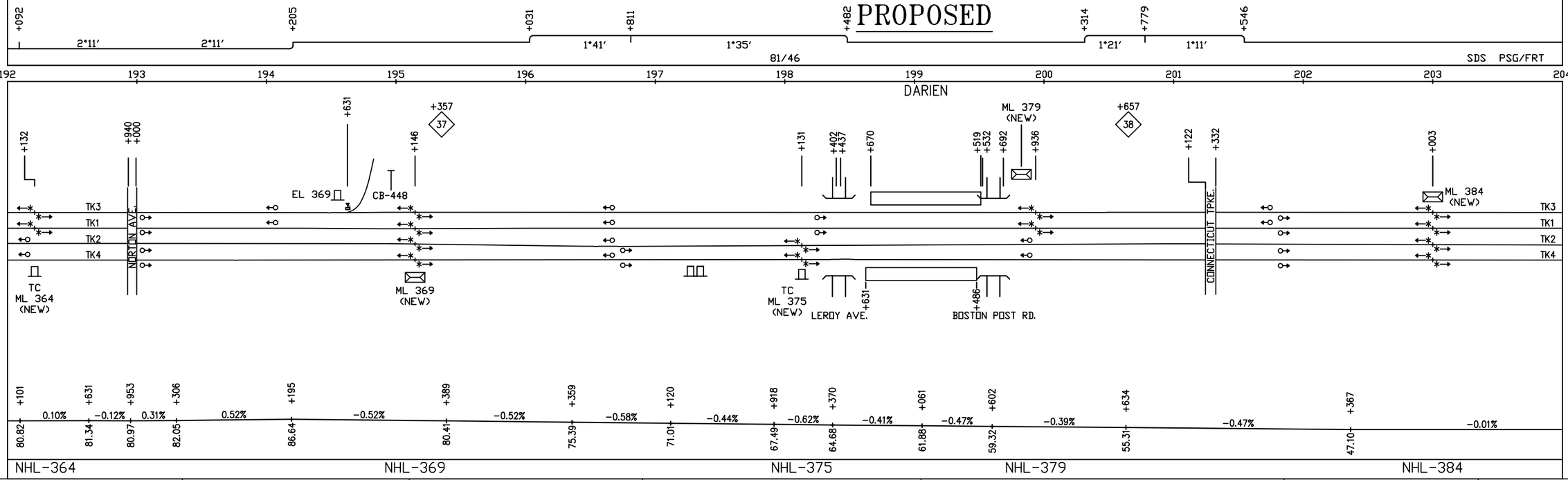

CIRCUIT ENGINEER	SR. SIGNAL ENGR.–DESIGN & STANDARDS	DIRECTOR C&S SYSTEMS	MTA Metro–North Railroad	NEW HAVEN LINE EXISTING / PROPOSED BLOCK PLAN MP 36.36 TO MP 38.64	ISSUE DATE: / BP–NHL GF REV. / SHEET BP–105 GF /users/signal/BP / BPNHL / BP–105

Gannett Fleming/CWA

CONTRACT #	PROJECT SHEET #
1000027511	0013

EXISTING

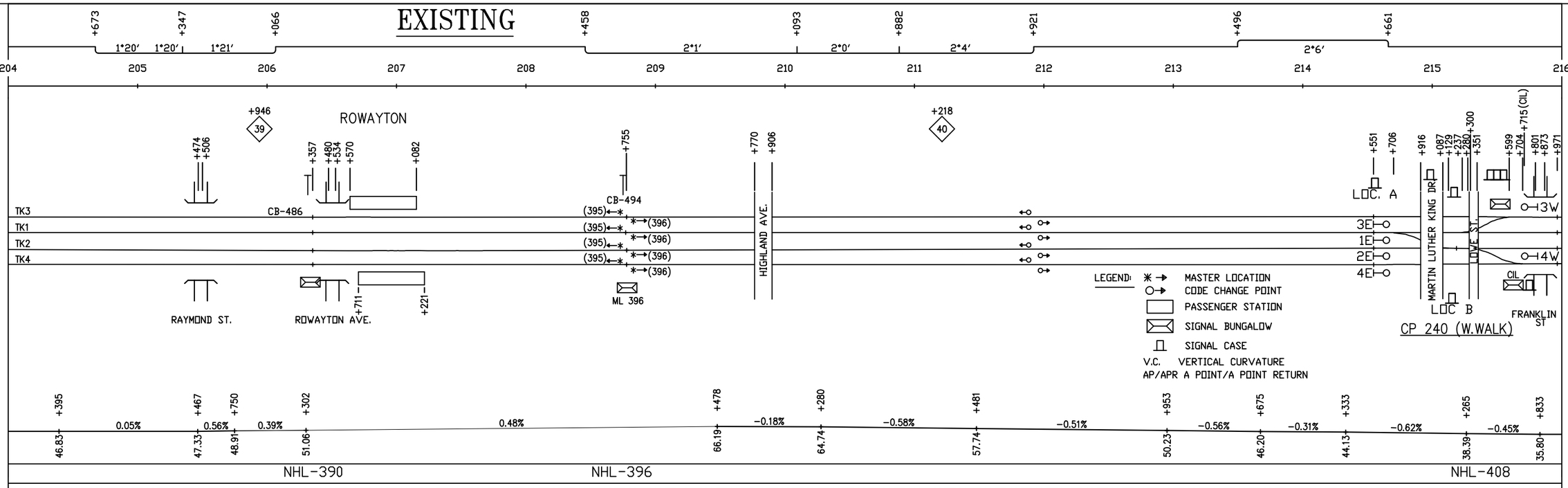

PROPOSED

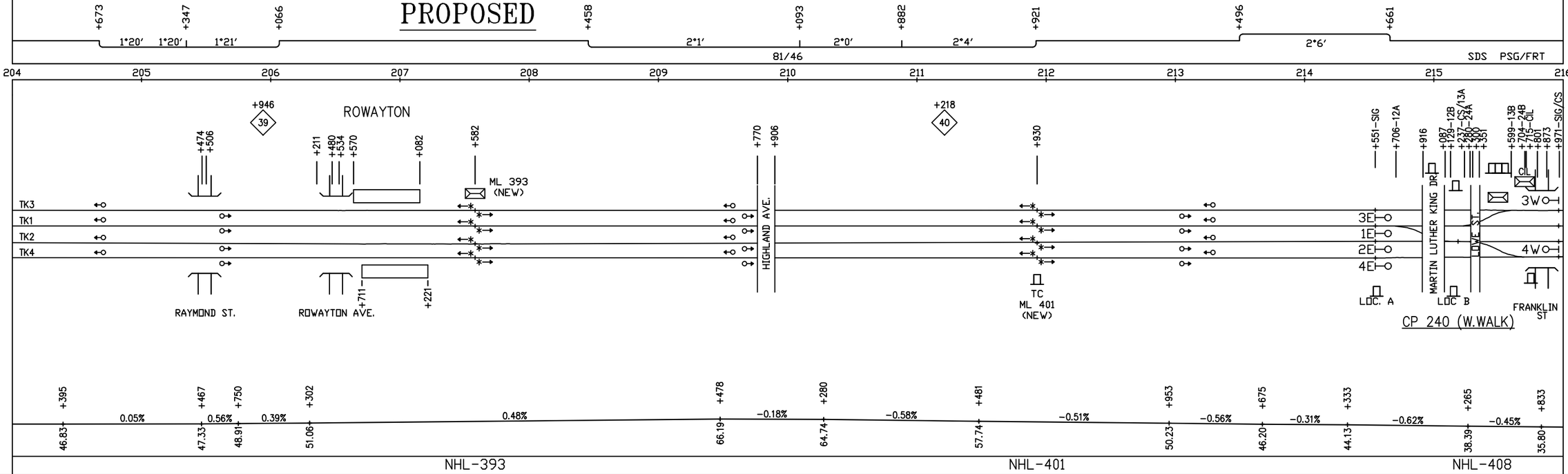

CIRCUIT ENGINEER	SR. SIGNAL ENGR.–DESIGN & STANDARDS	DIRECTOR C&S SYSTEMS	MTA Metro–North Railroad	NEW HAVEN LINE EXISTING / PROPOSED BLOCK PLAN MP 38.64 TO MP 40.91	ISSUE DATE: BP–NHL GF REV. SHEET BP–106 GF /users/signal/BP BPNHL BP–106

Gannett Fleming/CWA

CONTRACT #	PROJECT SHEET #
1000027511	0014

EXISTING

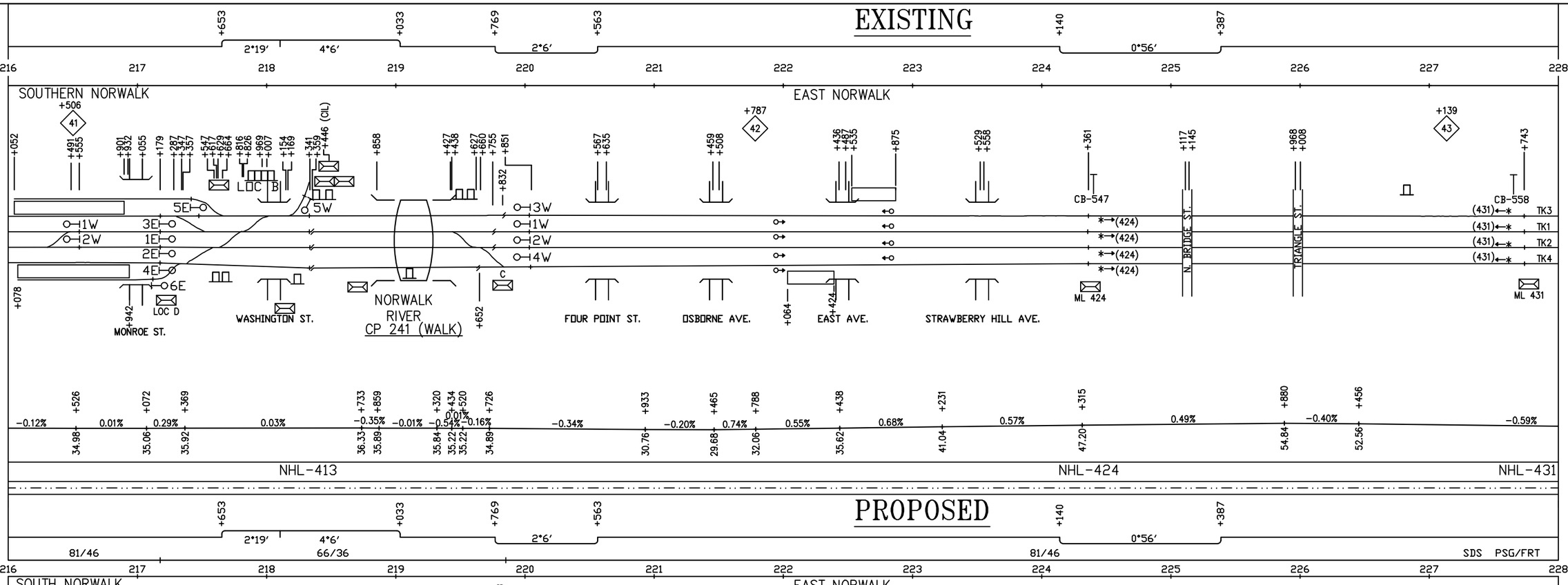

PROPOSED

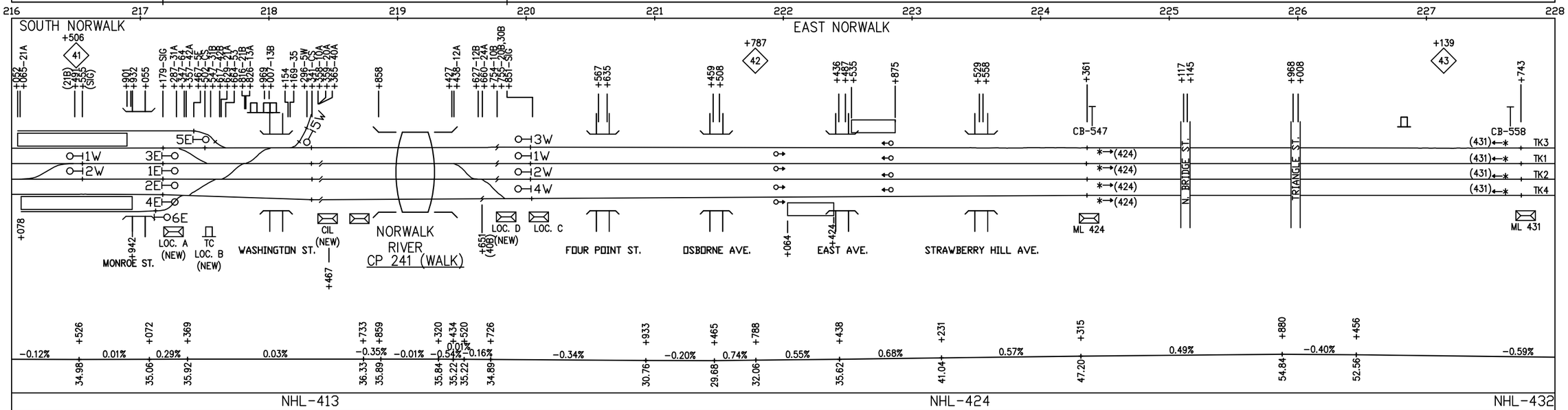

CIRCUIT ENGINEER	SR. SIGNAL ENGR.–DESIGN & STANDARDS	DIRECTOR C&S SYSTEMS	MTA Metro–North Railroad	NEW HAVEN LINE EXISTING / PROPOSED BLOCK PLAN MP 40.91 TO MP 43.18	ISSUE DATE: BP–NHL GF REV. SHEET BP–107 GF /users/signal/BP BPNHL BP–107

Gannett Fleming / CWA

CONTRACT #	PROJECT SHEET #
1000027511	0015

SH. NO.	INDEX	REVISION NO.														
		1	2	3	4	5	6	7	8	9	10	11	12	13	14	15	16
I1	INDEX AND REVISION NOTES																X
I2	INDEX																X
	NEW CANAAN BRANCH																
1	NEW CANAAN BRANCH - EAST & WEST																
2	NEW CANAAN BRANCH - EAST & WEST																
	NEW HAVEN LINE																
	STRAIGHT ROUTINGS - EAST																
1E	MP 12.0 TO MP 15.0 TRACKS 3 & 1 EAST								X					X		X	
2E	MP 12.0 TO MP 15.0 TRACKS 2 & 4 EAST								X					X		X	
3E	MP 15.0 TO MP 19.0 TRACKS 3 & 1 EAST	X				X							X	X	X	X	
4E	MP 15.0 TO MP 19.0 TRACKS 2, 4, 6 & 8 EAST	X				X							X	X	X	X	
5E	MP 19.0 TO MP 25.0 TRACKS 3 & 1 EAST	X	X			X											
6E	MP 19.0 TO MP 25.0 TRACKS 2 & 4 EAST	X	X			X											
7E	MP 25.0 TO MP 30.9 TRACKS 3 & 1 EAST																X
8E	MP 25.0 TO MP 30.9 TRACKS 2 & 4 EAST																X
9E	MP 30.9 TO MP 35.0 TRACK 3 CHANGES TO TRACK 5 EAST																X
10E	MP 30.9 TO MP 35.0 TRACKS 3 & 1 EAST																X
11E	MP 30.9 TO MP 35.0 TRACKS 2 & 4 EAST																X
12E	MP 35.6 TO MP 40.7 TRACKS 3 & 1 EAST																X
13E	MP 35.6 TO MP 40.7 TRACKS 2 & 4 EAST																X
14E	MP 40.7 TO MP 42.4 TRACKS 3 & 1 EAST																X
15E	MP 40.7 TO MP 42.4 TRACKS 2 & 4 EAST																X
	STRAIGHT ROUTINGS - WEST																
1W	MP 15.0 TO MP 12.0 TRACKS 3 & 1 WEST							X	X					X		X	
2W	MP 15.0 TO MP 12.0 TRACKS 2 & 4 WEST							X	X					X		X	
3W	MP 19.3 TO MP 15.0 TRACKS 3 & 1 WEST	X				X							X	X	X	X	
4W	MP 19.3 TO MP 15.0 TRACKS 2, 4, 6 & 8 WEST	X				X							X	X	X	X	
5W	MP 25.3 TO MP 19.3 TRACKS 3 & 1 WEST	X	X			X											
6W	MP 25.3 TO MP 19.3 TRACKS 2 & 4 WEST	X	X			X											
7W	MP 31.2 TO MP 25.3 TRACKS 3 & 1 WEST																X
8W	MP 31.2 TO MP 25.3 TRACKS 2 & 4 WEST																X
9W	MP 35.6 TO MP 31.2 TRACK 5 CHANGES TO TRACK 3 WEST																X
10W	MP 35.6 TO MP 31.2 TRACKS 3 & 1 WEST																X
11W	MP 35.6 TO MP 31.2 TRACKS 2 & 4 WEST																X
12W	MP 40.7 TO MP 35.6 TRACKS 3 & 1 WEST																X
13W	MP 40.7 TO MP 35.6 TRACKS 2 & 4 WEST																X
14W	MP 42.4 TO MP 40.7 TRACKS 3 & 1 WEST																X
15W	MP 42.4 TO MP 40.7 TRACKS 2 & 4 WEST																X

16 XXXX.XX,20XX
NEW HAVEN RESIGNALING
CP 229 TO CP 261
IN SERVICE:
PER:

1 MAY.01,1991
WAYSIDE SIGNALS RETIRED AT
CB 98, 175 & 211.
IN SERVICE:
PER: NBV JLR

2 JUL.29,1991
HOME SIGNALS RETIRED AT CP 223.
IN SERVICE:
PER: NBV JLR

3 APR.13,1992
SIGNAL 55E AT CP 234 RETIRED.
IN SERVICE:
PER: NBV CS LTB

4 JUN.30,1993
RULE 288 RETIRED, REPLACED BY
RULE 290 AT CP 234.
IN SERVICE:07-07-93
PER: W. CLINTON NBV FEG

5 DEC.01,1994
WAYSIDE SIGNAL REMOVAL AND GO
NO GO FROM CP 216 TO CP 234.
IN SERVICE: 04-13-97
PER: A. FAZZINO NHS NHS

6 NOV. 14, 1997
CP 232 PLACE IN SERVICE.
IN SERVICE: 10-25-98
PER: A. FAZZINO NHS NHS

7 DEC.01,1997
SUPER SWITCHES INSTALLED AT
C.P.112 - SW. # N13, N31 & 32.
IN SERVICE: 09-01-98
PER: A. FAZZINO JRP NHS NHS

8 DEC.01,1998
SWITCH 64 REMOVED AT CP 212
IN SERVICE: 12-18-98
PER: A. FAZZINO NHS FEG LB

9 SEP. 01, 1999
CP 235 PLACED IN SERVICE.
IN SERVICE: 07-23-00
PER: A. FAZZINO NHS NHS

10 AUG. 01, 2000
NEW CP 233 PLACED IN SERVICE.
IN SERVICE: 09-17-00
PER: A. FAZZINO NHS NHS

11 MAR. 28, 2003
SW 13 @ CP 233 UPGRADE TO #20
TANGENTIAL, GOOD FOR 60 MPH.
IN SERVICE: 04-16-03
PER: A. FAZZINO NHS NHS

12 JUN. 01, 2005
NEW CP-217 PLACED IN SERVICE.
IN SERVICE: 12-17-05
PER: A. FAZZINO NHS E&K E&K

13 SEP. 02, 2005
NEW CP-215 PLACED IN SERVICE.
IN SERVICE: 06-09-06
PER: S. DIORIO NHS E&K E&K

14 OCT. 25, 2006
SW 12 & 31 @ CP 217 UPGRADE TO
#20. SW. 42 PLACED IN SERVICE.
IN SERVICE: 10-28-06
PER: S. DIORIO NHS E&K E&K

15 OCT. 05, 2007
NEW CP-216 PLACED IN SERVICE.
IN SERVICE: 01-12-08
PER: S. DIORIO NHS E&K E&K

NOTES:

⊢○ - SIGNAL
✳→ - MASTER LOCATION
○→ - CODE CHANGE POINT
CB - CLEAR BLOCK
P - PROCEED CAB
180 - NORMAL CAB
120 - LIMITED CAB
75 - MEDIUM CAB
0 - RESTRICTED CAB
S - STOP
ABS - ABSOLUTE BLOCK SIGNAL
⊣▭ - TRACK CIRCUIT OCCUPIED
SDS - SIGNAL DESIGN SPEED

CIRCUIT ENGINEER

SR. SIGNAL ENGR.-DESIGN & STANDARDS

DIRECTOR C&S SYSTEMS

MTA Metro-North Railroad

NEW HAVEN LINE
MP 12.0 TO MP 42.4
ROUTING INDEX

ISSUE DATE:

GF REV. 16

GF /users/signal/RTG

RTG-NHL1

SHEET I1

NHL1 L100i1

Gannett Fleming/CWA

CONTRACT # 1000027511

PROJECT SHEET # 0036

SH. NO.	INDEX	REVISION NO.															
		1	2	3	4	5	6	7	8	9	10	11	12	13	14	15	16
	NEW HAVEN LINE																
	DIVERGING ROUTES																
1X	CP 212 TRACKS 3, 1, 2 EAST								X								
2X	CP 212 TRACKS 3, 1, 2 & 4 WEST							X	X								
3X	CP 215 TRACK 3 EAST													X		X	
4X	CP 215 TRACK 1 EAST													X		X	
5X	CP 215 TRACK 2 EAST													X		X	
6X	CP 215 TRACK 4 EAST													X		X	
7X	CP 215 TRACK 3 WEST													X			
8X	CP 215 TRACK 1 WEST													X			
9X	CP 215 TRACK 2 WEST													X			
10X	CP 215 TRACK 4 WEST													X			
11X	CP 216 TRACKS HG1 & HG2 EAST															X	
12X	CP 216 TRACKS 2 & 4 WEST															X	
13X	CP 217 TRACK 3 EAST												X		X	X	
14X	CP 217 TRACK 1 EAST												X		X	X	
15X	CP 217 TRACK 2 EAST												X		X	X	
16X	CP 217 TRACK 4 EAST												X		X	X	
17X	CP 217 TRACK 3 WEST												X		X	X	
18X	CP 217 TRACK 1 WEST												X		X	X	
19X	CP 217 TRACK 2 WEST												X		X	X	
20X	CP 217 TRACK 4 WEST												X		X	X	
21X	CP 217 TRACKS 6 & 8 WEST												X		X	X	
22X	CP 223 TRACK 3 EAST		X			X											
23X	CP 223 TRACK 1 EAST		X			X											
24X	CP 223 TRACK 2 EAST		X			X											
25X	CP 223 TRACK 4 EAST		X			X											
26X	CP 223 TRACK 3 WEST		X			X											
27X	CP 223 TRACK 1 WEST		X			X											
28X	CP 223 TRACK 2 WEST		X			X											
29X	CP 223 TRACK 4 WEST		X			X											
30X	CP 229 TRACK 3 EAST					X											X
31X	CP 229 TRACK 1 EAST					X											X
32X	CP 229 TRACK 2 EAST					X											X
33X	CP 229 TRACK 4 EAST					X											X
34X	CP 229 TRACK 3 WEST					X											X
35X	CP 229 TRACK 1 WEST					X											X
36X	CP 229 TRACK 2 WEST					X											X
37X	CP 229 TRACK 4 WEST					X											X
38X	CP 232 TRACKS 3 & 1 EAST						X			X							X
39X	CP 232 TRACKS 2 & 4 EAST						X			X							X
40X	CP 232 TRACKS 3 & 1 WEST						X			X							X
41X	CP 232 TRACK 2 WEST						X			X							X
42X	CP 233 TRACKS 5 & 2 EAST									X	X						X
43X	CP 233 TRACKS 7 & 4 WEST									X	X						X

SH. NO.	INDEX	REVISION NO.															
		1	2	3	4	5	6	7	8	9	10	11	12	13	14	15	16
	DIVERGING ROUTES																
44X	CP 234 TRACK 5 EAST			X	X	X					X						X
45X	CP 234 TRACK 3 EAST																X
46X	CP 234 TRACK 1 EAST																X
47X	CP 234 TRACK 2 EAST																X
48X	CP 234 TRACK 4 EAST																X
49X	CP 234 TRACK 5 WEST																X
50X	CP 234 TRACK 3 WEST																X
51X	CP 234 TRACK 1 WEST																X
52X	CP 234 TRACK 2 WEST																X
53X	CP 234 TRACK 4 WEST																X
54X	CP 234 TRACKS 6 & 7 WEST																X
55X	CP 234 STAMFORD YARD																X
56X	CP 235 TRACKS 5 & 3 EAST																X
57X	CP 235 TRACKS 3 & 1 WEST																X
58X	CP 240 TRACK 1 EAST																X
59X	CP 240 TRACK 2 EAST																X
60X	CP 240 TRACKS 3 & 1 WEST																X
61X	CP 240 TRACKS 2 & 4 WEST																X
62X	CP 241 TRACK 3 EAST																X
63X	CP 241 TRACK 1 EAST																X
64X	CP 241 TRACK 2 EAST																X
65X	CP 241 TRACK 4 EAST																X
66X	CP 241 TRACKS 5 & 6 EAST																X
67X	CP 241 TRACK 3 WEST																X
68X	CP 241 TRACK 1 WEST																X
69X	CP 241 TRACK 2 WEST																X
70X	CP 241 TRACK 4 WEST																X
71X	CP 241 TRACK 5 WEST																X

CIRCUIT ENGINEER

SR. SIGNAL ENGR.–DESIGN & STANDARDS

DIRECTOR C&S SYSTEMS

MTA Metro–North Railroad

NEW HAVEN LINE
MP 12.0 TO MP 42.4
ROUTING INDEX

ISSUE DATE:

RTG–NHL1

GF REV. 16

SHEET 12

GF /users/signal/RTG NHL1 L100i2

Gannett Fleming/CWA

CONTRACT # 1000027511

PROJECT SHEET # 0037

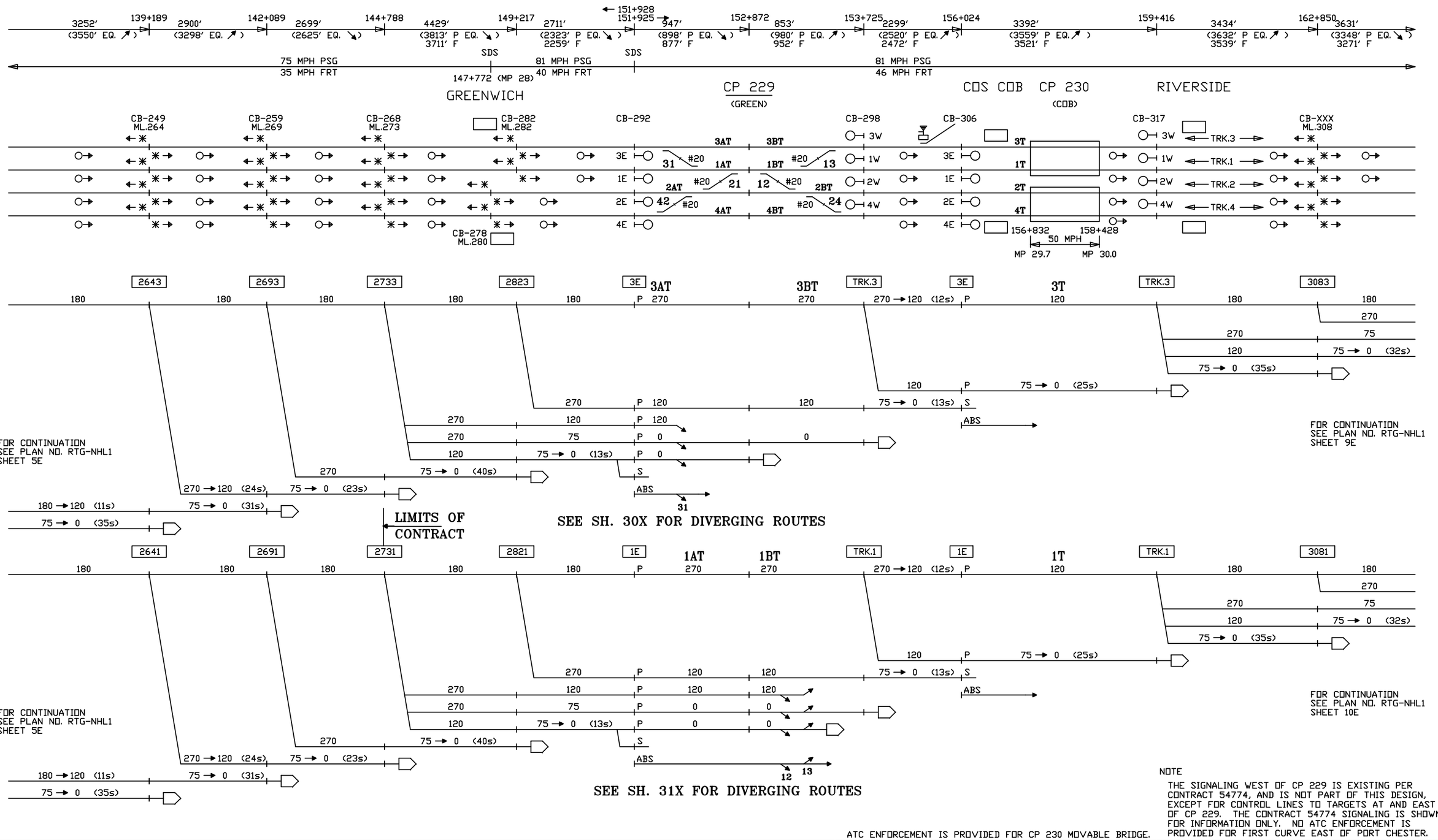

ATC ENFORCEMENT IS PROVIDED FOR CP 230 MOVABLE BRIDGE.

NOTE

THE SIGNALING WEST OF CP 229 IS EXISTING PER CONTRACT 54774, AND IS NOT PART OF THIS DESIGN, EXCEPT FOR CONTROL LINES TO TARGETS AT AND EAST OF CP 229. THE CONTRACT 54774 SIGNALING IS SHOWN FOR INFORMATION ONLY. NO ATC ENFORCEMENT IS PROVIDED FOR FIRST CURVE EAST OF PORT CHESTER.

CIRCUIT ENGINEER	SR. SIGNAL ENGR.–DESIGN & STANDARDS	DIRECTOR C&S SYSTEMS	MTA Metro–North Railroad	NEW HAVEN LINE MP 25.0 TO MP 30.9 ROUTINGS – TRACKS 3 & 1 EAST	ISSUE DATE: / RTG–NHL1 NHS REV. / SHEET 7E GAR /users/signal/RTG / NHL1 / L1007E

Gannett Fleming/CWA

CONTRACT #	PROJECT SHEET #
1000027511	0040

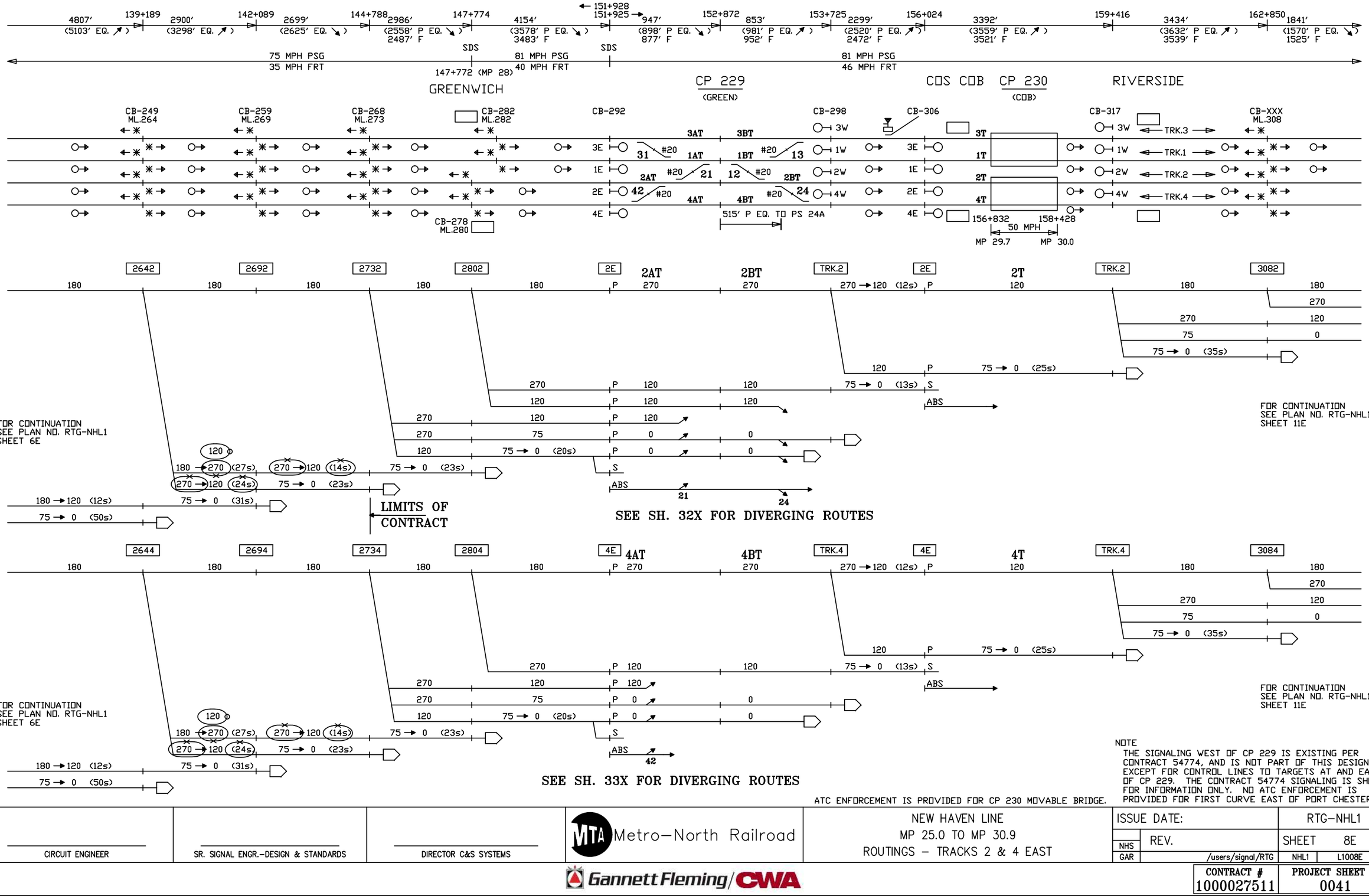

NOTE
THE SIGNALING WEST OF CP 229 IS EXISTING PER CONTRACT 54774, AND IS NOT PART OF THIS DESIGN, EXCEPT FOR CONTROL LINES TO TARGETS AT AND EAST OF CP 229. THE CONTRACT 54774 SIGNALING IS SHOWN FOR INFORMATION ONLY. NO ATC ENFORCEMENT IS PROVIDED FOR FIRST CURVE EAST OF PORT CHESTER.

ATC ENFORCEMENT IS PROVIDED FOR CP 230 MOVABLE BRIDGE.

CIRCUIT ENGINEER

SR. SIGNAL ENGR.–DESIGN & STANDARDS

DIRECTOR C&S SYSTEMS

MTA Metro–North Railroad

NEW HAVEN LINE
MP 25.0 TO MP 30.9
ROUTINGS – TRACKS 2 & 4 EAST

ISSUE DATE:

	REV.
NHS	
GAR	

/users/signal/RTG

RTG–NHL1

SHEET 8E

NHL1 L1008E

Gannett Fleming/CWA

CONTRACT # 1000027511

PROJECT SHEET # 0041

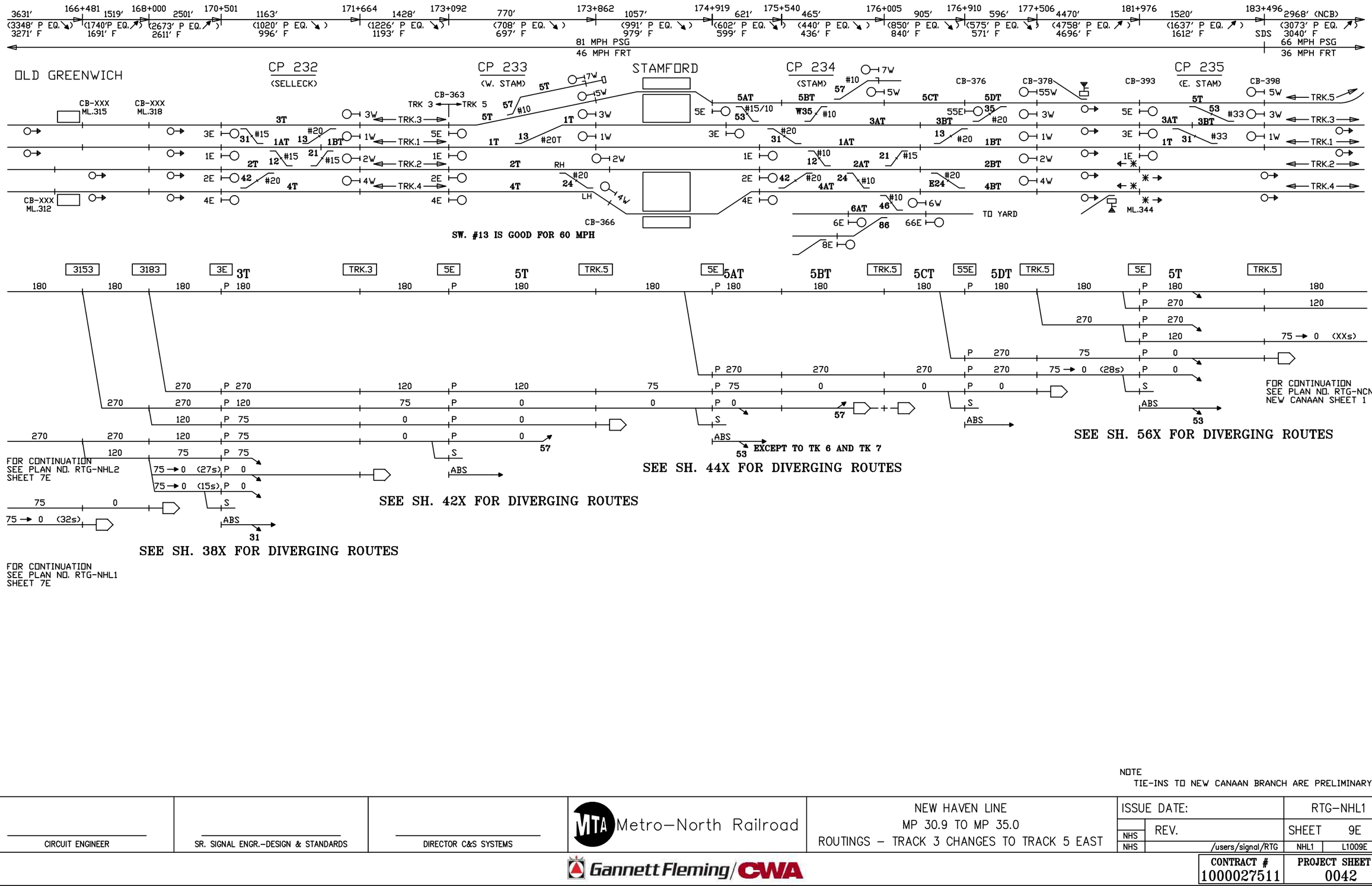

NOTE
TIE-INS TO NEW CANAAN BRANCH ARE PRELIMINARY.

CIRCUIT ENGINEER	SR. SIGNAL ENGR.–DESIGN & STANDARDS	DIRECTOR C&S SYSTEMS	Metro–North Railroad	NEW HAVEN LINE MP 30.9 TO MP 35.0 ROUTINGS – TRACK 3 CHANGES TO TRACK 5 EAST	ISSUE DATE:	RTG–NHL1
					NHS REV.	SHEET 9E
					NHS /users/signal/RTG	NHL1 L1009E

Gannett Fleming/CWA

CONTRACT #	PROJECT SHEET #
1000027511	0042

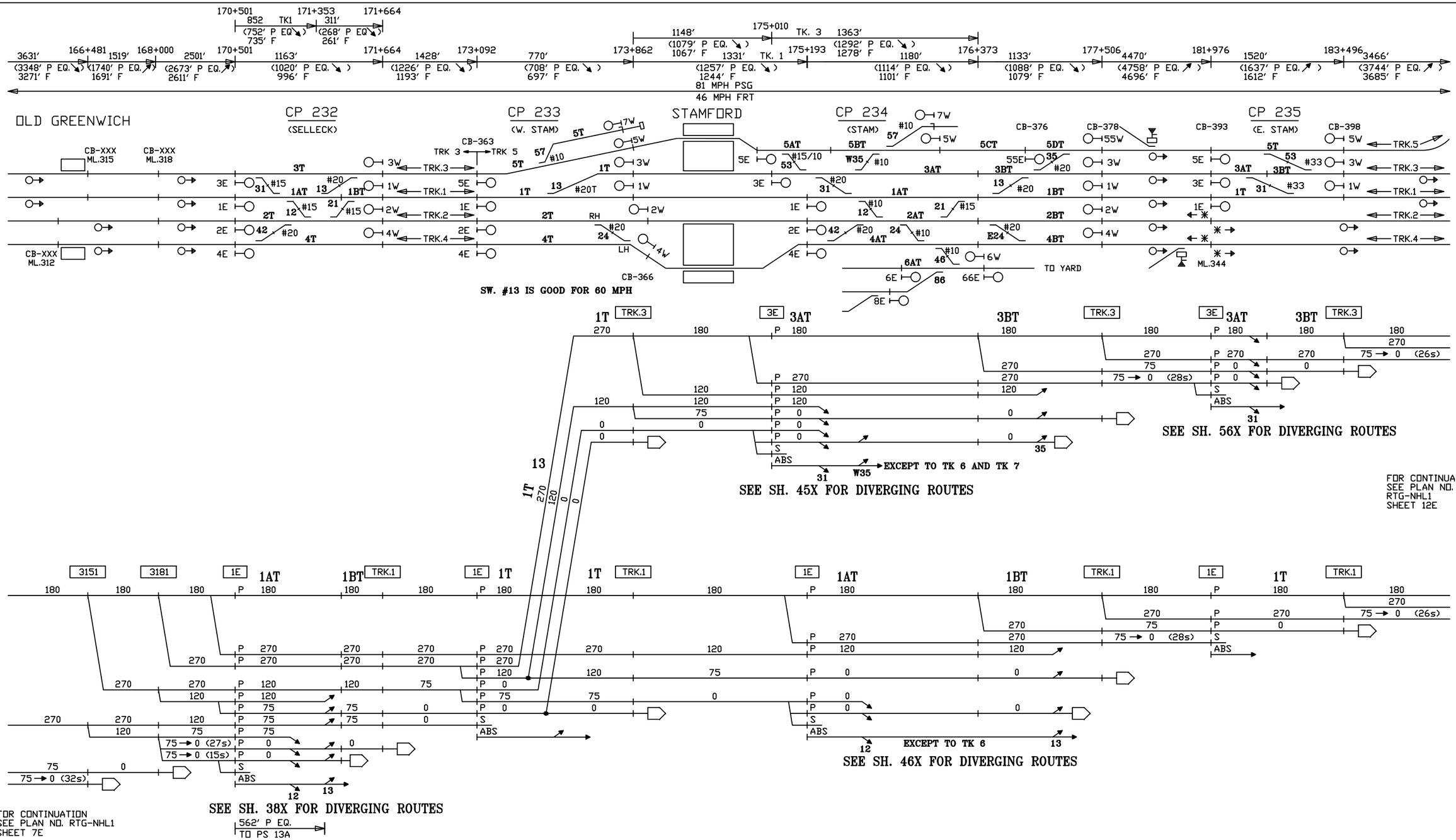

CIRCUIT ENGINEER	SR. SIGNAL ENGR.–DESIGN & STANDARDS	DIRECTOR C&S SYSTEMS	MTA Metro–North Railroad	NEW HAVEN LINE MP 30.9 TO MP 35.0 ROUTINGS – TRACKS 3 & 1 EAST	ISSUE DATE: / REV. / NHS / NHS / /users/signal/RTG RTG–NHL1 SHEET 10E NHL1 L1010E

Gannett Fleming/CWA

CONTRACT #	PROJECT SHEET #
1000027511	0043

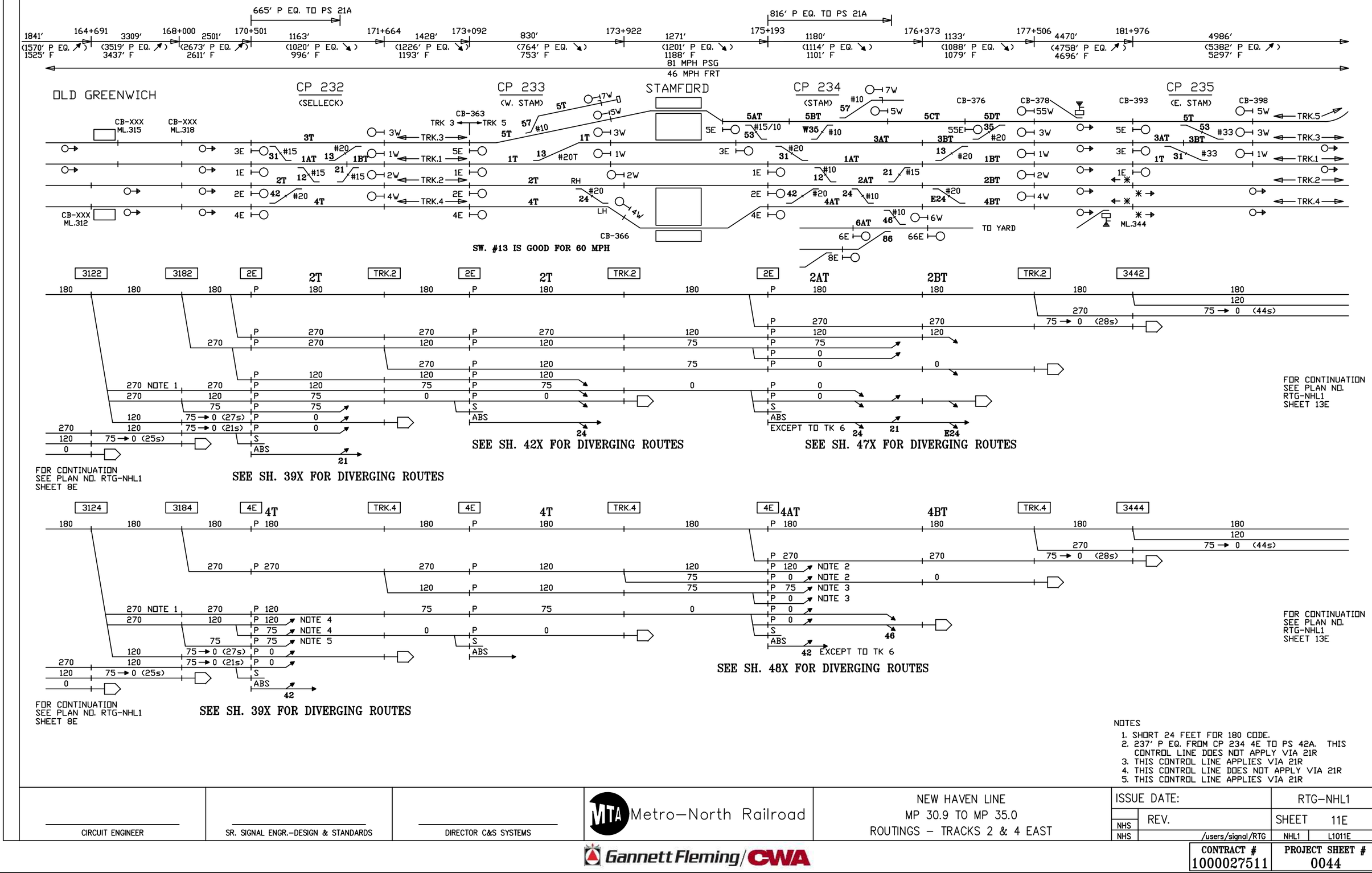

NOTES

1. SHORT 24 FEET FOR 180 CODE.
2. 237' P EQ. FROM CP 234 4E TO PS 42A. THIS CONTROL LINE DOES NOT APPLY VIA 21R
3. THIS CONTROL LINE APPLIES VIA 21R
4. THIS CONTROL LINE DOES NOT APPLY VIA 21R
5. THIS CONTROL LINE APPLIES VIA 21R

CIRCUIT ENGINEER	SR. SIGNAL ENGR.–DESIGN & STANDARDS	DIRECTOR C&S SYSTEMS	MTA Metro–North Railroad	NEW HAVEN LINE MP 30.9 TO MP 35.0 ROUTINGS – TRACKS 2 & 4 EAST	ISSUE DATE: / RTG–NHL1 NHS REV. / SHEET 11E NHS /users/signal/RTG / NHL1 / L1011E

Gannett Fleming/CWA

CONTRACT #	PROJECT SHEET #
1000027511	0044

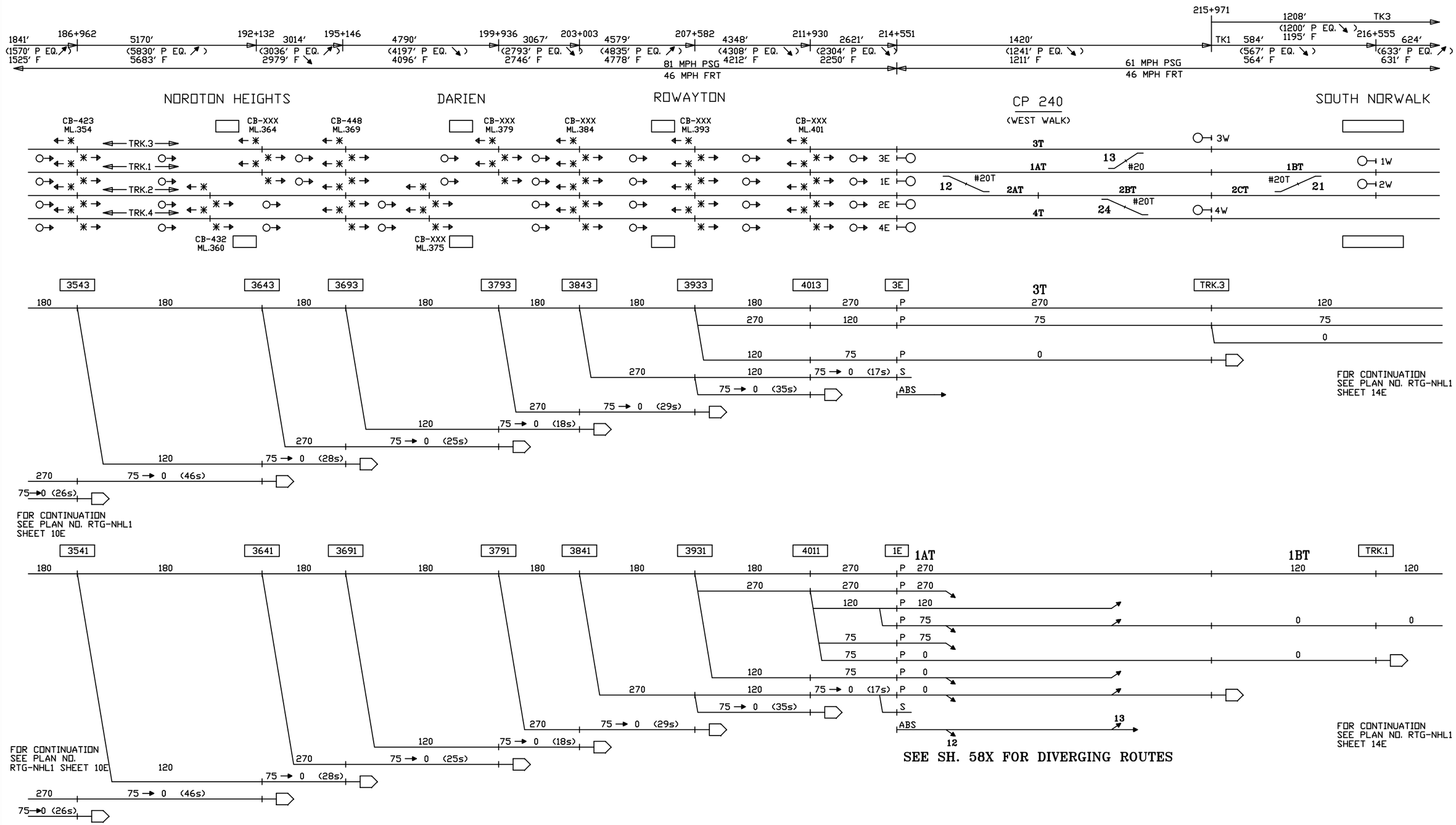

CIRCUIT ENGINEER	SR. SIGNAL ENGR.–DESIGN & STANDARDS	DIRECTOR C&S SYSTEMS	MTA Metro–North Railroad	NEW HAVEN LINE MP 35.6 TO MP 40.7 ROUTINGS – TRACKS 3 & 1 EAST	ISSUE DATE: / REV. / NHS / NHS / /users/signal/RTG RTG–NHL1 SHEET 12E NHL1 L1012E

Gannett Fleming/CWA

CONTRACT # 1000027511

PROJECT SHEET # 0045

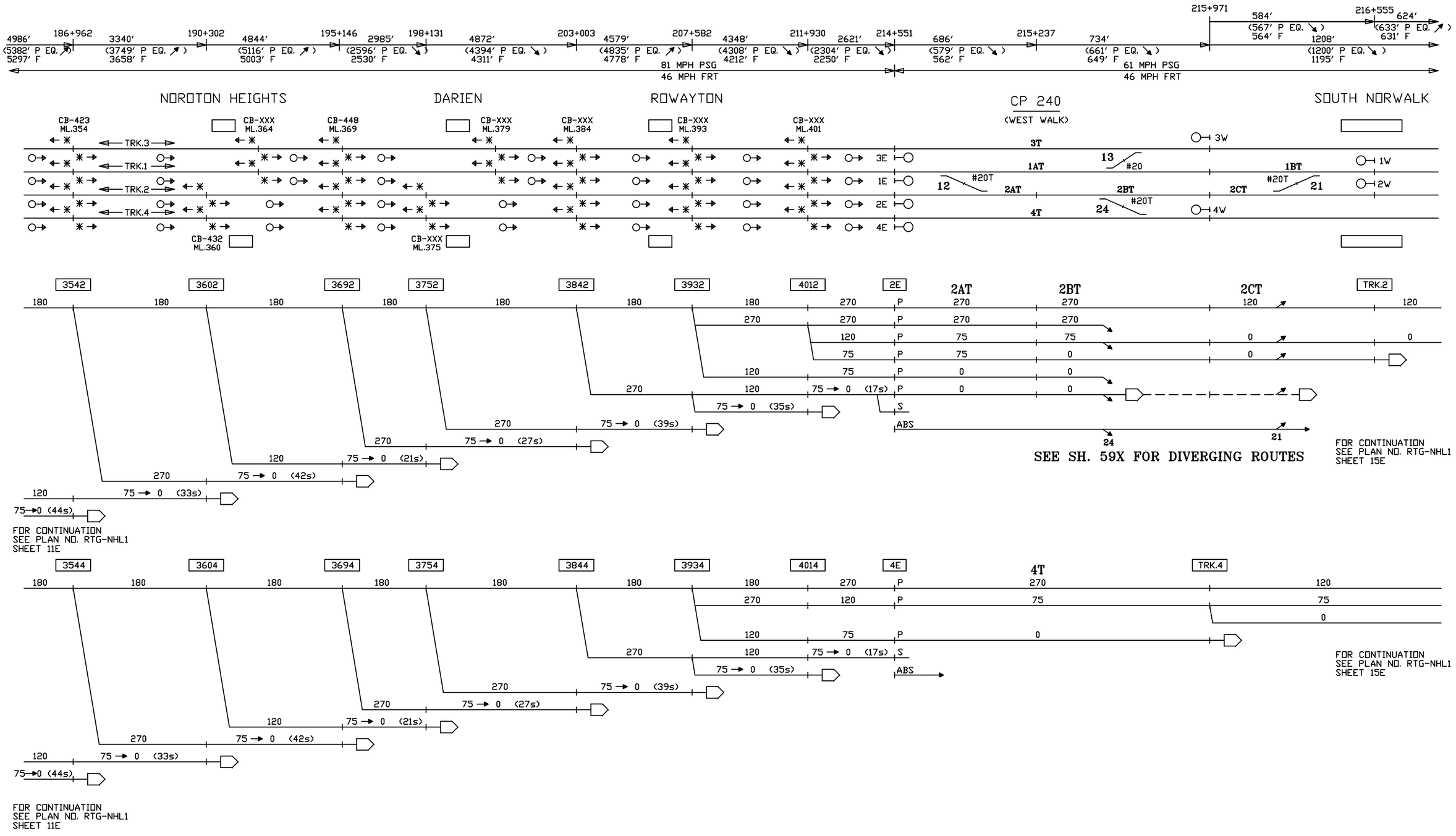

CIRCUIT ENGINEER	SR. SIGNAL ENGR.–DESIGN & STANDARDS	DIRECTOR C&S SYSTEMS	MTA Metro–North Railroad	NEW HAVEN LINE MP 35.6 TO MP 40.7 ROUTINGS – TRACKS 2 & 4 EAST	ISSUE DATE: / REV. / NHS / NHS / /users/signal/RTG RTG–NHL1 SHEET 13E NHL1 L1013E

Gannett Fleming/CWA

CONTRACT # 1000027511

PROJECT SHEET # 0046

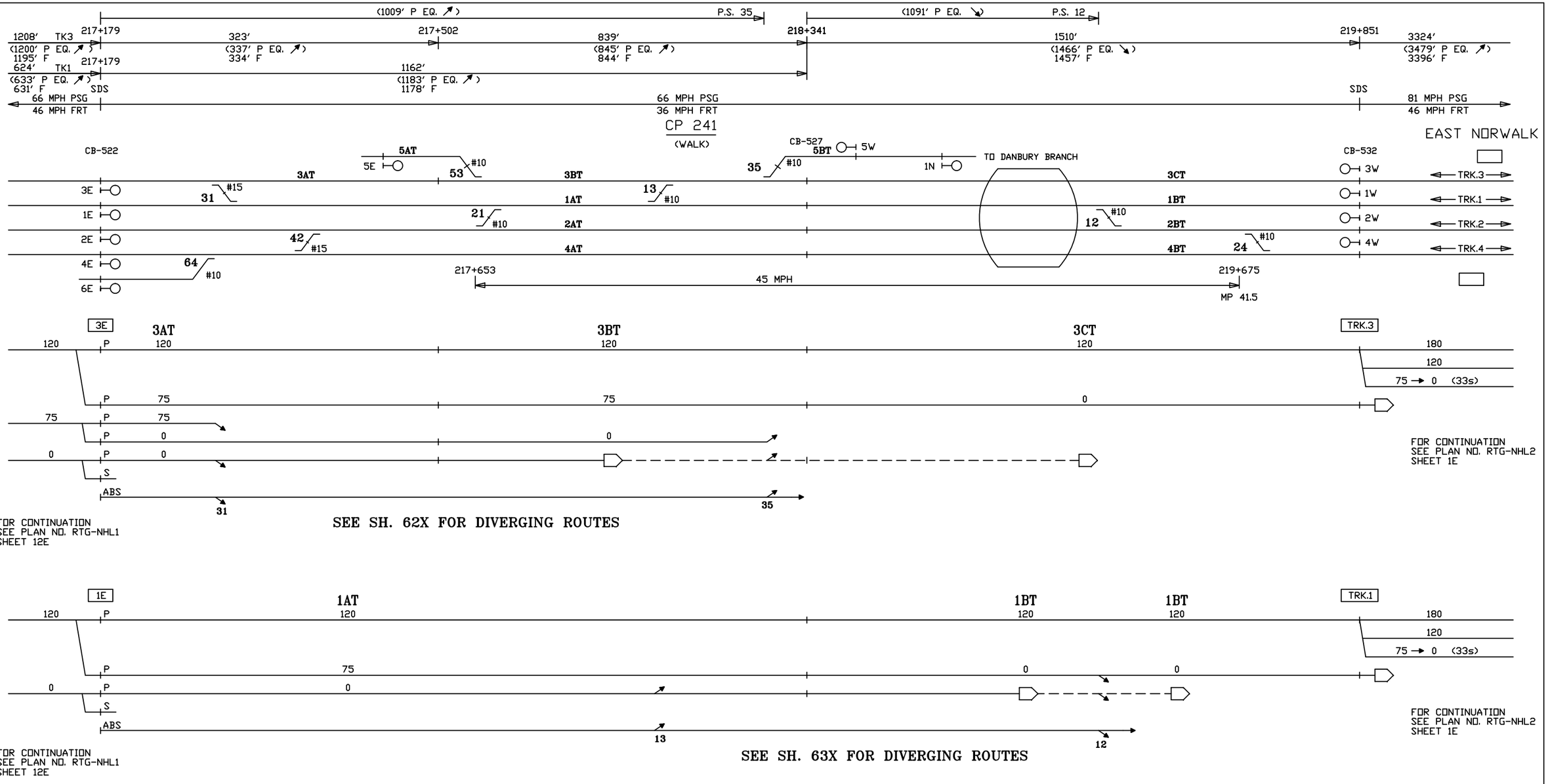

CIRCUIT ENGINEER	SR. SIGNAL ENGR.–DESIGN & STANDARDS	DIRECTOR C&S SYSTEMS	MTA Metro–North Railroad	NEW HAVEN LINE MP 40.7 TO MP 42.4 ROUTINGS – TRACKS 3 & 1 EAST	ISSUE DATE:	RTG–NHL1
					REV.	SHEET 14E
					NHS /users/signal/RTG	NHL1 L1014E

Gannett Fleming/CWA

CONTRACT #	PROJECT SHEET #
1000027511	0047

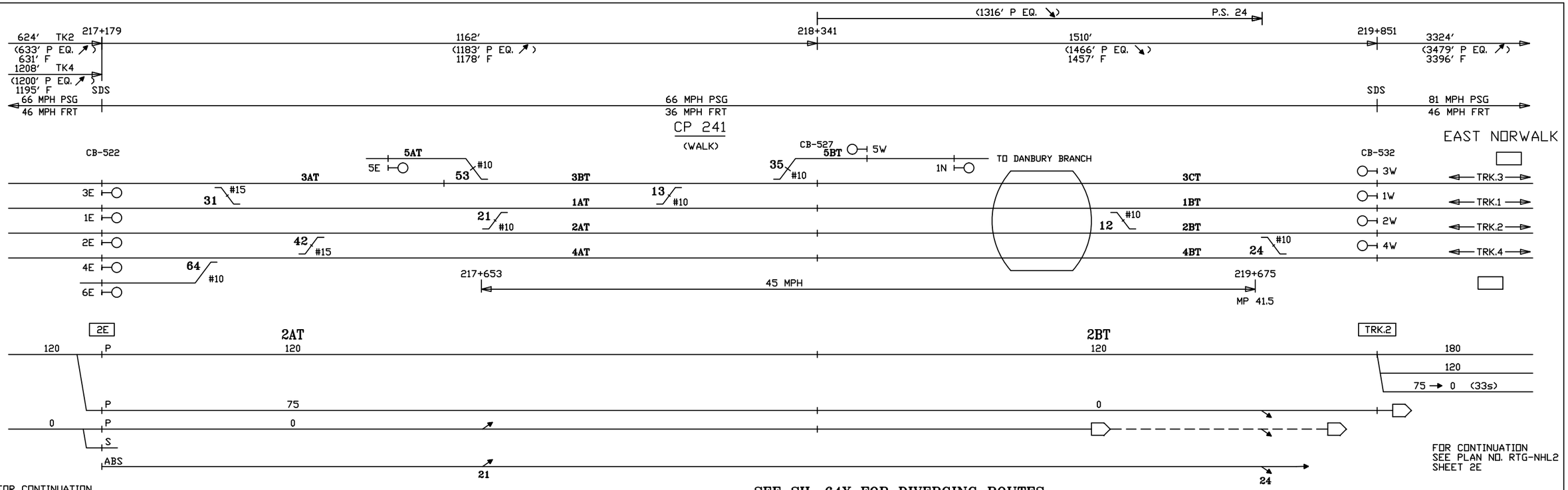

CIRCUIT ENGINEER

SR. SIGNAL ENGR.–DESIGN & STANDARDS

DIRECTOR C&S SYSTEMS

MTA Metro–North Railroad

NEW HAVEN LINE
MP 40.7 TO MP 42.4
ROUTINGS – TRACKS 2 & 4 EAST

ISSUE DATE:

NHS LB REV.

/users/signal/RTG

RTG–NHL1

SHEET 15E

NHL1 L1015E

Gannett Fleming/CWA

CONTRACT # 1000027511

PROJECT SHEET # 0048

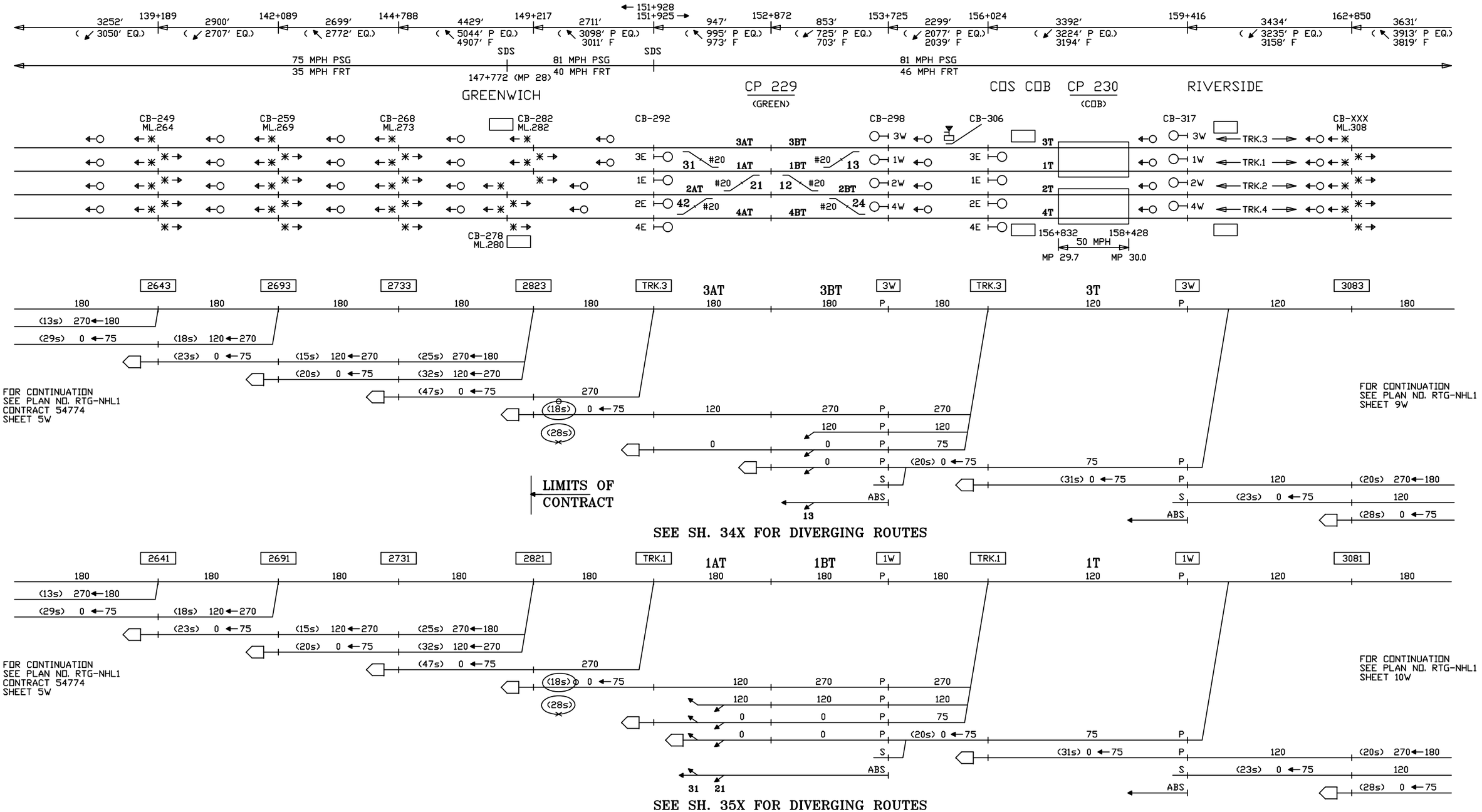

THE SIGNALING WEST OF CP 229 IS EXISTING PER CONTRACT 54774, AND IS NOT PART OF THIS DESIGN.
NO ATC ENFORCEMENT IS PROVIDED FOR FIRST CURVE EAST OF PORT CHESTER.

ATC ENFORCEMENT IS PROVIDED FOR CP 230 MOVABLE BRIDGE.

CIRCUIT ENGINEER	SR. SIGNAL ENGR.–DESIGN & STANDARDS	DIRECTOR C&S SYSTEMS	MTA Metro–North Railroad	NEW HAVEN LINE MP 31.2 TO MP 25.3 ROUTINGS – TRACKS 3 & 1 WEST	ISSUE DATE: / REV. / NHS / NHS / /users/signal/RTG RTG–NHL1 SHEET 7W NHL1 L1007W

Gannett Fleming/CWA

CONTRACT #	PROJECT SHEET #
1000027511	0049

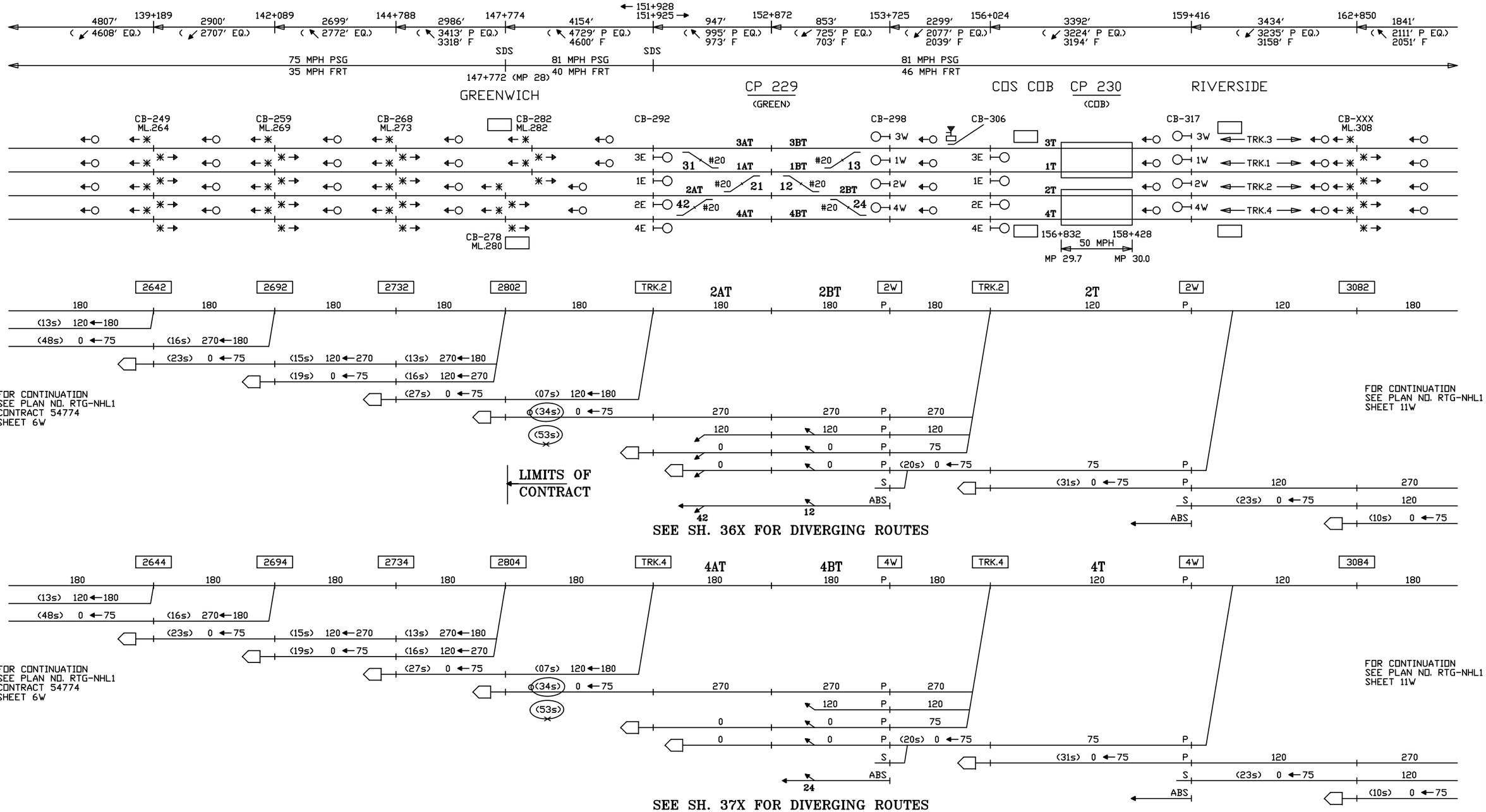

THE SIGNALING WEST OF CP 229 IS EXISTING PER CONTRACT 54774, AND IS NOT PART OF THIS DESIGN.
NO ENFORCEMENT IS PROVIDED FOR FIRST CURVE EAST OF PORT CHESTER.

ATC ENFORCEMENT IS PROVIDED FOR CP 230 MOVABLE BRIDGE.

CIRCUIT ENGINEER	SR. SIGNAL ENGR.–DESIGN & STANDARDS	DIRECTOR C&S SYSTEMS	MTA Metro–North Railroad	NEW HAVEN LINE MP 31.2 TO MP 25.3 ROUTINGS – TRACKS 2 & 4 WEST	ISSUE DATE:	RTG–NHL1
					NHS REV.	SHEET 8W
					NHS /users/signal/RTG	NHL1 L1008W

Gannett Fleming/CWA

CONTRACT #	PROJECT SHEET #
1000027511	0050

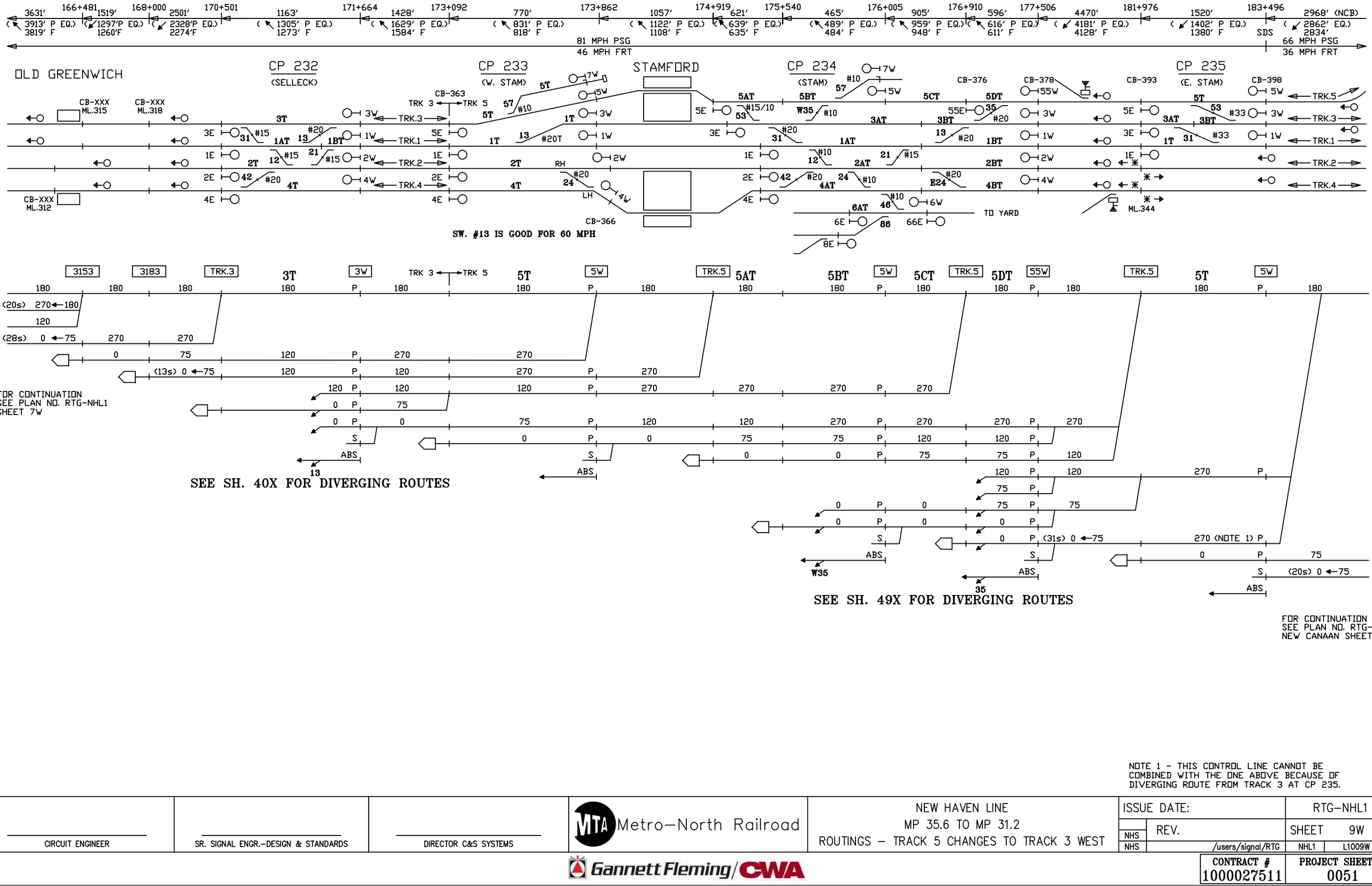

NOTE 1 - THIS CONTROL LINE CANNOT BE COMBINED WITH THE ONE ABOVE BECAUSE OF DIVERGING ROUTE FROM TRACK 3 AT CP 235.

CIRCUIT ENGINEER	SR. SIGNAL ENGR.–DESIGN & STANDARDS	DIRECTOR C&S SYSTEMS	Metro–North Railroad	NEW HAVEN LINE MP 35.6 TO MP 31.2 ROUTINGS – TRACK 5 CHANGES TO TRACK 3 WEST	ISSUE DATE: RTG–NHL1 REV. SHEET 9W NHS /users/signal/RTG NHL1 L1009W

Gannett Fleming/CWA

CONTRACT #	PROJECT SHEET #
1000027511	0051

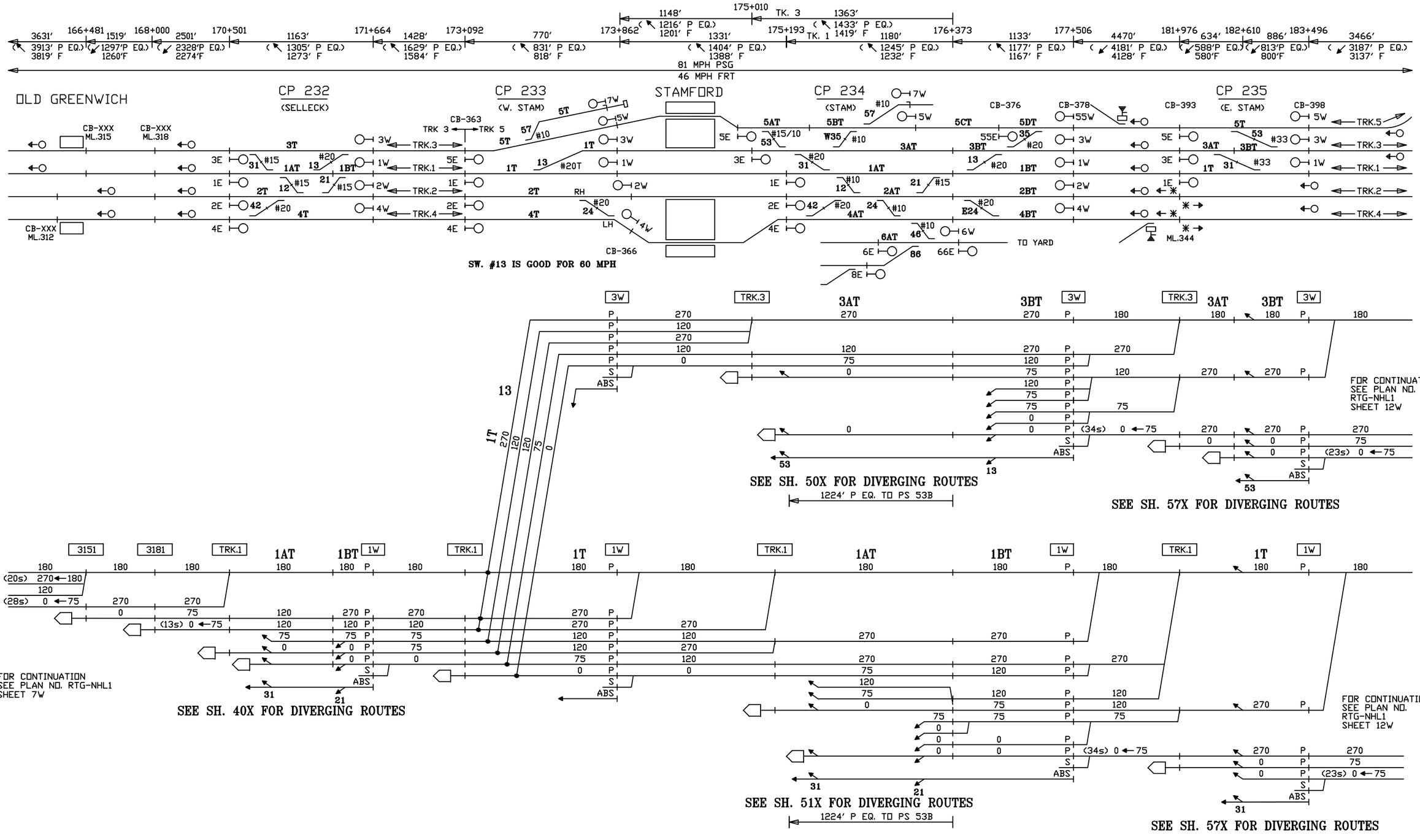

CIRCUIT ENGINEER	SR. SIGNAL ENGR.–DESIGN & STANDARDS	DIRECTOR C&S SYSTEMS	MTA Metro–North Railroad	NEW HAVEN LINE MP 35.6 TO MP 31.2 ROUTINGS – TRACKS 3 & 1 WEST	ISSUE DATE: RTG–NHL1 REV. SHEET 10W NHS /users/signal/RTG NHL1 L1010W

Gannett Fleming/CWA

CONTRACT # 1000027511 | PROJECT SHEET # 0052

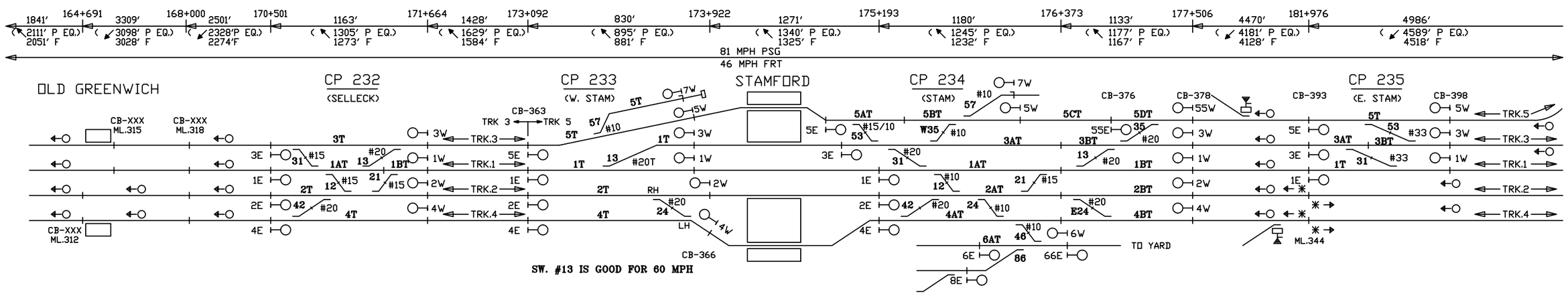

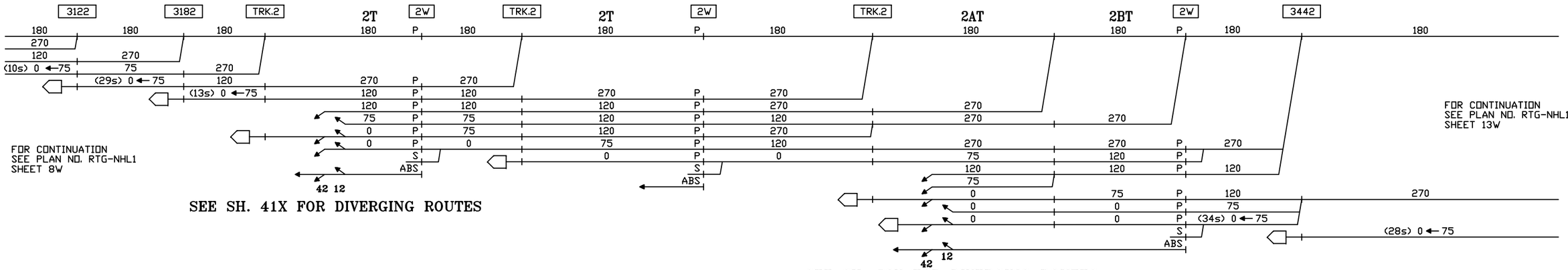

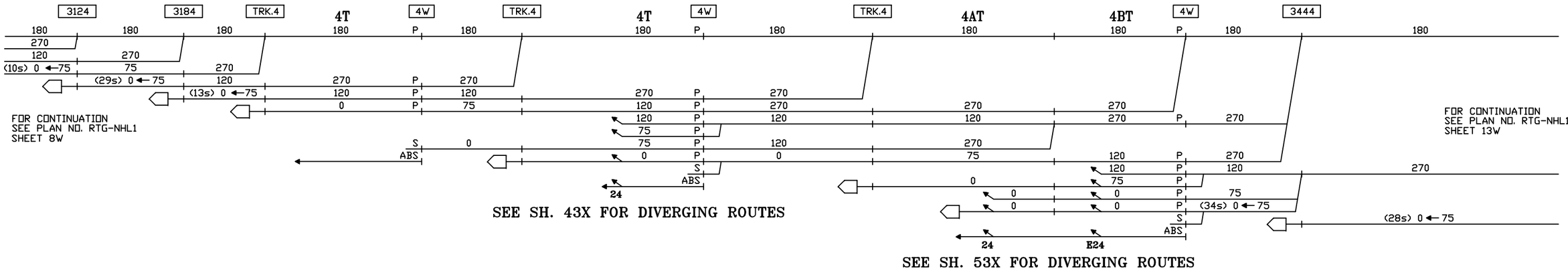

CIRCUIT ENGINEER	SR. SIGNAL ENGR.–DESIGN & STANDARDS	DIRECTOR C&S SYSTEMS	MTA Metro–North Railroad	NEW HAVEN LINE MP 35.6 TO MP 31.2 ROUTINGS – TRACKS 2 & 4 WEST	ISSUE DATE:	RTG–NHL1
					NHS REV.	SHEET 11W
					NHS /users/signal/RTG	NHL1 L1011W

Gannett Fleming/CWA

CONTRACT #	PROJECT SHEET #
1000027511	0053

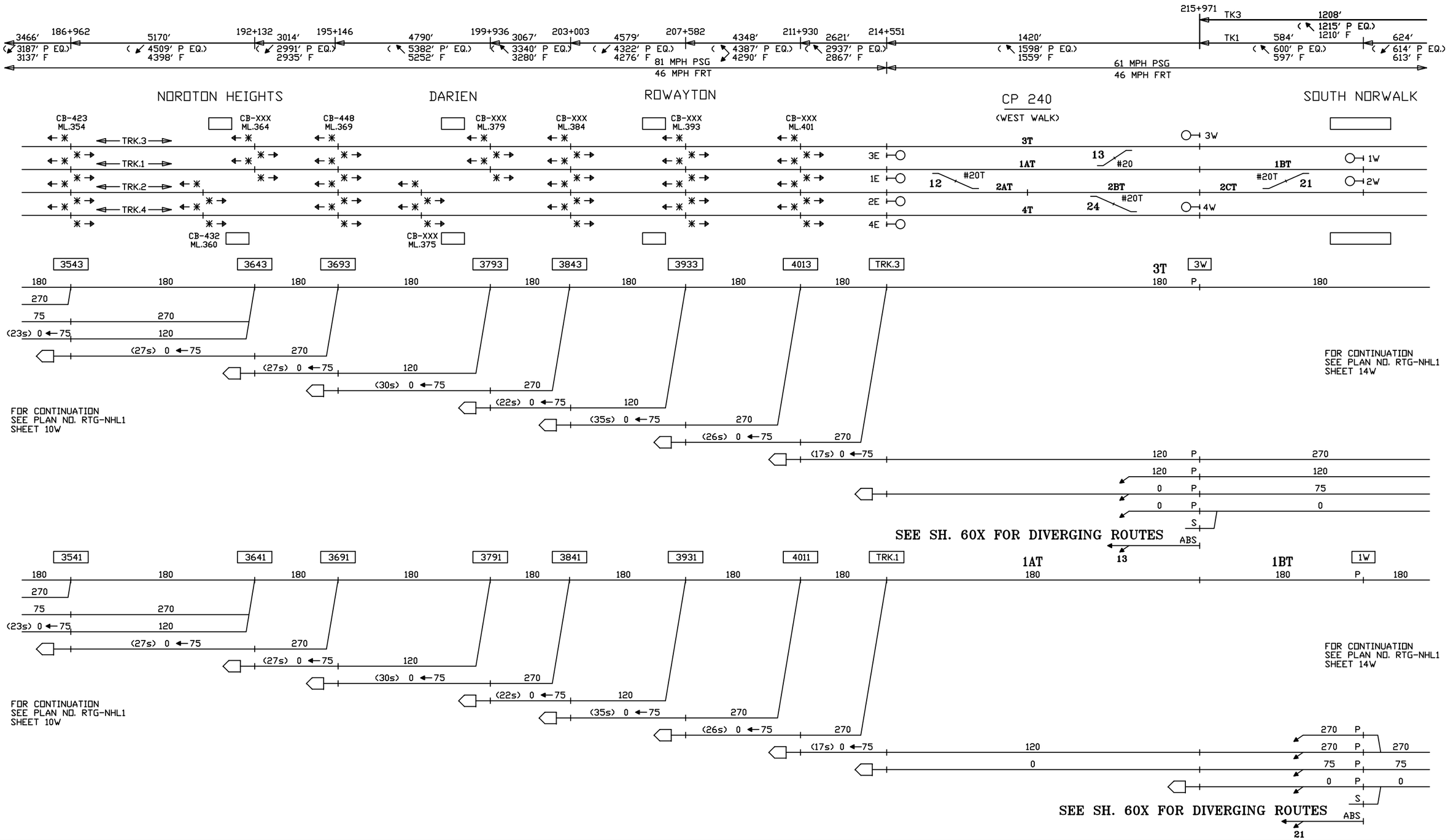

CIRCUIT ENGINEER	SR. SIGNAL ENGR.–DESIGN & STANDARDS	DIRECTOR C&S SYSTEMS	MTA Metro–North Railroad	NEW HAVEN LINE MP 40.7 TO MP 35.6 ROUTINGS – TRACKS 3 & 1 WEST	ISSUE DATE: / RTG–NHL1 NHS REV. / SHEET 12W NHS /users/signal/RTG / NHL1 / L1012W

Gannett Fleming/CWA

CONTRACT # 1000027511

PROJECT SHEET # 0054

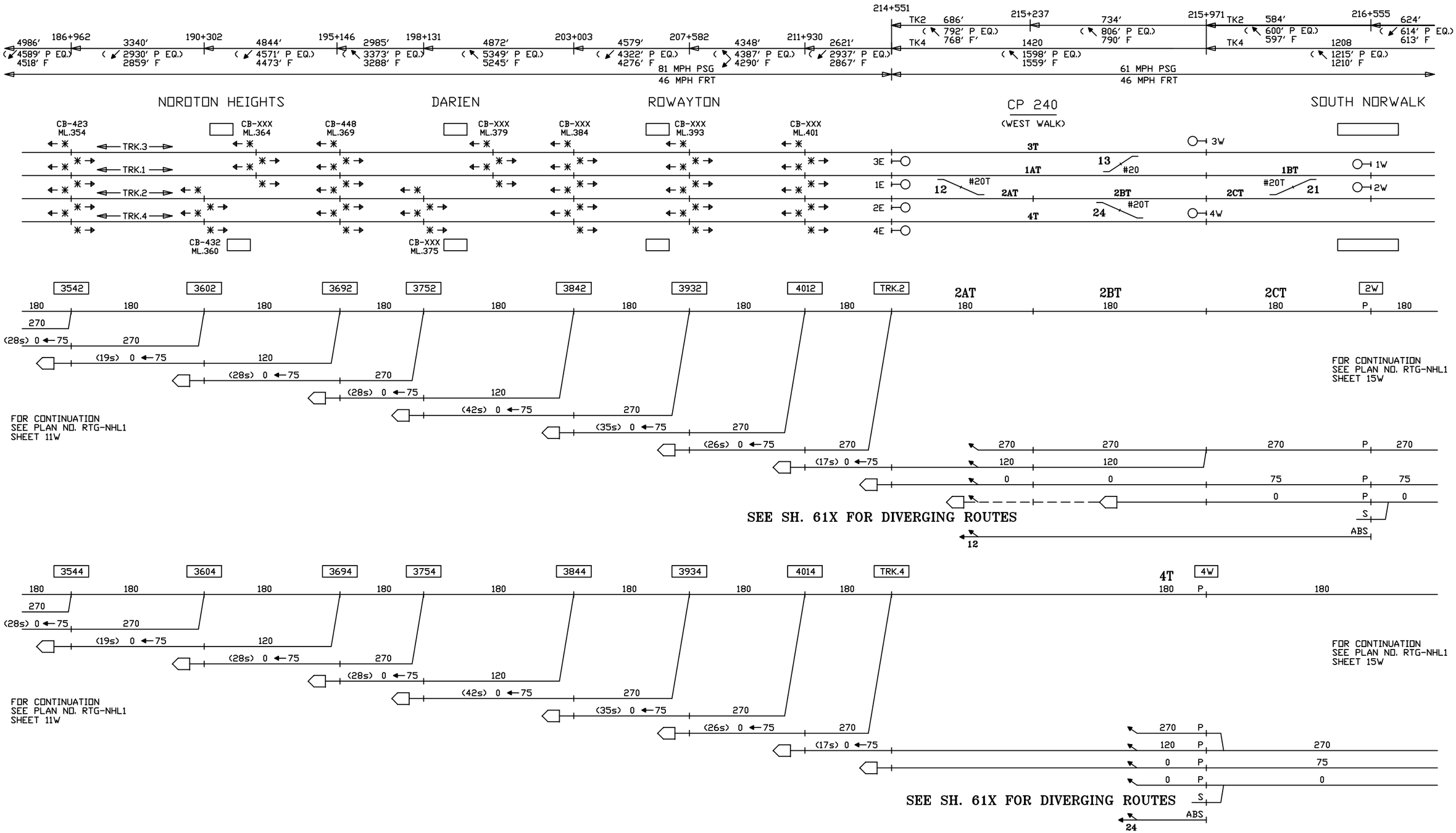

CIRCUIT ENGINEER	SR. SIGNAL ENGR.–DESIGN & STANDARDS	DIRECTOR C&S SYSTEMS	MTA Metro–North Railroad	NEW HAVEN LINE MP 40.7 TO MP 35.6 ROUTINGS – TRACKS 2 & 4 WEST	ISSUE DATE:	RTG–NHL1
					NHS REV.	SHEET 13W
					NHS /users/signal/RTG	NHL1 L1013W

Gannett Fleming/CWA

CONTRACT #	PROJECT SHEET #
1000027511	0055

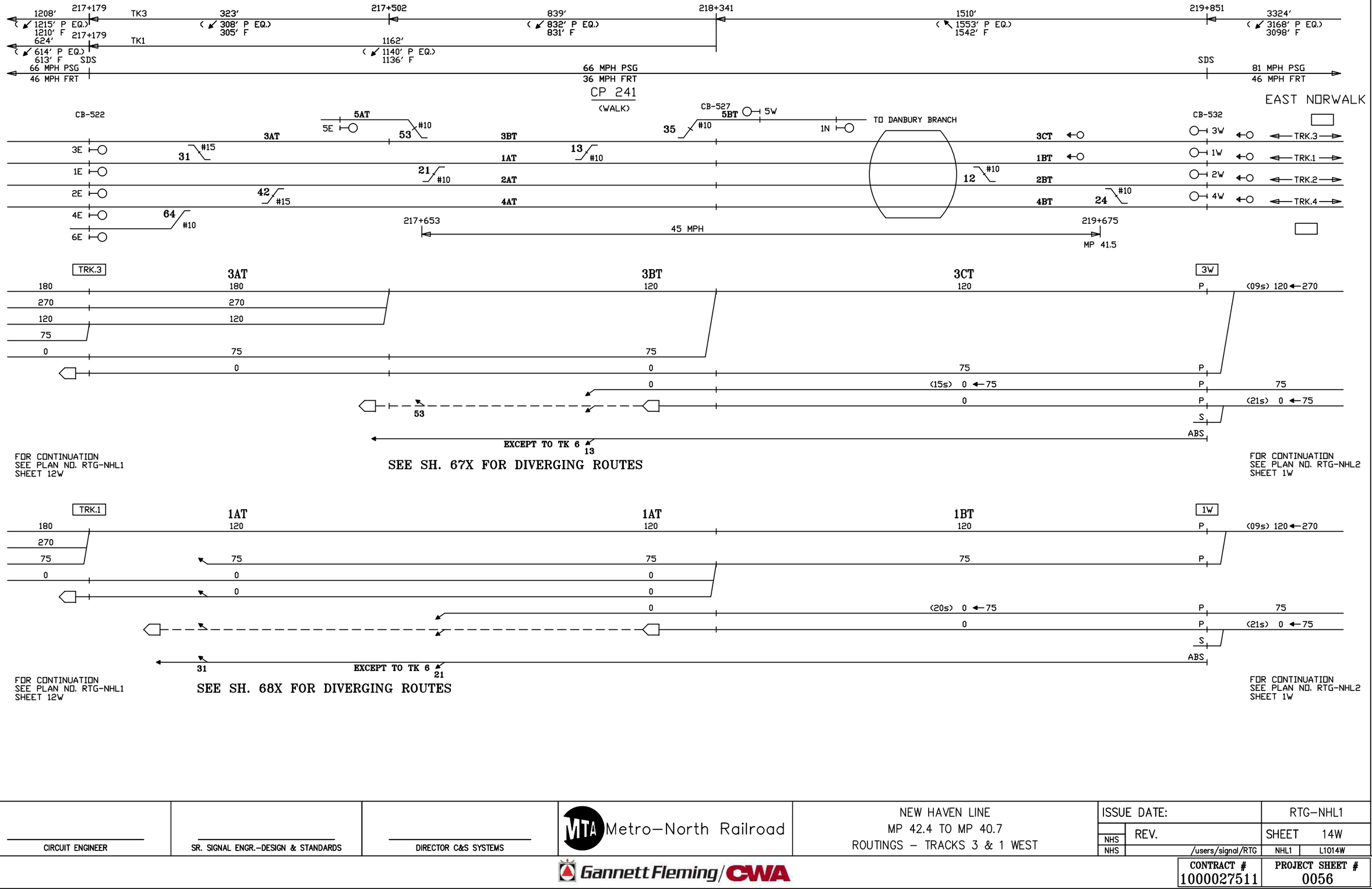

CIRCUIT ENGINEER	SR. SIGNAL ENGR.–DESIGN & STANDARDS	DIRECTOR C&S SYSTEMS	MTA Metro–North Railroad	NEW HAVEN LINE MP 42.4 TO MP 40.7 ROUTINGS – TRACKS 3 & 1 WEST	ISSUE DATE:	RTG–NHL1
					REV.	SHEET 14W
					NHS /users/signal/RTG	NHL1 L1014W
			Gannett Fleming/CWA		CONTRACT # 1000027511	PROJECT SHEET # 0056

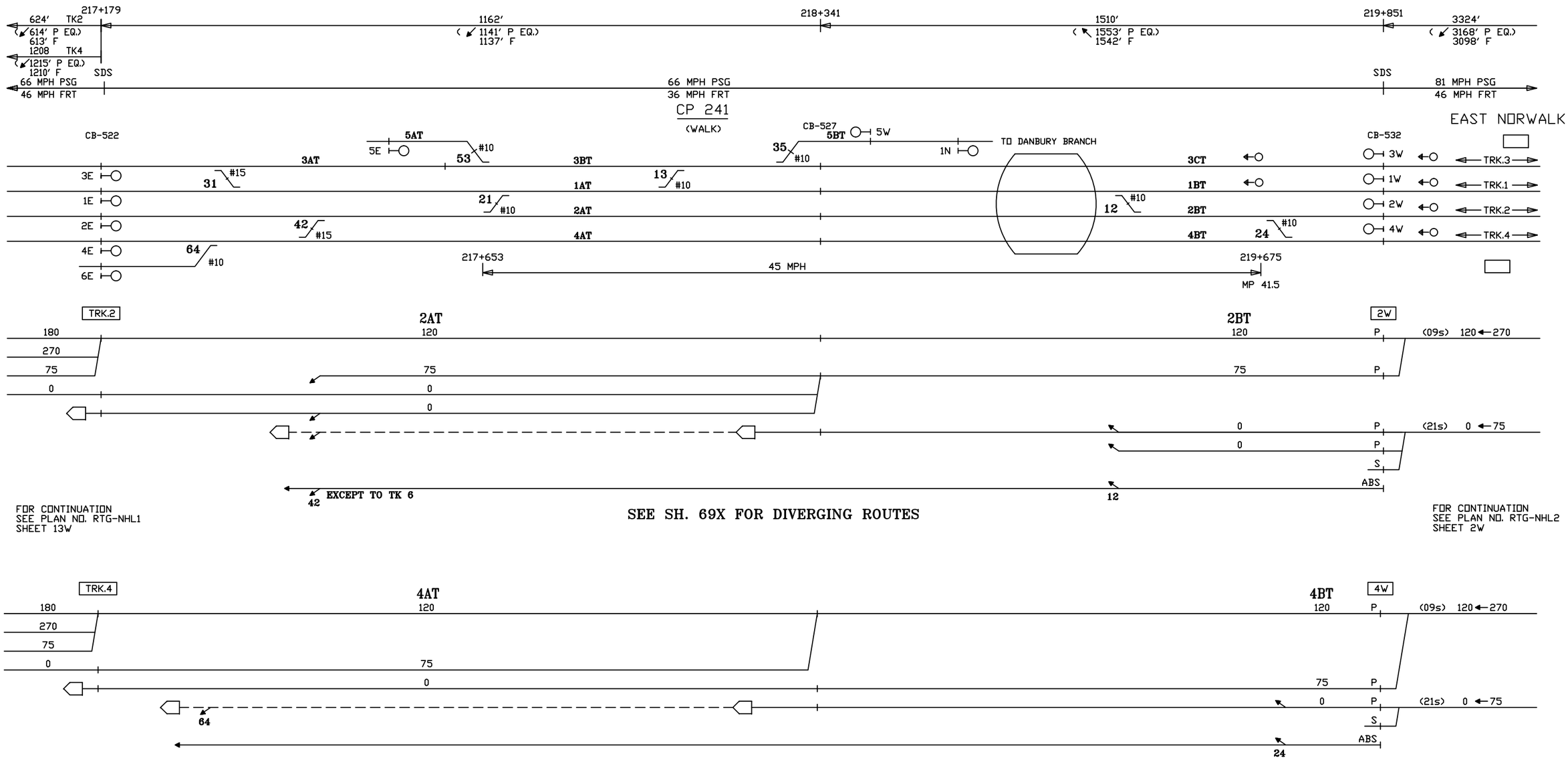

CIRCUIT ENGINEER	SR. SIGNAL ENGR.–DESIGN & STANDARDS	DIRECTOR C&S SYSTEMS	MTA Metro–North Railroad	NEW HAVEN LINE MP 42.4 TO MP 40.7 ROUTINGS – TRACKS 2 & 4 WEST	ISSUE DATE:	RTG–NHL1
					REV.	SHEET 15W
					NHS /users/signal/RTG	NHL1 L1015W

Gannett Fleming/CWA

CONTRACT #	PROJECT SHEET #
1000027511	0057

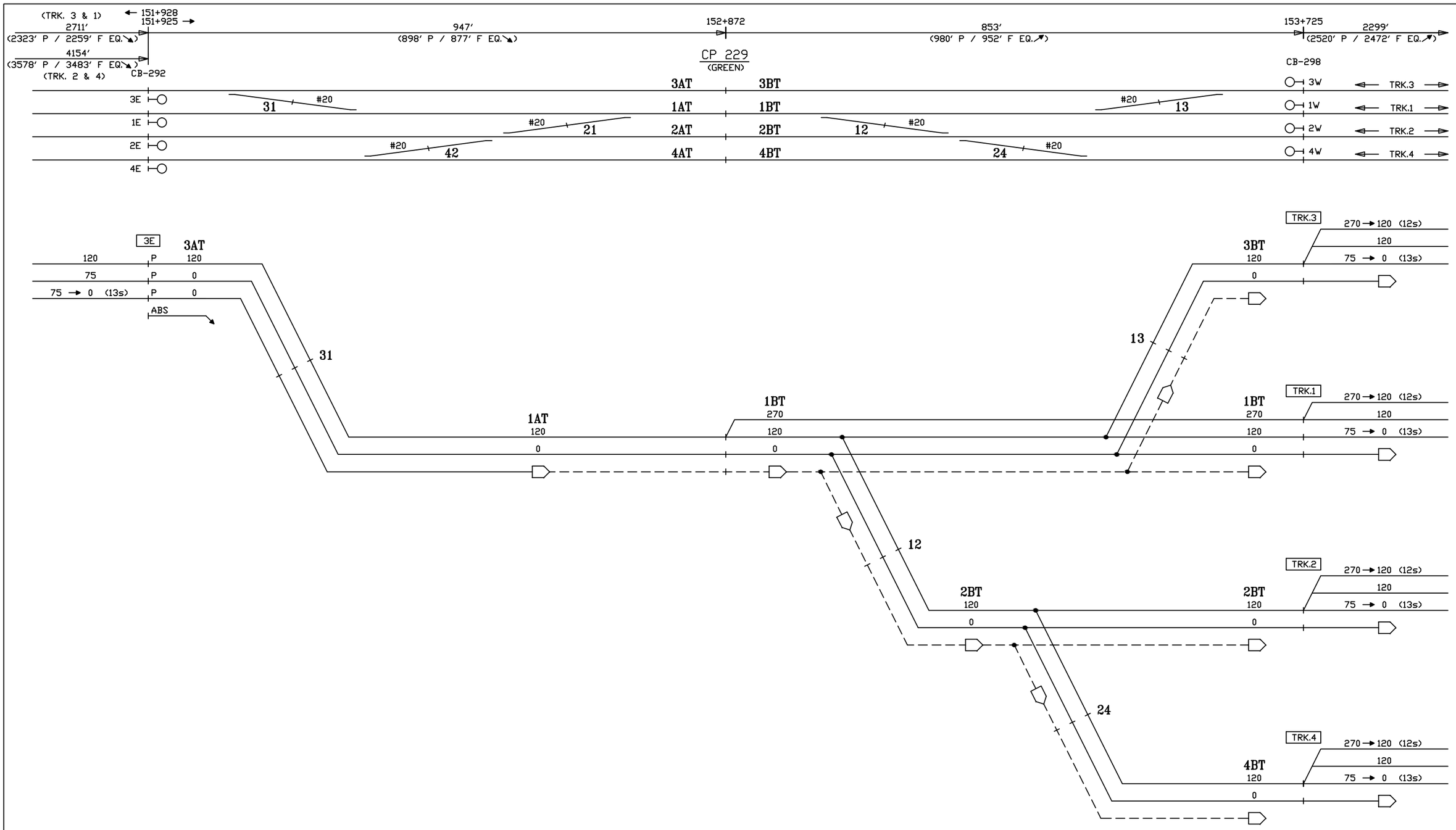

CIRCUIT ENGINEER	SR. SIGNAL ENGR.–DESIGN & STANDARDS	DIRECTOR C&S SYSTEMS	MTA Metro–North Railroad	NEW HAVEN LINE CP 229 DIVERGING ROUTES – TRACK 3 EAST	ISSUE DATE: / REV. / /users/signal/RTG RTG–NHL1 SHEET 30X NHL1 L1030X

Gannett Fleming/CWA

CONTRACT #	PROJECT SHEET #
1000027511	0058

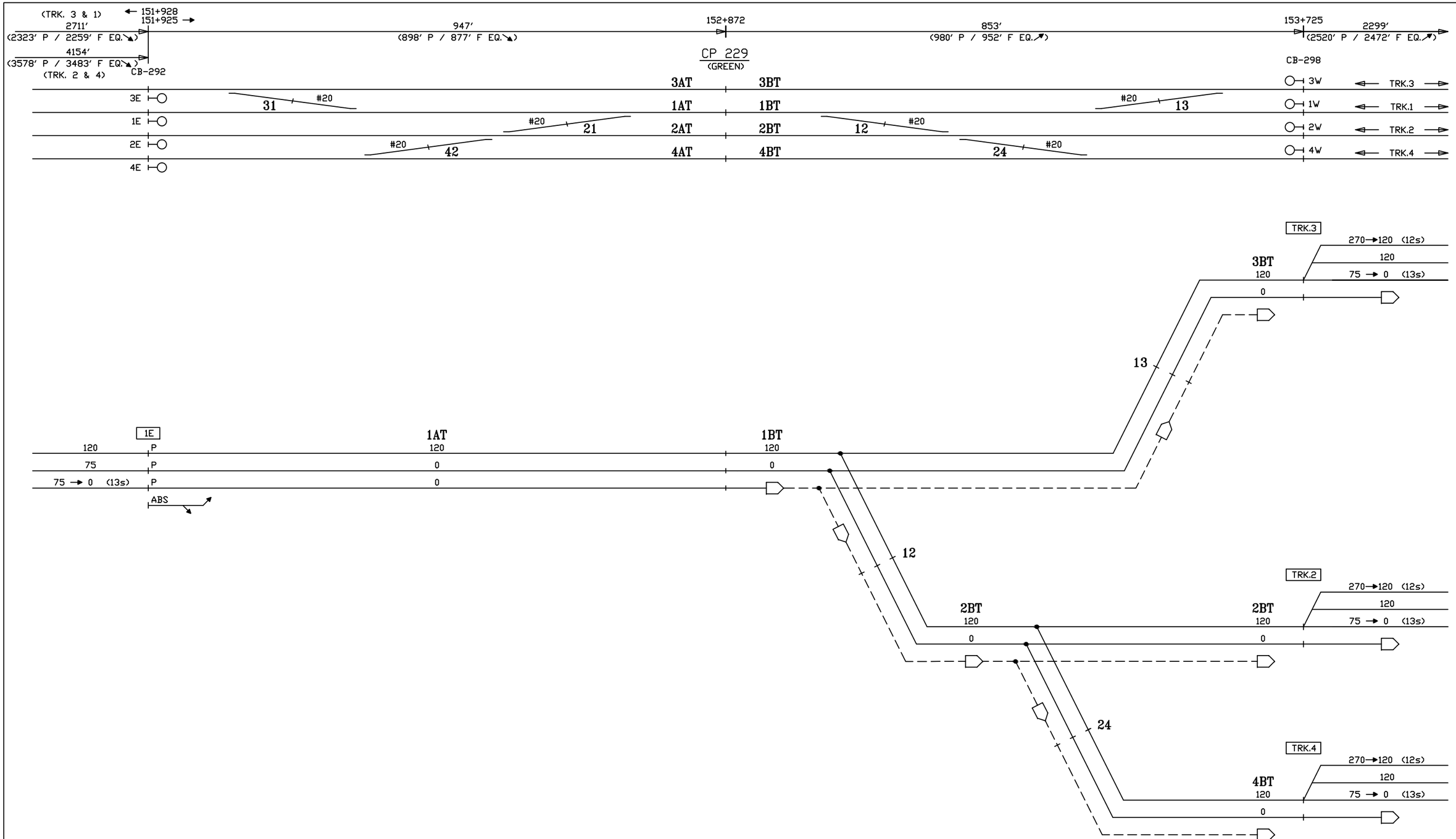

CIRCUIT ENGINEER	SR. SIGNAL ENGR.–DESIGN & STANDARDS	DIRECTOR C&S SYSTEMS	MTA Metro–North Railroad	NEW HAVEN LINE CP 229 DIVERGING ROUTES – TRACK 1 EAST	ISSUE DATE: / REV. / /users/signal/RTG RTG–NHL1 SHEET 31X NHL1 L1031X

Gannett Fleming/CWA

CONTRACT #	PROJECT SHEET #
1000027511	0059

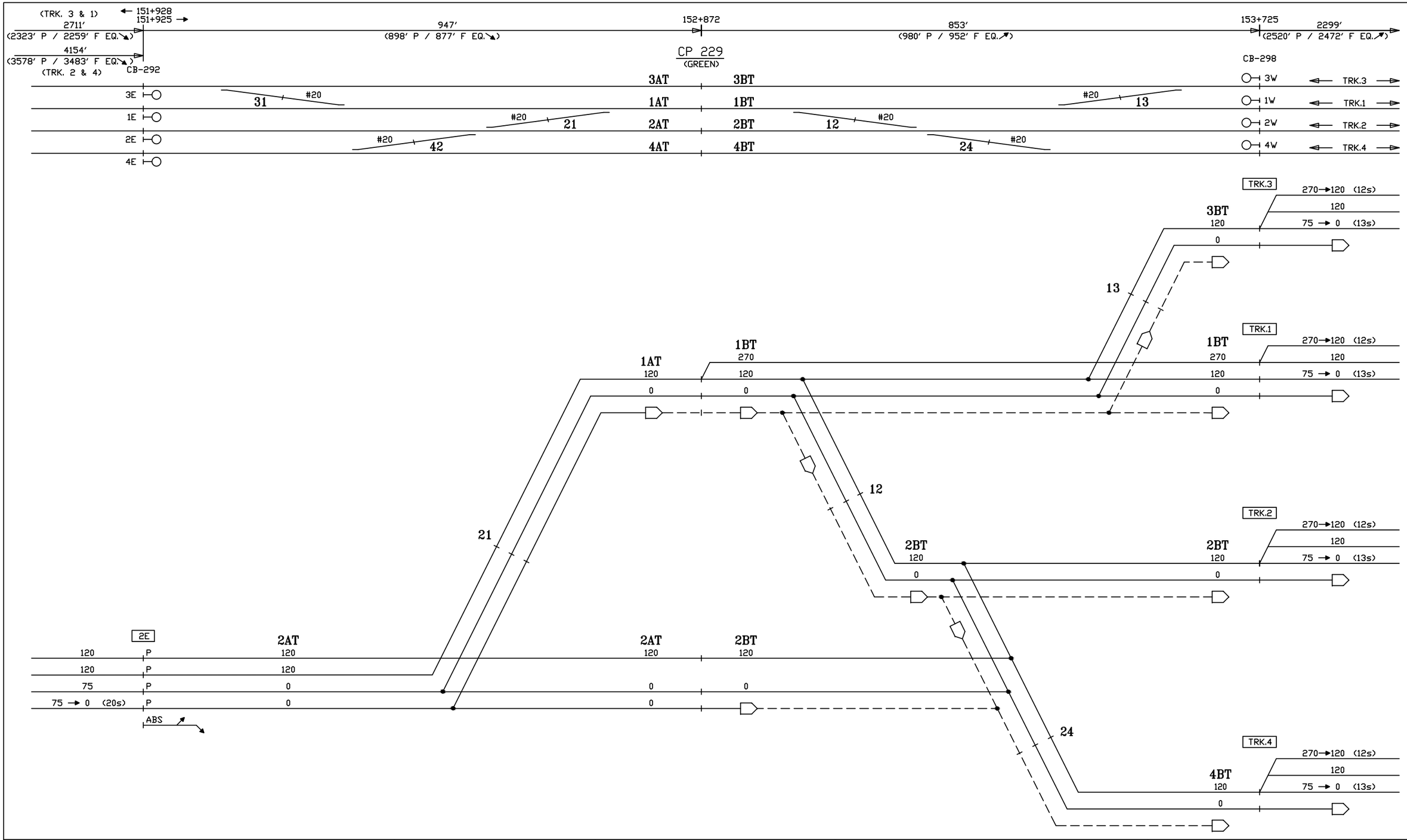

CIRCUIT ENGINEER	SR. SIGNAL ENGR.–DESIGN & STANDARDS	DIRECTOR C&S SYSTEMS	MTA Metro–North Railroad	NEW HAVEN LINE CP 229 DIVERGING ROUTES – TRACK 2 EAST	ISSUE DATE: / REV. / /users/signal/RTG RTG–NHL1 SHEET 32X NHL1 L1032X

Gannett Fleming/CWA

CONTRACT #	PROJECT SHEET #
1000027511	0060

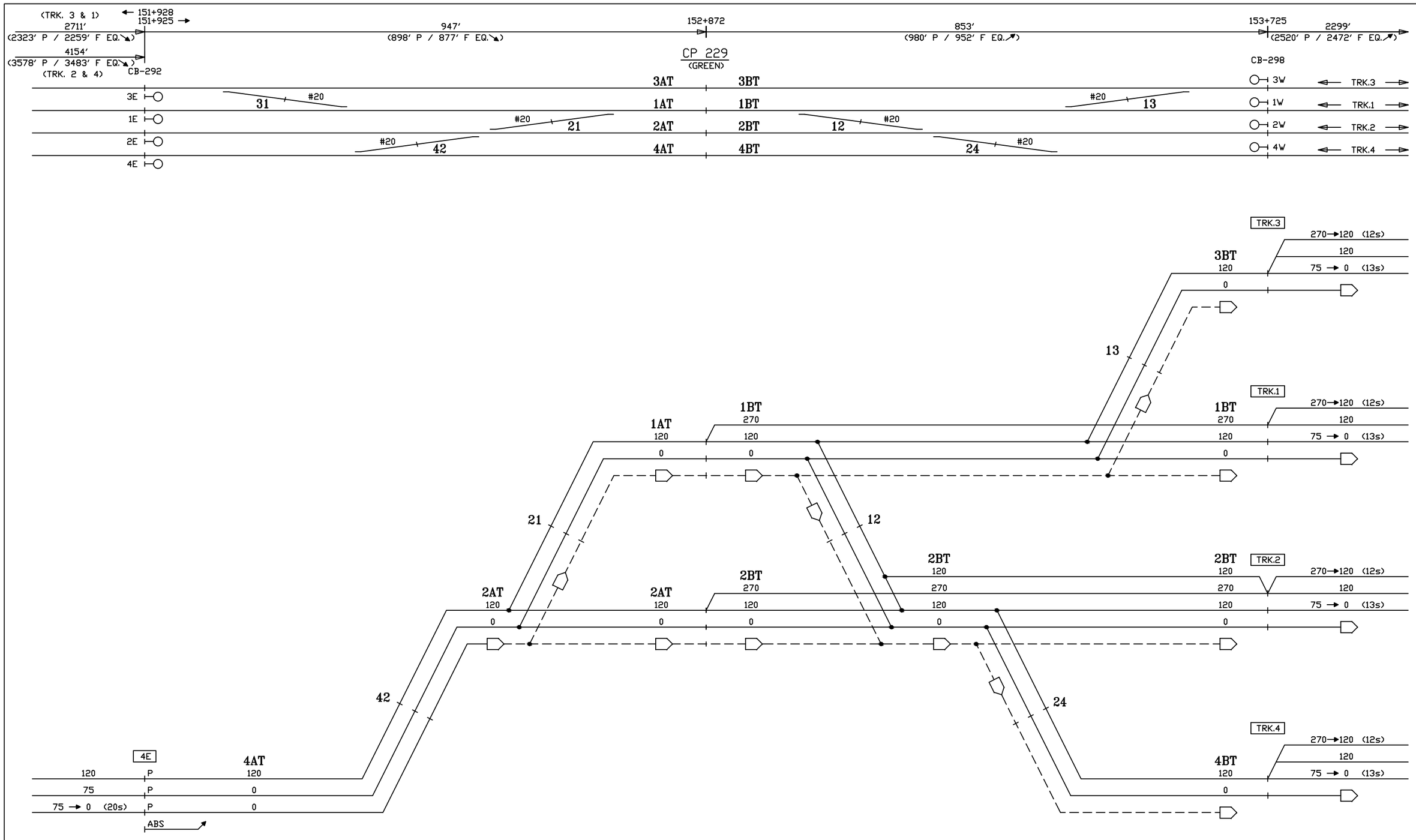

CIRCUIT ENGINEER	SR. SIGNAL ENGR.–DESIGN & STANDARDS	DIRECTOR C&S SYSTEMS	MTA Metro–North Railroad	NEW HAVEN LINE CP 229 DIVERGING ROUTES – TRACK 4 EAST	ISSUE DATE: / REV. / /users/signal/RTG RTG–NHL1 SHEET 33X NHL1 L1033X

Gannett Fleming/CWA

CONTRACT # 1000027511

PROJECT SHEET # 0061

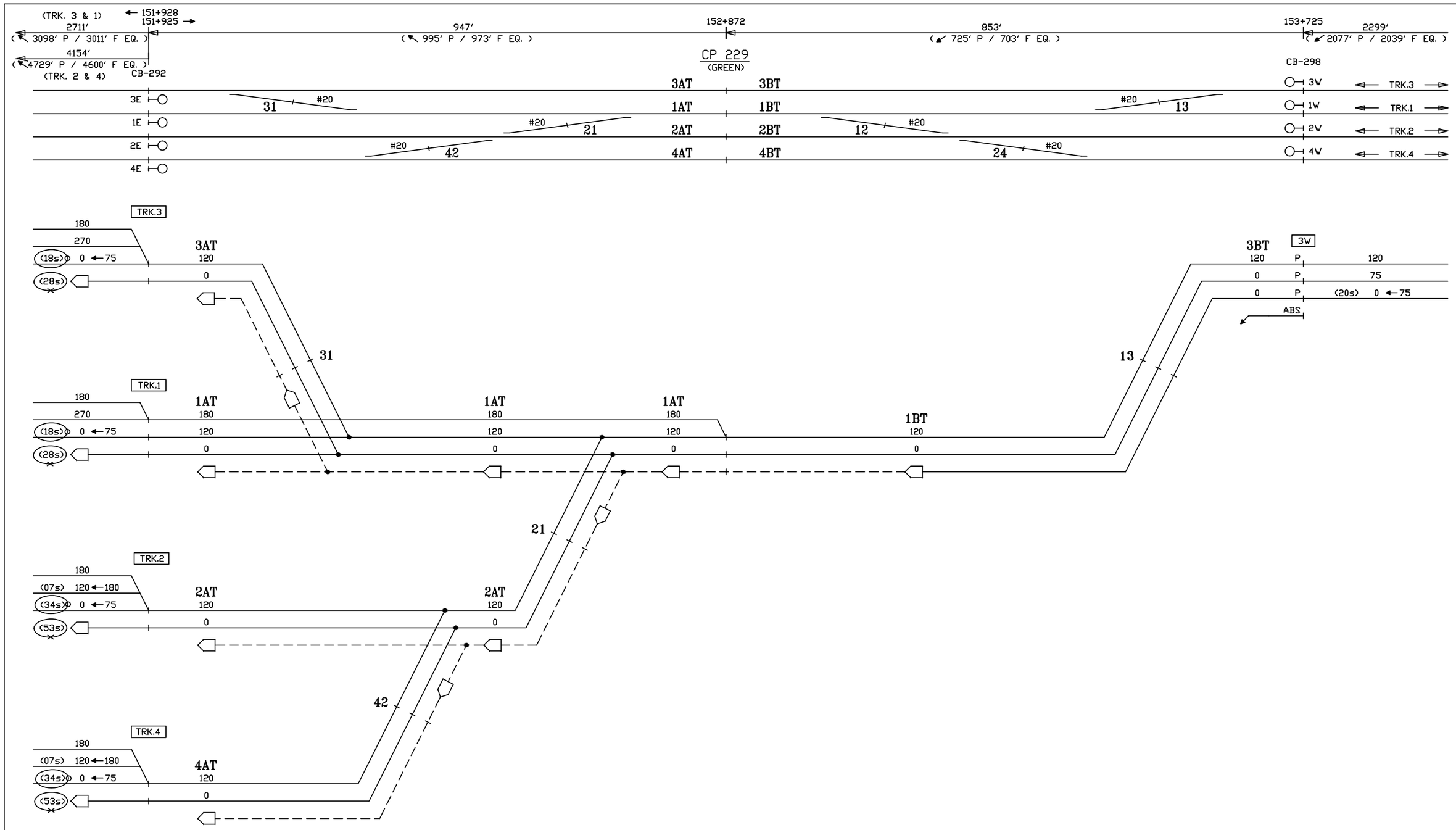

CIRCUIT ENGINEER	SR. SIGNAL ENGR.–DESIGN & STANDARDS	DIRECTOR C&S SYSTEMS	MTA Metro–North Railroad	NEW HAVEN LINE CP 229 DIVERGING ROUTES – TRACK 3 WEST	ISSUE DATE:	RTG–NHL1
					REV.	SHEET 34X
					/users/signal/RTG	NHL1 L1034X

Gannett Fleming/CWA

CONTRACT #	PROJECT SHEET #
1000027511	0062

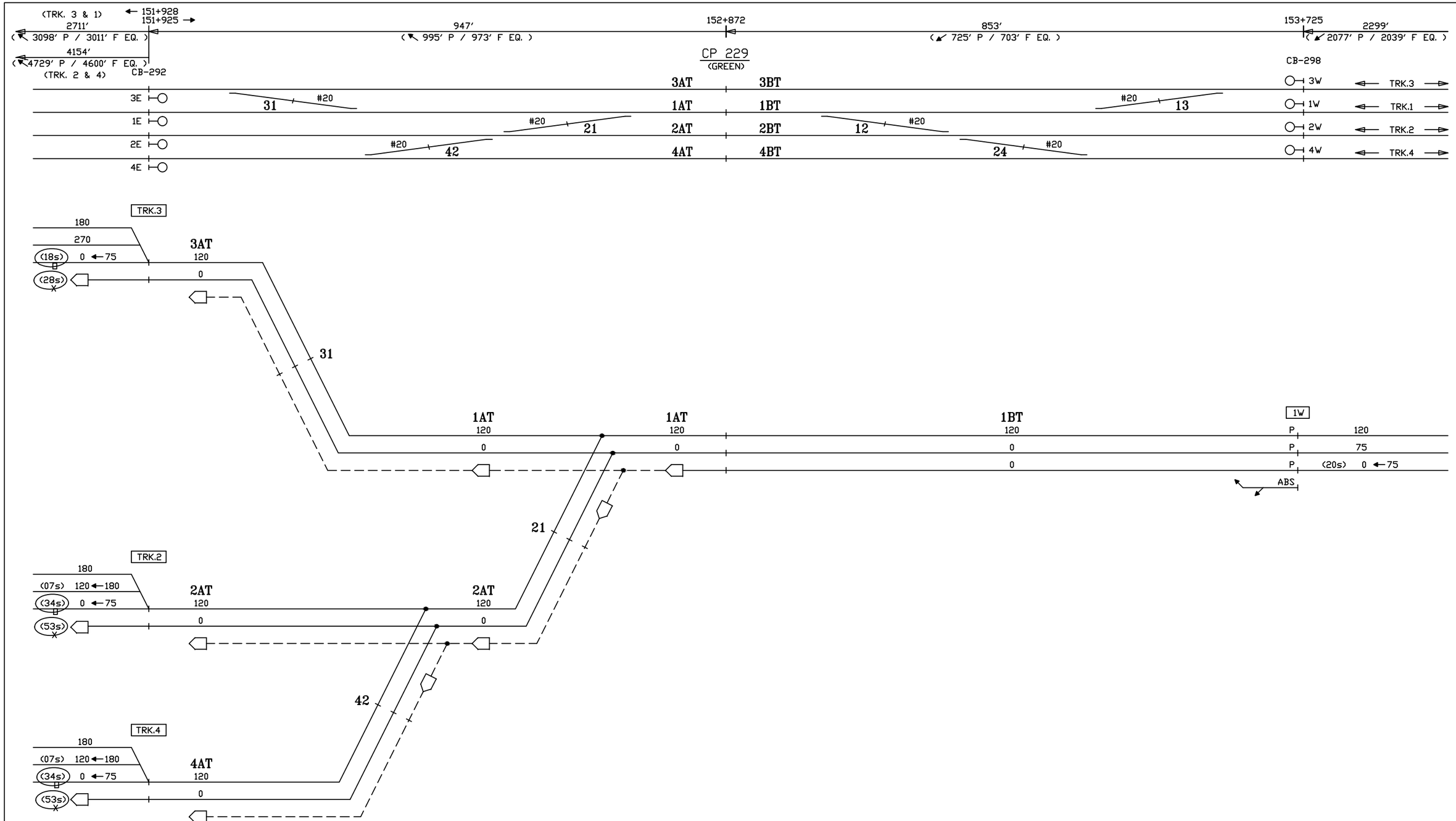

CIRCUIT ENGINEER	SR. SIGNAL ENGR.–DESIGN & STANDARDS	DIRECTOR C&S SYSTEMS	MTA Metro–North Railroad	NEW HAVEN LINE CP 229 DIVERGING ROUTES – TRACK 1 WEST	ISSUE DATE: / REV. / /users/signal/RTG RTG–NHL1 SHEET 35X NHL1 L1035X

Gannett Fleming/CWA

CONTRACT #	PROJECT SHEET #
1000027511	0063

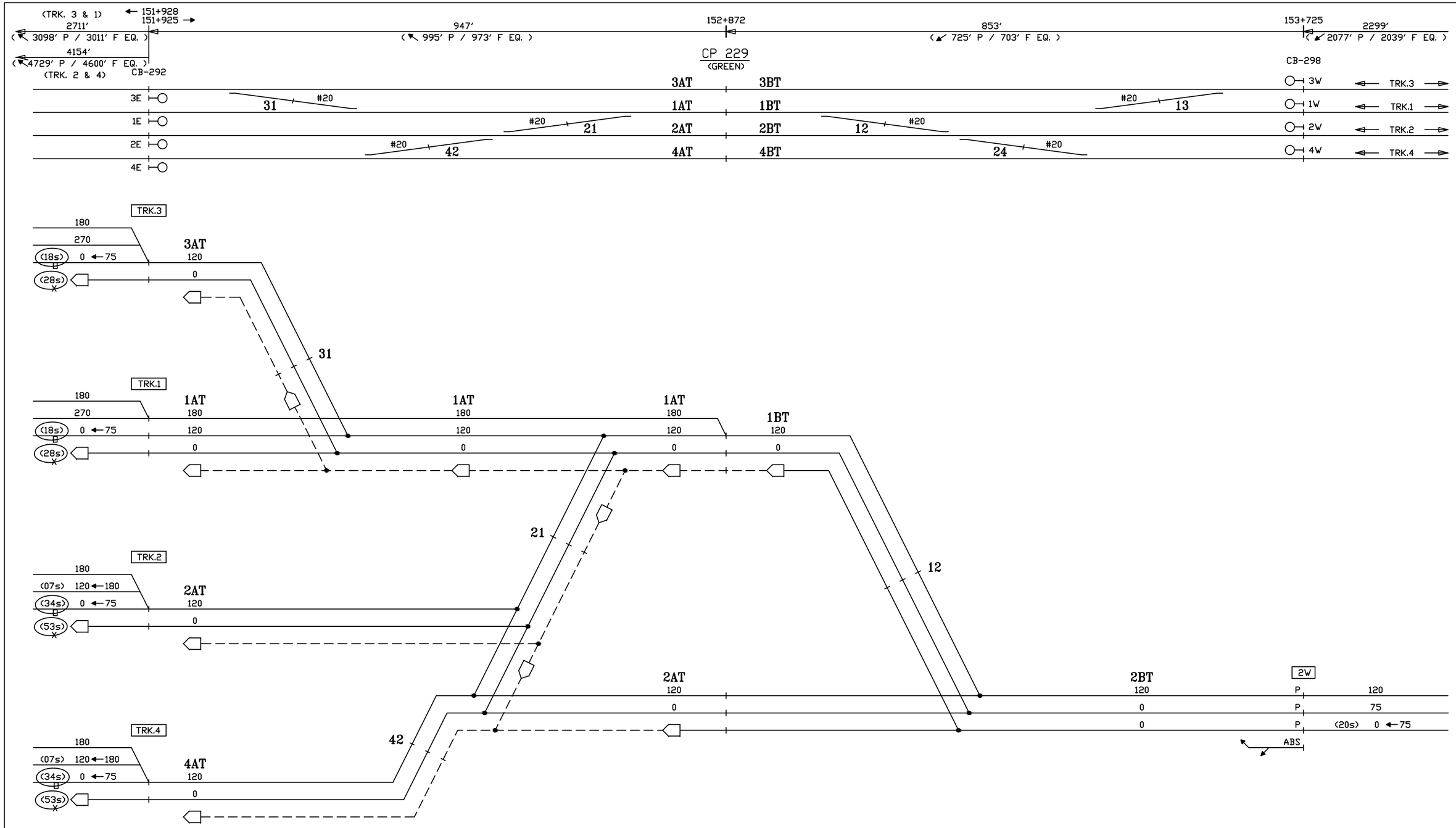

CIRCUIT ENGINEER	SR. SIGNAL ENGR.–DESIGN & STANDARDS	DIRECTOR C&S SYSTEMS	MTA Metro–North Railroad	NEW HAVEN LINE CP 229 DIVERGING ROUTES – TRACK 2 WEST	ISSUE DATE: / REV. / /users/signal/RTG RTG–NHL1 SHEET 36X NHL1 L1036X

Gannett Fleming/CWA

CONTRACT #	PROJECT SHEET #
1000027511	0064

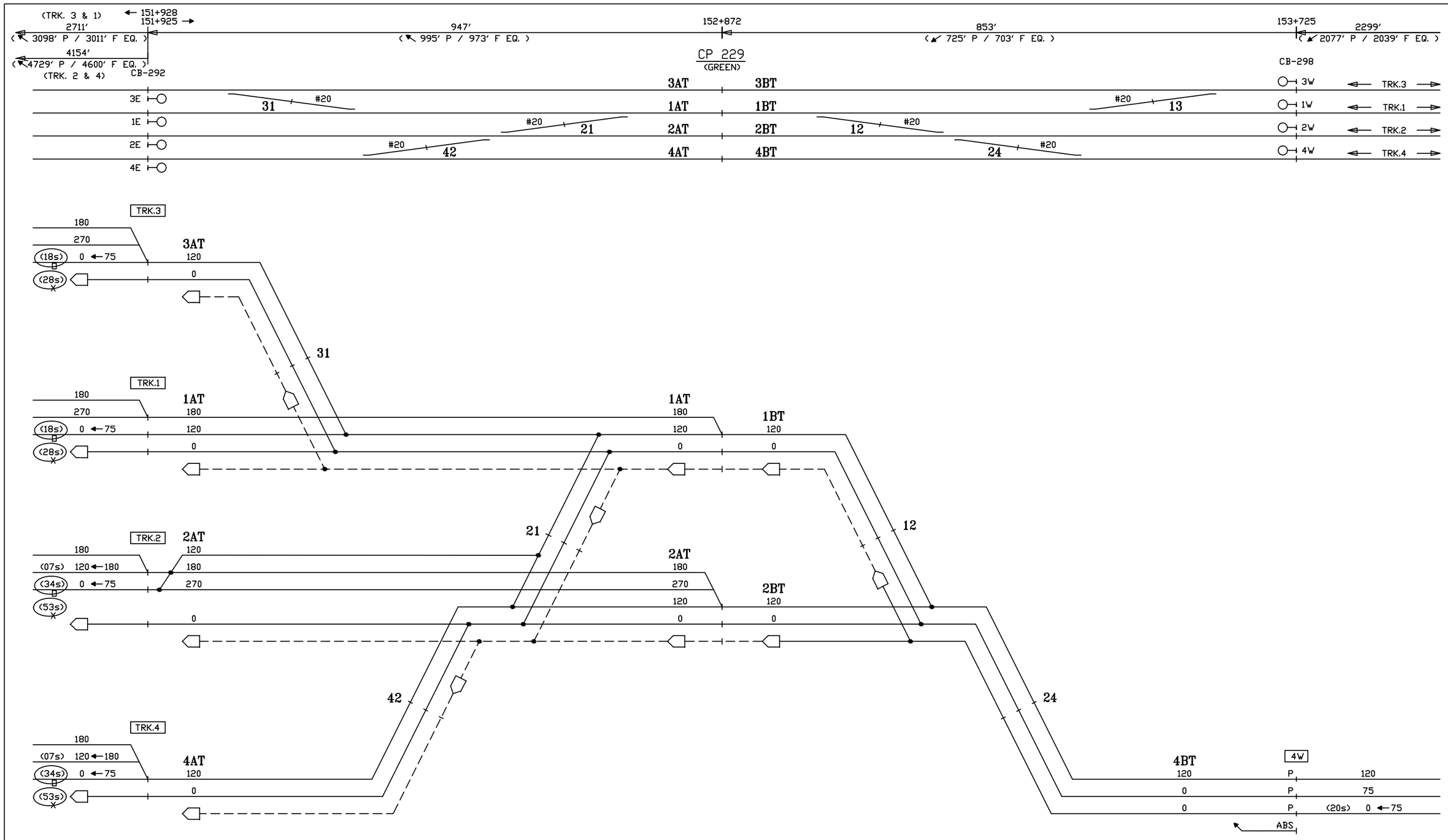

CIRCUIT ENGINEER	SR. SIGNAL ENGR.–DESIGN & STANDARDS	DIRECTOR C&S SYSTEMS	MTA Metro–North Railroad	NEW HAVEN LINE CP 229 DIVERGING ROUTES – TRACK 4 WEST	ISSUE DATE: / REV. / /users/signal/RTG RTG–NHL1 SHEET 37X NHL1 L1037X

Gannett Fleming/CWA

CONTRACT #	PROJECT SHEET #
1000027511	0065

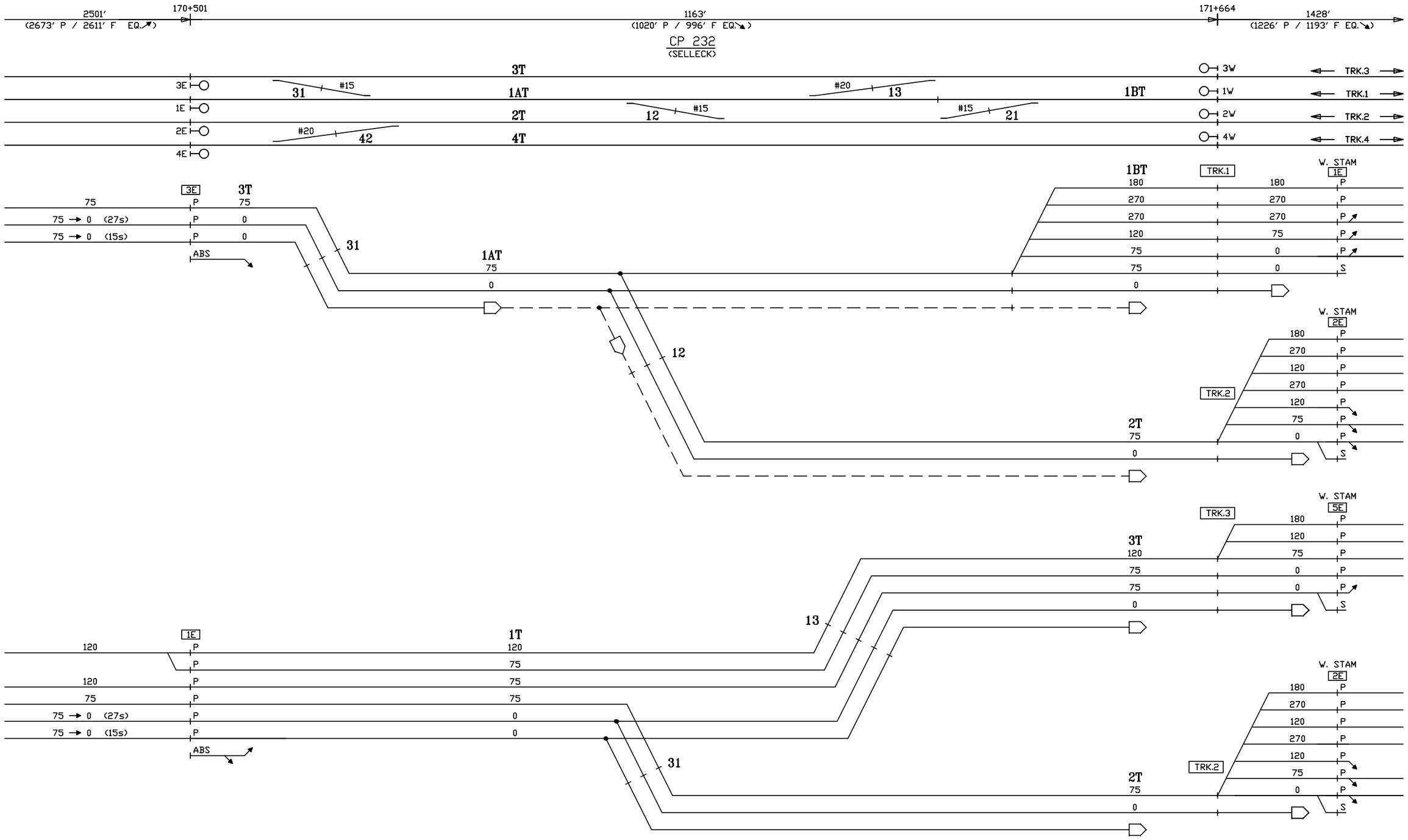

CIRCUIT ENGINEER	SR. SIGNAL ENGR.–DESIGN & STANDARDS	DIRECTOR C&S SYSTEMS	MTA Metro–North Railroad	NEW HAVEN LINE CP 232 DIVERGING ROUTES – TRACKS 3 & 1 EAST	ISSUE DATE:	RTG–NHL1
					REV.	SHEET 38X
					/USERS/SIGNAL/RTG	NHL1 L1038X

Gannett Fleming/CWA

CONTRACT #	PROJECT SHEET #
1000027511	0066

2501′ (2673′ P / 2611′ F EQ.↗)

170+501

1163′ (1020′ P / 996′ F EQ.↘)

171+664

1428′ (1226′ P / 1193′ F EQ.↘)

CP 232
(SELLECK)

3T
1AT
2T
4T

3E
1E
2E
4E

31 #15
12 #15
42 #20
#20 13
#15 21

1BT

3W TRK.3
1W TRK.1
2W TRK.2
4W TRK.4

W. STAM
1E
TRK.1
180 P
270 P
270 P↗
75 P↗
0 P↗
0 S

1BT
75
0

21

W. STAM
1E
TRK.1
180 P
270 P
270 P↗
75 P↗
0 P↗
0 S

1BT
75
0

21

W. STAM
2E
TRK.2
180 P
270 P
120 P
270 P
120 P↘
75 P↘
0 P↘
S

2T
120
75
75
0

2T
120
75

42

2E
75 P 75
75 → 0 (27s) P 0
75 → 0 (21s) P 0
ABS

4E 4T
120 P 120
P 75
75 P 75
75 → 0 (27s) P 0
75 → 0 (21s) P 0
ABS

CIRCUIT ENGINEER	SR. SIGNAL ENGR.–DESIGN & STANDARDS	DIRECTOR C&S SYSTEMS	MTA Metro–North Railroad	NEW HAVEN LINE CP 232 DIVERGING ROUTES – TRACKS 2 & 4 EAST	ISSUE DATE: / REV. / /USERS/SIGNAL/RTG	RTG–NHL1 SHEET 39X NHL1 L1039X

Gannett Fleming/CWA

CONTRACT # 1000027511

PROJECT SHEET # 0067

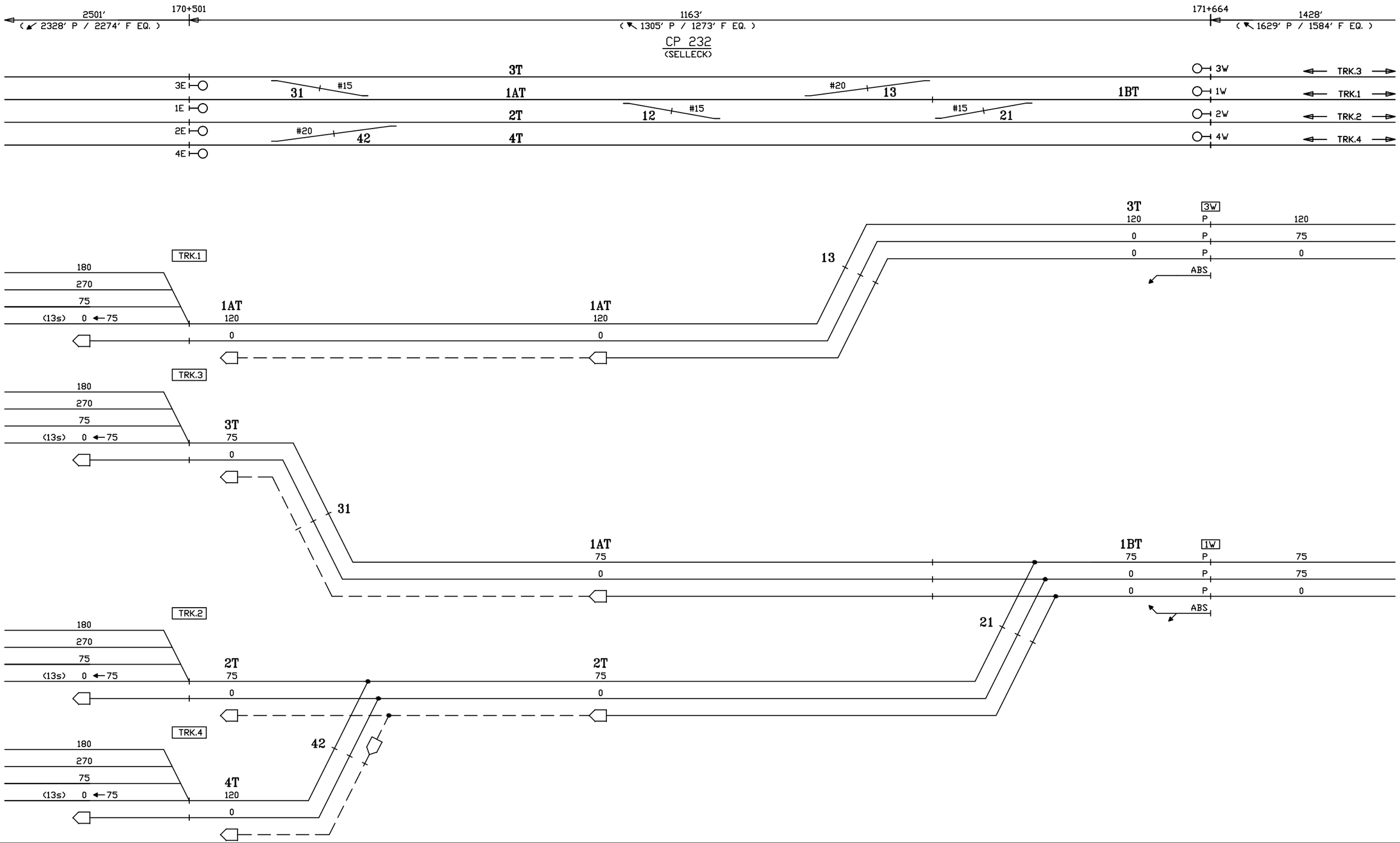

CIRCUIT ENGINEER	SR. SIGNAL ENGR.–DESIGN & STANDARDS	DIRECTOR C&S SYSTEMS	MTA Metro–North Railroad	NEW HAVEN LINE CP 232 DIVERGING ROUTES – TRACKS 3 & 1 WEST	ISSUE DATE: / REV. / /USERS/SIGNAL/RTG	RTG–NHL1 SHEET 40X NHL1 L1040X

Gannett Fleming/CWA

CONTRACT #	PROJECT SHEET #
1000027511	0068

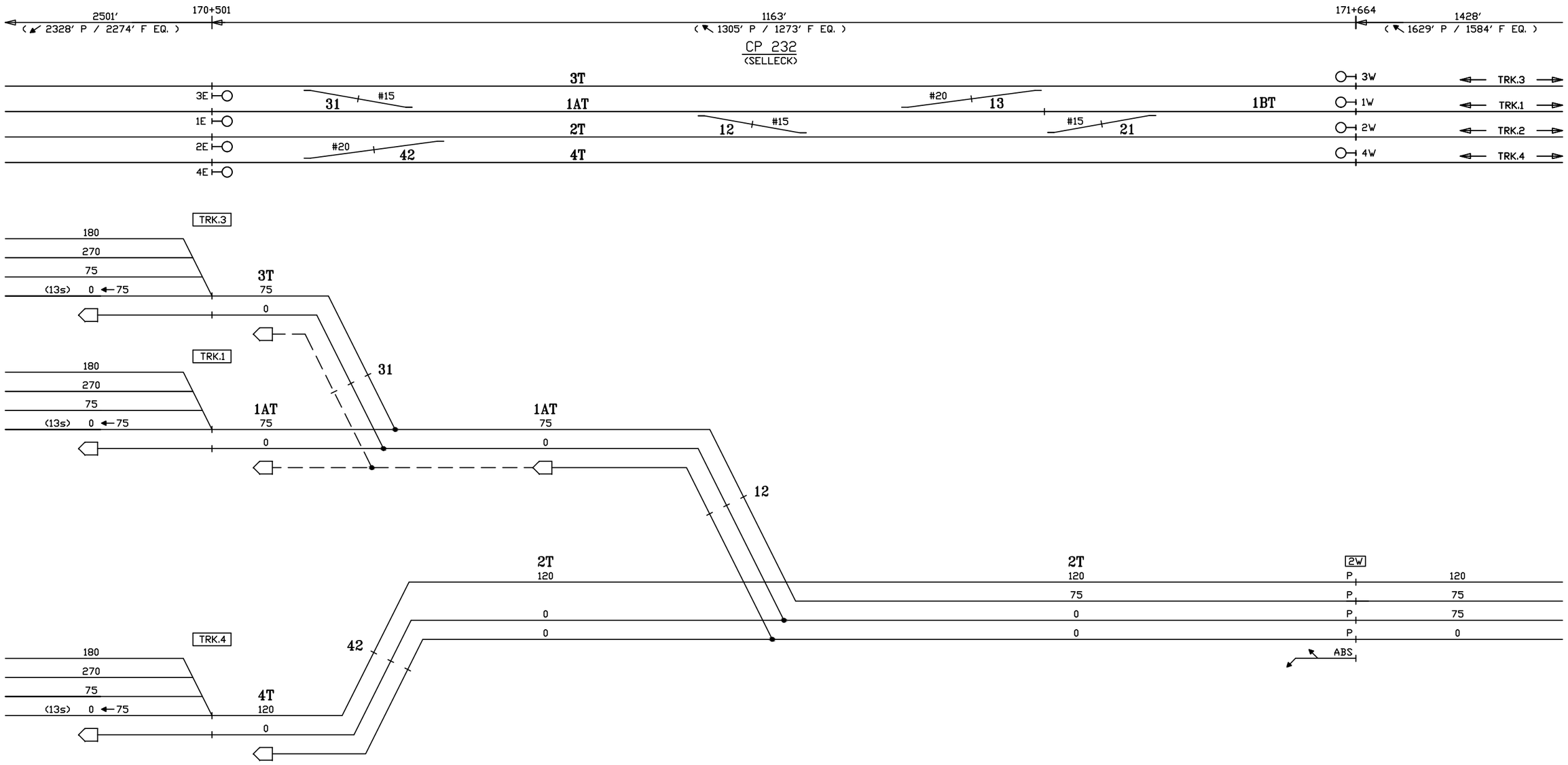

CIRCUIT ENGINEER	SR. SIGNAL ENGR.–DESIGN & STANDARDS	DIRECTOR C&S SYSTEMS	MTA Metro–North Railroad	NEW HAVEN LINE CP 232 DIVERGING ROUTES – TRACK 2 WEST	ISSUE DATE:	RTG–NHL1
					REV.	SHEET 41X
					/USERS/SIGNAL/RTG	NHL1 L1041X

Gannett Fleming/CWA

CONTRACT #	PROJECT SHEET #
1000027511	0069

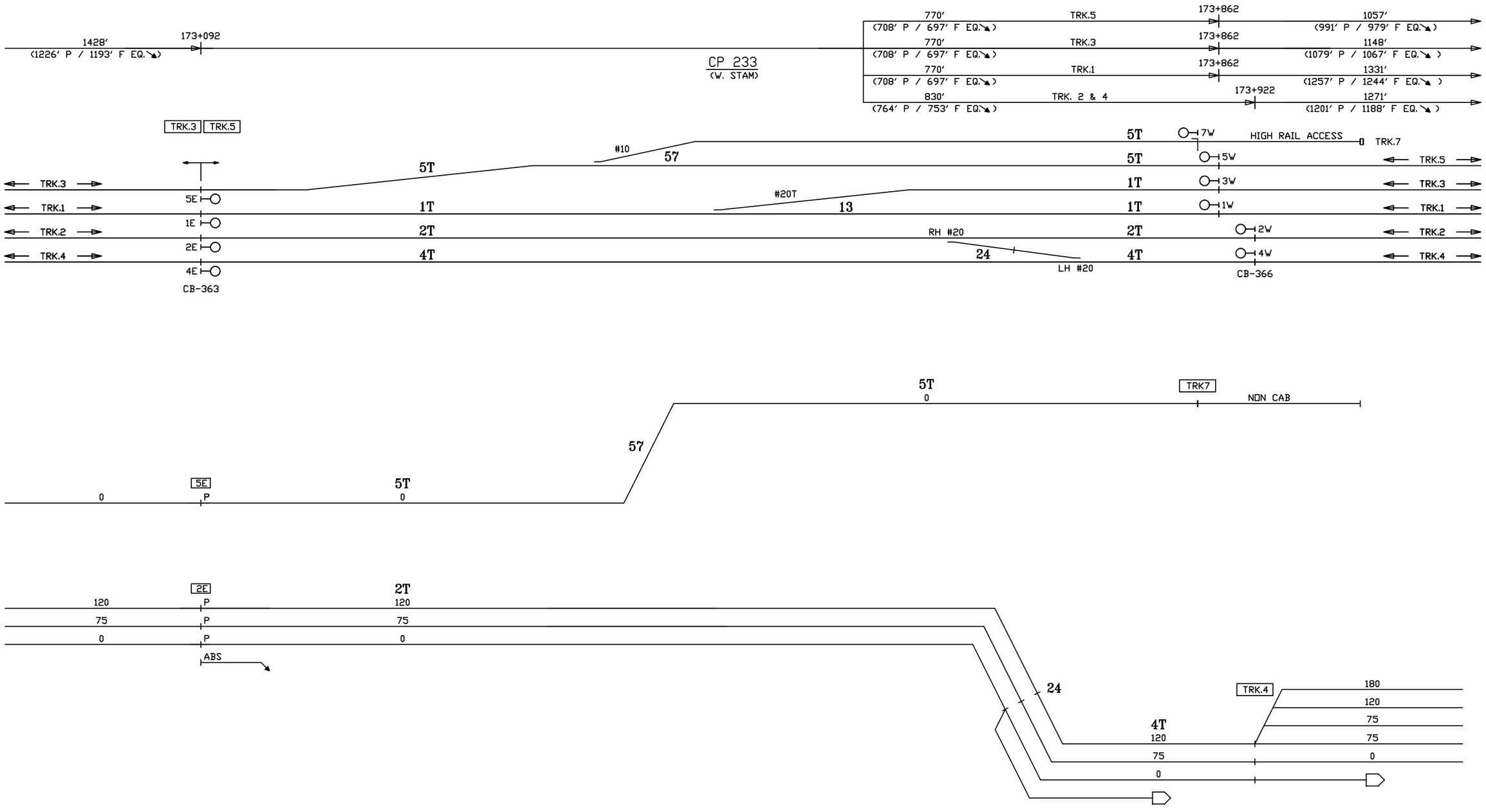

CIRCUIT ENGINEER	SR. SIGNAL ENGR.–DESIGN & STANDARDS	DIRECTOR C&S SYSTEMS	MTA Metro–North Railroad	NEW HAVEN LINE CP 233 DIVERGING ROUTES – TRACKS 5 & 2 EAST	ISSUE DATE:	RTG–NHL1
					NHS REV.	SHEET 42X
					NHS /users/signal/RTG	NHL1 L1042X

Gannett Fleming/CWA

CONTRACT #	PROJECT SHEET #
1000027511	0070

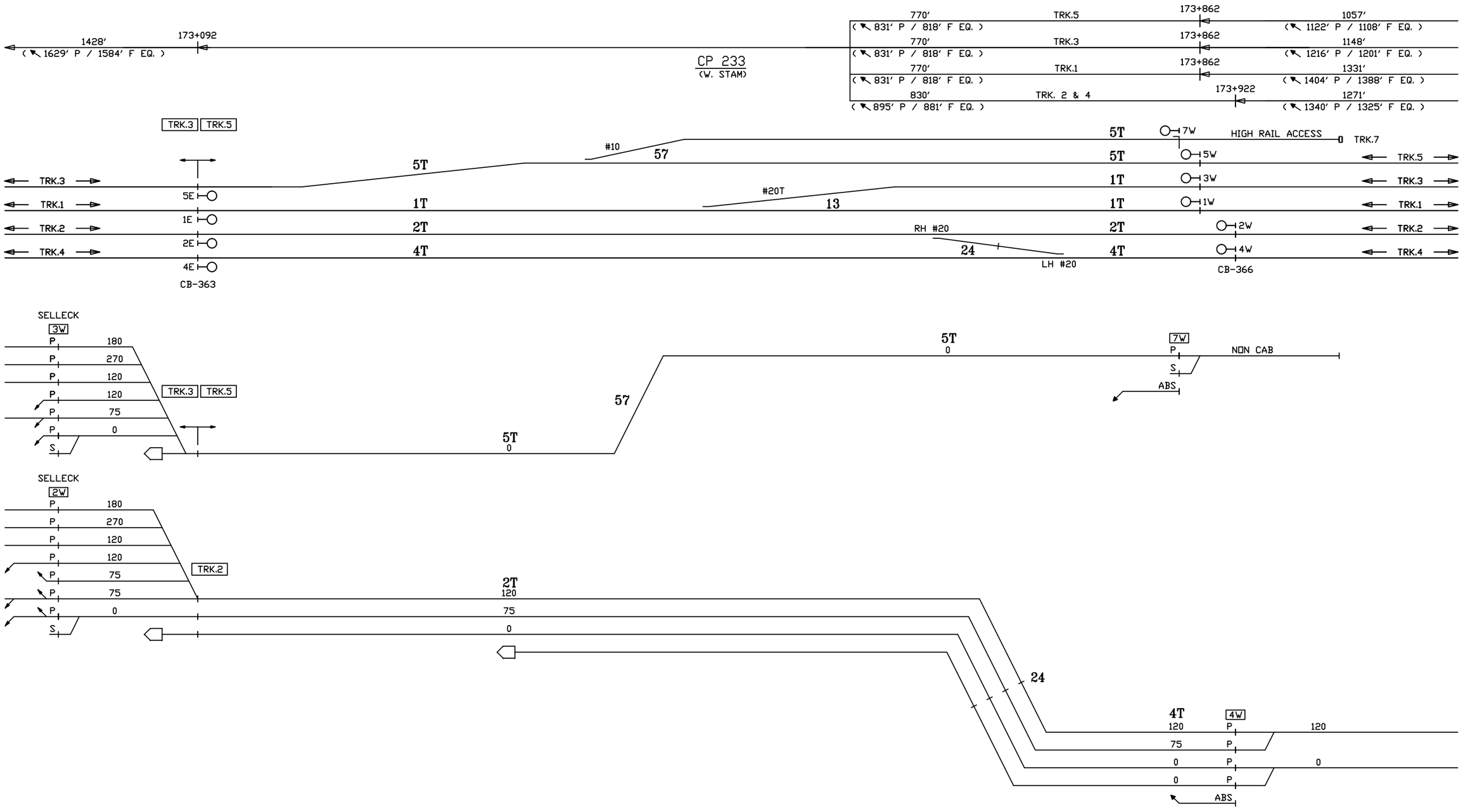

SEE SH. 10W FOR 3W TO TRACK 1 ROUTINGS

CIRCUIT ENGINEER	SR. SIGNAL ENGR.–DESIGN & STANDARDS	DIRECTOR C&S SYSTEMS	MTA Metro–North Railroad	NEW HAVEN LINE CP 233 DIVERGING ROUTES – TRACKS 7 & 4 WEST	ISSUE DATE:	RTG–NHL1
					NHS REV.	SHEET 43X
					NHS /users/signal/RTG	NHL1 L1043X

Gannett Fleming/CWA

CONTRACT #	PROJECT SHEET #
1000027511	0071

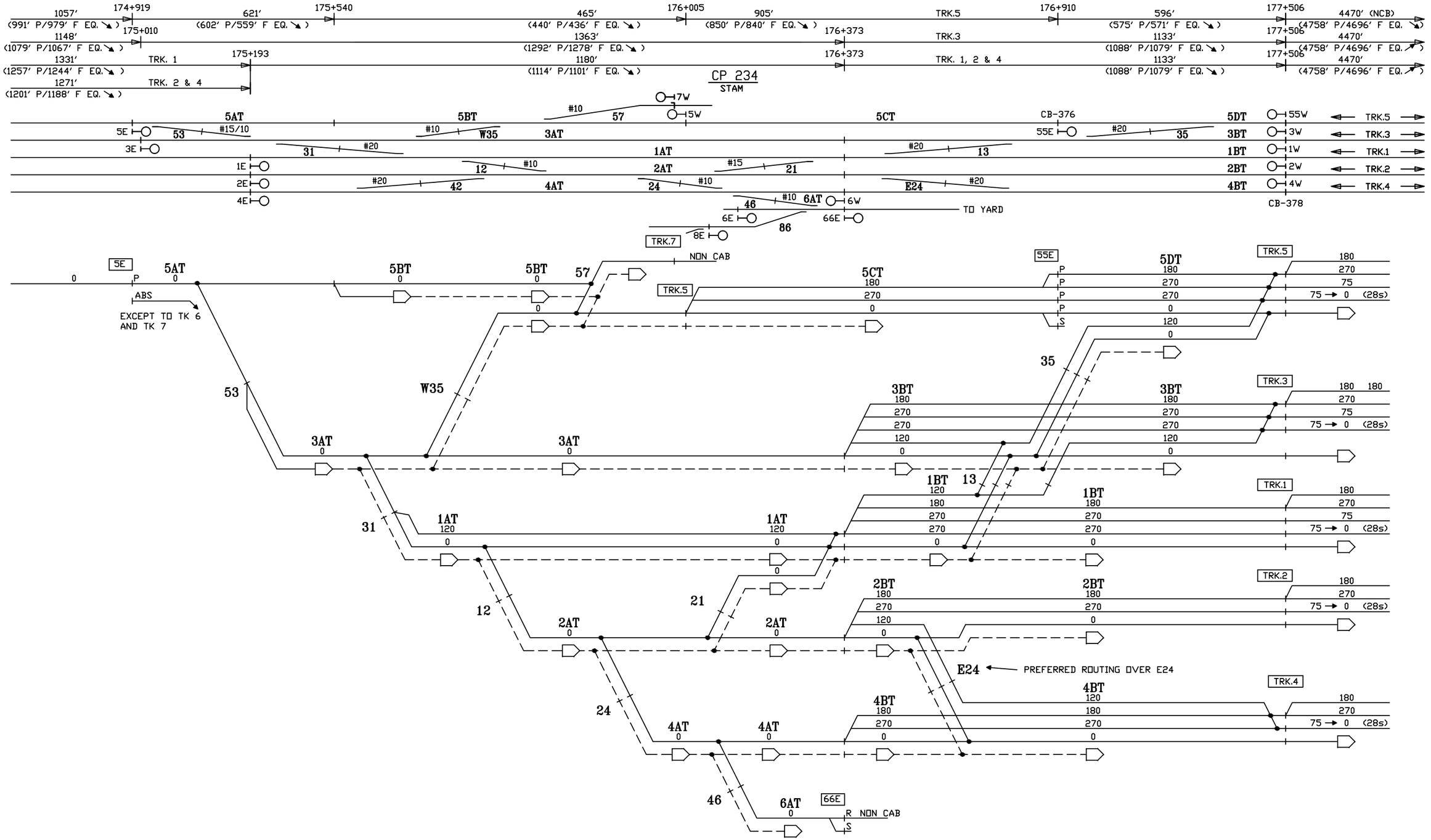

CIRCUIT ENGINEER	SR. SIGNAL ENGR.–DESIGN & STANDARDS	DIRECTOR C&S SYSTEMS	Metro–North Railroad	NEW HAVEN LINE CP 234 DIVERGING ROUTES – TRACK 5 EAST	ISSUE DATE: / REV. / /users/signal/RTG RTG–NHL1 SHEET 44X NHS NHL1 L1044X

Gannett Fleming/CWA

CONTRACT # 1000027511

PROJECT SHEET # 0072

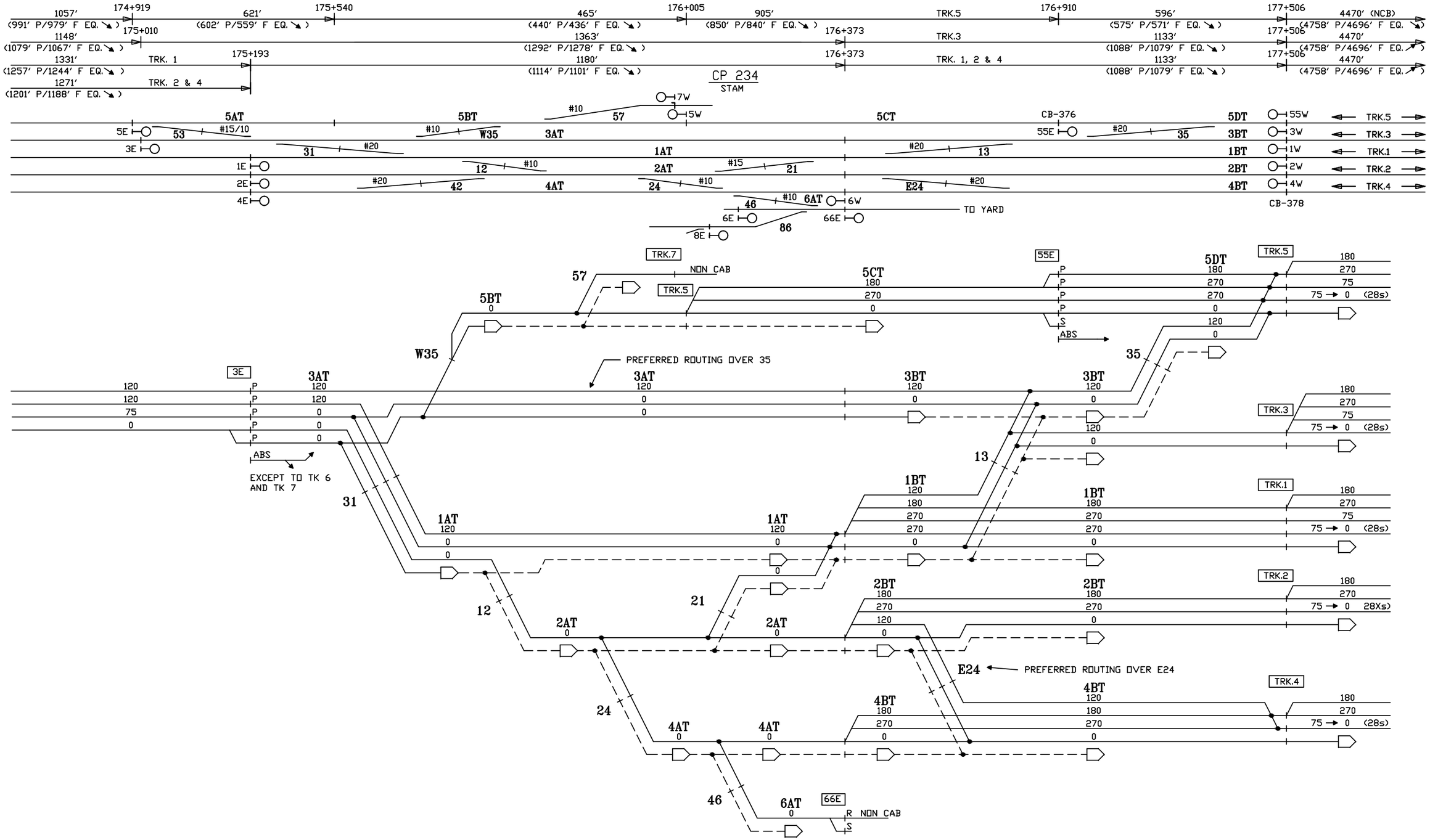

CIRCUIT ENGINEER	SR. SIGNAL ENGR.–DESIGN & STANDARDS	DIRECTOR C&S SYSTEMS	MTA Metro–North Railroad	NEW HAVEN LINE CP 234 DIVERGING ROUTES – TRACK 3 EAST	ISSUE DATE: / REV. / NHS / NHS / /users/signal/RTG RTG–NHL1 SHEET 45X NHL1 L1045X

Gannett Fleming/CWA

CONTRACT #	PROJECT SHEET #
1000027511	0073

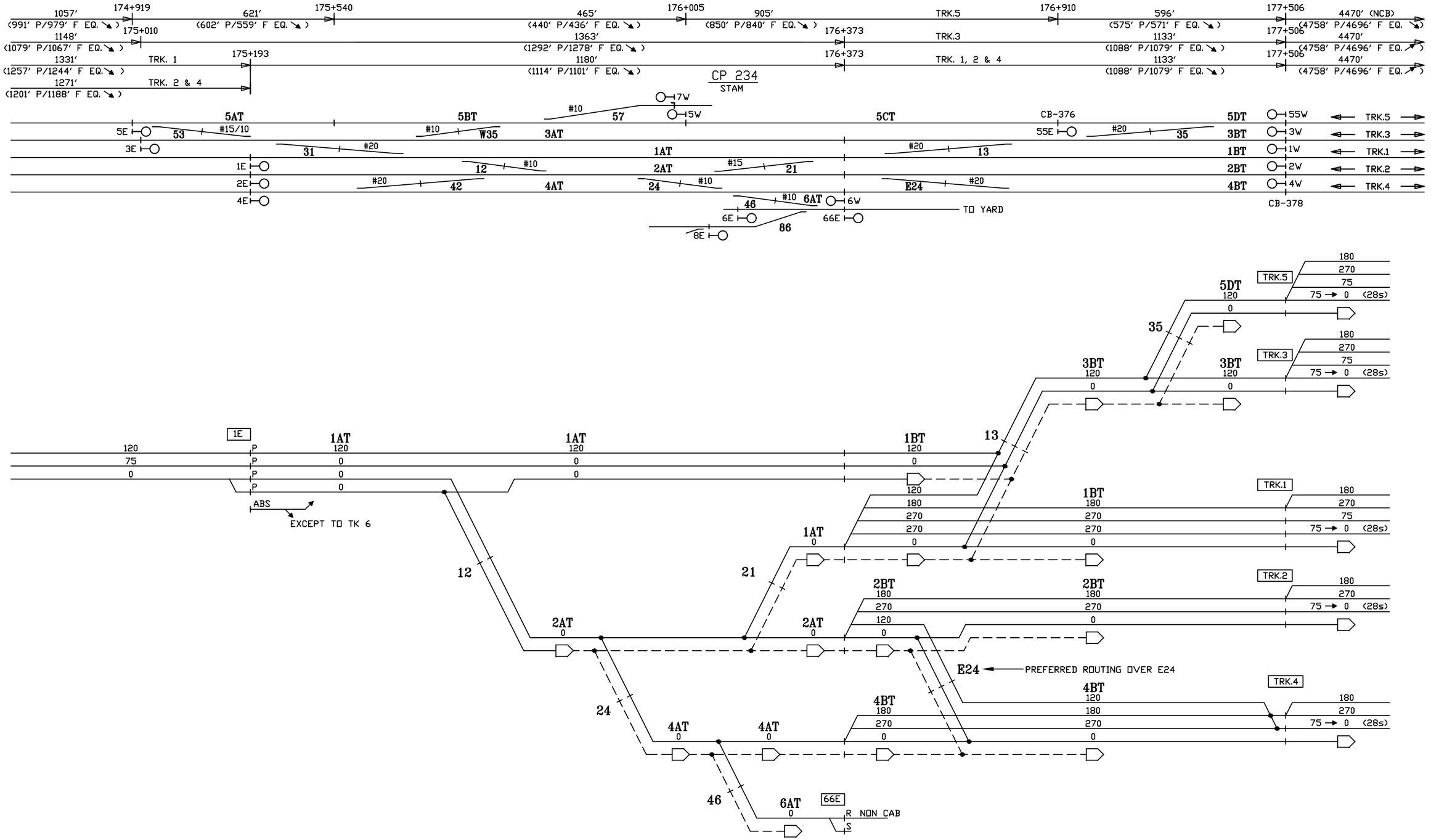

CIRCUIT ENGINEER	SR. SIGNAL ENGR.–DESIGN & STANDARDS	DIRECTOR C&S SYSTEMS	MTA Metro–North Railroad	NEW HAVEN LINE CP 234 DIVERGING ROUTES – TRACK 1 EAST	ISSUE DATE: / REV. / /users/signal/RTG RTG–NHL1 SHEET 46X NHL1 L1046X

Gannett Fleming/CWA

CONTRACT # 1000027511

PROJECT SHEET # 0074

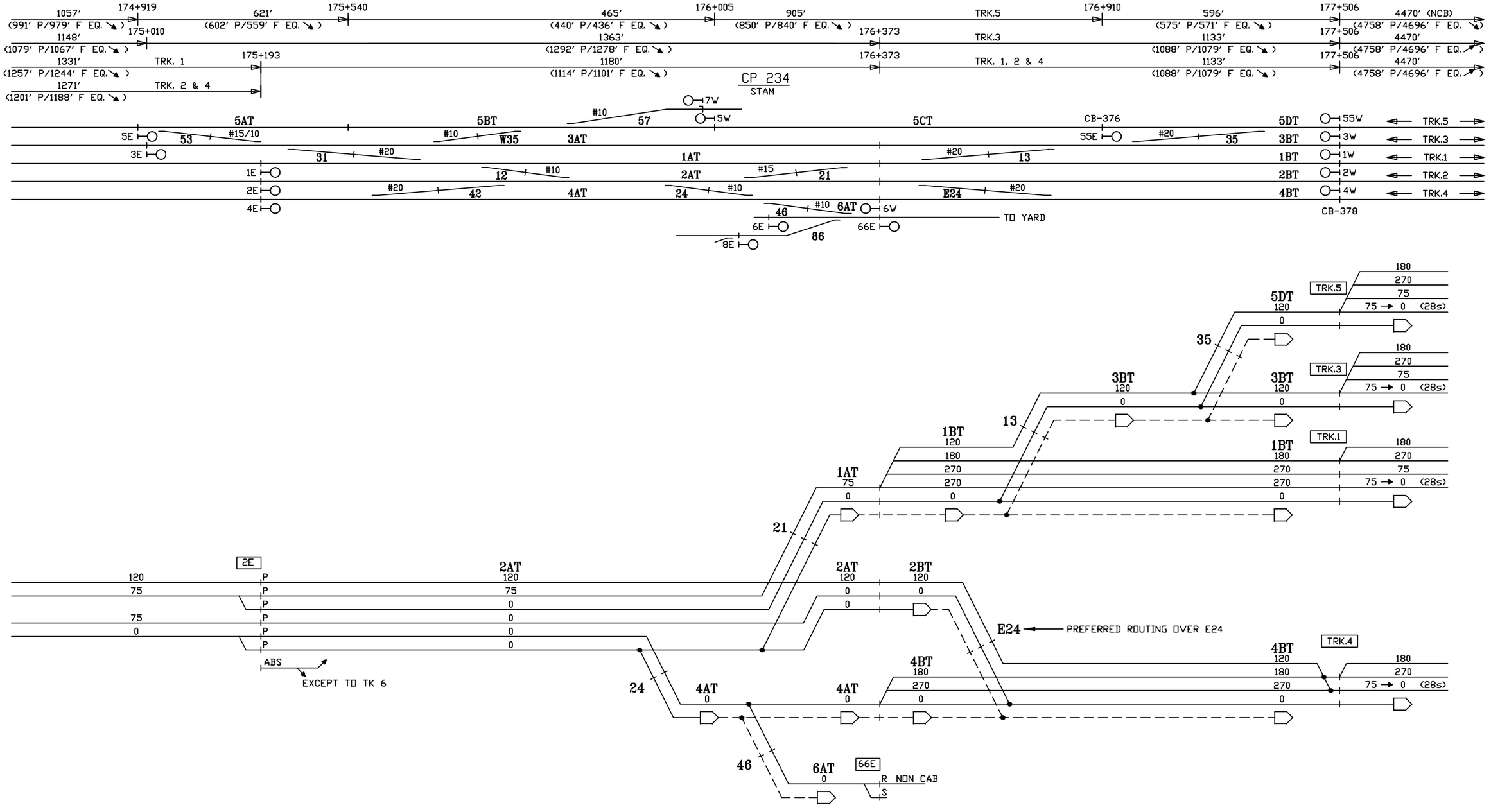

CIRCUIT ENGINEER	SR. SIGNAL ENGR.–DESIGN & STANDARDS	DIRECTOR C&S SYSTEMS	MTA Metro–North Railroad	NEW HAVEN LINE CP 234 DIVERGING ROUTES – TRACK 2 EAST	ISSUE DATE:	RTG–NHL1
					NHS REV.	SHEET 47X
					NHS /users/signal/RTG	NHL1 L1047X

Gannett Fleming/CWA

CONTRACT #	PROJECT SHEET #
1000027511	0075

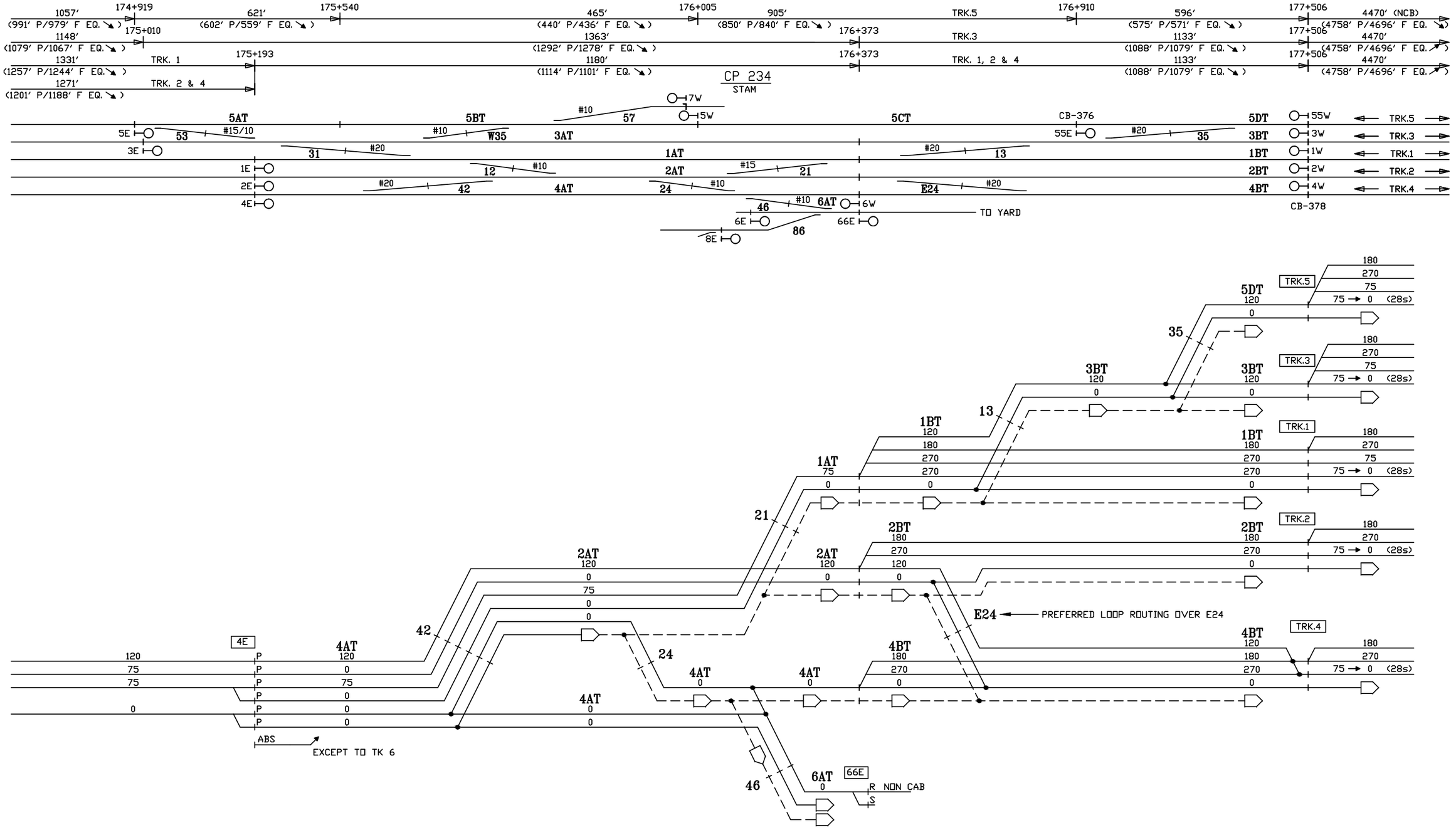

CIRCUIT ENGINEER	SR. SIGNAL ENGR.–DESIGN & STANDARDS	DIRECTOR C&S SYSTEMS	MTA Metro–North Railroad	NEW HAVEN LINE CP 234 DIVERGING ROUTES – TRACK 4 EAST	ISSUE DATE:	RTG–NHL1
					NHS REV.	SHEET 48X
					NHS /users/signal/RTG	NHL1 L1048X

Gannett Fleming/CWA

CONTRACT #	PROJECT SHEET #
1000027511	0076

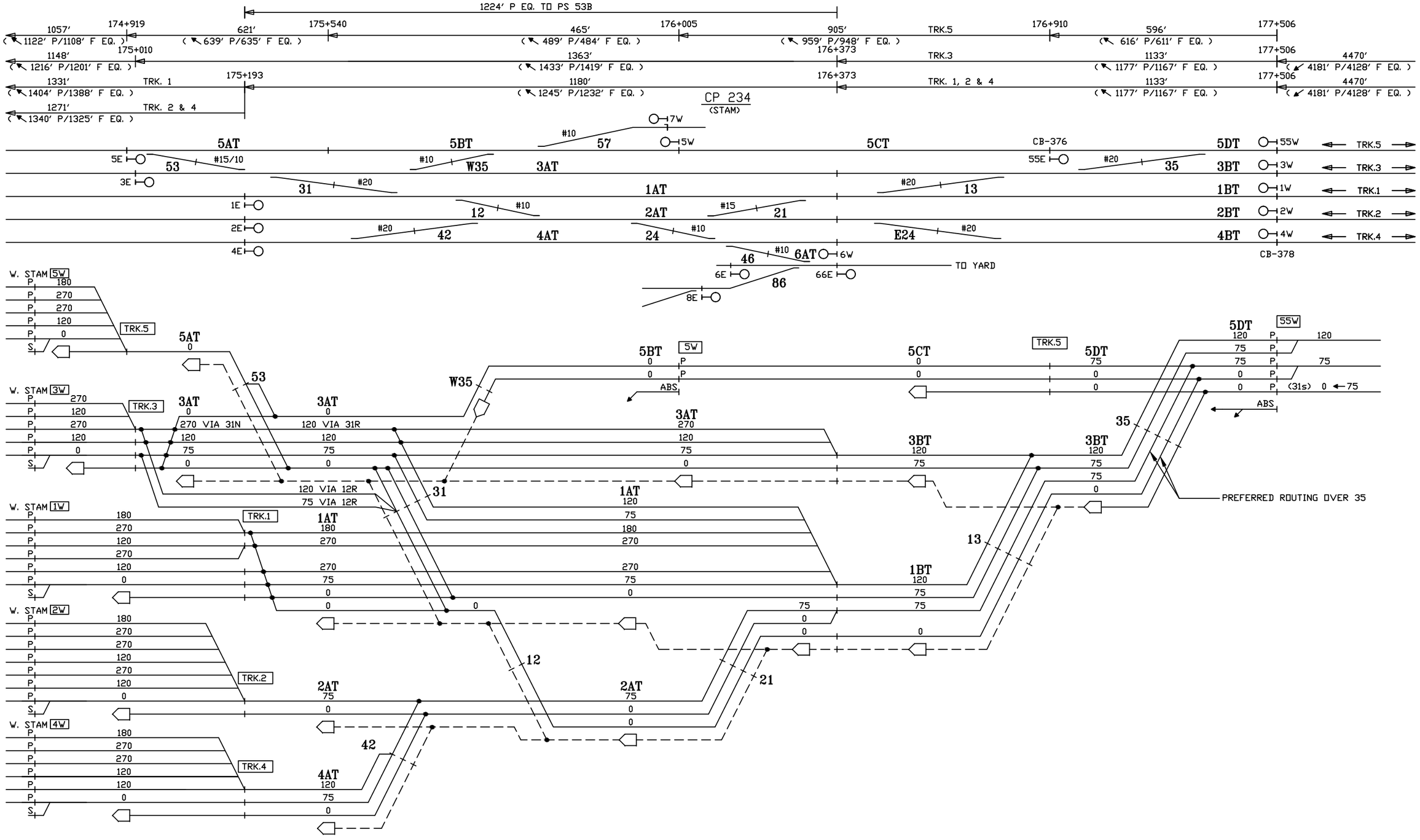

CIRCUIT ENGINEER	SR. SIGNAL ENGR.–DESIGN & STANDARDS	DIRECTOR C&S SYSTEMS	MTA Metro–North Railroad	NEW HAVEN LINE CP 234 DIVERGING ROUTES – TRACK 5 WEST	ISSUE DATE: / REV. / NHS NHS /users/signal/RTG RTG–NHL1 SHEET 49X NHL1 L1049X

Gannett Fleming/CWA

CONTRACT # 1000027511

PROJECT SHEET # 0077

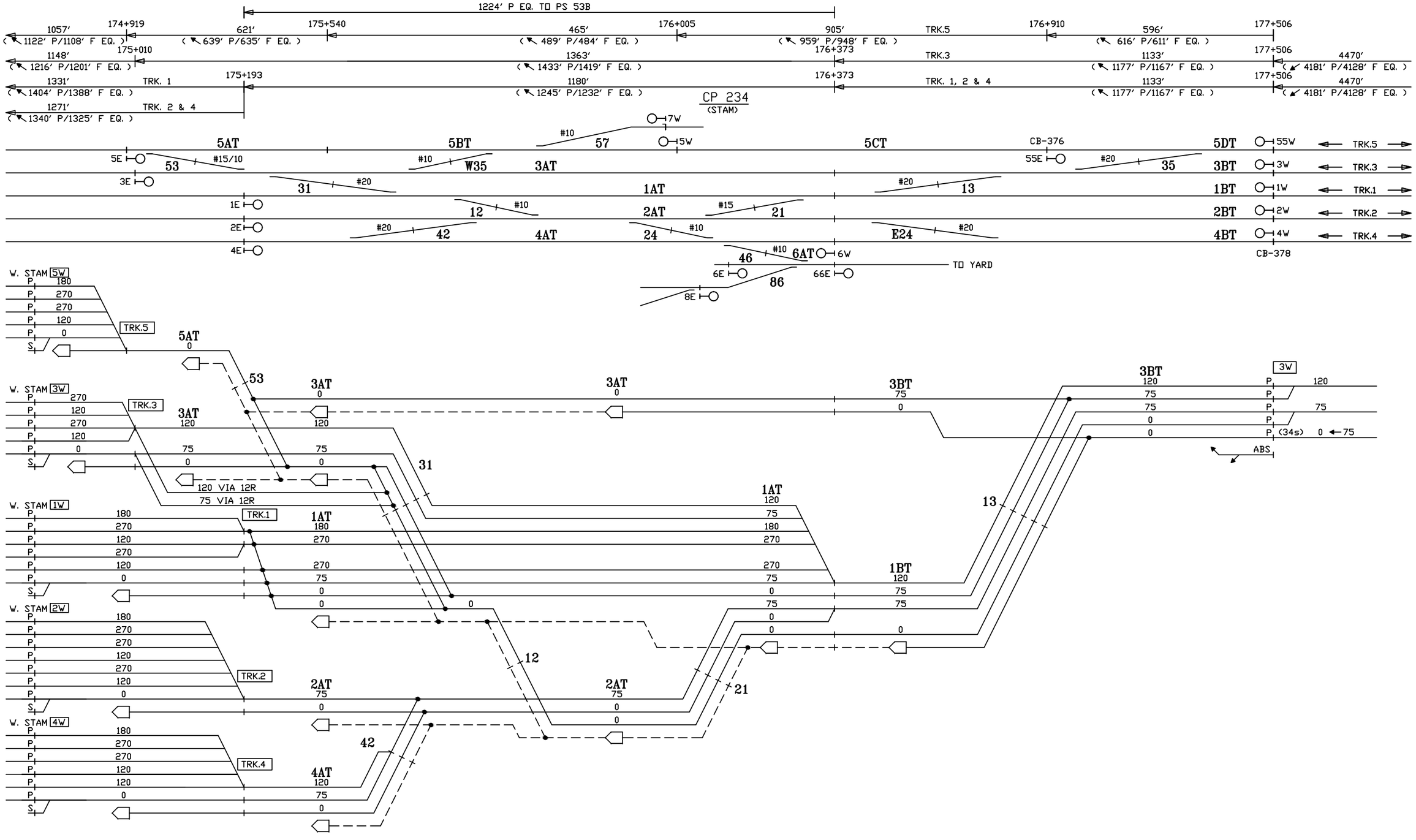

CIRCUIT ENGINEER	SR. SIGNAL ENGR.–DESIGN & STANDARDS	DIRECTOR C&S SYSTEMS	MTA Metro–North Railroad	NEW HAVEN LINE CP 234 DIVERGING ROUTES – TRACK 3 WEST	ISSUE DATE: / RTG–NHL1 NHS REV. / SHEET 50X NHS /users/signal/RTG / NHL1 / L1050X

Gannett Fleming/CWA

CONTRACT #	PROJECT SHEET #
1000027511	0078

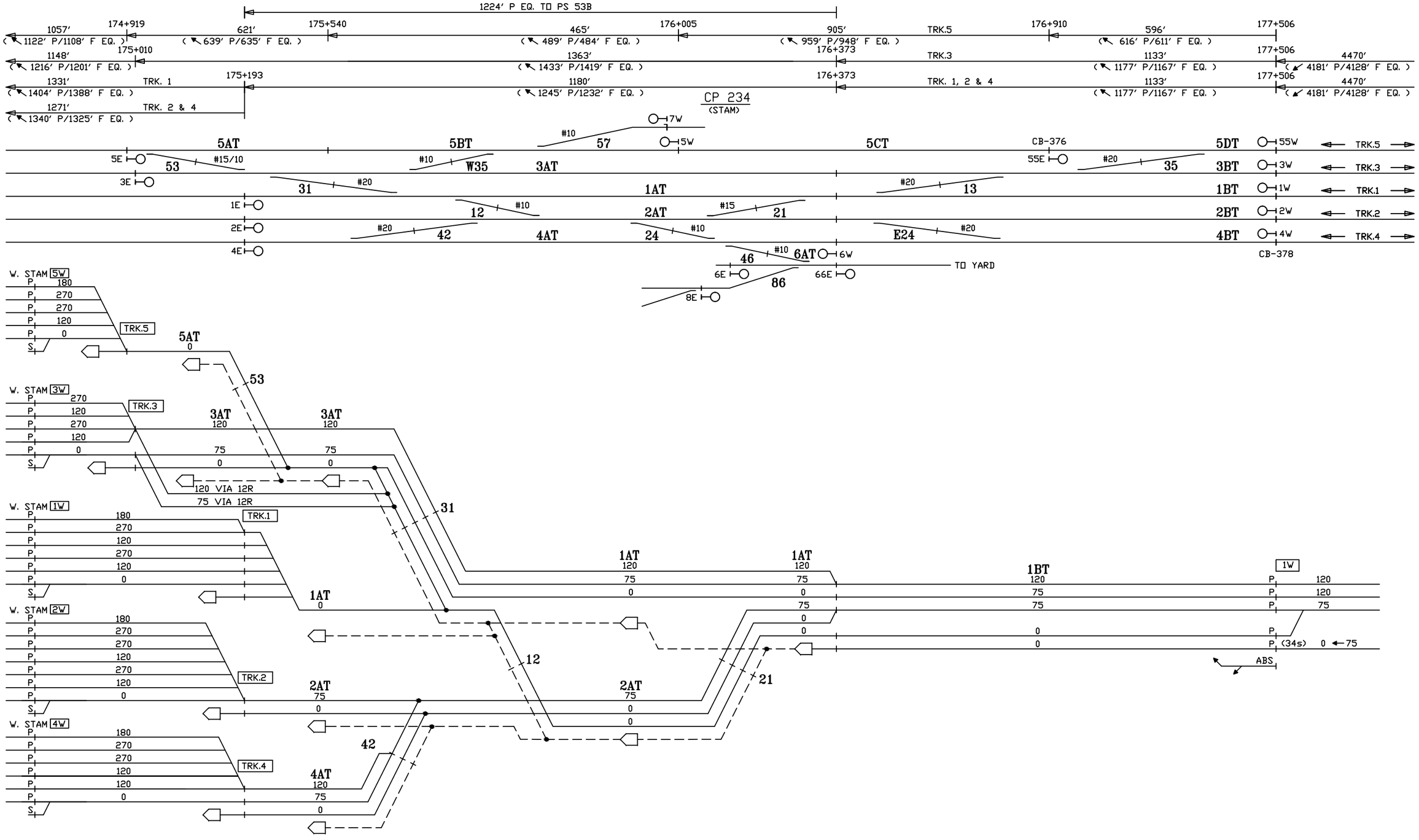

CIRCUIT ENGINEER	SR. SIGNAL ENGR.–DESIGN & STANDARDS	DIRECTOR C&S SYSTEMS	MTA Metro–North Railroad	NEW HAVEN LINE CP 234 DIVERGING ROUTES – TRACK 1 WEST	ISSUE DATE: / RTG–NHL1 NHS REV. / SHEET 51X NHS /users/signal/RTG / NHL1 / L1051X

Gannett Fleming/CWA

CONTRACT #	PROJECT SHEET #
1000027511	0079

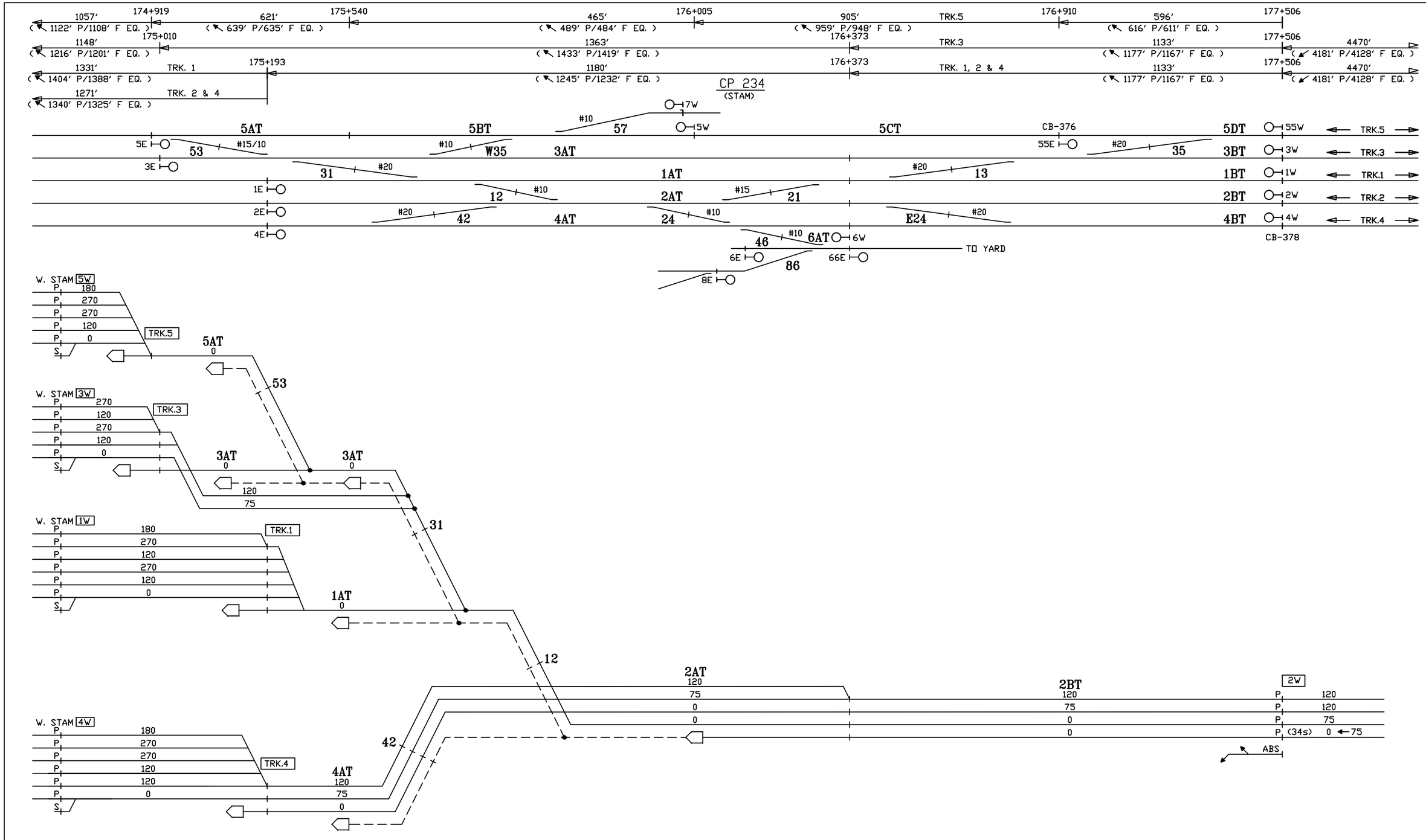

CIRCUIT ENGINEER	SR. SIGNAL ENGR.–DESIGN & STANDARDS	DIRECTOR C&S SYSTEMS	MTA Metro–North Railroad	NEW HAVEN LINE CP 234 DIVERGING ROUTES – TRACK 2 WEST	ISSUE DATE: / RTG–NHL1 NHS REV. / SHEET 52X NHS /users/signal/RTG / NHL1 / L1052X

Gannett Fleming/CWA

CONTRACT #	PROJECT SHEET #
1000027511	0080

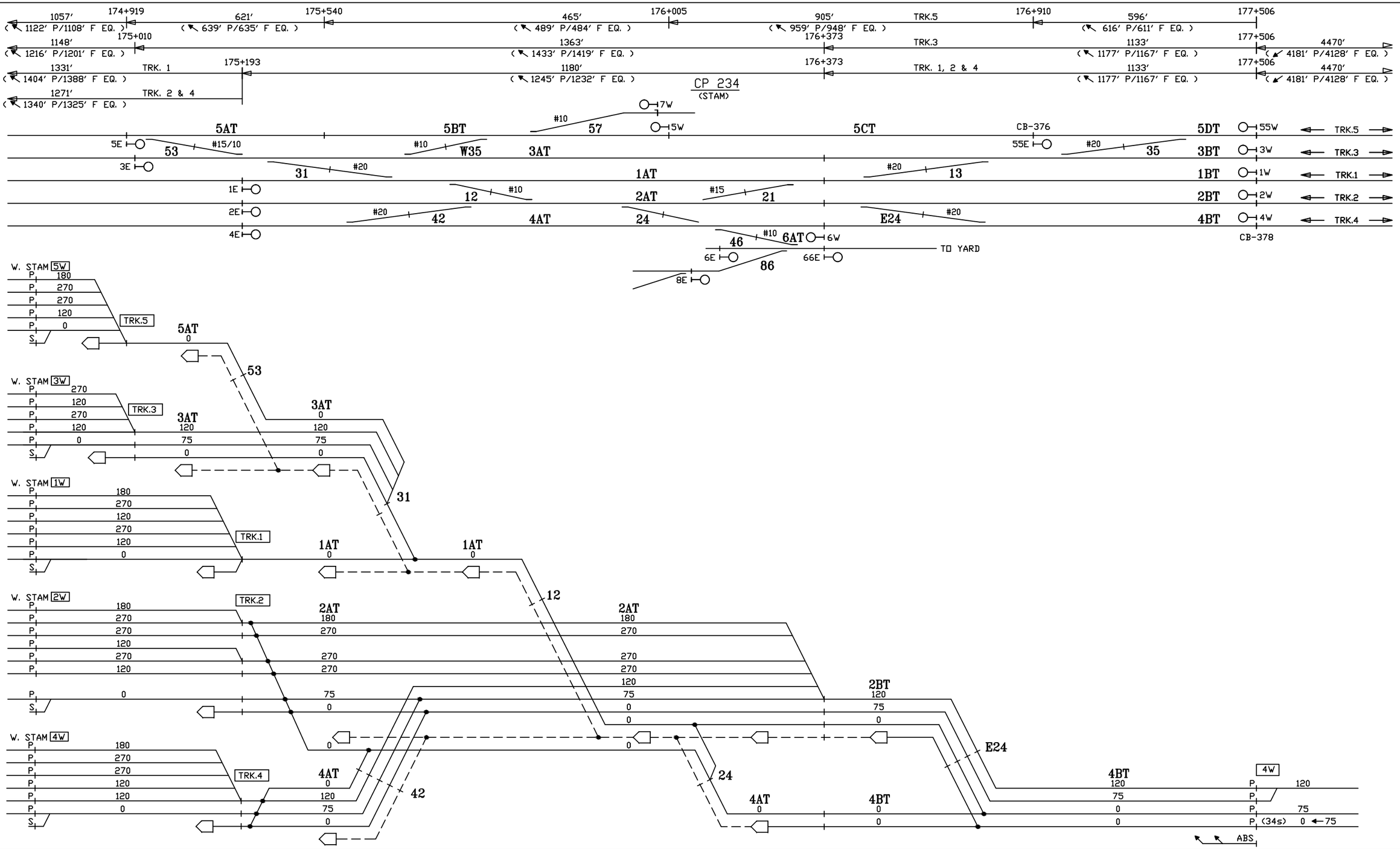

CIRCUIT ENGINEER	SR. SIGNAL ENGR.–DESIGN & STANDARDS	DIRECTOR C&S SYSTEMS	MTA Metro–North Railroad	NEW HAVEN LINE CP 234 DIVERGING ROUTES – TRACK 4 WEST	ISSUE DATE: RTG–NHL1 NHS REV. SHEET 53X NHS /users/signal/RTG NHL1 L1053X

Gannett Fleming/CWA

CONTRACT #	PROJECT SHEET #
1000027511	0081

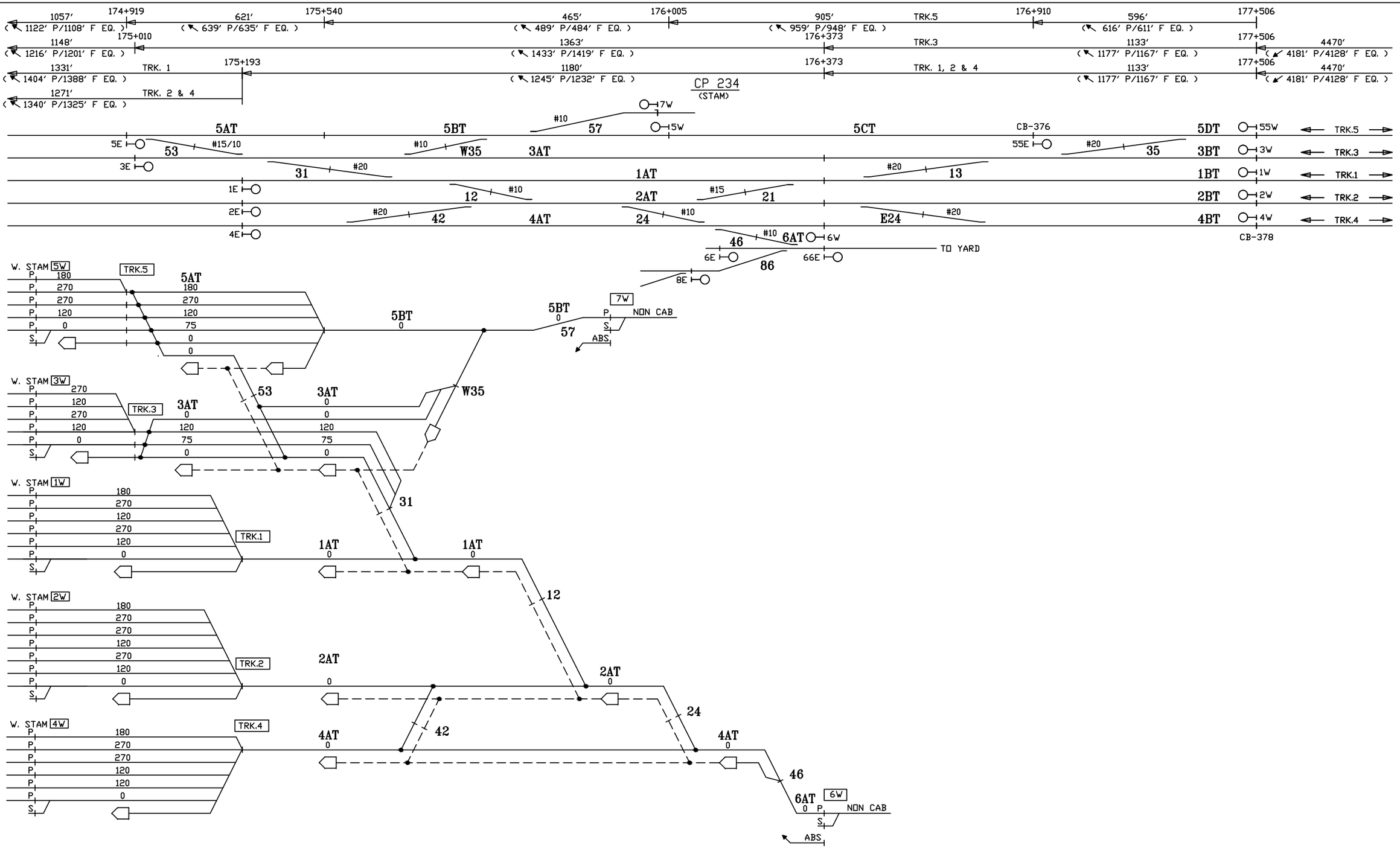

CIRCUIT ENGINEER	SR. SIGNAL ENGR.–DESIGN & STANDARDS	DIRECTOR C&S SYSTEMS	MTA Metro–North Railroad	NEW HAVEN LINE CP 234 DIVERGING ROUTES – TRACKS 6 & 7 WEST	ISSUE DATE: / RTG–NHL1 NHS REV. / SHEET 54X NHS /users/signal/RTG / NHL1 / L1054X

Gannett Fleming/CWA

CONTRACT #	PROJECT SHEET #
1000027511	0082

CP 234 (STAM)
STAMFORD YARD

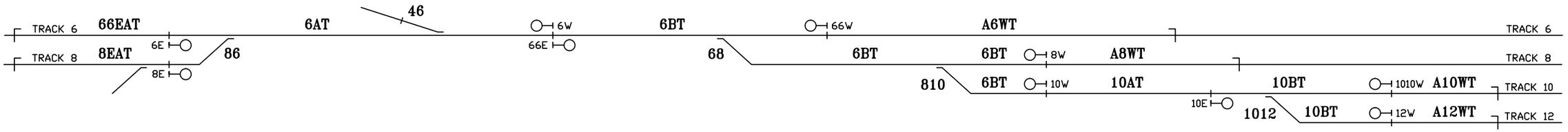

SEE SH. 54X FOR DIVERGING ROUTES

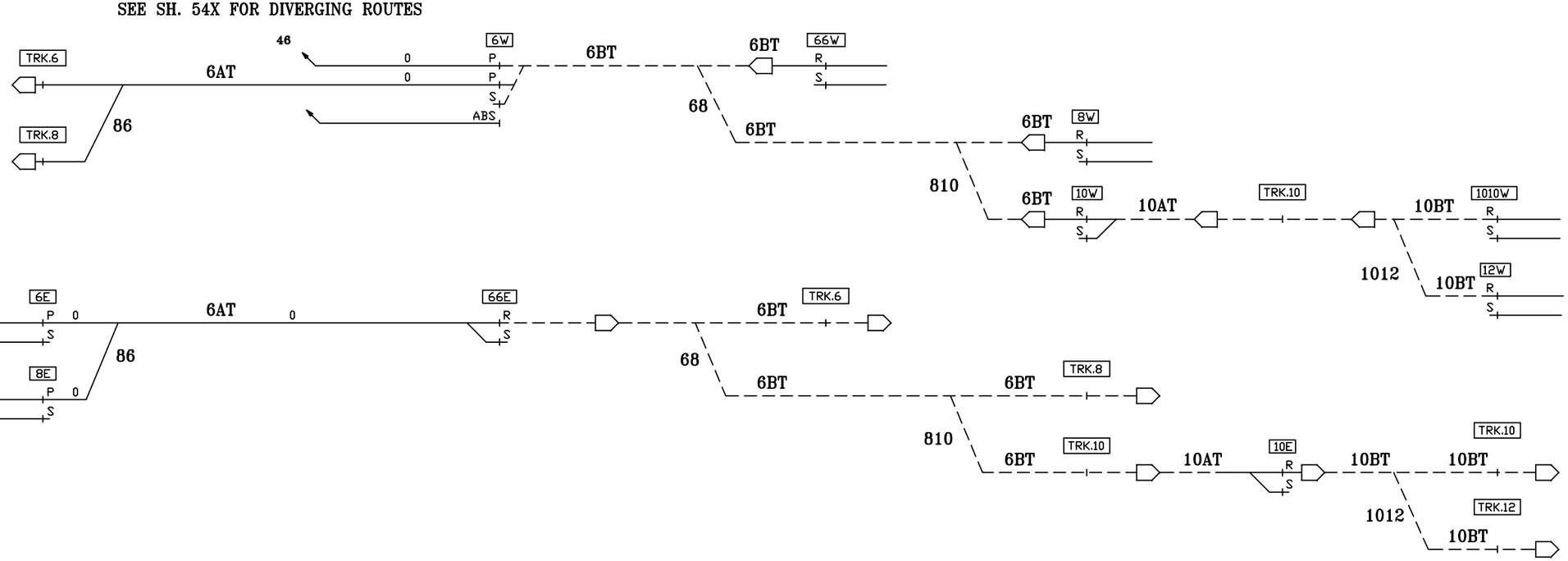

NOTES:
P - PROCEED CAB
R - RESTRICTING
S - STOP

CIRCUIT ENGINEER	SR. SIGNAL ENGR.–DESIGN & STANDARDS	DIRECTOR C&S SYSTEMS	MTA Metro–North Railroad	NEW HAVEN LINE CP 234 STAMFORD YARD ROUTINGS	ISSUE DATE: / REV. / NHS / NHS / /users/signal/RTG RTG–NHL1 SHEET 55X NHL1 L1055X

Gannett Fleming/CWA

CONTRACT #	PROJECT SHEET #
1000027511	0083

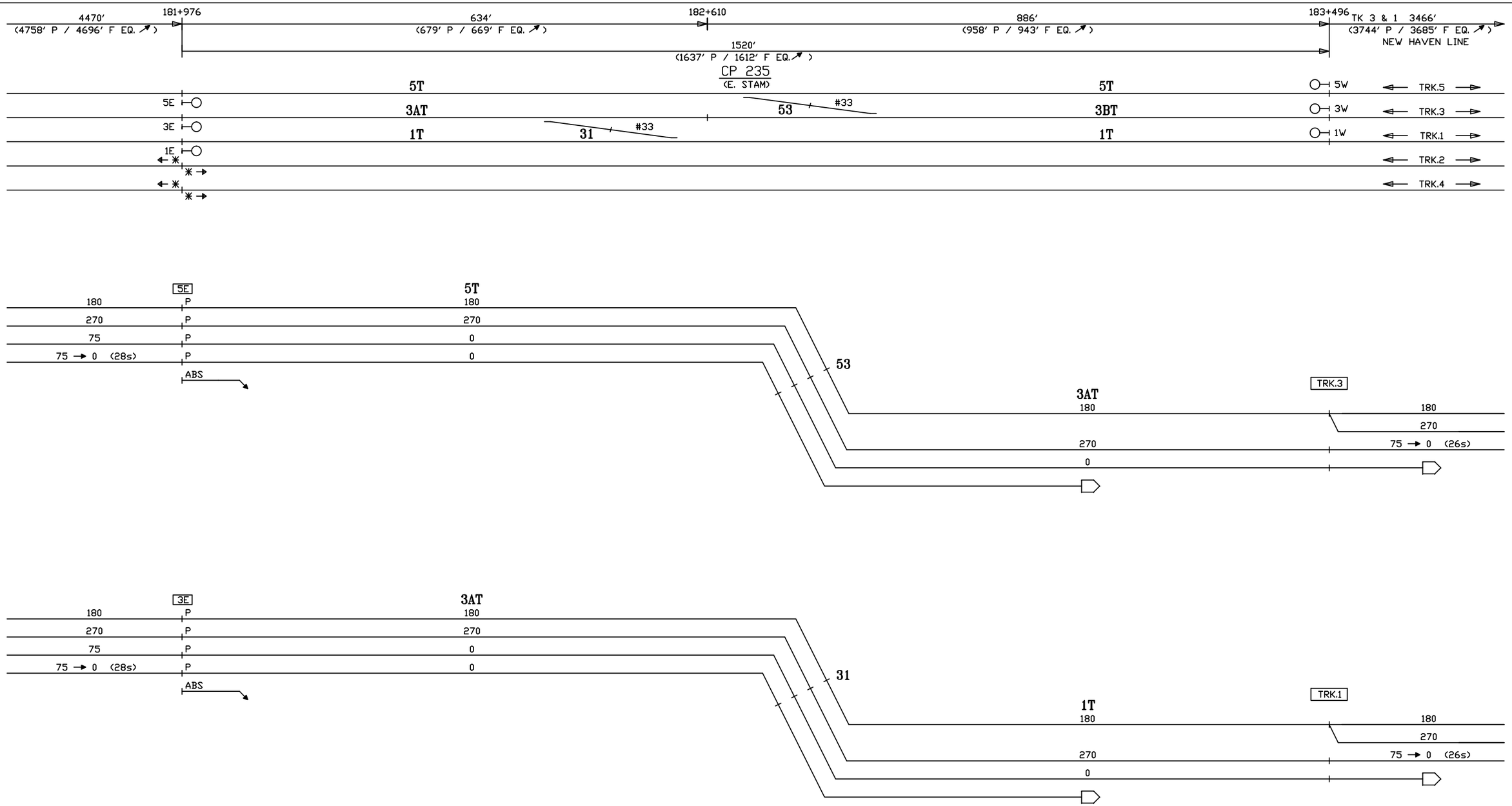

CIRCUIT ENGINEER	SR. SIGNAL ENGR.–DESIGN & STANDARDS	DIRECTOR C&S SYSTEMS	MTA Metro–North Railroad	NEW HAVEN LINE CP 235 DIVERGING ROUTES – TRACKS 5 & 3 EAST	ISSUE DATE:	RTG–NHL1
					NHS REV.	SHEET 56X
					NHS /users/signal/RTG	NHL1 L1056X

Gannett Fleming/CWA

CONTRACT #	PROJECT SHEET #
1000027511	0084

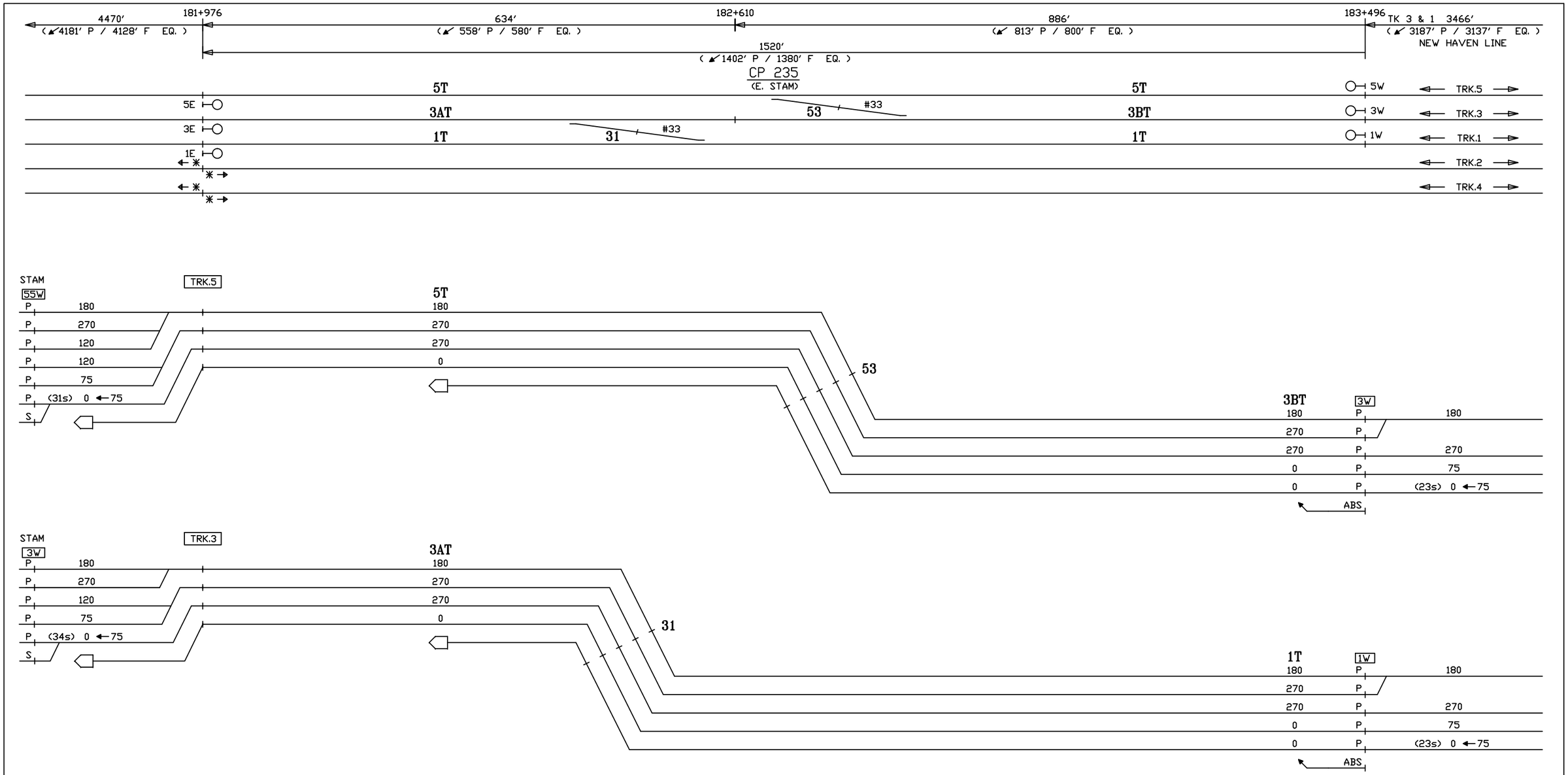

CIRCUIT ENGINEER	SR. SIGNAL ENGR.–DESIGN & STANDARDS	DIRECTOR C&S SYSTEMS	MTA Metro–North Railroad	NEW HAVEN LINE CP 235 DIVERGING ROUTES – TRACKS 3 & 1 WEST	ISSUE DATE: 09–01–99 NHS REV. 10 NHS /users/signal/RTG	RTG–NHL1 SHEET 57X NHL1 L1057X

Gannett Fleming/CWA

CONTRACT #	PROJECT SHEET #
1000027511	0085

CP 240 (WEST WALK)

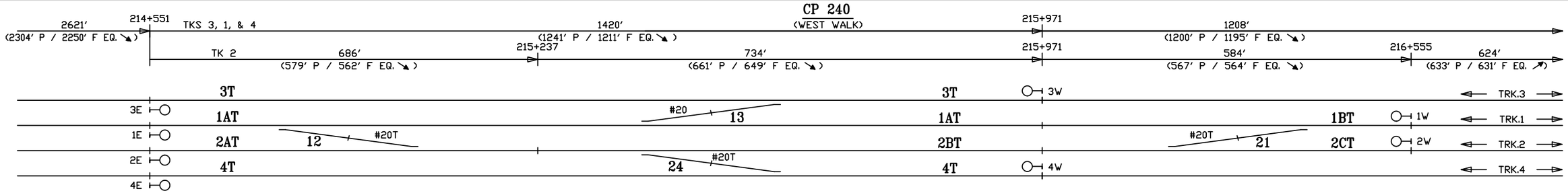

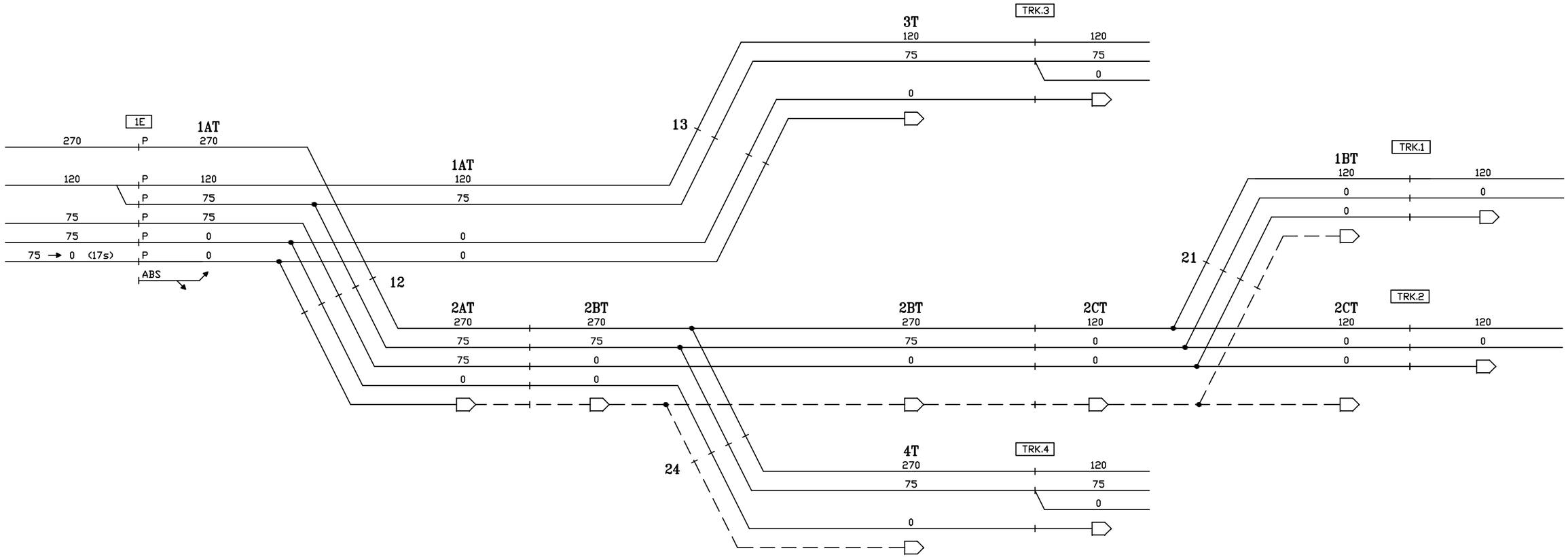

CIRCUIT ENGINEER	SR. SIGNAL ENGR.–DESIGN & STANDARDS	DIRECTOR C&S SYSTEMS	MTA Metro–North Railroad	NEW HAVEN LINE CP 240 DIVERGING ROUTES – TRACK 1 EAST	ISSUE DATE: / RTG–NHL1 NHS REV. / SHEET 58X NHS \users\signal\RTG / NHL1 L1058X

Gannett Fleming/CWA

CONTRACT #	PROJECT SHEET #
1000027511	0086

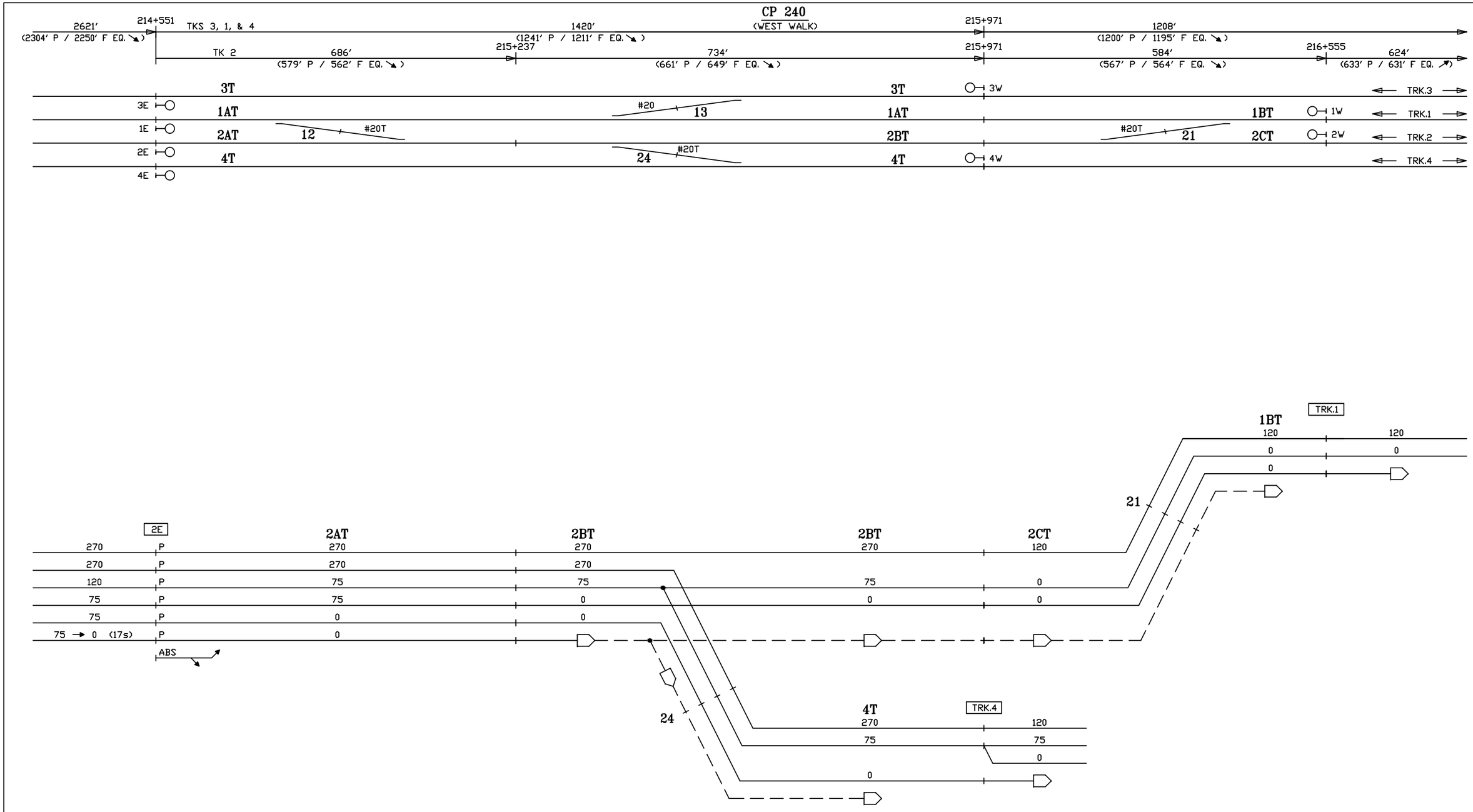

CIRCUIT ENGINEER	SR. SIGNAL ENGR.–DESIGN & STANDARDS	DIRECTOR C&S SYSTEMS	MTA Metro–North Railroad	NEW HAVEN LINE CP 240 DIVERGING ROUTES – TRACK 2 EAST	ISSUE DATE: NHS REV. NHS \users\signal\RTG	RTG–NHL1 SHEET 59X NHL1 L1059X

Gannett Fleming/CWA

CONTRACT #	PROJECT SHEET #
1000027511	0087

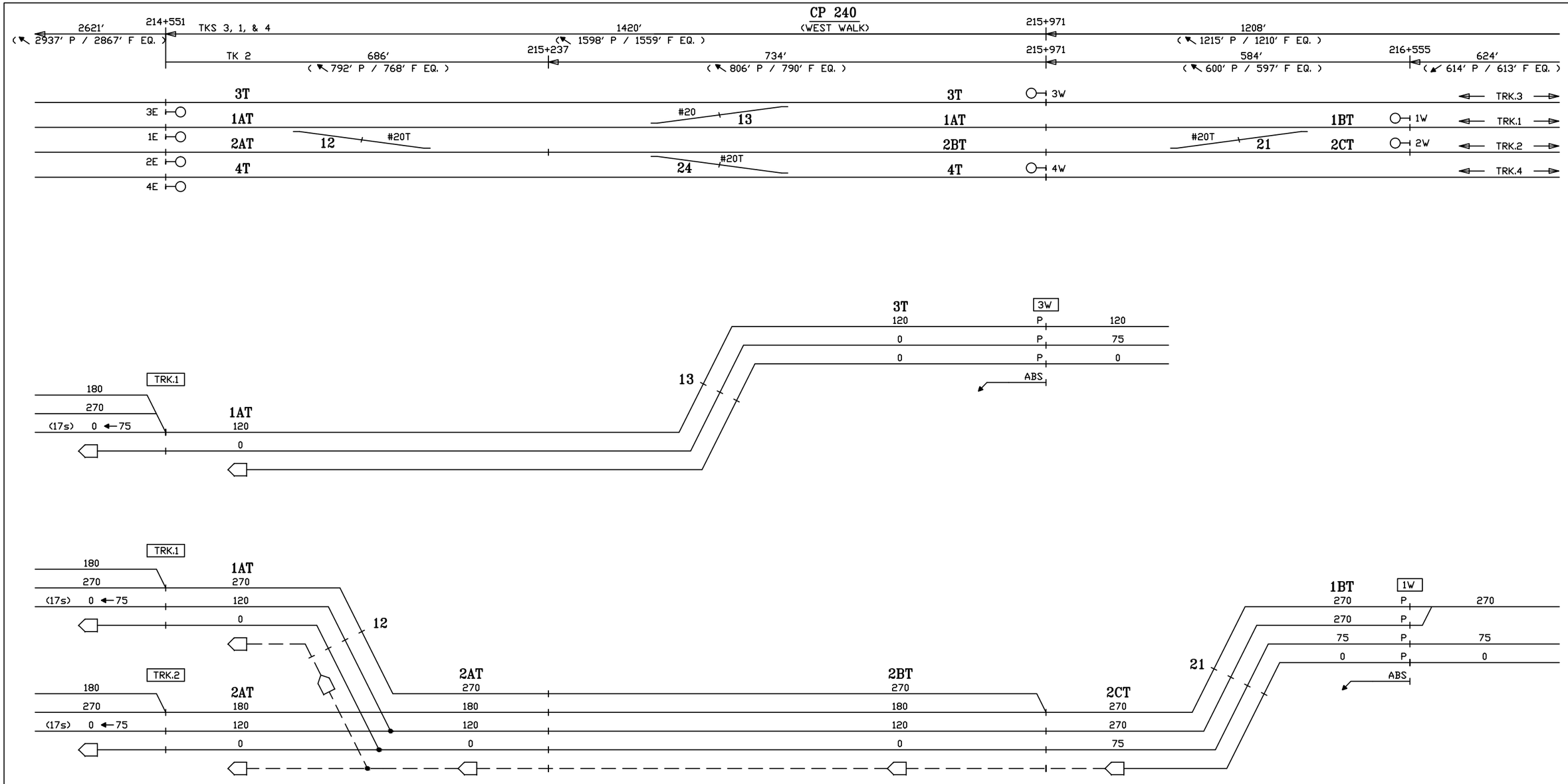

CIRCUIT ENGINEER	SR. SIGNAL ENGR.–DESIGN & STANDARDS	DIRECTOR C&S SYSTEMS	MTA Metro–North Railroad	NEW HAVEN LINE CP 240 DIVERGING ROUTES – TRACKS 3 & 1 WEST	ISSUE DATE:	RTG–NHL1
					NHS REV.	SHEET 60X
					NHS \users\signal\RTG	NHL1 L1060X

Gannett Fleming/CWA

CONTRACT #	PROJECT SHEET #
1000027511	0088

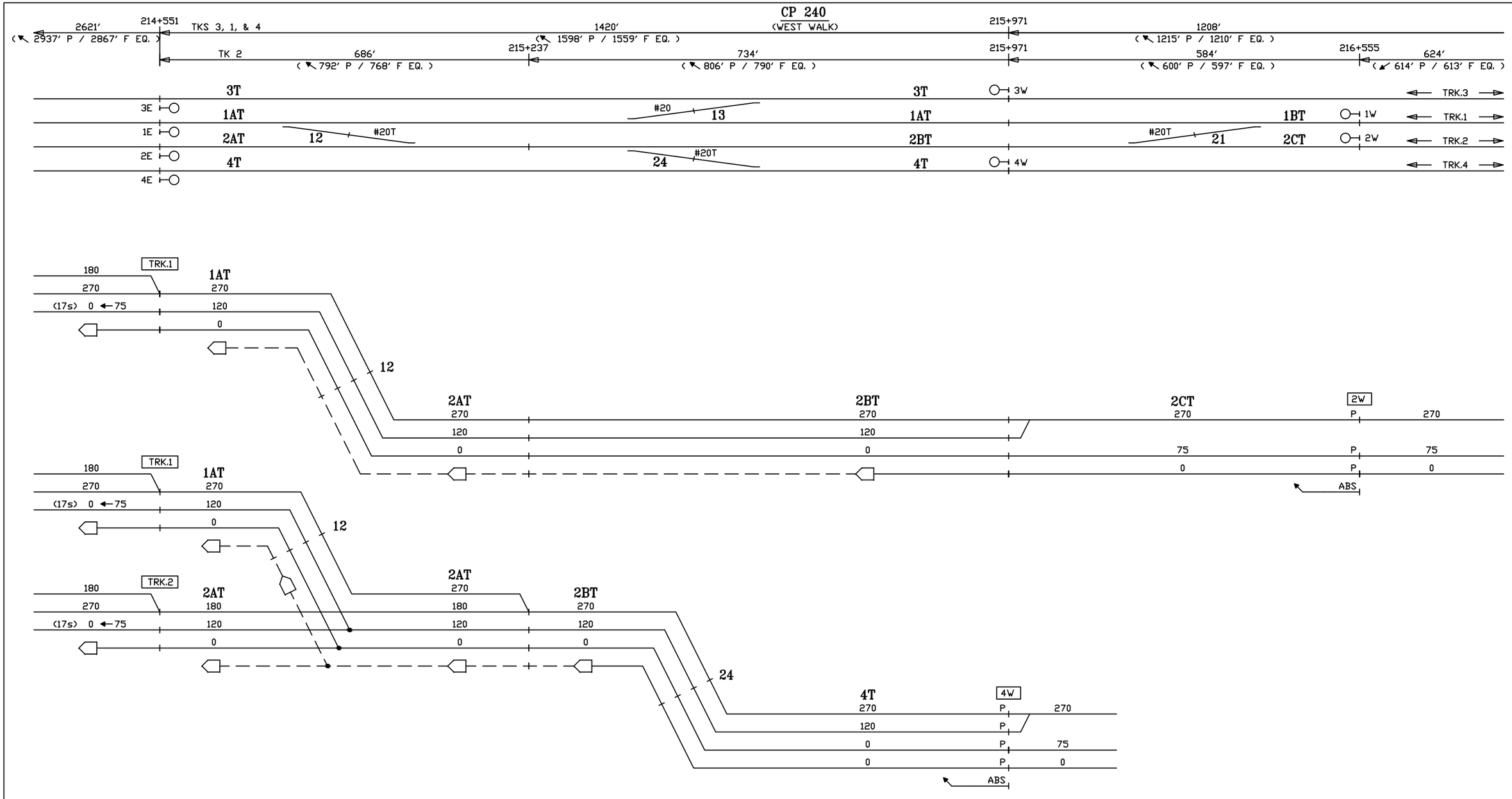

CIRCUIT ENGINEER	SR. SIGNAL ENGR.–DESIGN & STANDARDS	DIRECTOR C&S SYSTEMS	MTA Metro–North Railroad	NEW HAVEN LINE CP 240 DIVERGING ROUTES – TRACKS 2 & 4 WEST	ISSUE DATE:	RTG–NHL1
					NHS REV.	SHEET 61X
					NHS \users\signal\RTG	NHL1 L1061X

Gannett Fleming/CWA

CONTRACT #	PROJECT SHEET #
1000027511	0089

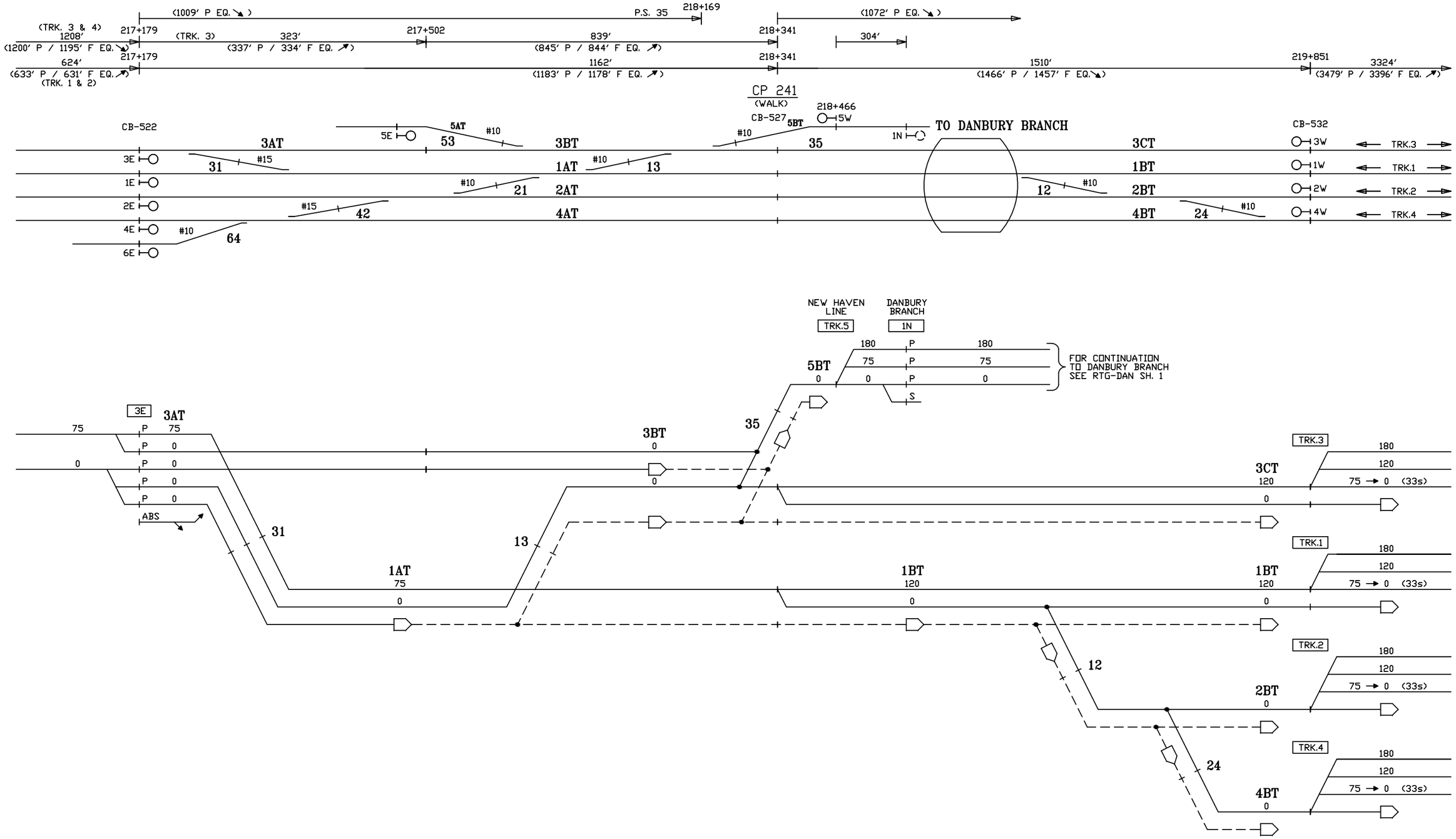

CIRCUIT ENGINEER	SR. SIGNAL ENGR.–DESIGN & STANDARDS	DIRECTOR C&S SYSTEMS	MTA Metro–North Railroad	NEW HAVEN LINE CP 241 DIVERGING ROUTES – TRACK 3 EAST	ISSUE DATE: / REV. / /users/signal/RTG	RTG–NHL1 SHEET 62X NHL1 L1062X

Gannett Fleming/CWA

CONTRACT # 1000027511

PROJECT SHEET # 0090

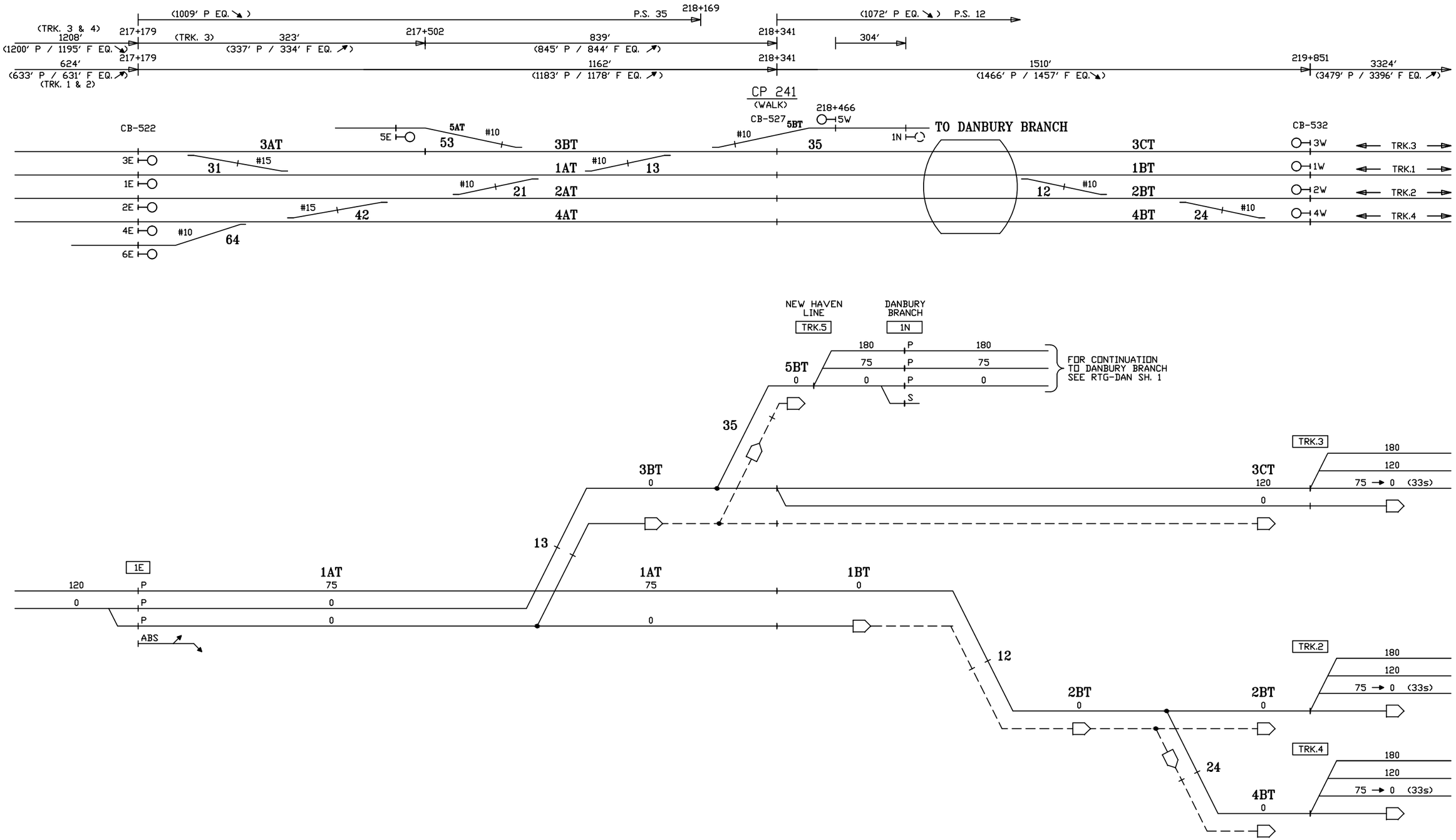

CIRCUIT ENGINEER	SR. SIGNAL ENGR.–DESIGN & STANDARDS	DIRECTOR C&S SYSTEMS	MTA Metro–North Railroad	NEW HAVEN LINE CP 241 DIVERGING ROUTES – TRACK 1 EAST	ISSUE DATE: REV. /users/signal/RTG
					RTG–NHL1 SHEET 63X NHL1 L1063X

Gannett Fleming/CWA

CONTRACT #	PROJECT SHEET #
1000027511	0091

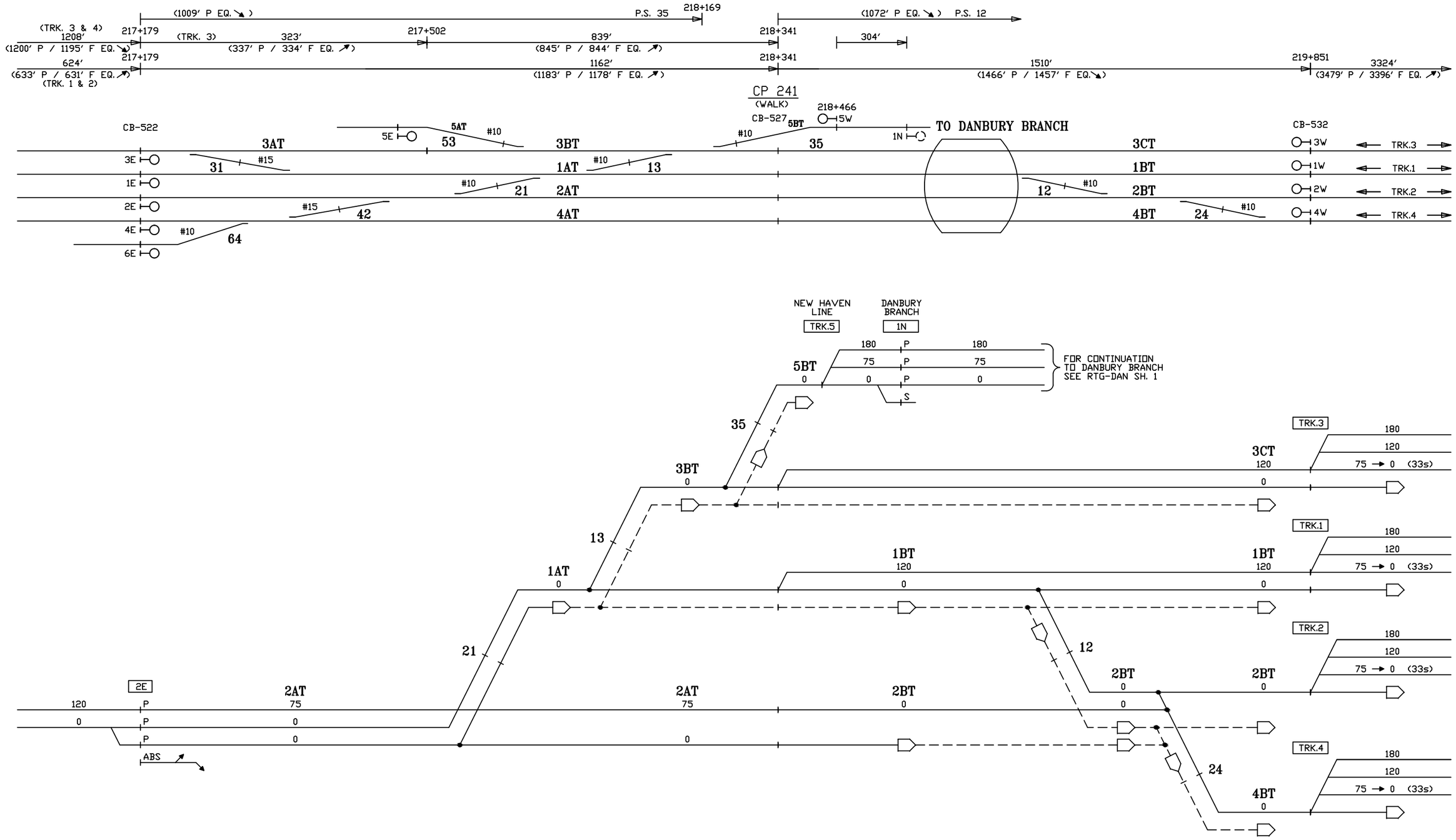

CIRCUIT ENGINEER	SR. SIGNAL ENGR.–DESIGN & STANDARDS	DIRECTOR C&S SYSTEMS	MTA Metro–North Railroad	NEW HAVEN LINE CP 241 DIVERGING ROUTES – TRACK 2 EAST	ISSUE DATE: REV.	RTG–NHL1 SHEET 64X
					/users/signal/RTG	NHL1 L1064X

Gannett Fleming/CWA

CONTRACT #	PROJECT SHEET #
1000027511	0092

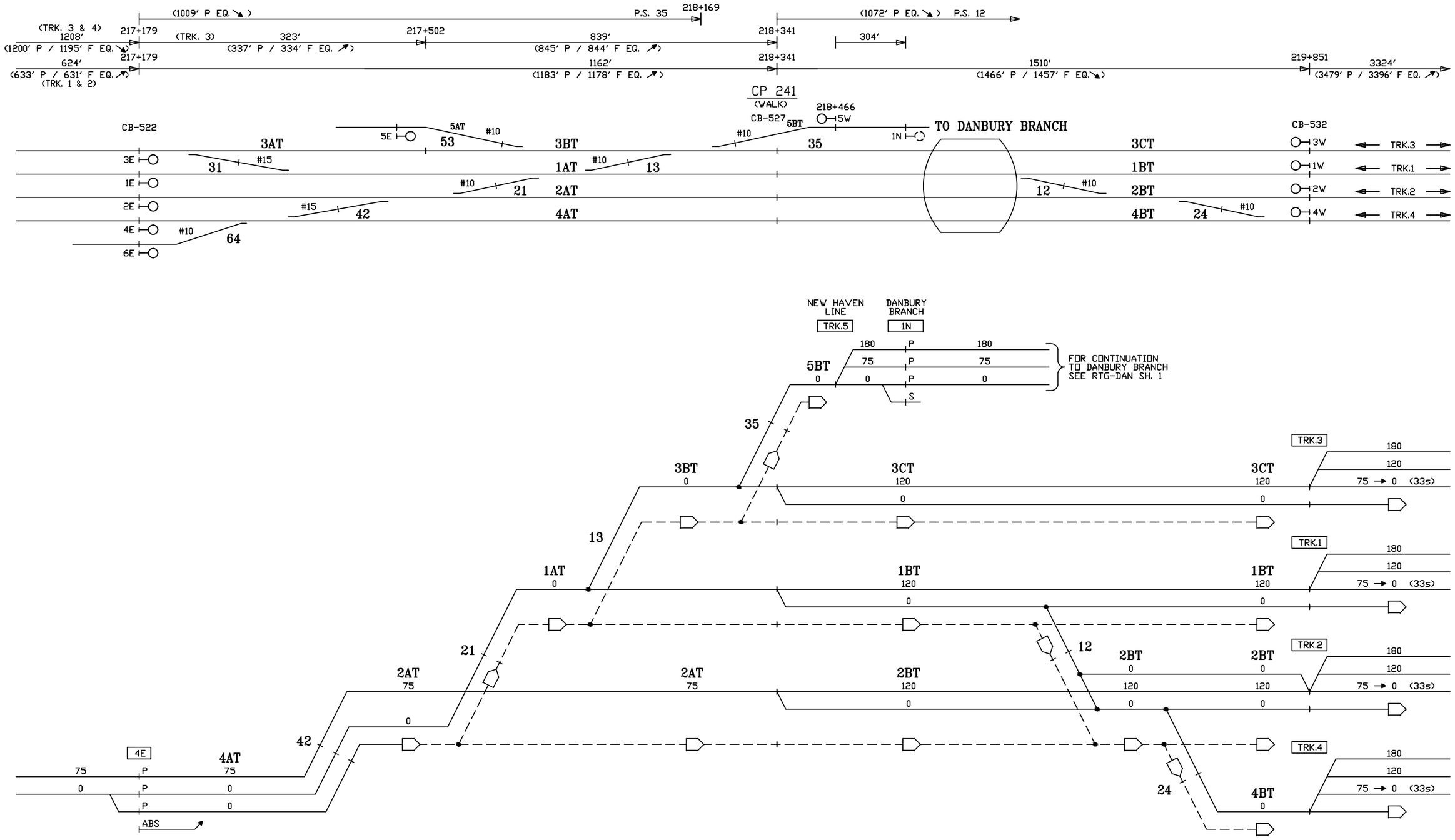

CIRCUIT ENGINEER	SR. SIGNAL ENGR.–DESIGN & STANDARDS	DIRECTOR C&S SYSTEMS	MTA Metro–North Railroad	NEW HAVEN LINE CP 241 DIVERGING ROUTES – TRACK 4 EAST	ISSUE DATE: / REV. / /users/signal/RTG RTG–NHL1 SHEET 65X NHL1 L1065X

Gannett Fleming/CWA

CONTRACT #	PROJECT SHEET #
1000027511	0093

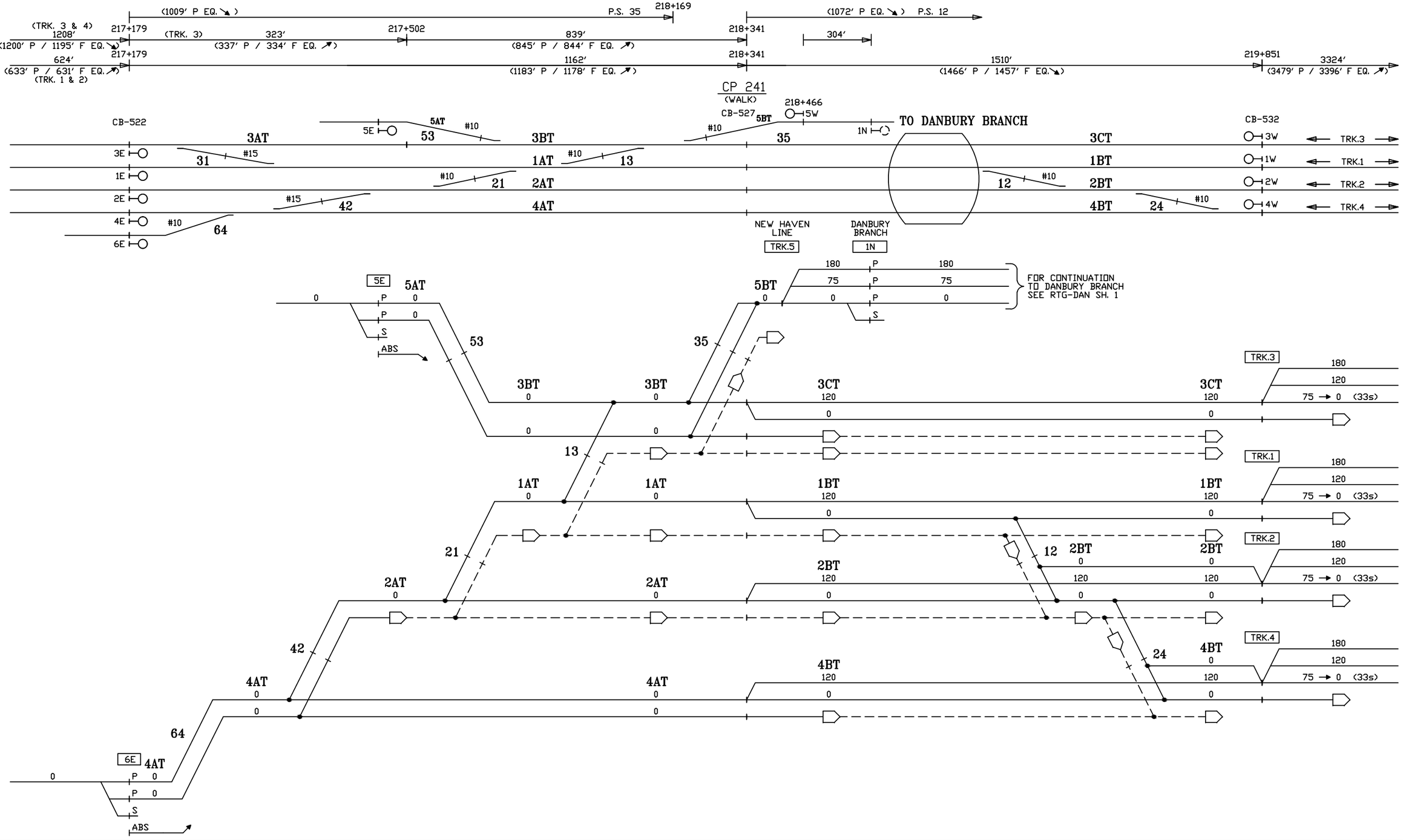

CIRCUIT ENGINEER	SR. SIGNAL ENGR.–DESIGN & STANDARDS	DIRECTOR C&S SYSTEMS	MTA Metro–North Railroad	NEW HAVEN LINE CP 241 DIVERGING ROUTES – TRACKS 5 & 6 EAST	ISSUE DATE: / REV. / /users/signal/RTG RTG–NHL1 SHEET 66X NHL1 L1066X

Gannett Fleming/CWA

CONTRACT #	PROJECT SHEET #
1000027511	0094

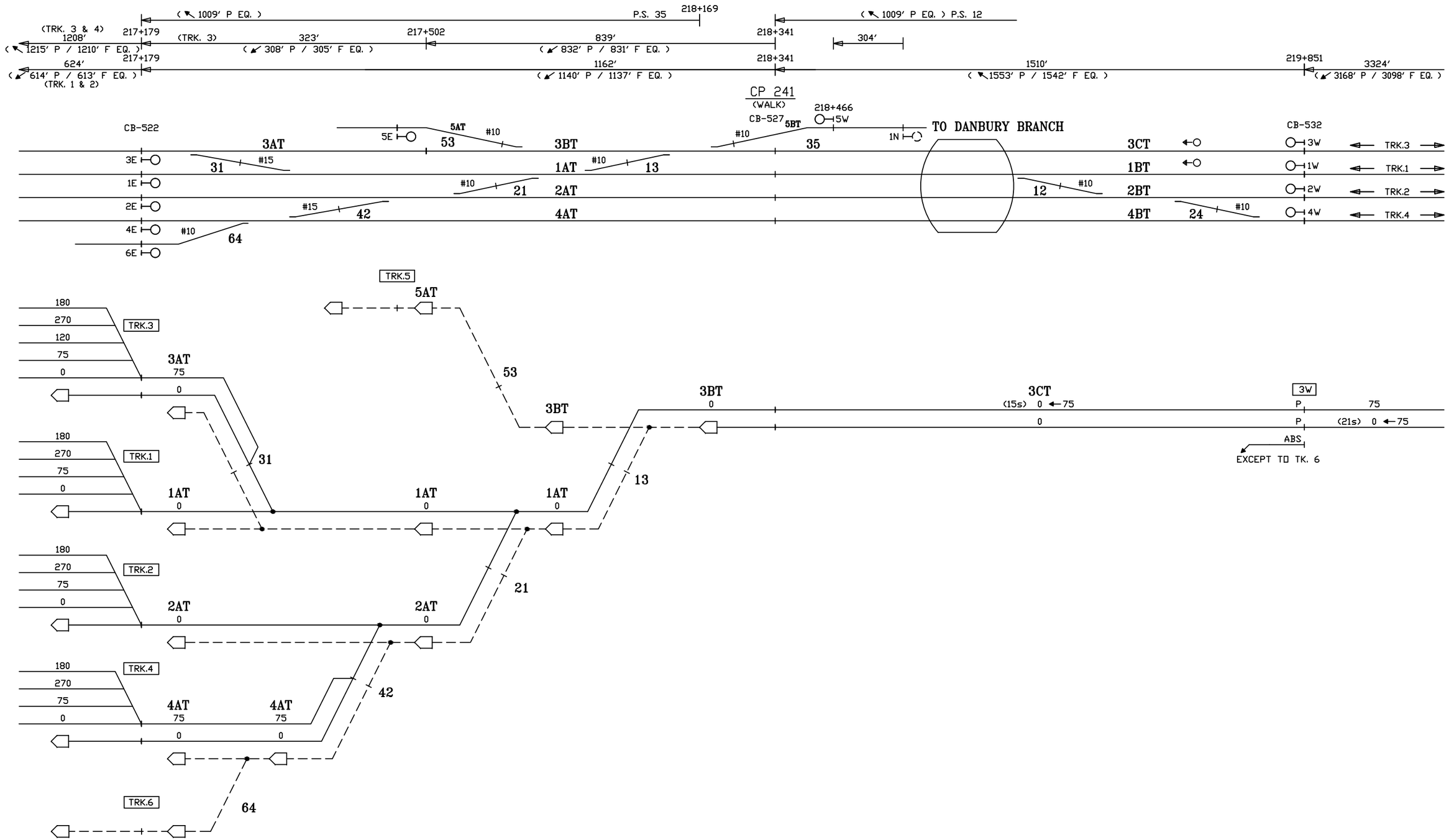

CIRCUIT ENGINEER	SR. SIGNAL ENGR.–DESIGN & STANDARDS	DIRECTOR C&S SYSTEMS	MTA Metro–North Railroad	NEW HAVEN LINE CP 241 DIVERGING ROUTES – TRACK 3 WEST	ISSUE DATE:	RTG–NHL1
					REV.	SHEET 67X
					NHS /users/signal/RTG	NHL1 L1067X

Gannett Fleming/CWA

CONTRACT #	PROJECT SHEET #
1000027511	0095

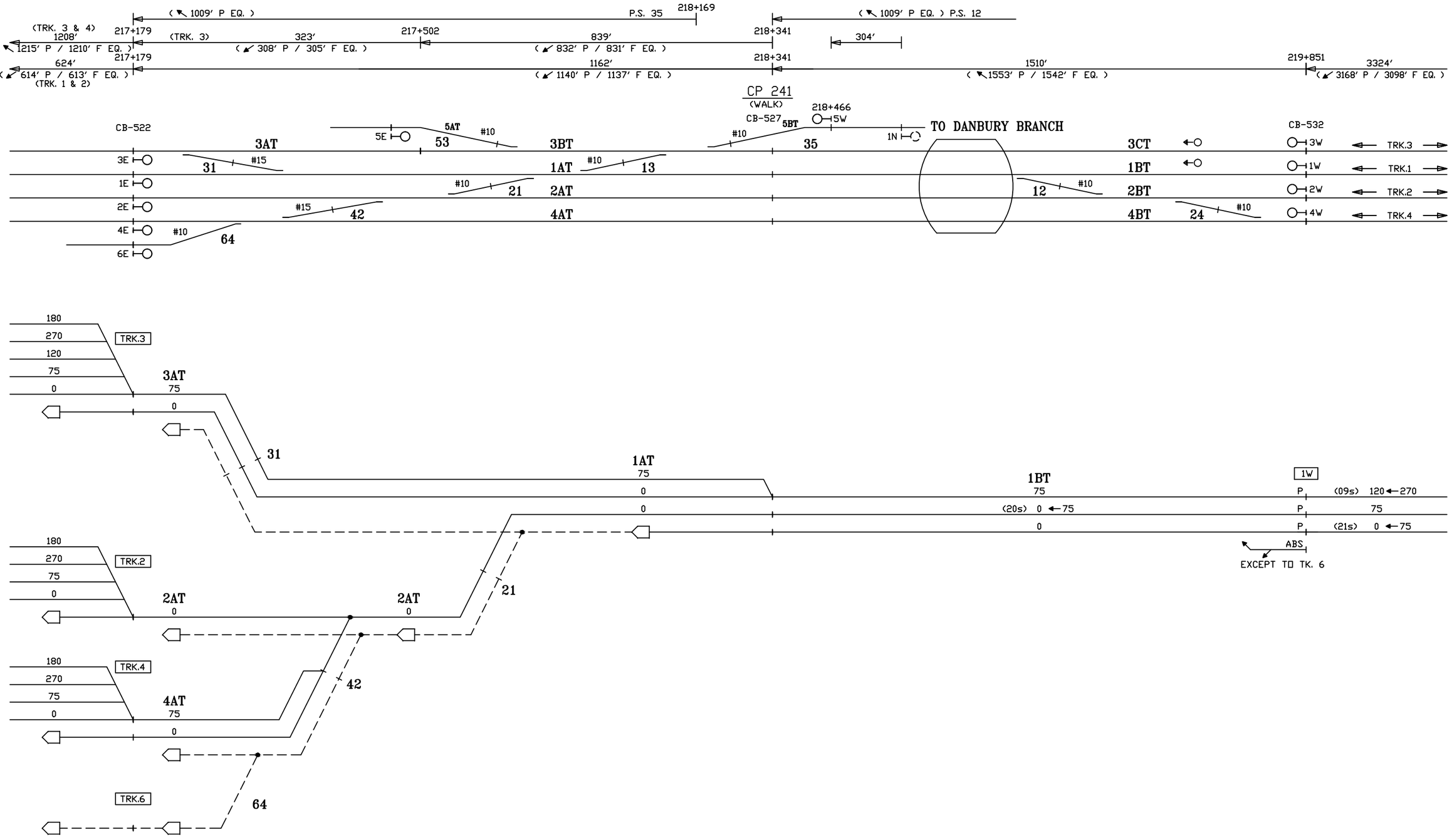

CIRCUIT ENGINEER	SR. SIGNAL ENGR.–DESIGN & STANDARDS	DIRECTOR C&S SYSTEMS	MTA Metro–North Railroad	NEW HAVEN LINE CP 241 DIVERGING ROUTES – TRACK 1 WEST	ISSUE DATE: / RTG–NHL1 NHS REV. / SHEET 68X NHS /users/signal/RTG / NHL1 / L1068X

Gannett Fleming/CWA

CONTRACT #	PROJECT SHEET #
1000027511	0096

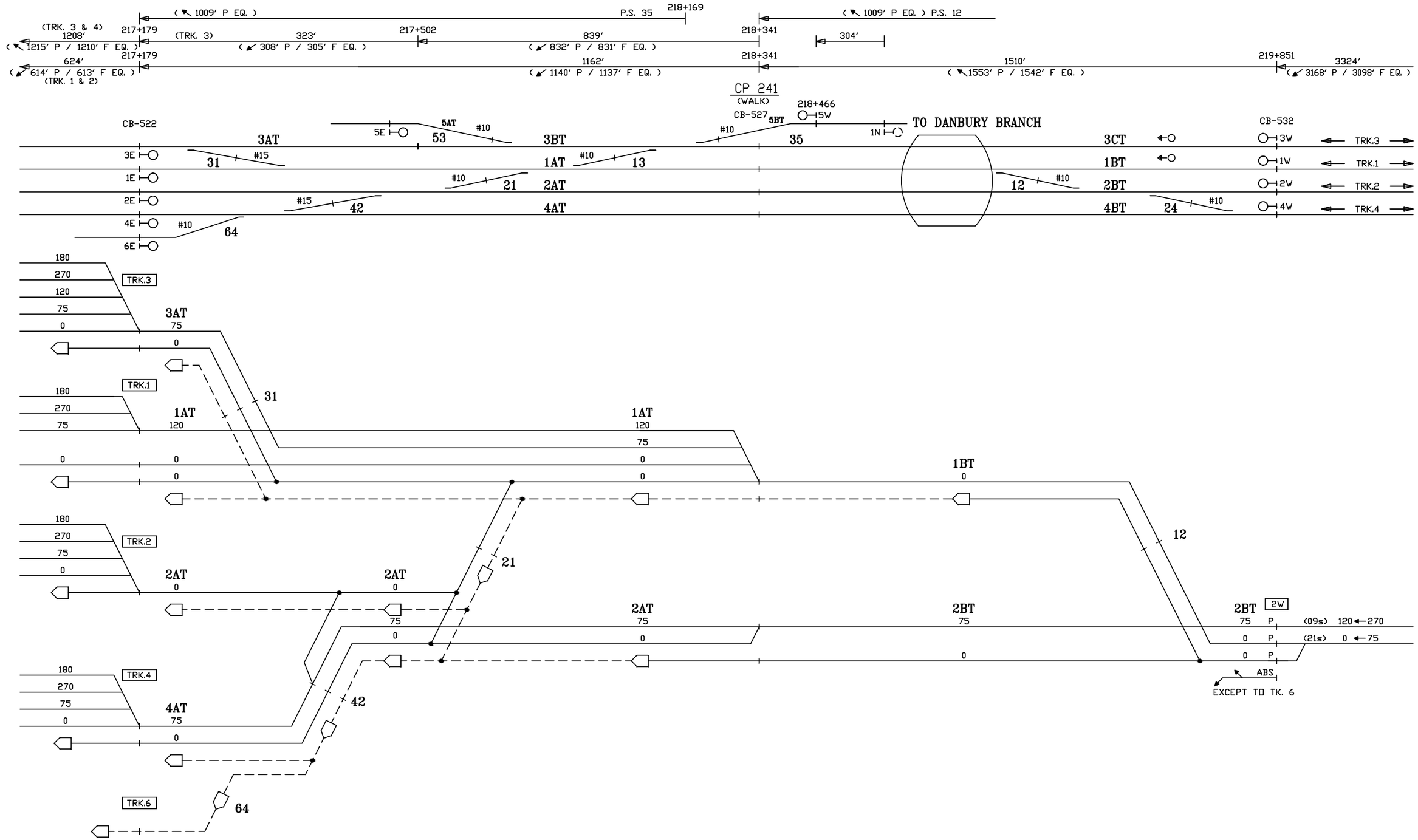

CIRCUIT ENGINEER	SR. SIGNAL ENGR.–DESIGN & STANDARDS	DIRECTOR C&S SYSTEMS	MTA Metro–North Railroad	NEW HAVEN LINE CP 241 DIVERGING ROUTES – TRACK 2 WEST	ISSUE DATE:	RTG–NHL1
					REV.	SHEET 69X
					NHS /users/signal/RTG	NHL1 L1069X

Gannett Fleming/CWA

CONTRACT #	PROJECT SHEET #
1000027511	0097

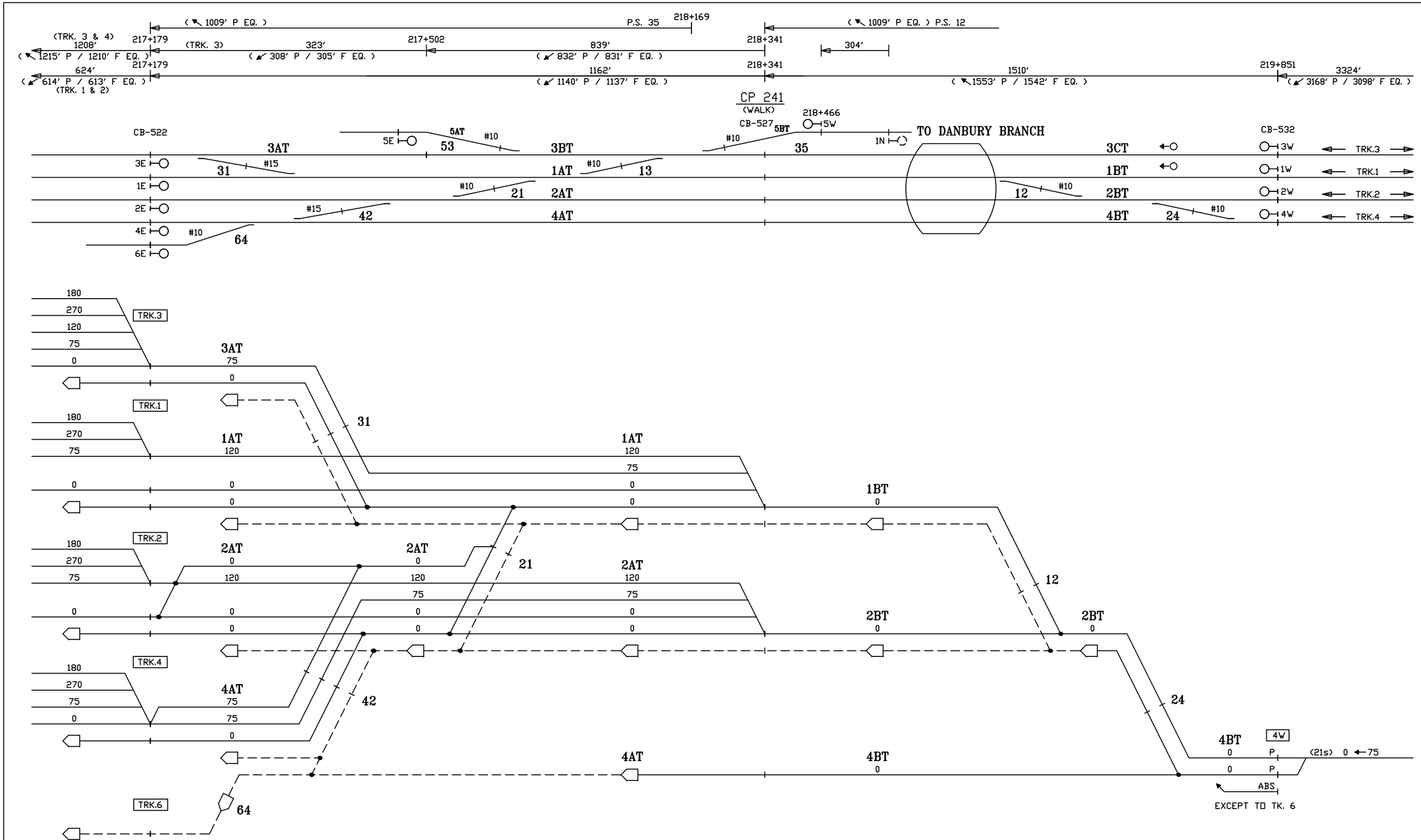

CIRCUIT ENGINEER	SR. SIGNAL ENGR.–DESIGN & STANDARDS	DIRECTOR C&S SYSTEMS	MTA Metro–North Railroad	NEW HAVEN LINE CP 241 DIVERGING ROUTES – TRACK 4 WEST	ISSUE DATE: RTG–NHL1 NHS REV. SHEET 70X NHS /users/signal/RTG NHL1 L1070X

Gannett Fleming/CWA

CONTRACT #	PROJECT SHEET #
1000027511	0098

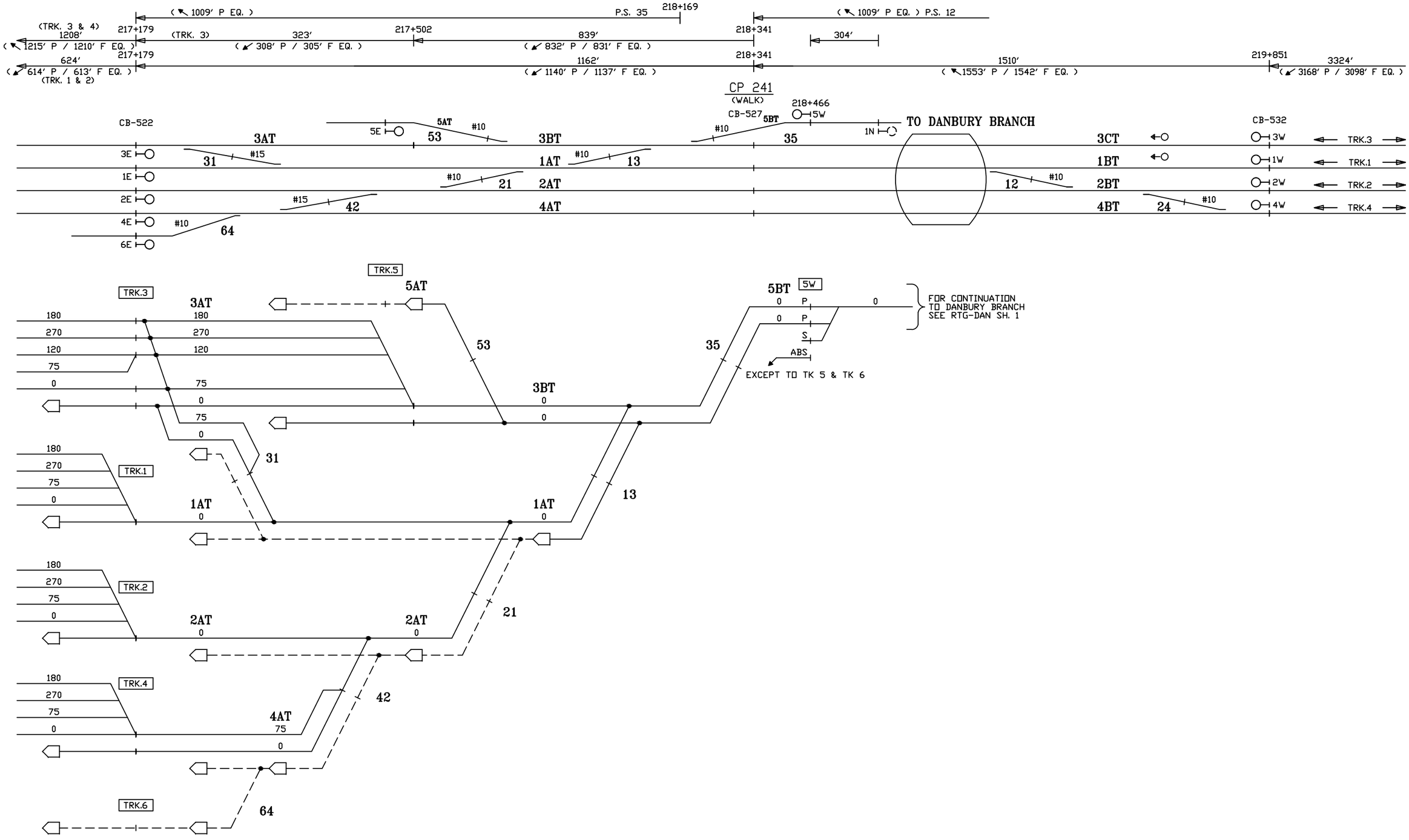

CIRCUIT ENGINEER	SR. SIGNAL ENGR.–DESIGN & STANDARDS	DIRECTOR C&S SYSTEMS	MTA Metro–North Railroad	NEW HAVEN LINE CP 241 DIVERGING ROUTES – TRACK 5 WEST	ISSUE DATE: / RTG–NHL1 NHS REV. / SHEET 71X NHS /users/signal/RTG / NHL1 / L1071

Gannett Fleming/CWA

CONTRACT # 1000027511

PROJECT SHEET # 0099

270 CODE CUTBACK

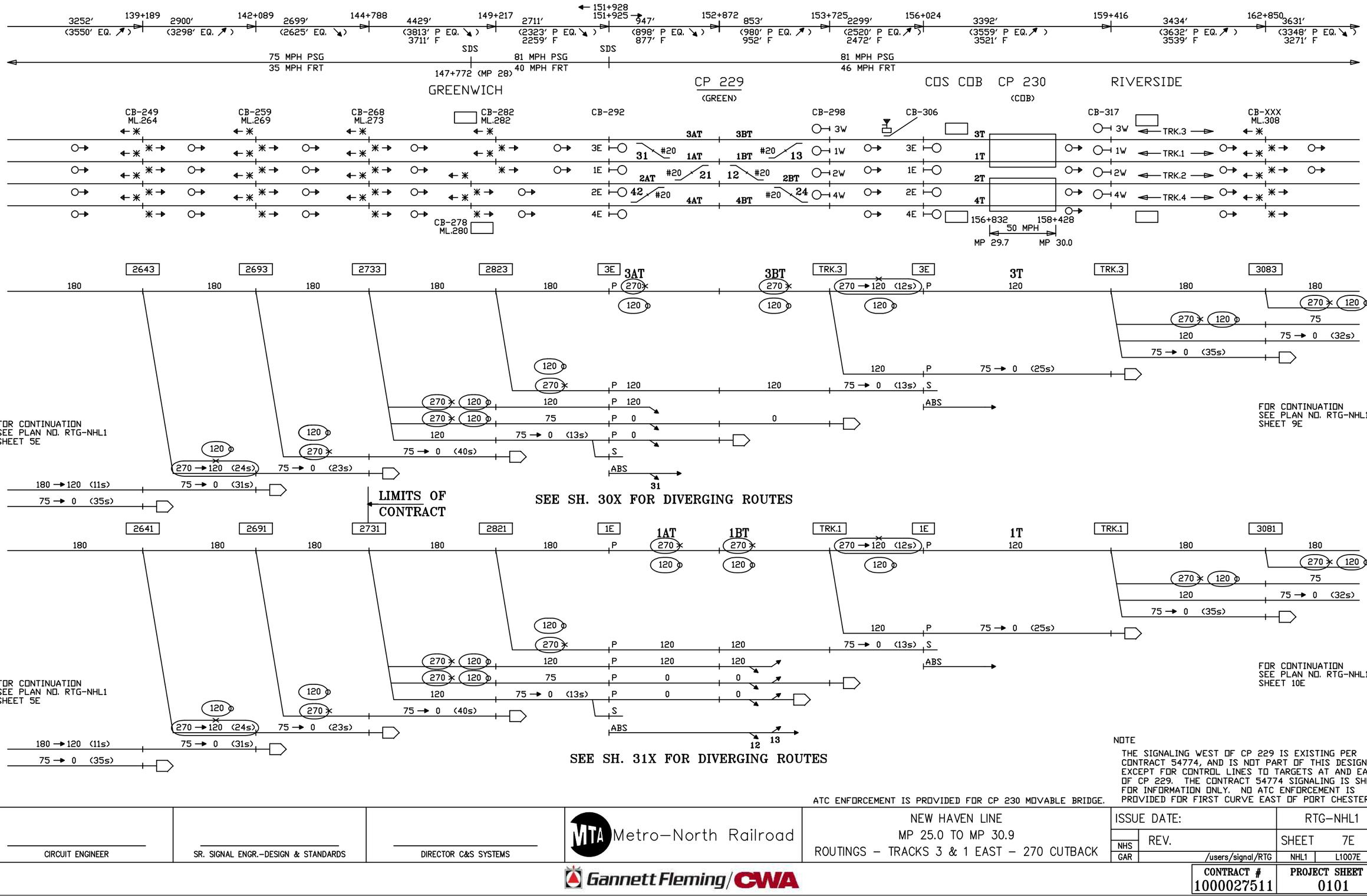

NOTE

THE SIGNALING WEST OF CP 229 IS EXISTING PER CONTRACT 54774, AND IS NOT PART OF THIS DESIGN, EXCEPT FOR CONTROL LINES TO TARGETS AT AND EAST OF CP 229. THE CONTRACT 54774 SIGNALING IS SHOWN FOR INFORMATION ONLY. NO ATC ENFORCEMENT IS PROVIDED FOR FIRST CURVE EAST OF PORT CHESTER.

ATC ENFORCEMENT IS PROVIDED FOR CP 230 MOVABLE BRIDGE.

CIRCUIT ENGINEER	SR. SIGNAL ENGR.–DESIGN & STANDARDS	DIRECTOR C&S SYSTEMS	MTA Metro–North Railroad	NEW HAVEN LINE MP 25.0 TO MP 30.9 ROUTINGS – TRACKS 3 & 1 EAST – 270 CUTBACK	ISSUE DATE: RTG–NHL1 NHS GAR REV. /users/signal/RTG SHEET 7E NHL1 L1007E

Gannett Fleming/CWA

CONTRACT #	PROJECT SHEET #
1000027511	0101

270 CODE CUTBACK

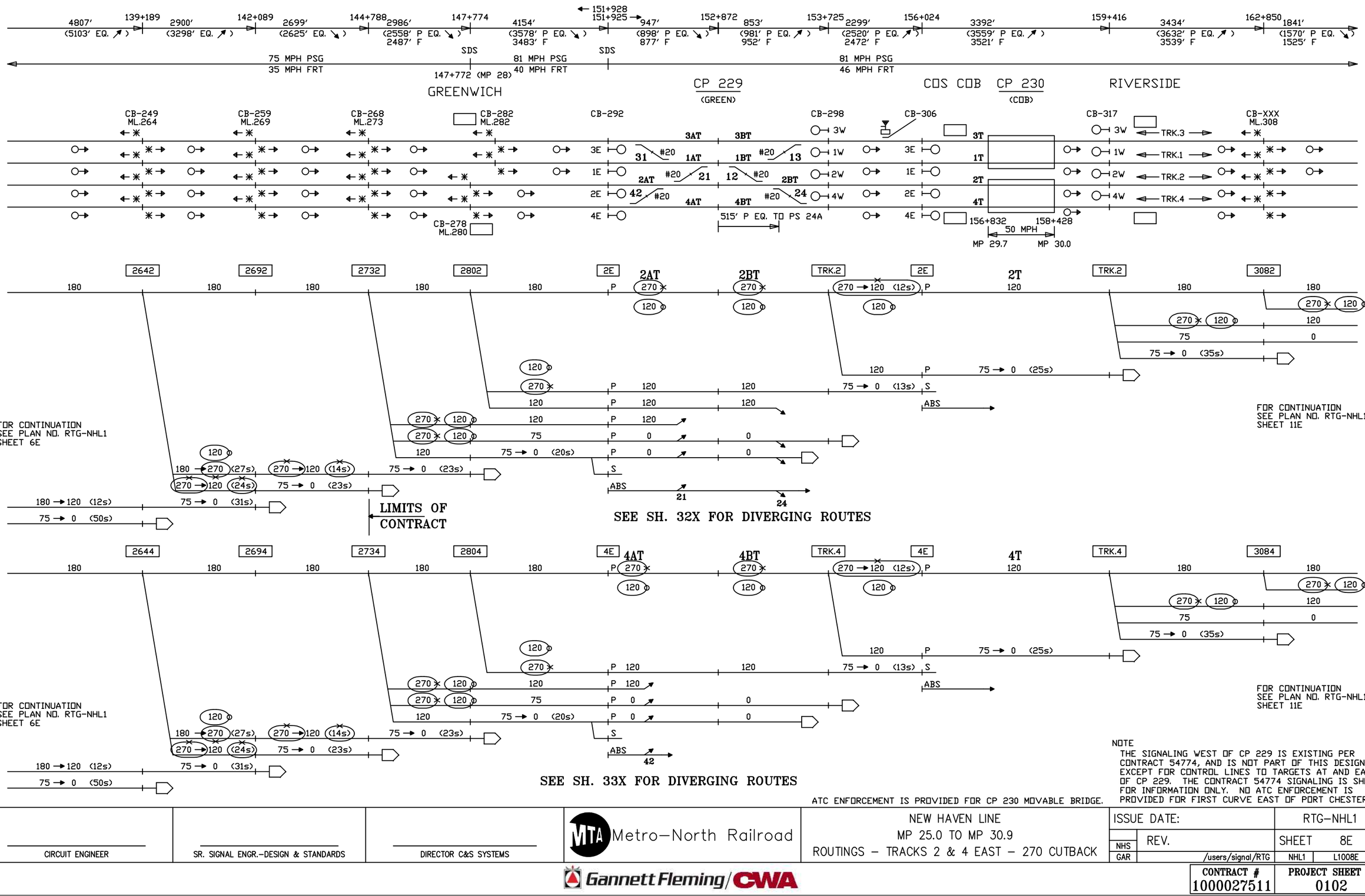

NOTE
THE SIGNALING WEST OF CP 229 IS EXISTING PER CONTRACT 54774, AND IS NOT PART OF THIS DESIGN, EXCEPT FOR CONTROL LINES TO TARGETS AT AND EAST OF CP 229. THE CONTRACT 54774 SIGNALING IS SHOWN FOR INFORMATION ONLY. NO ATC ENFORCEMENT IS PROVIDED FOR FIRST CURVE EAST OF PORT CHESTER.

ATC ENFORCEMENT IS PROVIDED FOR CP 230 MOVABLE BRIDGE.

CIRCUIT ENGINEER	SR. SIGNAL ENGR.–DESIGN & STANDARDS	DIRECTOR C&S SYSTEMS	MTA Metro–North Railroad	NEW HAVEN LINE MP 25.0 TO MP 30.9 ROUTINGS – TRACKS 2 & 4 EAST – 270 CUTBACK	ISSUE DATE: / RTG–NHL1 NHS REV. / SHEET 8E GAR /users/signal/RTG NHL1 L1008E

Gannett Fleming/CWA

CONTRACT #	PROJECT SHEET #
1000027511	0102

270 CODE CUTBACK

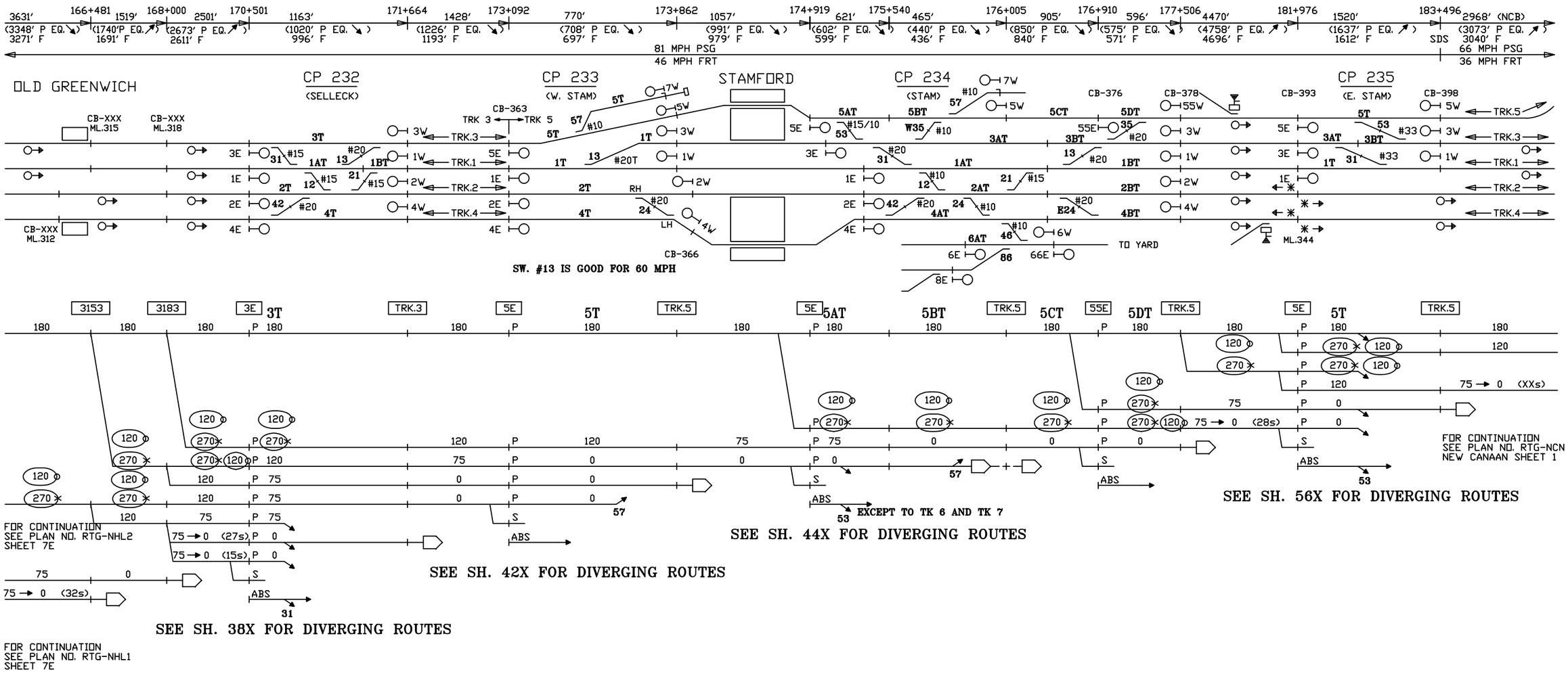

CIRCUIT ENGINEER	SR. SIGNAL ENGR.–DESIGN & STANDARDS	DIRECTOR C&S SYSTEMS	MTA Metro–North Railroad	NEW HAVEN LINE MP 30.9 TO MP 35.0 ROUTINGS – TRACK 3 CHANGES TO TRACK 5 EAST – 270 CUTBACK	ISSUE DATE:	RTG–NHL1
					REV.	SHEET 9E
					NHS /users/signal/RTG	NHL1 L1009E

Gannett Fleming/CWA

CONTRACT #	PROJECT SHEET #
1000027511	0103

270 CODE CUTBACK

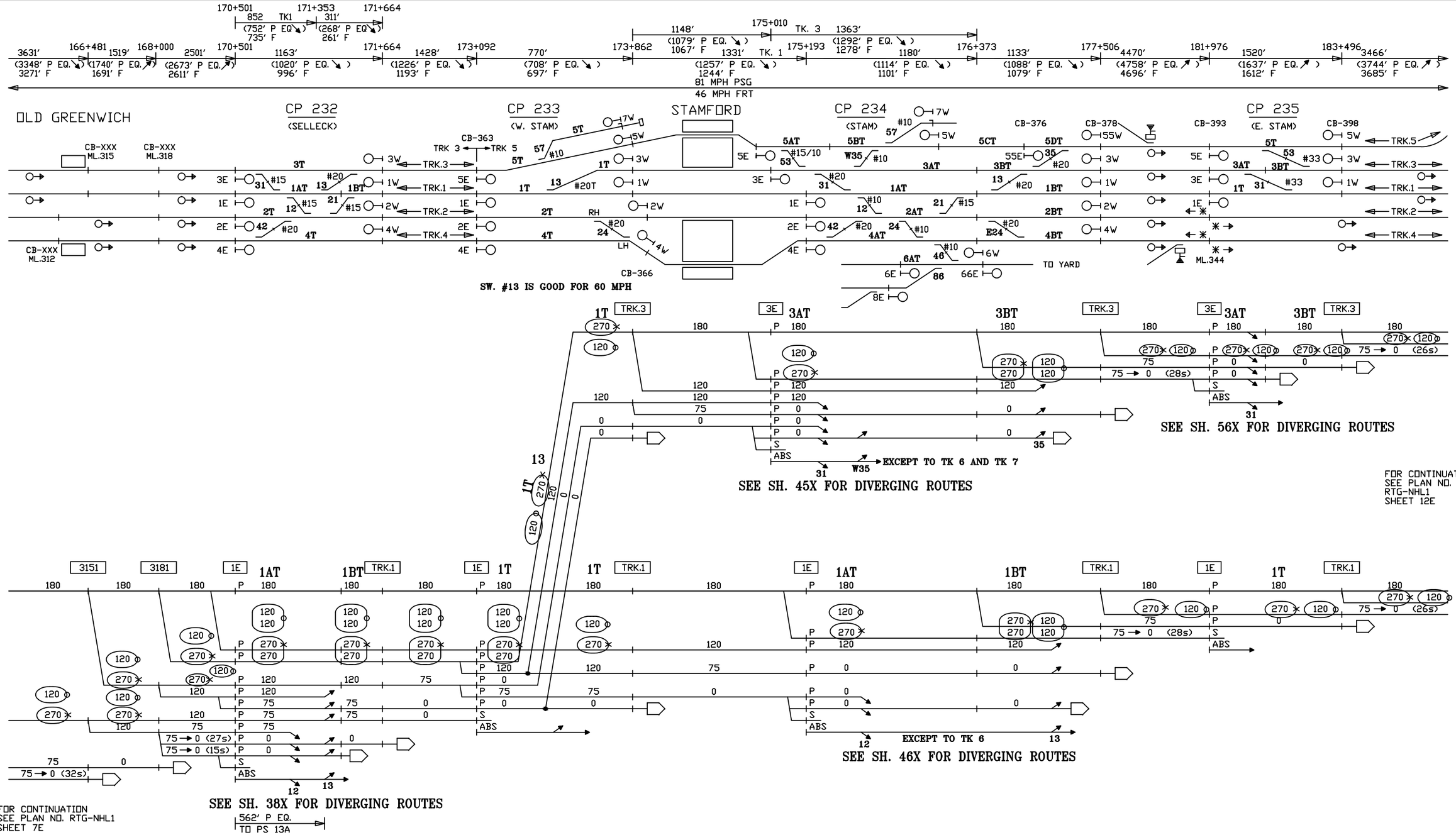

FOR CONTINUATION
SEE PLAN NO. RTG-NHL1
SHEET 7E

FOR CONTINUATION
SEE PLAN NO.
RTG-NHL1
SHEET 12E

CIRCUIT ENGINEER	SR. SIGNAL ENGR.–DESIGN & STANDARDS	DIRECTOR C&S SYSTEMS	Metro–North Railroad	NEW HAVEN LINE MP 30.9 TO MP 35.0 ROUTINGS – TRACKS 3 & 1 EAST – 270 CUTBACK	ISSUE DATE:	RTG–NHL1
					NHS REV.	SHEET 10E
					NHS /users/signal/RTG	NHL1 L1010E

Gannett Fleming/CWA

CONTRACT #	PROJECT SHEET #
1000027511	0104

270 CODE CUTBACK

NOTES

1. SHORT 24 FEET FOR 180 CODE.
2. 237' P EQ. FROM CP 234 4E TO PS 42A. THIS CONTROL LINE DOES NOT APPLY VIA 21R
3. THIS CONTROL LINE APPLIES VIA 21R
4. THIS CONTROL LINE DOES NOT APPLY VIA 21R
5. THIS CONTROL LINE APPLIES VIA 21R

CIRCUIT ENGINEER	SR. SIGNAL ENGR.–DESIGN & STANDARDS	DIRECTOR C&S SYSTEMS	MTA Metro–North Railroad	NEW HAVEN LINE MP 30.9 TO MP 35.0 ROUTINGS – TRACKS 2 & 4 EAST – 270 CUTBACK	ISSUE DATE: RTG–NHL1 REV. SHEET 11E NHS NHS /users/signal/RTG NHL1 L1011E

Gannett Fleming/CWA

CONTRACT #	PROJECT SHEET #
1000027511	0105

270 CODE CUTBACK

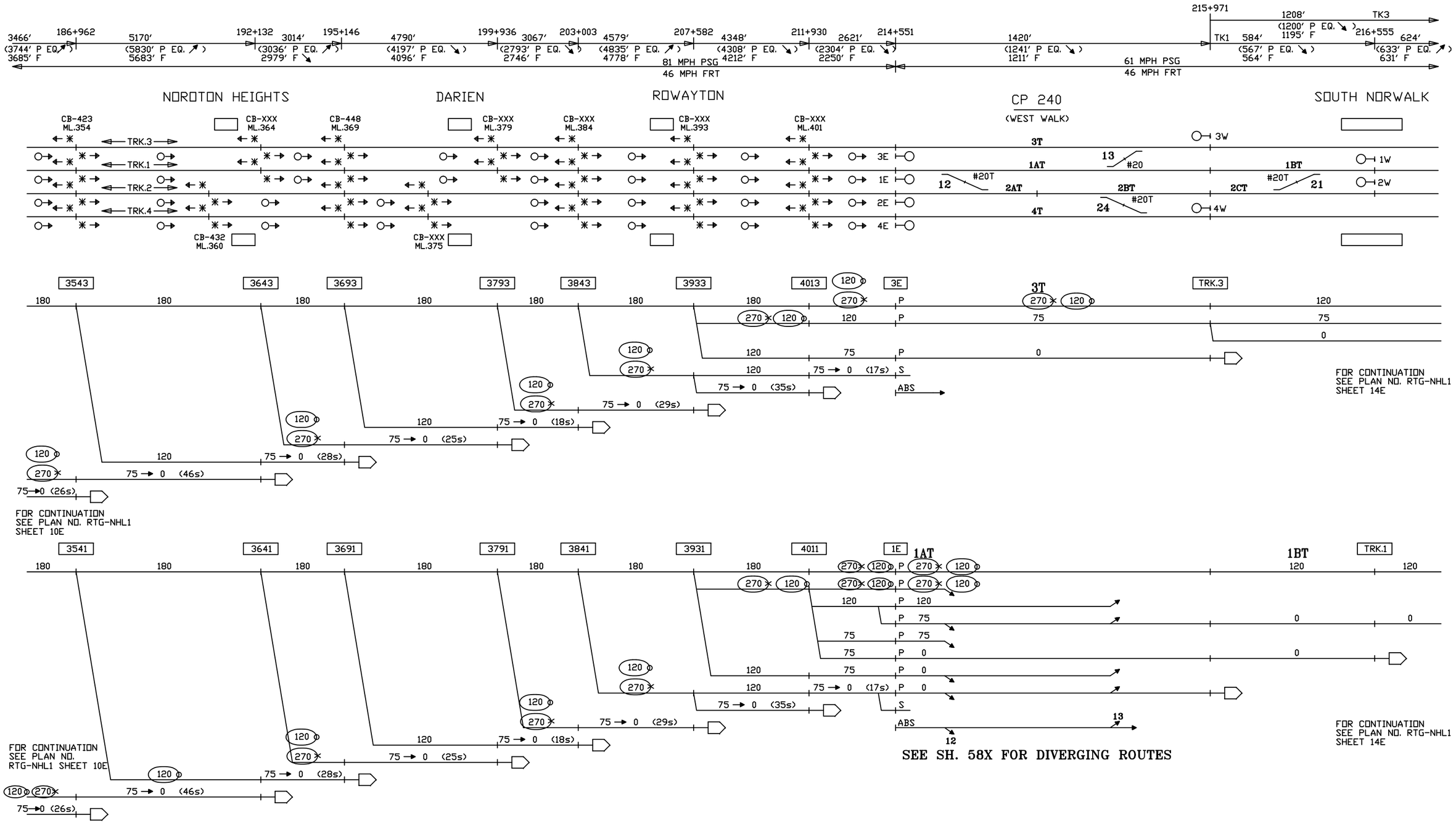

CIRCUIT ENGINEER

SR. SIGNAL ENGR.–DESIGN & STANDARDS

DIRECTOR C&S SYSTEMS

MTA Metro–North Railroad

NEW HAVEN LINE
MP 35.6 TO MP 40.7
ROUTINGS – TRACKS 3 & 1 EAST – 270 CUTBACK

ISSUE DATE:

	REV.	/users/signal/RTG	NHL1	L1012E
NHS				
NHS				

RTG–NHL1

SHEET 12E

Gannett Fleming/CWA

CONTRACT # 1000027511

PROJECT SHEET # 0106

270 CODE CUTBACK

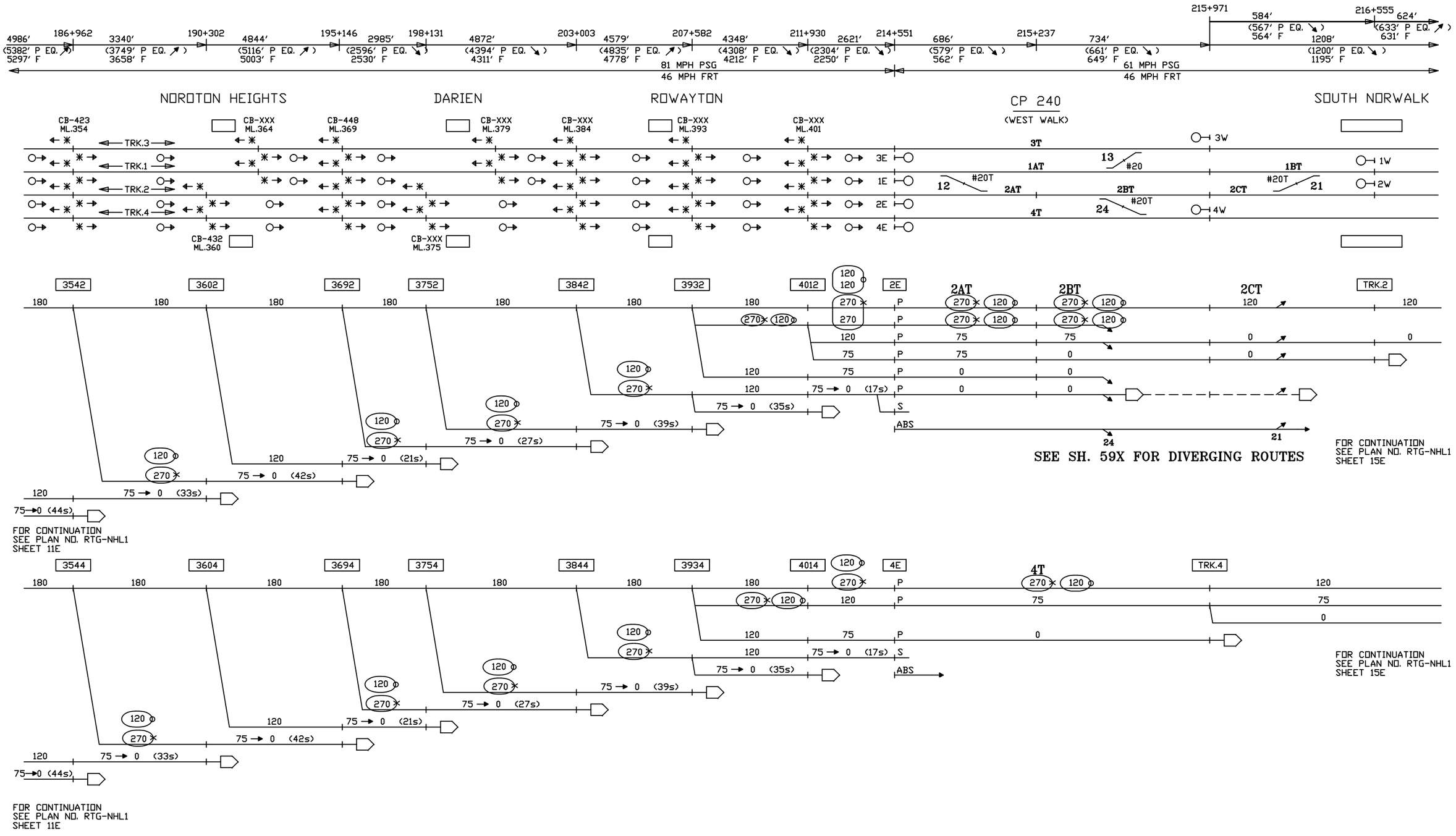

CIRCUIT ENGINEER	SR. SIGNAL ENGR.–DESIGN & STANDARDS	DIRECTOR C&S SYSTEMS	MTA Metro–North Railroad	NEW HAVEN LINE MP 35.6 TO MP 40.7 ROUTINGS – TRACKS 2 & 4 EAST – 270 CUTBACK	ISSUE DATE: / REV. / /users/signal/RTG RTG–NHL1 SHEET 13E NHL1 L1013E

Gannett Fleming/CWA

CONTRACT #	PROJECT SHEET #
1000027511	0107

270 CODE CUTBACK

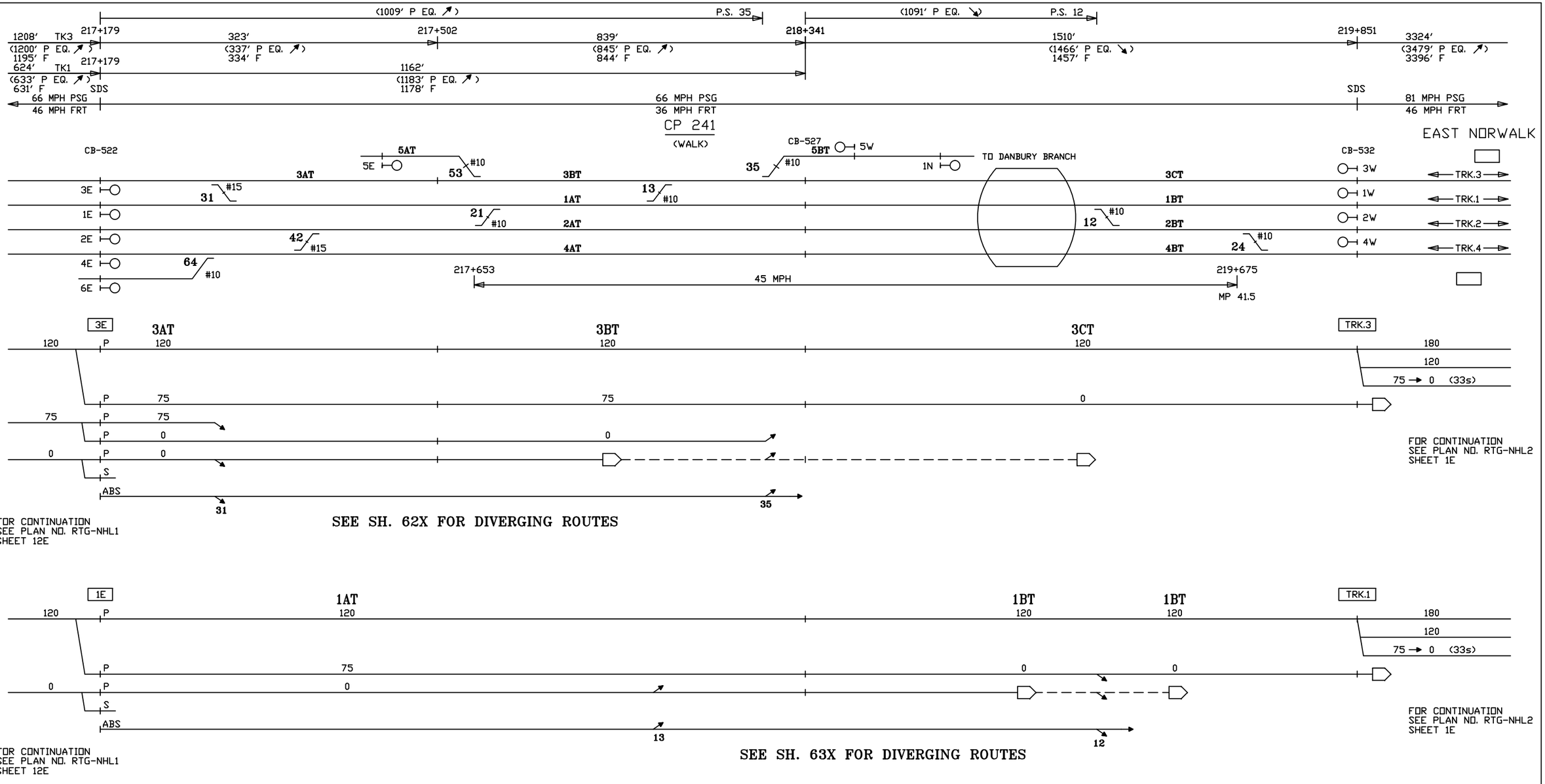

CIRCUIT ENGINEER	SR. SIGNAL ENGR.–DESIGN & STANDARDS	DIRECTOR C&S SYSTEMS	MTA Metro–North Railroad	NEW HAVEN LINE MP 40.7 TO MP 42.4 ROUTINGS – TRACKS 3 & 1 EAST – 270 CUTBACK	ISSUE DATE:	RTG–NHL1
					REV.	SHEET 14E
					NHS /users/signal/RTG	NHL1 L1014E

Gannett Fleming/CWA

CONTRACT #	PROJECT SHEET #
1000027511	0108

270 CODE CUTBACK

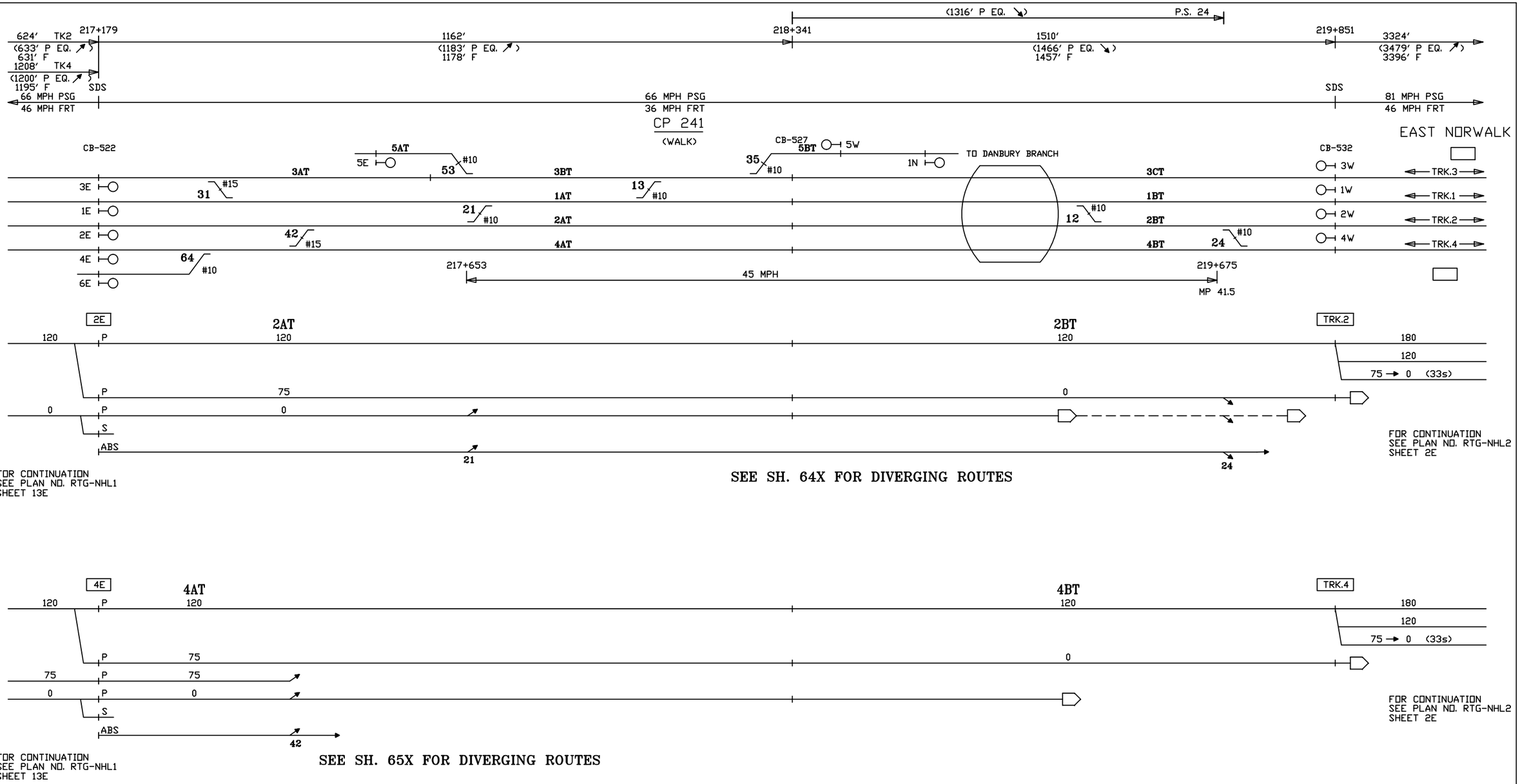

CIRCUIT ENGINEER	SR. SIGNAL ENGR.–DESIGN & STANDARDS	DIRECTOR C&S SYSTEMS	MTA Metro–North Railroad	NEW HAVEN LINE MP 40.7 TO MP 42.4 ROUTINGS – TRACKS 2 & 4 EAST – 270 CUTBACK	ISSUE DATE:	RTG–NHL1
					REV. (NHS / LB)	SHEET 15E
					/users/signal/RTG	NHL1 L1015E
			Gannett Fleming/CWA		CONTRACT # 1000027511	PROJECT SHEET # 0109

270 CODE CUTBACK

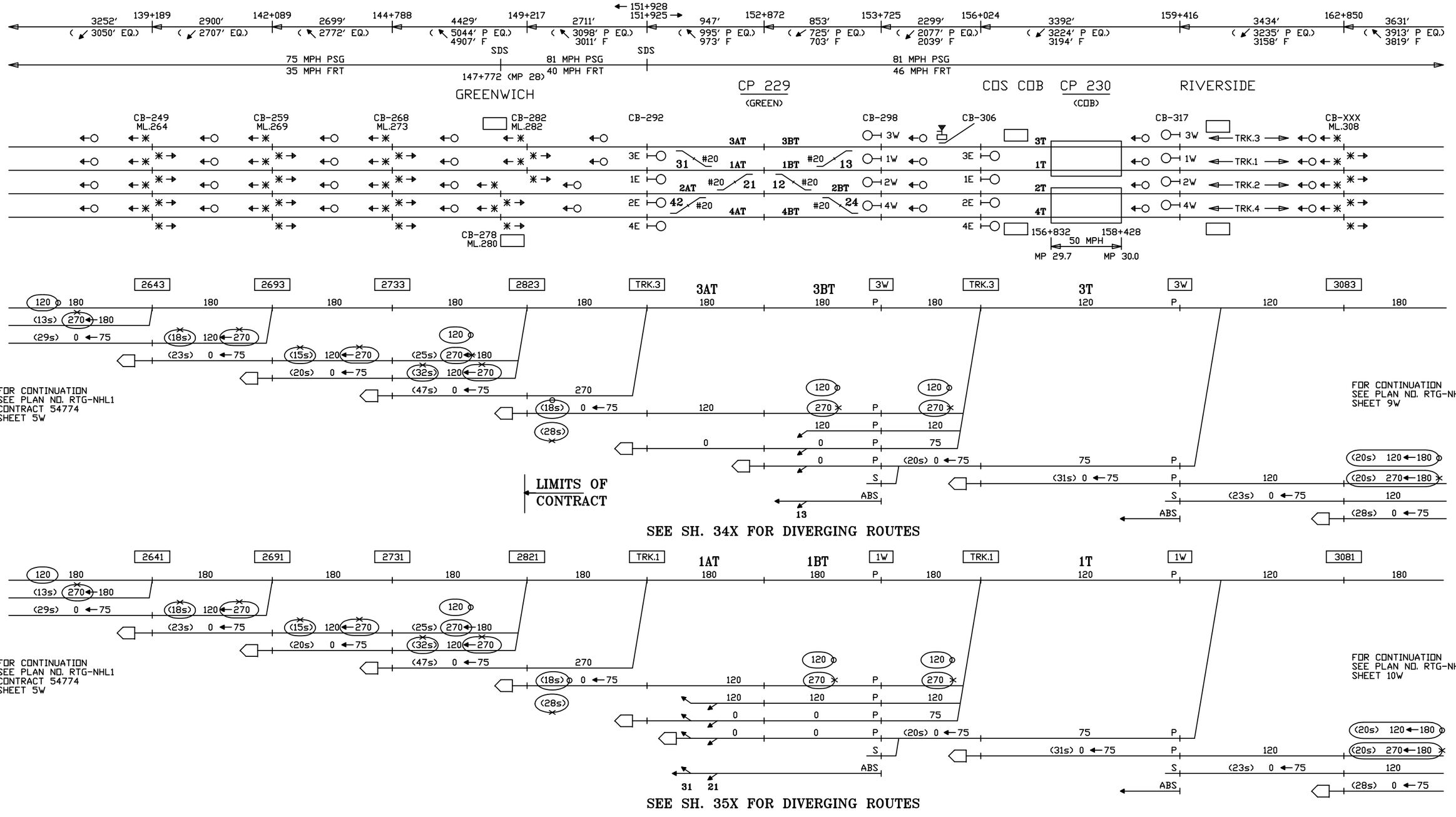

THE SIGNALING WEST OF CP 229 IS EXISTING PER CONTRACT 54774, AND IS NOT PART OF THIS DESIGN.
NO ATC ENFORCEMENT IS PROVIDED FOR FIRST CURVE EAST OF PORT CHESTER.

ATC ENFORCEMENT IS PROVIDED FOR CP 230 MOVABLE BRIDGE.

CIRCUIT ENGINEER	SR. SIGNAL ENGR.–DESIGN & STANDARDS	DIRECTOR C&S SYSTEMS	MTA Metro–North Railroad	NEW HAVEN LINE MP 31.2 TO MP 25.3 ROUTINGS – TRACKS 3 & 1 WEST – 270 CUTBACK	ISSUE DATE: / REV. / NHS / NHS / /users/signal/RTG RTG–NHL1 SHEET 7W NHL1 L1007W

Gannett Fleming/CWA

CONTRACT # 1000027511

PROJECT SHEET # 0110

270 CODE CUTBACK

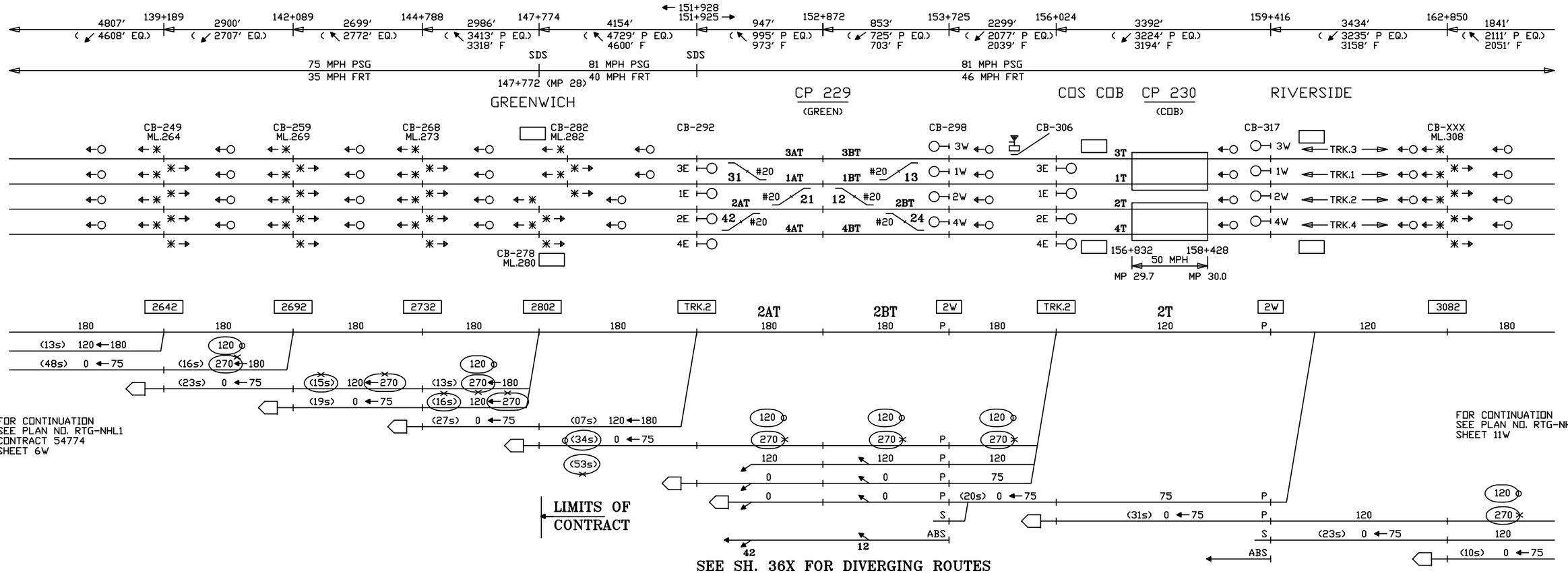

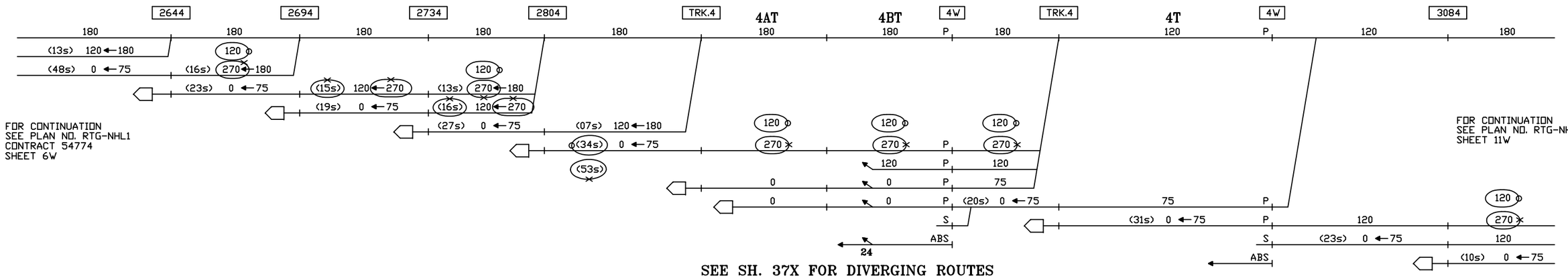

THE SIGNALING WEST OF CP 229 IS EXISTING PER CONTRACT 54774, AND IS NOT PART OF THIS DESIGN.
NO ENFORCEMENT IS PROVIDED FOR FIRST CURVE EAST OF PORT CHESTER.

ATC ENFORCEMENT IS PROVIDED FOR CP 230 MOVABLE BRIDGE.

CIRCUIT ENGINEER	SR. SIGNAL ENGR.–DESIGN & STANDARDS	DIRECTOR C&S SYSTEMS	MTA Metro–North Railroad	NEW HAVEN LINE MP 31.2 TO MP 25.3 ROUTINGS – TRACKS 2 & 4 WEST – 270 CUTBACK	ISSUE DATE: / REV. / NHS / NHS /users/signal/RTG RTG–NHL1 SHEET 8W NHL1 L1008W

Gannett Fleming/CWA

CONTRACT #	PROJECT SHEET #
1000027511	0111

270 CODE CUTBACK

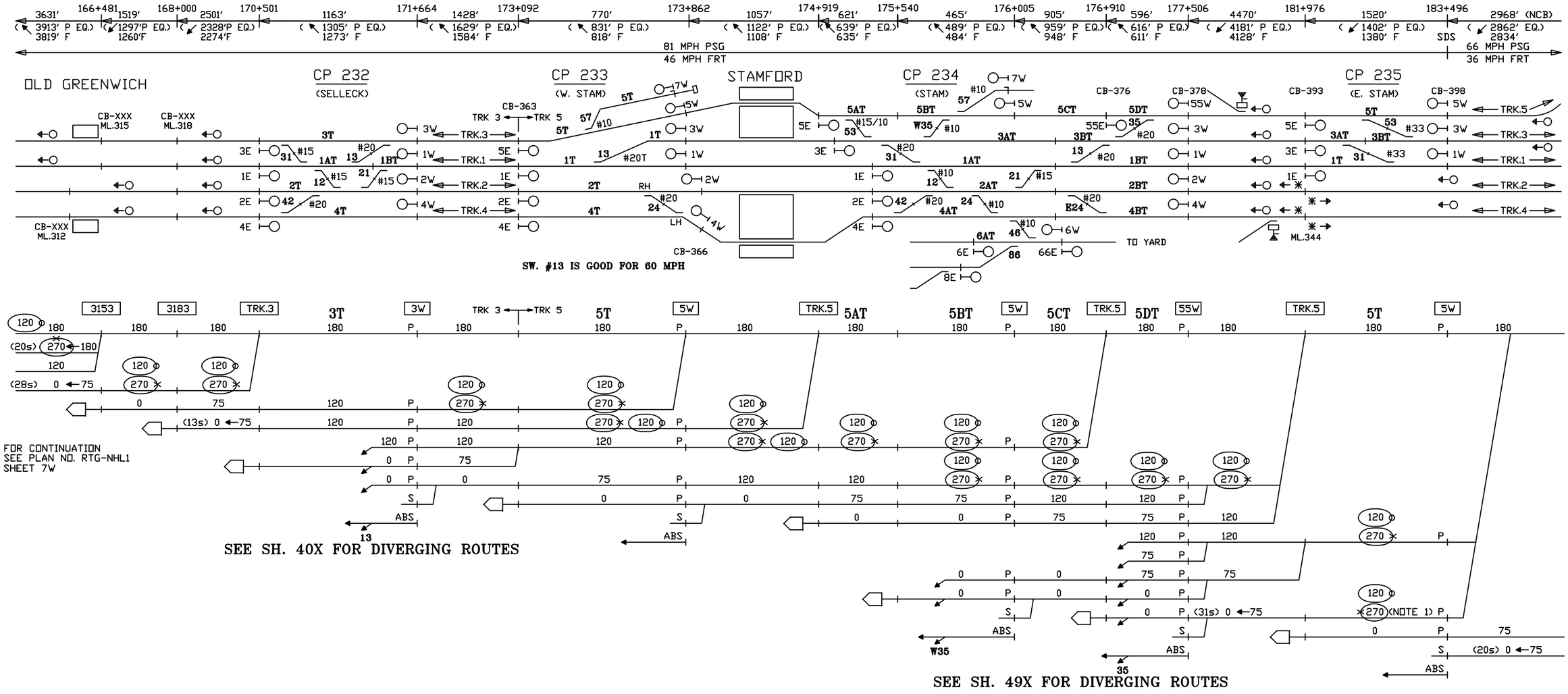

NOTE 1 - THIS CONTROL LINE CANNOT BE COMBINED WITH THE ONE ABOVE BECAUSE OF DIVERGING ROUTE FROM TRACK 3 AT CP 235.

CIRCUIT ENGINEER	SR. SIGNAL ENGR.-DESIGN & STANDARDS	DIRECTOR C&S SYSTEMS	MTA Metro-North Railroad	NEW HAVEN LINE MP 35.6 TO MP 31.2 ROUTINGS - TRACK 5 CHANGES TO TRACK 3 WEST - 270 CUTBACK	ISSUE DATE:	RTG-NHL1
					NHS REV.	SHEET 9W
					NHS /users/signal/RTG	NHL1 L1009W

Gannett Fleming/CWA

CONTRACT #	PROJECT SHEET #
1000027511	0112

270 CODE CUTBACK

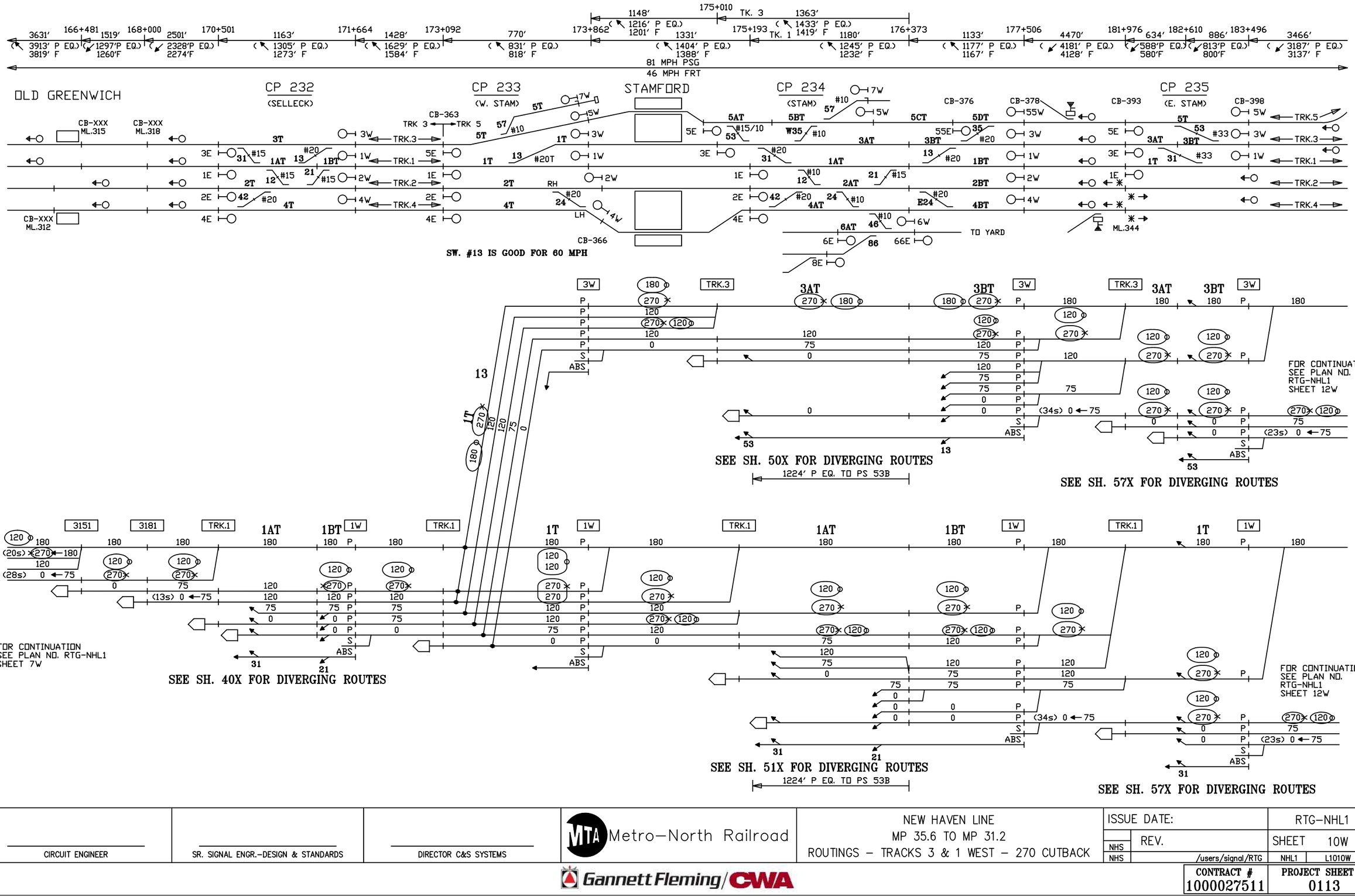

CIRCUIT ENGINEER	SR. SIGNAL ENGR.–DESIGN & STANDARDS	DIRECTOR C&S SYSTEMS	MTA Metro–North Railroad	NEW HAVEN LINE MP 35.6 TO MP 31.2 ROUTINGS – TRACKS 3 & 1 WEST – 270 CUTBACK	ISSUE DATE: RTG–NHL1 REV. SHEET 10W NHS /users/signal/RTG NHL1 L1010W

Gannett Fleming/CWA

CONTRACT # 1000027511 | PROJECT SHEET # 0113

270 CODE CUTBACK

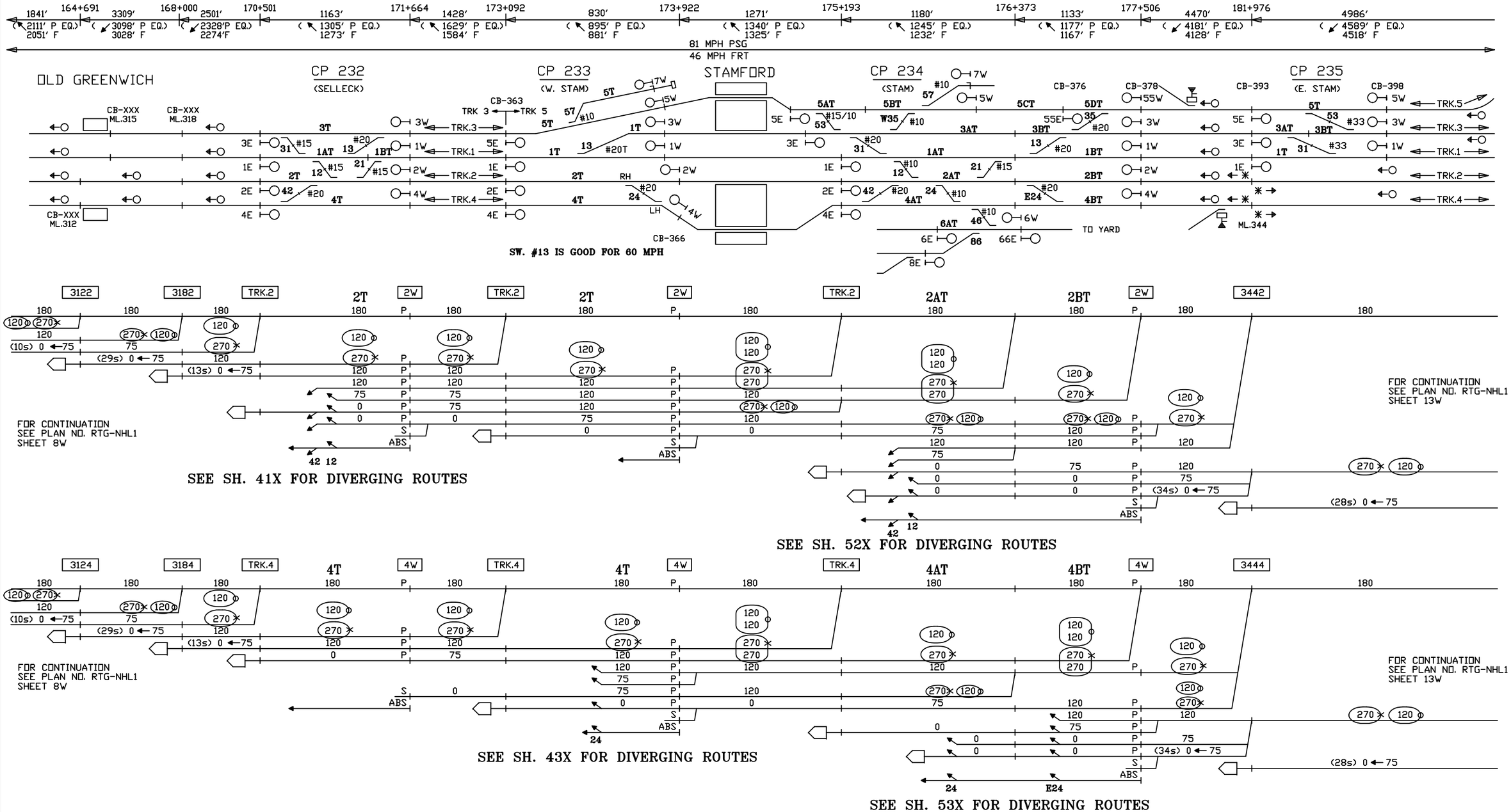

SEE SH. 41X FOR DIVERGING ROUTES

SEE SH. 52X FOR DIVERGING ROUTES

SEE SH. 43X FOR DIVERGING ROUTES

SEE SH. 53X FOR DIVERGING ROUTES

CIRCUIT ENGINEER	SR. SIGNAL ENGR.–DESIGN & STANDARDS	DIRECTOR C&S SYSTEMS	Metro–North Railroad	NEW HAVEN LINE MP 35.6 TO MP 31.2 ROUTINGS – TRACKS 2 & 4 WEST – 270 CUTBACK	ISSUE DATE: / RTG–NHL1 REV. / SHEET 11W NHS NHS /users/signal/RTG NHL1 L1011W

Gannett Fleming/CWA

CONTRACT # 1000027511

PROJECT SHEET # 0114

270 CODE CUTBACK

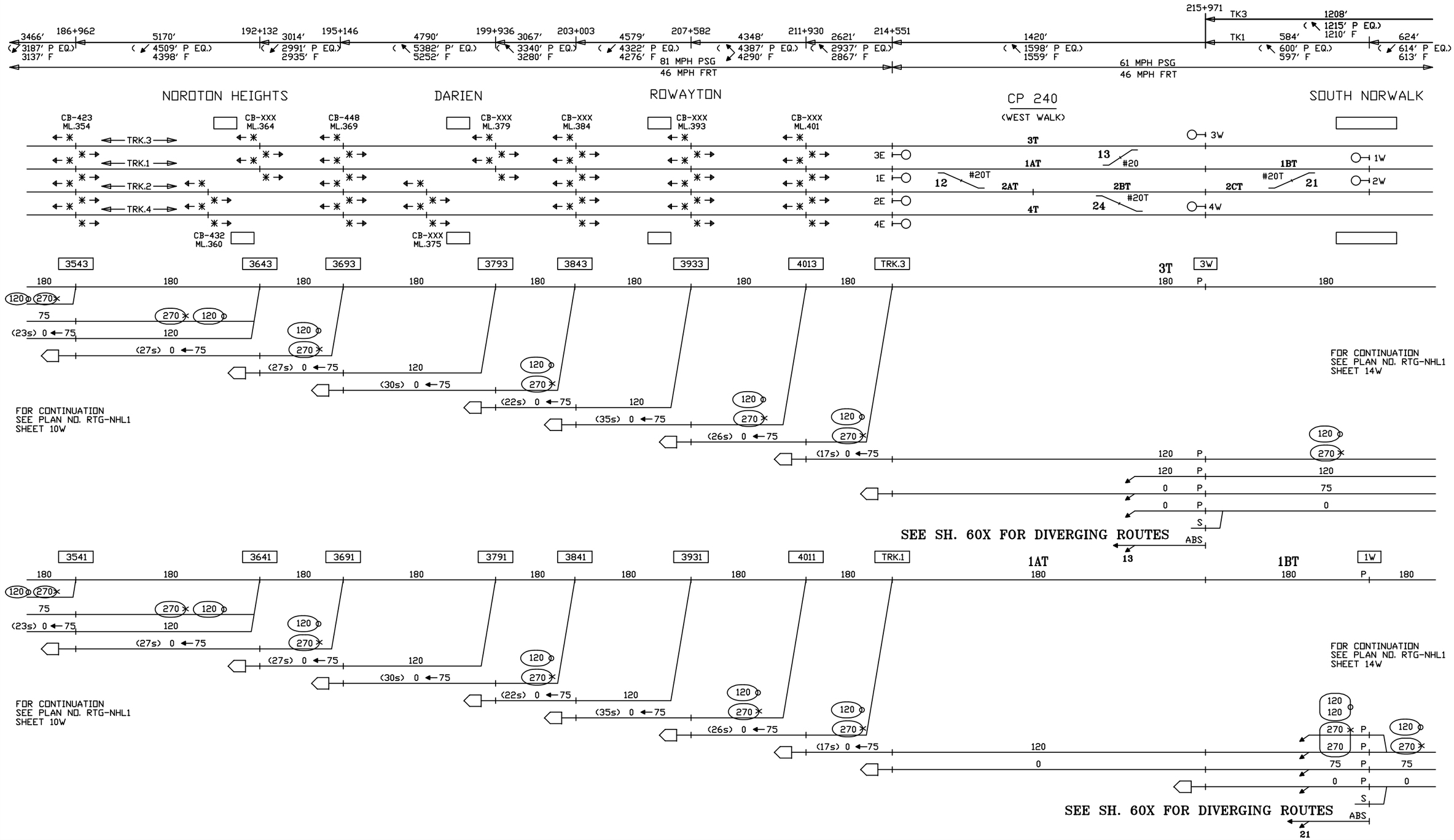

CIRCUIT ENGINEER	SR. SIGNAL ENGR.–DESIGN & STANDARDS	DIRECTOR C&S SYSTEMS	MTA Metro–North Railroad	NEW HAVEN LINE MP 40.7 TO MP 35.6 ROUTINGS – TRACKS 3 & 1 WEST – 270 CUTBACK	ISSUE DATE: / REV. / /users/signal/RTG RTG–NHL1 SHEET 12W NHL1 L1012W

Gannett Fleming/CWA

CONTRACT #	PROJECT SHEET #
1000027511	0115

270 CODE CUTBACK

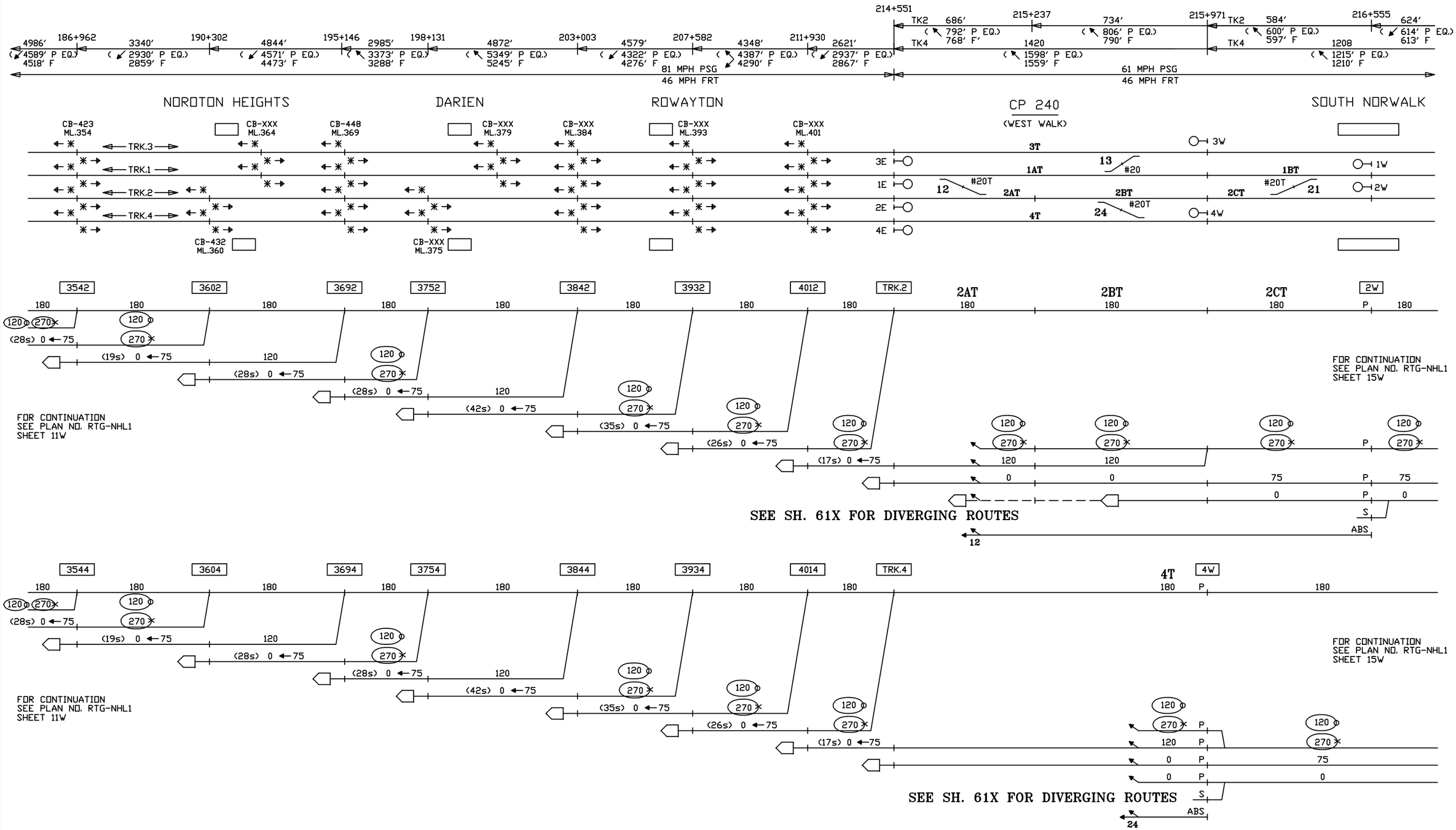

CIRCUIT ENGINEER	SR. SIGNAL ENGR.-DESIGN & STANDARDS	DIRECTOR C&S SYSTEMS	MTA Metro-North Railroad	NEW HAVEN LINE MP 40.7 TO MP 35.6 ROUTINGS – TRACKS 2 & 4 WEST – 270 CUTBACK	ISSUE DATE: NHS REV. NHS /users/signal/RTG	RTG-NHL1 SHEET 13W NHL1 L1013W

Gannett Fleming/CWA

CONTRACT #	PROJECT SHEET #
1000027511	0116

270 CODE CUTBACK

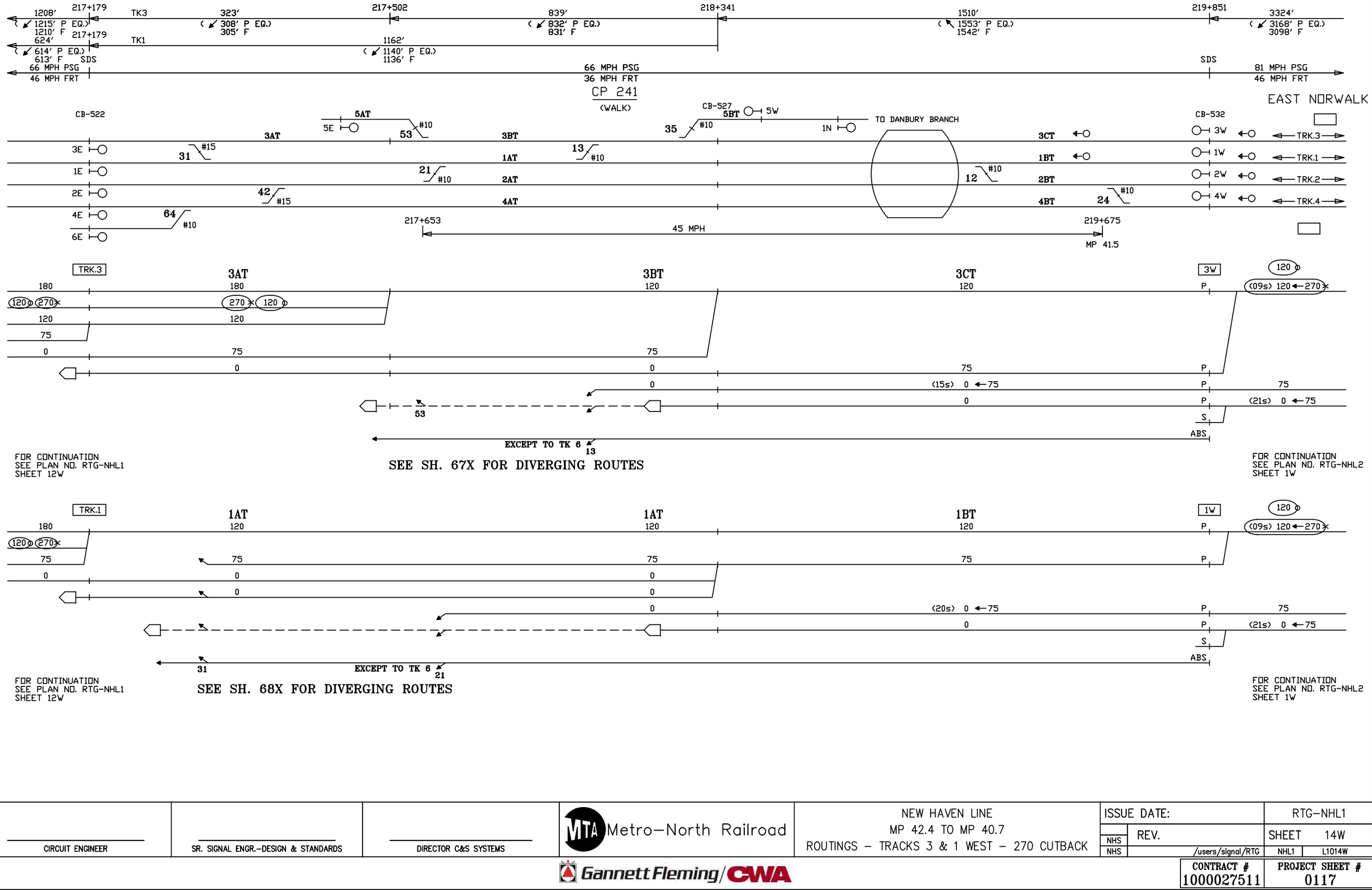

CIRCUIT ENGINEER	SR. SIGNAL ENGR.–DESIGN & STANDARDS	DIRECTOR C&S SYSTEMS	MTA Metro–North Railroad	NEW HAVEN LINE MP 42.4 TO MP 40.7 ROUTINGS – TRACKS 3 & 1 WEST – 270 CUTBACK	ISSUE DATE:	RTG–NHL1
					REV.	SHEET 14W
					NHS /users/signal/RTG	NHL1 L1014W
			Gannett Fleming/CWA		CONTRACT # 1000027511	PROJECT SHEET # 0117

270 CODE CUTBACK

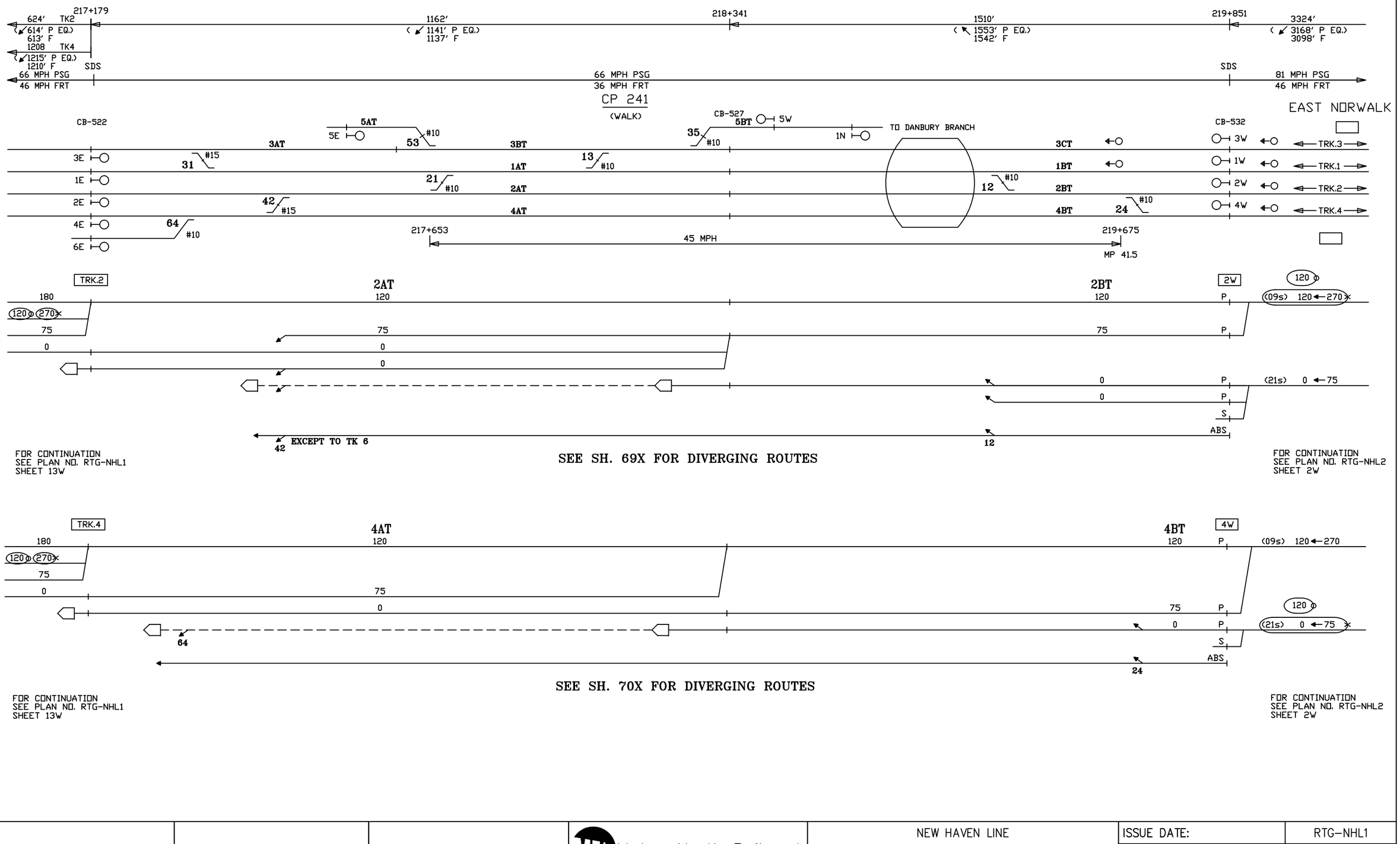

CIRCUIT ENGINEER	SR. SIGNAL ENGR.–DESIGN & STANDARDS	DIRECTOR C&S SYSTEMS	MTA Metro–North Railroad	NEW HAVEN LINE MP 42.4 TO MP 40.7 ROUTINGS – TRACKS 2 & 4 WEST – 270 CUTBACK	ISSUE DATE: / RTG–NHL1 NHS REV. / SHEET 15W NHS /users/signal/RTG / NHL1 / L1015W

Gannett Fleming/CWA

CONTRACT #	PROJECT SHEET #
1000027511	0118

270 CODE CUTBACK

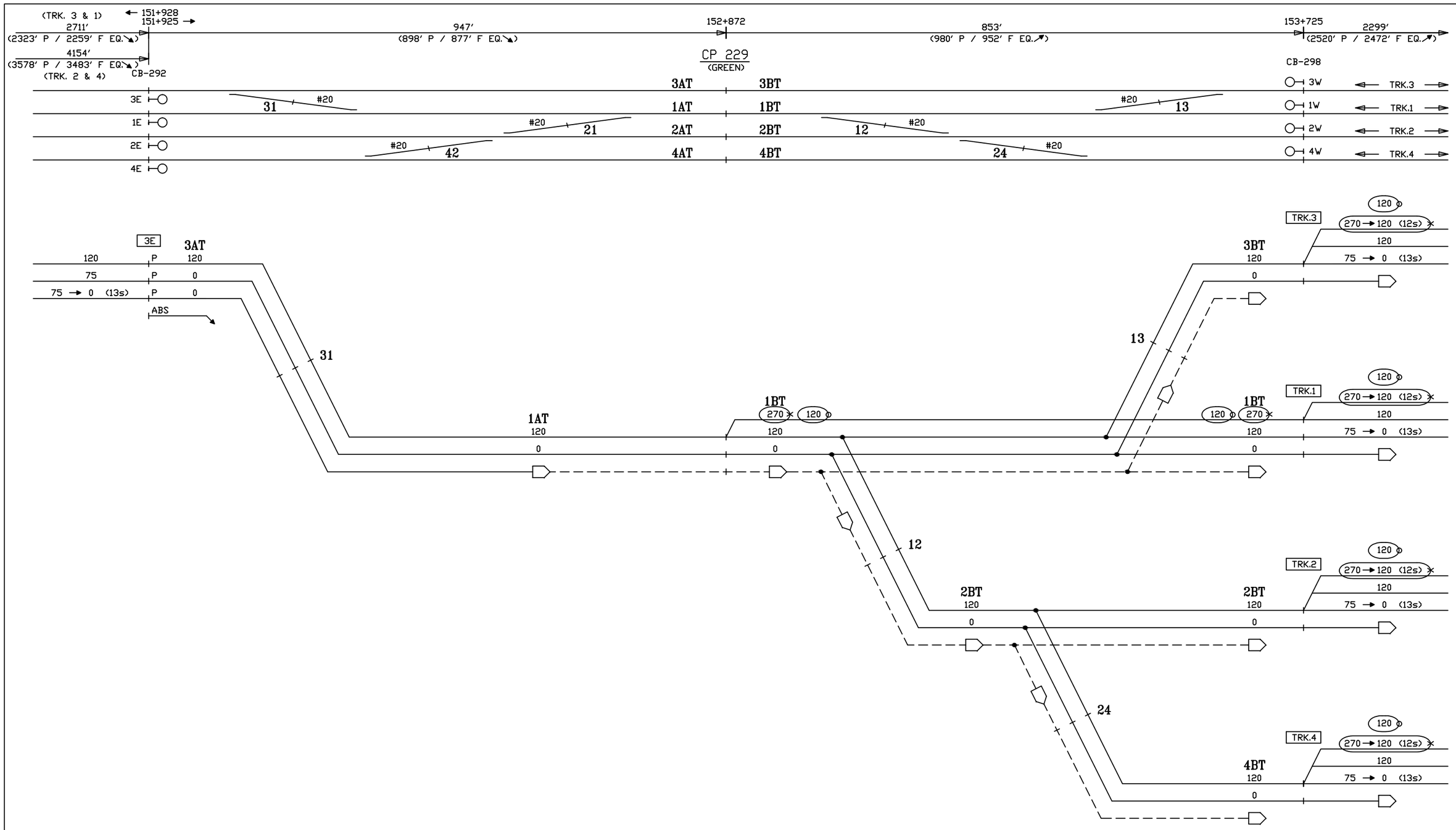

CIRCUIT ENGINEER	SR. SIGNAL ENGR.–DESIGN & STANDARDS	DIRECTOR C&S SYSTEMS	MTA Metro–North Railroad	NEW HAVEN LINE CP 229 DIVERGING ROUTES – TRACK 3 EAST – 270 CUTBACK	ISSUE DATE: / REV. / /users/signal/RTG RTG–NHL1 SHEET 30X NHL1 L1030X

Gannett Fleming/CWA

CONTRACT #	PROJECT SHEET #
1000027511	0119

270 CODE CUTBACK

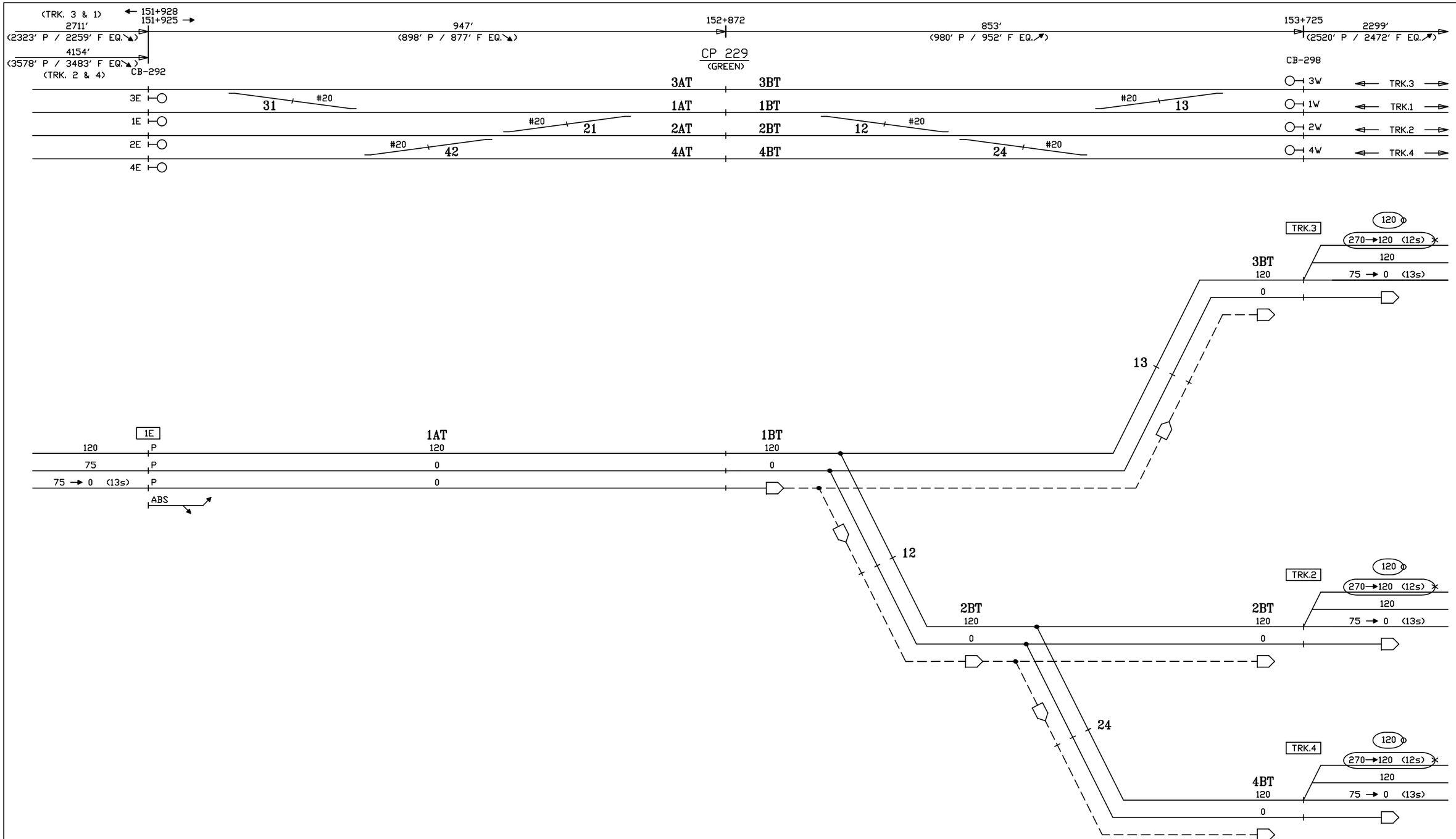

CIRCUIT ENGINEER	SR. SIGNAL ENGR.–DESIGN & STANDARDS	DIRECTOR C&S SYSTEMS	MTA Metro–North Railroad	NEW HAVEN LINE CP 229 DIVERGING ROUTES – TRACK 1 EAST – 270 CUTBACK	ISSUE DATE: / REV. / /users/signal/RTG RTG–NHL1 SHEET 31X NHL1 L1031X

Gannett Fleming/CWA

CONTRACT #	PROJECT SHEET #
1000027511	0120

270 CODE CUTBACK

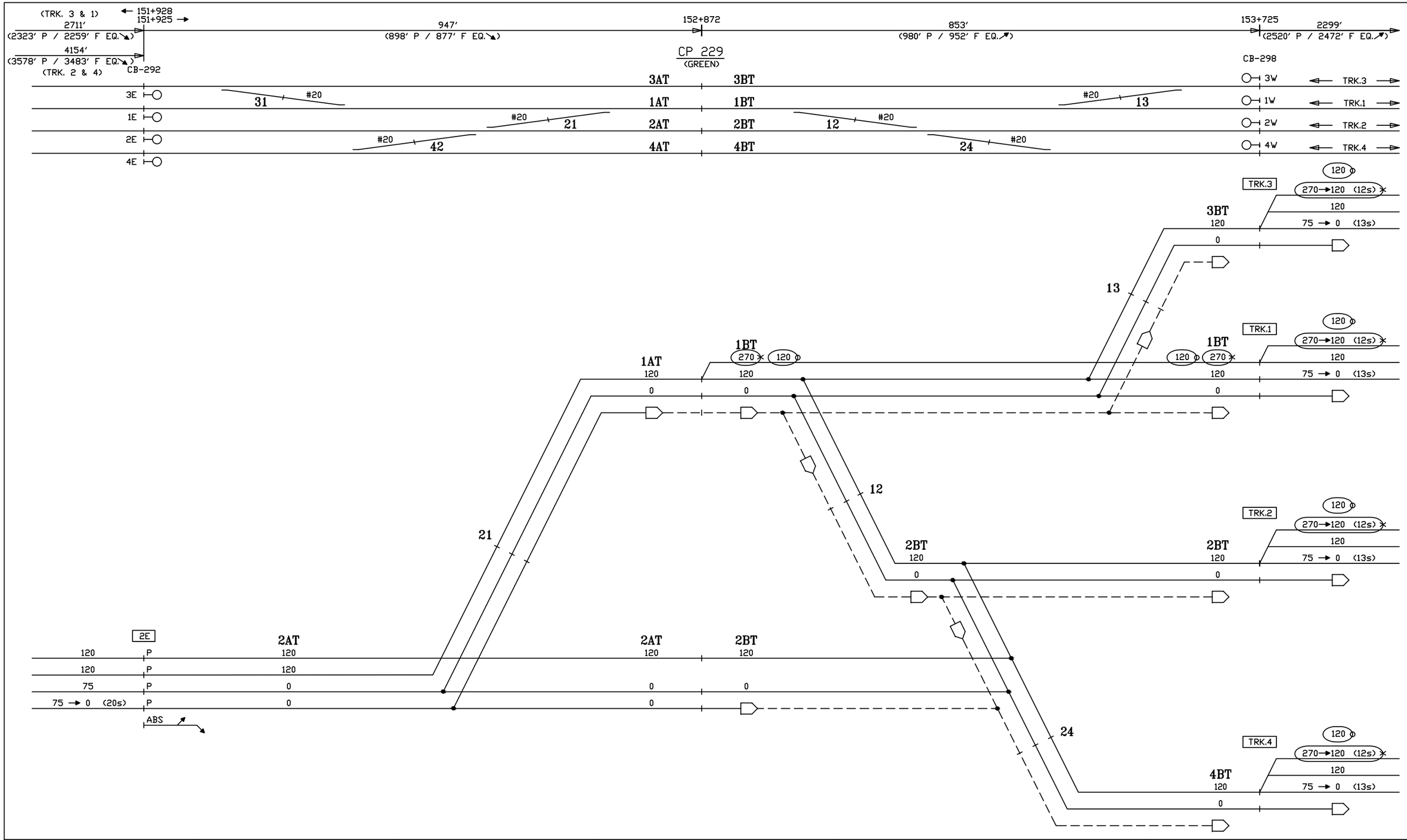

CIRCUIT ENGINEER	SR. SIGNAL ENGR.–DESIGN & STANDARDS	DIRECTOR C&S SYSTEMS	MTA Metro–North Railroad	NEW HAVEN LINE CP 229 DIVERGING ROUTES – TRACK 2 EAST – 270 CUTBACK	ISSUE DATE: REV. /users/signal/RTG

RTG–NHL1
SHEET 32X
NHL1 L1032X

Gannett Fleming/CWA

CONTRACT # 1000027511

PROJECT SHEET # 0121

270 CODE CUTBACK

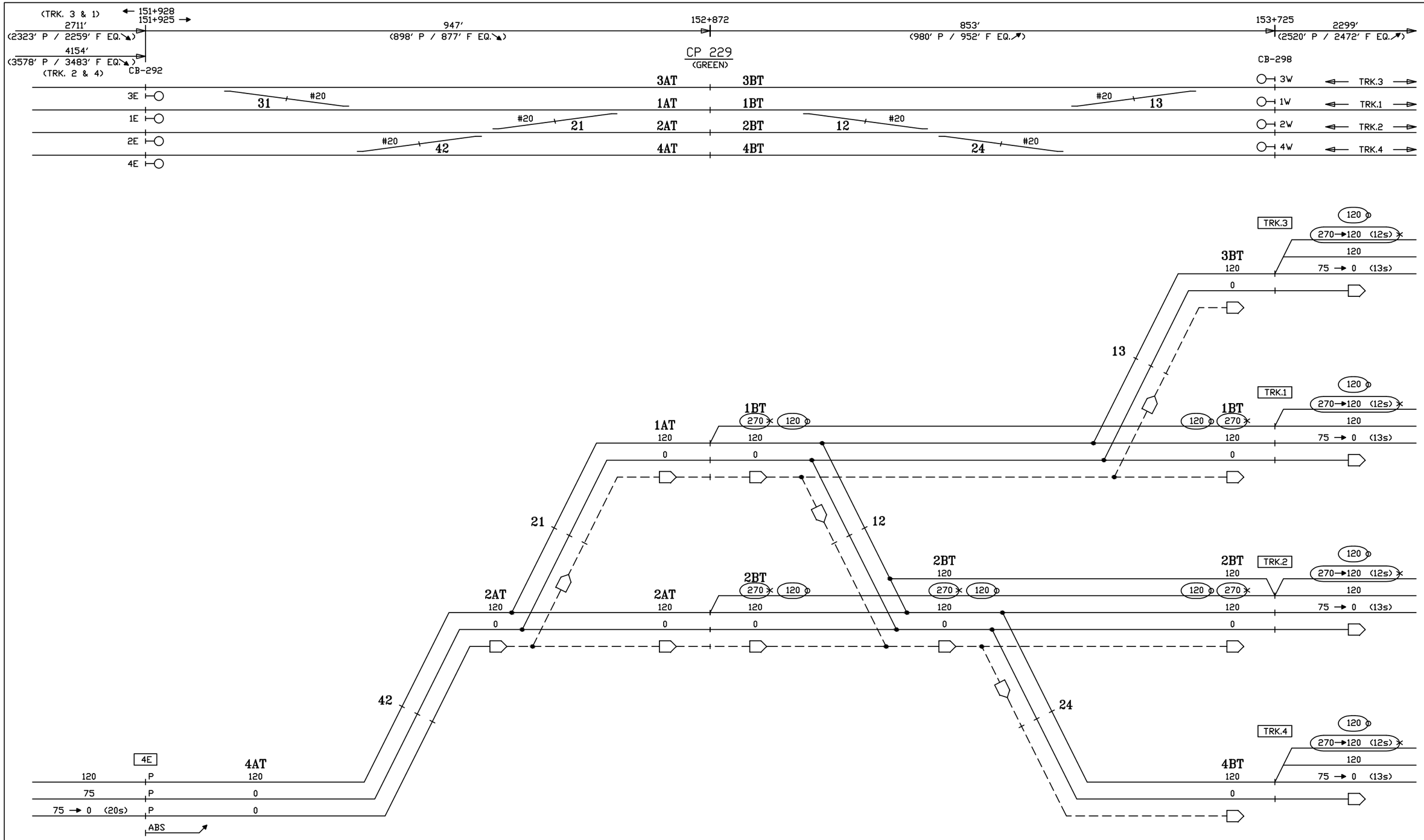

CIRCUIT ENGINEER	SR. SIGNAL ENGR.–DESIGN & STANDARDS	DIRECTOR C&S SYSTEMS	MTA Metro–North Railroad	NEW HAVEN LINE CP 229 DIVERGING ROUTES – TRACK 4 EAST – 270 CUTBACK	ISSUE DATE: / REV. / /users/signal/RTG	RTG–NHL1 SHEET 33X NHL1 L1033X

Gannett Fleming/CWA

CONTRACT #	PROJECT SHEET #
1000027511	0122

270 CODE CUTBACK

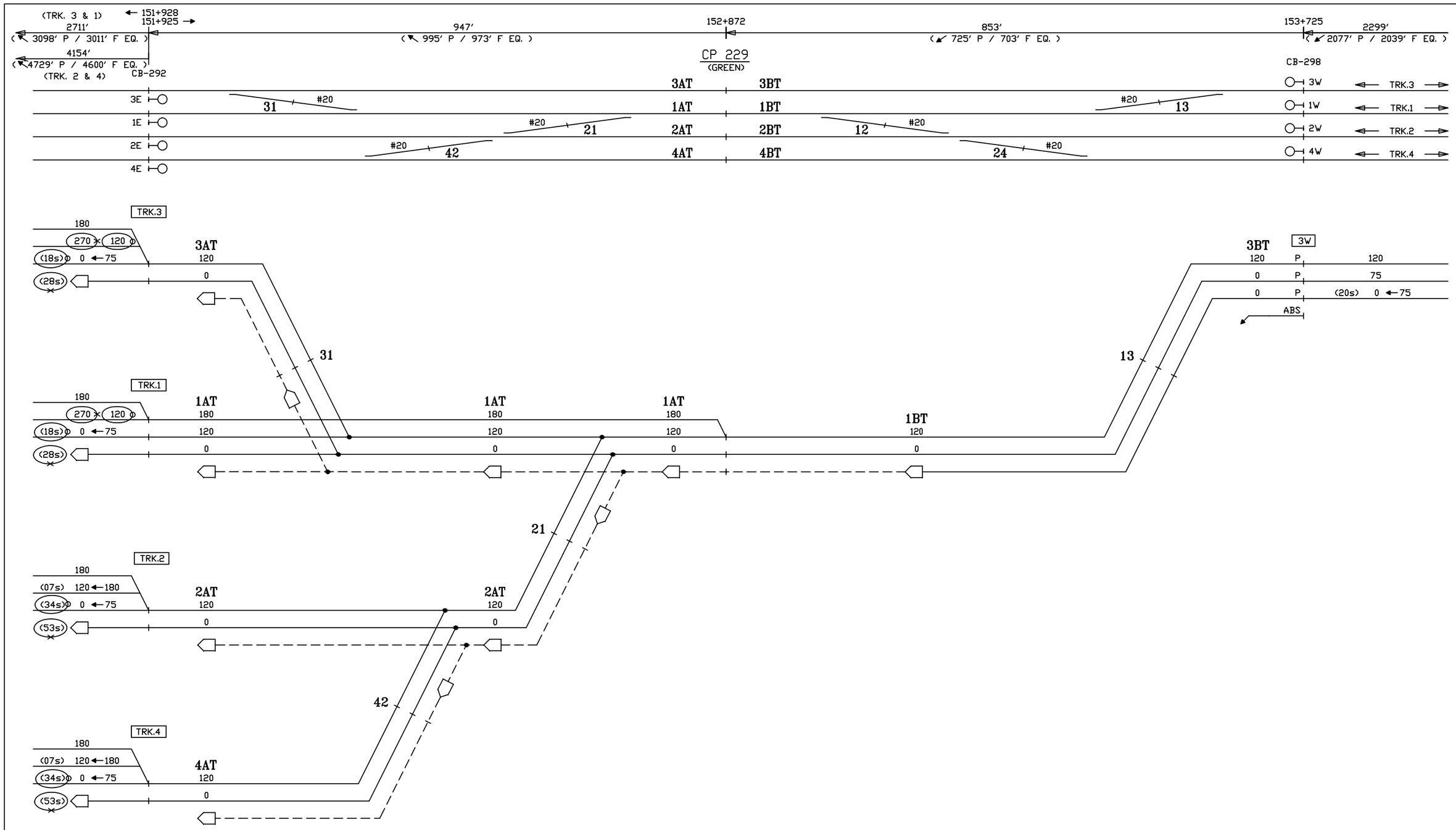

CIRCUIT ENGINEER	SR. SIGNAL ENGR.–DESIGN & STANDARDS	DIRECTOR C&S SYSTEMS	MTA Metro–North Railroad	NEW HAVEN LINE CP 229 DIVERGING ROUTES – TRACK 3 WEST – 270 CUTBACK	ISSUE DATE: / REV. / /users/signal/RTG RTG–NHL1 SHEET 34 NHL1 L1034X

Gannett Fleming/CWA

CONTRACT #	PROJECT SHEET #
1000027511	0123

270 CODE CUTBACK

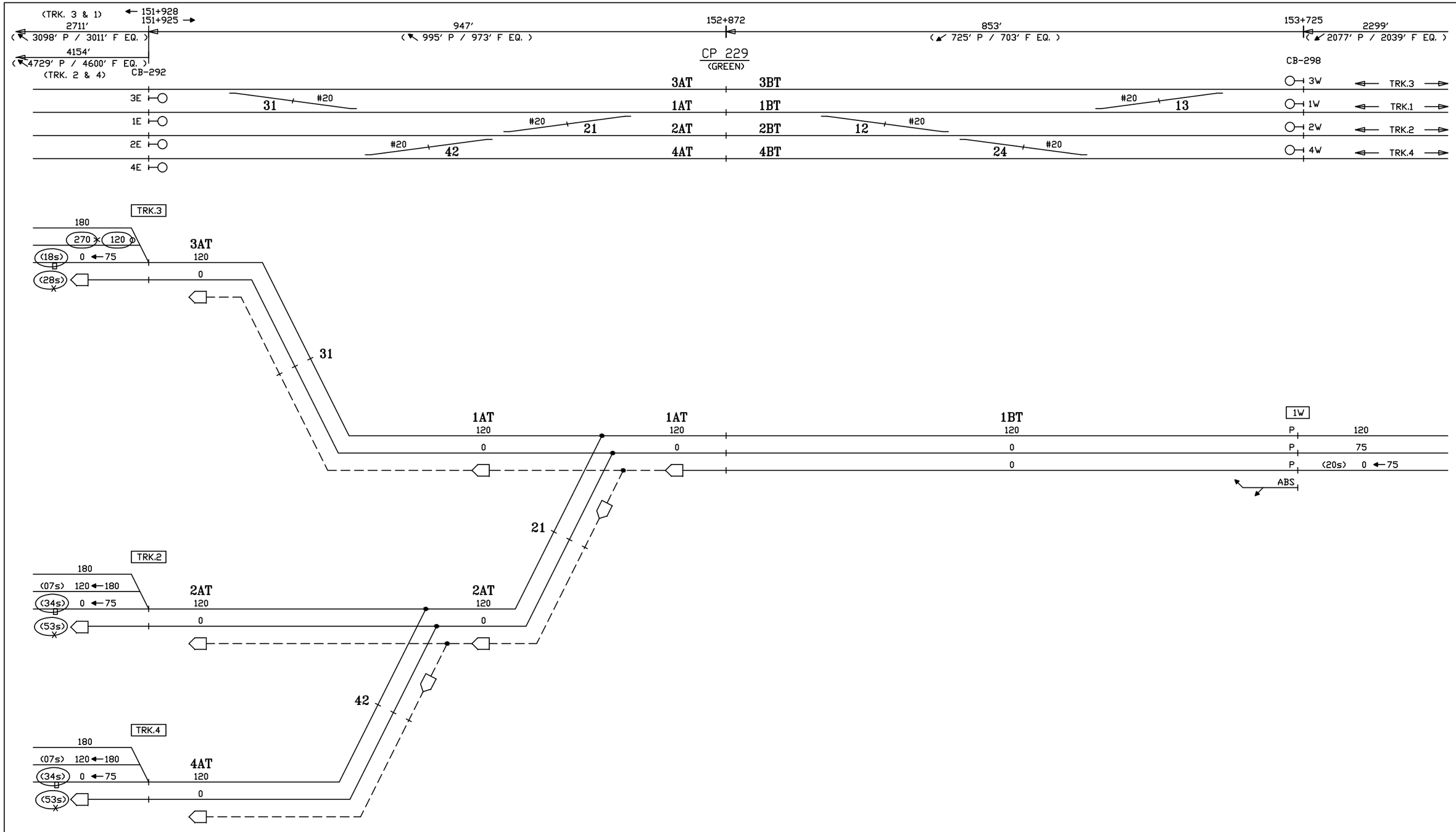

CIRCUIT ENGINEER	SR. SIGNAL ENGR.–DESIGN & STANDARDS	DIRECTOR C&S SYSTEMS	MTA Metro–North Railroad	NEW HAVEN LINE CP 229 DIVERGING ROUTES – TRACK 1 WEST – 270 CUTBACK	ISSUE DATE:	RTG–NHL1
					REV.	SHEET 35X
					/users/signal/RTG	NHL1 L1035X

Gannett Fleming/CWA

CONTRACT #	PROJECT SHEET #
1000027511	0124

270 CODE CUTBACK

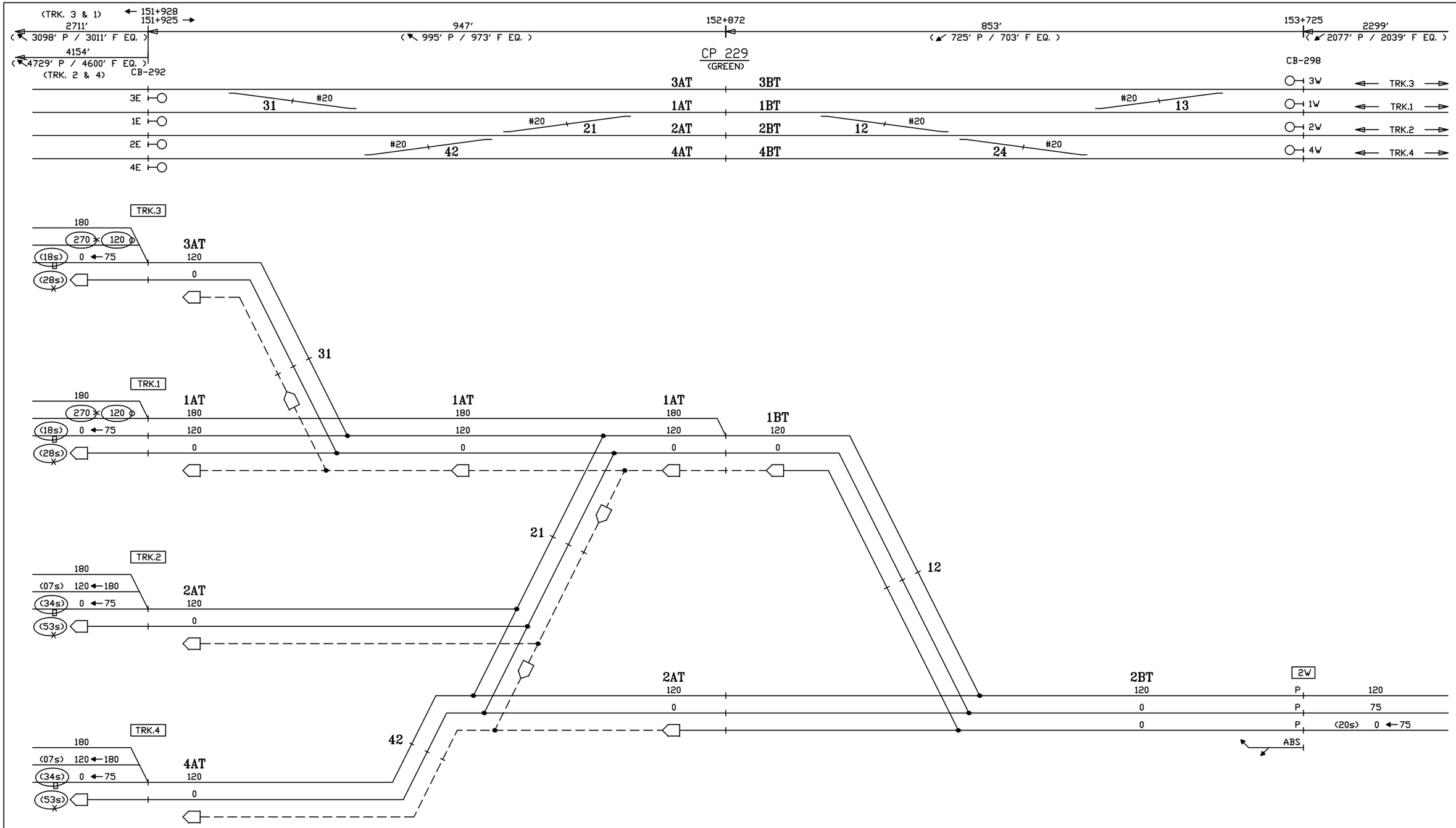

CIRCUIT ENGINEER	SR. SIGNAL ENGR.–DESIGN & STANDARDS	DIRECTOR C&S SYSTEMS	MTA Metro–North Railroad	NEW HAVEN LINE CP 229 DIVERGING ROUTES – TRACK 2 WEST – 270 CUTBACK	ISSUE DATE: / REV. / /users/signal/RTG RTG–NHL1 SHEET 36X NHL1 L1036X

Gannett Fleming/CWA

CONTRACT #	PROJECT SHEET #
1000027511	0125

270 CODE CUTBACK

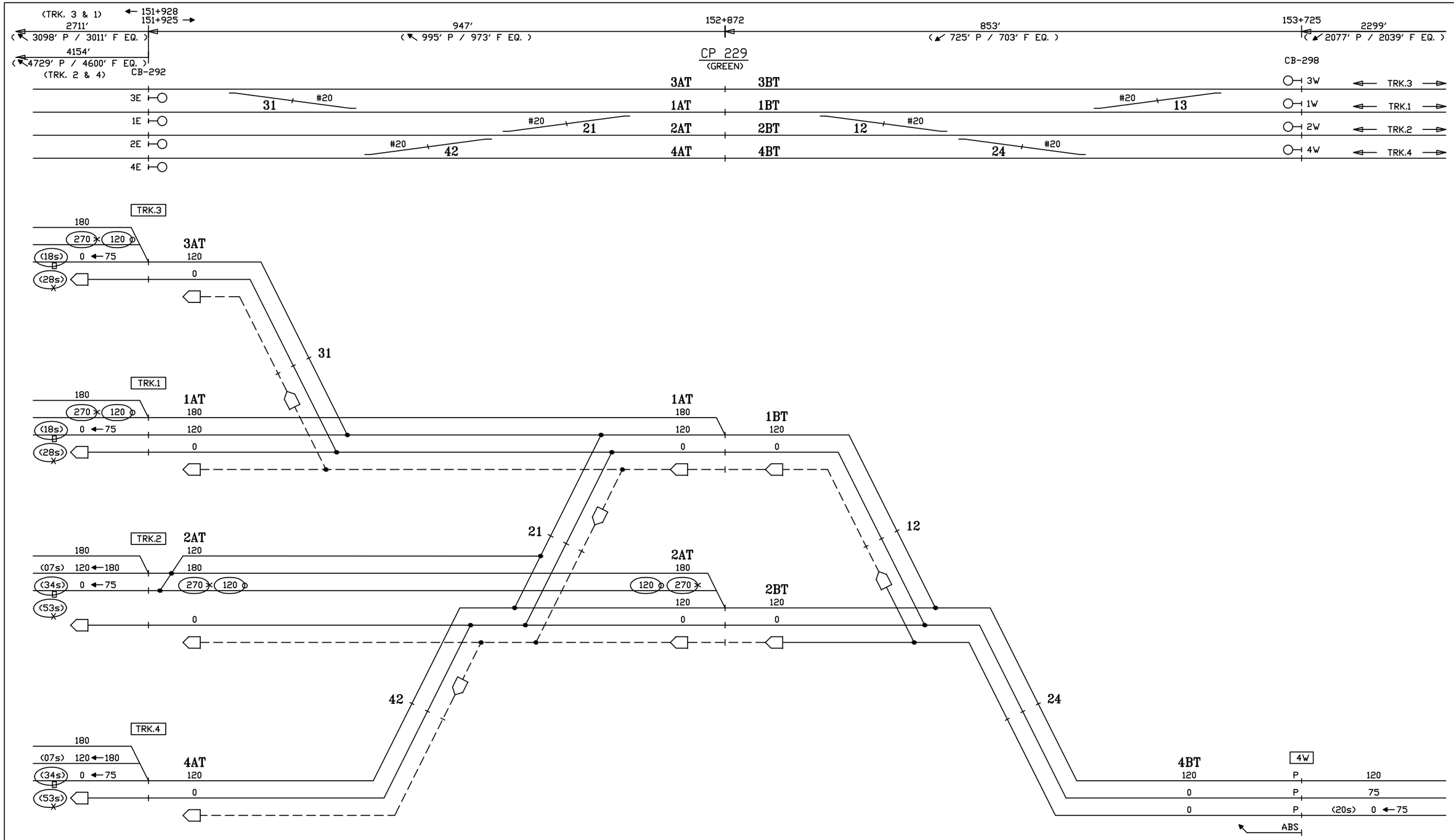

CIRCUIT ENGINEER	SR. SIGNAL ENGR.–DESIGN & STANDARDS	DIRECTOR C&S SYSTEMS	MTA Metro–North Railroad	NEW HAVEN LINE CP 229 DIVERGING ROUTES – TRACK 4 WEST – 270 CUTBACK	ISSUE DATE: / REV. / /users/signal/RTG RTG–NHL1 SHEET 37X NHL1 L1037X

Gannett Fleming/CWA

CONTRACT #	PROJECT SHEET #
1000027511	0126

270 CODE CUTBACK

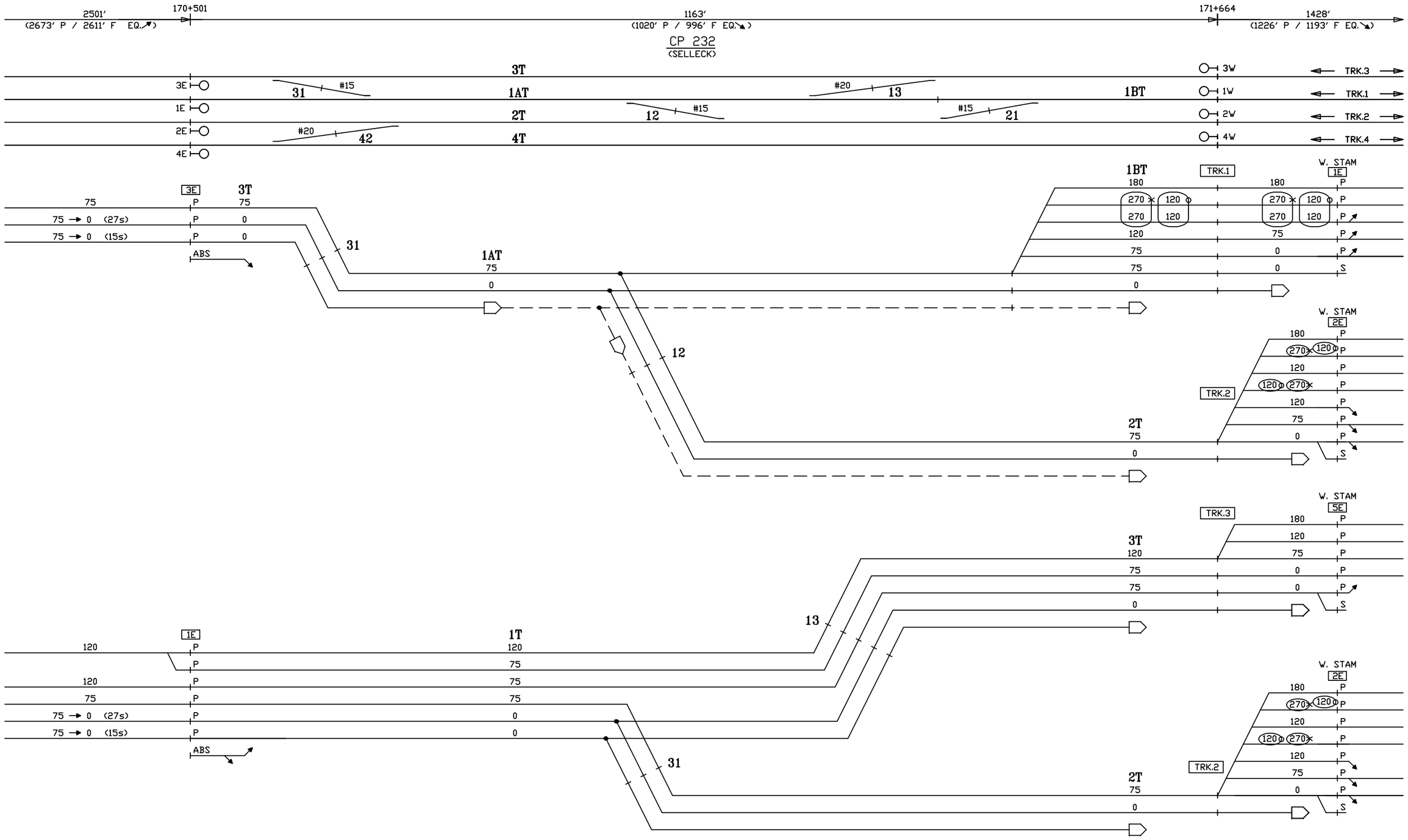

CIRCUIT ENGINEER	SR. SIGNAL ENGR.–DESIGN & STANDARDS	DIRECTOR C&S SYSTEMS	MTA Metro–North Railroad	NEW HAVEN LINE CP 232 DIVERGING ROUTES – TRACKS 3 & 1 EAST – 270 CUTBACK	ISSUE DATE: / REV. / /USERS/SIGNAL/RTG RTG–NHL1 SHEET 38X NHL1 L1038X

Gannett Fleming/CWA

CONTRACT #	PROJECT SHEET #
1000027511	0127

270 CODE CUTBACK

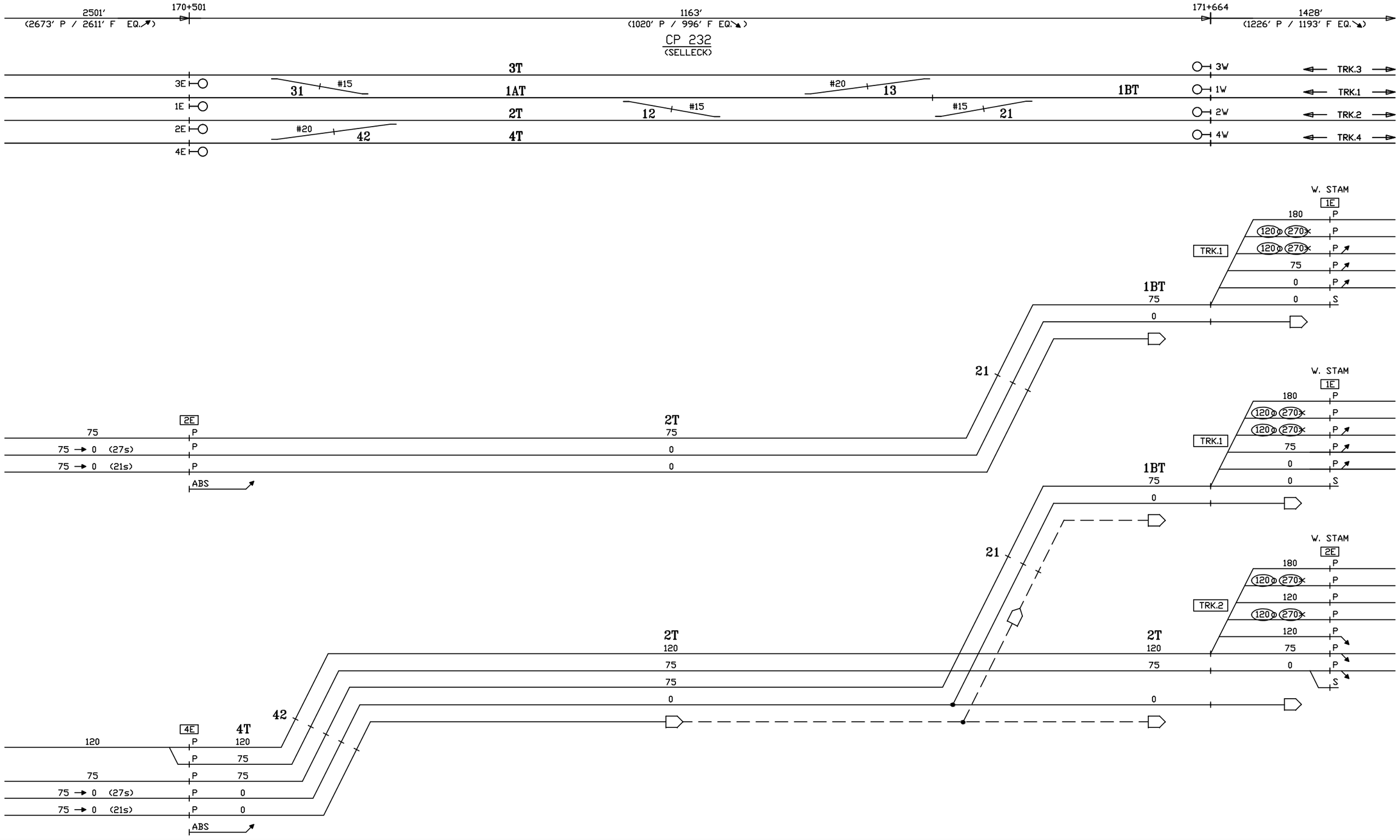

CIRCUIT ENGINEER	SR. SIGNAL ENGR.–DESIGN & STANDARDS	DIRECTOR C&S SYSTEMS	MTA Metro–North Railroad	NEW HAVEN LINE CP 232 DIVERGING ROUTES – TRACKS 2 & 4 EAST – 270 CUTBACK	ISSUE DATE: REV. /USERS/SIGNAL/RTG

RTG–NHL1
SHEET 39X
NHL1 L1039X

Gannett Fleming/CWA

CONTRACT # 1000027511

PROJECT SHEET # 0128

270 CODE CUTBACK

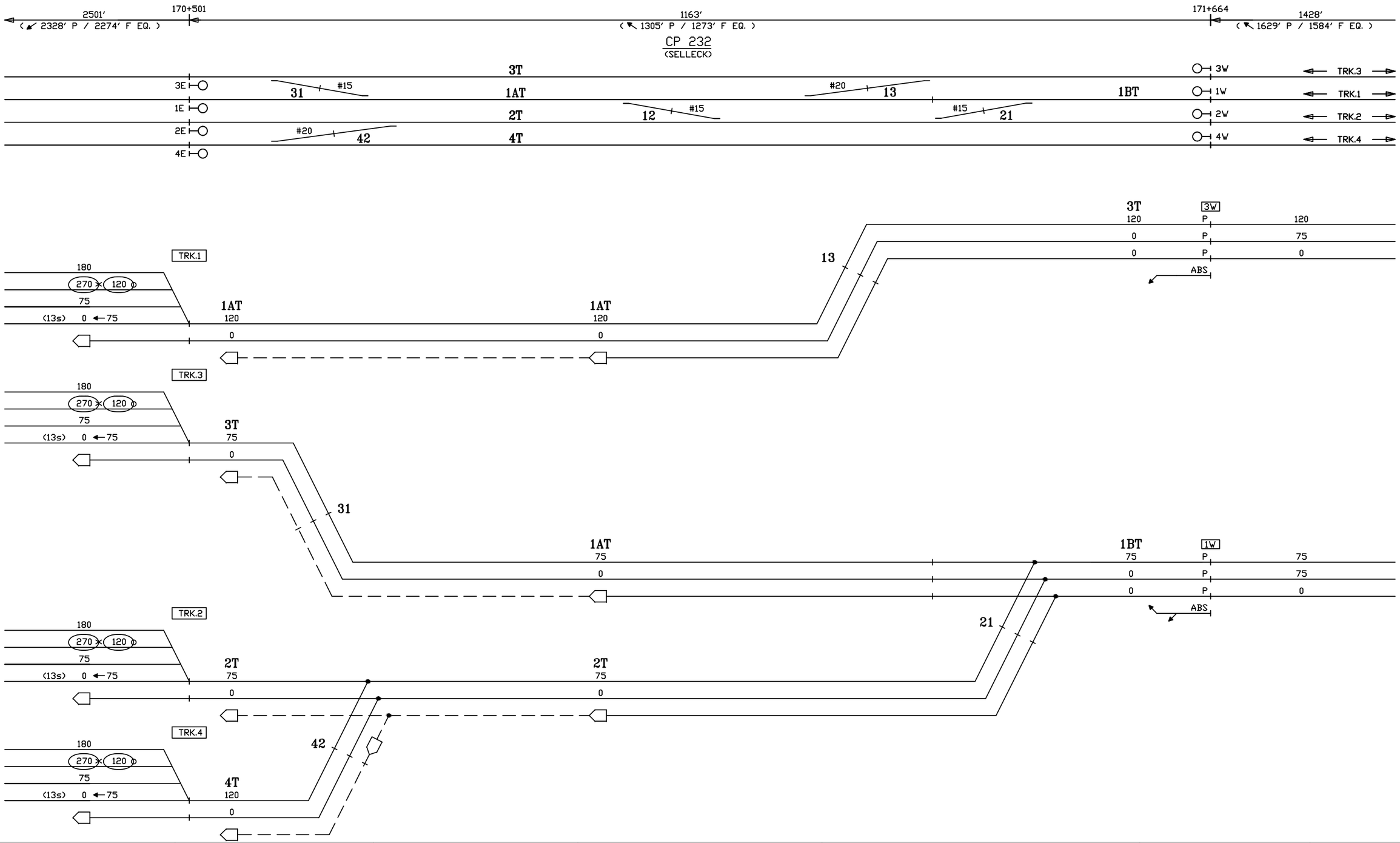

CIRCUIT ENGINEER	SR. SIGNAL ENGR.–DESIGN & STANDARDS	DIRECTOR C&S SYSTEMS	MTA Metro–North Railroad	NEW HAVEN LINE CP 232 DIVERGING ROUTES – TRACKS 3 & 1 WEST – 270 CUTBACK	ISSUE DATE: / REV. / /USERS/SIGNAL/RTG RTG–NHL1 SHEET 40X NHL1 L1040X

Gannett Fleming/CWA

CONTRACT #	PROJECT SHEET #
1000027511	0129

270 CODE CUTBACK

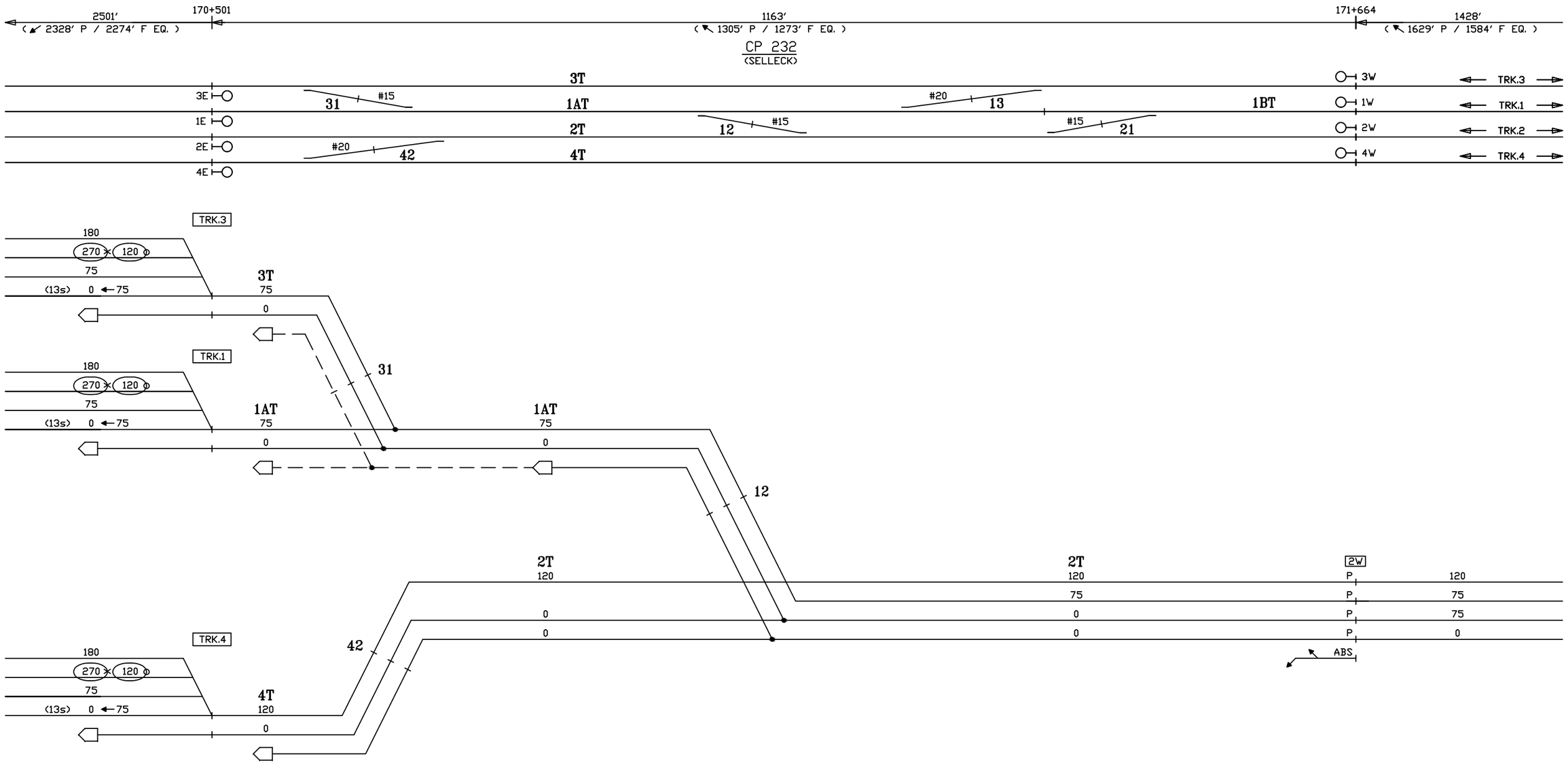

CIRCUIT ENGINEER	SR. SIGNAL ENGR.–DESIGN & STANDARDS	DIRECTOR C&S SYSTEMS	MTA Metro–North Railroad	NEW HAVEN LINE CP 232 DIVERGING ROUTES – TRACK 2 WEST – 270 CUTBACK	ISSUE DATE: / REV. / /USERS/SIGNAL/RTG RTG–NHL1 SHEET 41X NHL1 L1041X

Gannett Fleming/CWA

CONTRACT #	PROJECT SHEET #
1000027511	0130

270 CODE CUTBACK

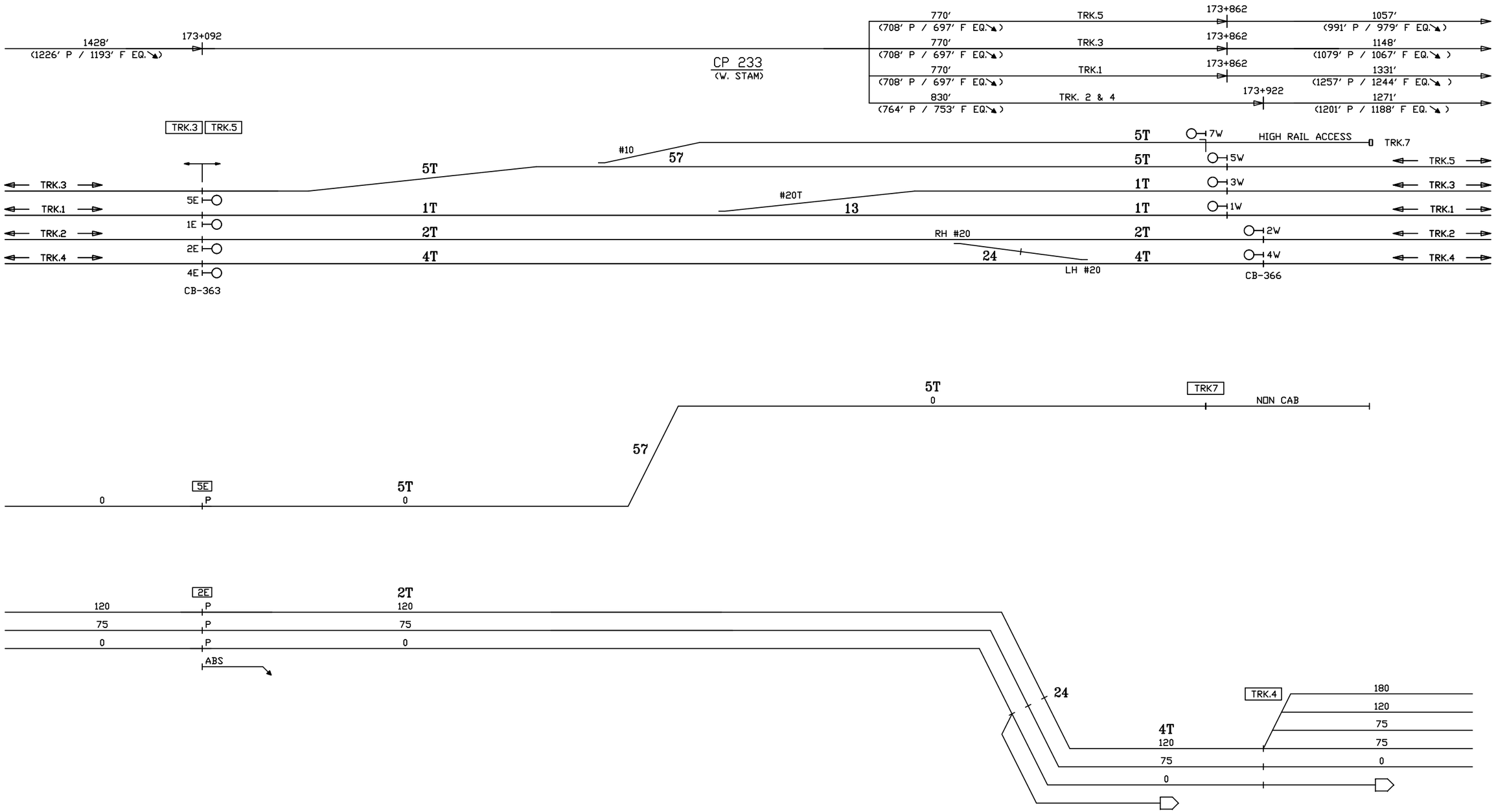

CIRCUIT ENGINEER	SR. SIGNAL ENGR.–DESIGN & STANDARDS	DIRECTOR C&S SYSTEMS	MTA Metro–North Railroad	NEW HAVEN LINE CP 233 DIVERGING ROUTES – TRACKS 5 & 2 EAST – 270 CUTBACK	ISSUE DATE:	RTG–NHL1
					REV.	SHEET 42X
					NHS /users/signal/RTG	NHS NHL1 L1042X

Gannett Fleming/CWA

CONTRACT #	PROJECT SHEET #
1000027511	0131

270 CODE CUTBACK

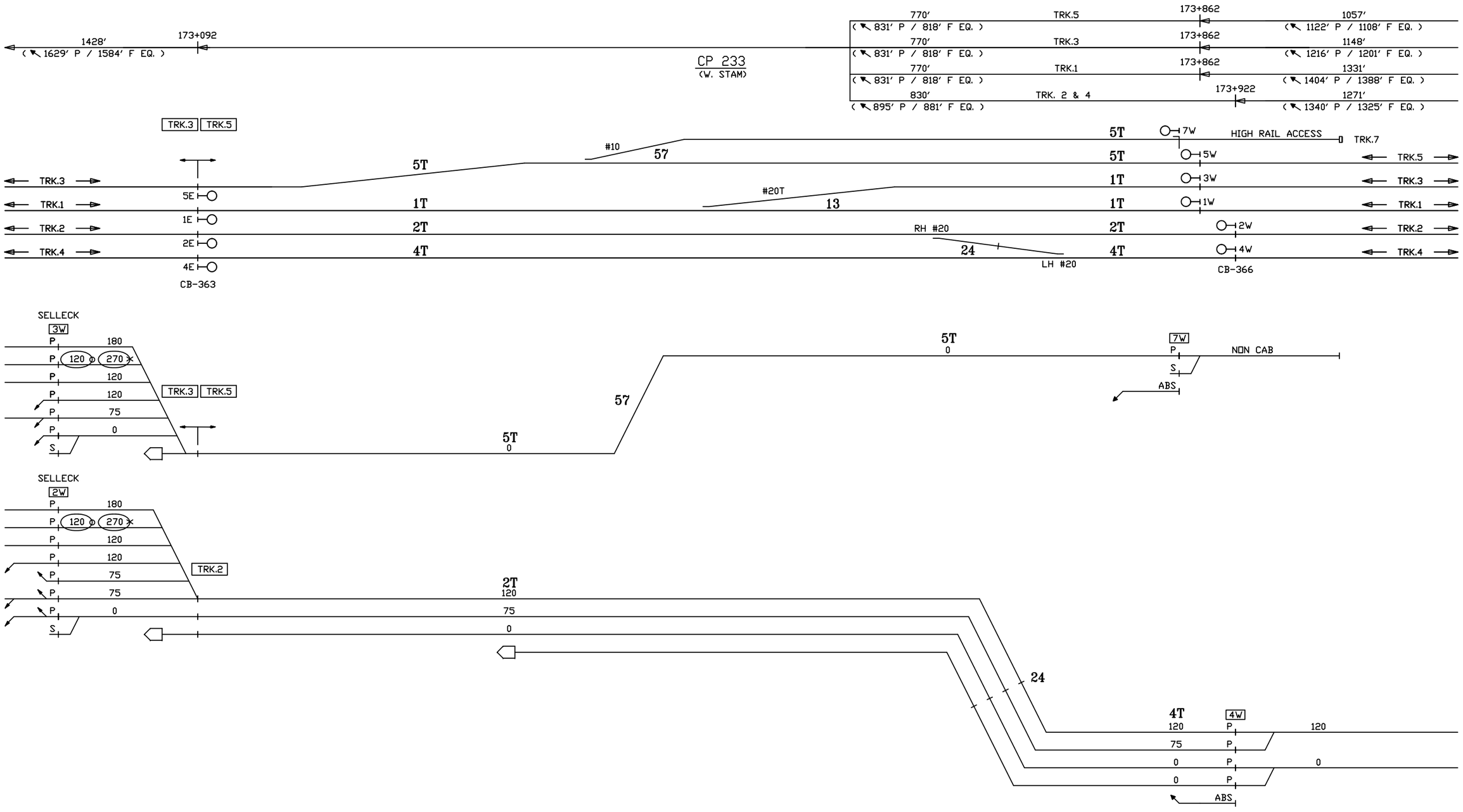

SEE SH. 10W FOR 3W TO TRACK 1 ROUTINGS

CIRCUIT ENGINEER	SR. SIGNAL ENGR.–DESIGN & STANDARDS	DIRECTOR C&S SYSTEMS	MTA Metro–North Railroad	NEW HAVEN LINE CP 233 DIVERGING ROUTES – TRACKS 7 & 4 WEST – 270 CUTBACK	ISSUE DATE:	RTG–NHL1
					NHS REV.	SHEET 43X
					NHS /users/signal/RTG	NHL1 L1043X

Gannett Fleming/CWA

CONTRACT #	PROJECT SHEET #
1000027511	0132

270 CODE CUTBACK

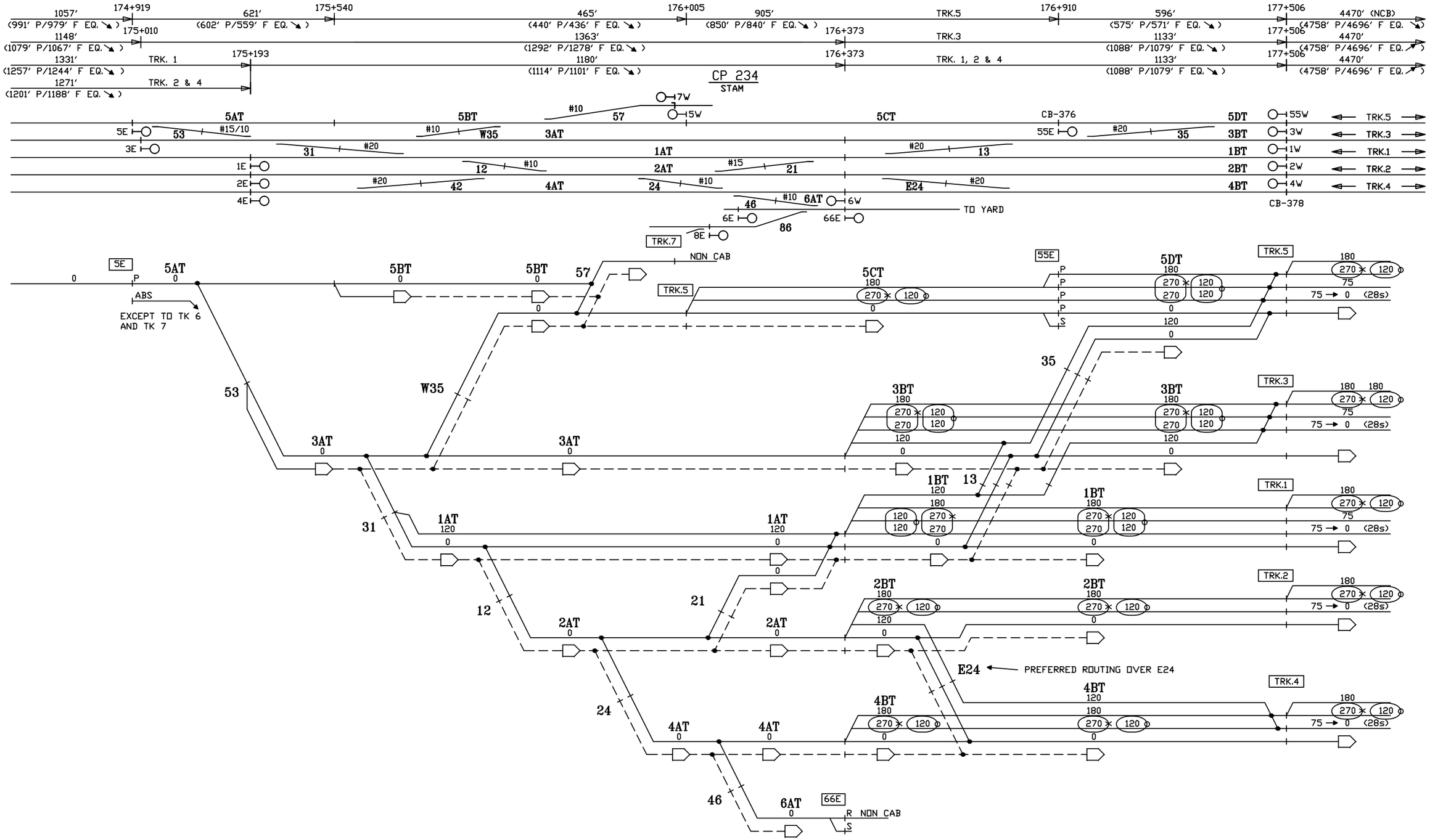

CIRCUIT ENGINEER	SR. SIGNAL ENGR.–DESIGN & STANDARDS	DIRECTOR C&S SYSTEMS	MTA Metro–North Railroad	NEW HAVEN LINE CP 234 DIVERGING ROUTES – TRACK 5 EAST – 270 CUTBACK	ISSUE DATE:	RTG–NHL1
					REV.	SHEET 44X
					NHS /users/signal/RTG NHL1	L1044X

Gannett Fleming/CWA

CONTRACT #	PROJECT SHEET #
1000027511	0133

270 CODE CUTBACK

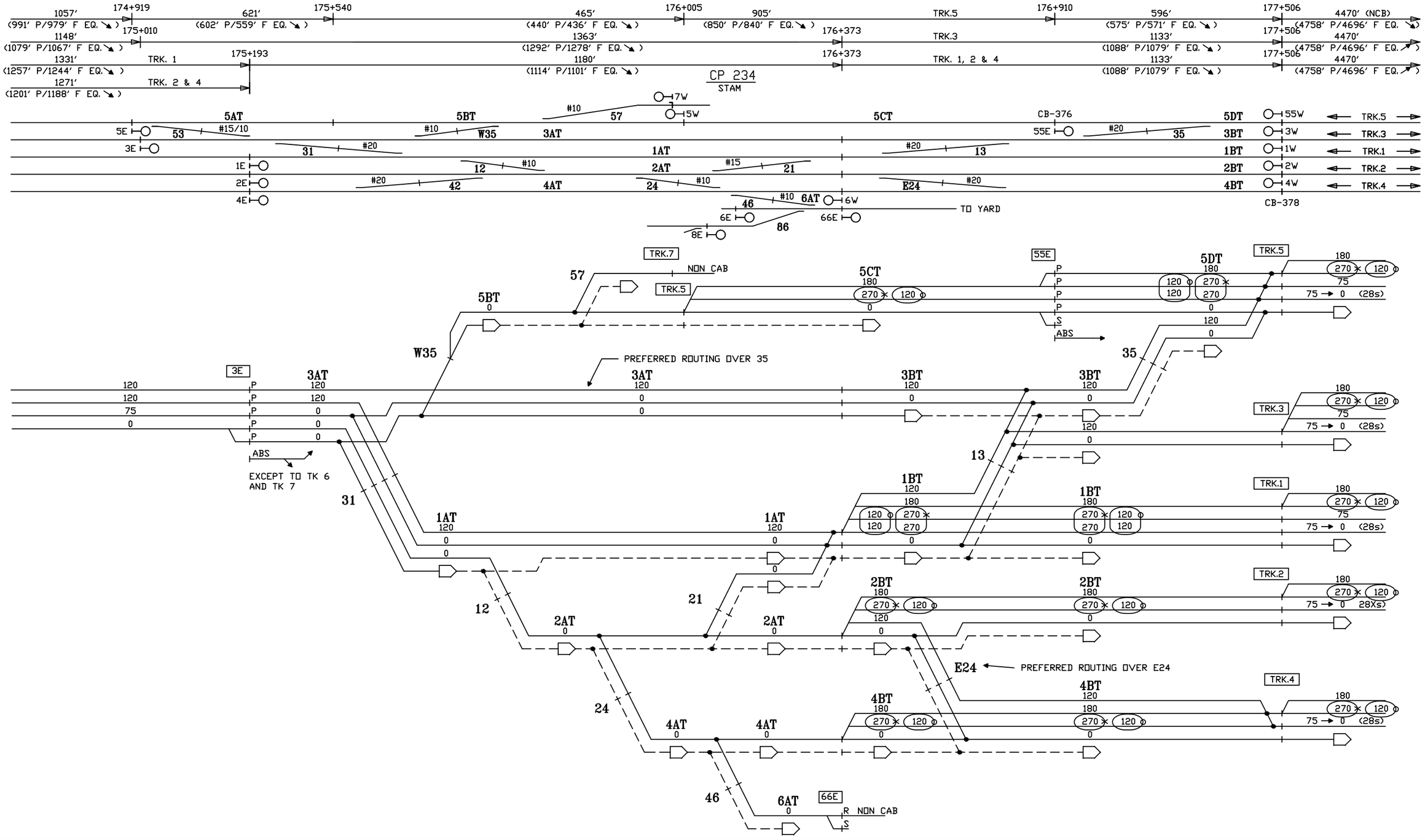

CIRCUIT ENGINEER	SR. SIGNAL ENGR.–DESIGN & STANDARDS	DIRECTOR C&S SYSTEMS	MTA Metro–North Railroad	NEW HAVEN LINE CP 234 DIVERGING ROUTES – TRACK 3 EAST – 270 CUTBACK	ISSUE DATE: / REV. / NHS / NHS / /users/signal/RTG RTG–NHL1 SHEET 45X NHL1 L1045X

Gannett Fleming/CWA

CONTRACT # 1000027511

PROJECT SHEET # 0134

270 CODE CUTBACK

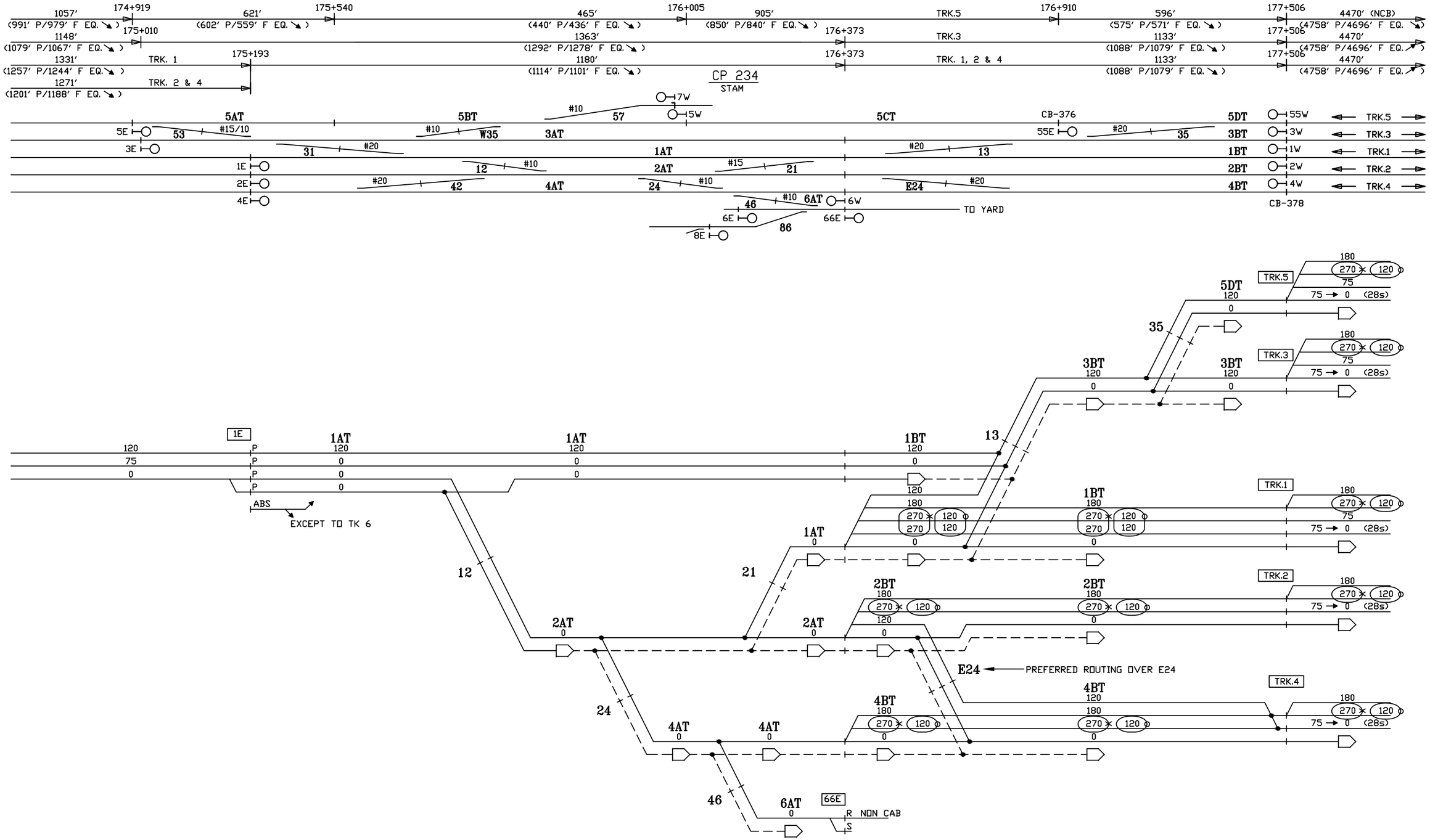

CIRCUIT ENGINEER	SR. SIGNAL ENGR.–DESIGN & STANDARDS	DIRECTOR C&S SYSTEMS	MTA Metro–North Railroad	NEW HAVEN LINE CP 234 DIVERGING ROUTES – TRACK 1 EAST – 270 CUTBACK	ISSUE DATE:	RTG–NHL1
					REV.	SHEET 46X
					/users/signal/RTG	NHL1 L1046X

Gannett Fleming/CWA

CONTRACT # 1000027511

PROJECT SHEET # 0135

270 CODE CUTBACK

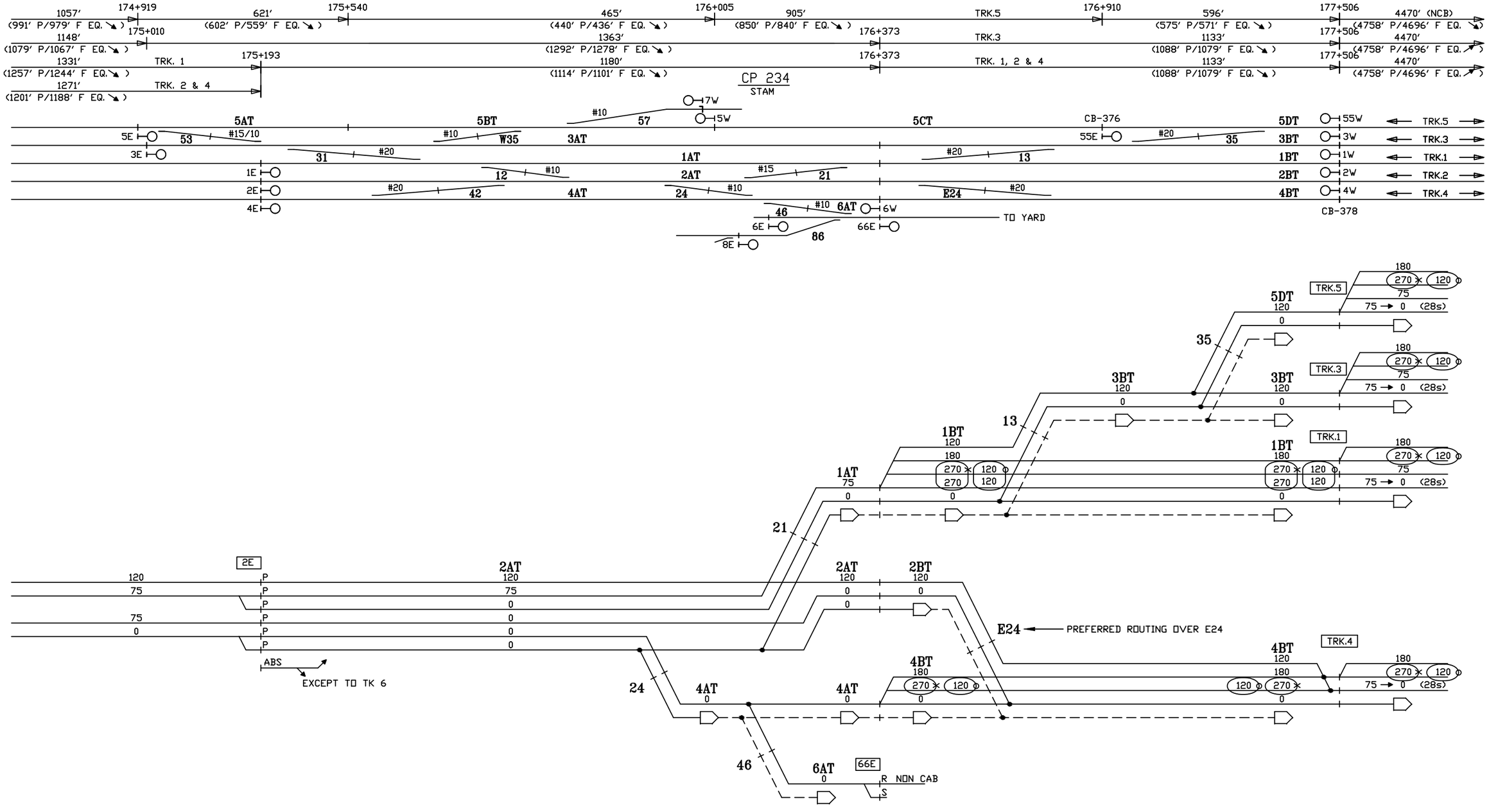

CIRCUIT ENGINEER	SR. SIGNAL ENGR.–DESIGN & STANDARDS	DIRECTOR C&S SYSTEMS	MTA Metro–North Railroad	NEW HAVEN LINE CP 234 DIVERGING ROUTES – TRACK 2 EAST – 270 CUTBACK	ISSUE DATE:	RTG–NHL1
					NHS REV.	SHEET 47X
					NHS /users/signal/RTG	NHL1 L1047X

Gannett Fleming/CWA

CONTRACT #	PROJECT SHEET #
1000027511	0136

270 CODE CUTBACK

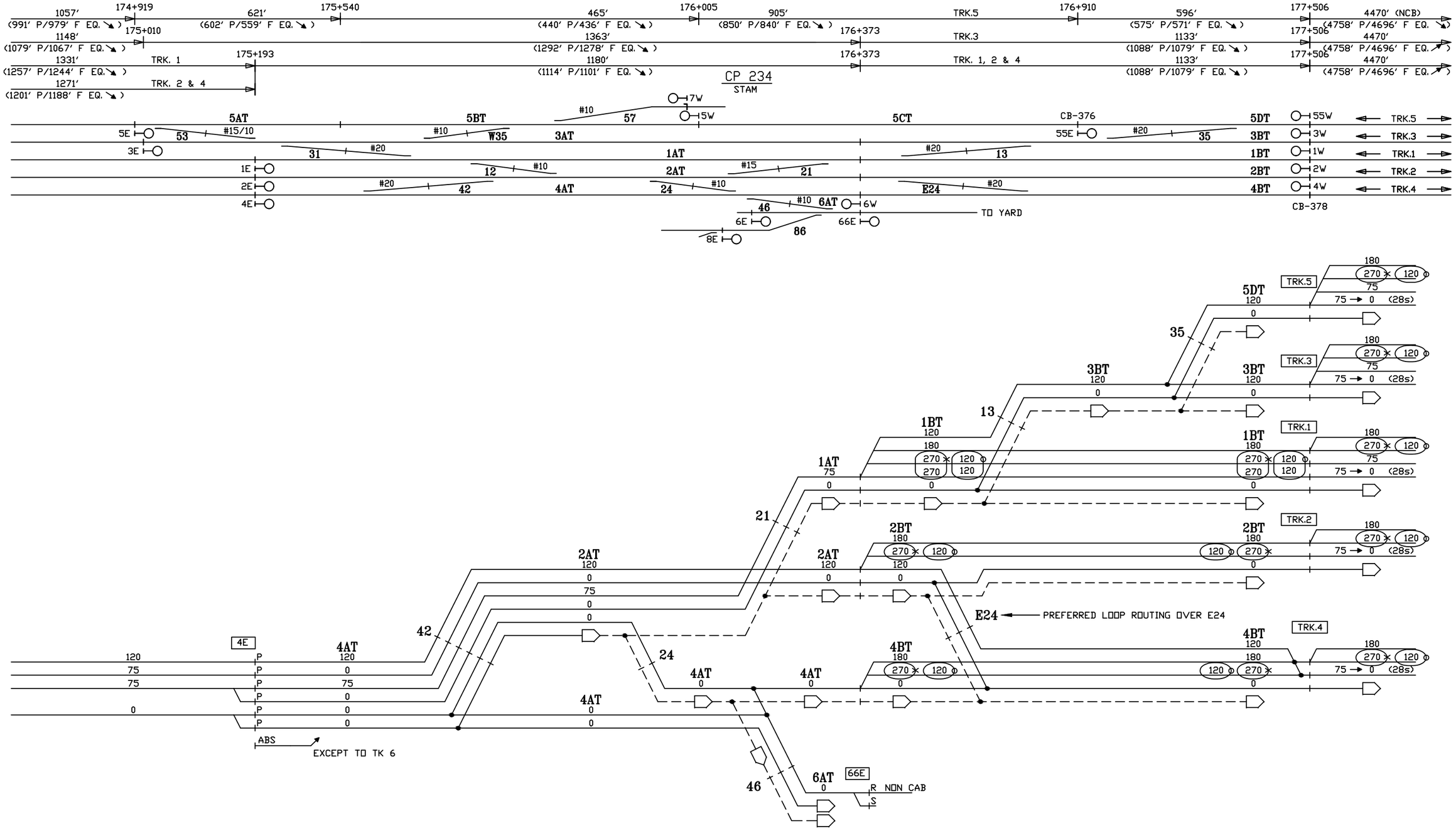

CIRCUIT ENGINEER	SR. SIGNAL ENGR.–DESIGN & STANDARDS	DIRECTOR C&S SYSTEMS	MTA Metro–North Railroad	NEW HAVEN LINE CP 234 DIVERGING ROUTES – TRACK 4 EAST – 270 CUTBACK	ISSUE DATE:	RTG–NHL1
					NHS REV.	SHEET 48X
					NHS /users/signal/RTG	NHL1 L1048X

Gannett Fleming/CWA

CONTRACT #	PROJECT SHEET #
1000027511	0137

270 CODE CUTBACK

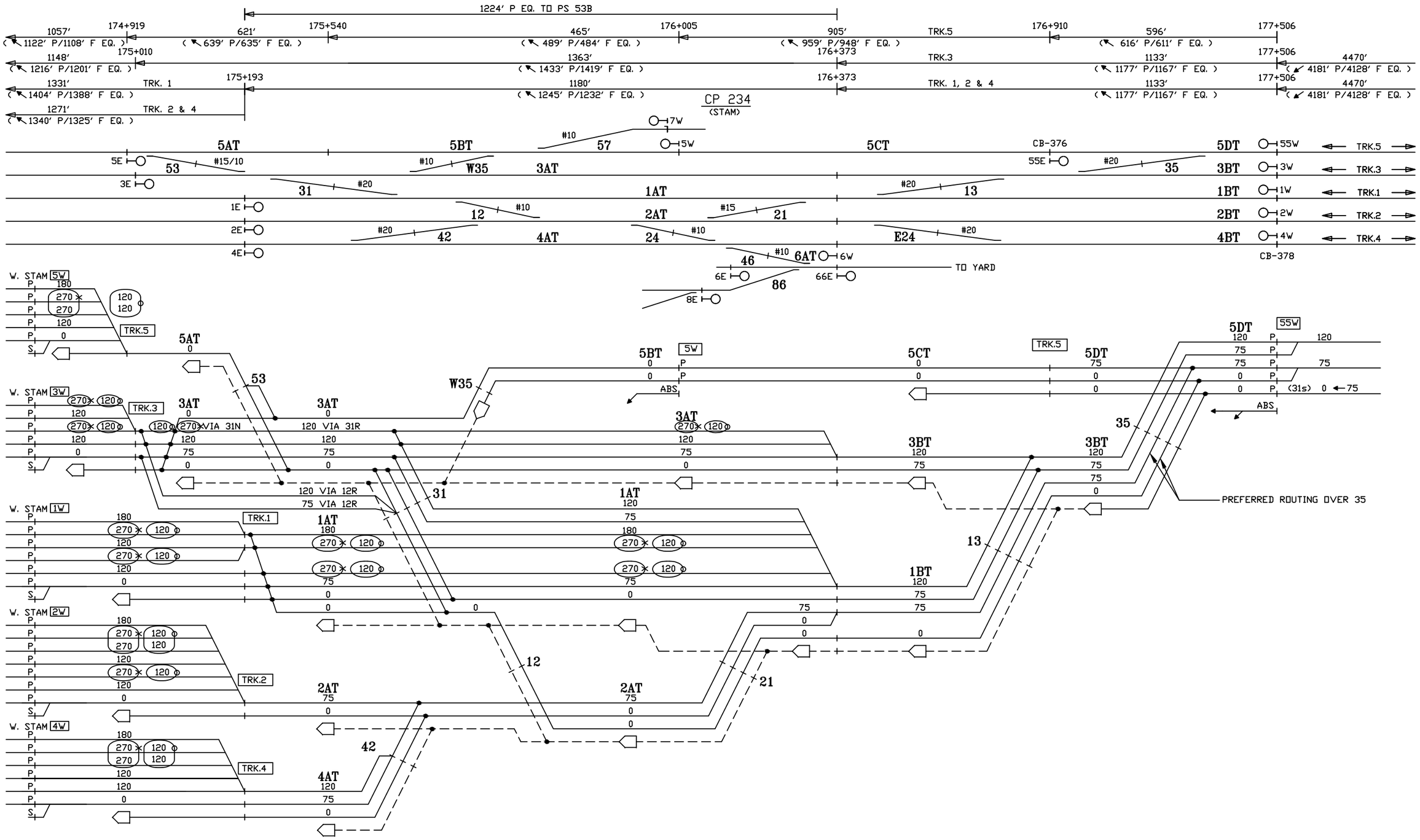

CIRCUIT ENGINEER	SR. SIGNAL ENGR.–DESIGN & STANDARDS	DIRECTOR C&S SYSTEMS	MTA Metro–North Railroad	NEW HAVEN LINE CP 234 DIVERGING ROUTES – TRACK 5 WEST – 270 CUTBACK	ISSUE DATE: REV. /users/signal/RTG

RTG–NHL1
SHEET 49X
NHL1 L1049X

Gannett Fleming/CWA

CONTRACT # 1000027511

PROJECT SHEET # 0138

270 CODE CUTBACK

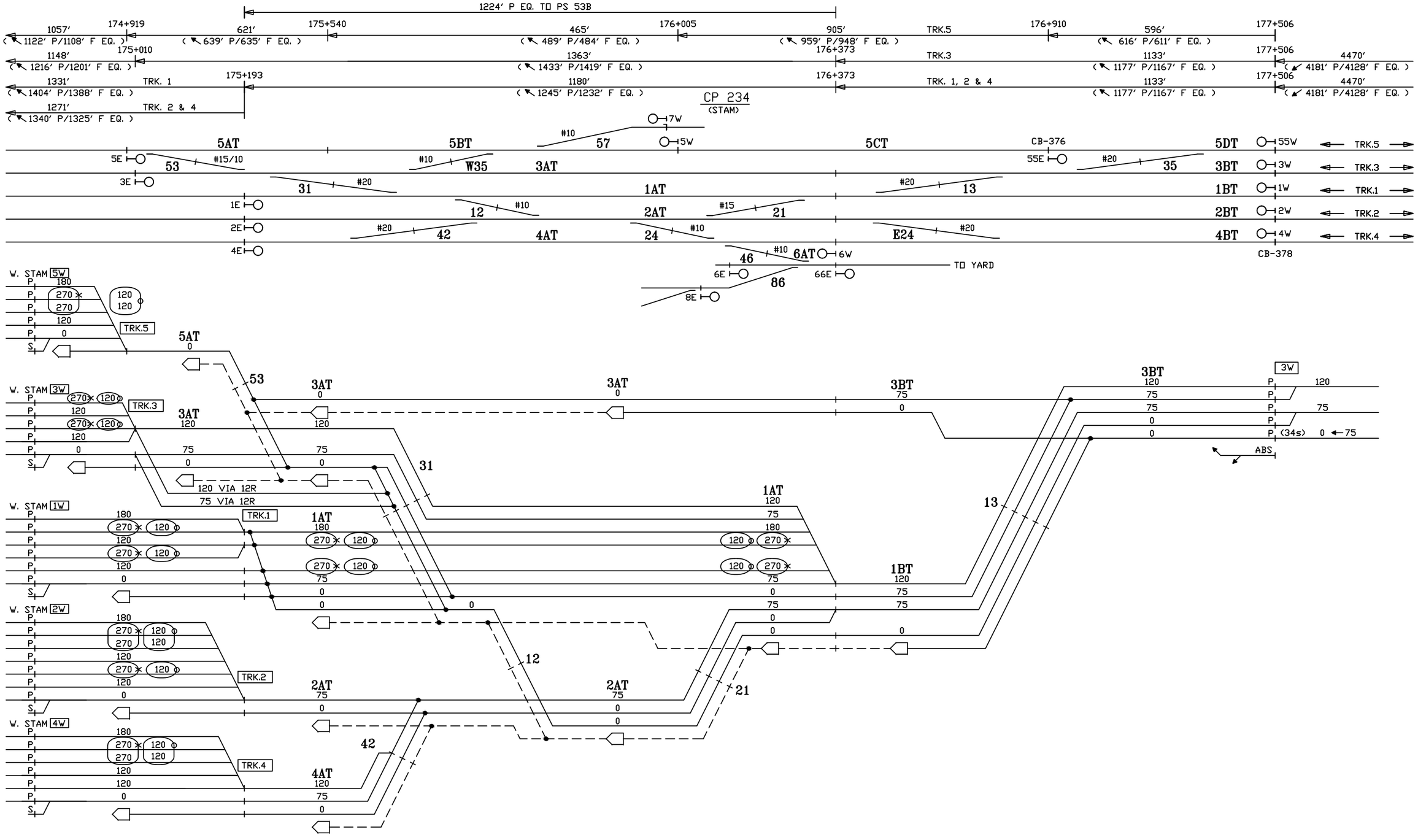

CIRCUIT ENGINEER	SR. SIGNAL ENGR.–DESIGN & STANDARDS	DIRECTOR C&S SYSTEMS	MTA Metro–North Railroad	NEW HAVEN LINE CP 234 DIVERGING ROUTES – TRACK 3 WEST – 270 CUTBACK	ISSUE DATE:	RTG–NHL1
					NHS REV.	SHEET 50X
					NHS /users/signal/RTG	NHL1 L1050X

Gannett Fleming/CWA

CONTRACT # 1000027511

PROJECT SHEET # 0139

270 CODE CUTBACK

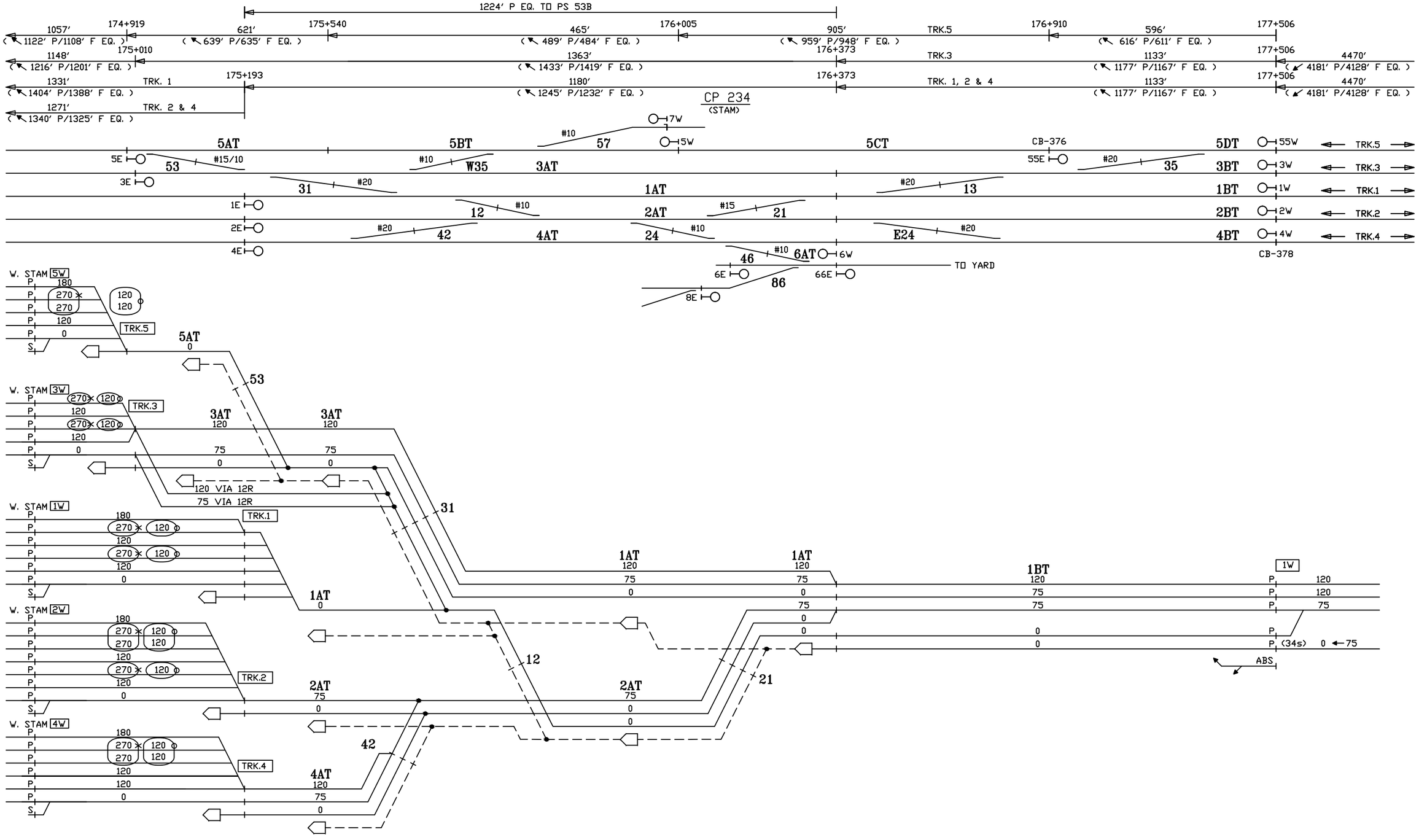

CIRCUIT ENGINEER	SR. SIGNAL ENGR.–DESIGN & STANDARDS	DIRECTOR C&S SYSTEMS	MTA Metro–North Railroad	NEW HAVEN LINE CP 234 DIVERGING ROUTES – TRACK 1 WEST – 270 CUTBACK	ISSUE DATE:	RTG–NHL1
					NHS REV.	SHEET 51X
					NHS /users/signal/RTG	NHL1 L1051X

Gannett Fleming/CWA

CONTRACT #	PROJECT SHEET #
1000027511	0140

270 CODE CUTBACK

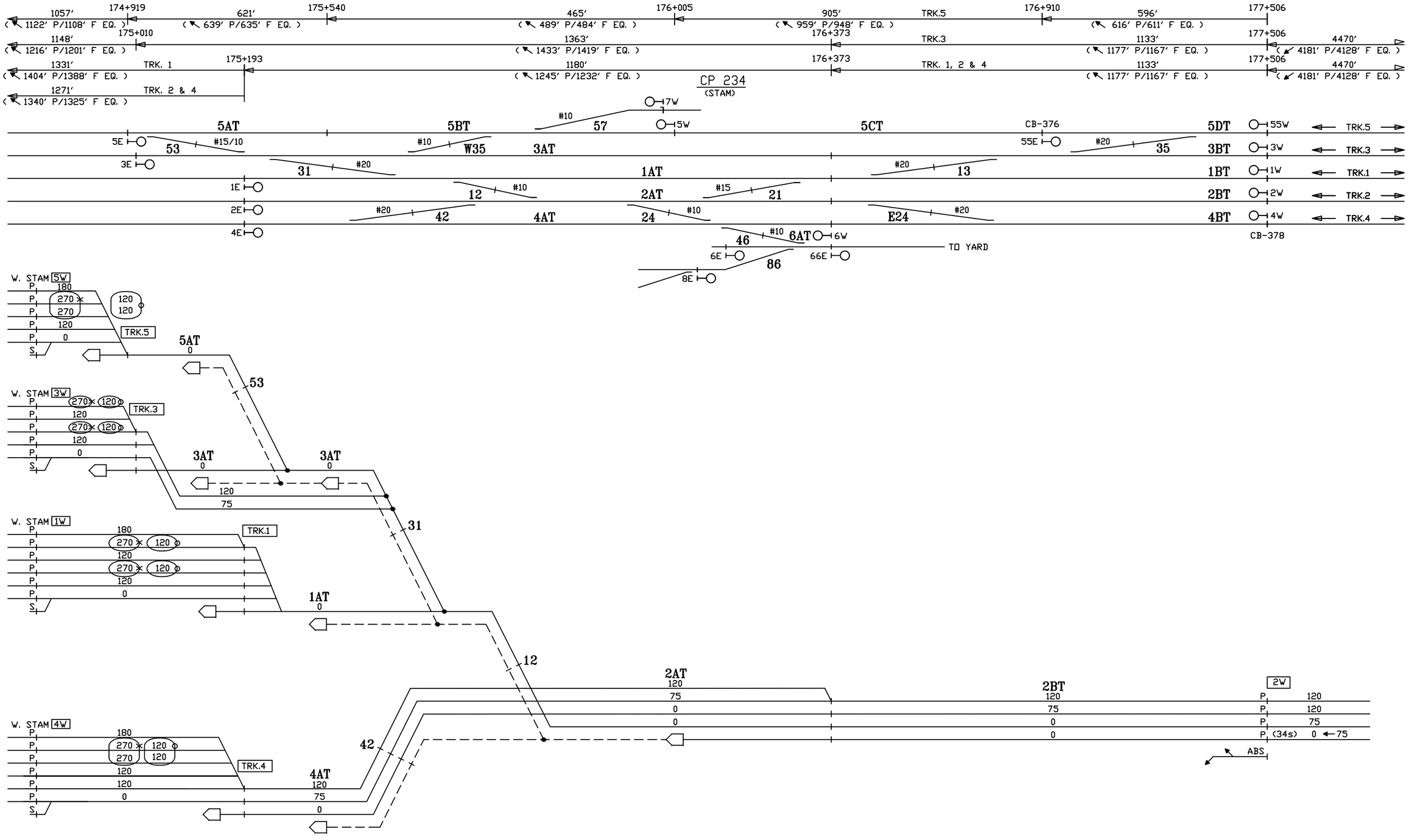

CIRCUIT ENGINEER	SR. SIGNAL ENGR.–DESIGN & STANDARDS	DIRECTOR C&S SYSTEMS	MTA Metro–North Railroad	NEW HAVEN LINE CP 234 DIVERGING ROUTES – TRACK 2 WEST – 270 CUTBACK	ISSUE DATE: / REV. / NHS / NHS / /users/signal/RTG RTG–NHL1 SHEET 52X NHL1 L1052X

Gannett Fleming/CWA

CONTRACT #	PROJECT SHEET #
1000027511	0141

270 CUTBACK

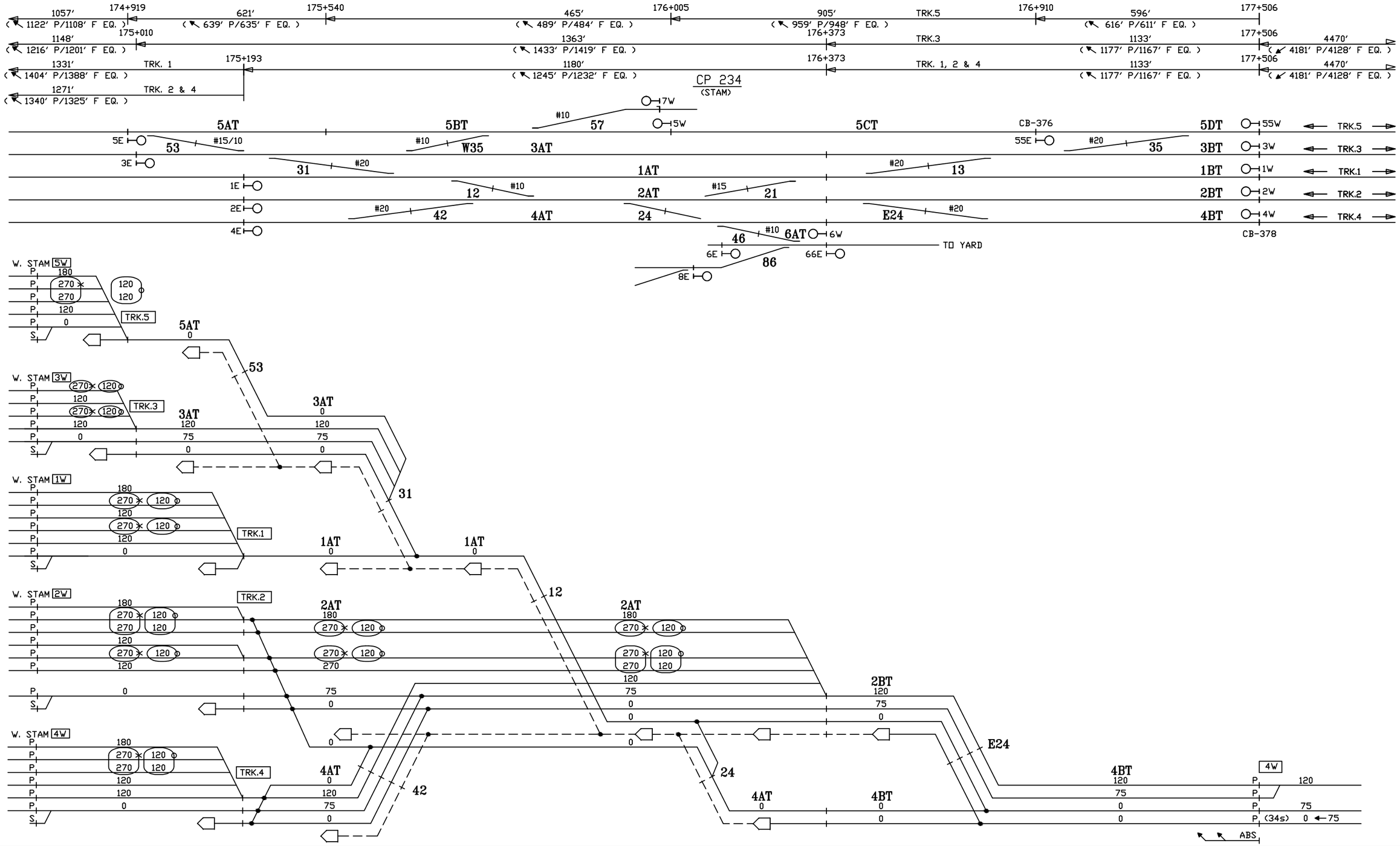

CIRCUIT ENGINEER	SR. SIGNAL ENGR.–DESIGN & STANDARDS	DIRECTOR C&S SYSTEMS	MTA Metro–North Railroad	NEW HAVEN LINE CP 234 DIVERGING ROUTES – TRACK 4 WEST – 270 CUTBACK	ISSUE DATE: / REV. / /users/signal/RTG RTG–NHL1 SHEET 53X NHL1 L1053X

Gannett Fleming/CWA

CONTRACT # 1000027511

PROJECT SHEET # 0142

270 CODE CUTBACK

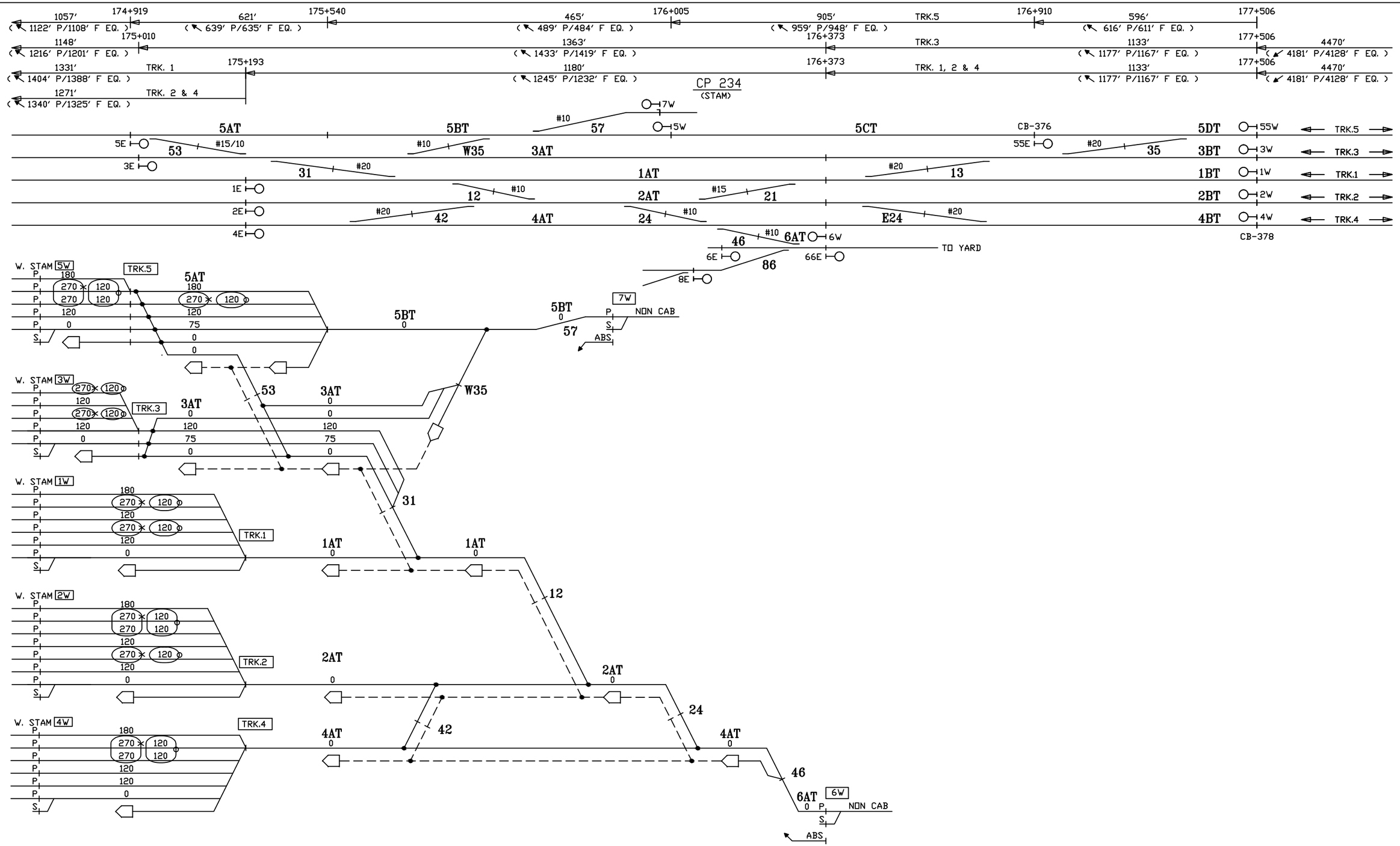

CIRCUIT ENGINEER	SR. SIGNAL ENGR.–DESIGN & STANDARDS	DIRECTOR C&S SYSTEMS	MTA Metro–North Railroad	NEW HAVEN LINE CP 234 DIVERGING ROUTES – TRACKS 6 & 7 WEST – 270 CUTBACK	ISSUE DATE: NHS REV. NHS /users/signal/RTG	RTG–NHL1 SHEET 54X NHL1 L1054X

Gannett Fleming/CWA

CONTRACT #	PROJECT SHEET #
1000027511	0143

270 CODE CUTBACK

CP 234 (STAM)
STAMFORD YARD

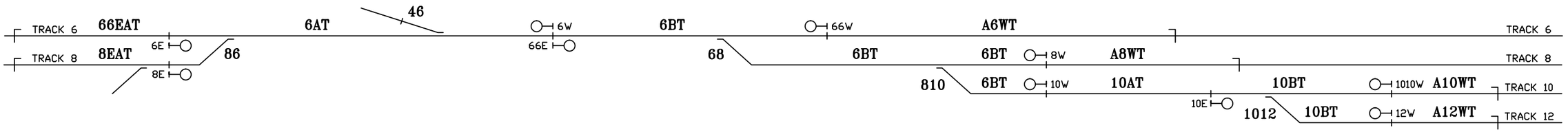

SEE SH. 54X FOR DIVERGING ROUTES

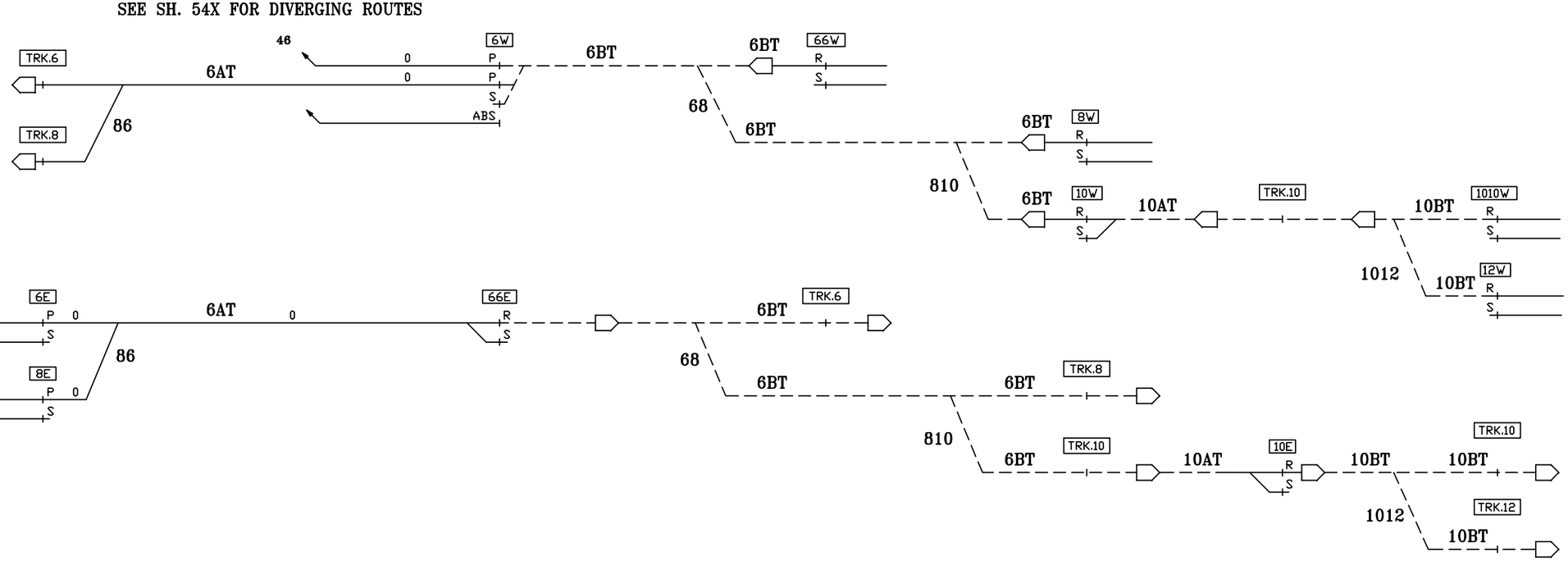

NOTES:
P - PROCEED CAB
R - RESTRICTING
S - STOP

CIRCUIT ENGINEER	SR. SIGNAL ENGR.–DESIGN & STANDARDS	DIRECTOR C&S SYSTEMS	MTA Metro–North Railroad	NEW HAVEN LINE CP 234 STAMFORD YARD ROUTINGS – 270 CUTBACK	ISSUE DATE:	RTG–NHL1
					NHS REV.	SHEET 55X
					NHS /users/signal/RTG	NHL1 L1055X

Gannett Fleming/CWA

CONTRACT #	PROJECT SHEET #
1000027511	0144

270 CODE CUTBACK

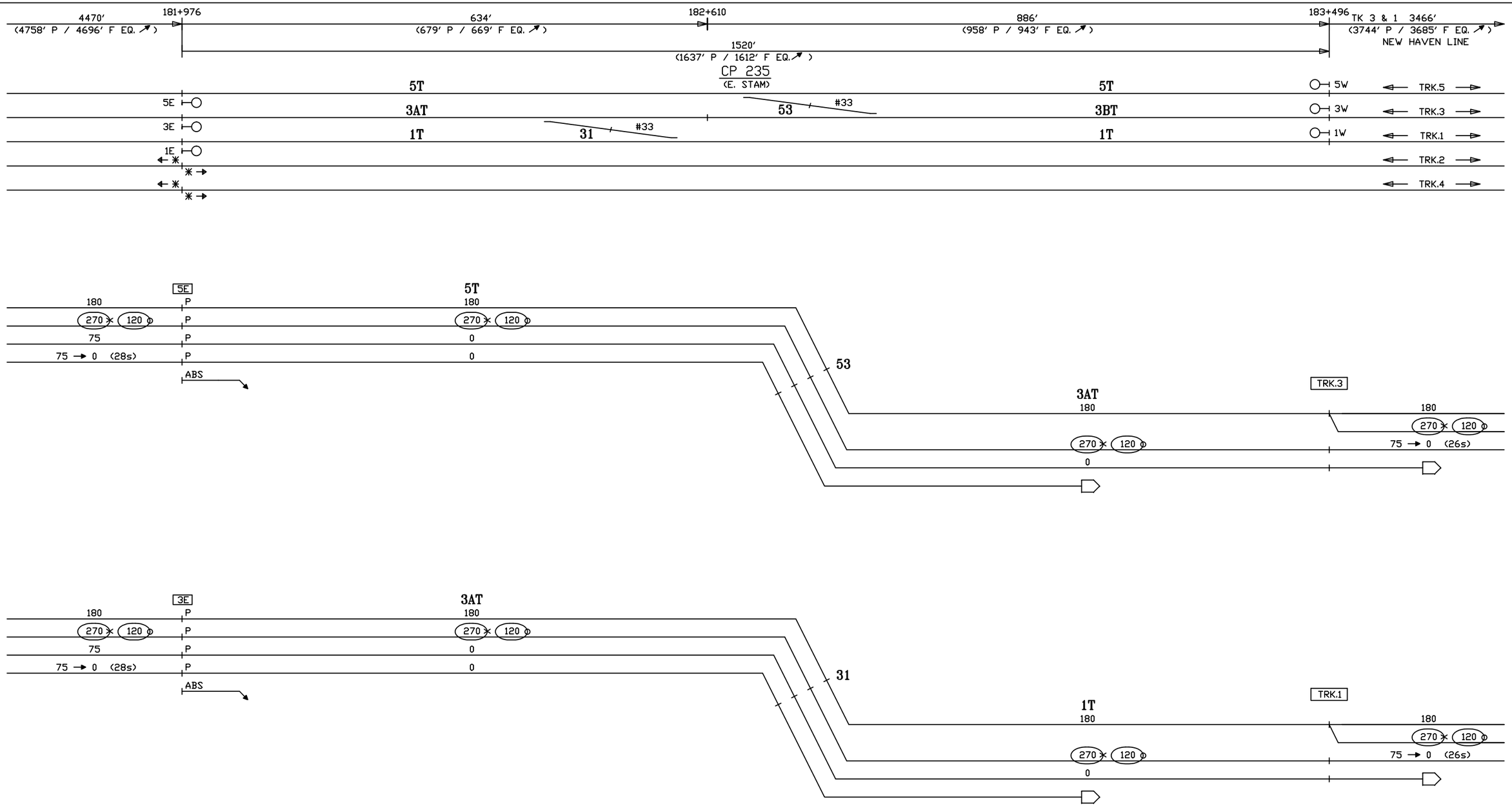

CIRCUIT ENGINEER	SR. SIGNAL ENGR.–DESIGN & STANDARDS	DIRECTOR C&S SYSTEMS	MTA Metro–North Railroad	NEW HAVEN LINE CP 235 DIVERGING ROUTES – TRACKS 5 & 3 EAST – 270 CUTBACK	ISSUE DATE:	RTG–NHL1
					REV. NHS NHS /users/signal/RTG	SHEET 56X NHL1 L1056X
			Gannett Fleming/CWA		CONTRACT # 1000027511	PROJECT SHEET # 0145

270 CODE CUTBACK

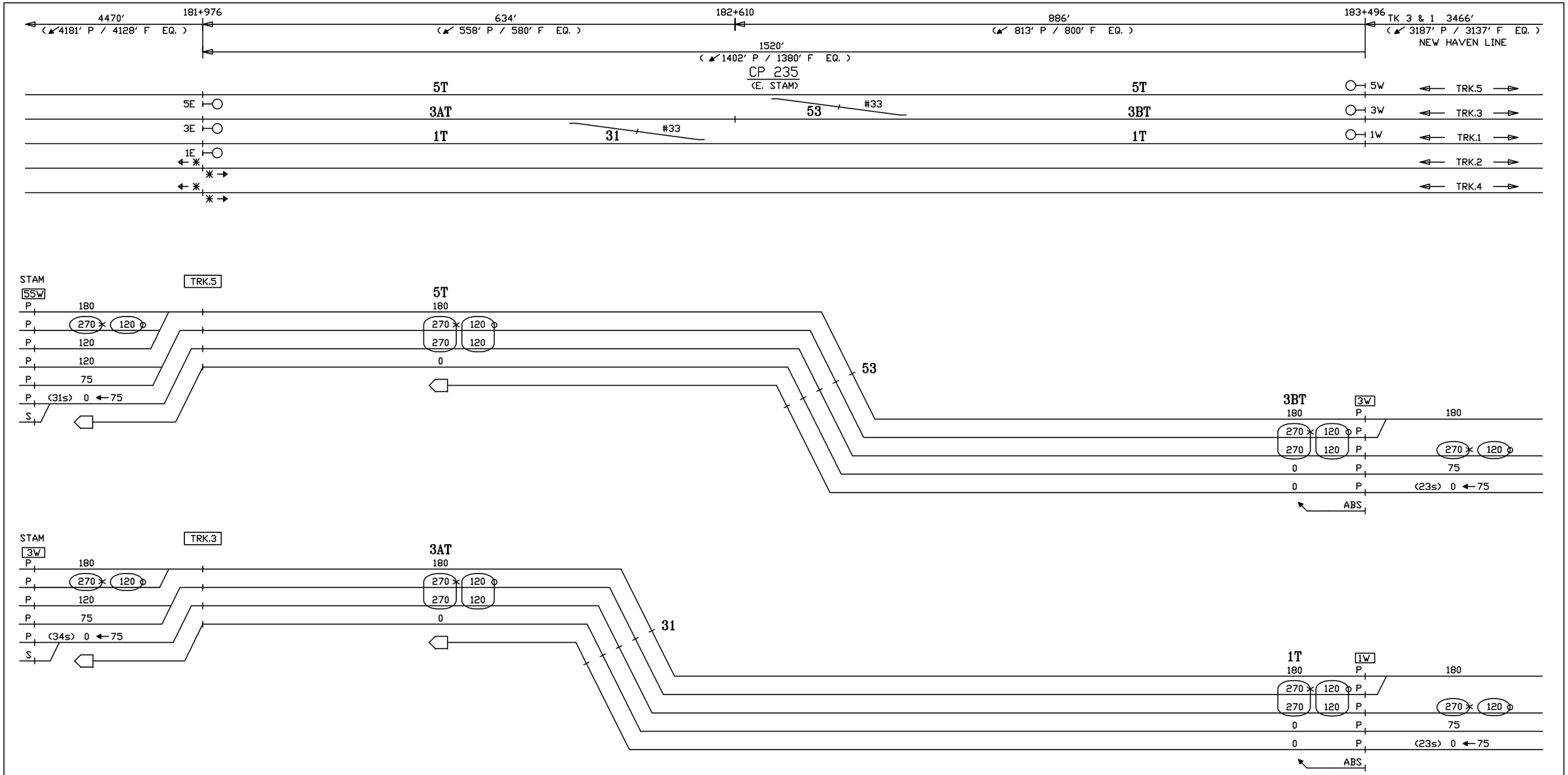

CIRCUIT ENGINEER	SR. SIGNAL ENGR.–DESIGN & STANDARDS	DIRECTOR C&S SYSTEMS	MTA Metro–North Railroad	NEW HAVEN LINE CP 235 DIVERGING ROUTES – TRACKS 3 & 1 WEST – 270 CUTBACK	ISSUE DATE: 09–01–99	RTG–NHL1
					NHS REV. 10	SHEET 57X
					NHS /users/signal/RTG	NHL1 L1057X
			Gannett Fleming/CWA		CONTRACT # 1000027511	PROJECT SHEET # 0146

270 CODE CUTBACK

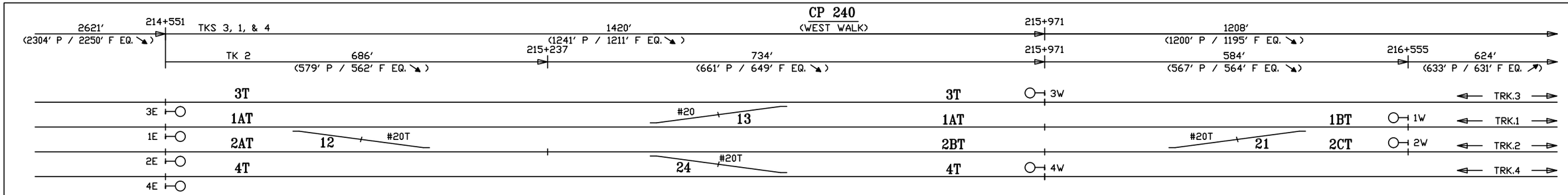

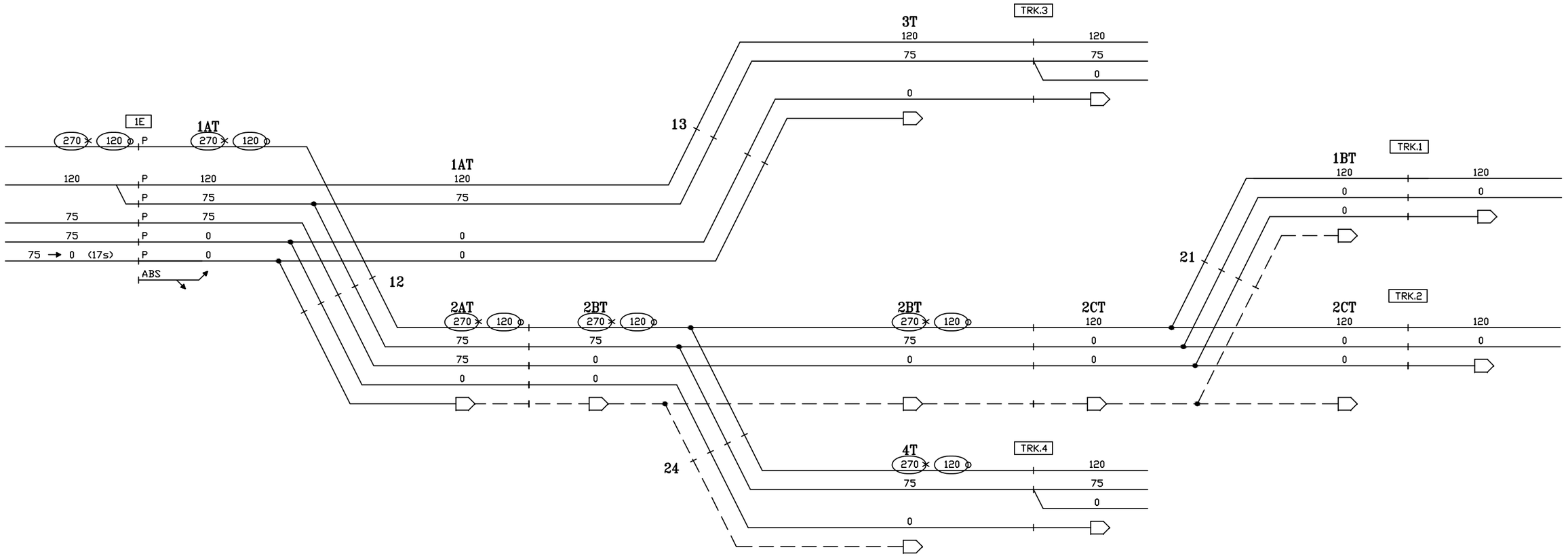

CIRCUIT ENGINEER	SR. SIGNAL ENGR.–DESIGN & STANDARDS	DIRECTOR C&S SYSTEMS	MTA Metro–North Railroad	NEW HAVEN LINE CP 240 DIVERGING ROUTES – TRACK 1 EAST – 270 CUTBACK	ISSUE DATE: / RTG–NHL1 NHS REV. / SHEET 58X NHS \users\signal\RTG / NHL1 / L1058X

Gannett Fleming/CWA

CONTRACT # 1000027511

PROJECT SHEET # 0147

270 CODE CUTBACK

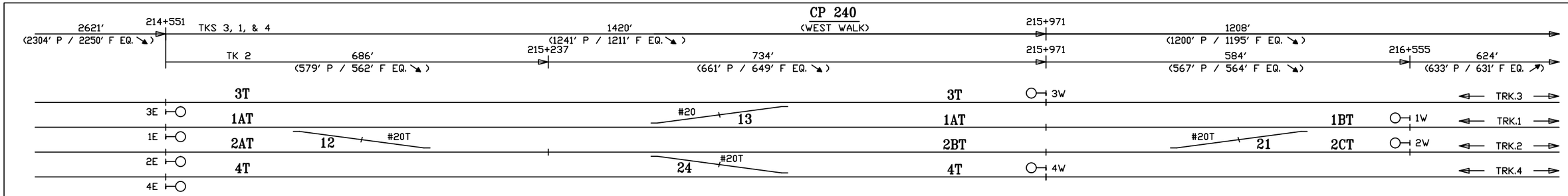

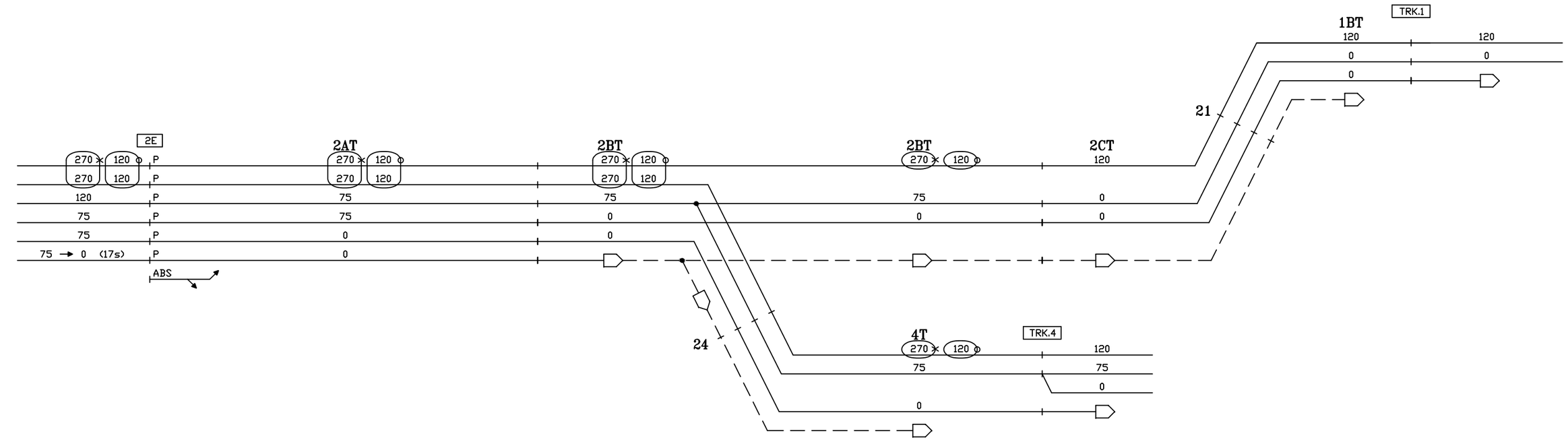

CIRCUIT ENGINEER	SR. SIGNAL ENGR.–DESIGN & STANDARDS	DIRECTOR C&S SYSTEMS	MTA Metro–North Railroad	NEW HAVEN LINE CP 240 DIVERGING ROUTES – TRACK 2 EAST – 270 CUTBACK	ISSUE DATE:	RTG–NHL1
					NHS REV.	SHEET 59X
					NHS \users\signal\RTG	NHL1 L1059X

Gannett Fleming/CWA

CONTRACT #	PROJECT SHEET #
1000027511	0148

270 CODE CUTBACK

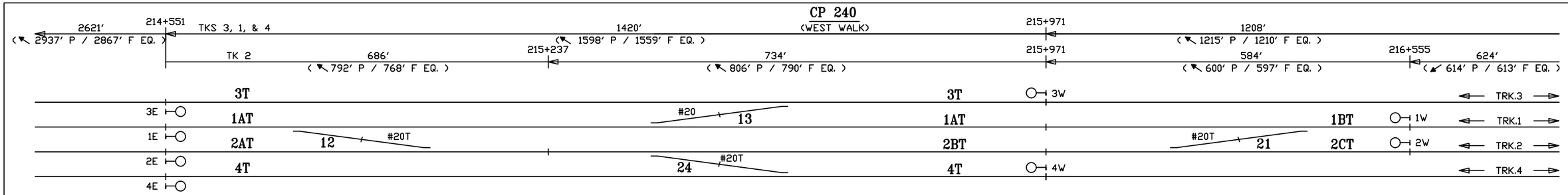

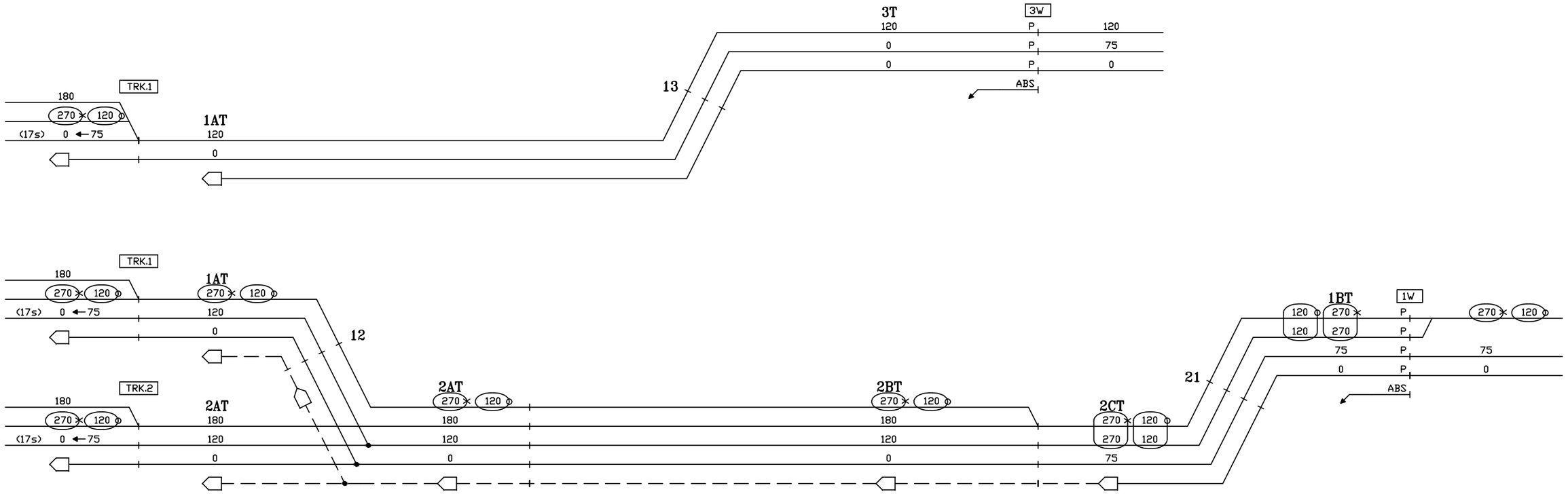

CIRCUIT ENGINEER	SR. SIGNAL ENGR.–DESIGN & STANDARDS	DIRECTOR C&S SYSTEMS	MTA Metro–North Railroad	NEW HAVEN LINE CP 240 DIVERGING ROUTES – TRACKS 3 & 1 WEST – 270 CUTBACK	ISSUE DATE: / RTG–NHL1 NHS REV. / SHEET 60X NHS \users\signal\RTG / NHL1 / L1060X

Gannett Fleming/CWA

CONTRACT #	PROJECT SHEET #
1000027511	0149

270 CODE CUTBACK

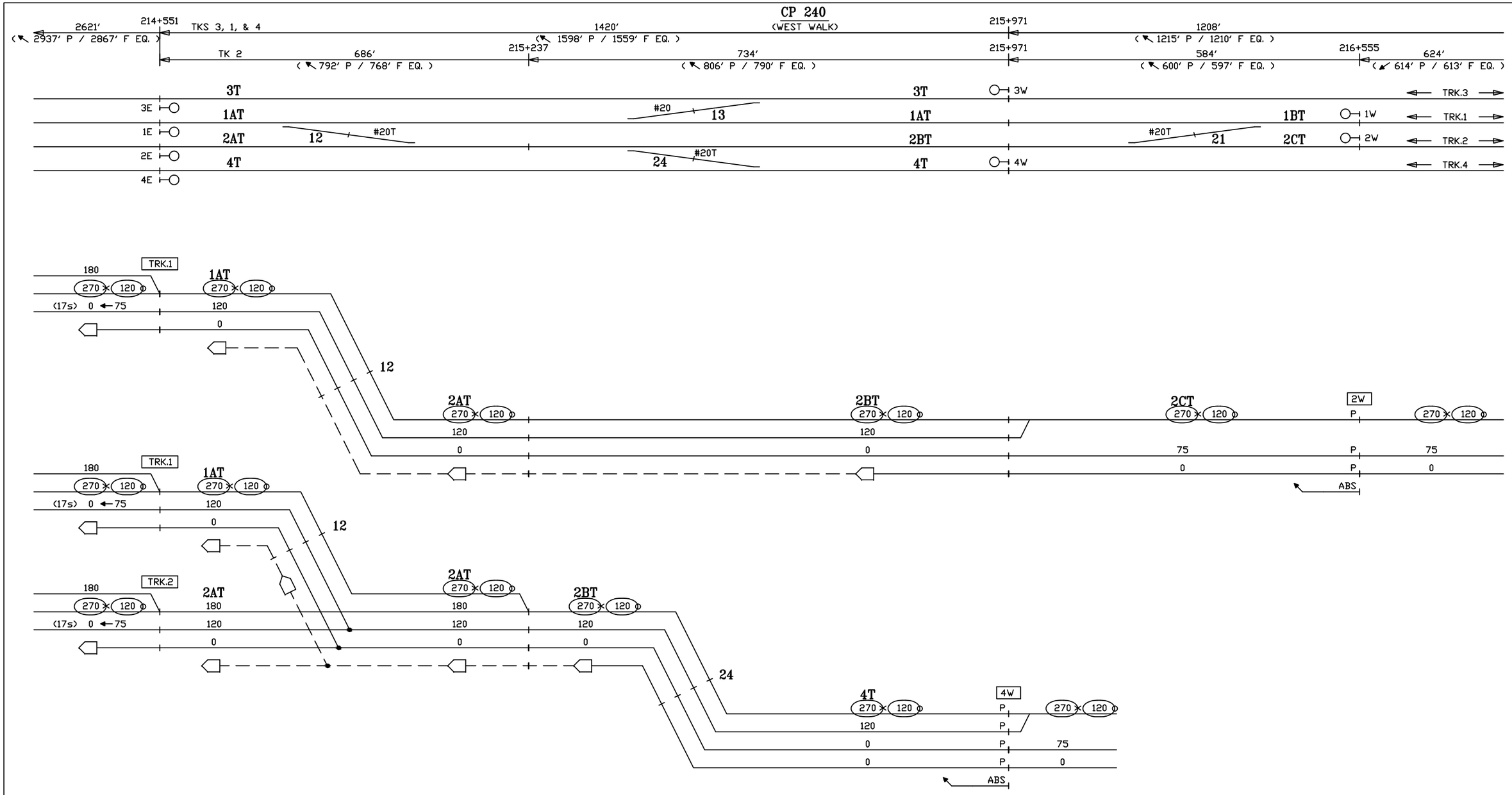

CIRCUIT ENGINEER	SR. SIGNAL ENGR.–DESIGN & STANDARDS	DIRECTOR C&S SYSTEMS	MTA Metro–North Railroad	NEW HAVEN LINE CP 240 DIVERGING ROUTES – TRACKS 2 & 4 WEST – 270 CUTBACK	ISSUE DATE:	RTG–NHL1
					NHS REV.	SHEET 61X
					NHS \users\signal\RTG	NHL1 L1061X

Gannett Fleming/CWA

CONTRACT #	PROJECT SHEET #
1000027511	0150

270 CODE CUTBACK

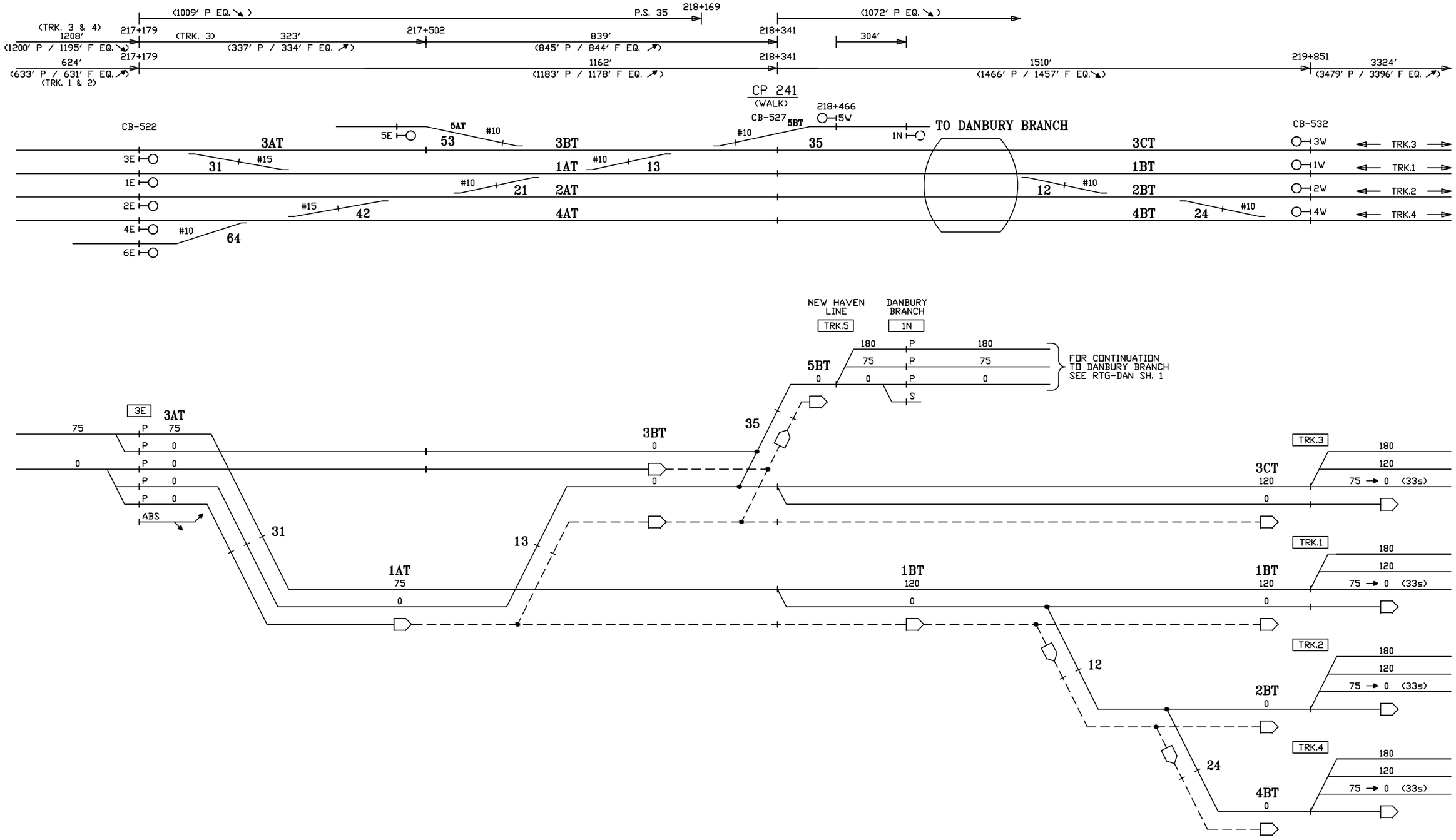

CIRCUIT ENGINEER	SR. SIGNAL ENGR.–DESIGN & STANDARDS	DIRECTOR C&S SYSTEMS	MTA Metro–North Railroad	NEW HAVEN LINE CP 241 DIVERGING ROUTES – TRACK 3 EAST – 270 CUTBACK	ISSUE DATE:	RTG–NHL1
					REV.	SHEET 62X
					/users/signal/RTG	NHL1 L1062X

Gannett Fleming/CWA

CONTRACT # 1000027511

PROJECT SHEET # 0151

270 CODE CUTBACK

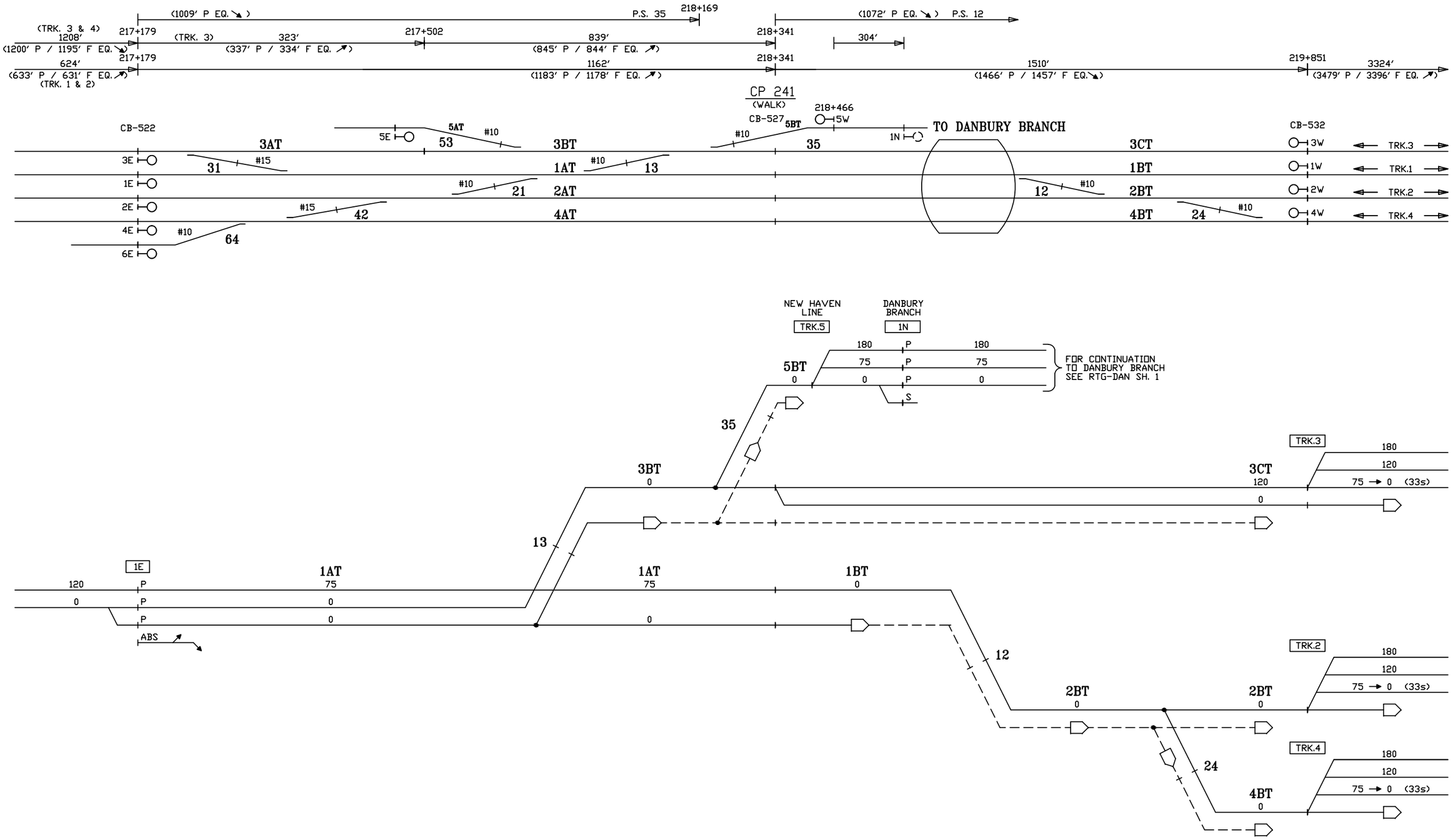

CIRCUIT ENGINEER	SR. SIGNAL ENGR.–DESIGN & STANDARDS	DIRECTOR C&S SYSTEMS	MTA Metro–North Railroad	NEW HAVEN LINE CP 241 DIVERGING ROUTES – TRACK 1 EAST – 270 CUTBACK	ISSUE DATE:	RTG–NHL1
					REV.	SHEET 63X
					/users/signal/RTG	NHL1 L1063X

Gannett Fleming/CWA

CONTRACT #	PROJECT SHEET #
1000027511	0152

270 CODE CUTBACK

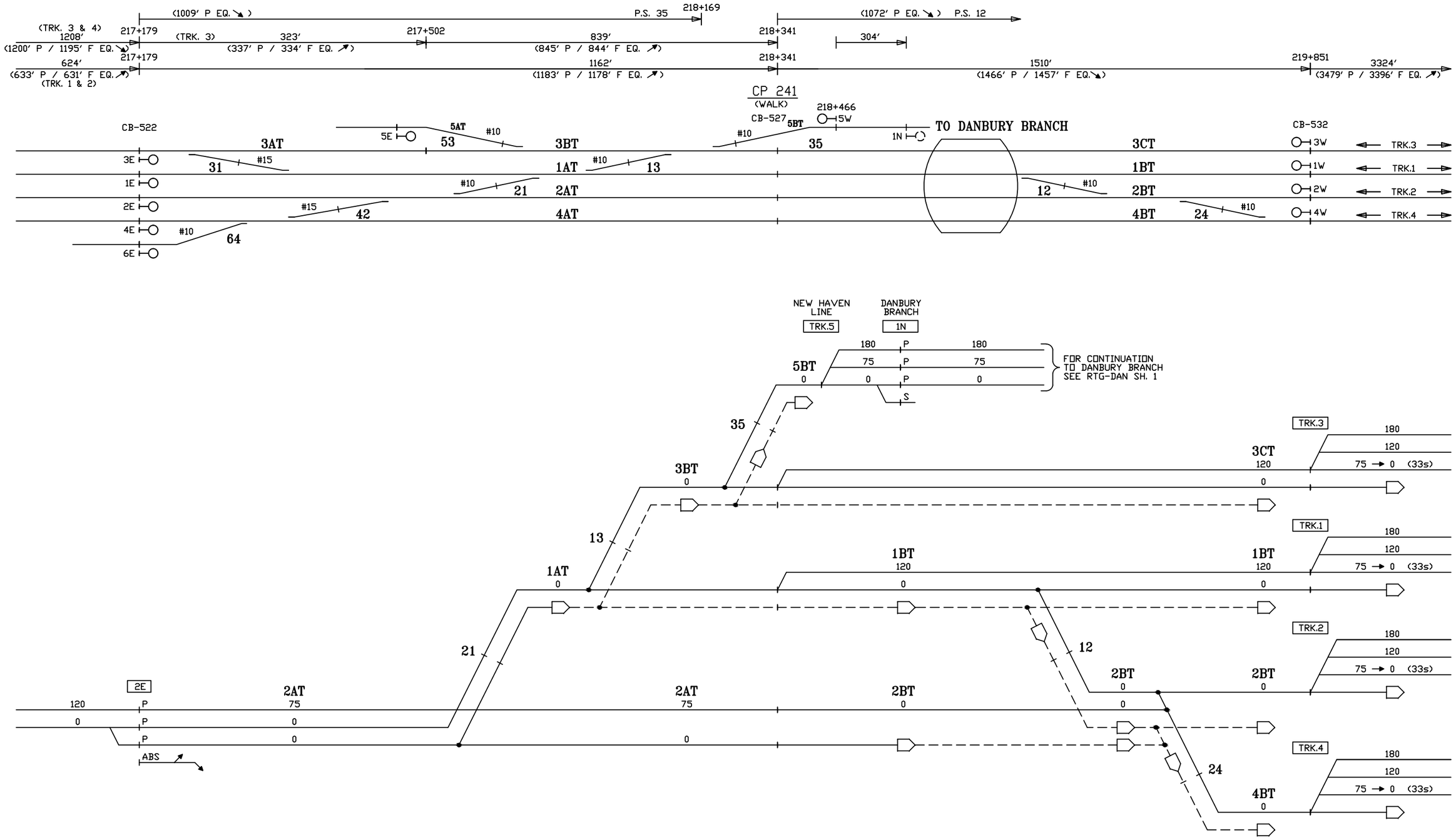

CIRCUIT ENGINEER	SR. SIGNAL ENGR.–DESIGN & STANDARDS	DIRECTOR C&S SYSTEMS	MTA Metro–North Railroad	NEW HAVEN LINE CP 241 DIVERGING ROUTES – TRACK 2 EAST – 270 CUTBACK	ISSUE DATE: REV. /users/signal/RTG	RTG–NHL1 SHEET 64X NHL1 L1064X

Gannett Fleming/CWA

CONTRACT #	PROJECT SHEET #
1000027511	0153

270 CODE CUTBACK

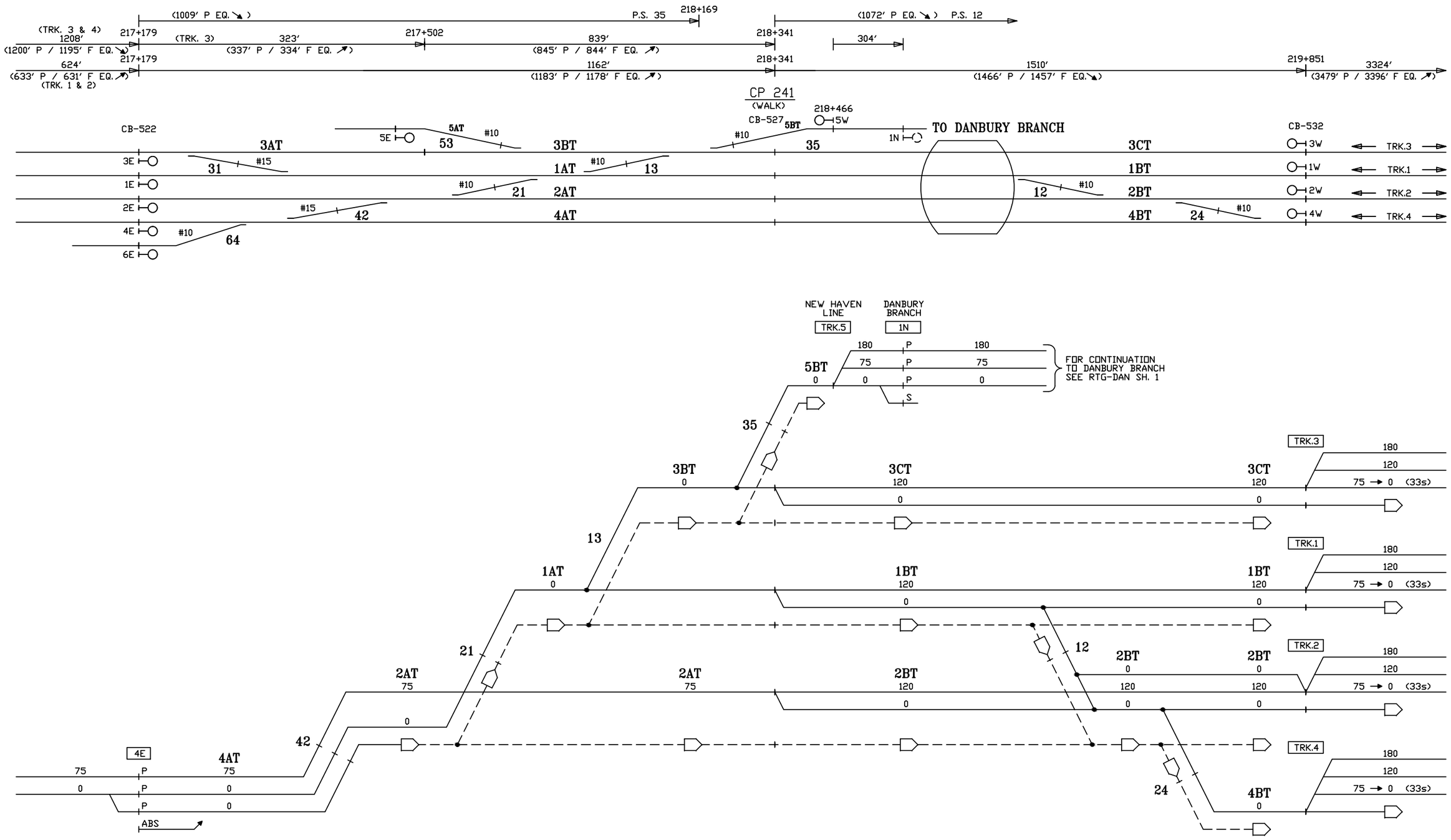

CIRCUIT ENGINEER	SR. SIGNAL ENGR.–DESIGN & STANDARDS	DIRECTOR C&S SYSTEMS	MTA Metro–North Railroad	NEW HAVEN LINE CP 241 DIVERGING ROUTES – TRACK 4 EAST – 270 CUTBACK	ISSUE DATE: REV. /users/signal/RTG

RTG–NHL1
SHEET 65X
NHL1 L1065X

Gannett Fleming/CWA

CONTRACT # 1000027511

PROJECT SHEET # 0154

270 CODE CUTBACK

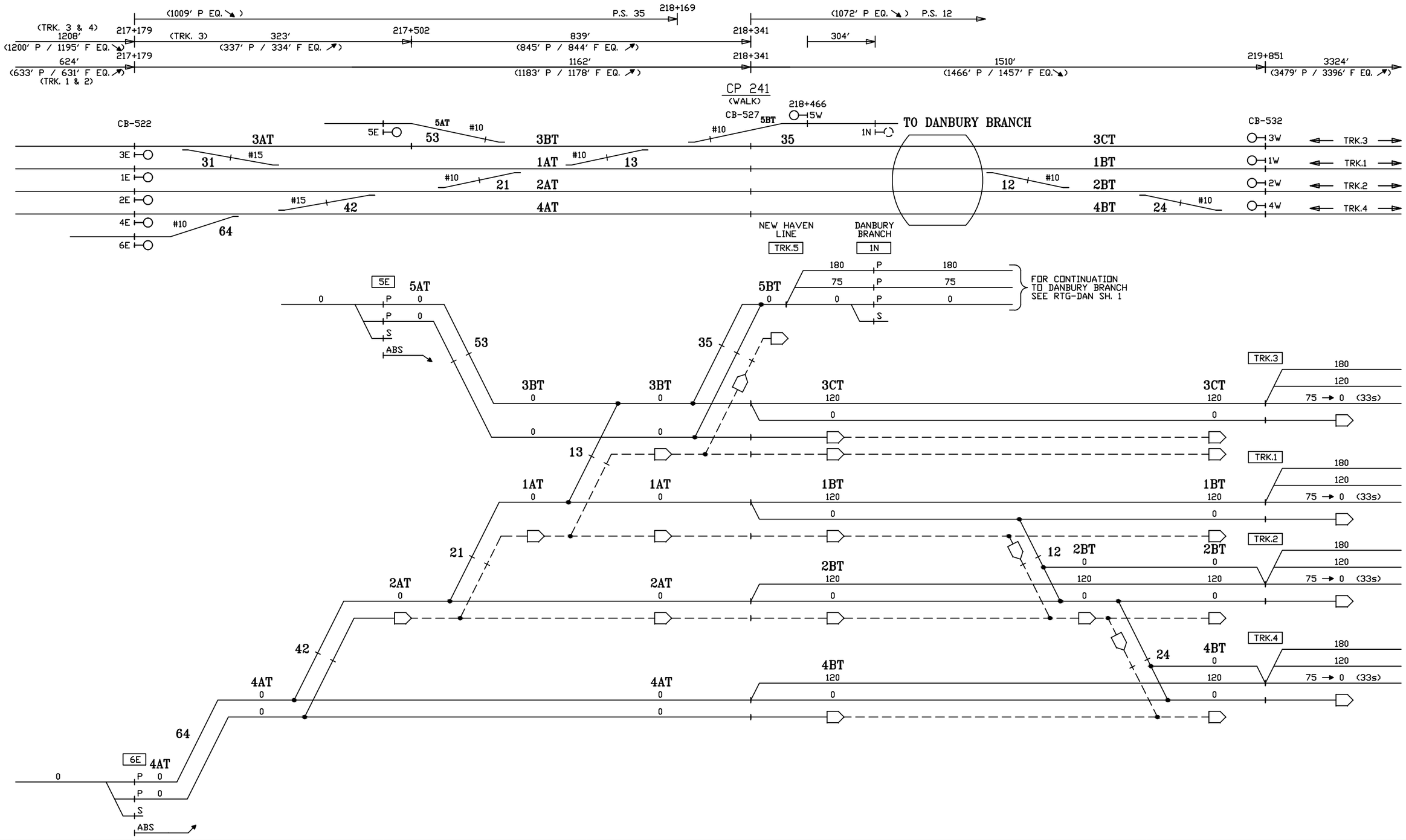

CIRCUIT ENGINEER	SR. SIGNAL ENGR.–DESIGN & STANDARDS	DIRECTOR C&S SYSTEMS	MTA Metro–North Railroad	NEW HAVEN LINE CP 241 DIVERGING ROUTES – TRACKS 5 & 6 EAST – 270 CUTBACK	ISSUE DATE: REV. /users/signal/RTG

RTG–NHL1
SHEET 66X
NHL1 | L1066X

Gannett Fleming/CWA

CONTRACT # 1000027511

PROJECT SHEET # 0155

270 CODE CUTBACK

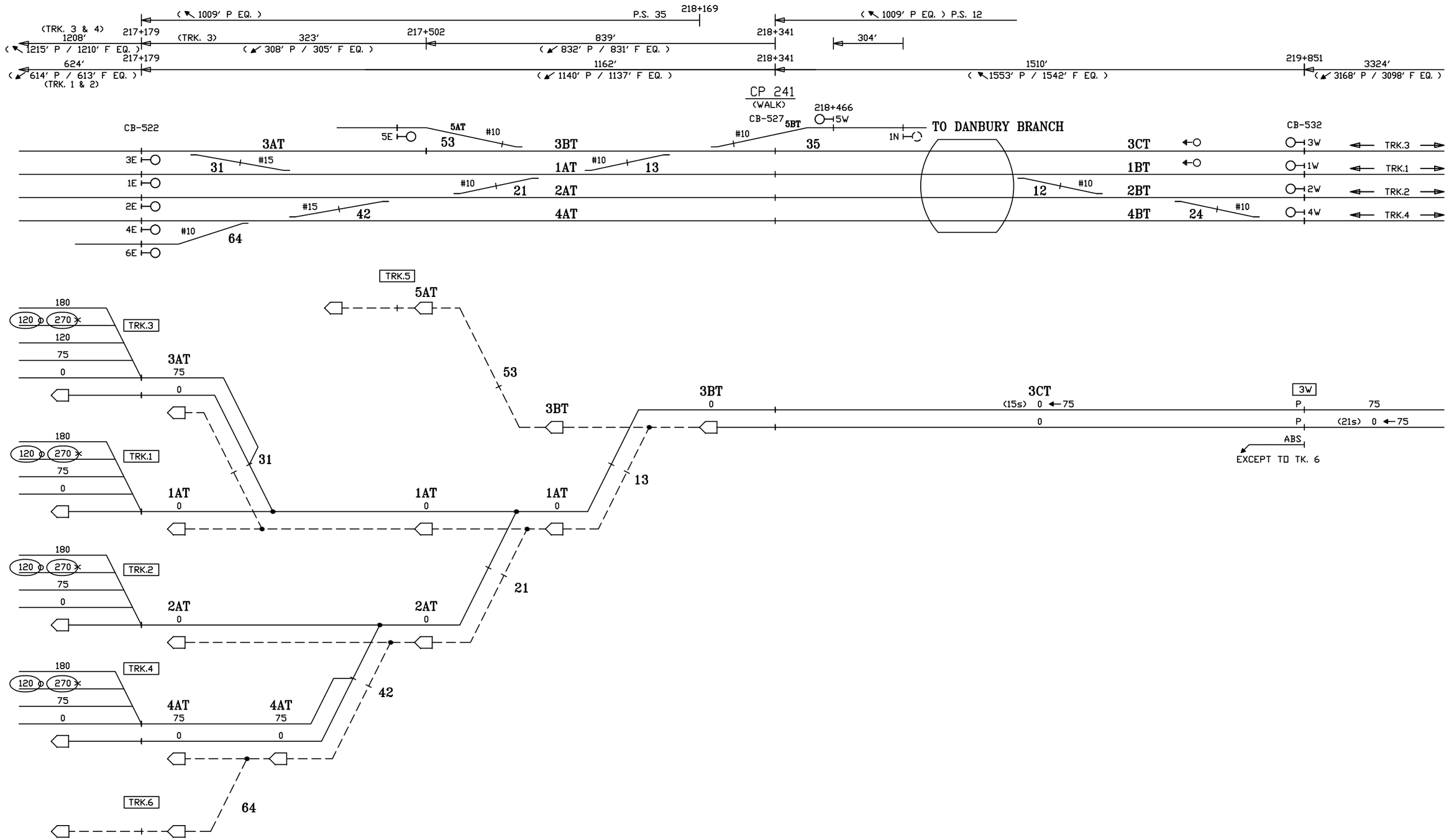

CIRCUIT ENGINEER	SR. SIGNAL ENGR.–DESIGN & STANDARDS	DIRECTOR C&S SYSTEMS	MTA Metro–North Railroad	NEW HAVEN LINE CP 241 DIVERGING ROUTES – TRACK 3 WEST – 270 CUTBACK	ISSUE DATE:	RTG–NHL1
					REV.	SHEET 67X
					NHS /users/signal/RTG	NHL1 L1067X

Gannett Fleming/CWA

CONTRACT #	PROJECT SHEET #
1000027511	0156

270 CODE CUTBACK

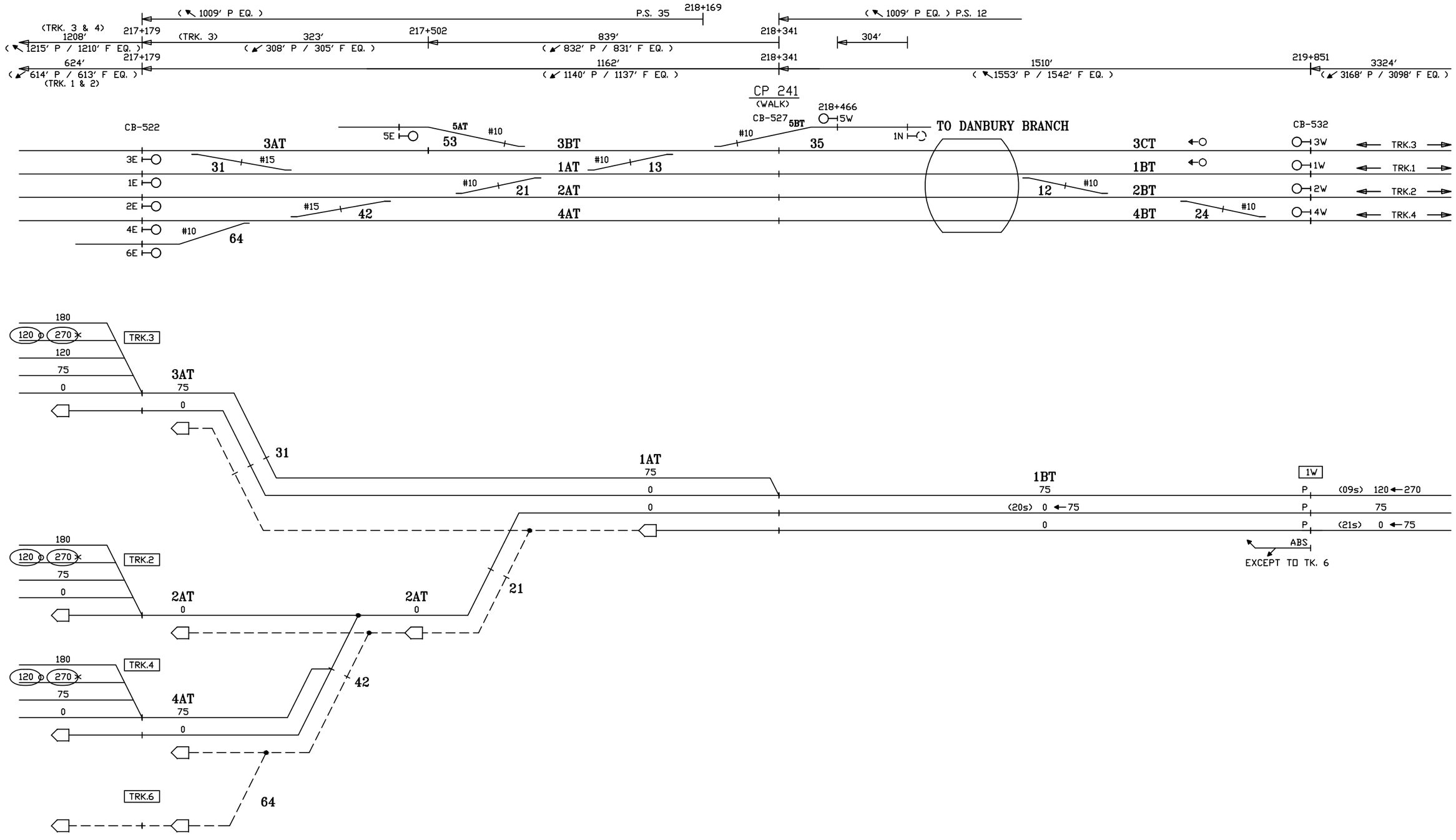

CIRCUIT ENGINEER	SR. SIGNAL ENGR.–DESIGN & STANDARDS	DIRECTOR C&S SYSTEMS	MTA Metro–North Railroad	NEW HAVEN LINE CP 241 DIVERGING ROUTES – TRACK 1 WEST – 270 CUTBACK	ISSUE DATE: / RTG–NHL1 NHS REV. / SHEET 68X NHS /users/signal/RTG / NHL1 / L1068X

Gannett Fleming/CWA

CONTRACT #	PROJECT SHEET #
1000027511	0157

270 CODE CUTBACK

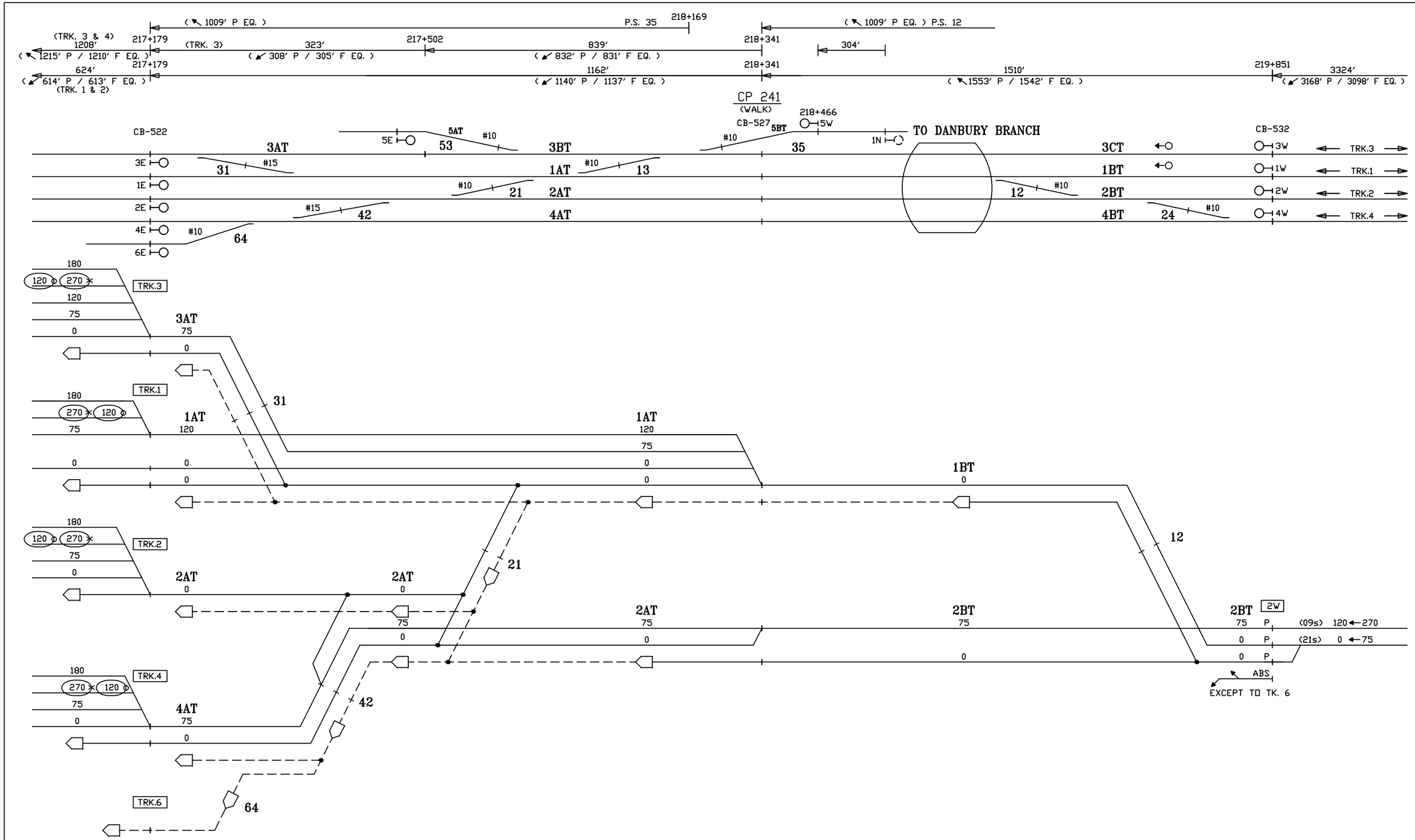

CIRCUIT ENGINEER	SR. SIGNAL ENGR.–DESIGN & STANDARDS	DIRECTOR C&S SYSTEMS	MTA Metro–North Railroad	NEW HAVEN LINE CP 241 DIVERGING ROUTES – TRACK 2 WEST – 270 CUTBACK	ISSUE DATE:	RTG–NHL1
					REV.	SHEET 69X
					NHS /users/signal/RTG	NHL1 L1069X

Gannett Fleming/CWA

CONTRACT #	PROJECT SHEET #
1000027511	0158

270 CODE CUTBACK

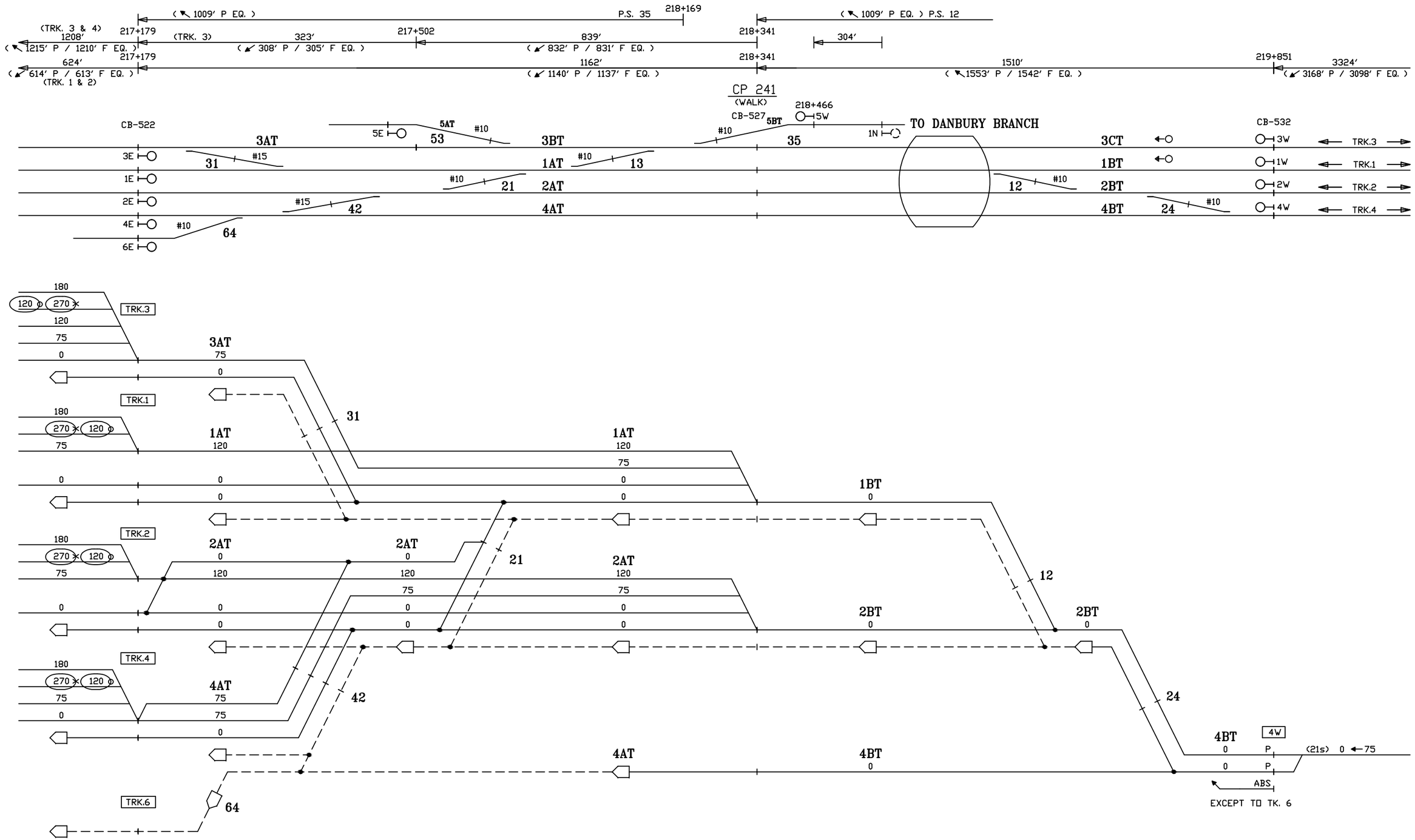

CIRCUIT ENGINEER	SR. SIGNAL ENGR.–DESIGN & STANDARDS	DIRECTOR C&S SYSTEMS	MTA Metro–North Railroad	NEW HAVEN LINE CP 241 DIVERGING ROUTES – TRACK 4 WEST – 270 CUTBACK	ISSUE DATE: / REV. / /users/signal/RTG RTG–NHL1 SHEET 70X NHS NHS NHL1 L1070X

Gannett Fleming/CWA

CONTRACT #	PROJECT SHEET #
1000027511	0159

270 CODE CUTBACK

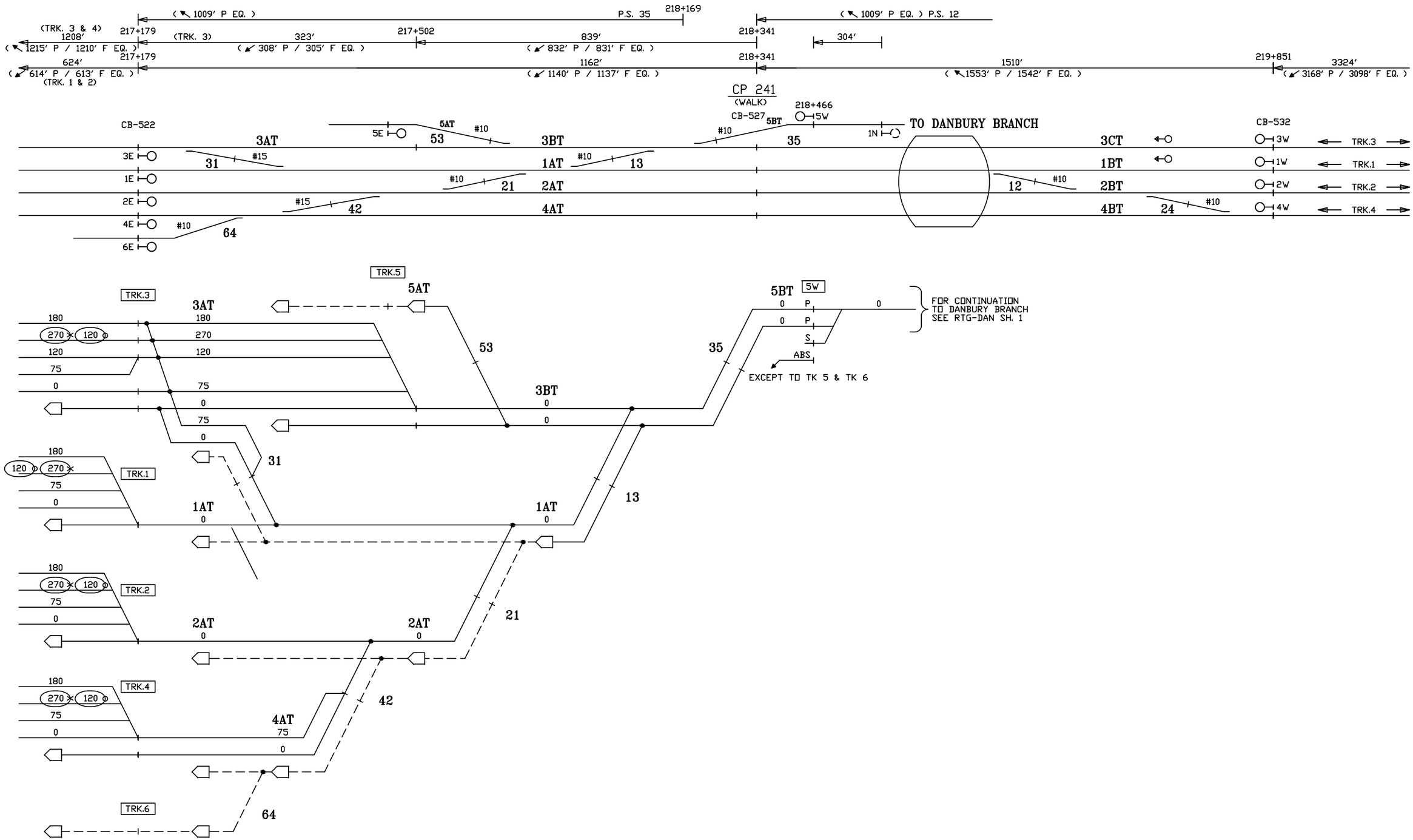

CIRCUIT ENGINEER	SR. SIGNAL ENGR.–DESIGN & STANDARDS	DIRECTOR C&S SYSTEMS	MTA Metro–North Railroad	NEW HAVEN LINE CP 241 DIVERGING ROUTES – TRACK 5 WEST – 270 CUTBACK	ISSUE DATE:	RTG–NHL1
					REV.	SHEET 71X
					NHS /users/signal/RTG	NHL1 L1071

Gannett Fleming/CWA

CONTRACT #	PROJECT SHEET #
1000027511	0160

EXISTING

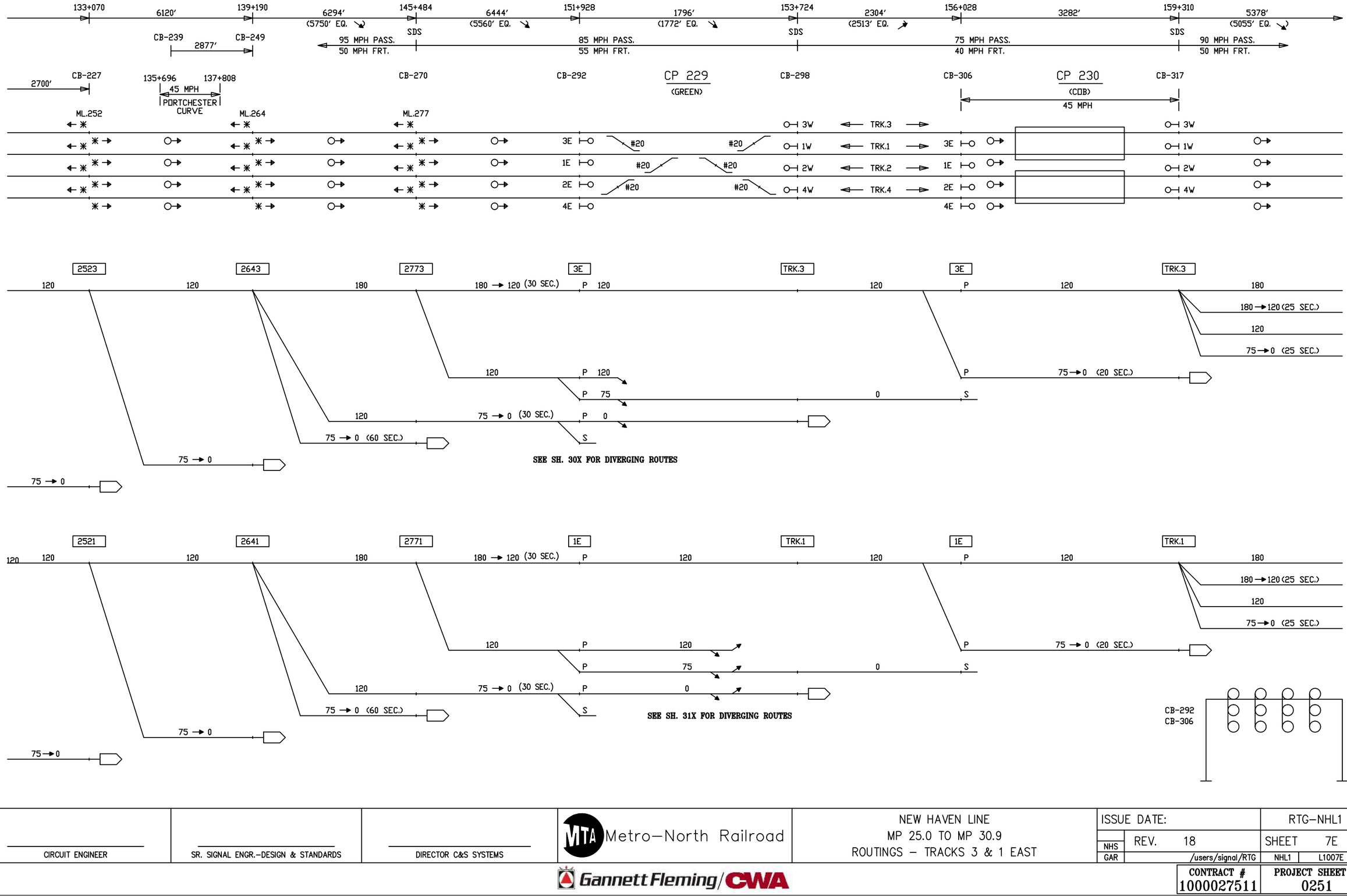

CIRCUIT ENGINEER	SR. SIGNAL ENGR.–DESIGN & STANDARDS	DIRECTOR C&S SYSTEMS	MTA Metro–North Railroad	NEW HAVEN LINE MP 25.0 TO MP 30.9 ROUTINGS – TRACKS 3 & 1 EAST	ISSUE DATE: / REV. 18 (NHS, GAR) / /users/signal/RTG RTG–NHL1 / SHEET 7E / NHL1 L1007E

Gannett Fleming/CWA

CONTRACT #	PROJECT SHEET #
1000027511	0251

EXISTING

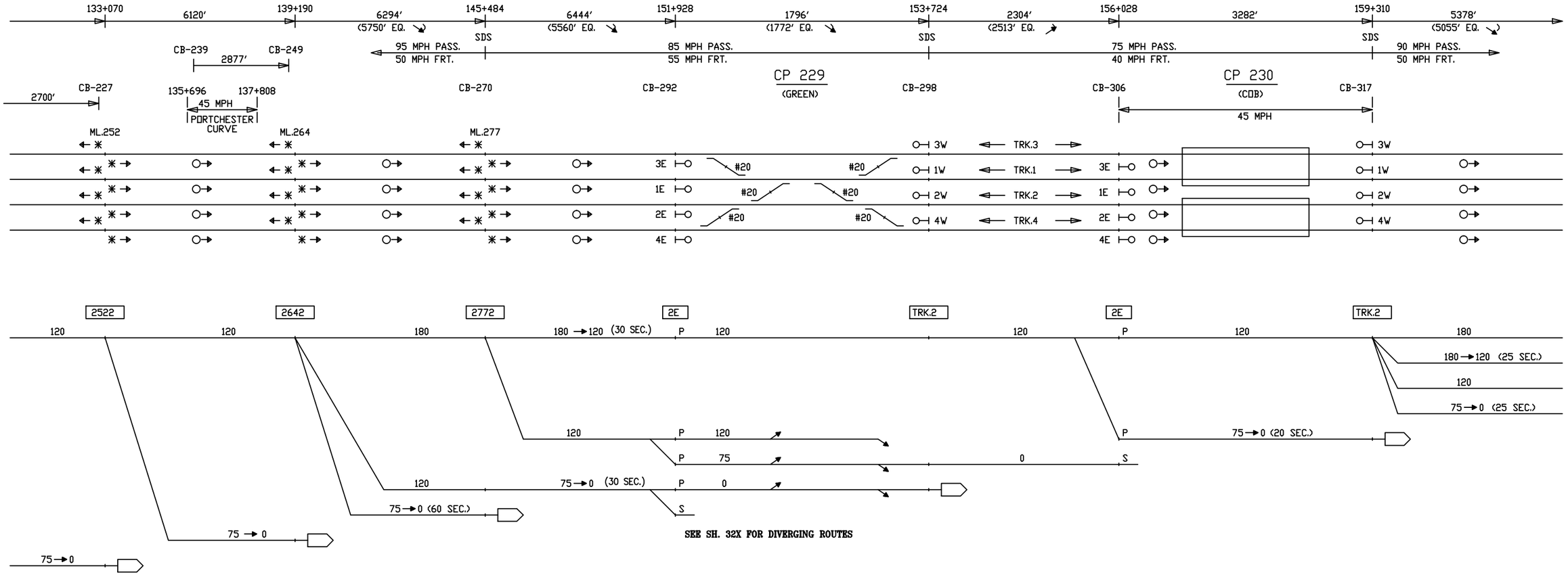

SEE SH. 32X FOR DIVERGING ROUTES

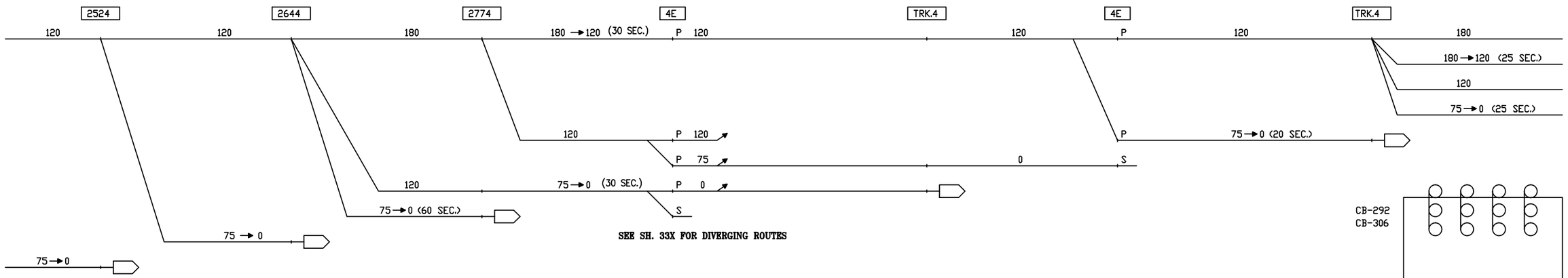

SEE SH. 33X FOR DIVERGING ROUTES

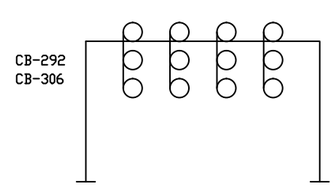

CIRCUIT ENGINEER	SR. SIGNAL ENGR.–DESIGN & STANDARDS	DIRECTOR C&S SYSTEMS	MTA Metro–North Railroad	NEW HAVEN LINE MP 25.0 TO MP 30.9 ROUTINGS – TRACKS 2 & 4 EAST	ISSUE DATE:	RTG–NHL1
					REV. 18 (NHS)	SHEET 8E
					GAR /users/signal/RTG	NHL1 L1008E

Gannett Fleming/CWA

CONTRACT #	PROJECT SHEET #
1000027511	0252

EXISTING

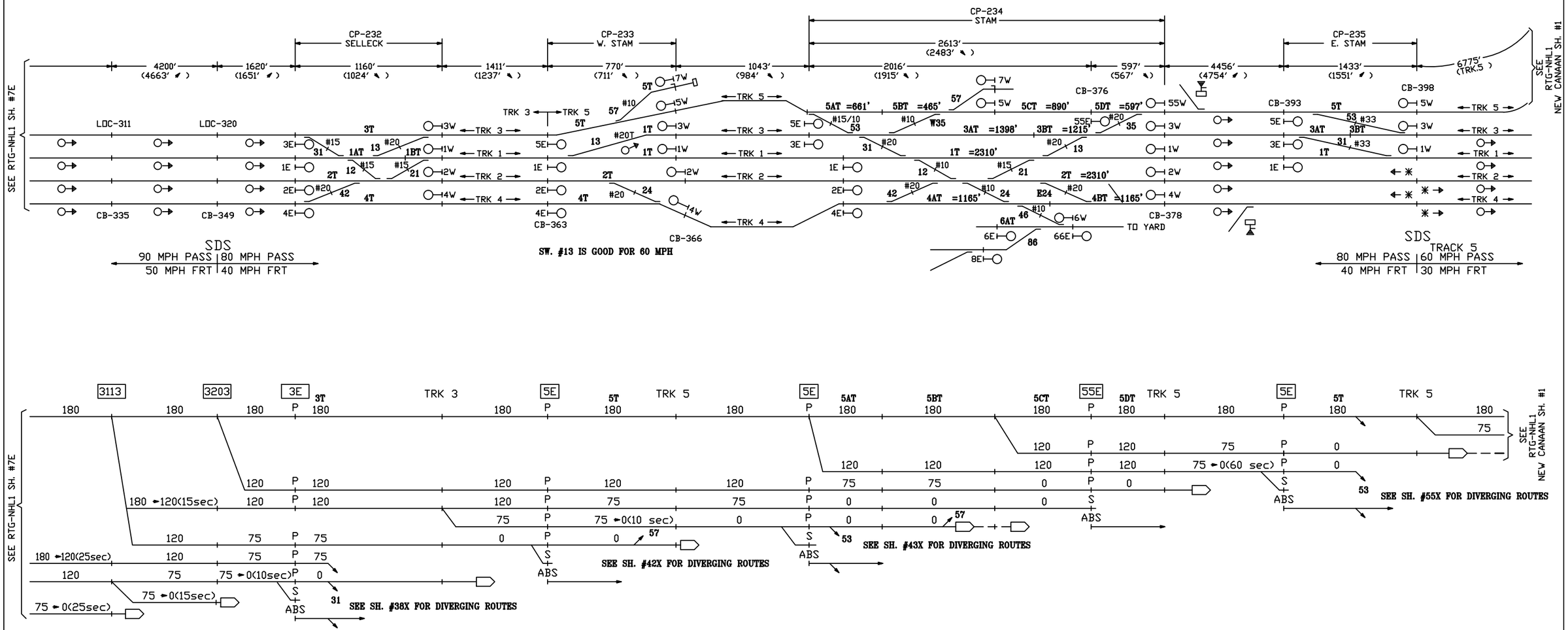

CIRCUIT ENGINEER	SR. SIGNAL ENGR.–DESIGN & STANDARDS	DIRECTOR C&S SYSTEMS	MTA Metro–North Railroad	NEW HAVEN LINE MP 30.9 TO MP 35.0 ROUTINGS – TRACK 3 CHANGES TO TRACK 5 EAST	ISSUE DATE: / REV. 11 / NHS /users/signal/RTG	RTG–NHL1 / SHEET 9E / NHL1 L1009E

Gannett Fleming/CWA

CONTRACT # 1000027511

PROJECT SHEET # 0253

EXISTING

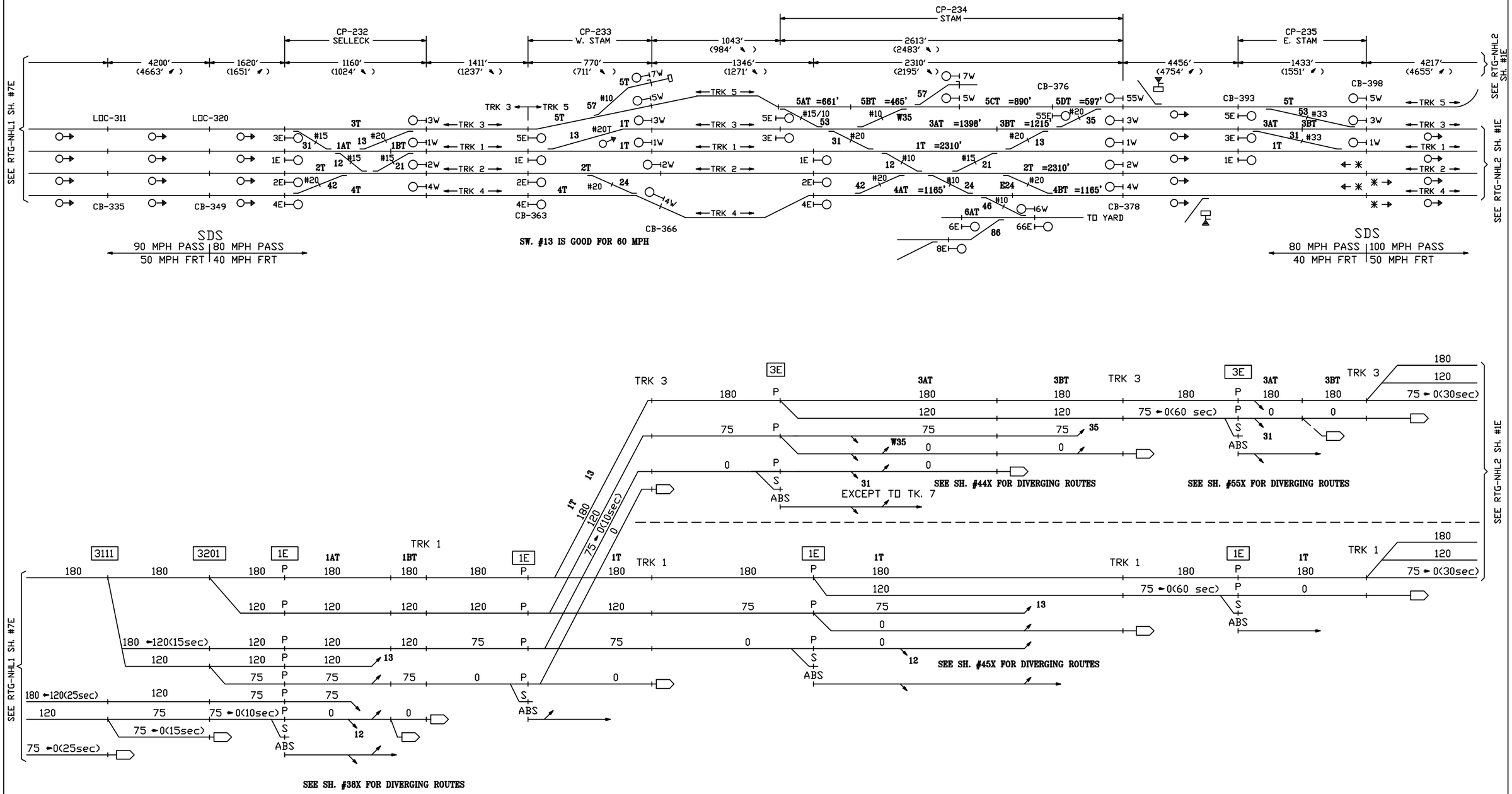

CIRCUIT ENGINEER	SR. SIGNAL ENGR.–DESIGN & STANDARDS	DIRECTOR C&S SYSTEMS	MTA Metro–North Railroad	NEW HAVEN LINE MP 30.9 TO MP 35.0 ROUTINGS – TRACKS 3 & 1 EAST	ISSUE DATE: 09–01–99 REV. 11 NHS /users/signal/RTG NHS NHL1 L1010E

RTG–NHL1 | SHEET 10E

Gannett Fleming/CWA

CONTRACT # 1000027511 | PROJECT SHEET # 0254

EXISTING

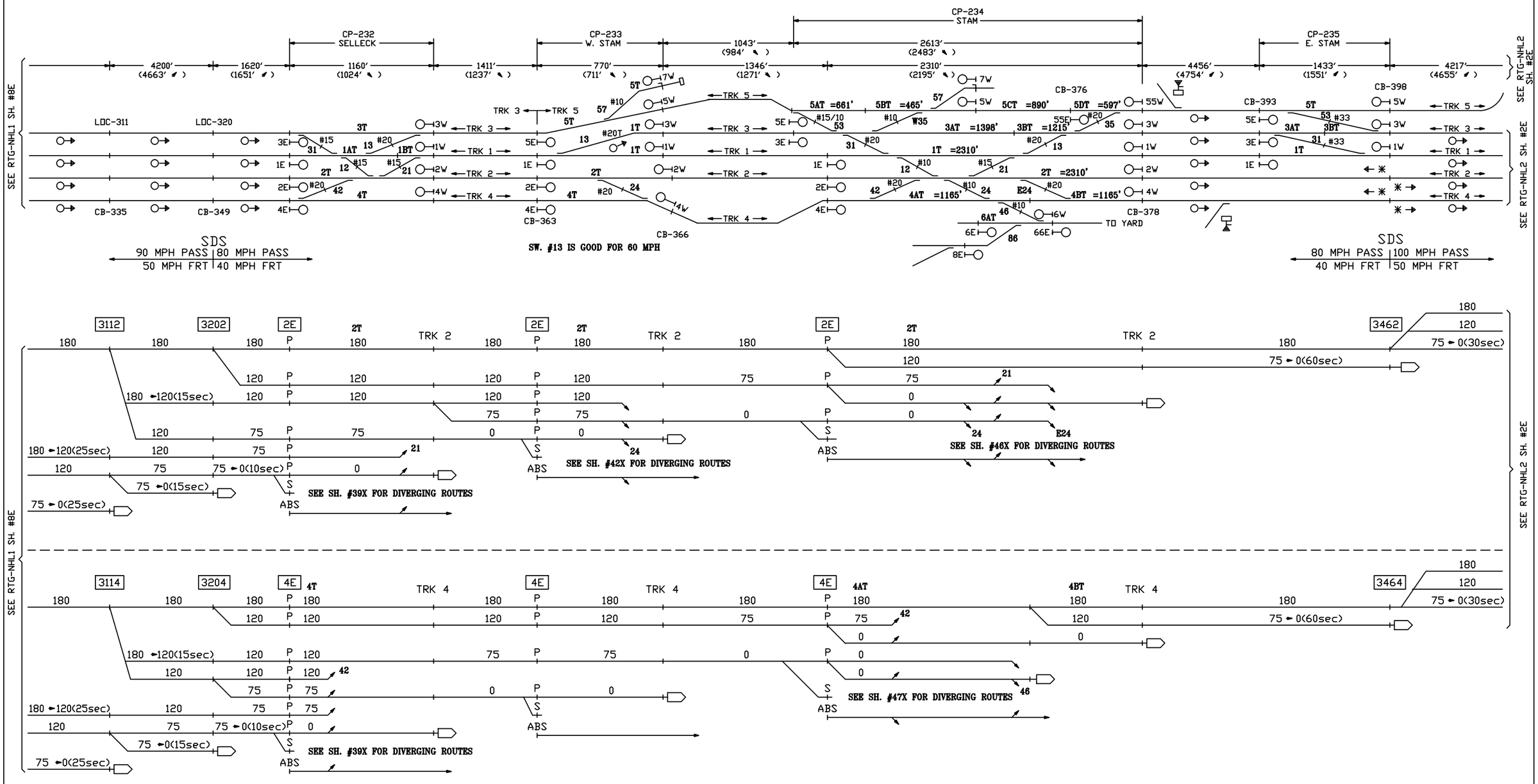

CIRCUIT ENGINEER	SR. SIGNAL ENGR.–DESIGN & STANDARDS	DIRECTOR C&S SYSTEMS	MTA Metro–North Railroad	NEW HAVEN LINE MP 30.9 TO MP 35.0 ROUTINGS – TRACKS 2 & 4 EAST	ISSUE DATE: 09–01–99 REV. 11 NHS /users/signal/RTG NHS NHL1 L1011E

RTG–NHL1 SHEET 11E

Gannett Fleming/CWA

CONTRACT # 1000027511

PROJECT SHEET # 0255

EXISTING

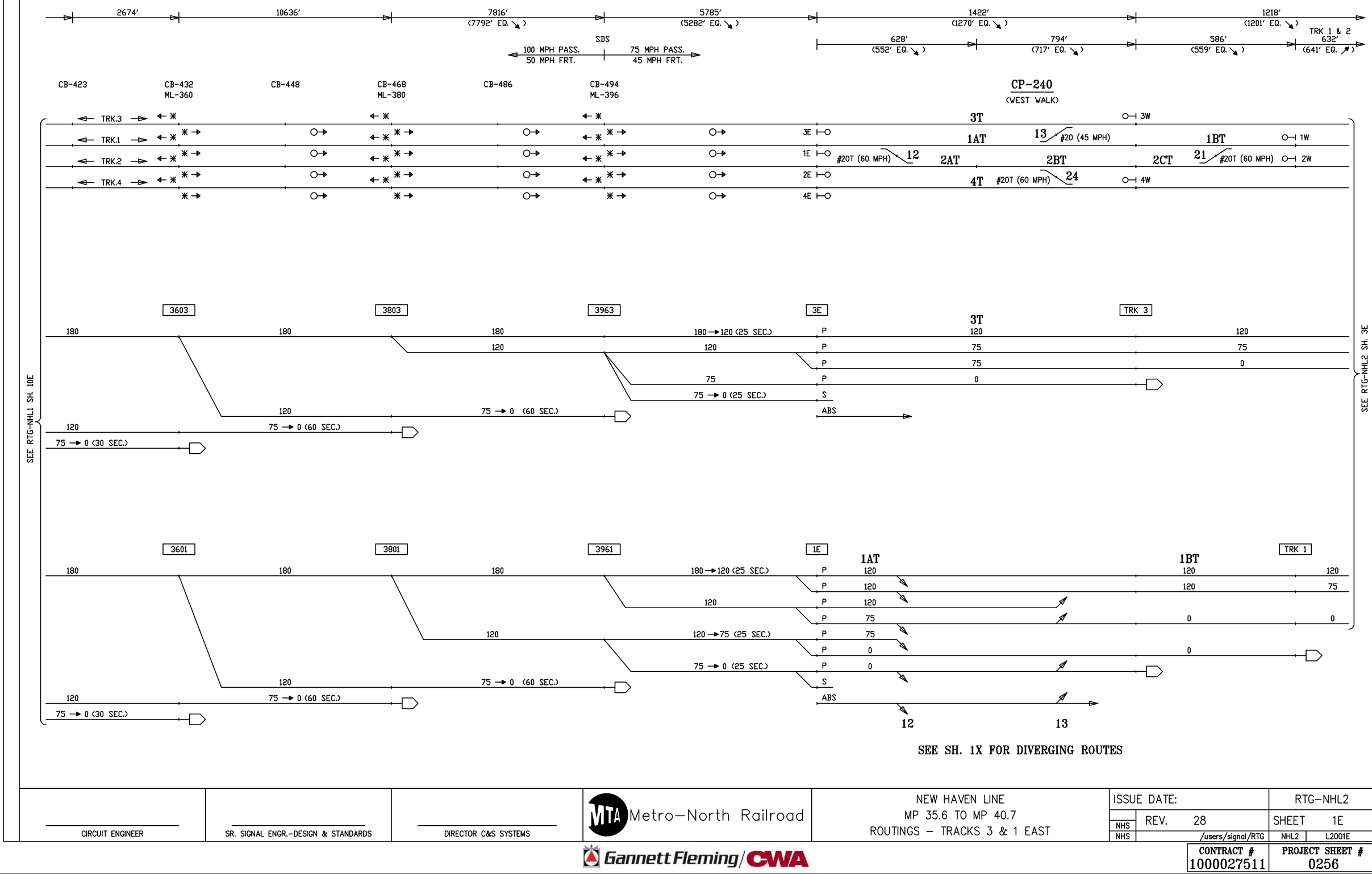

SEE SH. 1X FOR DIVERGING ROUTES

CIRCUIT ENGINEER	SR. SIGNAL ENGR.–DESIGN & STANDARDS	DIRECTOR C&S SYSTEMS	MTA Metro–North Railroad	NEW HAVEN LINE MP 35.6 TO MP 40.7 ROUTINGS – TRACKS 3 & 1 EAST	ISSUE DATE: RTG–NHL2 REV. 28 SHEET 1E NHS /users/signal/RTG NHL2 L2001E NHS

Gannett Fleming/CWA

CONTRACT #	PROJECT SHEET #
1000027511	0256

EXISTING

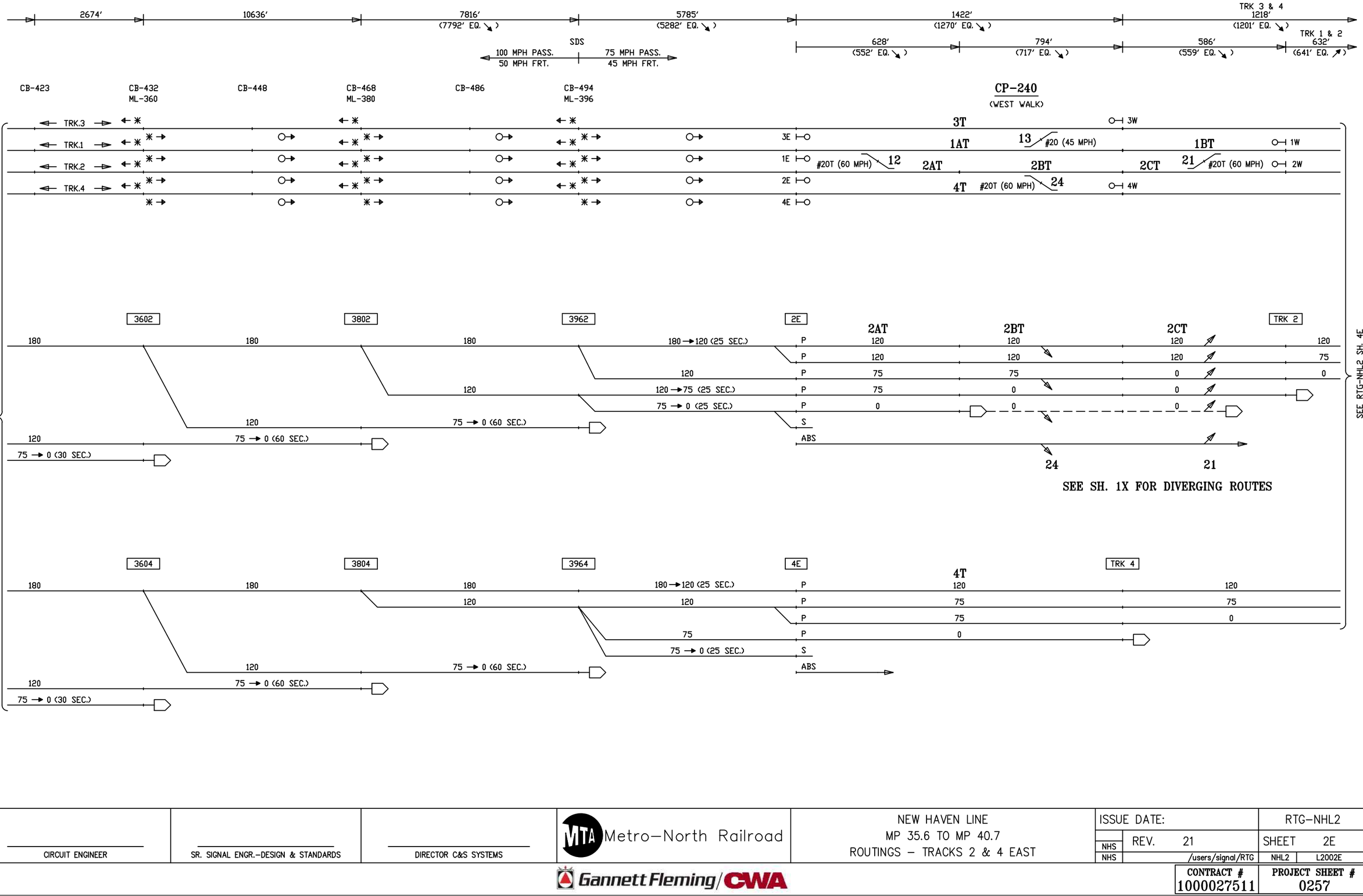

CIRCUIT ENGINEER	SR. SIGNAL ENGR.–DESIGN & STANDARDS	DIRECTOR C&S SYSTEMS	MTA Metro–North Railroad	NEW HAVEN LINE MP 35.6 TO MP 40.7 ROUTINGS – TRACKS 2 & 4 EAST	ISSUE DATE:	RTG–NHL2
					REV. 21	SHEET 2E
					NHS /users/signal/RTG	NHL2 L2002E
			Gannett Fleming/CWA		CONTRACT # 1000027511	PROJECT SHEET # 0257

EXISTING

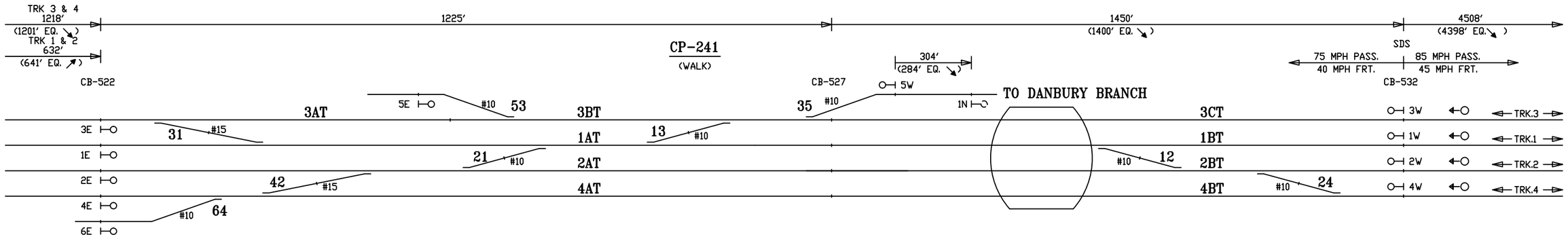

MAS = 30 MPH

MP 41.5 MP 41.6

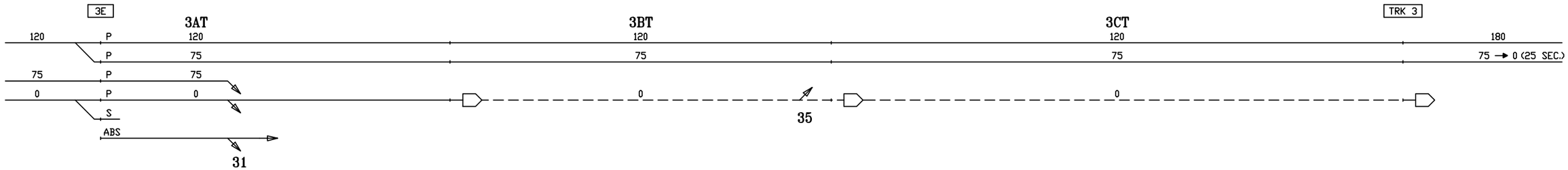

SEE SH. 2X FOR DIVERGING ROUTES

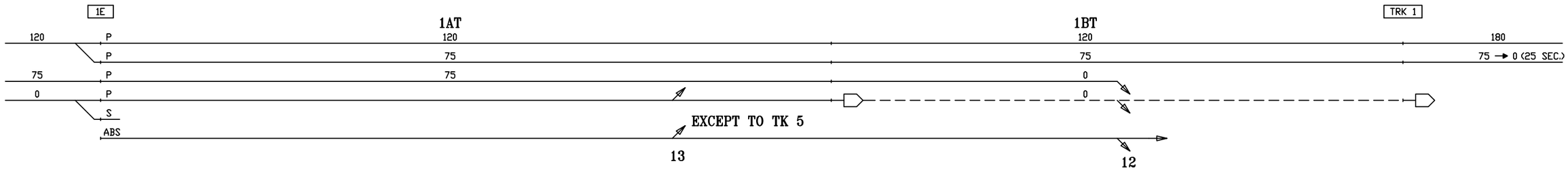

SEE SH. 3X FOR DIVERGING ROUTES

CIRCUIT ENGINEER	SR. SIGNAL ENGR.–DESIGN & STANDARDS	DIRECTOR C&S SYSTEMS	MTA Metro–North Railroad	NEW HAVEN LINE MP 40.7 TO MP 42.4 ROUTINGS – TRACKS 3 & 1 EAST	ISSUE DATE: 12–21–90 NHS REV. 28 NHS /users/signal/RTG	RTG–NHL2 SHEET 3E NHL2 L2003E

Gannett Fleming/CWA

CONTRACT #	PROJECT SHEET #
1000027511	0258

EXISTING

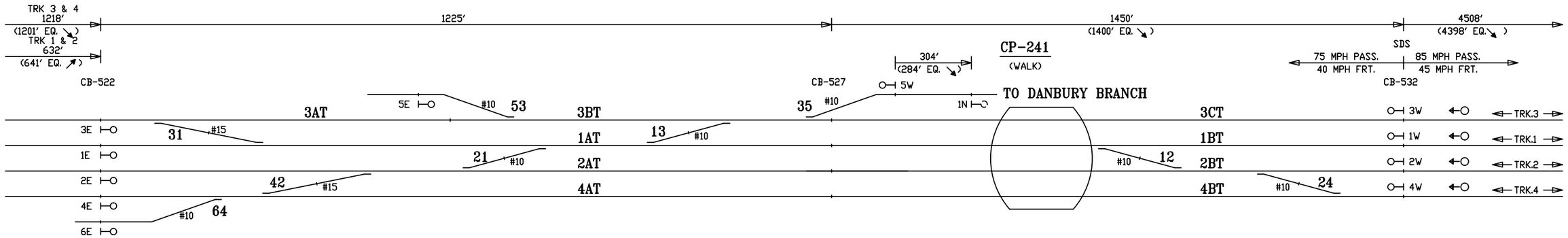

MAS = 30 MPH

MP 41.5 — MP 41.6

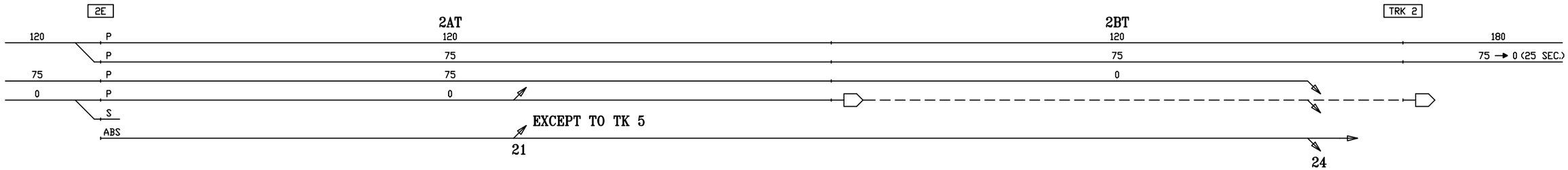

SEE SH. 4X FOR DIVERGING ROUTES

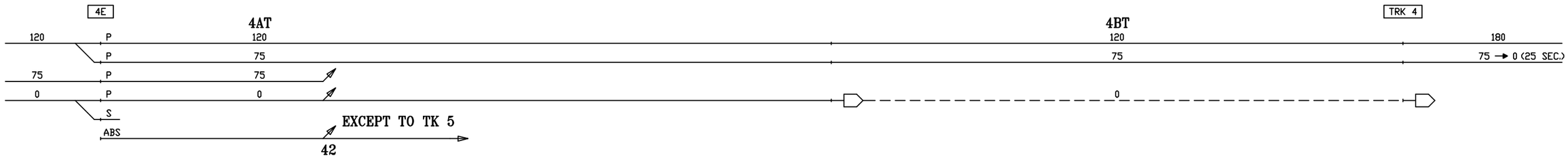

SEE SH. 5X FOR DIVERGING ROUTES

CIRCUIT ENGINEER	SR. SIGNAL ENGR.–DESIGN & STANDARDS	DIRECTOR C&S SYSTEMS	MTA Metro–North Railroad	NEW HAVEN LINE MP 40.7 TO MP 42.4 ROUTINGS – TRACKS 2 & 4 EAST	ISSUE DATE: 12–21–90 REV. 28 (NHS / LB) /users/signal/RTG	RTG–NHL2 SHEET 4E NHL2 L2004E

Gannett Fleming/CWA

CONTRACT #	PROJECT SHEET #
1000027511	0259

EXISTING

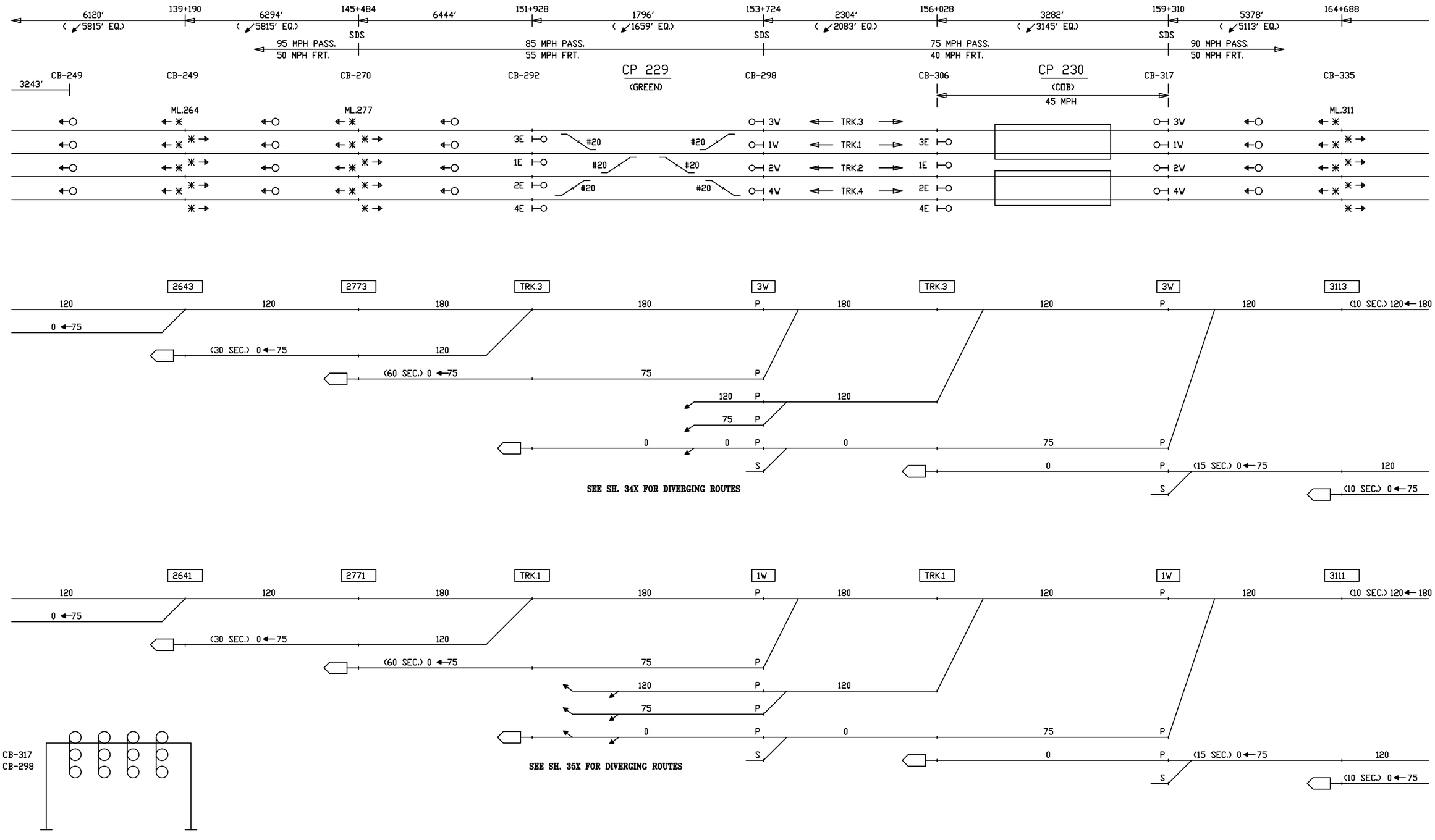

CIRCUIT ENGINEER	SR. SIGNAL ENGR.–DESIGN & STANDARDS	DIRECTOR C&S SYSTEMS	MTA Metro–North Railroad	NEW HAVEN LINE MP 31.2 TO MP 25.3 ROUTINGS – TRACKS 3 & 1 WEST	ISSUE DATE: / RTG–NHL1 NHS REV. 18 / SHEET 7W NHS /users/signal/RTG / NHL1 / L1007W

Gannett Fleming/CWA

CONTRACT #	PROJECT SHEET #
1000027511	0260

EXISTING

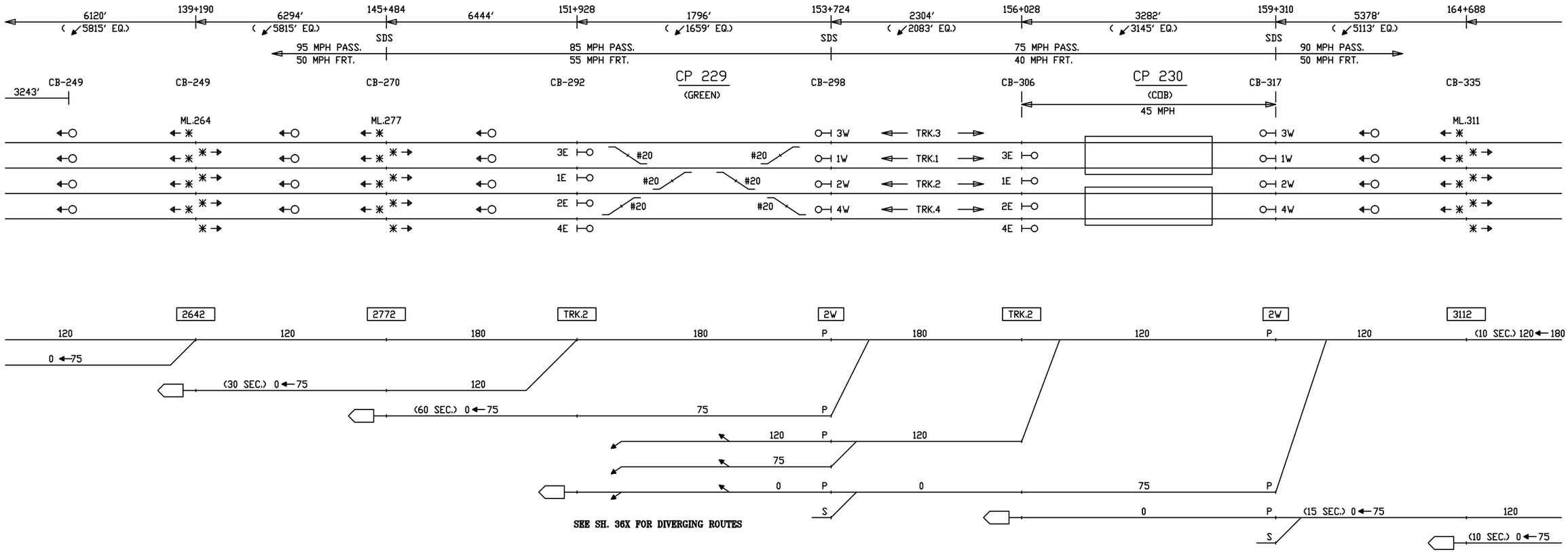

SEE SH. 36X FOR DIVERGING ROUTES

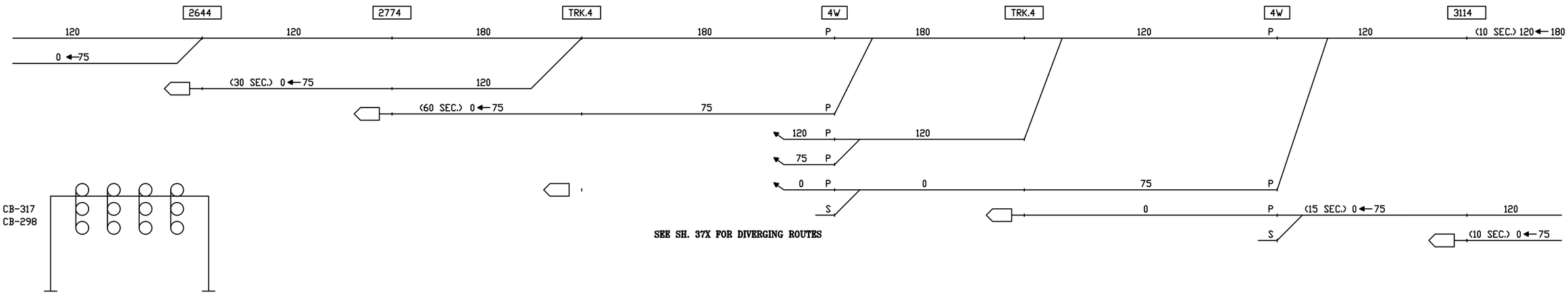

SEE SH. 37X FOR DIVERGING ROUTES

CIRCUIT ENGINEER	SR. SIGNAL ENGR.–DESIGN & STANDARDS	DIRECTOR C&S SYSTEMS	MTA Metro–North Railroad	NEW HAVEN LINE MP 31.2 TO MP 25.3 ROUTINGS – TRACKS 2 & 4 WEST	ISSUE DATE:	RTG–NHL1
					REV. 18	SHEET 8W
					NHS /users/signal/RTG	NHS NHL1 L1008W

Gannett Fleming/CWA

CONTRACT #	PROJECT SHEET #
1000027511	0261

EXISTING

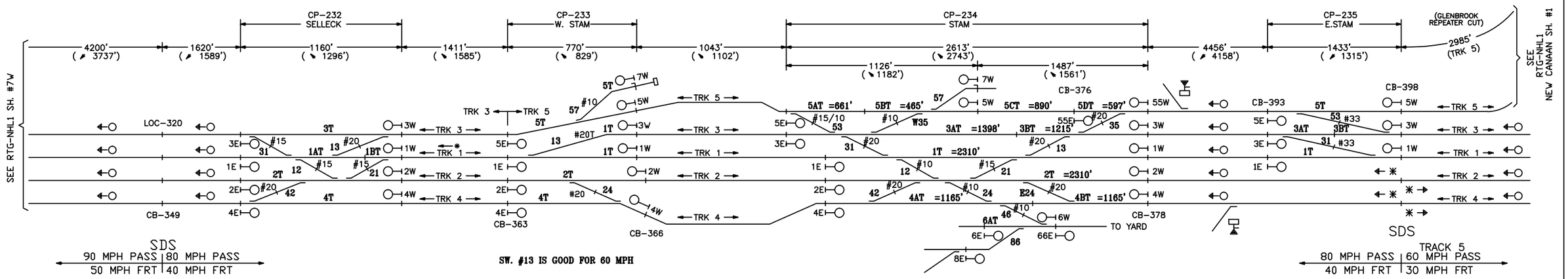

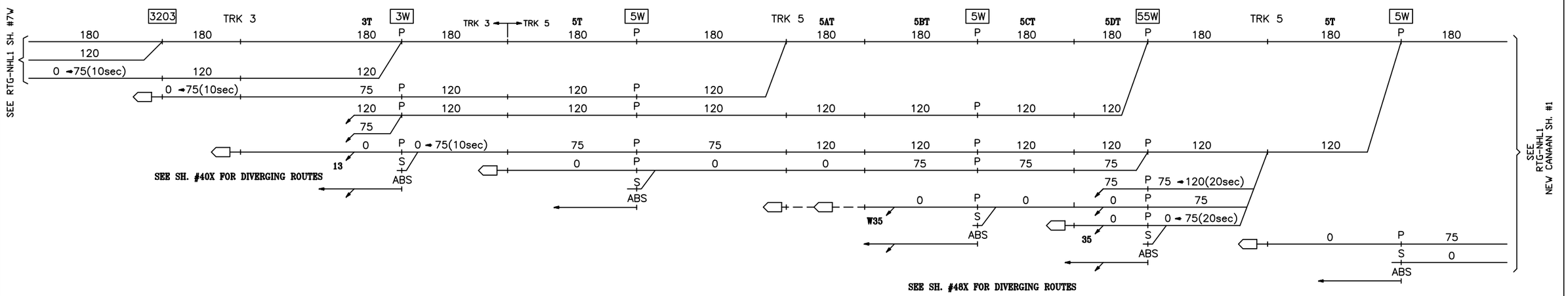

CIRCUIT ENGINEER	SR. SIGNAL ENGR.–DESIGN & STANDARDS	DIRECTOR C&S SYSTEMS	MTA Metro–North Railroad	NEW HAVEN LINE MP 35.6 TO MP 31.2 ROUTINGS – TRACK 5 CHANGES TO TRACK 3 WEST	ISSUE DATE:	RTG–NHL1
					NHS REV. 11	SHEET 9W
					NHS /users/signal/RTG	NHL1 L1009W

Gannett Fleming/CWA

CONTRACT # 1000027511

PROJECT SHEET # 0262

EXISTING

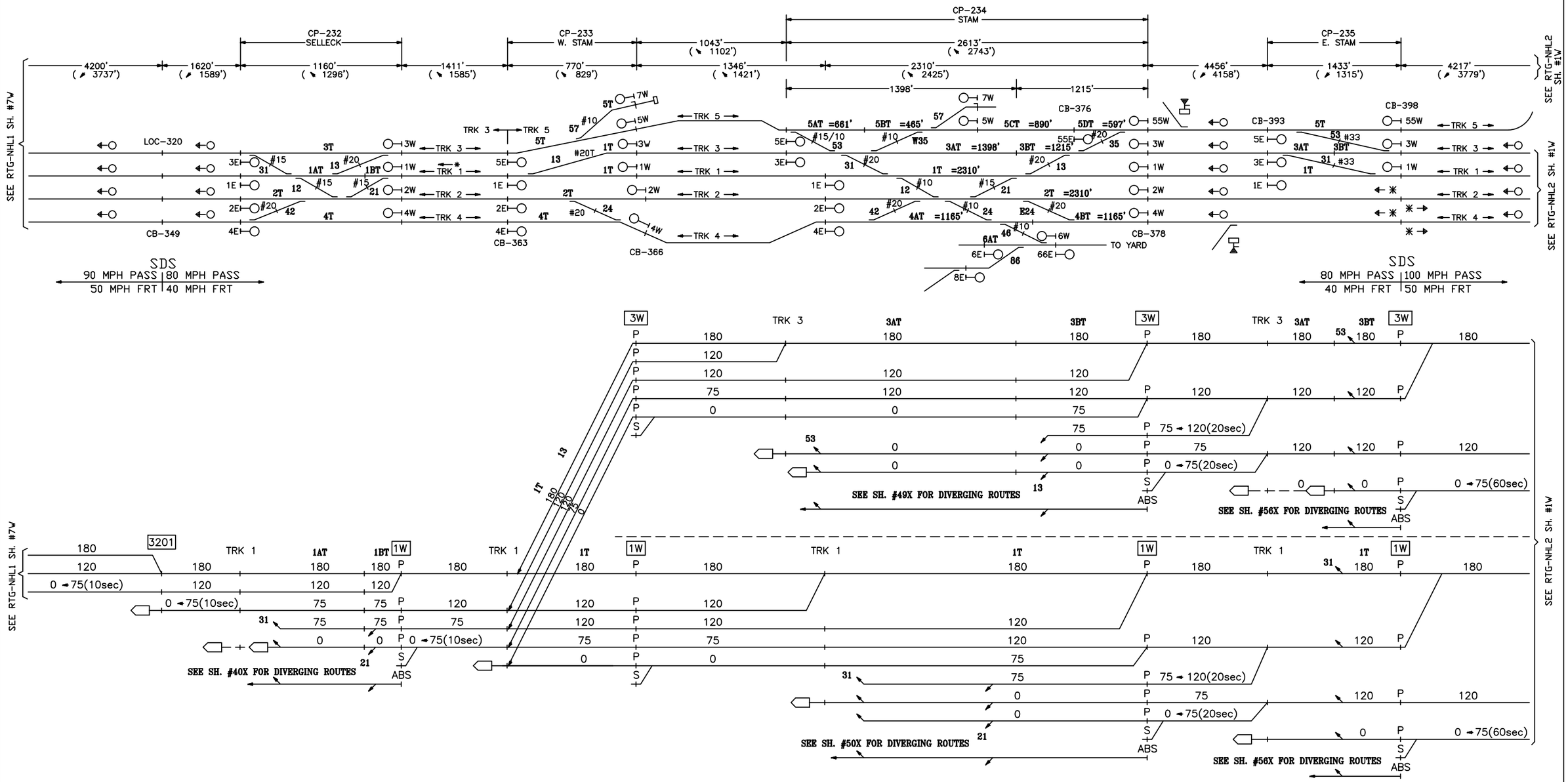

CIRCUIT ENGINEER	SR. SIGNAL ENGR.–DESIGN & STANDARDS	DIRECTOR C&S SYSTEMS	Metro–North Railroad	NEW HAVEN LINE MP 35.6 TO MP 31.2 ROUTINGS – TRACKS 3 & 1 WEST	ISSUE DATE: 09–01–99 · RTG–NHL1 NHS REV. 11 · SHEET 10W NHS /users/signal/RTG · NHL1 · L1010W

Gannett Fleming/CWA

CONTRACT # 1000027511 · PROJECT SHEET # 0263

EXISTING

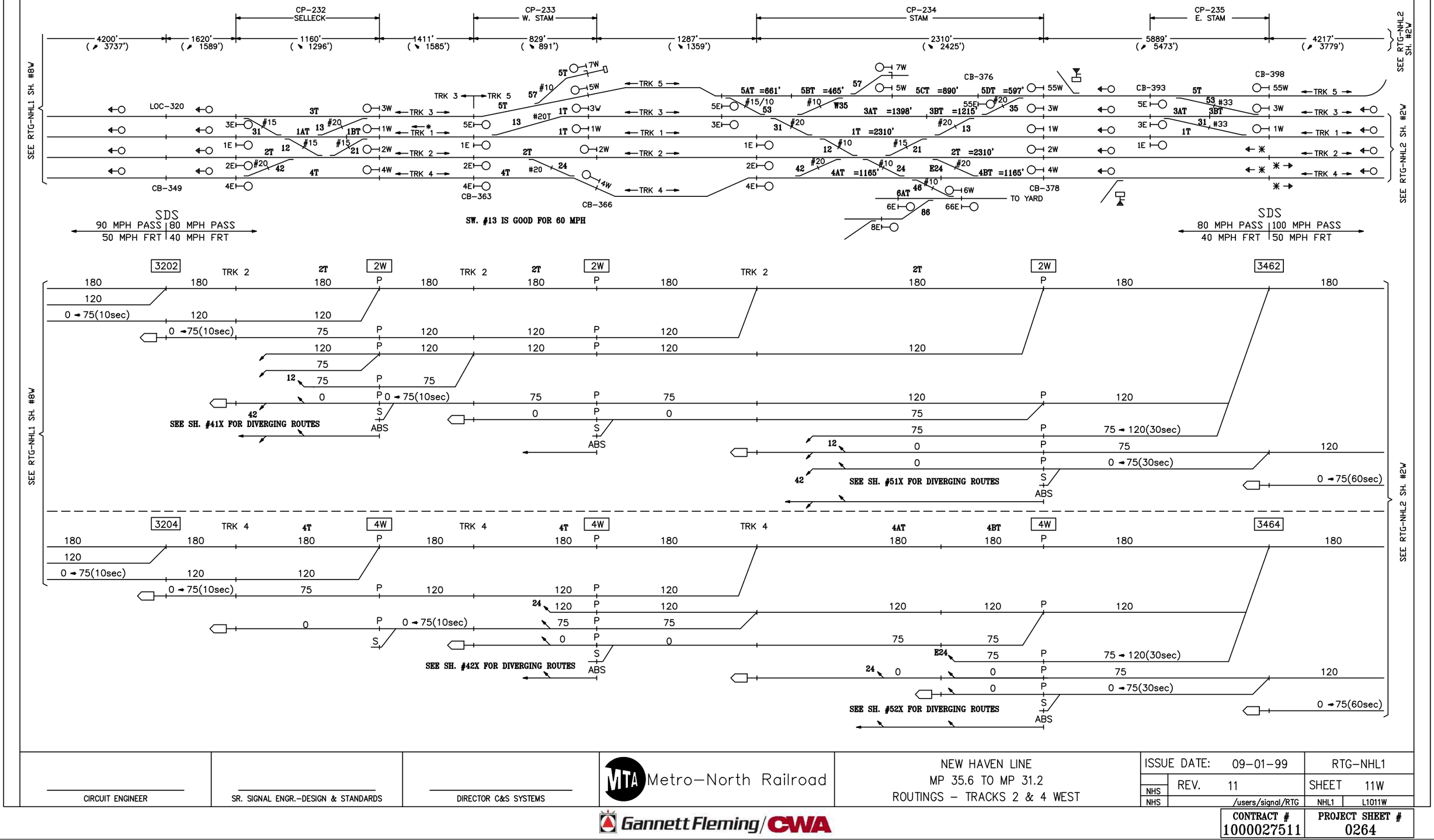

CIRCUIT ENGINEER	SR. SIGNAL ENGR.–DESIGN & STANDARDS	DIRECTOR C&S SYSTEMS	MTA Metro–North Railroad	NEW HAVEN LINE MP 35.6 TO MP 31.2 ROUTINGS – TRACKS 2 & 4 WEST	ISSUE DATE: 09–01–99 · RTG–NHL1 REV. 11 · SHEET 11W NHS · NHS · /users/signal/RTG · NHL1 · L1011W

Gannett Fleming/CWA

CONTRACT # 1000027511

PROJECT SHEET # 0264

EXISTING

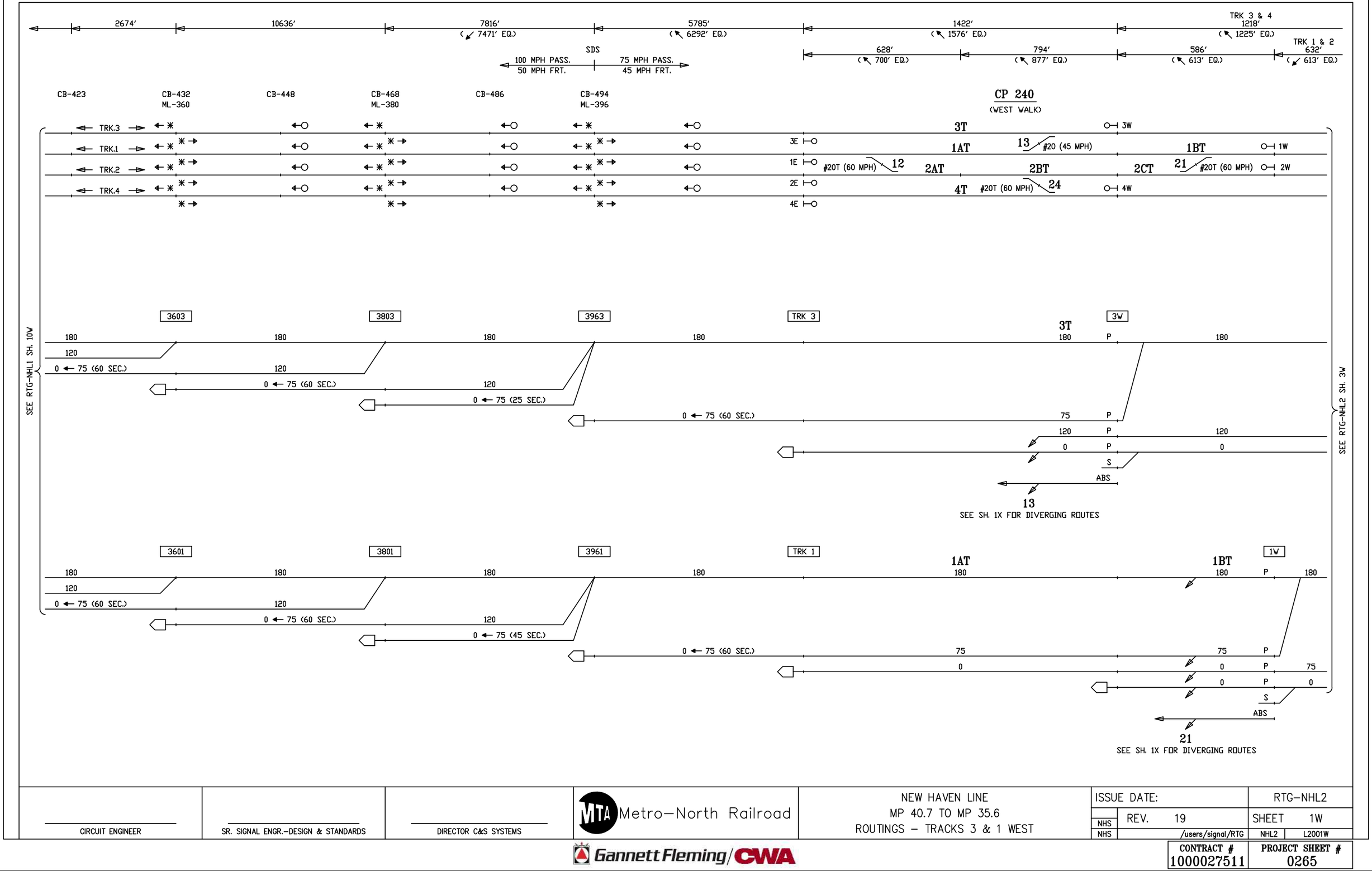

CIRCUIT ENGINEER	SR. SIGNAL ENGR.–DESIGN & STANDARDS	DIRECTOR C&S SYSTEMS	MTA Metro–North Railroad	NEW HAVEN LINE MP 40.7 TO MP 35.6 ROUTINGS – TRACKS 3 & 1 WEST	ISSUE DATE:	RTG–NHL2
					NHS REV. 19	SHEET 1W
					NHS /users/signal/RTG	NHL2 L2001W
			Gannett Fleming/CWA		CONTRACT # 1000027511	PROJECT SHEET # 0265

EXISTING

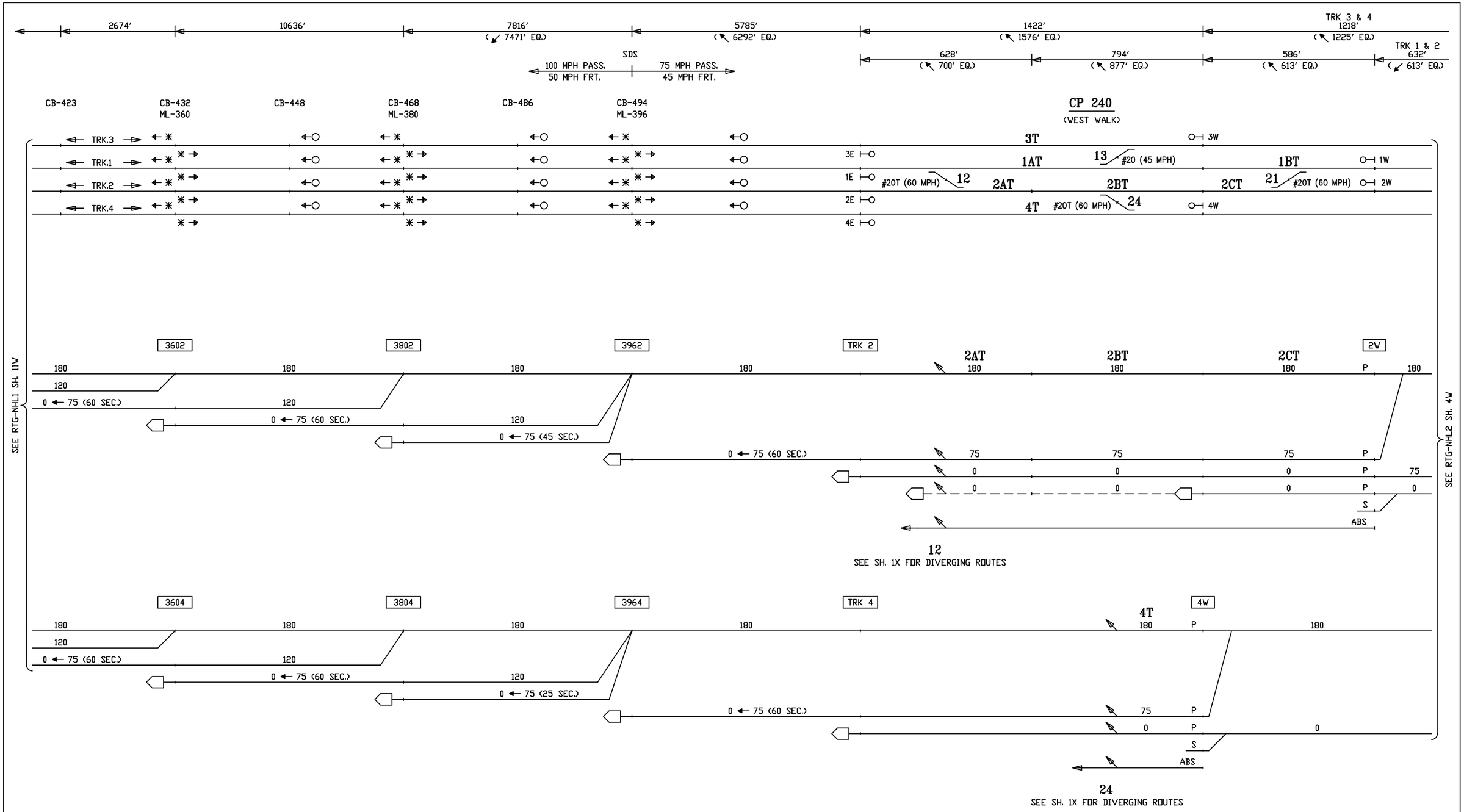

CIRCUIT ENGINEER	SR. SIGNAL ENGR.–DESIGN & STANDARDS	DIRECTOR C&S SYSTEMS	MTA Metro–North Railroad	NEW HAVEN LINE MP 40.7 TO MP 35.6 ROUTINGS – TRACKS 2 & 4 WEST	ISSUE DATE: NHS REV. 19 NHS /users/signal/RTG RTG–NHL2 SHEET 2W NHL2 L2002W

Gannett Fleming/CWA

CONTRACT #	PROJECT SHEET #
1000027511	0266

EXISTING

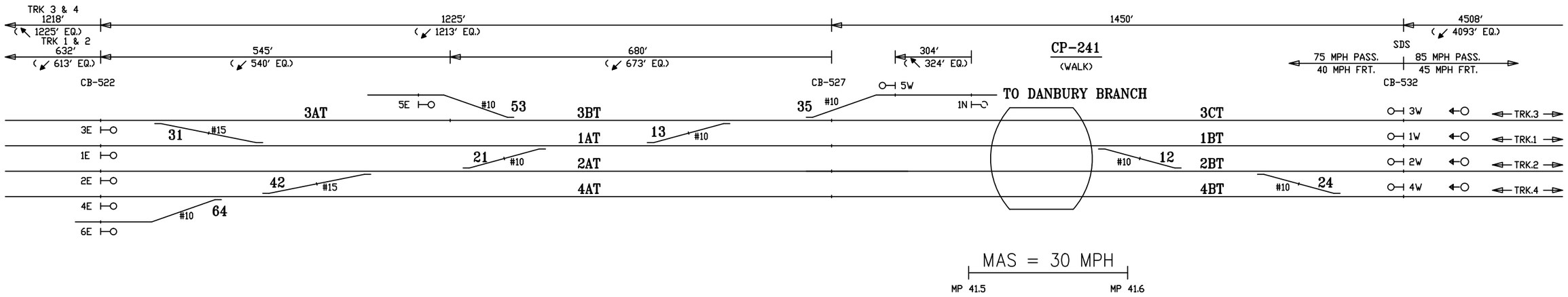

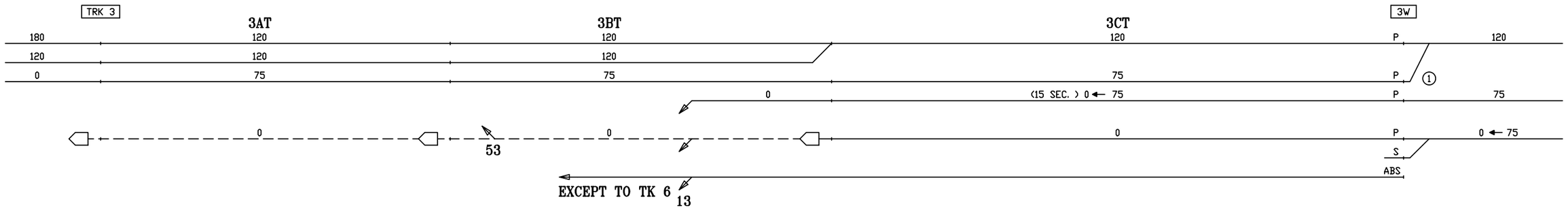

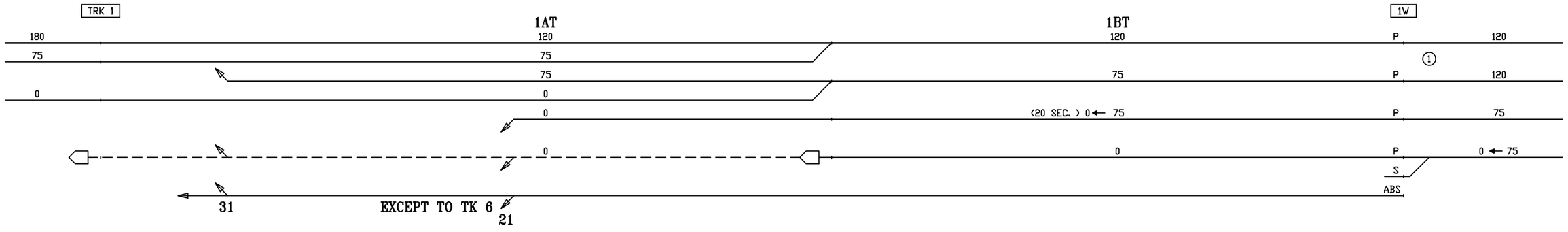

① ROUTINGS RELY ON MAS ≤ 60MPH PASS, 30 MPH FRT. OVER WALK MOVABLE BRIDGE

CIRCUIT ENGINEER	SR. SIGNAL ENGR.–DESIGN & STANDARDS	DIRECTOR C&S SYSTEMS	MTA Metro–North Railroad	NEW HAVEN LINE MP 42.4 TO MP 40.7 ROUTINGS – TRACKS 3 & 1 WEST	ISSUE DATE:	RTG–NHL2
					NHS REV. 28	SHEET 3W
					NHS /users/signal/RTG	NHL2 L2003W

Gannett Fleming/CWA

CONTRACT # 1000027511

PROJECT SHEET # 0267

EXISTING

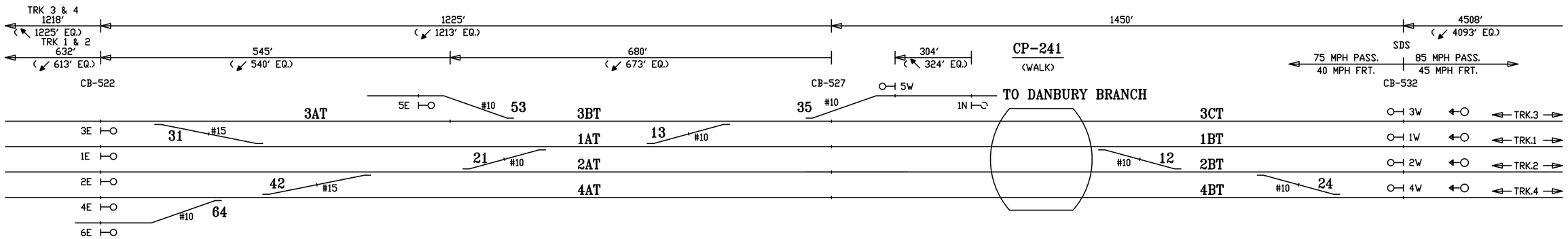

MAS = 30 MPH

MP 41.5 MP 41.6

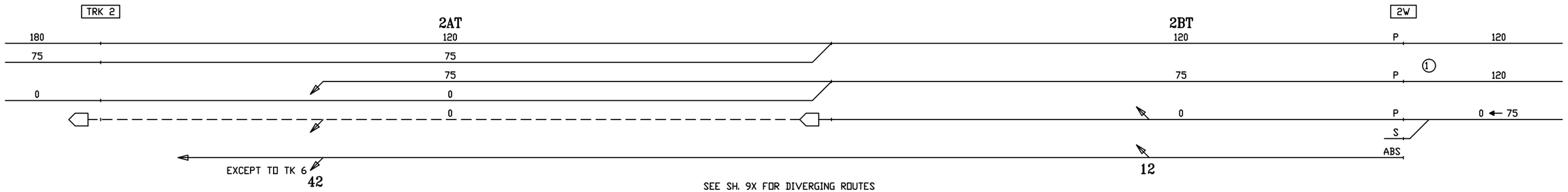

SEE SH. 9X FOR DIVERGING ROUTES

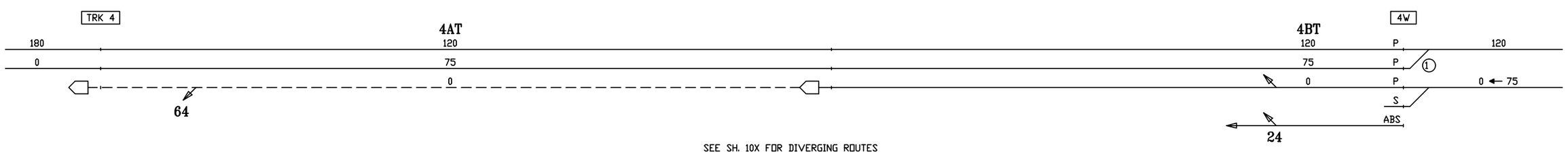

SEE SH. 10X FOR DIVERGING ROUTES

① ROUTINGS RELY ON MAS ≤ 60MPH PASS, 30 MPH FRT. OVER WALK MOVABLE BRIDGE

CIRCUIT ENGINEER	SR. SIGNAL ENGR.–DESIGN & STANDARDS	DIRECTOR C&S SYSTEMS	MTA Metro–North Railroad	NEW HAVEN LINE MP 42.4 TO MP 40.7 ROUTINGS – TRACKS 2 & 4 WEST	ISSUE DATE:
					NHS REV. 28
					NHS /users/signal/RTG

RTG–NHL2

SHEET 4W

NHL2 L2004W

Gannett Fleming/CWA

CONTRACT # 1000027511

PROJECT SHEET # 0268

EXISTING - NOT CHECKED, NOT APPROVED

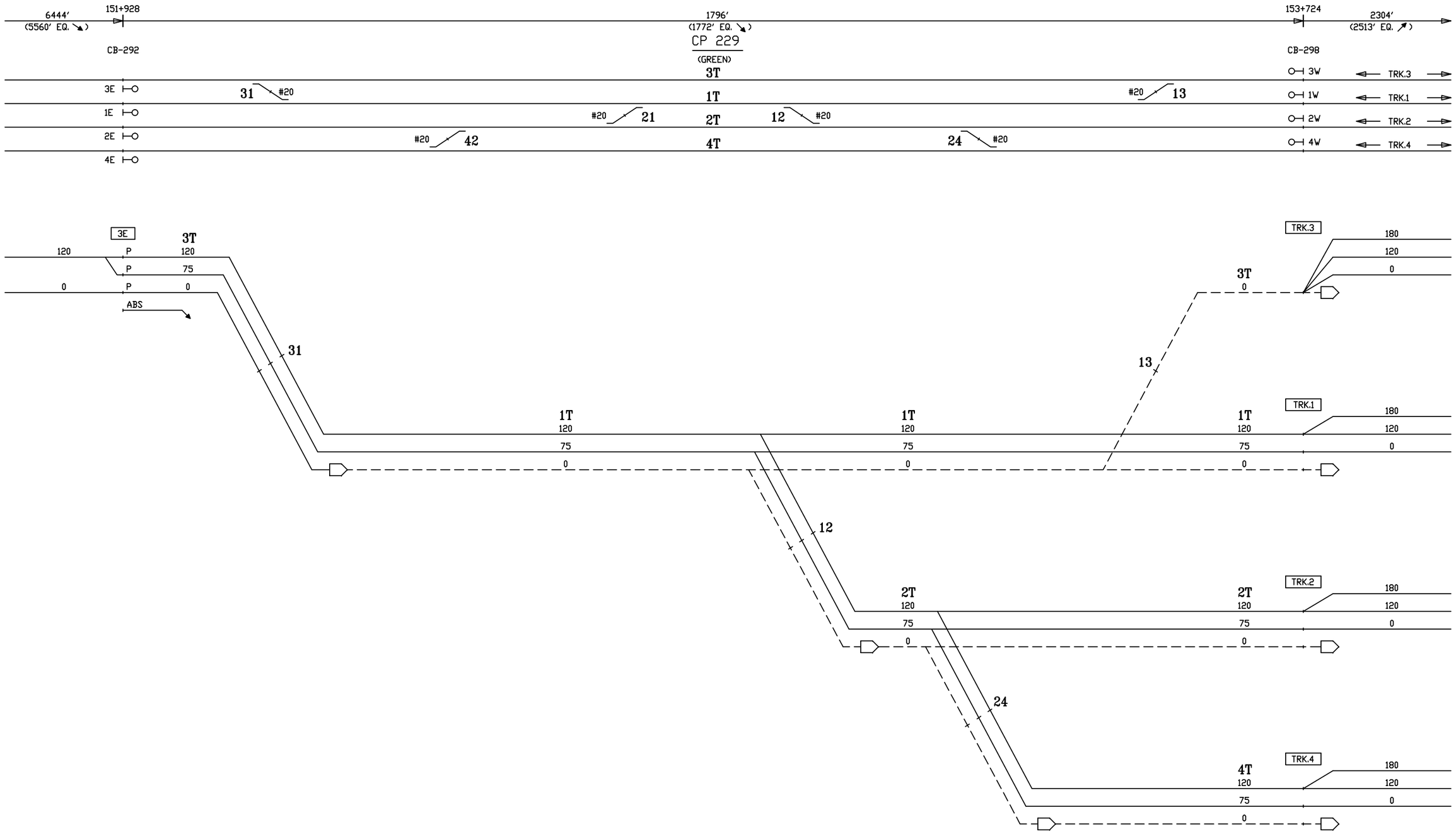

CIRCUIT ENGINEER	SR. SIGNAL ENGR.–DESIGN & STANDARDS	DIRECTOR C&S SYSTEMS	MTA Metro–North Railroad	NEW HAVEN LINE CP 229 DIVERGING ROUTES – TRACK 3 EAST	ISSUE DATE:	RTG–NHL1
					REV.	SHEET 30X
					/users/signal/RTG	NHL1 L1030X

Gannett Fleming/CWA

CONTRACT #	PROJECT SHEET #
1000027511	0269

EXISTING - NOT CHECKED, NOT APPROVED

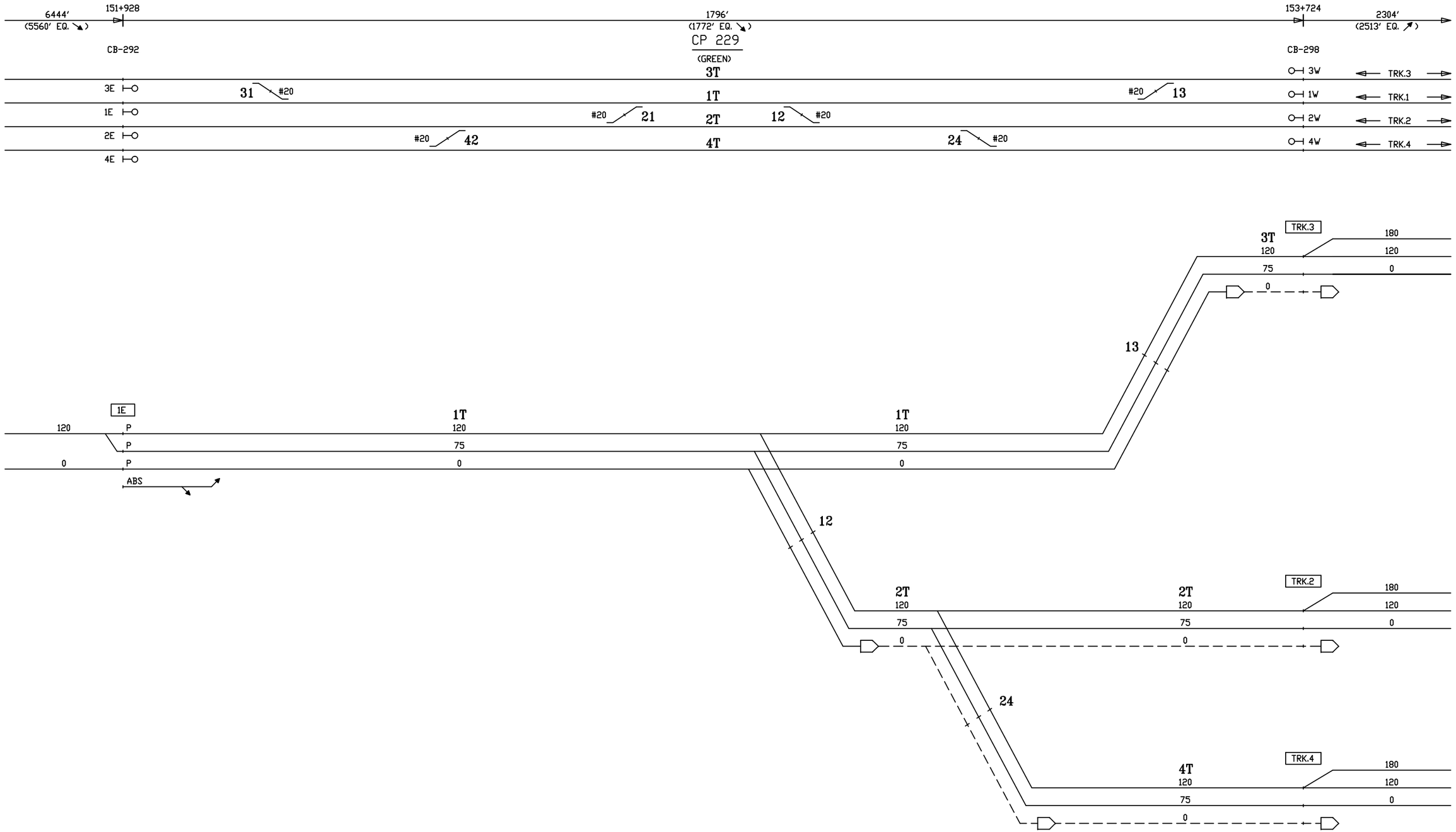

CIRCUIT ENGINEER	SR. SIGNAL ENGR.–DESIGN & STANDARDS	DIRECTOR C&S SYSTEMS	MTA Metro–North Railroad	NEW HAVEN LINE CP 229 DIVERGING ROUTES – TRACK 1 EAST	ISSUE DATE: / REV. / /users/signal/RTG RTG–NHL1 SHEET 31X NHL1 L1031X

Gannett Fleming/CWA

CONTRACT #	PROJECT SHEET #
1000027511	0270

EXISTING - NOT CHECKED, NOT APPROVED

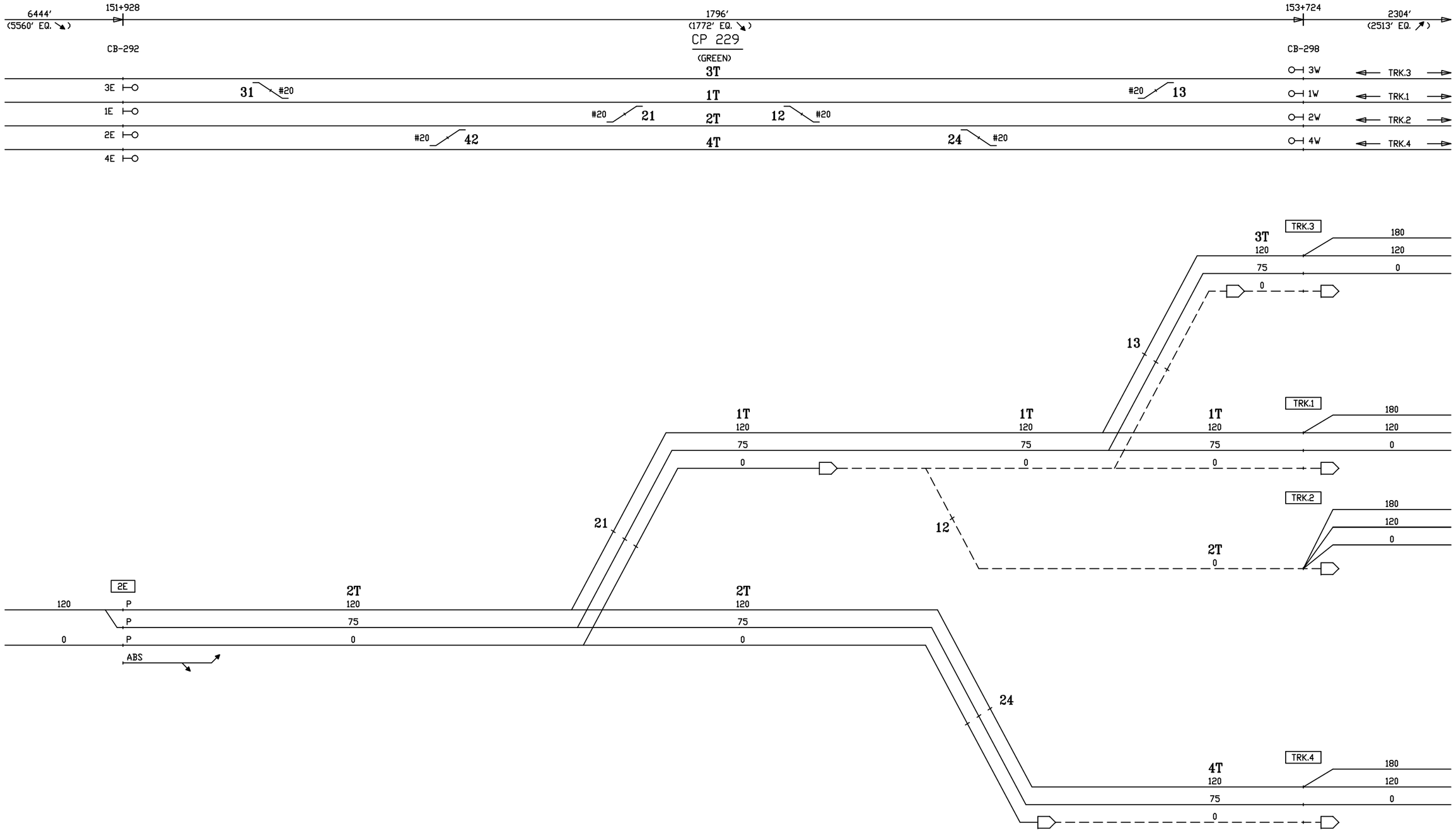

CIRCUIT ENGINEER	SR. SIGNAL ENGR.–DESIGN & STANDARDS	DIRECTOR C&S SYSTEMS	MTA Metro–North Railroad	NEW HAVEN LINE CP 229 DIVERGING ROUTES – TRACK 2 EAST	ISSUE DATE: / REV. / /users/signal/RTG RTG–NHL1 SHEET 32X NHL1 L1032X

Gannett Fleming/CWA

CONTRACT #	PROJECT SHEET #
1000027511	0271

EXISTING - NOT CHECKED, NOT APPROVED

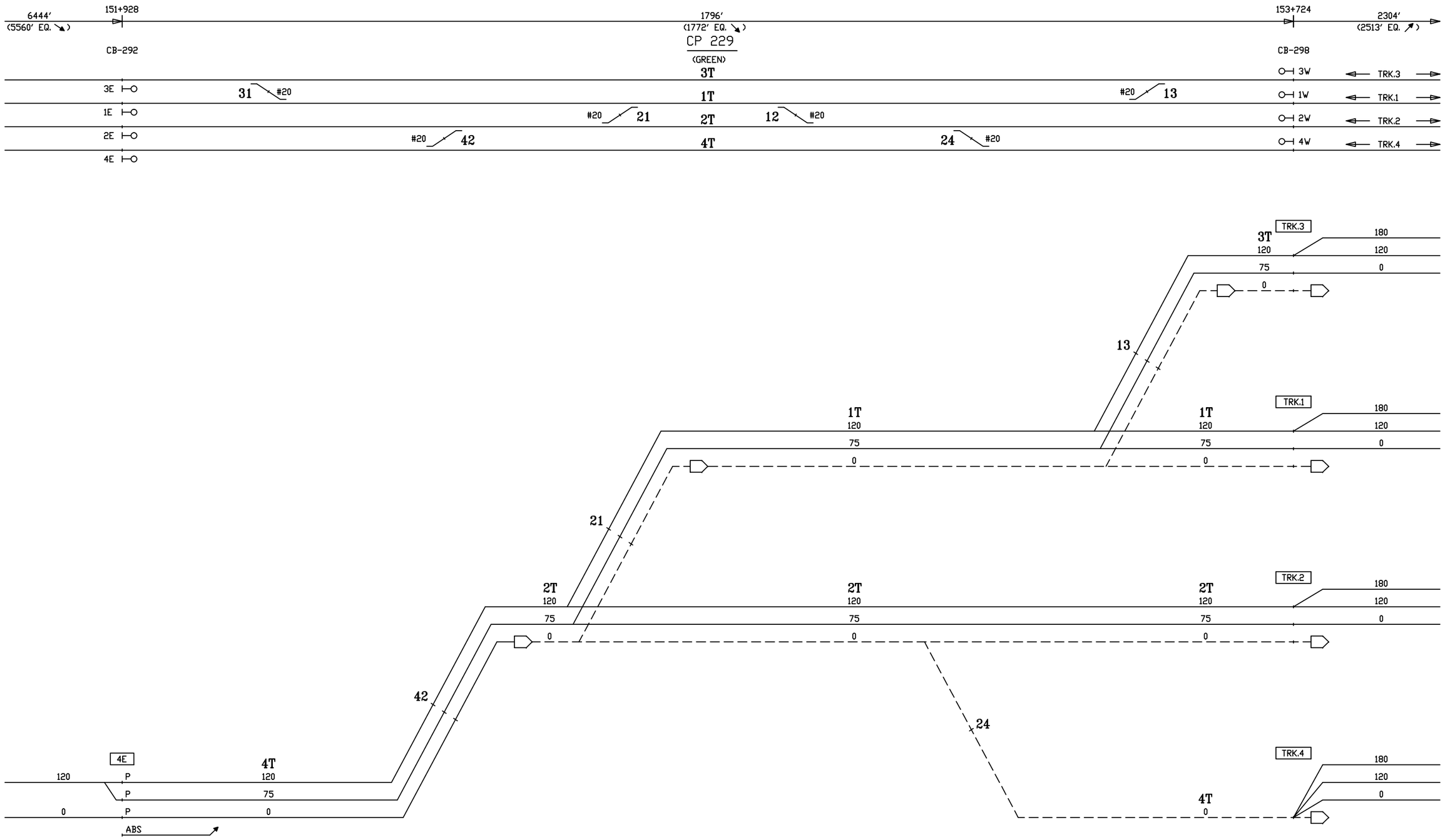

CIRCUIT ENGINEER	SR. SIGNAL ENGR.–DESIGN & STANDARDS	DIRECTOR C&S SYSTEMS	MTA Metro–North Railroad	NEW HAVEN LINE CP 229 DIVERGING ROUTES – TRACK 4 EAST	ISSUE DATE: / REV. / /users/signal/RTG RTG–NHL1 SHEET 33X NHL1 L1033X

Gannett Fleming/CWA

CONTRACT #	PROJECT SHEET #
1000027511	0272

EXISTING – NOT CHECKED, NOT APPROVED

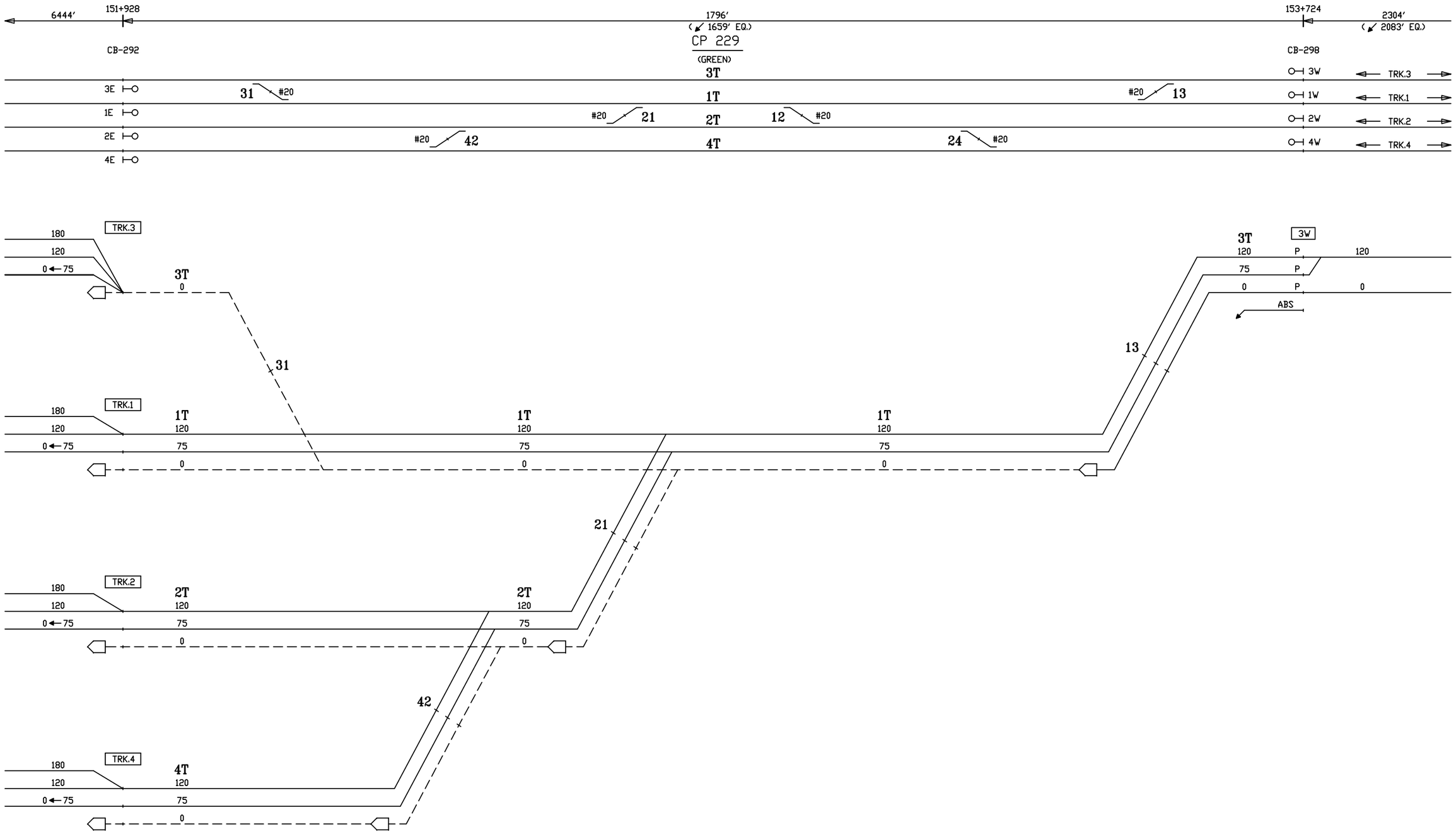

CIRCUIT ENGINEER	SR. SIGNAL ENGR.–DESIGN & STANDARDS	DIRECTOR C&S SYSTEMS	MTA Metro–North Railroad	NEW HAVEN LINE CP 229 DIVERGING ROUTES – TRACK 3 WEST	ISSUE DATE: / REV. / /users/signal/RTG RTG–NHL1 SHEET 34X NHL1 L1034X

Gannett Fleming/CWA

CONTRACT #	PROJECT SHEET #
1000027511	0273

EXISTING - NOT CHECKED, NOT APPROVED

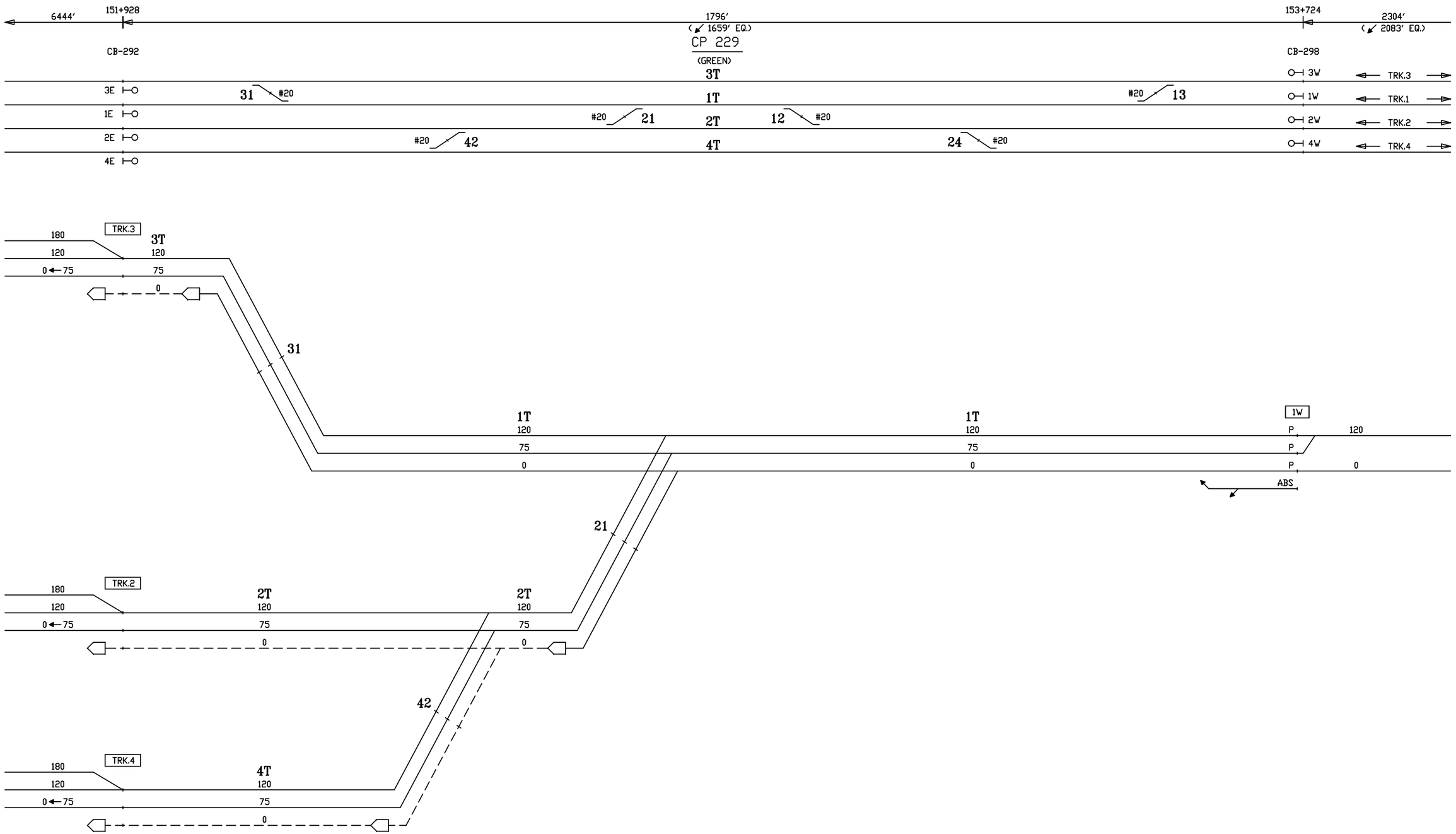

CIRCUIT ENGINEER	SR. SIGNAL ENGR.–DESIGN & STANDARDS	DIRECTOR C&S SYSTEMS	MTA Metro–North Railroad	NEW HAVEN LINE CP 229 DIVERGING ROUTES – TRACK 1 WEST	ISSUE DATE: / REV. / /users/signal/RTG RTG–NHL1 SHEET 35X NHL1 L1035X

Gannett Fleming/CWA

CONTRACT #	PROJECT SHEET #
1000027511	0274

EXISTING - NOT CHECKED, NOT APPROVED

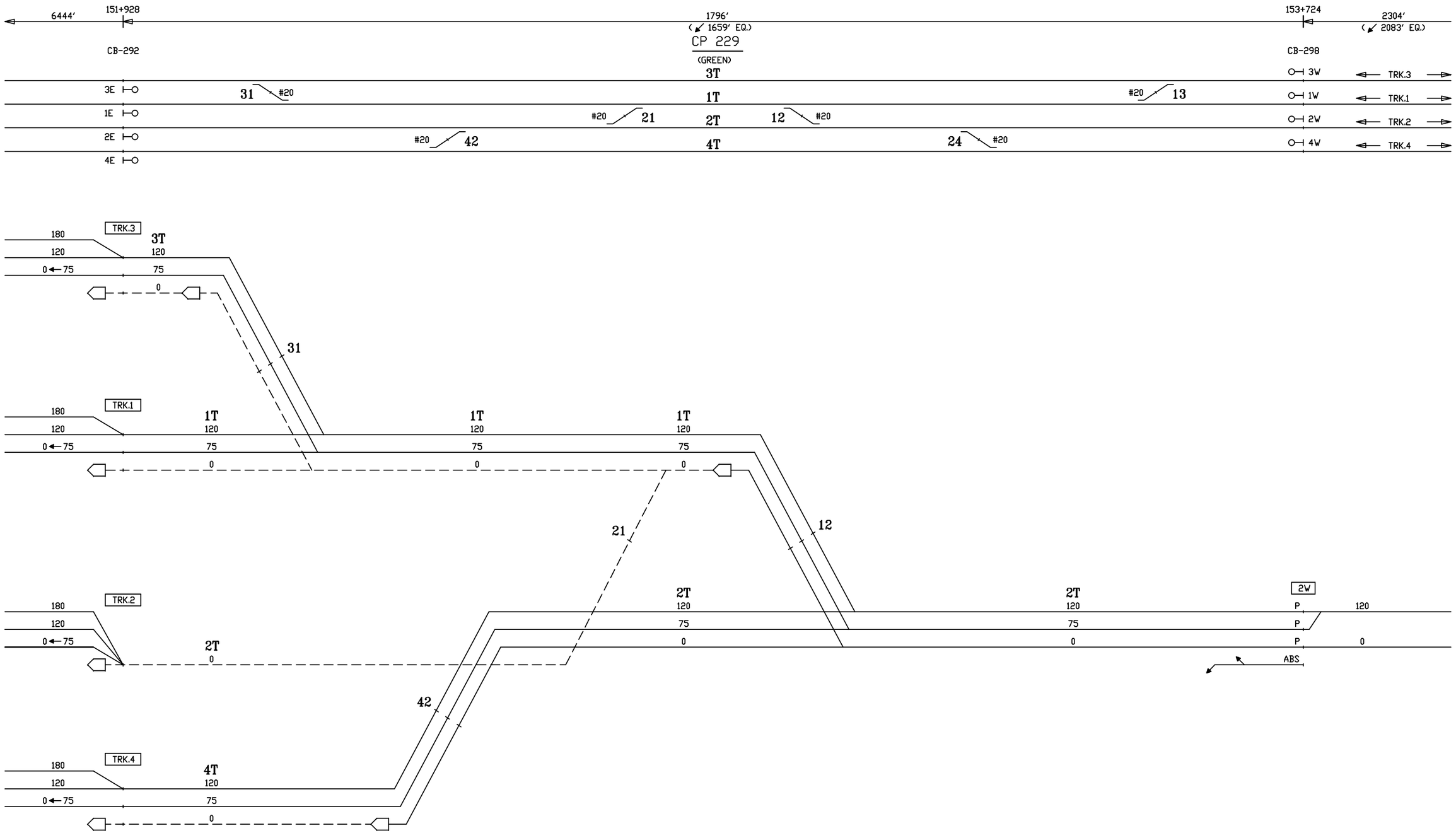

CIRCUIT ENGINEER	SR. SIGNAL ENGR.–DESIGN & STANDARDS	DIRECTOR C&S SYSTEMS	MTA Metro–North Railroad	NEW HAVEN LINE CP 229 DIVERGING ROUTES – TRACK 2 WEST	ISSUE DATE:	RTG–NHL1
					REV.	SHEET 36X
					/users/signal/RTG	NHL1 L1036X

Gannett Fleming/CWA

CONTRACT #	PROJECT SHEET #
1000027511	0275

EXISTING - NOT CHECKED, NOT APPROVED

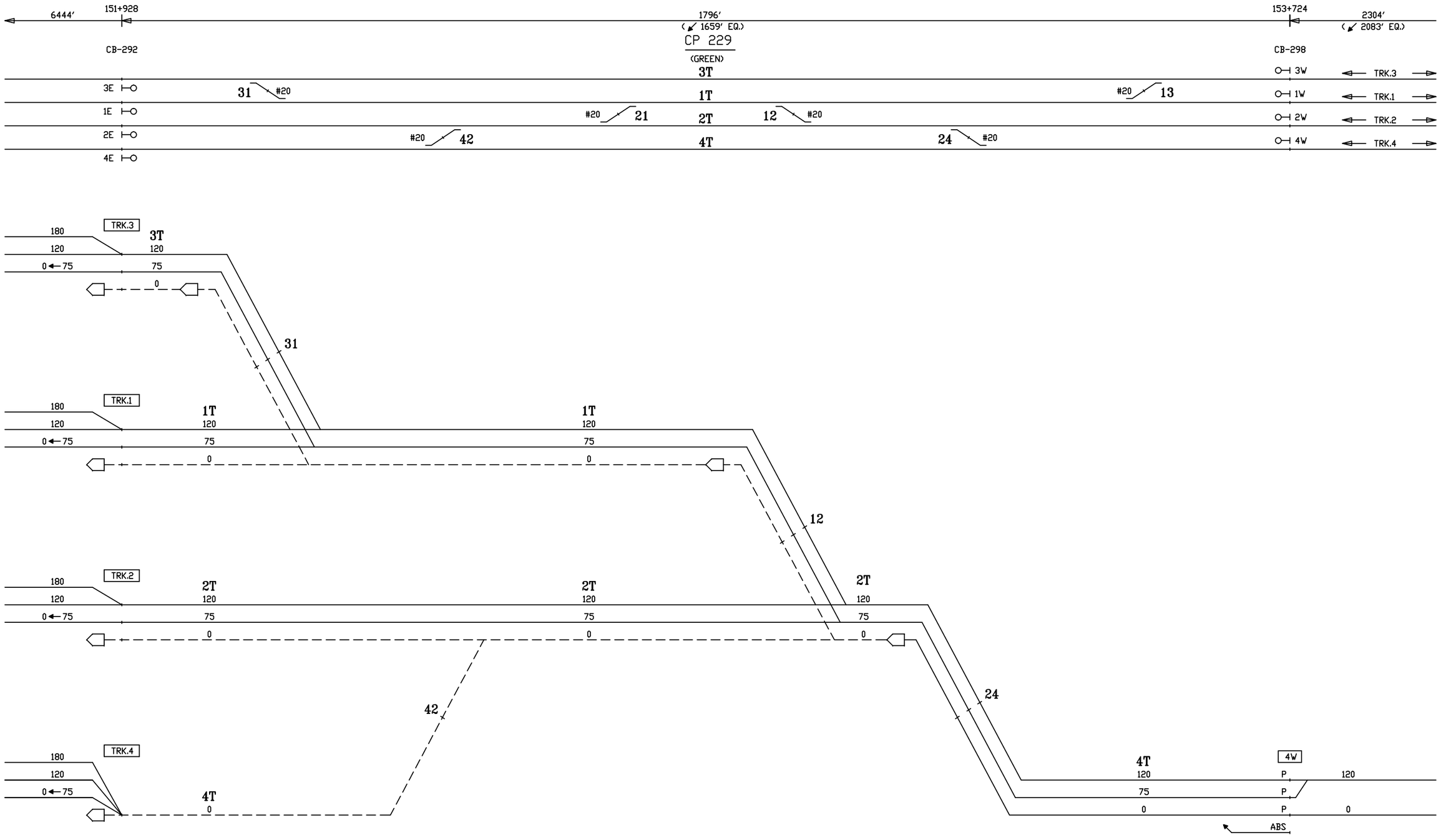

CIRCUIT ENGINEER	SR. SIGNAL ENGR.–DESIGN & STANDARDS	DIRECTOR C&S SYSTEMS	MTA Metro–North Railroad	NEW HAVEN LINE CP 229 DIVERGING ROUTES – TRACK 4 WEST	ISSUE DATE: / REV. / /users/signal/RTG RTG–NHL1 SHEET 37X NHL1 L1037X

Gannett Fleming/CWA

CONTRACT #	PROJECT SHEET #
1000027511	0276

EXISTING

SELLECK CP–232

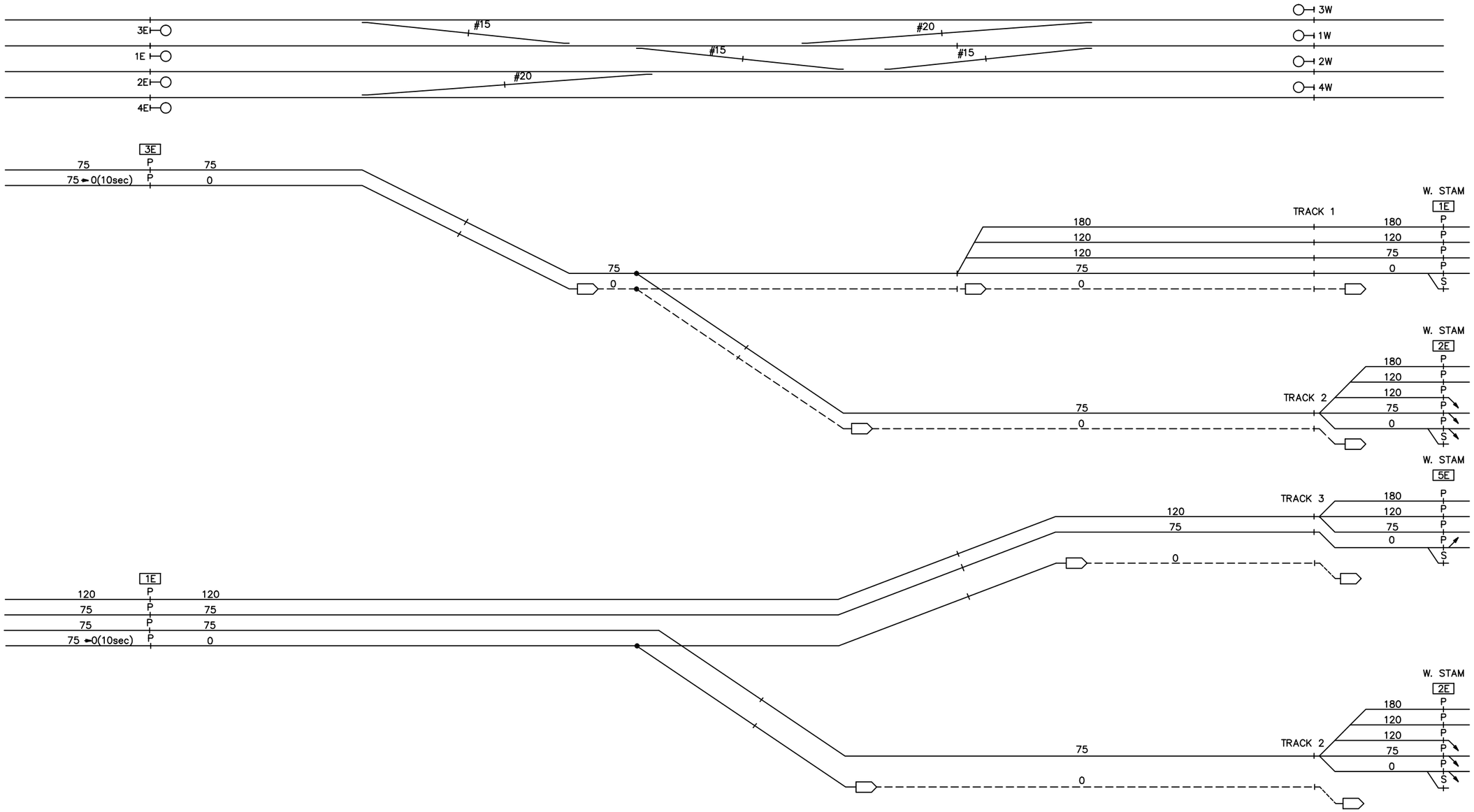

CIRCUIT ENGINEER	SR. SIGNAL ENGR.–DESIGN & STANDARDS	DIRECTOR C&S SYSTEMS	MTA Metro–North Railroad	NEW HAVEN LINE CP 232 DIVERGING ROUTES – TRACKS 3 & 1 EAST	ISSUE DATE: 11–14–97 REV. 10 /USERS/SIGNAL/RTG	RTG–NHL1 SHEET 38X NHL1 L1038X

Gannett Fleming/CWA

CONTRACT #	PROJECT SHEET #
1000027511	0277

EXISTING

SELLECK CP–232

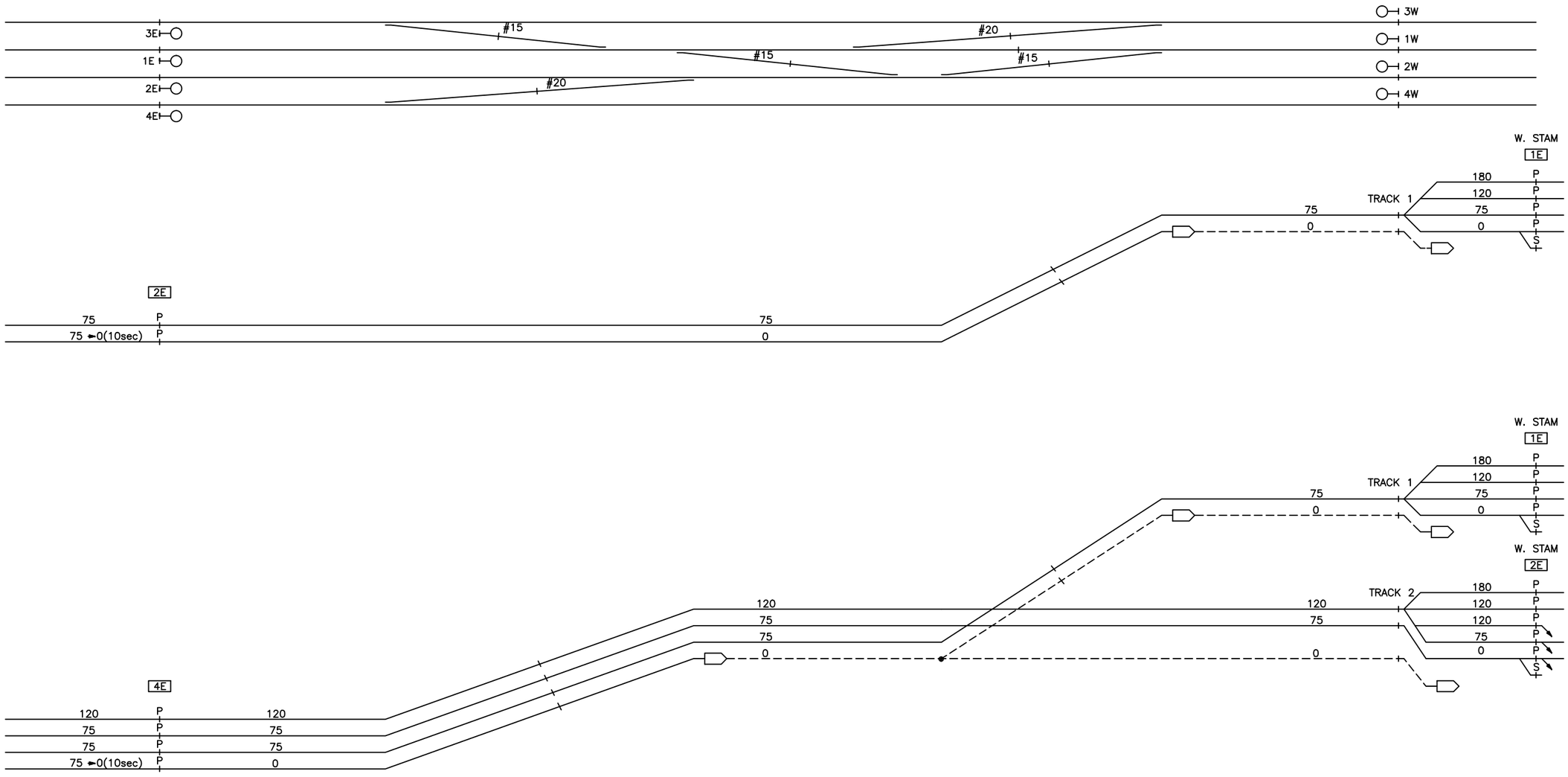

CIRCUIT ENGINEER	SR. SIGNAL ENGR.–DESIGN & STANDARDS	DIRECTOR C&S SYSTEMS	MTA Metro–North Railroad	NEW HAVEN LINE CP 232 DIVERGING ROUTES – TRACKS 2 & 4 EAST	ISSUE DATE: 11–14–97 REV. 10 /USERS/SIGNAL/RTG	RTG–NHL1 SHEET 39X NHL1 L1039X

Gannett Fleming/CWA

CONTRACT #	PROJECT SHEET #
1000027511	0278

EXISTING

SELLECK CP–232

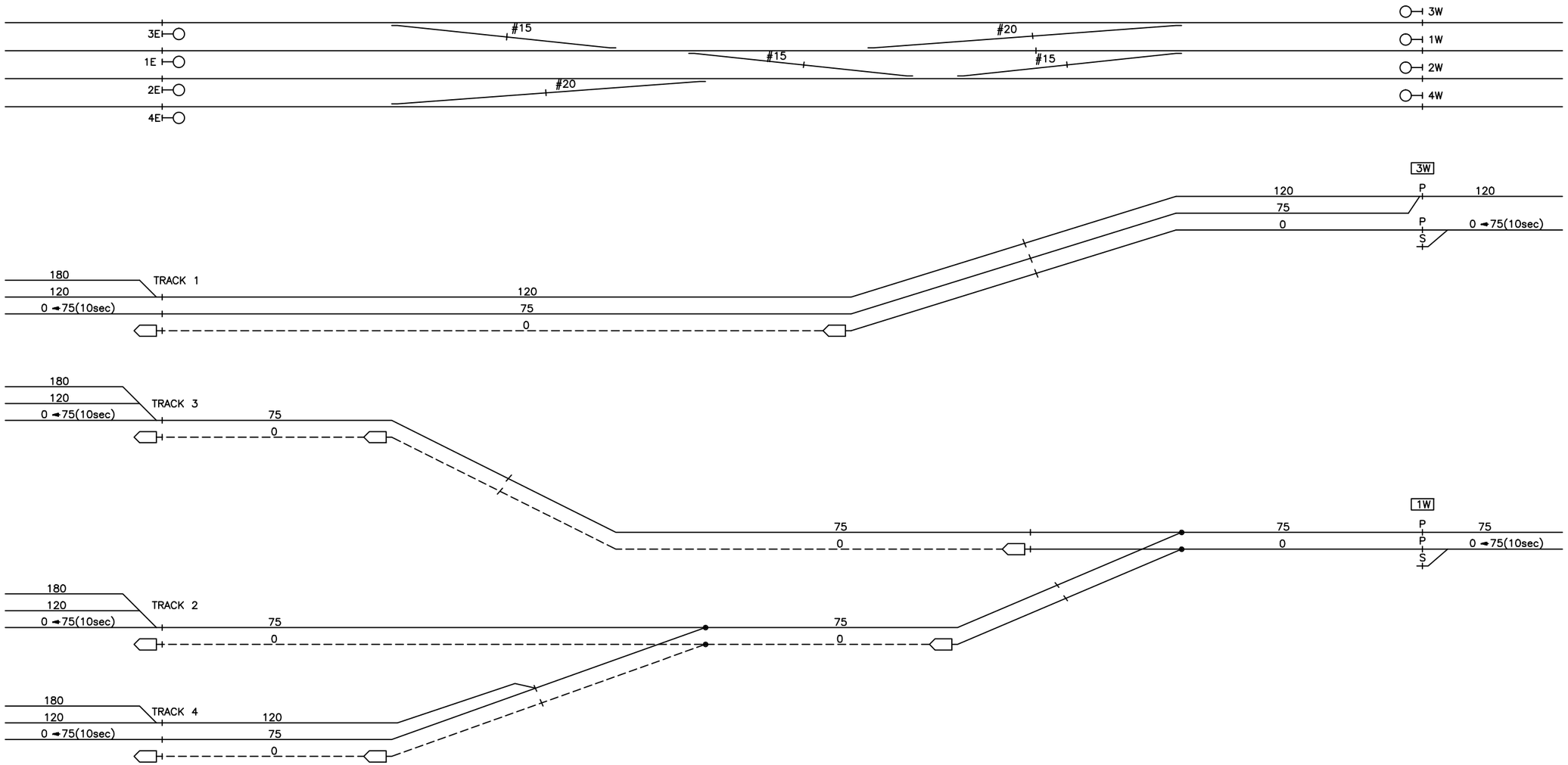

CIRCUIT ENGINEER	SR. SIGNAL ENGR.–DESIGN & STANDARDS	DIRECTOR C&S SYSTEMS	MTA Metro–North Railroad	NEW HAVEN LINE CP 232 DIVERGING ROUTES – TRACKS 3 & 1 WEST	ISSUE DATE: 11–14–97 REV. 10 /USERS/SIGNAL/RTG

RTG–NHL1
SHEET 40X
NHL1 L1040X

Gannett Fleming/CWA

CONTRACT # 1000027511

PROJECT SHEET # 0279

EXISTING

SELLECK CP–232

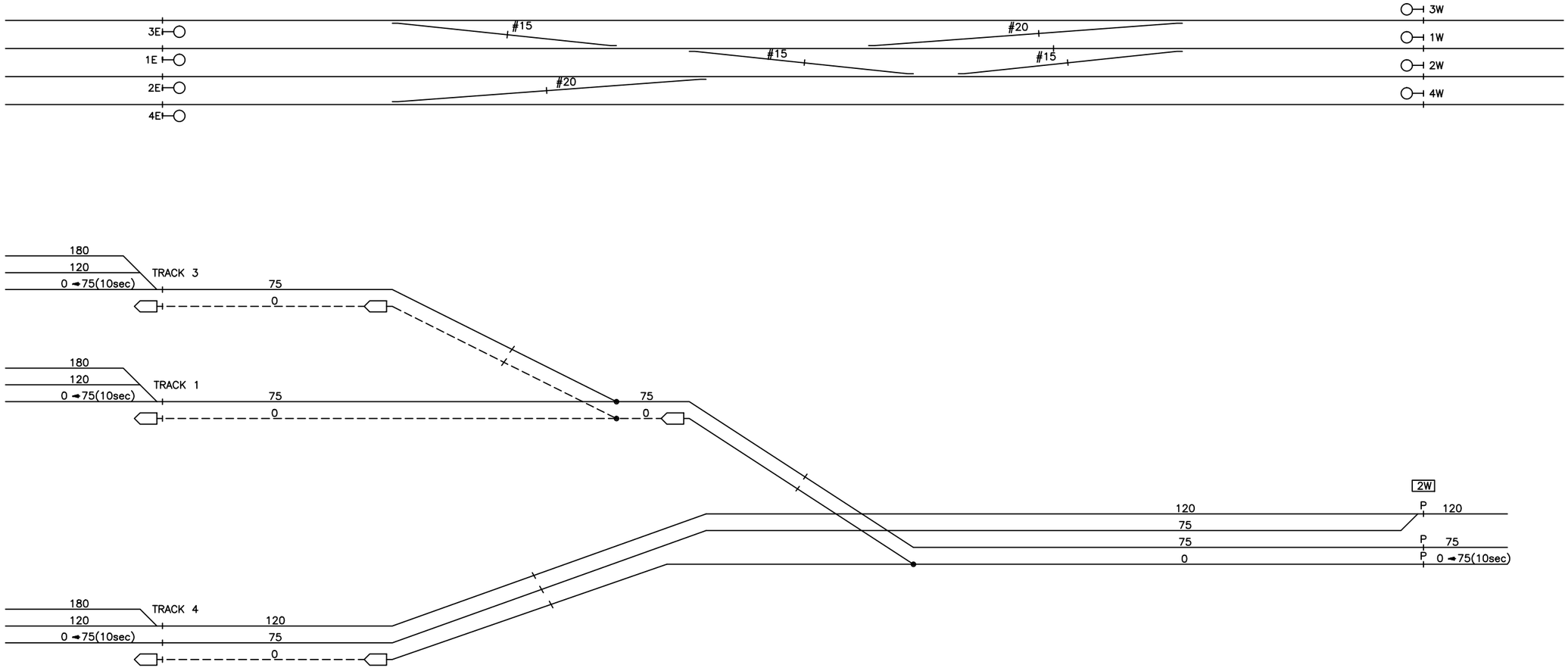

CIRCUIT ENGINEER	SR. SIGNAL ENGR.–DESIGN & STANDARDS	DIRECTOR C&S SYSTEMS	MTA Metro–North Railroad	NEW HAVEN LINE CP 232 DIVERGING ROUTES – TRACK 2 WEST	ISSUE DATE: 11–14–97 REV. 10 /USERS/SIGNAL/RTG	RTG–NHL1 SHEET 41X NHL1 L1041X

Gannett Fleming/CWA

CONTRACT #	PROJECT SHEET #
1000027511	0280

EXISTING

W. STAM. CP–233

EAST ROUTINGS

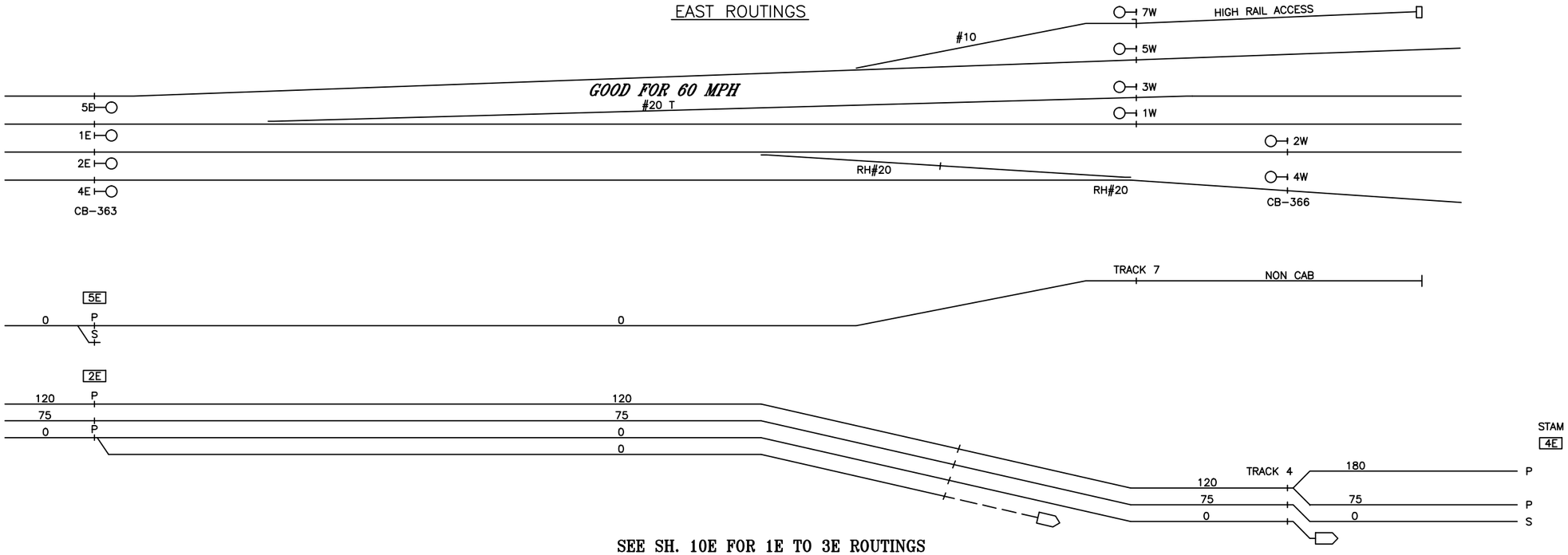

SEE SH. 10E FOR 1E TO 3E ROUTINGS

W. STAM. CP–233

WEST ROUTINGS

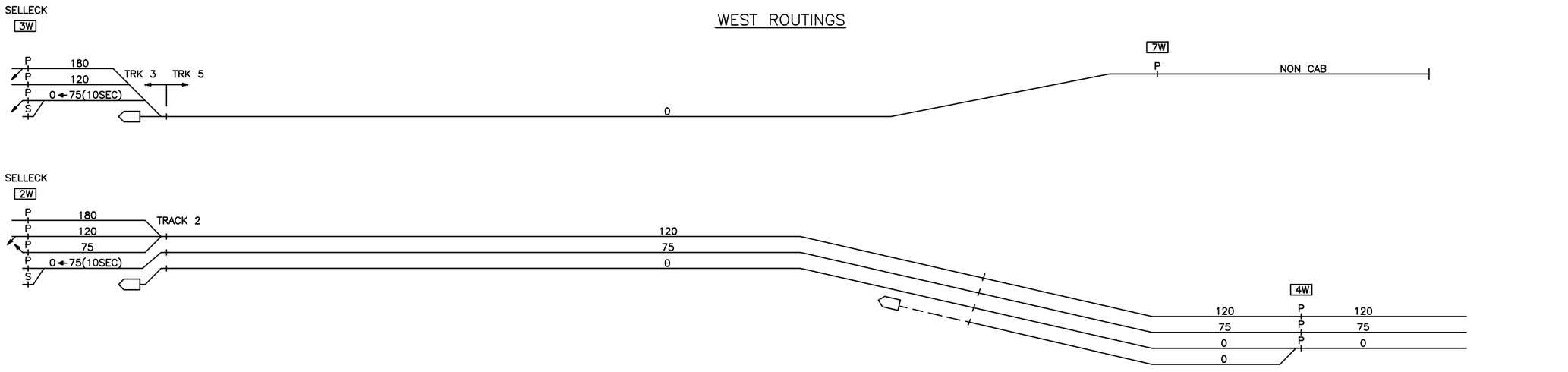

SEE SH. 10W FOR 3W TO 1W ROUTINGS

CIRCUIT ENGINEER	SR. SIGNAL ENGR.–DESIGN & STANDARDS	DIRECTOR C&S SYSTEMS	MTA Metro–North Railroad	NEW HAVEN LINE CP 233 DIVERGING ROUTES	ISSUE DATE: 09–01–99 NHS REV. 11 NHS /users/signal/RTG	RTG–NHL1 SHEET 42X NHL1 L1042X

Gannett Fleming/CWA

CONTRACT # 1000027511

PROJECT SHEET # 0281

EXISTING

STAM CP-234

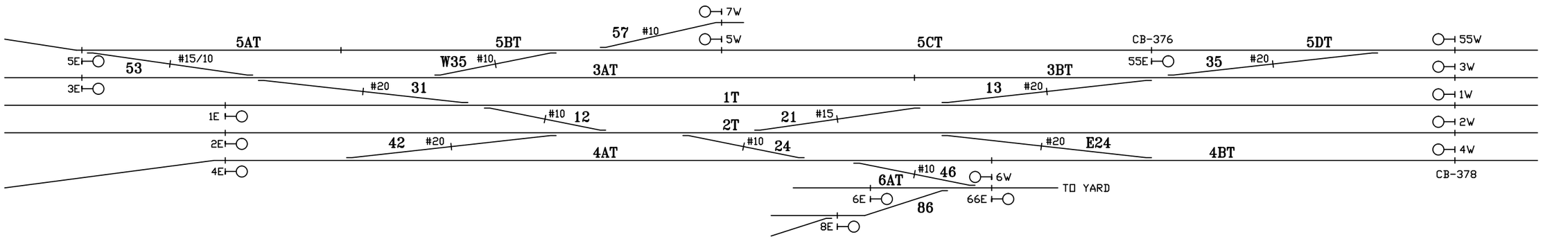

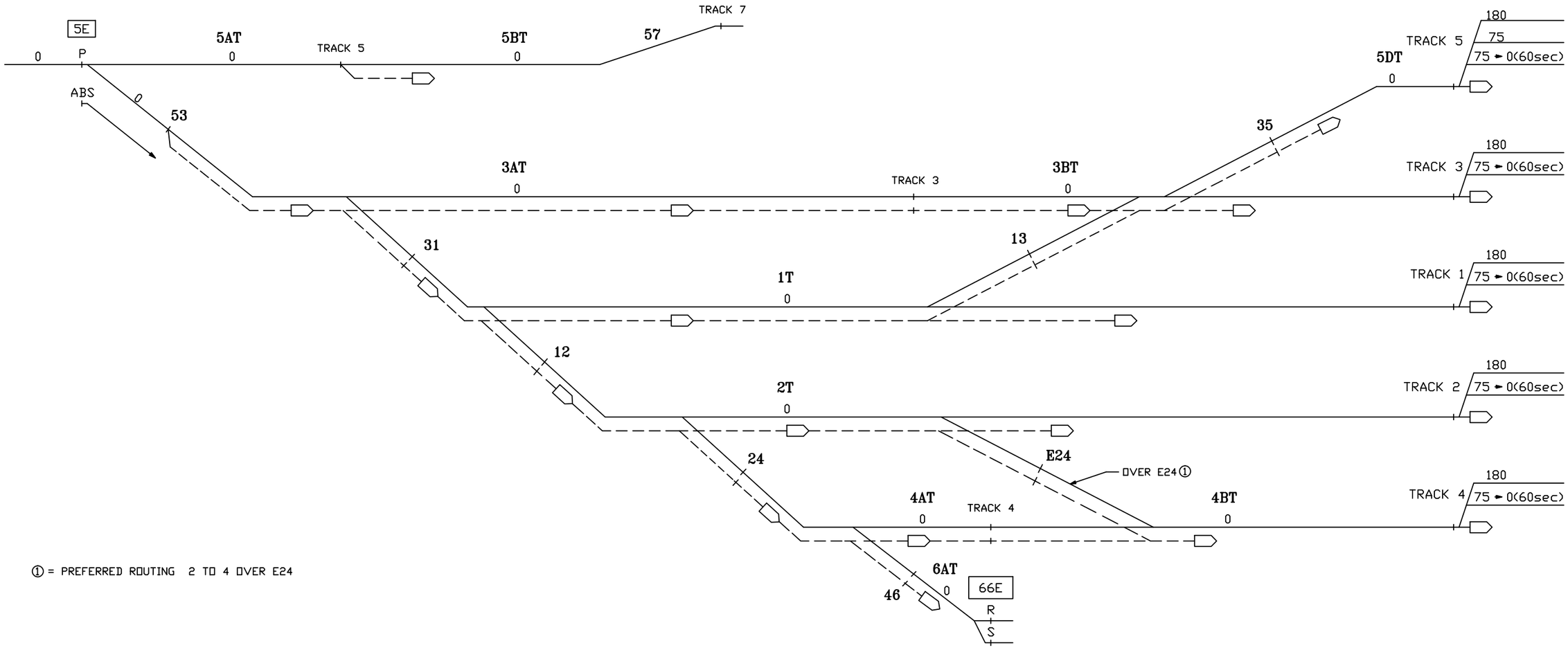

① = PREFERRED ROUTING 2 TO 4 OVER E24

CIRCUIT ENGINEER	SR. SIGNAL ENGR.–DESIGN & STANDARDS	DIRECTOR C&S SYSTEMS	MTA Metro–North Railroad	NEW HAVEN LINE CP 234 DIVERGING ROUTES – TRACK 5 EAST	ISSUE DATE: 09–01–99 NHS REV. 10 NHS /users/signal/RTG NHL1 L1043X	RTG–NHL1 SHEET 43X

Gannett Fleming/CWA

CONTRACT #	PROJECT SHEET #
1000027511	0282

EXISTING

STAM. CP-234

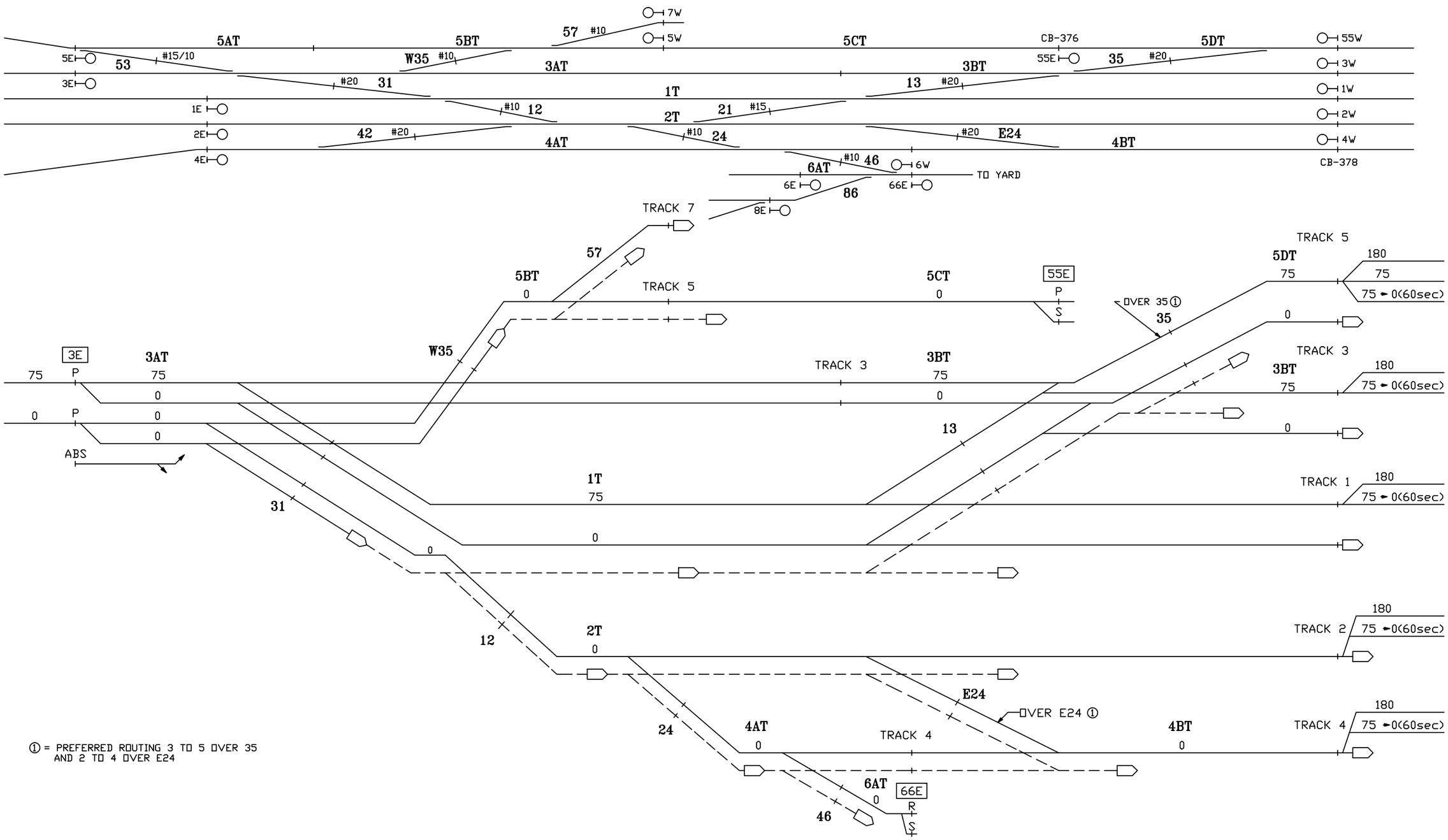

① = PREFERRED ROUTING 3 TO 5 OVER 35
AND 2 TO 4 OVER E24

CIRCUIT ENGINEER	SR. SIGNAL ENGR.–DESIGN & STANDARDS	DIRECTOR C&S SYSTEMS	MTA Metro–North Railroad	NEW HAVEN LINE CP 234 DIVERGING ROUTES – TRACK 3 EAST	ISSUE DATE: 09–01–99 NHS REV. 10 NHS /users/signal/RTG	RTG–NHL1 SHEET 44X NHL1 L1044X

Gannett Fleming/CWA

CONTRACT #	PROJECT SHEET #
1000027511	0283

EXISTING

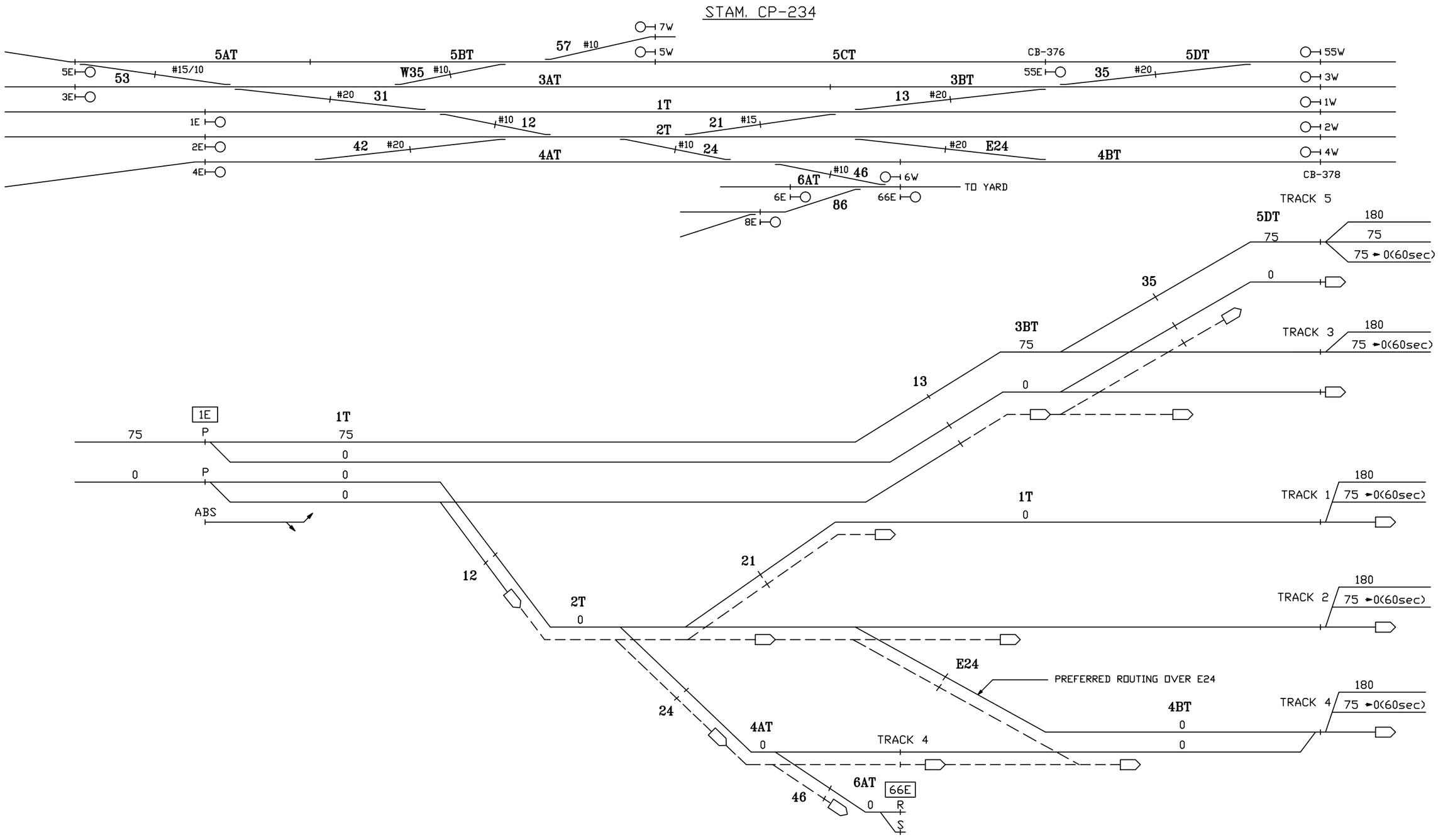

CIRCUIT ENGINEER	SR. SIGNAL ENGR.–DESIGN & STANDARDS	DIRECTOR C&S SYSTEMS	MTA Metro–North Railroad	NEW HAVEN LINE CP 234 DIVERGING ROUTES – TRACK 1 EAST	ISSUE DATE: 09–01–99 NHS REV. 10 NHS /users/signal/RTG	RTG–NHL1 SHEET 45X NHL1 L1045X

Gannett Fleming/CWA

CONTRACT # 1000027511

PROJECT SHEET # 0284

EXISTING

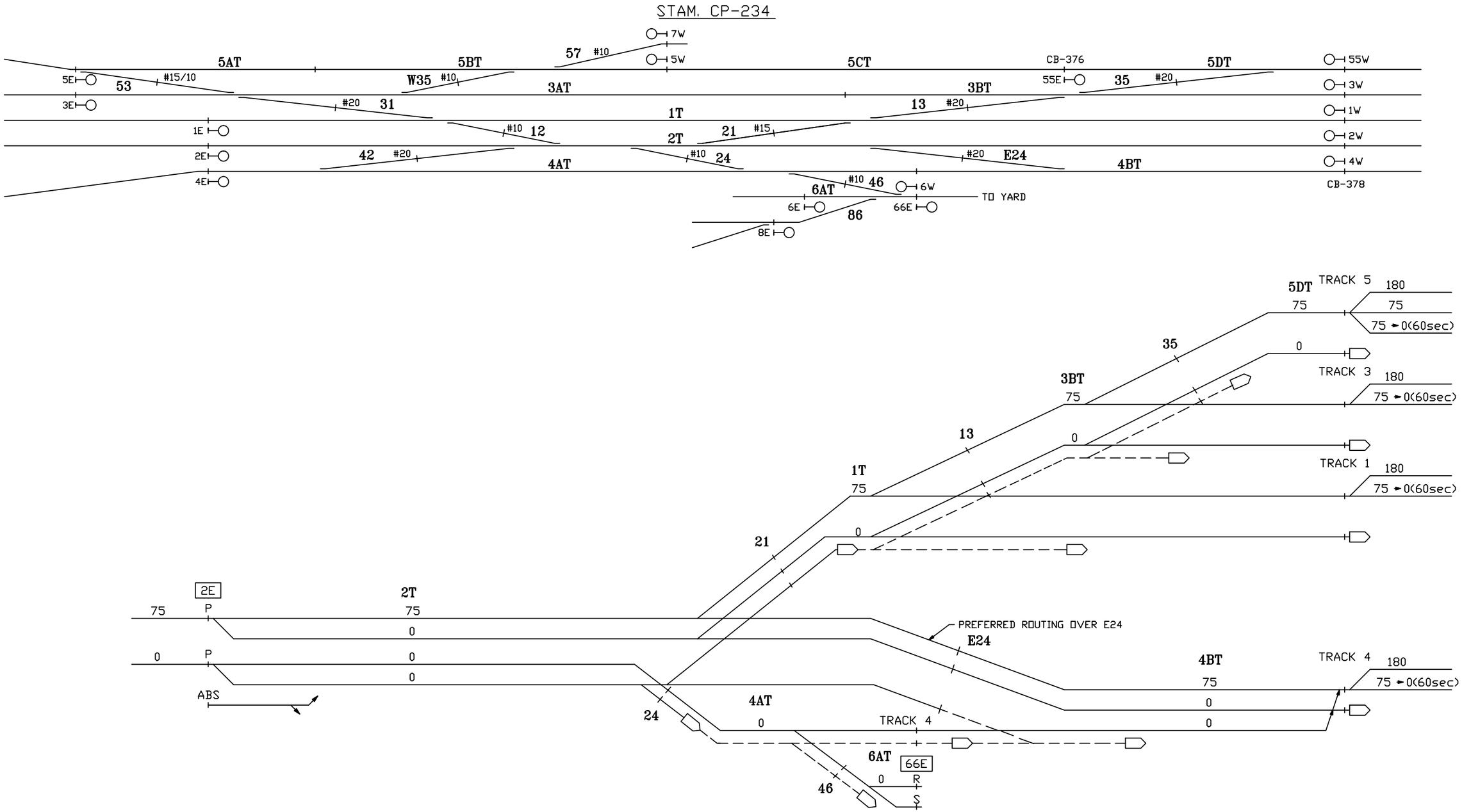

CIRCUIT ENGINEER	SR. SIGNAL ENGR.-DESIGN & STANDARDS	DIRECTOR C&S SYSTEMS	MTA Metro-North Railroad	NEW HAVEN LINE CP 234 DIVERGING ROUTES – TRACK 2 EAST	ISSUE DATE: 09-01-99 NHS REV. 10 NHS /users/signal/RTG	RTG-NHL1 SHEET 46X NHL1 L1046X

Gannett Fleming/CWA

CONTRACT #	PROJECT SHEET #
1000027511	0285

EXISTING

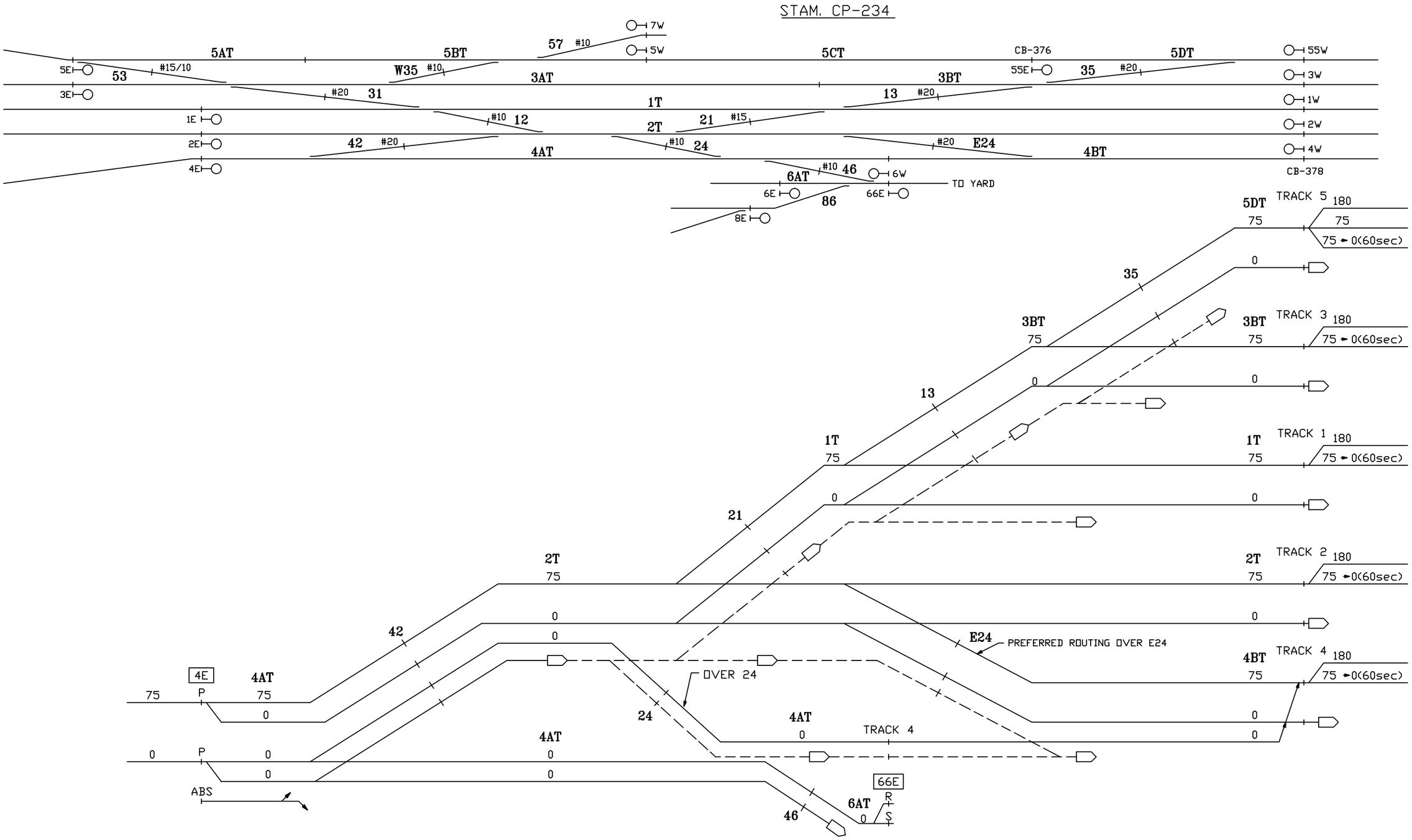

CIRCUIT ENGINEER	SR. SIGNAL ENGR.–DESIGN & STANDARDS	DIRECTOR C&S SYSTEMS	MTA Metro–North Railroad	NEW HAVEN LINE CP 234 DIVERGING ROUTES – TRACK 4 EAST	ISSUE DATE: 09–01–99 NHS REV. 10 NHS /users/signal/RTG NHL1 L1047X

RTG–NHL1

SHEET 47X

Gannett Fleming/CWA

CONTRACT # 1000027511

PROJECT SHEET # 0286

EXISTING

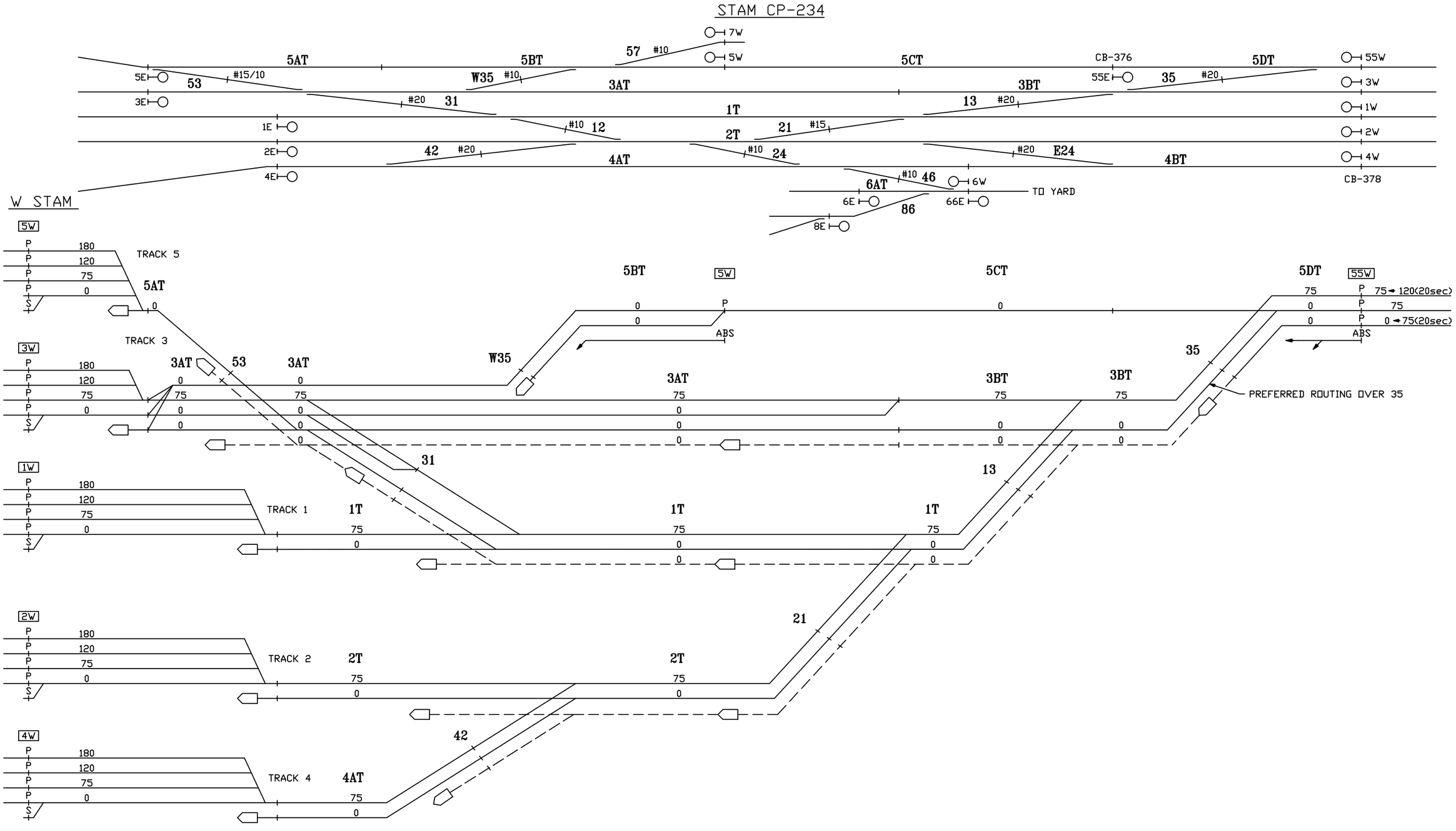

CIRCUIT ENGINEER	SR. SIGNAL ENGR.–DESIGN & STANDARDS	DIRECTOR C&S SYSTEMS	MTA Metro–North Railroad	NEW HAVEN LINE CP 234 DIVERGING ROUTES – TRACK 5 WEST	ISSUE DATE: 09–01–99 NHS REV. 10 NHS /users/signal/RTG	RTG–NHL1 SHEET 48X NHL1 L1048X

Gannett Fleming/CWA

CONTRACT #	PROJECT SHEET #
1000027511	0287

EXISTING

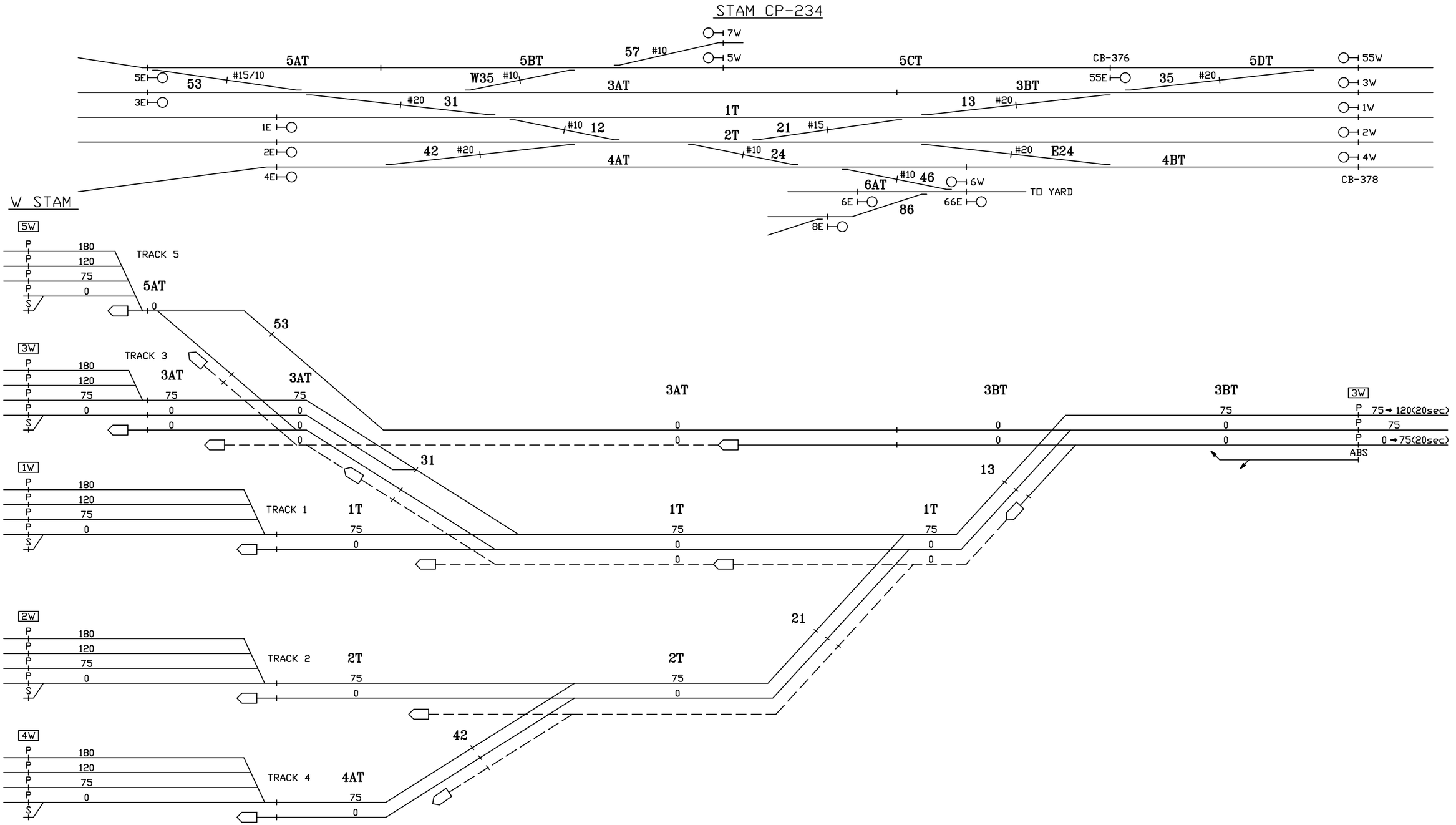

CIRCUIT ENGINEER	SR. SIGNAL ENGR.–DESIGN & STANDARDS	DIRECTOR C&S SYSTEMS	MTA Metro–North Railroad	NEW HAVEN LINE CP 234 DIVERGING ROUTES – TRACK 3 WEST	ISSUE DATE: 09–01–99 NHS REV. 10 NHS /users/signal/RTG NHL1 L1049X

RTG–NHL1

SHEET 49X

Gannett Fleming/CWA

CONTRACT # 1000027511

PROJECT SHEET # 0288

EXISTING

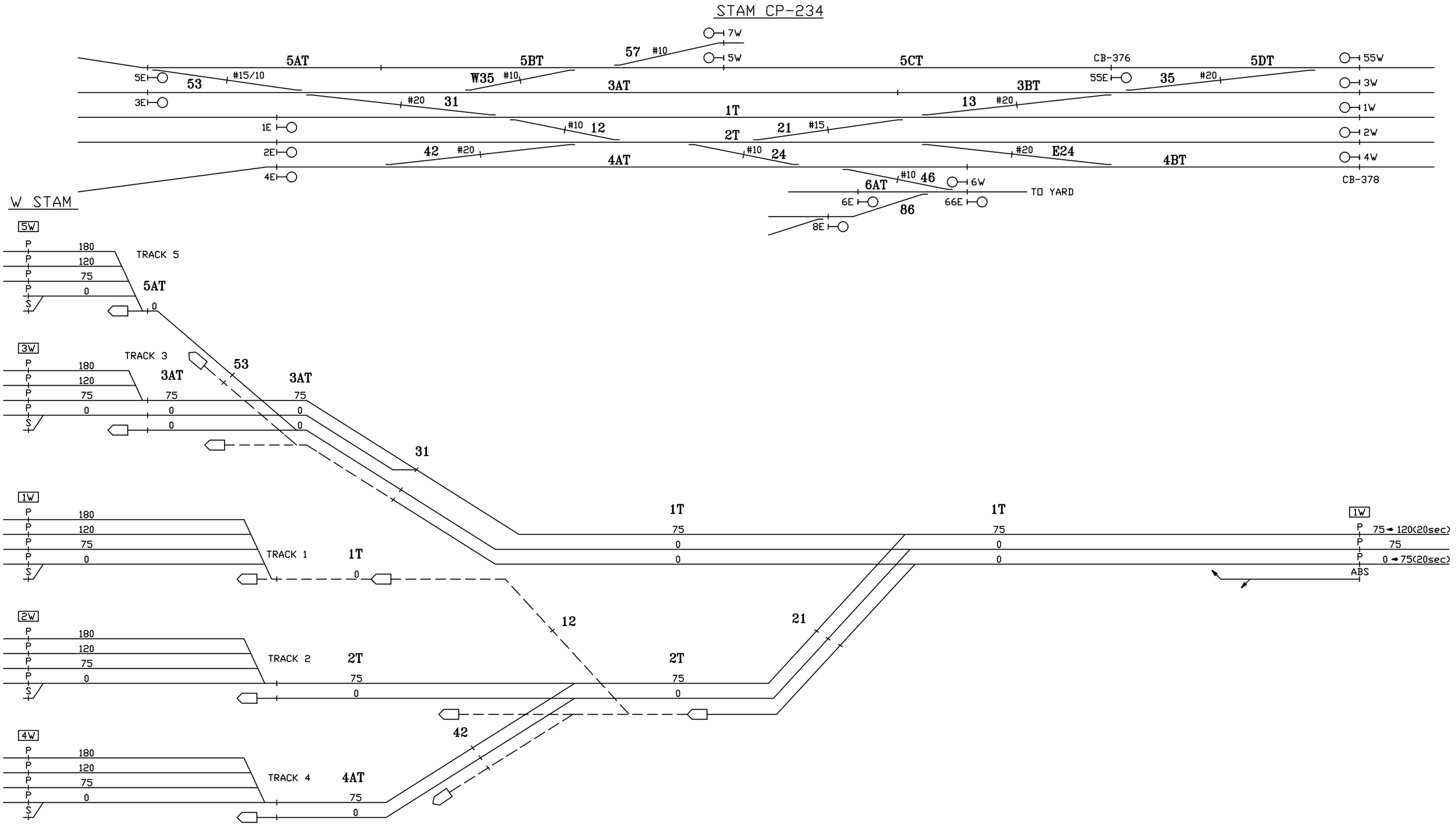

CIRCUIT ENGINEER	SR. SIGNAL ENGR.-DESIGN & STANDARDS	DIRECTOR C&S SYSTEMS	Metro-North Railroad	NEW HAVEN LINE CP 234 DIVERGING ROUTES – TRACK 1 WEST	ISSUE DATE: 09-01-99 REV. 10 /users/signal/RTG	RTG-NHL1 SHEET 50X NHL1 L1050X

Gannett Fleming/CWA

CONTRACT #	PROJECT SHEET #
1000027511	0289

EXISTING

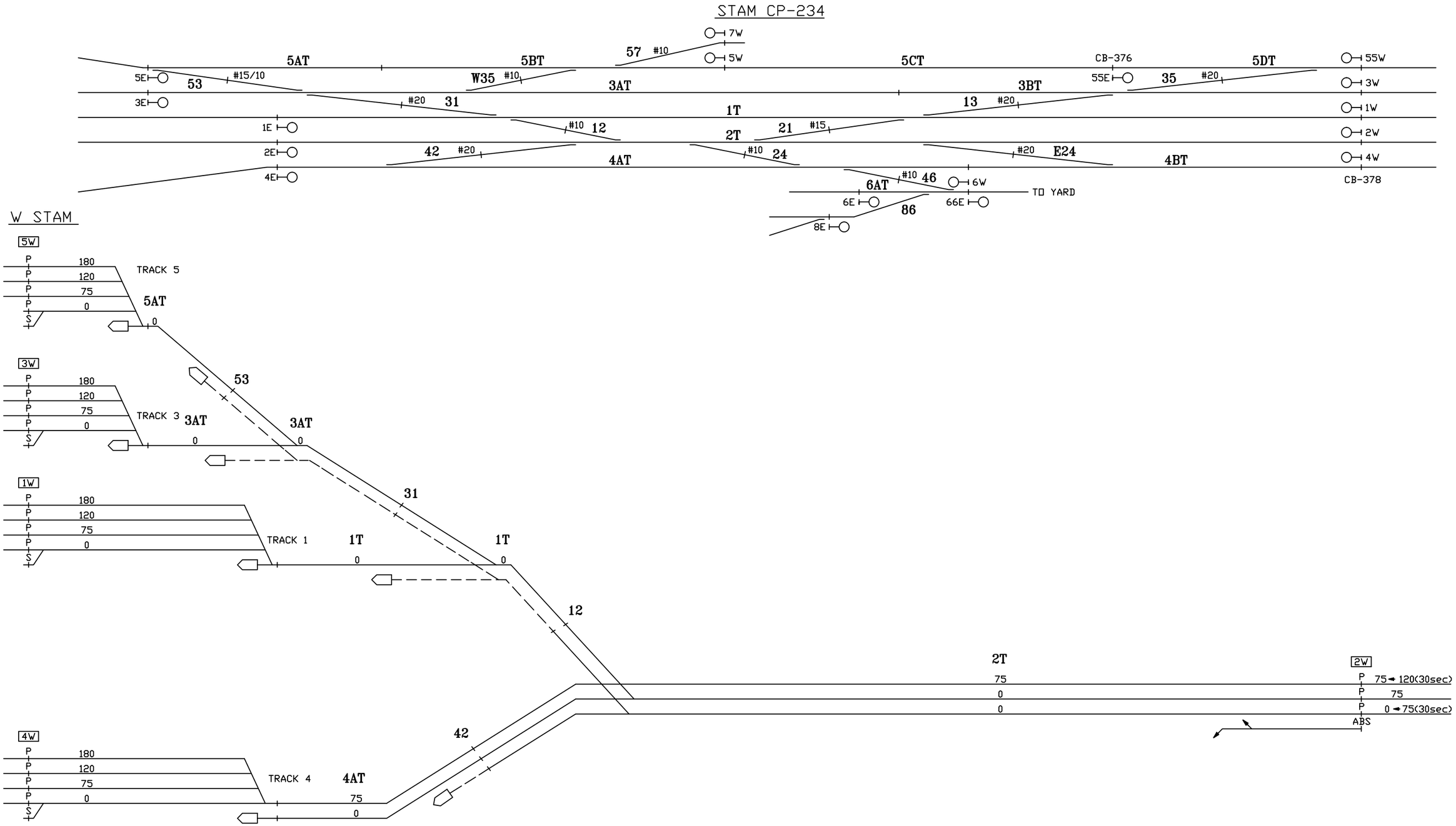

CIRCUIT ENGINEER	SR. SIGNAL ENGR.–DESIGN & STANDARDS	DIRECTOR C&S SYSTEMS	MTA Metro–North Railroad	NEW HAVEN LINE CP 234 DIVERGING ROUTES – TRACK 2 WEST	ISSUE DATE: 09–01–99 · RTG–NHL1 NHS REV. 10 · SHEET 51X NHS /users/signal/RTG · NHL1 · L1051X

Gannett Fleming/CWA

CONTRACT #	PROJECT SHEET #
1000027511	0290

EXISTING

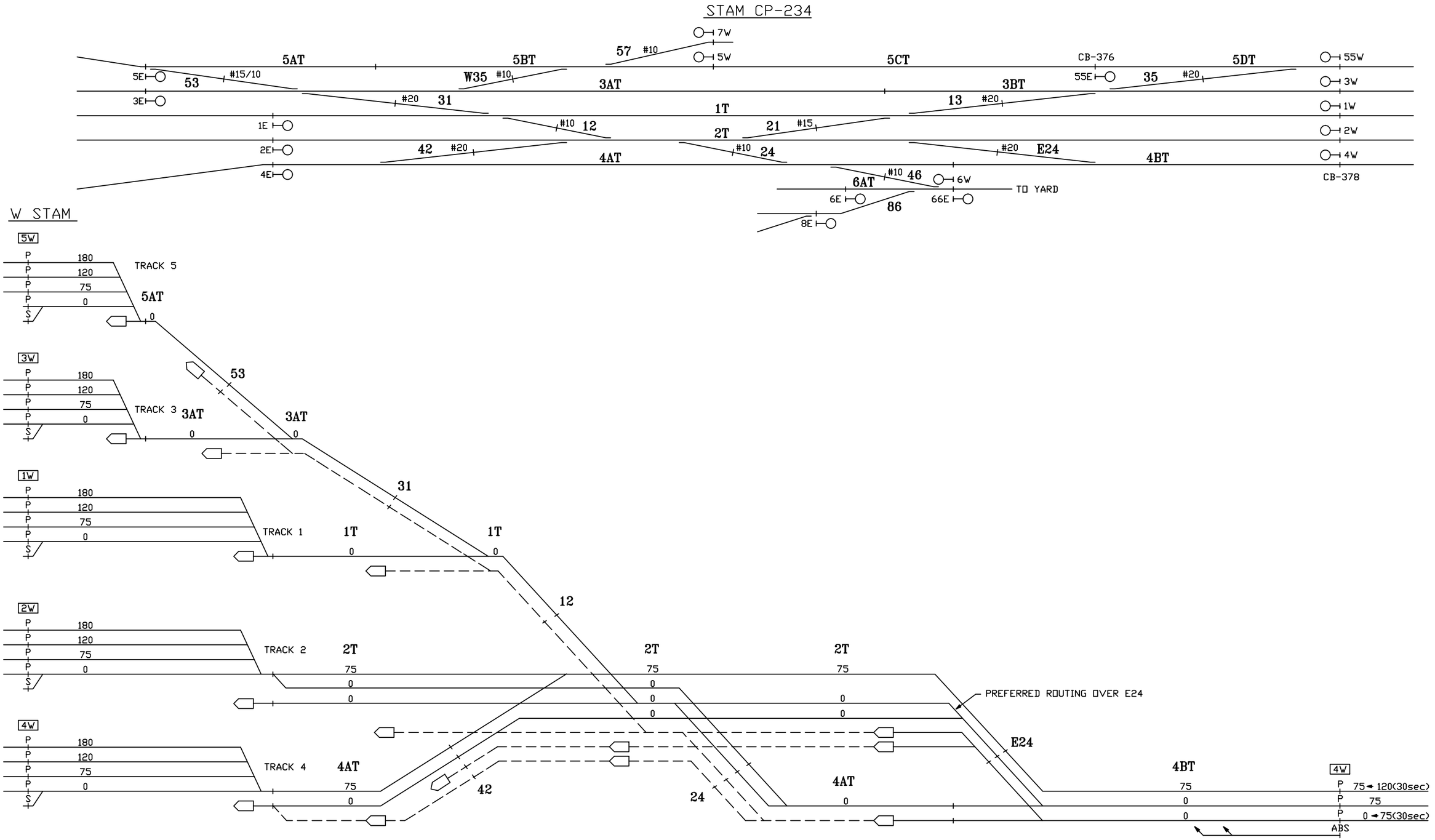

CIRCUIT ENGINEER	SR. SIGNAL ENGR.–DESIGN & STANDARDS	DIRECTOR C&S SYSTEMS	MTA Metro–North Railroad	NEW HAVEN LINE CP 234 DIVERGING ROUTES – TRACK 4 WEST	ISSUE DATE: 09–01–99 / NHS REV. 10 / NHS /users/signal/RTG	RTG–NHL1 / SHEET 52X / NHL1 L1052X

Gannett Fleming/CWA

CONTRACT #	PROJECT SHEET #
1000027511	0291

EXISTING

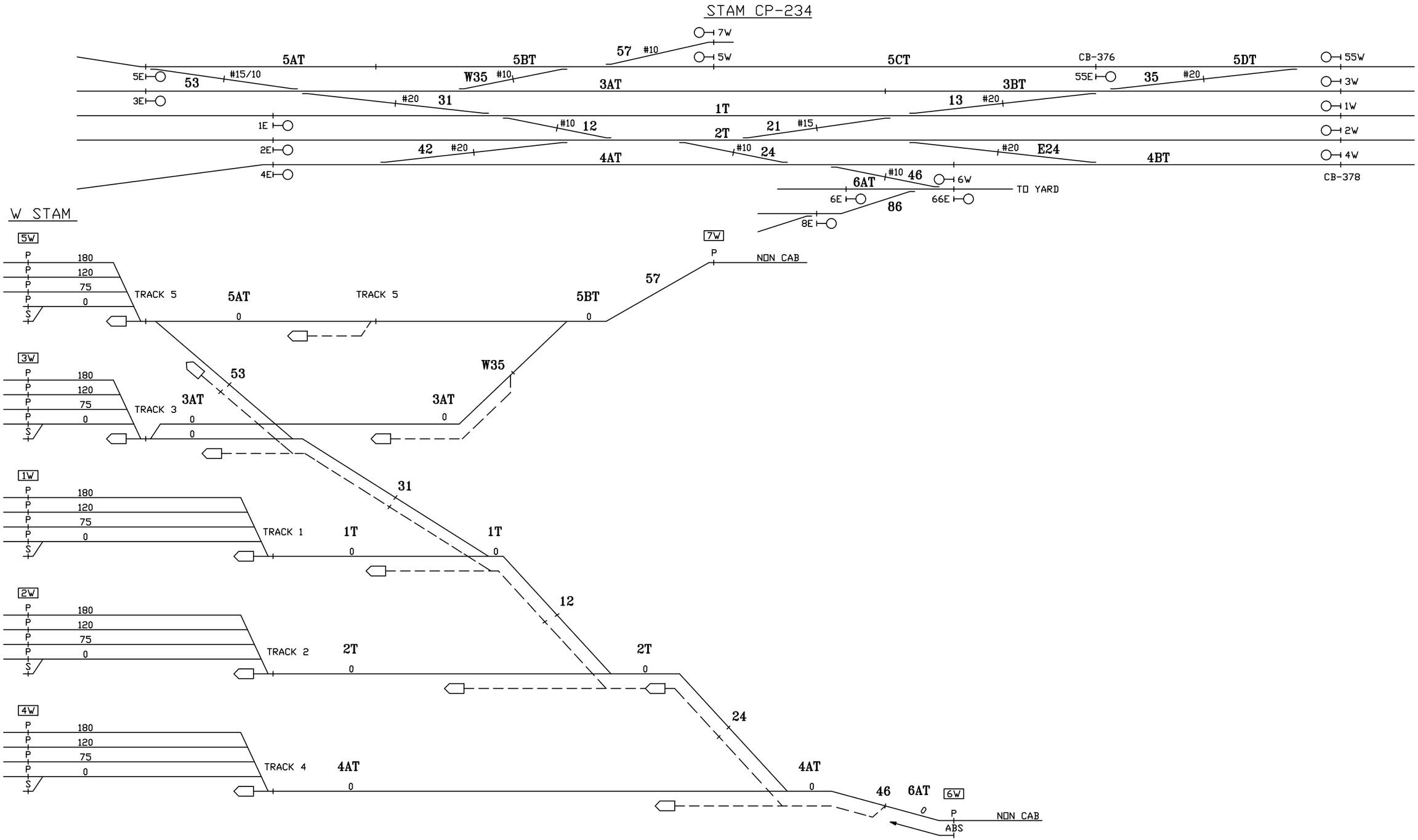

CIRCUIT ENGINEER	SR. SIGNAL ENGR.–DESIGN & STANDARDS	DIRECTOR C&S SYSTEMS	MTA Metro–North Railroad	NEW HAVEN LINE CP 234 DIVERGING ROUTES – TRACKS 6 & 7 WEST	ISSUE DATE: 09–01–99 · RTG–NHL1 NHS REV. 10 · SHEET 53X NHS /users/signal/RTG · NHL1 · L1053X

Gannett Fleming/CWA

CONTRACT #	PROJECT SHEET #
1000027511	0292

EXISTING

STAM CP-234

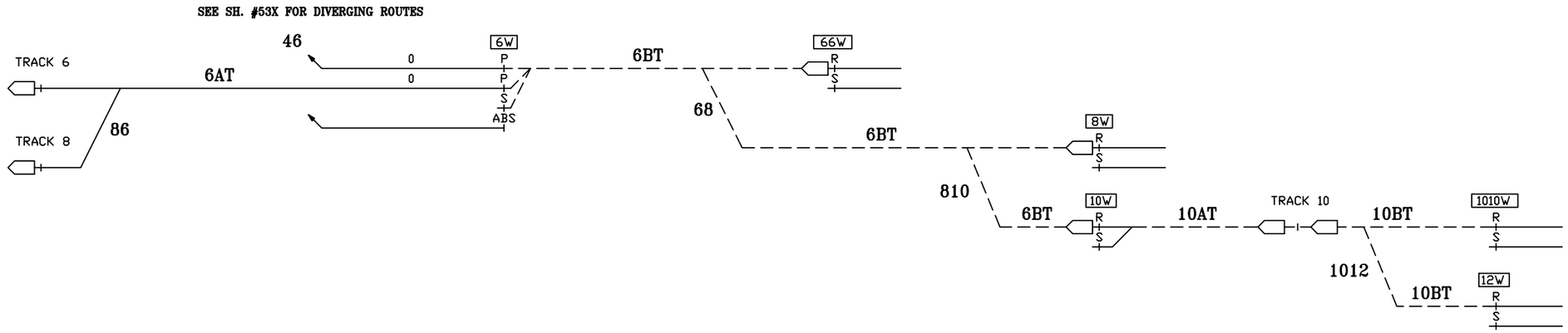

STAMFORD YARD

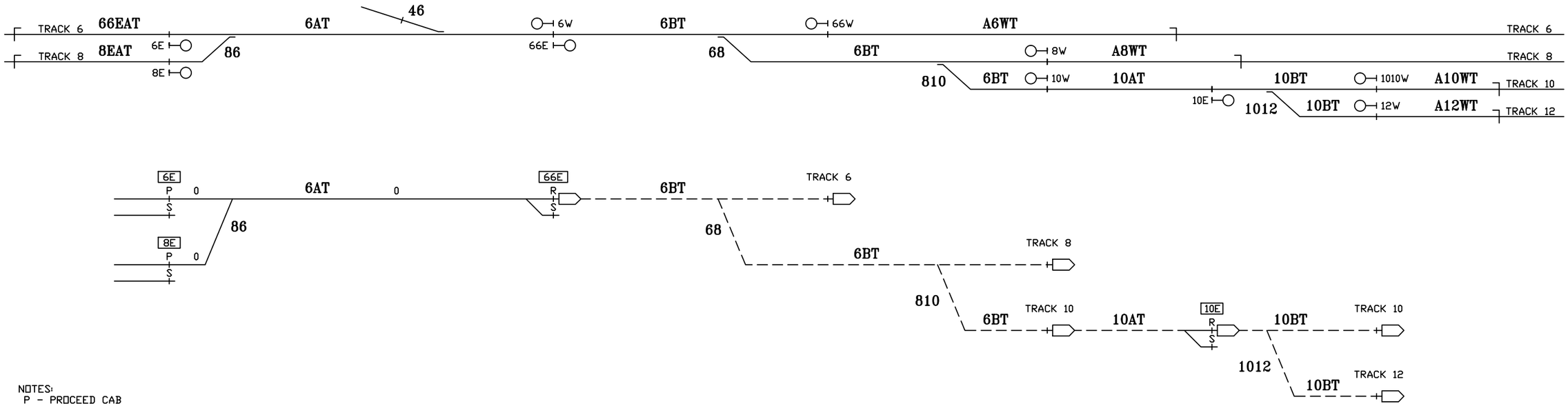

NOTES:
P - PROCEED CAB
R - RESTRICTING
S - STOP

CIRCUIT ENGINEER	SR. SIGNAL ENGR.-DESIGN & STANDARDS	DIRECTOR C&S SYSTEMS	MTA Metro-North Railroad	NEW HAVEN LINE CP 234 STAMFORD YARD ROUTINGS	ISSUE DATE: 09-01-99 / RTG-NHL1 NHS REV. 5 / SHEET 54X NHS /users/signal/RTG / NHL1 / L1054X

Gannett Fleming/CWA

CONTRACT #	PROJECT SHEET #
1000027511	0293

EXISTING

E. STAM. CP-235

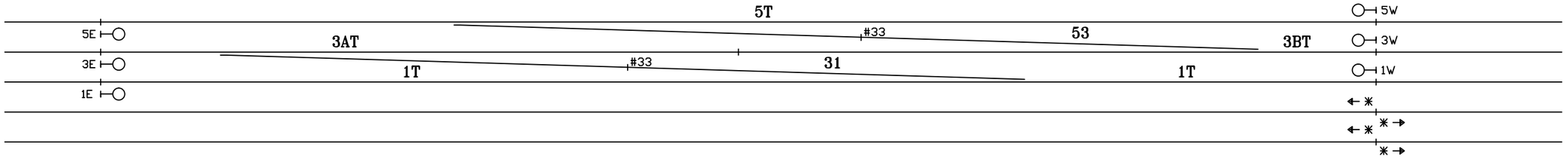

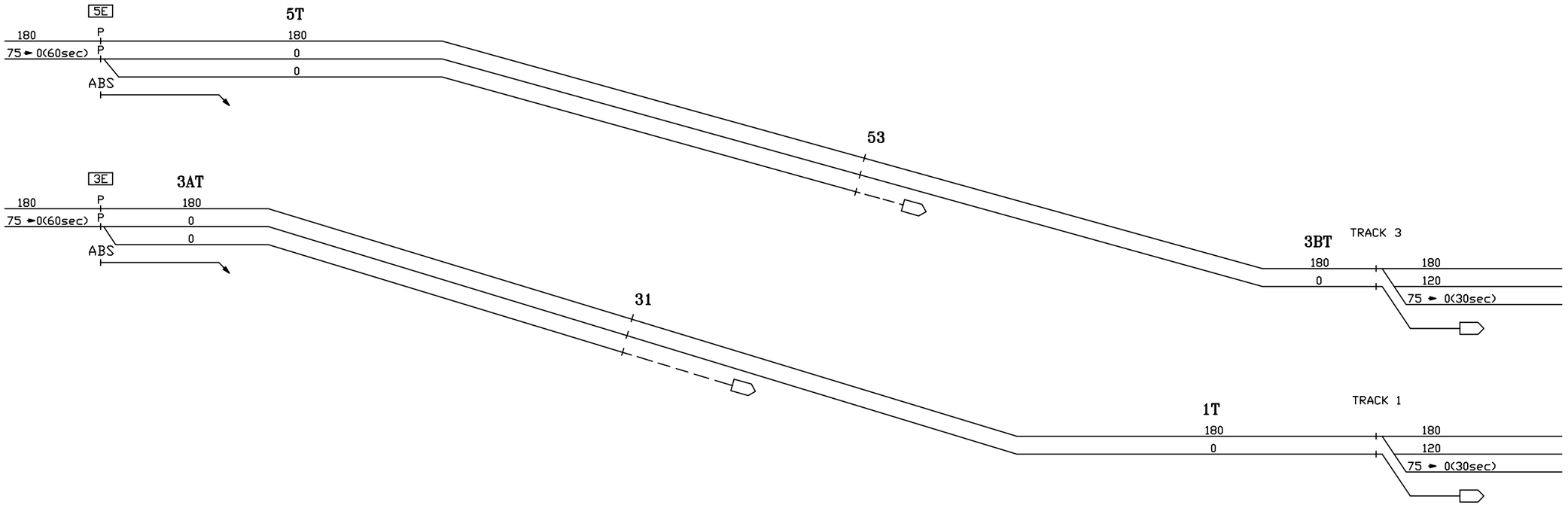

CIRCUIT ENGINEER	SR. SIGNAL ENGR.–DESIGN & STANDARDS	DIRECTOR C&S SYSTEMS	MTA Metro–North Railroad	NEW HAVEN LINE CP 235 DIVERGING ROUTES – TRACKS 5 & 3 EAST	ISSUE DATE: 09–01–99 REV. 9 NHS /users/signal/RTG NHL1 L1055X	RTG–NHL1 SHEET 55X

Gannett Fleming/CWA

CONTRACT #	PROJECT SHEET #
1000027511	0294

EXISTING

E. STAM. CP-235

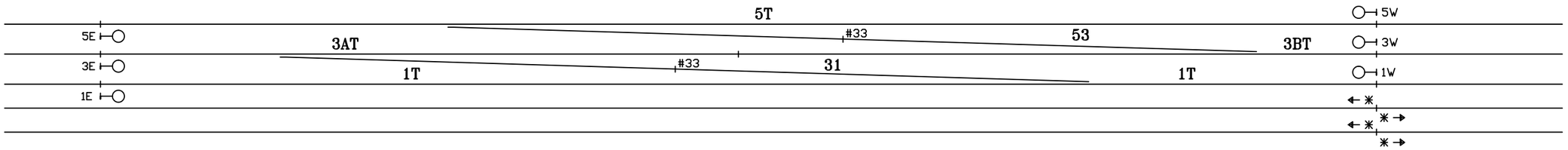

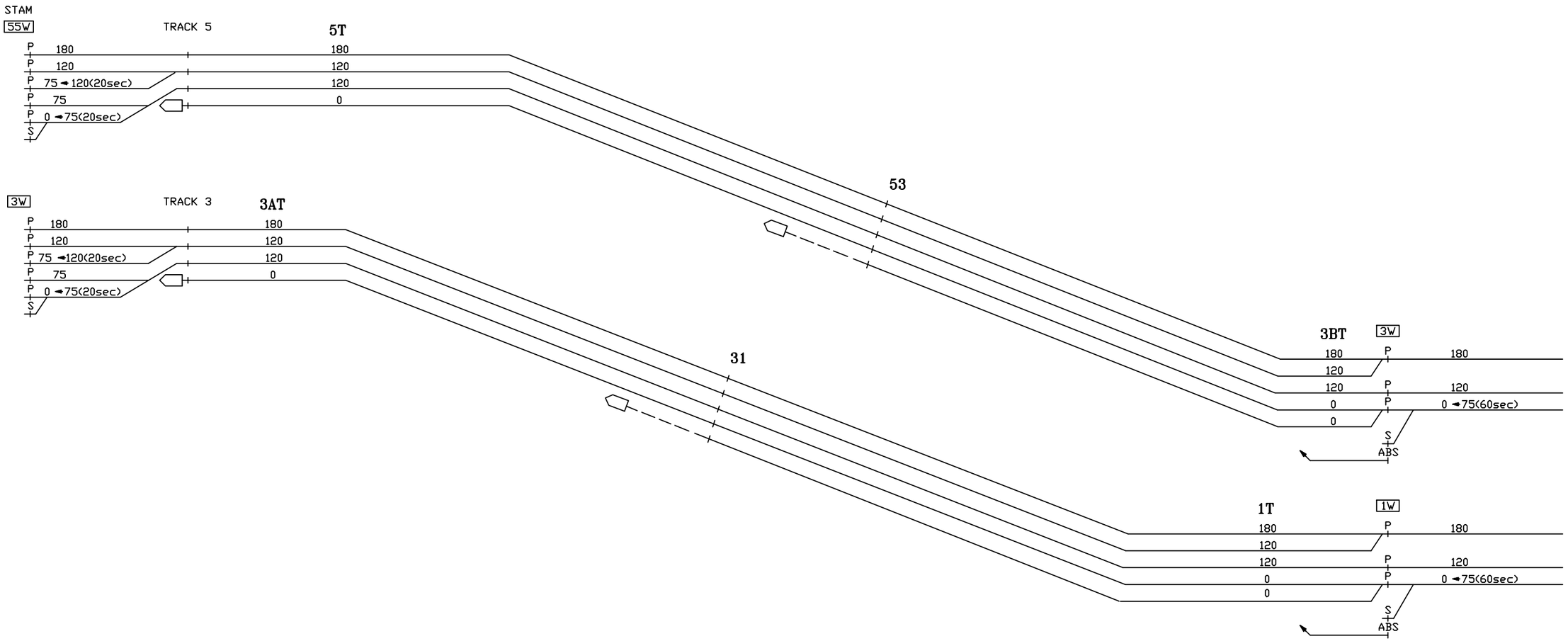

CIRCUIT ENGINEER	SR. SIGNAL ENGR.–DESIGN & STANDARDS	DIRECTOR C&S SYSTEMS	MTA Metro–North Railroad	NEW HAVEN LINE CP 235 DIVERGING ROUTES – TRACKS 3 & 1 WEST	ISSUE DATE: 09–01–99 / RTG–NHL1 NHS REV. 10 / SHEET 56X NHS /users/signal/RTG / NHL1 / L1056X

Gannett Fleming/CWA

CONTRACT #	PROJECT SHEET #
1000027511	0295

EXISTING

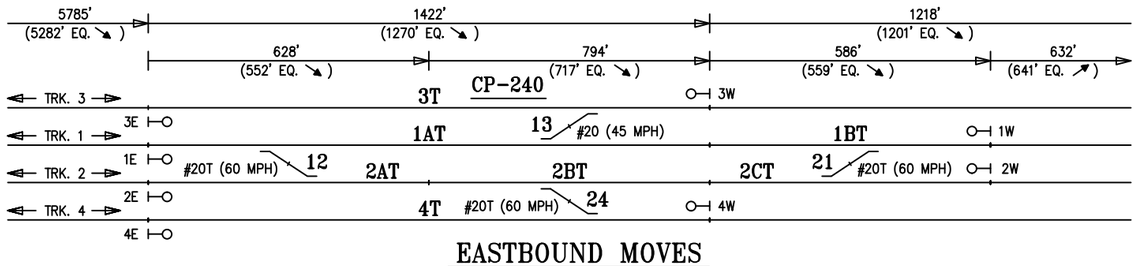

EASTBOUND MOVES

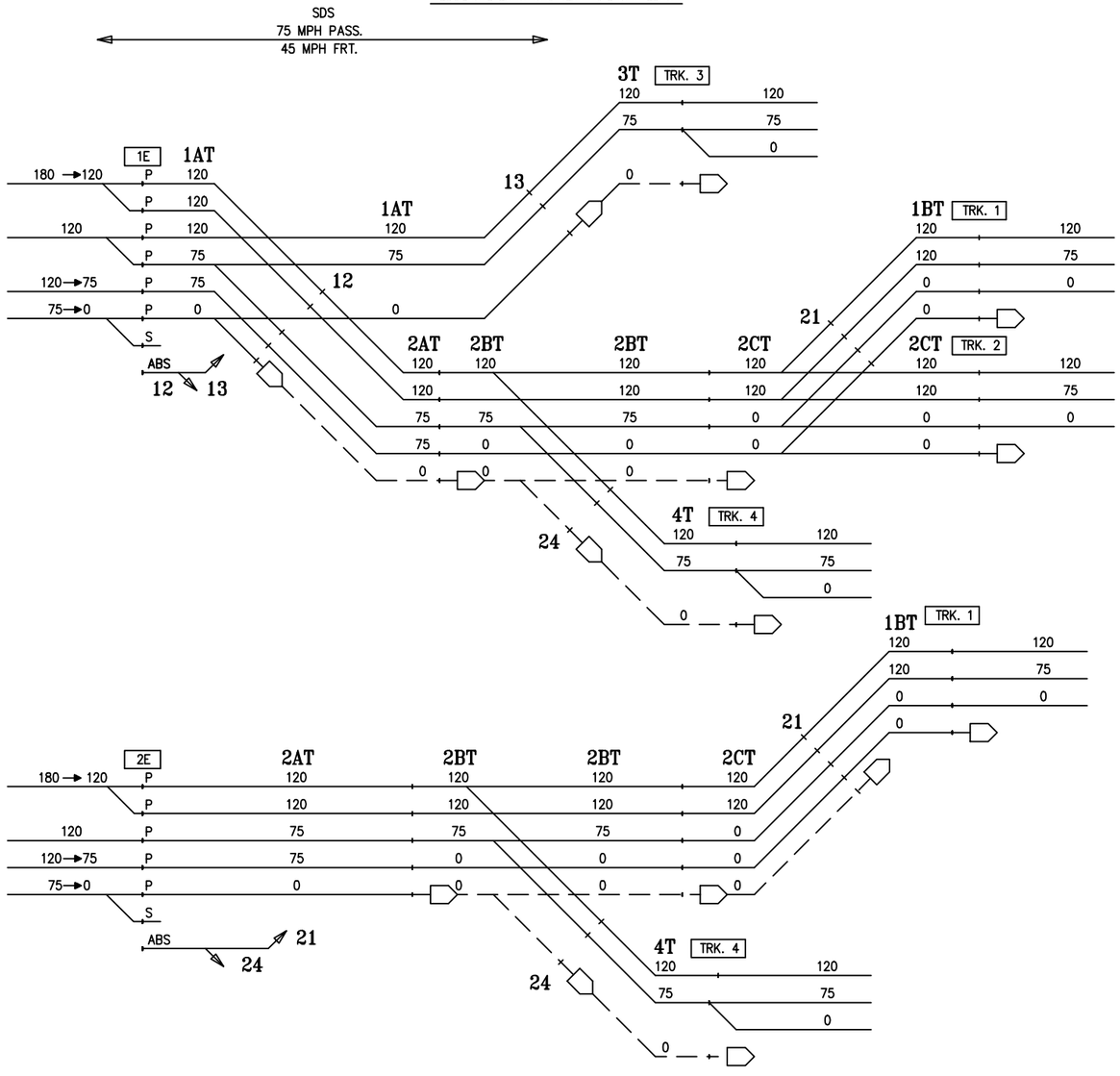

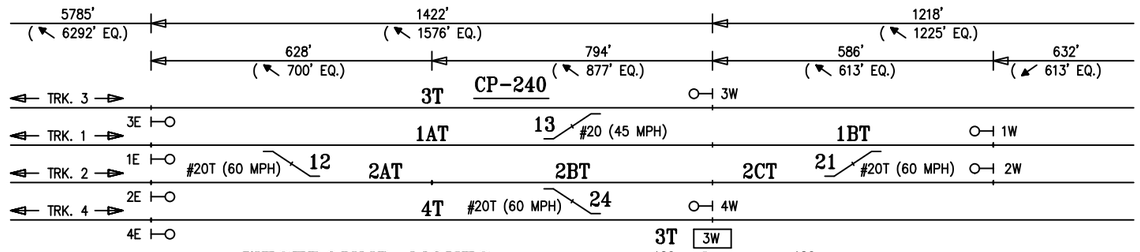

WESTBOUND MOVES

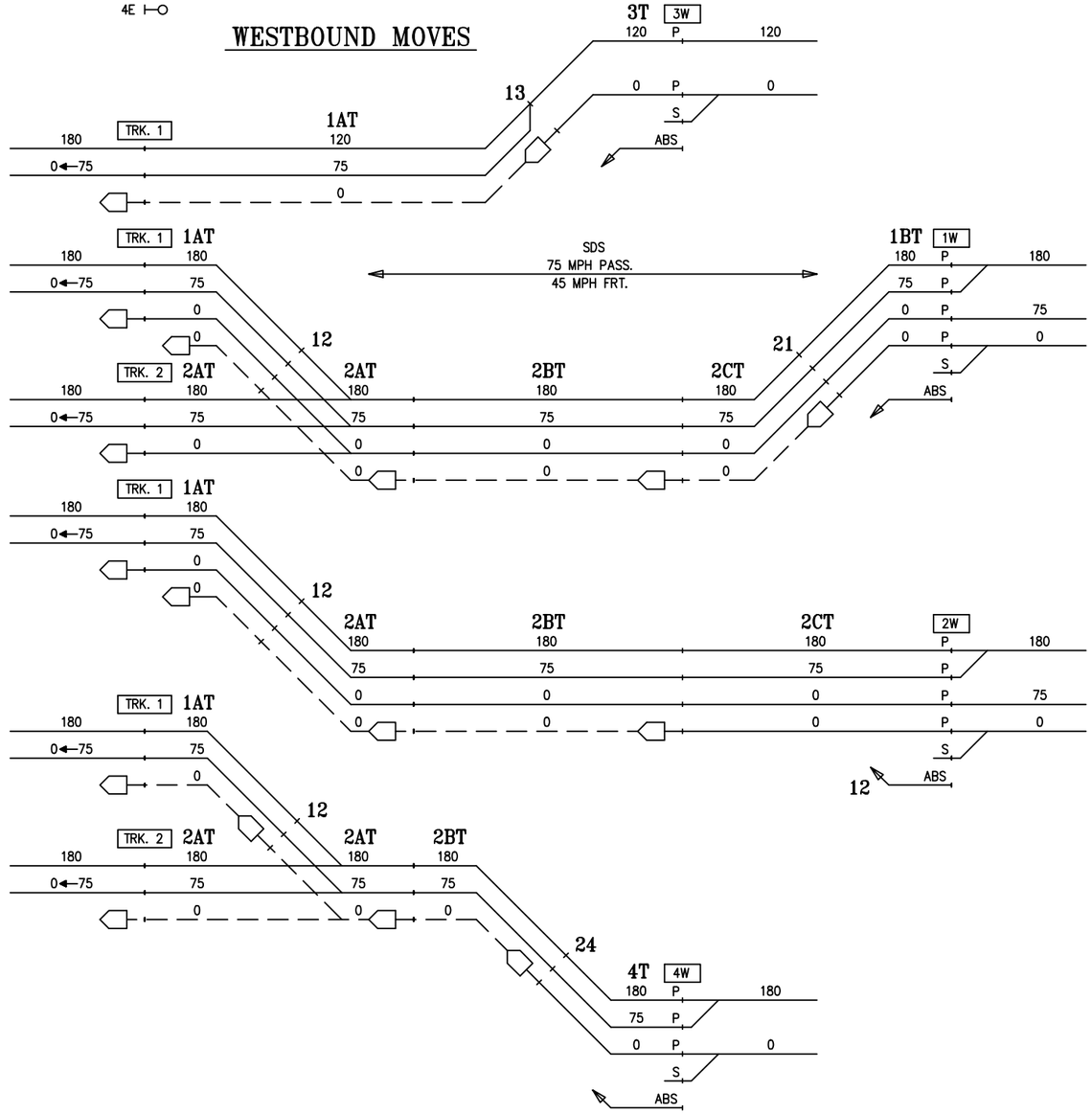

CIRCUIT ENGINEER	SR. SIGNAL ENGR.–DESIGN & STANDARDS	DIRECTOR C&S SYSTEMS	MTA Metro–North Railroad	NEW HAVEN LINE CP 240 DIVERGING ROUTES	ISSUE DATE: RTG–NHL2 NHS REV. 21 SHEET 1X NHS \users\signal\RTG NHL2 L2001X

Gannett Fleming/CWA

CONTRACT #	PROJECT SHEET #
1000027511	0296

EXISTING

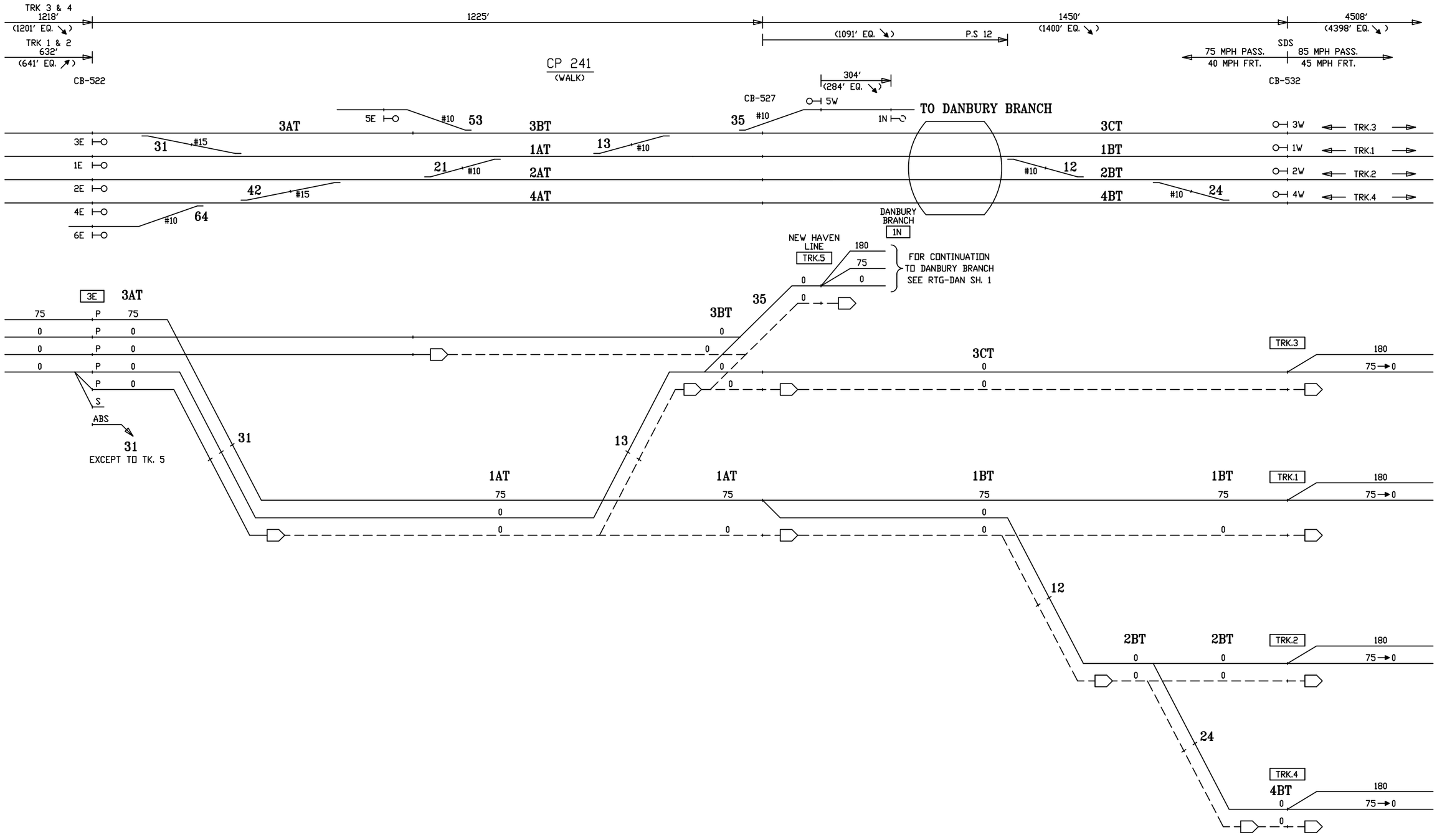

CIRCUIT ENGINEER	SR. SIGNAL ENGR.–DESIGN & STANDARDS	DIRECTOR C&S SYSTEMS	MTA Metro–North Railroad	NEW HAVEN LINE CP 241 DIVERGING ROUTES – TRACK 3 EAST	ISSUE DATE: 06–01–88 REV. 23 /users/signal/RTG	RTG–NHL2 SHEET 2X NHL2 L2002X

Gannett Fleming/CWA

CONTRACT #	PROJECT SHEET #
1000027511	0297

EXISTING

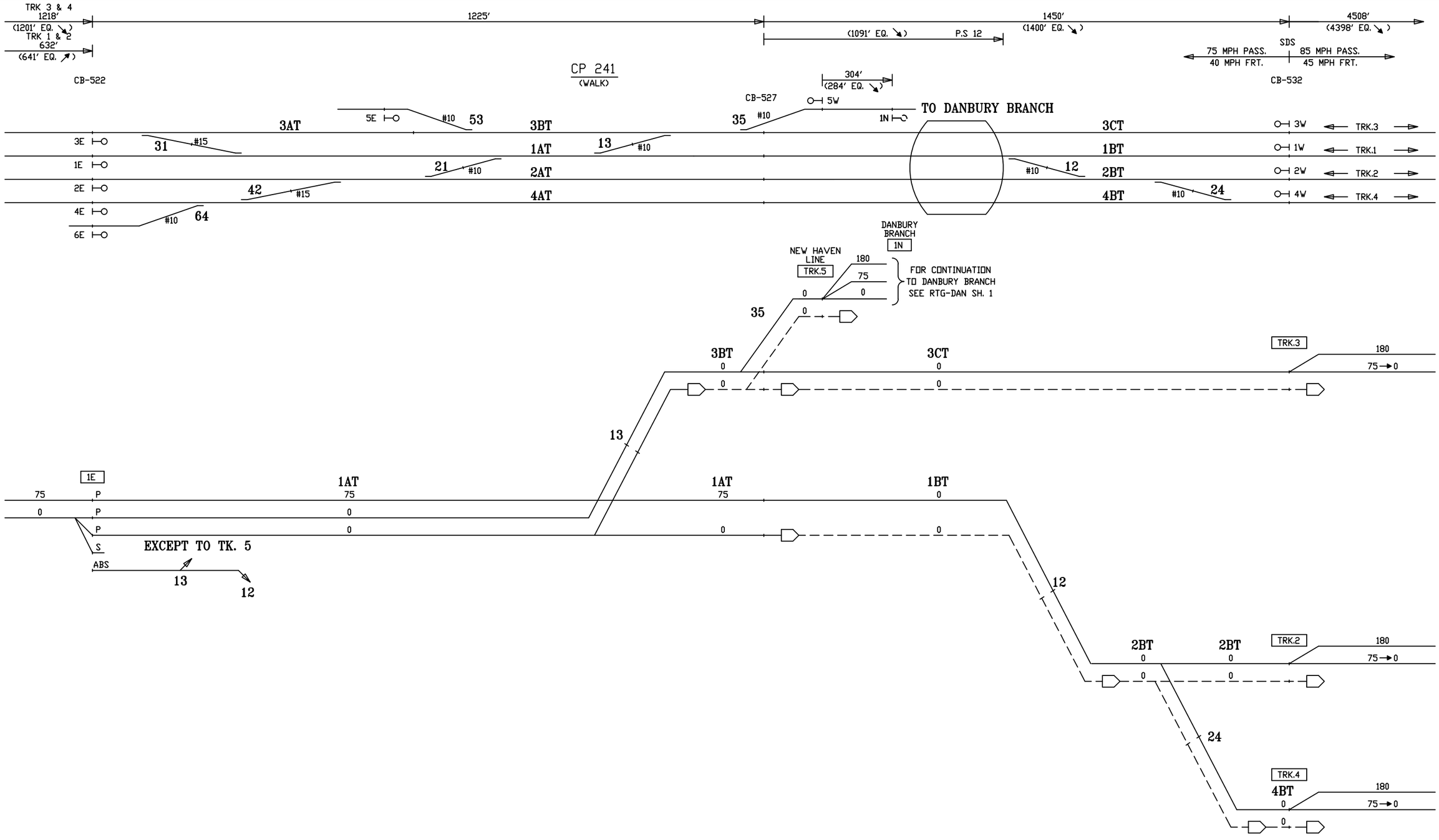

CIRCUIT ENGINEER	SR. SIGNAL ENGR.–DESIGN & STANDARDS	DIRECTOR C&S SYSTEMS	MTA Metro–North Railroad	NEW HAVEN LINE CP 241 DIVERGING ROUTES – TRACK 1 EAST	ISSUE DATE: 06–01–88 REV. 23 /users/signal/RTG

RTG–NHL2
SHEET 3X
NHL2 L2003X

Gannett Fleming/CWA

CONTRACT # 1000027511

PROJECT SHEET # 0298

EXISTING

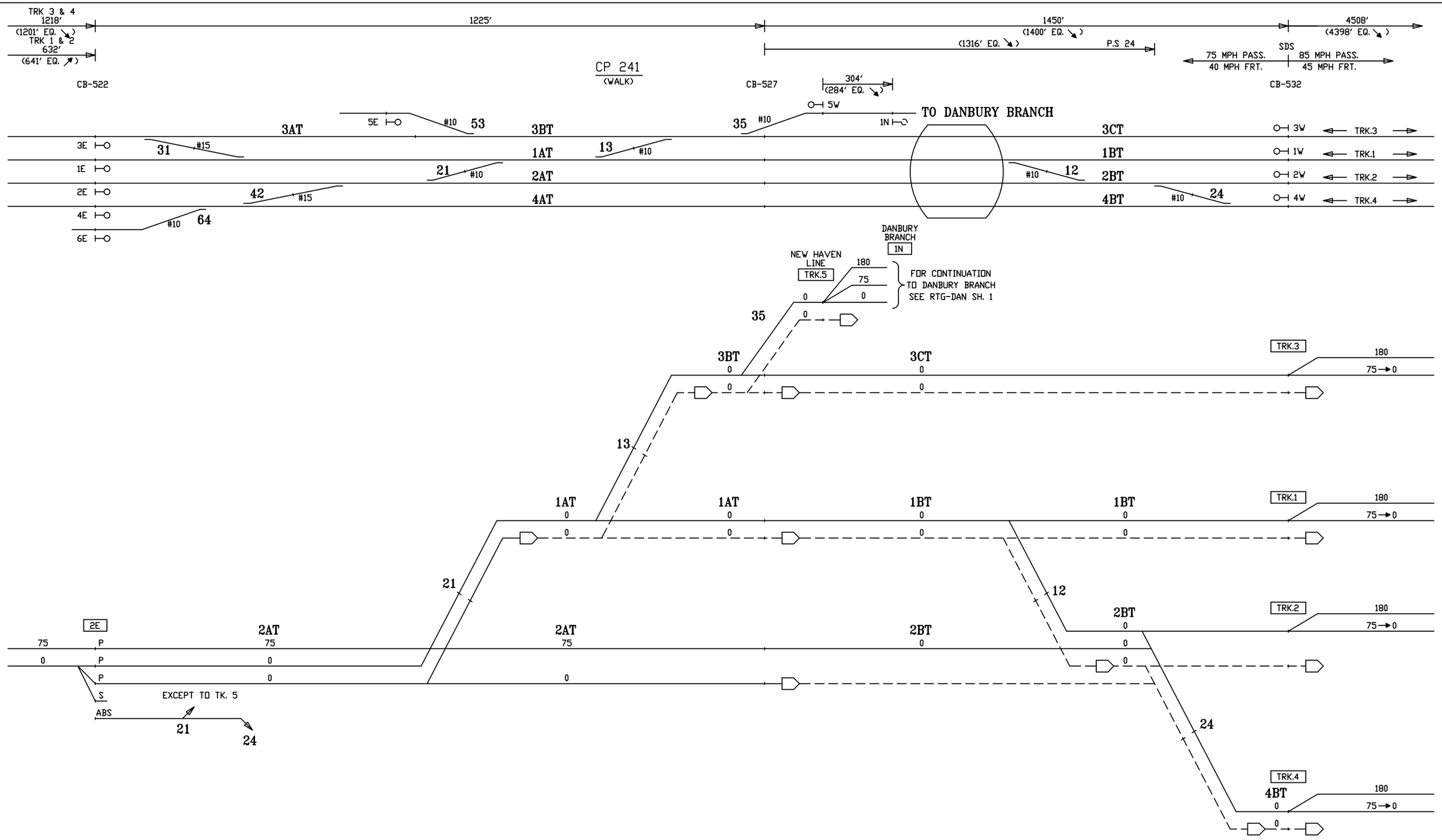

CIRCUIT ENGINEER	SR. SIGNAL ENGR.–DESIGN & STANDARDS	DIRECTOR C&S SYSTEMS	MTA Metro–North Railroad	NEW HAVEN LINE CP 241 DIVERGING ROUTES – TRACK 2 EAST	ISSUE DATE: 06–01–88 REV. 23 /users/signal/RTG

RTG–NHL2
SHEET 4X
NHL2 | L2004X

Gannett Fleming/CWA

CONTRACT # 1000027511

PROJECT SHEET # 0299

EXISTING

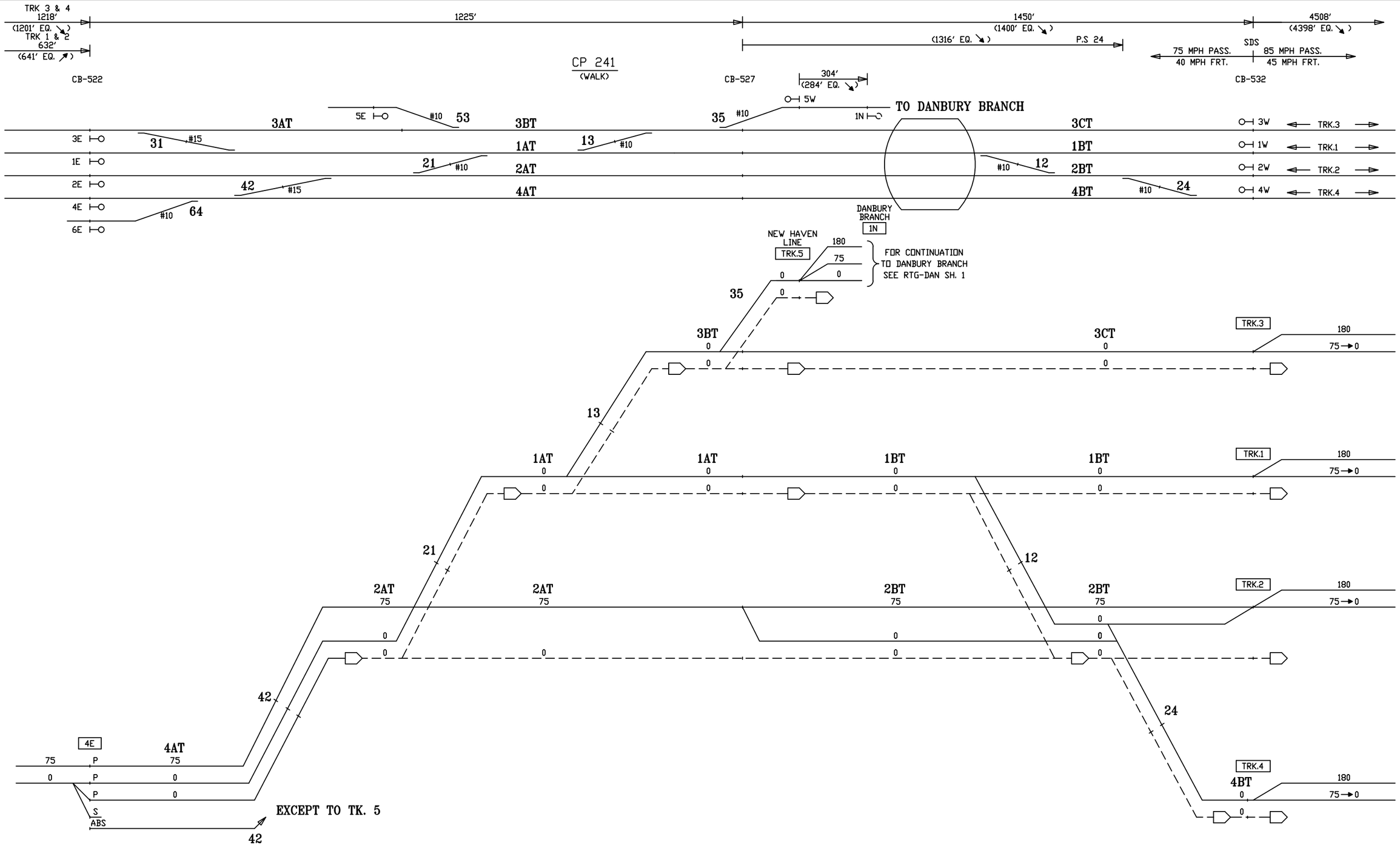

CIRCUIT ENGINEER	SR. SIGNAL ENGR.–DESIGN & STANDARDS	DIRECTOR C&S SYSTEMS	MTA Metro–North Railroad	NEW HAVEN LINE CP 241 DIVERGING ROUTES – TRACK 4 EAST	ISSUE DATE: 06–01–88 · REV. 23 · /users/signal/RTG · RTG–NHL2 · SHEET 5X · NHL2 · L2005X

Gannett Fleming/CWA

CONTRACT #	PROJECT SHEET #
1000027511	0300

EXISTING

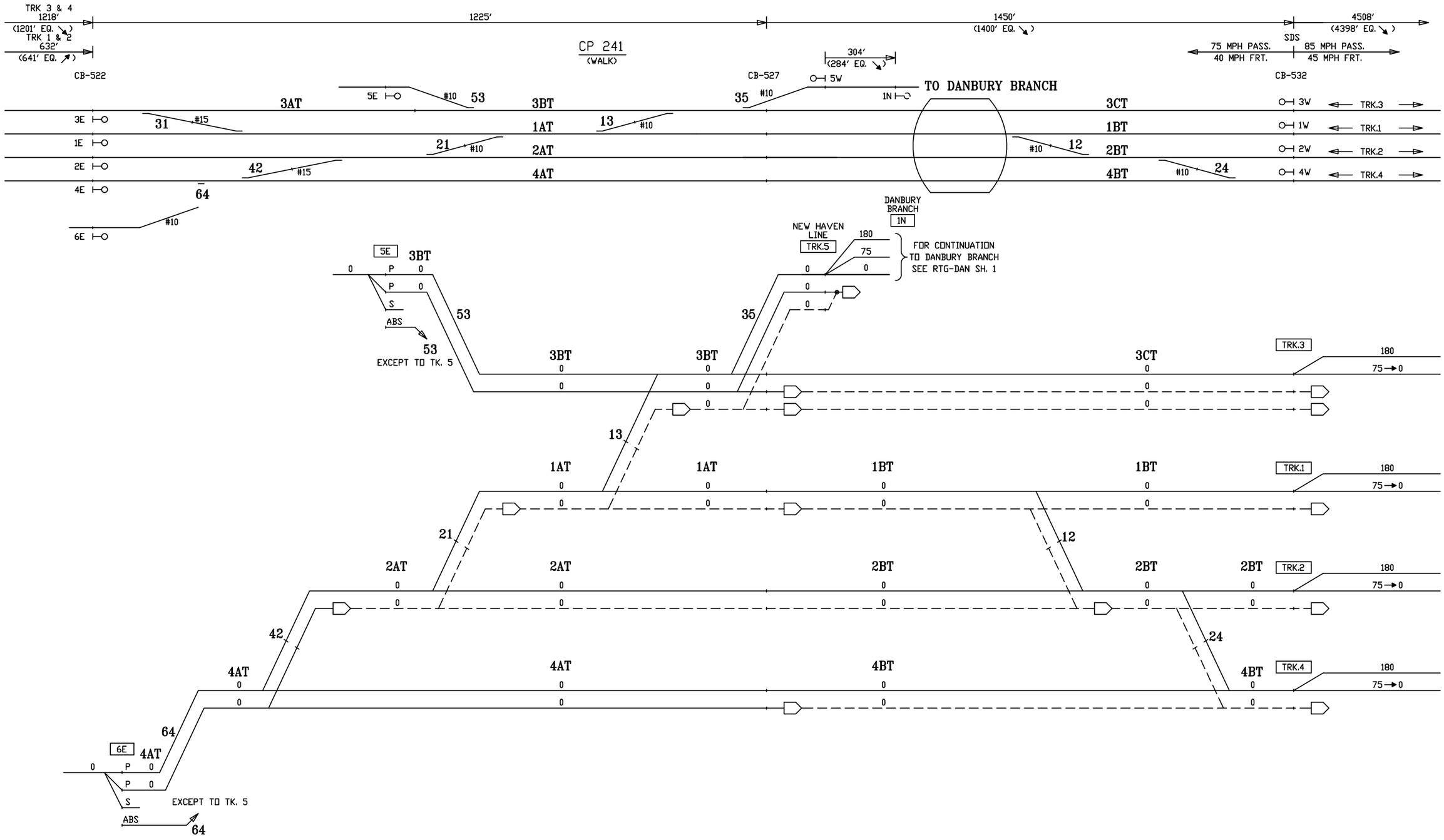

CIRCUIT ENGINEER	SR. SIGNAL ENGR.–DESIGN & STANDARDS	DIRECTOR C&S SYSTEMS	MTA Metro–North Railroad	NEW HAVEN LINE CP 241 DIVERGING ROUTES – TRACKS 5 & 6 EAST	ISSUE DATE: 06–01–88 REV. 23 /users/signal/RTG	RTG–NHL2 SHEET 6X NHL2 L2006X

Gannett Fleming/CWA

CONTRACT #	PROJECT SHEET #
1000027511	0301

EXISTING

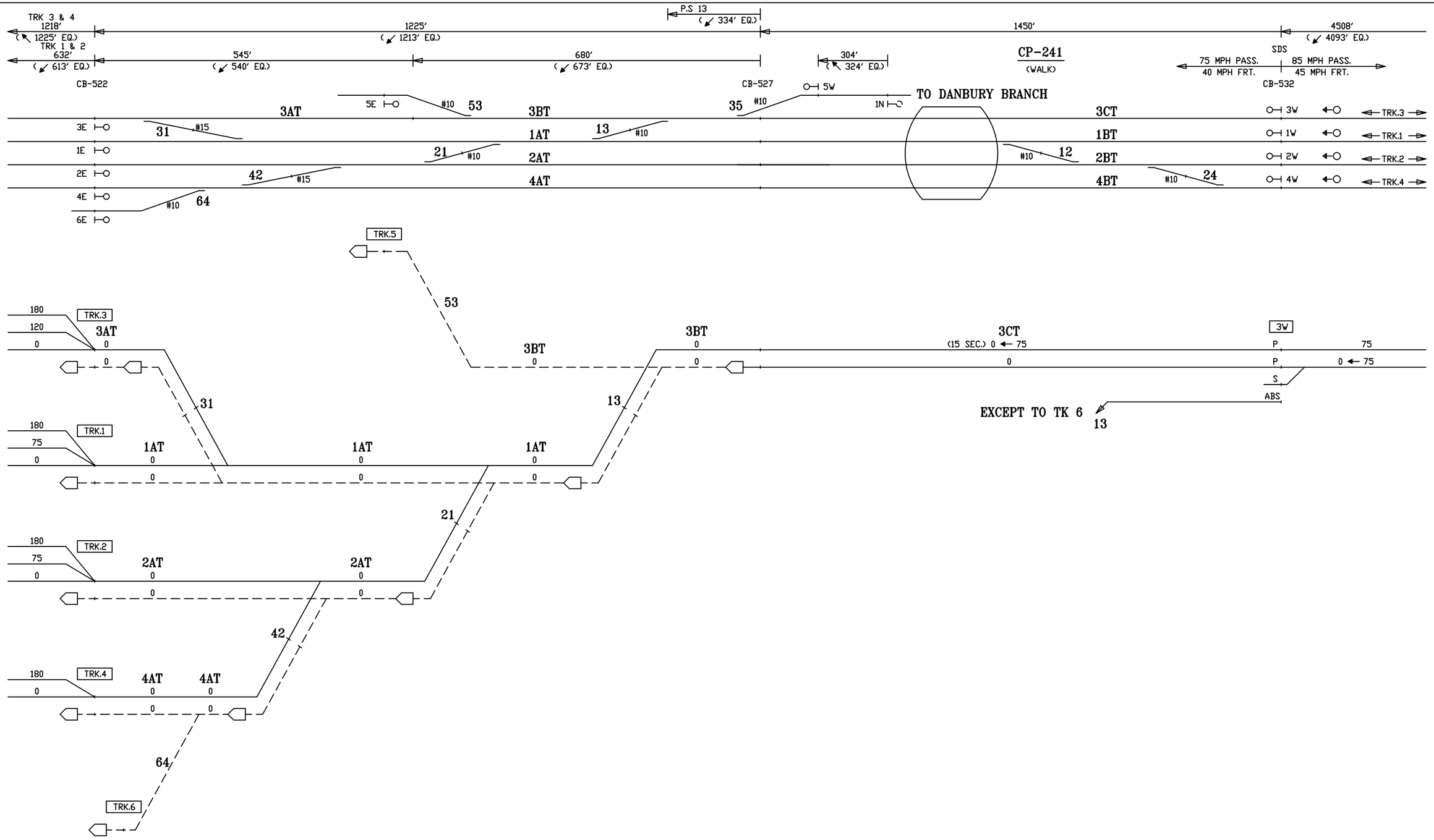

CIRCUIT ENGINEER	SR. SIGNAL ENGR.–DESIGN & STANDARDS	DIRECTOR C&S SYSTEMS	MTA Metro–North Railroad	NEW HAVEN LINE CP 241 DIVERGING ROUTES – TRACK 3 WEST	ISSUE DATE: 06–01–88 REV. 23	RTG–NHL2 SHEET 7X
					NHS /users/signal/RTG NHL2 L2007X	

Gannett Fleming/CWA

CONTRACT #	PROJECT SHEET #
1000027511	0302

EXISTING

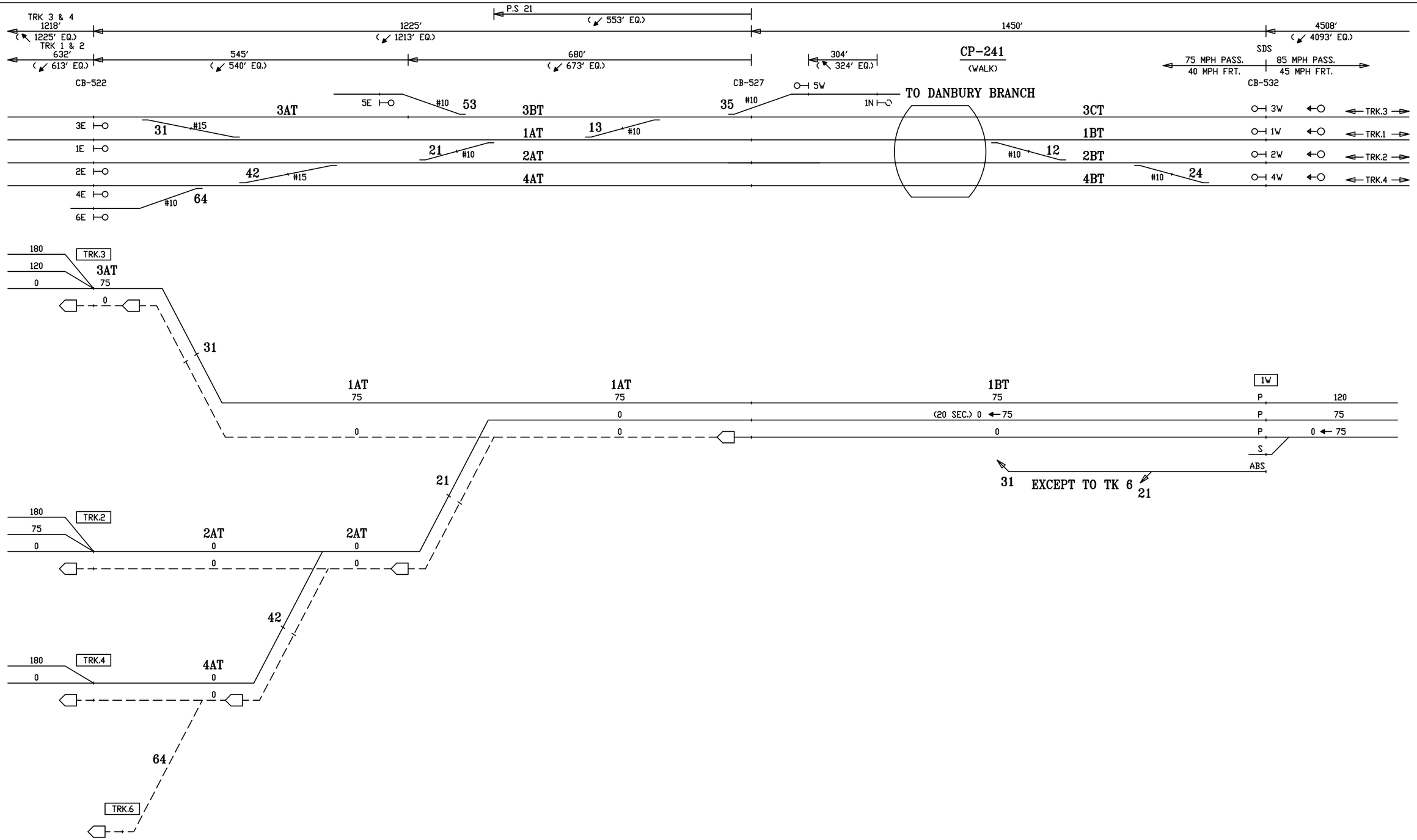

CIRCUIT ENGINEER	SR. SIGNAL ENGR.–DESIGN & STANDARDS	DIRECTOR C&S SYSTEMS	MTA Metro–North Railroad	NEW HAVEN LINE CP 241 DIVERGING ROUTES – TRACK 1 WEST	ISSUE DATE: 06–01–88 NHS REV. 23 NHS /users/signal/RTG	RTG–NHL2 SHEET 8X NHL2 L2008X

Gannett Fleming/CWA

CONTRACT #	PROJECT SHEET #
1000027511	0303

EXISTING

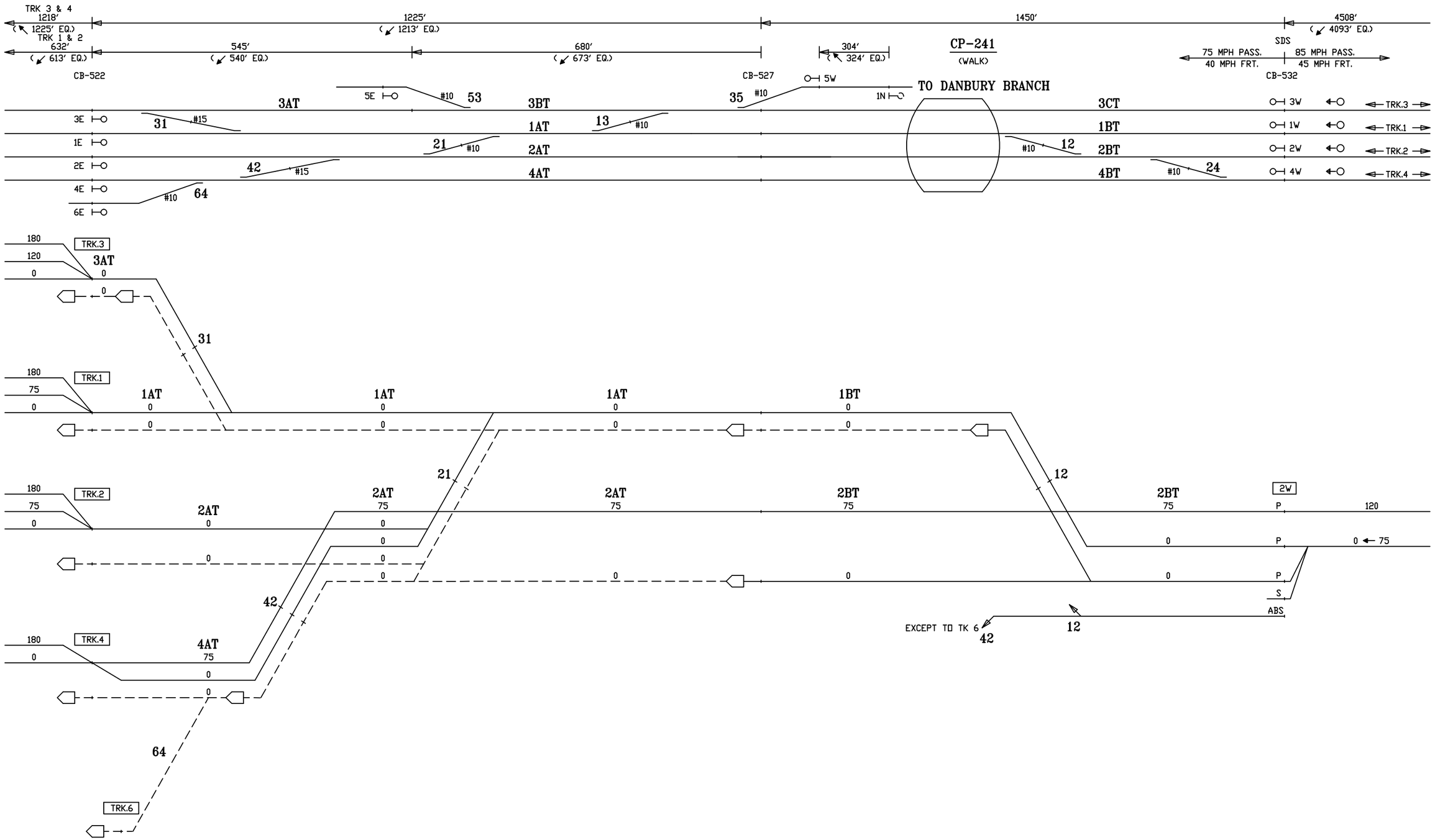

CIRCUIT ENGINEER	SR. SIGNAL ENGR.–DESIGN & STANDARDS	DIRECTOR C&S SYSTEMS	MTA Metro–North Railroad	NEW HAVEN LINE CP 241 DIVERGING ROUTES – TRACK 2 WEST	ISSUE DATE: 06–01–88 NHS REV. 23 NHS /users/signal/RTG	RTG–NHL2 SHEET 9X NHL2 L2009X

Gannett Fleming/CWA

CONTRACT #	PROJECT SHEET #
1000027511	0304

EXISTING

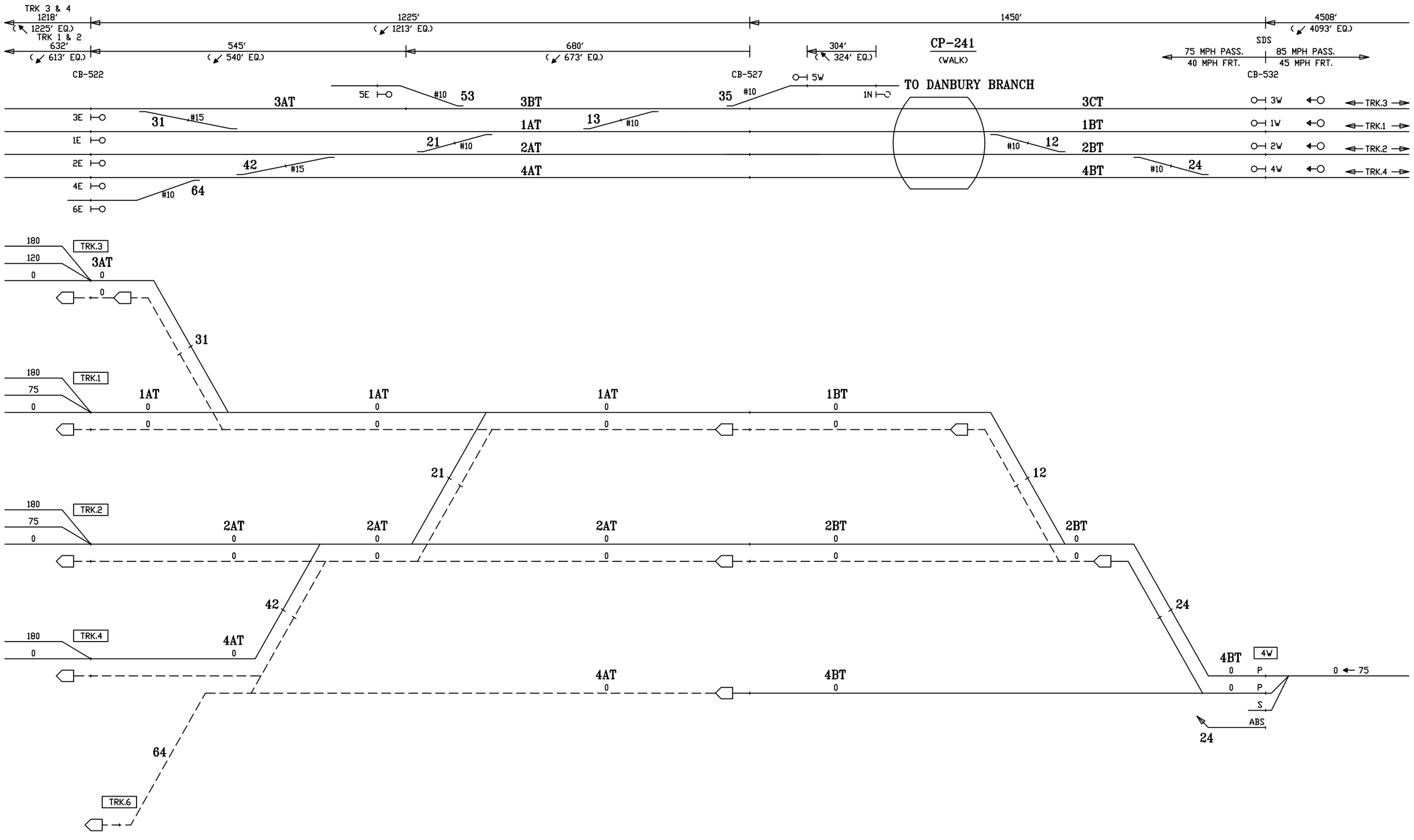

CIRCUIT ENGINEER	SR. SIGNAL ENGR.–DESIGN & STANDARDS	DIRECTOR C&S SYSTEMS	MTA Metro–North Railroad	NEW HAVEN LINE CP 241 DIVERGING ROUTES – TRACK 4 WEST	ISSUE DATE: 06–01–88 NHS REV. 23 NHS /users/signal/RTG	RTG–NHL2 SHEET 10X NHL2 L2010X

Gannett Fleming/CWA

CONTRACT #	PROJECT SHEET #
1000027511	0305

EXISTING

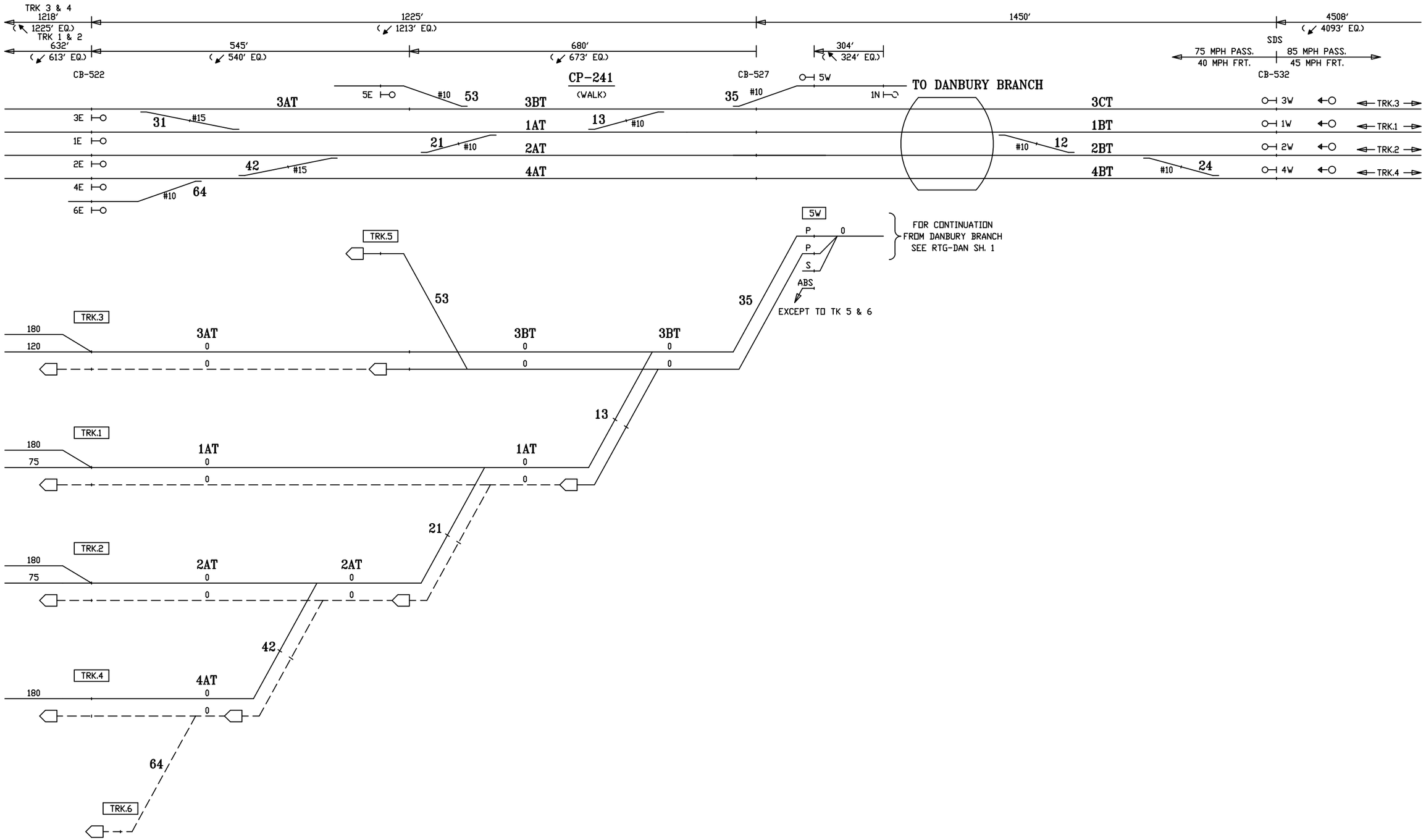

CIRCUIT ENGINEER	SR. SIGNAL ENGR.–DESIGN & STANDARDS	DIRECTOR C&S SYSTEMS	MTA Metro–North Railroad	NEW HAVEN LINE CP 241 DIVERGING ROUTES – TRACK 5 WEST	ISSUE DATE: 06–01–88 NHS REV. 23 NHS /users/signal/RTG	RTG–NHL2 SHEET 11X NHL2 L2011X

Gannett Fleming/CWA

CONTRACT #	PROJECT SHEET #
1000027511	0306

EXISTING

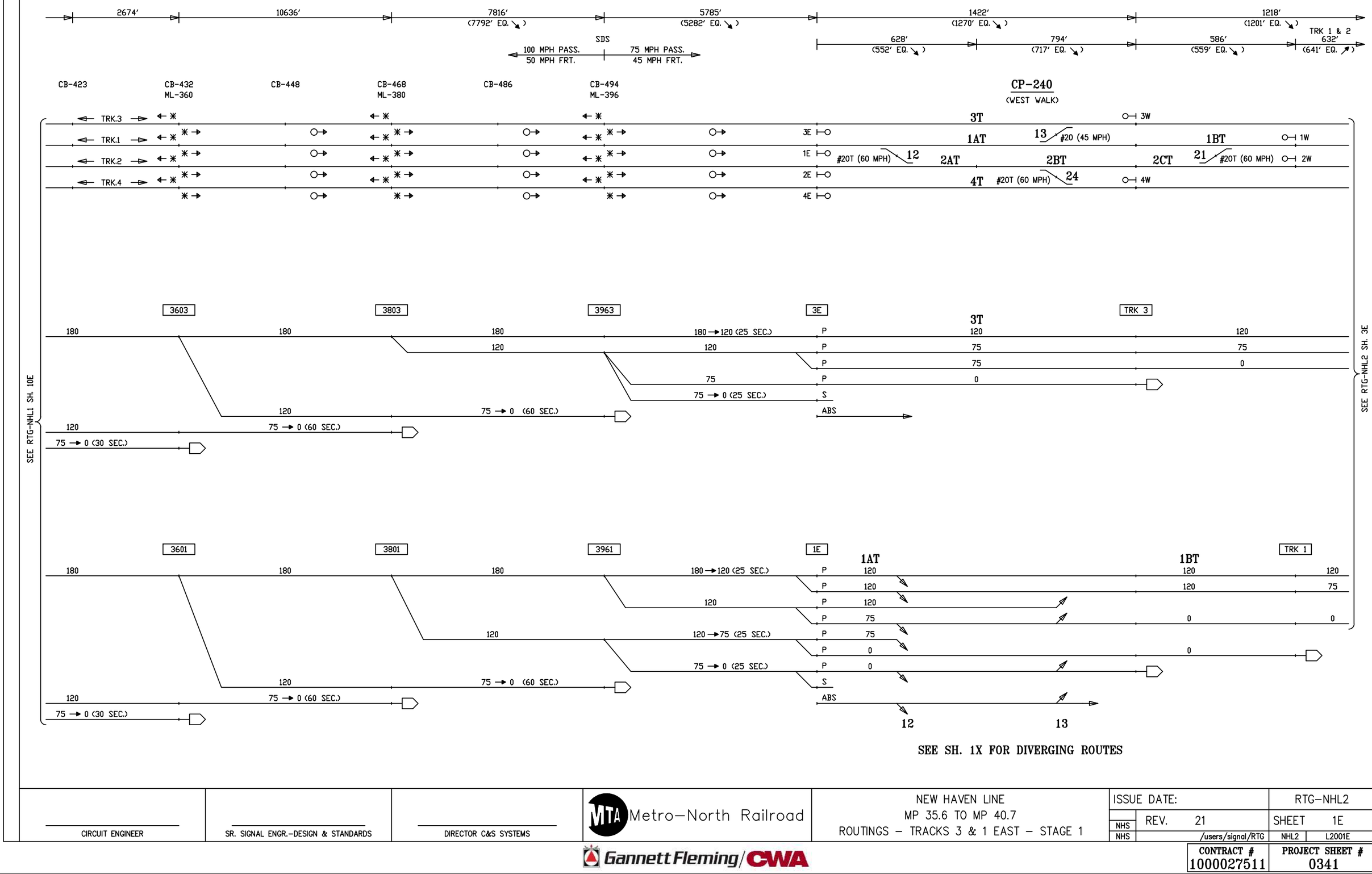

SEE SH. 1X FOR DIVERGING ROUTES

CIRCUIT ENGINEER	SR. SIGNAL ENGR.–DESIGN & STANDARDS	DIRECTOR C&S SYSTEMS	MTA Metro–North Railroad	NEW HAVEN LINE MP 35.6 TO MP 40.7 ROUTINGS – TRACKS 3 & 1 EAST – STAGE 1	ISSUE DATE: NHS REV. 21 NHS /users/signal/RTG RTG–NHL2 SHEET 1E NHL2 L2001E

Gannett Fleming/CWA

CONTRACT #	PROJECT SHEET #
1000027511	0341

EXISTING

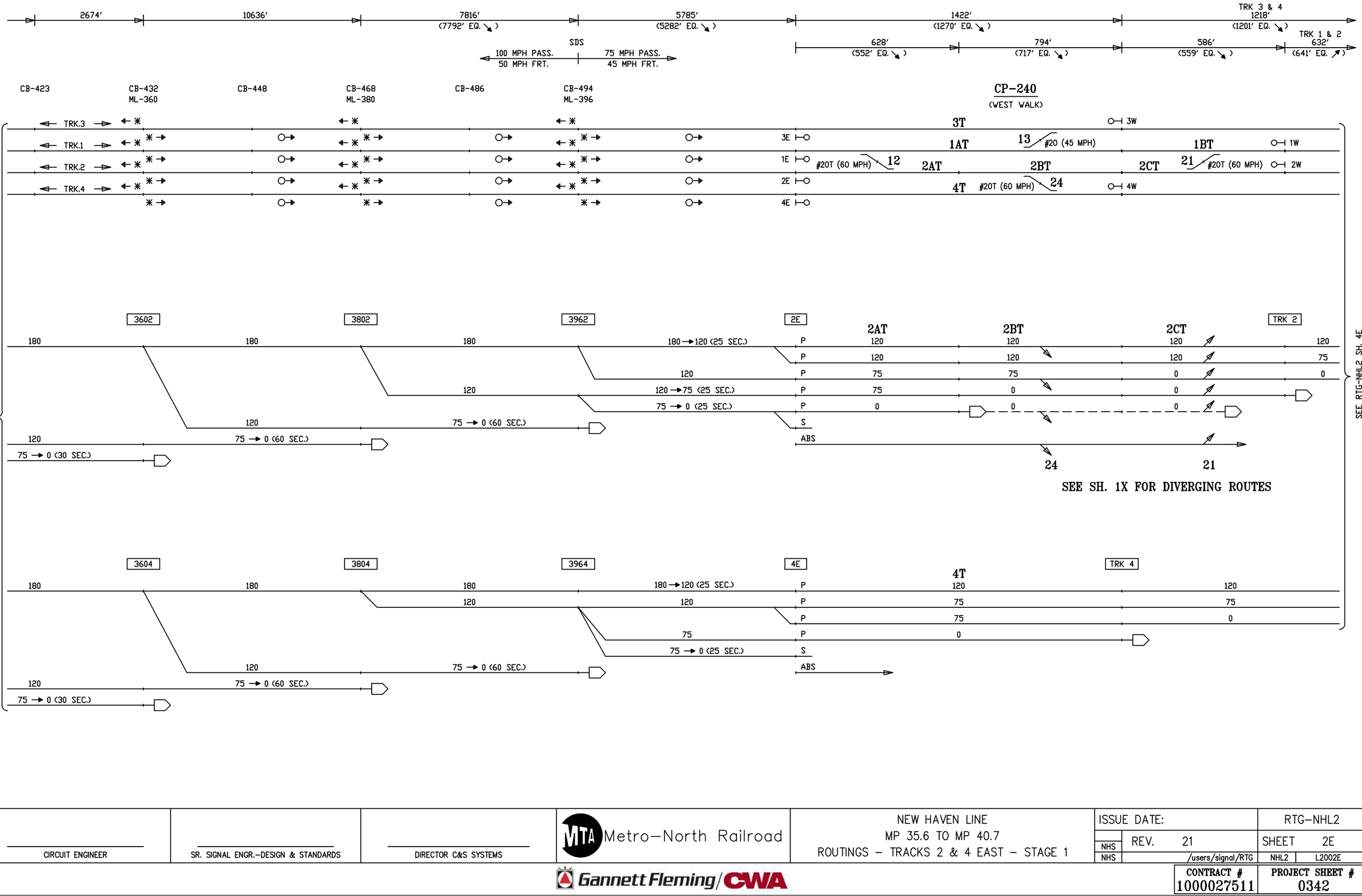

CIRCUIT ENGINEER	SR. SIGNAL ENGR.–DESIGN & STANDARDS	DIRECTOR C&S SYSTEMS	MTA Metro–North Railroad	NEW HAVEN LINE MP 35.6 TO MP 40.7 ROUTINGS – TRACKS 2 & 4 EAST – STAGE 1	ISSUE DATE:	RTG–NHL2
					NHS REV. 21	SHEET 2E
					NHS /users/signal/RTG	NHL2 L2002E
			Gannett Fleming/CWA		CONTRACT # 1000027511	PROJECT SHEET # 0342

EXISTING — STAGE 1 — EXISTING

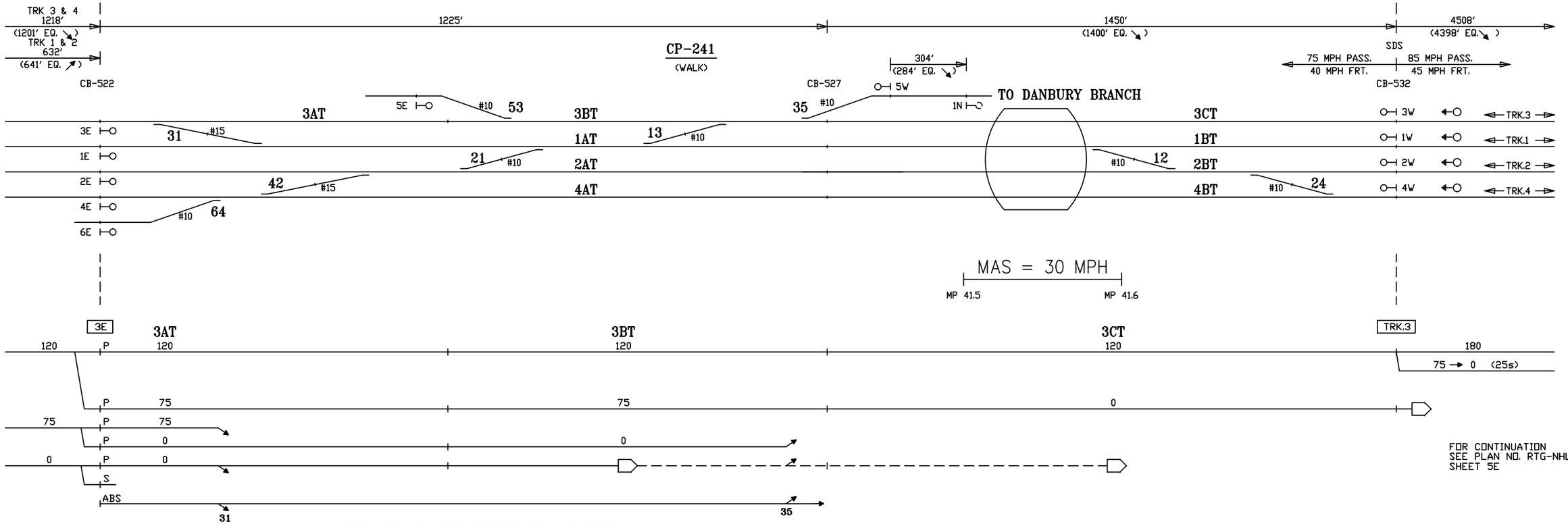

CIRCUIT ENGINEER	SR. SIGNAL ENGR.–DESIGN & STANDARDS	DIRECTOR C&S SYSTEMS	MTA Metro-North Railroad	NEW HAVEN LINE MP 40.7 TO MP 42.4 ROUTINGS – TRACKS 3 & 1 EAST – STAGE 1	ISSUE DATE: 12-21-90 — RTG-NHL2 NHS REV. 28 — SHEET 3E NHS /users/signal/RTG — NHL2 — L2003E

Gannett Fleming/CWA

CONTRACT #	PROJECT SHEET #
1000027511	0343

EXISTING — STAGE 1 — EXISTING

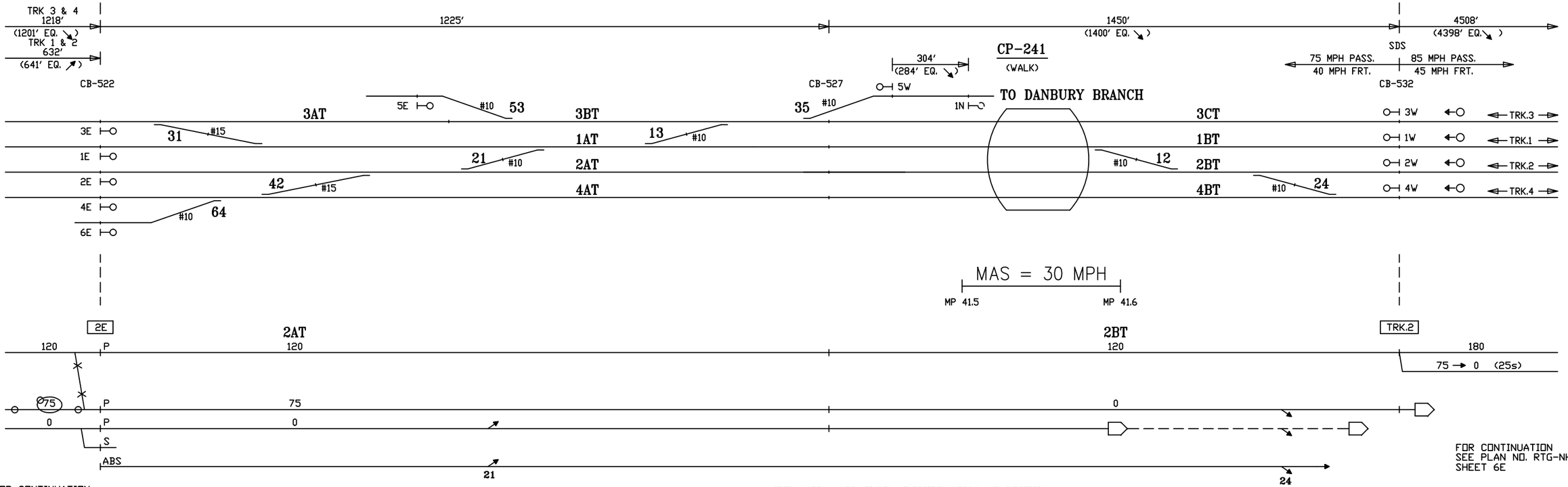

CIRCUIT ENGINEER	SR. SIGNAL ENGR.–DESIGN & STANDARDS	DIRECTOR C&S SYSTEMS	MTA Metro–North Railroad	NEW HAVEN LINE MP 40.7 TO MP 42.4 ROUTINGS – TRACKS 2 & 4 EAST – STAGE 1	ISSUE DATE: 12-21-90 REV. 28 /users/signal/RTG	RTG-NHL2 SHEET 4E NHL2 L2004E

Gannett Fleming / CWA

CONTRACT # 1000027511

PROJECT SHEET # 0344

EXISTING

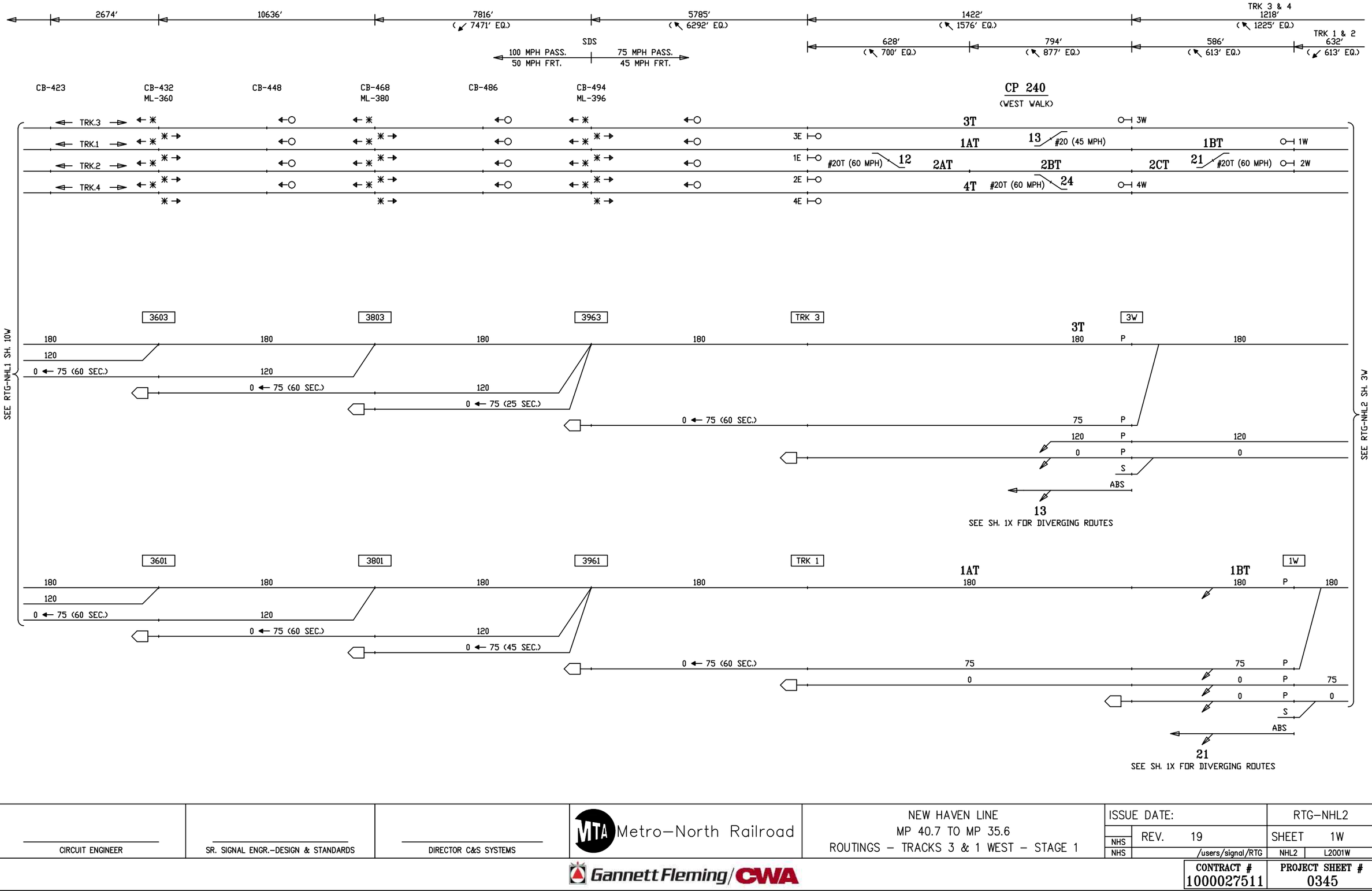

CIRCUIT ENGINEER	SR. SIGNAL ENGR.–DESIGN & STANDARDS	DIRECTOR C&S SYSTEMS	Metro–North Railroad	NEW HAVEN LINE MP 40.7 TO MP 35.6 ROUTINGS – TRACKS 3 & 1 WEST – STAGE 1	ISSUE DATE: / REV. 19 / NHS / NHS /users/signal/RTG RTG–NHL2 / SHEET 1W / NHL2 L2001W CONTRACT # 1000027511 / PROJECT SHEET # 0345

Gannett Fleming/CWA

EXISTING

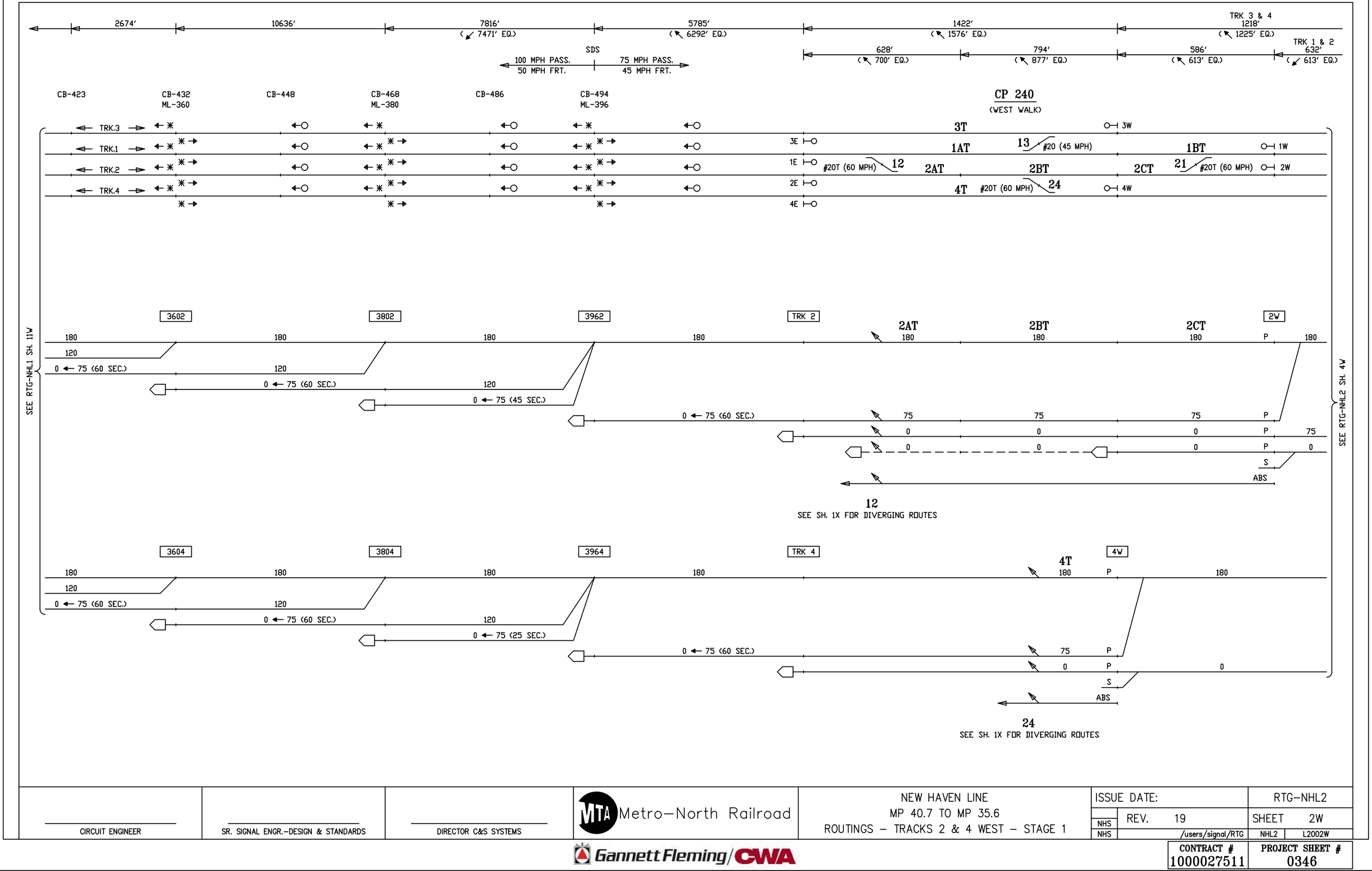

CIRCUIT ENGINEER	SR. SIGNAL ENGR.–DESIGN & STANDARDS	DIRECTOR C&S SYSTEMS	MTA Metro–North Railroad	NEW HAVEN LINE MP 40.7 TO MP 35.6 ROUTINGS – TRACKS 2 & 4 WEST – STAGE 1	ISSUE DATE: NHS REV. 19 NHS /users/signal/RTG	RTG–NHL2 SHEET 2W NHL2 L2002W

Gannett Fleming/CWA

CONTRACT #	PROJECT SHEET #
1000027511	0346

EXISTING — STAGE 1 — EXISTING

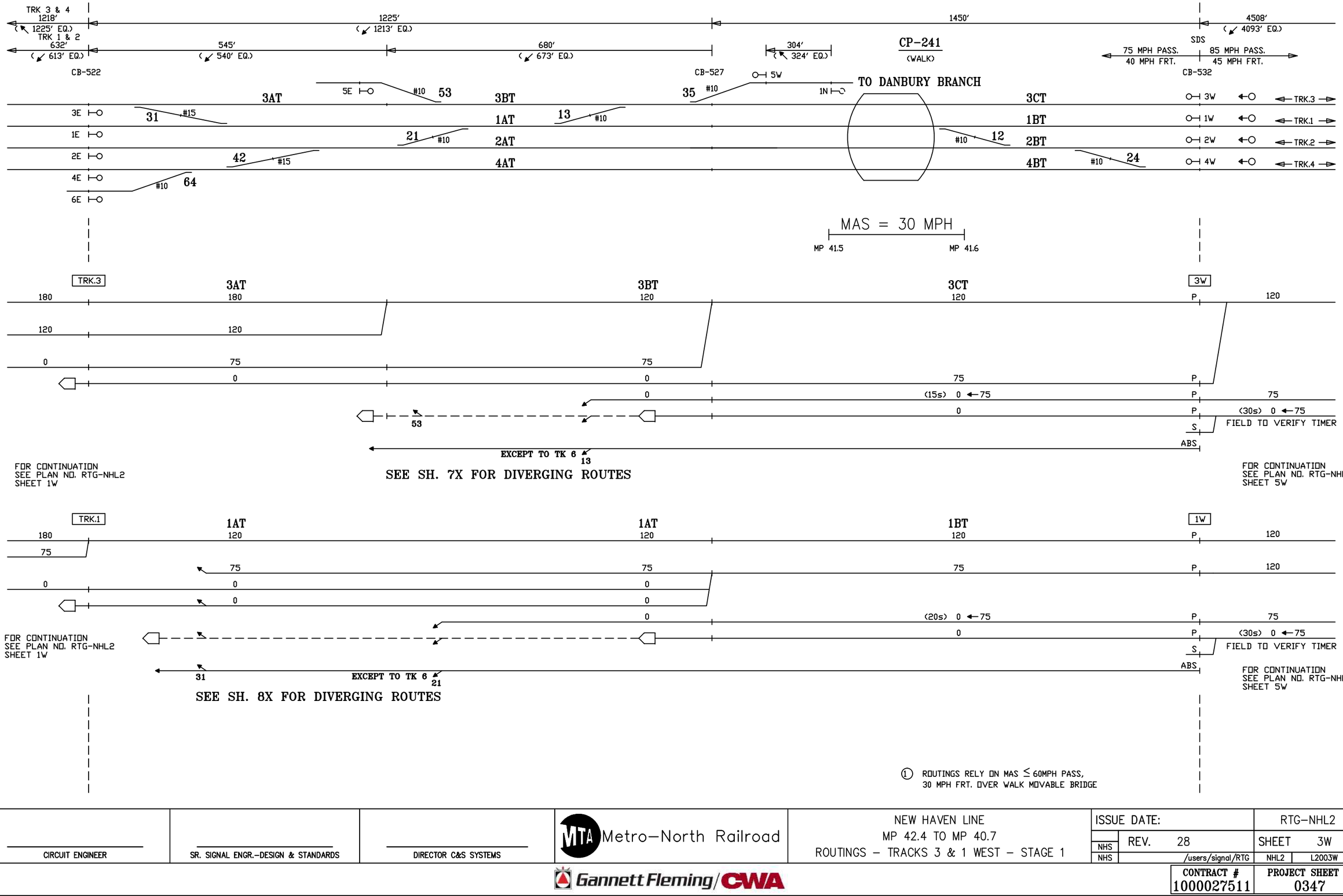

① ROUTINGS RELY ON MAS ≤ 60MPH PASS, 30 MPH FRT. OVER WALK MOVABLE BRIDGE

CIRCUIT ENGINEER	SR. SIGNAL ENGR.–DESIGN & STANDARDS	DIRECTOR C&S SYSTEMS	MTA Metro–North Railroad	NEW HAVEN LINE MP 42.4 TO MP 40.7 ROUTINGS – TRACKS 3 & 1 WEST – STAGE 1	ISSUE DATE: / REV. 28 / NHS / NHS /users/signal/RTG RTG–NHL2 / SHEET 3W / NHL2 L2003W

Gannett Fleming/CWA

CONTRACT # 1000027511

PROJECT SHEET # 0347

EXISTING — STAGE 1 — EXISTING

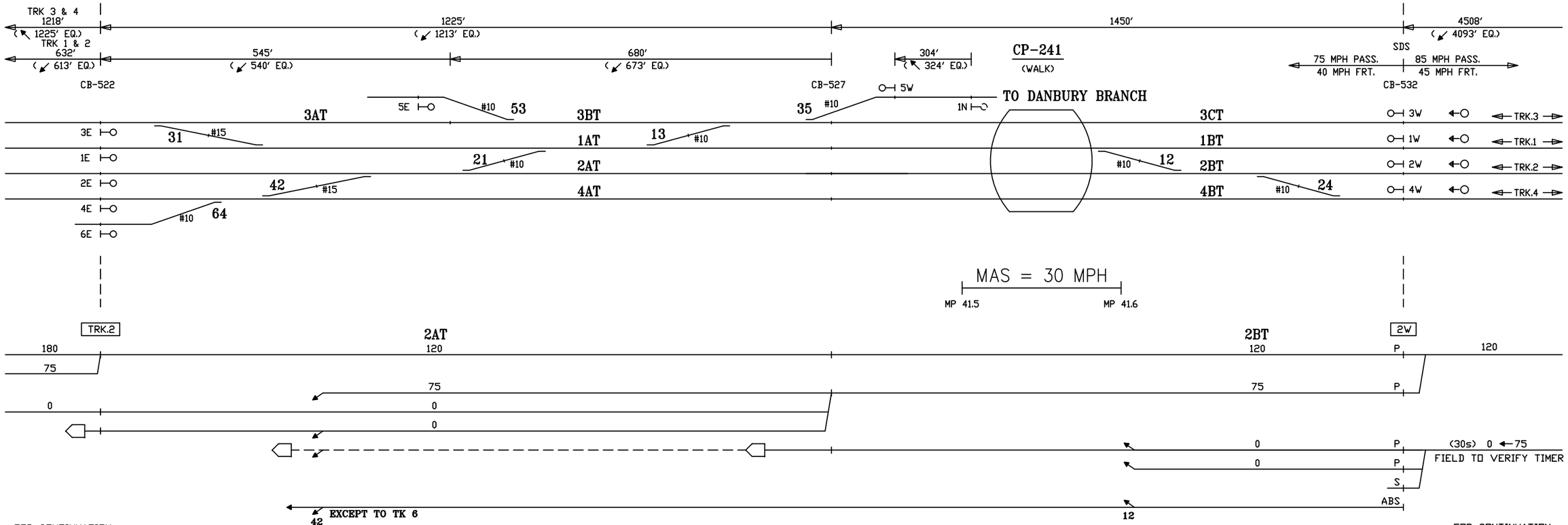

① ROUTINGS RELY ON MAS ≤ 60MPH PASS, 30 MPH FRT. OVER WALK MOVABLE BRIDGE

CIRCUIT ENGINEER	SR. SIGNAL ENGR.–DESIGN & STANDARDS	DIRECTOR C&S SYSTEMS	MTA Metro-North Railroad	NEW HAVEN LINE MP 42.4 TO MP 40.7 ROUTINGS – TRACKS 2 & 4 WEST – STAGE 1	ISSUE DATE: / RTG-NHL2 NHS REV. 28 / SHEET 4W NHS /users/signal/RTG NHL2 L2004W

Gannett Fleming/CWA

CONTRACT # 1000027511 | PROJECT SHEET # 0348

EXISTING

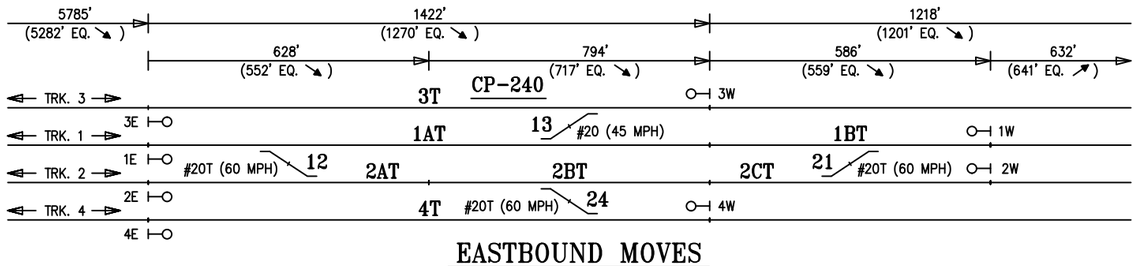

EASTBOUND MOVES

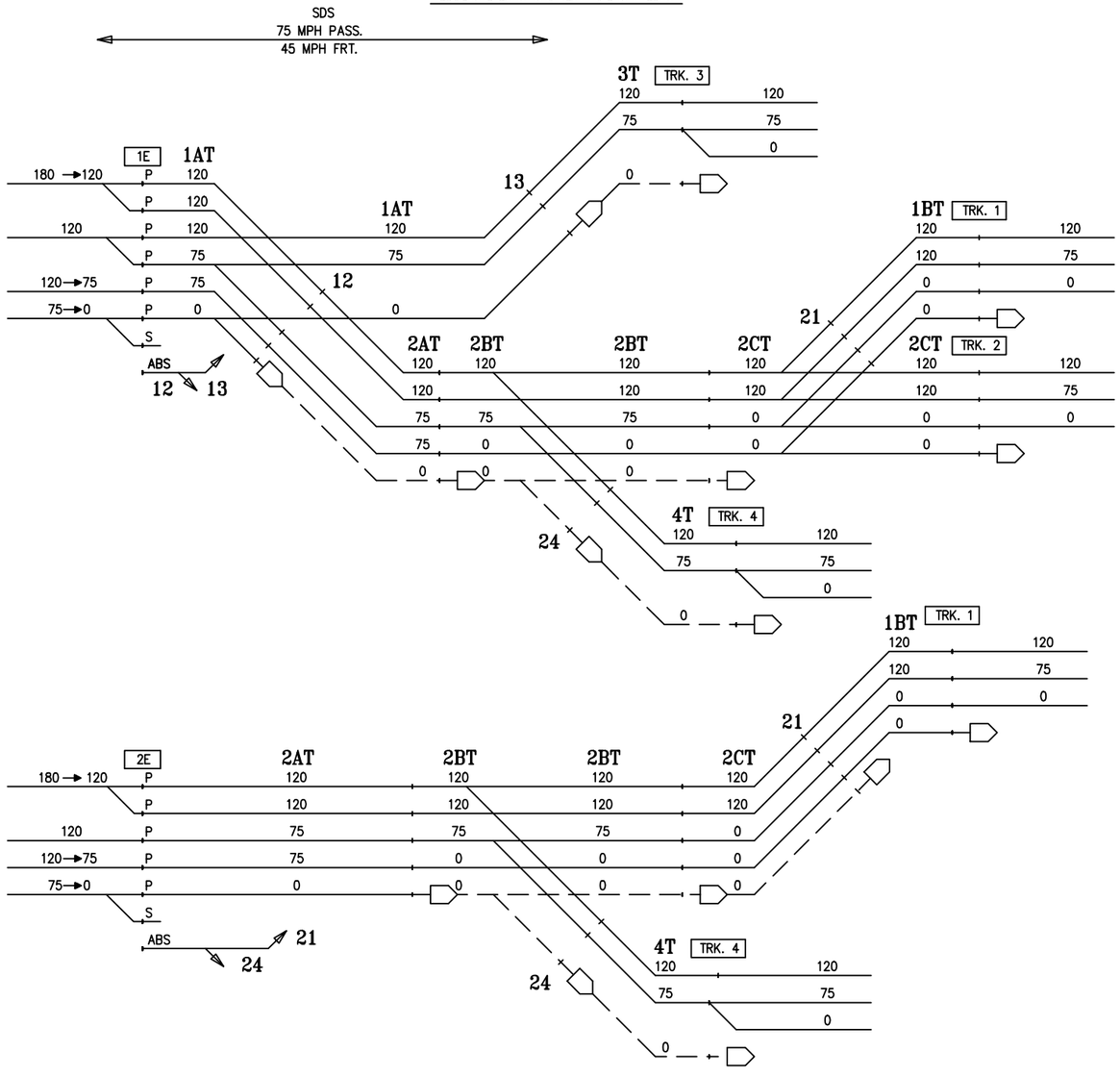

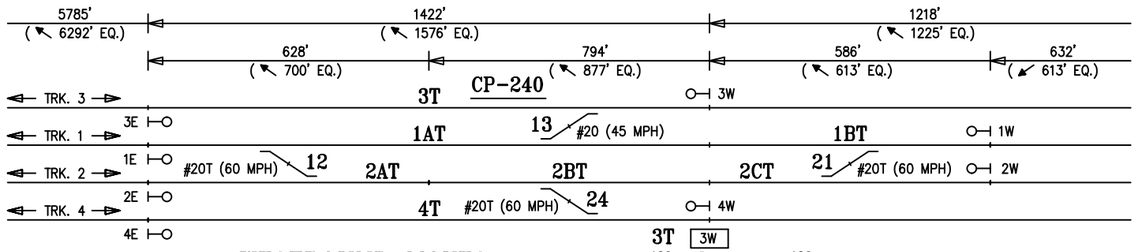

WESTBOUND MOVES

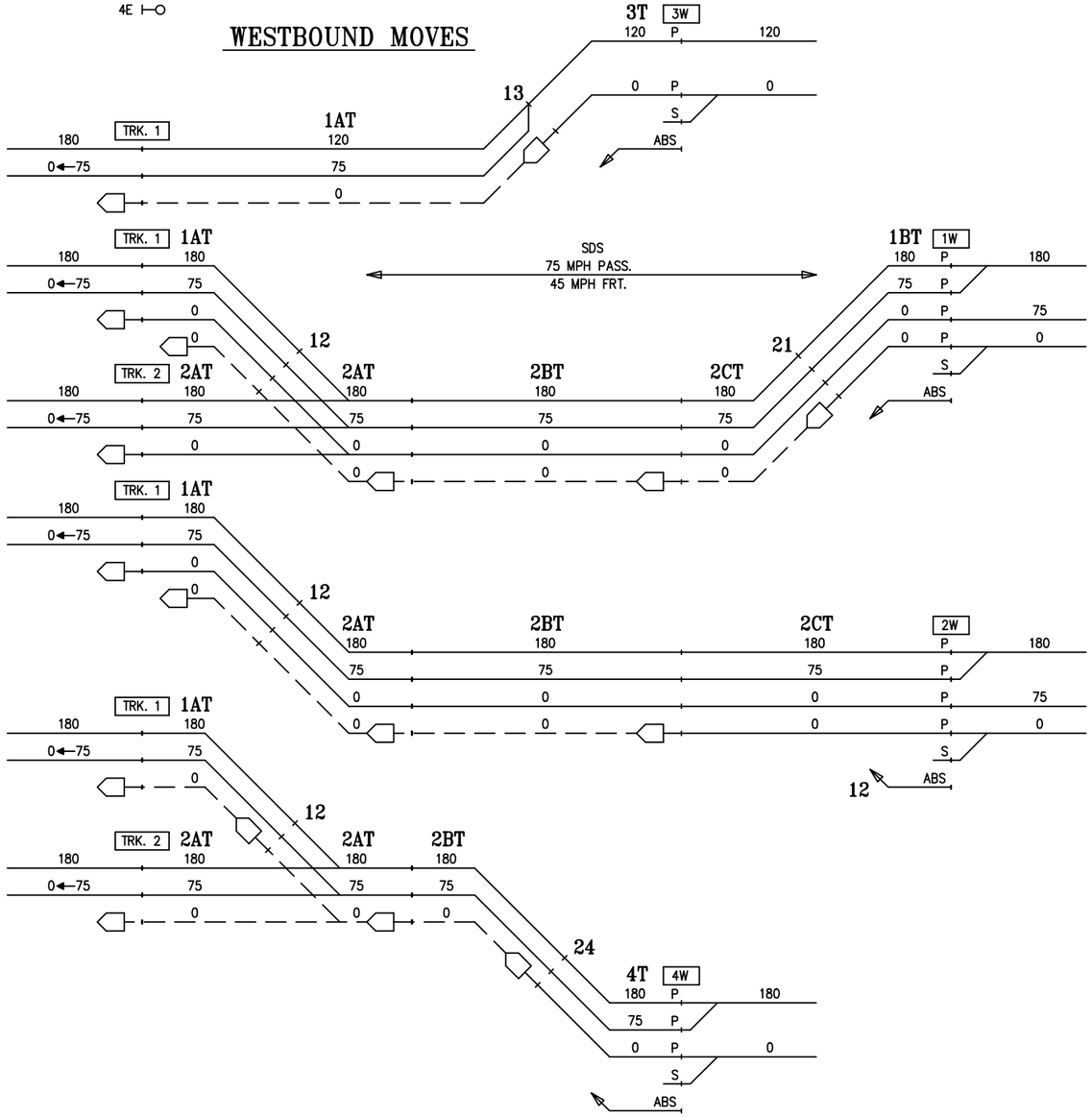

CIRCUIT ENGINEER	SR. SIGNAL ENGR.–DESIGN & STANDARDS	DIRECTOR C&S SYSTEMS	MTA Metro–North Railroad	NEW HAVEN LINE CP 240 DIVERGING ROUTES – STAGE 1	ISSUE DATE: RTG–NHL2 NHS REV. 21 SHEET 1X NHS \users\signal\RTG NHL2 L2001X

Gannett Fleming/CWA

CONTRACT #	PROJECT SHEET #
1000027511	0349

EXISTING — STAGE 1 — EXISTING

TRK 3 & 4 1218′ (1201′ EQ. ↘)
TRK 1 & 2 632′ (641′ EQ. ↗)
1225′
1450′ (1400′ EQ. ↘)
4508′ (4398′ EQ. ↘)
(1091′ EQ. ↘)
P.S 12
SDS
75 MPH PASS. 40 MPH FRT.
85 MPH PASS. 45 MPH FRT.
CB-522
CP 241 (WALK)
304′ (284′ EQ. ↘)
CB-527
CB-532
TO DANBURY BRANCH

3AT 3BT 3CT
1AT 1BT
2AT 2BT
4AT 4BT
3E 1E 2E 4E 6E
5E 53 #10
31 #15
13 #10
21 #10
42 #15
64 #10
35 #10 5W 1N
12 #10
24 #10
3W TRK.3
1W TRK.1
2W TRK.2
4W TRK.4

NEW HAVEN LINE TRK.5
DANBURY BRANCH 1N
5BT 0
180 P 180
75 P 75
0 P 0 S
FOR CONTINUATION TO DANBURY BRANCH SEE RTG-DAN SH. 1

3E 3AT 75 P 75
P 0
0 P 0
P 0
P 0
ABS
3BT 0
35
31
13
1AT 75 0
1BT 120 0
12
24
TRK.3
3CT 120 0 180 75 → 0 (25s)
TRK.1
1BT 120 0 180 75 → 0 (25s)
TRK.2
2BT 0 180 75 → 0 (25s)
TRK.4
4BT 0 180 75 → 0 (25s)

CIRCUIT ENGINEER	SR. SIGNAL ENGR.–DESIGN & STANDARDS	DIRECTOR C&S SYSTEMS	MTA Metro–North Railroad	NEW HAVEN LINE CP 241 DIVERGING ROUTES – TRACK 3 EAST – STAGE 1	ISSUE DATE: 06–01–88 REV. 23 /users/signal/RTG

RTG–NHL2
SHEET 2X
NHL2 L2002X

Gannett Fleming/CWA

CONTRACT # 1000027511
PROJECT SHEET # 0350

EXISTING — STAGE 1 — EXISTING

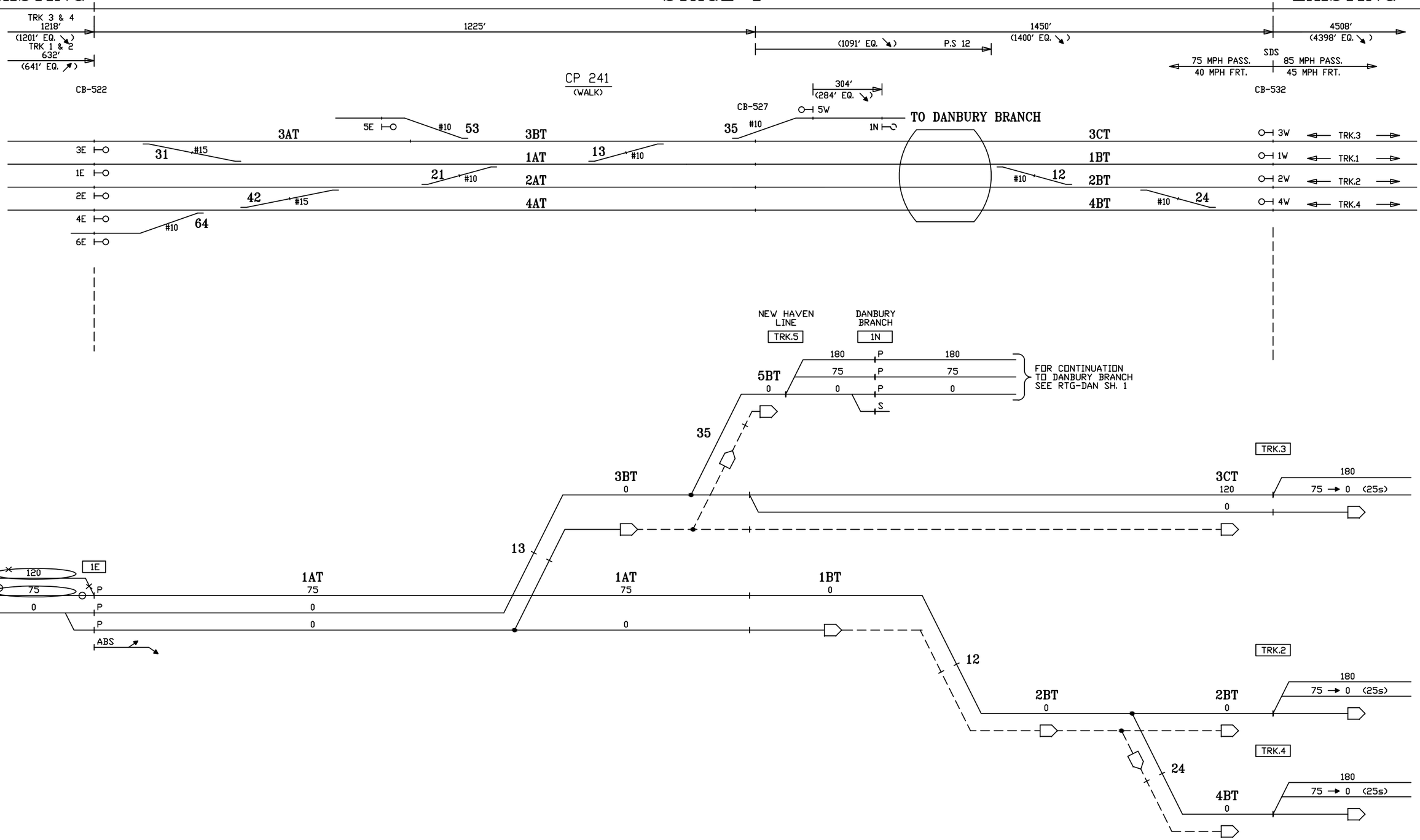

CIRCUIT ENGINEER	SR. SIGNAL ENGR.–DESIGN & STANDARDS	DIRECTOR C&S SYSTEMS	MTA Metro–North Railroad	NEW HAVEN LINE CP 241 DIVERGING ROUTES – TRACK 1 EAST – STAGE 1	ISSUE DATE: 06–01–88 · REV. 23 · /users/signal/RTG RTG–NHL2 · SHEET 3X · NHL2 · L2003X

Gannett Fleming/CWA

CONTRACT # 1000027511 — PROJECT SHEET # 0351

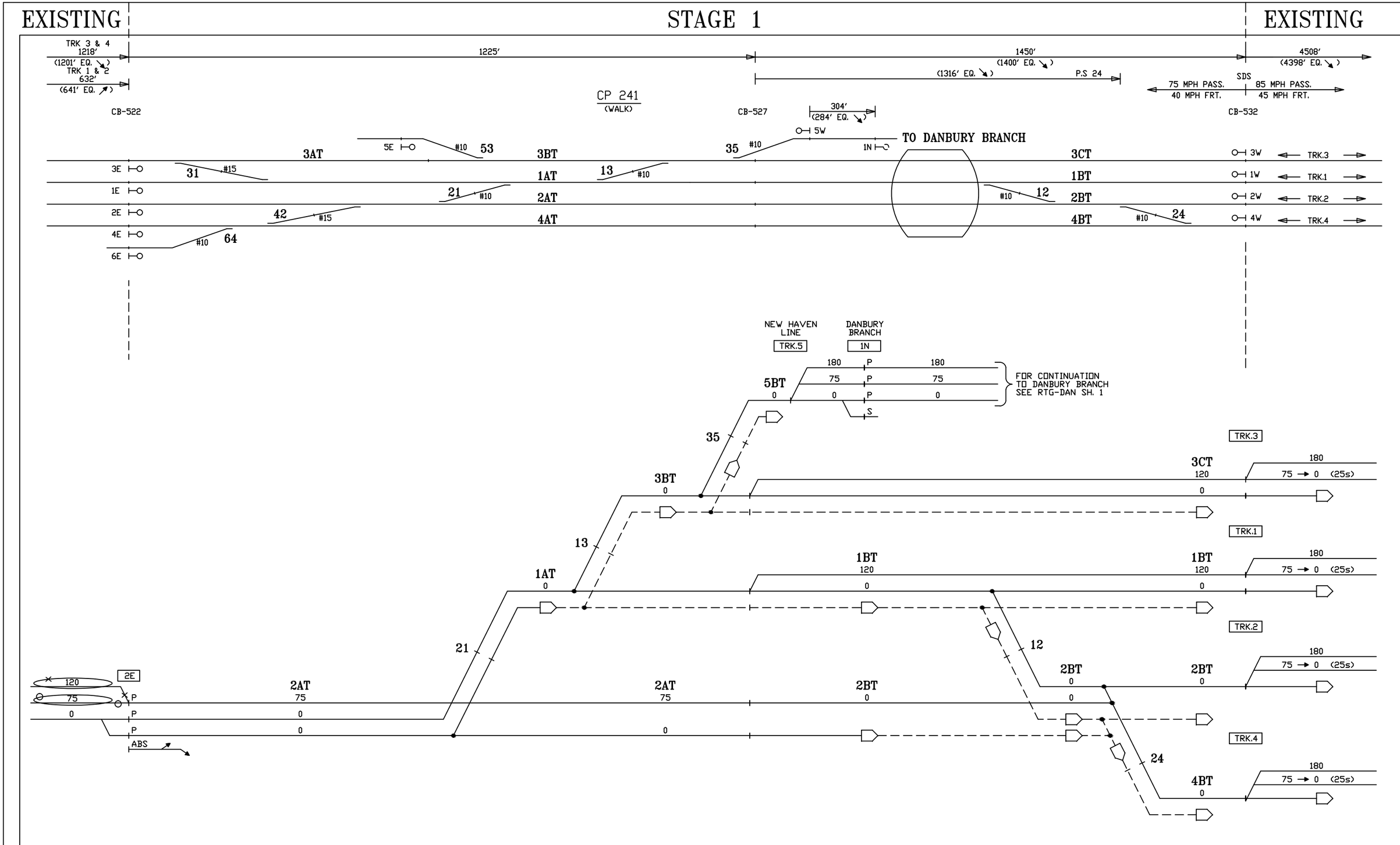

CIRCUIT ENGINEER	SR. SIGNAL ENGR.-DESIGN & STANDARDS	DIRECTOR C&S SYSTEMS	MTA Metro-North Railroad	NEW HAVEN LINE CP 241 DIVERGING ROUTES – TRACK 2 EAST – STAGE 1	ISSUE DATE: 06-01-88 REV. 23 /users/signal/RTG	RTG-NHL2 SHEET 4X NHL2 L2004X

Gannett Fleming/CWA

CONTRACT #	PROJECT SHEET #
1000027511	0352

EXISTING — STAGE 1 — EXISTING

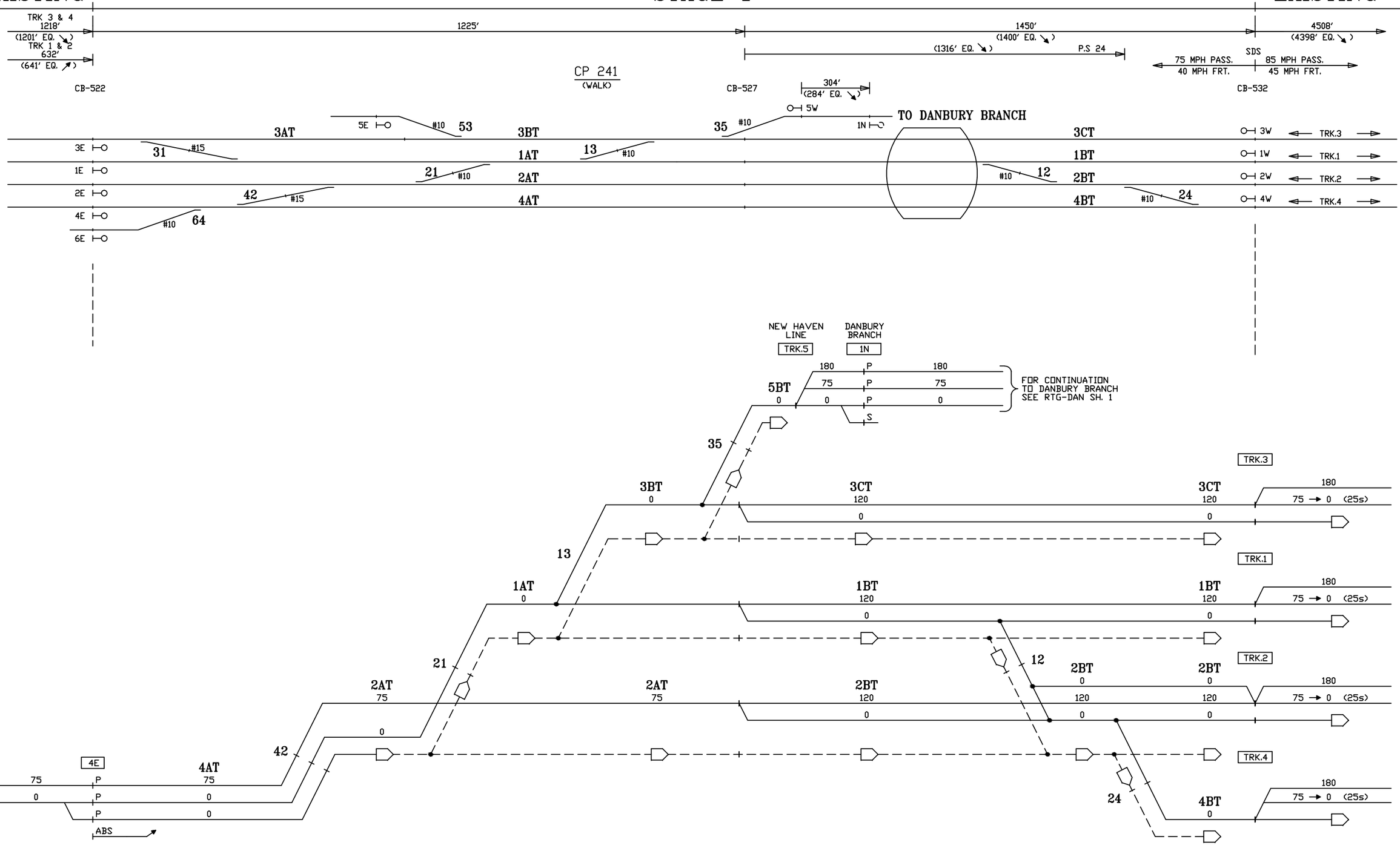

CIRCUIT ENGINEER	SR. SIGNAL ENGR.–DESIGN & STANDARDS	DIRECTOR C&S SYSTEMS	MTA Metro–North Railroad	NEW HAVEN LINE CP 241 DIVERGING ROUTES – TRACK 4 EAST – STAGE 1	ISSUE DATE: 06–01–88 / REV. 23 / /users/signal/RTG RTG–NHL2 / SHEET 5X / NHL2 L2005X

Gannett Fleming/CWA

CONTRACT #	PROJECT SHEET #
1000027511	0353

EXISTING — STAGE 1 — EXISTING

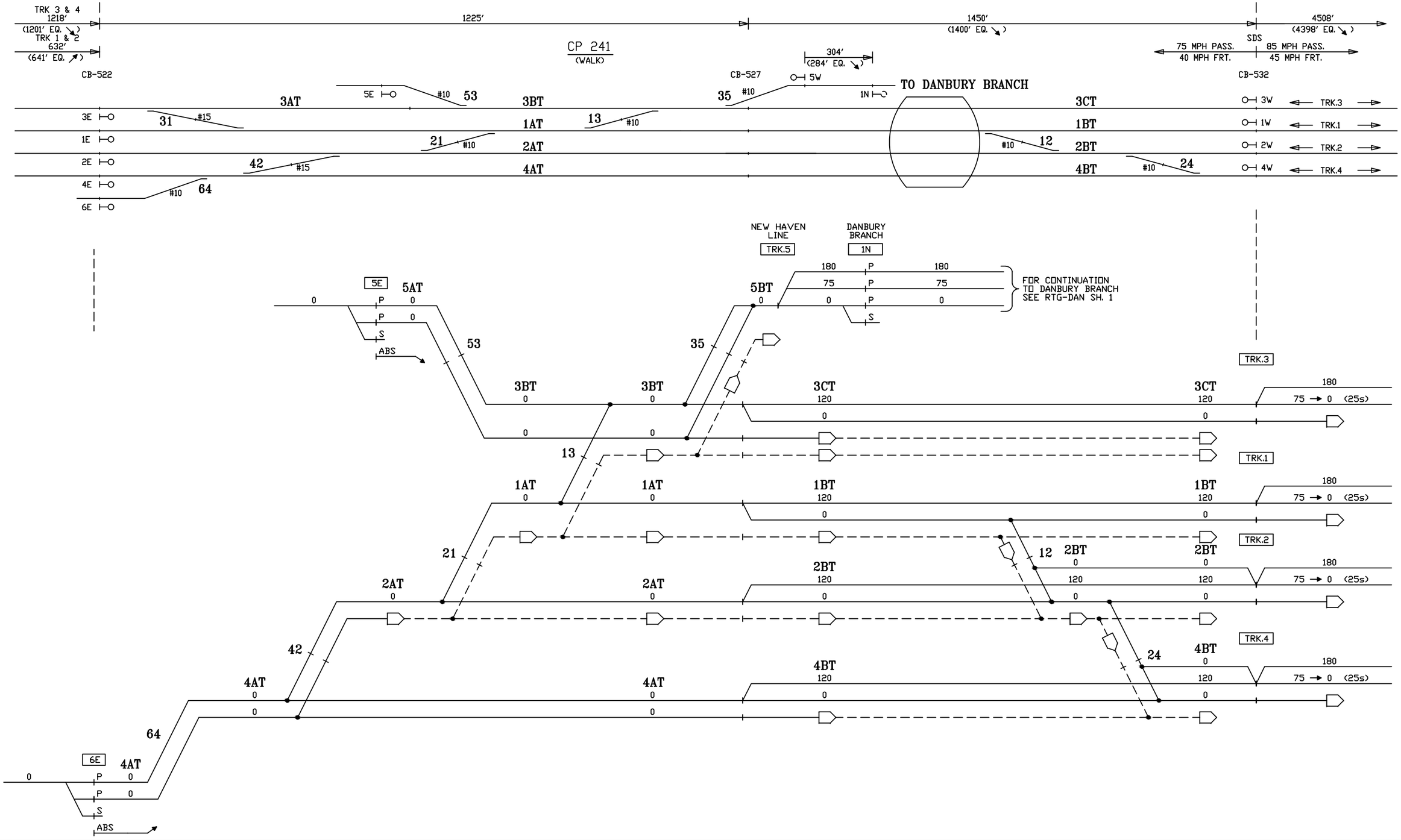

CIRCUIT ENGINEER	SR. SIGNAL ENGR.–DESIGN & STANDARDS	DIRECTOR C&S SYSTEMS	MTA Metro–North Railroad	NEW HAVEN LINE CP 241 DIVERGING ROUTES – TRACKS 5 & 6 EAST – STAGE 1	ISSUE DATE: 06–01–88 REV. 23 /users/signal/RTG RTG–NHL2 SHEET 6X NHL2 L2006X

Gannett Fleming/CWA

CONTRACT # 1000027511

PROJECT SHEET # 0354

EXISTING — STAGE 1 — EXISTING

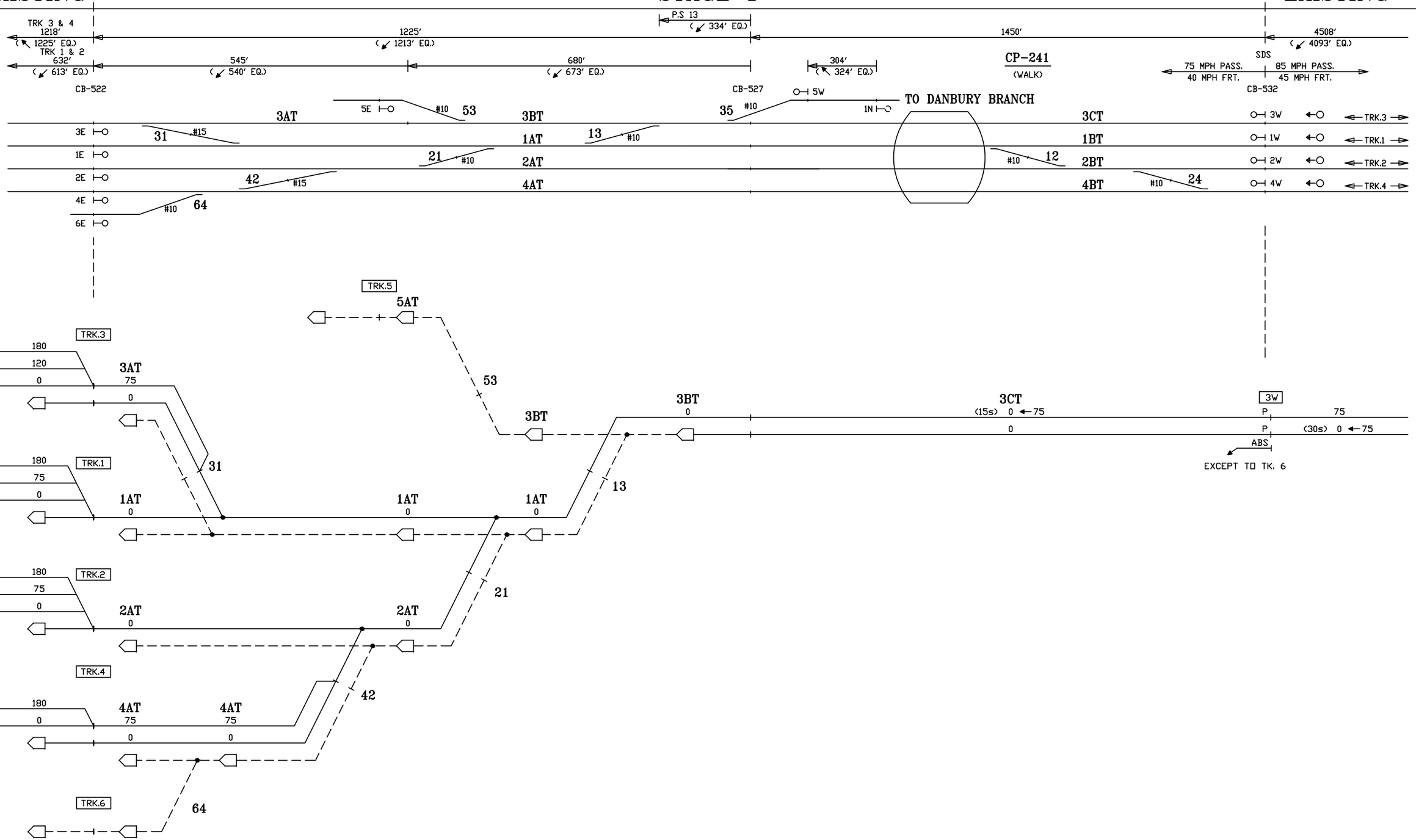

CIRCUIT ENGINEER	SR. SIGNAL ENGR.–DESIGN & STANDARDS	DIRECTOR C&S SYSTEMS	MTA Metro–North Railroad	NEW HAVEN LINE CP 241 DIVERGING ROUTES – TRACK 3 WEST – STAGE 1	ISSUE DATE: 06–01–88 REV. 23 NHS /users/signal/RTG NHL2 L2007X	RTG–NHL2 SHEET 7X

Gannett Fleming/CWA

CONTRACT #	PROJECT SHEET #
1000027511	0355

EXISTING — STAGE 1 — EXISTING

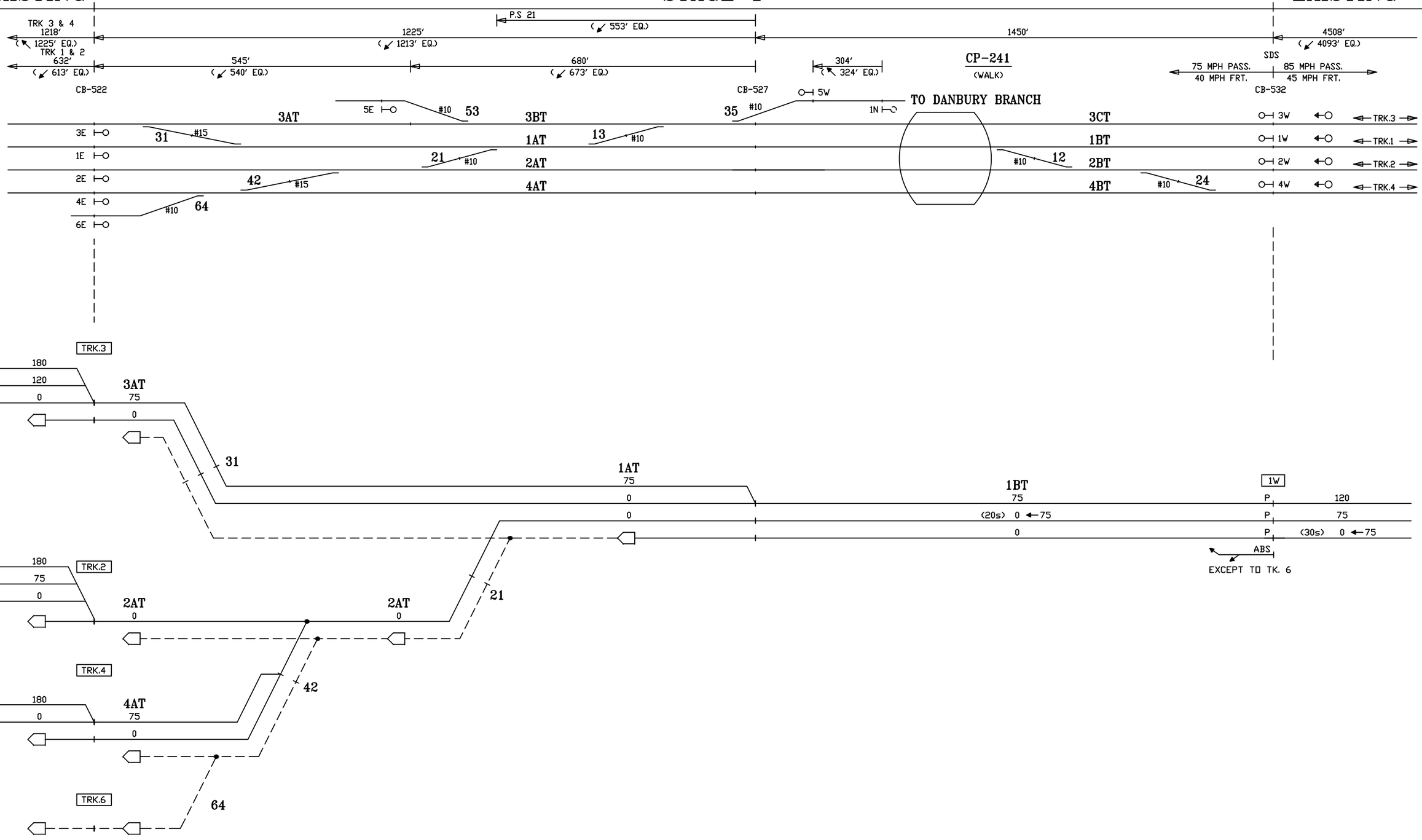

CIRCUIT ENGINEER	SR. SIGNAL ENGR.–DESIGN & STANDARDS	DIRECTOR C&S SYSTEMS	MTA Metro–North Railroad	NEW HAVEN LINE CP 241 DIVERGING ROUTES – TRACK 1 WEST – STAGE 1	ISSUE DATE: 06–01–88 · RTG–NHL2 NHS REV. 23 · SHEET 8X NHS /users/signal/RTG · NHL2 · L2008X

Gannett Fleming/CWA

CONTRACT #	PROJECT SHEET #
1000027511	0356

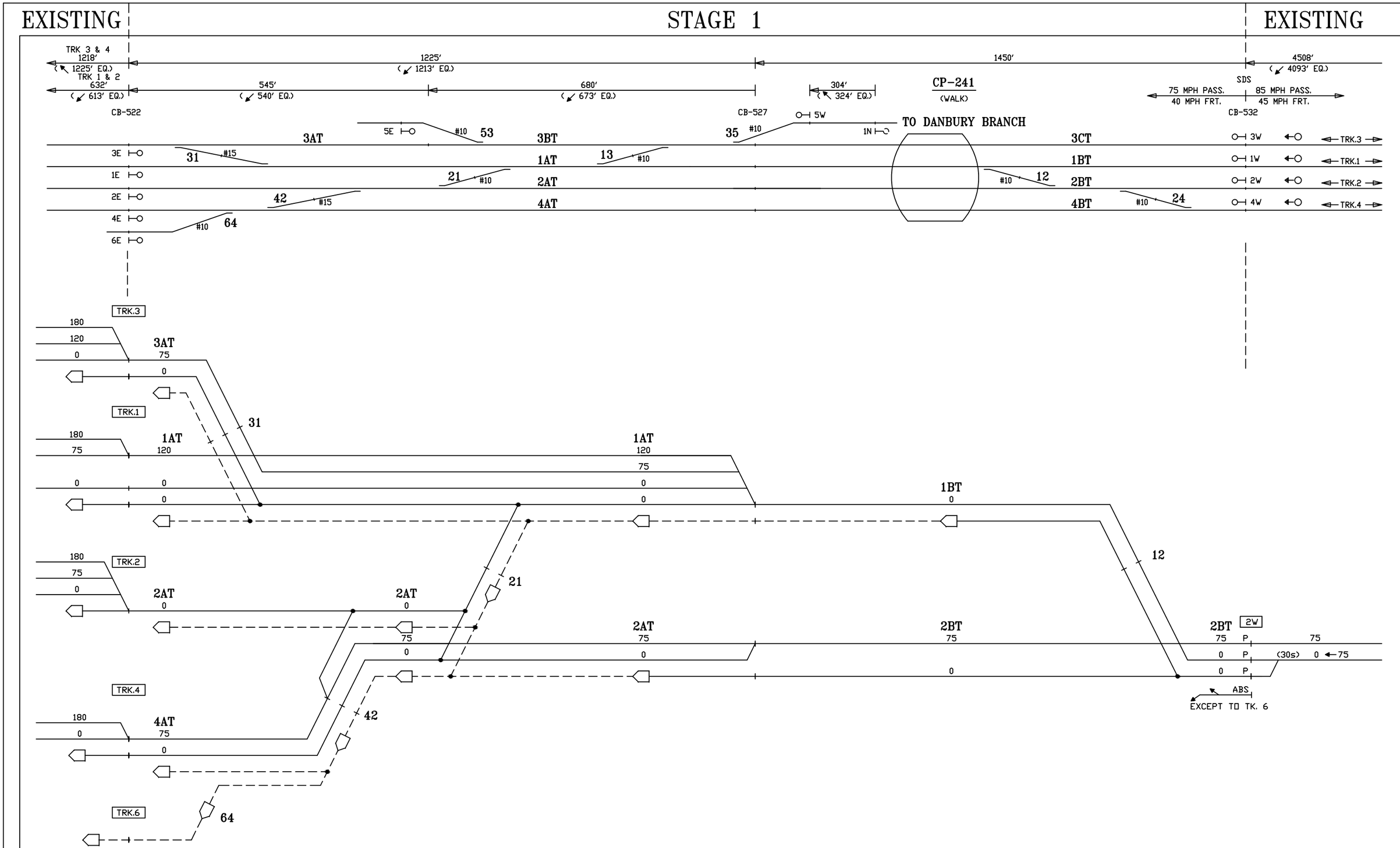

CIRCUIT ENGINEER	SR. SIGNAL ENGR.-DESIGN & STANDARDS	DIRECTOR C&S SYSTEMS	MTA Metro-North Railroad	NEW HAVEN LINE CP 241 DIVERGING ROUTES - TRACK 2 WEST - STAGE 1	ISSUE DATE: 06-01-88 NHS REV. 23 NHS /users/signal/RTG	RTG-NHL2 SHEET 9X NHL2 L2009X

Gannett Fleming/CWA

CONTRACT #	PROJECT SHEET #
1000027511	0357

EXISTING — STAGE 1 — EXISTING

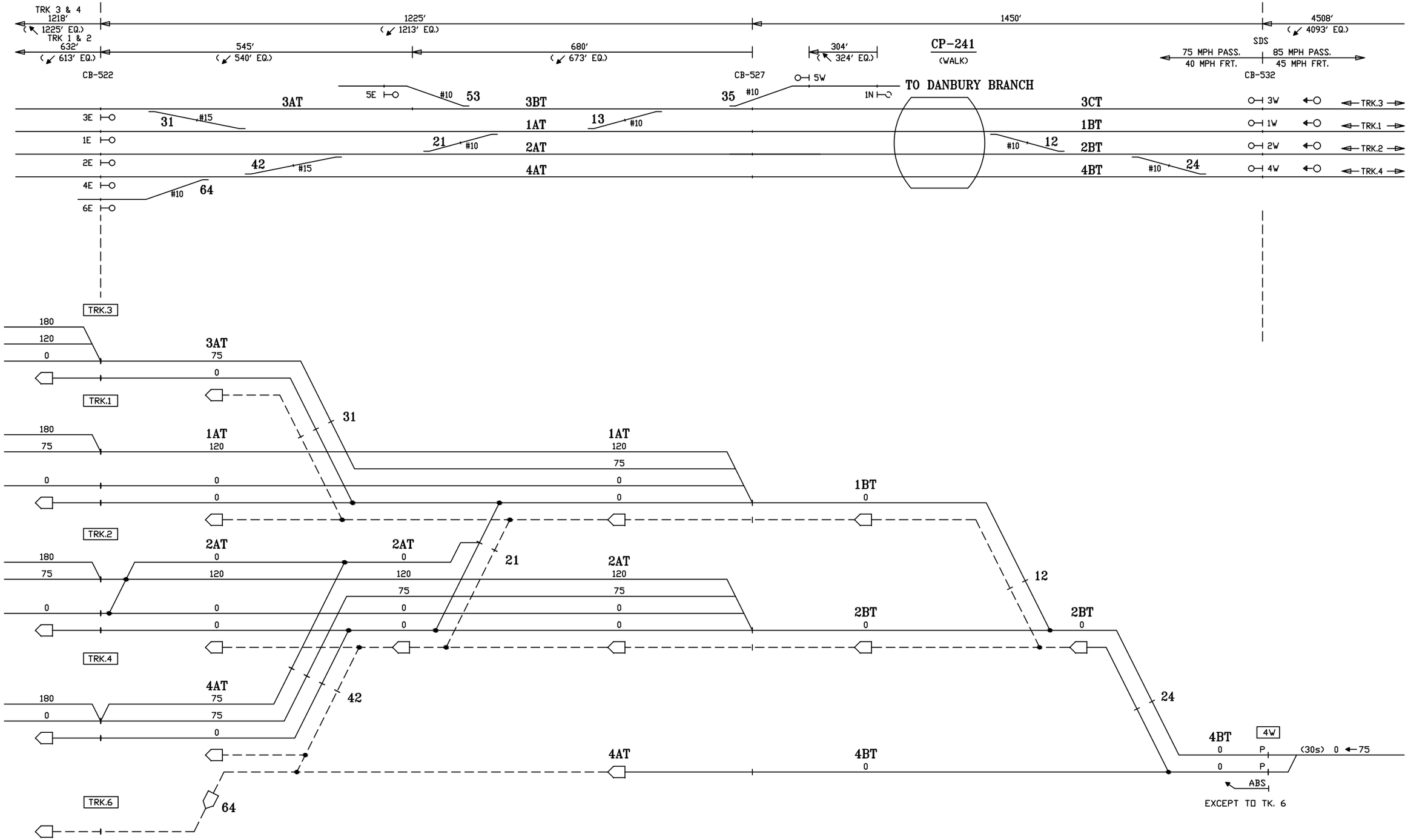

CIRCUIT ENGINEER	SR. SIGNAL ENGR.–DESIGN & STANDARDS	DIRECTOR C&S SYSTEMS	MTA Metro–North Railroad	NEW HAVEN LINE CP 241 DIVERGING ROUTES – TRACK 4 WEST – STAGE 1	ISSUE DATE: 06–01–88 · RTG–NHL2 NHS REV. 23 · SHEET 10X NHS /users/signal/RTG · NHL2 · L2010X

Gannett Fleming / CWA

CONTRACT #	PROJECT SHEET #
1000027511	0358

EXISTING — STAGE 1 — EXISTING

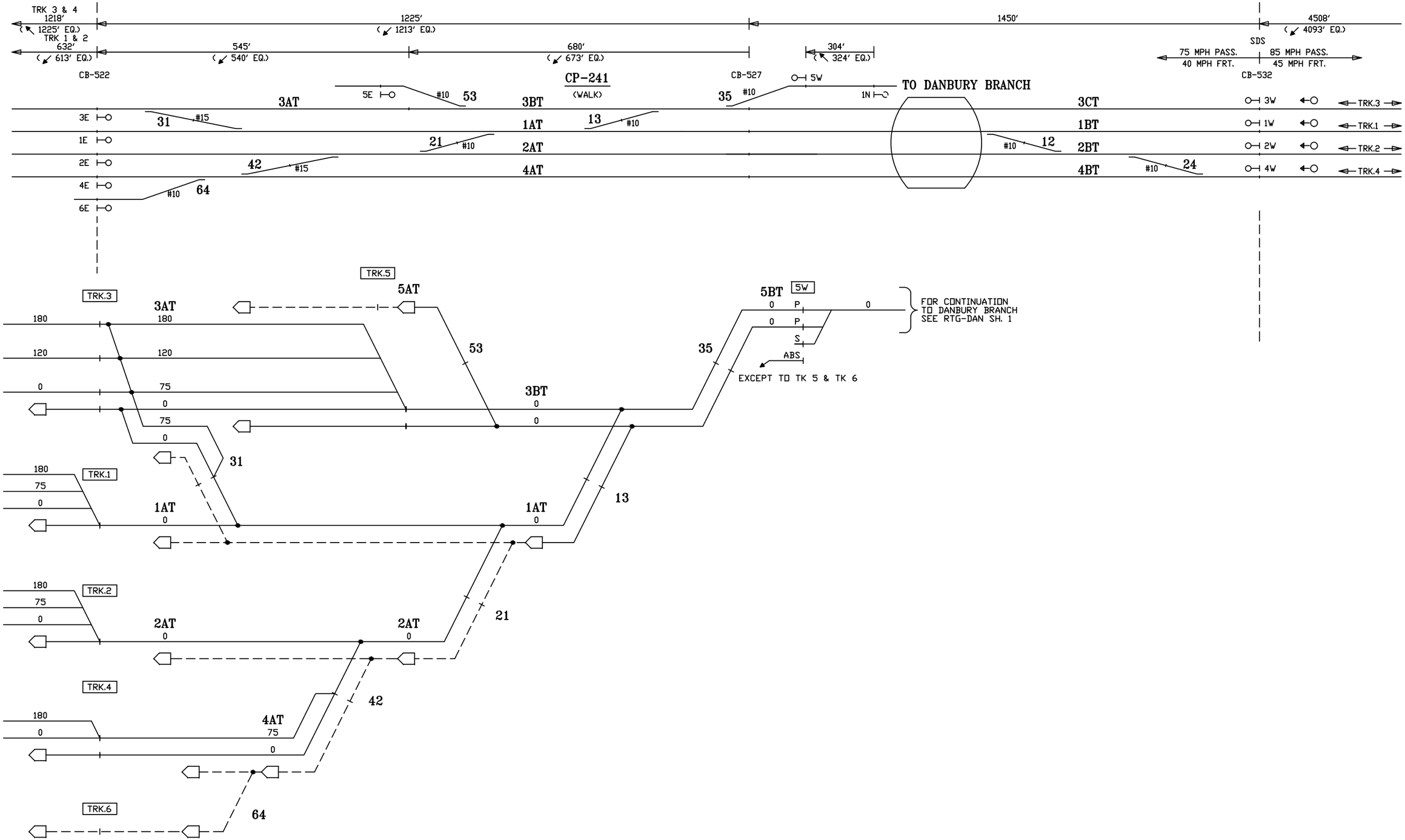

CIRCUIT ENGINEER	SR. SIGNAL ENGR.–DESIGN & STANDARDS	DIRECTOR C&S SYSTEMS	MTA Metro–North Railroad	NEW HAVEN LINE CP 241 DIVERGING ROUTES – TRACK 5 WEST – STAGE 1	ISSUE DATE: 06–01–88 REV. 23 NHS /users/signal/RTG	RTG–NHL2 SHEET 11X NHL2 L2011X

Gannett Fleming / CWA

CONTRACT #	PROJECT SHEET #
1000027511	0359

IN SERVICE — STAGE 2 — EXISTING

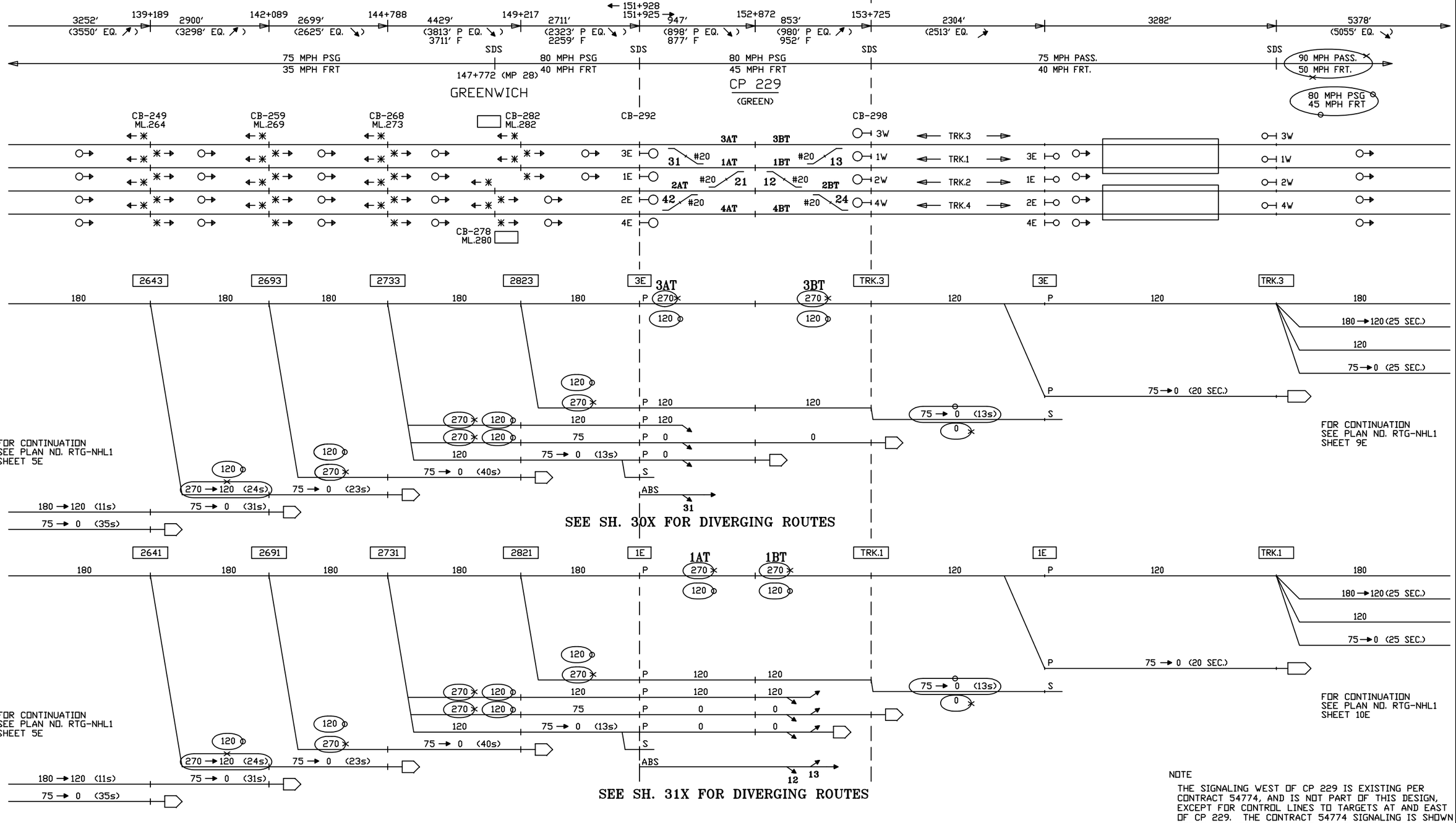

NOTE

THE SIGNALING WEST OF CP 229 IS EXISTING PER CONTRACT 54774, AND IS NOT PART OF THIS DESIGN, EXCEPT FOR CONTROL LINES TO TARGETS AT AND EAST OF CP 229. THE CONTRACT 54774 SIGNALING IS SHOWN FOR INFORMATION ONLY. NO ATC ENFORCEMENT IS PROVIDED FOR FIRST CURVE EAST OF PORT CHESTER.

ATC ENFORCEMENT IS PROVIDED FOR CP 230 MOVABLE BRIDGE.

CIRCUIT ENGINEER	SR. SIGNAL ENGR.–DESIGN & STANDARDS	DIRECTOR C&S SYSTEMS	MTA Metro–North Railroad	NEW HAVEN LINE MP 25.0 TO MP 30.9 ROUTINGS – TRACKS 3 & 1 EAST – STAGE 2	ISSUE DATE: RTG–NHL1 REV. SHEET 7E NHS GAR /users/signal/RTG NHL1 L1007E

Gannett Fleming/CWA

CONTRACT # 1000027511

PROJECT SHEET # 0360

IN SERVICE | STAGE 2 | EXISTING

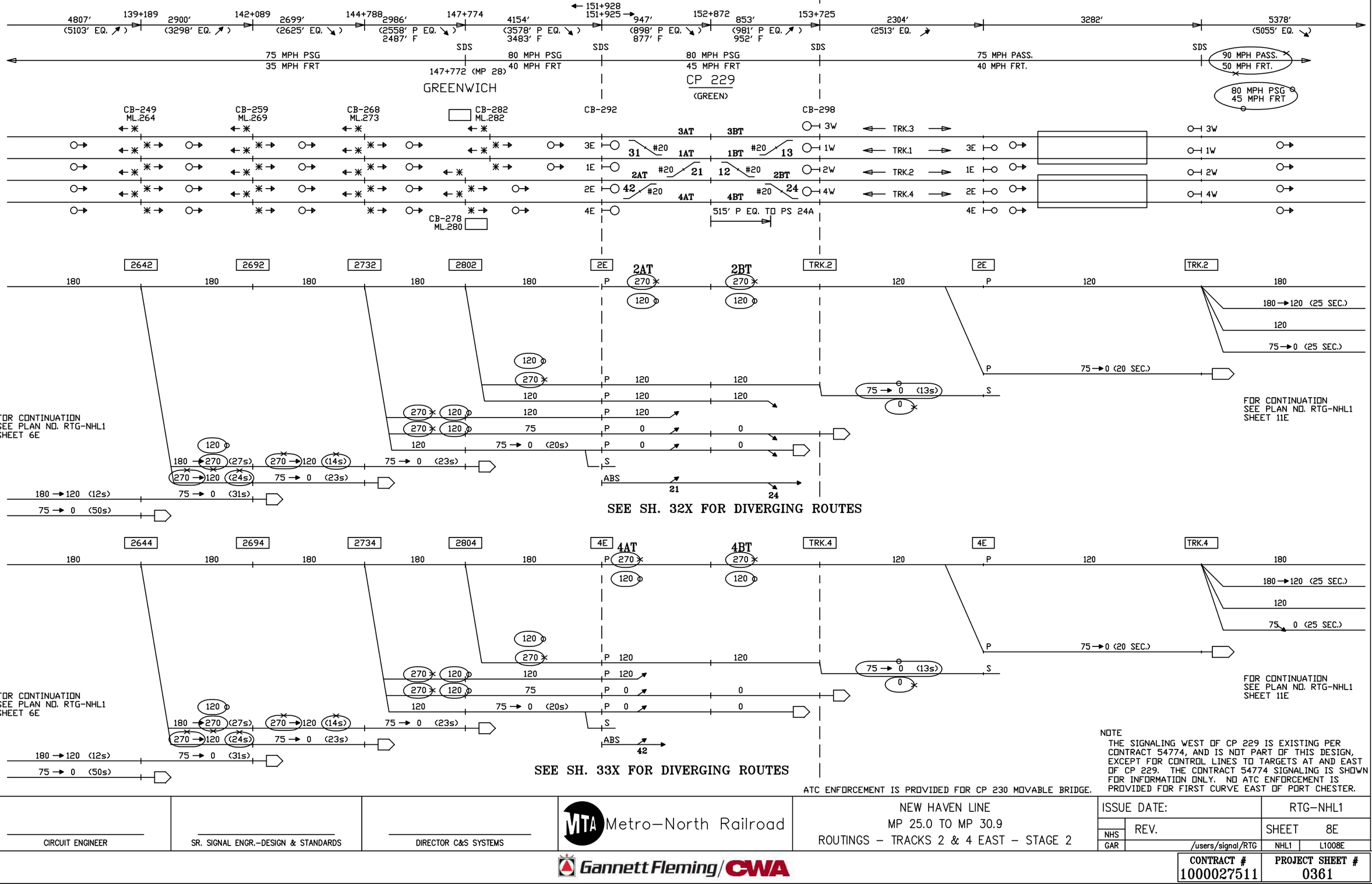

FOR CONTINUATION SEE PLAN NO. RTG-NHL1 SHEET 6E

FOR CONTINUATION SEE PLAN NO. RTG-NHL1 SHEET 11E

SEE SH. 32X FOR DIVERGING ROUTES

SEE SH. 33X FOR DIVERGING ROUTES

ATC ENFORCEMENT IS PROVIDED FOR CP 230 MOVABLE BRIDGE.

NOTE
THE SIGNALING WEST OF CP 229 IS EXISTING PER CONTRACT 54774, AND IS NOT PART OF THIS DESIGN, EXCEPT FOR CONTROL LINES TO TARGETS AT AND EAST OF CP 229. THE CONTRACT 54774 SIGNALING IS SHOWN FOR INFORMATION ONLY. NO ATC ENFORCEMENT IS PROVIDED FOR FIRST CURVE EAST OF PORT CHESTER.

CIRCUIT ENGINEER	SR. SIGNAL ENGR.–DESIGN & STANDARDS	DIRECTOR C&S SYSTEMS	MTA Metro–North Railroad	NEW HAVEN LINE MP 25.0 TO MP 30.9 ROUTINGS – TRACKS 2 & 4 EAST – STAGE 2	ISSUE DATE: / RTG–NHL1 NHS REV. / SHEET 8E GAR /users/signal/RTG / NHL1 / L1008E

Gannett Fleming/CWA

CONTRACT # 1000027511

PROJECT SHEET # 0361

EXISTING

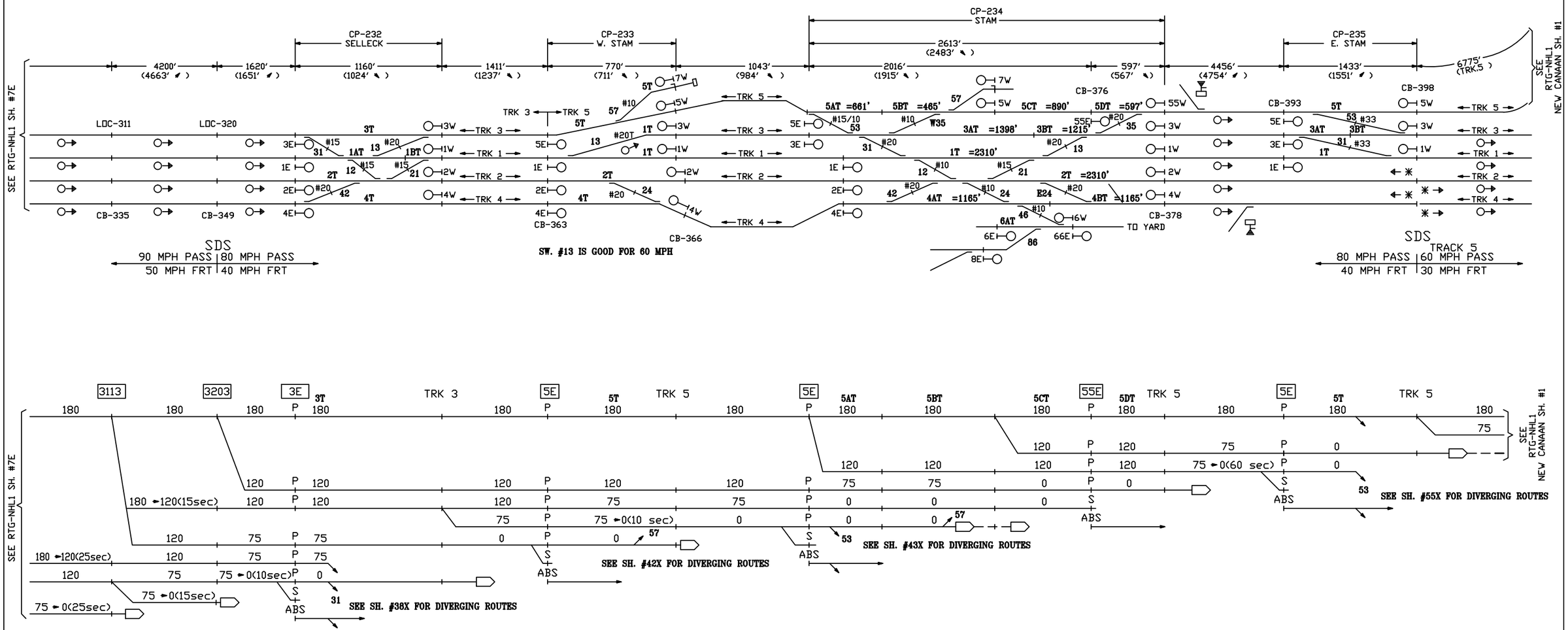

CIRCUIT ENGINEER	SR. SIGNAL ENGR.–DESIGN & STANDARDS	DIRECTOR C&S SYSTEMS	MTA Metro–North Railroad	NEW HAVEN LINE MP 30.9 TO MP 35.0 ROUTINGS – TRACK 3 CHANGES TO TRACK 5 EAST – STAGE 2	ISSUE DATE:	RTG–NHL1
					NHS REV. 11	SHEET 9E
					NHS /users/signal/RTG	NHL1 L1009E

Gannett Fleming/CWA

CONTRACT # 1000027511

PROJECT SHEET # 0362

EXISTING

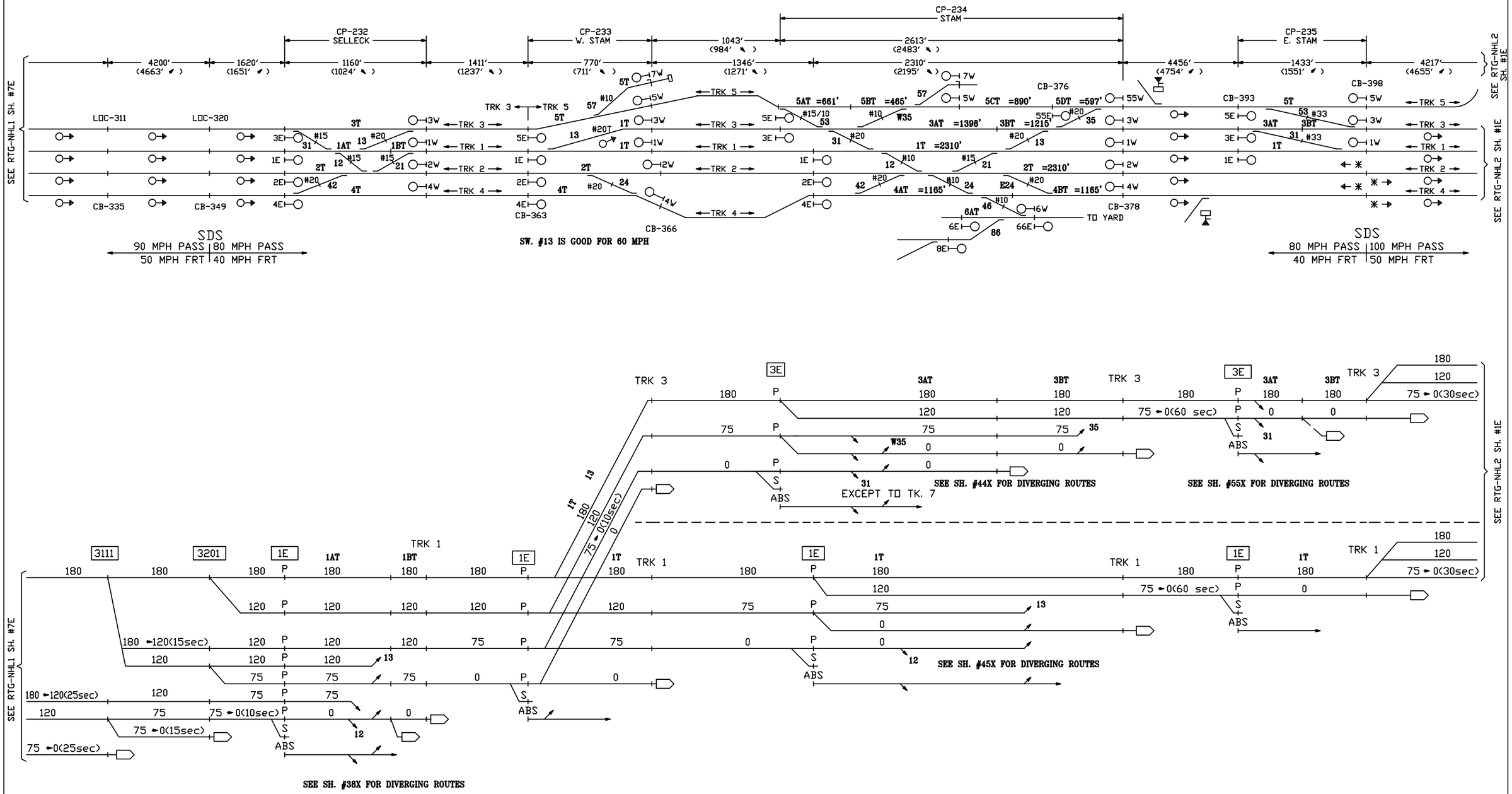

CIRCUIT ENGINEER	SR. SIGNAL ENGR.–DESIGN & STANDARDS	DIRECTOR C&S SYSTEMS	MTA Metro–North Railroad	NEW HAVEN LINE MP 30.9 TO MP 35.0 ROUTINGS – TRACKS 3 & 1 EAST – STAGE 2	ISSUE DATE: 09–01–99 · RTG–NHL1 NHS REV. 11 · SHEET 10E NHS /users/signal/RTG · NHL1 · L1010E

Gannett Fleming/CWA

CONTRACT #	PROJECT SHEET #
1000027511	0363

EXISTING

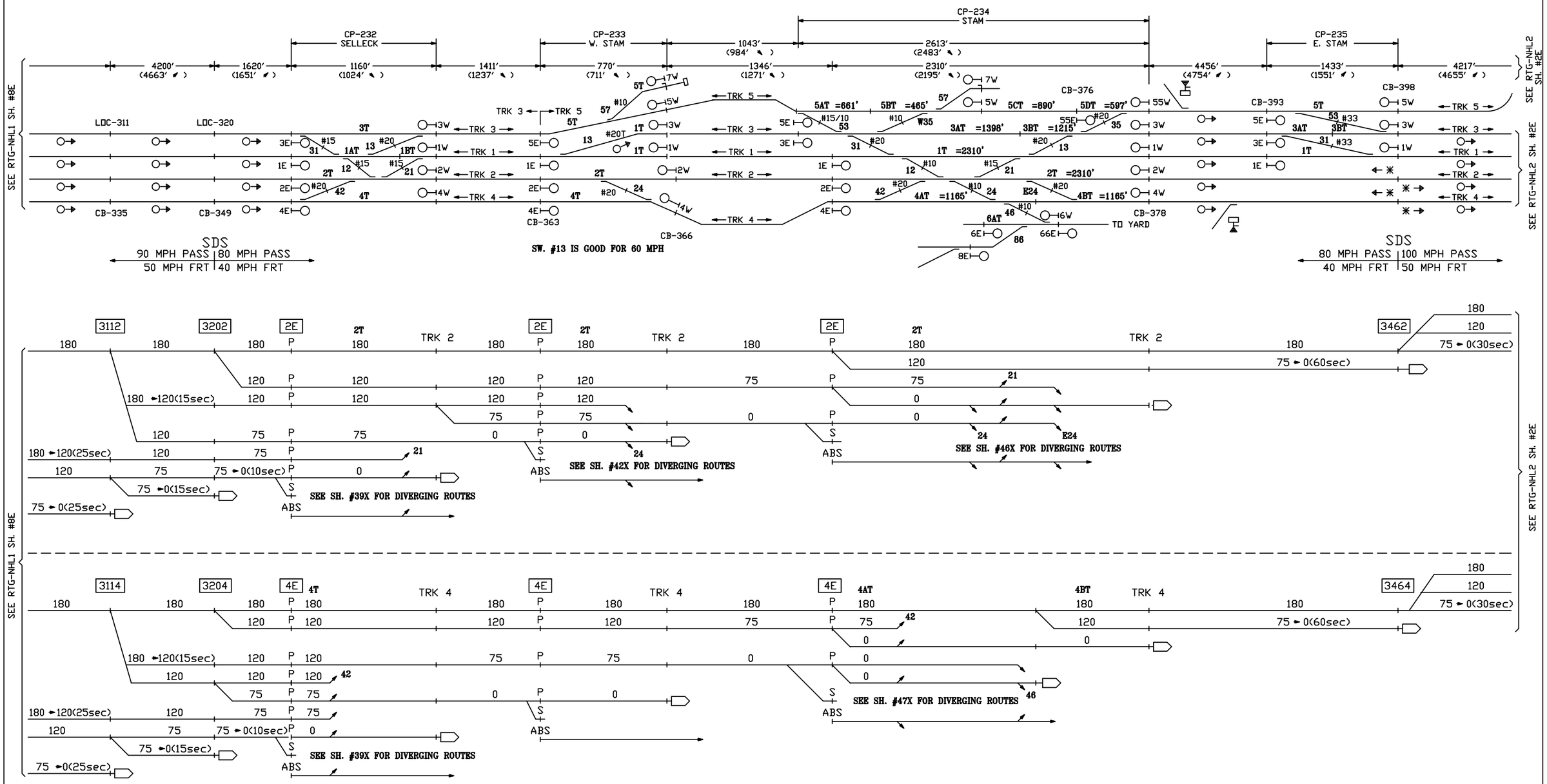

CIRCUIT ENGINEER	SR. SIGNAL ENGR.–DESIGN & STANDARDS	DIRECTOR C&S SYSTEMS	MTA Metro–North Railroad	NEW HAVEN LINE MP 30.9 TO MP 35.0 ROUTINGS – TRACKS 2 & 4 EAST – STAGE 2	ISSUE DATE: 09–01–99 NHS REV. 11 NHS /users/signal/RTG

RTG–NHL1
SHEET 11E
NHL1 L1011E

Gannett Fleming/CWA

CONTRACT # 1000027511

PROJECT SHEET # 0364

IN SERVICE — STAGE 2 — EXISTING

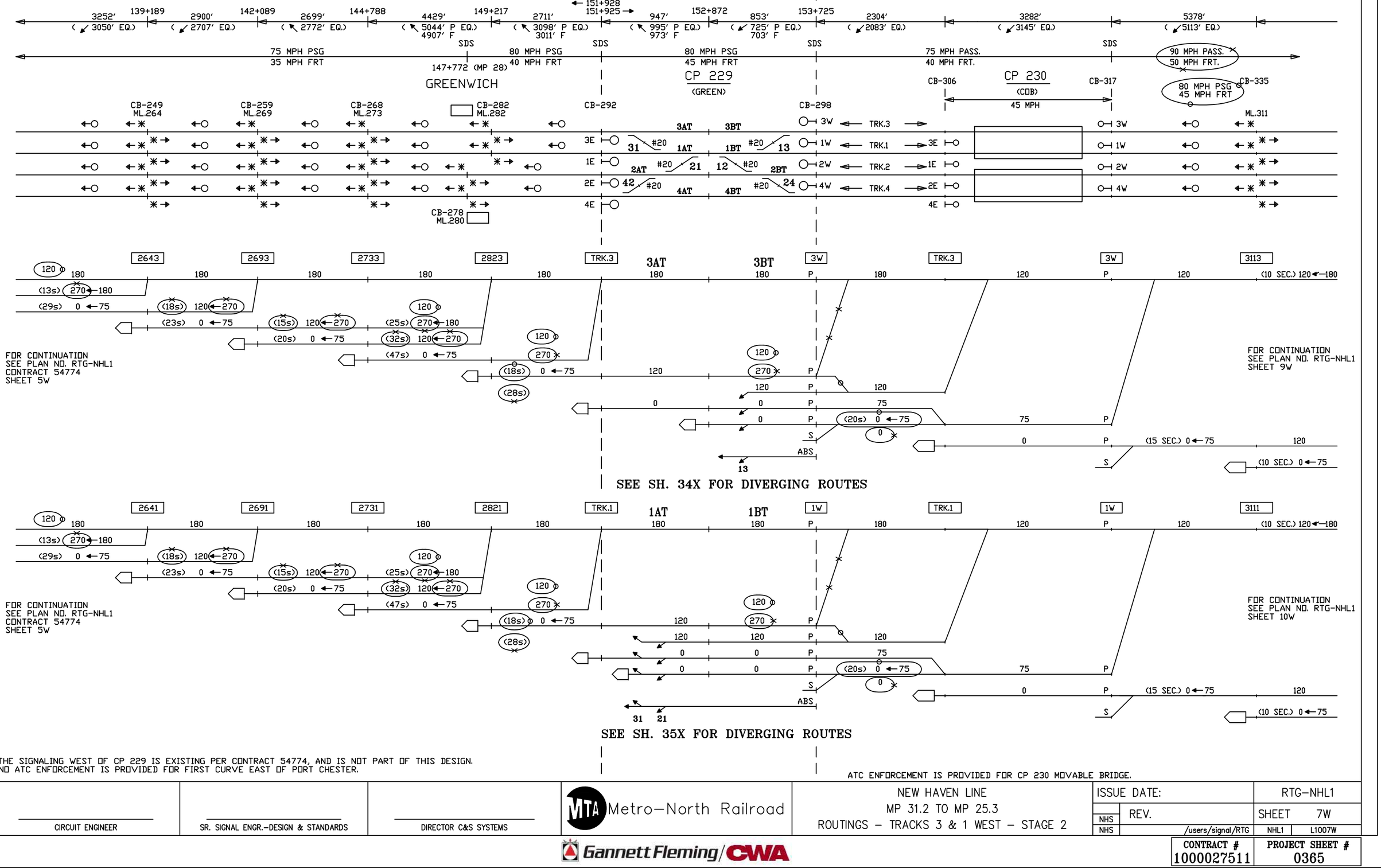

SEE SH. 34X FOR DIVERGING ROUTES

SEE SH. 35X FOR DIVERGING ROUTES

THE SIGNALING WEST OF CP 229 IS EXISTING PER CONTRACT 54774, AND IS NOT PART OF THIS DESIGN.
NO ATC ENFORCEMENT IS PROVIDED FOR FIRST CURVE EAST OF PORT CHESTER.

ATC ENFORCEMENT IS PROVIDED FOR CP 230 MOVABLE BRIDGE.

CIRCUIT ENGINEER	SR. SIGNAL ENGR.–DESIGN & STANDARDS	DIRECTOR C&S SYSTEMS	MTA Metro–North Railroad	NEW HAVEN LINE MP 31.2 TO MP 25.3 ROUTINGS – TRACKS 3 & 1 WEST – STAGE 2	ISSUE DATE:	RTG–NHL1
					REV.	SHEET 7W
					NHS /users/signal/RTG	NHL1 L1007W

Gannett Fleming/CWA

CONTRACT #	PROJECT SHEET #
1000027511	0365

IN SERVICE | STAGE 2 | EXISTING

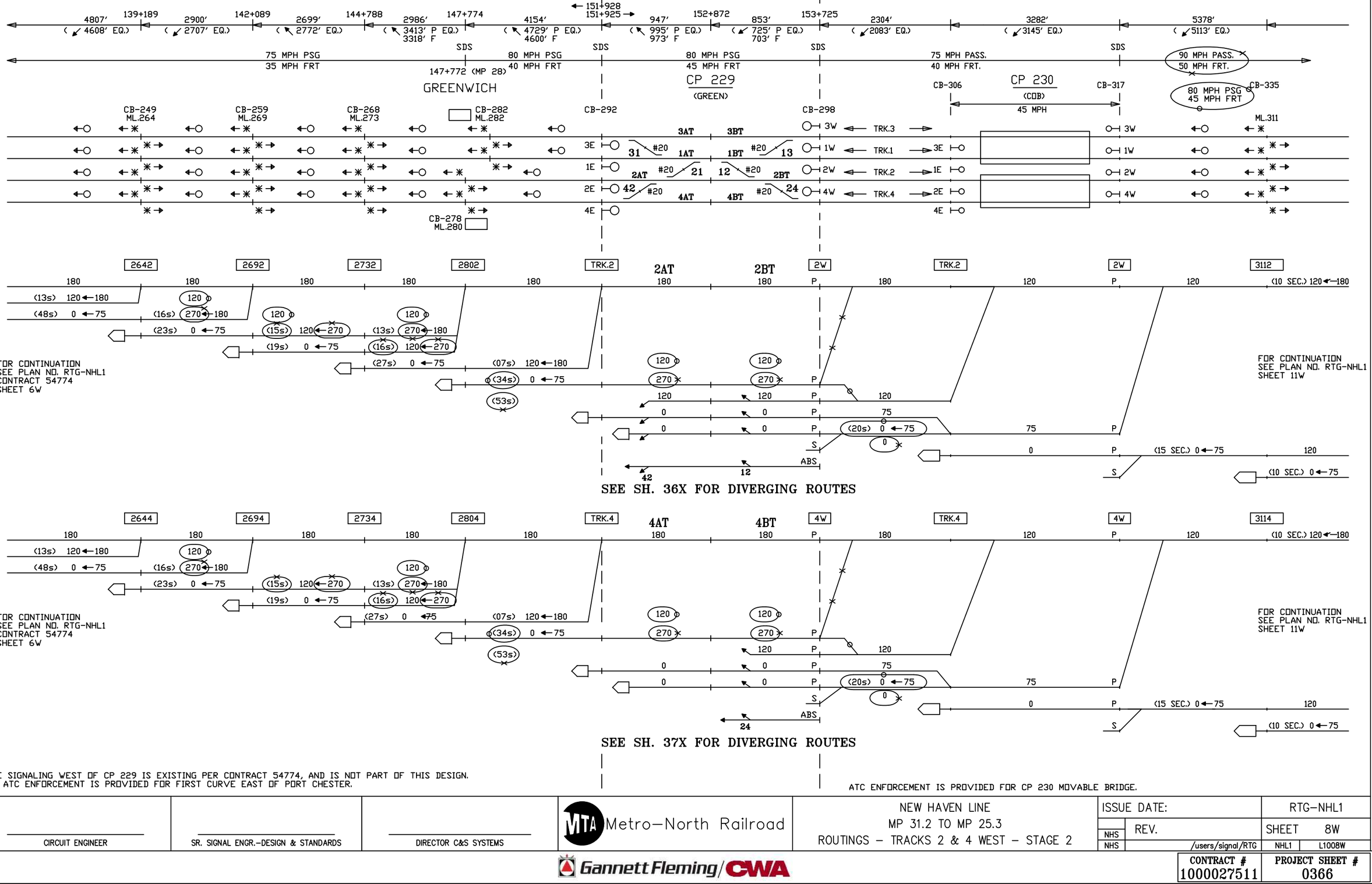

THE SIGNALING WEST OF CP 229 IS EXISTING PER CONTRACT 54774, AND IS NOT PART OF THIS DESIGN.
NO ATC ENFORCEMENT IS PROVIDED FOR FIRST CURVE EAST OF PORT CHESTER.

ATC ENFORCEMENT IS PROVIDED FOR CP 230 MOVABLE BRIDGE.

CIRCUIT ENGINEER	SR. SIGNAL ENGR.–DESIGN & STANDARDS	DIRECTOR C&S SYSTEMS	MTA Metro–North Railroad	NEW HAVEN LINE MP 31.2 TO MP 25.3 ROUTINGS – TRACKS 2 & 4 WEST – STAGE 2	ISSUE DATE: / REV. / /users/signal/RTG RTG–NHL1 SHEET 8W NHL1 L1008W

Gannett Fleming/CWA

CONTRACT # 1000027511

PROJECT SHEET # 0366

EXISTING

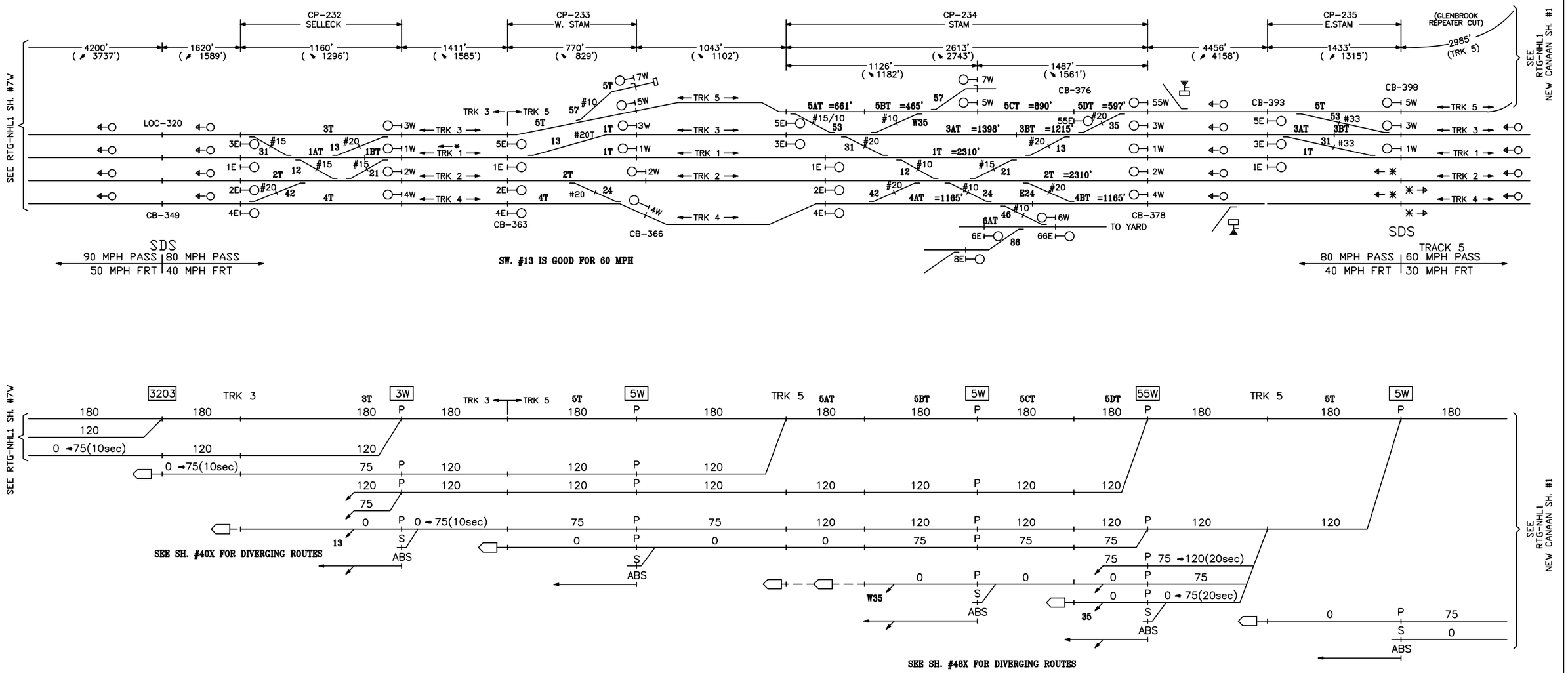

CIRCUIT ENGINEER	SR. SIGNAL ENGR.–DESIGN & STANDARDS	DIRECTOR C&S SYSTEMS	Metro–North Railroad	NEW HAVEN LINE MP 35.6 TO MP 31.2 ROUTINGS – TRACK 5 CHANGES TO TRACK 3 WEST – STAGE 2	ISSUE DATE: / RTG–NHL1 NHS REV. 11 / SHEET 9W NHS /users/signal/RTG / NHL1 / L1009W

Gannett Fleming/CWA

CONTRACT #	PROJECT SHEET #
1000027511	0367

EXISTING

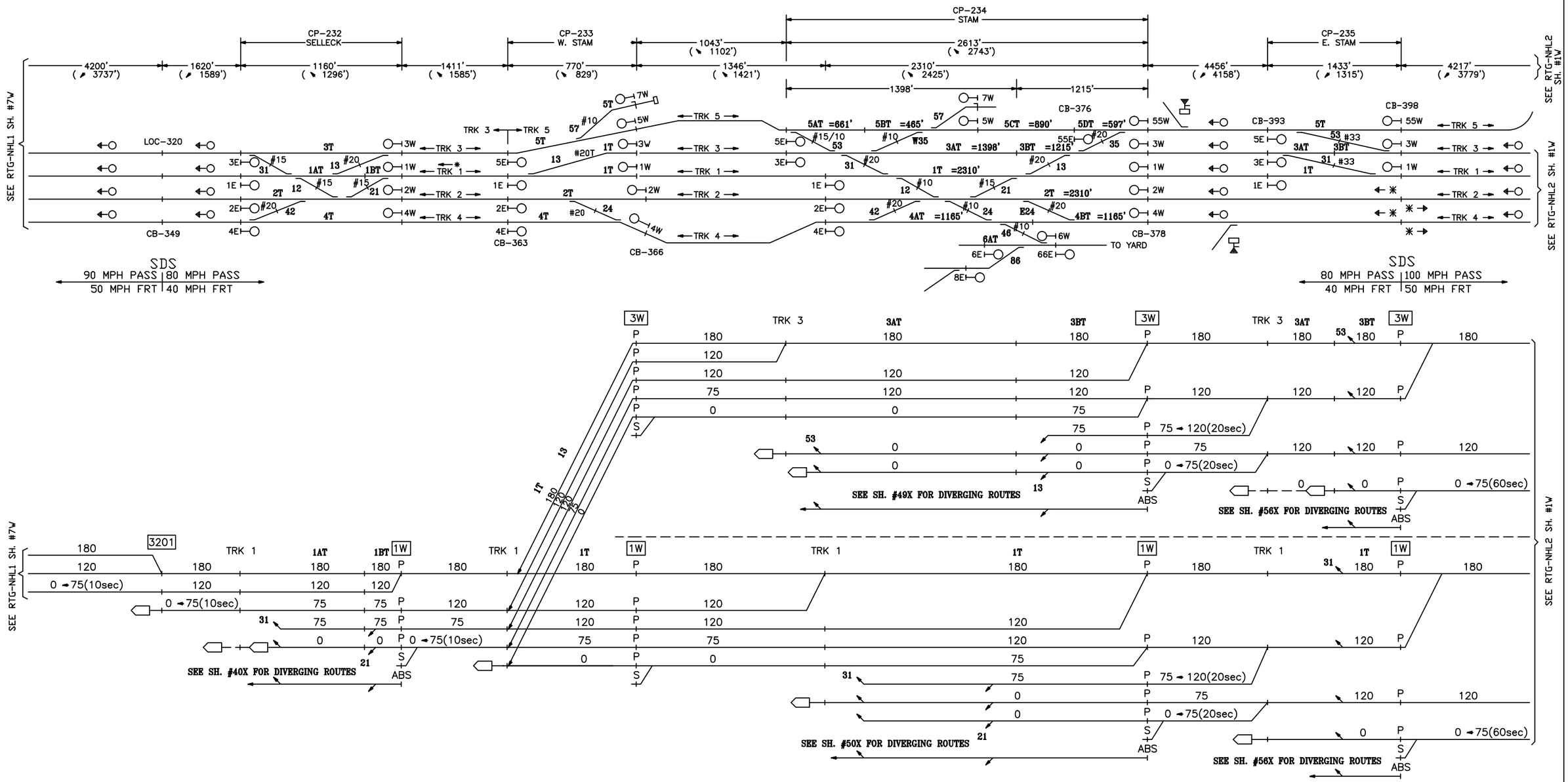

CIRCUIT ENGINEER	SR. SIGNAL ENGR.–DESIGN & STANDARDS	DIRECTOR C&S SYSTEMS	Metro–North Railroad	NEW HAVEN LINE MP 35.6 TO MP 31.2 ROUTINGS – TRACKS 3 & 1 WEST – STAGE 2	ISSUE DATE: 09–01–99 · RTG–NHL1 NHS REV. 11 · SHEET 10W NHS /users/signal/RTG · NHL1 · L1010W

Gannett Fleming/CWA

CONTRACT # 1000027511 · PROJECT SHEET # 0368

EXISTING

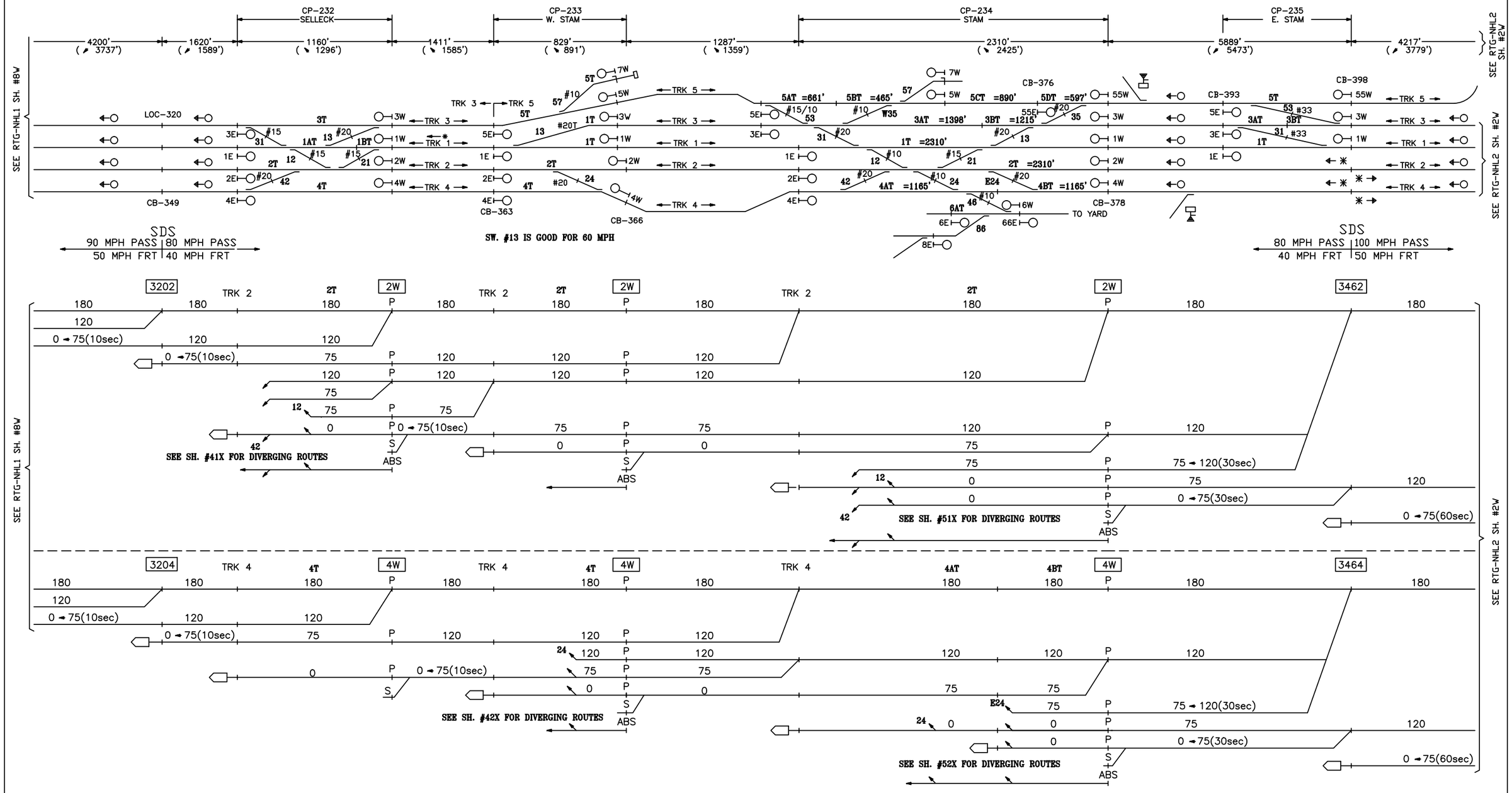

CIRCUIT ENGINEER	SR. SIGNAL ENGR.–DESIGN & STANDARDS	DIRECTOR C&S SYSTEMS	Metro–North Railroad	NEW HAVEN LINE MP 35.6 TO MP 31.2 ROUTINGS – TRACKS 2 & 4 WEST – STAGE 2	ISSUE DATE: 09–01–99 · RTG–NHL1 NHS REV. 11 · SHEET 11W NHS /users/signal/RTG · NHL1 · L1011W

Gannett Fleming/CWA

CONTRACT # 1000027511 · PROJECT SHEET # 0369

STAGE 2

EXISTING

(TRK. 3 & 1) ← 151+928
151+925 →
2711′
(2323′ P / 2259′ F EQ.↘)
4154′
(3578′ P / 3483′ F EQ.↘)
(TRK. 2 & 4)
CB-292

947′
(898′ P / 877′ F EQ.↘)

152+872

853′
(980′ P / 952′ F EQ.↗)

153+725
2304′
(2513′ EQ.↗)

CP 229
(GREEN)

CB-298

3E
1E
2E
4E

3AT 3BT
1AT 1BT
2AT 2BT
4AT 4BT

3W TRK.3
1W TRK.1
2W TRK.2
4W TRK.4

#20 31
#20 21
#20 42
#20 13
12 #20
#20 24

TRK.3

3E
3AT
120 P 120
75 P 0
75 → 0 (13s) P 0
ABS

31

3BT
120
0
120
75 → 0 (13s)

13

TRK.1

1AT
120
0

1BT
270 120
120
0

1BT
120 270
120
0
120
75 → 0 (13s)

12

TRK.2

2BT
120
0

2BT
120
0
120
75 → 0 (13s)

24

TRK.4

4BT
120
0
120
75 → 0 (13s)

CIRCUIT ENGINEER	SR. SIGNAL ENGR.–DESIGN & STANDARDS	DIRECTOR C&S SYSTEMS	MTA Metro–North Railroad	NEW HAVEN LINE CP 229 DIVERGING ROUTES – TRACK 3 EAST – STAGE 2	ISSUE DATE: / REV. / /users/signal/RTG	RTG–NHL1 SHEET 30X NHL1 L1030X

Gannett Fleming/CWA

CONTRACT # 1000027511

PROJECT SHEET # 0370

STAGE 2

EXISTING

(TRK. 3 & 1)
151+928
151+925
2711'
(2323' P / 2259' F EQ.)
4154'
(3578' P / 3483' F EQ.)
(TRK. 2 & 4)
CB-292
947'
(898' P / 877' F EQ.)
152+872
CP 229
(GREEN)
853'
(980' P / 952' F EQ.)
153+725
2304'
(2513' EQ.)
CB-298

3E
1E
2E
4E
3AT
3BT
1AT
1BT
2AT
2BT
4AT
4BT
3W
1W
2W
4W
TRK.3
TRK.1
TRK.2
TRK.4
31
21
42
12
13
24
#20

1E
P
120
75
75 → 0 (13s)
ABS
1AT
1BT
0

TRK.3
3BT
120
75 → 0 (13s)
13
TRK.2
2BT
12
TRK.4
4BT
24

CIRCUIT ENGINEER	SR. SIGNAL ENGR.–DESIGN & STANDARDS	DIRECTOR C&S SYSTEMS	MTA Metro–North Railroad	NEW HAVEN LINE CP 229 DIVERGING ROUTES – TRACK 1 EAST – STAGE 2	ISSUE DATE: / REV. / /users/signal/RTG RTG–NHL1 SHEET 31X NHL1 L1031X

Gannett Fleming/CWA

CONTRACT # 1000027511

PROJECT SHEET # 0371

STAGE 2

EXISTING

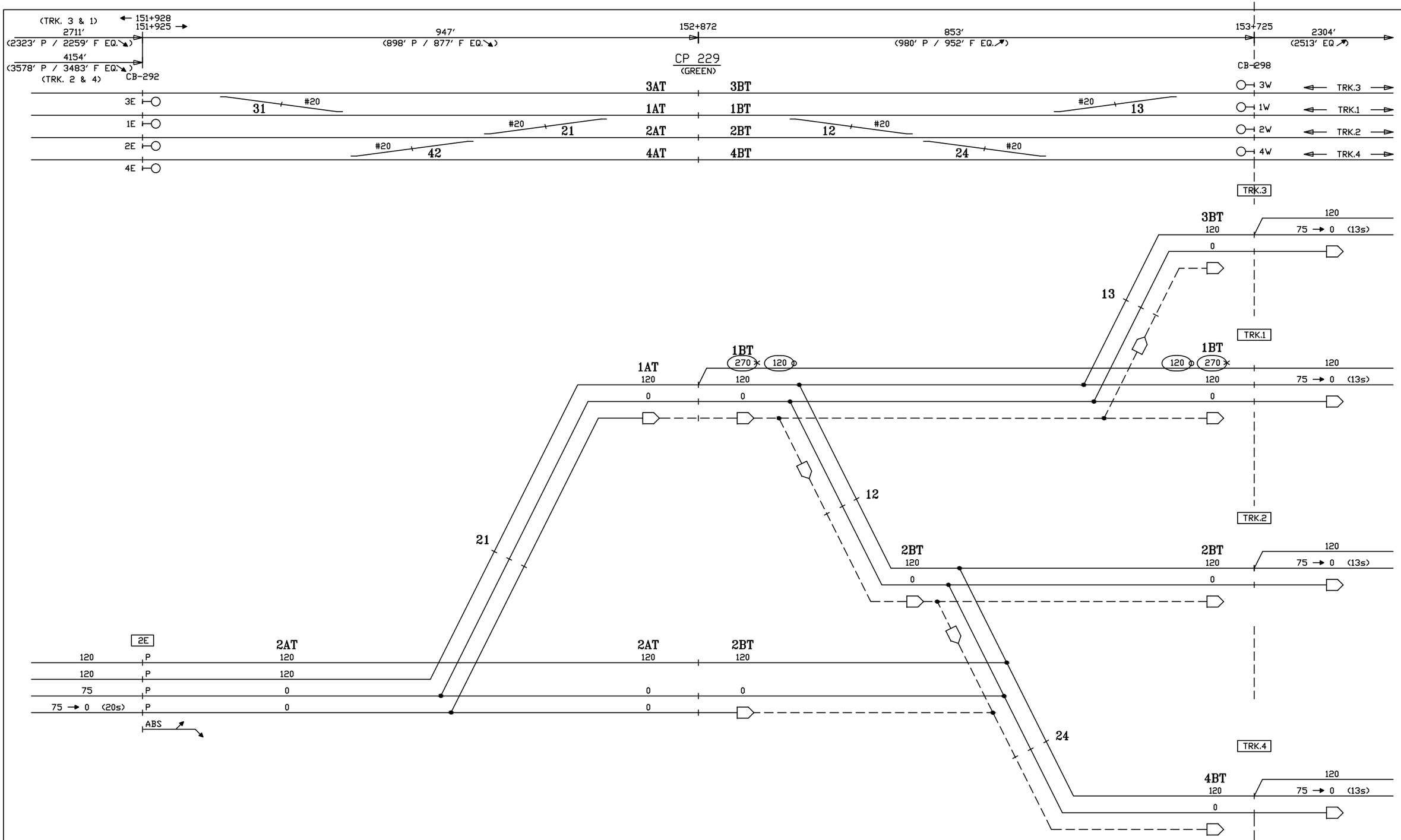

CIRCUIT ENGINEER	SR. SIGNAL ENGR.–DESIGN & STANDARDS	DIRECTOR C&S SYSTEMS	MTA Metro–North Railroad	NEW HAVEN LINE CP 229 DIVERGING ROUTES – TRACK 2 EAST – STAGE 2	ISSUE DATE: / REV. / /users/signal/RTG RTG–NHL1 SHEET 32X NHL1 L1032X

Gannett Fleming/CWA

CONTRACT #	PROJECT SHEET #
1000027511	0372

STAGE 2

EXISTING

(TRK. 3 & 1)
151+928
151+925
2711'
(2323' P / 2259' F EQ.↘)
4154'
(3578' P / 3483' F EQ.↘)
(TRK. 2 & 4)
CB-292
947'
(898' P / 877' F EQ.↘)
152+872
CP 229
(GREEN)
853'
(980' P / 952' F EQ.↗)
153+725
2304'
(2513' EQ.↗)
CB-298

3E
1E
2E
4E
3AT
1AT
2AT
4AT
3BT
1BT
2BT
4BT
3W
1W
2W
4W
TRK.3
TRK.1
TRK.2
TRK.4
31
21
42
12
13
24
#20
4E
P
ABS
120
75
0
(13s)
(20s)
270

CIRCUIT ENGINEER	SR. SIGNAL ENGR.–DESIGN & STANDARDS	DIRECTOR C&S SYSTEMS	MTA Metro–North Railroad	NEW HAVEN LINE CP 229 DIVERGING ROUTES – TRACK 4 EAST – STAGE 2	ISSUE DATE: / REV. / /users/signal/RTG RTG–NHL1 SHEET 33X NHL1 L1033X

Gannett Fleming/CWA

CONTRACT # 1000027511

PROJECT SHEET # 0373

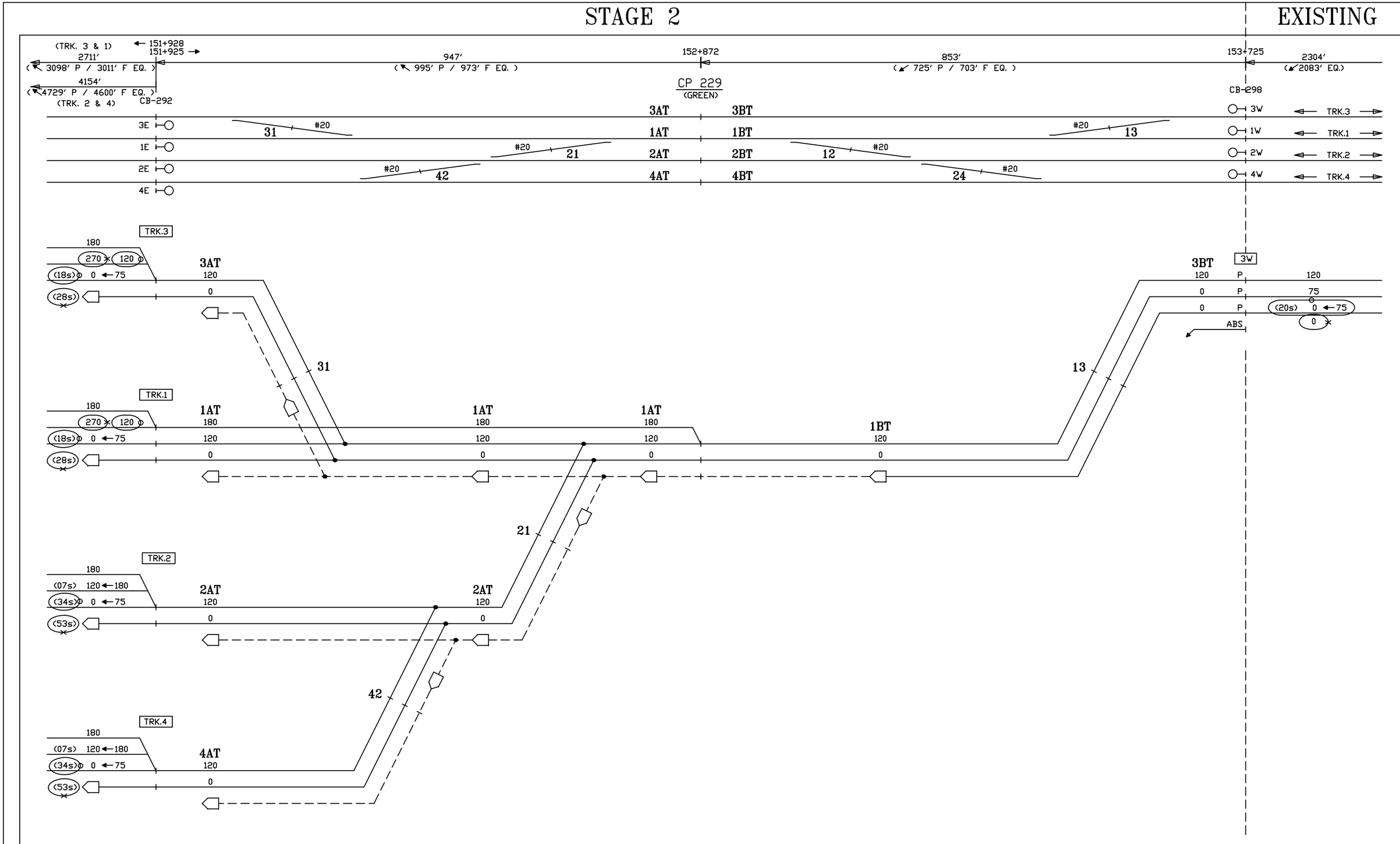

CIRCUIT ENGINEER	SR. SIGNAL ENGR.-DESIGN & STANDARDS	DIRECTOR C&S SYSTEMS	MTA Metro-North Railroad	NEW HAVEN LINE CP 229 DIVERGING ROUTES – TRACK 3 WEST – STAGE 2	ISSUE DATE: REV. /users/signal/RTG	RTG-NHL1 SHEET 34X NHL1 L1034X

Gannett Fleming/CWA

CONTRACT #	PROJECT SHEET #
1000027511	0374

STAGE 2

EXISTING

(TRK. 3 & 1)
151+928
151+925
2711'
(3098' P / 3011' F EQ.)
4154'
(4729' P / 4600' F EQ.)
(TRK. 2 & 4)
CB-292
947'
(995' P / 973' F EQ.)
152+872
CP 229
(GREEN)
853'
(725' P / 703' F EQ.)
153+725
2304'
(2083' EQ.)
CB-1298

3E
1E
2E
4E
3AT
3BT
1AT
1BT
2AT
2BT
4AT
4BT
3W
1W
2W
4W
TRK.3
TRK.1
TRK.2
TRK.4
31
21
42
12
24
13
#20

TRK.3
180
270
120
(18s)
0 ← 75
(28s)
3AT
120
0
31

1AT
120
0
1AT
120
0
1BT
120
0
0
1W
P
120
P
75
P
(20s)
0 ← 75
0
ABS

21

TRK.2
180
(07s)
120 ← 180
(34s)
0 ← 75
(53s)
2AT
120
0
2AT
120
0

42

TRK.4
180
(07s)
120 ← 180
(34s)
0 ← 75
(53s)
4AT
120
0

CIRCUIT ENGINEER	SR. SIGNAL ENGR.–DESIGN & STANDARDS	DIRECTOR C&S SYSTEMS	MTA Metro–North Railroad	NEW HAVEN LINE CP 229 DIVERGING ROUTES – TRACK 1 WEST – STAGE 2	ISSUE DATE: / REV. / /users/signal/RTG RTG–NHL1 SHEET 35X NHL1 L1035X

Gannett Fleming/CWA

CONTRACT # 1000027511

PROJECT SHEET # 0375

STAGE 2

EXISTING

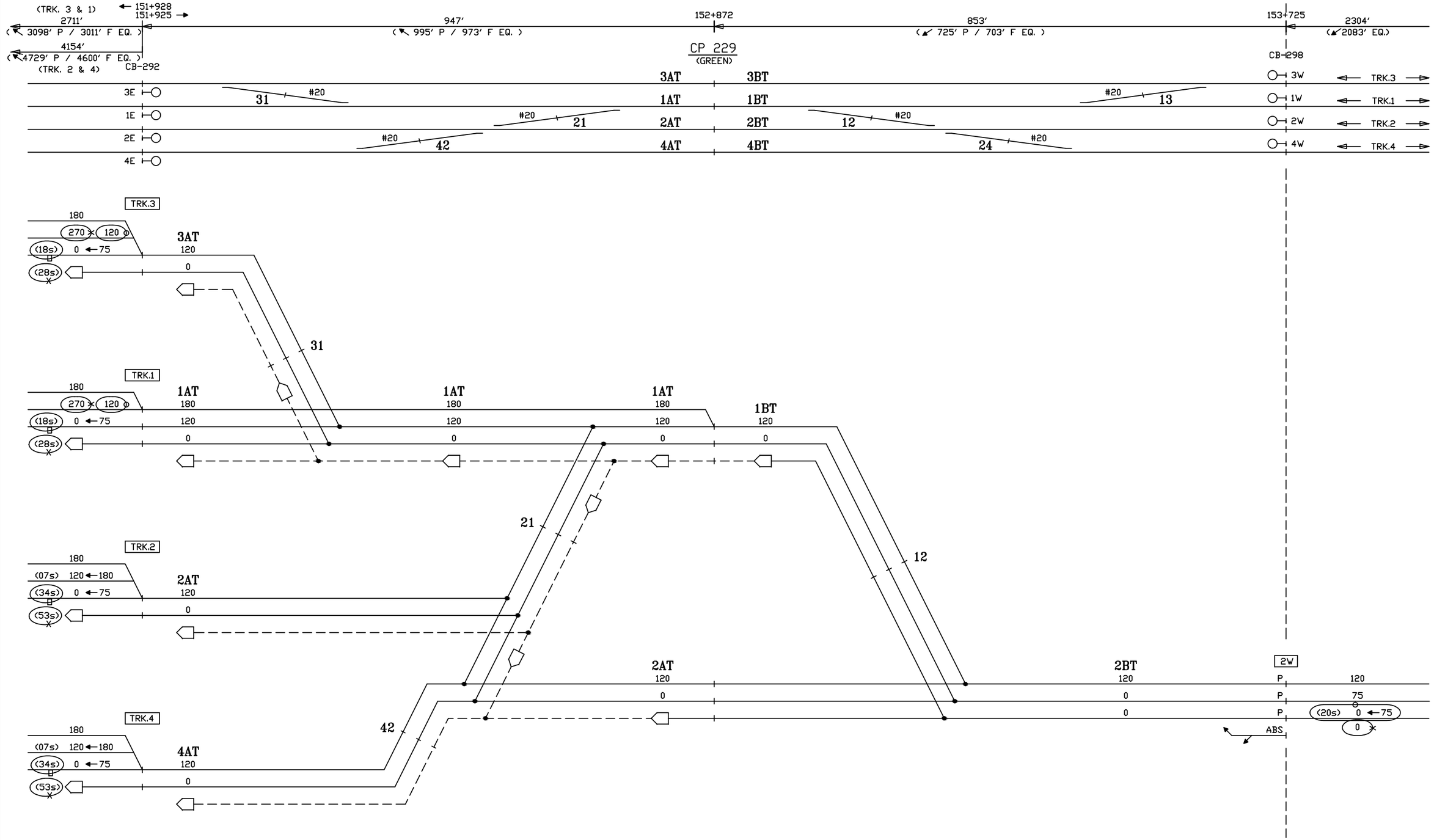

CIRCUIT ENGINEER	SR. SIGNAL ENGR.–DESIGN & STANDARDS	DIRECTOR C&S SYSTEMS	MTA Metro–North Railroad	NEW HAVEN LINE CP 229 DIVERGING ROUTES – TRACK 2 WEST – STAGE 2	ISSUE DATE: / REV. / /users/signal/RTG RTG–NHL1 SHEET 36X NHL1 L1036X

Gannett Fleming/CWA

CONTRACT # 1000027511

PROJECT SHEET # 0376

STAGE 2

EXISTING

(TRK. 3 & 1) ← 151+928
151+925 →
2711′
(↖ 3098′ P / 3011′ F EQ.)
4154′
(↖ 4729′ P / 4600′ F EQ.)
(TRK. 2 & 4)

947′
(↖ 995′ P / 973′ F EQ.)

152+872

853′
(↙ 725′ P / 703′ F EQ.)

153+725

2304′
(↙ 2083′ EQ.)

CP 229
(GREEN)

CB-292

CB-298

3E
1E
2E
4E

3AT 3BT
1AT 1BT
2AT 2BT
4AT 4BT

3W TRK.3 →
1W TRK.1 →
2W TRK.2 →
4W TRK.4 →

31 #20
21 #20
42 #20
12 #20
24 #20
13 #20

TRK.3
180
270 120
(18s) 0 ← 75
(28s)
3AT
120
0
31

TRK.1
180
270 120
(18s) 0 ← 75
(28s)
1AT
180
120
0
1AT
180
120
0
1BT
120
0

TRK.2
180
(07s) 120 ← 180
(34s) 0 ← 75
(53s)
2AT
120
180
270 120
21
2AT
180
120 270
2BT
120
0
12

TRK.4
180
(07s) 120 ← 180
(34s) 0 ← 75
(53s)
4AT
120
0
42
24
4BT
120
0
0
4W
P
P
P
ABS
120
75
(20s) 0 ← 75
0

CIRCUIT ENGINEER	SR. SIGNAL ENGR.–DESIGN & STANDARDS	DIRECTOR C&S SYSTEMS	MTA Metro–North Railroad	NEW HAVEN LINE CP 229 DIVERGING ROUTES – TRACK 4 WEST – STAGE 2	ISSUE DATE: RTG–NHL1 REV. SHEET 37X /users/signal/RTG NHL1 L1037X

Gannett Fleming/CWA

CONTRACT # 1000027511

PROJECT SHEET # 0377

IN SERVICE | STAGE 3 | EXISTING

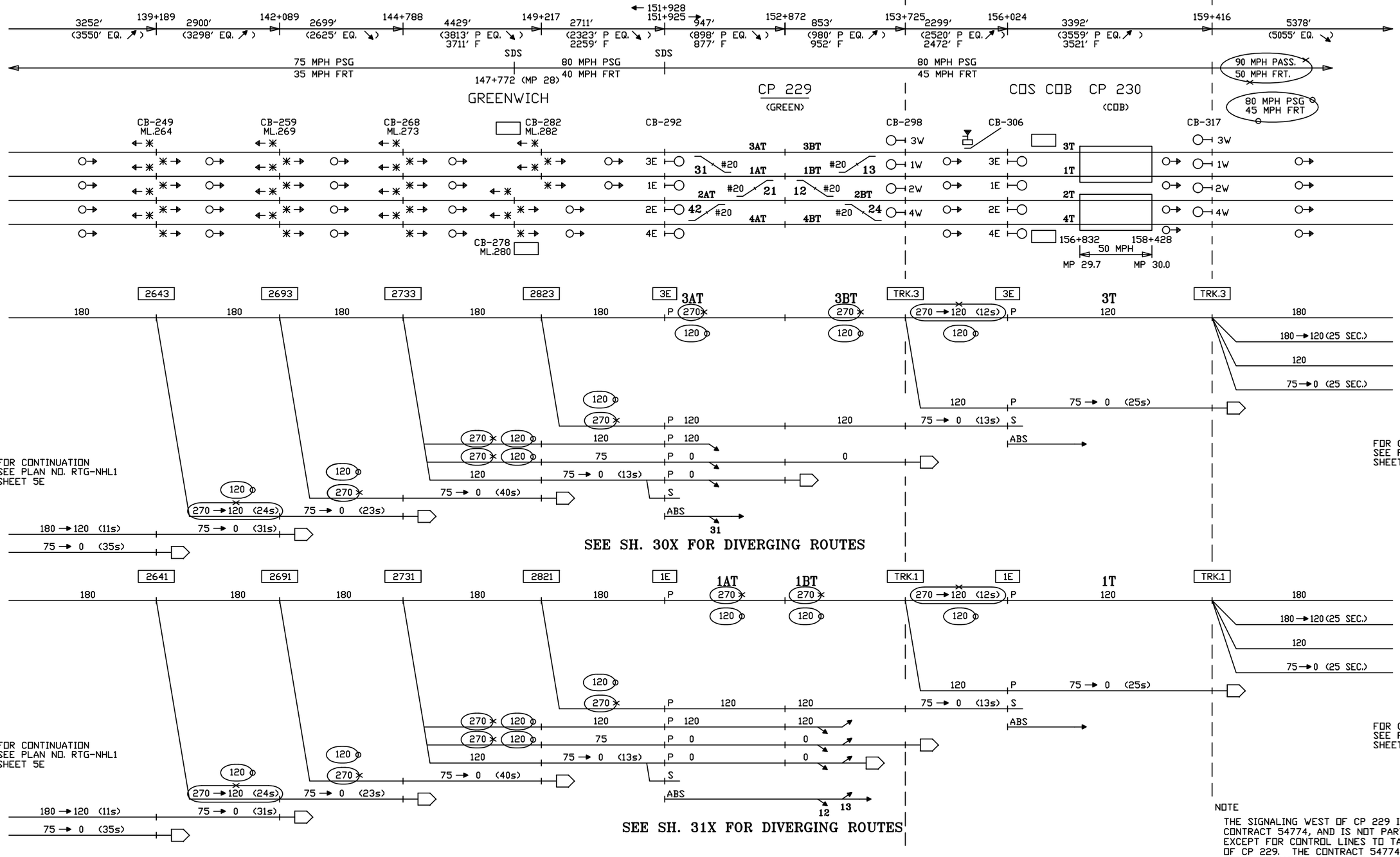

NOTE

THE SIGNALING WEST OF CP 229 IS EXISTING PER CONTRACT 54774, AND IS NOT PART OF THIS DESIGN, EXCEPT FOR CONTROL LINES TO TARGETS AT AND EAST OF CP 229. THE CONTRACT 54774 SIGNALING IS SHOWN FOR INFORMATION ONLY. NO ATC ENFORCEMENT IS PROVIDED FOR FIRST CURVE EAST OF PORT CHESTER.

ATC ENFORCEMENT IS PROVIDED FOR CP 230 MOVABLE BRIDGE.

CIRCUIT ENGINEER

SR. SIGNAL ENGR.–DESIGN & STANDARDS

DIRECTOR C&S SYSTEMS

MTA Metro–North Railroad

NEW HAVEN LINE
MP 25.0 TO MP 30.9
ROUTINGS – TRACKS 3 & 1 EAST – STAGE 3

ISSUE DATE:

REV.

NHS

GAR

RTG–NHL1

SHEET 7E

/users/signal/RTG | NHL1 | L1007E

Gannett Fleming/CWA

CONTRACT # 1000027511

PROJECT SHEET # 0380

IN SERVICE | STAGE 3 | EXISTING

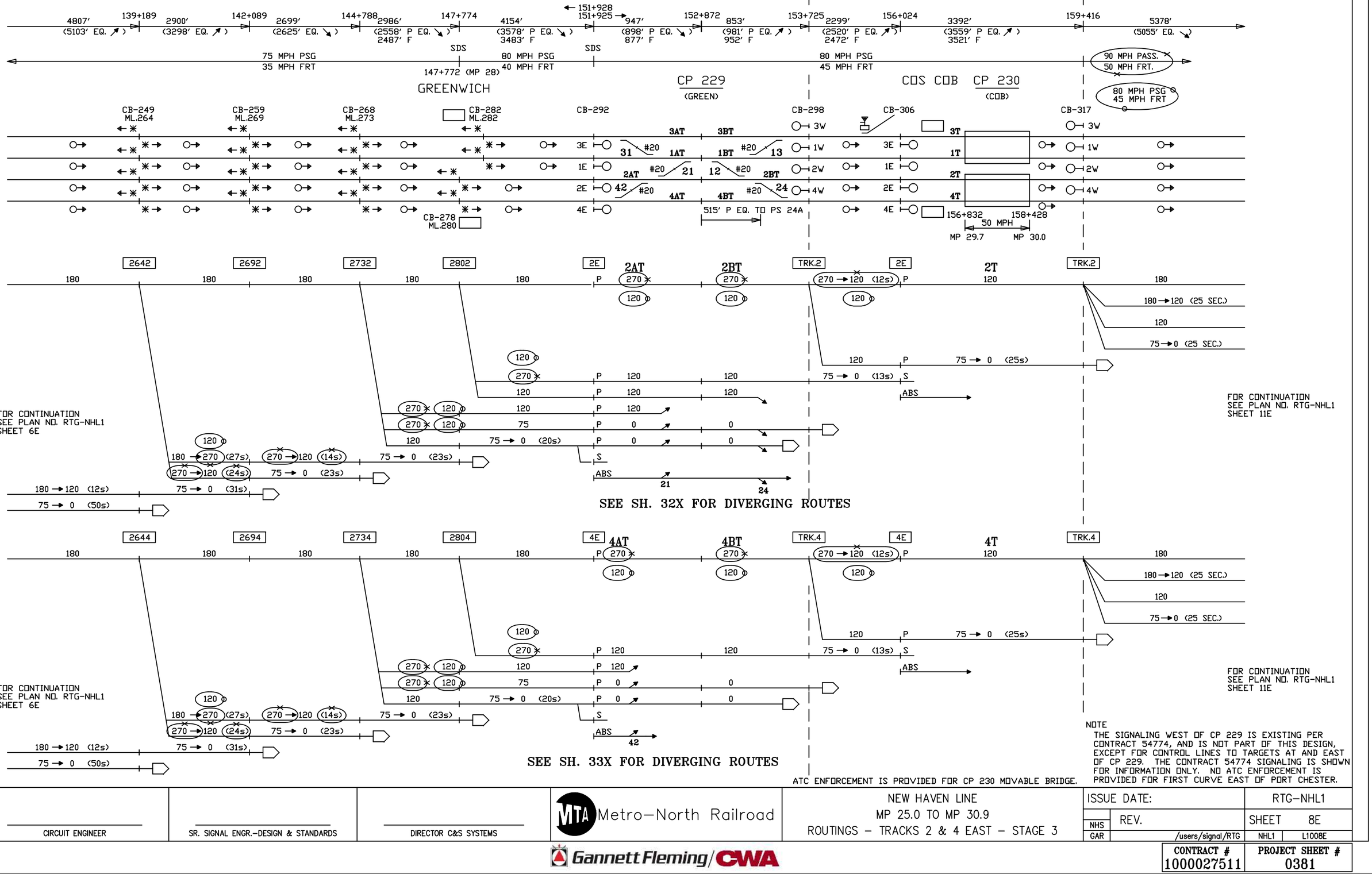

NOTE
THE SIGNALING WEST OF CP 229 IS EXISTING PER CONTRACT 54774, AND IS NOT PART OF THIS DESIGN, EXCEPT FOR CONTROL LINES TO TARGETS AT AND EAST OF CP 229. THE CONTRACT 54774 SIGNALING IS SHOWN FOR INFORMATION ONLY. NO ATC ENFORCEMENT IS PROVIDED FOR FIRST CURVE EAST OF PORT CHESTER.

CIRCUIT ENGINEER	SR. SIGNAL ENGR.–DESIGN & STANDARDS	DIRECTOR C&S SYSTEMS	MTA Metro–North Railroad	NEW HAVEN LINE MP 25.0 TO MP 30.9 ROUTINGS – TRACKS 2 & 4 EAST – STAGE 3	ISSUE DATE: RTG–NHL1 REV. SHEET 8E NHS GAR /users/signal/RTG NHL1 L1008E

Gannett Fleming/CWA

CONTRACT # 1000027511

PROJECT SHEET # 0381

EXISTING

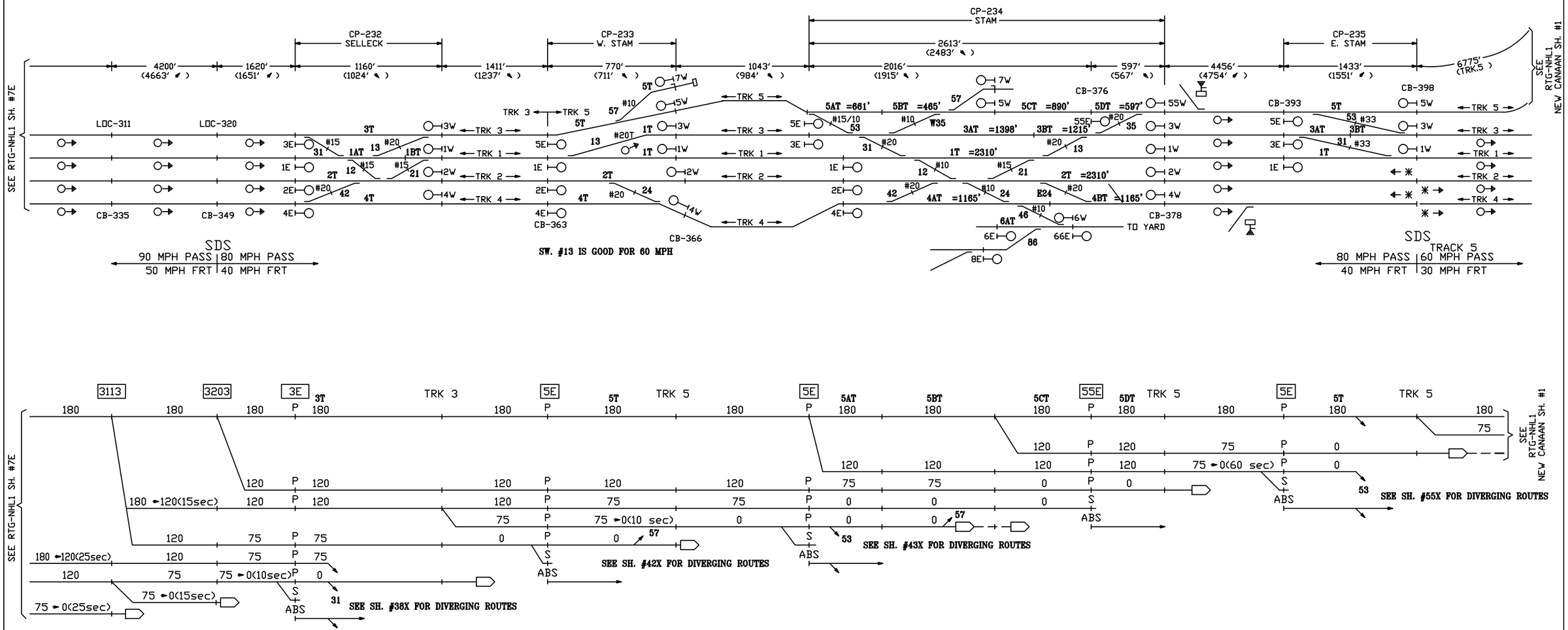

CIRCUIT ENGINEER	SR. SIGNAL ENGR.–DESIGN & STANDARDS	DIRECTOR C&S SYSTEMS	MTA Metro–North Railroad	NEW HAVEN LINE MP 30.9 TO MP 35.0 ROUTINGS – TRACK 3 CHANGES TO TRACK 5 EAST – STAGE 3	ISSUE DATE: REV. 11 /users/signal/RTG

RTG–NHL1 | SHEET 9E | NHL1 | L1009E

Gannett Fleming/CWA

CONTRACT # 1000027511 | PROJECT SHEET # 0382

EXISTING

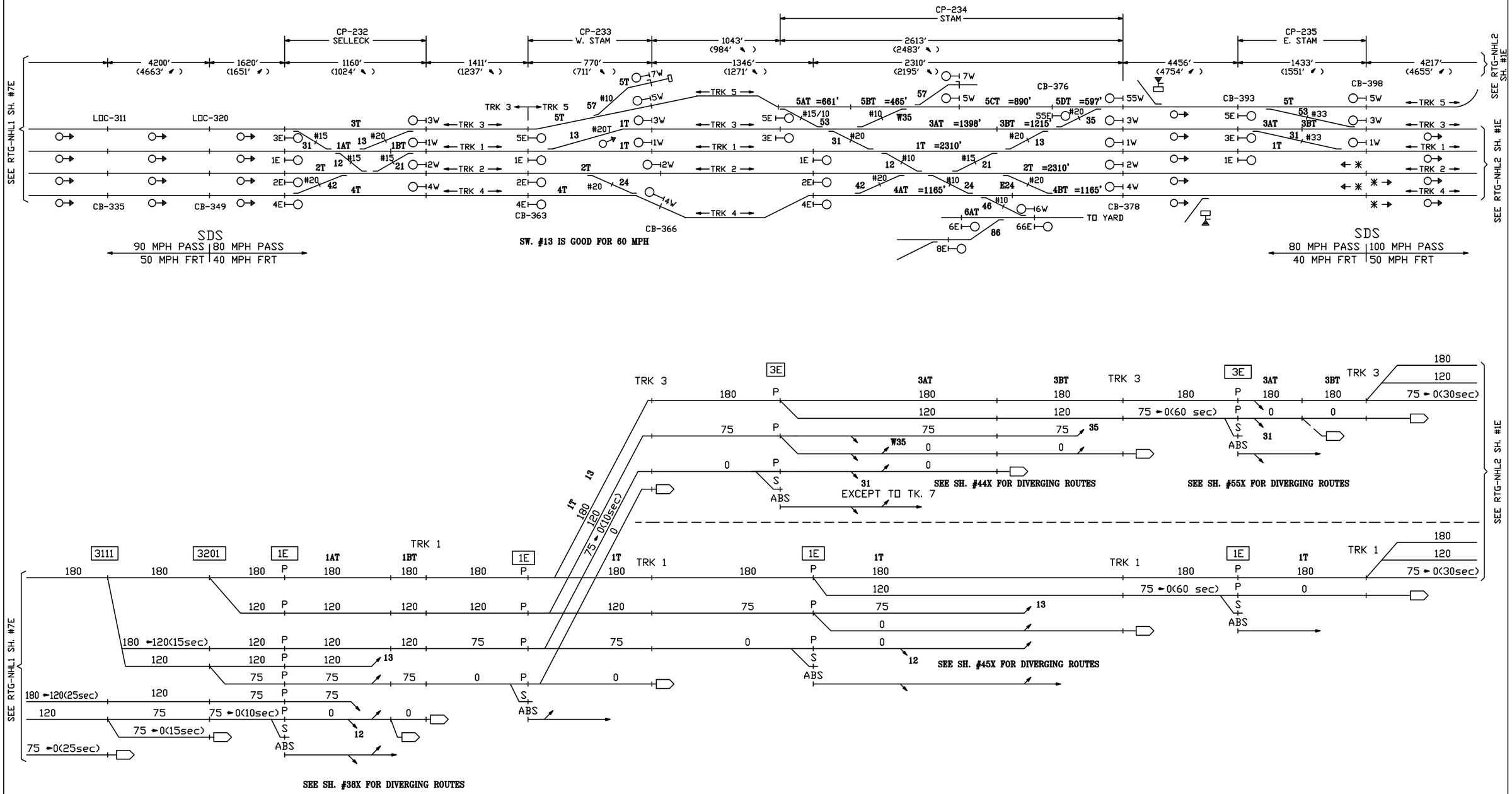

CIRCUIT ENGINEER	SR. SIGNAL ENGR.–DESIGN & STANDARDS	DIRECTOR C&S SYSTEMS	MTA Metro–North Railroad	NEW HAVEN LINE MP 30.9 TO MP 35.0 ROUTINGS – TRACKS 3 & 1 EAST – STAGE 3	ISSUE DATE: 09–01–99 · RTG–NHL1 NHS REV. 11 · SHEET 10E NHS /users/signal/RTG · NHL1 · L1010E

Gannett Fleming/CWA

CONTRACT #	PROJECT SHEET #
1000027511	0383

EXISTING

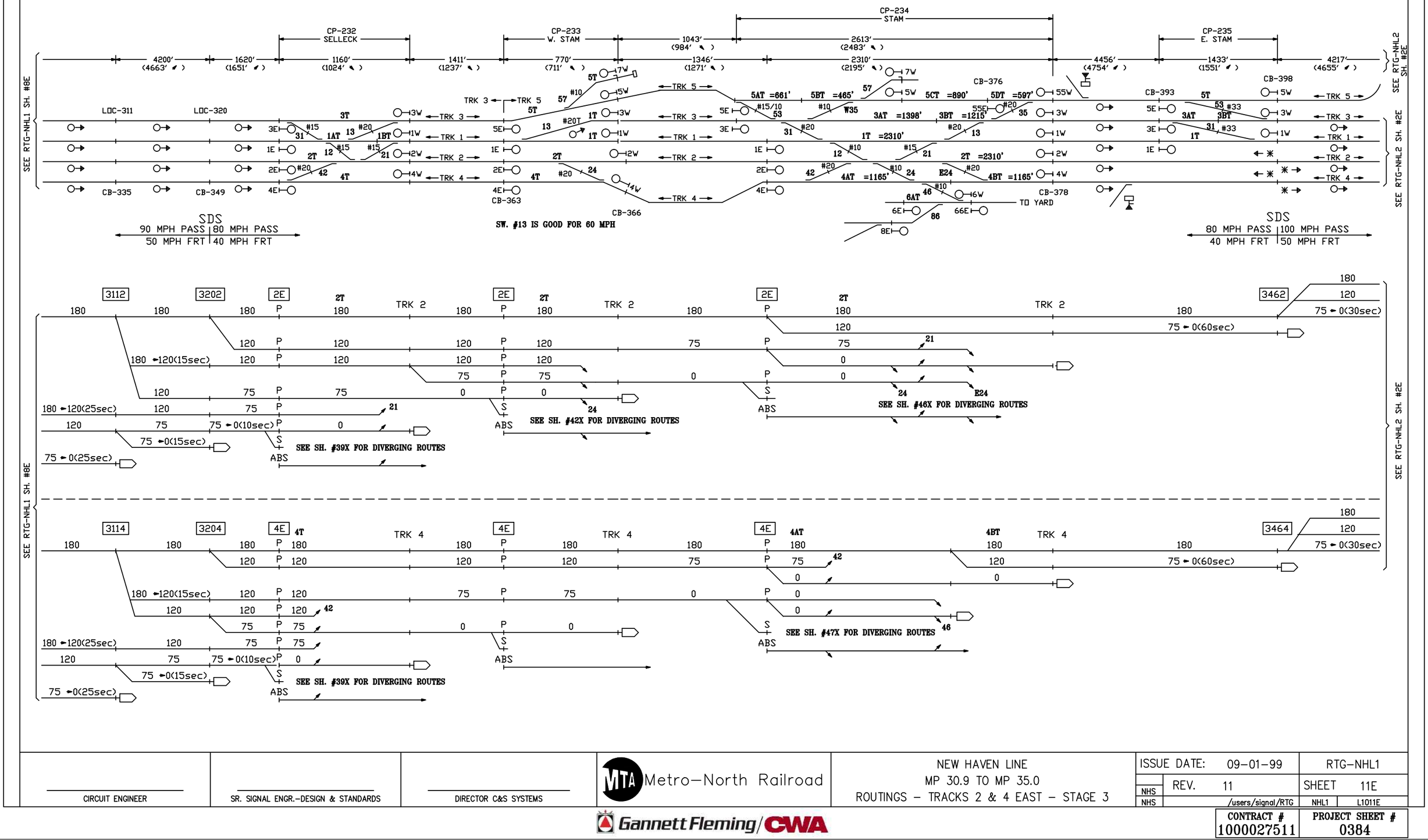

CIRCUIT ENGINEER	SR. SIGNAL ENGR.–DESIGN & STANDARDS	DIRECTOR C&S SYSTEMS	MTA Metro–North Railroad	NEW HAVEN LINE MP 30.9 TO MP 35.0 ROUTINGS – TRACKS 2 & 4 EAST – STAGE 3	ISSUE DATE: 09–01–99 REV. 11 NHS /users/signal/RTG NHS

RTG–NHL1 | SHEET 11E | NHL1 | L1011E

Gannett Fleming/CWA

CONTRACT # 1000027511 | PROJECT SHEET # 0384

IN SERVICE — STAGE 3 — EXISTING

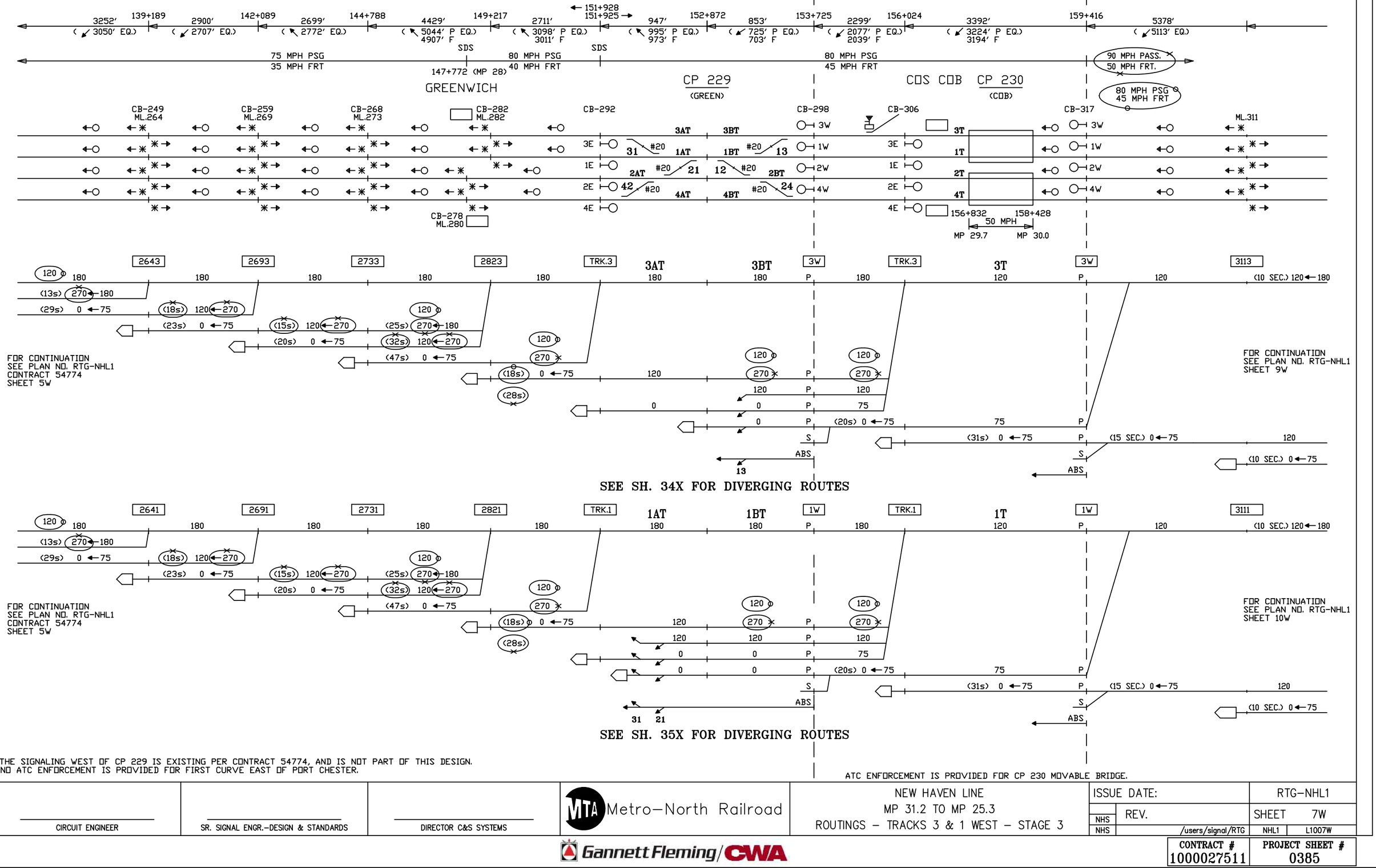

CIRCUIT ENGINEER	SR. SIGNAL ENGR.–DESIGN & STANDARDS	DIRECTOR C&S SYSTEMS	MTA Metro–North Railroad	NEW HAVEN LINE MP 31.2 TO MP 25.3 ROUTINGS – TRACKS 3 & 1 WEST – STAGE 3	ISSUE DATE: / REV. / NHS / NHS / /users/signal/RTG RTG–NHL1 SHEET 7W NHL1 L1007W

Gannett Fleming/CWA

CONTRACT # 1000027511

PROJECT SHEET # 0385

IN SERVICE — STAGE 3 — EXISTING

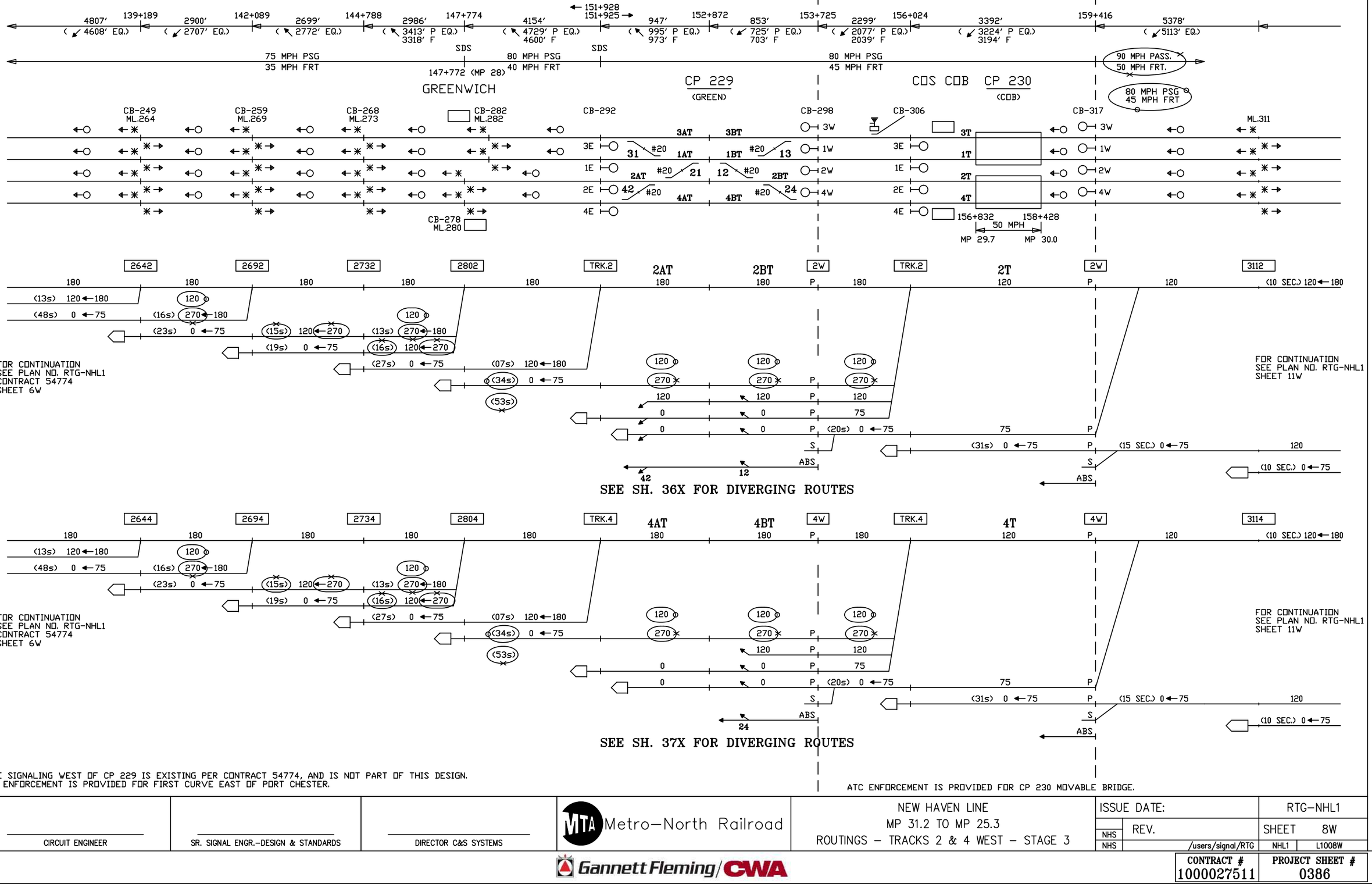

THE SIGNALING WEST OF CP 229 IS EXISTING PER CONTRACT 54774, AND IS NOT PART OF THIS DESIGN.
NO ENFORCEMENT IS PROVIDED FOR FIRST CURVE EAST OF PORT CHESTER.

ATC ENFORCEMENT IS PROVIDED FOR CP 230 MOVABLE BRIDGE.

CIRCUIT ENGINEER	SR. SIGNAL ENGR.–DESIGN & STANDARDS	DIRECTOR C&S SYSTEMS	MTA Metro–North Railroad	NEW HAVEN LINE MP 31.2 TO MP 25.3 ROUTINGS – TRACKS 2 & 4 WEST – STAGE 3	ISSUE DATE: / RTG–NHL1 NHS REV. / SHEET 8W NHS /users/signal/RTG / NHL1 / L1008W

Gannett Fleming/CWA

CONTRACT #	PROJECT SHEET #
1000027511	0386

EXISTING

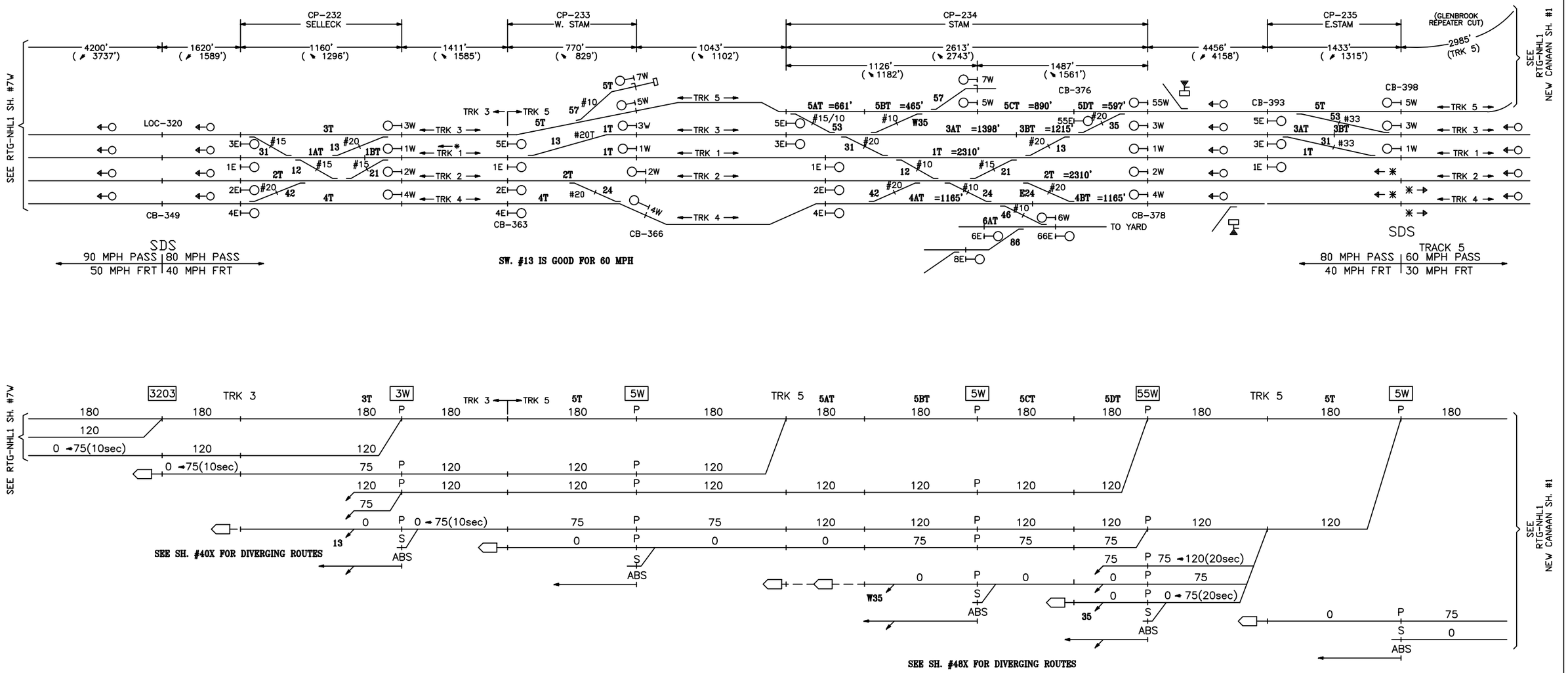

CIRCUIT ENGINEER	SR. SIGNAL ENGR.–DESIGN & STANDARDS	DIRECTOR C&S SYSTEMS	Metro–North Railroad	NEW HAVEN LINE MP 35.6 TO MP 31.2 ROUTINGS – TRACK 5 CHANGES TO TRACK 3 WEST – STAGE 3	ISSUE DATE:	RTG–NHL1
					NHS REV. 11	SHEET 9W
					NHS /users/signal/RTG	NHL1 L1009W

Gannett Fleming/CWA

CONTRACT # 1000027511

PROJECT SHEET # 0387

EXISTING

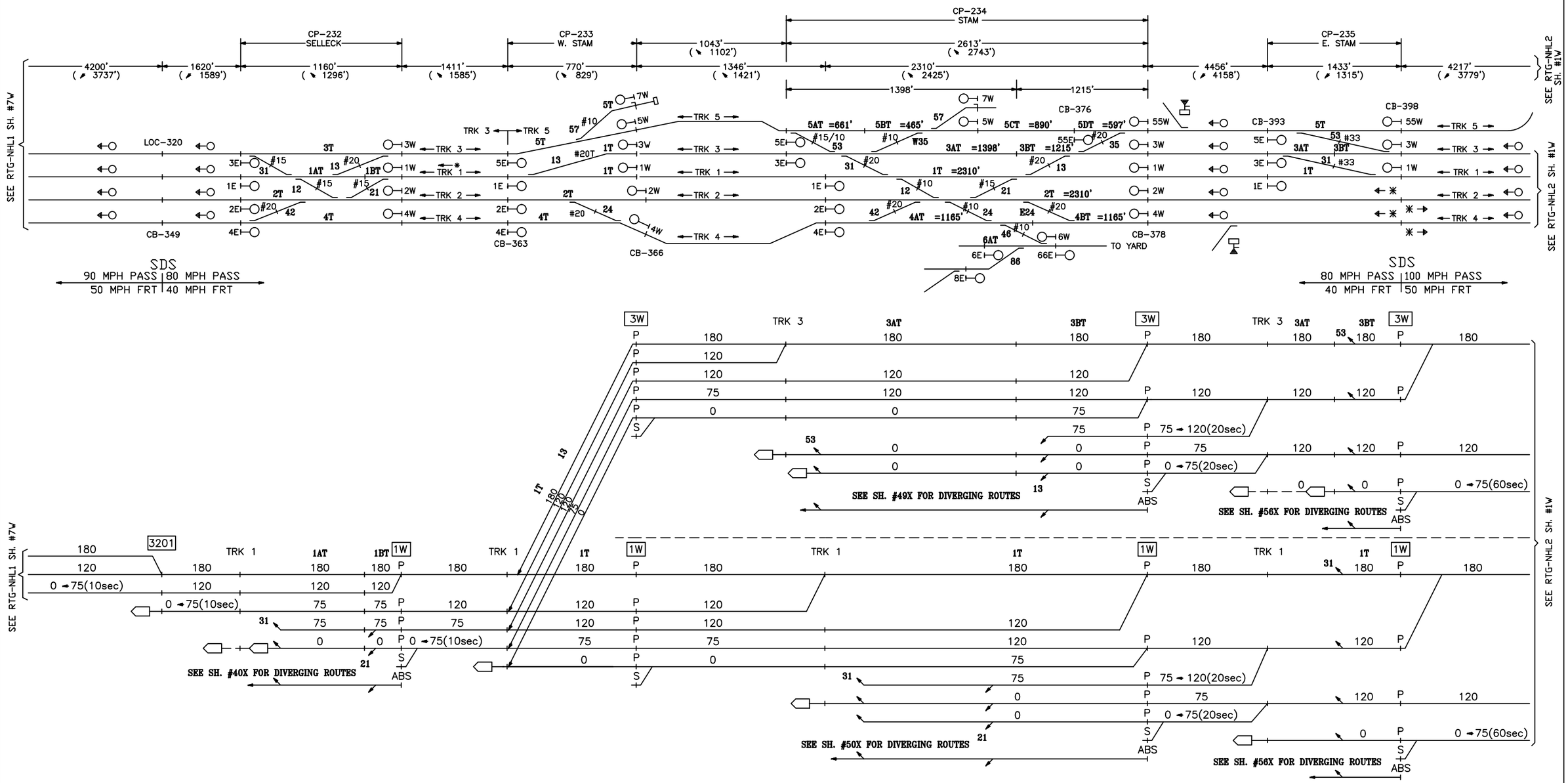

CIRCUIT ENGINEER	SR. SIGNAL ENGR.–DESIGN & STANDARDS	DIRECTOR C&S SYSTEMS	Metro–North Railroad	NEW HAVEN LINE MP 35.6 TO MP 31.2 ROUTINGS – TRACKS 3 & 1 WEST – STAGE 3	ISSUE DATE: 09–01–99 · RTG–NHL1 NHS REV. 11 · SHEET 10W NHS /users/signal/RTG · NHL1 · L1010W

Gannett Fleming / CWA

CONTRACT # 1000027511 · PROJECT SHEET # 0388

EXISTING

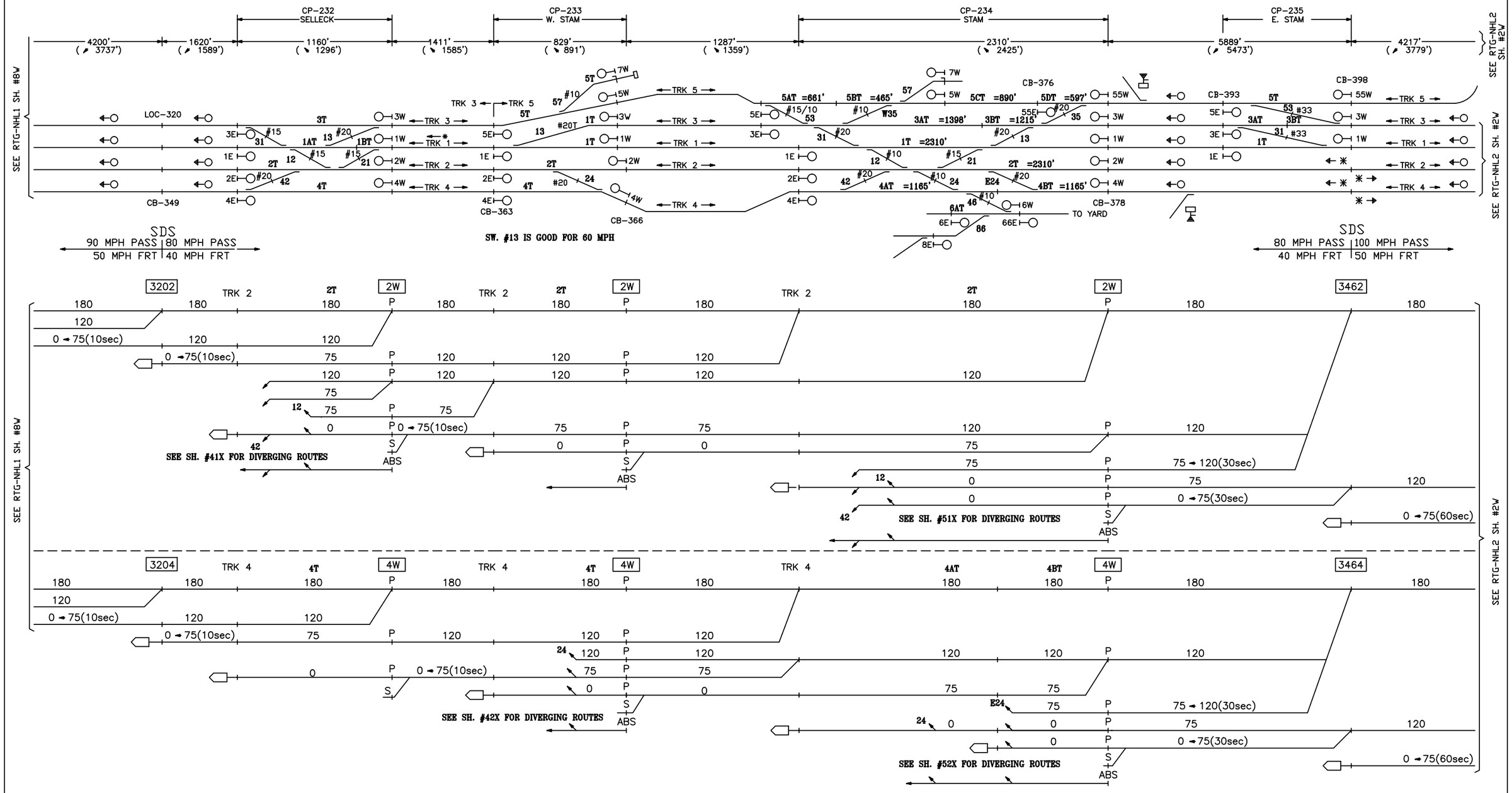

CIRCUIT ENGINEER	SR. SIGNAL ENGR.–DESIGN & STANDARDS	DIRECTOR C&S SYSTEMS	MTA Metro–North Railroad	NEW HAVEN LINE MP 35.6 TO MP 31.2 ROUTINGS – TRACKS 2 & 4 WEST – STAGE 3	ISSUE DATE: 09–01–99 · RTG–NHL1 NHS REV. 11 · SHEET 11W NHS /users/signal/RTG · NHL1 · L1011W

Gannett Fleming / CWA

CONTRACT # 1000027511 · PROJECT SHEET # 0389

IN SERVICE

STAGE 3

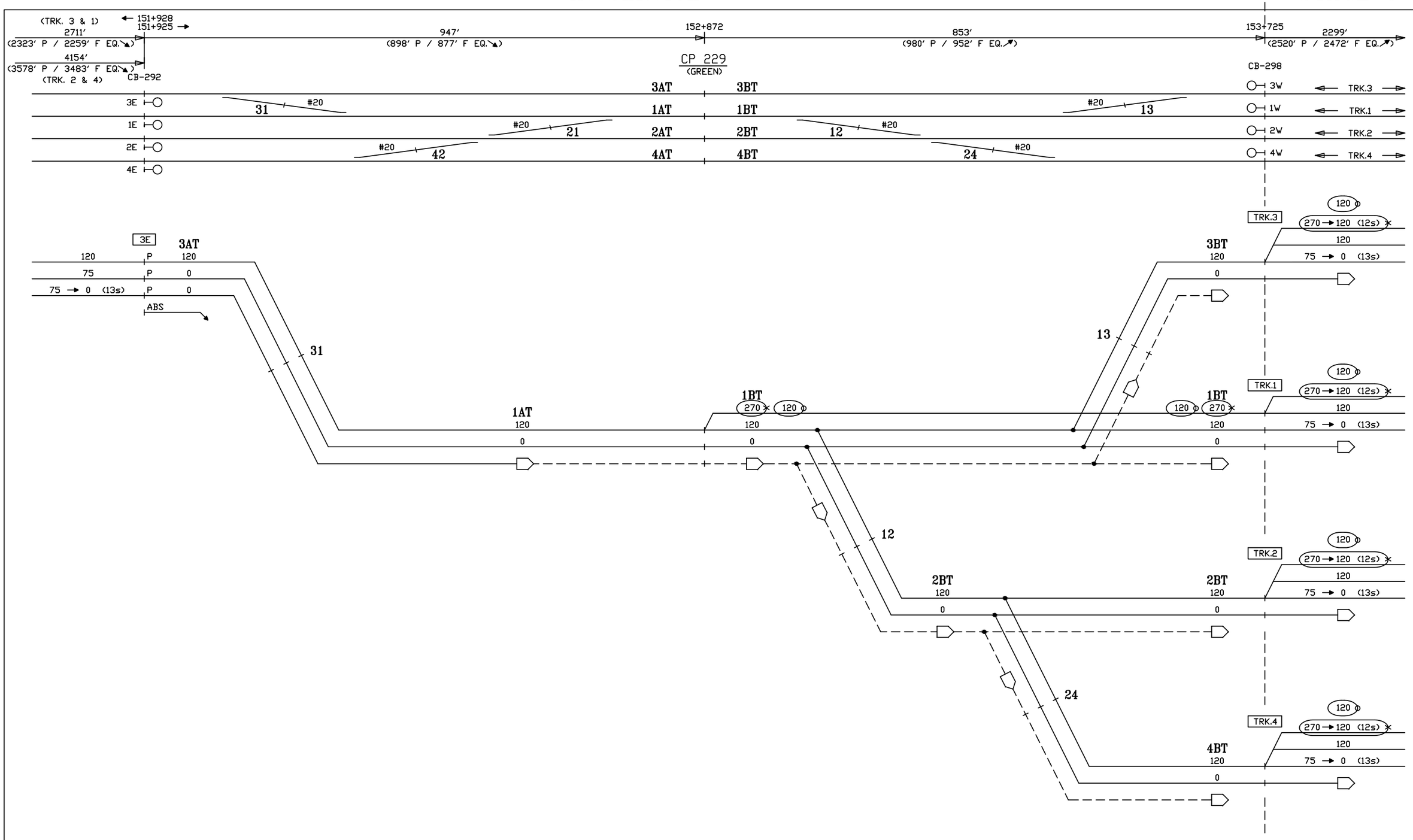

CIRCUIT ENGINEER	SR. SIGNAL ENGR.–DESIGN & STANDARDS	DIRECTOR C&S SYSTEMS	MTA Metro–North Railroad	NEW HAVEN LINE CP 229 DIVERGING ROUTES – TRACK 3 EAST – STAGE 3	ISSUE DATE: / REV. / /users/signal/RTG RTG–NHL1 SHEET 30X NHL1 L1030X

Gannett Fleming/CWA

CONTRACT #	PROJECT SHEET #
1000027511	0390

IN SERVICE

STAGE 3

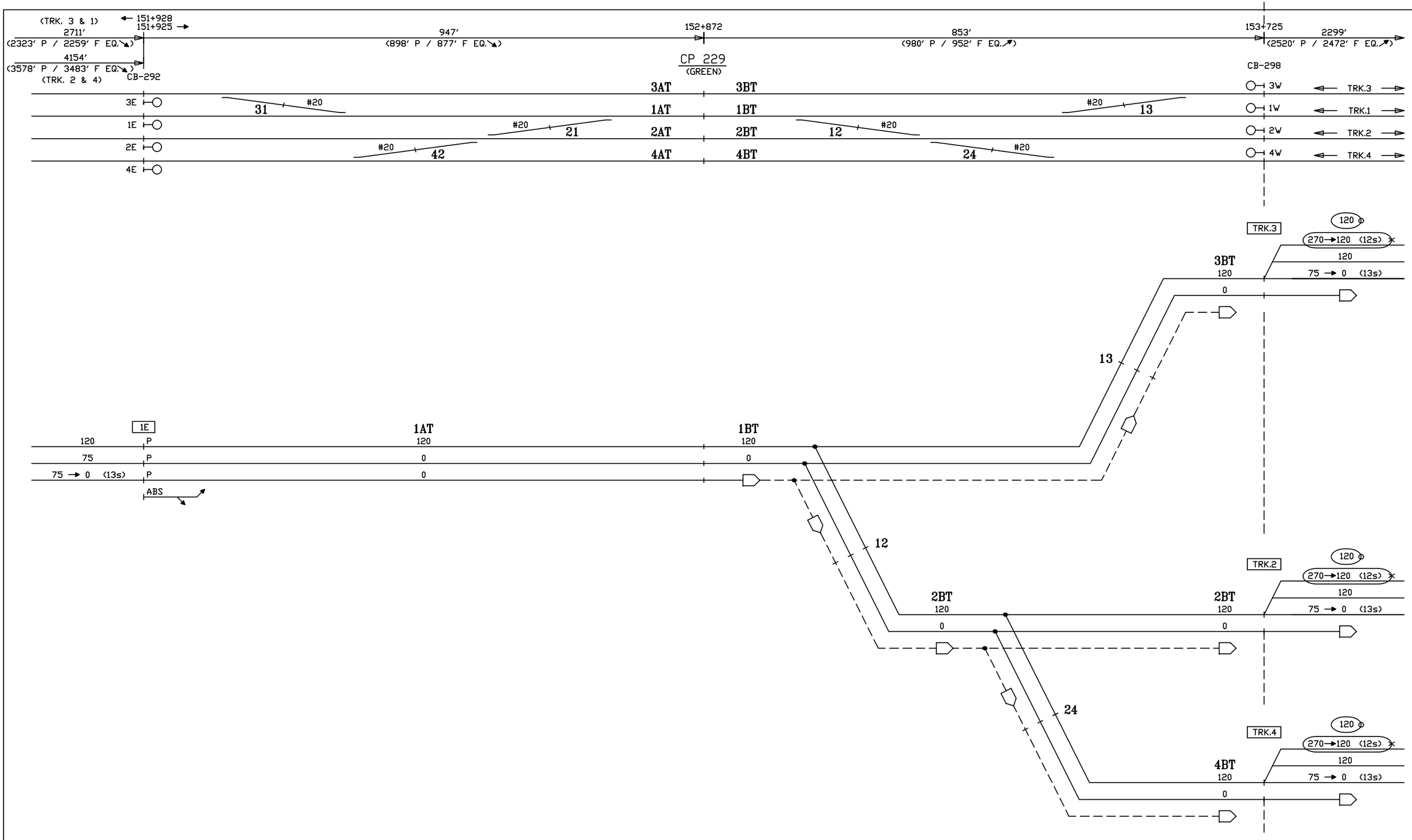

CIRCUIT ENGINEER	SR. SIGNAL ENGR.–DESIGN & STANDARDS	DIRECTOR C&S SYSTEMS	MTA Metro–North Railroad	NEW HAVEN LINE CP 229 DIVERGING ROUTES – TRACK 1 EAST – STAGE 3	ISSUE DATE: / REV. / /users/signal/RTG RTG–NHL1 SHEET 31X NHL1 L1031X

Gannett Fleming/CWA

CONTRACT # 1000027511

PROJECT SHEET # 0391

IN SERVICE

STAGE 3

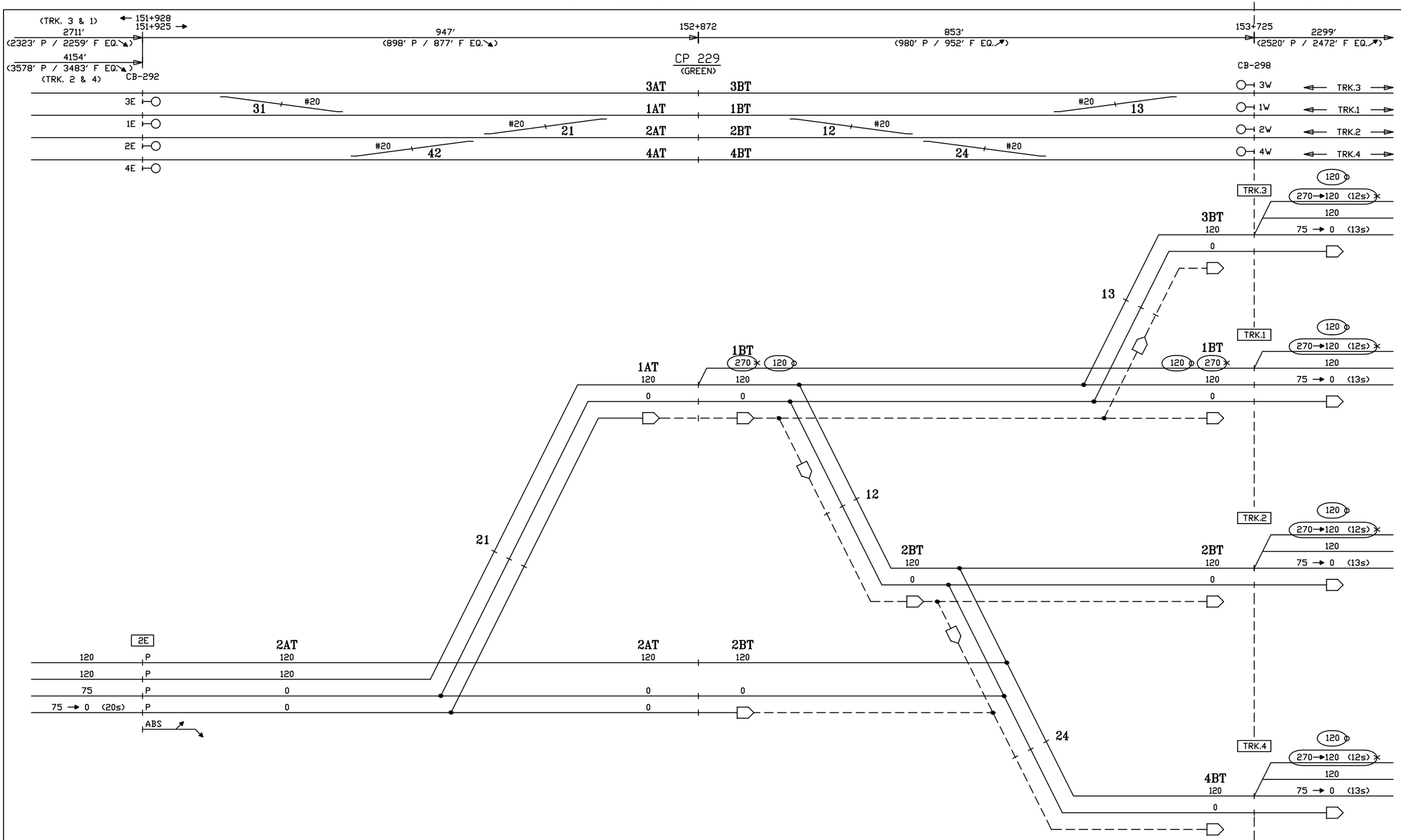

CIRCUIT ENGINEER	SR. SIGNAL ENGR.–DESIGN & STANDARDS	DIRECTOR C&S SYSTEMS	MTA Metro–North Railroad	NEW HAVEN LINE CP 229 DIVERGING ROUTES – TRACK 2 EAST – STAGE 3	ISSUE DATE: / REV. / /users/signal/RTG RTG–NHL1 SHEET 32X NHL1 L1032X

Gannett Fleming/CWA

CONTRACT #	PROJECT SHEET #
1000027511	0392

IN SERVICE

STAGE 3

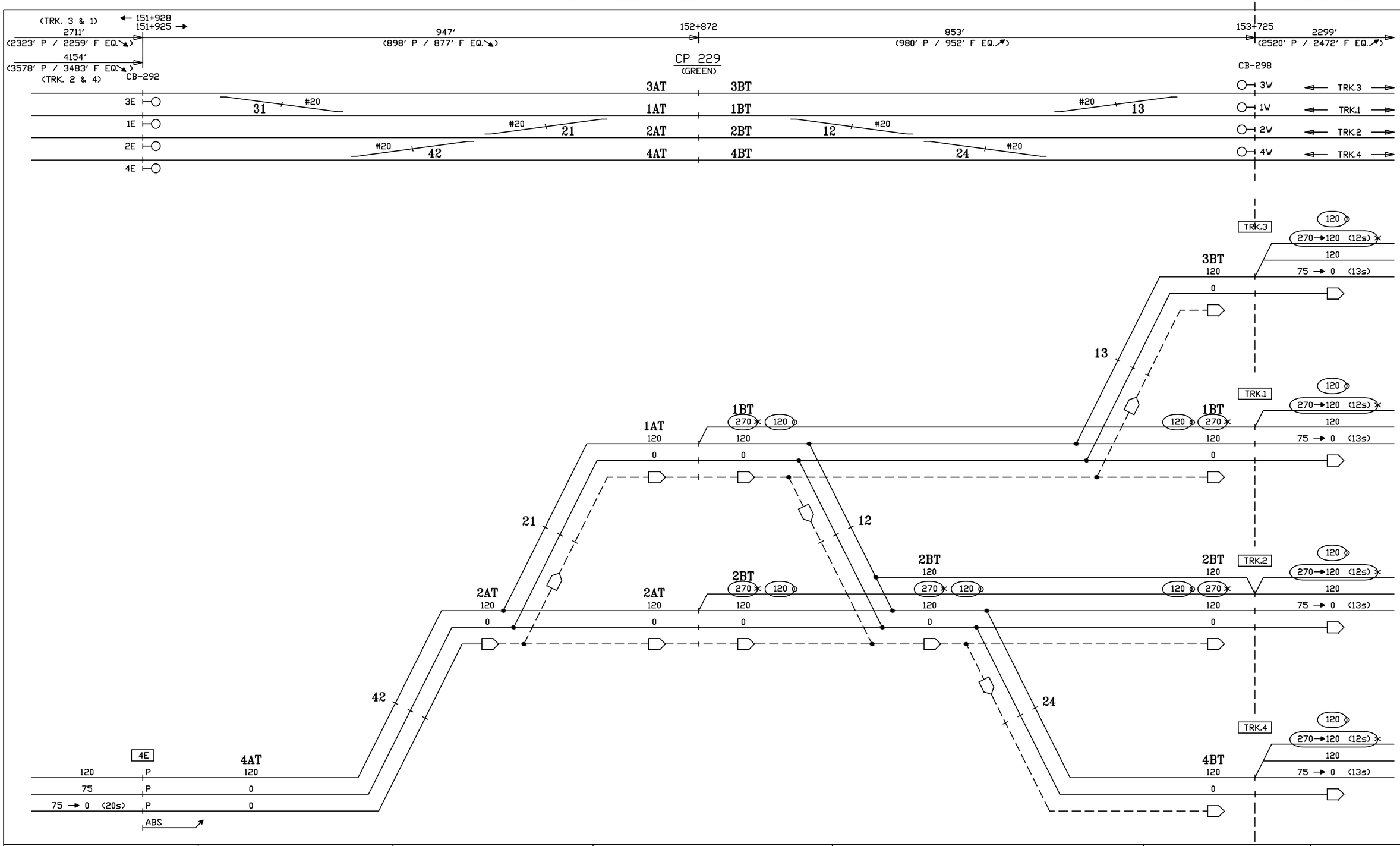

CIRCUIT ENGINEER	SR. SIGNAL ENGR.–DESIGN & STANDARDS	DIRECTOR C&S SYSTEMS	MTA Metro–North Railroad	NEW HAVEN LINE CP 229 DIVERGING ROUTES – TRACK 4 EAST – STAGE 3	ISSUE DATE: / REV. / /users/signal/RTG RTG–NHL1 SHEET 33X NHL1 L1033X

Gannett Fleming/CWA

CONTRACT # 1000027511

PROJECT SHEET # 0393

IN SERVICE

STAGE 3

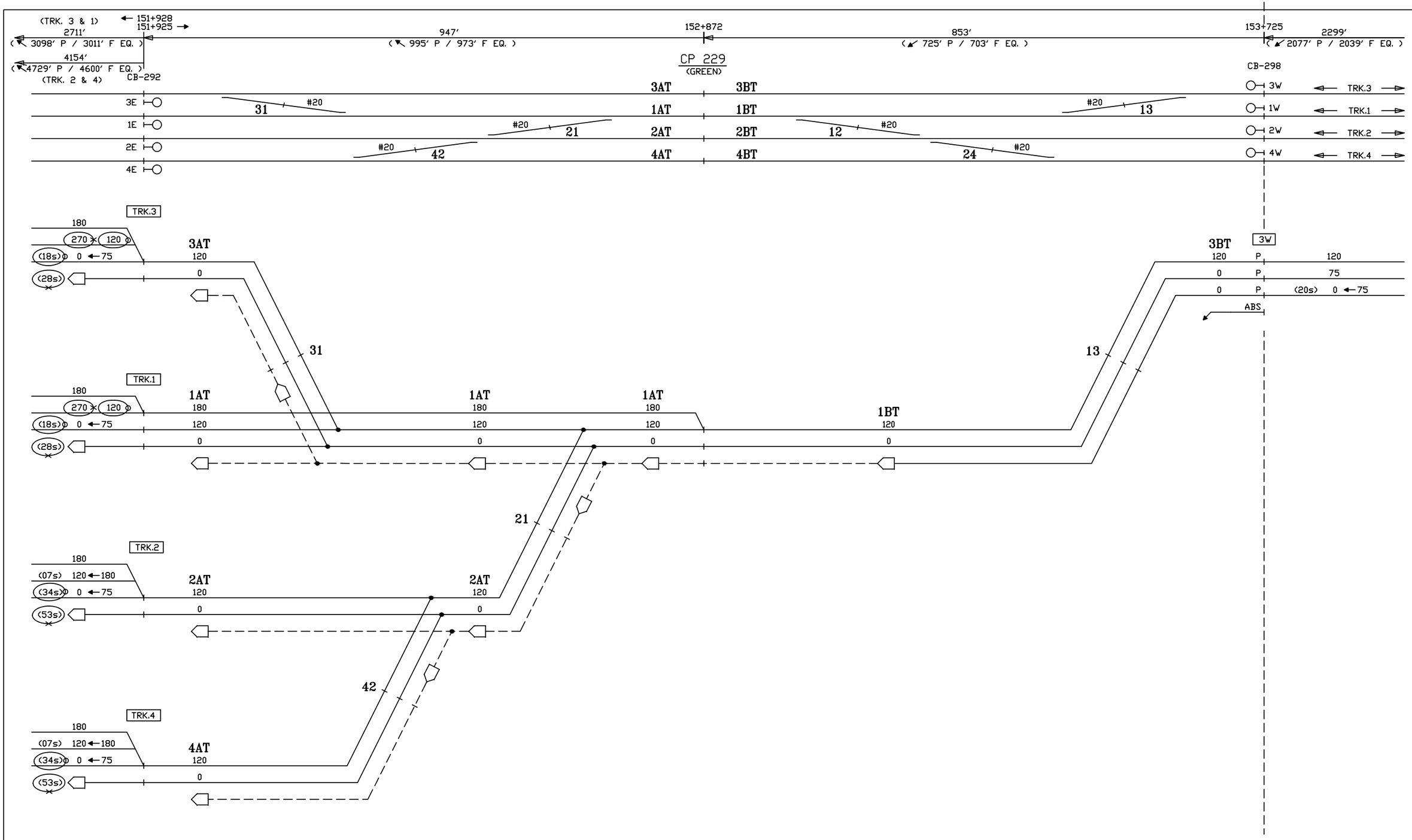

CIRCUIT ENGINEER	SR. SIGNAL ENGR.–DESIGN & STANDARDS	DIRECTOR C&S SYSTEMS	MTA Metro–North Railroad	NEW HAVEN LINE CP 229 DIVERGING ROUTES – TRACK 3 WEST – STAGE 3	ISSUE DATE: / REV. / /users/signal/RTG RTG–NHL1 SHEET 34X NHL1 L1034X

Gannett Fleming/CWA

CONTRACT # 1000027511

PROJECT SHEET # 0394

IN SERVICE

STAGE 3

(TRK. 3 & 1)
151+928
151+925
2711'
(3098' P / 3011' F EQ.)
4154'
(4729' P / 4600' F EQ.)
(TRK. 2 & 4)
CB-292
947'
(995' P / 973' F EQ.)
152+872
CP 229
(GREEN)
853'
(725' P / 703' F EQ.)
153+725
2299'
(2077' P / 2039' F EQ.)
CB-298

3E
1E
2E
4E
3AT
1AT
2AT
4AT
3BT
1BT
2BT
4BT
3W
1W
2W
4W
TRK.3
TRK.1
TRK.2
TRK.4
31
21
42
12
13
24
#20

TRK.3
180
270
120
(18s)
0 ← 75
(28s)
3AT
120
0
31
1AT
120
0
1AT
120
0
1BT
120
0
1W
P
120
P
75
P
(20s) 0 ← 75
ABS

21
TRK.2
180
(07s) 120 ← 180
(34s) 0 ← 75
(53s)
2AT
120
0
2AT
120
0
42
TRK.4
180
(07s) 120 ← 180
(34s) 0 ← 75
(53s)
4AT
120
0

CIRCUIT ENGINEER	SR. SIGNAL ENGR.–DESIGN & STANDARDS	DIRECTOR C&S SYSTEMS	MTA Metro–North Railroad	NEW HAVEN LINE CP 229 DIVERGING ROUTES – TRACK 1 WEST – STAGE 3	ISSUE DATE: / REV. / /users/signal/RTG RTG–NHL1 SHEET 35X NHL1 L1035X

Gannett Fleming/CWA

CONTRACT #	PROJECT SHEET #
1000027511	0395

IN SERVICE

STAGE 3

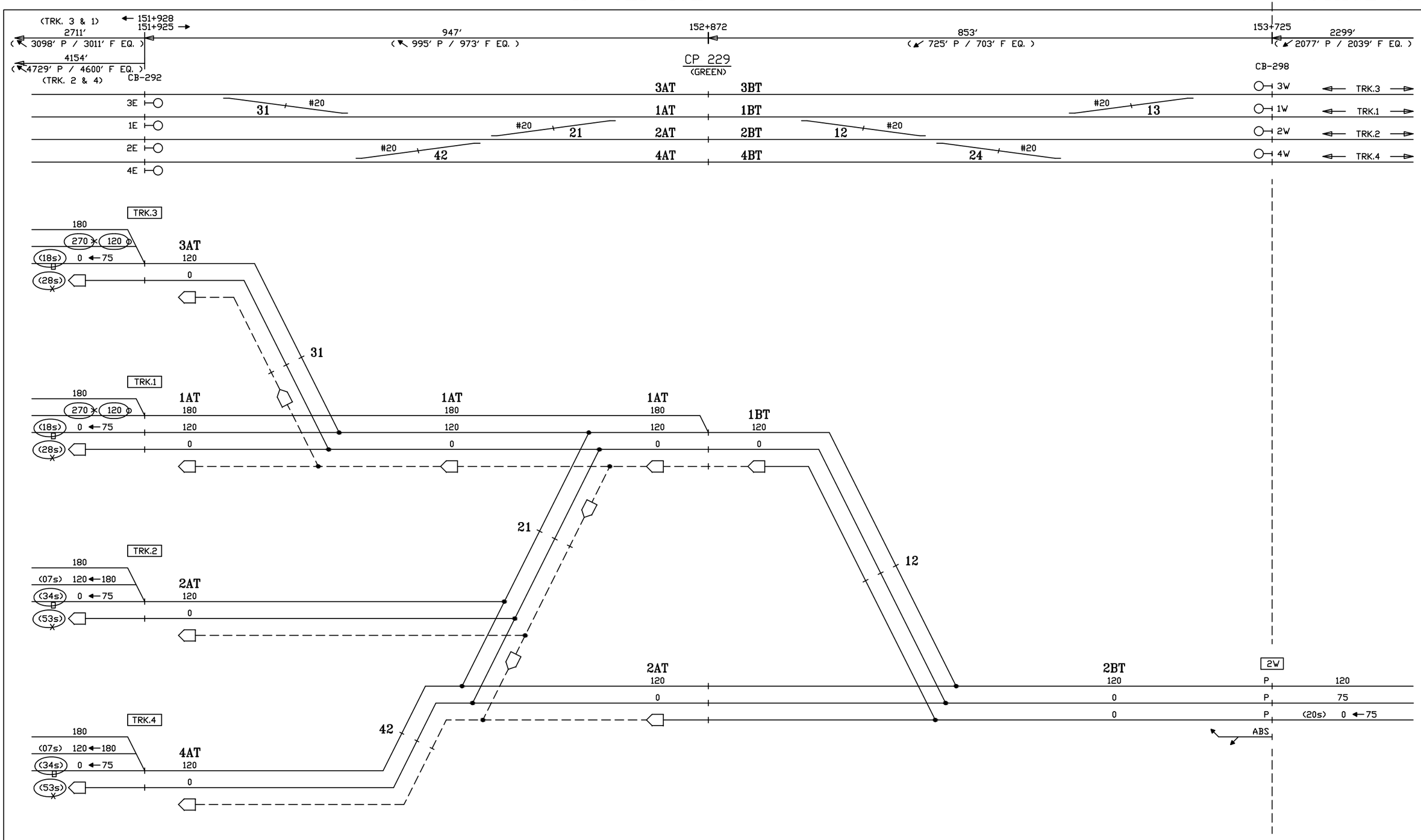

CIRCUIT ENGINEER	SR. SIGNAL ENGR.–DESIGN & STANDARDS	DIRECTOR C&S SYSTEMS	MTA Metro–North Railroad	NEW HAVEN LINE CP 229 DIVERGING ROUTES – TRACK 2 WEST – STAGE 3	ISSUE DATE: / REV. / /users/signal/RTG RTG–NHL1 SHEET 36X NHL1 L1036X

Gannett Fleming/CWA

CONTRACT #	PROJECT SHEET #
1000027511	0396

IN SERVICE

STAGE 3

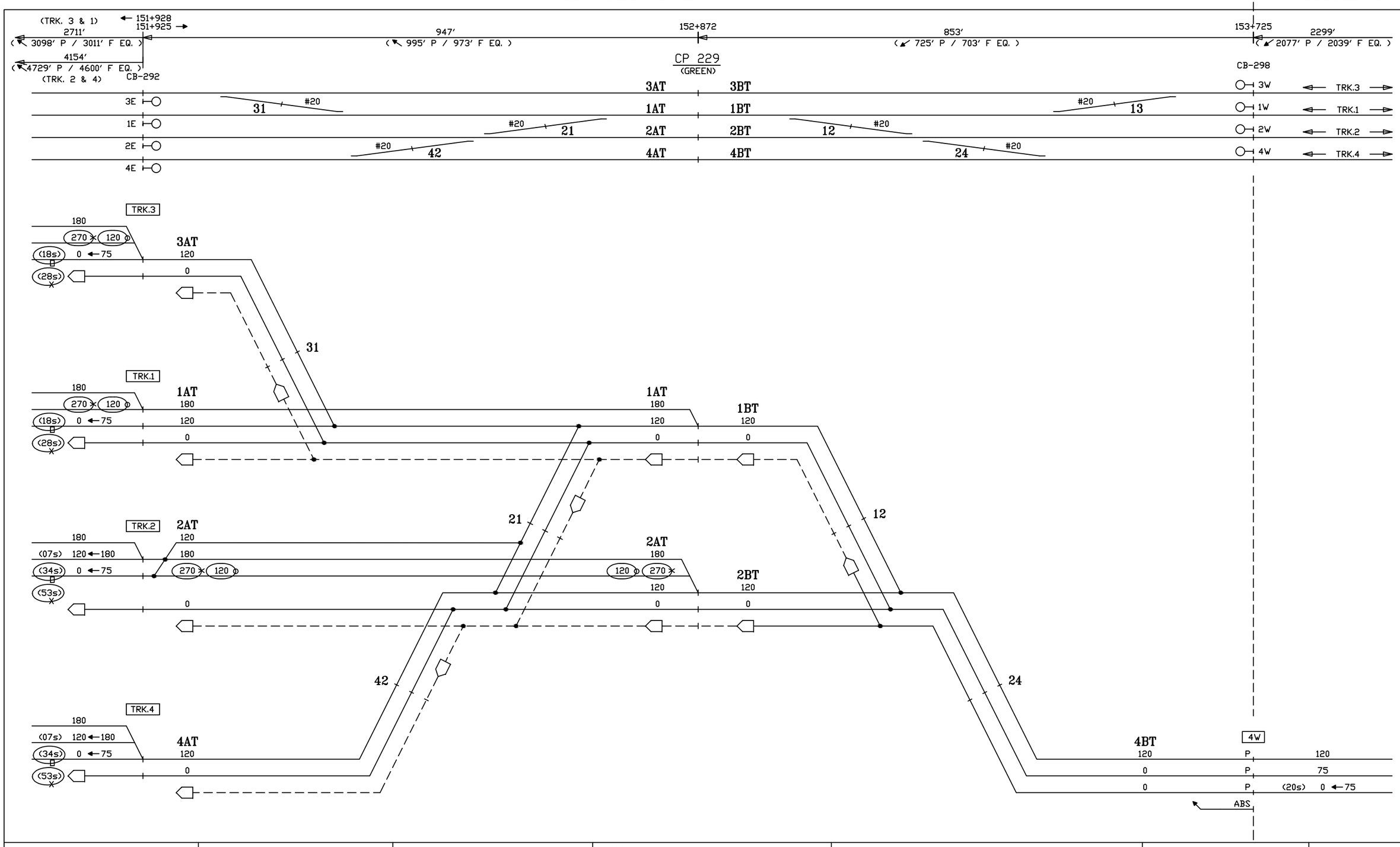

CIRCUIT ENGINEER	SR. SIGNAL ENGR.–DESIGN & STANDARDS	DIRECTOR C&S SYSTEMS	MTA Metro–North Railroad	NEW HAVEN LINE CP 229 DIVERGING ROUTES – TRACK 4 WEST – STAGE 3	ISSUE DATE: / REV. / /users/signal/RTG RTG–NHL1 SHEET 37X NHL1 L1037X

Gannett Fleming/CWA

CONTRACT # 1000027511

PROJECT SHEET # 0397

IN SERVICE

STAGE 4

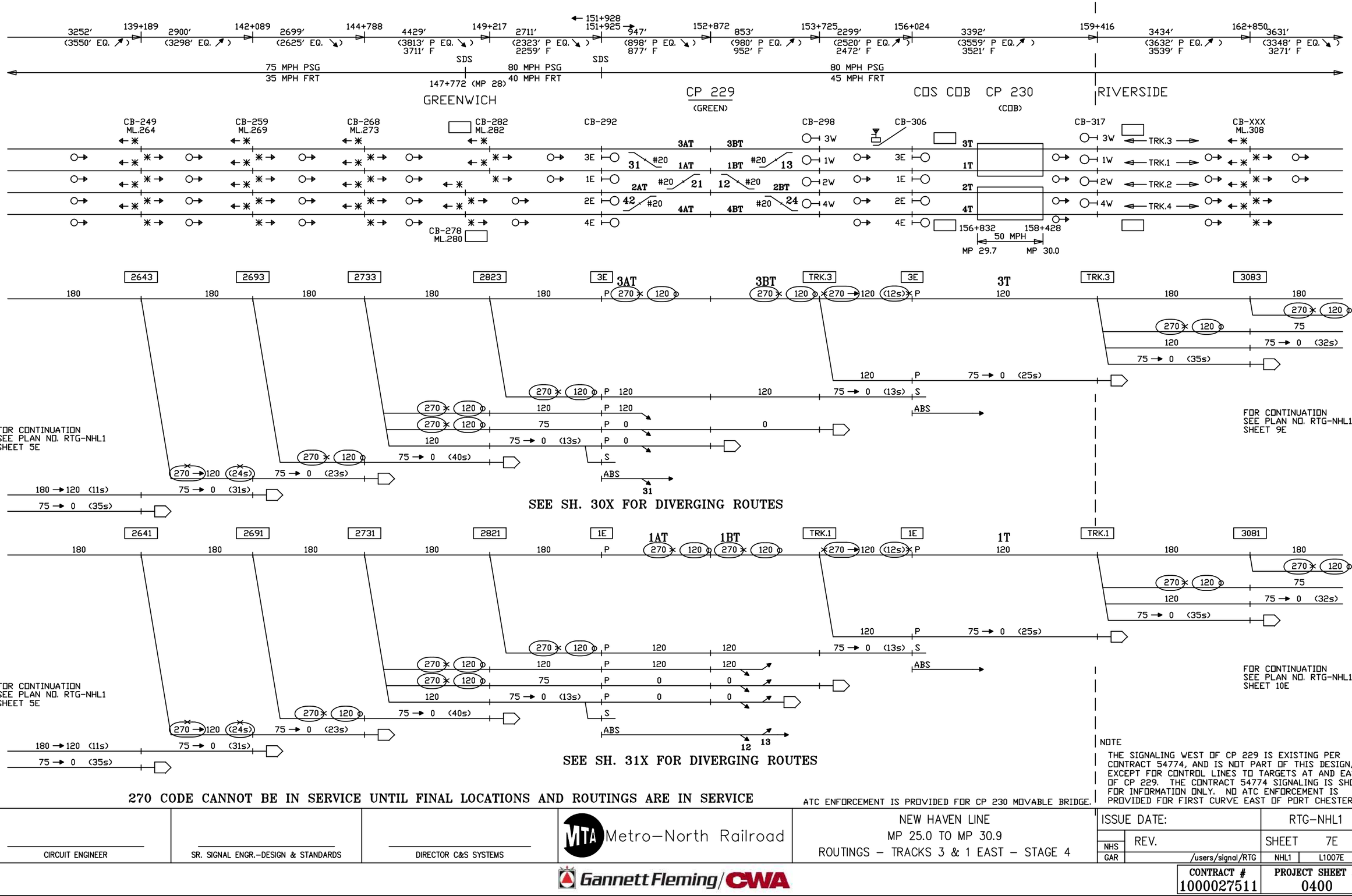

270 CODE CANNOT BE IN SERVICE UNTIL FINAL LOCATIONS AND ROUTINGS ARE IN SERVICE

ATC ENFORCEMENT IS PROVIDED FOR CP 230 MOVABLE BRIDGE.

NOTE

THE SIGNALING WEST OF CP 229 IS EXISTING PER CONTRACT 54774, AND IS NOT PART OF THIS DESIGN, EXCEPT FOR CONTROL LINES TO TARGETS AT AND EAST OF CP 229. THE CONTRACT 54774 SIGNALING IS SHOWN FOR INFORMATION ONLY. NO ATC ENFORCEMENT IS PROVIDED FOR FIRST CURVE EAST OF PORT CHESTER.

CIRCUIT ENGINEER	SR. SIGNAL ENGR.–DESIGN & STANDARDS	DIRECTOR C&S SYSTEMS	MTA Metro–North Railroad	NEW HAVEN LINE MP 25.0 TO MP 30.9 ROUTINGS – TRACKS 3 & 1 EAST – STAGE 4	ISSUE DATE: RTG–NHL1 REV. SHEET 7E NHS GAR /users/signal/RTG NHL1 L1007E

Gannett Fleming/CWA

CONTRACT #	PROJECT SHEET #
1000027511	0400

IN SERVICE

STAGE 4

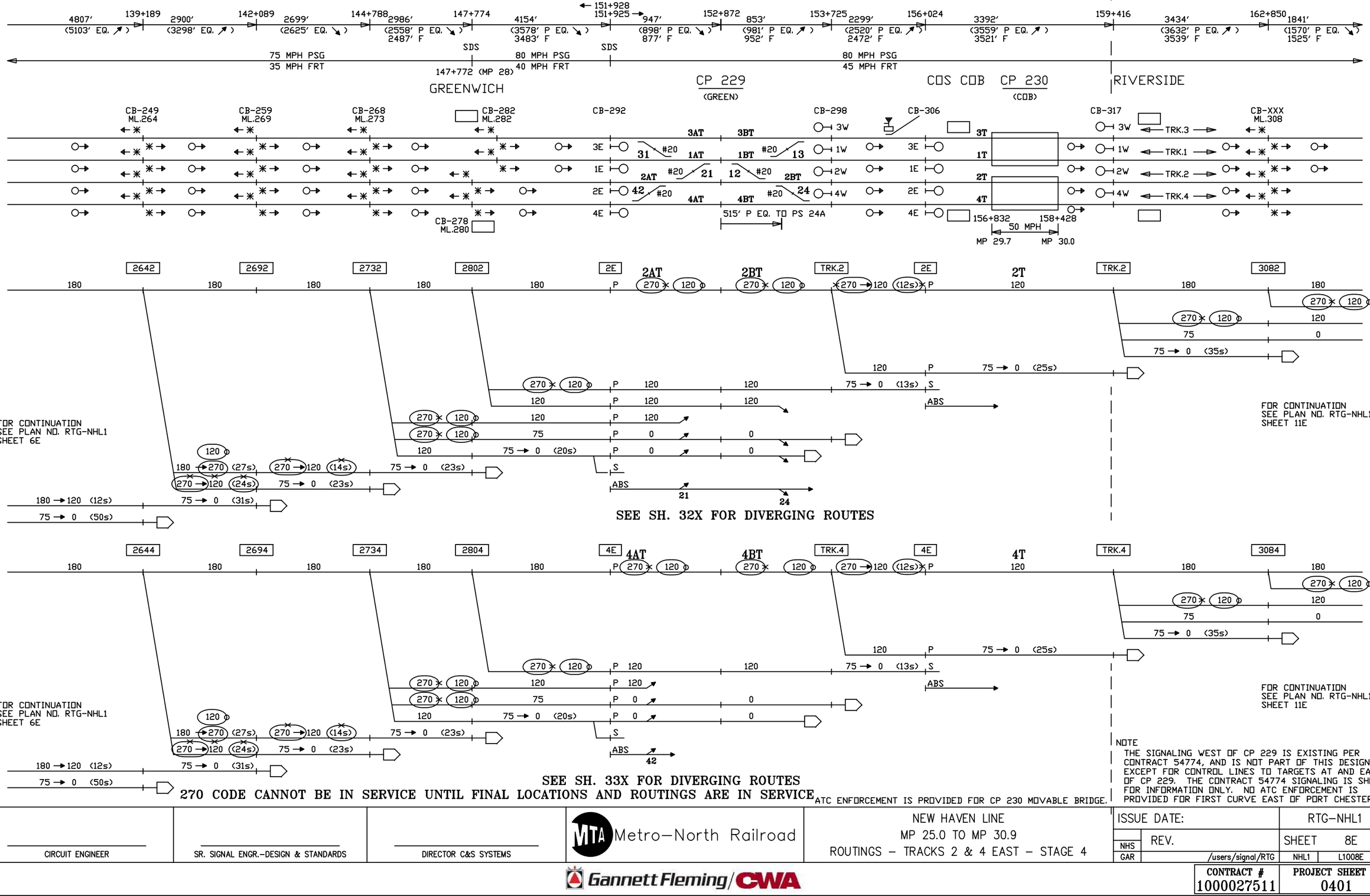

SEE SH. 32X FOR DIVERGING ROUTES

SEE SH. 33X FOR DIVERGING ROUTES

270 CODE CANNOT BE IN SERVICE UNTIL FINAL LOCATIONS AND ROUTINGS ARE IN SERVICE

ATC ENFORCEMENT IS PROVIDED FOR CP 230 MOVABLE BRIDGE.

NOTE
THE SIGNALING WEST OF CP 229 IS EXISTING PER CONTRACT 54774, AND IS NOT PART OF THIS DESIGN, EXCEPT FOR CONTROL LINES TO TARGETS AT AND EAST OF CP 229. THE CONTRACT 54774 SIGNALING IS SHOWN FOR INFORMATION ONLY. NO ATC ENFORCEMENT IS PROVIDED FOR FIRST CURVE EAST OF PORT CHESTER.

CIRCUIT ENGINEER

SR. SIGNAL ENGR.–DESIGN & STANDARDS

DIRECTOR C&S SYSTEMS

MTA Metro–North Railroad

NEW HAVEN LINE
MP 25.0 TO MP 30.9
ROUTINGS – TRACKS 2 & 4 EAST – STAGE 4

ISSUE DATE:

RTG–NHL1

NHS
GAR
REV.

SHEET 8E

/users/signal/RTG NHL1 L1008E

Gannett Fleming/CWA

CONTRACT # 1000027511

PROJECT SHEET # 0401

STAGE 4

EXISTING

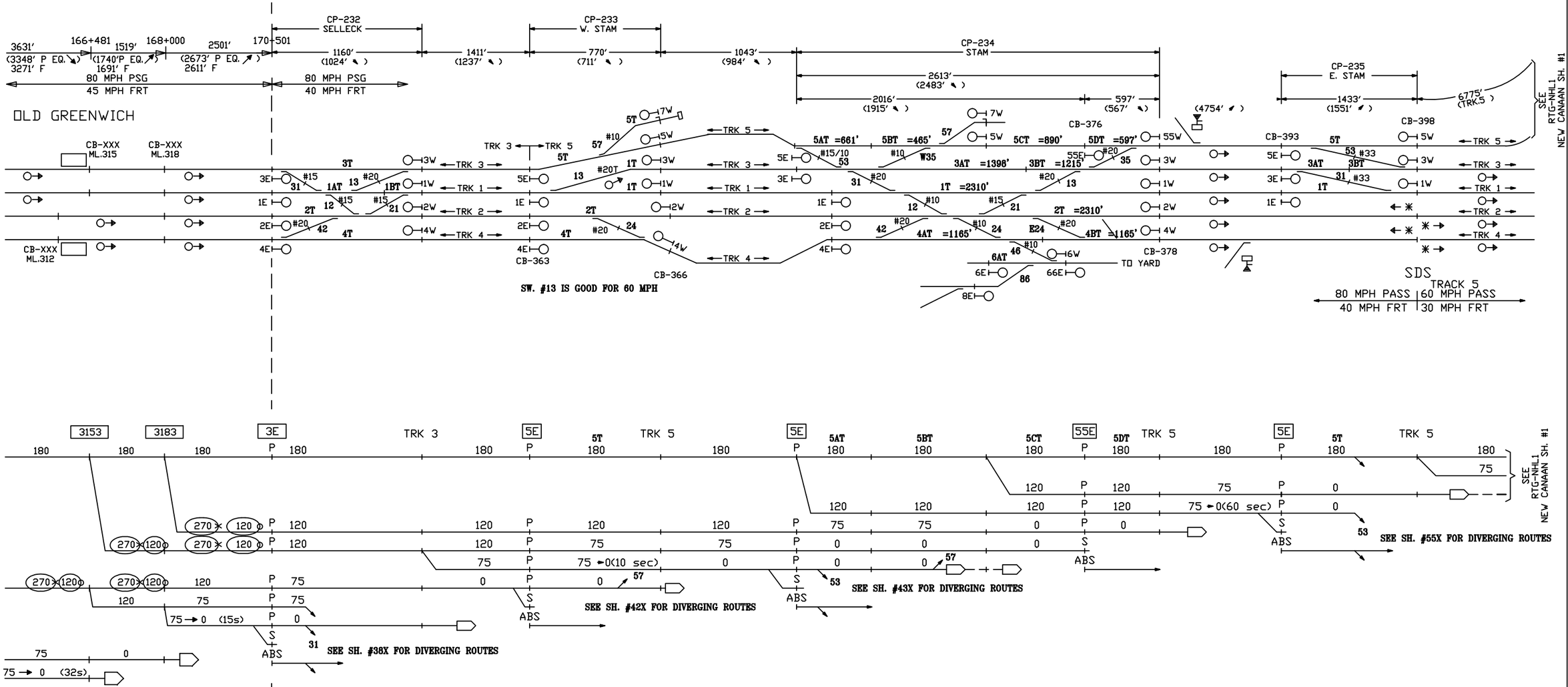

SEE SH. 38X FOR DIVERGING ROUTES

FOR CONTINUATION
SEE PLAN NO. RTG-NHL1
SHEET 7E

270 CODE CANNOT BE IN SERVICE UNTIL FINAL LOCATIONS AND ROUTINGS ARE IN SERVICE

NOTE
TIE-INS TO NEW CANAAN BRANCH ARE PRELIMINARY.

CIRCUIT ENGINEER	SR. SIGNAL ENGR.–DESIGN & STANDARDS	DIRECTOR C&S SYSTEMS	MTA Metro–North Railroad	NEW HAVEN LINE MP 30.9 TO MP 35.0 ROUTINGS – TRACK 3 CHANGES TO TRACK 5 EAST – STAGE 4	ISSUE DATE: / RTG–NHL1 NHS REV. / SHEET 9E NHS /users/signal/RTG / NHL1 / L1009E

Gannett Fleming/CWA

CONTRACT # 1000027511

PROJECT SHEET # 0402

STAGE 4

EXISTING

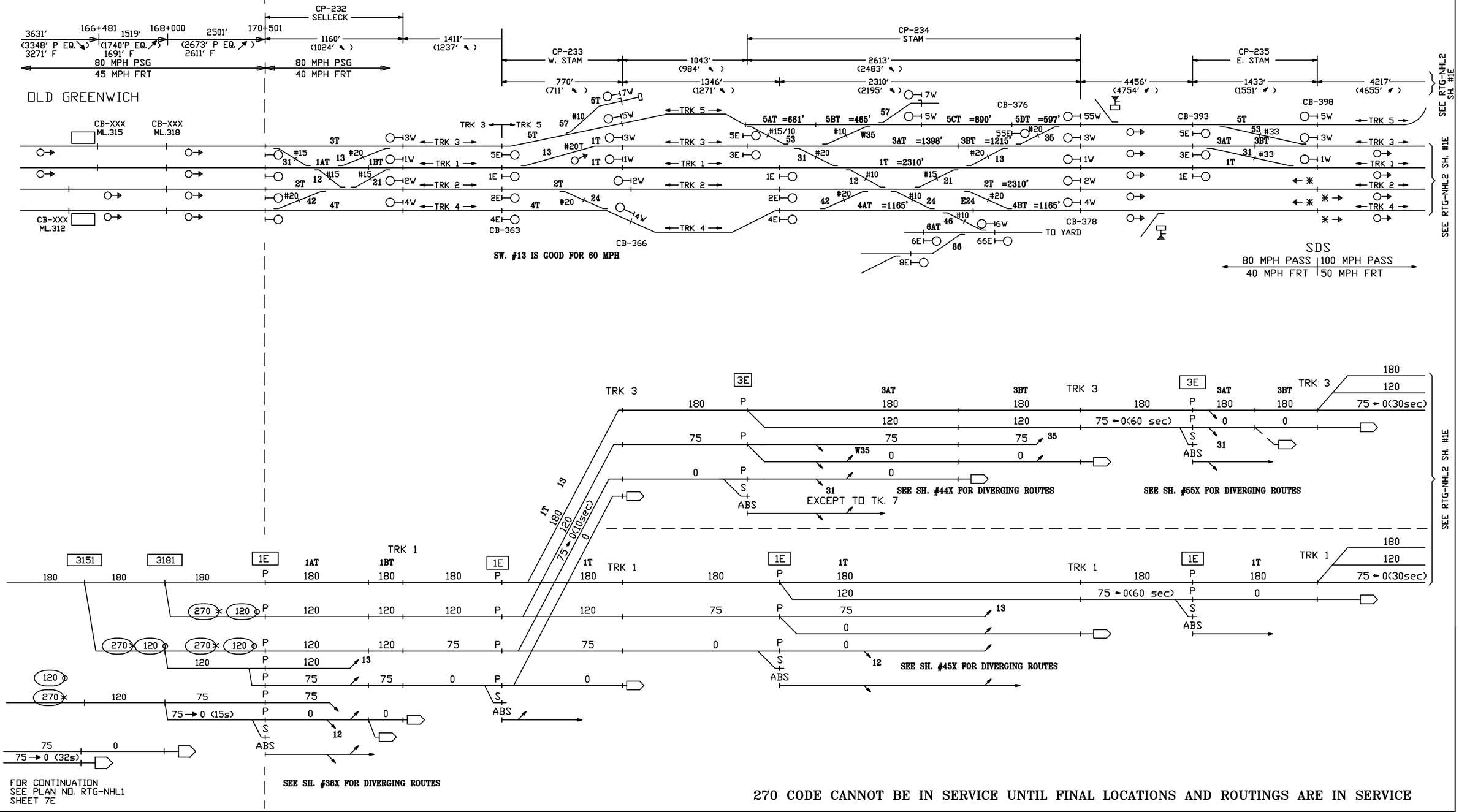

270 CODE CANNOT BE IN SERVICE UNTIL FINAL LOCATIONS AND ROUTINGS ARE IN SERVICE

CIRCUIT ENGINEER	SR. SIGNAL ENGR.–DESIGN & STANDARDS	DIRECTOR C&S SYSTEMS	MTA Metro–North Railroad	NEW HAVEN LINE MP 30.9 TO MP 35.0 ROUTINGS – TRACKS 3 & 1 EAST – STAGE 4	ISSUE DATE: / REV. / NHS / NHS / /users/signal/RTG RTG–NHL1 SHEET 10E NHL1 L1010E

Gannett Fleming/CWA

CONTRACT # 1000027511

PROJECT SHEET # 0403

STAGE 4

EXISTING

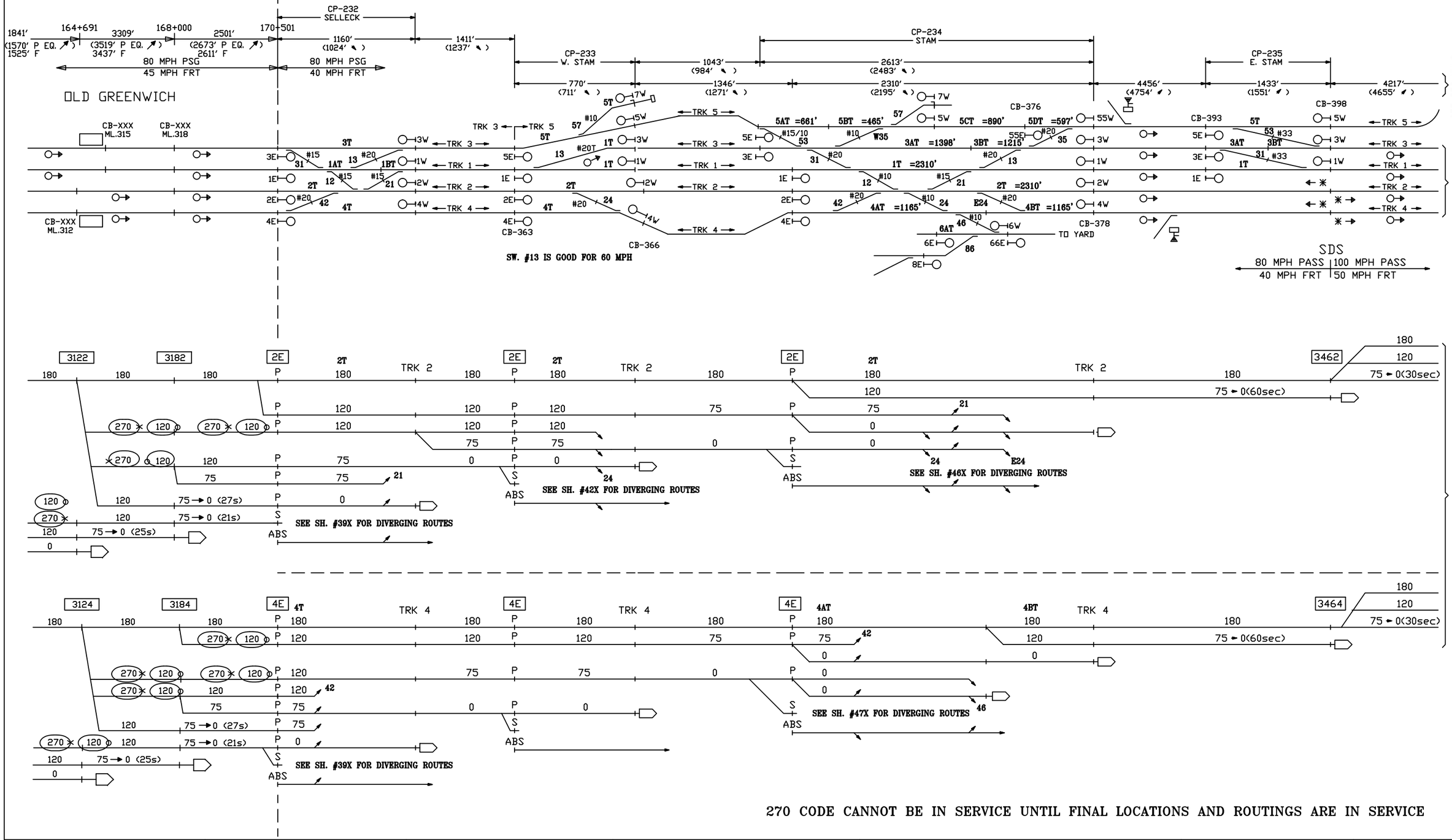

270 CODE CANNOT BE IN SERVICE UNTIL FINAL LOCATIONS AND ROUTINGS ARE IN SERVICE

CIRCUIT ENGINEER	SR. SIGNAL ENGR.–DESIGN & STANDARDS	DIRECTOR C&S SYSTEMS	MTA Metro–North Railroad	NEW HAVEN LINE MP 30.9 TO MP 35.0 ROUTINGS – TRACKS 2 & 4 EAST – STAGE 4	ISSUE DATE: / REV. / NHS / NHS / /users/signal/RTG RTG–NHL1 SHEET 11E NHL1 L1011E

Gannett Fleming/CWA

CONTRACT # 1000027511

PROJECT SHEET # 0404

IN SERVICE

STAGE 4

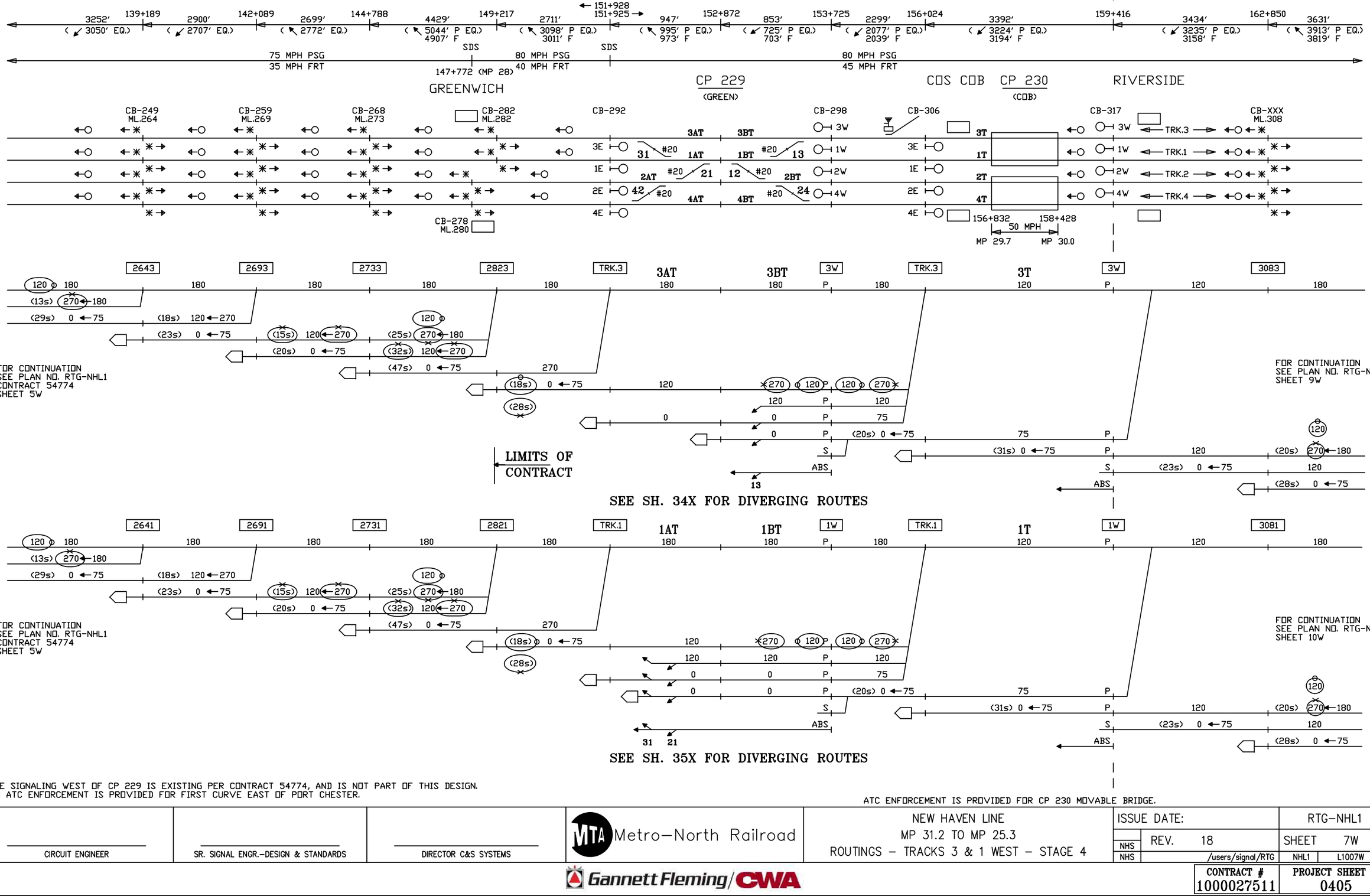

THE SIGNALING WEST OF CP 229 IS EXISTING PER CONTRACT 54774, AND IS NOT PART OF THIS DESIGN.
NO ATC ENFORCEMENT IS PROVIDED FOR FIRST CURVE EAST OF PORT CHESTER.

ATC ENFORCEMENT IS PROVIDED FOR CP 230 MOVABLE BRIDGE.

CIRCUIT ENGINEER	SR. SIGNAL ENGR.–DESIGN & STANDARDS	DIRECTOR C&S SYSTEMS	MTA Metro–North Railroad	NEW HAVEN LINE MP 31.2 TO MP 25.3 ROUTINGS – TRACKS 3 & 1 WEST – STAGE 4	ISSUE DATE: NHS REV. 18 NHS /users/signal/RTG	RTG–NHL1 SHEET 7W NHL1 L1007W

Gannett Fleming/CWA

CONTRACT # 1000027511

PROJECT SHEET # 0405

IN SERVICE

STAGE 4

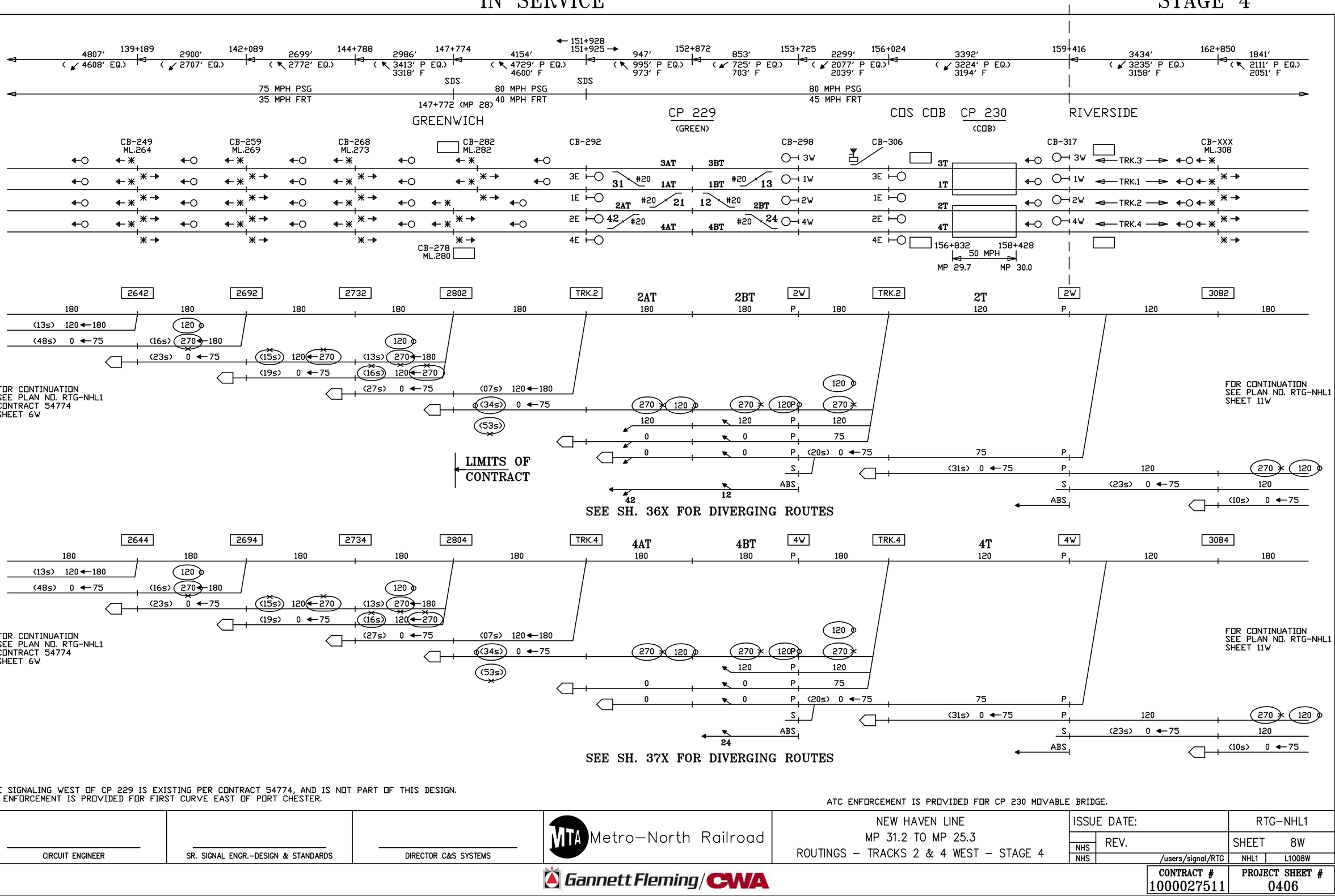

THE SIGNALING WEST OF CP 229 IS EXISTING PER CONTRACT 54774, AND IS NOT PART OF THIS DESIGN.
NO ENFORCEMENT IS PROVIDED FOR FIRST CURVE EAST OF PORT CHESTER.

ATC ENFORCEMENT IS PROVIDED FOR CP 230 MOVABLE BRIDGE.

CIRCUIT ENGINEER	SR. SIGNAL ENGR.–DESIGN & STANDARDS	DIRECTOR C&S SYSTEMS	MTA Metro–North Railroad	NEW HAVEN LINE MP 31.2 TO MP 25.3 ROUTINGS – TRACKS 2 & 4 WEST – STAGE 4	ISSUE DATE:	RTG–NHL1
					NHS REV.	SHEET 8W
					NHS /users/signal/RTG	NHL1 L1008W

Gannett Fleming/CWA

CONTRACT #	PROJECT SHEET #
1000027511	0406

STAGE 4

EXISTING

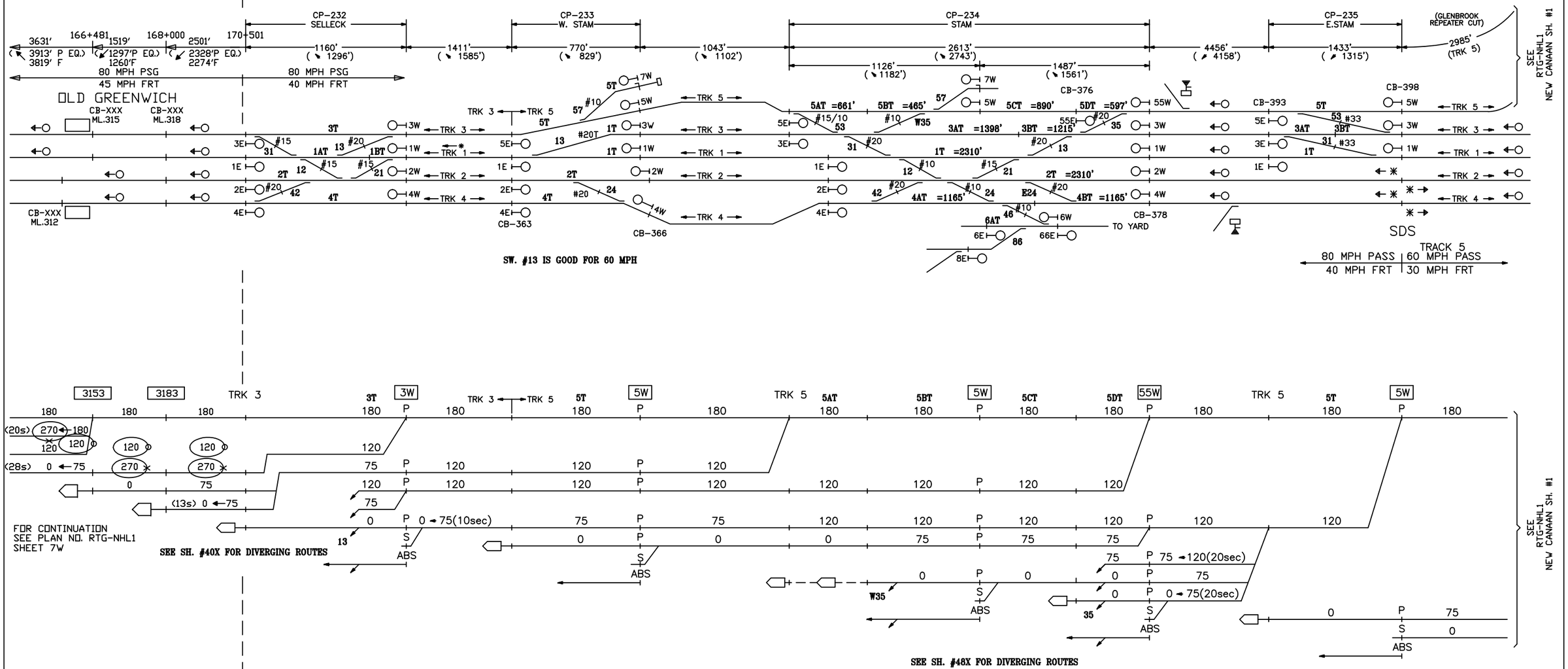

CIRCUIT ENGINEER	SR. SIGNAL ENGR.–DESIGN & STANDARDS	DIRECTOR C&S SYSTEMS	Metro–North Railroad	NEW HAVEN LINE MP 35.6 TO MP 31.2 ROUTINGS – TRACK 5 CHANGES TO TRACK 3 WEST – STAGE 4	ISSUE DATE: REV. 11 /users/signal/RTG

RTG–NHL1 | SHEET 9W | NHL1 | L1009W

Gannett Fleming/CWA

CONTRACT # 1000027511 | PROJECT SHEET # 0407

STAGE 4

EXISTING

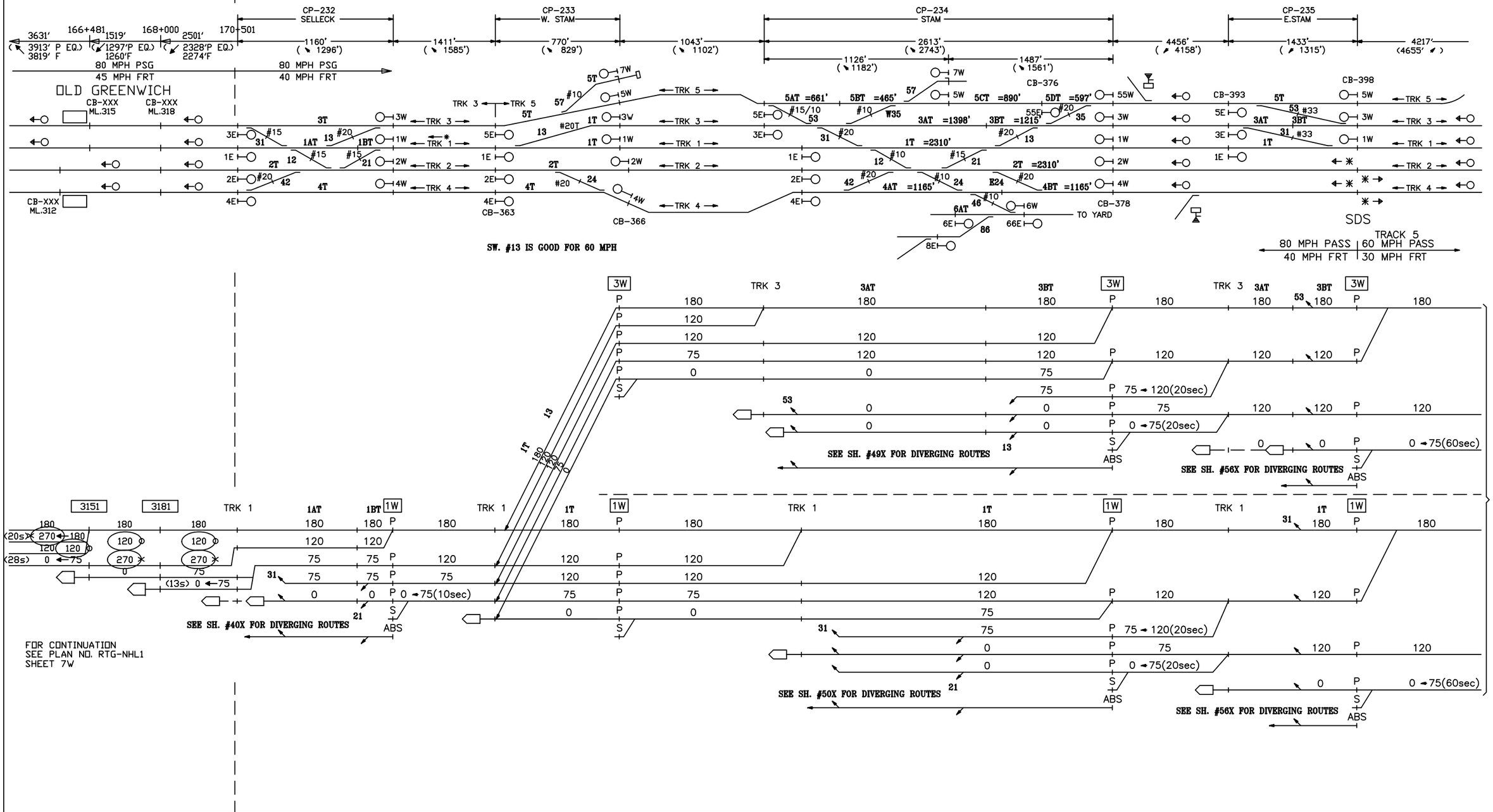

CIRCUIT ENGINEER	SR. SIGNAL ENGR.–DESIGN & STANDARDS	DIRECTOR C&S SYSTEMS	Metro–North Railroad	NEW HAVEN LINE MP 35.6 TO MP 31.2 ROUTINGS – TRACKS 3 & 1 WEST – STAGE 4	ISSUE DATE: 09–01–99 · RTG–NHL1 NHS REV. 11 · SHEET 10W NHS /users/signal/RTG · NHL1 · L1010W

Gannett Fleming/CWA

CONTRACT # 1000027511 · PROJECT SHEET # 0408

STAGE 4

EXISTING

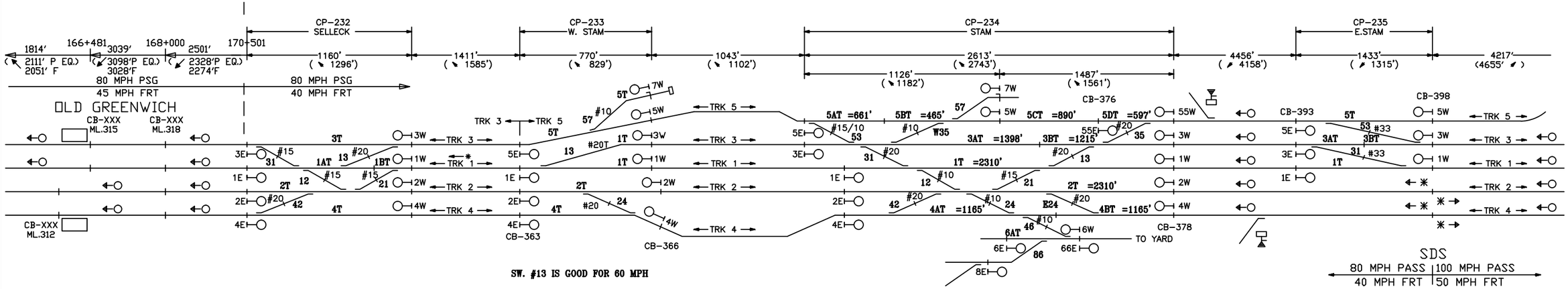

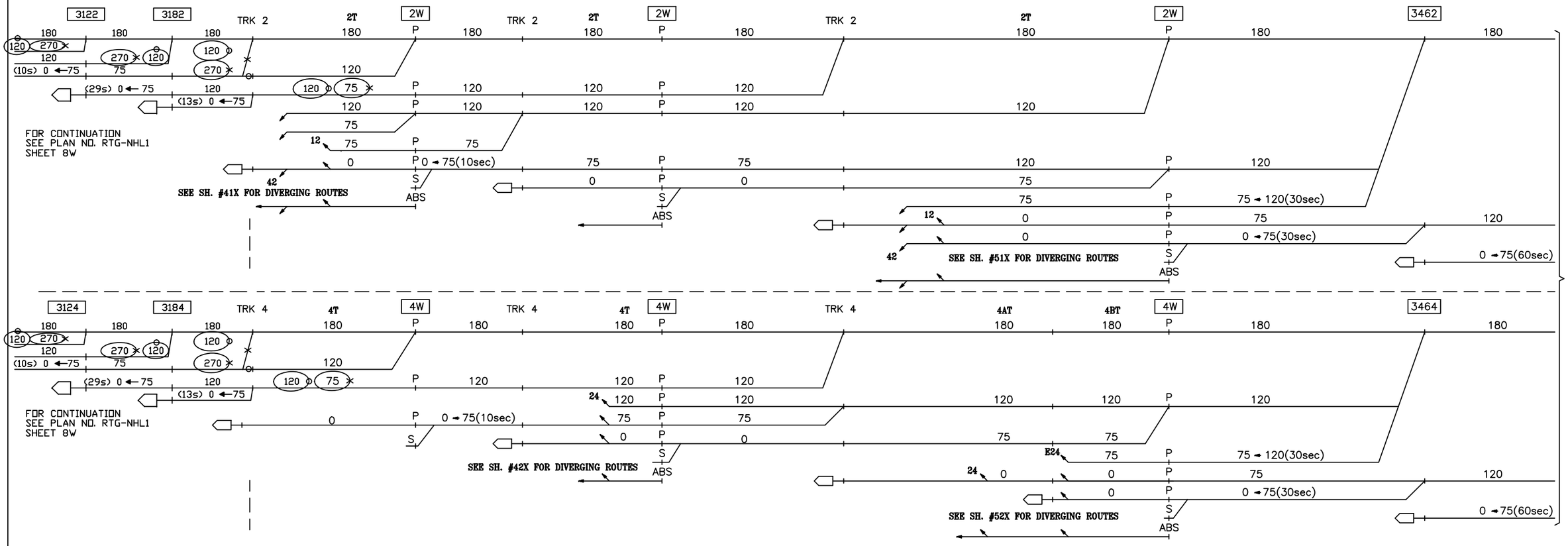

CIRCUIT ENGINEER

SR. SIGNAL ENGR.–DESIGN & STANDARDS

DIRECTOR C&S SYSTEMS

MTA Metro–North Railroad

NEW HAVEN LINE
MP 35.6 TO MP 31.2
ROUTINGS – TRACKS 2 & 4 WEST – STAGE 4

ISSUE DATE: 09–01–99

REV. 11

NHS

NHS

/users/signal/RTG

RTG–NHL1

SHEET 11W

NHL1 L1011W

Gannett Fleming/CWA

CONTRACT # 1000027511

PROJECT SHEET # 0409

STAGE 4

EXISTING

SELLECK CP–232

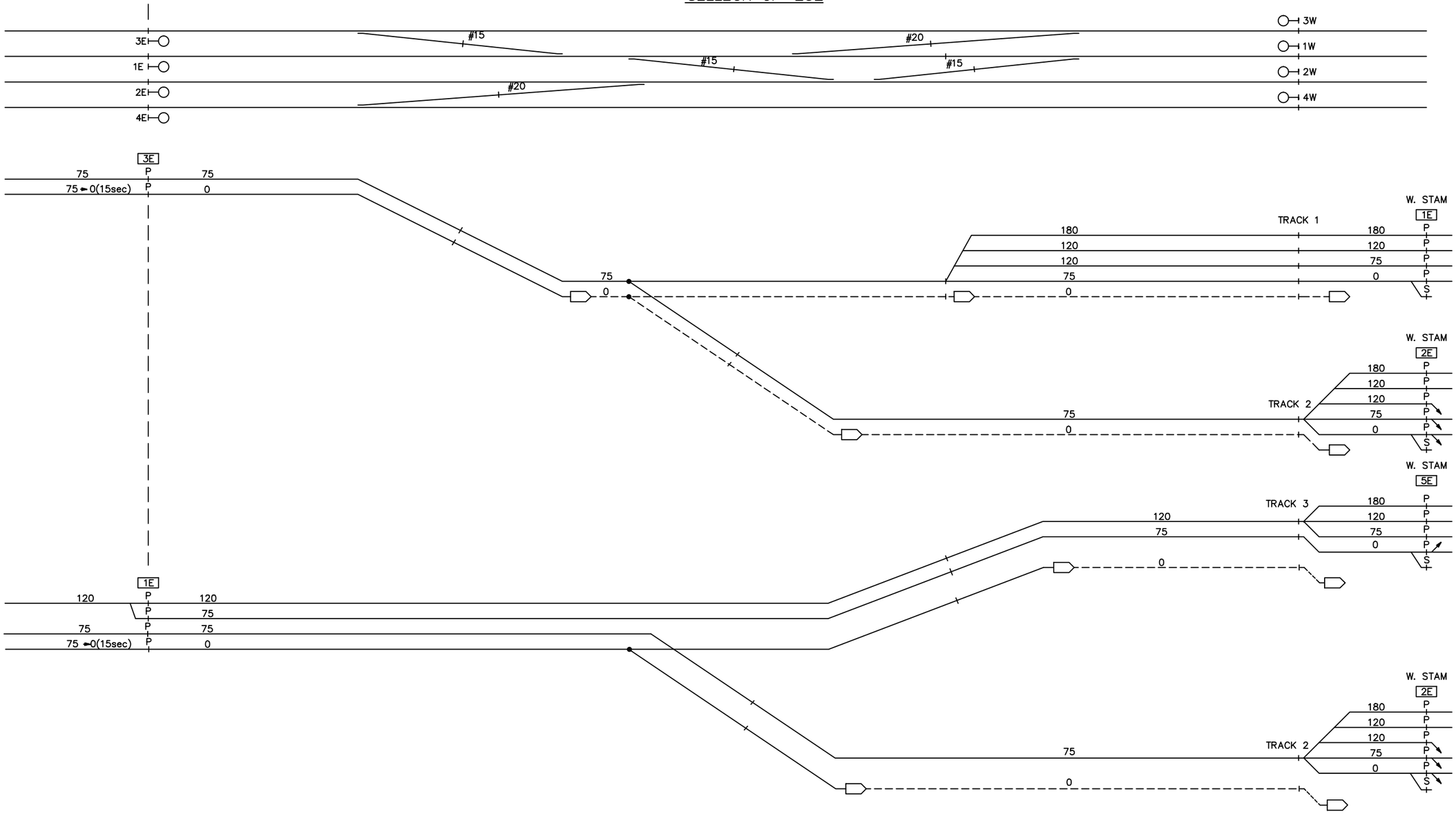

CIRCUIT ENGINEER	SR. SIGNAL ENGR.–DESIGN & STANDARDS	DIRECTOR C&S SYSTEMS	MTA Metro–North Railroad	NEW HAVEN LINE CP 232 DIVERGING ROUTES – TRACKS 3 & 1 EAST – STAGE 4	ISSUE DATE: 11–14–97 REV. 10 /USERS/SIGNAL/RTG	RTG–NHL1 SHEET 38X NHL1 L1038X

Gannett Fleming / CWA

CONTRACT #	PROJECT SHEET #
1000027511	0410

STAGE 4

EXISTING

SELLECK CP–232

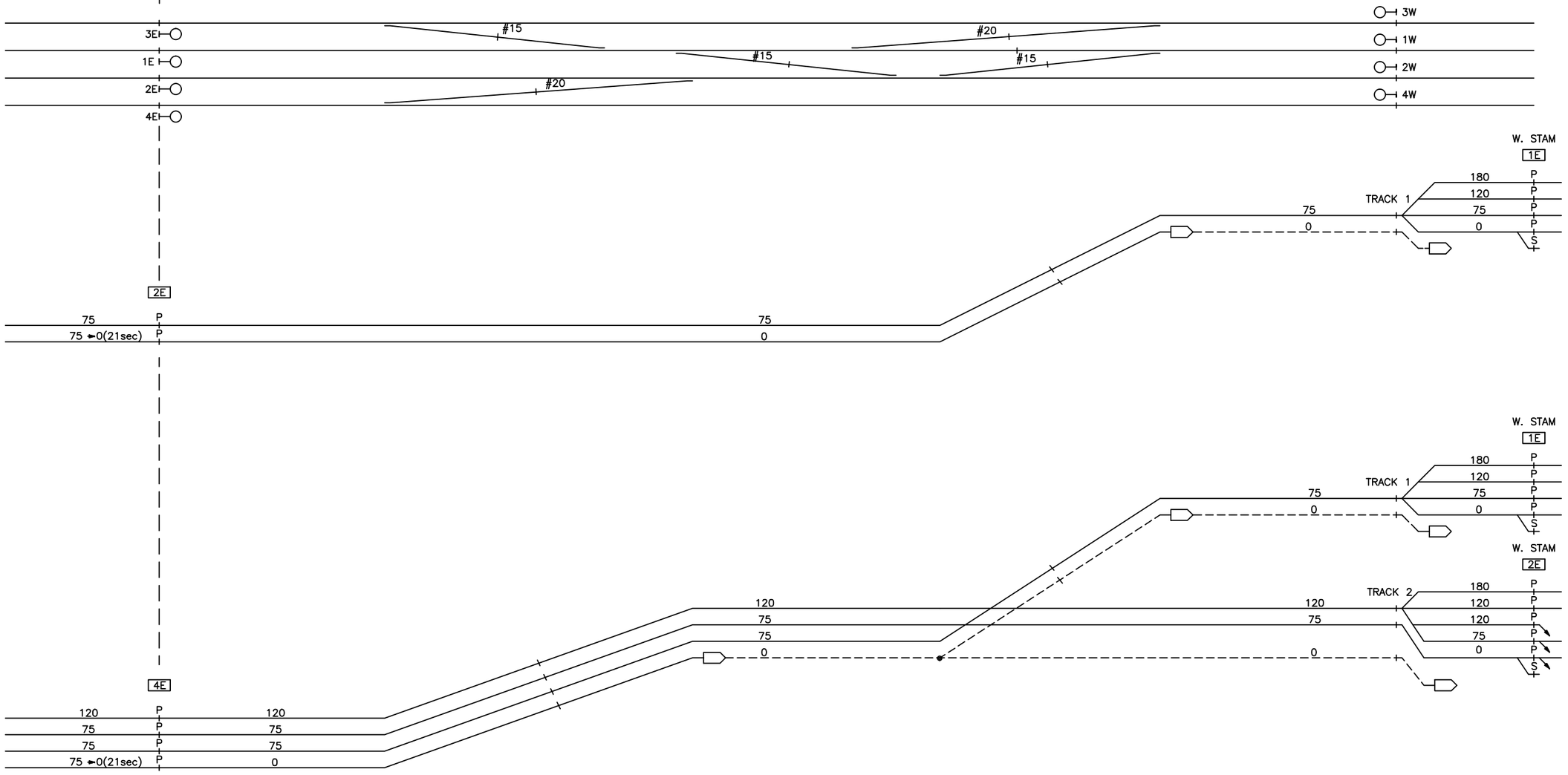

CIRCUIT ENGINEER	SR. SIGNAL ENGR.–DESIGN & STANDARDS	DIRECTOR C&S SYSTEMS	MTA Metro–North Railroad	NEW HAVEN LINE CP 232 DIVERGING ROUTES – TRACKS 2 & 4 EAST – STAGE 4	ISSUE DATE: 11–14–97 REV. 10 /USERS/SIGNAL/RTG	RTG–NHL1 SHEET 39X NHL1 L1039X

Gannett Fleming/CWA

CONTRACT #	PROJECT SHEET #
1000027511	0411

STAGE 4

EWISTING

SELLECK CP–232

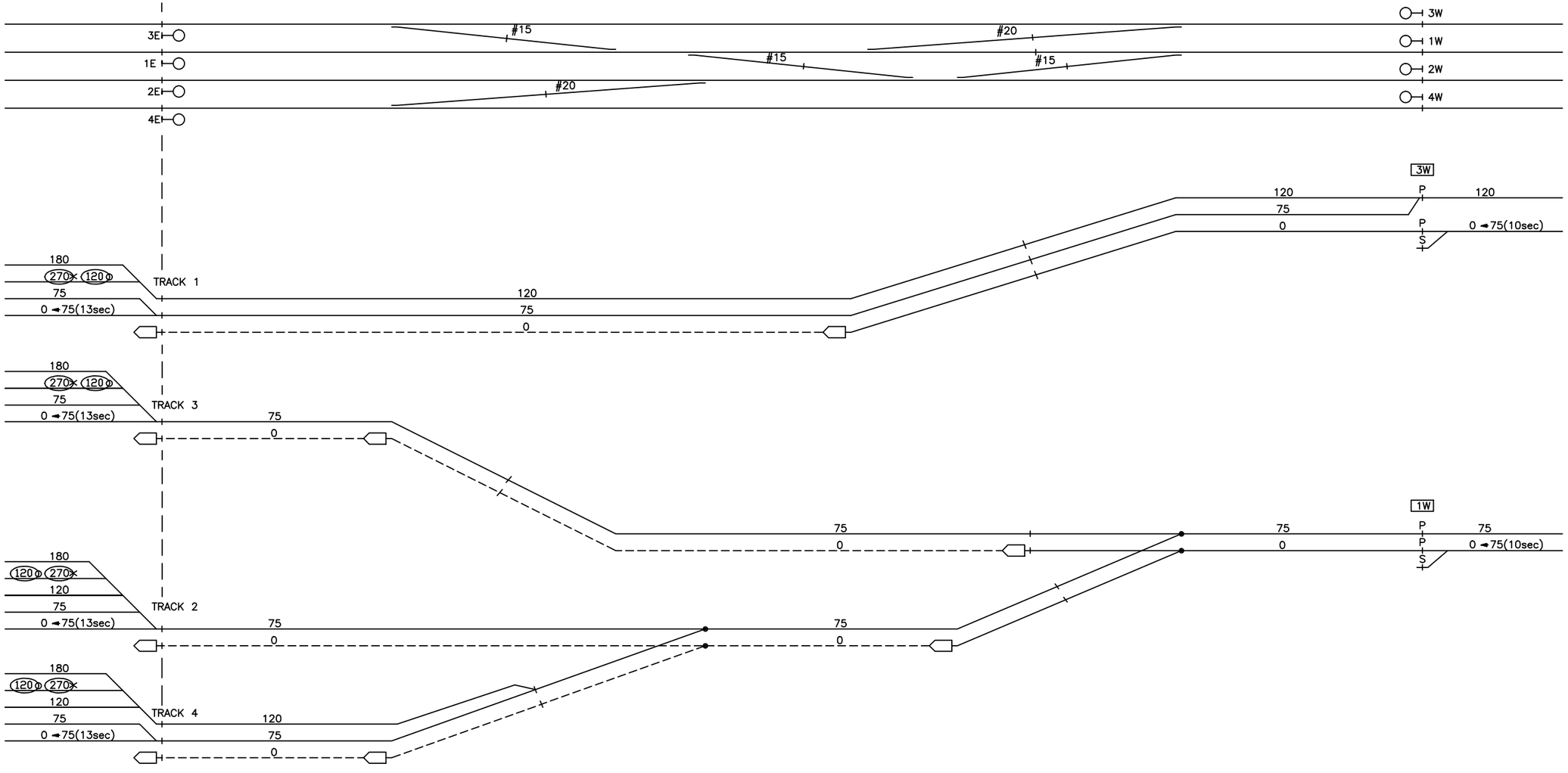

CIRCUIT ENGINEER	SR. SIGNAL ENGR.–DESIGN & STANDARDS	DIRECTOR C&S SYSTEMS	MTA Metro–North Railroad	NEW HAVEN LINE CP 232 DIVERGING ROUTES – TRACKS 3 & 1 WEST – STAGE 4	ISSUE DATE: 11–14–97 REV. 10 /USERS/SIGNAL/RTG NHL1 L1040X RTG–NHL1 SHEET 40X

Gannett Fleming/CWA

CONTRACT # 1000027511

PROJECT SHEET # 0412

STAGE 4

EXISTING

SELLECK CP–232

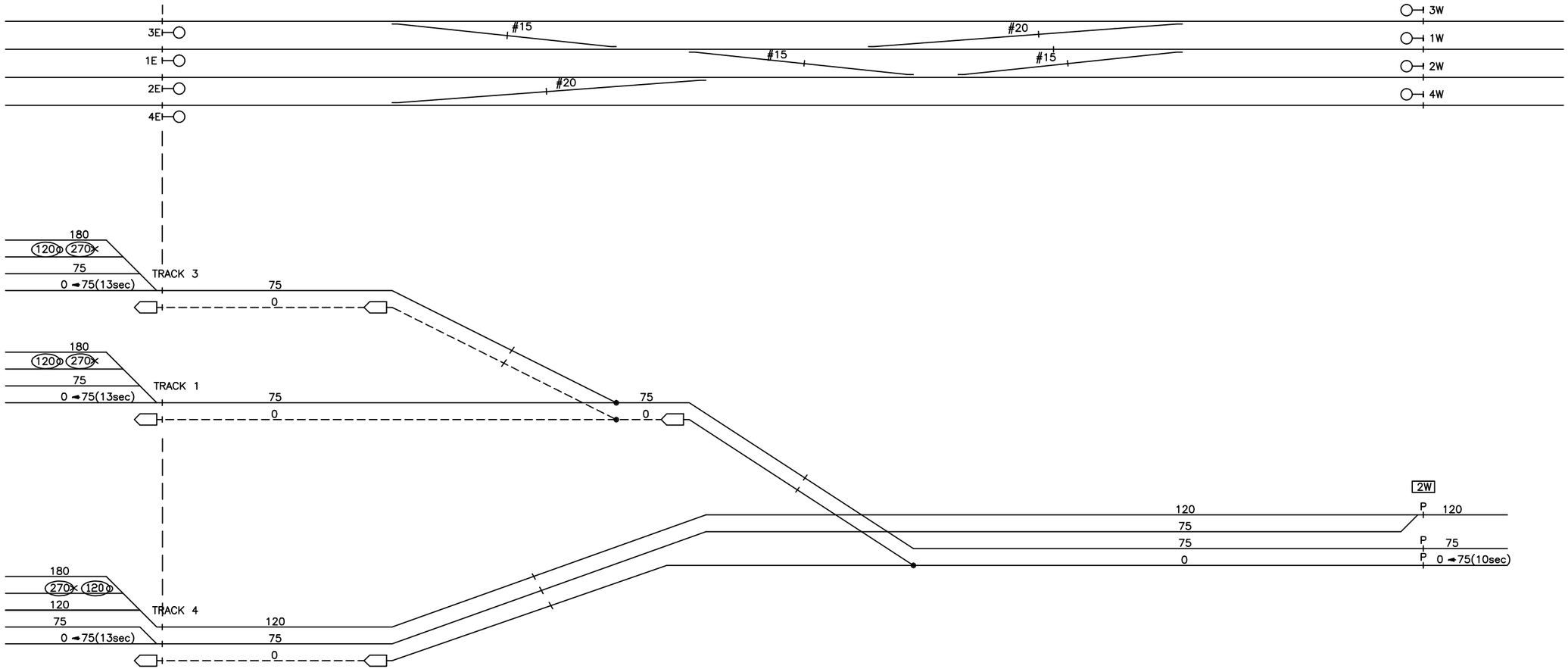

CIRCUIT ENGINEER	SR. SIGNAL ENGR.–DESIGN & STANDARDS	DIRECTOR C&S SYSTEMS	MTA Metro–North Railroad	NEW HAVEN LINE CP 232 DIVERGING ROUTES – TRACK 2 WEST – STAGE 4	ISSUE DATE: 11–14–97 REV. 10 /USERS/SIGNAL/RTG NHL1 L1041X

RTG–NHL1

SHEET 41X

Gannett Fleming/CWA

CONTRACT # 1000027511

PROJECT SHEET # 0413

EXISTING

W. STAM. CP–233

EAST ROUTINGS

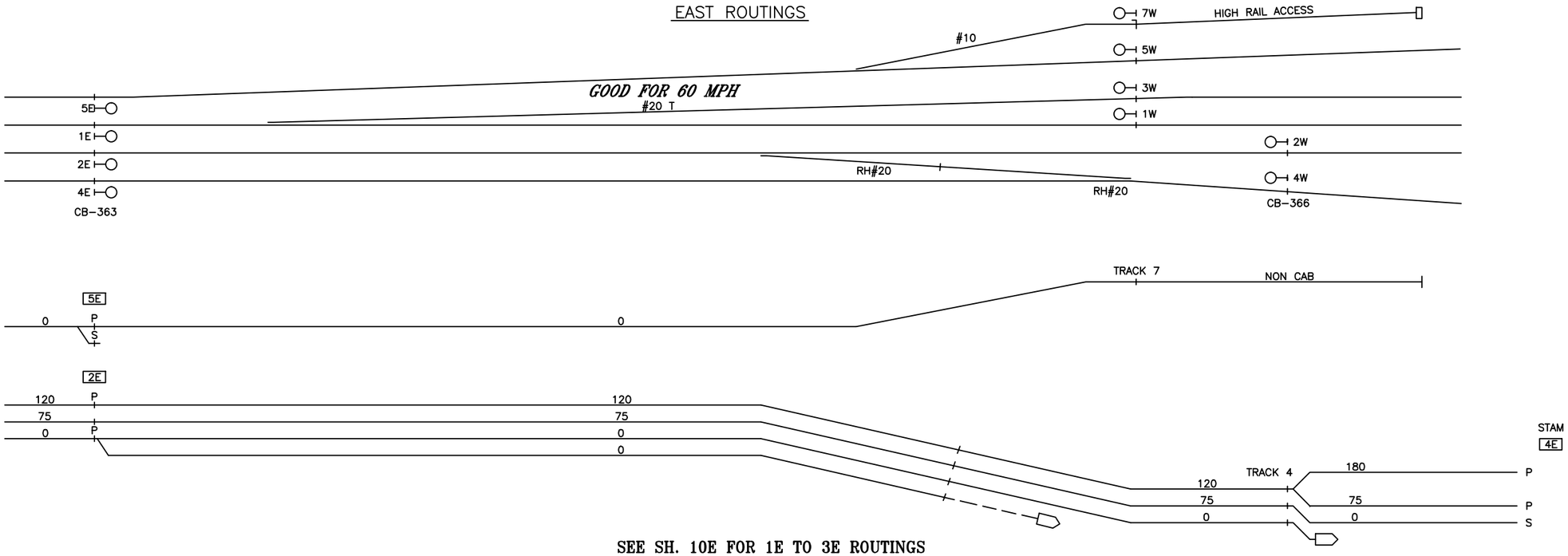

SEE SH. 10E FOR 1E TO 3E ROUTINGS

W. STAM. CP–233

WEST ROUTINGS

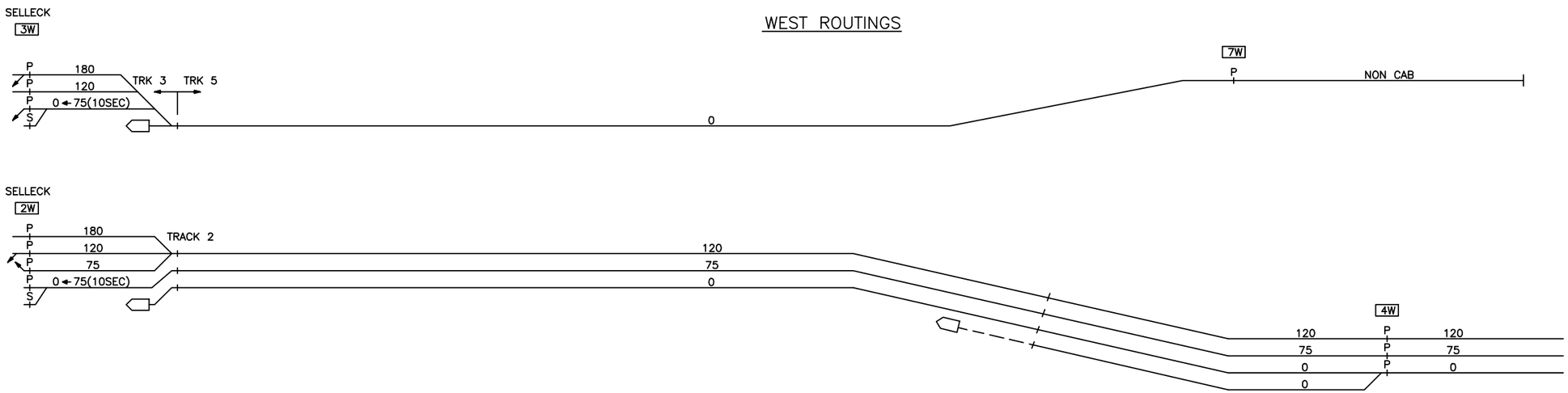

SEE SH. 10W FOR 3W TO 1W ROUTINGS

CIRCUIT ENGINEER	SR. SIGNAL ENGR.–DESIGN & STANDARDS	DIRECTOR C&S SYSTEMS	MTA Metro–North Railroad	NEW HAVEN LINE CP 233 DIVERGING ROUTES – STAGE 4	ISSUE DATE: 09–01–99 NHS REV. 11 NHS /users/signal/RTG NHL1 L1042X

RTG–NHL1

SHEET 42X

Gannett Fleming/CWA

CONTRACT # 1000027511

PROJECT SHEET # 0414

IN SERVICE

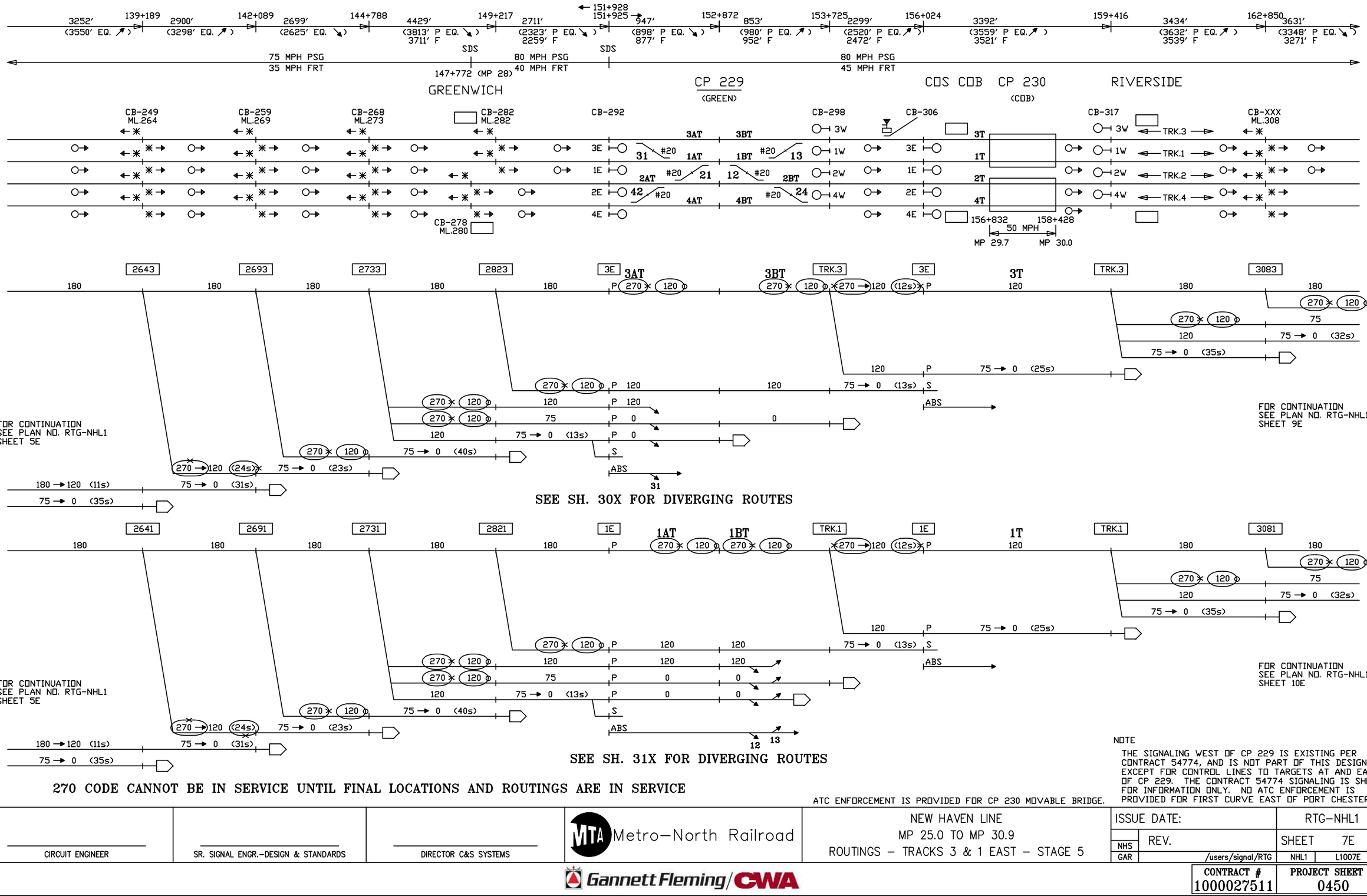

270 CODE CANNOT BE IN SERVICE UNTIL FINAL LOCATIONS AND ROUTINGS ARE IN SERVICE

NOTE

THE SIGNALING WEST OF CP 229 IS EXISTING PER CONTRACT 54774, AND IS NOT PART OF THIS DESIGN, EXCEPT FOR CONTROL LINES TO TARGETS AT AND EAST OF CP 229. THE CONTRACT 54774 SIGNALING IS SHOWN FOR INFORMATION ONLY. NO ATC ENFORCEMENT IS PROVIDED FOR FIRST CURVE EAST OF PORT CHESTER.

ATC ENFORCEMENT IS PROVIDED FOR CP 230 MOVABLE BRIDGE.

CIRCUIT ENGINEER	SR. SIGNAL ENGR.–DESIGN & STANDARDS	DIRECTOR C&S SYSTEMS	MTA Metro–North Railroad	NEW HAVEN LINE MP 25.0 TO MP 30.9 ROUTINGS – TRACKS 3 & 1 EAST – STAGE 5	ISSUE DATE: RTG–NHL1 NHS GAR REV. /users/signal/RTG SHEET 7E NHL1 L1007E

Gannett Fleming/CWA

CONTRACT #	PROJECT SHEET #
1000027511	0450

IN SERVICE

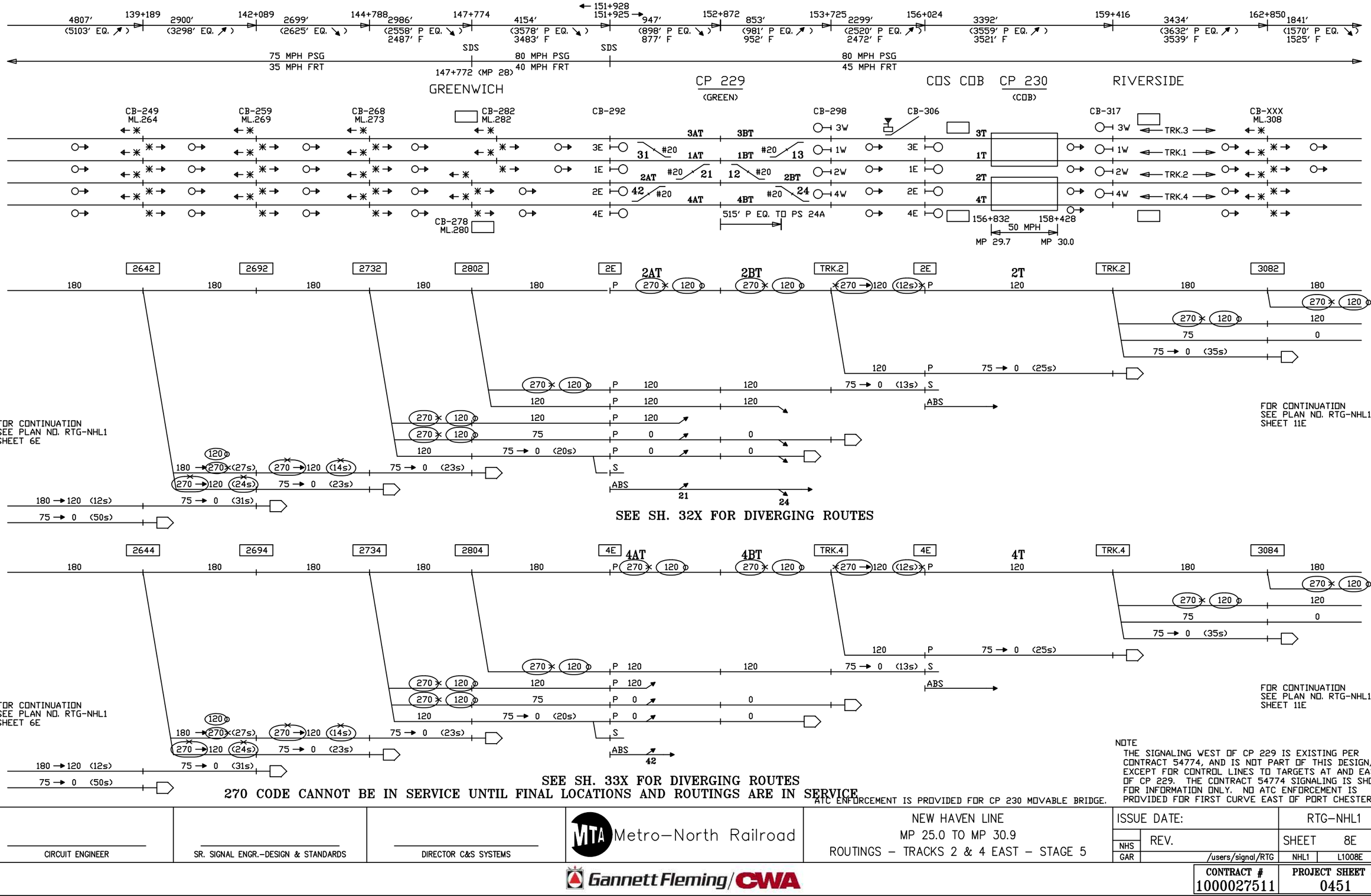

SEE SH. 32X FOR DIVERGING ROUTES

SEE SH. 33X FOR DIVERGING ROUTES

270 CODE CANNOT BE IN SERVICE UNTIL FINAL LOCATIONS AND ROUTINGS ARE IN SERVICE

NOTE
THE SIGNALING WEST OF CP 229 IS EXISTING PER CONTRACT 54774, AND IS NOT PART OF THIS DESIGN, EXCEPT FOR CONTROL LINES TO TARGETS AT AND EAST OF CP 229. THE CONTRACT 54774 SIGNALING IS SHOWN FOR INFORMATION ONLY. NO ATC ENFORCEMENT IS PROVIDED FOR FIRST CURVE EAST OF PORT CHESTER.

ATC ENFORCEMENT IS PROVIDED FOR CP 230 MOVABLE BRIDGE.

CIRCUIT ENGINEER	SR. SIGNAL ENGR.–DESIGN & STANDARDS	DIRECTOR C&S SYSTEMS	MTA Metro–North Railroad	NEW HAVEN LINE MP 25.0 TO MP 30.9 ROUTINGS – TRACKS 2 & 4 EAST – STAGE 5	ISSUE DATE: / REV. / NHS / GAR / /users/signal/RTG RTG–NHL1 SHEET 8E NHL1 L1008E

Gannett Fleming/CWA

CONTRACT # 1000027511

PROJECT SHEET # 0451

IN SERVICE | EXISTING | STAGE 5 | EXISTING

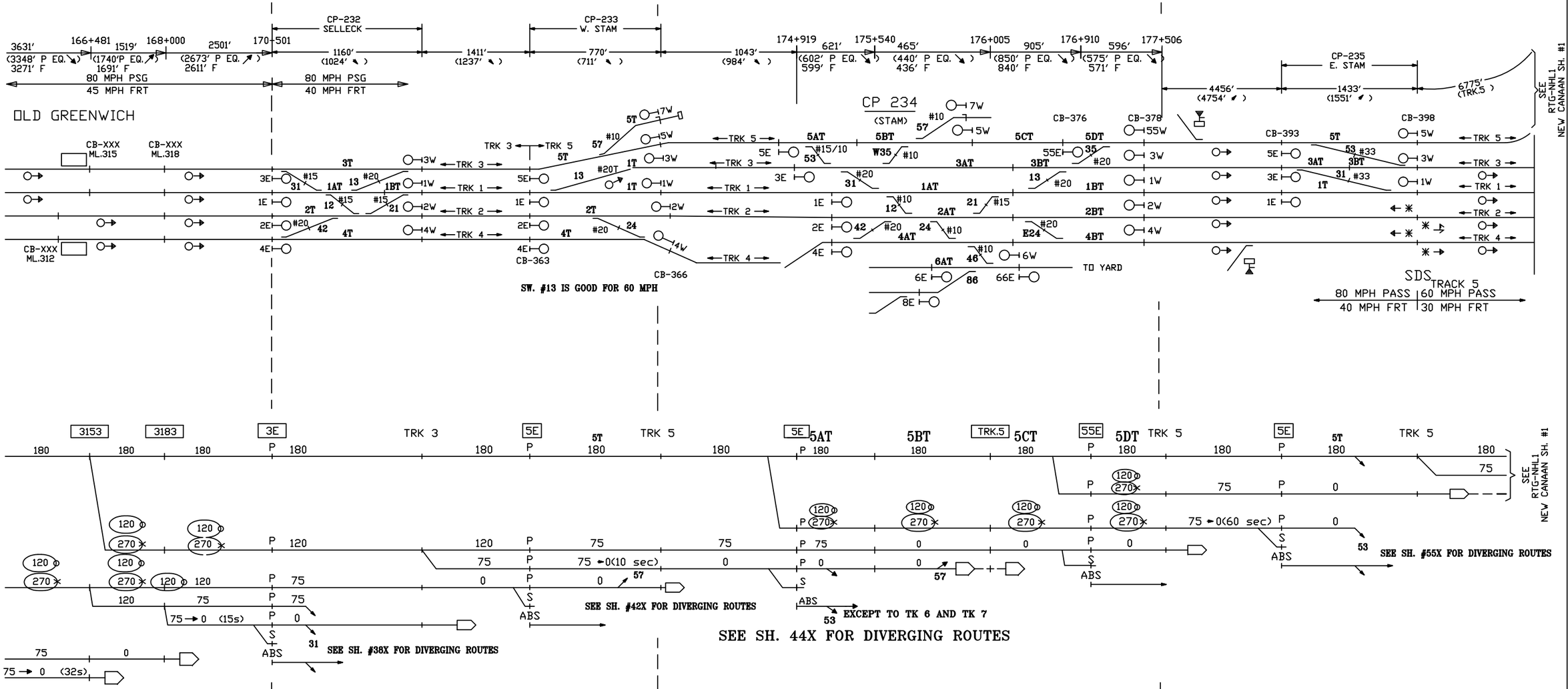

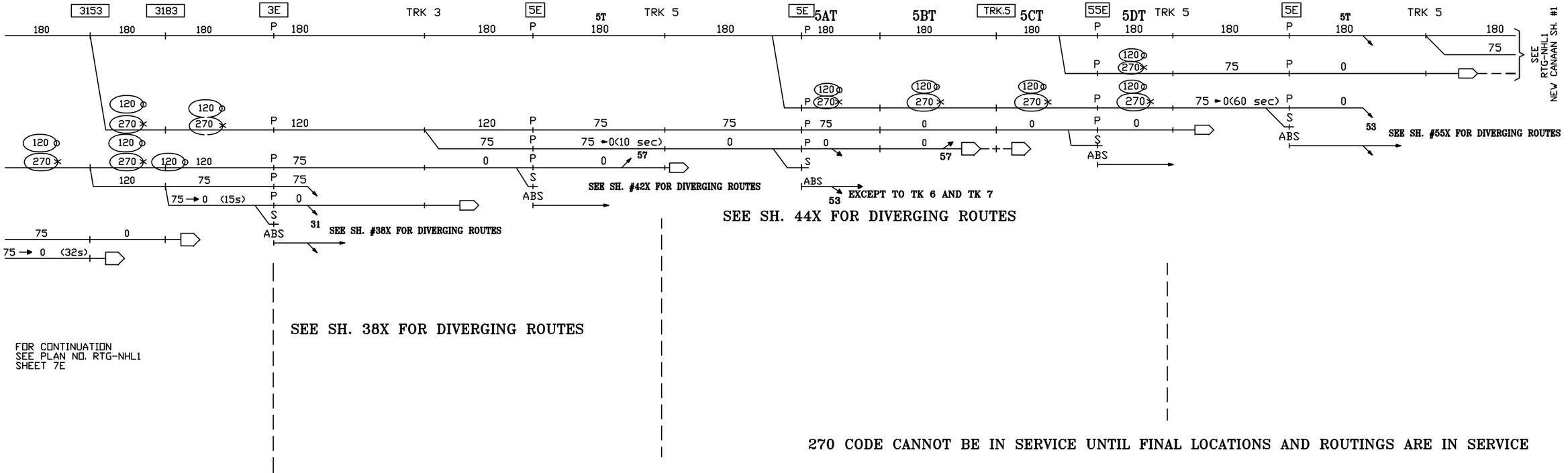

FOR CONTINUATION
SEE PLAN NO. RTG-NHL1
SHEET 7E

270 CODE CANNOT BE IN SERVICE UNTIL FINAL LOCATIONS AND ROUTINGS ARE IN SERVICE

CIRCUIT ENGINEER	SR. SIGNAL ENGR.–DESIGN & STANDARDS	DIRECTOR C&S SYSTEMS	MTA Metro–North Railroad	NEW HAVEN LINE MP 30.9 TO MP 35.0 ROUTINGS – TRACK 3 CHANGES TO TRACK 5 EAST – STAGE 5	ISSUE DATE: / RTG–NHL1 NHS REV. / SHEET 9E NHS /users/signal/RTG / NHL1 / L1009E

Gannett Fleming/CWA

CONTRACT # 1000027511 | PROJECT SHEET # 0452

IN SERVICE | EXISTING | STAGE 5 | EXISTING

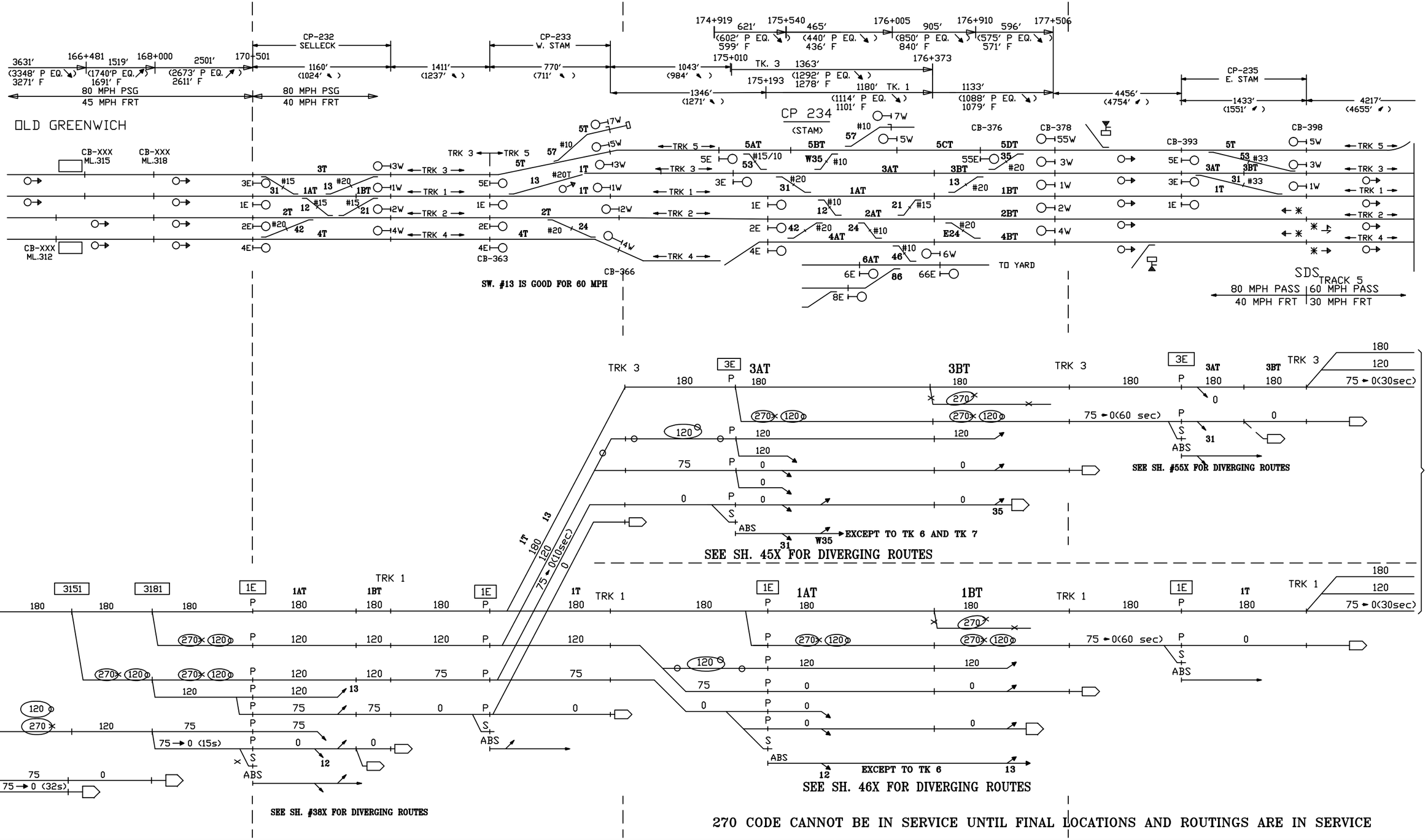

270 CODE CANNOT BE IN SERVICE UNTIL FINAL LOCATIONS AND ROUTINGS ARE IN SERVICE

CIRCUIT ENGINEER	SR. SIGNAL ENGR.–DESIGN & STANDARDS	DIRECTOR C&S SYSTEMS	MTA Metro–North Railroad	NEW HAVEN LINE MP 30.9 TO MP 35.0 ROUTINGS – TRACKS 3 & 1 EAST – STAGE 5	ISSUE DATE: RTG–NHL1 NHS REV. SHEET 10E NHS /users/signal/RTG NHL1 L1010E

Gannett Fleming/CWA

CONTRACT # 1000027511 | PROJECT SHEET # 0453

IN SERVICE | EXISTING | STAGE 5 | EXISTING

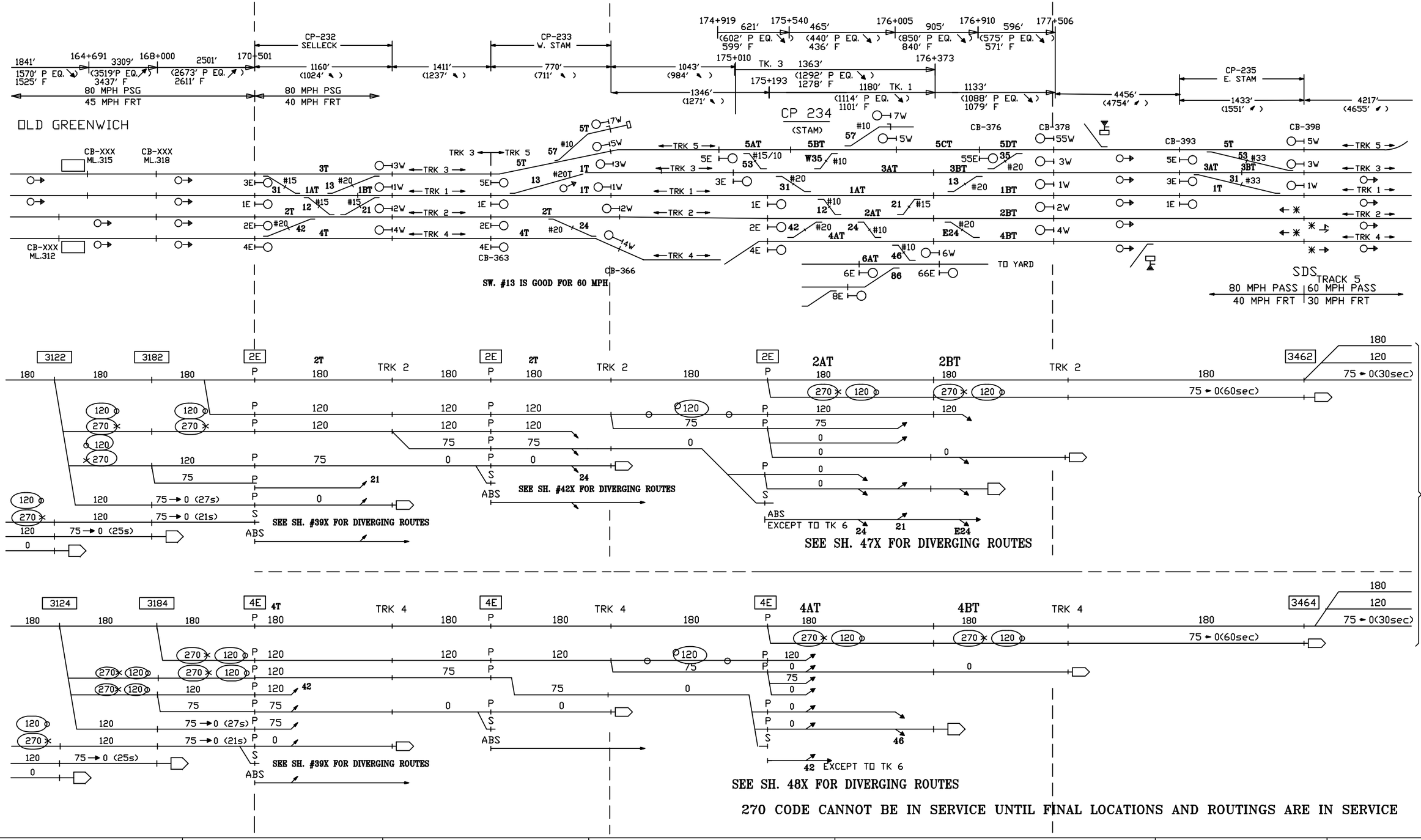

270 CODE CANNOT BE IN SERVICE UNTIL FINAL LOCATIONS AND ROUTINGS ARE IN SERVICE

CIRCUIT ENGINEER	SR. SIGNAL ENGR.–DESIGN & STANDARDS	DIRECTOR C&S SYSTEMS	MTA Metro–North Railroad	NEW HAVEN LINE MP 30.9 TO MP 35.0 ROUTINGS – TRACKS 2 & 4 EAST – STAGE 5	ISSUE DATE: / RTG–NHL1 NHS REV. / SHEET 11E NHS /users/signal/RTG / NHL1 / L1011E

Gannett Fleming/CWA

CONTRACT # 1000027511 | PROJECT SHEET # 0454

EXISTING

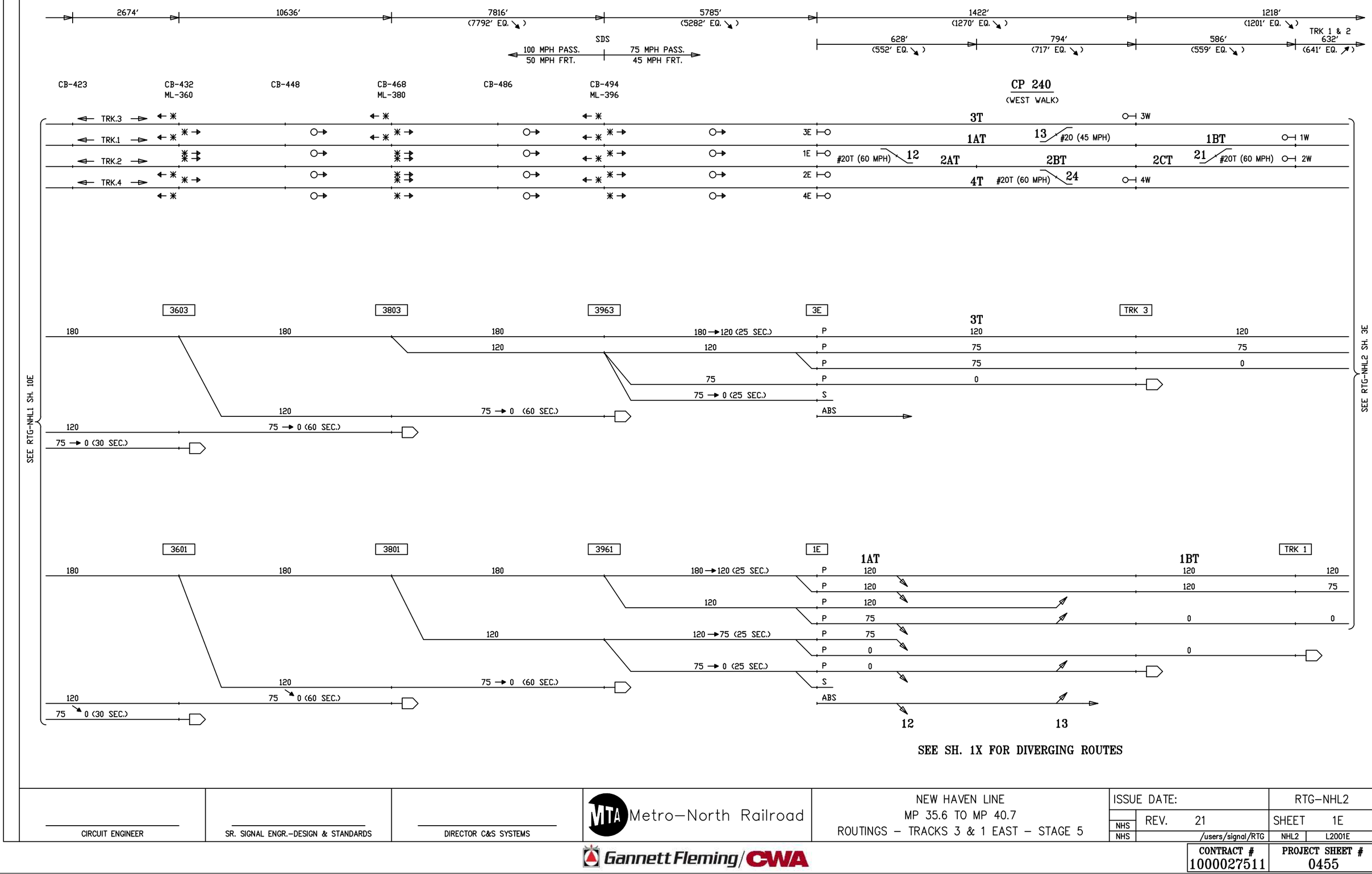

SEE SH. 1X FOR DIVERGING ROUTES

CIRCUIT ENGINEER	SR. SIGNAL ENGR.–DESIGN & STANDARDS	DIRECTOR C&S SYSTEMS	MTA Metro–North Railroad	NEW HAVEN LINE MP 35.6 TO MP 40.7 ROUTINGS – TRACKS 3 & 1 EAST – STAGE 5	ISSUE DATE:	RTG–NHL2
					NHS REV. 21	SHEET 1E
					NHS /users/signal/RTG	NHL2 L2001E

Gannett Fleming/CWA

CONTRACT #	PROJECT SHEET #
1000027511	0455

EXISTING

CIRCUIT ENGINEER	SR. SIGNAL ENGR.–DESIGN & STANDARDS	DIRECTOR C&S SYSTEMS	MTA Metro–North Railroad	NEW HAVEN LINE MP 35.6 TO MP 40.7 ROUTINGS – TRACKS 2 & 4 EAST – STAGE 5	ISSUE DATE:	RTG–NHL2
					NHS REV.	SHEET 2E
					NHS /users/signal/RTG	NHL2 L2002E

Gannett Fleming/CWA

CONTRACT #	PROJECT SHEET #
1000027511	0456

IN SERVICE

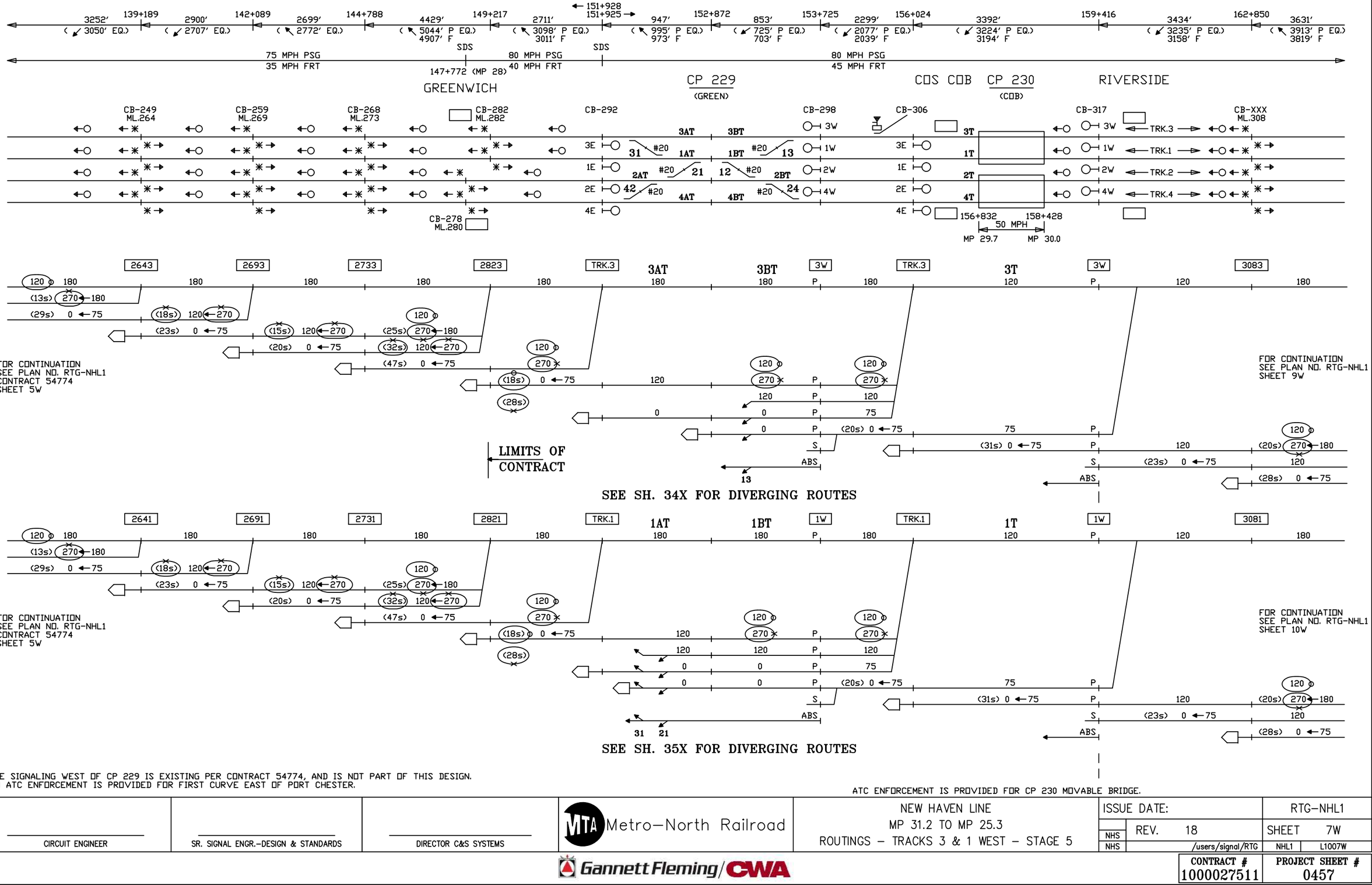

THE SIGNALING WEST OF CP 229 IS EXISTING PER CONTRACT 54774, AND IS NOT PART OF THIS DESIGN.
NO ATC ENFORCEMENT IS PROVIDED FOR FIRST CURVE EAST OF PORT CHESTER.

ATC ENFORCEMENT IS PROVIDED FOR CP 230 MOVABLE BRIDGE.

CIRCUIT ENGINEER	SR. SIGNAL ENGR.–DESIGN & STANDARDS	DIRECTOR C&S SYSTEMS	MTA Metro–North Railroad	NEW HAVEN LINE MP 31.2 TO MP 25.3 ROUTINGS – TRACKS 3 & 1 WEST – STAGE 5	ISSUE DATE: REV. 18 NHS /users/signal/RTG NHS NHL1 L1007W	RTG–NHL1 SHEET 7W

Gannett Fleming/CWA

CONTRACT #	PROJECT SHEET #
1000027511	0457

IN SERVICE

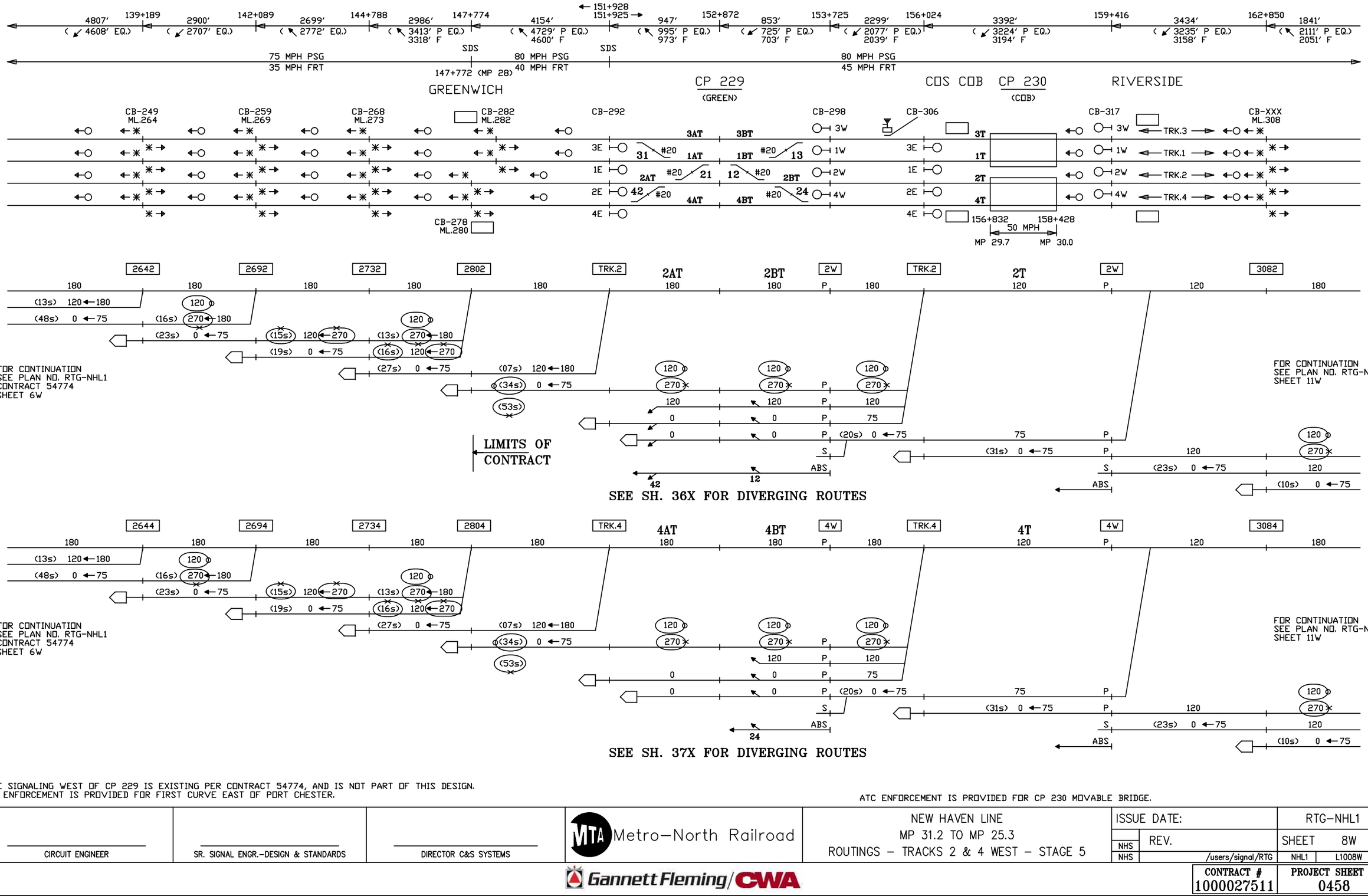

THE SIGNALING WEST OF CP 229 IS EXISTING PER CONTRACT 54774, AND IS NOT PART OF THIS DESIGN.
NO ENFORCEMENT IS PROVIDED FOR FIRST CURVE EAST OF PORT CHESTER.

ATC ENFORCEMENT IS PROVIDED FOR CP 230 MOVABLE BRIDGE.

CIRCUIT ENGINEER	SR. SIGNAL ENGR.–DESIGN & STANDARDS	DIRECTOR C&S SYSTEMS	MTA Metro–North Railroad	NEW HAVEN LINE MP 31.2 TO MP 25.3 ROUTINGS – TRACKS 2 & 4 WEST – STAGE 5	ISSUE DATE: / REV. / /users/signal/RTG	RTG–NHL1 SHEET 8W NHL1 L1008W

Gannett Fleming/CWA

CONTRACT #	PROJECT SHEET #
1000027511	0458

IN SERVICE | EXISTING | STAGE 5 | EXISTING

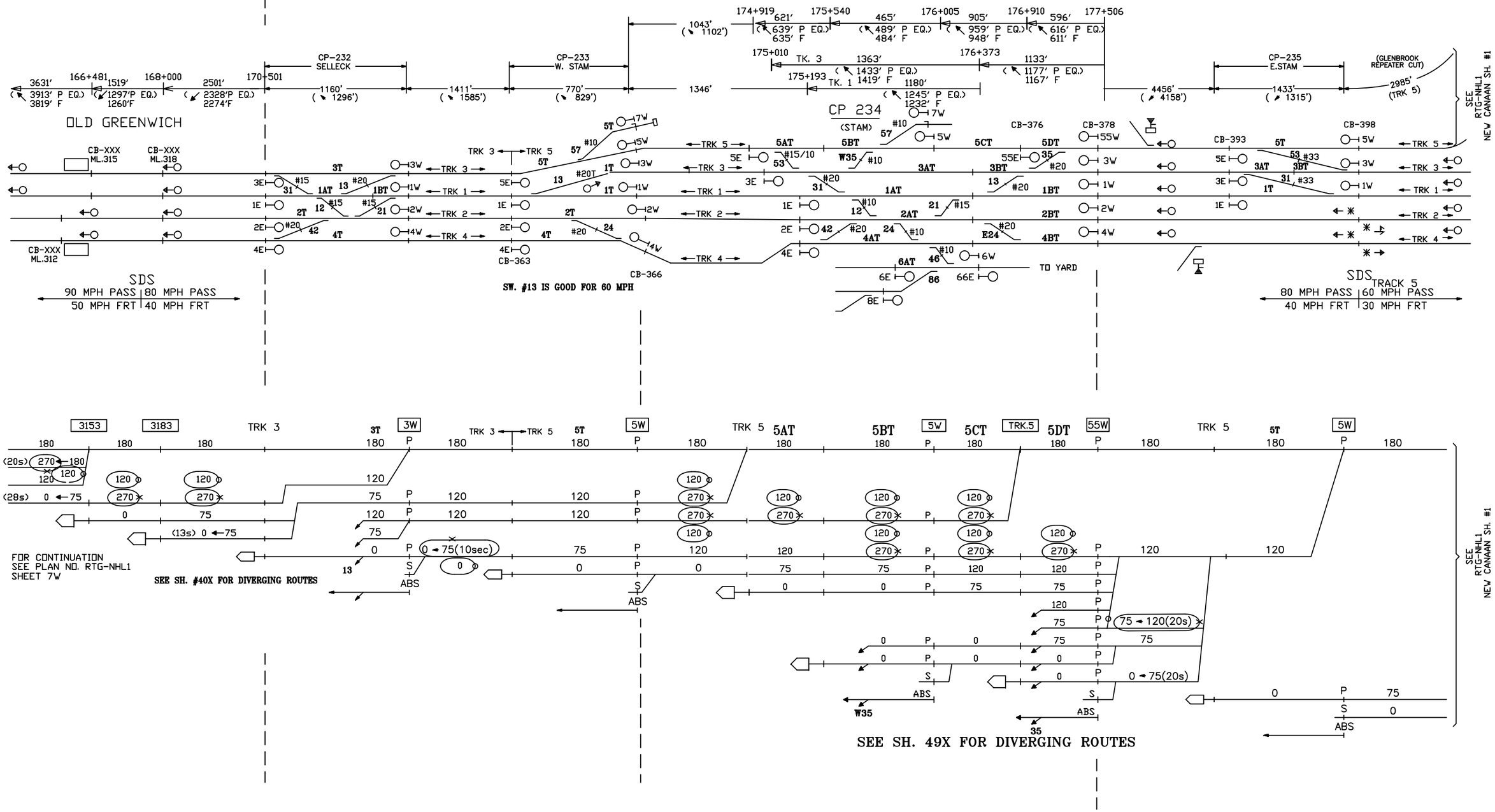

CIRCUIT ENGINEER	SR. SIGNAL ENGR.–DESIGN & STANDARDS	DIRECTOR C&S SYSTEMS	MTA Metro–North Railroad	NEW HAVEN LINE MP 35.6 TO MP 31.2 ROUTINGS – TRACK 5 CHANGES TO TRACK 3 WEST – STAGE 5	ISSUE DATE:	RTG–NHL1
					REV. 11 NHS /users/signal/RTG NHS	SHEET 9W NHL1 L1009W

Gannett Fleming/CWA

CONTRACT #	PROJECT SHEET #
1000027511	0459

IN SERVICE | EXISTING | STAGE 5 | EXISTING

OLD GREENWICH

CB-XXX ML.315 | CB-XXX ML.318 | CB-XXX ML.312 | CB-363 | CB-366 | CB-376 | CB-378 | CB-393 | CB-398

CP-232 SELLECK | CP-233 W. STAM | CP-234 (STAM) | CP-235 E.STAM

TK. 3 | TK. 1

TRK 1 | TRK 2 | TRK 3 | TRK 4 | TRK 5

TO YARD

SDS
80 MPH PASS | 80 MPH PASS
45 MPH FRT | 40 MPH FRT

SDS
80 MPH PASS | 60 MPH PASS
40 MPH PASS | 30 MPH FRT

SW. #13 IS GOOD FOR 60 MPH

SEE SH. 50X FOR DIVERGING ROUTES

SEE SH. 51X FOR DIVERGING ROUTES

SEE SH. #40X FOR DIVERGING ROUTES

SEE SH. #56X FOR DIVERGING ROUTES

SEE RTG-NHL2 SH. #1W

FOR CONTINUATION
SEE PLAN NO. RTG-NHL1
SHEET 7W

CIRCUIT ENGINEER | SR. SIGNAL ENGR.-DESIGN & STANDARDS | DIRECTOR C&S SYSTEMS

Metro-North Railroad

NEW HAVEN LINE
MP 35.6 TO MP 31.2
ROUTINGS – TRACKS 3 & 1 WEST – STAGE 5

ISSUE DATE: 09-01-99			RTG-NHL1
NHS	REV. 11		SHEET 10W
NHS	/users/signal/RTG	NHL1	L1010W

Gannett Fleming/CWA

CONTRACT # 1000027511

PROJECT SHEET # 0460

IN SERVICE | EXISTING | STAGE 5 | EXISTING

OLD GREENWICH

CB-XXX ML.315 | CB-XXX ML.318 | CB-XXX ML.312 | CB-363 | CB-366 | CB-376 | CB-378 | CB-393 | CB-398

CP 234 (STAM)

TO YARD

SW. #13 IS GOOD FOR 60 MPH

SDS
80 MPH PASS | 80 MPH PASS
45 MPH FRT | 40 MPH FRT

SDS
80 MPH PASS | 60 MPH PASS
40 MPH PASS | 30 MPH FRT

FOR CONTINUATION
SEE PLAN NO. RTG-NHL1
SHEET 8W

SEE SH. #41X FOR DIVERGING ROUTES

SEE SH. #42X FOR DIVERGING ROUTES

SEE RTG-NHL2 SH. #2W

CIRCUIT ENGINEER	SR. SIGNAL ENGR.–DESIGN & STANDARDS	DIRECTOR C&S SYSTEMS	Metro–North Railroad	NEW HAVEN LINE M.P. 35.6 TO M.P. 31.2 ROUTINGS – TRACKS 2 & 4 WEST – STAGE 5	ISSUE DATE: 09–01–99 REV. 11 NHS /users/signal/RTG	RTG–NHL1 SHEET 11W NHL1 L1011W

Gannett Fleming/CWA

CONTRACT #	PROJECT SHEET #
1000027511	0461

EXISTING

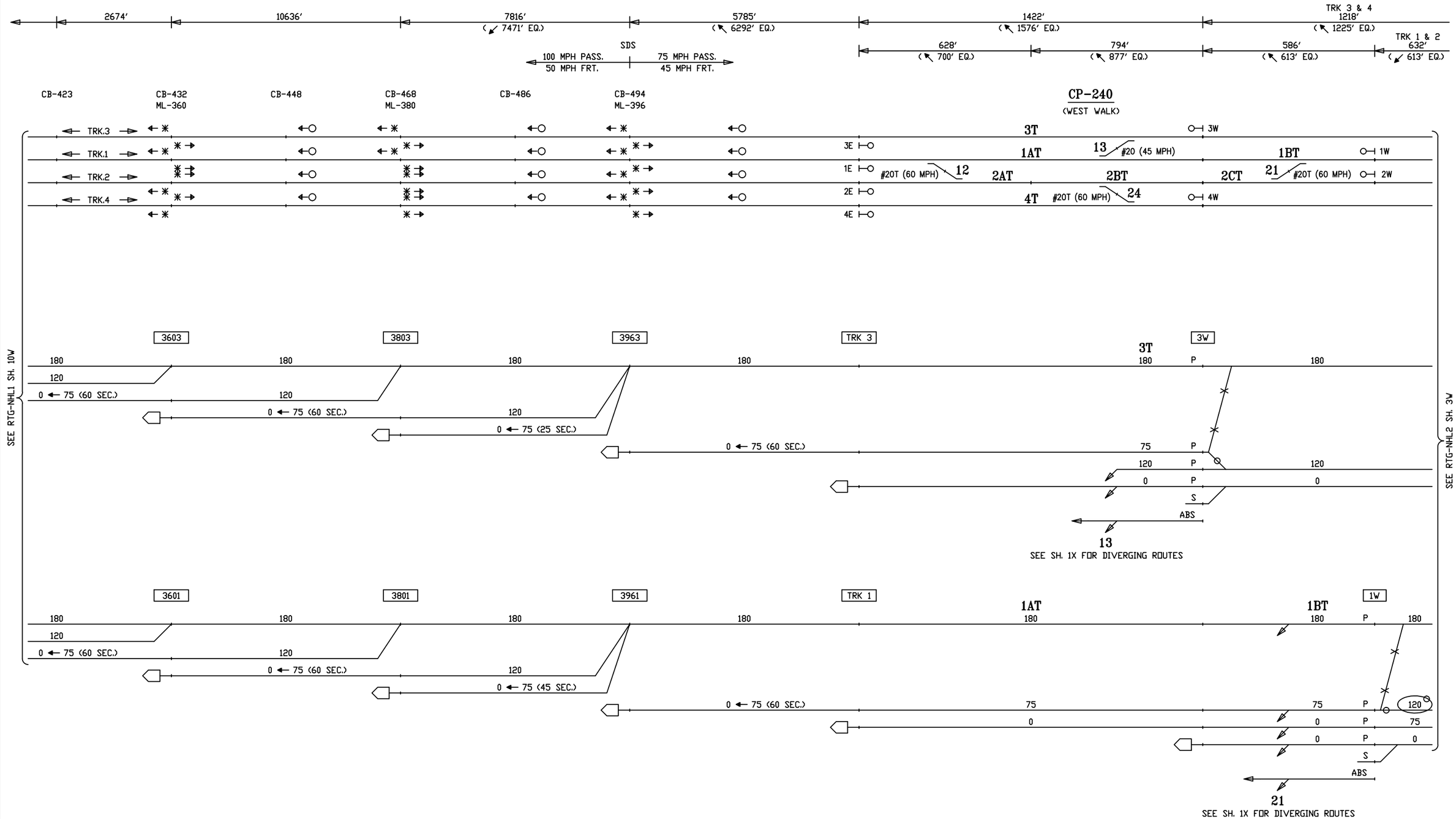

CIRCUIT ENGINEER	SR. SIGNAL ENGR.–DESIGN & STANDARDS	DIRECTOR C&S SYSTEMS	Metro–North Railroad	NEW HAVEN LINE MP 40.7 TO MP 35.6 ROUTINGS – TRACKS 3 & 1 WEST – STAGE 5	ISSUE DATE: / RTG–NHL2 NHS REV. 19 / SHEET 1W NHS /users/signal/RTG / NHL2 / L2001W

Gannett Fleming/CWA

CONTRACT #	PROJECT SHEET #
1000027511	0462

EXISTING

CIRCUIT ENGINEER	SR. SIGNAL ENGR.–DESIGN & STANDARDS	DIRECTOR C&S SYSTEMS	MTA Metro–North Railroad	NEW HAVEN LINE MP 40.7 TO MP 35.6 ROUTINGS – TRACKS 2 & 4 WEST – STAGE 5	ISSUE DATE: REV. 19 NHS /users/signal/RTG NHS NHL2 L2002W RTG–NHL2 SHEET 2W

Gannett Fleming/CWA

CONTRACT # 1000027511

PROJECT SHEET # 0463

IN SERVICE

EXISTING

SELLECK CP–232

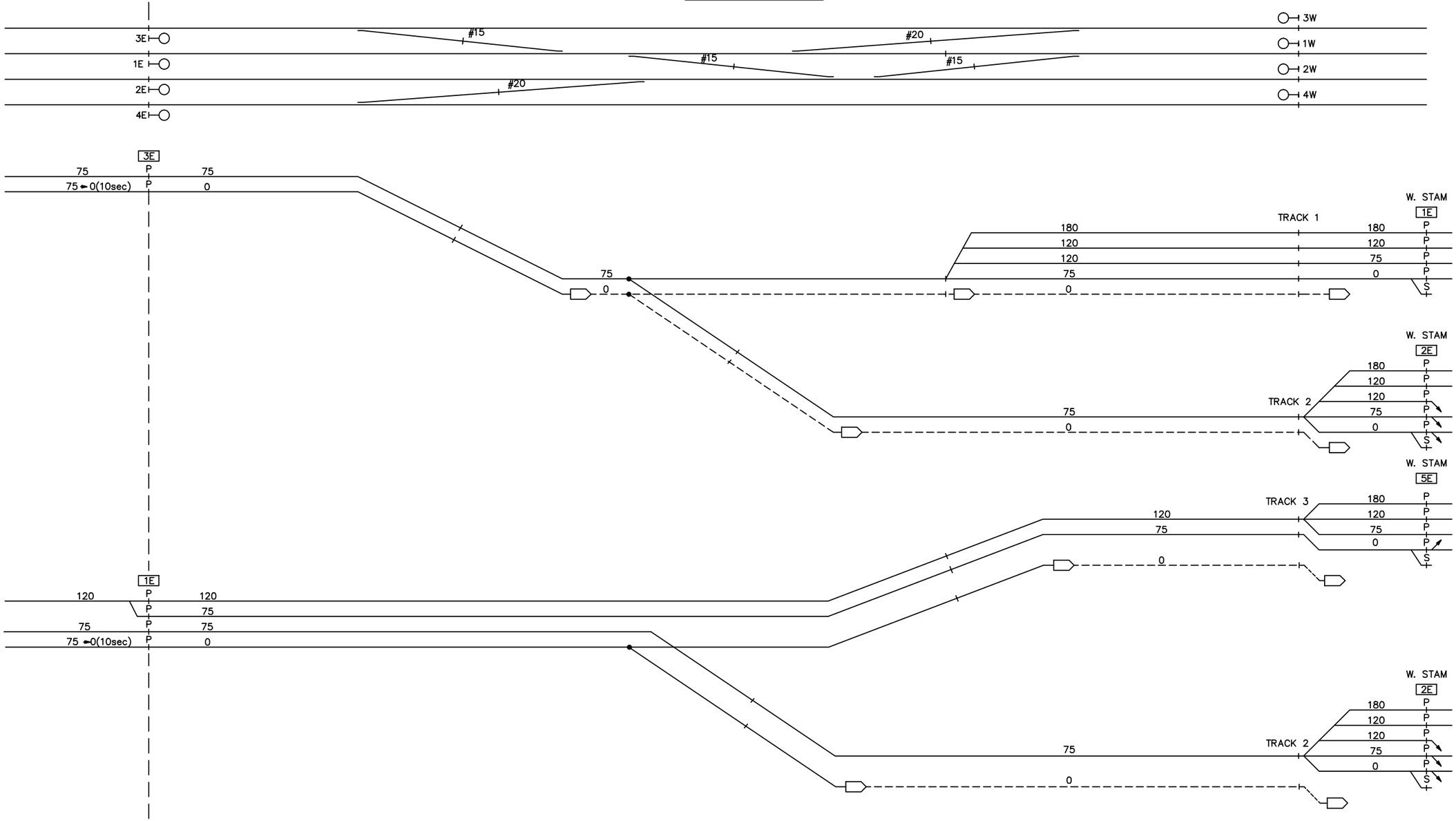

CIRCUIT ENGINEER	SR. SIGNAL ENGR.–DESIGN & STANDARDS	DIRECTOR C&S SYSTEMS	MTA Metro–North Railroad	NEW HAVEN LINE CP 232 DIVERGING ROUTES – TRACKS 3 & 1 EAST – STAGE 5	ISSUE DATE: 11–14–97 REV. 10 /USERS/SIGNAL/RTG	RTG–NHL1 SHEET 38X NHL1 L1038X

Gannett Fleming/CWA

CONTRACT #	PROJECT SHEET #
1000027511	0464

IN SERVICE

EXISTING

SELLECK CP–232

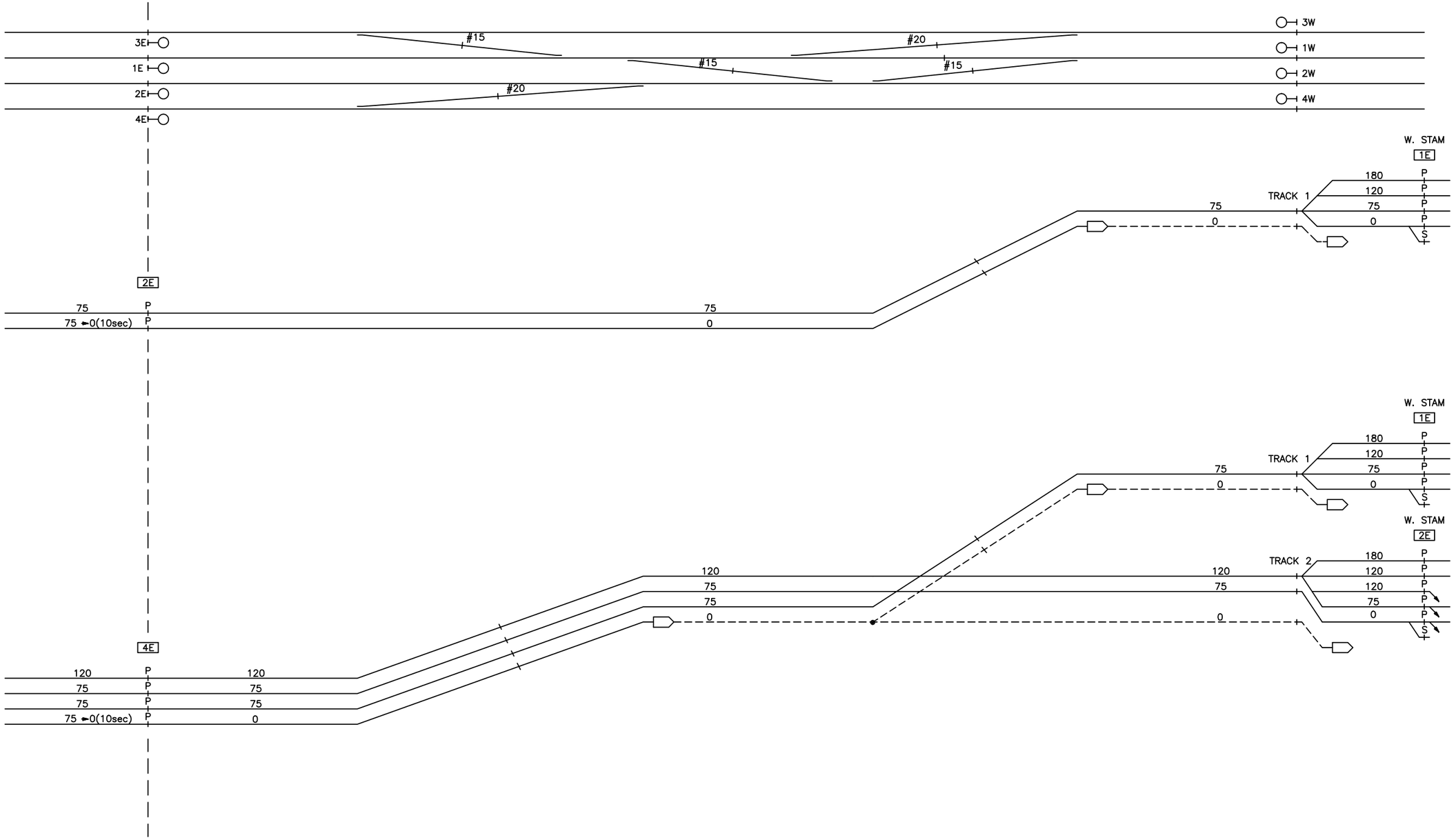

CIRCUIT ENGINEER	SR. SIGNAL ENGR.–DESIGN & STANDARDS	DIRECTOR C&S SYSTEMS	MTA Metro–North Railroad	NEW HAVEN LINE CP 232 DIVERGING ROUTES – TRACKS 2 & 4 EAST – STAGE 5	ISSUE DATE: 11–14–97 REV. 10 /USERS/SIGNAL/RTG	RTG–NHL1 SHEET 39X NHL1 L1039X

Gannett Fleming/CWA

CONTRACT #	PROJECT SHEET #
1000027511	0465

IN SERVICE

EXISTING

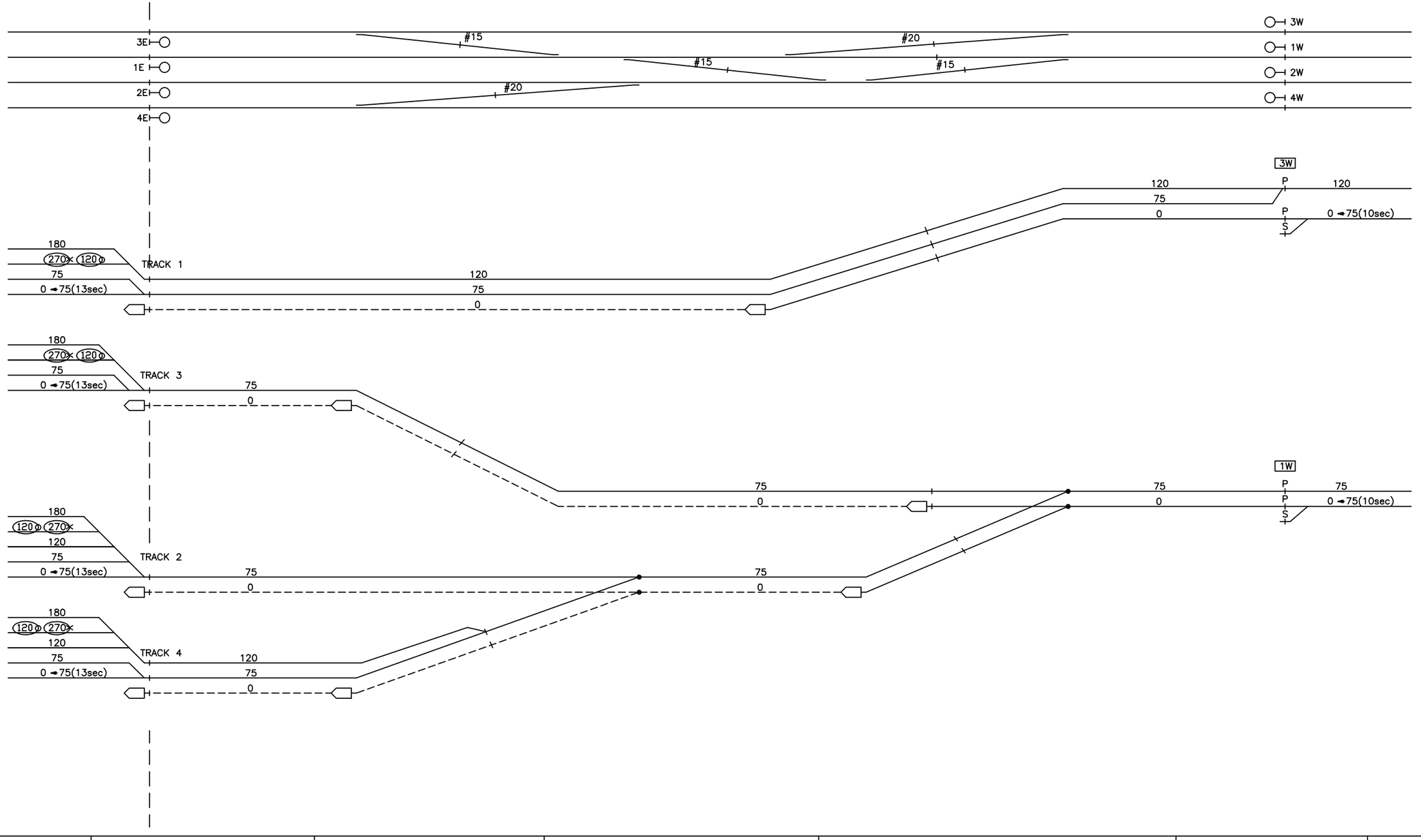

CIRCUIT ENGINEER	SR. SIGNAL ENGR.–DESIGN & STANDARDS	DIRECTOR C&S SYSTEMS	MTA Metro–North Railroad	NEW HAVEN LINE CP 232 DIVERGING ROUTES – TRACKS 3 & 1 WEST – STAGE 5	ISSUE DATE: 11–14–97 REV. 10 /USERS/SIGNAL/RTG

RTG–NHL1	
SHEET 40X	
NHL1	L1040X

Gannett Fleming/CWA

CONTRACT #	PROJECT SHEET #
1000027511	0466

IN SERVICE

EXISTING

SELLECK CP–232

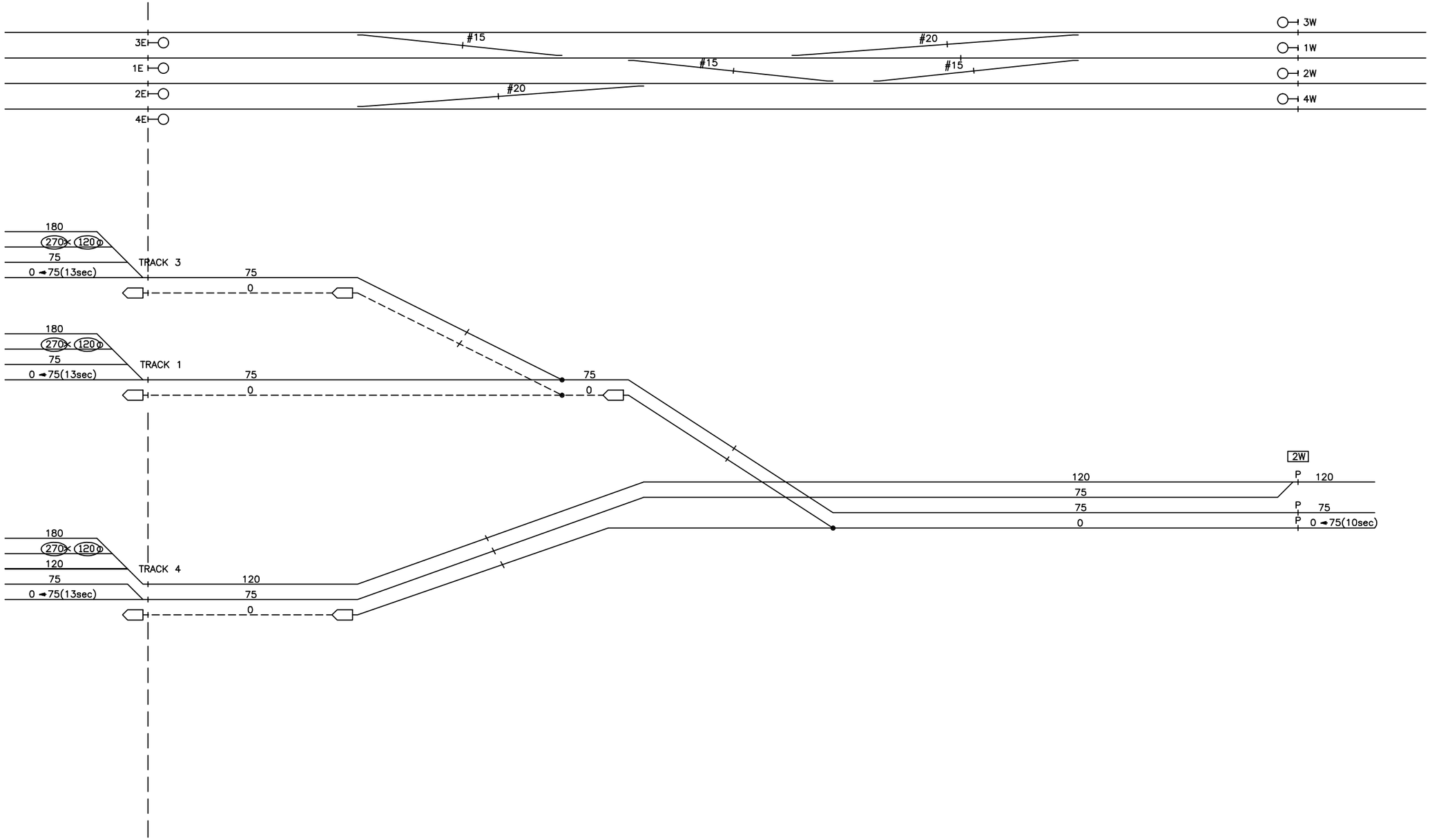

CIRCUIT ENGINEER	SR. SIGNAL ENGR.–DESIGN & STANDARDS	DIRECTOR C&S SYSTEMS	MTA Metro–North Railroad	NEW HAVEN LINE CP 232 DIVERGING ROUTES – TRACK 2 WEST – STAGE 5	ISSUE DATE: 11–14–97 REV. 10 /USERS/SIGNAL/RTG NHL1 L1041X

RTG–NHL1

SHEET 41X

Gannett Fleming/CWA

CONTRACT # 1000027511

PROJECT SHEET # 0467

EXISTING

STAGE 5

W. STAM. CP–233

EAST ROUTINGS

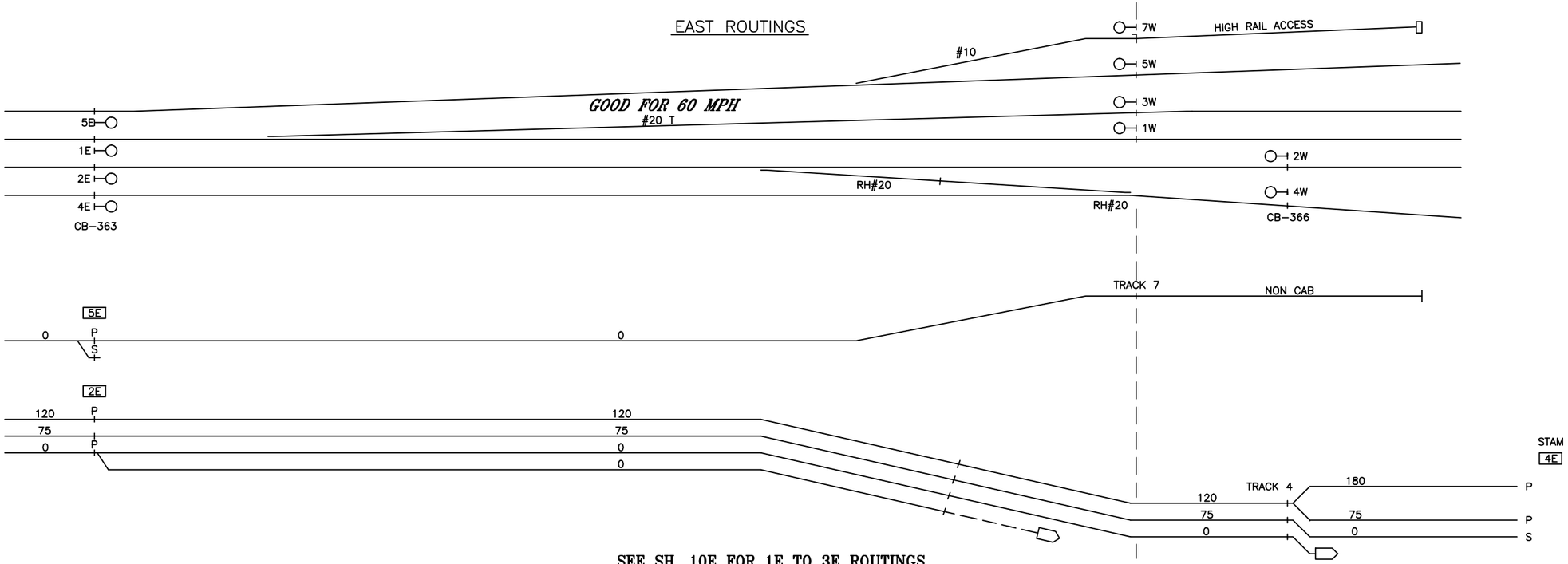

SEE SH. 10E FOR 1E TO 3E ROUTINGS

W. STAM. CP–233

WEST ROUTINGS

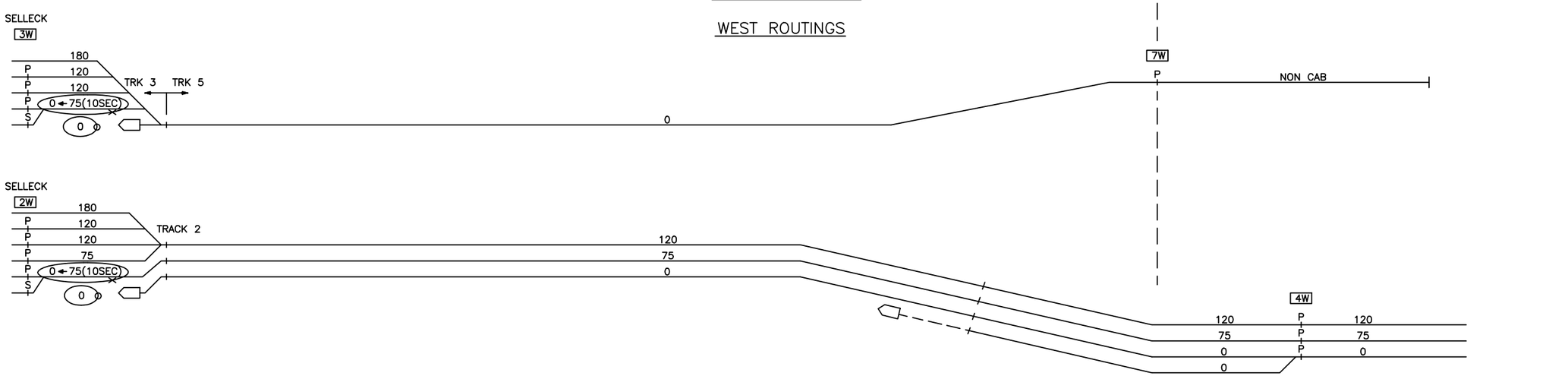

SEE SH. 10W FOR 3W TO 1W ROUTINGS

CIRCUIT ENGINEER	SR. SIGNAL ENGR.–DESIGN & STANDARDS	DIRECTOR C&S SYSTEMS	MTA Metro–North Railroad	NEW HAVEN LINE CP 233 DIVERGING ROUTES – STAGE 5	ISSUE DATE: 09–01–99 NHS REV. 11 NHS /users/signal/RTG	RTG–NHL1 SHEET 42X NHL1 L1042X

Gannett Fleming/CWA

CONTRACT # 1000027511

PROJECT SHEET # 0468

STAGE 5

EXISTING

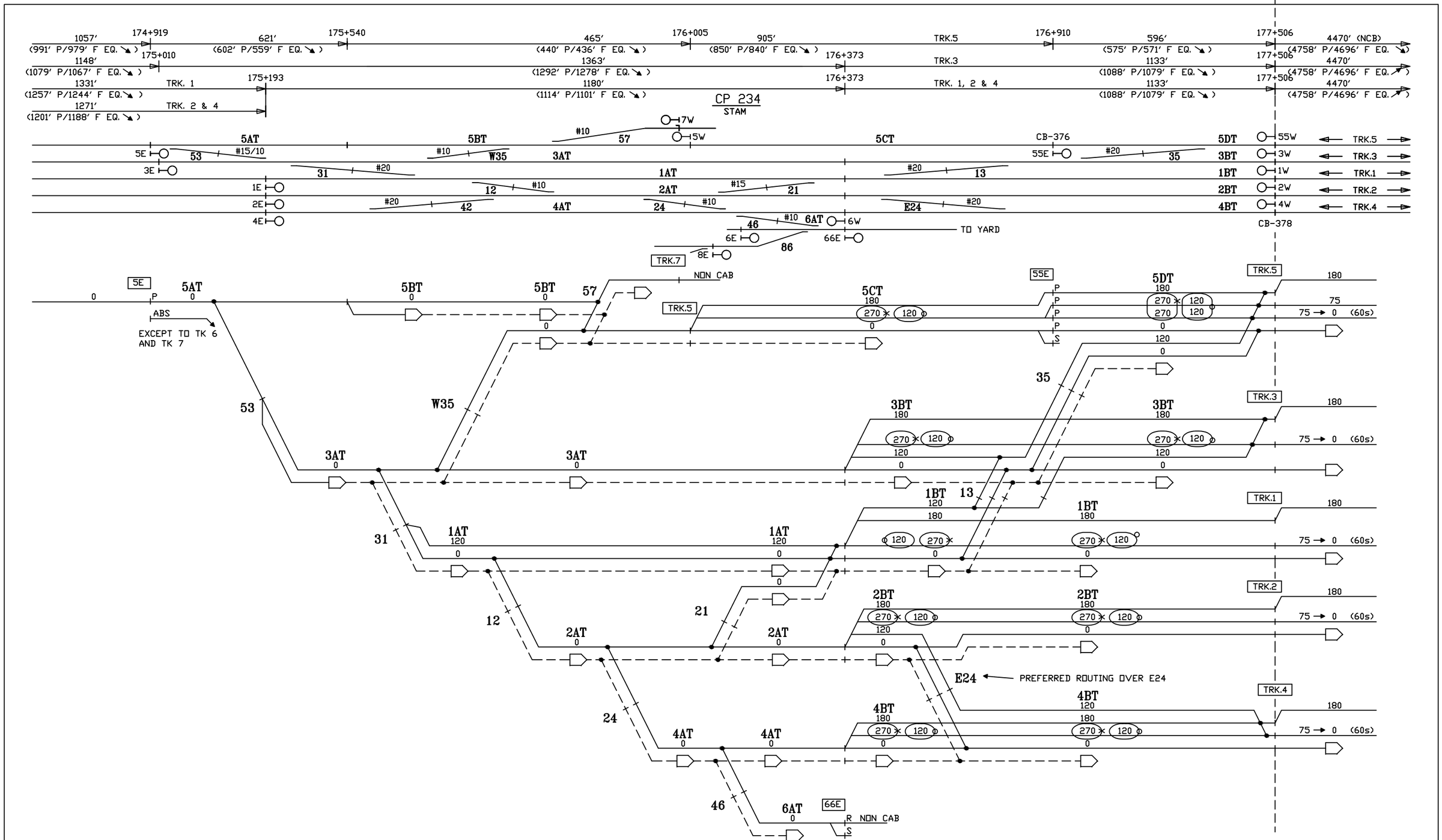

CIRCUIT ENGINEER	SR. SIGNAL ENGR.-DESIGN & STANDARDS	DIRECTOR C&S SYSTEMS	MTA Metro-North Railroad	NEW HAVEN LINE CP 234 DIVERGING ROUTES – TRACK 5 EAST – STAGE 5	ISSUE DATE: NHS REV. NHS /users/signal/RTG	RTG-NHL1 SHEET 44X NHL1 L1044X

Gannett Fleming/CWA

CONTRACT #	PROJECT SHEET #
1000027511	0469

STAGE 5

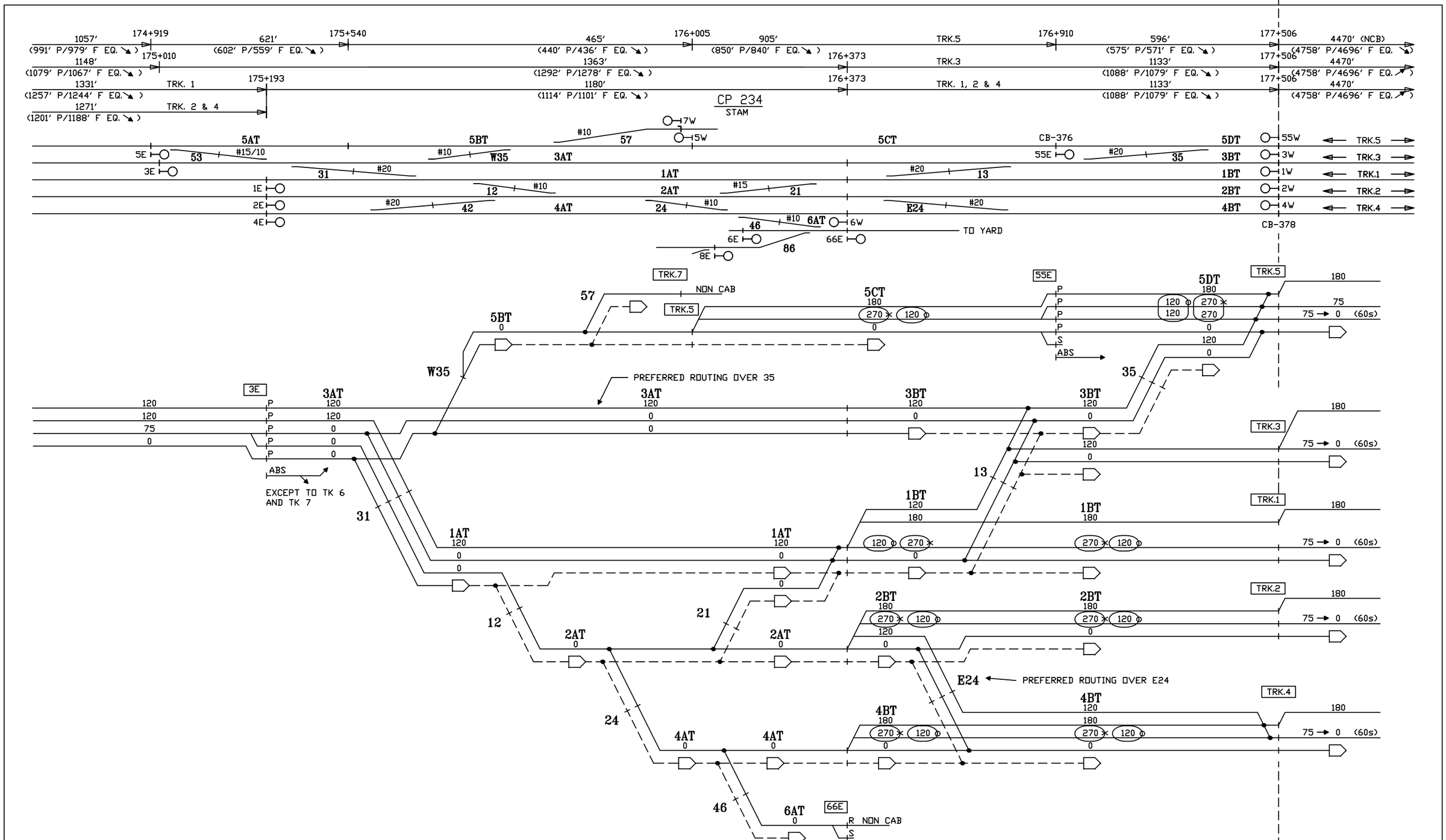

CIRCUIT ENGINEER	SR. SIGNAL ENGR.-DESIGN & STANDARDS	DIRECTOR C&S SYSTEMS	MTA Metro-North Railroad	NEW HAVEN LINE CP 234 DIVERGING ROUTES – TRACK 3 EAST – STAGE 5	ISSUE DATE: NHS REV. NHS /users/signal/RTG	RTG-NHL1 SHEET 45X NHL1 L1045X

Gannett Fleming/CWA

CONTRACT #	PROJECT SHEET #
1000027511	0470

STAGE 5

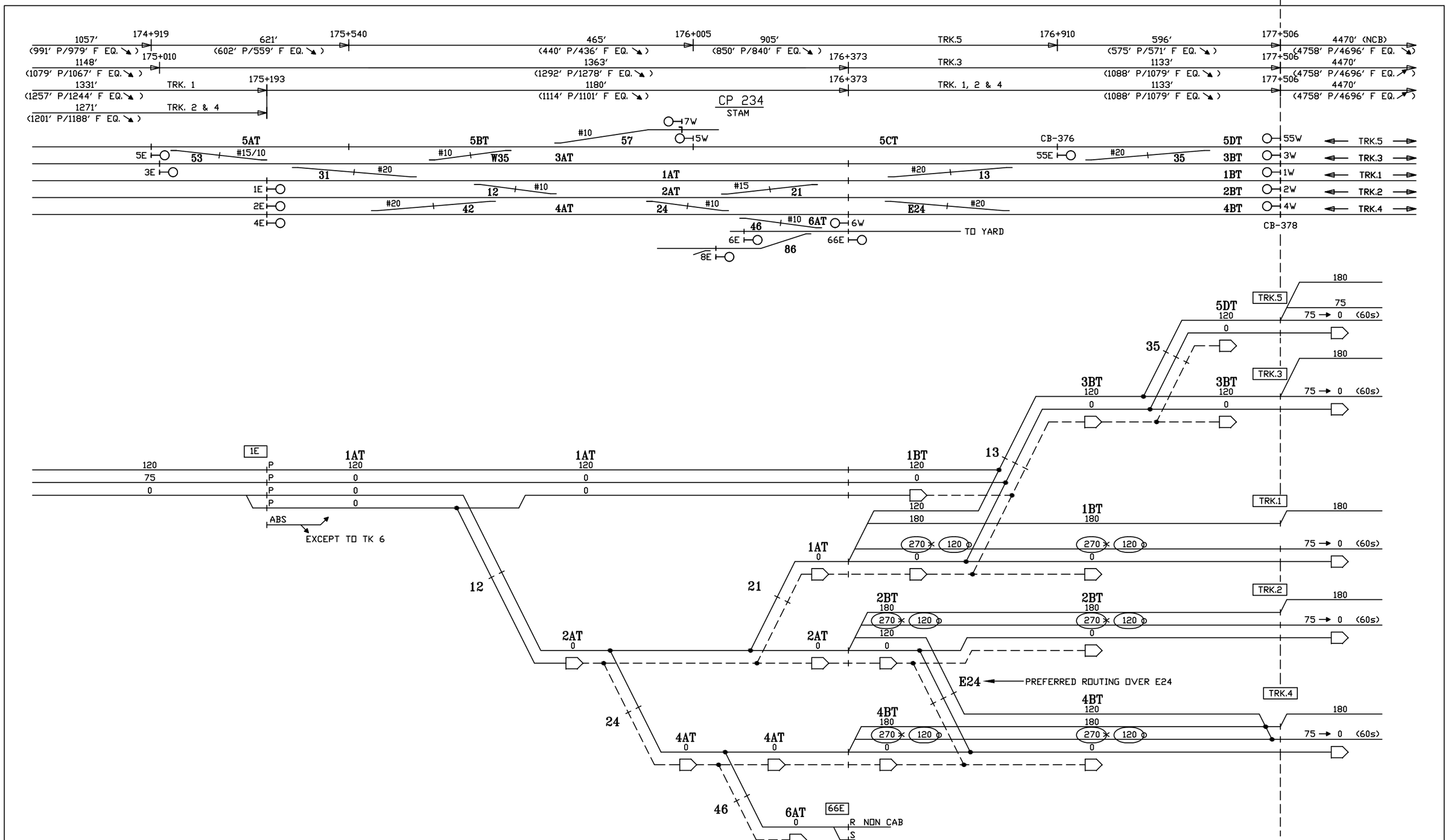

CIRCUIT ENGINEER	SR. SIGNAL ENGR.–DESIGN & STANDARDS	DIRECTOR C&S SYSTEMS	Metro–North Railroad	NEW HAVEN LINE CP 234 DIVERGING ROUTES – TRACK 1 EAST – STAGE 5	ISSUE DATE: NHS REV. NHS /users/signal/RTG	RTG–NHL1 SHEET 46X NHL1 L1046X

Gannett Fleming/CWA

CONTRACT #	PROJECT SHEET #
1000027511	0471

STAGE 5

EXISTING

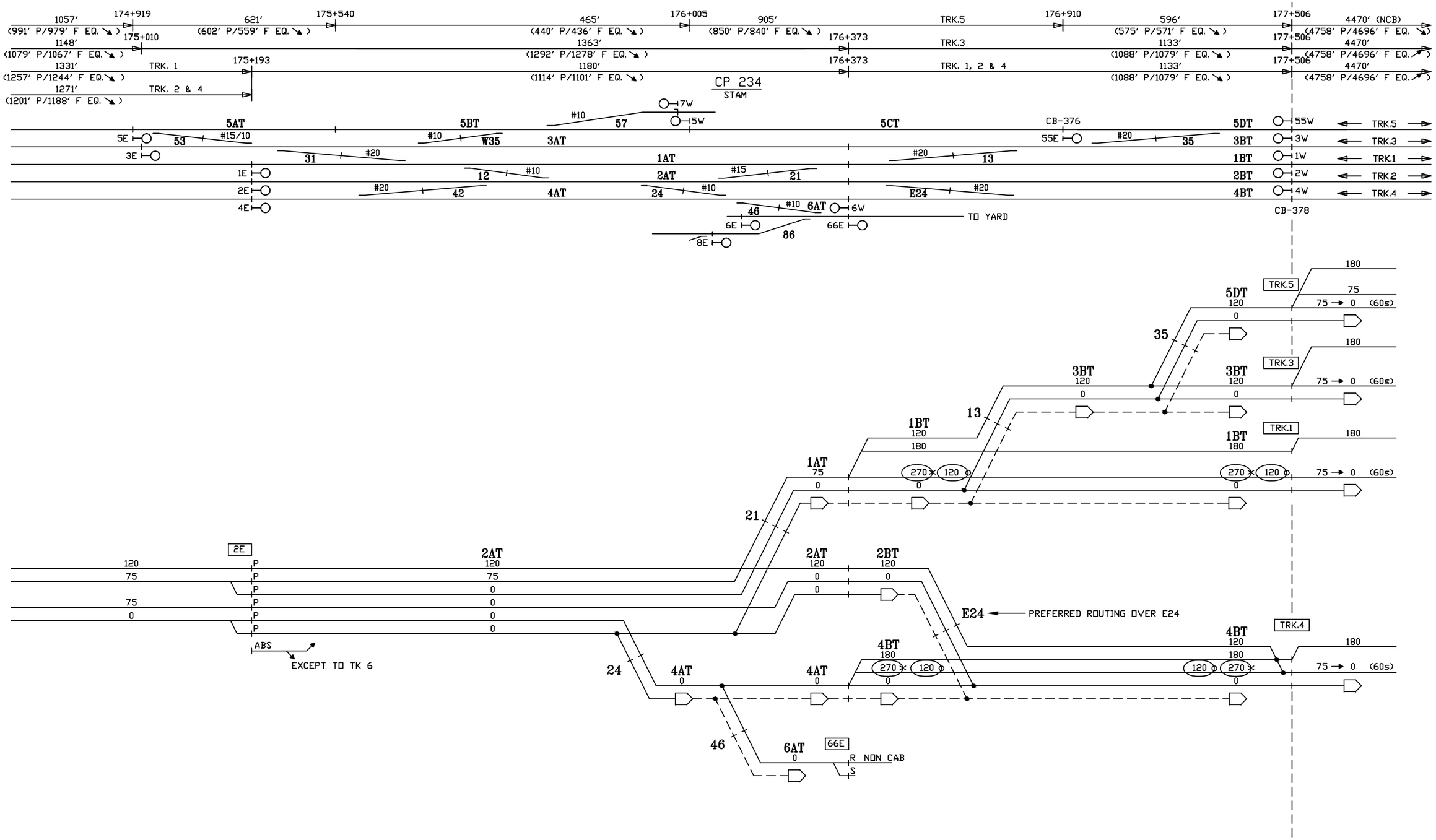

CIRCUIT ENGINEER	SR. SIGNAL ENGR.–DESIGN & STANDARDS	DIRECTOR C&S SYSTEMS	MTA Metro–North Railroad	NEW HAVEN LINE CP 234 DIVERGING ROUTES – TRACK 2 EAST – STAGE 5	ISSUE DATE: / REV. / NHS / NHS /users/signal/RTG RTG–NHL1 SHEET 47X NHL1 L1047X

Gannett Fleming/CWA

CONTRACT #	PROJECT SHEET #
1000027511	0472

STAGE 5 STAGE 5 EXISTING

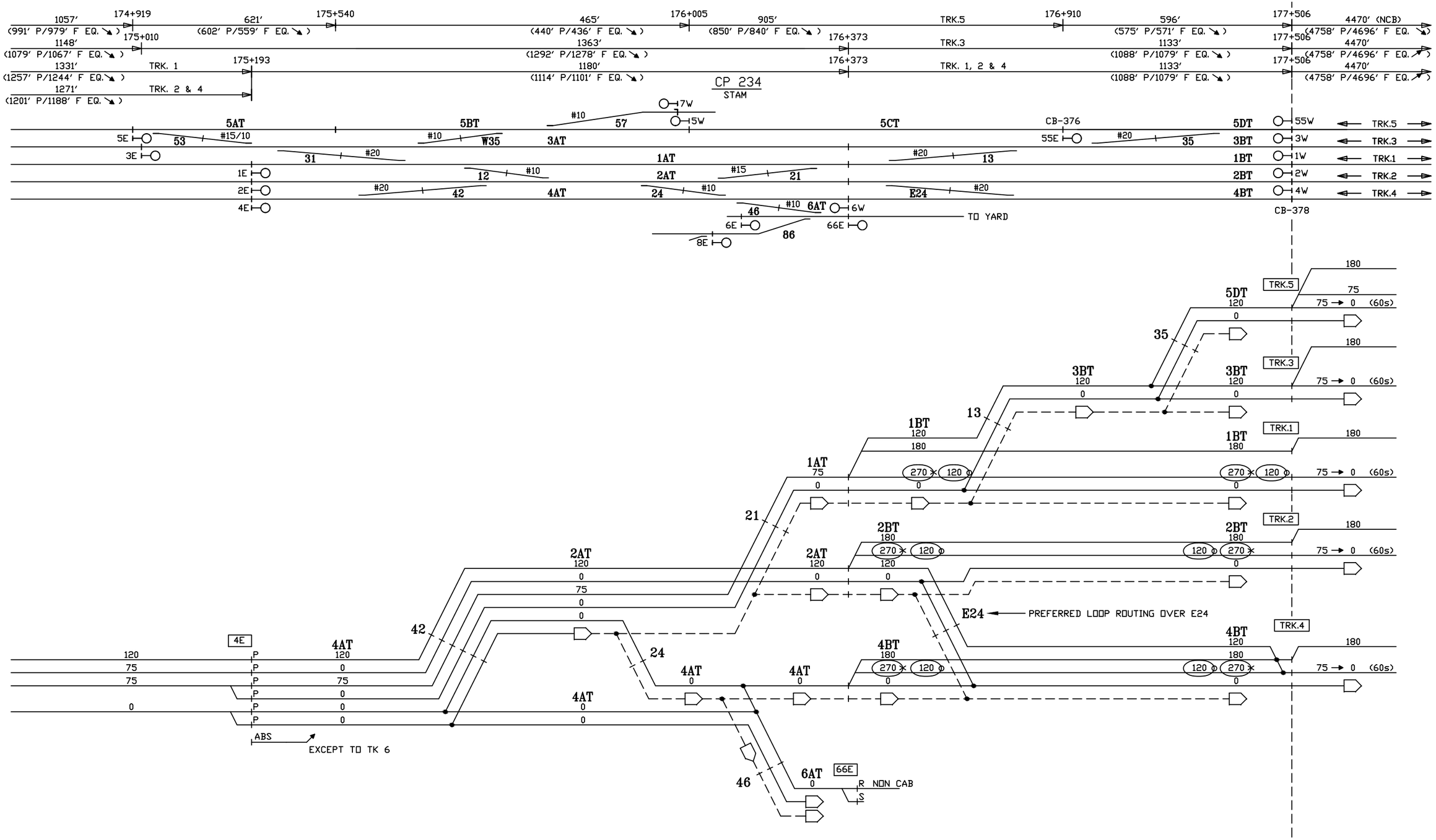

CIRCUIT ENGINEER	SR. SIGNAL ENGR.–DESIGN & STANDARDS	DIRECTOR C&S SYSTEMS	MTA Metro–North Railroad	NEW HAVEN LINE CP 234 DIVERGING ROUTES – TRACK 4 EAST – STAGE 5	ISSUE DATE: / REV. / NHS / NHS /users/signal/RTG RTG–NHL1 SHEET 48X NHL1 L1048X

Gannett Fleming/CWA

CONTRACT #	PROJECT SHEET #
1000027511	0473

STAGE 5

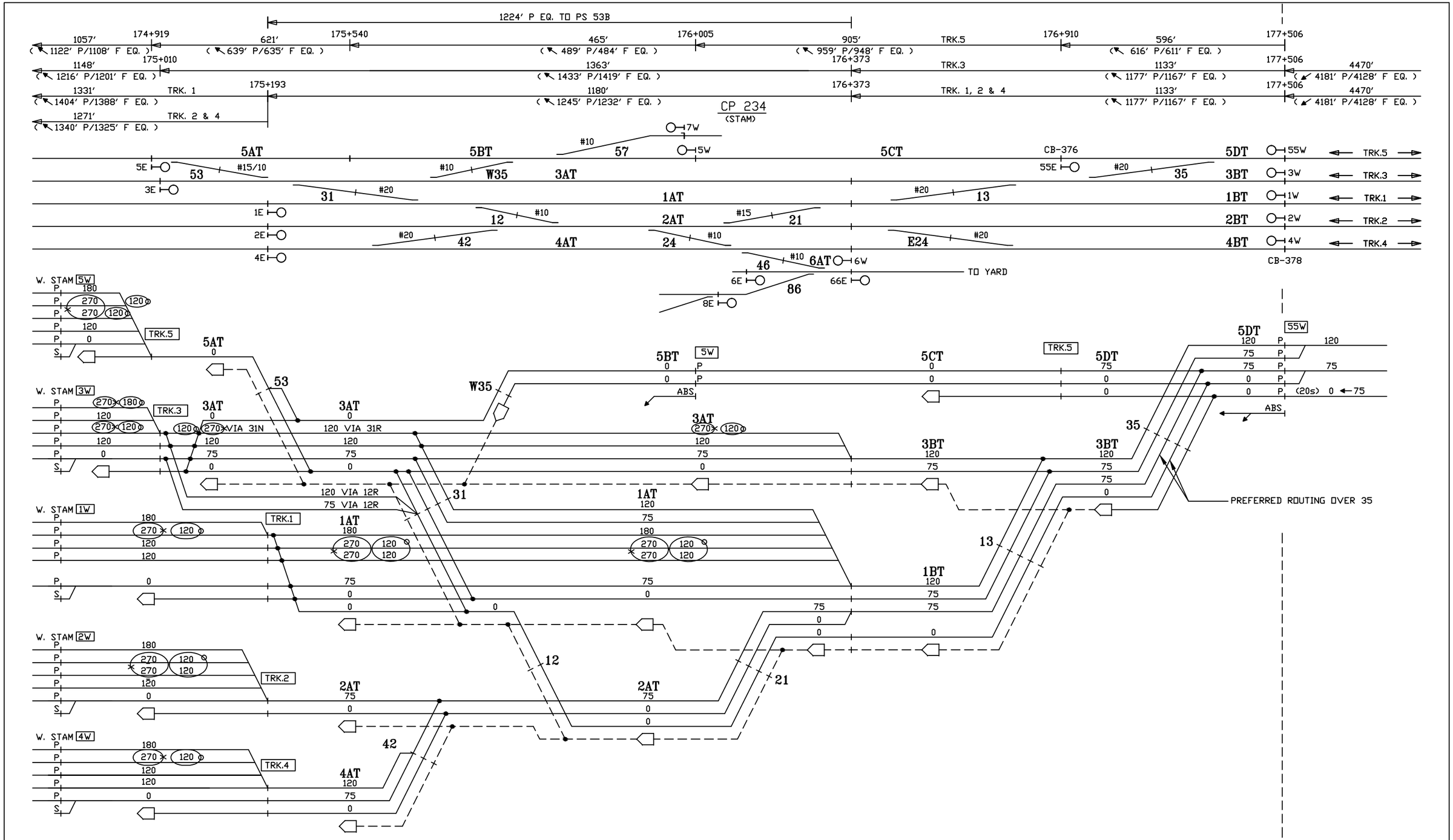

CIRCUIT ENGINEER	SR. SIGNAL ENGR.-DESIGN & STANDARDS	DIRECTOR C&S SYSTEMS	MTA Metro-North Railroad	NEW HAVEN LINE CP 234 DIVERGING ROUTES – TRACK 5 WEST – STAGE 5	ISSUE DATE: NHS REV. NHS /users/signal/RTG	RTG-NHL1 SHEET 49X NHL1 L1049X

Gannett Fleming/CWA

CONTRACT #	PROJECT SHEET #
1000027511	0474

STAGE 5

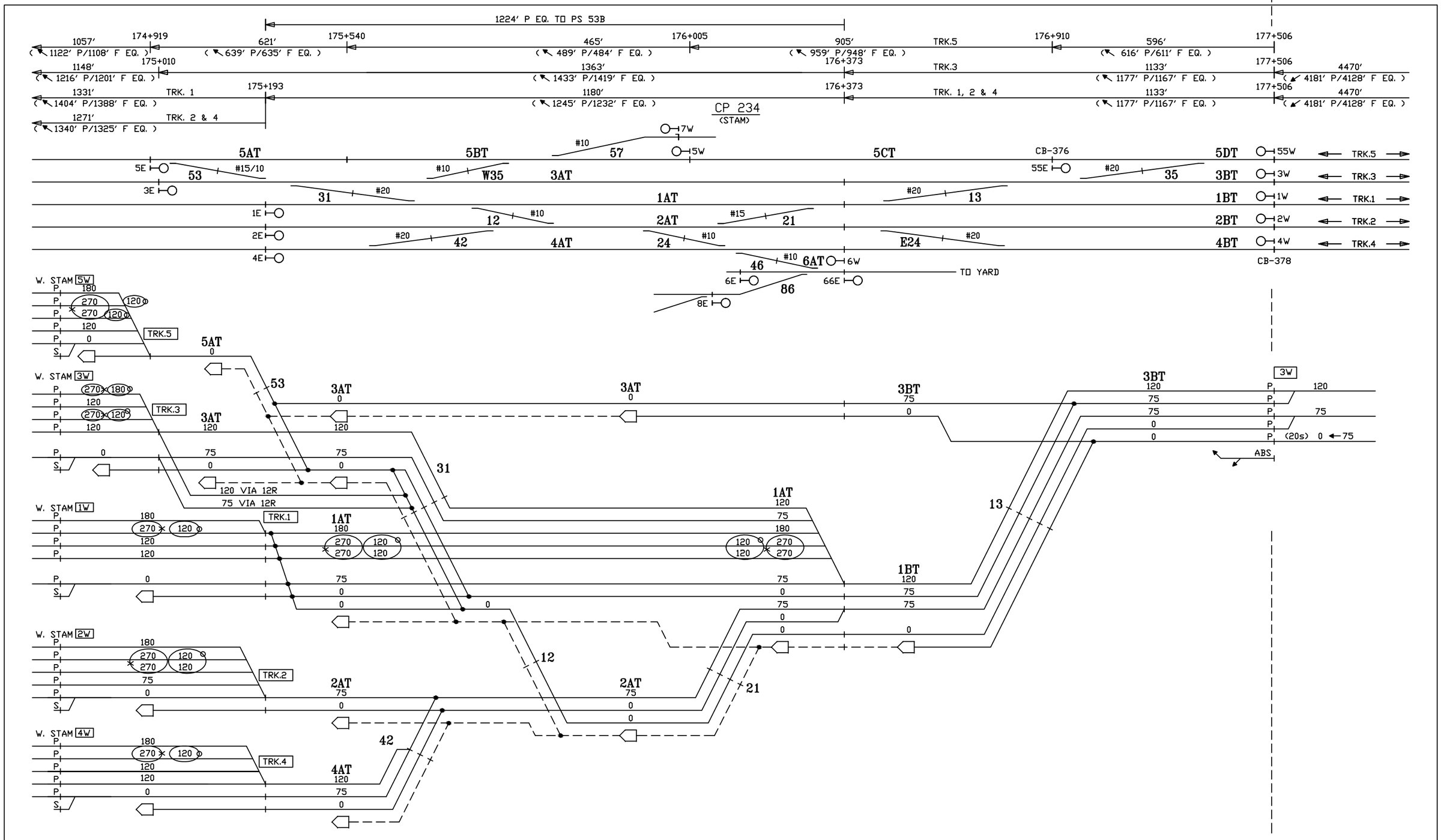

CIRCUIT ENGINEER	SR. SIGNAL ENGR.-DESIGN & STANDARDS	DIRECTOR C&S SYSTEMS	MTA Metro-North Railroad	NEW HAVEN LINE CP 234 DIVERGING ROUTES – TRACK 3 WEST – STAGE 5	ISSUE DATE: NHS REV. NHS /users/signal/RTG	RTG-NHL1 SHEET 50X NHL1 L1050X

Gannett Fleming/CWA

CONTRACT #	PROJECT SHEET #
1000027511	0475

STAGE 5

EXISTING

1224' P EQ. TO PS 53B

1057' (1122' P/1108' F EQ.) | 174+919 | 621' (639' P/635' F EQ.) | 175+540 | 465' (489' P/484' F EQ.) | 176+005 | 905' (959' P/948' F EQ.) | TRK.5 | 176+910 | 596' (616' P/611' F EQ.) | 177+506

1148' (1216' P/1201' F EQ.) | 175+010 | 1363' (1433' P/1419' F EQ.) | 176+373 | TRK.3 | 1133' (1177' P/1167' F EQ.) | 177+506 | 4470' (4181' P/4128' F EQ.)

1331' (1404' P/1388' F EQ.) TRK. 1 | 175+193 | 1180' (1245' P/1232' F EQ.) | 176+373 | TRK. 1, 2 & 4 | 1133' (1177' P/1167' F EQ.) | 177+506 | 4470' (4181' P/4128' F EQ.)

1271' (1340' P/1325' F EQ.) TRK. 2 & 4

CP 234
(STAM)

7W, #10, 57, 5W

5AT | 5BT | 5CT | CB-376 | 5DT 55W → TRK.5

5E, #15/10, 53, #10, W35, 3AT, 55E, #20, 35, 3BT 3W → TRK.3

3E, 31, #20, 1AT, #20, 13, 1BT 1W → TRK.1

1E, 12, #10, 2AT, #15, 21, 2BT 2W → TRK.2

2E, #20, 42, 4AT, 24, #10, E24, #20, 4BT 4W → TRK.4

4E, CB-378

#10, 46, 6AT 6W → TO YARD

6E, 66E

86

8E

W. STAM 5W
P 180
P 270 120
P 270 120
P 120
P 0
S
TRK.5

5AT 0

53

W. STAM 3W
P 270 180
P 120
P 270 120
P 120
TRK.3

3AT 120 | 3AT 120

P 0 | 75 | 75
S | 0 | 0

120 VIA 12R
75 VIA 12R

31

W. STAM 1W
P 180
P 270 120
P 120
P 120
P 0
S
TRK.1

1AT 0

1AT 120 | 1AT 120

75 | 75
0 | 0
75
0
0

1BT 120
75
75
0
0

1W
P 120
P 75
P
P (20s) 0 ← 75
ABS

12

21

W. STAM 2W
P 180
P 270 120
P 270 120
P 120
P 0
S
TRK.2

2AT 75
0

2AT 75
0
0

42

W. STAM 4W
P 180
P 270 120
P 120
P 120
P 0
S
TRK.4

4AT 120
75
0

CIRCUIT ENGINEER	SR. SIGNAL ENGR.–DESIGN & STANDARDS	DIRECTOR C&S SYSTEMS	MTA Metro–North Railroad	NEW HAVEN LINE CP 234 DIVERGING ROUTES – TRACK 1 WEST – STAGE 5	ISSUE DATE: / REV. / NHS / NHS / /users/signal/RTG RTG–NHL1 SHEET 51X NHL1 L1051X

Gannett Fleming/CWA

CONTRACT # 1000027511

PROJECT SHEET # 0476

STAGE 5

EXISTING

1057′ (1122′ P/1108′ F EQ.) 174+919 621′ (639′ P/635′ F EQ.) 175+540 465′ (489′ P/484′ F EQ.) 176+005 905′ (959′ P/948′ F EQ.) TRK.5 176+910 596′ (616′ P/611′ F EQ.) 177+506

1148′ (1216′ P/1201′ F EQ.) 175+010 1363′ (1433′ P/1419′ F EQ.) 176+373 TRK.3 1133′ (1177′ P/1167′ F EQ.) 177+506 4470′ (4181′ P/4128′ F EQ.)

1331′ (1404′ P/1388′ F EQ.) TRK. 1 175+193 1180′ (1245′ P/1232′ F EQ.) 176+373 TRK. 1, 2 & 4 1133′ (1177′ P/1167′ F EQ.) 177+506 4470′ (4181′ P/4128′ F EQ.)

1271′ (1340′ P/1325′ F EQ.) TRK. 2 & 4

CP 234
(STAM)

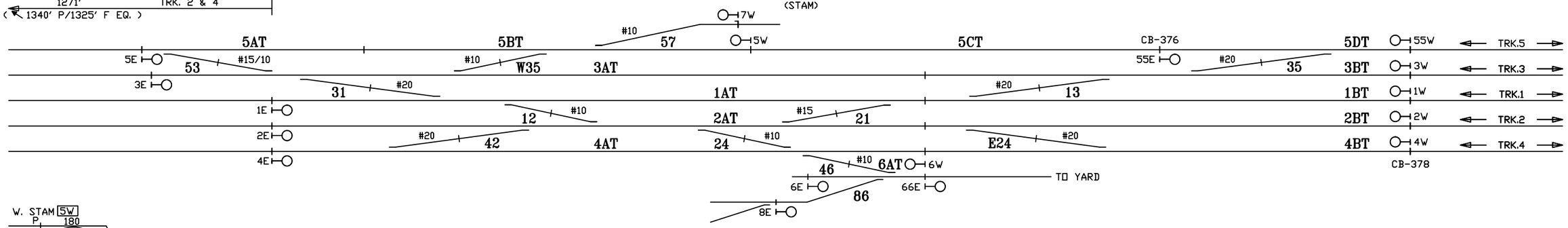

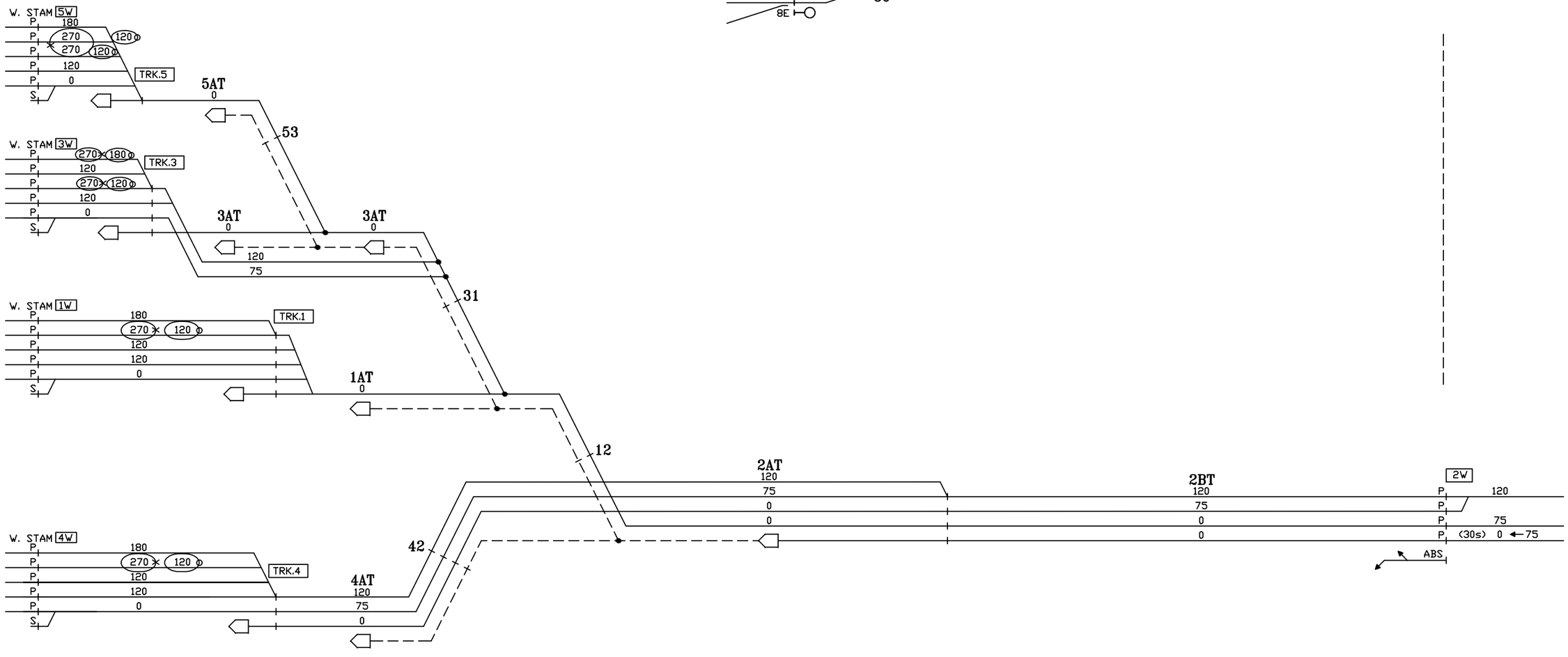

CIRCUIT ENGINEER	SR. SIGNAL ENGR.–DESIGN & STANDARDS	DIRECTOR C&S SYSTEMS	MTA Metro–North Railroad	NEW HAVEN LINE CP 234 DIVERGING ROUTES – TRACK 2 WEST – STAGE 5	ISSUE DATE: / RTG–NHL1 NHS REV. / SHEET 52X NHS /users/signal/RTG / NHL1 / L1052X

Gannett Fleming/CWA

CONTRACT # 1000027511

PROJECT SHEET # 0477

STAGE 5

EXISTING

1057′ (1122′ P/1108′ F EQ.) 174+919 621′ (639′ P/635′ F EQ.) 175+540
1148′ (1216′ P/1201′ F EQ.) 175+010
1331′ (1404′ P/1388′ F EQ.) TRK. 1 175+193
1271′ (1340′ P/1325′ F EQ.) TRK. 2 & 4

465′ (489′ P/484′ F EQ.) 176+005 905′ (959′ P/948′ F EQ.) TRK.5 176+910 596′ (616′ P/611′ F EQ.) 177+506
1363′ (1433′ P/1419′ F EQ.) 176+373 TRK.3 1133′ (1177′ P/1167′ F EQ.) 177+506 4470′ (4181′ P/4128′ F EQ.)
1180′ (1245′ P/1232′ F EQ.) 176+373 TRK. 1, 2 & 4 1133′ (1177′ P/1167′ F EQ.) 177+506 4470′ (4181′ P/4128′ F EQ.)

CP 234 (STAM)

5AT 5BT 5CT CB-376 5DT 55W TRK.5
5E 53 #15/10 #10 W35 3AT #10 57 7W 5W 55E #20 35 3BT 3W TRK.3
3E 31 #20 1AT #20 13 1BT 1W TRK.1
1E 12 #10 2AT #15 21 2BT 2W TRK.2
2E #20 42 4AT 24 E24 #20 4BT 4W TRK.4
4E CB-378
#10 6AT 6W TO YARD
46
6E 66E
86
8E

W. STAM 5W — TRK.5 — 5AT — 53 — 3AT
W. STAM 3W — TRK.3 — 3AT — 31 — 1AT
W. STAM 1W — TRK.1 — 1AT — 12 — 2AT
W. STAM 2W — TRK.2 — 2AT — 2BT — E24 — 4BT
W. STAM 4W — TRK.4 — 4AT — 42 — 24 — 4AT — 4BT — 4W
(30s) 0 ←75
ABS

CIRCUIT ENGINEER	SR. SIGNAL ENGR.–DESIGN & STANDARDS	DIRECTOR C&S SYSTEMS	MTA Metro–North Railroad	NEW HAVEN LINE CP 234 DIVERGING ROUTES – TRACK 4 WEST – STAGE 5	ISSUE DATE: RTG–NHL1 NHS REV. SHEET 53X NHS /users/signal/RTG NHL1 L1053X

Gannett Fleming/CWA

CONTRACT # 1000027511 | PROJECT SHEET # 0478

STAGE 5

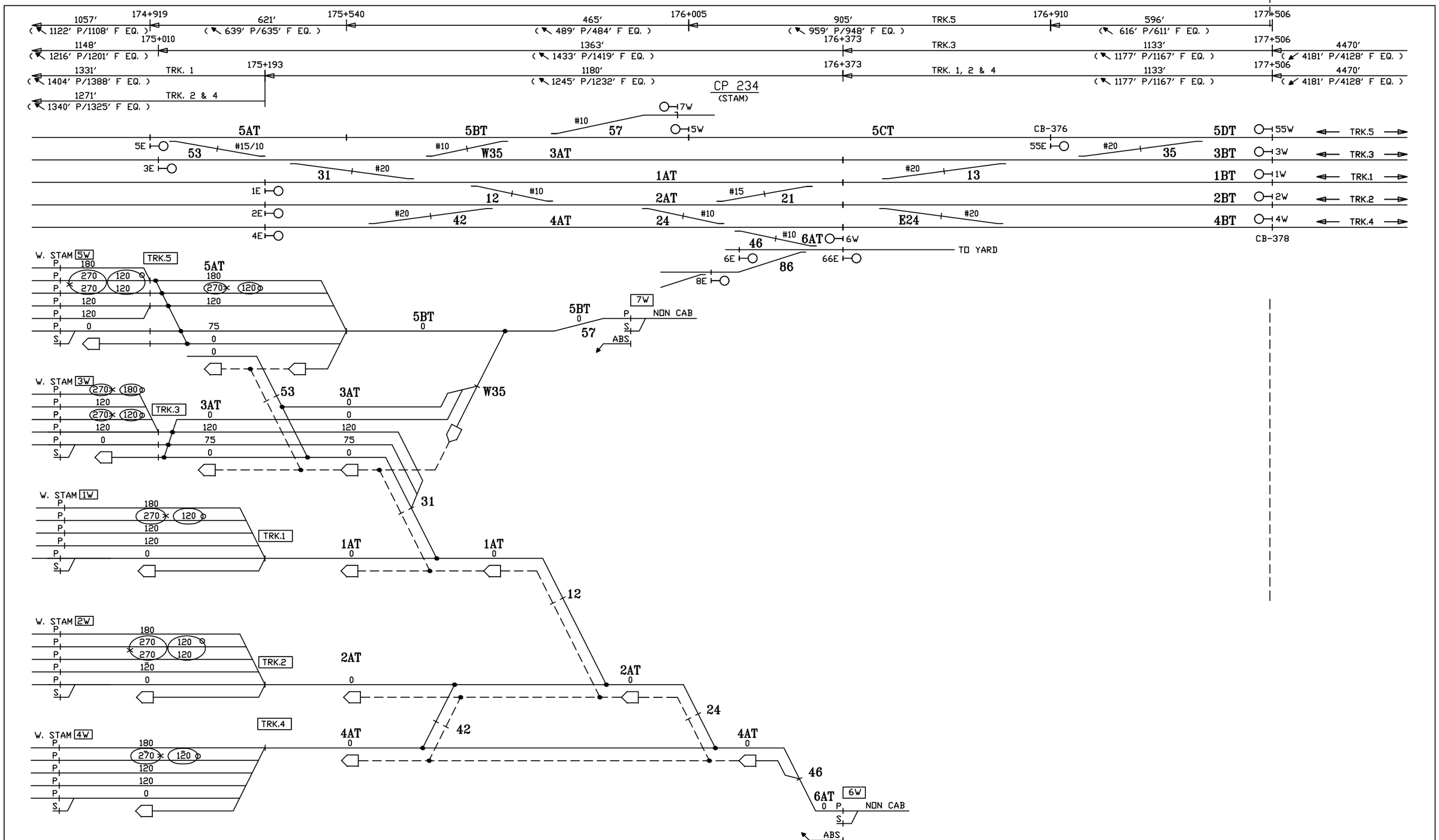

CIRCUIT ENGINEER	SR. SIGNAL ENGR.-DESIGN & STANDARDS	DIRECTOR C&S SYSTEMS	MTA Metro-North Railroad	NEW HAVEN LINE CP 234 DIVERGING ROUTES - TRACKS 6 & 7 WEST - STAGE 5	ISSUE DATE: NHS REV. NHS /users/signal/RTG	RTG-NHL1 SHEET 54X NHL1 L1054X

Gannett Fleming/CWA

CONTRACT #	PROJECT SHEET #
1000027511	0479

STAGE 5

CP 234 (STAM)
STAMFORD YARD

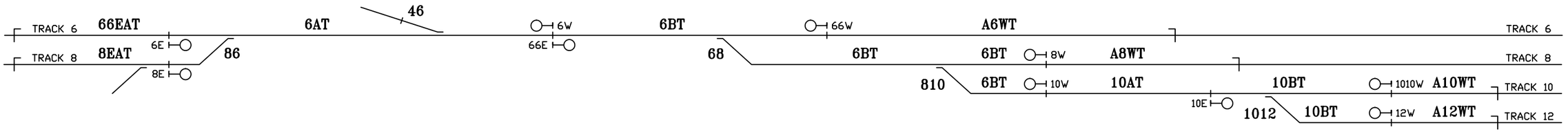

SEE SH. 54X FOR DIVERGING ROUTES

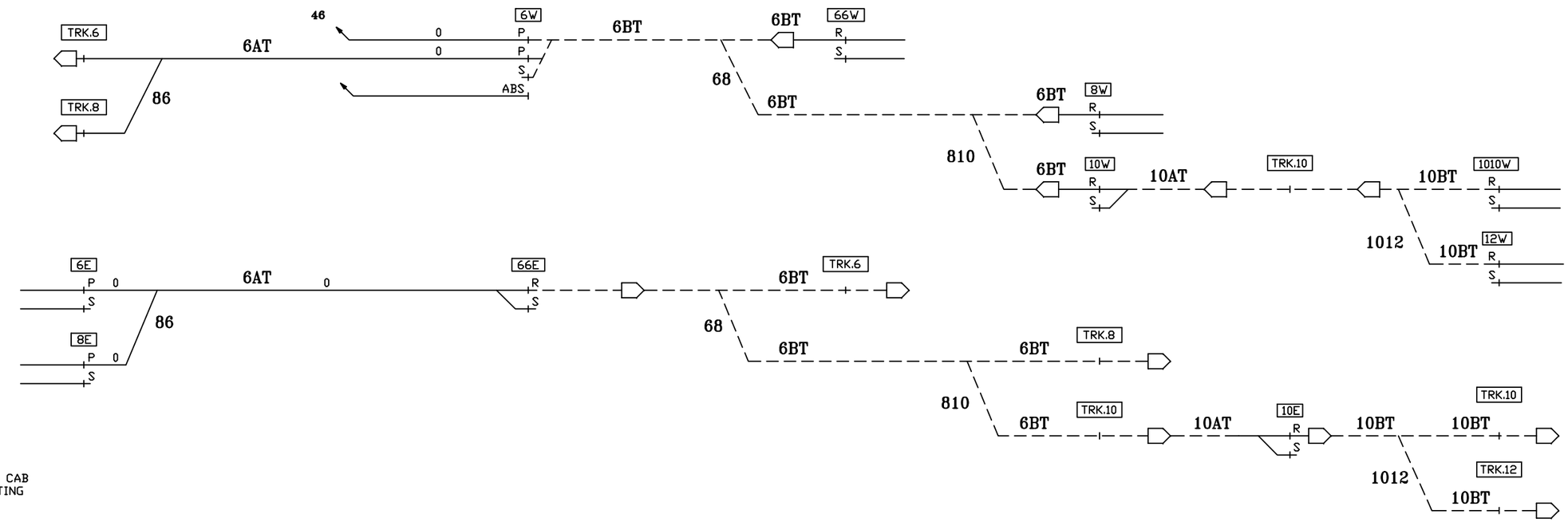

NOTES:
P - PROCEED CAB
R - RESTRICTING
S - STOP

CIRCUIT ENGINEER	SR. SIGNAL ENGR.–DESIGN & STANDARDS	DIRECTOR C&S SYSTEMS	MTA Metro–North Railroad	NEW HAVEN LINE CP 234 STAMFORD YARD ROUTINGS – STAGE 5	ISSUE DATE: / REV. / NHS / NHS / /users/signal/RTG RTG–NHL1 SHEET 55X NHL1 L1055X

Gannett Fleming/CWA

CONTRACT # 1000027511

PROJECT SHEET # 0480

IN SERVICE | EXISTING | IN SERVICE | STAGE 6 | EXISTING

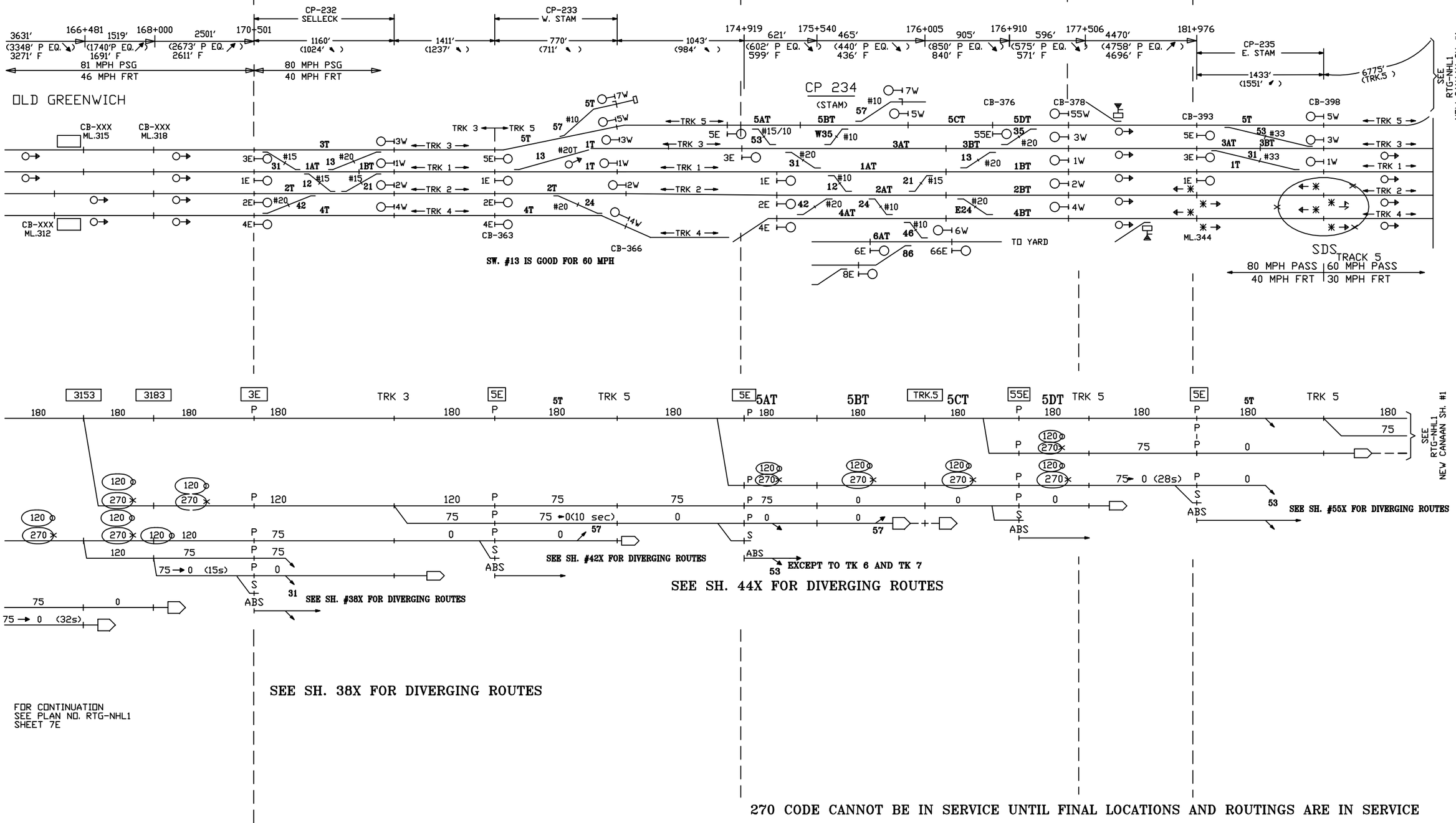

270 CODE CANNOT BE IN SERVICE UNTIL FINAL LOCATIONS AND ROUTINGS ARE IN SERVICE

CIRCUIT ENGINEER	SR. SIGNAL ENGR.–DESIGN & STANDARDS	DIRECTOR C&S SYSTEMS	MTA Metro–North Railroad	NEW HAVEN LINE MP 30.9 TO MP 35.0 ROUTINGS – TRACK 3 CHANGES TO TRACK 5 EAST – STAGE 6	ISSUE DATE: RTG–NHL1 NHS REV. SHEET 9E NHS /users/signal/RTG NHL1 L1009E

Gannett Fleming/CWA

CONTRACT # 1000027511 | PROJECT SHEET # 0500

IN SERVICE | EXISTING | IN SERVICE | STAGE 6 | EXISTING

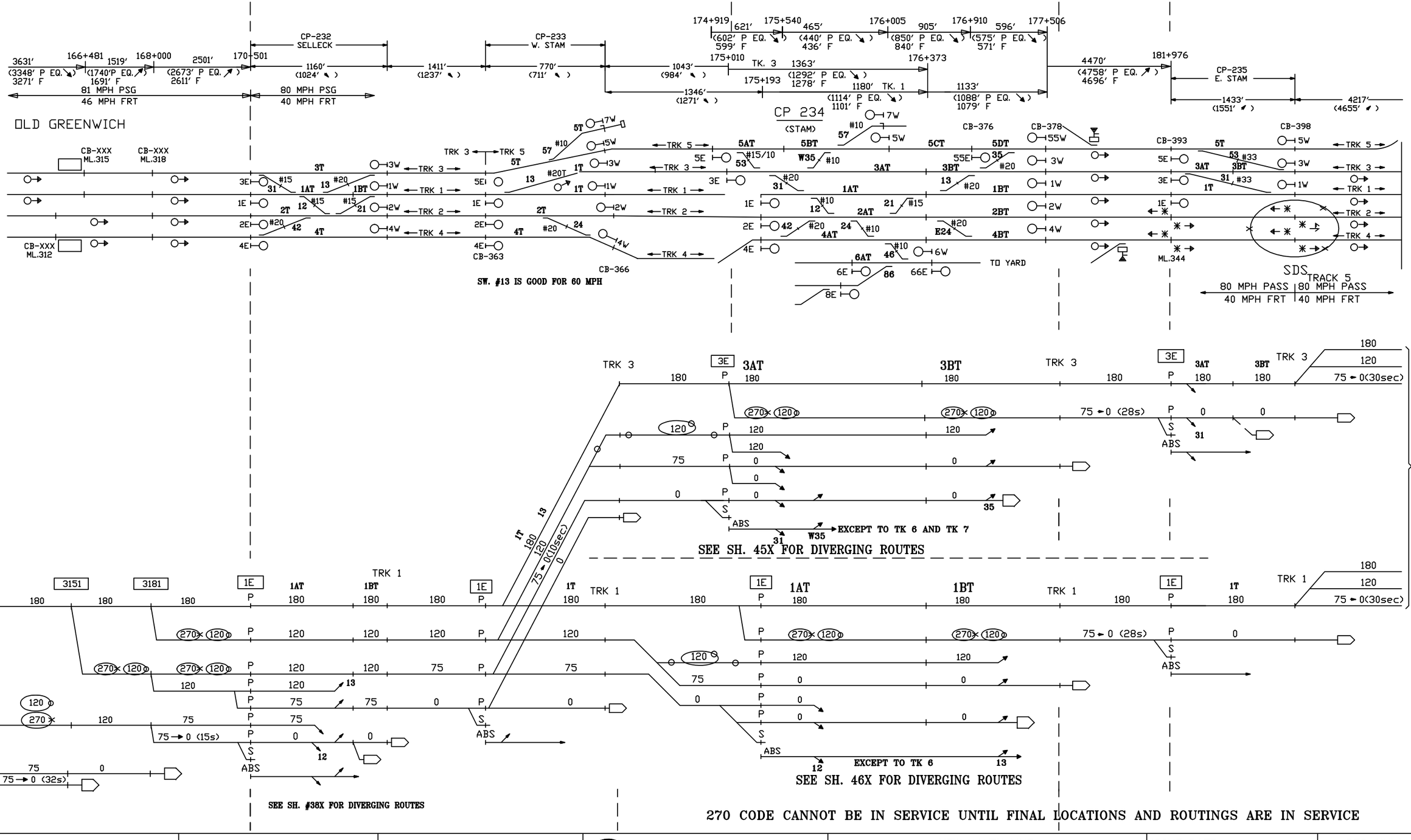

270 CODE CANNOT BE IN SERVICE UNTIL FINAL LOCATIONS AND ROUTINGS ARE IN SERVICE

CIRCUIT ENGINEER	SR. SIGNAL ENGR.–DESIGN & STANDARDS	DIRECTOR C&S SYSTEMS	MTA Metro–North Railroad	NEW HAVEN LINE MP 30.9 TO MP 35.0 ROUTINGS – TRACKS 3 & 1 EAST – STAGE 6	ISSUE DATE: / RTG–NHL1 NHS REV. / SHEET 10E NHS /users/signal/RTG / NHL1 / L1010E

Gannett Fleming/CWA

CONTRACT # 1000027511 | PROJECT SHEET # 0501

IN SERVICE | EXISTING | IN SERVICE | STAGE 6 | EXISTING

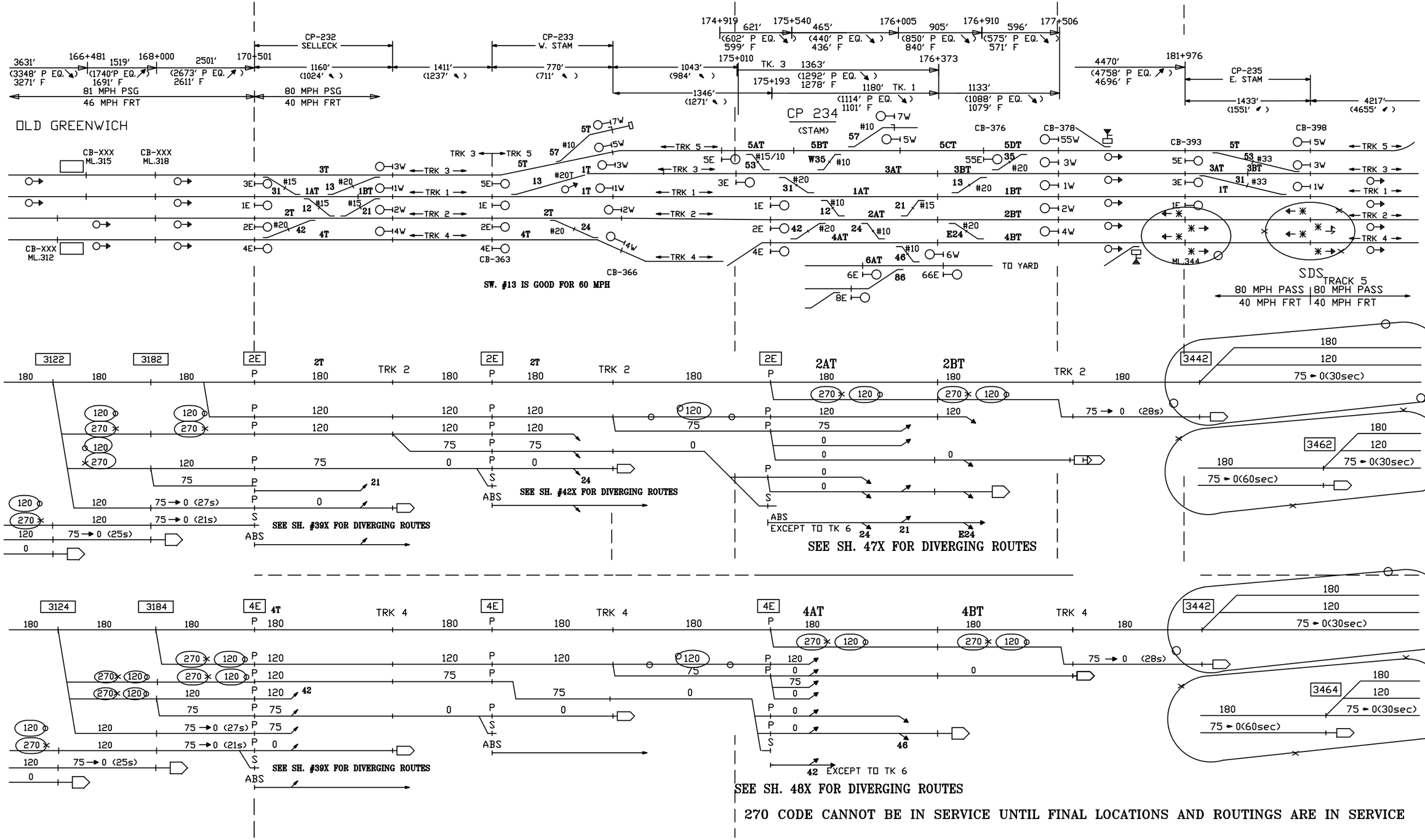

CIRCUIT ENGINEER	SR. SIGNAL ENGR.–DESIGN & STANDARDS	DIRECTOR C&S SYSTEMS	MTA Metro–North Railroad	NEW HAVEN LINE MP 30.9 TO MP 35.0 ROUTINGS – TRACKS 2 & 4 EAST – STAGE 6	ISSUE DATE: / RTG–NHL1 NHS REV. / SHEET 11E NHS /users/signal/RTG NHL1 L1011E

Gannett Fleming/CWA

CONTRACT #	PROJECT SHEET #
1000027511	0502

EXISTING

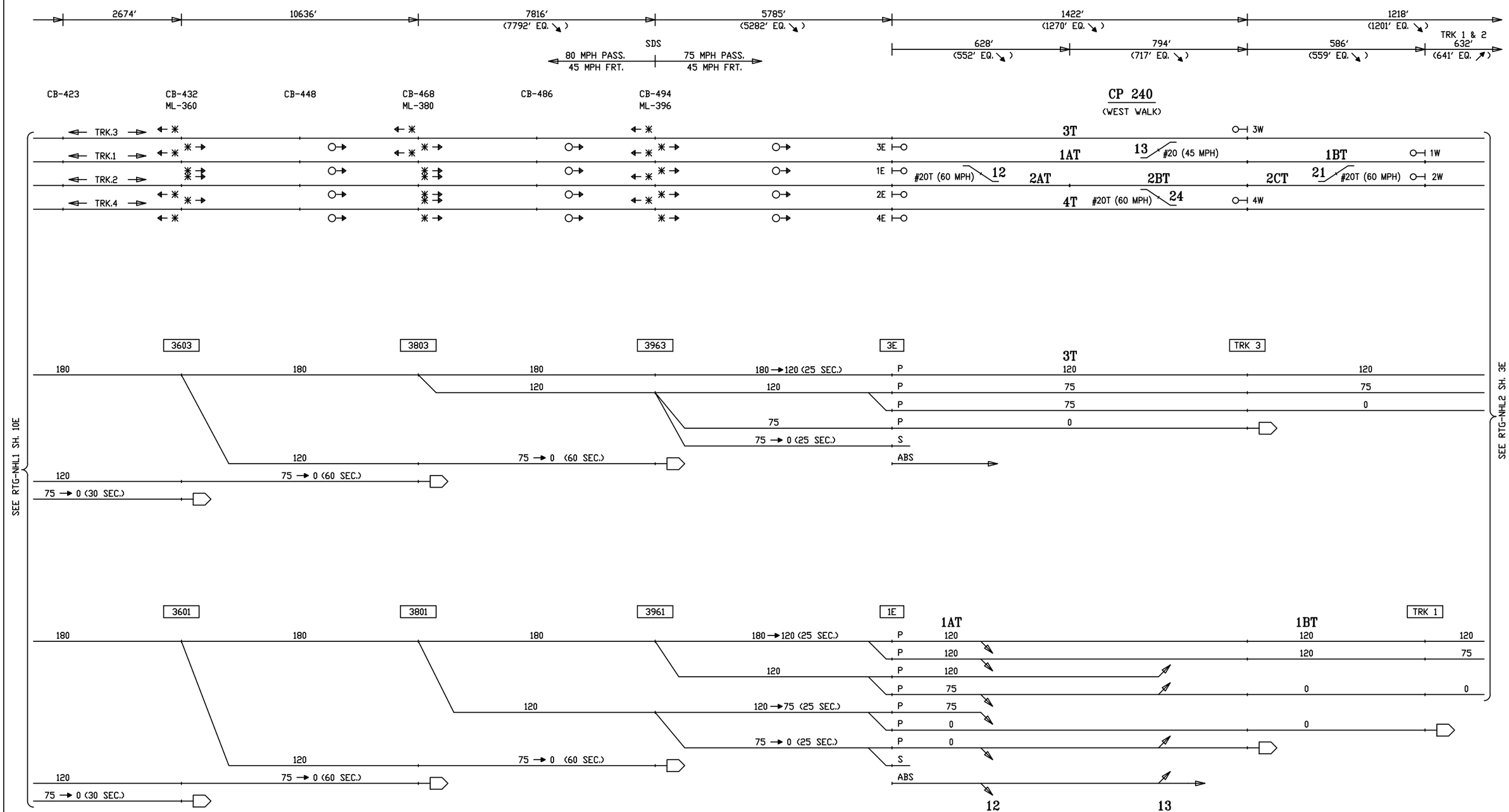

SEE SH. 1X FOR DIVERGING ROUTES

CIRCUIT ENGINEER	SR. SIGNAL ENGR.–DESIGN & STANDARDS	DIRECTOR C&S SYSTEMS	MTA Metro–North Railroad	NEW HAVEN LINE MP 35.6 TO MP 40.7 ROUTINGS – TRACKS 3 & 1 EAST – STAGE 6	ISSUE DATE: NHS REV. 21 NHS /users/signal/RTG	RTG–NHL2 SHEET 1E NHL2 L2001E

Gannett Fleming/CWA

CONTRACT #	PROJECT SHEET #
1000027511	0503

EXISTING

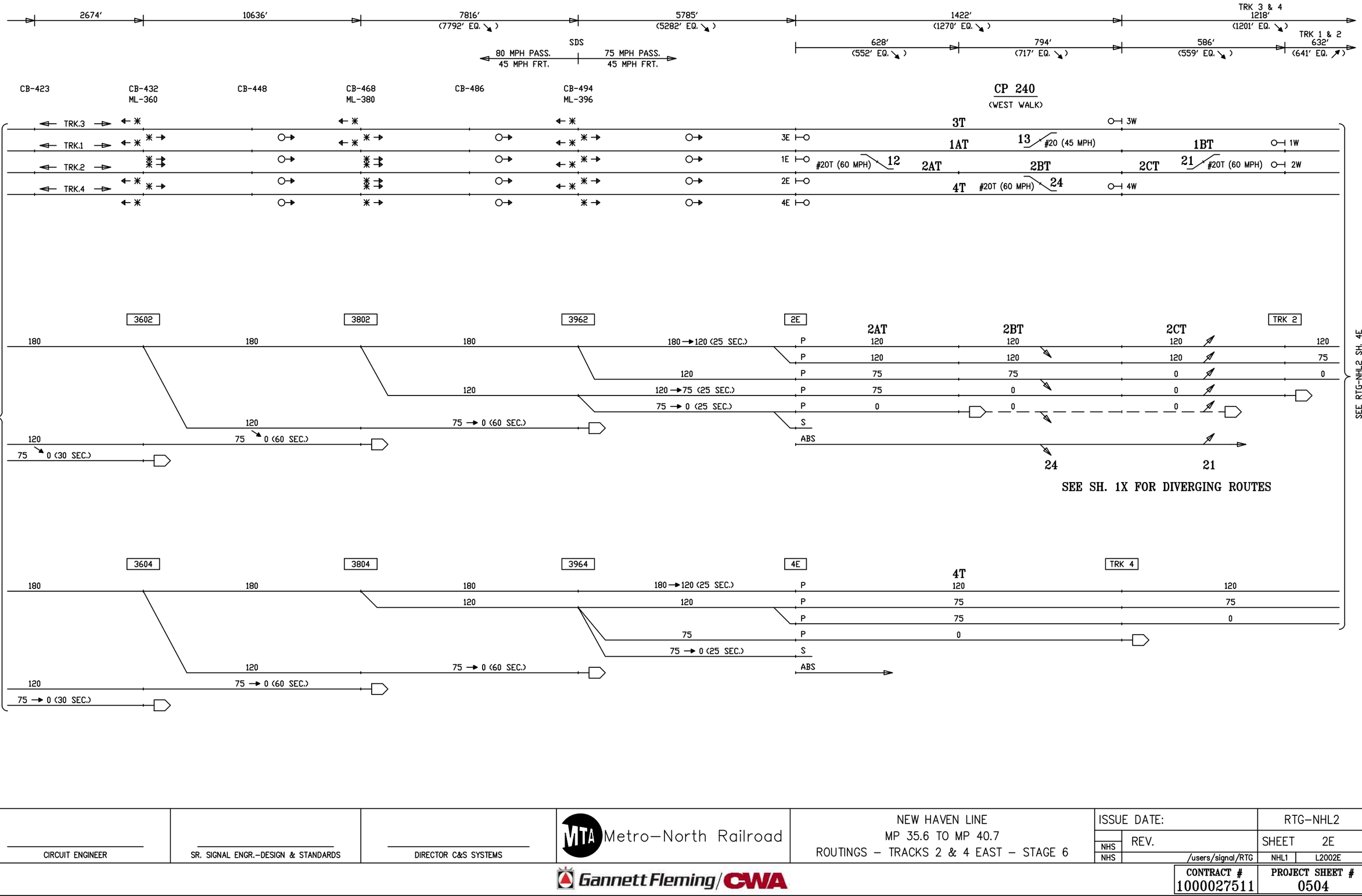

CIRCUIT ENGINEER	SR. SIGNAL ENGR.–DESIGN & STANDARDS	DIRECTOR C&S SYSTEMS	MTA Metro–North Railroad	NEW HAVEN LINE MP 35.6 TO MP 40.7 ROUTINGS – TRACKS 2 & 4 EAST – STAGE 6	ISSUE DATE: / RTG–NHL2 NHS REV. / SHEET 2E NHS /users/signal/RTG / NHL1 / L2002E

Gannett Fleming/CWA

CONTRACT # 1000027511

PROJECT SHEET # 0504

IN SERVICE | EXISTING | IN SERVICE | STAGE 6 | EXISTING

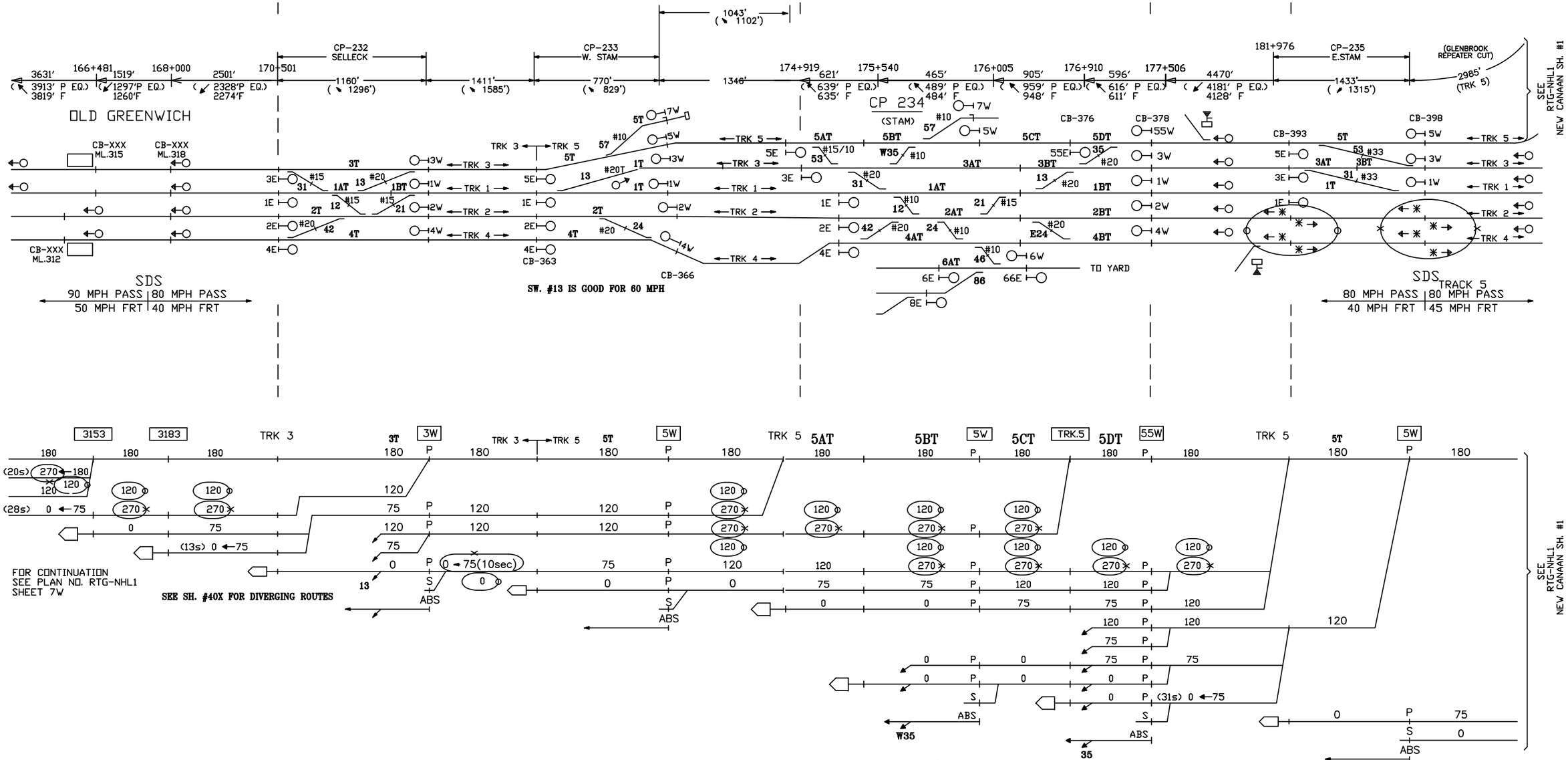

CIRCUIT ENGINEER	SR. SIGNAL ENGR.–DESIGN & STANDARDS	DIRECTOR C&S SYSTEMS	MTA Metro–North Railroad	NEW HAVEN LINE MP 35.6 TO MP 31.2 ROUTINGS – TRACK 5 CHANGES TO TRACK 3 WEST – STAGE 6	ISSUE DATE: REV. 11 /users/signal/RTG	RTG–NHL1 SHEET 9W NHL1 L1009W

Gannett Fleming/CWA

CONTRACT # 1000027511

PROJECT SHEET # 0505

IN SERVICE | EXISTING | IN SERVICE | STAGE 6 | EXISTING

OLD GREENWICH

CB-XXX ML.315 | CB-XXX ML.318 | CB-XXX ML.312 | CB-363 | CB-366 | CB-376 | CB-378 | CB-393 | CB-398

CP-232 SELLECK | CP-233 W. STAM | CP 234 (STAM) | CP-235 E.STAM

TK. 3 | TK. 1

TRK 1 | TRK 2 | TRK 3 | TRK 4 | TRK 5

TO YARD

SDS
80 MPH PASS | 80 MPH PASS
45 MPH FRT | 40 MPH FRT

SDS TRACK 5
80 MPH PASS | 80 MPH PASS
40 MPH FRT | 45 MPH FRT

SW. #13 IS GOOD FOR 60 MPH

SEE SH. 50X FOR DIVERGING ROUTES

SEE SH. 51X FOR DIVERGING ROUTES

SEE SH. #40X FOR DIVERGING ROUTES

SEE SH. #56X FOR DIVERGING ROUTES

SEE RTG-NHL2 SH. #1W

FOR CONTINUATION
SEE PLAN NO. RTG-NHL1
SHEET 7W

CIRCUIT ENGINEER | SR. SIGNAL ENGR.–DESIGN & STANDARDS | DIRECTOR C&S SYSTEMS

Metro–North Railroad

NEW HAVEN LINE
MP 35.6 TO MP 31.2
ROUTINGS – TRACKS 3 & 1 WEST – STAGE 6

ISSUE DATE: 09–01–99			RTG–NHL1
NHS	REV. 11		SHEET 10W
NHS	/users/signal/RTG	NHL1	L1010W

Gannett Fleming/CWA

CONTRACT # 1000027511

PROJECT SHEET # 0506

IN SERVICE | EXISTING | IN SERVICE | STAGE 6 | EXISTING

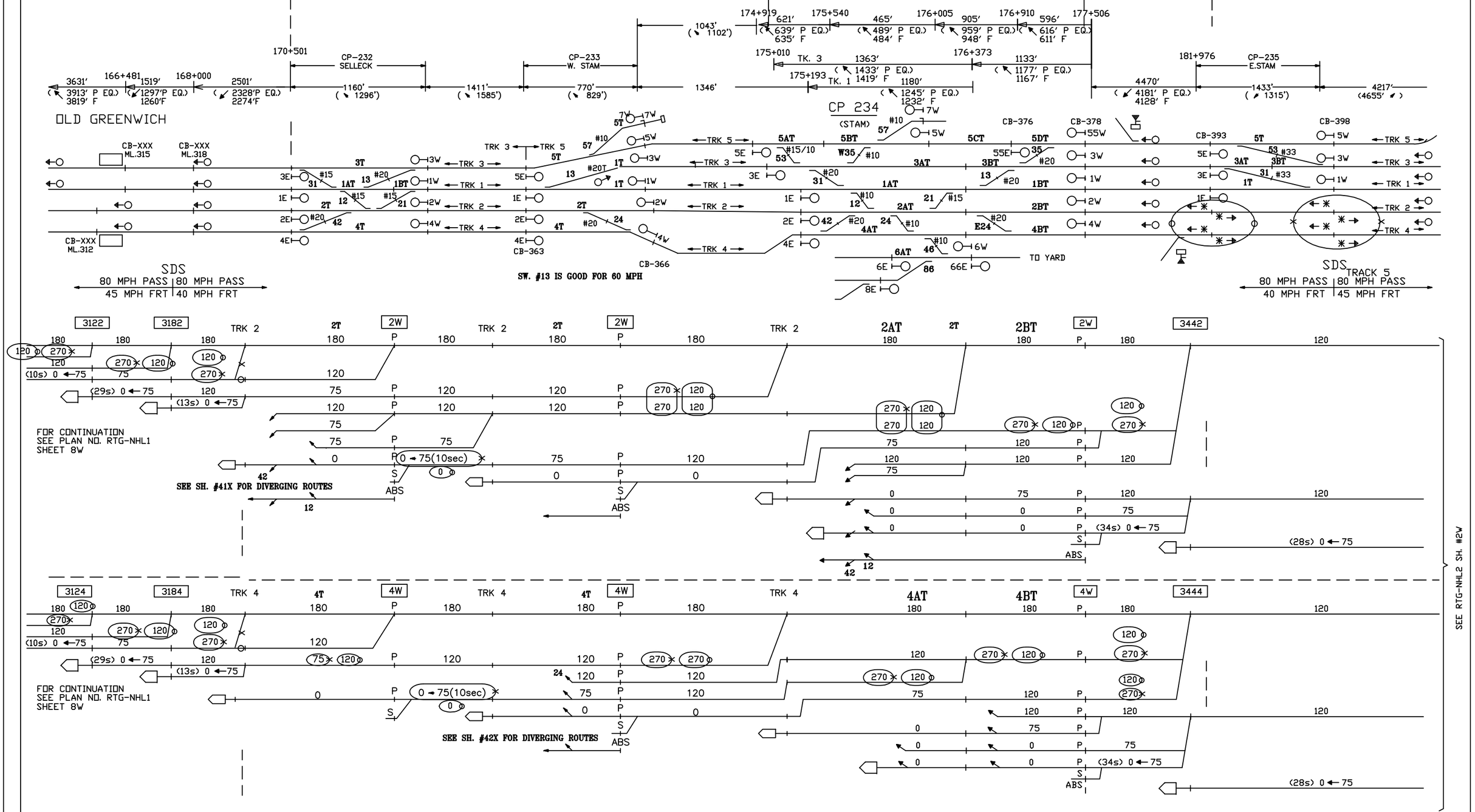

CIRCUIT ENGINEER	SR. SIGNAL ENGR.–DESIGN & STANDARDS	DIRECTOR C&S SYSTEMS	MTA Metro–North Railroad	NEW HAVEN LINE MP 35.6 TO MP 31.2 ROUTINGS – TRACKS 2 & 4 WEST – STAGE 6	ISSUE DATE: 09–01–99 REV. 11 NHS /users/signal/RTG NHL1 L1011W

RTG–NHL1
SHEET 11W

Gannett Fleming/CWA

CONTRACT # 1000027511

PROJECT SHEET # 0507

EXISTING

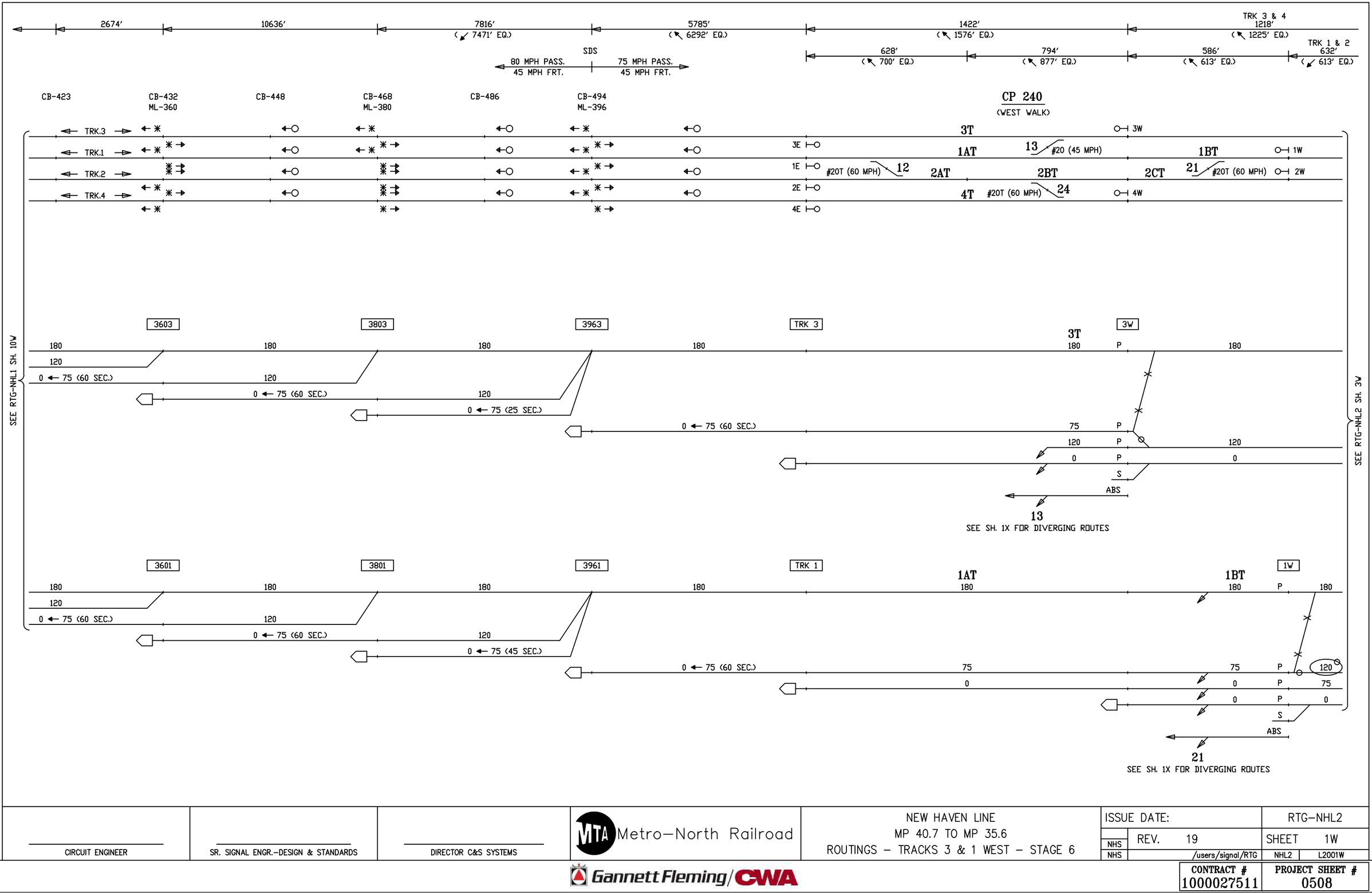

CIRCUIT ENGINEER	SR. SIGNAL ENGR.–DESIGN & STANDARDS	DIRECTOR C&S SYSTEMS	MTA Metro–North Railroad	NEW HAVEN LINE MP 40.7 TO MP 35.6 ROUTINGS – TRACKS 3 & 1 WEST – STAGE 6	ISSUE DATE:	RTG–NHL2
					NHS REV. 19	SHEET 1W
					NHS /users/signal/RTG	NHL2 L2001W

Gannett Fleming/CWA

CONTRACT #	PROJECT SHEET #
1000027511	0508

EXISTING

CIRCUIT ENGINEER	SR. SIGNAL ENGR.–DESIGN & STANDARDS	DIRECTOR C&S SYSTEMS	MTA Metro–North Railroad	NEW HAVEN LINE MP 40.7 TO MP 35.6 ROUTINGS – TRACKS 2 & 4 WEST – STAGE 6	ISSUE DATE:	RTG–NHL2
					NHS REV. 19	SHEET 2W
					NHS /users/signal/RTG	NHL2 L2002W

Gannett Fleming/CWA

CONTRACT #	PROJECT SHEET #
1000027511	0509

IN SERVICE

STAGE 6

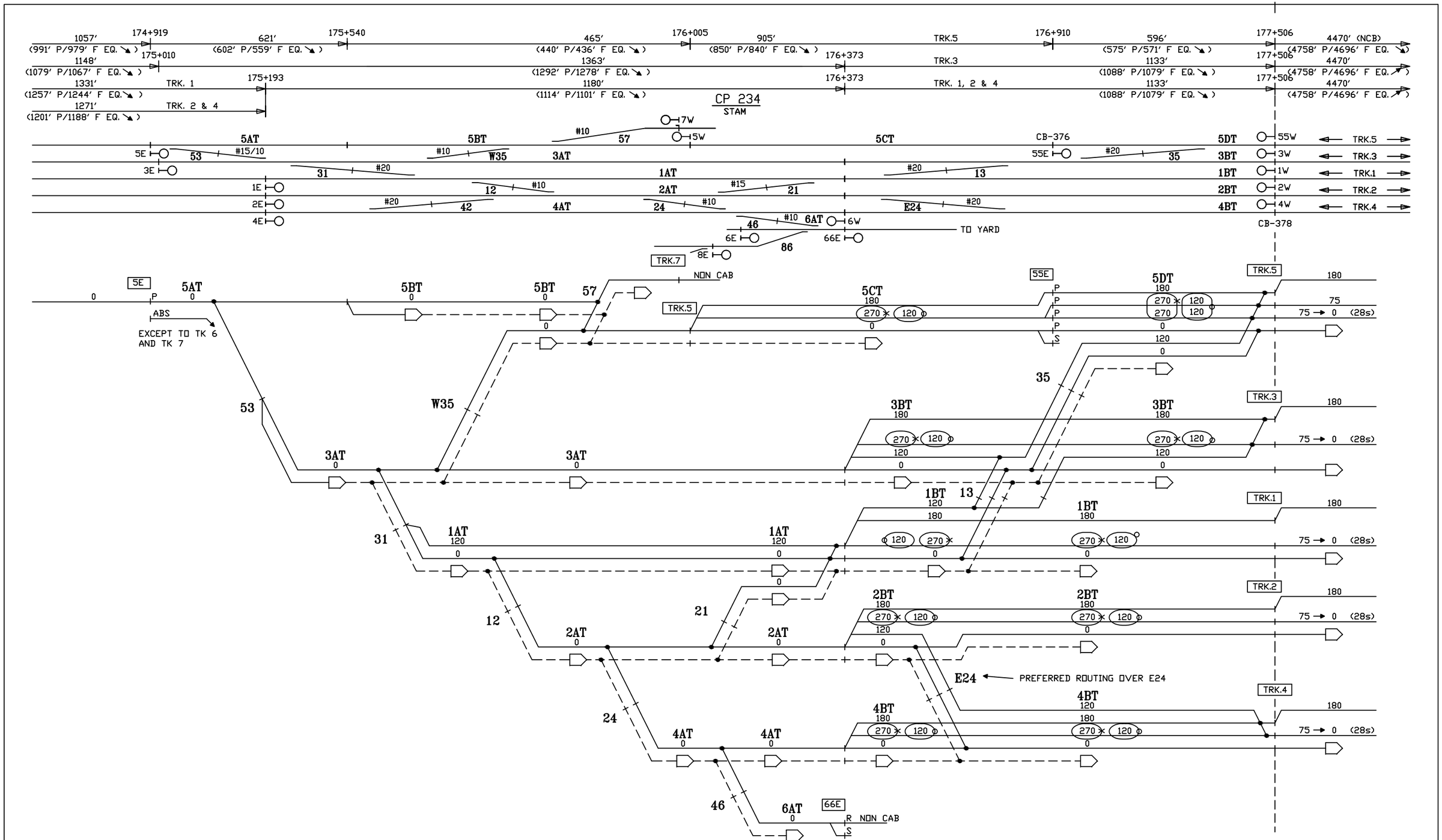

CIRCUIT ENGINEER	SR. SIGNAL ENGR.-DESIGN & STANDARDS	DIRECTOR C&S SYSTEMS	MTA Metro-North Railroad	NEW HAVEN LINE CP 234 DIVERGING ROUTES – TRACK 5 EAST – STAGE 6	ISSUE DATE: NHS REV. NHS /users/signal/RTG	RTG-NHL1 SHEET 44X NHL1 L1044X

Gannett Fleming/CWA

CONTRACT #	PROJECT SHEET #
1000027511	0510

IN SERVICE

STAGE 6

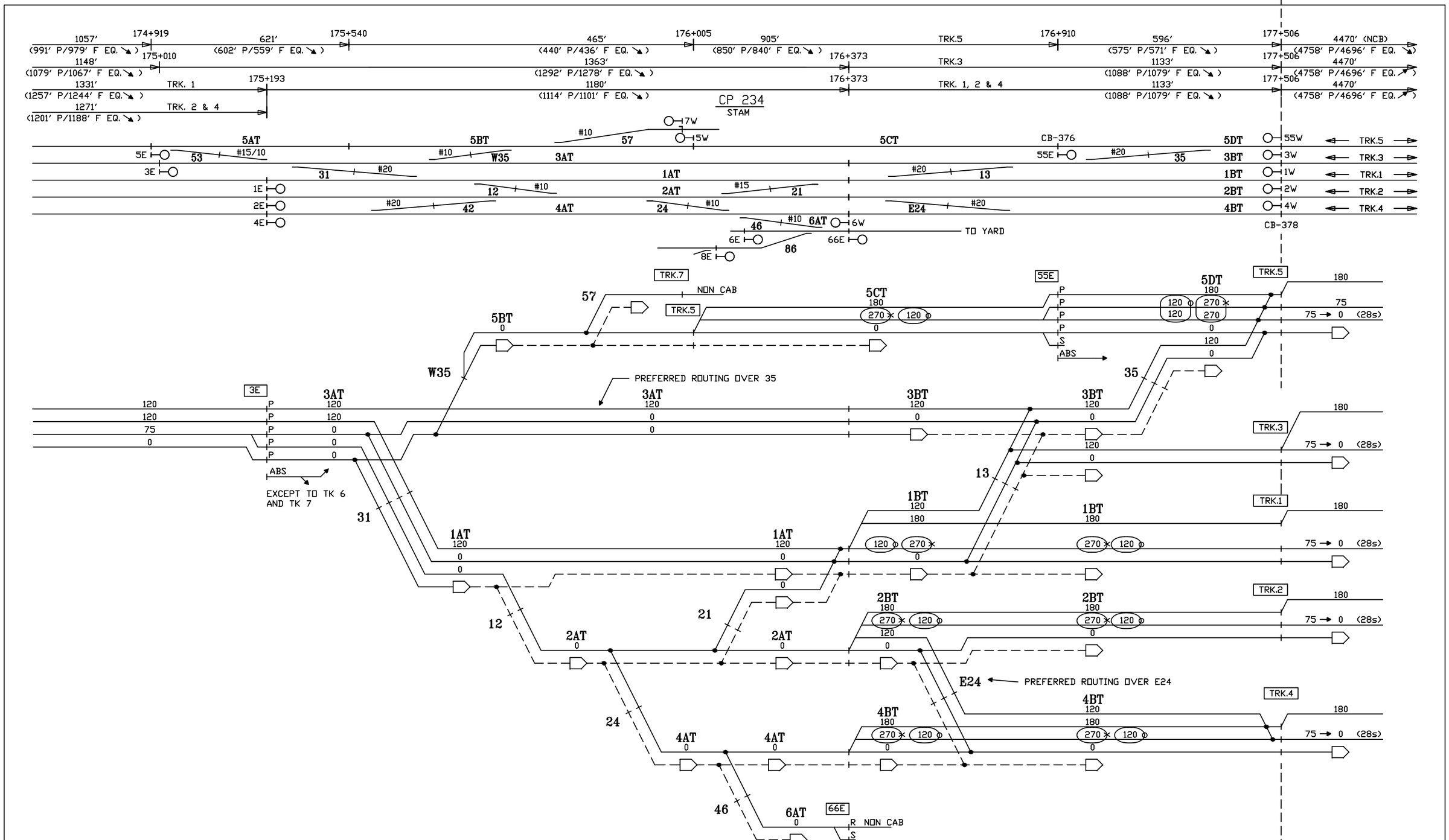

CIRCUIT ENGINEER	SR. SIGNAL ENGR.–DESIGN & STANDARDS	DIRECTOR C&S SYSTEMS	MTA Metro–North Railroad	NEW HAVEN LINE CP 234 DIVERGING ROUTES – TRACK 3 EAST – STAGE 6	ISSUE DATE: NHS REV. NHS /users/signal/RTG	RTG–NHL1 SHEET 45X NHL1 L1045X

Gannett Fleming/CWA

CONTRACT #	PROJECT SHEET #
1000027511	0511

IN SERVICE

STAGE 6

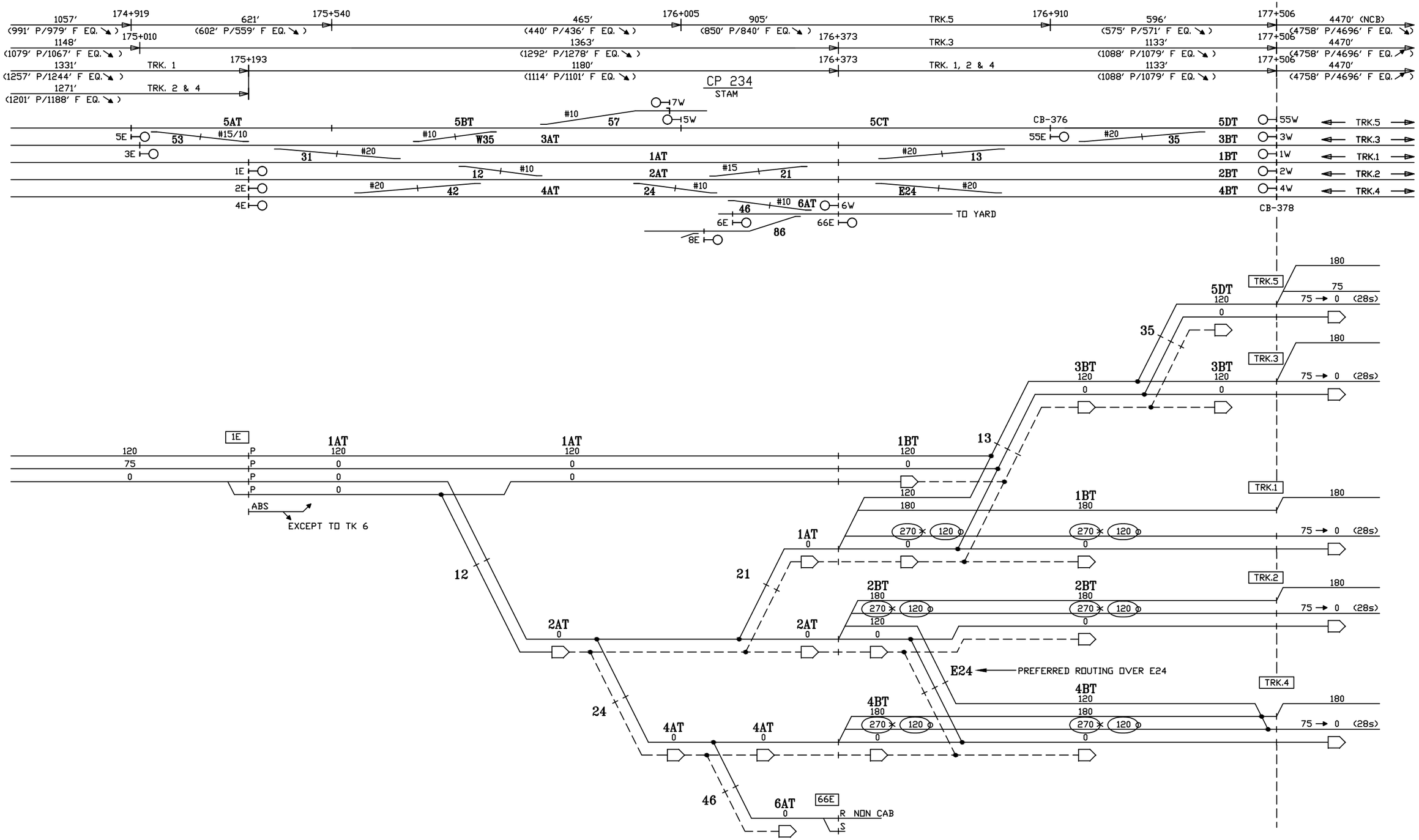

CIRCUIT ENGINEER	SR. SIGNAL ENGR.–DESIGN & STANDARDS	DIRECTOR C&S SYSTEMS	Metro–North Railroad	NEW HAVEN LINE CP 234 DIVERGING ROUTES – TRACK 1 EAST – STAGE 6	ISSUE DATE: / RTG–NHL1 NHS REV. / SHEET 46X NHS /users/signal/RTG / NHL1 / L1046X

Gannett Fleming/CWA

CONTRACT # 1000027511

PROJECT SHEET # 0512

IN SERVICE

STAGE 6

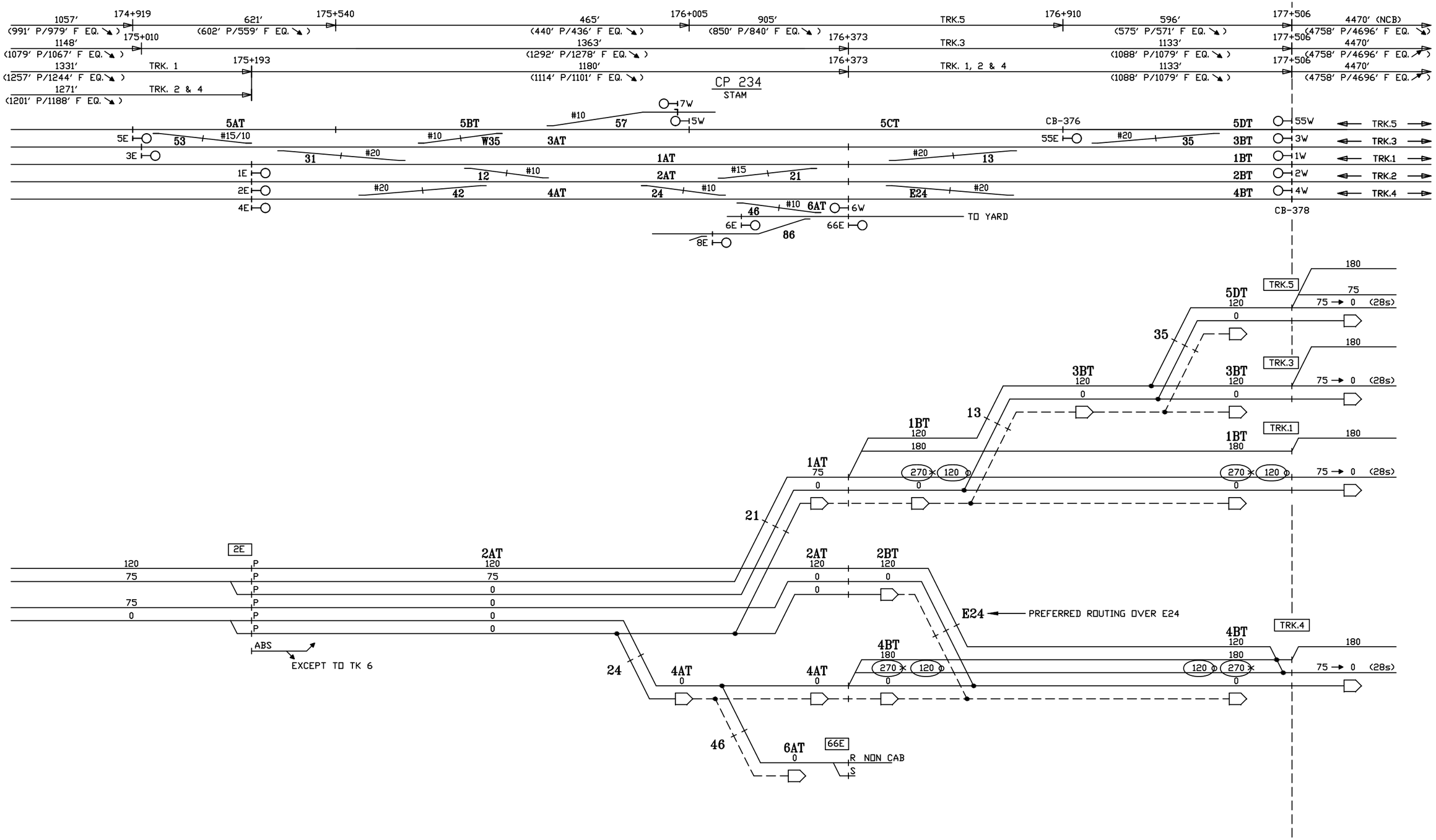

CIRCUIT ENGINEER	SR. SIGNAL ENGR.–DESIGN & STANDARDS	DIRECTOR C&S SYSTEMS	MTA Metro–North Railroad	NEW HAVEN LINE CP 234 DIVERGING ROUTES – TRACK 2 EAST – STAGE 6	ISSUE DATE: / REV. / NHS / NHS / /users/signal/RTG RTG–NHL1 SHEET 47X NHL1 L1047X

Gannett Fleming/CWA

CONTRACT #	PROJECT SHEET #
1000027511	0513

IN SERVICE

STAGE 6

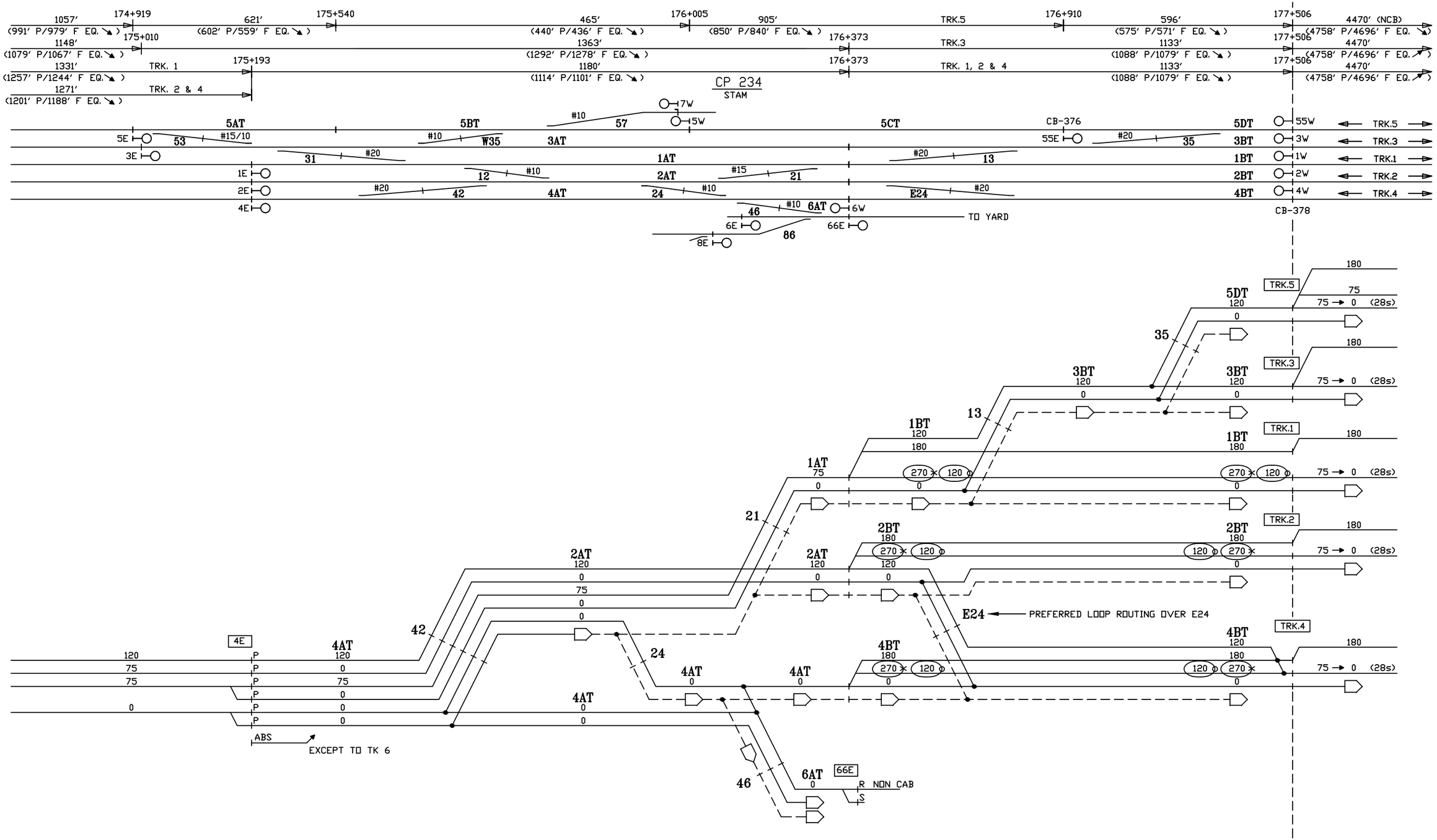

CIRCUIT ENGINEER	SR. SIGNAL ENGR.–DESIGN & STANDARDS	DIRECTOR C&S SYSTEMS	Metro–North Railroad	NEW HAVEN LINE CP 234 DIVERGING ROUTES – TRACK 4 EAST – STAGE 6	ISSUE DATE: / REV. / NHS / NHS / /users/signal/RTG RTG–NHL1 SHEET 48X NHL1 L1048X

Gannett Fleming/CWA

CONTRACT # 1000027511

PROJECT SHEET # 0514

IN SERVICE

STAGE 6

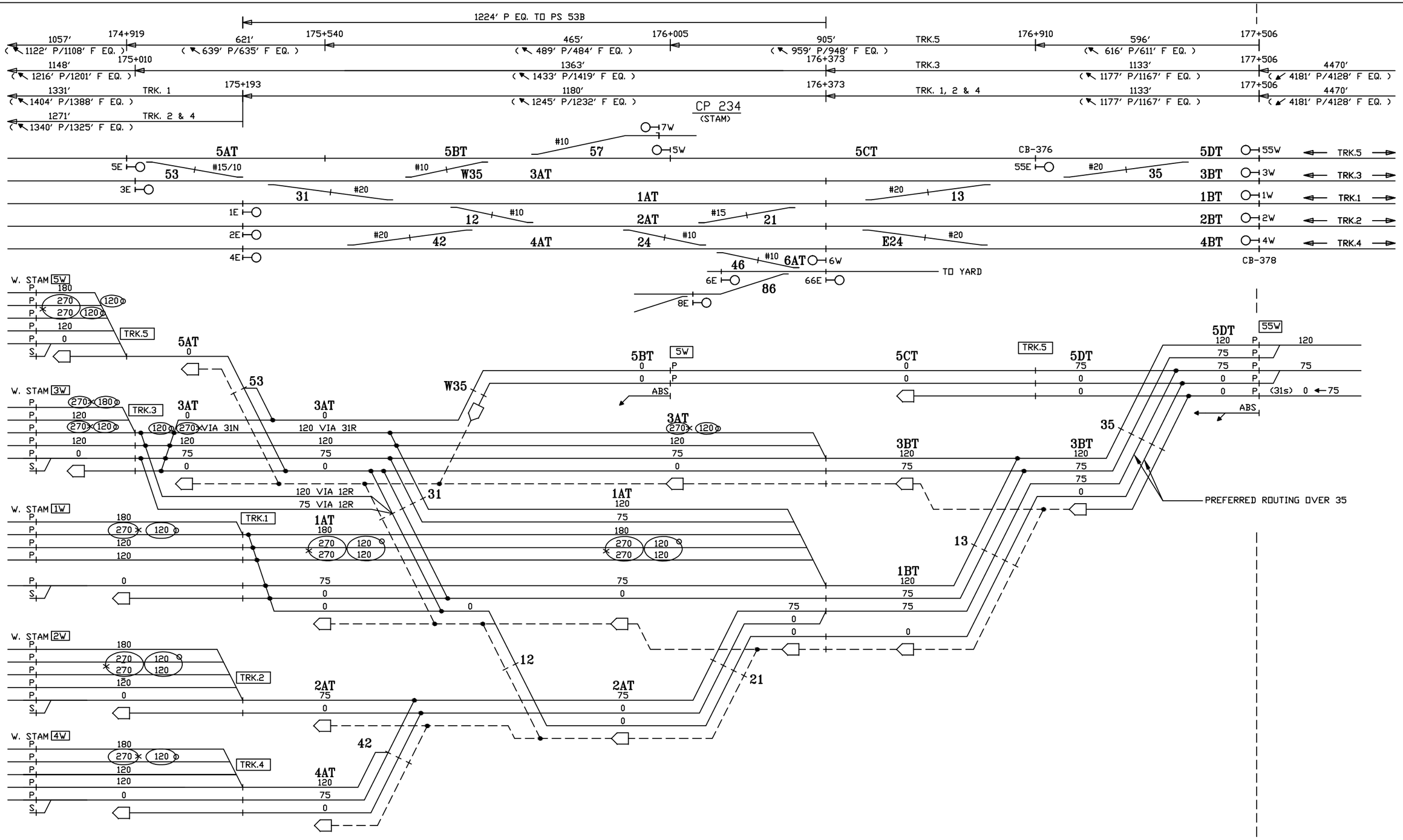

CIRCUIT ENGINEER	SR. SIGNAL ENGR.–DESIGN & STANDARDS	DIRECTOR C&S SYSTEMS	MTA Metro–North Railroad	NEW HAVEN LINE CP 234 DIVERGING ROUTES – TRACK 5 WEST – STAGE 6	ISSUE DATE: / REV. / NHS / NHS / /users/signal/RTG RTG–NHL1 SHEET 49X NHL1 L1049X

Gannett Fleming/CWA

CONTRACT # 1000027511

PROJECT SHEET # 0515

IN SERVICE

STAGE 6

1224' P EQ. TO PS 53B

1057' (1122' P/1108' F EQ.) | 174+919 | 621' (639' P/635' F EQ.) | 175+540 | 465' (489' P/484' F EQ.) | 176+005 | 905' (959' P/948' F EQ.) | TRK.5 | 176+910 | 596' (616' P/611' F EQ.) | 177+506

1148' (1216' P/1201' F EQ.) | 175+010 | 1363' (1433' P/1419' F EQ.) | 176+373 | TRK.3 | 1133' (1177' P/1167' F EQ.) | 177+506 | 4470' (4181' P/4128' F EQ.)

1331' (1404' P/1388' F EQ.) | TRK. 1 | 175+193 | 1180' (1245' P/1232' F EQ.) | 176+373 | TRK. 1, 2 & 4 | 1133' (1177' P/1167' F EQ.) | 177+506 | 4470' (4181' P/4128' F EQ.)

1271' (1340' P/1325' F EQ.) | TRK. 2 & 4

CP 234
(STAM)

5AT | 5BT | 5CT | CB-376 | 5DT 55W → TRK.5

5E | 53 | #15/10 | #10 | W35 | 3AT | 55E | #20 | 35 | 3BT 3W → TRK.3

3E | 31 | #20 | 1AT | #20 | 13 | 1BT 1W → TRK.1

1E | 12 | #10 | 2AT | #15 | 21 | 2BT 2W → TRK.2

2E | #20 | 42 | 4AT | 24 | #10 | E24 | #20 | 4BT 4W → TRK.4

4E | CB-378

#10 | 7W | 57 | 5W

#10 | 46 | 6AT 6W → TO YARD

6E | 66E | 86

8E

W. STAM 5W
P 180
P 270 × 120
P 270 × 120
P 120
P 0
S
TRK.5

W. STAM 3W
P 270 × 180
P 120
P 270 × 120
P 120
TRK.3

W. STAM 1W
P 180
P 270 × 120
P 120
P 120
TRK.1

W. STAM 2W
P 180
P 270 × 120
P 270 × 120
P 75
P 0
S
TRK.2

W. STAM 4W
P 180
P 270 × 120
P 120
P 120
P 0
S
TRK.4

5AT 0

3AT 0 | 3AT 0 | 3BT 75 0

1AT 120 | 1BT 120

2AT 75 | 2AT 75

4AT 120

53 | 31 | 12 | 42 | 21 | 13

P 0 75 75
S 0 0 0

120 VIA 12R
75 VIA 12R

P 120 75 75 0 0
P 75 0 0 0 0
P (34s) 0 ← 75
ABS

P 180 270 × 120 120 × 270
P 120 120
P 120 120

P 0 75 75 75 0
S 0 0 0 0 0

P 180 270 × 120 120 × 270
P 75 120 × 270
P 0 75 75 0
S 0 0 0

P 180 270 × 120 120 × 270
P 120 120
P 120 120
P 0 75 75 0
S 0 0 0

CIRCUIT ENGINEER	SR. SIGNAL ENGR.–DESIGN & STANDARDS	DIRECTOR C&S SYSTEMS	MTA Metro–North Railroad	NEW HAVEN LINE CP 234 DIVERGING ROUTES – TRACK 3 WEST – STAGE 6	ISSUE DATE: / REV. / /users/signal/RTG RTG–NHL1 SHEET 50X NHL1 L1050X

Gannett Fleming/CWA

CONTRACT # 1000027511

PROJECT SHEET # 0516

IN SERVICE

STAGE 6

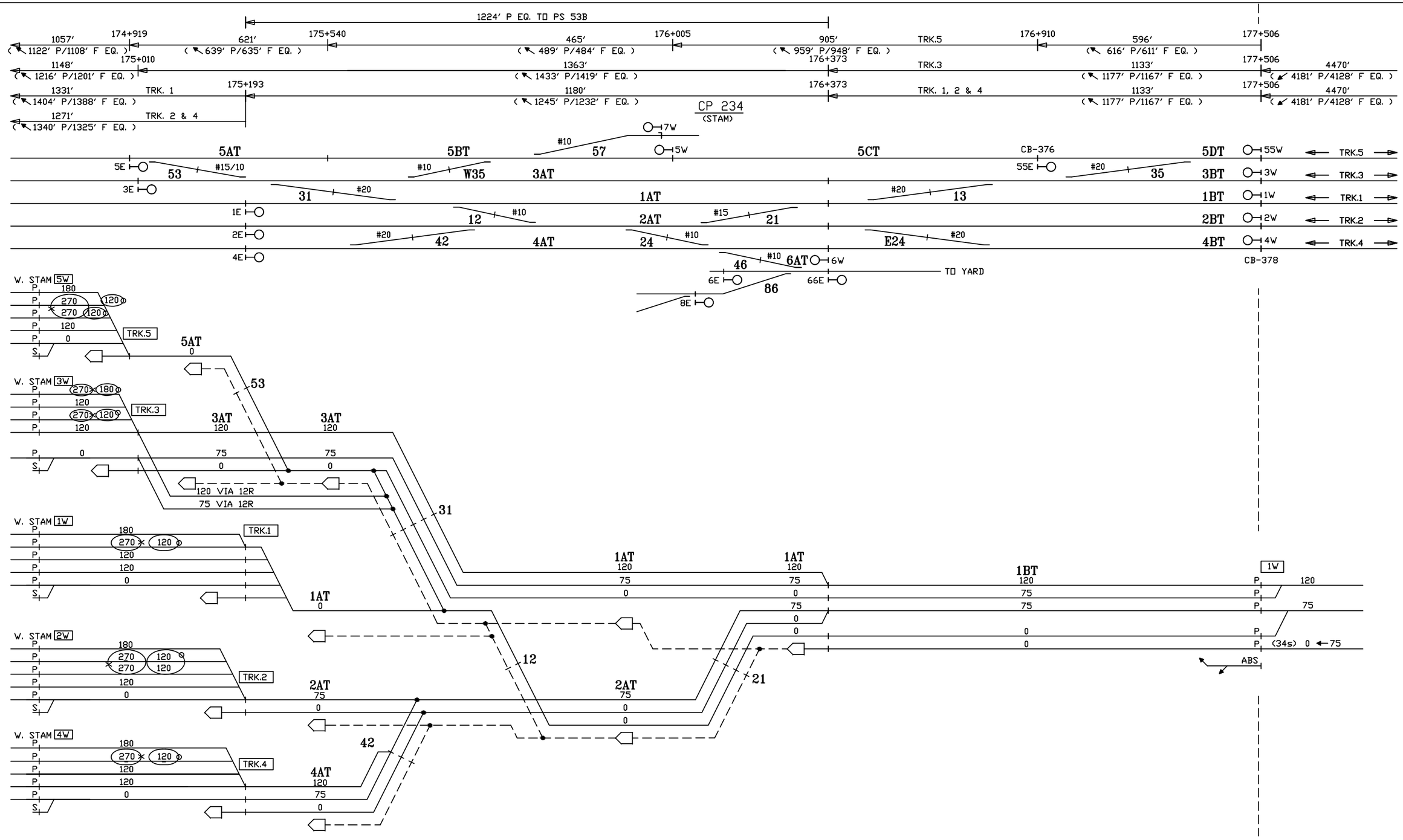

CIRCUIT ENGINEER	SR. SIGNAL ENGR.–DESIGN & STANDARDS	DIRECTOR C&S SYSTEMS	MTA Metro–North Railroad	NEW HAVEN LINE CP 234 DIVERGING ROUTES – TRACK 1 WEST – STAGE 6	ISSUE DATE: NHS REV. NHS /users/signal/RTG	RTG–NHL1 SHEET 51X NHL1 L1051X

Gannett Fleming/CWA

CONTRACT #	PROJECT SHEET #
1000027511	0517

IN SERVICE

STAGE 6

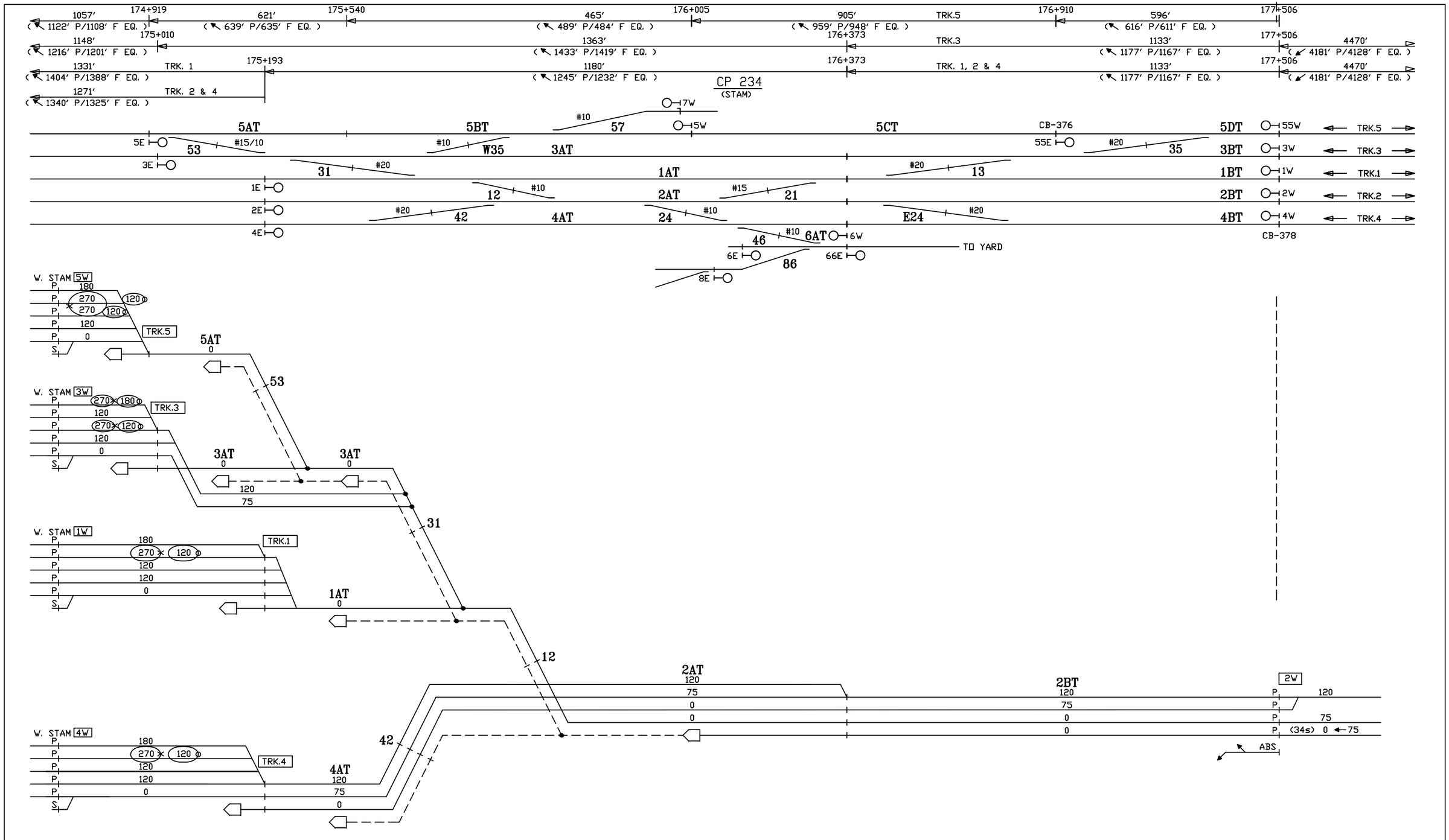

CIRCUIT ENGINEER	SR. SIGNAL ENGR.-DESIGN & STANDARDS	DIRECTOR C&S SYSTEMS	Metro-North Railroad	NEW HAVEN LINE CP 234 DIVERGING ROUTES - TRACK 2 WEST - STAGE 6	ISSUE DATE: NHS REV. NHS /users/signal/RTG	RTG-NHL1 SHEET 52X NHL1 L1052X

Gannett Fleming/CWA

CONTRACT #	PROJECT SHEET #
1000027511	0518

IN SERVICE

STAGE 6

1057′ (1122′ P/1108′ F EQ.)
174+919
621′ (639′ P/635′ F EQ.)
175+540
465′ (489′ P/484′ F EQ.)
176+005
905′ (959′ P/948′ F EQ.)
TRK.5
176+910
596′ (616′ P/611′ F EQ.)
177+506

1148′ (1216′ P/1201′ F EQ.)
175+010
1363′ (1433′ P/1419′ F EQ.)
176+373
TRK.3
1133′ (1177′ P/1167′ F EQ.)
177+506
4470′ (4181′ P/4128′ F EQ.)

1331′ (1404′ P/1388′ F EQ.)
TRK. 1
175+193
1180′ (1245′ P/1232′ F EQ.)
176+373
TRK. 1, 2 & 4
1133′ (1177′ P/1167′ F EQ.)
177+506
4470′ (4181′ P/4128′ F EQ.)

1271′ (1340′ P/1325′ F EQ.)
TRK. 2 & 4

CP 234
(STAM)

7W
#10
57
5W
5AT
5BT
5CT
CB-376
5DT
55W
TRK.5
5E
53
#15/10
#10
W35
3AT
55E
#20
35
3BT
3W
TRK.3
3E
31
#20
1AT
#20
13
1BT
1W
TRK.1
1E
12
#10
2AT
#15
21
2BT
2W
TRK.2
2E
#20
42
4AT
24
E24
#20
4BT
4W
TRK.4
4E
CB-378
#10
6AT
6W
46
TO YARD
6E
66E
86
8E

W. STAM 5W
P 180
P 270 120
P 270 120
P 120
P 0
S
TRK.5
5AT
0
53

W. STAM 3W
P 270 180
P 120
P 270 120
P 120
P 0
S
TRK.3
3AT
120
75
0
3AT
0
120
75
0
31

W. STAM 1W
P 180
P 270 120
P 120
P 120
P 0
S
TRK.1
1AT
0
1AT
0
12

W. STAM 2W
P 180
P 270 120
P 270 120
P 120
P 0
S
TRK.2
2AT
180
270 120
270 120
120
75
0
0
2AT
180
270 120
270 120
120
75
0
0
2BT
120
75
0
0
E24

W. STAM 4W
P 180
P 270 120
P 120
P 120
P 0
S
TRK.4
4AT
0
120
75
0
42
24
4AT
0
0
4BT
0
0
4BT
120
75
0
0
4W
P 120
P 75
P (34s) 0 ←75
ABS

CIRCUIT ENGINEER	SR. SIGNAL ENGR.–DESIGN & STANDARDS	DIRECTOR C&S SYSTEMS	MTA Metro–North Railroad	NEW HAVEN LINE CP 234 DIVERGING ROUTES – TRACK 4 WEST – STAGE 6	ISSUE DATE: / RTG–NHL1 NHS REV. / SHEET 53X NHS /users/signal/RTG / NHL1 / L1053X

Gannett Fleming/CWA

CONTRACT # 1000027511

PROJECT SHEET # 0519

IN SERVICE

STAGE 6

1057′ 1122′ P/1108′ F EQ. | 174+919 | 621′ 639′ P/635′ F EQ. | 175+540 | 465′ 489′ P/484′ F EQ. | 176+005 | 905′ 959′ P/948′ F EQ. | TRK.5 | 176+910 | 596′ 616′ P/611′ F EQ. | 177+506

1148′ 1216′ P/1201′ F EQ. | 175+010 | 1363′ 1433′ P/1419′ F EQ. | 176+373 | TRK.3 | 1133′ 1177′ P/1167′ F EQ. | 177+506 | 4470′ 4181′ P/4128′ F EQ.

1331′ 1404′ P/1388′ F EQ. | TRK. 1 | 175+193 | 1180′ 1245′ P/1232′ F EQ. | 176+373 | TRK. 1, 2 & 4 | 1133′ 1177′ P/1167′ F EQ. | 177+506 | 4470′ 4181′ P/4128′ F EQ.

1271′ 1340′ P/1325′ F EQ. | TRK. 2 & 4

CP 234
(STAM)

5AT 5BT 5CT 5DT TRK.5
3AT 3BT TRK.3
1AT 1BT TRK.1
2AT 2BT TRK.2
4AT 4BT TRK.4
CB-376 CB-378
TO YARD
NON CAB
ABS

W. STAM 5W | TRK.5
W. STAM 3W | TRK.3
W. STAM 1W | TRK.1
W. STAM 2W | TRK.2
W. STAM 4W | TRK.4
6AT 6W NON CAB ABS
7W NON CAB ABS

CIRCUIT ENGINEER	SR. SIGNAL ENGR.–DESIGN & STANDARDS	DIRECTOR C&S SYSTEMS	MTA Metro–North Railroad	NEW HAVEN LINE CP 234 DIVERGING ROUTES – TRACKS 6 & 7 WEST – STAGE 6	ISSUE DATE:
					NHS REV.
					NHS /users/signal/RTG

RTG–NHL1
SHEET 54X
NHL1 L1054X

Gannett Fleming/CWA

CONTRACT # 1000027511

PROJECT SHEET # 0520

STAGE 6

CP 234 (STAM)
STAMFORD YARD

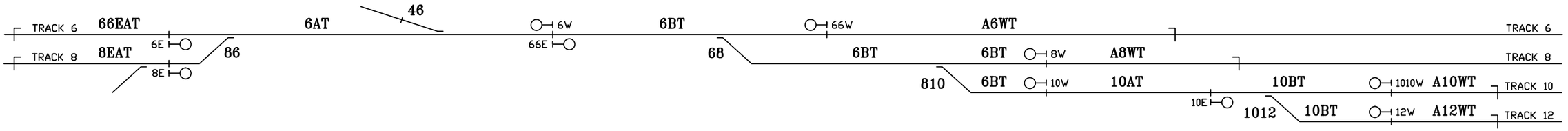

SEE SH. 54X FOR DIVERGING ROUTES

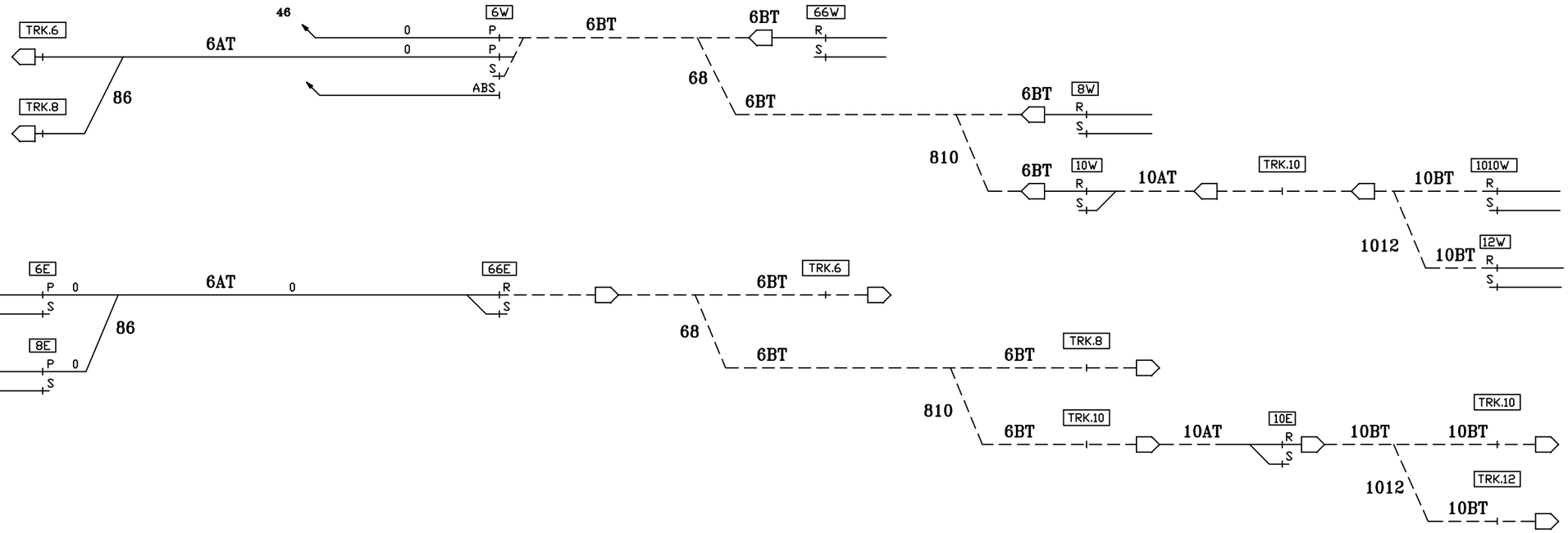

NOTES:
P - PROCEED CAB
R - RESTRICTING
S - STOP

CIRCUIT ENGINEER	SR. SIGNAL ENGR.–DESIGN & STANDARDS	DIRECTOR C&S SYSTEMS	MTA Metro–North Railroad	NEW HAVEN LINE CP 234 STAMFORD YARD ROUTINGS – STAGE 6	ISSUE DATE:	RTG–NHL1
					NHS REV.	SHEET 55X
					NHS /users/signal/RTG	NHL1 L1055X

Gannett Fleming/CWA

CONTRACT #	PROJECT SHEET #
1000027511	0521

STAGE 6

EXISTING

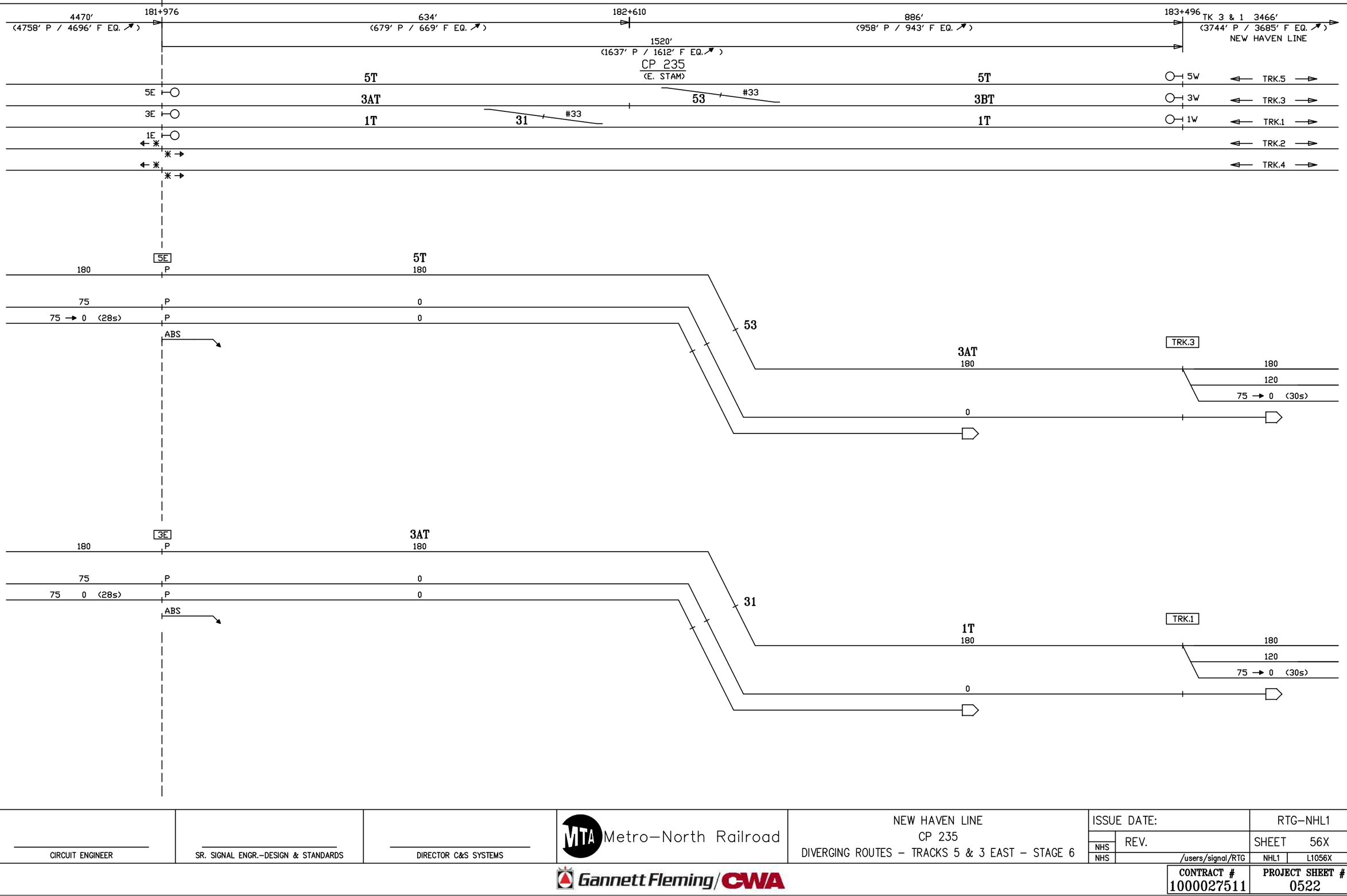

CIRCUIT ENGINEER	SR. SIGNAL ENGR.–DESIGN & STANDARDS	DIRECTOR C&S SYSTEMS	MTA Metro–North Railroad	NEW HAVEN LINE CP 235 DIVERGING ROUTES – TRACKS 5 & 3 EAST – STAGE 6	ISSUE DATE:	RTG–NHL1
					NHS REV.	SHEET 56X
					NHS /users/signal/RTG	NHL1 L1056X

Gannett Fleming/CWA

CONTRACT #	PROJECT SHEET #
1000027511	0522

STAGE 6

EXISTING

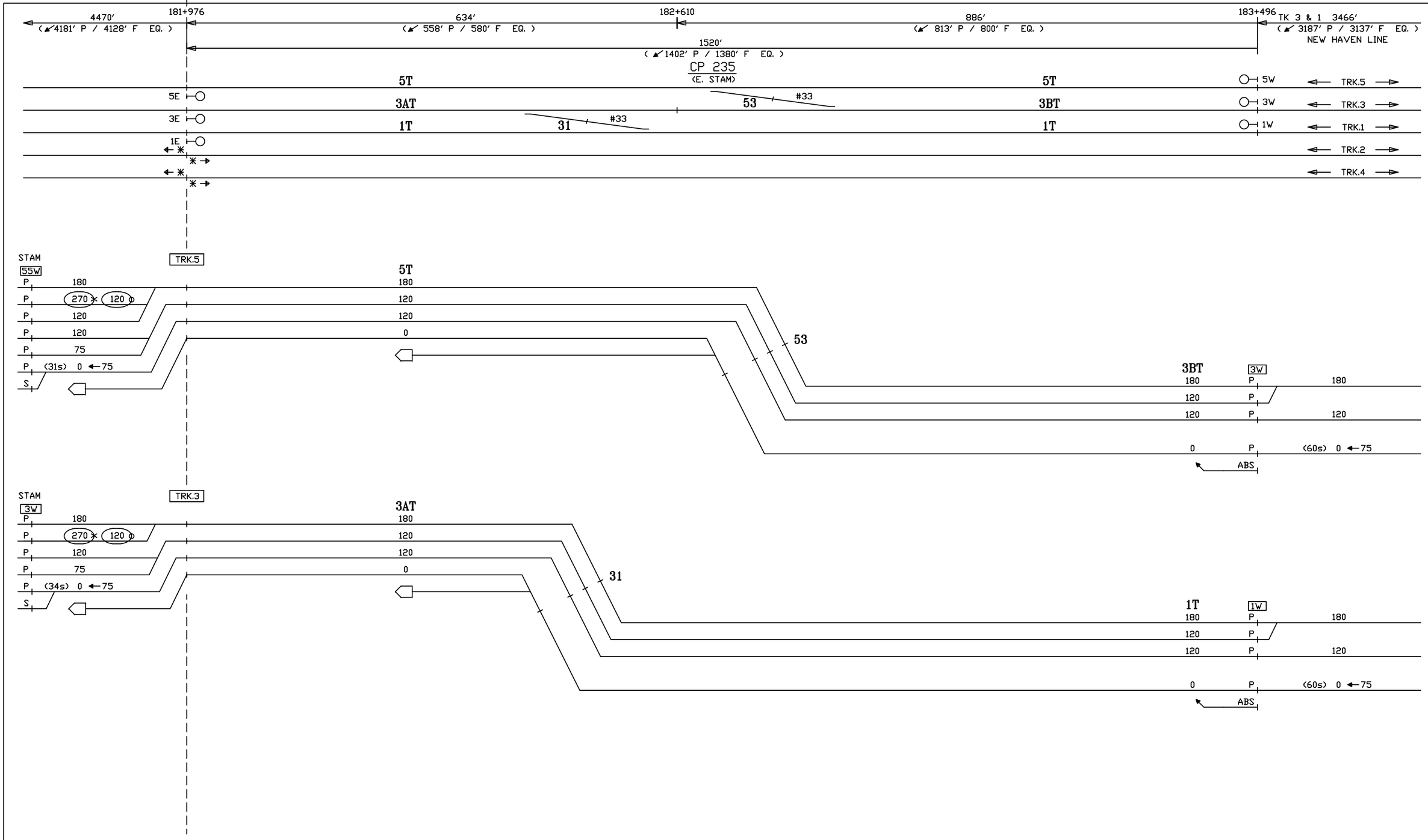

CIRCUIT ENGINEER	SR. SIGNAL ENGR.–DESIGN & STANDARDS	DIRECTOR C&S SYSTEMS	MTA Metro–North Railroad	NEW HAVEN LINE CP 235 DIVERGING ROUTES – TRACKS 3 & 1 WEST – STAGE 6	ISSUE DATE: 09–01–99 NHS REV. 10 NHS /users/signal/RTG	RTG–NHL1 SHEET 57X NHL1 L1057X

Gannett Fleming/CWA

CONTRACT #	PROJECT SHEET #
1000027511	0523

IN SERVICE | EXISTING | IN SERVICE | STAGE 7

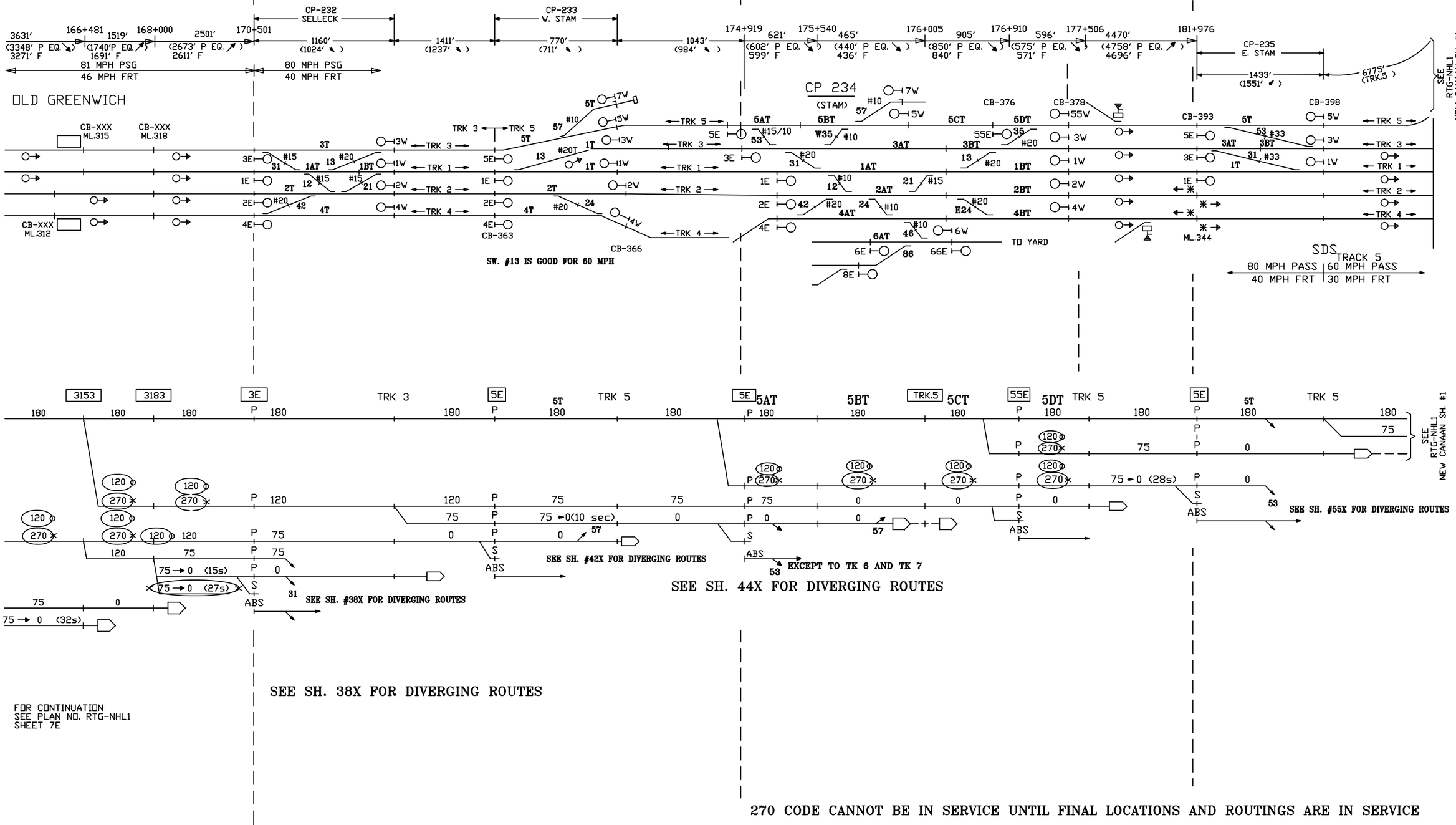

CIRCUIT ENGINEER	SR. SIGNAL ENGR.–DESIGN & STANDARDS	DIRECTOR C&S SYSTEMS	MTA Metro–North Railroad	NEW HAVEN LINE MP 30.9 TO MP 35.0 ROUTINGS – TRACK 3 CHANGES TO TRACK 5 EAST – STAGE 7	ISSUE DATE: RTG–NHL1 REV. SHEET 9E NHS /users/signal/RTG NHL1 L1009E

Gannett Fleming/CWA

CONTRACT # 1000027511 | PROJECT SHEET # 0550

IN SERVICE | EXISTING | IN SERVICE | STAGE 7

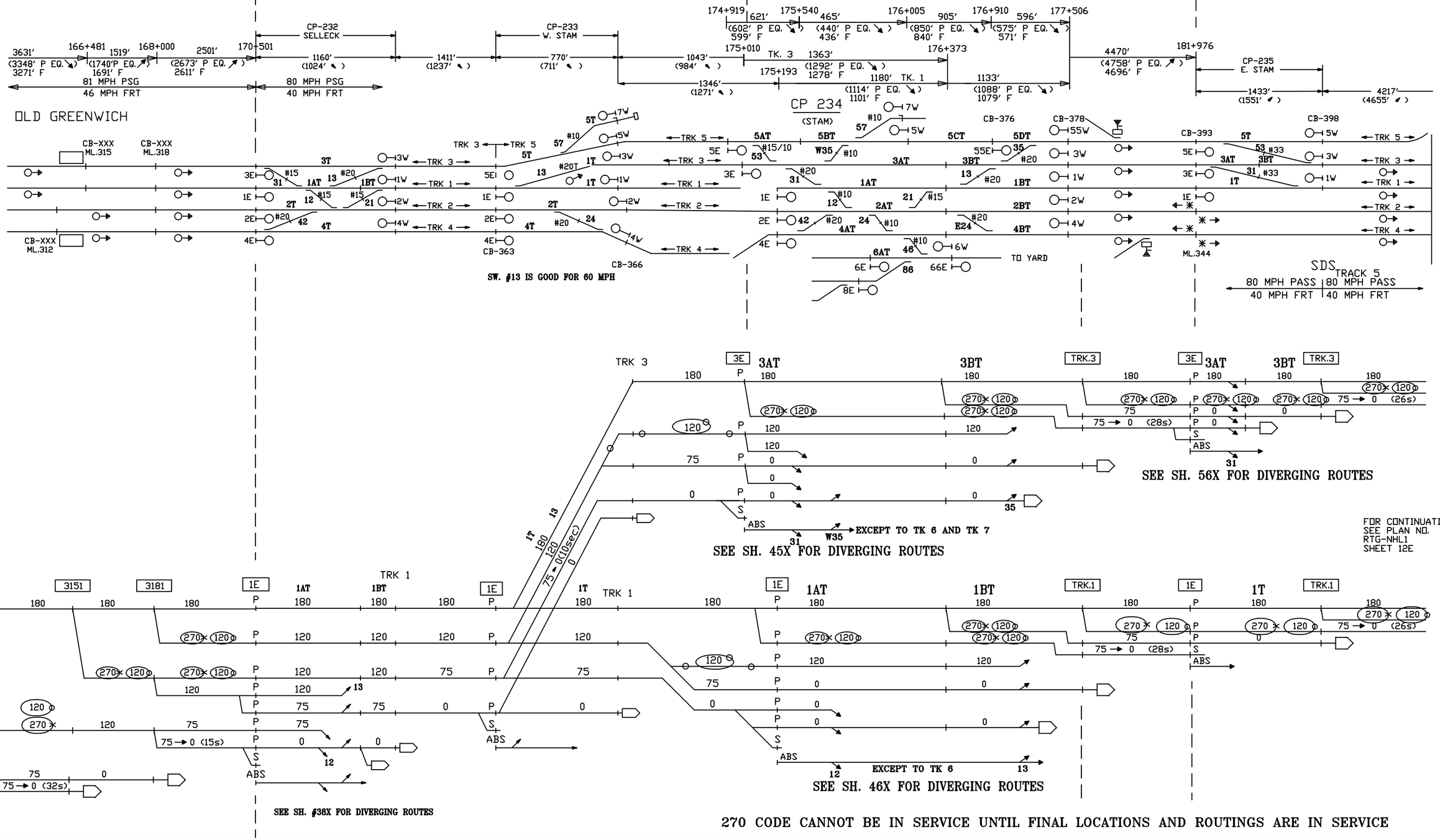

270 CODE CANNOT BE IN SERVICE UNTIL FINAL LOCATIONS AND ROUTINGS ARE IN SERVICE

CIRCUIT ENGINEER	SR. SIGNAL ENGR.–DESIGN & STANDARDS	DIRECTOR C&S SYSTEMS	MTA Metro–North Railroad	NEW HAVEN LINE MP 30.9 TO MP 35.0 ROUTINGS – TRACKS 3 & 1 EAST – STAGE 7	ISSUE DATE: / REV. / NHS / NHS /users/signal/RTG RTG–NHL1 SHEET 10E NHL1 L1010E

Gannett Fleming/CWA

CONTRACT # 1000027511

PROJECT SHEET # 0551

IN SERVICE | EXISTING | IN SERVICE | STAGE 7

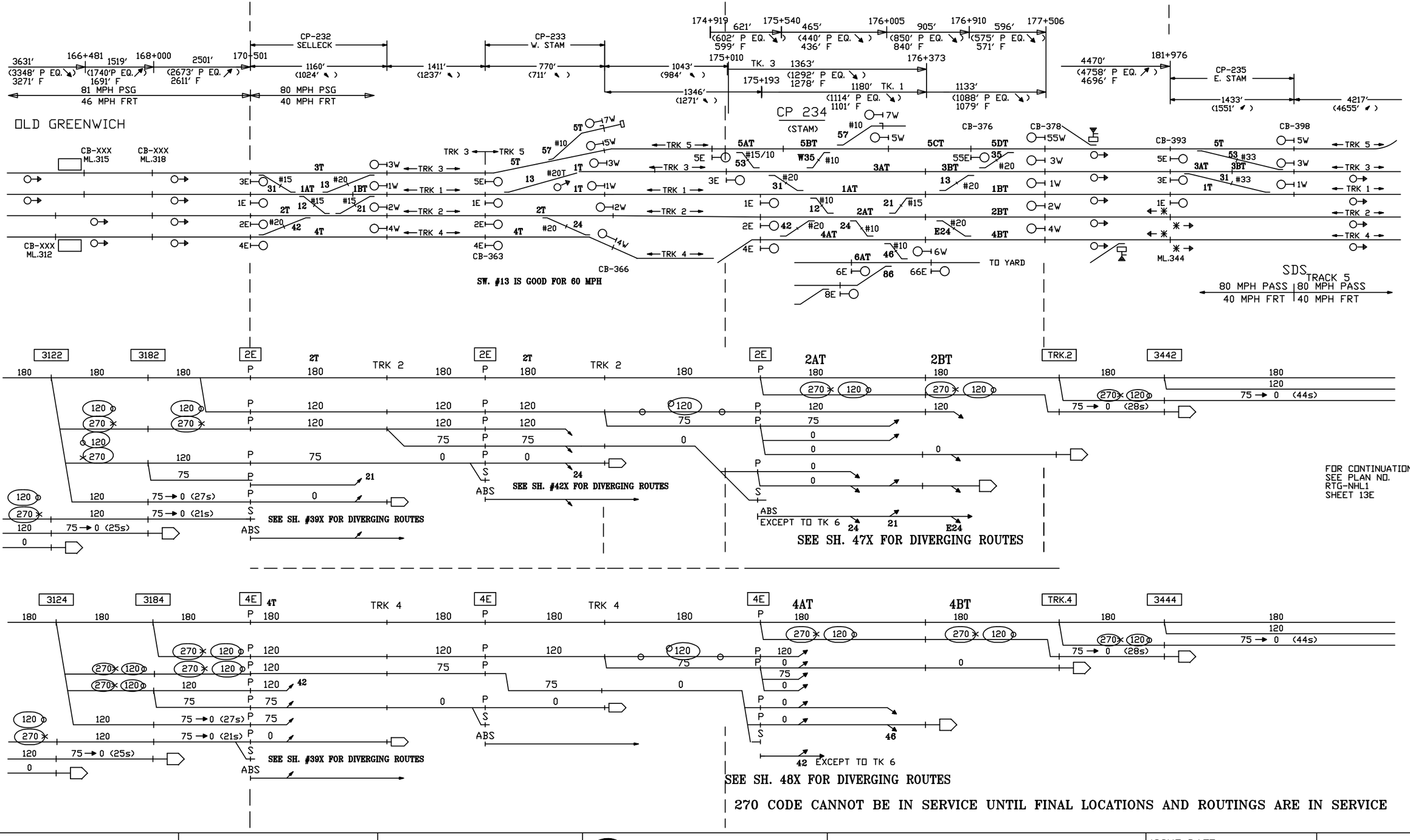

270 CODE CANNOT BE IN SERVICE UNTIL FINAL LOCATIONS AND ROUTINGS ARE IN SERVICE

CIRCUIT ENGINEER

SR. SIGNAL ENGR.-DESIGN & STANDARDS

DIRECTOR C&S SYSTEMS

MTA Metro-North Railroad

NEW HAVEN LINE
MP 30.9 TO MP 35.0
ROUTINGS – TRACKS 2 & 4 EAST – STAGE 7

ISSUE DATE:		RTG-NHL1
NHS	REV.	SHEET 11E
NHS	/users/signal/RTG	NHL1 L1011E

Gannett Fleming/CWA

CONTRACT # 1000027511

PROJECT SHEET # 0552

STAGE 7

EXISTING

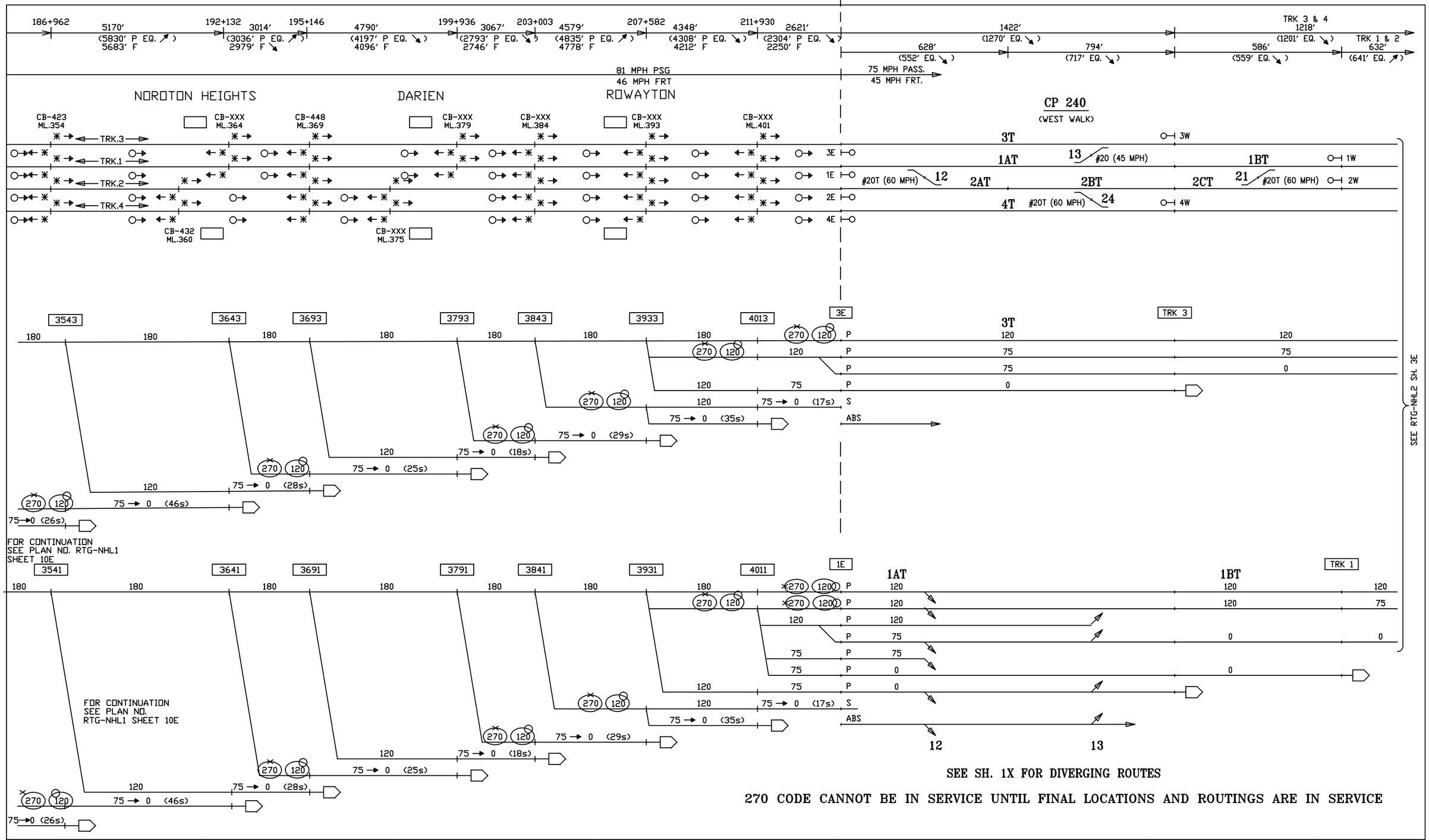

270 CODE CANNOT BE IN SERVICE UNTIL FINAL LOCATIONS AND ROUTINGS ARE IN SERVICE

CIRCUIT ENGINEER	SR. SIGNAL ENGR.–DESIGN & STANDARDS	DIRECTOR C&S SYSTEMS	MTA Metro–North Railroad	NEW HAVEN LINE MP 35.6 TO MP 40.7 ROUTINGS – TRACKS 3 & 1 EAST – STAGE 7	ISSUE DATE:	RTG–NHL2
					NHS REV. 21	SHEET 1E
					NHS /users/signal/RTG	NHL2 L2001E

Gannett Fleming/CWA

CONTRACT # 1000027511

PROJECT SHEET # 0553

STAGE 7

EXISTING

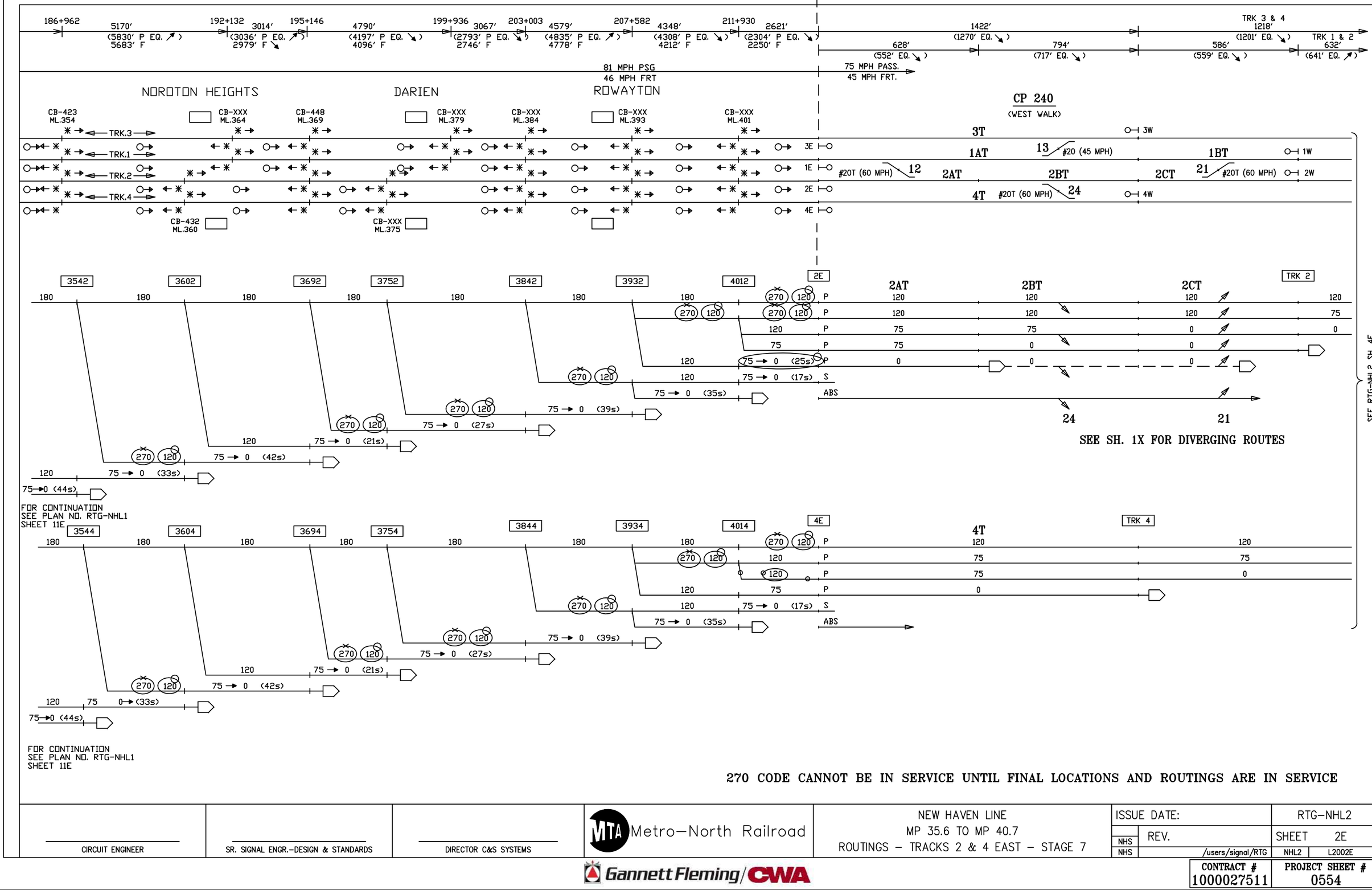

270 CODE CANNOT BE IN SERVICE UNTIL FINAL LOCATIONS AND ROUTINGS ARE IN SERVICE

CIRCUIT ENGINEER	SR. SIGNAL ENGR.–DESIGN & STANDARDS	DIRECTOR C&S SYSTEMS	MTA Metro–North Railroad	NEW HAVEN LINE MP 35.6 TO MP 40.7 ROUTINGS – TRACKS 2 & 4 EAST – STAGE 7	ISSUE DATE: RTG–NHL2 NHS REV. SHEET 2E NHS /users/signal/RTG NHL2 L2002E

Gannett Fleming/CWA

CONTRACT #	PROJECT SHEET #
1000027511	0554

EXISTING — IN SERVICE — EXISTING

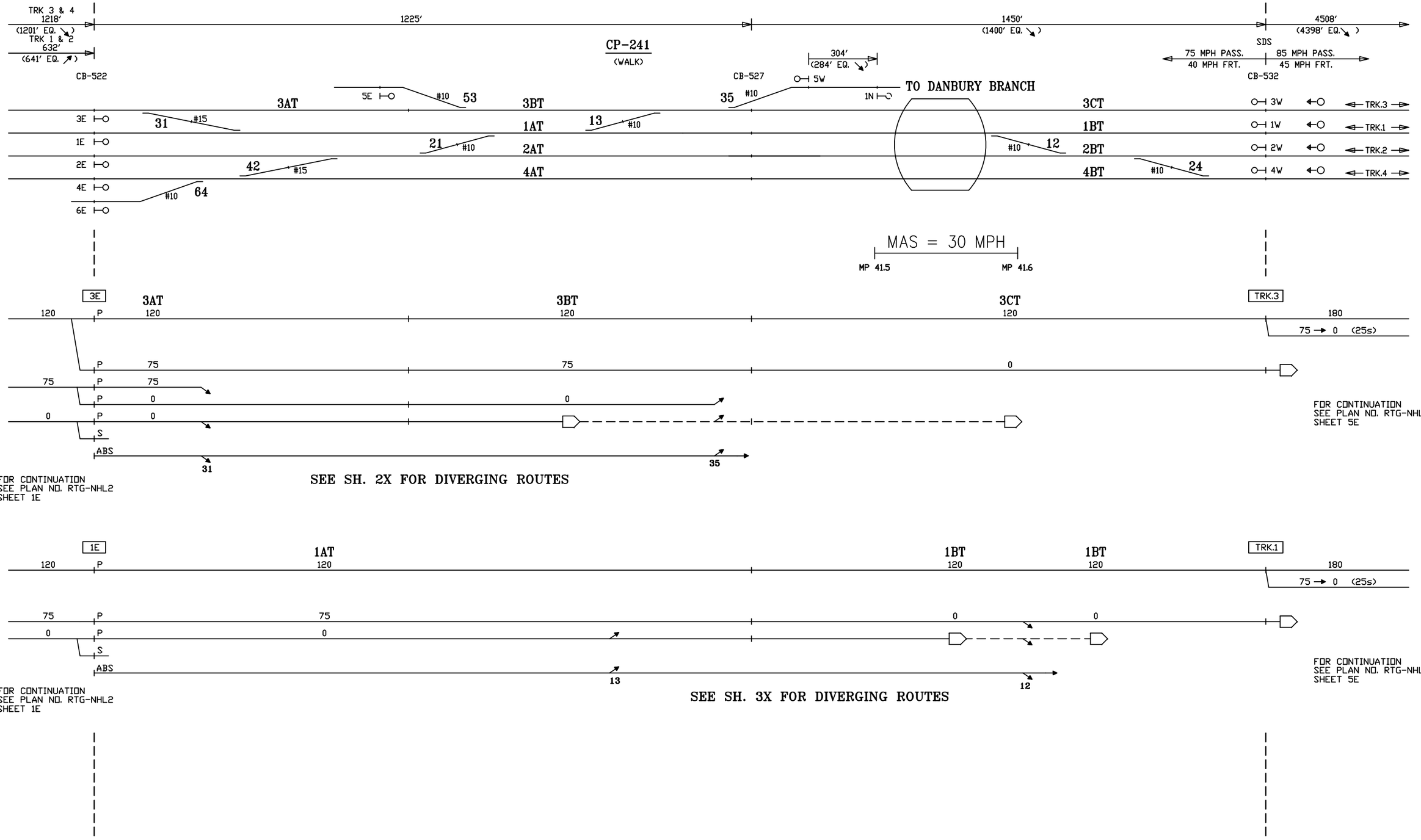

CIRCUIT ENGINEER	SR. SIGNAL ENGR.–DESIGN & STANDARDS	DIRECTOR C&S SYSTEMS	MTA Metro–North Railroad	NEW HAVEN LINE MP 40.7 TO MP 42.4 ROUTINGS – TRACKS 3 & 1 EAST – STAGE 7	ISSUE DATE: 12–21–90 · RTG–NHL2 NHS REV. 28 · SHEET 3E NHS /users/signal/RTG · NHL2 · L2003E

Gannett Fleming/CWA

CONTRACT #	PROJECT SHEET #
1000027511	0555

EXISTING — IN SERVICE — EXISTING

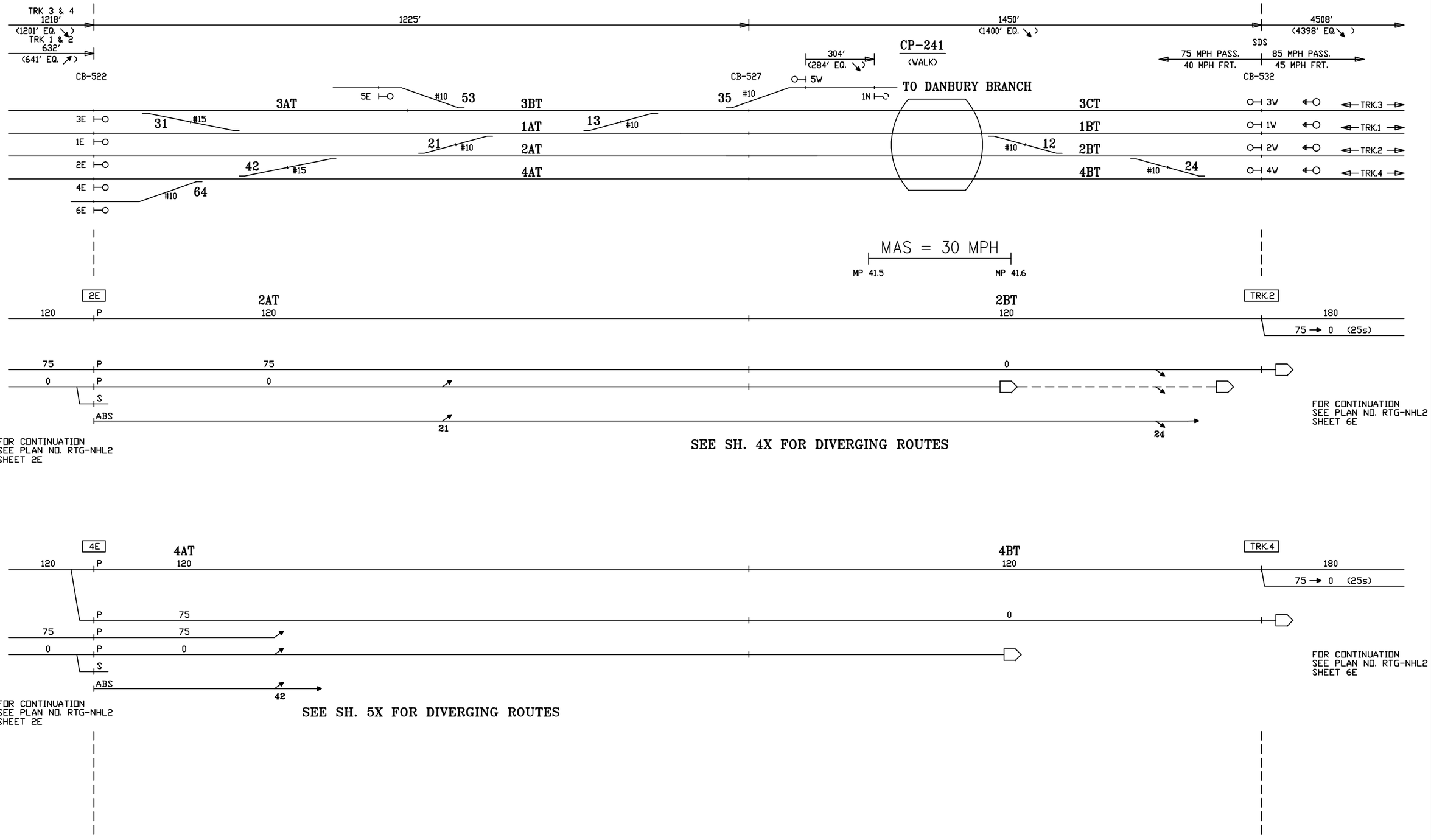

CIRCUIT ENGINEER	SR. SIGNAL ENGR.–DESIGN & STANDARDS	DIRECTOR C&S SYSTEMS	MTA Metro–North Railroad	NEW HAVEN LINE MP 40.7 TO MP 42.4 ROUTINGS – TRACKS 2 & 4 EAST – STAGE 7	ISSUE DATE: 12-21-90 · RTG-NHL2 NHS · REV. 28 · SHEET 4E LB · /users/signal/RTG · NHL2 · L2004E

Gannett Fleming/CWA

CONTRACT # 1000027511

PROJECT SHEET # 0556

IN SERVICE | EXISTING | IN SERVICE | STAGE 7

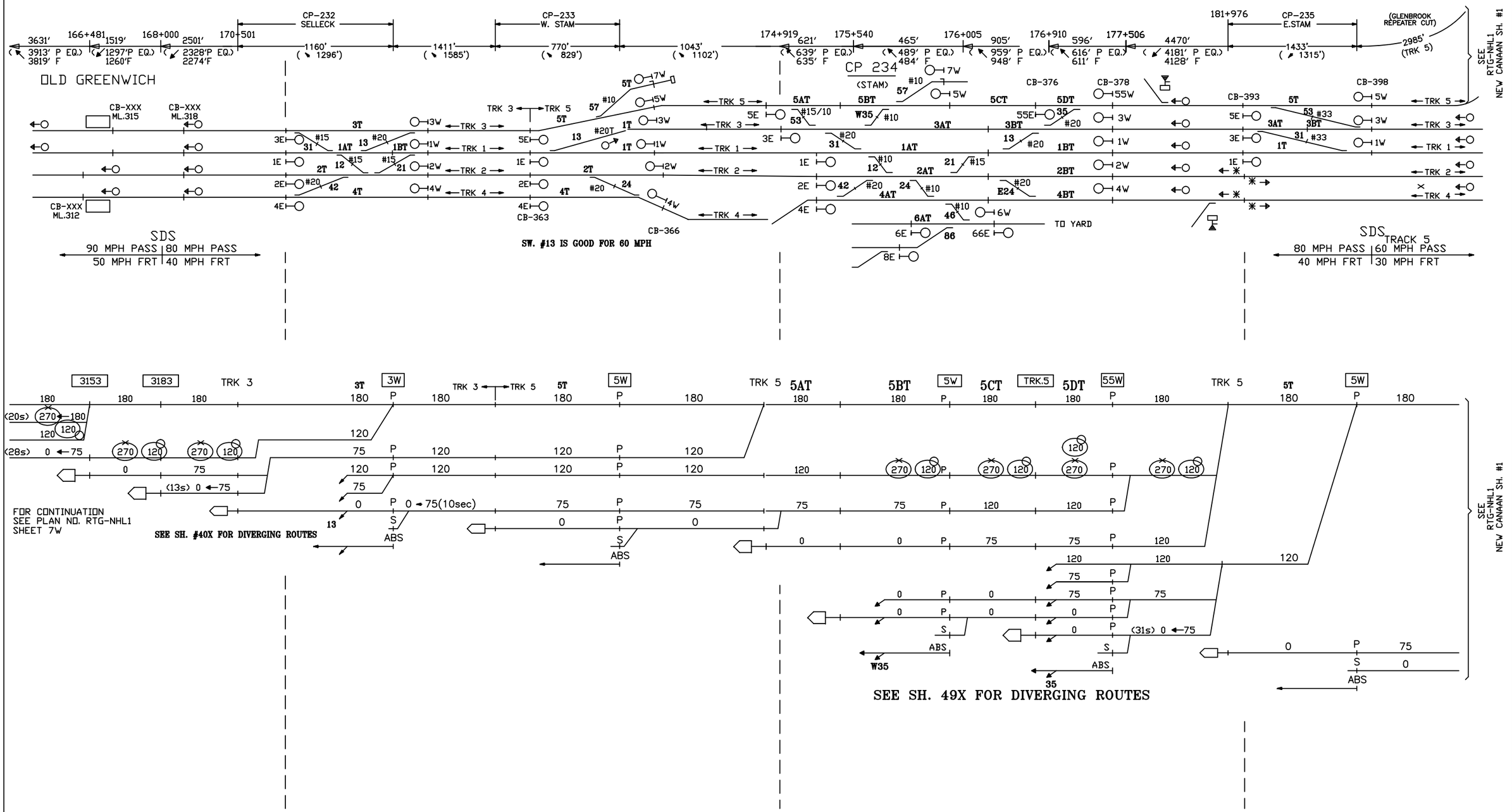

CIRCUIT ENGINEER	SR. SIGNAL ENGR.–DESIGN & STANDARDS	DIRECTOR C&S SYSTEMS	MTA Metro–North Railroad	NEW HAVEN LINE MP 35.6 TO MP 31.2 ROUTINGS – TRACK 5 CHANGES TO TRACK 3 WEST – STAGE 7	ISSUE DATE: REV. 11 /users/signal/RTG	RTG–NHL1 SHEET 9W NHL1 L1009W

Gannett Fleming/CWA

CONTRACT #	PROJECT SHEET #
1000027511	0557

IN SERVICE | EXISTING | IN SERVICE | STAGE 7

OLD GREENWICH

CB-XXX ML.315 | CB-XXX ML.318 | CB-XXX ML.312 | CB-363 | CB-366 | CB-376 | CB-378 | CB-393 | CB-398

CP-232 SELLECK | CP-233 W. STAM | CP 234 (STAM) | CP-235 E.STAM

TK. 3 | TK. 1

TO YARD

SDS
80 MPH PASS | 80 MPH PASS
45 MPH FRT | 40 MPH FRT

SW. #13 IS GOOD FOR 60 MPH

SDS TRACK 5
80 MPH PASS | 80 MPH PASS
40 MPH FRT | 45 MPH FRT

FOR CONTINUATION SEE PLAN NO. RTG-NHL1 SHEET 12W

SEE SH. 50X FOR DIVERGING ROUTES

SEE SH. 57X FOR DIVERGING ROUTES

SEE SH. #40X FOR DIVERGING ROUTES

FOR CONTINUATION SEE PLAN NO. RTG-NHL1 SHEET 7W

SEE SH. 51X FOR DIVERGING ROUTES

SEE SH. 57X FOR DIVERGING ROUTES

FOR CONTINUATION SEE PLAN NO. RTG-NHL1 SHEET 12W

CIRCUIT ENGINEER | SR. SIGNAL ENGR.–DESIGN & STANDARDS | DIRECTOR C&S SYSTEMS

Metro–North Railroad

NEW HAVEN LINE
MP 35.6 TO MP 31.2
ROUTINGS – TRACKS 3 & 1 WEST – STAGE 7

ISSUE DATE: 09–01–99 | RTG–NHL1
REV. 11 | SHEET 10W
NHS | /users/signal/RTG | NHL1 | L1010W

Gannett Fleming/CWA

CONTRACT # 1000027511 | PROJECT SHEET # 0558

IN SERVICE | EXISTING | IN SERVICE | STAGE 7

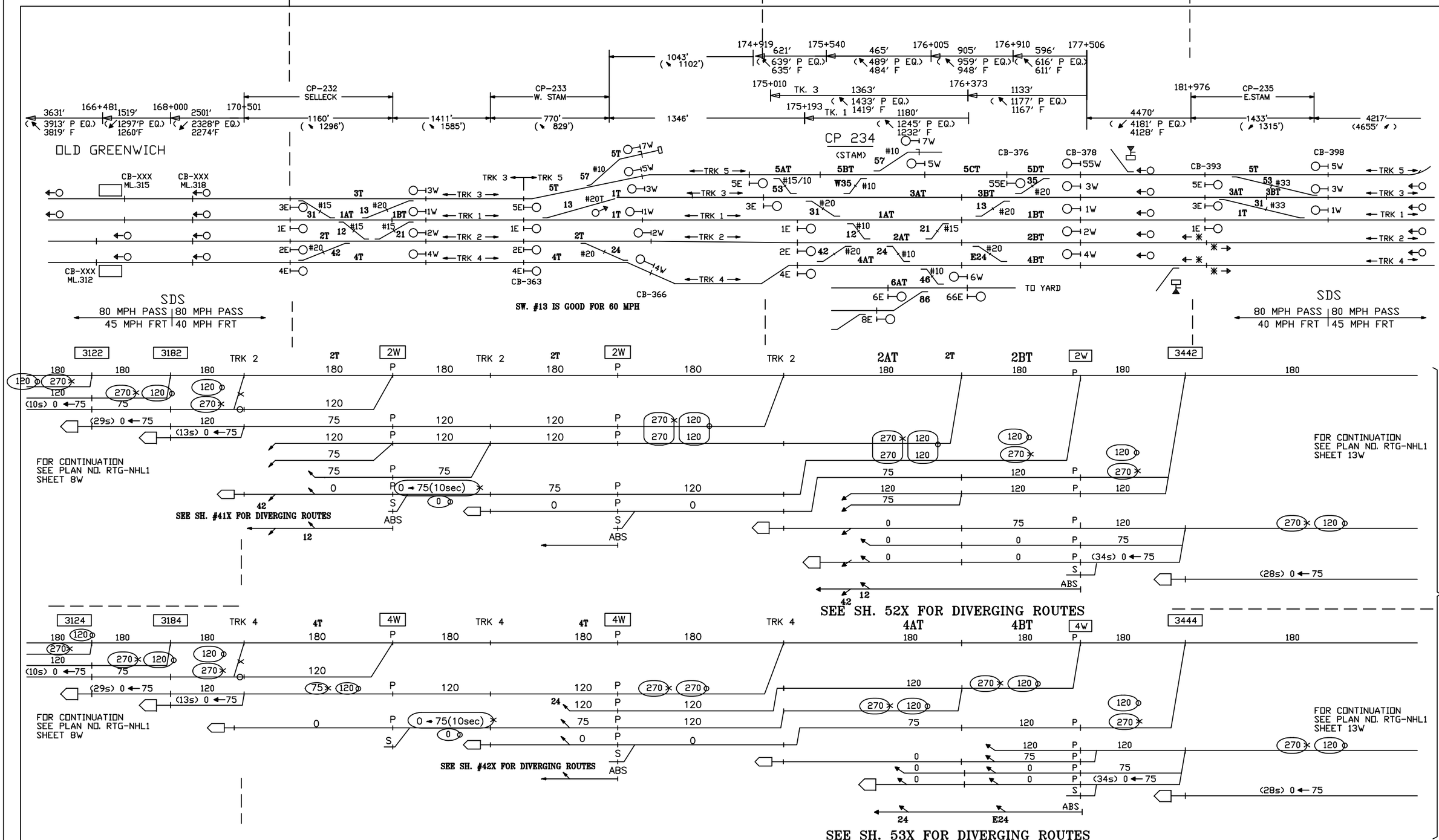

CIRCUIT ENGINEER	SR. SIGNAL ENGR.–DESIGN & STANDARDS	DIRECTOR C&S SYSTEMS	MTA Metro–North Railroad	NEW HAVEN LINE MP 35.6 TO MP 31.2 ROUTINGS – TRACKS 2 & 4 WEST – STAGE 7	ISSUE DATE: 09–01–99 · RTG–NHL1 REV. 11 · SHEET 11W NHS /users/signal/RTG · NHL1 · L1011W

Gannett Fleming/CWA

CONTRACT # 1000027511 | PROJECT SHEET # 0559

STAGE 7

EXISTING

186+962 — 5170′ (4509′ P EQ.) 4398′ F — 192+132 — 3014′ (2991′ P EQ.) 2935′ F — 195+146 — 4790′ (5382′ P′ EQ.) 5252′ F — 199+936 — 3067′ (3340′ P EQ.) 3280′ F — 203+003 — 4579′ (4322′ P EQ.) 4276′ F — 207+582 — 4348′ (4387′ P EQ.) 4290′ F — 211+930 — 2621′ (2937′ P EQ.) 2867′ F

80 MPH PSG
45 MPH FRT

1422′ (1576′ EQ.) — TRK 3 & 4 1218′ (1225′ EQ.)

628′ (700′ EQ.) — 794′ (877′ EQ.) — 586′ (613′ EQ.) — TRK 1 & 2 632′ (613′ EQ.)

NORWOOD HEIGHTS — DARIEN — ROWAYTON

CB-423 ML.354 — CB-XXX ML.364 — CB-448 ML.369 — CB-XXX ML.379 — CB-XXX ML.384 — CB-XXX ML.393 — CB-XXX ML.401

CB-432 ML.360 — CB-XXX ML.375

TRK.3 — TRK.1 — TRK.2 — TRK.4

3E — 1E — 2E — 4E

CP 240
(WEST WALK)

3T — 1AT — 2AT — 4T — 2BT — 2CT — 1BT

3W — 1W — 2W — 4W

#20T (60 MPH) 12 — 13 #20 (45 MPH) — #20T (60 MPH) 24 — 21 #20T (60 MPH)

3543 — 3643 — 3693 — 3793 — 3843 — 3933 — 4013 — TRK.3

180 — 120 — 270 — 75 — (23s) 0 ← 75 — (27s) 0 ← 75 — (30s) 0 ← 75 — (22s) 0 ← 75 — (35s) 0 ← 75 — (26s) 0 ← 75 — (17s) 0 ← 75

FOR CONTINUATION
SEE PLAN NO. RTG-NHL1
SHEET 10W

3T — 3W — P — 75 — 120 — 0 — S — ABS

13
SEE SH. 1X FOR DIVERGING ROUTES

SEE RTG-NHL2 SH. 3W

3541 — 3641 — 3691 — 3791 — 3841 — 3931 — 4011 — TRK.1

1AT — 1BT — 1W — 21

FOR CONTINUATION
SEE PLAN NO. RTG-NHL1
SHEET 10W

21
SEE SH. 1X FOR DIVERGING ROUTES

CIRCUIT ENGINEER	SR. SIGNAL ENGR.–DESIGN & STANDARDS	DIRECTOR C&S SYSTEMS	MTA Metro–North Railroad	NEW HAVEN LINE MP 40.7 TO MP 35.6 ROUTINGS – TRACKS 3 & 1 WEST – STAGE 7	ISSUE DATE: REV. 19 (NHS, NHS) /users/signal/RTG RTG–NHL2 SHEET 1W NHL2 L2001W

Gannett Fleming/CWA

CONTRACT # 1000027511

PROJECT SHEET # 0560

STAGE 7

EXISTING

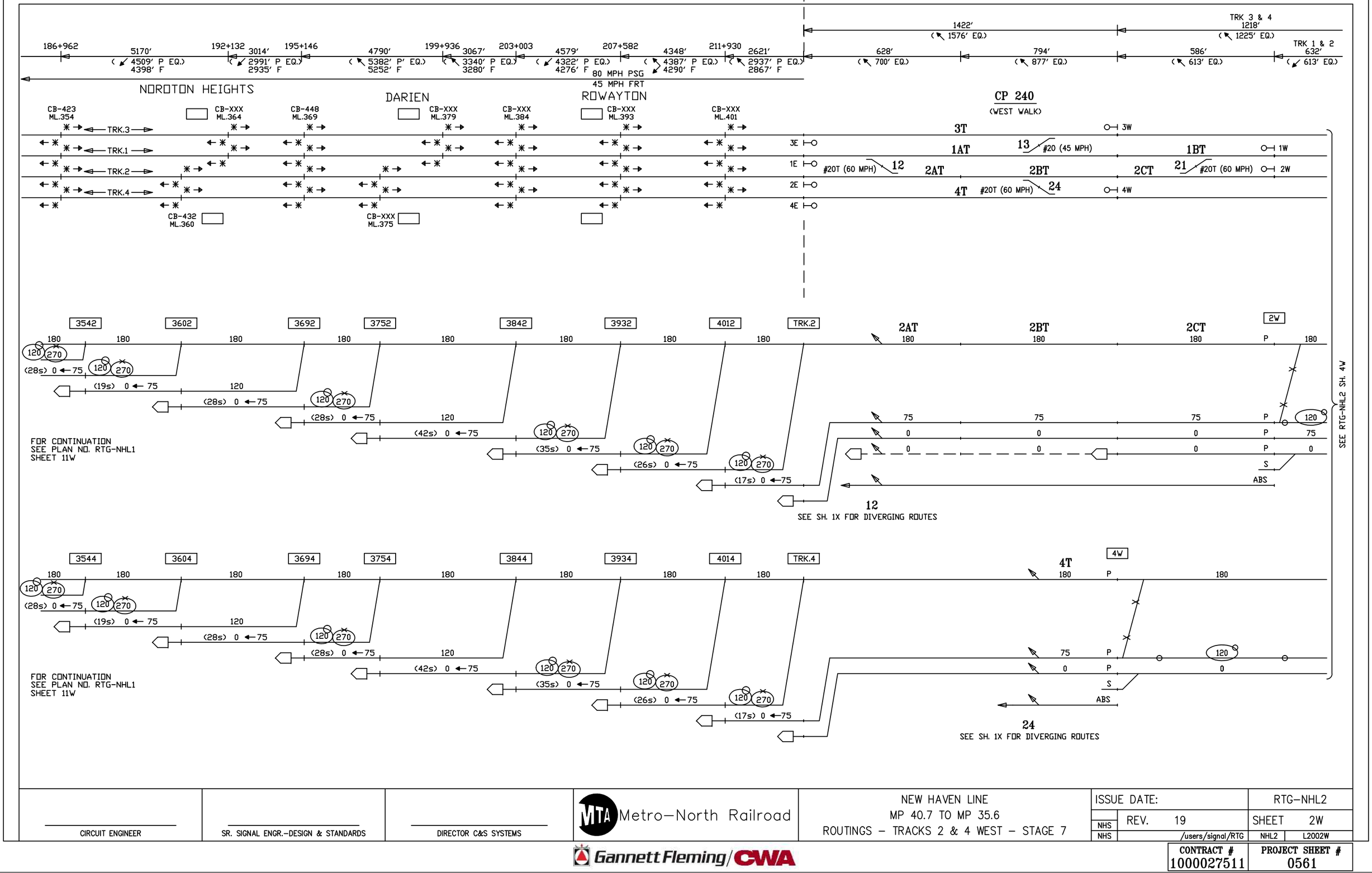

CIRCUIT ENGINEER	SR. SIGNAL ENGR.–DESIGN & STANDARDS	DIRECTOR C&S SYSTEMS	MTA Metro–North Railroad	NEW HAVEN LINE MP 40.7 TO MP 35.6 ROUTINGS – TRACKS 2 & 4 WEST – STAGE 7	ISSUE DATE: REV. 19 NHS /users/signal/RTG NHS NHL2 L2002W

RTG–NHL2

SHEET 2W

Gannett Fleming/CWA

CONTRACT # 1000027511

PROJECT SHEET # 0561

EXISTING — IN SERVICE — EXISTING

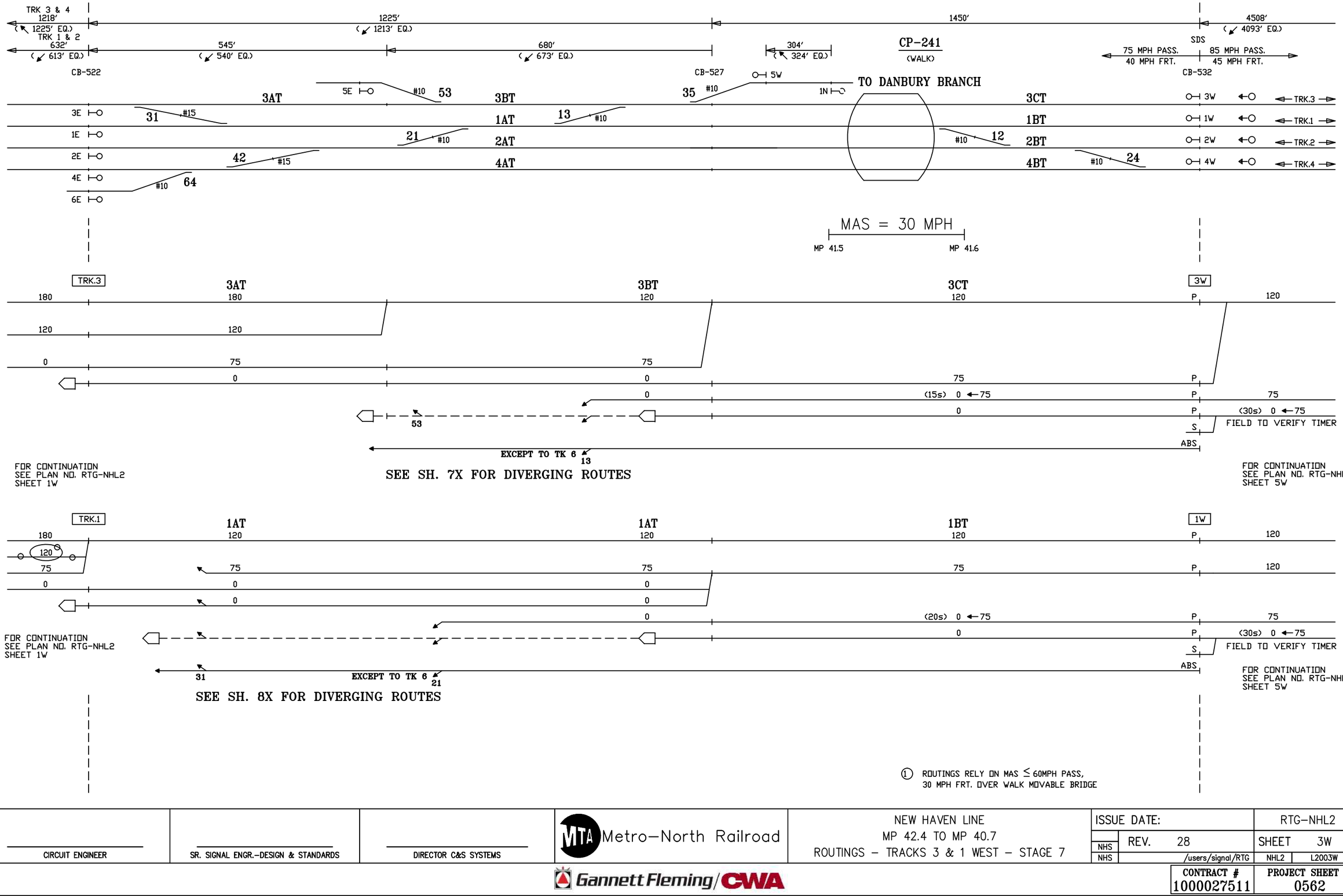

① ROUTINGS RELY ON MAS ≤ 60MPH PASS, 30 MPH FRT. OVER WALK MOVABLE BRIDGE

CIRCUIT ENGINEER	SR. SIGNAL ENGR.–DESIGN & STANDARDS	DIRECTOR C&S SYSTEMS	MTA Metro–North Railroad	NEW HAVEN LINE MP 42.4 TO MP 40.7 ROUTINGS – TRACKS 3 & 1 WEST – STAGE 7	ISSUE DATE: RTG–NHL2 REV. 28 SHEET 3W NHS /users/signal/RTG NHL2 L2003W

Gannett Fleming/CWA

CONTRACT # 1000027511

PROJECT SHEET # 0562

EXISTING — IN SERVICE — EXISTING

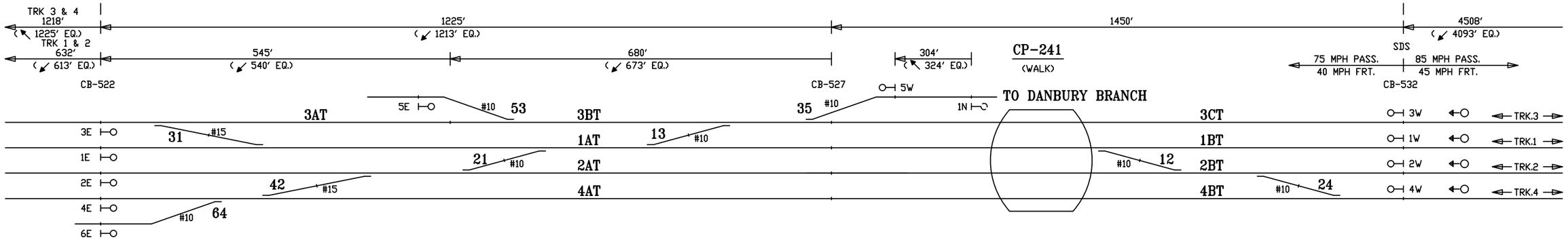

MAS = 30 MPH

MP 41.5 — MP 41.6

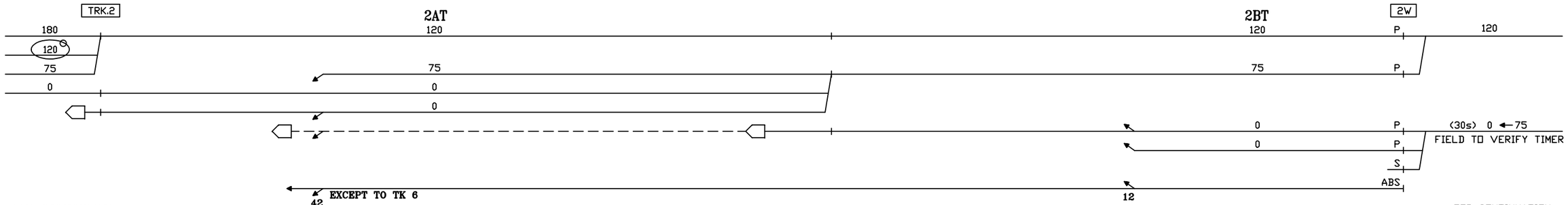

FOR CONTINUATION
SEE PLAN NO. RTG-NHL2
SHEET 2W

SEE SH. 9X FOR DIVERGING ROUTES

FOR CONTINUATION
SEE PLAN NO. RTG-NHL2
SHEET 6W

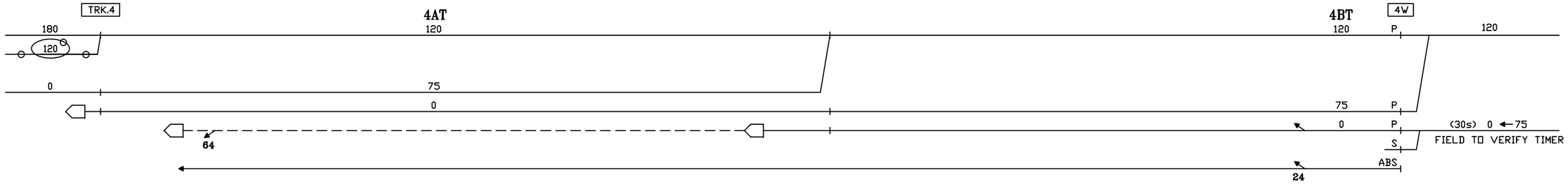

SEE SH. 10X FOR DIVERGING ROUTES

FOR CONTINUATION
SEE PLAN NO. RTG-NHL2
SHEET 2W

FOR CONTINUATION
SEE PLAN NO. RTG-NHL2
SHEET 6W

① ROUTINGS RELY ON MAS ≤ 60MPH PASS,
30 MPH FRT. OVER WALK MOVABLE BRIDGE

CIRCUIT ENGINEER	SR. SIGNAL ENGR.–DESIGN & STANDARDS	DIRECTOR C&S SYSTEMS	MTA Metro–North Railroad	NEW HAVEN LINE MP 42.4 TO MP 40.7 ROUTINGS – TRACKS 2 & 4 WEST – STAGE 7	ISSUE DATE: / REV. 28 / NHS / NHS / /users/signal/RTG RTG–NHL2 SHEET 4W NHL2 L2004W

Gannett Fleming/CWA

CONTRACT # 1000027511

PROJECT SHEET # 0563

EXISTING

IN SERVICE

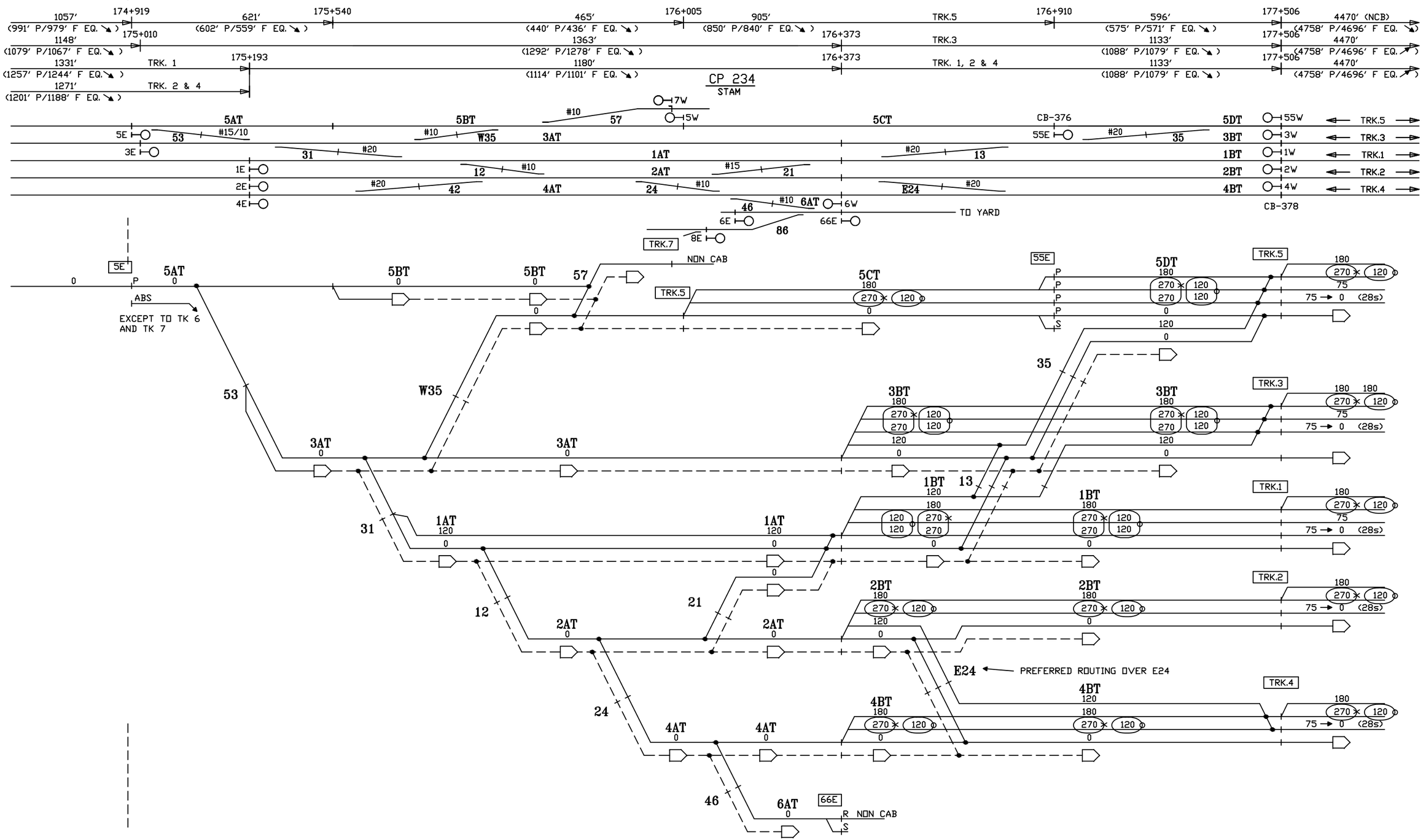

CIRCUIT ENGINEER	SR. SIGNAL ENGR.–DESIGN & STANDARDS	DIRECTOR C&S SYSTEMS	MTA Metro–North Railroad	NEW HAVEN LINE CP 234 DIVERGING ROUTES – TRACK 5 EAST – STAGE 7	ISSUE DATE:	RTG–NHL1
					NHS REV.	SHEET 44X
					NHS /users/signal/RTG	NHL1 L1044X

Gannett Fleming/CWA

CONTRACT # 1000027511

PROJECT SHEET # 0564

EXISTING

IN SERVICE

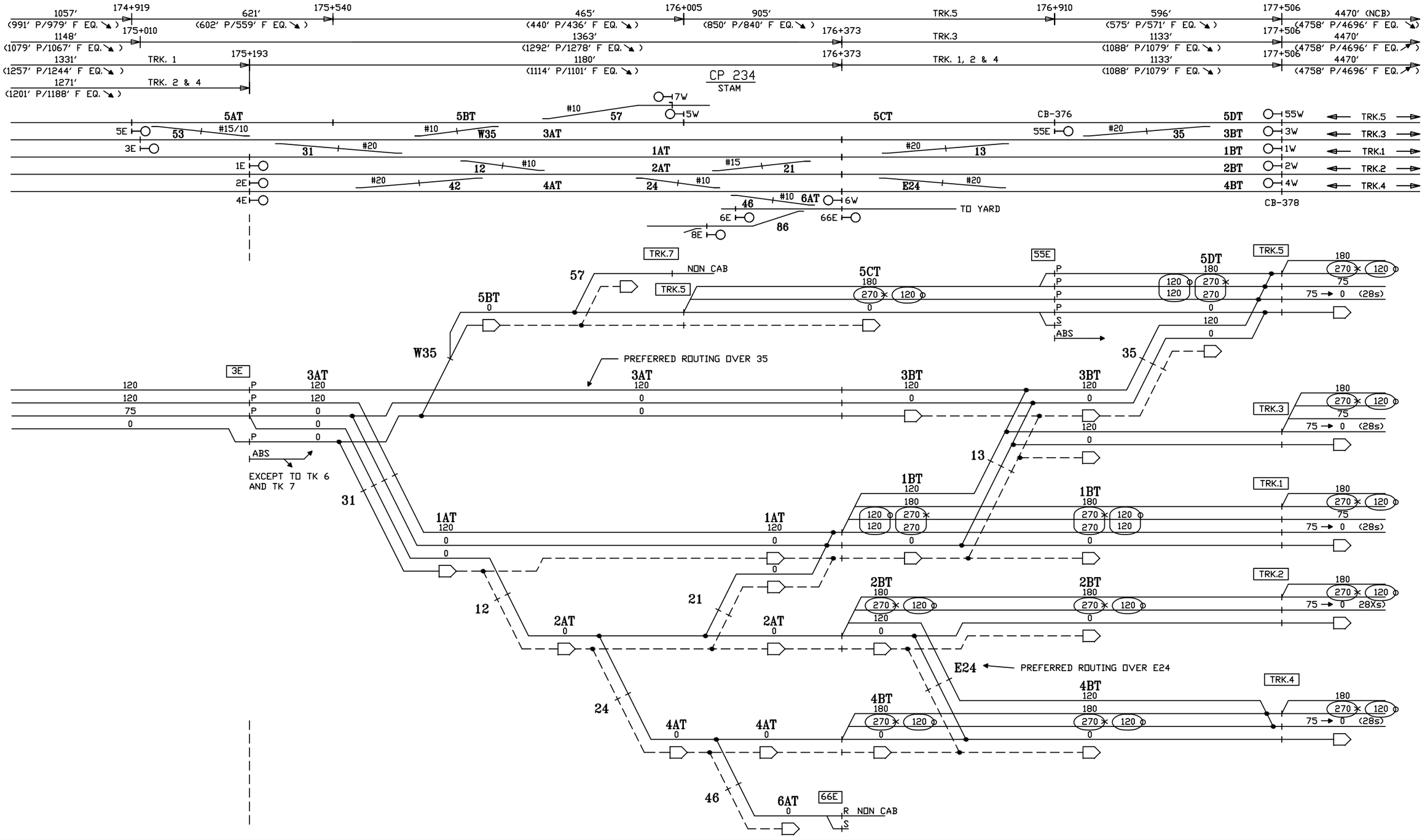

CIRCUIT ENGINEER	SR. SIGNAL ENGR.–DESIGN & STANDARDS	DIRECTOR C&S SYSTEMS	MTA Metro–North Railroad	NEW HAVEN LINE CP 234 DIVERGING ROUTES – TRACK 3 EAST – STAGE 7	ISSUE DATE: / REV. / /users/signal/RTG	RTG–NHL1 SHEET 45X NHL1 L1045X

Gannett Fleming/CWA

CONTRACT # 1000027511

PROJECT SHEET # 0565

EXISTING

IN SERVICE

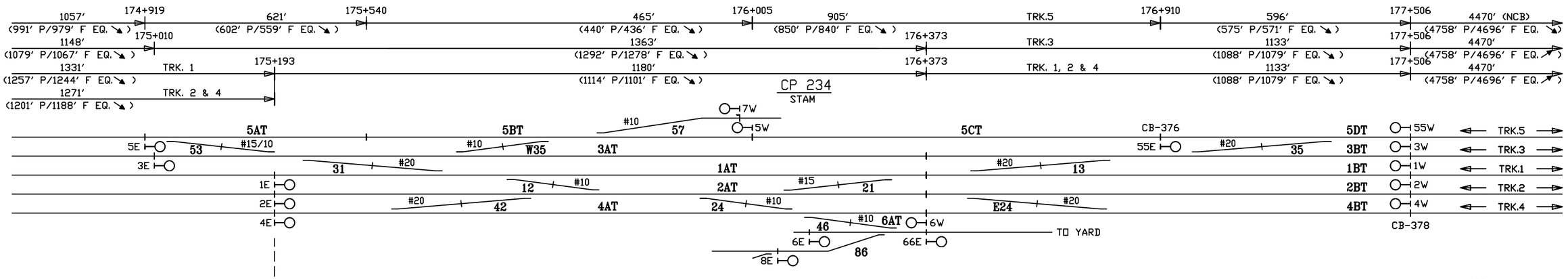

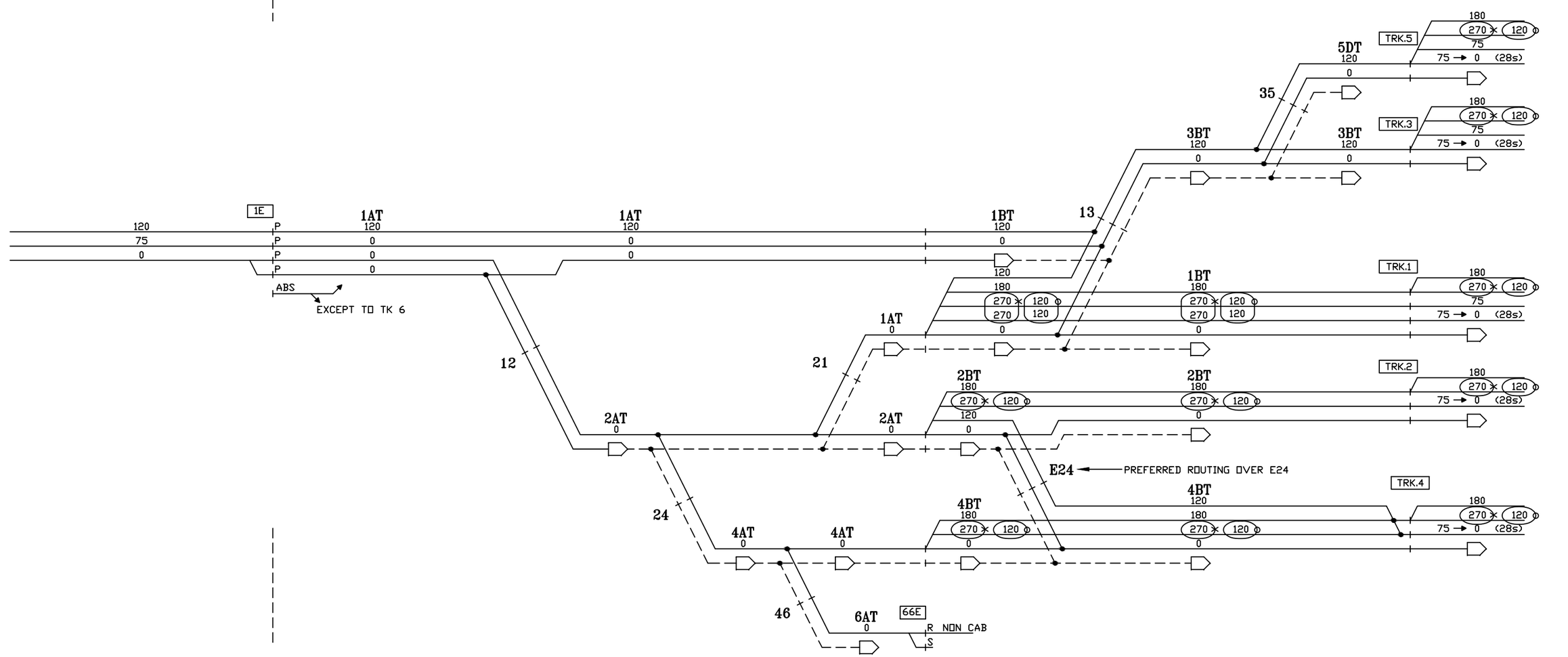

CIRCUIT ENGINEER	SR. SIGNAL ENGR.–DESIGN & STANDARDS	DIRECTOR C&S SYSTEMS	MTA Metro–North Railroad	NEW HAVEN LINE CP 234 DIVERGING ROUTES – TRACK 1 EAST – STAGE 7	ISSUE DATE: / REV. NHS NHS /users/signal/RTG RTG–NHL1 SHEET 46X NHL1 L1046X

Gannett Fleming/CWA

CONTRACT # 1000027511

PROJECT SHEET # 0566

EXISTING

IN SERVICE

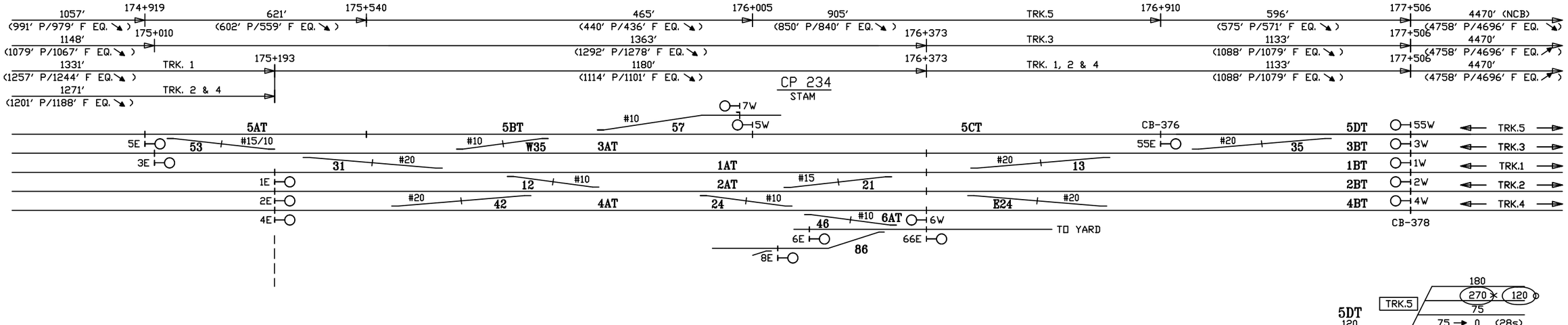

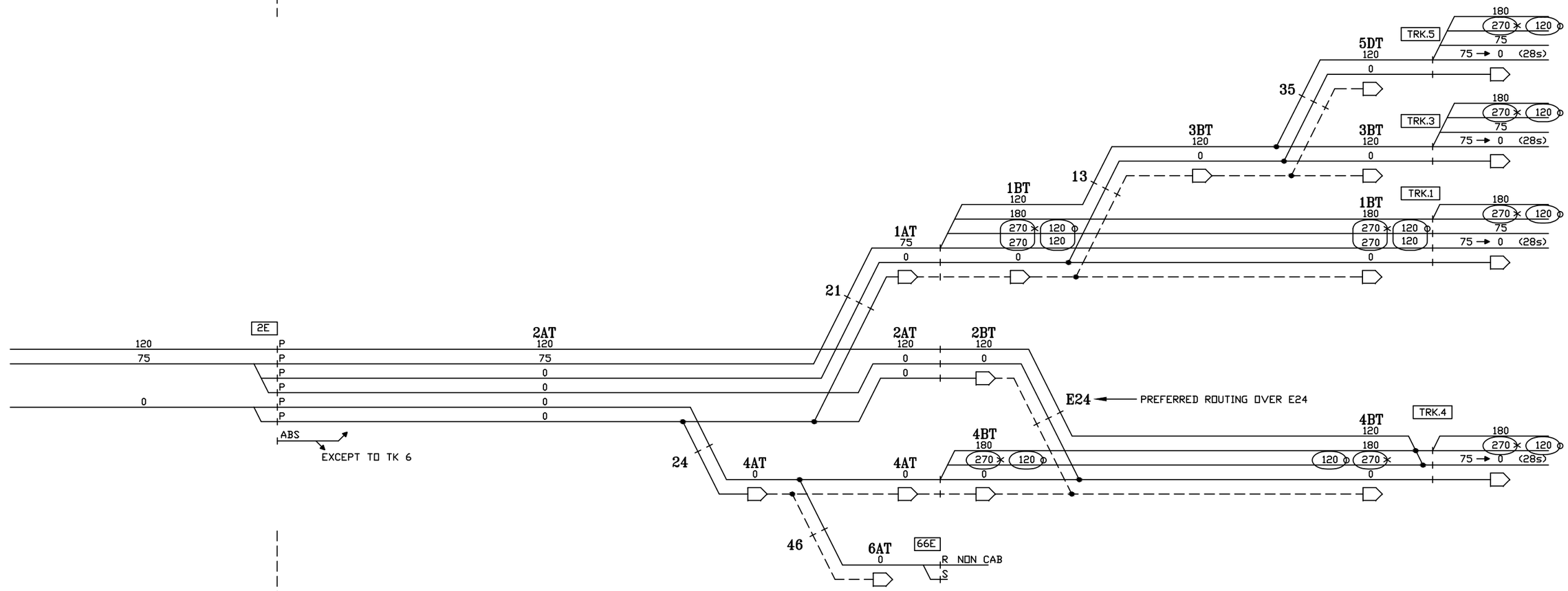

CIRCUIT ENGINEER	SR. SIGNAL ENGR.–DESIGN & STANDARDS	DIRECTOR C&S SYSTEMS	MTA Metro–North Railroad	NEW HAVEN LINE CP 234 DIVERGING ROUTES – TRACK 2 EAST – STAGE 7	ISSUE DATE:	RTG–NHL1
					NHS REV.	SHEET 47X
					NHS /users/signal/RTG	NHL1 L1047X

Gannett Fleming/CWA

CONTRACT #	PROJECT SHEET #
1000027511	0567

EXISTING

IN SERVICE

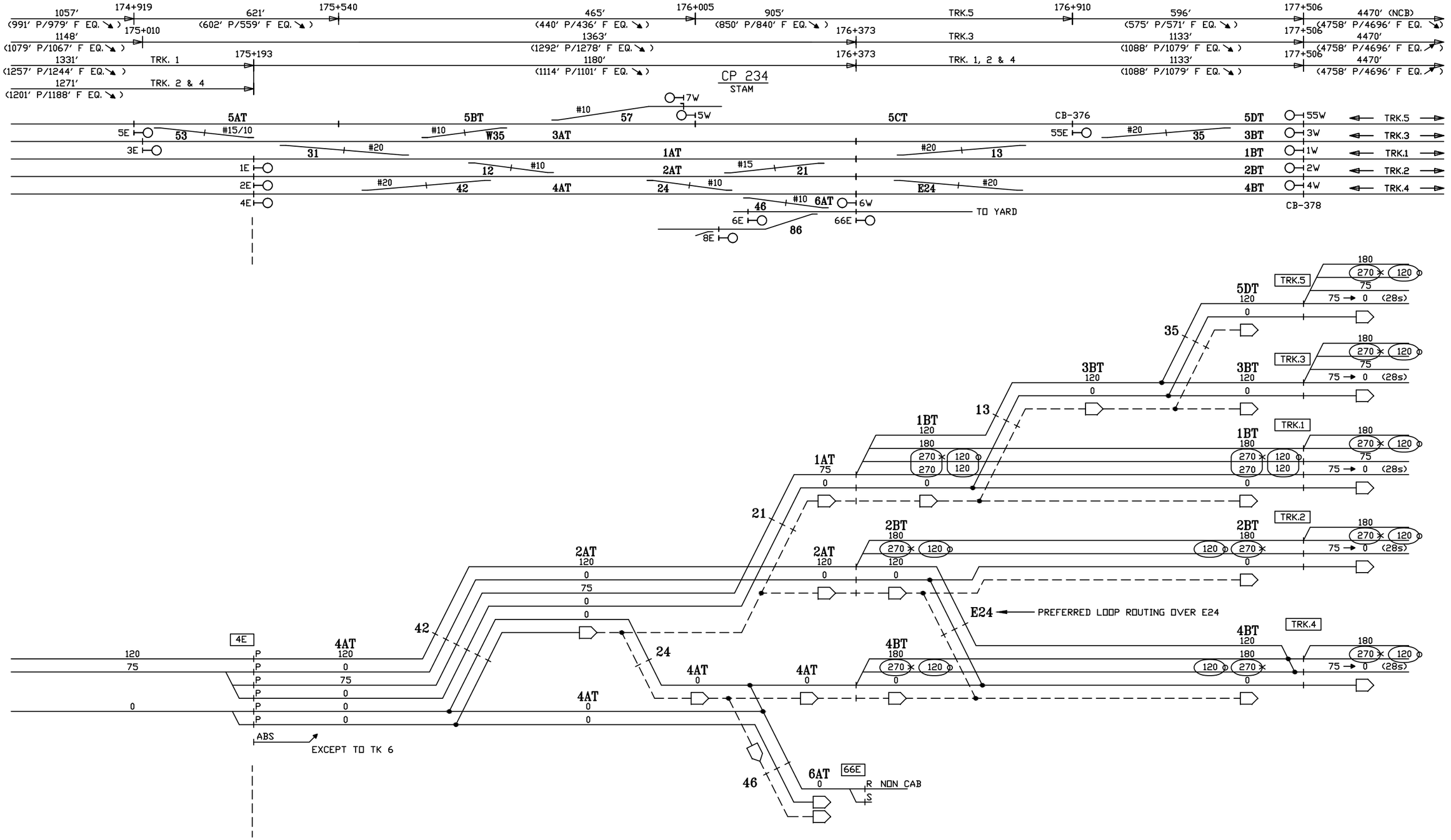

CIRCUIT ENGINEER	SR. SIGNAL ENGR.–DESIGN & STANDARDS	DIRECTOR C&S SYSTEMS	MTA Metro–North Railroad	NEW HAVEN LINE CP 234 DIVERGING ROUTES – TRACK 4 EAST – STAGE 7	ISSUE DATE: / REV. / /users/signal/RTG RTG–NHL1 SHEET 48X NHL1 L1048X

Gannett Fleming/CWA

CONTRACT #	PROJECT SHEET #
1000027511	0568

EXISTING

IN SERVICE

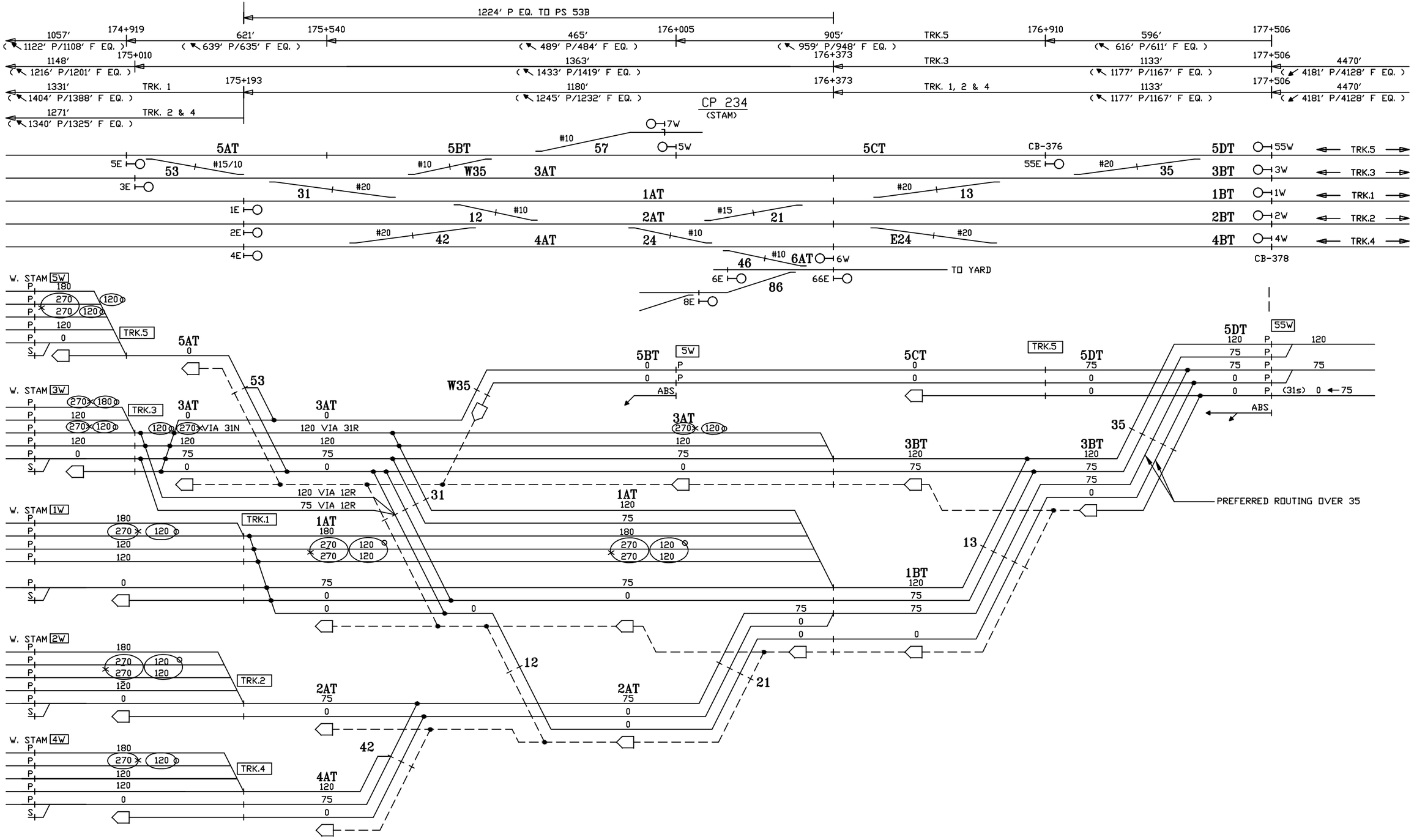

CIRCUIT ENGINEER	SR. SIGNAL ENGR.–DESIGN & STANDARDS	DIRECTOR C&S SYSTEMS	MTA Metro–North Railroad	NEW HAVEN LINE CP 234 DIVERGING ROUTES – TRACK 5 WEST – STAGE 7	ISSUE DATE: / RTG–NHL1 NHS REV. / SHEET 49X NHS /users/signal/RTG / NHL1 / L1049X

Gannett Fleming/CWA

CONTRACT # 1000027511

PROJECT SHEET # 0569

EXISTING

IN SERVICE

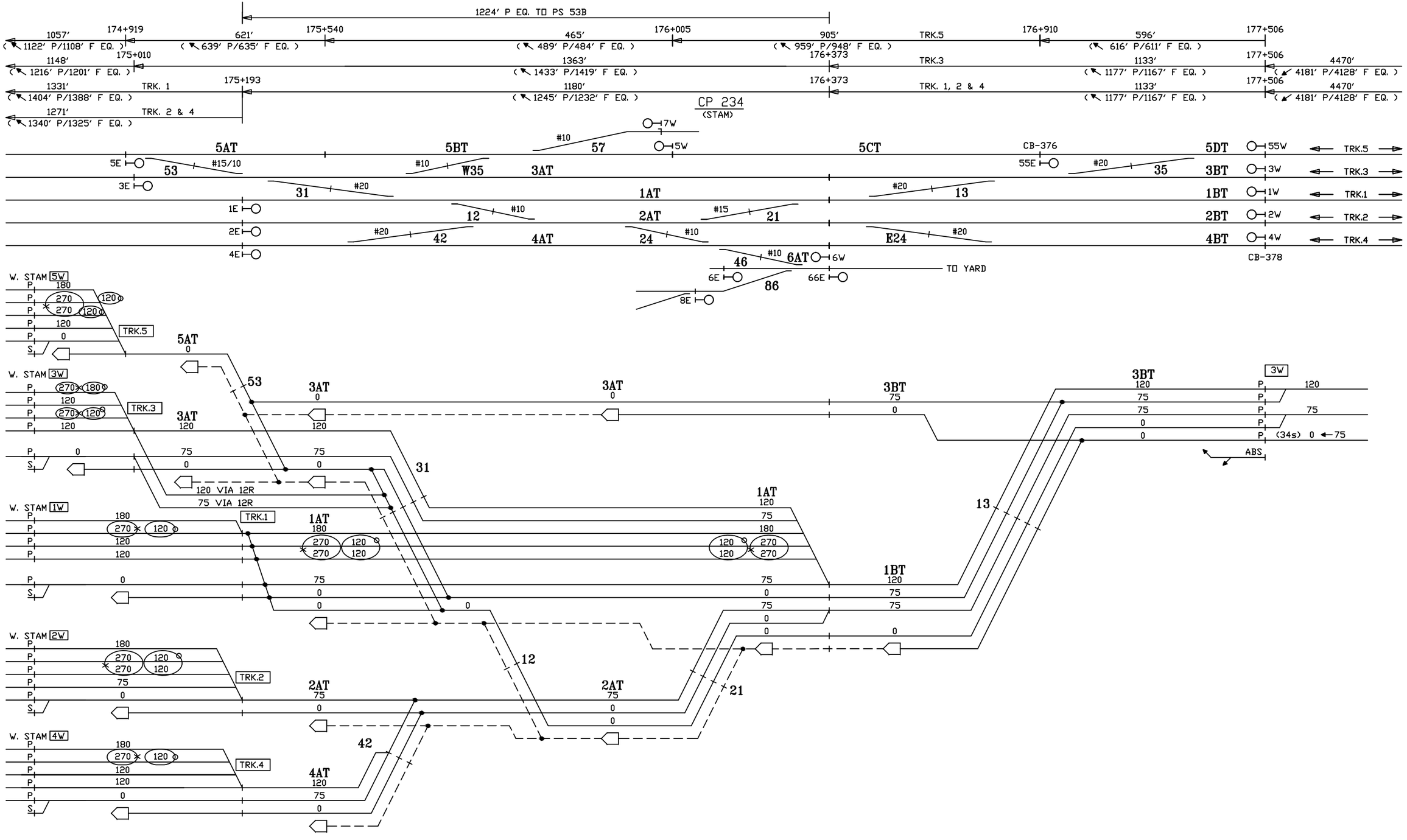

CIRCUIT ENGINEER	SR. SIGNAL ENGR.–DESIGN & STANDARDS	DIRECTOR C&S SYSTEMS	MTA Metro–North Railroad	NEW HAVEN LINE CP 234 DIVERGING ROUTES – TRACK 3 WEST – STAGE 7	ISSUE DATE: / RTG–NHL1 NHS REV. / SHEET 50X NHS /users/signal/RTG / NHL1 / L1050X

Gannett Fleming/CWA

CONTRACT #	PROJECT SHEET #
1000027511	0570

EXISTING

IN SERVICE

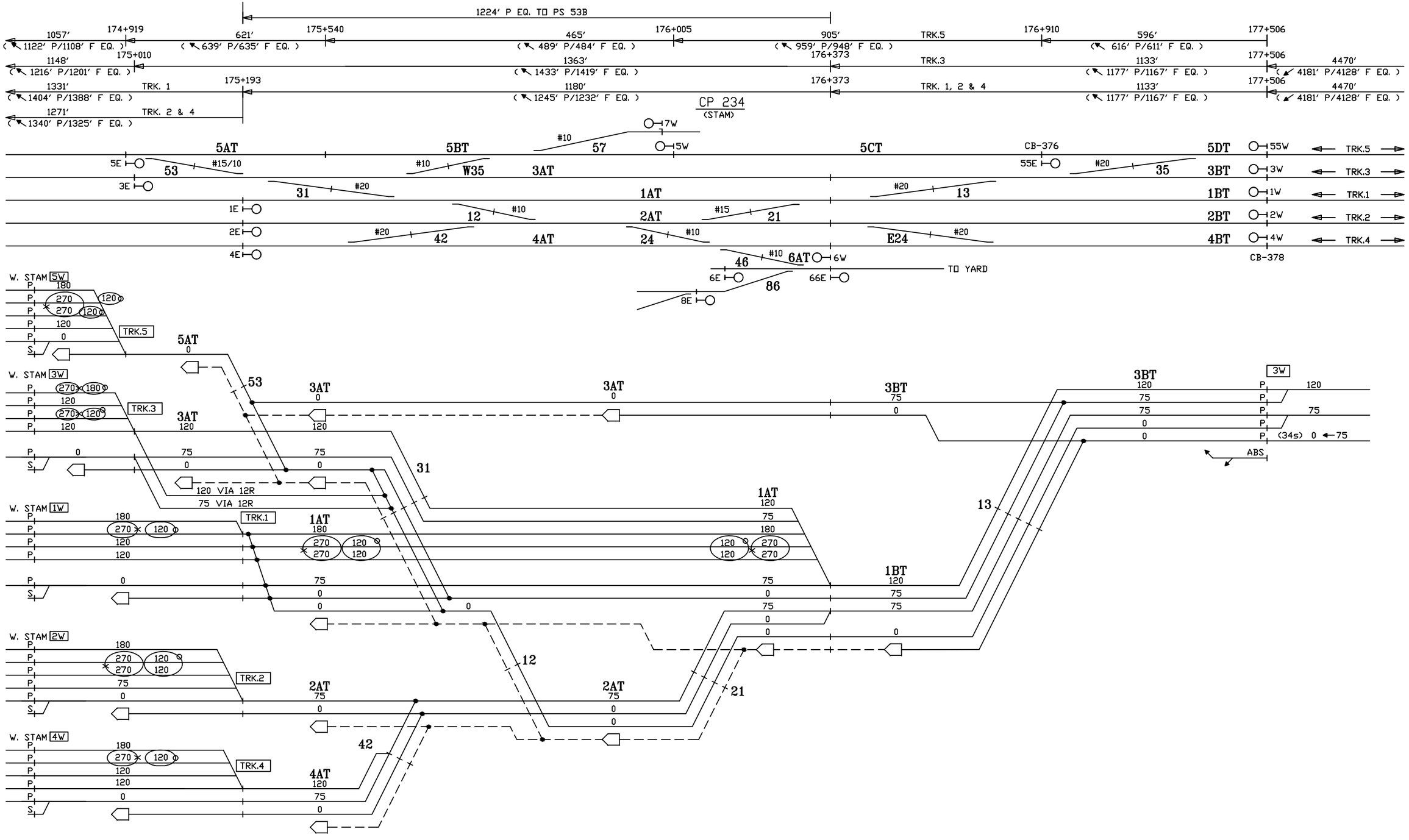

CIRCUIT ENGINEER	SR. SIGNAL ENGR.–DESIGN & STANDARDS	DIRECTOR C&S SYSTEMS	MTA Metro–North Railroad	NEW HAVEN LINE CP 234 DIVERGING ROUTES – TRACK 1 WEST – STAGE 7	ISSUE DATE: / RTG–NHL1 NHS REV. / SHEET 51X NHS /users/signal/RTG / NHL1 / L1051X

Gannett Fleming/CWA

CONTRACT # 1000027511

PROJECT SHEET # 0571

EXISTING

IN SERVICE

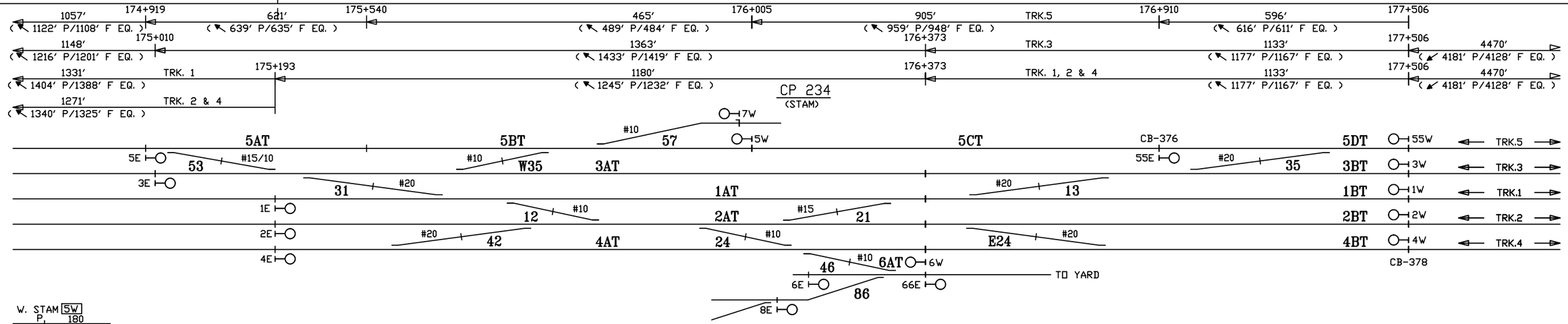

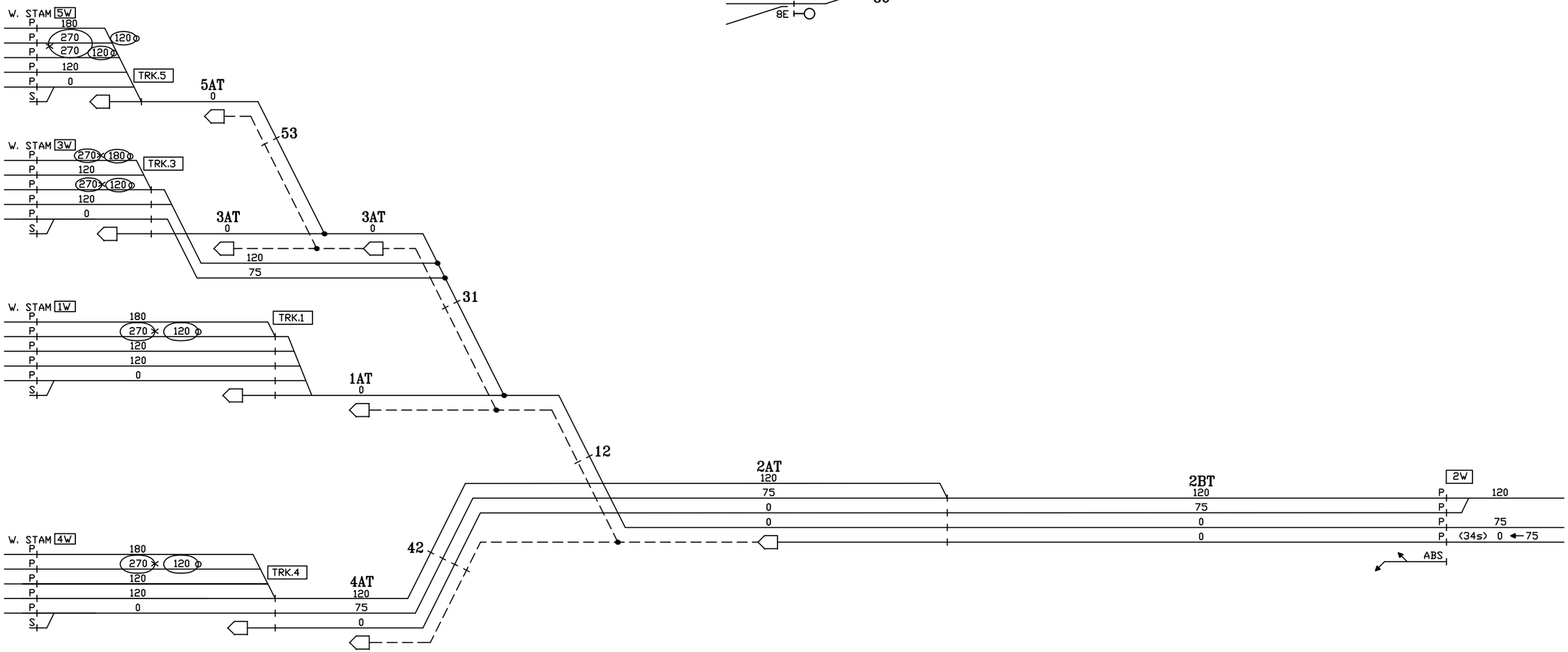

CIRCUIT ENGINEER	SR. SIGNAL ENGR.–DESIGN & STANDARDS	DIRECTOR C&S SYSTEMS	MTA Metro–North Railroad	NEW HAVEN LINE CP 234 DIVERGING ROUTES – TRACK 2 WEST – STAGE 7	ISSUE DATE: / RTG–NHL1 NHS REV. / SHEET 52X NHS /users/signal/RTG / NHL1 / L1052X

Gannett Fleming/CWA

CONTRACT #	PROJECT SHEET #
1000027511	0572

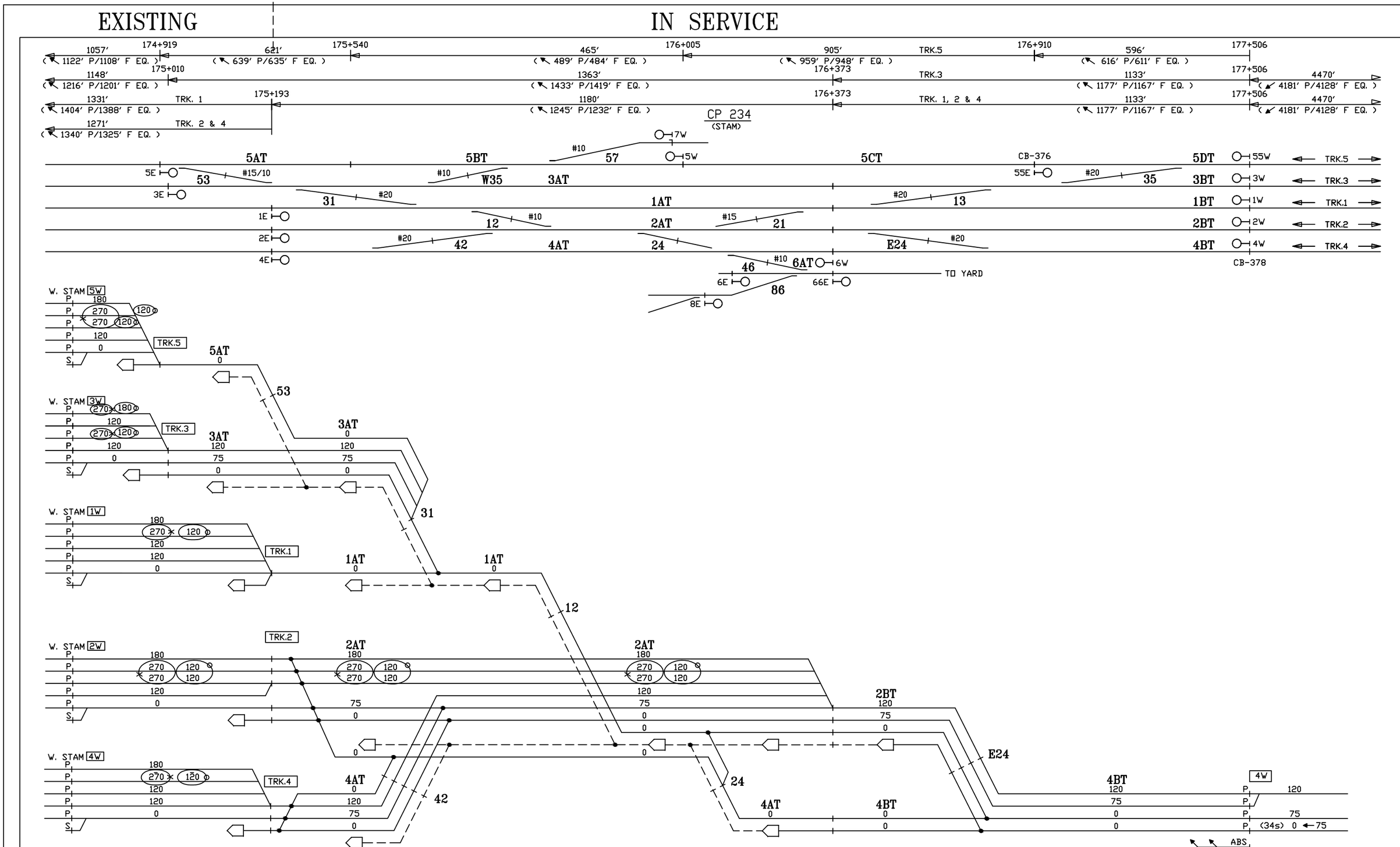

CIRCUIT ENGINEER	SR. SIGNAL ENGR.-DESIGN & STANDARDS	DIRECTOR C&S SYSTEMS	MTA Metro-North Railroad	NEW HAVEN LINE CP 234 DIVERGING ROUTES – TRACK 4 WEST – STAGE 7	ISSUE DATE: NHS REV. NHS /users/signal/RTG	RTG-NHL1 SHEET 53X NHL1 L1053X

Gannett Fleming/CWA

CONTRACT #	PROJECT SHEET #
1000027511	0573

EXISTING

IN SERVICE

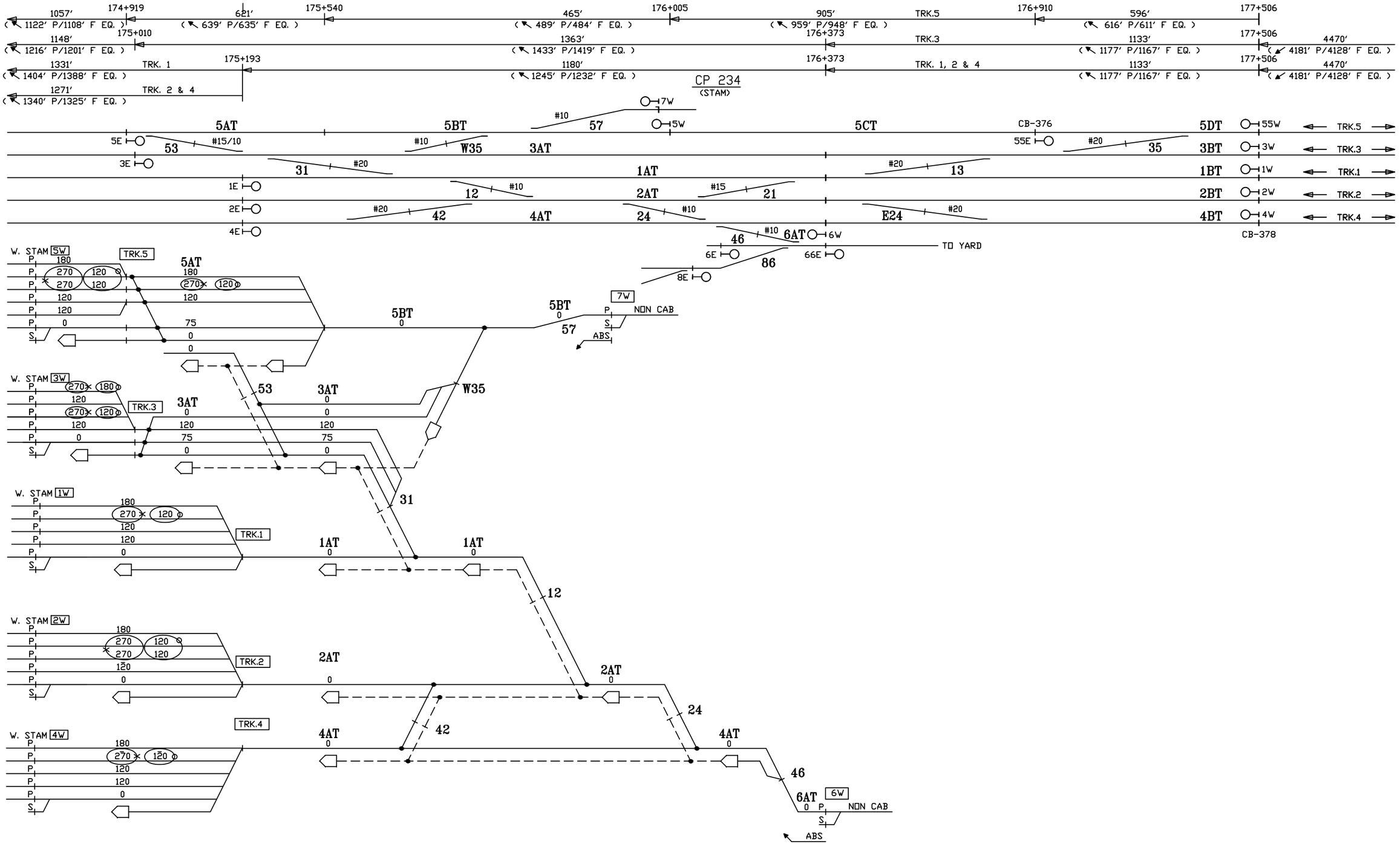

CIRCUIT ENGINEER	SR. SIGNAL ENGR.–DESIGN & STANDARDS	DIRECTOR C&S SYSTEMS	MTA Metro–North Railroad	NEW HAVEN LINE CP 234 DIVERGING ROUTES – TRACKS 6 & 7 WEST – STAGE 7	ISSUE DATE: / RTG–NHL1 NHS REV. / SHEET 54X NHS /users/signal/RTG / NHL1 / L1054X

Gannett Fleming/CWA

CONTRACT # 1000027511

PROJECT SHEET # 0574

IN SERVICE

CP 234 (STAM)
STAMFORD YARD

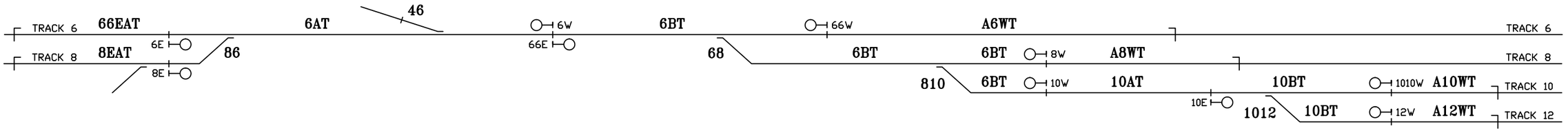

SEE SH. 54X FOR DIVERGING ROUTES

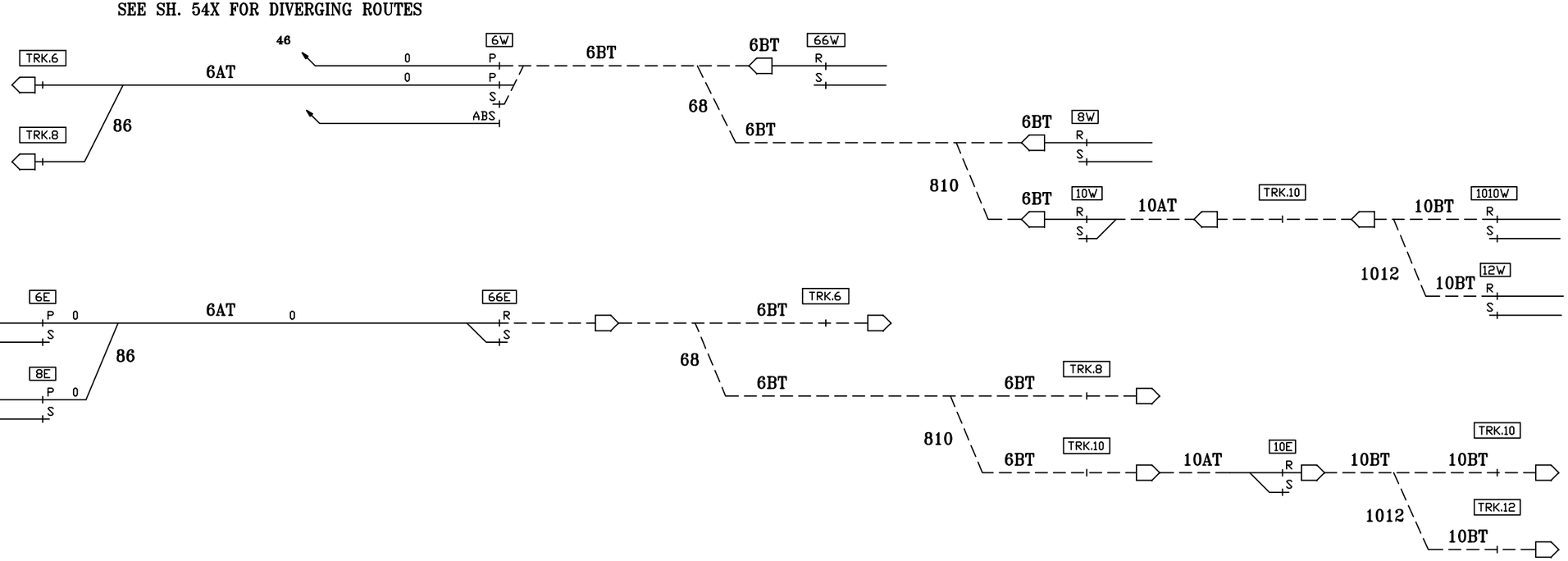

NOTES:
P - PROCEED CAB
R - RESTRICTING
S - STOP

CIRCUIT ENGINEER	SR. SIGNAL ENGR.–DESIGN & STANDARDS	DIRECTOR C&S SYSTEMS	MTA Metro–North Railroad	NEW HAVEN LINE CP 234 STAMFORD YARD ROUTINGS – STAGE 7	ISSUE DATE: / REV. / NHS / NHS / /users/signal/RTG RTG–NHL1 SHEET 55X NHL1 L1055X

Gannett Fleming/CWA

CONTRACT #	PROJECT SHEET #
1000027511	0575

IN SERVICE

STAGE 7

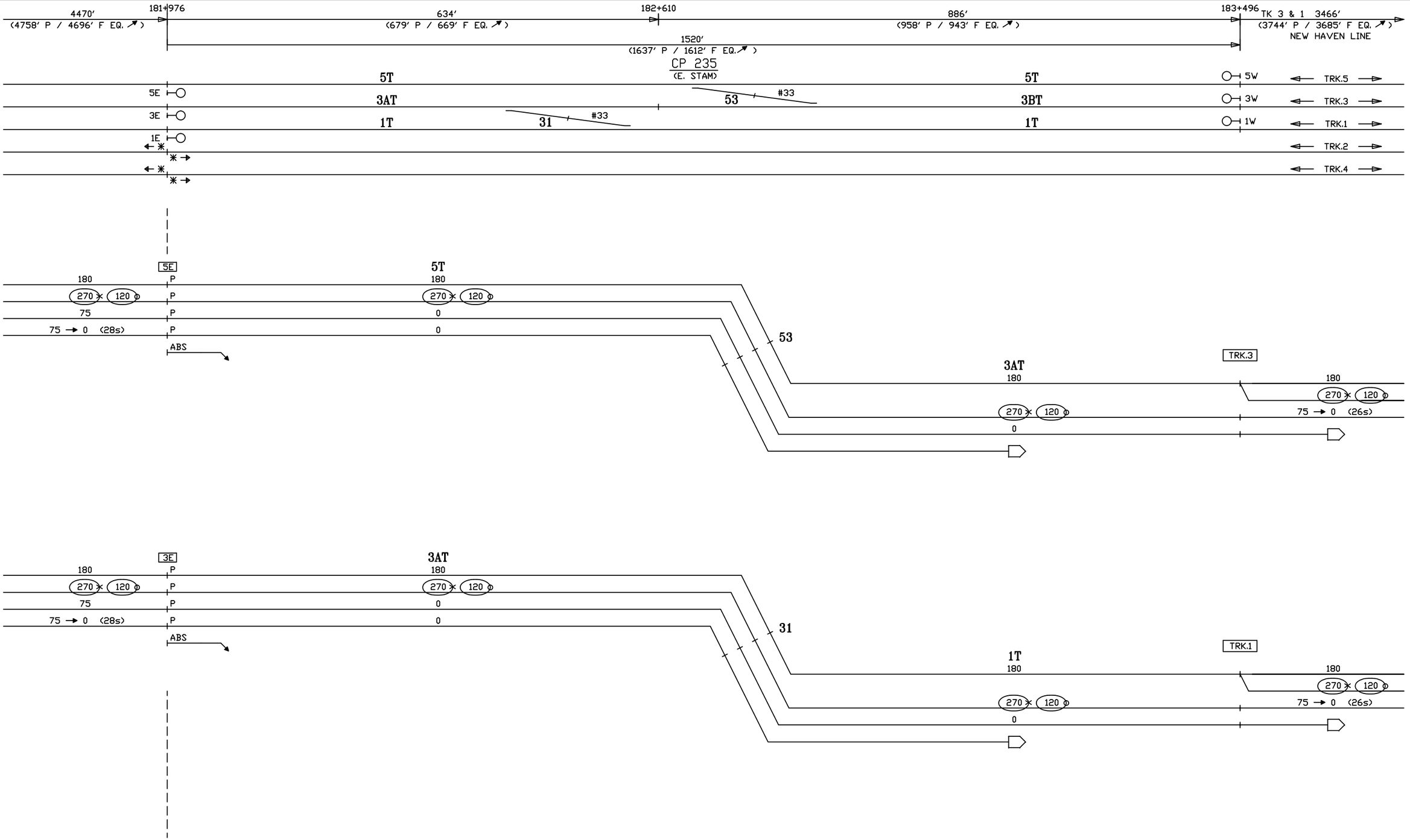

CIRCUIT ENGINEER	SR. SIGNAL ENGR.–DESIGN & STANDARDS	DIRECTOR C&S SYSTEMS	MTA Metro–North Railroad	NEW HAVEN LINE CP 235 DIVERGING ROUTES – TRACKS 5 & 3 EAST – STAGE 7	ISSUE DATE:	RTG–NHL1
					NHS REV.	SHEET 56X
					NHS /users/signal/RTG	NHL1 L1056X

Gannett Fleming/CWA

CONTRACT #	PROJECT SHEET #
1000027511	0576

IN SERVICE

STAGE 7

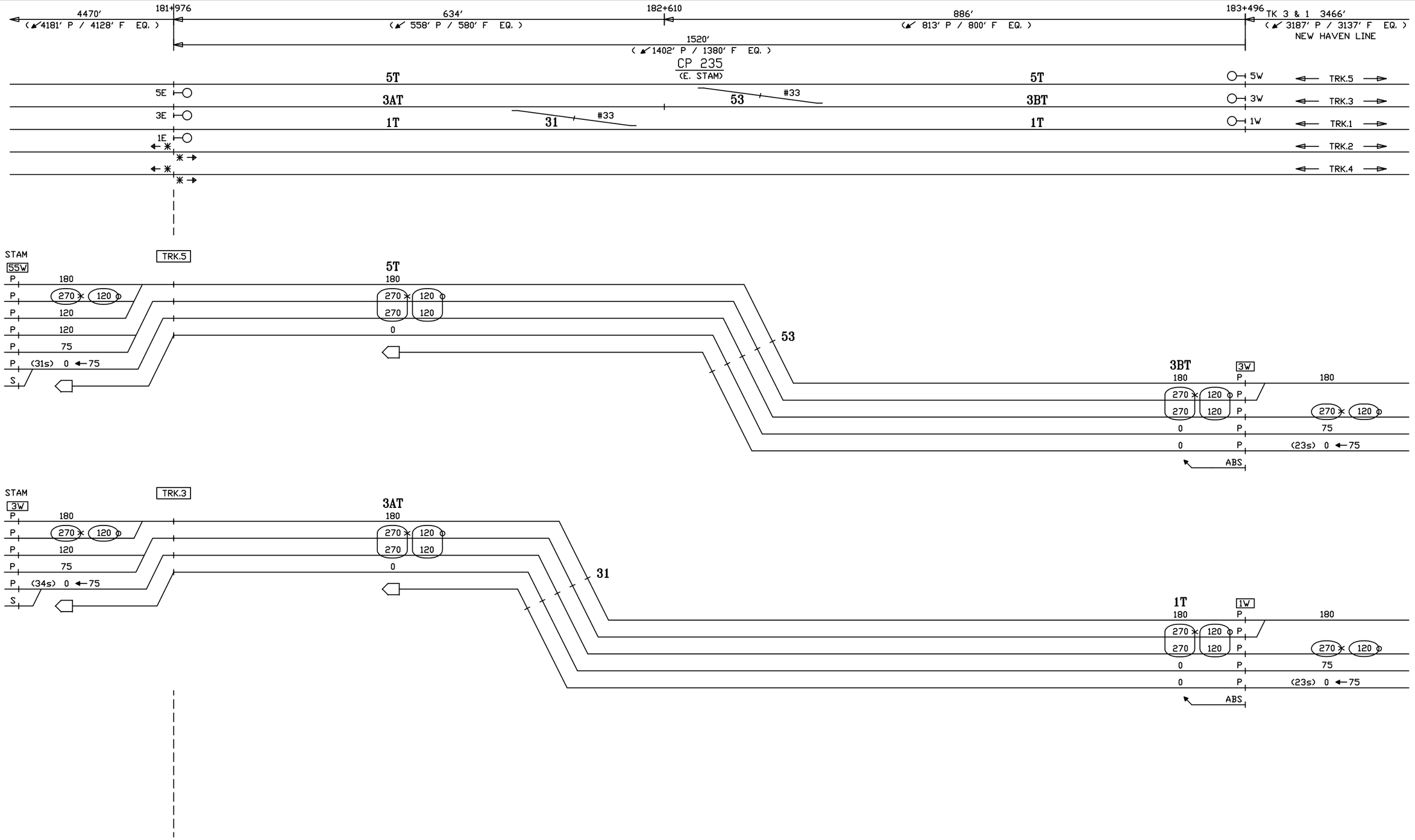

CIRCUIT ENGINEER	SR. SIGNAL ENGR.–DESIGN & STANDARDS	DIRECTOR C&S SYSTEMS	MTA Metro–North Railroad	NEW HAVEN LINE CP 235 DIVERGING ROUTES – TRACKS 3 & 1 WEST – STAGE 7	ISSUE DATE: 09–01–99 · RTG–NHL1 NHS REV. 10 · SHEET 57X NHS /users/signal/RTG · NHL1 · L1057X

Gannett Fleming/CWA

CONTRACT # 1000027511

PROJECT SHEET # 0577

STAGE 7

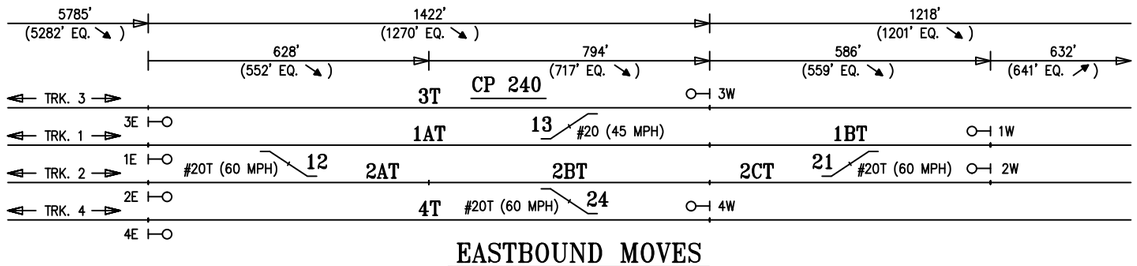

EASTBOUND MOVES

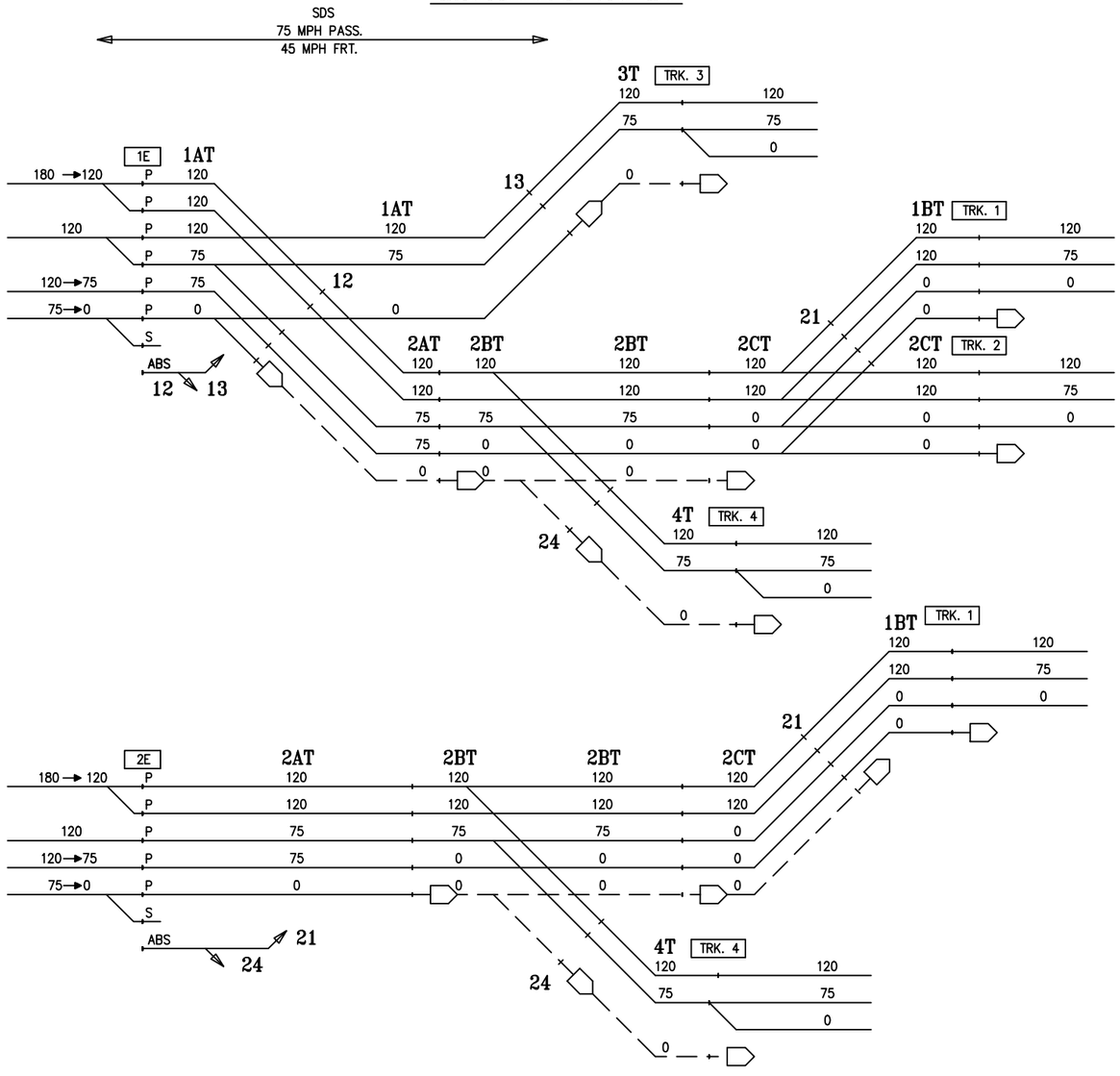

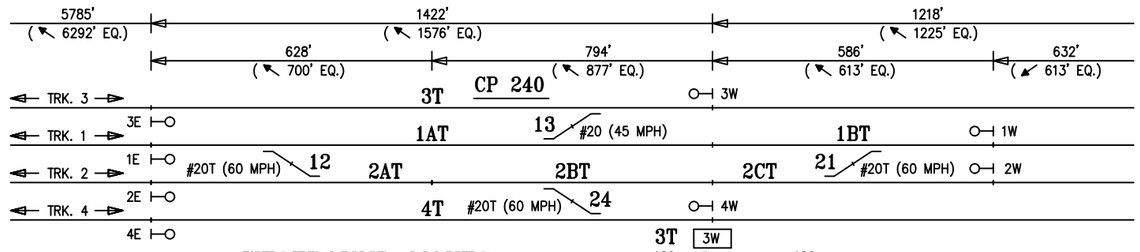

WESTBOUND MOVES

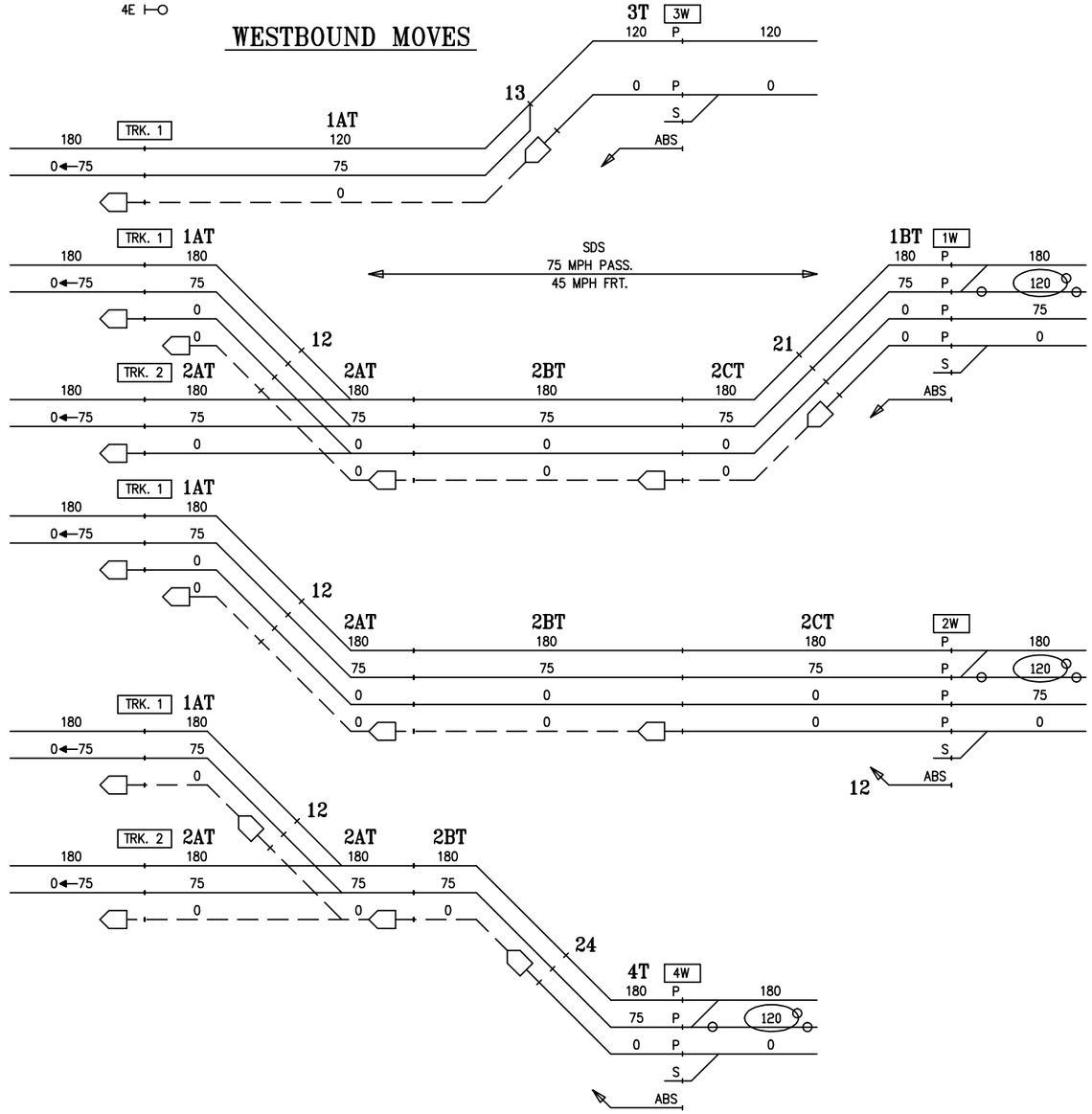

CIRCUIT ENGINEER	SR. SIGNAL ENGR.–DESIGN & STANDARDS	DIRECTOR C&S SYSTEMS	MTA Metro–North Railroad	NEW HAVEN LINE CP 240 DIVERGING ROUTES – STAGE 7	ISSUE DATE: RTG–NHL2 NHS REV. 21 SHEET 1X NHS \users\signal\RTG NHL2 L2001X

Gannett Fleming/CWA

CONTRACT #	PROJECT SHEET #
1000027511	0578

EXISTING — IN SERVICE — EXISTING

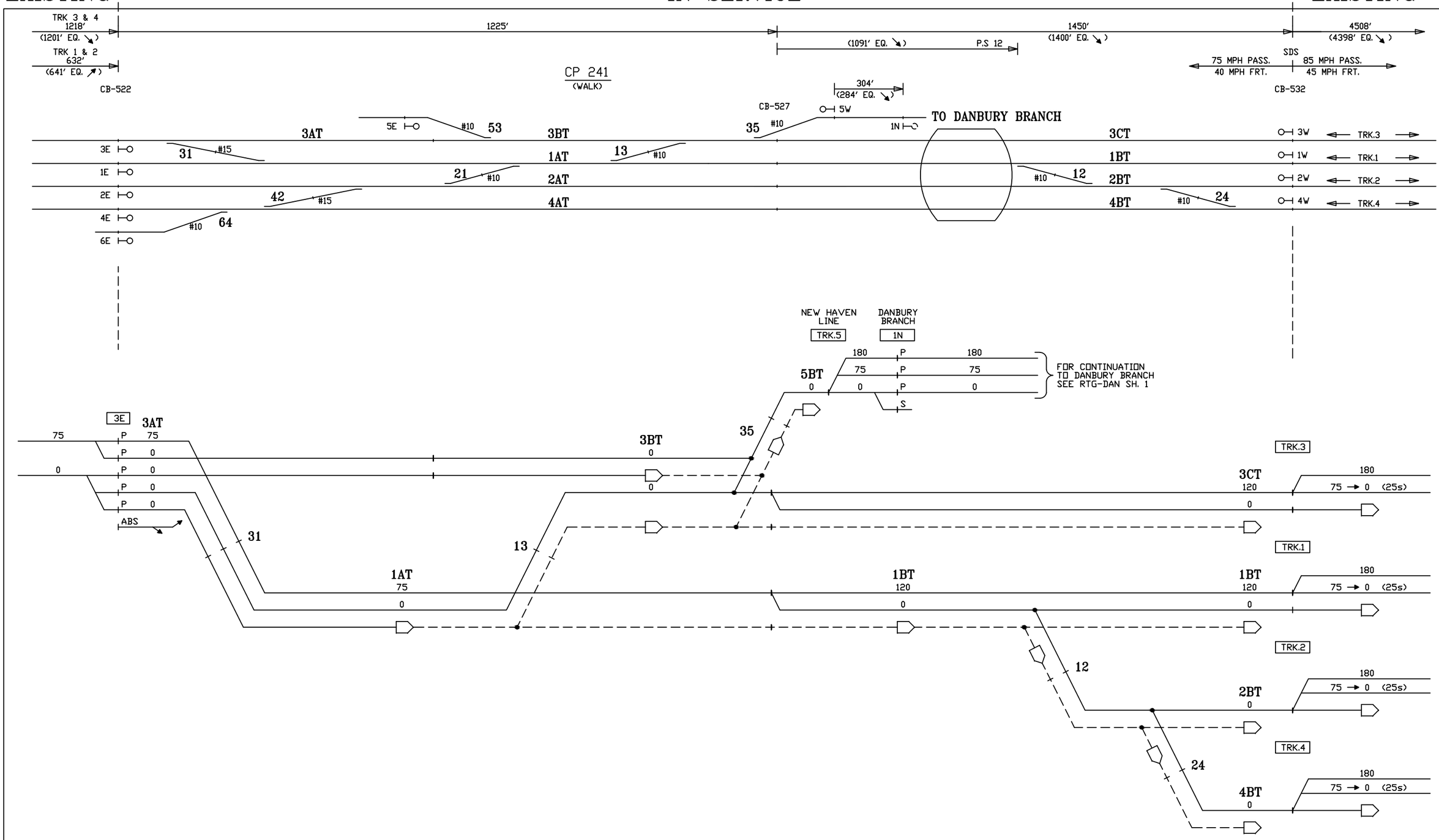

CIRCUIT ENGINEER	SR. SIGNAL ENGR.–DESIGN & STANDARDS	DIRECTOR C&S SYSTEMS	MTA Metro–North Railroad	NEW HAVEN LINE CP 241 DIVERGING ROUTES – TRACK 3 EAST – STAGE 7	ISSUE DATE: 06–01–88 REV. 23 /users/signal/RTG RTG–NHL2 SHEET 2X NHL2 L2002X

Gannett Fleming/CWA

CONTRACT # 1000027511

PROJECT SHEET # 0579

EXISTING | IN SERVICE | EXISTING

TRK 3 & 4
1218′
(1201′ EQ. ↘)
TRK 1 & 2
632′
(641′ EQ. ↗)
1225′
(1091′ EQ. ↘)
P.S 12
1450′
(1400′ EQ. ↘)
4508′
(4398′ EQ. ↘)
SDS
75 MPH PASS.
40 MPH FRT.
85 MPH PASS.
45 MPH FRT.
CB-522
CP 241
(WALK)
304′
(284′ EQ. ↘)
CB-527
CB-532
TO DANBURY BRANCH

3E
1E
2E
4E
6E
3AT
1AT
2AT
4AT
3BT
1AT
2AT
4AT
3CT
1BT
2BT
4BT
5E
#10
53
31
#15
21
#10
42
#15
64
#10
13
#10
35
#10
5W
1N
12
#10
24
#10
3W
1W
2W
4W
TRK.3
TRK.1
TRK.2
TRK.4

NEW HAVEN LINE
TRK.5
DANBURY BRANCH
1N
5BT
180 P 180
75 P 75
0 P 0
S
FOR CONTINUATION TO DANBURY BRANCH SEE RTG-DAN SH. 1

35
13
12
24
3BT 0
3CT 120 0
180 75 → 0 (25s)
1E
120
75
0
P
ABS
1AT 75 0
1AT 75 0
1BT 0
0
TRK.3
TRK.2
TRK.4
2BT 0
2BT 0
4BT 0

CIRCUIT ENGINEER	SR. SIGNAL ENGR.–DESIGN & STANDARDS	DIRECTOR C&S SYSTEMS	MTA Metro–North Railroad	NEW HAVEN LINE CP 241 DIVERGING ROUTES – TRACK 1 EAST – STAGE 7	ISSUE DATE: 06–01–88 REV. 23 /users/signal/RTG RTG–NHL2 SHEET 3X NHL2 L2003X

Gannett Fleming/CWA

CONTRACT # 1000027511
PROJECT SHEET # 0580

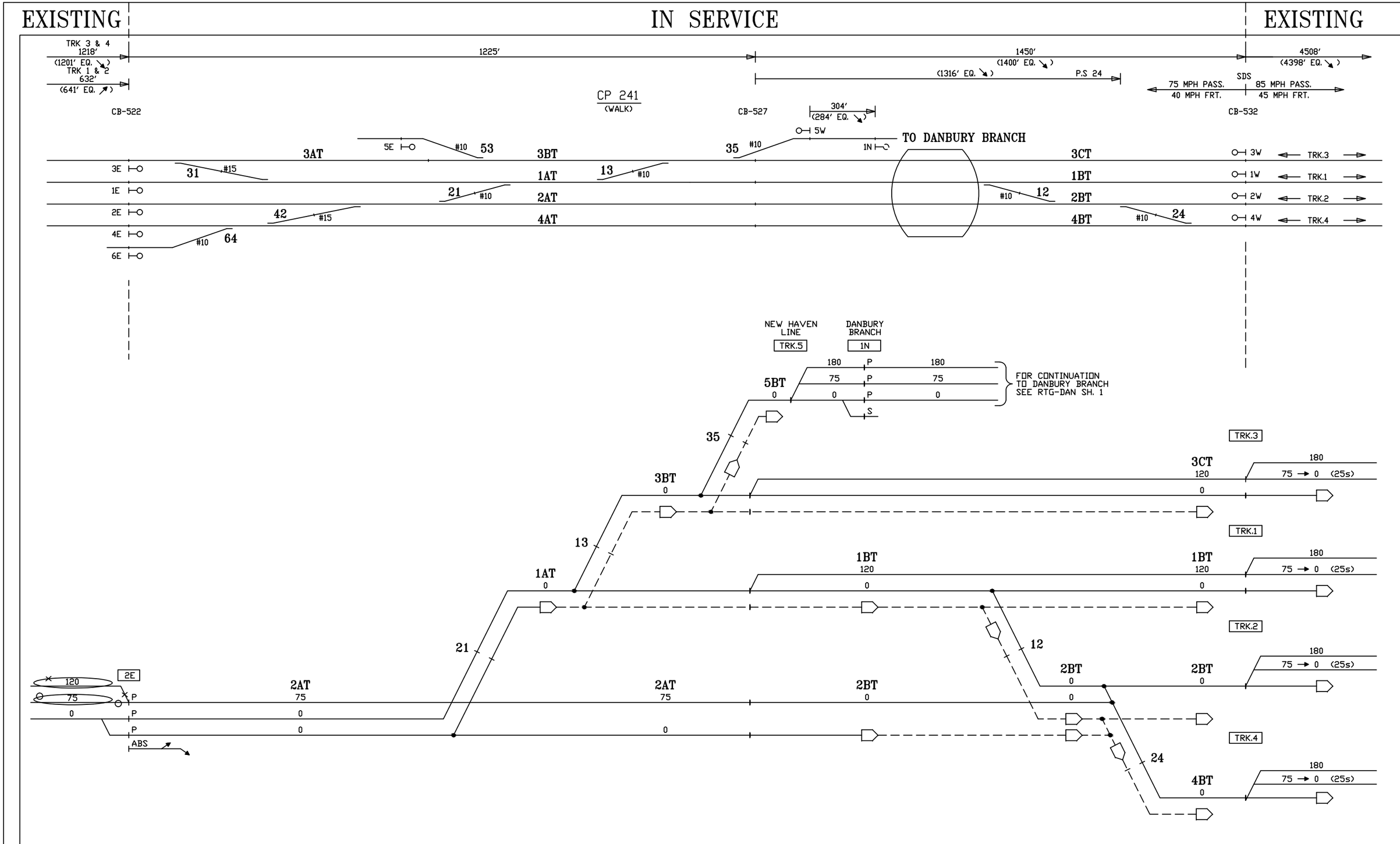

CIRCUIT ENGINEER	SR. SIGNAL ENGR.-DESIGN & STANDARDS	DIRECTOR C&S SYSTEMS	MTA Metro-North Railroad	NEW HAVEN LINE CP 241 DIVERGING ROUTES – TRACK 2 EAST – STAGE 7	ISSUE DATE: 06-01-88 REV. 23 /users/signal/RTG	RTG-NHL2 SHEET 4X NHL2 L2004X

Gannett Fleming/CWA

CONTRACT #	PROJECT SHEET #
1000027511	0581

EXISTING — IN SERVICE — EXISTING

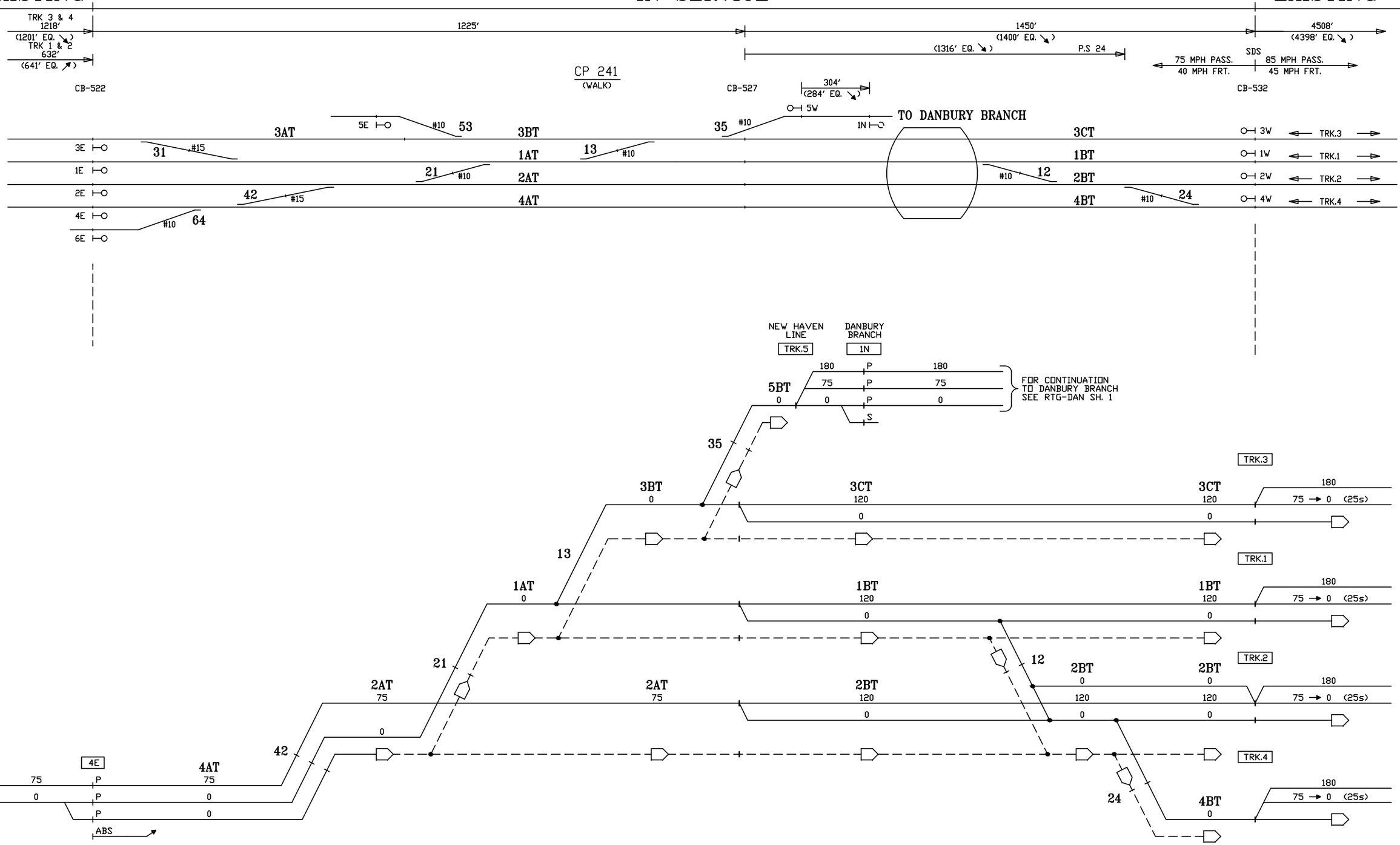

CIRCUIT ENGINEER	SR. SIGNAL ENGR.–DESIGN & STANDARDS	DIRECTOR C&S SYSTEMS	MTA Metro–North Railroad	NEW HAVEN LINE CP 241 DIVERGING ROUTES – TRACK 4 EAST – STAGE 7	ISSUE DATE: 06–01–88 · REV. 23 · /users/signal/RTG RTG–NHL2 · SHEET 5X · NHL2 · L2005X

Gannett Fleming/CWA

CONTRACT # 1000027511

PROJECT SHEET # 0582

EXISTING | IN SERVICE | EXISTING

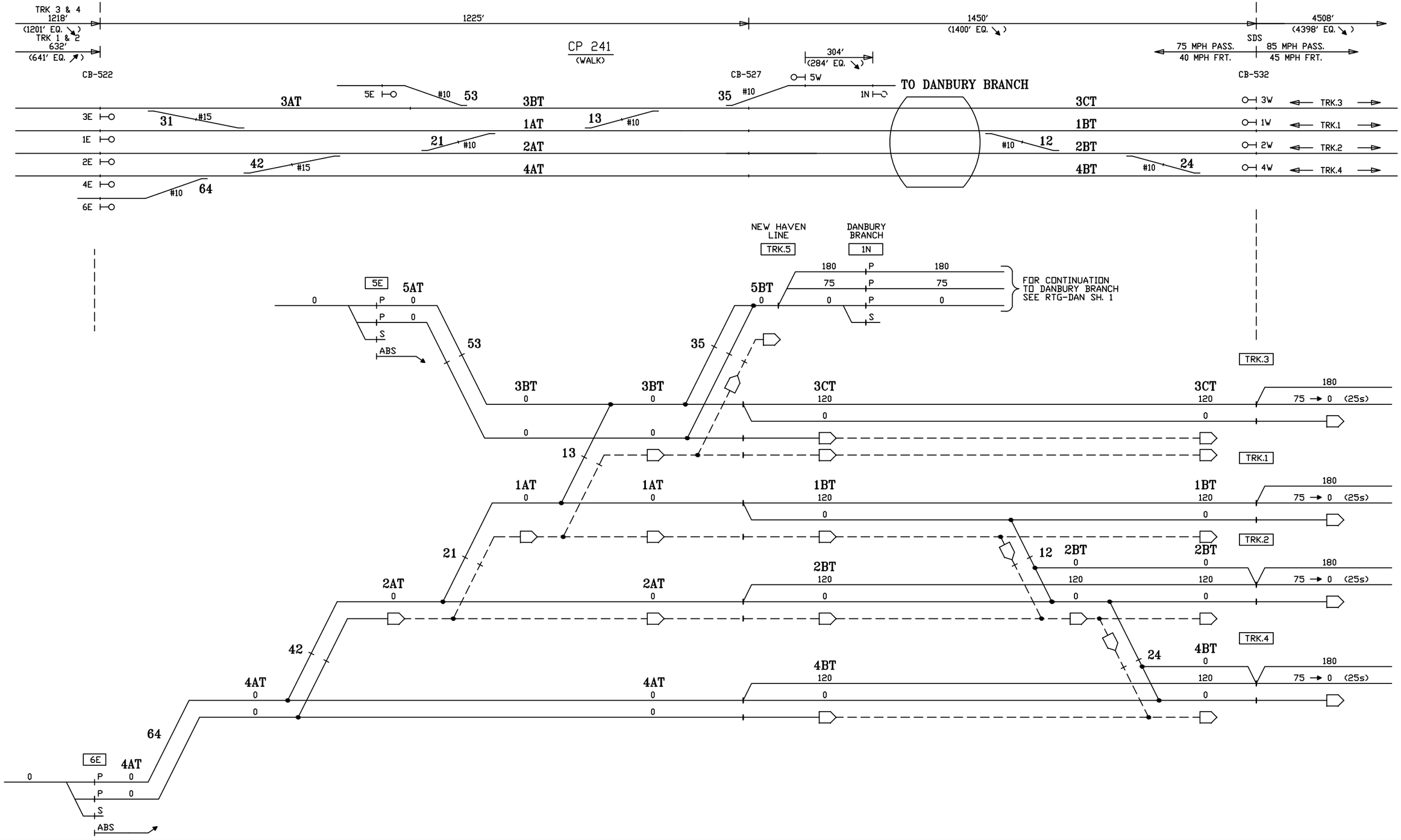

CIRCUIT ENGINEER	SR. SIGNAL ENGR.–DESIGN & STANDARDS	DIRECTOR C&S SYSTEMS	MTA Metro–North Railroad	NEW HAVEN LINE CP 241 DIVERGING ROUTES – TRACKS 5 & 6 EAST – STAGE 7	ISSUE DATE: 06–01–88 REV. 23 /users/signal/RTG RTG–NHL2 SHEET 6X NHL2 L2006X

Gannett Fleming/CWA

CONTRACT #	PROJECT SHEET #
1000027511	0583

EXISTING | IN SERVICE | EXISTING

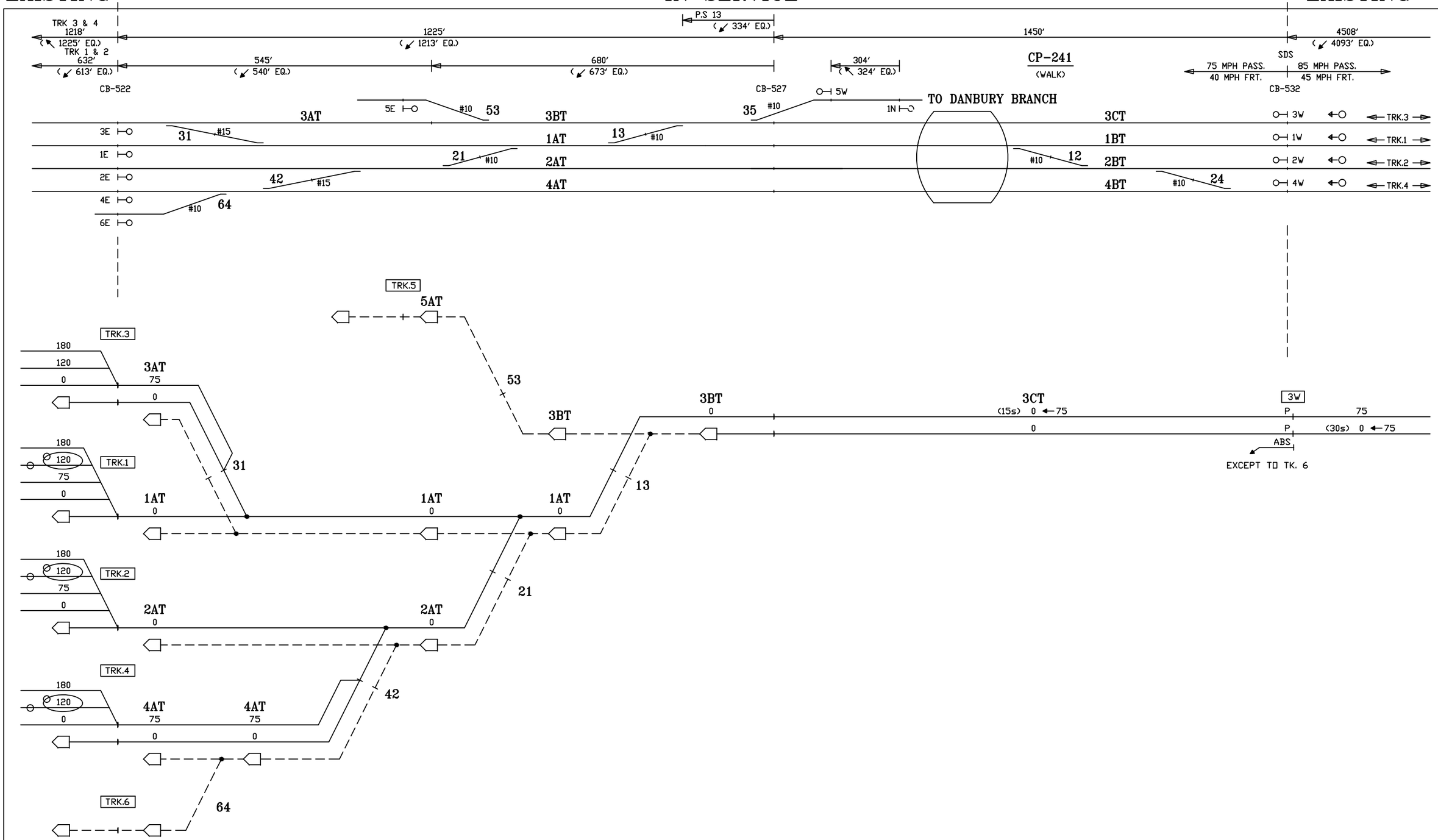

CIRCUIT ENGINEER	SR. SIGNAL ENGR.–DESIGN & STANDARDS	DIRECTOR C&S SYSTEMS	MTA Metro–North Railroad	NEW HAVEN LINE CP 241 DIVERGING ROUTES – TRACK 3 WEST – STAGE 7	ISSUE DATE: 06–01–88 NHS REV. 23 NHS /users/signal/RTG	RTG–NHL2 SHEET 7X NHL2 L2007X

Gannett Fleming/CWA

CONTRACT #	PROJECT SHEET #
1000027511	0584

EXISTING — IN SERVICE — EXISTING

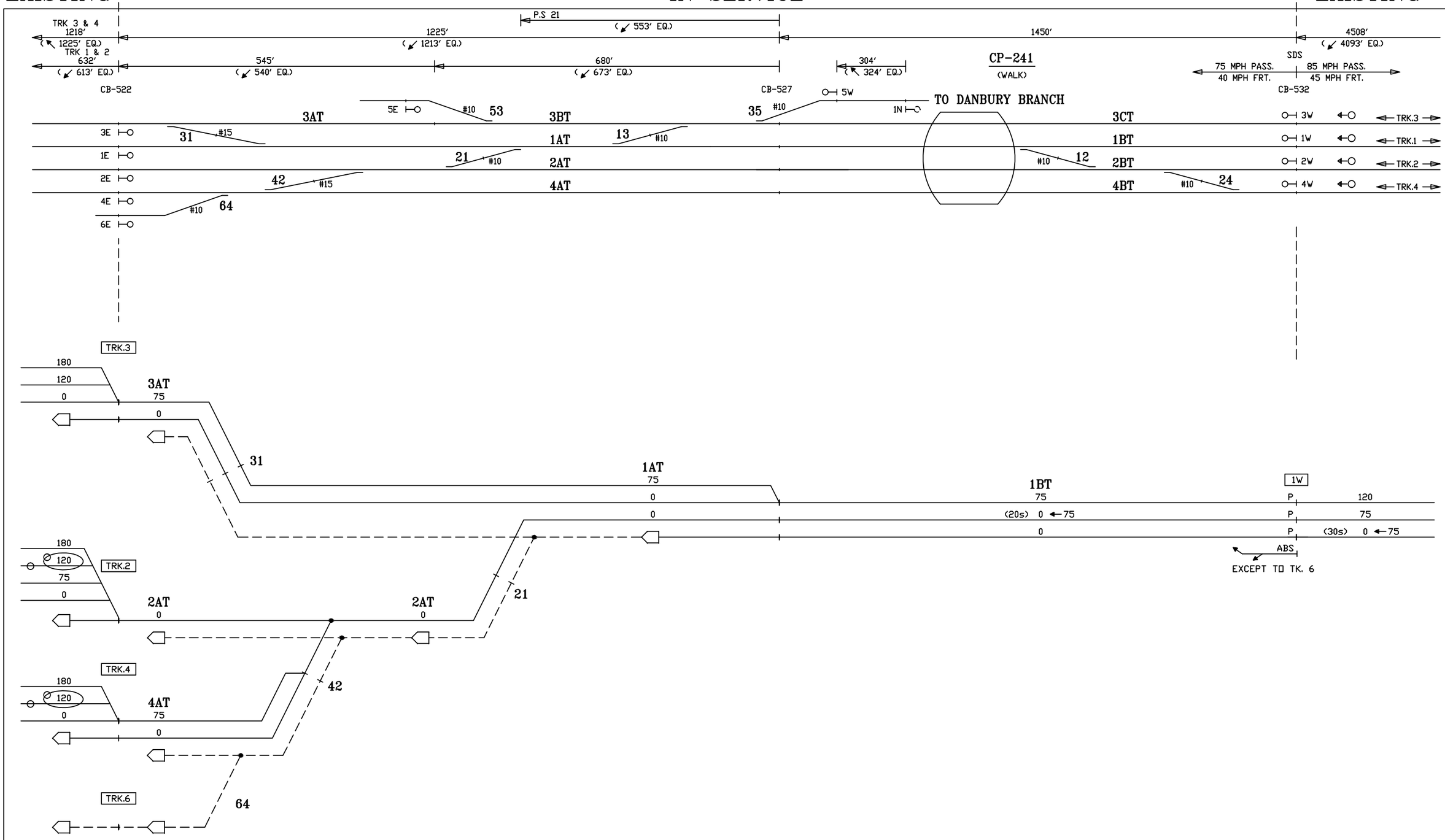

CIRCUIT ENGINEER	SR. SIGNAL ENGR.–DESIGN & STANDARDS	DIRECTOR C&S SYSTEMS	MTA Metro–North Railroad	NEW HAVEN LINE CP 241 DIVERGING ROUTES – TRACK 1 WEST – STAGE 7	ISSUE DATE: 06–01–88 NHS REV. 23 NHS /users/signal/RTG	RTG–NHL2 SHEET 8X NHL2 L2008X

Gannett Fleming/CWA

CONTRACT #	PROJECT SHEET #
1000027511	0585

EXISTING | IN SERVICE | EXISTING

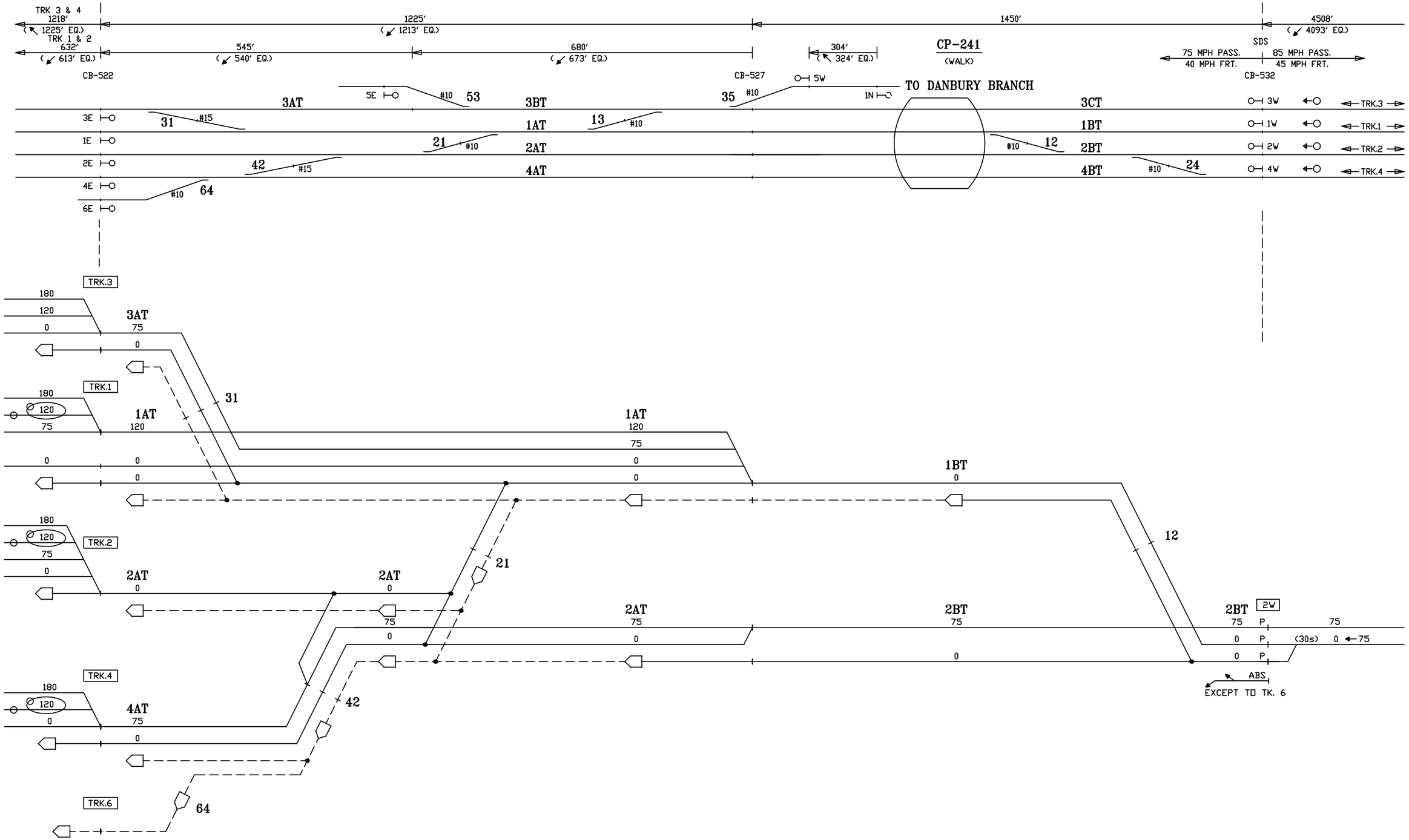

CIRCUIT ENGINEER	SR. SIGNAL ENGR.–DESIGN & STANDARDS	DIRECTOR C&S SYSTEMS	MTA Metro–North Railroad	NEW HAVEN LINE CP 241 DIVERGING ROUTES – TRACK 2 WEST – STAGE 7	ISSUE DATE: 06–01–88 NHS REV. 23 NHS /users/signal/RTG	RTG–NHL2 SHEET 9X NHL2 L2009X

Gannett Fleming/CWA

CONTRACT #	PROJECT SHEET #
1000027511	0586

EXISTING — IN SERVICE — EXISTING

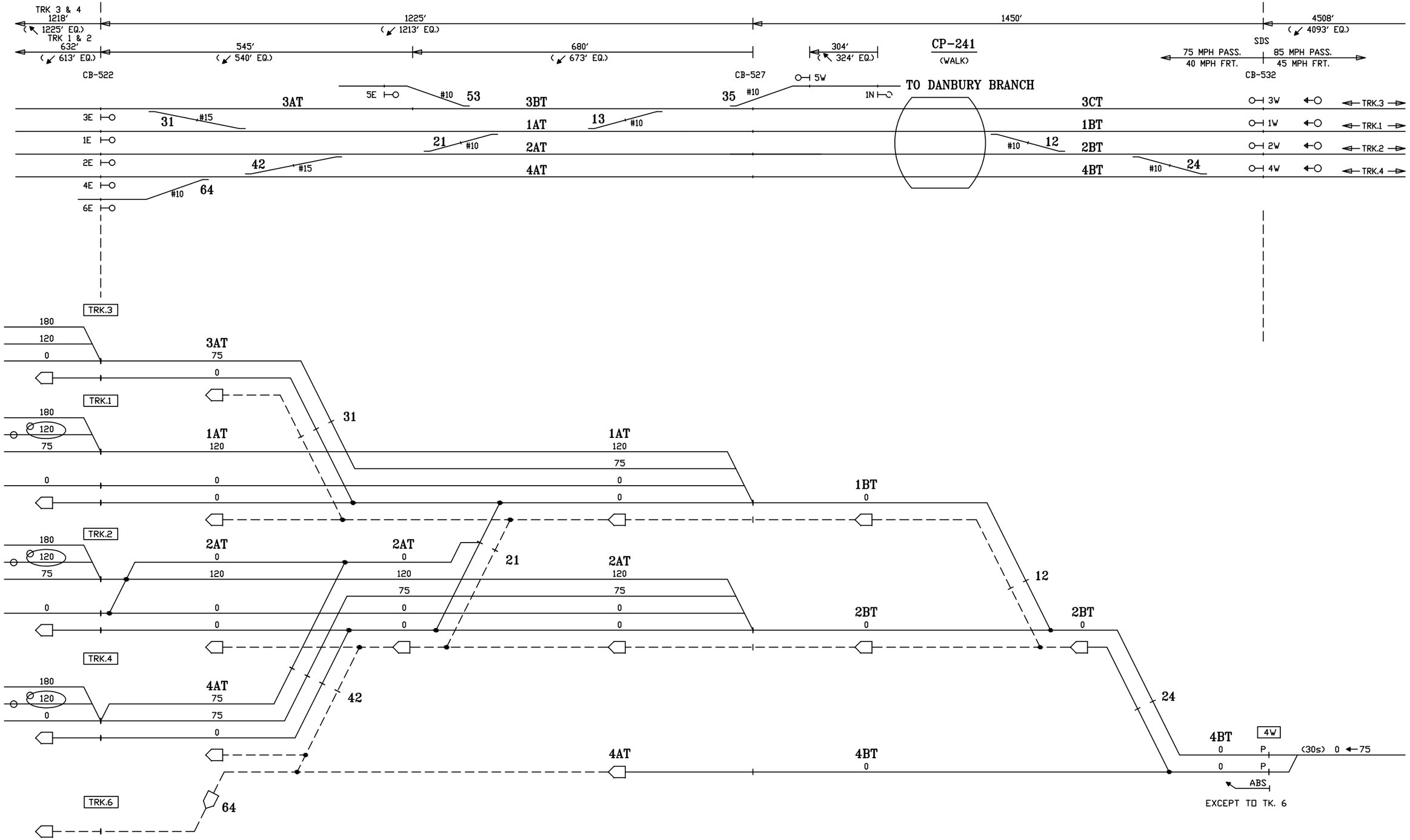

CIRCUIT ENGINEER	SR. SIGNAL ENGR.–DESIGN & STANDARDS	DIRECTOR C&S SYSTEMS	MTA Metro–North Railroad	NEW HAVEN LINE CP 241 DIVERGING ROUTES – TRACK 4 WEST – STAGE 7	ISSUE DATE: 06–01–88 · RTG–NHL2 NHS REV. 23 · SHEET 10X NHS /users/signal/RTG · NHL2 · L2010X

Gannett Fleming/CWA

CONTRACT # 1000027511 · PROJECT SHEET # 0587

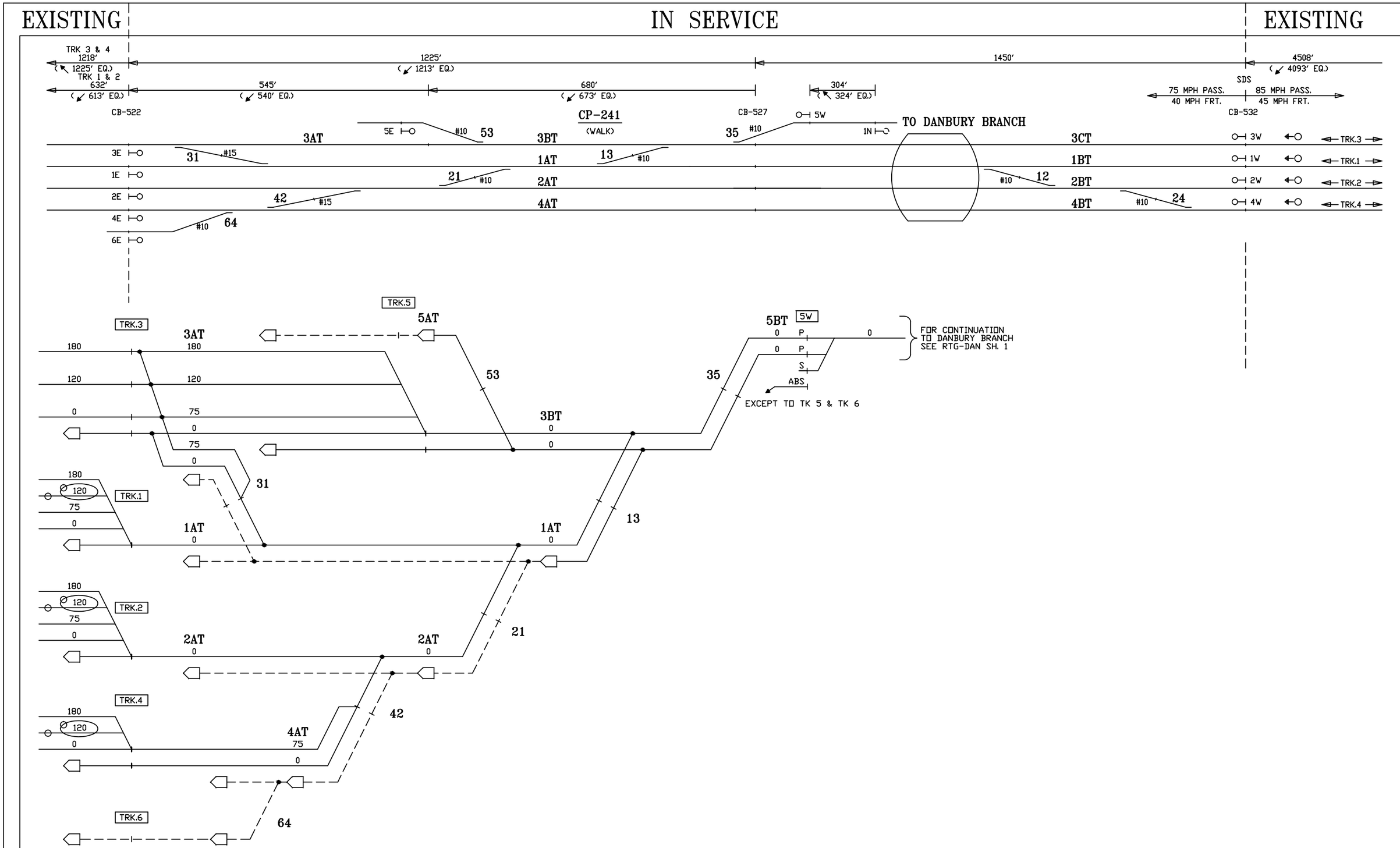
EXISTING
IN SERVICE
EXISTING
TRK 3 & 4
1218'
(1225' EQ.)
TRK 1 & 2
632'
(613' EQ.)
1225'
(1213' EQ.)
545'
(540' EQ.)
680'
(673' EQ.)
1450'
304'
(324' EQ.)
4508'
(4093' EQ.)
SDS
75 MPH PASS.
40 MPH FRT.
85 MPH PASS.
45 MPH FRT.
CB-522
CP-241
(WALK)
CB-527
CB-532
TO DANBURY BRANCH
3AT
3BT
3CT
1AT
1BT
2AT
2BT
4AT
4BT
TRK.3
TRK.1
TRK.2
TRK.4
TRK.5
TRK.6
5AT
5BT
5W
FOR CONTINUATION
TO DANBURY BRANCH
SEE RTG-DAN SH. 1
EXCEPT TO TK 5 & TK 6
ABS
CIRCUIT ENGINEER
SR. SIGNAL ENGR.-DESIGN & STANDARDS
DIRECTOR C&S SYSTEMS
Metro-North Railroad
NEW HAVEN LINE
CP 241
DIVERGING ROUTES - TRACK 5 WEST - STAGE 7
ISSUE DATE: 06-01-88
REV. 23
/users/signal/RTG
RTG-NHL2
SHEET 11X
NHL2 L2011X
CONTRACT # 1000027511
PROJECT SHEET # 0588
Gannett Fleming/CWA

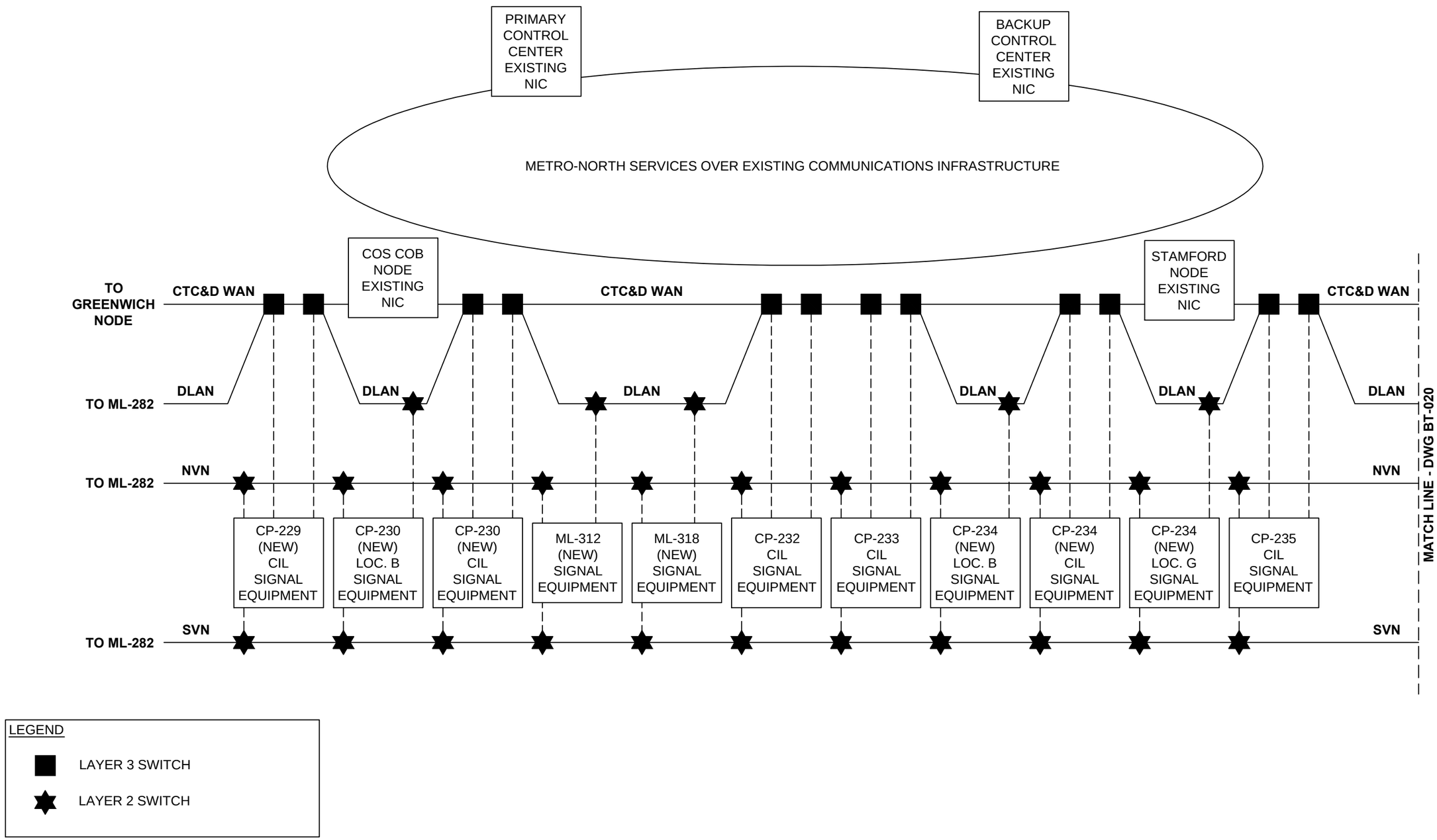

DESIGNED JLB													
DRAWN MN													
CHECKED BP													
APPROVED SW		NO.	DATE		DRWN	CHKD	APPVD	NO.	DATE		DRWN	CHKD	APPVD
		REVISIONS						REVISIONS					

Gannett Fleming Transit & Rail Systems /CWA
GANNETT FLEMING/CWA, a joint venture
TWO PENN PLAZA, SUITE 552
380 SEVENTH AVENUE
NEW YORK, NY 10121-0101
PRJ: 057664

Metro-North Railroad
347 Madison Avenue
New York, N.Y. 10017

TITLE
ENGINEERING AND DESIGN OF CP 229 – CP 241
SIGNAL NETWORK
OVERVIEW BLOCK DIAGRAM 1 OF 2

CONTRACT NO. 1000027511
SCALE
DATE 08–29–14
DRAWING NO. BT-019
SHEET 0600 OF

PRIMARY CONTROL CENTER EXISTING NIC

BACKUP CONTROL CENTER EXISTING NIC

METRO-NORTH SERVICES OVER EXISTING COMMUNICATIONS INFRASTRUCTURE

DARIEN NODE EXISTING NIC

SOUTH NORWALK NODE EXISTING NIC

CTC&D WAN — **CTC&D WAN** — **CTC&D WAN** — **CTC&D WAN** — **TO CP-244**

DLAN — **DLAN** — **DLAN** — **DLAN** — **DLAN** — **TO CP-244**

MATCH LINE - DWG BT-019

NVN — **NVN** — **TO CP-244**

ML-354 (NEW) SIGNAL EQUIPMENT	ML-360 (NEW) SIGNAL EQUIPMENT	ML-369 (NEW) SIGNAL EQUIPMENT	ML-379 (NEW) SIGNAL EQUIPMENT	ML-384 (NEW) SIGNAL EQUIPMENT	ML-393 (NEW) SIGNAL EQUIPMENT	CP-240 CIL SIGNAL EQUIPMENT	CP-241 (NEW) LOC. A SIGNAL EQUIPMENT	CP-241 (NEW) CIL SIGNAL EQUIPMENT	CP-241 (NEW) LOC. C SIGNAL EQUIPMENT

SVN — **SVN** — **TO CP-244**

LEGEND

- LAYER 3 SWITCH
- LAYER 2 SWITCH

DESIGNED	JLB
DRAWN	MN
CHECKED	BP
APPROVED	SW

NO.	DATE		DRWN	CHKD	APPVD

REVISIONS

NO.	DATE		DRWN	CHKD	APPVD

REVISIONS

Gannett Fleming Transit & Rail Systems /CWA
GANNETT FLEMING/CWA, a joint venture
TWO PENN PLAZA, SUITE 552
380 SEVENTH AVENUE
NEW YORK, NY 10121-0101
PRJ: 057684

Metro-North Railroad
347 Madison Avenue
New York, N.Y. 10017

TITLE
ENGINEERING AND DESIGN OF CP 229 – CP 241
SIGNAL NETWORK OVERVIEW BLOCK DIAGRAM 2 OF 2

CONTRACT NO. 1000027511
SCALE
DATE 08–29–14
DRAWING NO. **BT-020**
SHEET 0601 OF

ML282

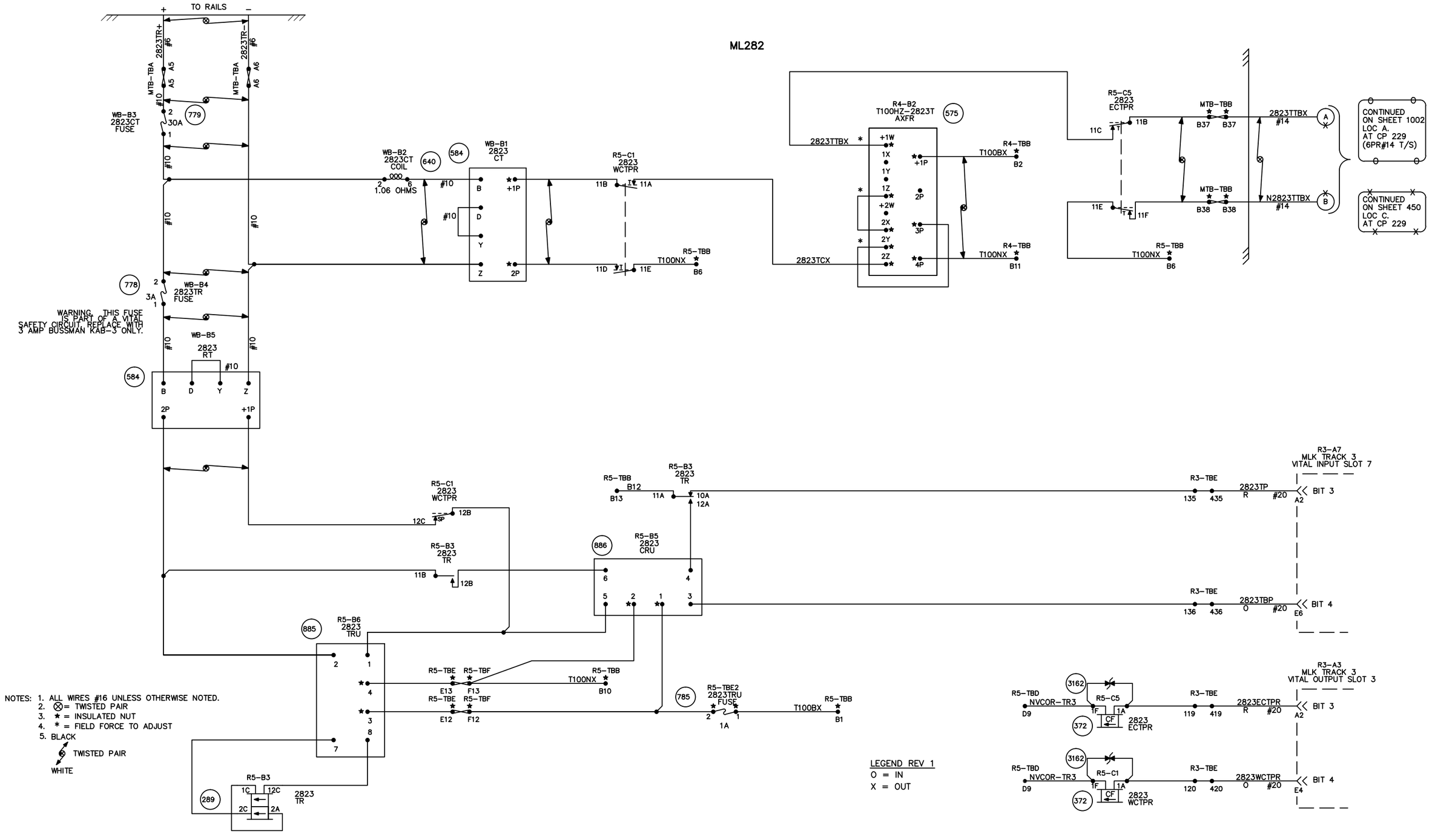

NOTES:
1. ALL WIRES #16 UNLESS OTHERWISE NOTED.
2. ⊗ = TWISTED PAIR
3. ★ = INSULATED NUT
4. * = FIELD FORCE TO ADJUST
5. BLACK ⊗ TWISTED PAIR WHITE

LEGEND REV 1
O = IN
X = OUT

CIRCUIT ENGINEER	SR. SIGNAL ENGR.–DESIGN & STANDARDS	DIRECTOR C&S SYSTEMS	MTA Metro–North Railroad	NEW HAVEN LINE ML–282 TRACK CIRCUIT 2823T	ISSUE DATE: / REV. 10 / \USERS\SIGNAL\NHL\NHL2	NHL–282 SHEET 010 NHL282 L282010

Gannett Fleming/CWA

CONTRACT # 1000027511

PROJECT SHEET # 1000

CP 229 (GREEN)

SIG. 3E,1E,2E,4E 151+925
CB-292 151+925
LOC. A 151+952
42A PS 152+056
31A PS 152+085
LOC. B 152+271
SM1 152+340
42B PS 152+423
31B PS 152+444
21A PS 152+482
LOC. C 152+661
21B PS 152+840
SM2 152+871
CS 152+872
CB-296 153+129
12A PS 152+903
C.I.L. 152+965
LOC. D 153+081
12B PS 153+260
13A PS 153+309
24A PS 153+320
LOC. E 153+316
SM3 153+340
13B PS 153+668
24B PS 153+686
LOC. F 153+675
SIG. 3W,1W,2W,4W 153+725

← TO GRAND CENTRAL TERMINAL

TO NEW HAVEN →

SEE PLAN NHL-282

SEE PLAN NHL-2931000

CB-292

CB-296

CB-298

TRACK 3 — 2823T — 3AT — 3E — 31A — 3A1T — #20 — 1A1T — #20 — 31B — 3ATR — 3BTR — 3W — 3BT — 2913TR — TRACK 3

TRACK 1 — 2821T — 1ATR — 1E — 1AT — 1BT — 1W — 1BTR — 2911TR — TRACK 1

21A — 2A1T — #20 — 1A2T — #20 — 21B

12A — 1B1T — #20 — 2B1T — #20 — 12B

13A — 1B2T — #20 — 3B1T — #20 — 13B

TRACK 2 — 2802T — 2AT — 2E — 2ATR — 2BT — 2W — 2BTR — 2912TR — TRACK 2

42A — 4A1T — #20 — 2A2T — #20 — 42B

24A — 2B2T — #20 — 4B1T — #20 — 24B

TRACK 4 — 2804T — 4AT — 4E — 4ATR — 4BTR — 4W — 4BT — 2914TR — TRACK 4

EXISTING LOC. C — LOC. A — LOC. B — SM1 — LOC. C — SM2 — EXISTING C.I.L. — C.I.L. — LOC. D — LOC. E — SM3 — LOC. F

DESIGNED	CEL
DRAWN	CEL
CHECKED	JJL
APPROVED	XXX

NO.	DATE		DRWN	CHKD	APPVD

REVISIONS

NO.	DATE		DRWN	CHKD	APPVD

REVISIONS

Gannett Fleming Transit & Rail Systems /CWA
GANNETT FLEMING/CWA, a joint venture
TWO PENN PLAZA, SUITE 552
380 SEVENTH AVENUE
NEW YORK, NY 10121-0101
PRJ: 057664

Metro-North Railroad
347 Madison Avenue
New York, N.Y. 10017

TITLE
ENGINEERING AND DESIGN OF
CP 229 – CP 241
CP 229
TRACK LAYOUT

CONTRACT NO. 1000027511
SCALE
DATE 08-29-14
DRAWING NO. NHL2901000
SHEET 1001 OF _

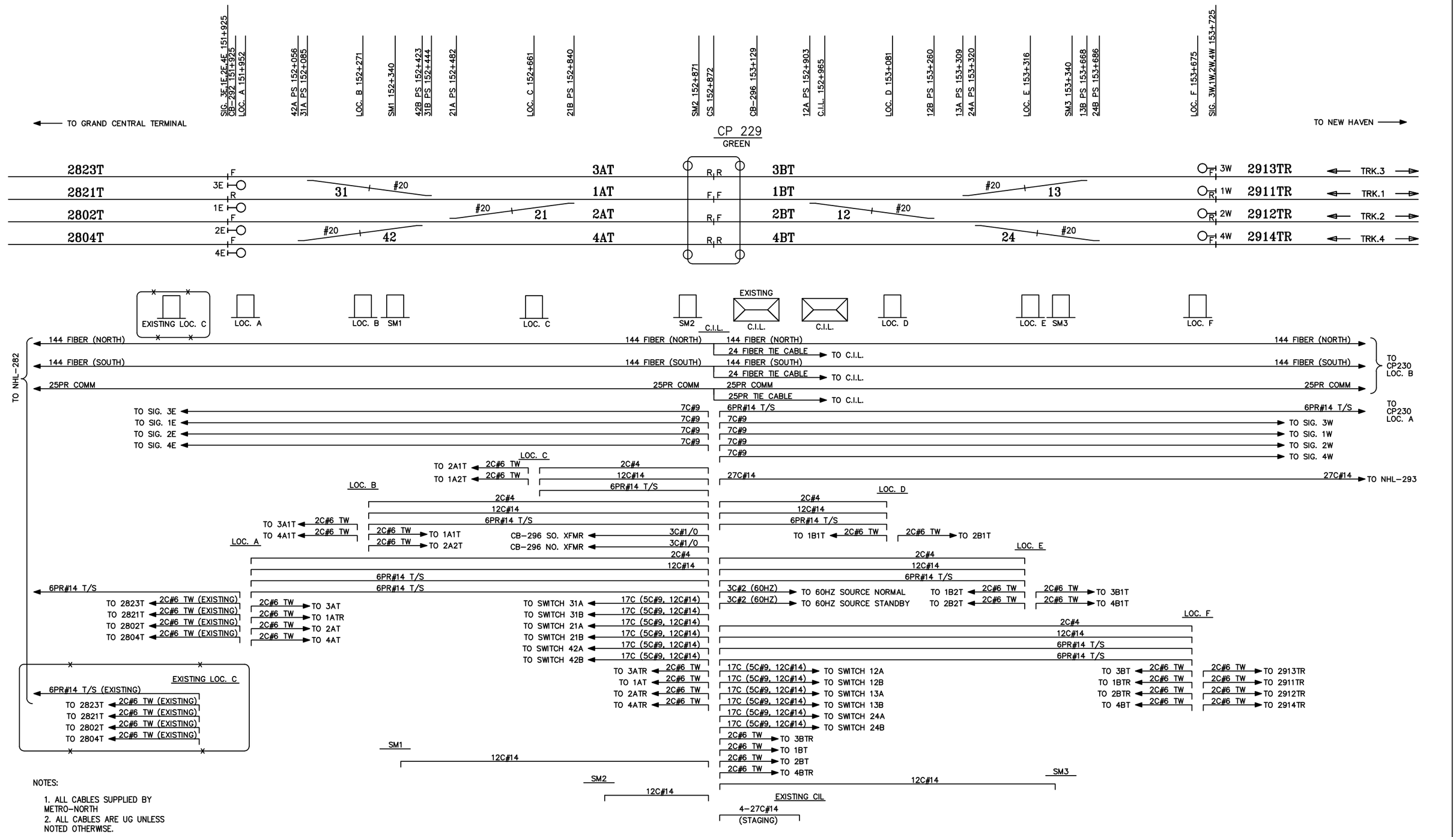

NOTES:

1. ALL CABLES SUPPLIED BY METRO-NORTH
2. ALL CABLES ARE UG UNLESS NOTED OTHERWISE.

DESIGNED	CEL
DRAWN	CEL
CHECKED	JJL
APPROVED	XXX

NO.	DATE		DRWN	CHKD	APPVD	NO.	DATE		DRWN	CHKD	APPVD
REVISIONS						REVISIONS					

Gannett Fleming Transit & Rail Systems /CWA
GANNETT FLEMING/CWA, a joint venture
TWO PENN PLAZA, SUITE 552
380 SEVENTH AVENUE
NEW YORK, NY 10121-0101
PRJ: 057664

Metro-North Railroad
347 Madison Avenue
New York, N.Y. 10017

TITLE
ENGINEERING AND DESIGN OF CP 229 – CP 241

CP 229
CABLE PLAN

CONTRACT NO. 1000027511
SCALE
DATE 08-29-14
DRAWING NO. NHL2901001
SHEET 1002 OF _

CP 229

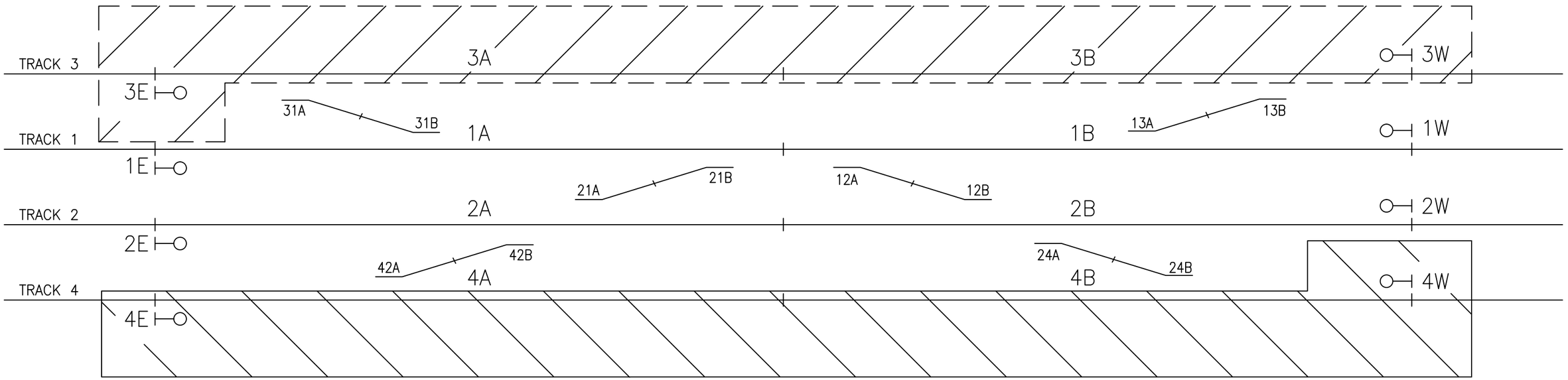

TRACK 3 ZONED PROCESSORS ZONE 1

TRACKS 1 & 2 ZONED PROCESSORS ZONE 2

TRACK 4 ZONED PROCESSORS ZONE 3

DESIGNED	RRL
DRAWN	DSL
CHECKED	JJL
APPROVED	GAL

NO.	DATE		DRWN	CHKD	APPVD	NO.	DATE		DRWN	CHKD	APPVD
REVISIONS						REVISIONS					

Gannett Fleming Transit & Rail Systems /CWA
GANNETT FLEMING/CWA, a joint venture
TWO PENN PLAZA, SUITE 552
380 SEVENTH AVENUE
NEW YORK, NY 10121-0101
PRJ: 057664

Metro-North Railroad
347 Madison Avenue
New York, N.Y. 10017

TITLE
ENGINEERING AND DESIGN OF
CP 229 – CP 241

CP 229
MICROPROCESSOR ZONING PLAN

CONTRACT NO. 1000027511
SCALE
DATE 08-29-14
DRAWING NO. NHL2901002
SHEET 1003 OF _

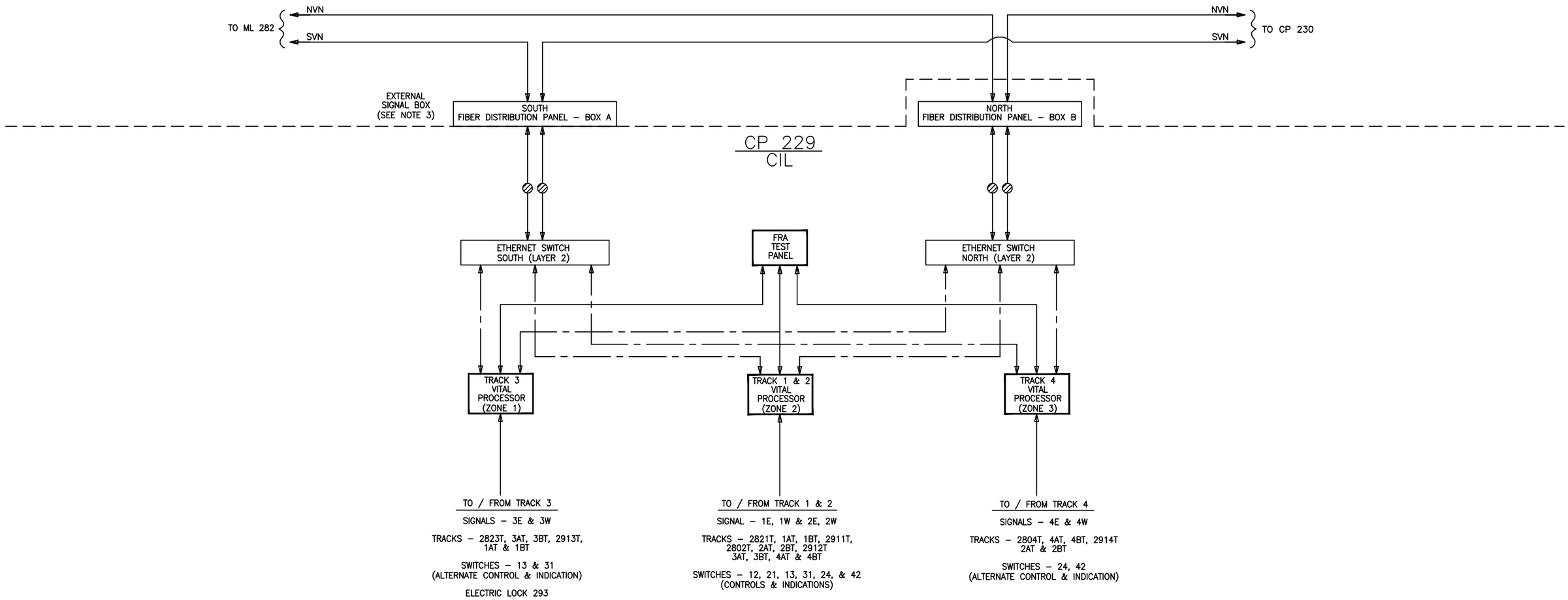

KEY

= VITAL DISCRETE I/O
= SERIAL LINK
= ETHERNET LINK
= FIBER OPTIC LINK (2 STRANDS)

NOTES:

1. TYPICAL CIRCUITS SHOWN ARE BASED UPON SPECIFIC VITAL PROCESSOR INTERLOCKING PRODUCTS AND ARE INTENDED TO DEFINE THE TYPES OF INTERFACE REQUIRED. CONTRACTOR SHALL PROVIDE DESIGN IN ACCORDANCE WITH ALL SPECIFICATION REQUIREMENTS AND BASED UPON SPECIFIC SIGNAL EQUIPMENT TO BE SUPPLIED.
2. ETHERNET SWITCHES SHALL BE POWERED THROUGH DC TO DC CONVERTER.
3. THE EXTERNAL SIGNAL BOX ILLUSTRATED ON THIS SHEET IS THE SAME BOX AS SHOWN ON THE NON VITAL MICROPROCESSOR BLOCK DIAGRAM.

DESIGNED	RRL
DRAWN	CBH
CHECKED	JJL
APPROVED	XXX

NO.	DATE		DRWN	CHKD	APPVD	NO.	DATE		DRWN	CHKD	APPVD
REVISIONS						REVISIONS					

Gannett Fleming Transit & Rail Systems / CWA
GANNETT FLEMING/CWA, a joint venture
TWO PENN PLAZA, SUITE 552
380 SEVENTH AVENUE
NEW YORK, NY 10121-0101
PRJ: 057664

Metro-North Railroad
347 Madison Avenue
New York, N.Y. 10017

TITLE
ENGINEERING AND DESIGN OF CP 229 – CP 241
CP 229
MICROPROCESSOR BLOCK DIAGRAM

CONTRACT NO. 1000027511
SCALE
DATE 08-29-14
DRAWING NO. NHL2901003
SHEET 1004 OF _

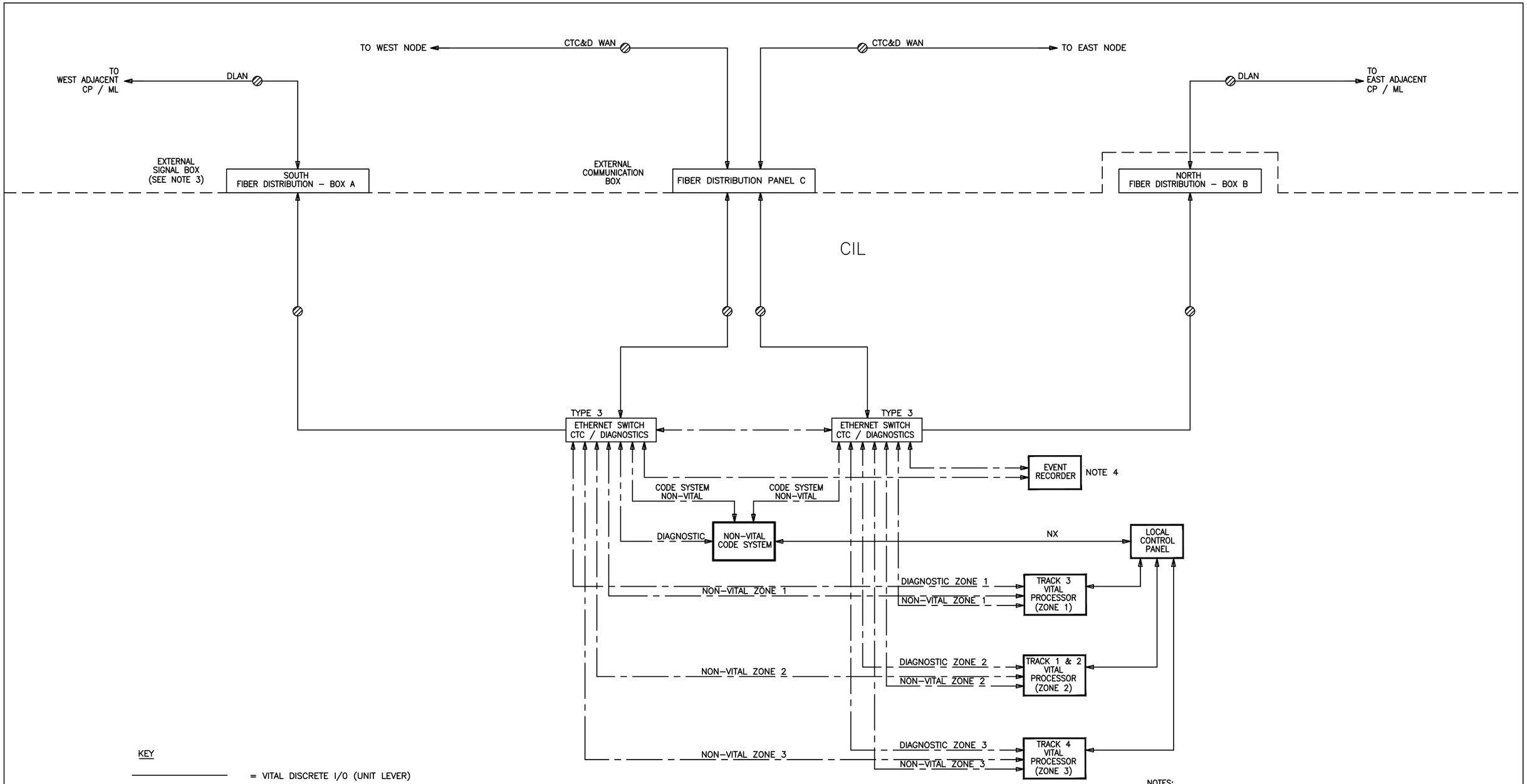

KEY

= VITAL DISCRETE I/O (UNIT LEVER)

= SERIAL LINK

= ETHERNET LINK

= FIBER OPTIC LINK (2 STRANDS)

SEC = SERIAL TO ETHERNET CONVERTER

NOTES:

1. TYPICAL CIRCUITS SHOWN ARE BASED UPON SPECIFIC VITAL PROCESSOR INTERLOCKING PRODUCTS AND ARE INTENDED TO DEFINE THE TYPES OF INTERFACE REQUIRED. CONTRACTOR SHALL PROVIDE DESIGN IN ACCORDANCE WITH ALL SPECIFICATION REQUIREMENTS AND BASED UPON SPECIFIC SIGNAL EQUIPMENT TO BE SUPPLIED.
2. ETHERNET SWITCHES SHALL BE POWERED THROUGH DC TO DC CONVERTER.
3. THE EXTERNAL SIGNAL BOX ILLUSTRATED ON THIS SHEET IS THE SAME BOX AS SHOWN ON THE VITAL MICROPROCESSOR BLOCK DIAGRAM.
4. REQUIRED ONLY IF CONTRACTOR'S VITAL PROCESSOR INTERNAL EVENT RECORER DOES NOT MEET THE REQUIREMENTS OF TECHNICAL SPECIFICATIONS.

DESIGNED RRL													
DRAWN CBH													
CHECKED JJL													
APPROVED XXX													
		NO.	DATE		DRWN	CHKD	APPVD	NO.	DATE		DRWN	CHKD	APPVD
		REVISIONS						REVISIONS					

Gannett Fleming Transit & Rail Systems / CWA
GANNETT FLEMING/CWA, a joint venture
TWO PENN PLAZA, SUITE 552
380 SEVENTH AVENUE
NEW YORK, NY 10121–0101
PRJ: 057664

MTA Metro-North Railroad
347 Madison Avenue
New York, N.Y. 10017

TITLE
ENGINEERING AND DESIGN OF CP 229 – CP 241
CP 229
NON-VITAL MICROPROCESSOR BLOCK DIAGRAM

CONTRACT NO. 1000027511
SCALE
DATE 08–29–14
DRAWING NO. NHL2901004
SHEET 1005 OF _

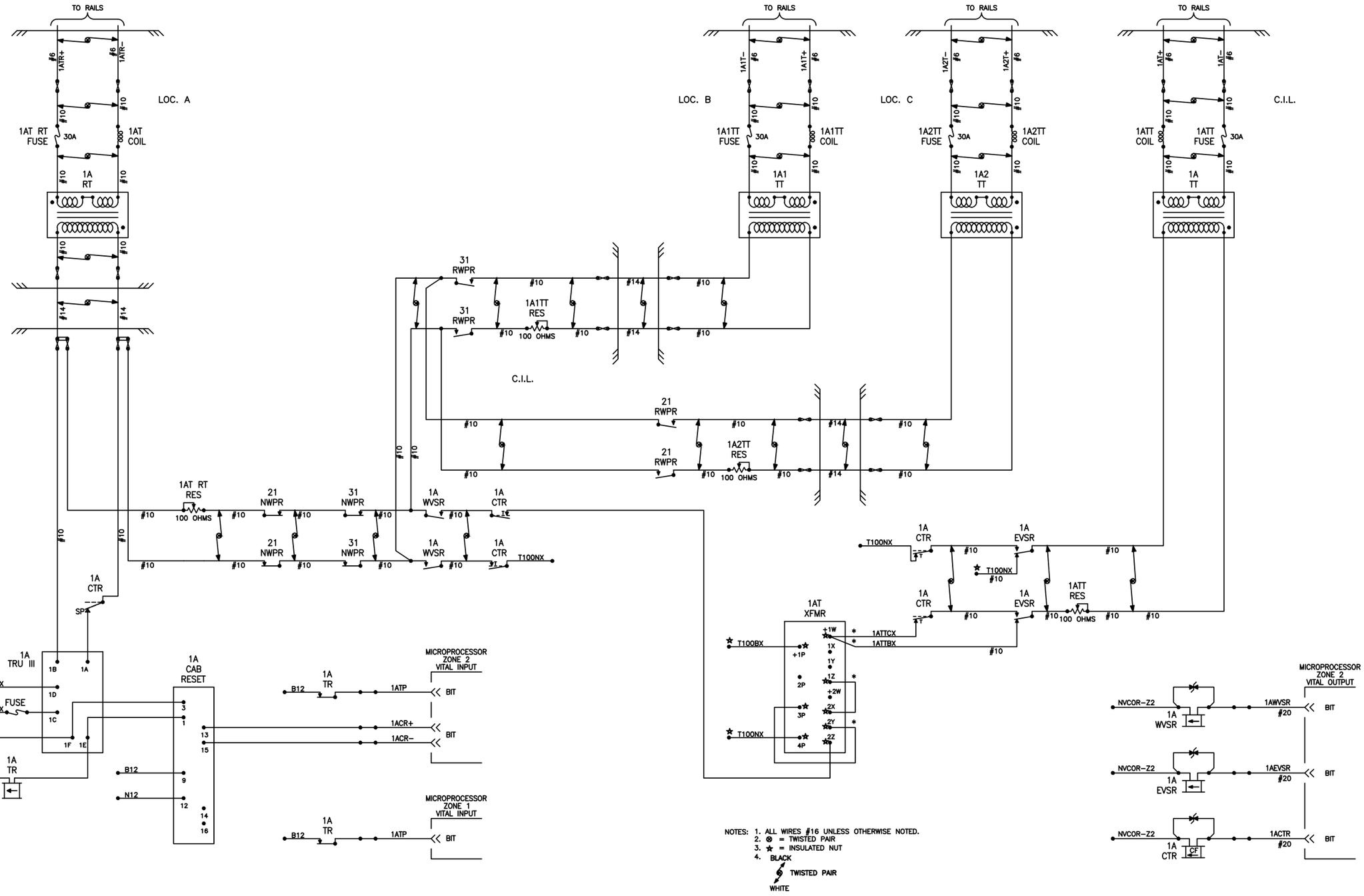

DESIGNED RRL		NO.	DATE		DRWN	CHKD	APPVD	NO.	DATE		DRWN	CHKD	APPVD
DRAWN CBH													
CHECKED JJL													
APPROVED XXX				REVISIONS						REVISIONS			

Gannett Fleming Transit & Rail Systems / CWA
GANNETT FLEMING/CWA, a joint venture
TWO PENN PLAZA, SUITE 552
380 SEVENTH AVENUE
NEW YORK, NY 10121-0101
PRJ: 057664

Metro-North Railroad
347 Madison Avenue
New York, N.Y. 10017

TITLE
ENGINEERING AND DESIGN OF CP 229 – CP 241
CP 229
INTERLOCKING TRACK CIRCUIT
TRACK 1AT

CONTRACT NO. 1000027511
SCALE
DATE 08-29-14
DRAWING NO. NHL2901005
SHEET 1006 OF _

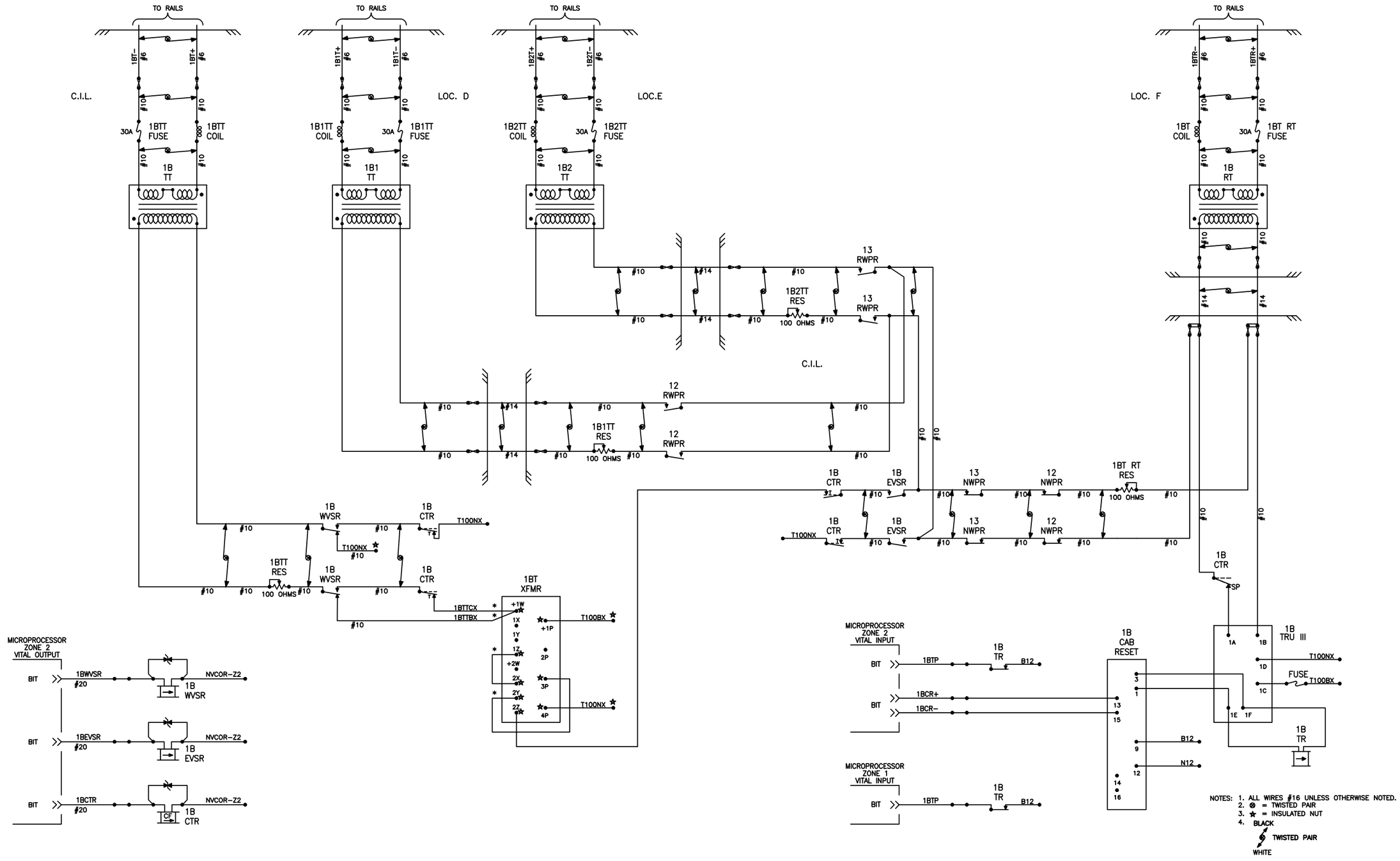

DESIGNED	RRL
DRAWN	CBH
CHECKED	JJL
APPROVED	XXX

NO.	DATE		DRWN	CHKD	APPVD	NO.	DATE		DRWN	CHKD	APPVD
REVISIONS						REVISIONS					

Gannett Fleming Transit & Rail Systems /CWA
GANNETT FLEMING/CWA, a joint venture
TWO PENN PLAZA, SUITE 552
380 SEVENTH AVENUE
NEW YORK, NY 10121-0101
PRJ: 057664

Metro-North Railroad
347 Madison Avenue
New York, N.Y. 10017

TITLE
ENGINEERING AND DESIGN OF
CP 229 – CP 241

CP 229
INTERLOCKING TRACK CIRCUIT
TRACK 1BT

CONTRACT NO. 1000027511
SCALE
DATE 08-29-14
DRAWING NO. NHL2901006
SHEET 1007 OF _

C.I.L.

NOTES:

1. ALL WIRES TO MOTOR ARE #9 COPPER.
2. PREDETERMINED MAXIMUM TIME INTERNAL TO COMPLETE SWITCH MOVEMENT SHALL BE PROGRAMED IN VITAL PROCESSOR LOGIC TO REPLACE CONVENTIONAL SWITCH OVERLOAD CIRCUIT.
3. TYPICAL CIRCUITS SHOWN ARE BASED UPON SPECIFIC VITAL PROCESSOR INTERLOCKING PRODUCTS AND ARE INTENDED TO DEFINE THE TYPES OF INTERFACE REQUIRED. CONTRACTOR SHALL PROVIDE DESIGN IN ACCORDANCE WITH ALL SPECIFICATION REQUIREMENTS AND BASED UPON SPECIFIC SIGNAL EQUIPMENT TO BE SUPPLIED.
4. SECONDARY PROCESSOR CONTROLS ARE NOT REQUIRED FOR SWITCH 12 AND SWITCH 21.

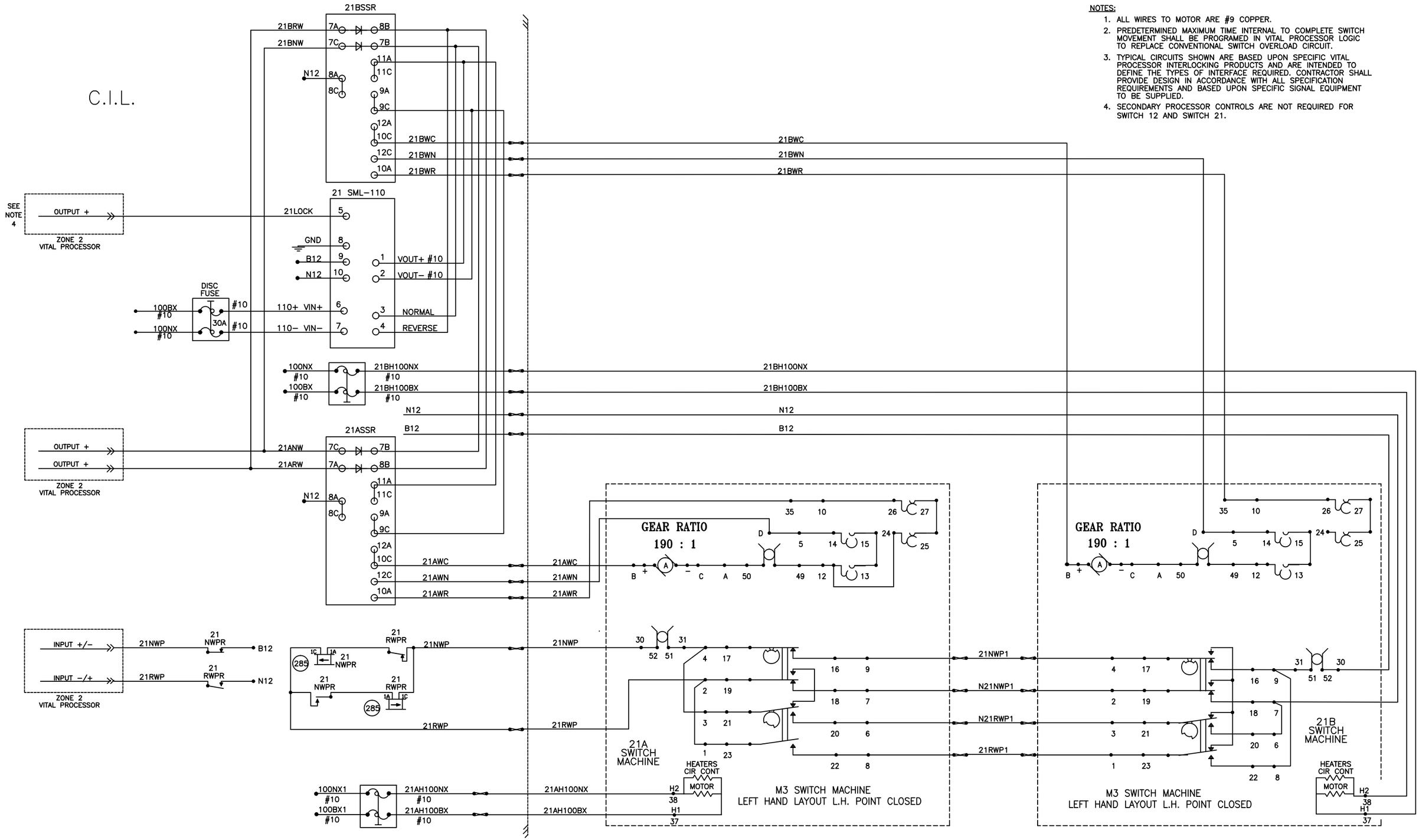

DESIGNED NJD													
DRAWN NJD													
CHECKED JJL													
APPROVED XXX													
		NO.	DATE		DRWN	CHKD	APPVD	NO.	DATE		DRWN	CHKD	APPVD
		REVISIONS						REVISIONS					

Gannett Fleming Transit & Rail Systems / CWA
GANNETT FLEMING/CWA, a joint venture
TWO PENN PLAZA, SUITE 552
380 SEVENTH AVENUE
NEW YORK, NY 10121–0101
PRJ: 057664

Metro-North Railroad
347 Madison Avenue
New York, N.Y. 10017

TITLE
ENGINEERING AND DESIGN OF CP 229 – CP 241
CP 229
SWITCH CONTROL AND INDICATION 21

CONTRACT NO. 1000027511
SCALE NONE
DATE 08–29–14
DRAWING NO. NHL2901007
SHEET 1008 OF _

C.I.L.

NOTES:

1. ALL WIRES TO MOTOR ARE #9 COPPER.
2. PREDETERMINED MAXIMUM TIME INTERNAL TO COMPLETE SWITCH MOVEMENT SHALL BE PROGRAMED IN VITAL PROCESSOR LOGIC TO REPLACE CONVENTIONAL SWITCH OVERLOAD CIRCUIT.
3. TYPICAL CIRCUITS SHOWN ARE BASED UPON SPECIFIC VITAL PROCESSOR INTERLOCKING PRODUCTS AND ARE INTENDED TO DEFINE THE TYPES OF INTERFACE REQUIRED. CONTRACTOR SHALL PROVIDE DESIGN IN ACCORDANCE WITH ALL SPECIFICATION REQUIREMENTS AND BASED UPON SPECIFIC SIGNAL EQUIPMENT TO BE SUPPLIED.
4. SECONDARY PROCESSOR CONTROLS ARE NOT REQUIRED FOR SWITCH 12 AND SWITCH 21.

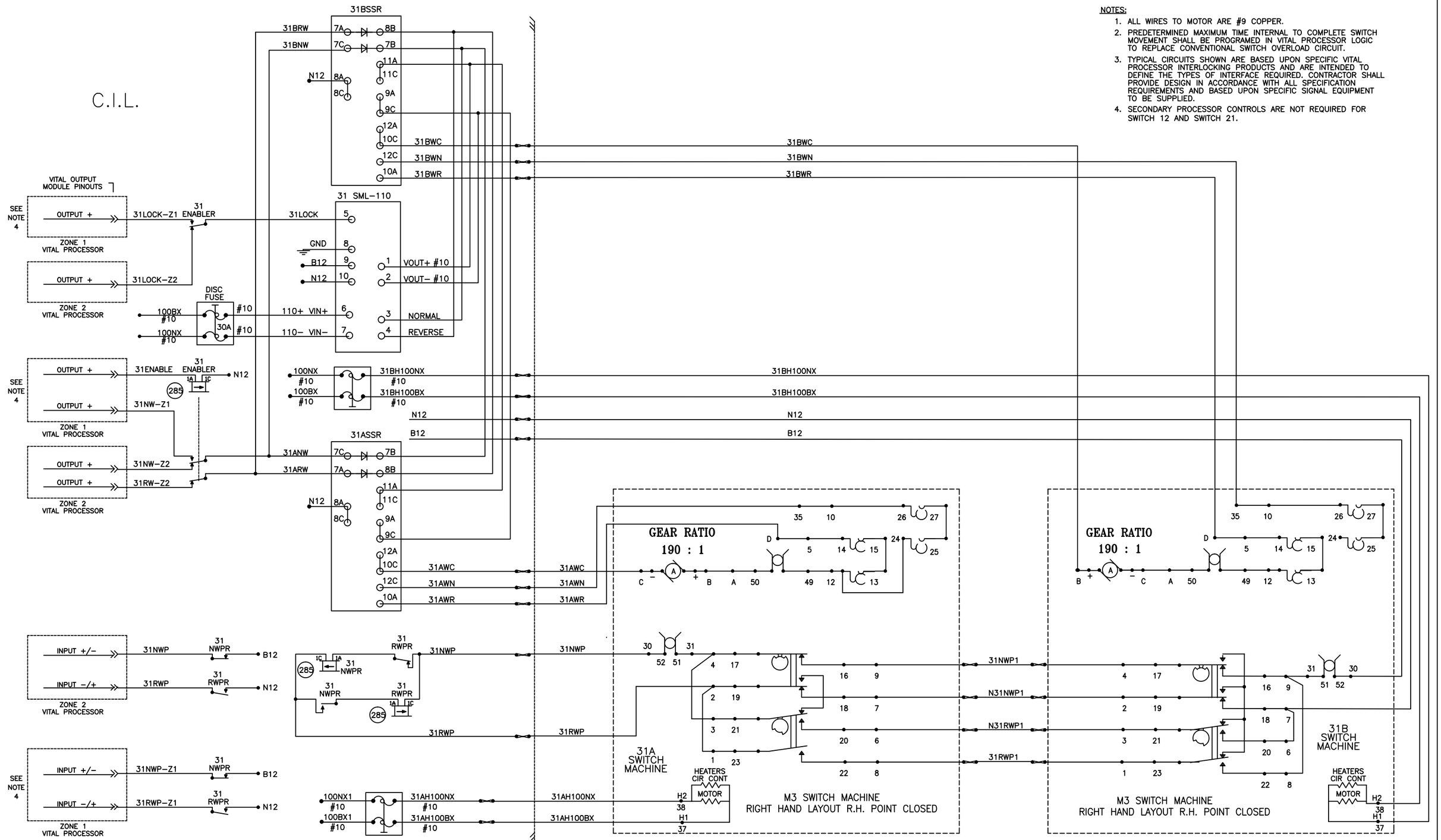

DESIGNED NJD													
DRAWN NJD													
CHECKED JJL													
APPROVED XXX													
		NO.	DATE		DRWN	CHKD	APPVD	NO.	DATE		DRWN	CHKD	APPVD
		REVISIONS						REVISIONS					

Gannett Fleming Transit & Rail Systems / CWA
GANNETT FLEMING/CWA, a joint venture
TWO PENN PLAZA, SUITE 552
380 SEVENTH AVENUE
NEW YORK, NY 10121-0101
PRJ: 057664

MTA Metro-North Railroad
347 Madison Avenue
New York, N.Y. 10017

TITLE
ENGINEERING AND DESIGN OF CP 229 – CP 241
CP 229
SWITCH CONTROL AND INDICATION 31

CONTRACT NO. 1000027511
SCALE NONE
DATE 08-29-14
DRAWING NO. NHL2901008
SHEET 1009 OF _

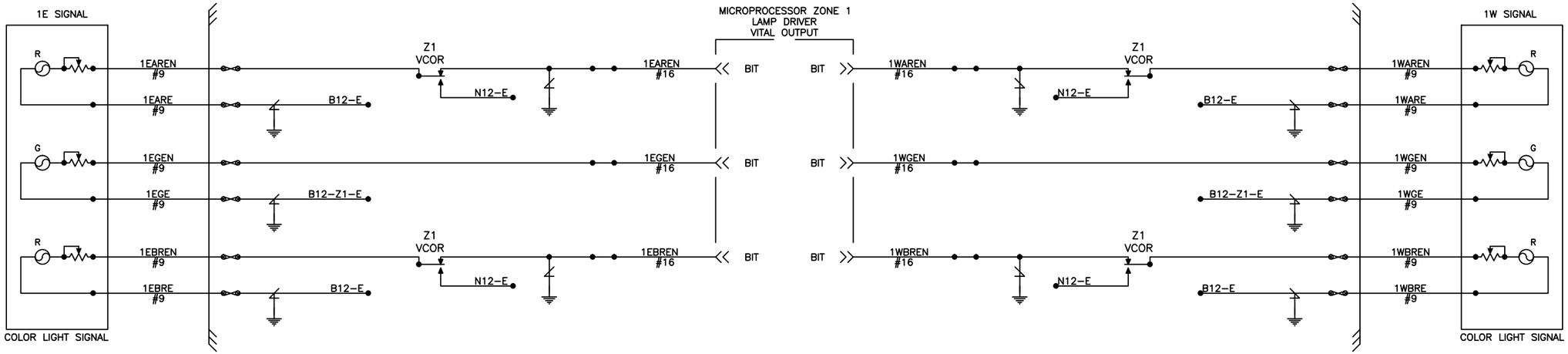

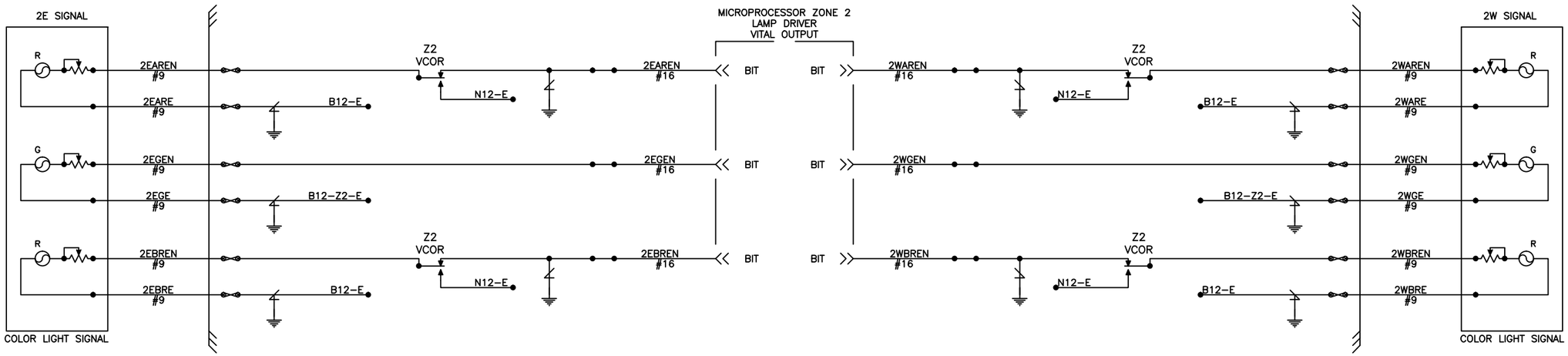

NOTES:

1.) ALL WIRES 10 AWG. UNLESS NOTED.

2.) SIGNAL LAMPS ARE RATED FOR 18 WATTS AT 10 VOLTS.

DESIGNED RRL													
DRAWN DSL													
CHECKED JJL													
APPROVED XXX													
		NO.	DATE		DRWN	CHKD	APPVD	NO.	DATE		DRWN	CHKD	APPVD
		REVISIONS						REVISIONS					

Gannett Fleming Transit & Rail Systems / CWA
GANNETT FLEMING/CWA, a joint venture
TWO PENN PLAZA, SUITE 552
380 SEVENTH AVENUE
NEW YORK, NY 10121–0101
PRJ: 057664

Metro-North Railroad
347 Madison Avenue
New York, N.Y. 10017

TITLE
ENGINEERING AND DESIGN OF CP 229 – CP 241
CP 229
SIGNAL LIGHTING 3E, 3W, 1E, 1W

CONTRACT NO. 1000027511
SCALE
DATE 08–29–14
DRAWING NO. **NHL2901009**
SHEET 1010 OF _

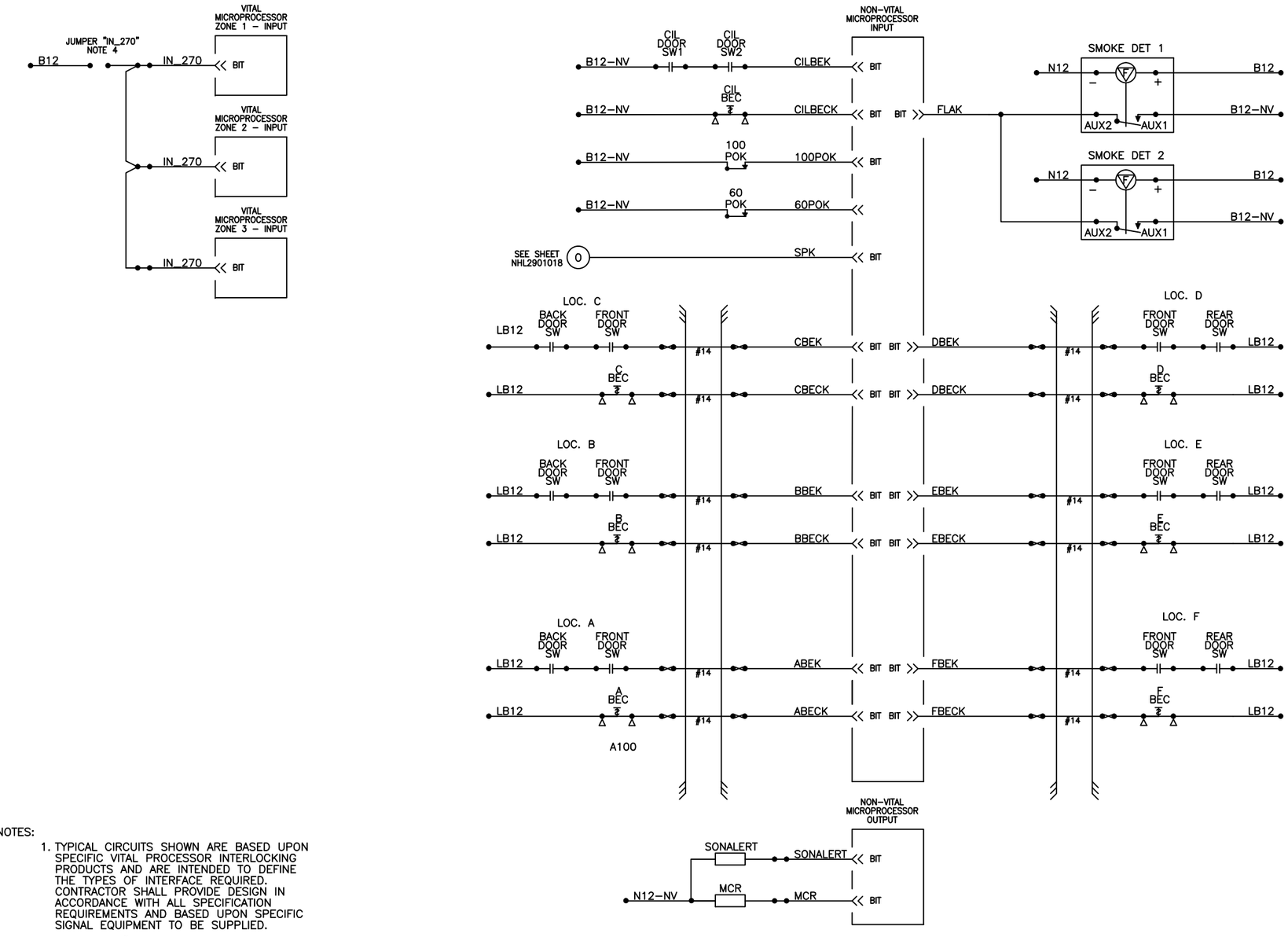

NOTES:

1. TYPICAL CIRCUITS SHOWN ARE BASED UPON SPECIFIC VITAL PROCESSOR INTERLOCKING PRODUCTS AND ARE INTENDED TO DEFINE THE TYPES OF INTERFACE REQUIRED. CONTRACTOR SHALL PROVIDE DESIGN IN ACCORDANCE WITH ALL SPECIFICATION REQUIREMENTS AND BASED UPON SPECIFIC SIGNAL EQUIPMENT TO BE SUPPLIED.
2. ALL WIRES #16 UNLESS NOTED.
3. INPUT, OUTPUT AND POWER WIRES TO BE PUT IN SEPERATE BUNDLES.
4. INSTALL JUMPER "IN_270" AFTER ALL VEHICLES THAT CAN OPERATE ARE EQUIPPED FOR 270 CODE.

DESIGNED	CEL
DRAWN	CEL
CHECKED	JJL
APPROVED	XXX

NO.	DATE		DRWN	CHKD	APPVD

REVISIONS

NO.	DATE		DRWN	CHKD	APPVD

REVISIONS

Gannett Fleming Transit & Rail Systems / CWA
GANNETT FLEMING/CWA, a joint venture
TWO PENN PLAZA, SUITE 552
380 SEVENTH AVENUE
NEW YORK, NY 10121–0101
PRJ: 057664

Metro-North Railroad
347 Madison Avenue
New York, N.Y. 10017

TITLE
ENGINEERING AND DESIGN OF CP 229 – CP 241

CP 229
MISCELLANEOUS CIRCUITS

CONTRACT NO.	1000027511
SCALE	NONE
DATE	08–29–14
DRAWING NO.	NHL2901010
SHEET	1011 OF _

C.I.L.

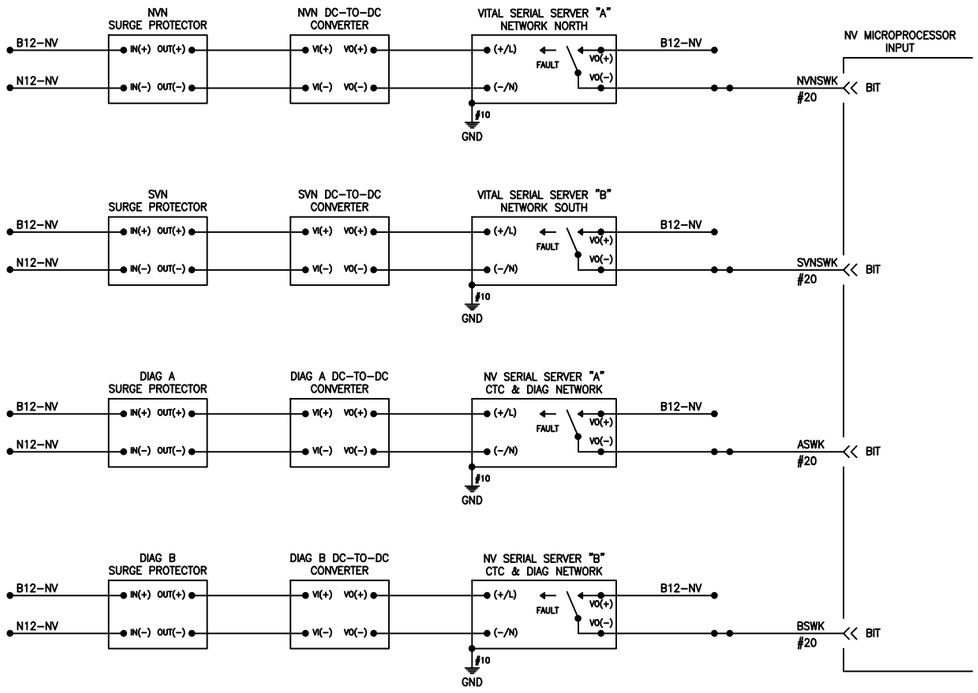

LOC OR ML

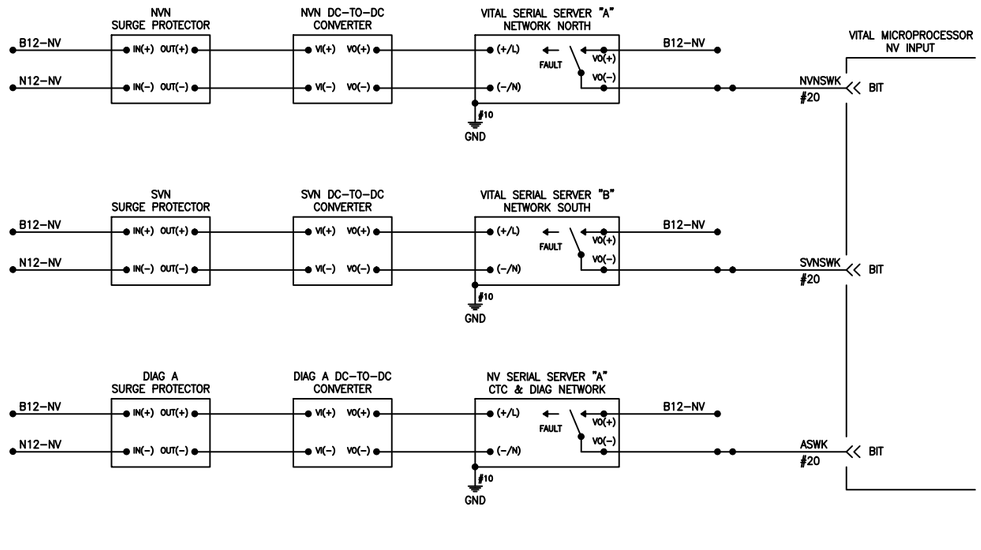

NOTES:

1. TYPICAL CIRCUITS SHOWN ARE BASED UPON SPECIFIC VITAL & NONVITAL PROCESSOR INTERLOCKING PRODUCTS AND ARE INTENDED TO DEFINE THE TYPES OF INTERFACE REQUIRED. CONTRACTOR SHALL PROVIDE DESIGN IN ACCORDANCE WITH ALL SPECIFICATION REQUIREMENTS AND BASED UPON SPECIFIC SIGNAL EQUIPMENT TO BE SUPPLIED.
2. ALL WIRES #16 UNLESS NOTED.
3. INPUT, OUTPUT AND POWER WIRES TO BE PUT IN SEPERATE BUNDLES.

DESIGNED CEL													
DRAWN CEL													
CHECKED JJL													
APPROVED XXX													
		NO.	DATE	REVISIONS	DRWN	CHKD	APPVD	NO.	DATE	REVISIONS	DRWN	CHKD	APPVD

Gannett Fleming Transit & Rail Systems / CWA
GANNETT FLEMING/CWA, a joint venture
TWO PENN PLAZA, SUITE 552
380 SEVENTH AVENUE
NEW YORK, NY 10121–0101
PRJ: 057664

Metro-North Railroad
347 Madison Avenue
New York, N.Y. 10017

TITLE
ENGINEERING AND DESIGN OF
CP 229 – CP 241

CP 229
ETHERNET POWER CIRCUITS

CONTRACT NO. 1000027511
SCALE NONE
DATE 08–29–14
DRAWING NO. **NHL2901011**
SHEET 1012 OF _

C.I.L.

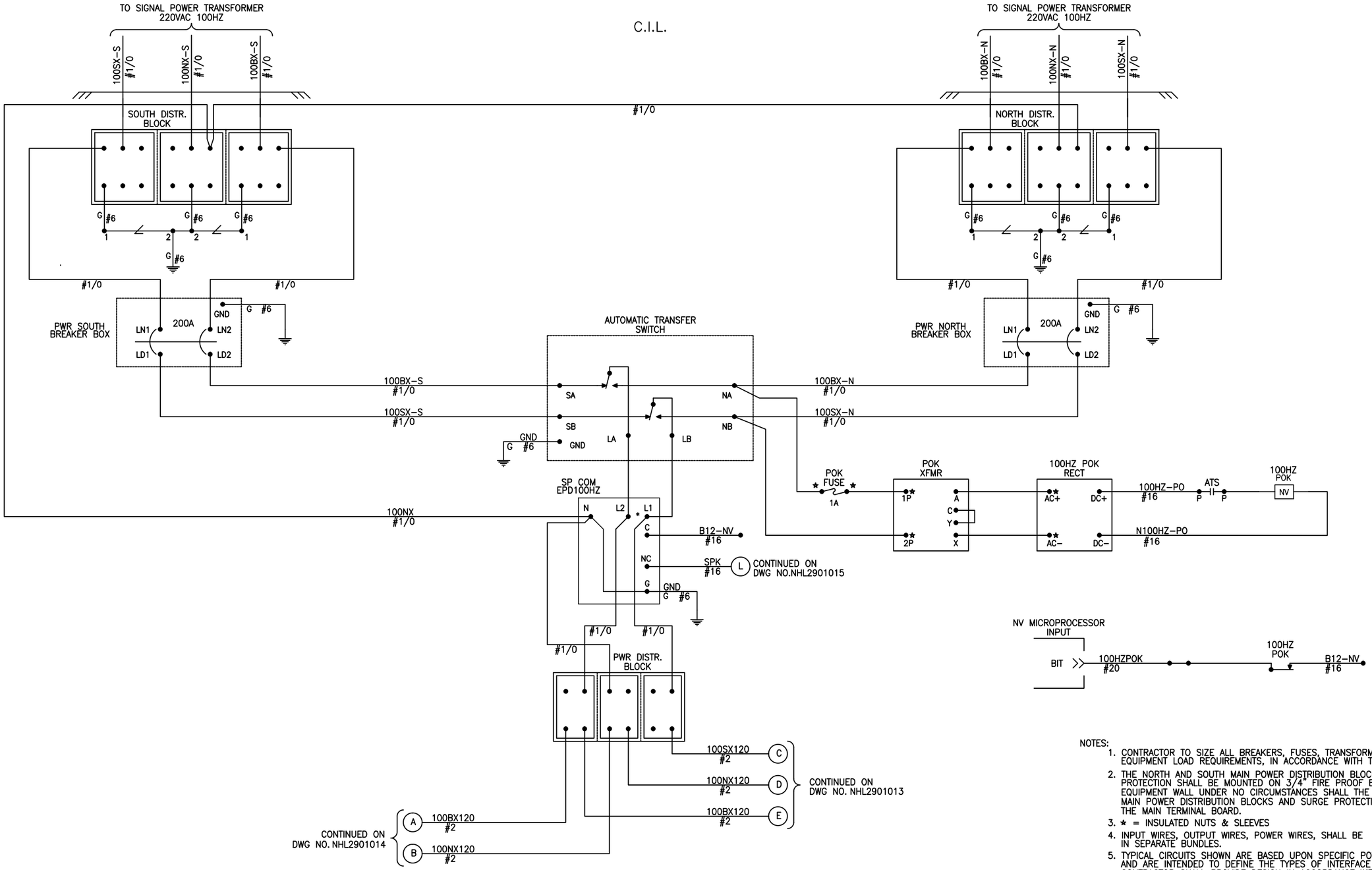

NOTES:

1. CONTRACTOR TO SIZE ALL BREAKERS, FUSES, TRANSFORMERS & WIRE PER EQUIPMENT LOAD REQUIREMENTS, IN ACCORDANCE WITH THE SPECIFICATIONS.
2. THE NORTH AND SOUTH MAIN POWER DISTRIBUTION BLOCKS AND SURGE PROTECTION SHALL BE MOUNTED ON 3/4" FIRE PROOF BOARD ON THE EQUIPMENT WALL UNDER NO CIRCUMSTANCES SHALL THE NORTH AND SOUTH MAIN POWER DISTRIBUTION BLOCKS AND SURGE PROTECTION BE MOUNTED ON THE MAIN TERMINAL BOARD.
3. * = INSULATED NUTS & SLEEVES
4. INPUT WIRES, OUTPUT WIRES, POWER WIRES, SHALL BE IN SEPARATE BUNDLES.
5. TYPICAL CIRCUITS SHOWN ARE BASED UPON SPECIFIC POWER PRODUCTS AND ARE INTENDED TO DEFINE THE TYPES OF INTERFACE REQUIRED. CONTRACTOR SHALL PROVIDE DESIGN IN ACCORDANCE WITH ALL SPECIFICATION REQUIREMENTS AND BASED UPON SPECIFIC POWER DEVICES TO BE SUPPLIED.
6. CIRCUITS SHOWN ARE TYPICAL FOR HOUSES WITH VITAL MICROPROCESSORS.

DESIGNED RRL													
DRAWN RRL													
CHECKED JJL													
APPROVED XXX													
		NO.	DATE		DRWN	CHKD	APPVD	NO.	DATE		DRWN	CHKD	APPVD
		REVISIONS						REVISIONS					

Gannett Fleming Transit & Rail Systems / CWA
GANNETT FLEMING/CWA, a joint venture
TWO PENN PLAZA, SUITE 552
380 SEVENTH AVENUE
NEW YORK, NY 10121-0101
PRJ: 057664

Metro-North Railroad
347 Madison Avenue
New York, N.Y. 10017

TITLE
ENGINEERING AND DESIGN OF
CP 229 – CP 241
CP 229
CIL 100HZ TRANSFER SWITCH

CONTRACT NO. 1000027511
SCALE NONE
DATE 08-29-14
DRAWING NO. NHL2901012
SHEET 1013 OF _

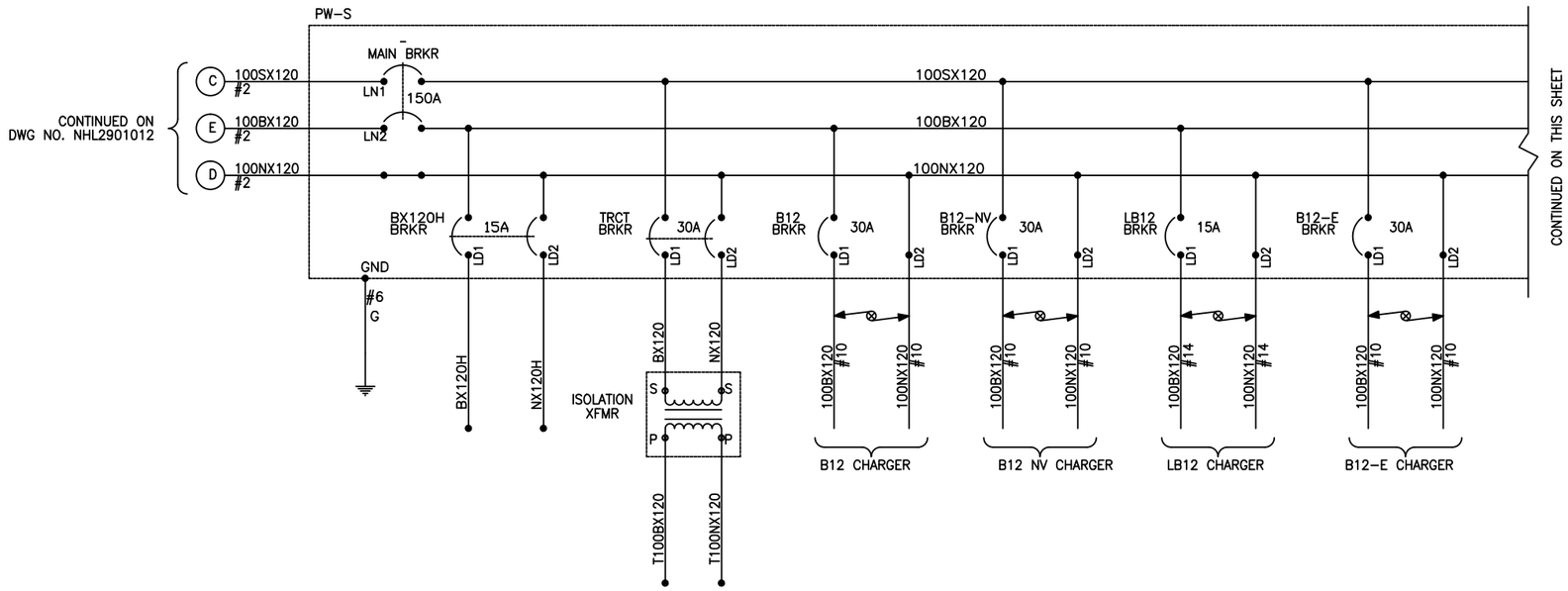

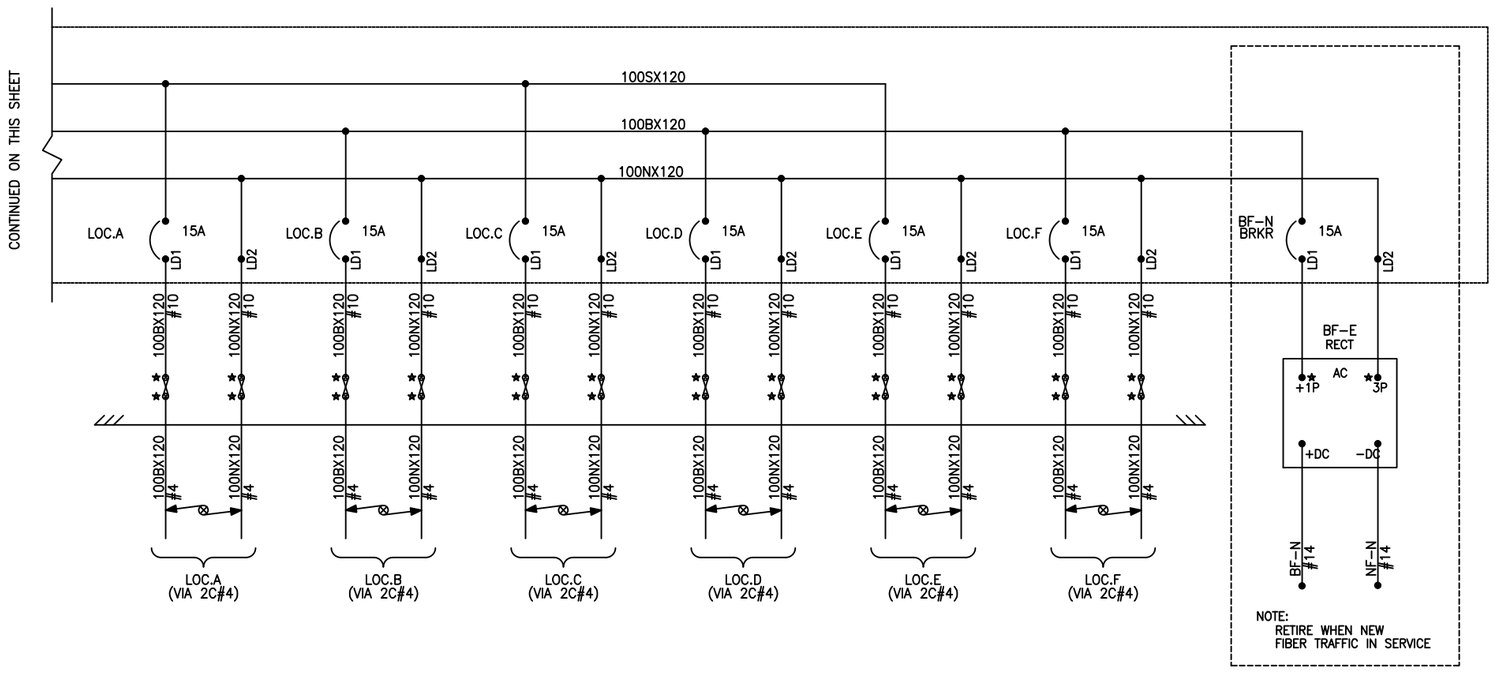

NOTES:

1. CONTRACTOR TO SIZE ALL BREAKERS, FUSES & WIRE PER EQUIPMENT LOAD REQUIREMENTS, IN ACCORDANCE WITH THE SPECIFICATIONS.
2. BATTERIES/RECTIFIERS SHALL BE PROVIDED AS REQUIRED BY DETAILED DESIGN AND IN ACCORDANCE WITH THE SPECIFICATIONS.
3. EXTERNAL CURRENT MONITORS ARE REQUIRED IF EQUIVALENT FUNCTION CANNOT BE PROVIDED INTERNALLY IN BATTERY CHARGER.
4. ★ = INSULATED NUTS & SLEEVES
5. INPUT WIRES, OUTPUT WIRES, POWER WIRES, SHALL BE IN SEPARATE BUNDLES.
6. TYPICAL CIRCUITS SHOWN ARE BASED UPON SPECIFIC DC POWER PRODUCTS AND ARE INTENDED TO DEFINE THE TYPES OF INTERFACE REQUIRED. CONTRACTOR SHALL PROVIDE DESIGN IN ACCORDANCE WITH ALL SPECIFICATION REQUIREMENTS AND BASED UPON SPECIFIC POWER AND MONITORING EQUIPMENT TO BE SUPPLIED.
6. CIRCUITS SHOWN ARE TYPICAL FOR HOUSES WITH VITAL MICROPROCESSORS.

DESIGNED RRL													
DRAWN RRL													
CHECKED JJL													
APPROVED XXX													
		NO.	DATE		DRWN	CHKD	APPVD	NO.	DATE		DRWN	CHKD	APPVD
		REVISIONS						REVISIONS					

Gannett Fleming Transit & Rail Systems / CWA
GANNETT FLEMING/CWA, a joint venture
TWO PENN PLAZA, SUITE 552
380 SEVENTH AVENUE
NEW YORK, NY 10121-0101
PRJ: 057664

Metro-North Railroad
347 Madison Avenue
New York, N.Y. 10017

TITLE
ENGINEERING AND DESIGN OF
CP 229 – CP 241
CP 229
CIL 100HZ POWER DISTRIBUTION

CONTRACT NO. 1000027511
SCALE NONE
DATE 08-29-14
DRAWING NO. NHL2901013
SHEET 1014 OF _

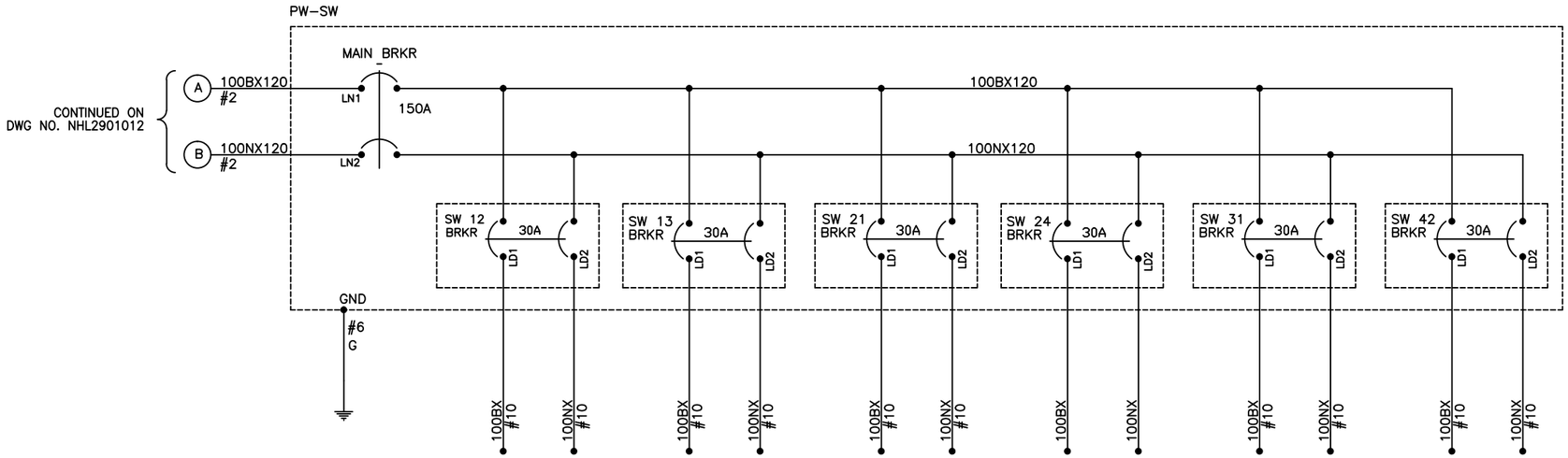

NOTES:

1. CONTRACTOR TO SIZE ALL BREAKERS, FUSES & WIRE PER EQUIPMENT LOAD REQUIREMENTS, IN ACCORDANCE WITH THE SPECIFICATIONS.
2. BATTERIES/RECTIFIERS SHALL BE PROVIDED AS REQUIRED BY DETAILED DESIGN AND IN ACCORDANCE WITH THE SPECIFICATIONS.
3. EXTERNAL CURRENT MONITORS ARE REQUIRED IF EQUIVALENT FUCTION CANNOT BE PROVIDED INTERNALLY IN BATTERY CHARGER.
4. ⋆ = INSULATED NUTS & SLEEVES
5. INPUT WIRES, OUTPUT WIRES, POWER WIRES, SHALL BE IN SEPARATE BUNDLES.
6. TYPICAL CIRCUITS SHOWN ARE BASED UPON SPECIFIC POWER PRODUCTS AND ARE INTENDED TO DEFINE THE TYPES OF INTERFACE REQUIRED. CONTRACTOR SHALL PROVIDE DESIGN IN ACCORDANCE WITH ALL SPECIFICATION REQUIREMENTS AND BASED UPON SPECIFIC POWER DEVICES TO BE SUPPLIED.
7. CIRCUITS SHOWN ARE TYPICAL FOR HOUSES WITH VITAL MICROPROCESSORS.

DESIGNED	RRL
DRAWN	RRL
CHECKED	JJL
APPROVED	XXX

NO.	DATE		DRWN	CHKD	APPVD
		REVISIONS			

NO.	DATE		DRWN	CHKD	APPVD
		REVISIONS			

Gannett Fleming Transit & Rail Systems / CWA
GANNETT FLEMING/CWA, a joint venture
TWO PENN PLAZA, SUITE 552
380 SEVENTH AVENUE
NEW YORK, NY 10121-0101
PRJ: 057664

Metro-North Railroad
347 Madison Avenue
New York, N.Y. 10017

TITLE
ENGINEERING AND DESIGN OF
CP 229 – CP 241
CP 229
CIL SWITCH POWER

CONTRACT NO.	1000027511
SCALE	NONE
DATE	08-29-14
DRAWING NO.	NHL2901014
SHEET 1015 OF	_

C.I.L.

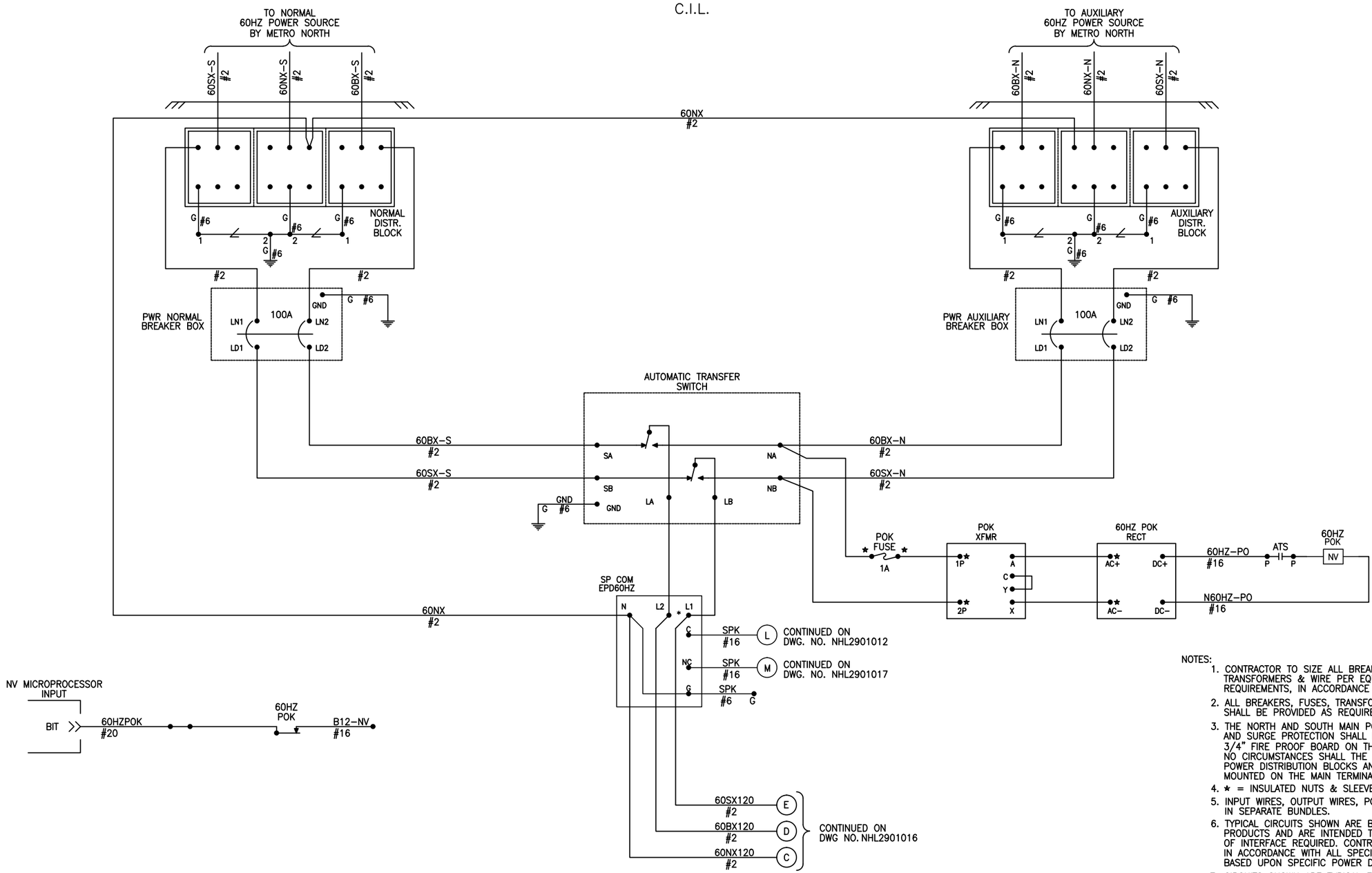

NOTES:

1. CONTRACTOR TO SIZE ALL BREAKERS, FUSES, TRANSFORMERS & WIRE PER EQUIPMENT LOAD REQUIREMENTS, IN ACCORDANCE WITH THE SPECIFICATIONS.
2. ALL BREAKERS, FUSES, TRANSFORMERS, PANELS & WIRE SHALL BE PROVIDED AS REQUIRED BY DETAIL DESIGN.
3. THE NORTH AND SOUTH MAIN POWER DISTRIBUTION BLOCKS AND SURGE PROTECTION SHALL BE MOUNTED ON 3/4" FIRE PROOF BOARD ON THE EQUIPEMENT WALL UNDER NO CIRCUMSTANCES SHALL THE NORTH AND SOUTH MAIN POWER DISTRIBUTION BLOCKS AND SURGE PROTECTION BE MOUNTED ON THE MAIN TERMINAL BOARD.
4. ★ = INSULATED NUTS & SLEEVES
5. INPUT WIRES, OUTPUT WIRES, POWER WIRES, SHALL BE IN SEPARATE BUNDLES.
6. TYPICAL CIRCUITS SHOWN ARE BASED UPON SPECIFIC POWER PRODUCTS AND ARE INTENDED TO DEFINE THE THE TYPES OF INTERFACE REQUIRED. CONTRACTOR SHALL PROVIDE DESIGN IN ACCORDANCE WITH ALL SPECIFICATION REQUIREMENTS AND BASED UPON SPECIFIC POWER DEVICES TO BE SUPPLIED.
7. CIRCUITS SHOWN ARE TYPICAL FOR HOUSES WITH VITAL MICROPROCESSORS.

DESIGNED RRL													
DRAWN RRL													
CHECKED JJL													
APPROVED XXX													
		NO.	DATE		DRWN	CHKD	APPVD	NO.	DATE		DRWN	CHKD	APPVD
		REVISIONS						REVISIONS					

Gannett Fleming Transit & Rail Systems /CWA
GANNETT FLEMING/CWA, a joint venture
TWO PENN PLAZA, SUITE 552
380 SEVENTH AVENUE
NEW YORK, NY 10121-0101
PRJ: 057664

MTA Metro-North Railroad
347 Madison Avenue
New York, N.Y. 10017

TITLE
ENGINEERING AND DESIGN OF
CP 229 – CP 241
CP 229
CIL 60HZ TRANSFER SWITCH

CONTRACT NO. 1000027511
SCALE NONE
DATE 08–29–14
DRAWING NO. NHL2901015
SHEET 1016 OF _

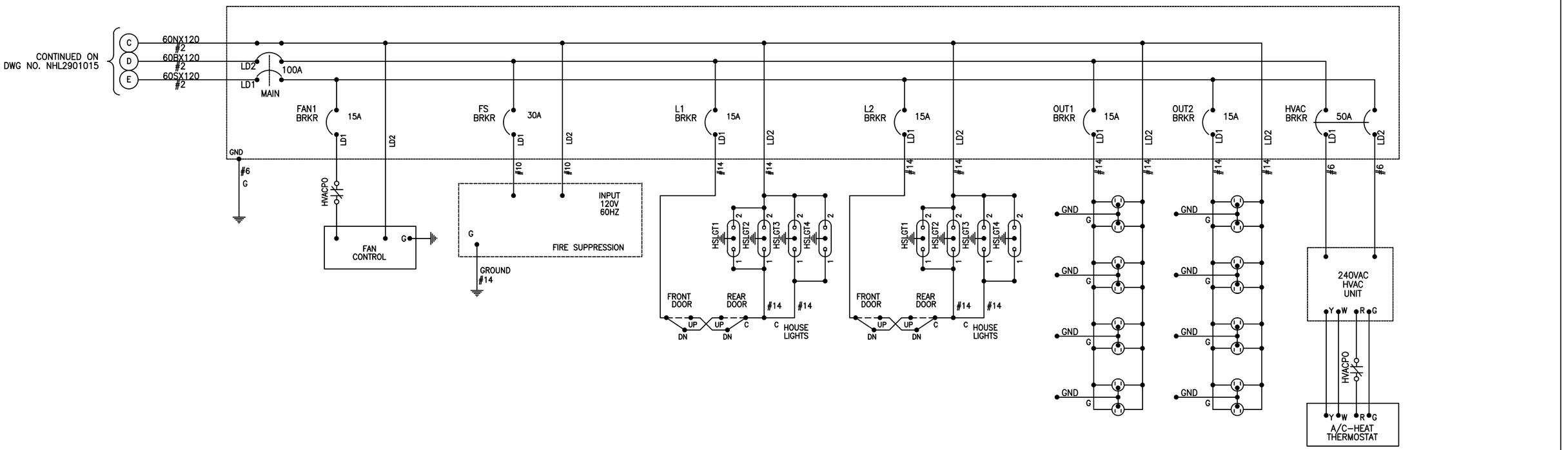

NOTES:

1. CONTRACTOR TO SIZE ALL BREAKERS, FUSES, TRANSFORMERS & WIRE PER EQUIPMENT LOAD REQUIREMENTS, IN ACCORDANCE WITH THE SPECIFICATIONS.
2. ALL BREAKERS, FUSES, TRANSFORMERS, PANELS & WIRE SHALL BE PROVIDED AS REQUIRED BY DETAIL DESIGN.
3. THE NORTH AND SOUTH MAIN POWER DISTRIBUTION BLOCKS AND SURGE PROTECTION SHALL BE MOUNTED ON 3/4" FIRE PROOF BOARD ON THE EQUIPEMENT WALL UNDER NO CIRCUMSTANCES SHALL THE NORTH AND SOUTH MAIN POWER DISTRIBUTION BLOCKS AND SURGE PROTECTION BE MOUNTED ON THE MAIN TERMINAL BOARD.
4. * = INSULATED NUTS & SLEEVES
5. INPUT WIRES, OUTPUT WIRES, POWER WIRES, SHALL BE IN SEPARATE BUNDLES.
6. TYPICAL CIRCUITS SHOWN ARE BASED UPON SPECIFIC POWER PRODUCTS AND ARE INTENDED TO DEFINE THE THE TYPES OF INTERFACE REQUIRED. CONTRACTOR SHALL PROVIDE DESIGN IN ACCORDANCE WITH ALL SPECIFICATION REQUIREMENTS AND BASED UPON SPECIFIC POWER DEVICES TO BE SUPPLIED.
7. CIRCUITS SHOWN ARE TYPICAL FOR HOUSES WITH VITAL MICROPROCESSORS.

DESIGNED RRL													
DRAWN RRL													
CHECKED JJL													
APPROVED XXX													
		NO.	DATE		DRWN	CHKD	APPVD	NO.	DATE		DRWN	CHKD	APPVD
		REVISIONS						REVISIONS					

Gannett Fleming Transit & Rail Systems /CWA
GANNETT FLEMING/CWA, a joint venture
TWO PENN PLAZA, SUITE 552
380 SEVENTH AVENUE
NEW YORK, NY 10121-0101
PRJ: 057664

Metro-North Railroad
347 Madison Avenue
New York, N.Y. 10017

TITLE
ENGINEERING AND DESIGN OF
CP 229 – CP 241
CP 229
CIL 60HZ POWER DISTRIBUTION

CONTRACT NO. 1000027511
SCALE NONE
DATE 08-29-14
DRAWING NO. NHL2901016
SHEET 1017 OF _

CIL

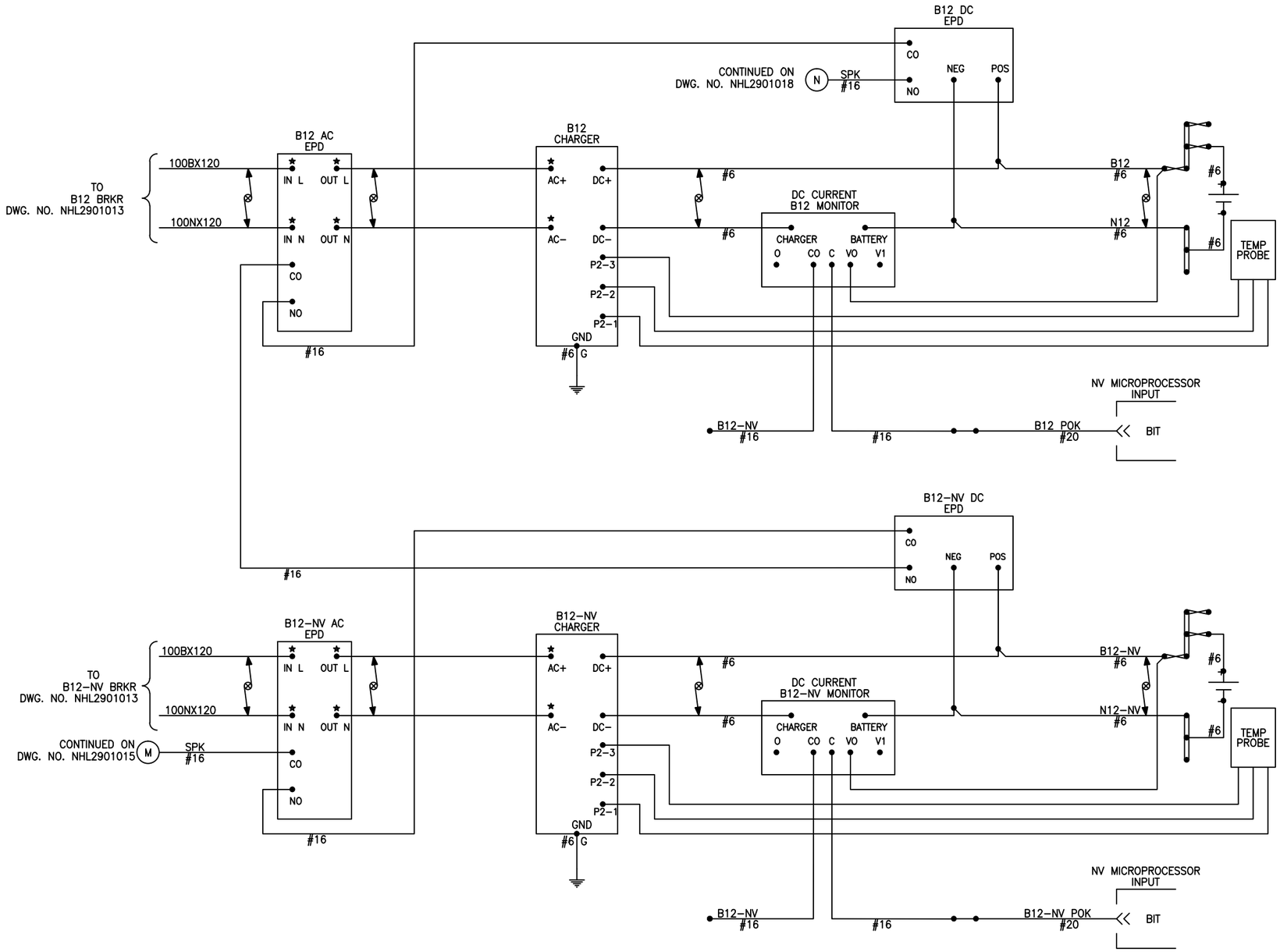

NOTES:

1. CONTRACTOR TO SIZE ALL BATTERIES, RECTIFIERS, FUSES & WIRE PER EQUIPMENT LOAD REQUIREMENTS, IN ACCORDANCE WITH THE SPECIFICATIONS.
2. BATTERIES/RECTIFIERS SHALL BE PROVIDED AS REQUIRED BY DETAILED DESIGN AND IN ACCORDANCE WITH THE SPECIFICATIONS.
3. EXTERNAL CURRENT MONITORS ARE REQUIRED IF EQUIVALENT FUNCTION CANNOT BE PROVIDED INTERNALLY IN BATTERY CHARGER.
4. ⋆ = INSULATED NUTS & SLEEVES
5. INPUT WIRES, OUTPUT WIRES, POWER WIRES, SHALL BE IN SEPARATE BUNDLES.
6. TYPICAL CIRCUITS SHOWN ARE BASED UPON SPECIFIC DC POWER PRODUCTS AND ARE INTENDED TO DEFINE THE TYPES OF INTERFACE REQUIRED. CONTRACTOR SHALL PROVIDE DESIGN IN ACCORDANCE WITH ALL SPECIFICATION REQUIREMENTS AND BASED UPON SPECIFIC POWER AND MONITORING EQUIPMENT TO BE SUPPLIED.
7. CIRCUITS SHOWN ARE TYPICAL FOR HOUSES WITH VITAL MICROPROCESSORS.

DESIGNED RRL													
DRAWN RRL													
CHECKED JJL													
APPROVED XXX													
		NO.	DATE		DRWN	CHKD	APPVD	NO.	DATE		DRWN	CHKD	APPVD
		REVISIONS						REVISIONS					

Gannett Fleming Transit & Rail Systems / CWA
GANNETT FLEMING/CWA, a joint venture
TWO PENN PLAZA, SUITE 552
380 SEVENTH AVENUE
NEW YORK, NY 10121–0101
PRJ: 057664

Metro-North Railroad
347 Madison Avenue
New York, N.Y. 10017

TITLE
ENGINEERING AND DESIGN OF CP 229 – CP 241
CP 229
CIL BATTERY AND CHARGER B12, B12-NV

CONTRACT NO. 1000027511
SCALE NONE
DATE 08–29–14
DRAWING NO. **NHL2901017**
SHEET 1018 OF _

CIL

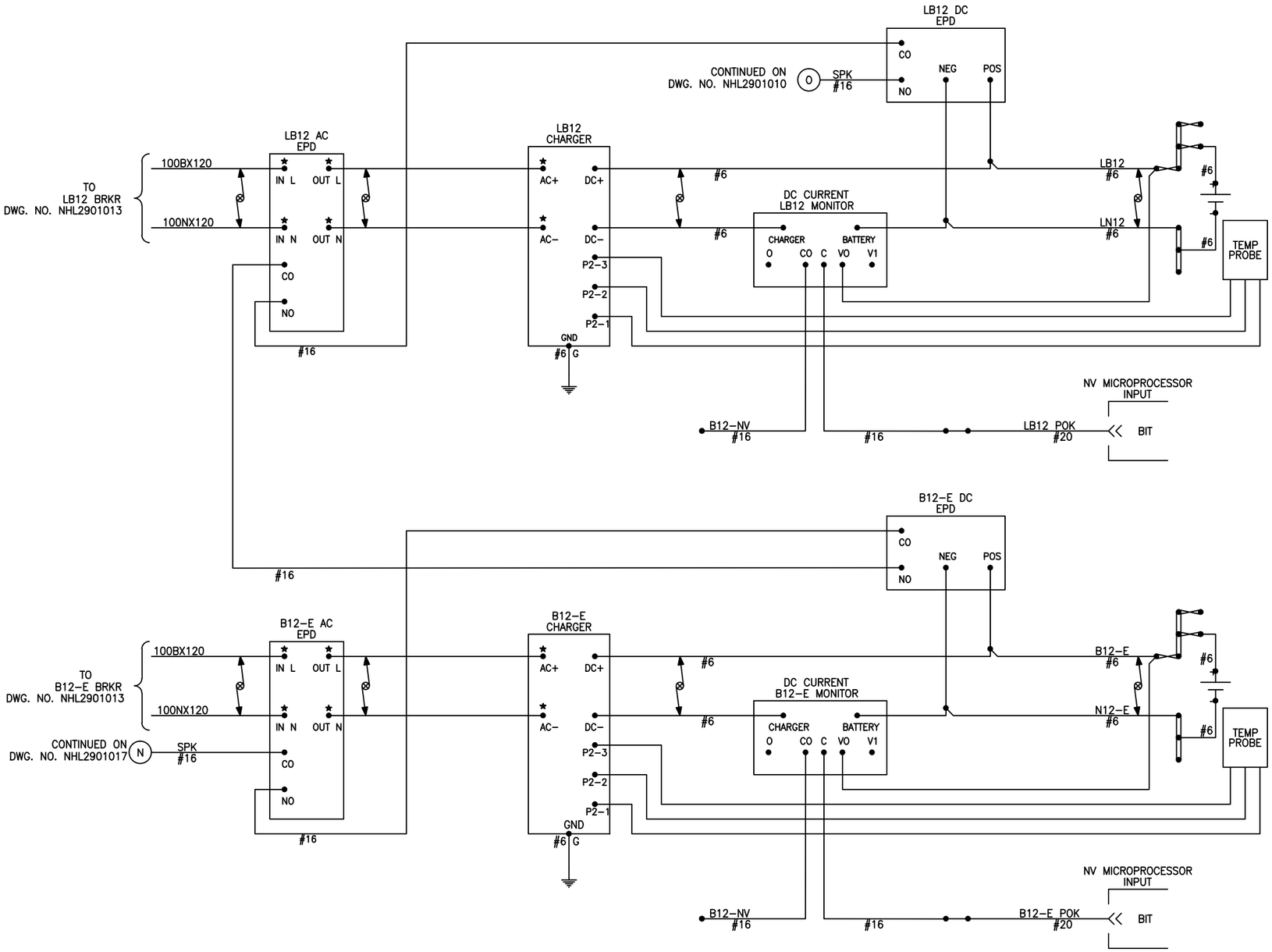

NOTES:

1. CONTRACTOR TO SIZE ALL BATTERIES, RECTIFIERS, FUSES & WIRE PER EQUIPMENT LOAD REQUIREMENTS, IN ACCORDANCE WITH THE SPECIFICATIONS.
2. BATTERIES/RECTIFIERS SHALL BE PROVIDED AS REQUIRED BY DETAILED DESIGN AND IN ACCORDANCE WITH THE SPECIFICATIONS.
3. EXTERNAL CURRENT MONITORS ARE REQUIRED IF EQUIVALENT FUNCTION CANNOT BE PROVIDED INTERNALLY IN BATTERY CHARGER.
4. ⋆ = INSULATED NUTS & SLEEVES
5. INPUT WIRES, OUTPUT WIRES, POWER WIRES, SHALL BE IN SEPARATE BUNDLES.
6. TYPICAL CIRCUITS SHOWN ARE BASED UPON SPECIFIC DC POWER PRODUCTS AND ARE INTENDED TO DEFINE THE TYPES OF INTERFACE REQUIRED. CONTRACTOR SHALL PROVIDE DESIGN IN ACCORDANCE WITH ALL SPECIFICATION REQUIREMENTS AND BASED UPON SPECIFIC POWER AND MONITORING EQUIPMENT TO BE SUPPLIED.
7. CIRCUITS SHOWN ARE TYPICAL FOR HOUSES WITH VITAL MICROPROCESSORS.

DESIGNED RRL													
DRAWN RRL													
CHECKED JJL													
APPROVED XXX													
		NO.	DATE		DRWN	CHKD	APPVD	NO.	DATE		DRWN	CHKD	APPVD
		REVISIONS						REVISIONS					

Gannett Fleming Transit & Rail Systems / CWA
GANNETT FLEMING/CWA, a joint venture
TWO PENN PLAZA, SUITE 552
380 SEVENTH AVENUE
NEW YORK, NY 10121–0101
PRJ: 057664

Metro-North Railroad
347 Madison Avenue
New York, N.Y. 10017

TITLE
ENGINEERING AND DESIGN OF CP 229 – CP 241
CP 229
CIL BATTERY AND CHARGER LB12, B12-E

CONTRACT NO. 1000027511
SCALE NONE
DATE 08–29–14
DRAWING NO. NHL2901018
SHEET 1019 OF _

C.I.L.

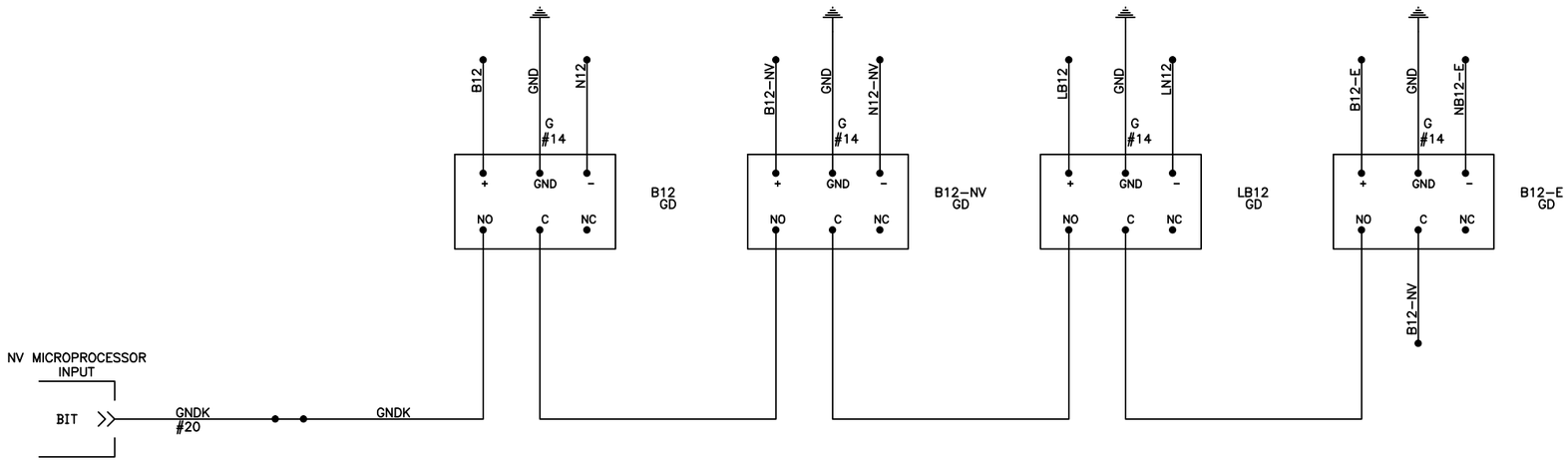

NOTES:

1. TYPICAL CIRCUITS SHOWN ARE BASED UPON SPECIFIC DETECTOR PRODUCTS AND ARE INTENDED TO DEFINE THE TYPES OF GROUND DETECTION REQUIRED. CONTRACTOR SHALL PROVIDE DESIGN IN ACCORDANCE WITH ALL SPECIFICATION REQUIREMENTS AND BASED UPON SPECIFIC GROUND DEVICES TO BE SUPPLIED.
2. TYPICAL CIRCUITS SHOWN ARE SIMILAR FOR THE FOLLOWING INTERLOCKING CENTRAL INSTRUMENT LOCATIONS: CP234 AND CP241.
3. INPUT WIRES, OUTPUT WIRES, POWER WIRES, SHALL BE IN SEPARATE BUNDLES.
4. ★ = INSULATED NUTS & SLEEVES

DESIGNED RRL													
DRAWN RRL													
CHECKED JJL													
APPROVED XXX													
		NO.	DATE		DRWN	CHKD	APPVD	NO.	DATE		DRWN	CHKD	APPVD
		REVISIONS						REVISIONS					

Gannett Fleming Transit & Rail Systems / CWA
GANNETT FLEMING/CWA, a joint venture
TWO PENN PLAZA, SUITE 552
380 SEVENTH AVENUE
NEW YORK, NY 10121–0101
PRJ: 057664

Metro-North Railroad
347 Madison Avenue
New York, N.Y. 10017

TITLE
ENGINEERING AND DESIGN OF
CP 229 – CP 241

CP 229
CIL GROUND DETECTOR NETWORK

CONTRACT NO. 1000027511
SCALE NONE
DATE 08–29–14
DRAWING NO. **NHL2901019**
SHEET 1020 OF _

LOC. A

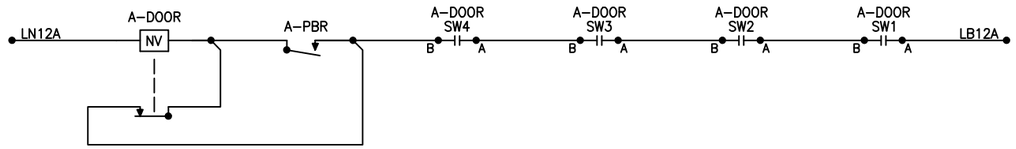

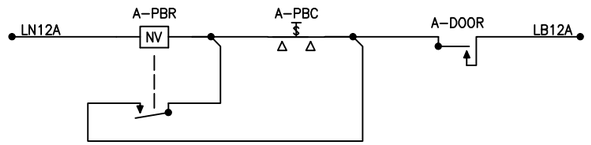

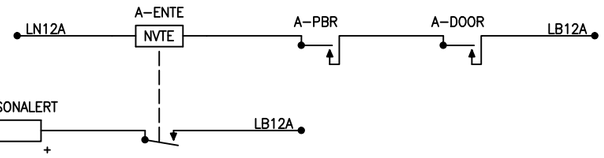

C.I.L.

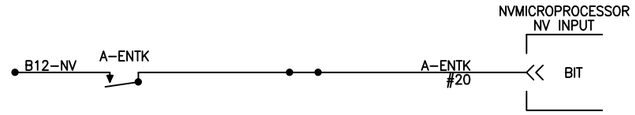

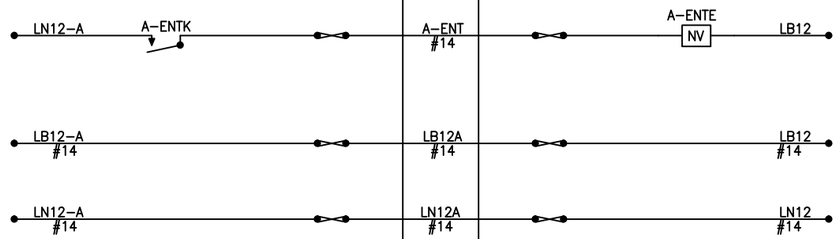

NOTES:

1. CONTRACTOR TO SIZE ALL WIRE PER EQUIPMENT LOAD REQUIREMENTS, IN ACCORDANCE WITH THE SPECIFICATIONS.
2. INPUT WIRES, OUTPUT WIRES, POWER WIRES, SHALL BE IN SEPARATE BUNDLES.
3. TYPICAL CIRCUITS SHOWN ARE BASED UPON SPECIFIC PROCESSOR PRODUCTS AND ARE INTENDED TO DEFINE THE TYPES OF INTERFACE REQUIRED. CONTRACTOR SHALL PROVIDE DESIGN IN ACCORDANCE WITH ALL SPECIFICATION REQUIREMENTS AND BASED UPON SPECIFIC PROCESSOR TO BE SUPPLIED.
4. TYPICAL CIRCUITS SHOWN ARE SIMILAR FOR TRACK CASE LOCATIONS: LOC. B, LOC. C, LOC. D, LOC. E, AND LOC. F.

DESIGNED RRL													
DRAWN RRL													
CHECKED JJL													
APPROVED XXX													
		NO.	DATE		DRWN	CHKD	APPVD	NO.	DATE		DRWN	CHKD	APPVD
		REVISIONS						REVISIONS					

Gannett Fleming Transit & Rail Systems / CWA
GANNETT FLEMING/CWA, a joint venture
TWO PENN PLAZA, SUITE 552
380 SEVENTH AVENUE
NEW YORK, NY 10121–0101
PRJ: 057664

Metro-North Railroad
347 Madison Avenue
New York, N.Y. 10017

TITLE
ENGINEERING AND DESIGN OF
CP 229 – CP 241
CP 229
LOC. A MISCELLANEOUS CIRCUITS

CONTRACT NO. 1000027511
SCALE NONE | DATE 08–29–14
DRAWING NO. NHL2901020
SHEET 1021 OF _

LOC. A

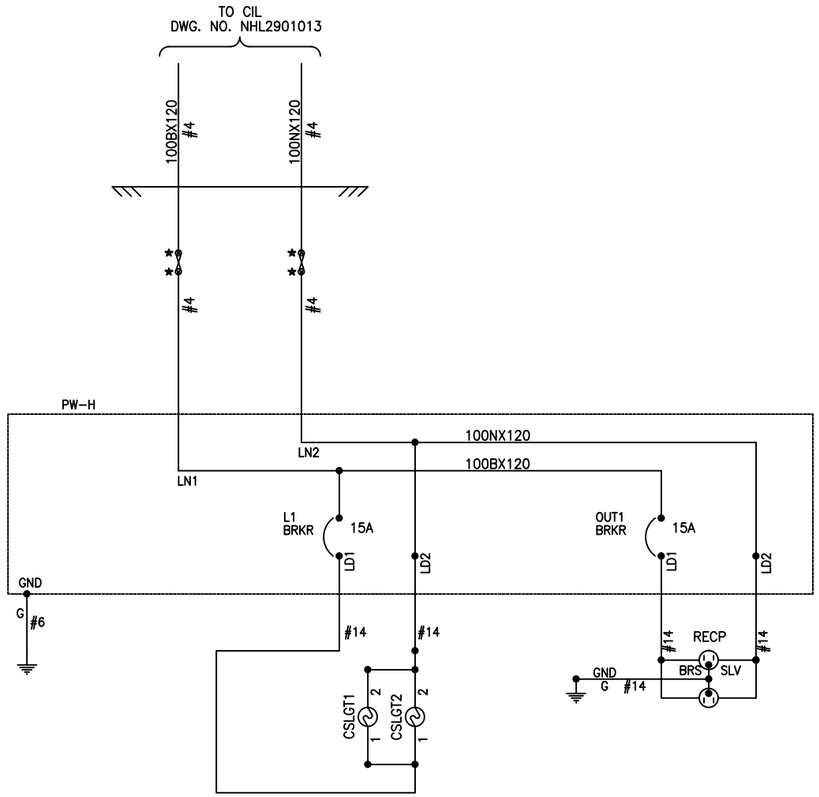

NOTES:

1. CONTRACTOR TO SIZE ALL BREAKERS, FUSES AND WIRE PER EQUIPMENT LOAD REQUIREMENTS, IN ACCORDANCE WITH THE SPECIFICATIONS.
2. ALL BREAKERS, FUSES, LIGHTS, RECEPTICALS, AND CONTROLS SHALL BE PROVIDED AS REQUIRED BY DETAILED DESIGN.
3. TYPICAL CIRCUITS SHOWN ARE BASED UPON SPECIFIC POWER PRODUCTS AND ARE INTENDED TO DEFINE THE TYPES OF INTERFACE REQUIRED. CONTRACTOR SHALL PROVIDE DESIGN IN ACCORDANCE WITH ALL SPECIFICATION REQUIREMENTS AND BASED UPON SPECIFIC POWER DEVICES TO BE SUPPLIED.
4. TYPICAL CIRCUITS SHOWN ARE SIMILAR FOR TRACK CASES AT FOLLOWING INTERLOCKING LOCATIONS: LOC. B, LOC. C, LOC. D, LOC. E AND LOC. F.
5. POWER WIRES AND GROUND WIRES, PUT IN SEPARATE BUNDLES.

DESIGNED	RRL
DRAWN	RRL
CHECKED	JJL
APPROVED	XXX

NO.	DATE		DRWN	CHKD	APPVD	NO.	DATE	DRWN	CHKD	APPVD
REVISIONS						REVISIONS				

Gannett Fleming Transit & Rail Systems /CWA
GANNETT FLEMING/CWA, a joint venture
TWO PENN PLAZA, SUITE 552
380 SEVENTH AVENUE
NEW YORK, NY 10121-0101
PRJ: 057664

Metro-North Railroad
347 Madison Avenue
New York, N.Y. 10017

TITLE
ENGINEERING AND DESIGN OF CP 229 – CP 241

CP 229
LOC. A POWER CIRCUITS

CONTRACT NO. 1000027511
SCALE NONE
DATE 08-29-14
DRAWING NO. NHL2901021
SHEET 1022 OF _

C.I.L.

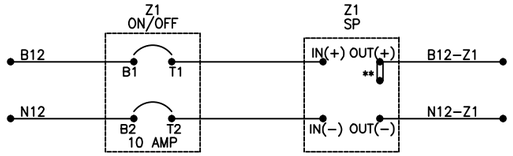

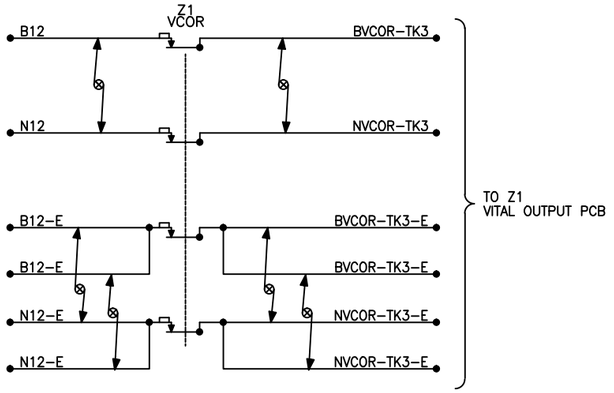

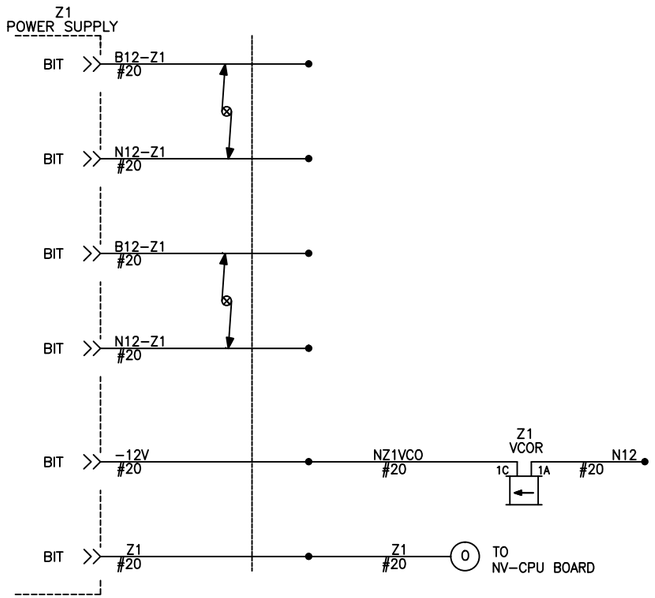

NOTES:

1. CONTRACTOR TO SIZE ALL BREAKERS, FUSES & WIRE PER EQUIPMENT LOAD REQUIREMENTS, IN ACCORDANCE WITH THE SPECIFICATIONS.
2. INPUT WIRES, OUTPUT WIRES, POWER WIRES, SHALL BE IN SEPARATE BUNDLES.
3. TYPICAL CIRCUITS SHOWN ARE BASED UPON SPECIFIC POWER PRODUCTS AND ARE INTENDED TO DEFINE THE TYPES OF INTERFACE REQUIRED. CONTRACTOR SHALL PROVIDE DESIGN IN ACCORDANCE WITH ALL SPECIFICATION REQUIREMENTS AND BASED UPON SPECIFIC POWER DEVICES TO BE SUPPLIED.
4. ** = 12V STRAP.
5. CIRCUITS SHOWN ARE SIMILAR FOR THE FOLLOWING VITAL PROCESSOR TRACKS; TRACK 1–2, AND TRACK 4.

DESIGNED RRL													
DRAWN RRL													
CHECKED JJL													
APPROVED XXX													
		NO.	DATE		DRWN	CHKD	APPVD	NO.	DATE		DRWN	CHKD	APPVD
		REVISIONS						REVISIONS					

Gannett Fleming Transit & Rail Systems /CWA
GANNETT FLEMING/CWA, a joint venture
TWO PENN PLAZA, SUITE 552
380 SEVENTH AVENUE
NEW YORK, NY 10121–0101
PRJ: 057664

Metro-North Railroad
347 Madison Avenue
New York, N.Y. 10017

TITLE
ENGINEERING AND DESIGN OF
CP 229 – CP 241
CP 229
DC POWER CIRCUITS
VITAL MICROPROCESSOR TRACK 3

CONTRACT NO. 1000027511
SCALE NONE
DATE 08–29–14
DRAWING NO. NHL2901022
SHEET 1023 OF _

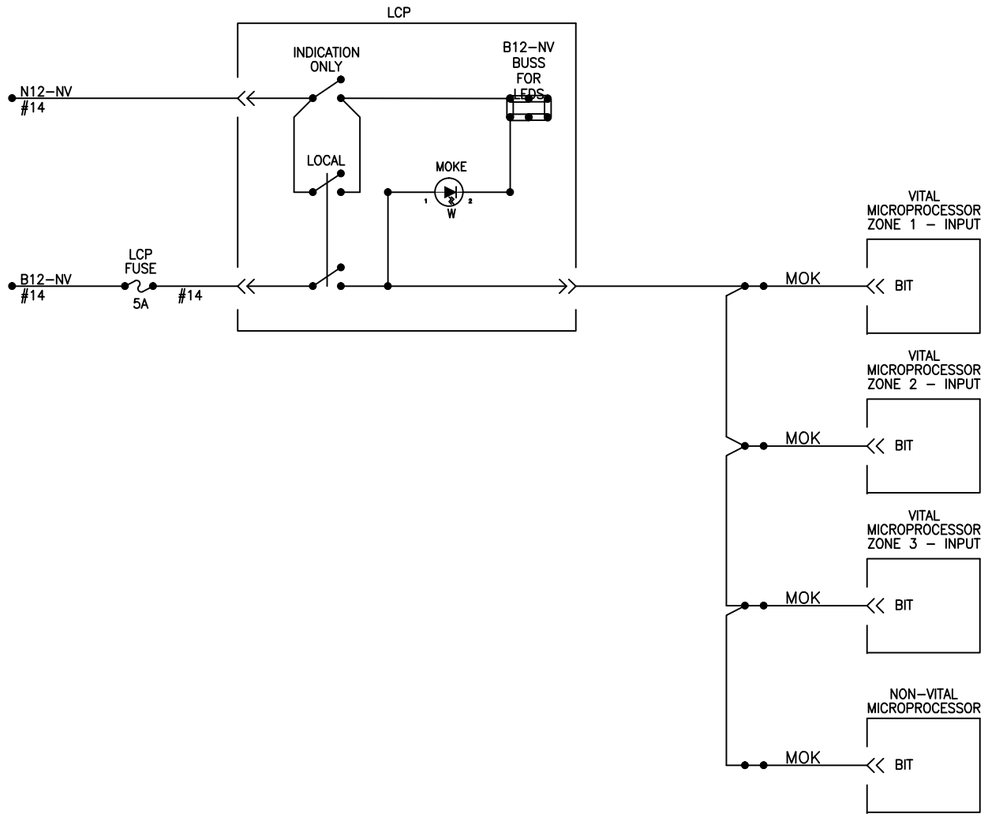

NOTES: 1. TYPICAL CIRCUITS SHOWN ARE BASED UPON SPECIFIC VITAL PROCESSOR INTERLOCKING PRODUCTS AND ARE INTENDED TO DEFINE THE TYPES OF INTERFACE REQUIRED. CONTRACTOR SHALL PROVIDE DESIGN IN ACCORDANCE WITH ALL SPECIFICATION REQUIREMENTS AND BASED UPON SPECIFIC SIGNAL EQUIPMENT TO BE SUPPLIED.

2. ALL WIRES #20 UNLESS NOTED.

3. INPUT, OUTPUT AND POWER WIRES TO BE PUT IN SEPERATE BUNDLES.

DESIGNED	CEL
DRAWN	CEL
CHECKED	JJL
APPROVED	XXX

NO.	DATE		DRWN	CHKD	APPVD	NO.	DATE		DRWN	CHKD	APPVD
REVISIONS						REVISIONS					

Gannett Fleming Transit & Rail Systems /CWA
GANNETT FLEMING/CWA, a joint venture
TWO PENN PLAZA, SUITE 552
380 SEVENTH AVENUE
NEW YORK, NY 10121–0101
PRJ: 057664

Metro-North Railroad
347 Madison Avenue
New York, N.Y. 10017

TITLE
ENGINEERING AND DESIGN OF CP 229 – CP 241

CP 229
LOCAL CONTROL POWER CIRCUITS

CONTRACT NO. 1000027511
SCALE NONE
DATE 08–29–14
DRAWING NO. NHL2901023
SHEET 1024 OF _

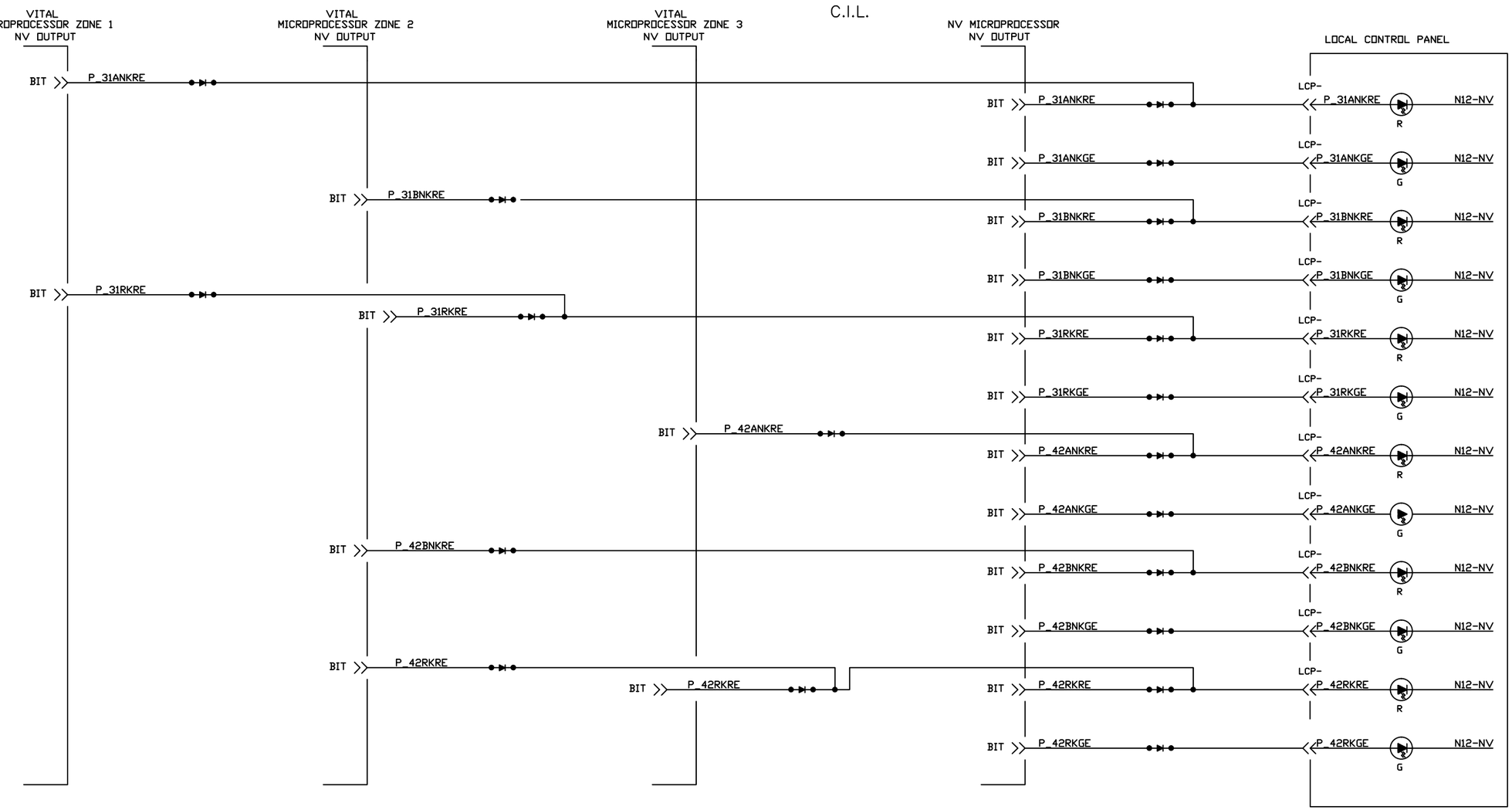

NOTE:
ALL WIRES #20 UNLESS OTHERWISE NOTED.

DESIGNED	CEL
DRAWN	CEL
CHECKED	JJL
APPROVED	XXX

NO.	DATE		DRWN	CHKD	APPVD	NO.	DATE	DRWN	CHKD	APPVD
REVISIONS						REVISIONS				

Gannett Fleming Transit & Rail Systems /CWA
GANNETT FLEMING/CWA, a joint venture
TWO PENN PLAZA, SUITE 552
380 SEVENTH AVENUE
NEW YORK, NY 10121-0101
PRJ: 057664

Metro-North Railroad
347 Madison Avenue
New York, N.Y. 10017

TITLE
ENGINEERING AND DESIGN OF CP 229 – CP 241
CP 229
LOCAL CONTROL OUTPUT CIRCUITS

CONTRACT NO. 1000027511
SCALE NONE
DATE 08-29-14
DRAWING NO. NHL2901024
SHEET 1025 OF _

C.I.L.

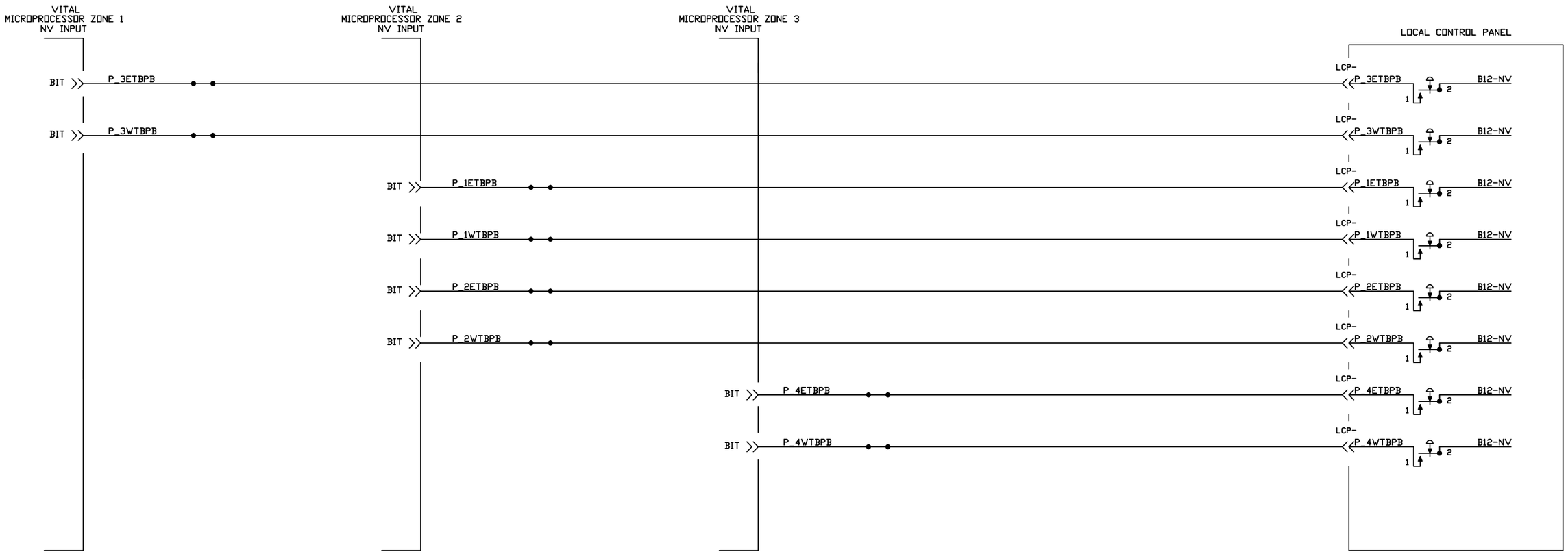

NOTE:
ALL WIRES #20 UNLESS OTHERWISE NOTED.

DESIGNED CEL													
DRAWN CEL													
CHECKED JJL													
APPROVED XXX													
		NO.	DATE		DRWN	CHKD	APPVD	NO.	DATE		DRWN	CHKD	APPVD
		REVISIONS						REVISIONS					

Gannett Fleming Transit & Rail Systems / CWA
GANNETT FLEMING/CWA, a joint venture
TWO PENN PLAZA, SUITE 552
380 SEVENTH AVENUE
NEW YORK, NY 10121-0101
PRJ: 057664

Metro-North Railroad
347 Madison Avenue
New York, N.Y. 10017

TITLE
ENGINEERING AND DESIGN OF CP 229 – CP 241

CP 229
LOCAL CONTROL INPUT CIRCUITS
SHEET 1 OF 5

CONTRACT NO. 1000027511
SCALE NONE | DATE 08-29-14
DRAWING NO. NHL2901025
SHEET 1026 OF _

C.I.L.

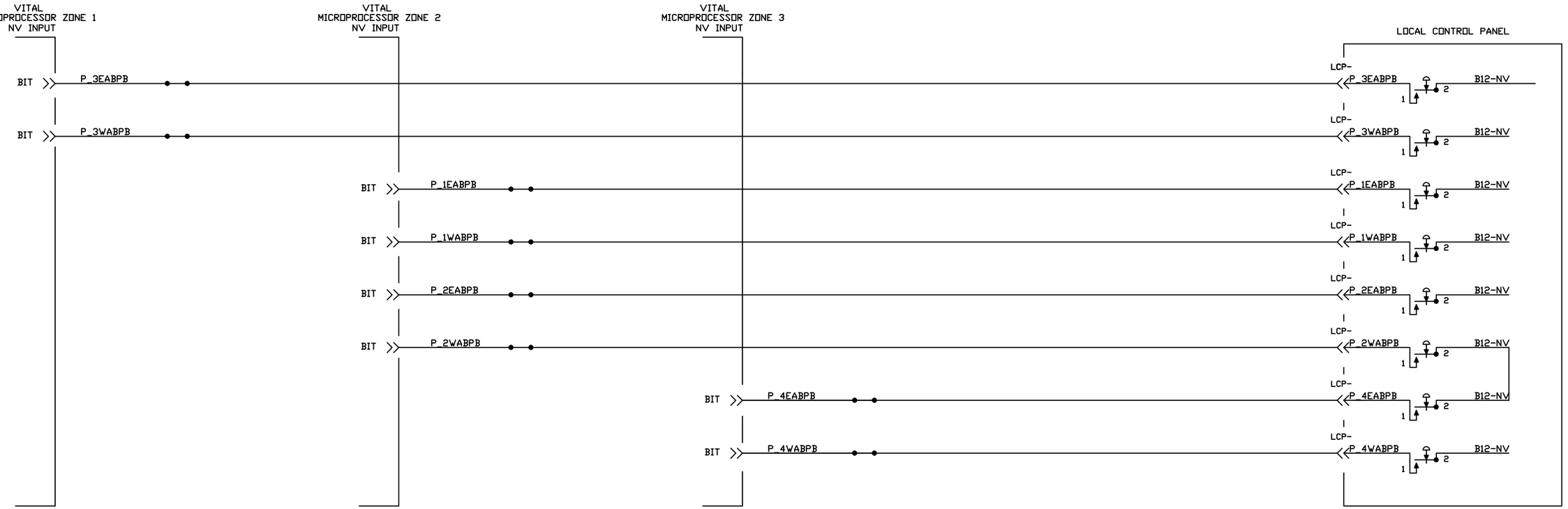

NOTE:
ALL WIRES #20 UNLESS NOTED.

DESIGNED	CEL
DRAWN	CEL
CHECKED	JJL
APPROVED	XXX

NO.	DATE		DRWN	CHKD	APPVD	NO.	DATE	DRWN	CHKD	APPVD
REVISIONS						REVISIONS				

Gannett Fleming Transit & Rail Systems /CWA
GANNETT FLEMING/CWA, a joint venture
TWO PENN PLAZA, SUITE 552
380 SEVENTH AVENUE
NEW YORK, NY 10121-0101
PRJ: 057664

Metro-North Railroad
347 Madison Avenue
New York, N.Y. 10017

TITLE
ENGINEERING AND DESIGN OF CP 229 – CP 241

CP 229
LOCAL CONTROL INPUT CIRCUITS
SHEET 2 OF 5

CONTRACT NO. 1000027511
SCALE NONE
DATE 08-29-14
DRAWING NO. NHL2901026
SHEET 1027 OF _

C.I.L.

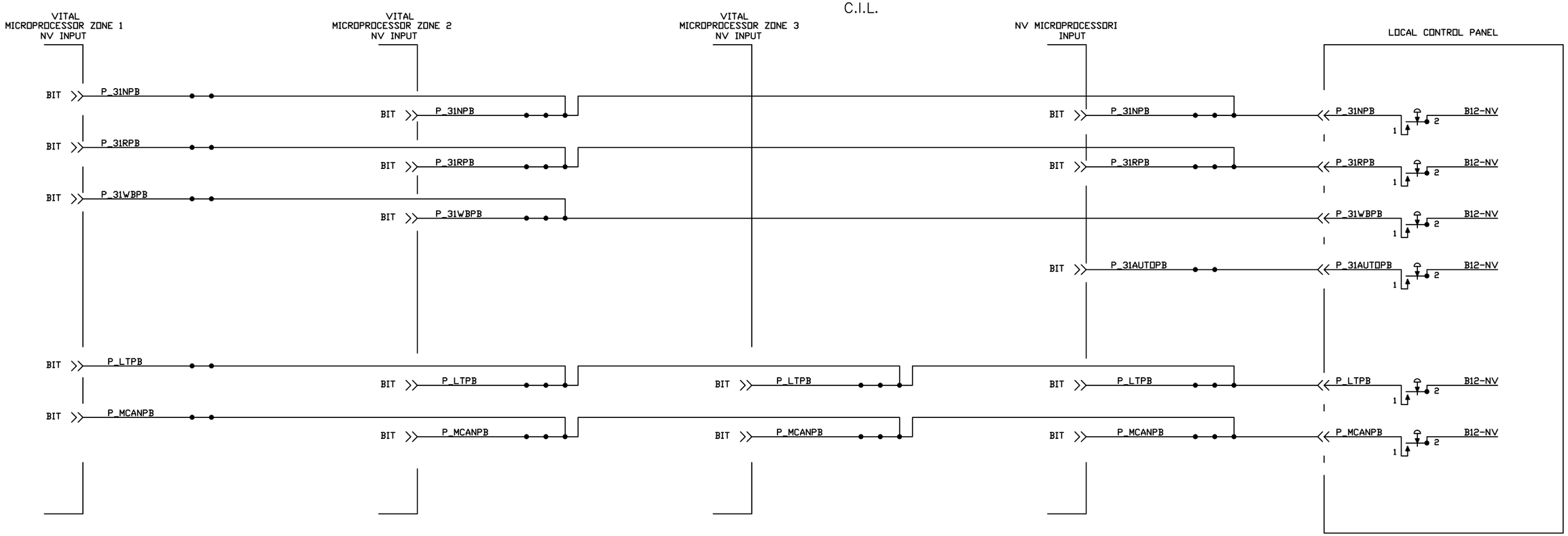

DESIGNED CEL													
DRAWN CEL													
CHECKED JJL													
APPROVED XXX													
		NO.	DATE		DRWN	CHKD	APPVD	NO.	DATE		DRWN	CHKD	APPVD
		REVISIONS						REVISIONS					

Gannett Fleming Transit & Rail Systems /CWA
GANNETT FLEMING/CWA, a joint venture
TWO PENN PLAZA, SUITE 552
380 SEVENTH AVENUE
NEW YORK, NY 10121-0101
PRJ: 057664

Metro-North Railroad
347 Madison Avenue
New York, N.Y. 10017

TITLE
ENGINEERING AND DESIGN OF
CP 229 – CP 241
CP 229
LOCAL CONTROL INPUT CIRCUITS
SHEET 3 OF 5

CONTRACT NO. 1000027511
SCALE NONE | DATE 08-29-14
DRAWING NO. NHL2901027
SHEET 1028 OF _

C.I.L.

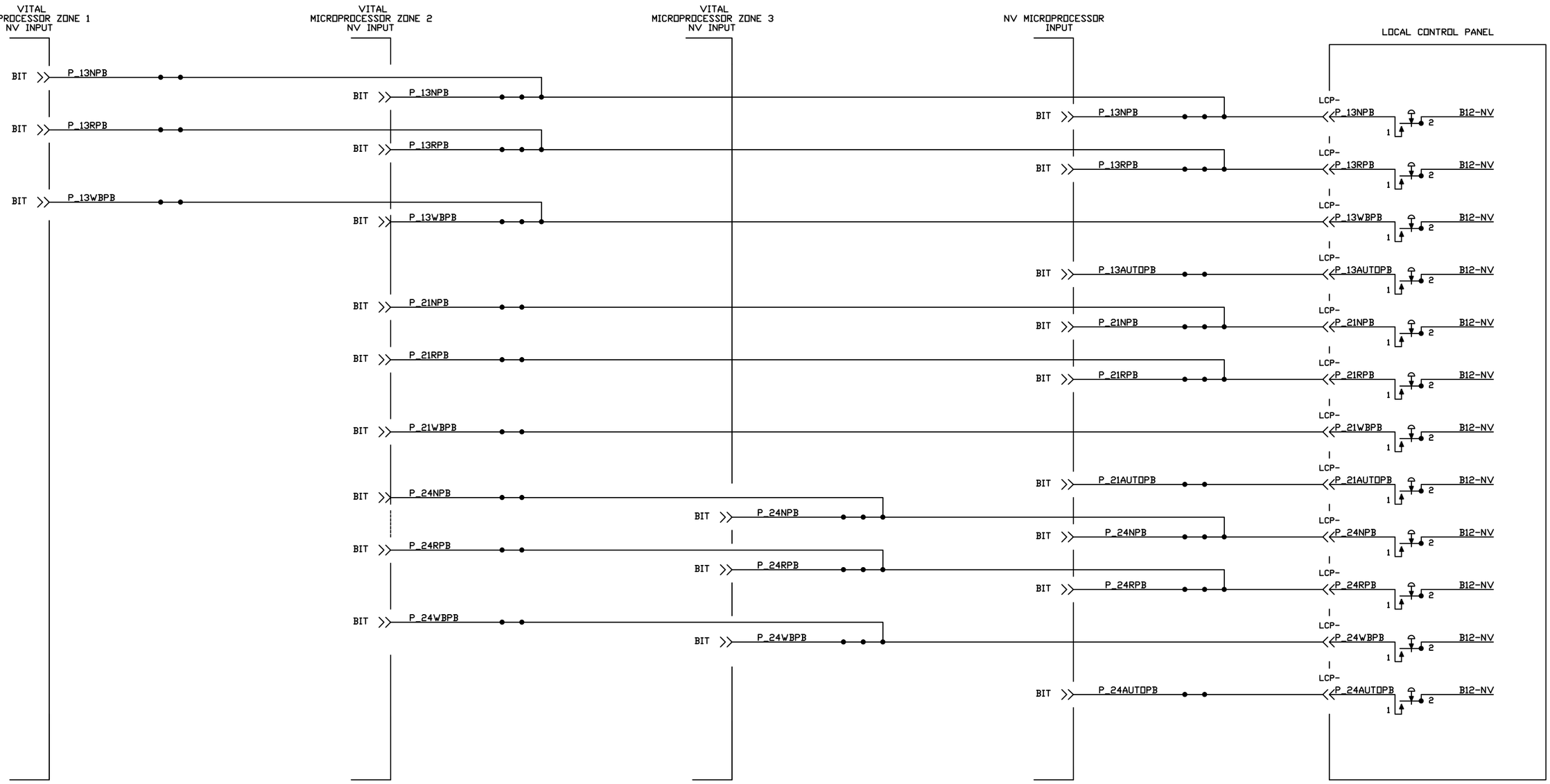

ALL WIRES #20 UNLESS OTHERWISE NOTED.

DESIGNED CEL													
DRAWN CEL													
CHECKED JJL													
APPROVED XXX													
		NO.	DATE		DRWN	CHKD	APPVD	NO.	DATE		DRWN	CHKD	APPVD
		REVISIONS						REVISIONS					

Gannett Fleming Transit & Rail Systems /CWA
GANNETT FLEMING/CWA, a joint venture
TWO PENN PLAZA, SUITE 552
380 SEVENTH AVENUE
NEW YORK, NY 10121-0101
PRJ: 057664

Metro-North Railroad
347 Madison Avenue
New York, N.Y. 10017

TITLE
ENGINEERING AND DESIGN OF
CP 229 – CP 241
CP 229
LOCAL CONTROL INPUT CIRCUITS
SHEET 4 OF 5

CONTRACT NO. 1000027511
SCALE NONE | DATE 08-29-14
DRAWING NO. NHL2901028
SHEET 1029 OF _

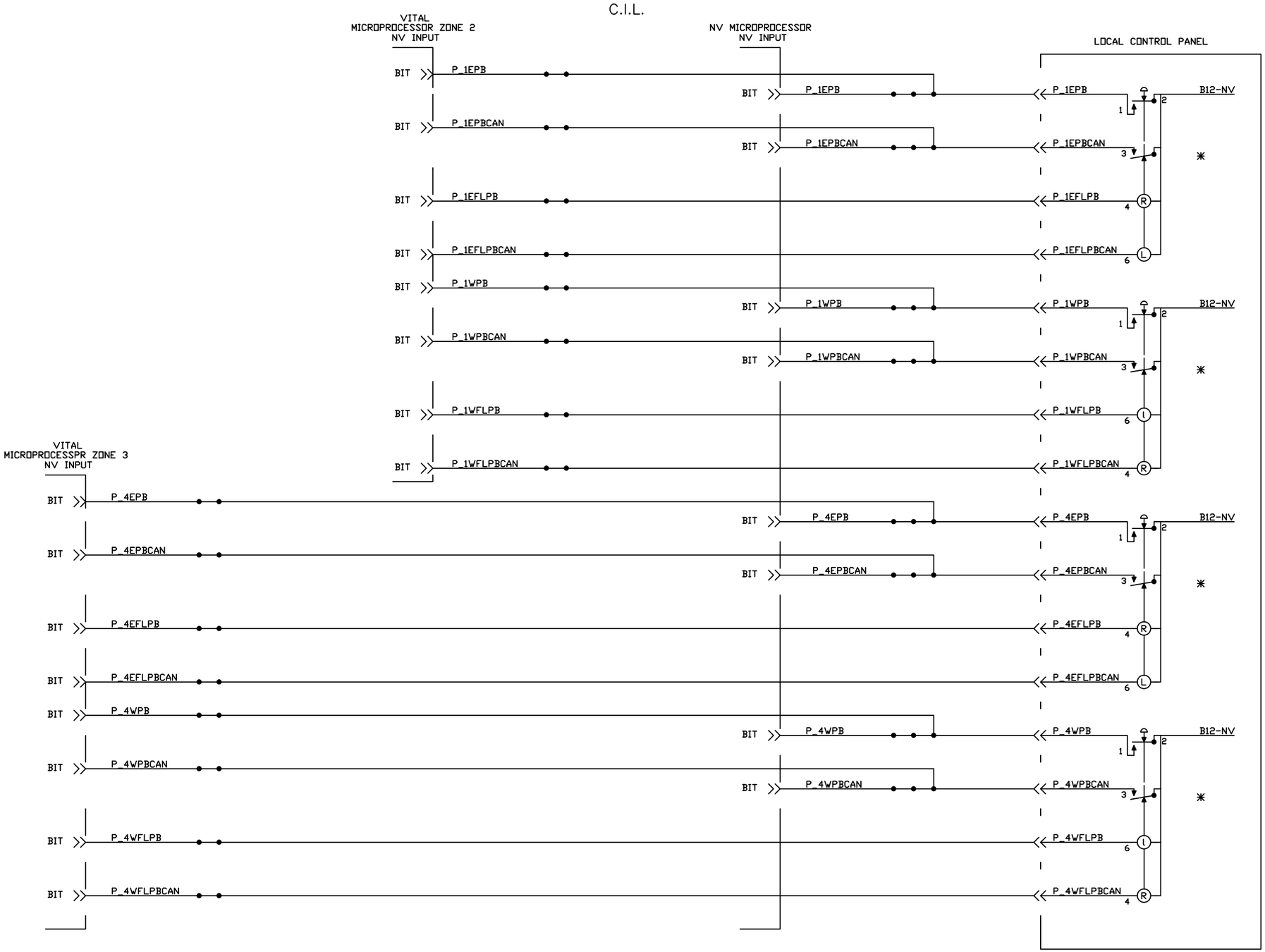

NOTE:
1. * COMMON BAR IN MALE CONNECTOR PIN 2 TO PIN 5
2. ALL WIRES #20 UNLESS NOTED.

DESIGNED	CEL
DRAWN	CEL
CHECKED	JJL
APPROVED	XXX

NO.	DATE		DRWN	CHKD	APPVD	NO.	DATE	DRWN	CHKD	APPVD
REVISIONS						REVISIONS				

Gannett Fleming Transit & Rail Systems /CWA
GANNETT FLEMING/CWA, a joint venture
TWO PENN PLAZA, SUITE 552
380 SEVENTH AVENUE
NEW YORK, NY 10121-0101
PRJ: 057664

Metro-North Railroad
347 Madison Avenue
New York, N.Y. 10017

TITLE
ENGINEERING AND DESIGN OF CP 229 – CP 241

CP 229
LOCAL CONTROL INPUT CIRCUITS
SHEET 5 OF 5

CONTRACT NO. 1000027511
SCALE NONE
DATE 08-29-14
DRAWING NO. NHL2901029
SHEET 1030 OF _

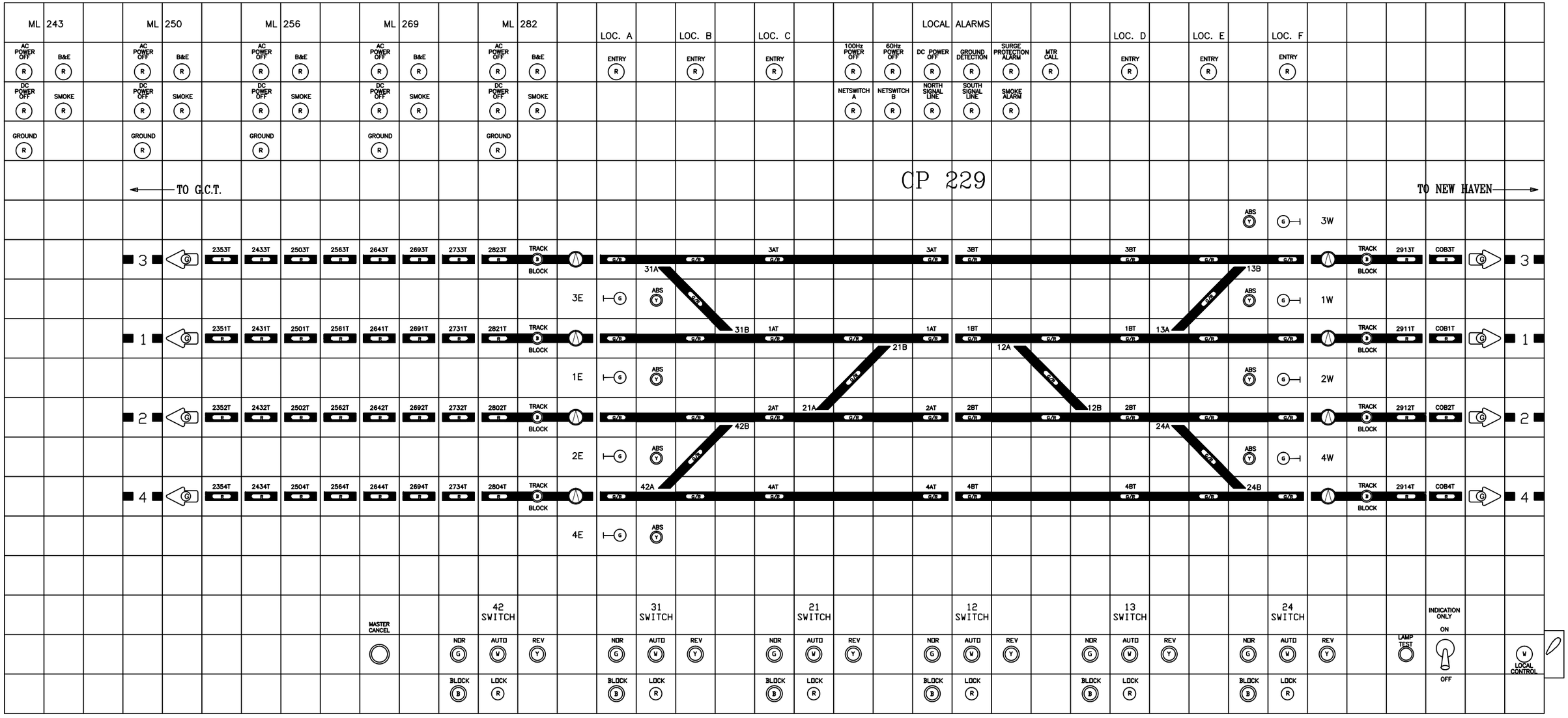

LEGEND:

- PUSH PULL TURN BUTTON (ENTECH)
- PUSH BUTTON WITH LED BACKLIGHT (LED COLOR INDICATED)
- G/R LED (COLOR INDICATED)
- PUSH BUTTON
- SIGNAL–GREEN LED INDICATES CLEAR, DARK LED INDICATES NOT CLEAR

COLOR ABBREVIATIONS

G = GREEN, R = RED, Y = YELLOW, W = WHITE, C = CLEAR, B = BLUE

LOCAL CONTROL PANEL

NOTES:

1. REMOTE/LOCAL MODE SWITCH SHALL BE LOCATED IN LOCKED BOX IN CLOSE PROXIMITY TO LOCAL CONTROL PANEL. LOCATION TO BE SUBMITTED AND APPROVED BY ENGINEER.
2. PANEL FACE TO BE GREY WITH BLACK LINES AND LETTERING MOSAIC TILES SHALL BE SACO SMARTVISION, INC. PART NUMBER ST–2424GR OR APPROVED EQUAL
3. IN ADDITION TO THOSE SHOWN, TRACK OCCUPANCY INDICATIONS SHALL ALSO BE PROVIDED FOR ALL AUTOMATIC BLOCK SECTIONS INDICATED BY LINE CARRIER TO THE INTERLOCKING.

DESIGNED	RRL
DRAWN	RRL
CHECKED	JJL
APPROVED	XXX

NO.	DATE		DRWN	CHKD	APPVD
		REVISIONS			

NO.	DATE		DRWN	CHKD	APPVD
		REVISIONS			

Gannett Fleming Transit & Rail Systems / CWA
GANNETT FLEMING/CWA, a joint venture
TWO PENN PLAZA, SUITE 552
380 SEVENTH AVENUE
NEW YORK, NY 10121–0101
PRJ: 057664

Metro-North Railroad
347 Madison Avenue
New York, N.Y. 10017

TITLE
ENGINEERING AND DESIGN OF
CP 229 – CP 241

CP 229
LOCAL CONTROL PANEL

CONTRACT NO.	1000027511
SCALE	NONE
DATE	08–29–14
DRAWING NO.	NHL2901030
SHEET	1031 OF _

SERIAL CONTROL WORDS								
	0	1	2	3	4	5	6	7
WORD 1	C1WGZ	C1WGZC	C1EGZ	C1EGZC	C2WGZ	C2WGZC	C2EGZ	C2EGZC
	8	9	10	11	12	13	14	15
	C3WGZ	C3WGZC	C3EGZ	C3EGZC	C4WGZ	C4WGZC	C4EGZ	C4EGZC
	16	17	18	19	20	21	22	23
	C1WABZ	C1WABZC	C1EABZ	C1EABZC	C2WABZ	C2WABZC	C2EABZ	C2EABZC
	24	25	26	27	28	29	30	31
	C3WABZ	C3WABZC	C3EABZ	C3EABZC	C4WABZ	C4WABZC	C4EABZ	C4EABZC
WORD 2	0	1	2	3	4	5	6	7
	C1WFLZ	C1WFLZC	C1EFLZ	C1EFLZC	C2WFLZ	C2WFLZC	C2EFLZ	C2EFLZC
	8	9	10	11	12	13	14	15
	C3WFLZ	C3WFLZC	C3EFLZ	C3EFLZC	C4WFLZ	C4WFLZC	C4EFLZ	C4EFLZC
	16	17	18	19	20	21	22	23
	C1WTB	C1WTBC	C1ETB	C1ETBC	C2WTB	C2WTBC	C2ETB	C2ETBC
	24	25	26	27	28	29	30	31
	C3WTB	C3WTBC	C3ETB	C3ETBC	C4WTB	C4WTBC	C4ETB	C4ETBC
WORD 3	0	1	2	3	4	5	6	7
	C12NWZ	C12RWZ	C12WBZ	C12WBZC	C13NWZ	C13RWZ	C13WBZ	C13WBZC
	8	9	10	11	12	13	14	15
	C21NWZ	C21RWZ	C21WBZ	C21WBZC	C24NWZ	C24RWZ	C24WBZ	C24WBZC
	16	17	18	19	20	21	22	23
	C31NWZ	C31RWZ	C31WBZ	C31WBZC	C42NWZ	C42RWZ	C42WBZ	C42WBZC
	24	25	26	27	28	29	30	31
	C1WFCZ	C1EFCZ	C2WFCZ	C2EFCZ	C3WFCZ	C3EFCZ	C4WFCZ	C4EFCZ
WORD 4	0	1	2	3	4	5	6	7
	C293WLZ	C293WLZC	CSMZ	CSMZC	CRMCZ	CRMCZC	CLAFK	CLBFK
	8	9	10	11	12	13	14	15
	SPARE	SPARE	SPARE	SPARE	SPARE	SPARE	SPARE	SPARE
	16	17	18	19	20	21	22	23
	SPARE	SPARE	SPARE	SPARE	SPARE	SPARE	SPARE	SPARE
	24	25	26	27	28	29	30	31
	SPARE	SPARE	SPARE	SPARE	SPARE	SPARE	SPARE	SPARE

SERIAL INDICATION WORDS								
	0	1	2	3	4	5	6	7
WORD 1	1WGK	1EGK	2WGK	2EGK	3WGK	3EGK	4WGK	4EGK
	8	9	10	11	12	13	14	15
	1WFLK	1EFLK	2WFLK	2EFLK	3WFLK	3EFLK	4WFLK	4EFLK
	16	17	18	19	20	21	22	23
	1WABGK	1EABGK	2WABGK	2EABGK	3WABGK	3EABGK	4WABGK	4EABGK
	24	25	26	27	28	29	30	31
	1WFK	1EFK	2WFK	2EFK	3WFK	3EFK	4WFK	4EFK
WORD 2	0	1	2	3	4	5	6	7
	1WTBK	1ETBK	2WTBK	2ETBK	3WTBK	3ETBK	4WTBK	4ETBK
	8	9	10	11	12	13	14	15
	1ATK	1BTK	2ATK	2BTK	3ATK	3BTK	4ATK	4BTK
	16	17	18	19	20	21	22	23
	12ANK	12BNK	12ARK	12BRK	12WBK	12LK	13ANK	13BNK
	24	25	26	27	28	29	30	31
	13ARK	13BRK	13WBK	13LK	21ANK	21BNK	21ARK	21BRK
WORD 3	0	1	2	3	4	5	6	7
	21WBK	21LK	24ANK	24BNK	24ARK	24BRK	24WBK	24LK
	8	9	10	11	12	13	14	15
	31ANK	31BNK	31ARK	31BRK	31WBK	31LK	42ANK	42BNK
	16	17	18	19	20	21	22	23
	42ARK	42BRK	42WBK	42LK	*293NWLK	SPARE	SPARE	SPARE
	24	25	26	27	28	29	30	31
	2353TK	2433TK	2503TK	2563TK	2643TK	2693TK	2733TK	2823TK
WORD 4	0	1	2	3	4	5	6	7
	2913TK	COB3TK	2351TK	2431TK	2501TK	2561TK	2641TK	2691TK
	8	9	10	11	12	13	14	15
	2731TK	2821TK	2911TK	COB1TK	2352TK	2432TK	2502TK	2562TK
	16	17	18	19	20	21	22	23
	2642TK	2692TK	2732TK	2802TK	2912TK	COB2TK	2354TK	2434TK
	24	25	26	27	28	29	30	31
	2504TK	2584TK	2644TK	2694TK	2734TK	2804TK	2914TK	COB4TK
WORD 5	0	1	2	3	4	5	6	7
	60HZPOK	100HZPOK	DCPOK	GNDK	SPK	SDK	NSLFAILEDK	SSLFAILEDK
	8	9	10	11	12	13	14	15
	MCK	NETSWAK	NETSWBK	BBEK	SPARE	ABEK	SPARE	BBEK
	16	17	18	19	20	21	22	23
	SPARE	CBEK	SPARE	DBEK	SPARE	EBEK	SPARE	FBEK
	24	25	26	27	28	29	30	31
	282ACPOK	282DCPOK	282BEK	282GNDK	282SDK	SPARE	SPARE	SPARE
WORD 6	0	1	2	3	4	5	6	7
	269ACPOK	269DCPOK	269BEK	269GNDK	269SDK	SPARE	SPARE	SPARE
	8	9	10	11	12	13	14	15
	256ACPOK	256DCPOK	256BEK	256GNDK	256SDK	SPARE	SPARE	SPARE
	16	17	18	19	20	21	22	23
	250ACPOK	250DCPOK	250BEK	250GNDK	250SDK	SPARE	SPARE	SPARE
	24	25	26	27	28	29	30	31
	243ACPOK	243DCPOK	243BEK	243GNDK	243SDK	SPARE	SPARE	SPARE
WORD 7	0	1	2	3	4	5	6	7
	1WLOK	1ELOK	2WLOK	2ELOK	3WLOK	3ELOK	4WLOK	4ELOK
	8	9	10	11	12	13	14	15
	Z1CPS	Z2CPS	Z3CPS	NVPMODE	MOK	CLAFK	CLBFK	SPARE
	16	17	18	19	20	21	22	23
	SPARE	SPARE	SPARE	SPARE	SPARE	SPARE	SPARE	SPARE
	24	25	26	27	28	29	30	31
	SPARE	SPARE	SPARE	SPARE	SPARE	SPARE	SPARE	SPARE

* THE USE OF 293NWLK IS TO BE DETERMINED.

DESIGNED CEL	NO.	DATE		DRWN	CHKD	APPVD	NO.	DATE		DRWN	CHKD	APPVD	
DRAWN CEL													
CHECKED JJL													
APPROVED XXX			REVISIONS						REVISIONS				

Gannett Fleming Transit & Rail Systems / CWA
GANNETT FLEMING/CWA, a joint venture
TWO PENN PLAZA, SUITE 552
380 SEVENTH AVENUE
NEW YORK, NY 10121-0101
PRJ: 057664

Metro-North Railroad
347 Madison Avenue
New York, N.Y. 10017

TITLE
ENGINEERING AND DESIGN OF
CP 229 – CP 241

CP 229
SERIAL I/O CHART CIL

CONTRACT NO. 1000027511
SCALE NONE
DATE 08–29–14
DRAWING NO. NHL2901031
SHEET 1032 OF _

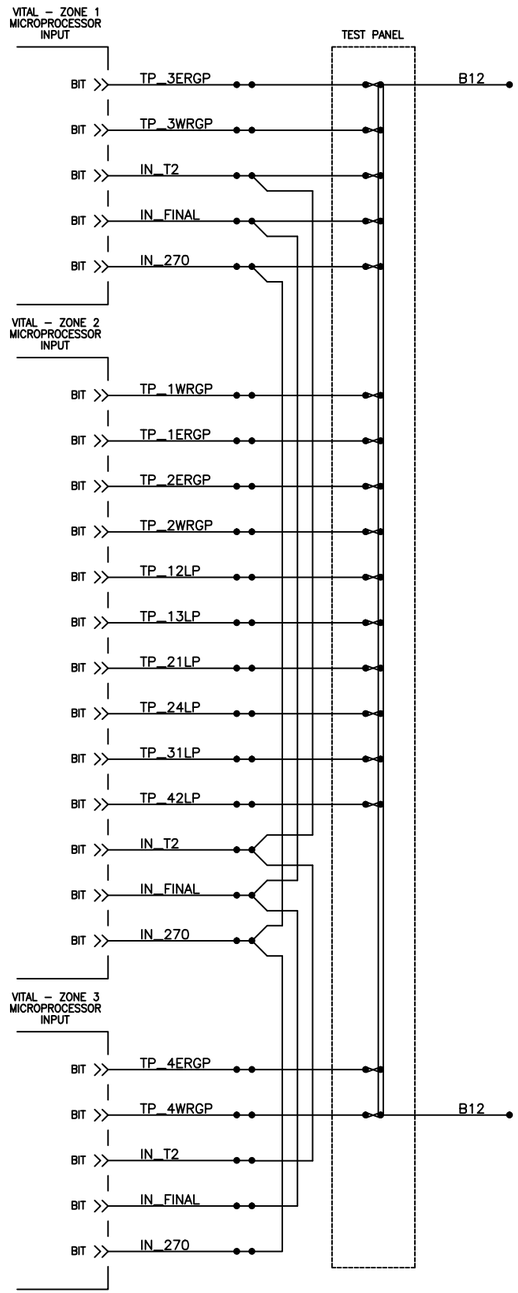

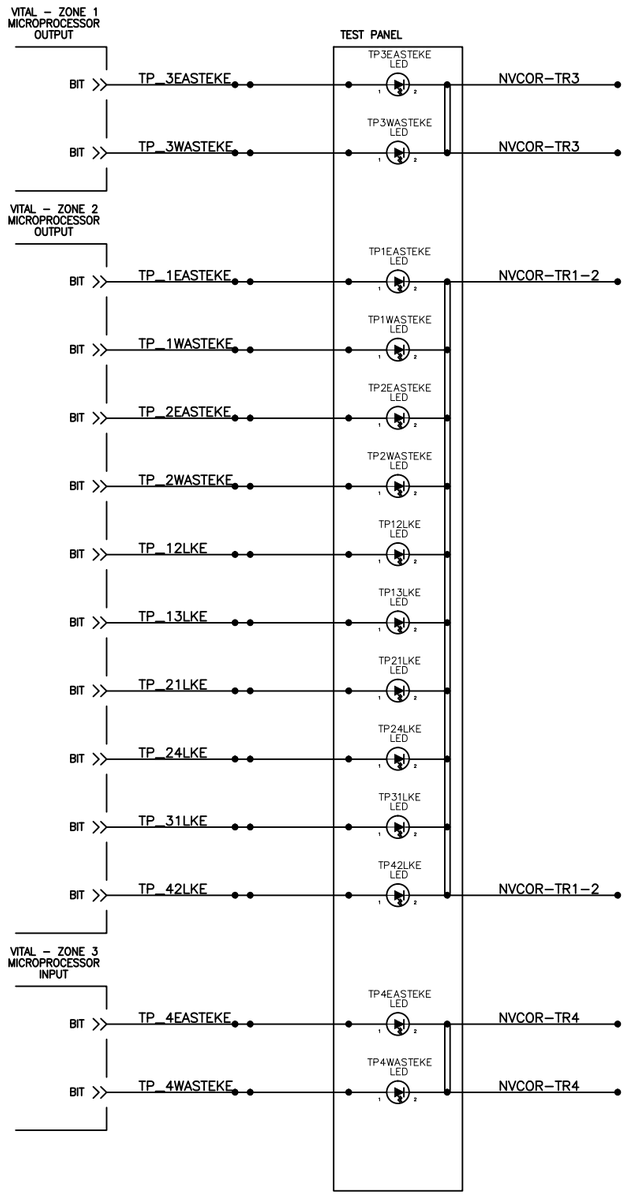

NOTES:
1. TYPICAL CIRCUITS SHOWN ARE BASED UPON SPECIFIC VITAL PROCESSOR INTERLOCKING PRODUCTS AND ARE INTENDED TO DEFINE THE TYPES OF INTERFACE REQUIRED. CONTRACTOR SHALL PROVIDE DESIGN IN ACCORDANCE WITH ALL SPECIFICATION REQUIREMENTS AND BASED UPON SPECIFIC SIGNAL EQUIPMENT TO BE SUPPLIED.
2. ALL WIRES #16 UNLESS NOTED.
3. INPUT, OUTPUT AND POWER WIRES TO BE PUT IN SEPERATE BUNDLES.

DESIGNED CEL													
DRAWN CEL													
CHECKED JJL													
APPROVED XXX													
		NO.	DATE		DRWN	CHKD	APPVD	NO.	DATE		DRWN	CHKD	APPVD
		REVISIONS						REVISIONS					

Gannett Fleming Transit & Rail Systems /CWA
GANNETT FLEMING/CWA, a joint venture
TWO PENN PLAZA, SUITE 552
380 SEVENTH AVENUE
NEW YORK, NY 10121–0101
PRJ: 057664

Metro-North Railroad
347 Madison Avenue
New York, N.Y. 10017

TITLE
ENGINEERING AND DESIGN OF CP 229 – CP 241
CP 229
TEST PANEL CIRCUITS

CONTRACT NO. 1000027511
SCALE NONE | DATE 08–29–14
DRAWING NO. **NHL2901032**
SHEET 1033 OF _

VITAL RACK ZONE 1

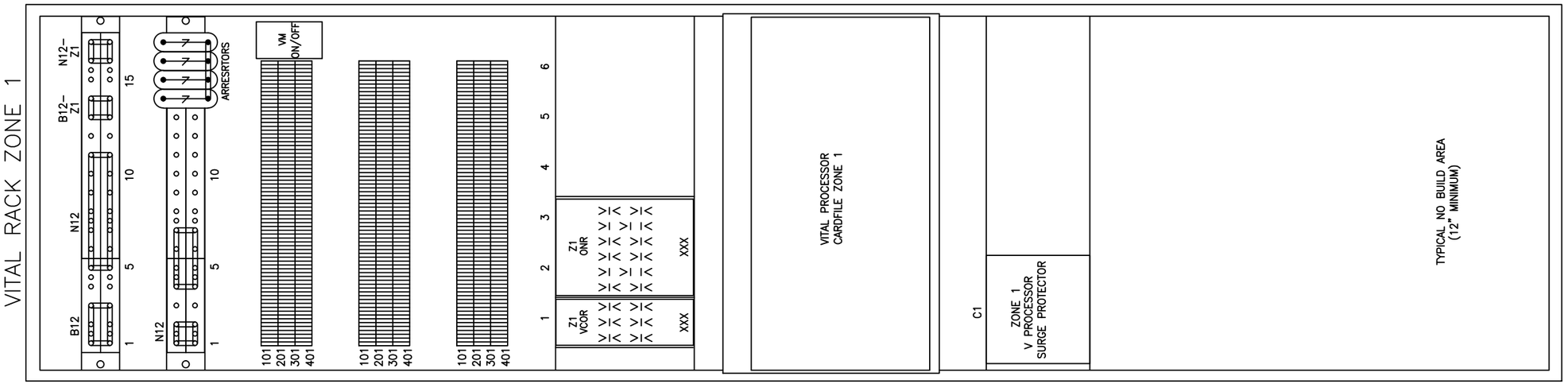

FRONT VIEW

NOTES:
1. ALL MICROPROCESSOR EQUIPMENT (SWITCHES, CARDFILES, DC TO DC CONVERTERS, AND CODE LINE EQUIPMENT) SHALL BE MOUNTED AT A MINIMUM OF 3' FROM BOTTOM OF RACK.

DESIGNED	RRL
DRAWN	RRL
CHECKED	JJL
APPROVED	XXX

NO.	DATE		DRWN	CHKD	APPVD
		REVISIONS			

NO.	DATE		DRWN	CHKD	APPVD
		REVISIONS			

Gannett Fleming Transit & Rail Systems / CWA
GANNETT FLEMING/CWA, a joint venture
TWO PENN PLAZA, SUITE 552
380 SEVENTH AVENUE
NEW YORK, NY 10121-0101
PRJ: 057664

MTA Metro-North Railroad
347 Madison Avenue
New York, N.Y. 10017

TITLE
ENGINEERING AND DESIGN OF CP 229 – CP 241
CP 229
RACK LAYOUT
ZONE 1 VITAL MICROPROCESSOR

CONTRACT NO.	1000027511
SCALE	NONE
DATE	08-29-14
DRAWING NO.	NHL2901033
SHEET 1034 OF	_

VITAL RACK ZONE 2

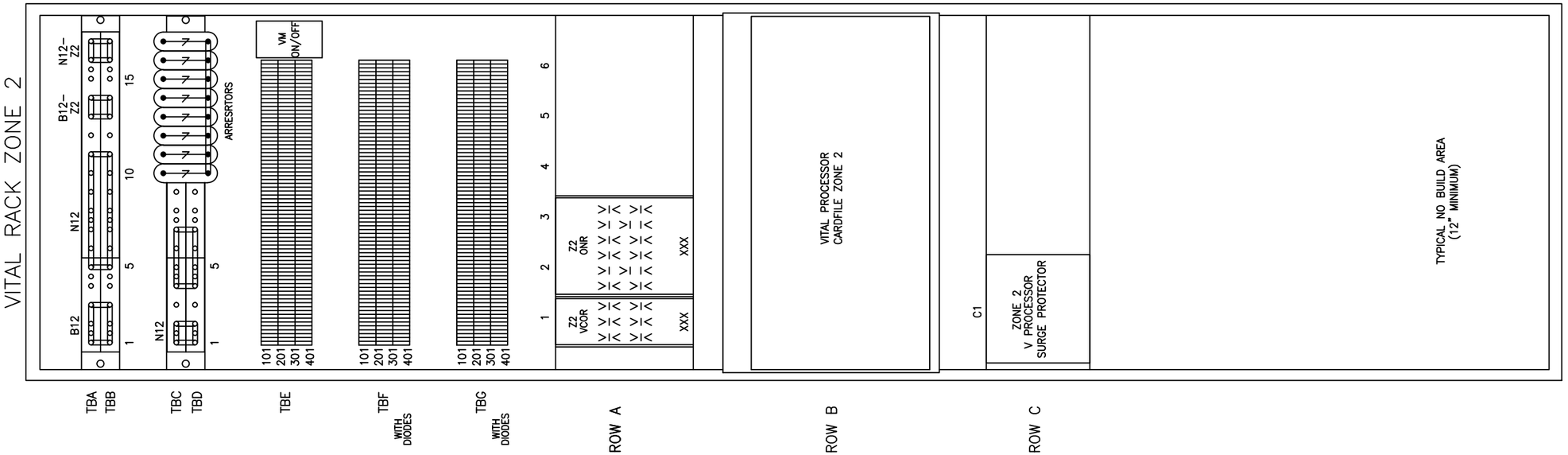

FRONT VIEW

NOTES:
1. ALL MICROPROCESSOR EQUIPMENT (SWITCHES, CARDFILES, DC TO DC CONVERTERS, AND CODE LINE EQUIPMENT) SHALL BE MOUNTED AT A MINIMUM OF 3' FROM BOTTOM OF RACK.

DESIGNED	RRL
DRAWN	RRL
CHECKED	JJL
APPROVED	XXX

NO.	DATE		DRWN	CHKD	APPVD
		REVISIONS			

NO.	DATE		DRWN	CHKD	APPVD
		REVISIONS			

Gannett Fleming Transit & Rail Systems / CWA
GANNETT FLEMING/CWA, a joint venture
TWO PENN PLAZA, SUITE 552
380 SEVENTH AVENUE
NEW YORK, NY 10121–0101
PRJ: 057664

Metro-North Railroad
347 Madison Avenue
New York, N.Y. 10017

TITLE
ENGINEERING AND DESIGN OF CP 229 – CP 241

CP 229
RACK LAYOUT
ZONE 2 VITAL MICROPROCESSOR

CONTRACT NO. 1000027511
SCALE NONE
DATE 08–29–14
DRAWING NO. NHL2901034
SHEET 1035 OF _

VITAL RACK ZONE 3

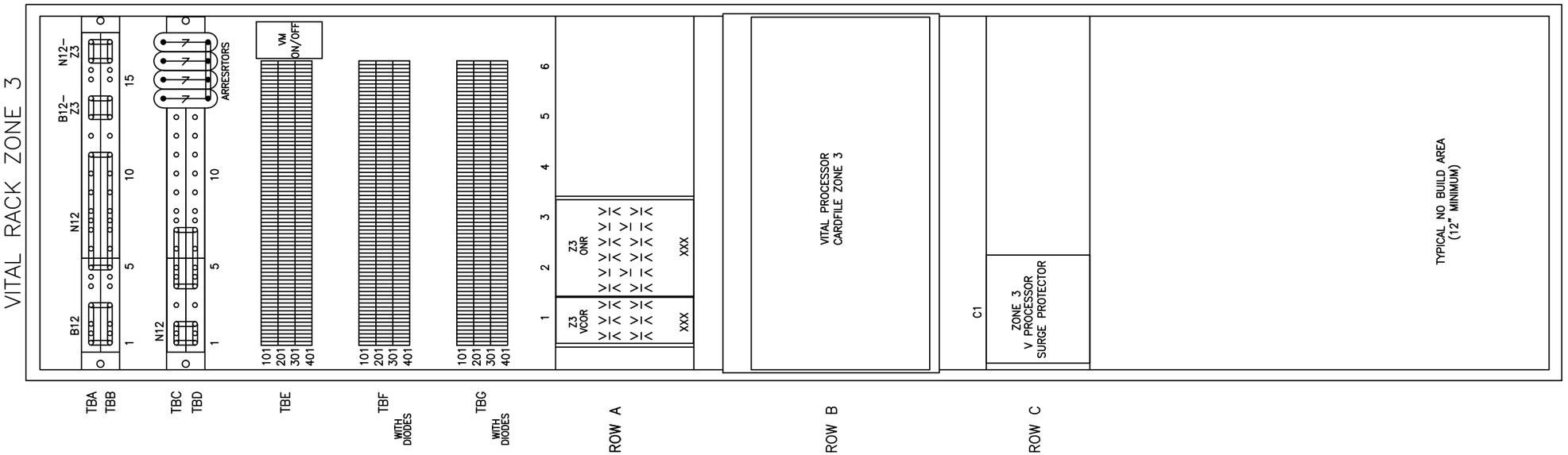

FRONT VIEW

NOTES:
1. ALL MICROPROCESSOR EQUIPMENT (SWITCHES, CARDFILES, DC TO DC CONVERTERS, AND CODE LINE EQUIPMENT) SHALL BE MOUNTED AT A MINIMUM OF 3' FROM BOTTOM OF RACK.

DESIGNED	RRL
DRAWN	RRL
CHECKED	JJL
APPROVED	XXX

NO.	DATE		DRWN	CHKD	APPVD

REVISIONS

NO.	DATE		DRWN	CHKD	APPVD

REVISIONS

Gannett Fleming Transit & Rail Systems / CWA
GANNETT FLEMING/CWA, a joint venture
TWO PENN PLAZA, SUITE 552
380 SEVENTH AVENUE
NEW YORK, NY 10121-0101
PRJ: 057664

MTA Metro-North Railroad
347 Madison Avenue
New York, N.Y. 10017

TITLE
ENGINEERING AND DESIGN OF CP 229 – CP 241
CP 229
RACK LAYOUT
ZONE 3 VITAL MICROPROCESSOR

CONTRACT NO.	1000027511
SCALE	NONE
DATE	08-29-14
DRAWING NO.	NHL2901035
SHEET	1036 OF _

NV RACK

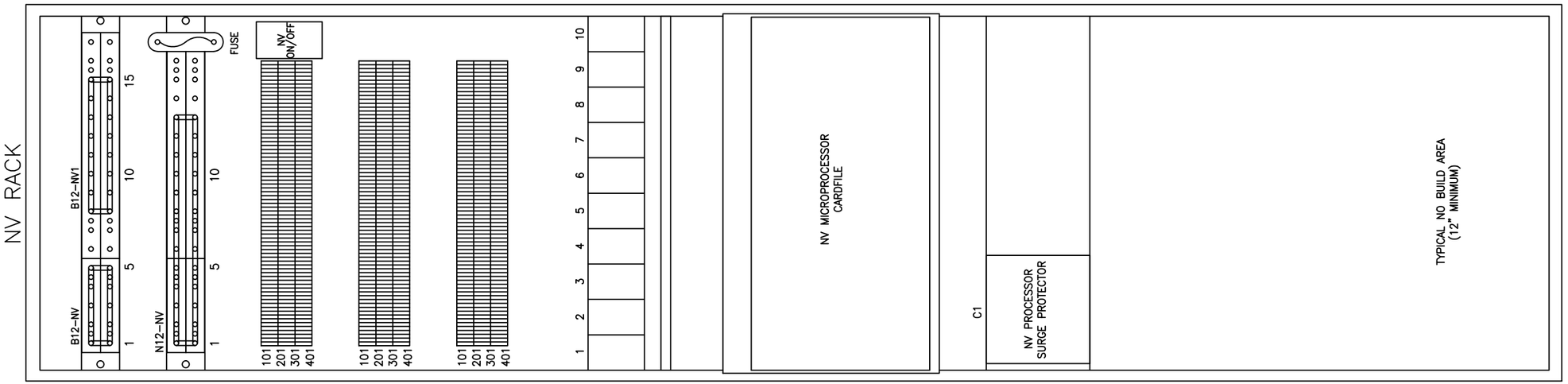

NOTES:
1. ALL MICROPROCESSOR EQUIPMENT (SWITCHES, CARDFILES, DC TO DC CONVERTERS, AND CODE LINE EQUIPMENT) SHALL BE MOUNTED AT A MINIMUM OF 3' FROM BOTTOM OF RACK.

DESIGNED RRL													
DRAWN RRL													
CHECKED JJL													
APPROVED XXX													
		NO.	DATE	REVISIONS	DRWN	CHKD	APPVD	NO.	DATE	REVISIONS	DRWN	CHKD	APPVD

Gannett Fleming Transit & Rail Systems / CWA
GANNETT FLEMING/CWA, a joint venture
TWO PENN PLAZA, SUITE 552
380 SEVENTH AVENUE
NEW YORK, NY 10121-0101
PRJ: 057664

Metro-North Railroad
347 Madison Avenue
New York, N.Y. 10017

TITLE
ENGINEERING AND DESIGN OF CP 229 – CP 241
CP 229
RACK LAYOUT
NON-VITAL MICROPROCESSOR

CONTRACT NO. 1000027511
SCALE NONE
DATE 08-29-14
DRAWING NO. NHL2901036
SHEET 1037 OF _

RACK — TRACK 1

NOTES:

1. ALL MICROPROCESSOR EQUIPMENT (SWITCHES, CARDFILES, DC TO DC CONVERTERS, AND CODE LINE EQUIPMENT) SHALL BE MOUNTED AT A MINIMUM OF 3' FROM BOTTOM OF RACK.

DESIGNED	RRL
DRAWN	RRL
CHECKED	JJL
APPROVED	XXX

NO.	DATE		DRWN	CHKD	APPVD	NO.	DATE		DRWN	CHKD	APPVD
REVISIONS						REVISIONS					

Gannett Fleming Transit & Rail Systems /CWA
GANNETT FLEMING/CWA, a joint venture
TWO PENN PLAZA, SUITE 552
380 SEVENTH AVENUE
NEW YORK, NY 10121-0101
PRJ: 057664

Metro-North Railroad
347 Madison Avenue
New York, N.Y. 10017

TITLE
ENGINEERING AND DESIGN OF
CP 229 — CP 241

CP 229
RACK LAYOUT TRACK 1

CONTRACT NO. 1000027511	
SCALE NONE	DATE 08-29-14
DRAWING NO. **NHL2901037**	
SHEET 1038 OF _	

NOTES:
1. ALL MICROPROCESSOR EQUIPMENT (SWITCHES, CARDFILES, DC TO DC CONVERTERS, AND CODE LINE EQUIPMENT) SHALL BE MOUNTED AT A MINIMUM OF 3' FROM BOTTOM OF RACK.

DESIGNED	RRL
DRAWN	RRL
CHECKED	JJL
APPROVED	XXX

NO.	DATE		DRWN	CHKD	APPVD	NO.	DATE		DRWN	CHKD	APPVD

REVISIONS | REVISIONS

Gannett Fleming Transit & Rail Systems /CWA
GANNETT FLEMING/CWA, a joint venture
TWO PENN PLAZA, SUITE 552
380 SEVENTH AVENUE
NEW YORK, NY 10121-0101
PRJ: 057664

Metro-North Railroad
347 Madison Avenue
New York, N.Y. 10017

TITLE
ENGINEERING AND DESIGN OF
CP 229 – CP 241

CP 229
RACK LAYOUT TRACK 2

CONTRACT NO. 1000027511	
SCALE NONE	DATE 08-29-14
DRAWING NO. NHL2901038	
SHEET 1039 OF _	

NOTES:
1. ALL MICROPROCESSOR EQUIPMENT (SWITCHES, CARDFILES, DC TO DC CONVERTERS, AND CODE LINE EQUIPMENT) SHALL BE MOUNTED AT A MINIMUM OF 3' FROM BOTTOM OF RACK.

DESIGNED	RRL
DRAWN	RRL
CHECKED	JJL
APPROVED	XXX

NO.	DATE	REVISIONS	DRWN	CHKD	APPVD	NO.	DATE	REVISIONS	DRWN	CHKD	APPVD

Gannett Fleming Transit & Rail Systems /CWA
GANNETT FLEMING/CWA, a joint venture
TWO PENN PLAZA, SUITE 552
380 SEVENTH AVENUE
NEW YORK, NY 10121-0101
PRJ: 057664

Metro-North Railroad
347 Madison Avenue
New York, N.Y. 10017

TITLE
ENGINEERING AND DESIGN OF
CP 229 – CP 241

CP 229
RACK LAYOUT TRACK 3

CONTRACT NO. 1000027511
SCALE NONE
DATE 08-29-14
DRAWING NO. **NHL2901039**
SHEET 1040 OF _

RACK – TRACK 4

FRONT VIEW

NOTES:

1. ALL MICROPROCESSOR EQUIPMENT (SWITCHES, CARDFILES, DC TO DC CONVERTERS, AND CODE LINE EQUIPMENT) SHALL BE MOUNTED AT A MINIMUM OF 3' FROM BOTTOM OF RACK.

DESIGNED	RRL
DRAWN	RRL
CHECKED	JJL
APPROVED	XXX

NO.	DATE		DRWN	CHKD	APPVD	NO.	DATE		DRWN	CHKD	APPVD

REVISIONS REVISIONS

Gannett Fleming Transit & Rail Systems /CWA
GANNETT FLEMING/CWA, a joint venture
TWO PENN PLAZA, SUITE 552
380 SEVENTH AVENUE
NEW YORK, NY 10121-0101
PRJ: 057664

Metro-North Railroad
347 Madison Avenue
New York, N.Y. 10017

TITLE
ENGINEERING AND DESIGN OF CP 229 – CP 241

CP 229
RACK LAYOUT TRACK 4

CONTRACT NO. 1000027511
SCALE NONE
DATE 08-29-14
DRAWING NO. **NHL2901040**
SHEET 1041 OF _

ROW A

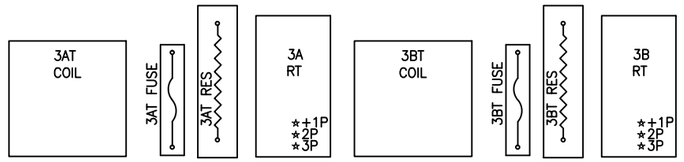

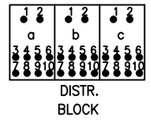

DISTR. BLOCK

60HZ AUTOMATIC TRANSFER SWITCH

60HZ POWER NORMAL BREAKER BOX

60HZ POWER AUXILIARY BREAKER BOX

ROW B

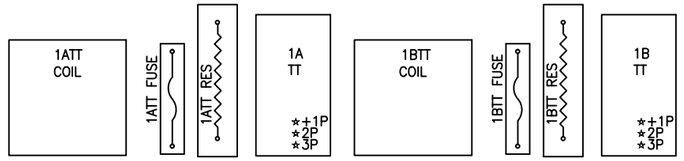

ROW C

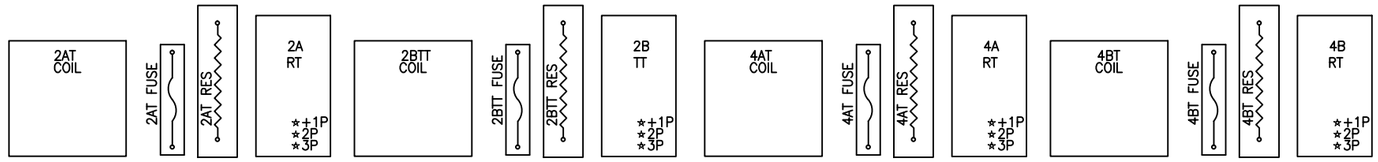

NOTE:
1. * = INSULATED NUT

DESIGNED RRL													
DRAWN RRL													
CHECKED JJL													
APPROVED XXX													
		NO.	DATE	REVISIONS	DRWN	CHKD	APPVD	NO.	DATE	REVISIONS	DRWN	CHKD	APPVD

Gannett Fleming Transit & Rail Systems / CWA
GANNETT FLEMING/CWA, a joint venture
TWO PENN PLAZA, SUITE 552
380 SEVENTH AVENUE
NEW YORK, NY 10121-0101
PRJ: 057664

Metro-North Railroad
347 Madison Avenue
New York, N.Y. 10017

TITLE
ENGINEERING AND DESIGN OF
CP 229 – CP 241

CP 229
WALL LAYOUT
SHEET 1 OF 3

CONTRACT NO. 1000027511
SCALE NONE
DATE 08-29-14
DRAWING NO. NHL2901041
SHEET 1042 OF _

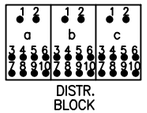

100HZ
AUTOMATIC TRANSFER
SWITCH

BX120H	LOC. A
	LOC. B
TRCT	LOC. C
B12	LOC. D
B12–NV	LOC. E
LB12	LOC. F
B12–E	SM

PW–S
BRKRS

12	13
21	24
31	42

PW–SW
BRKRS

100HZ
PWR NORTH
BREAKER BOX

100HZ
PWR SOUTH
BREAKER BOX

FAN	HVAC
POK	FIRE
OUT1	OUT2
L1	SS & COM
L2	

PW–H
BRKRS

12AH FUSE DISC
12BH FUSE DISC
13AH FUSE DISC
13BH FUSE DISC
21AH FUSE DISC
21BH FUSE DISC
24AH FUSE DISC
24BH FUSE DISC
31AH FUSE DISC
31BH FUSE DISC
42AH FUSE DISC
42BH FUSE DISC

100 HZ POK
TRANSFORMER

CIL
SONALERT

DISBL
PB

60HZ
RECT
* AC+
* AC–

60POK
FUSE

60POK
TRANSFORMER

100HZ POK
RECT
* AC+
* AC–

POK
FUSE

ISOLATION
TRANSFORMER

T100
XFMR

SM
RECT
* AC+
* AC–

SP–H
COM

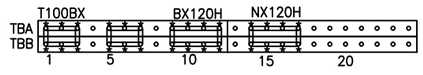

NOTE:
1. * = INSULATED NUT

DESIGNED	DRAWN	CHECKED	APPROVED
RRL	RRL	JJL	XXX

NO.	DATE		DRWN	CHKD	APPVD

REVISIONS

NO.	DATE		DRWN	CHKD	APPVD

REVISIONS

Gannett Fleming Transit & Rail Systems / CWA
GANNETT FLEMING/CWA, a joint venture
TWO PENN PLAZA, SUITE 552
380 SEVENTH AVENUE
NEW YORK, NY 10121–0101
PRJ: 057664

Metro-North Railroad
347 Madison Avenue
New York, N.Y. 10017

TITLE
ENGINEERING AND DESIGN OF
CP 229 – CP 241

CP 229
WALL LAYOUT
SHEET 2 OF 3

CONTRACT NO.
1000027511

SCALE: NONE
DATE: 08–29–14

DRAWING NO.
NHL2901042

SHEET 1043 OF _

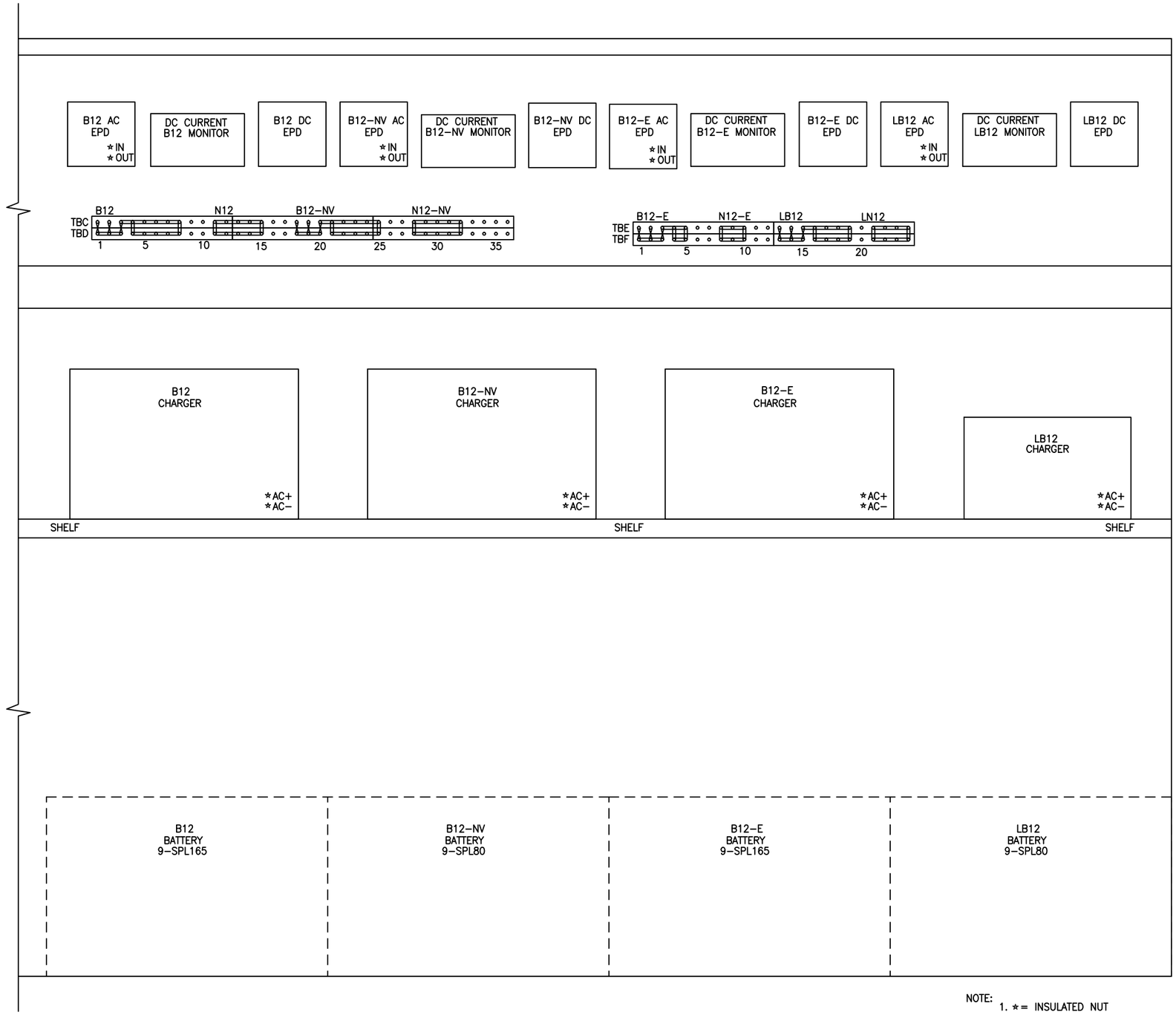

NOTE:
1. * = INSULATED NUT

DESIGNED RRL														
DRAWN RRL														
CHECKED JJL														
APPROVED XXX														
		NO.	DATE		DRWN	CHKD	APPVD	NO.	DATE		DRWN	CHKD	APPVD	
		REVISIONS						REVISIONS						

Gannett Fleming Transit & Rail Systems / CWA
GANNETT FLEMING/CWA, a joint venture
TWO PENN PLAZA, SUITE 552
380 SEVENTH AVENUE
NEW YORK, NY 10121–0101
PRJ: 057664

Metro-North Railroad
347 Madison Avenue
New York, N.Y. 10017

TITLE
ENGINEERING AND DESIGN OF
CP 229 – CP 241
CP 229
WALL LAYOUT
SHEET 3 OF 3

CONTRACT NO. 1000027511
SCALE NONE
DATE 08–29–14
DRAWING NO. NHL2901043
SHEET 1044 OF _

EL. 293

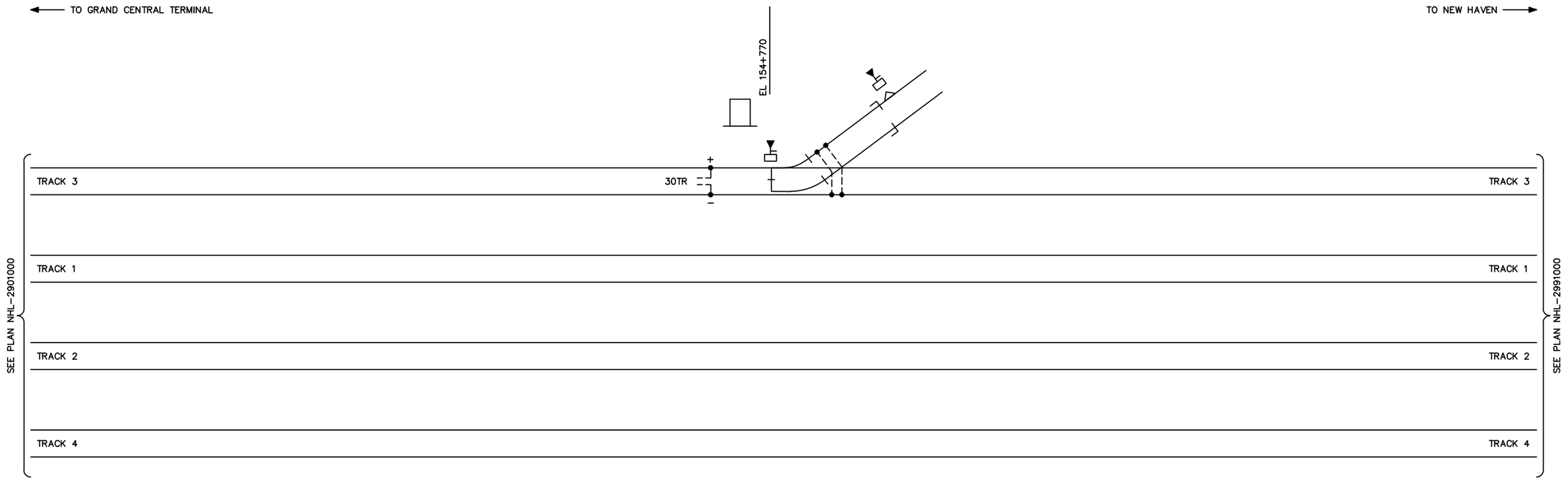

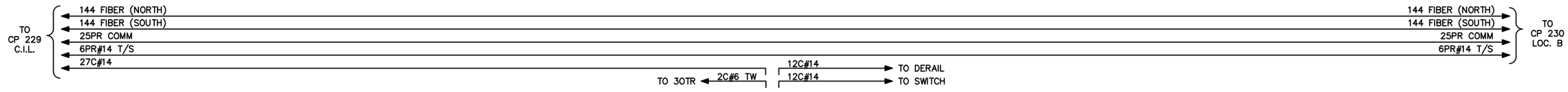

NOTES:

1. ALL CABLES SUPPLIED BY METRO-NORTH
2. ALL CABLES ARE UG UNLESS NOTED OTHERWISE.

DESIGNED CEL		NO.	DATE		DRWN	CHKD	APPVD	NO.	DATE		DRWN	CHKD	APPVD
DRAWN CEL													
CHECKED JJL													
APPROVED XXX		REVISIONS						REVISIONS					

Gannett Fleming Transit & Rail Systems / CWA
GANNETT FLEMING/CWA, a joint venture
TWO PENN PLAZA, SUITE 552
380 SEVENTH AVENUE
NEW YORK, NY 10121-0101
PRJ: 057664

Metro-North Railroad
347 Madison Avenue
New York, N.Y. 10017

TITLE
ENGINEERING AND DESIGN OF CP 229 – CP 241

ELECTRIC LOCK 293
TRACK AND CABLE PLAN

CONTRACT NO. 1000027511
SCALE
DATE 08-29-14
DRAWING NO. NHL2931000
SHEET 1045 OF _

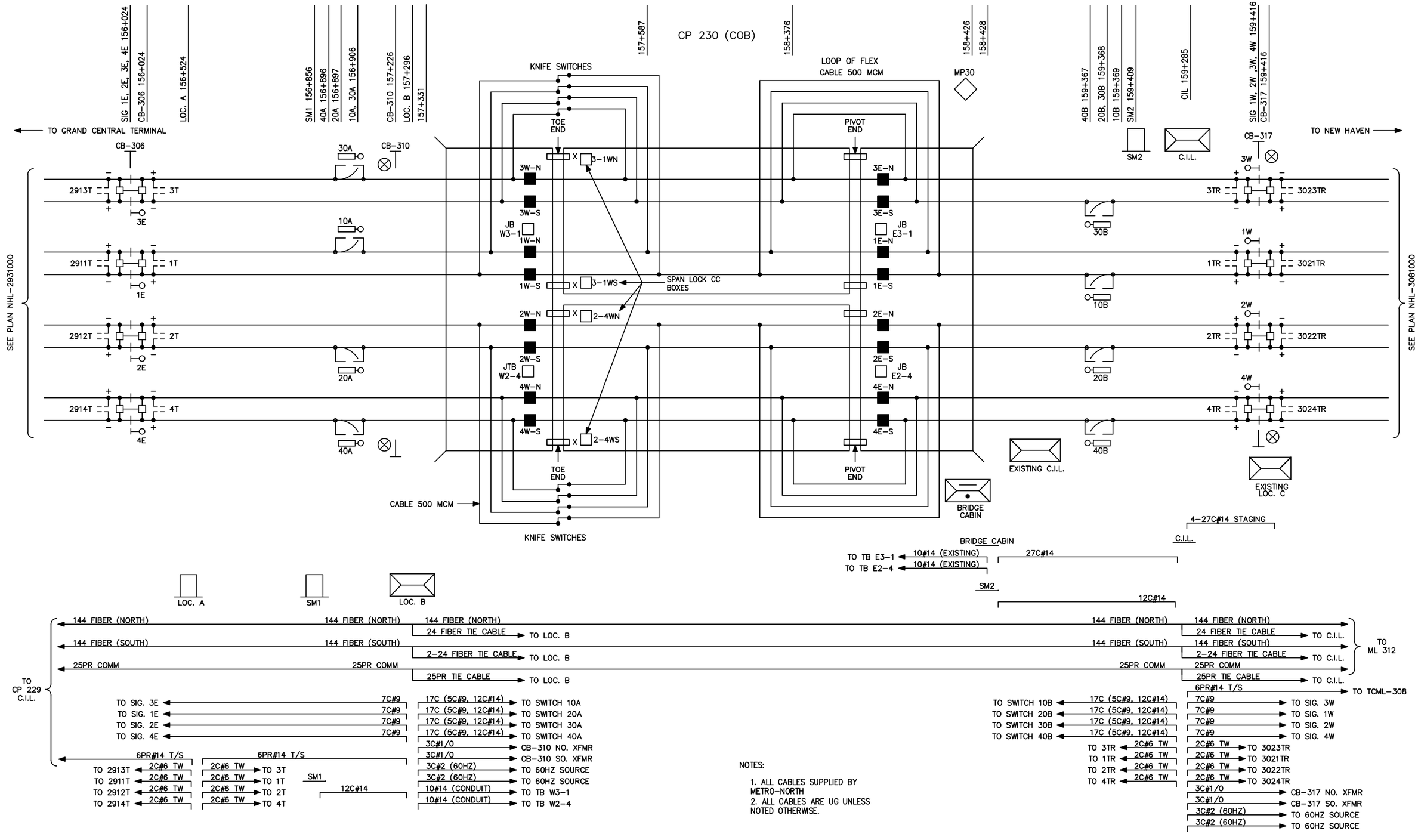

NOTES:

1. ALL CABLES SUPPLIED BY METRO-NORTH
2. ALL CABLES ARE UG UNLESS NOTED OTHERWISE.

DESIGNED CEL		NO.	DATE		DRWN	CHKD	APPVD	NO.	DATE		DRWN	CHKD	APPVD
DRAWN CEL													
CHECKED JJL													
APPROVED XXX				REVISIONS						REVISIONS			

Gannett Fleming Transit & Rail Systems / CWA
GANNETT FLEMING/CWA, a joint venture
TWO PENN PLAZA, SUITE 552
380 SEVENTH AVENUE
NEW YORK, NY 10121-0101
PRJ: 057664

Metro-North Railroad
347 Madison Avenue
New York, N.Y. 10017

TITLE
ENGINEERING AND DESIGN OF CP 229 – CP 241

CP 230
TRACK AND CABLE PLAN

CONTRACT NO. 1000027511
SCALE
DATE 08-29-14
DRAWING NO. NHL2991000
SHEET 1046 OF _

CP 230

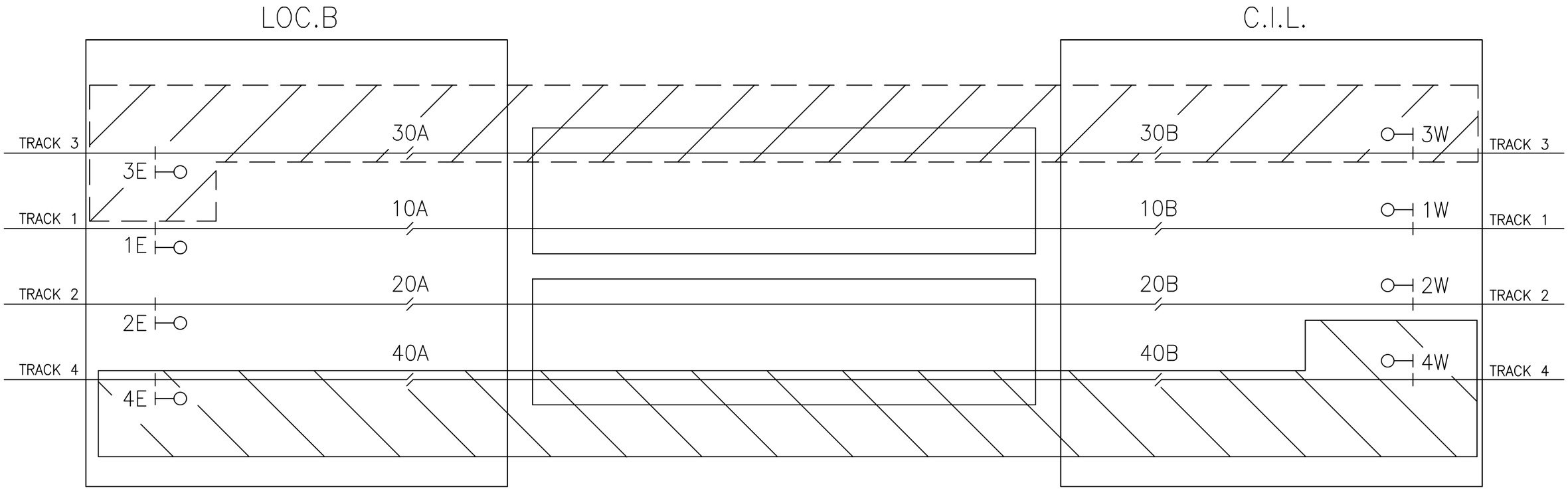

TRACK 3 ZONED PROCESSORS ZONE 1

TRACKS 1 & 2 ZONED PROCESSORS ZONE 2

TRACK 4 ZONED PROCESSORS ZONE 3

DESIGNED RRL														
DRAWN DSL														
CHECKED JJL														
APPROVED GAE														
		NO.	DATE		DRWN	CHKD	APPVD	NO.	DATE		DRWN	CHKD	APPVD
		REVISIONS						REVISIONS						

Gannett Fleming Transit & Rail Systems /CWA
GANNETT FLEMING/CWA, a joint venture
TWO PENN PLAZA, SUITE 552
380 SEVENTH AVENUE
NEW YORK, NY 10121-0101
PRJ: 057664

MTA Metro-North Railroad
347 Madison Avenue
New York, N.Y. 10017

TITLE
ENGINEERING AND DESIGN OF
CP 229 – CP 241
CP 230
MICROPROCESSOR ZONING PLAN

CONTRACT NO. 1000027511
SCALE
DATE 08-29-14
DRAWING NO. NHL2991001
SHEET 1047 OF _

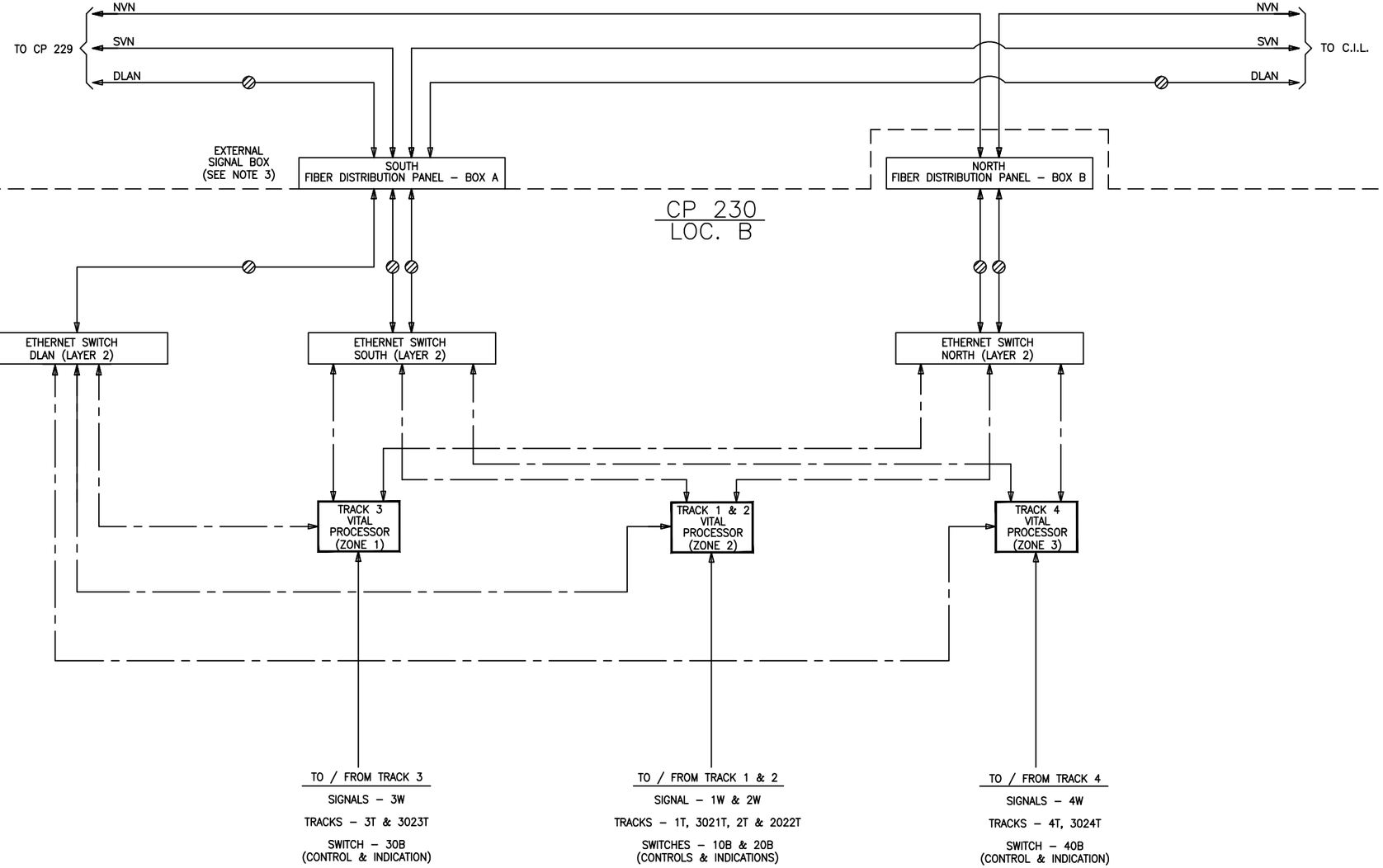

KEY

= VITAL DISCRETE I/O

= SERIAL LINK

= ETHERNET LINK

= FIBER OPTIC LINK (2 STRANDS)

NOTES:

1. TYPICAL CIRCUITS SHOWN ARE BASED UPON SPECIFIC VITAL PROCESSOR INTERLOCKING PRODUCTS AND ARE INTENDED TO DEFINE THE TYPES OF INTERFACE REQUIRED. CONTRACTOR SHALL PROVIDE DESIGN IN ACCORDANCE WITH ALL SPECIFICATION REQUIREMENTS AND BASED UPON SPECIFIC SIGNAL EQUIPMENT TO BE SUPPLIED.
2. ETHERNET SWITCHES SHALL BE POWERED THROUGH DC TO DC CONVERTER.
3. THE EXTERNAL SIGNAL BOX ILLUSTRATED ON THIS SHEET IS THE SAME BOX AS SHOWN ON THE NON VITAL MICROPROCESSOR BLOCK DIAGRAM.

DESIGNED	RRL
DRAWN	CBH
CHECKED	JJL
APPROVED	XXX

NO.	DATE		DRWN	CHKD	APPVD

REVISIONS

NO.	DATE		DRWN	CHKD	APPVD

REVISIONS

Gannett Fleming Transit & Rail Systems / CWA
GANNETT FLEMING/CWA, a joint venture
TWO PENN PLAZA, SUITE 552
380 SEVENTH AVENUE
NEW YORK, NY 10121–0101
PRJ: 057664

Metro-North Railroad
347 Madison Avenue
New York, N.Y. 10017

TITLE
ENGINEERING AND DESIGN OF
CP 229 – CP 241
CP 230
LOC. B
MICROPROCESSOR BLOCK DIAGRAM

CONTRACT NO. 1000027511
SCALE
DATE 08–29–14
DRAWING NO. NHL2991002
SHEET 1048 OF _

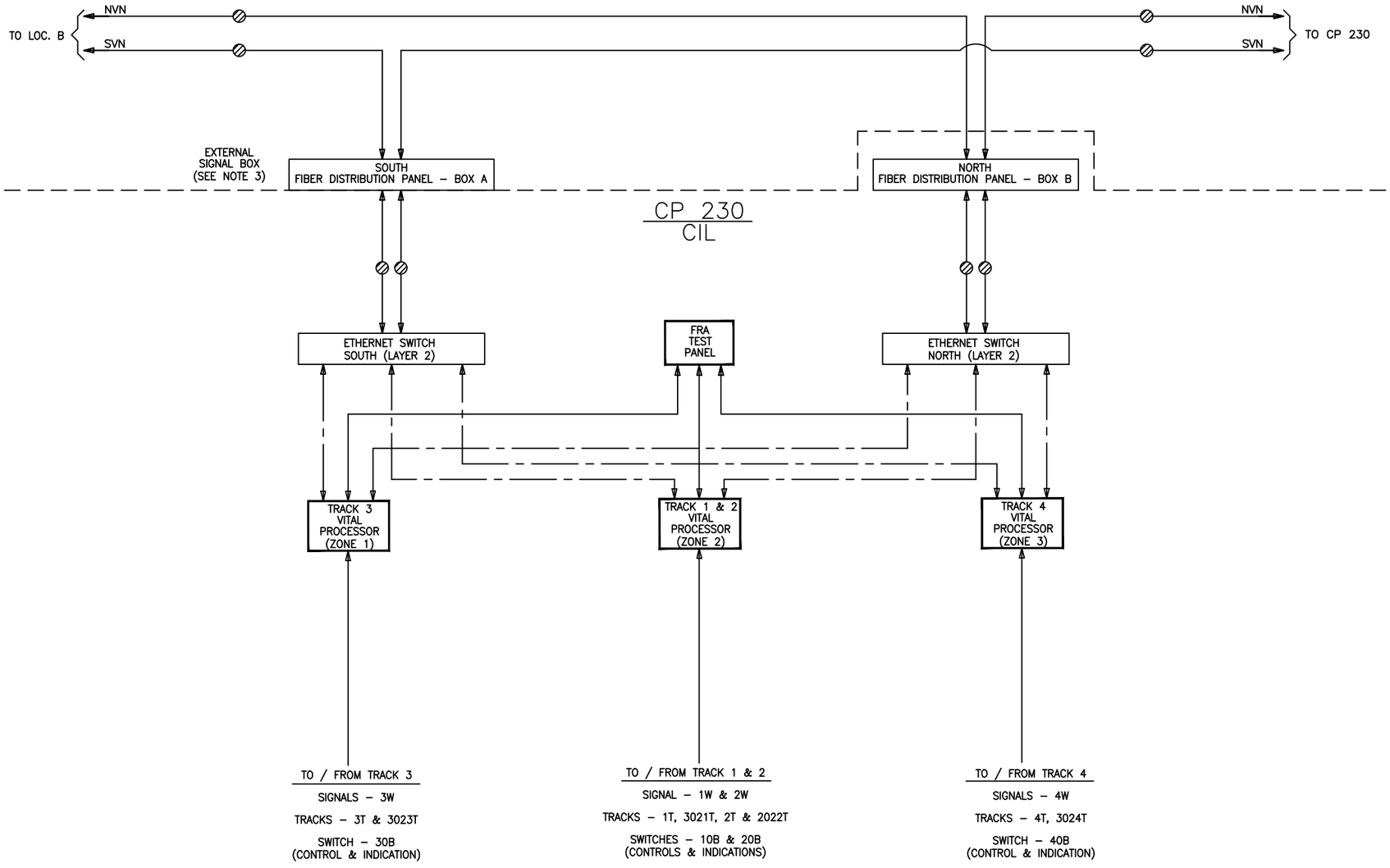

KEY

= VITAL DISCRETE I/O

= SERIAL LINK

= ETHERNET LINK

= FIBER OPTIC LINK (2 STRANDS)

NOTES:

1. TYPICAL CIRCUITS SHOWN ARE BASED UPON SPECIFIC VITAL PROCESSOR INTERLOCKING PRODUCTS AND ARE INTENDED TO DEFINE THE TYPES OF INTERFACE REQUIRED. CONTRACTOR SHALL PROVIDE DESIGN IN ACCORDANCE WITH ALL SPECIFICATION REQUIREMENTS AND BASED UPON SPECIFIC SIGNAL EQUIPMENT TO BE SUPPLIED.
2. ETHERNET SWITCHES SHALL BE POWERED THROUGH DC TO DC CONVERTER.
3. THE EXTERNAL SIGNAL BOX ILLUSTRATED ON THIS SHEET IS THE SAME BOX AS SHOWN ON THE NON VITAL MICROPROCESSOR BLOCK DIAGRAM.

DESIGNED RRL														
DRAWN CBH														
CHECKED JJL														
APPROVED XXX														
		NO.	DATE	REVISIONS	DRWN	CHKD	APPVD	NO.	DATE	REVISIONS	DRWN	CHKD	APPVD	

Gannett Fleming Transit & Rail Systems / CWA
GANNETT FLEMING/CWA, a joint venture
TWO PENN PLAZA, SUITE 552
380 SEVENTH AVENUE
NEW YORK, NY 10121-0101
PRJ: 057664

Metro-North Railroad
347 Madison Avenue
New York, N.Y. 10017

TITLE
ENGINEERING AND DESIGN OF CP 229 – CP 241
CP 230
CIL
MICROPROCESSOR BLOCK DIAGRAM

CONTRACT NO. 1000027511
SCALE
DATE 08-29-14
DRAWING NO. NHL2991003
SHEET 1049 OF _

NOTES:

1. ALL WIRES TO MOTOR ARE #9 COPPER.
2. PREDETERMINED MAXIMUM TIME INTERNAL TO COMPLETE SWITCH MOVEMENT SHALL BE PROGRAMED IN VITAL PROCESSOR LOGIC TO REPLACE CONVENTIONAL SWITCH OVERLOAD CIRCUIT.
3. TYPICAL CIRCUITS SHOWN ARE BASED UPON SPECIFIC VITAL PROCESSOR INTERLOCKING PRODUCTS AND ARE INTENDED TO DEFINE THE TYPES OF INTERFACE REQUIRED. CONTRACTOR SHALL PROVIDE DESIGN IN ACCORDANCE WITH ALL SPECIFICATION REQUIREMENTS AND BASED UPON SPECIFIC SIGNAL EQUIPMENT TO BE SUPPLIED.

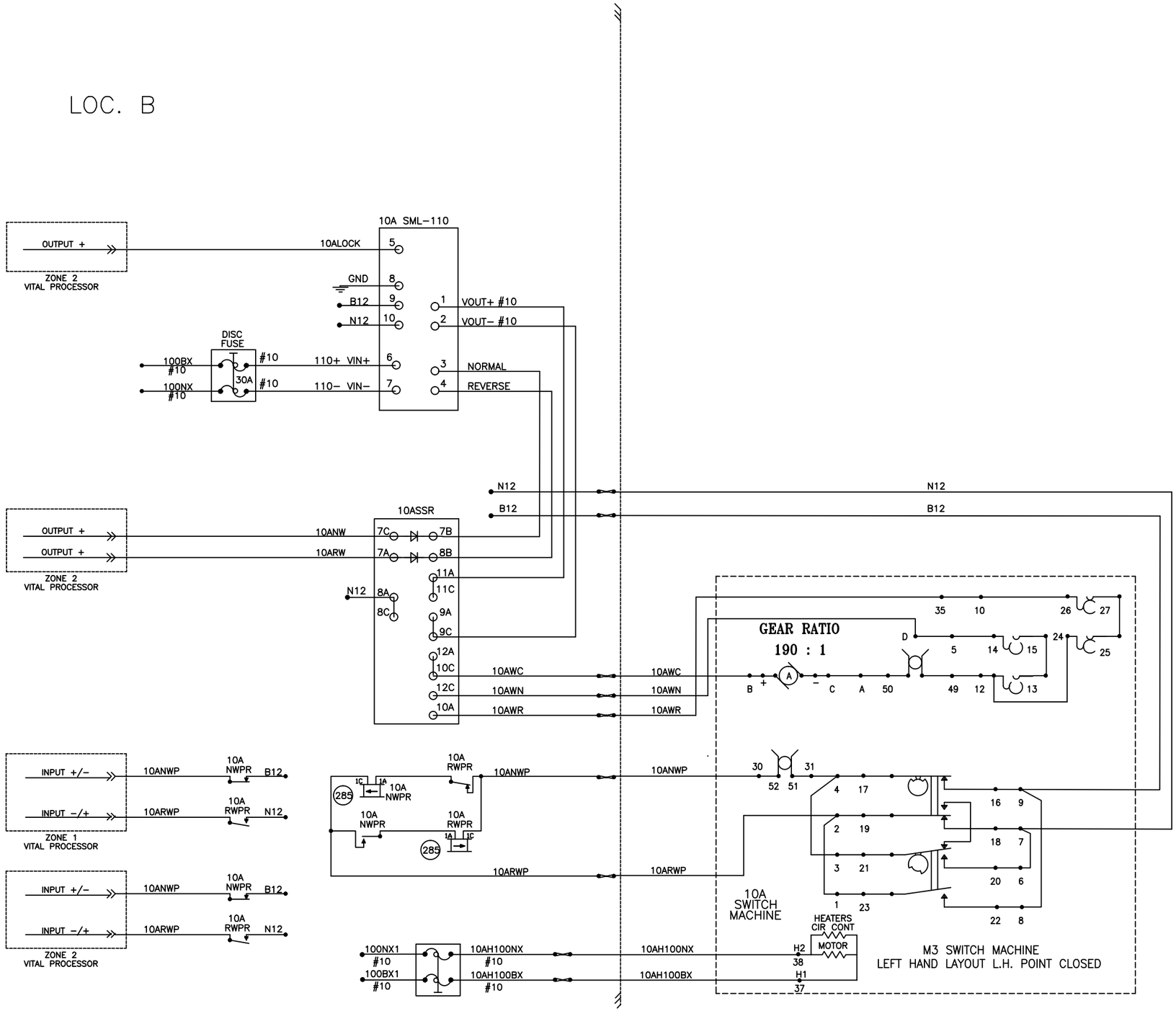

DESIGNED CEL													
DRAWN CEL													
CHECKED JJL													
APPROVED XXX													
		NO.	DATE		DRWN	CHKD	APPVD	NO.	DATE		DRWN	CHKD	APPVD
		REVISIONS						REVISIONS					

Gannett Fleming Transit & Rail Systems / CWA
GANNETT FLEMING/CWA, a joint venture
TWO PENN PLAZA, SUITE 552
380 SEVENTH AVENUE
NEW YORK, NY 10121–0101
PRJ: 057664

Metro-North Railroad
347 Madison Avenue
New York, N.Y. 10017

TITLE
ENGINEERING AND DESIGN OF
CP 229 – CP 241
CP 230
SWITCH CONTROL AND INDICATION 10A

CONTRACT NO. 1000027511
SCALE NONE
DATE 08–29–14
DRAWING NO. NHL2991004
SHEET 1050 OF _

C.I.L.

NOTES:

1. ALL WIRES TO MOTOR ARE #9 COPPER.
2. PREDETERMINED MAXIMUM TIME INTERNAL TO COMPLETE SWITCH MOVEMENT SHALL BE PROGRAMED IN VITAL PROCESSOR LOGIC TO REPLACE CONVENTIONAL SWITCH OVERLOAD CIRCUIT.
3. TYPICAL CIRCUITS SHOWN ARE BASED UPON SPECIFIC VITAL PROCESSOR INTERLOCKING PRODUCTS AND ARE INTENDED TO DEFINE THE TYPES OF INTERFACE REQUIRED. CONTRACTOR SHALL PROVIDE DESIGN IN ACCORDANCE WITH ALL SPECIFICATION REQUIREMENTS AND BASED UPON SPECIFIC SIGNAL EQUIPMENT TO BE SUPPLIED.

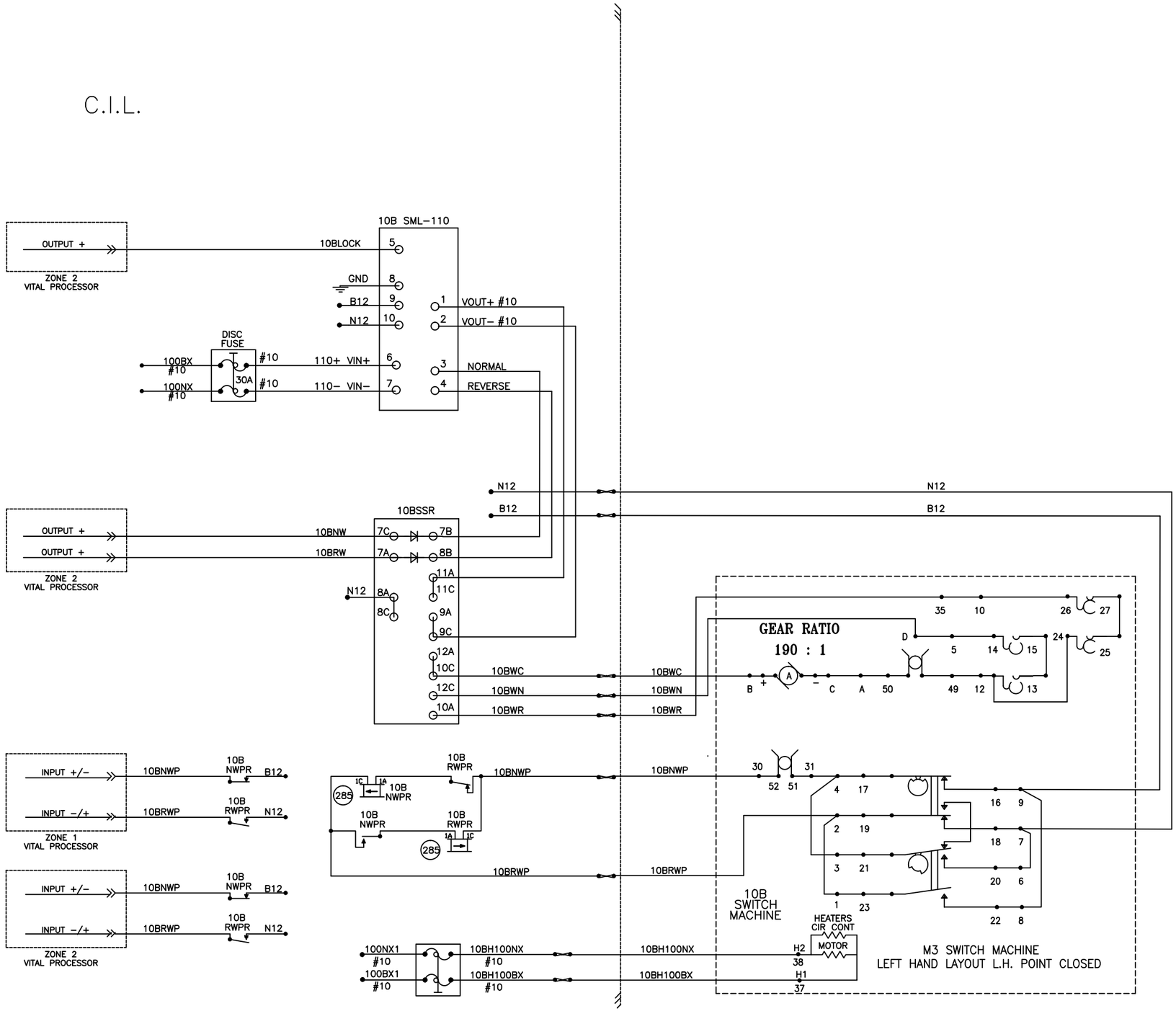

DESIGNED CEL													
DRAWN CEL													
CHECKED JJL													
APPROVED XXX													
		NO.	DATE		DRWN	CHKD	APPVD	NO.	DATE		DRWN	CHKD	APPVD
		REVISIONS						REVISIONS					

Gannett Fleming Transit & Rail Systems / CWA
GANNETT FLEMING/CWA, a joint venture
TWO PENN PLAZA, SUITE 552
380 SEVENTH AVENUE
NEW YORK, NY 10121–0101
PRJ: 057664

Metro-North Railroad
347 Madison Avenue
New York, N.Y. 10017

TITLE
ENGINEERING AND DESIGN OF
CP 229 – CP 241
CP 230
SWITCH CONTROL AND INDICATION 10B

CONTRACT NO. 1000027511
SCALE NONE
DATE 08–29–14
DRAWING NO. NHL2991005
SHEET 1051 OF _

LOC. B

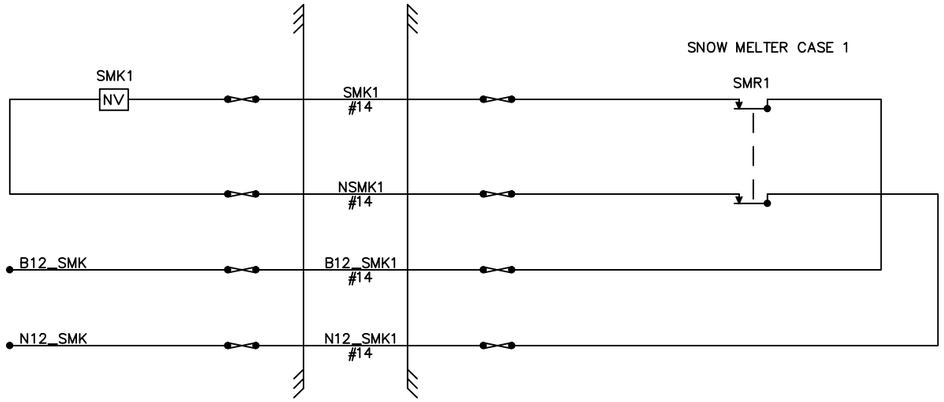

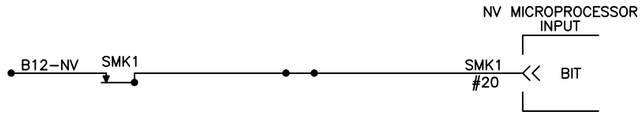

NOTES:

1. ALL WIRES #16 UNLESS OTHERWISE NOTED.
2. INPUT WIRES, OUTPUT WIRES, POWER WIRES, SHALL BE IN SEPARATE BUNDLES.
3. TYPICAL CIRCUITS SHOWN ARE BASED UPON SPECIFIC PRODUCTS AND ARE INTENDED TO DEFINE THE TYPE OF INTERFACE REQUIRED. CONTRACTOR SHALL PROVIDE DESIGN IN ACCORDANCE WITH ALL SPECIFICATION REQUIREMENTS AND BASED UPON SPECIFIC SNOW MELTER INTERFACE TO BE SUPPLIED.
4. TYPICAL CIRCUITS SHOWN ARE SIMILAR FOR THE FOLLOWING INTERLOCKING CENTRAL INSTRUMENT LOCATIONS: CP234 & CP241.

DESIGNED RRL													
DRAWN RRL													
CHECKED JJL													
APPROVED XXX													
		NO.	DATE	REVISIONS	DRWN	CHKD	APPVD	NO.	DATE	REVISIONS	DRWN	CHKD	APPVD

Gannett Fleming Transit & Rail Systems / CWA
GANNETT FLEMING/CWA, a joint venture
TWO PENN PLAZA, SUITE 552
380 SEVENTH AVENUE
NEW YORK, NY 10121–0101
PRJ: 057664

Metro-North Railroad
347 Madison Avenue
New York, N.Y. 10017

TITLE
ENGINEERING AND DESIGN OF
CP 229 – CP 241
CP 230
LOC. B SNOWMELTER CIRCUITS

CONTRACT NO. 1000027511
SCALE NONE | DATE 08–29–14
DRAWING NO. **NHL2991006**
SHEET 1052 OF _

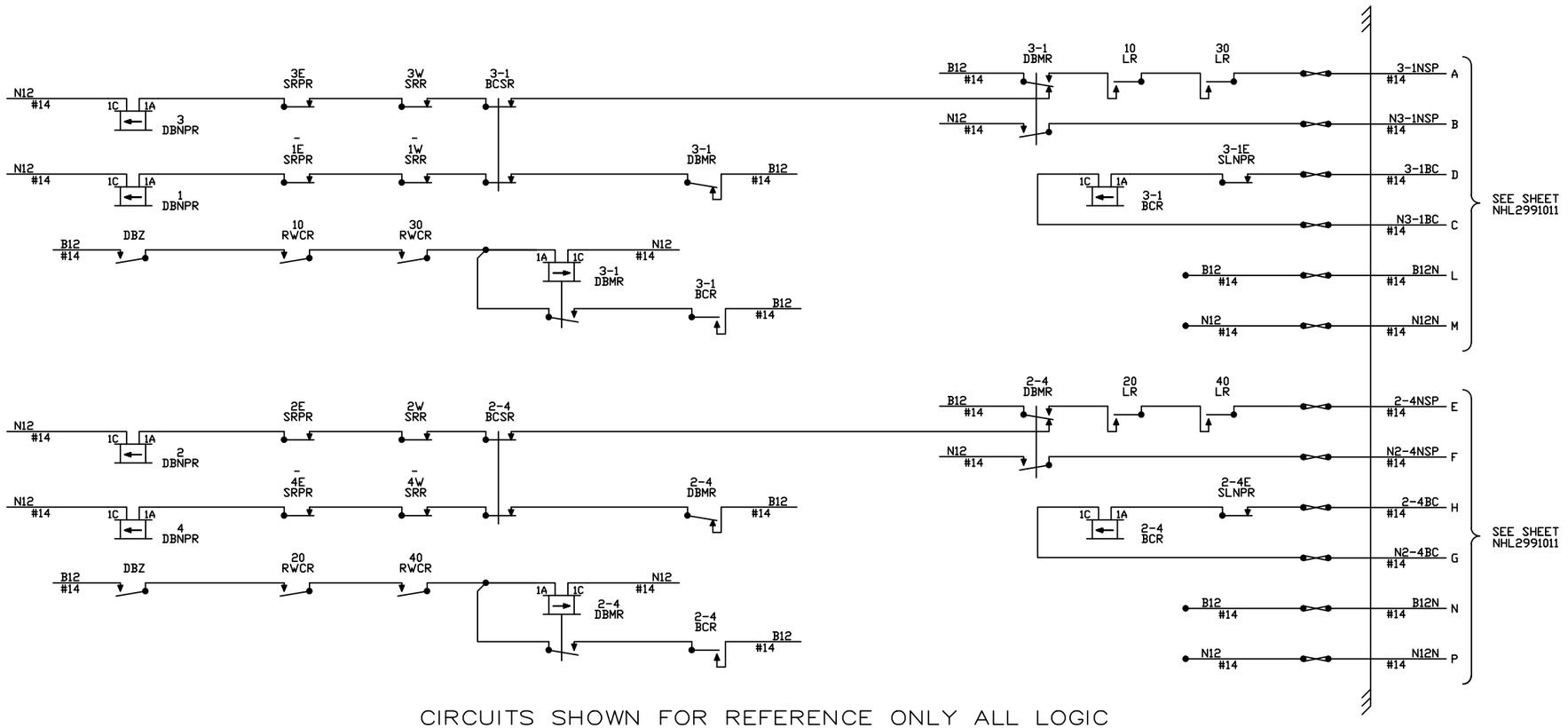

CIRCUITS SHOWN FOR REFERENCE ONLY ALL LOGIC
TO BE CONTAINED WITHIN MICROPROCESSOR

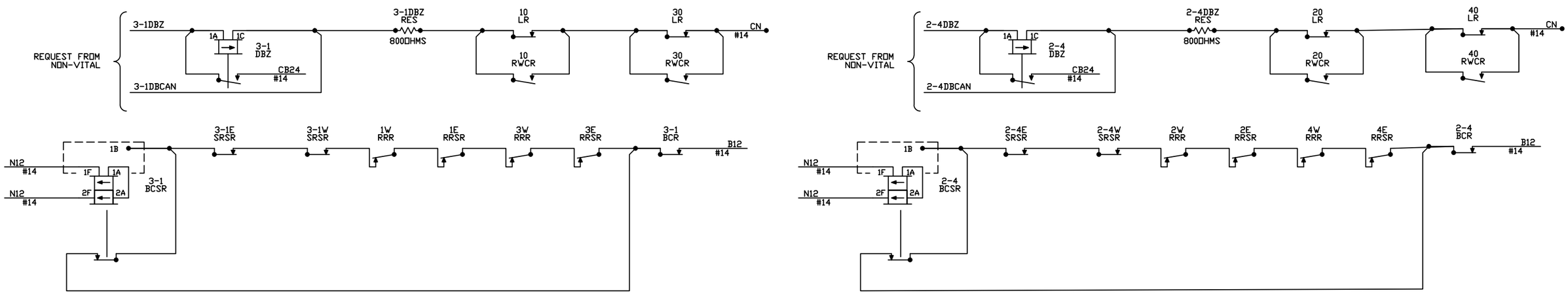

DESIGNED CEL												
DRAWN CEL												
CHECKED JJL												
APPROVED XXX												
		NO.	DATE		DRWN	CHKD	APPVD	NO.	DATE		DRWN	CHKD	APPVD
		REVISIONS						REVISIONS					

Gannett Fleming Transit & Rail Systems / CWA
GANNETT FLEMING/CWA, a joint venture
TWO PENN PLAZA, SUITE 552
380 SEVENTH AVENUE
NEW YORK, NY 10121-0101
PRJ: 057664

MTA Metro-North Railroad
347 Madison Avenue
New York, N.Y. 10017

TITLE
ENGINEERING AND DESIGN OF
CP 229 – CP 241
CP 230
DRAWBRIDGE CIRCUITS SPAN CONTROL

CONTRACT NO. 1000027511
SCALE
DATE 08-29-14
DRAWING NO. NHL2991007
SHEET 1053 OF _

LOC. B

TER BOX
W3-1

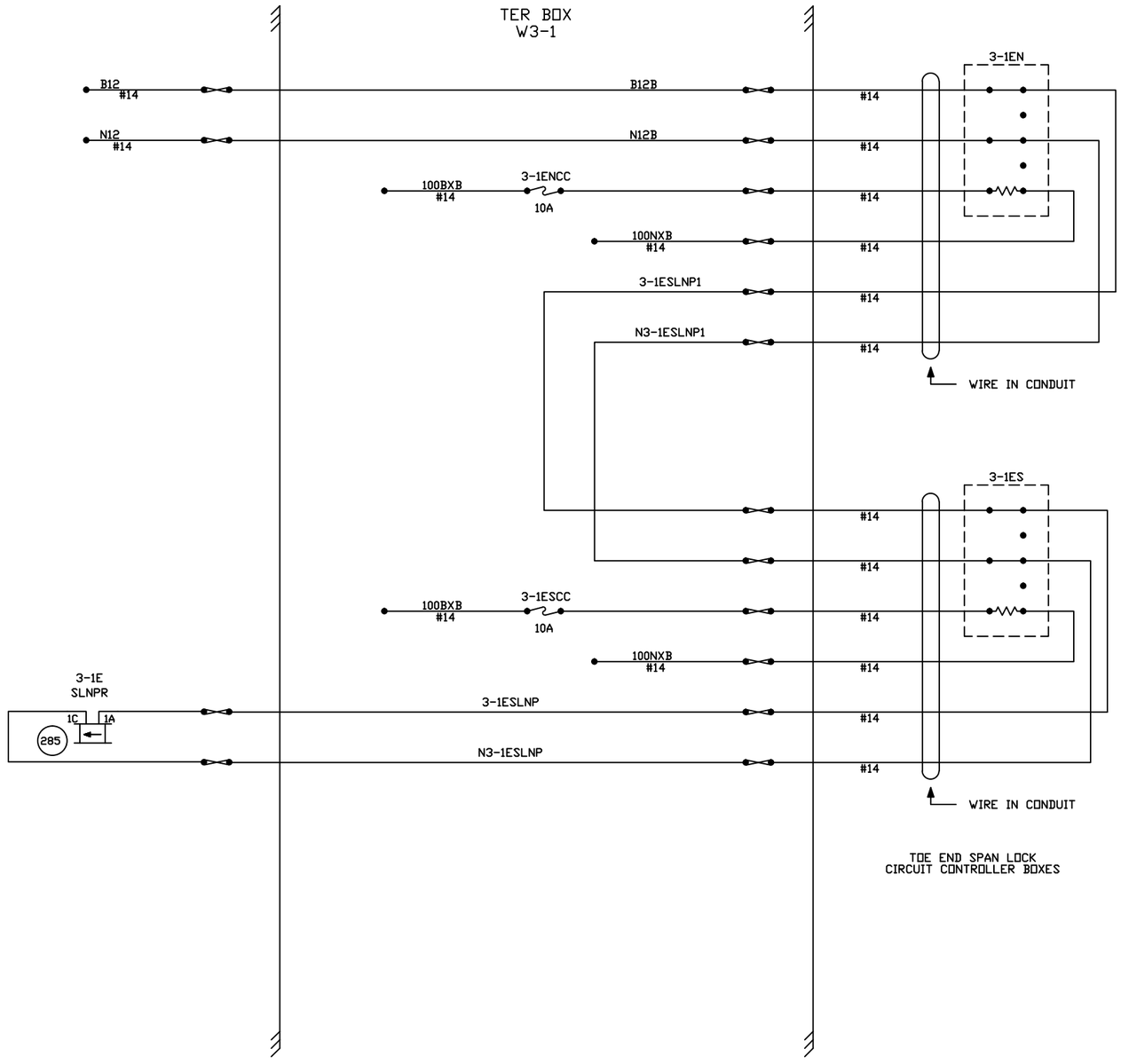

TOE END SPAN LOCK
CIRCUIT CONTROLLER BOXES

NOTES:
ALL WIRES #16 UNLESS OTHERWISE NOTED.

DESIGNED CEL														
DRAWN CEL														
CHECKED JJL														
APPROVED XXX														
		NO.	DATE		DRWN	CHKD	APPVD	NO.	DATE		DRWN	CHKD	APPVD	
		REVISIONS						REVISIONS						

Gannett Fleming Transit & Rail Systems / CWA
GANNETT FLEMING/CWA, a joint venture
TWO PENN PLAZA, SUITE 552
380 SEVENTH AVENUE
NEW YORK, NY 10121-0101
PRJ: 057664

MTA Metro-North Railroad
347 Madison Avenue
New York, N.Y. 10017

TITLE
ENGINEERING AND DESIGN OF
CP 229 – CP 241
CP 230
DRAWBRIDGE SPAN LOCK CIRCUITS

CONTRACT NO. 1000027511
SCALE
DATE 08-29-14
DRAWING NO. NHL2991008
SHEET 1054 OF _

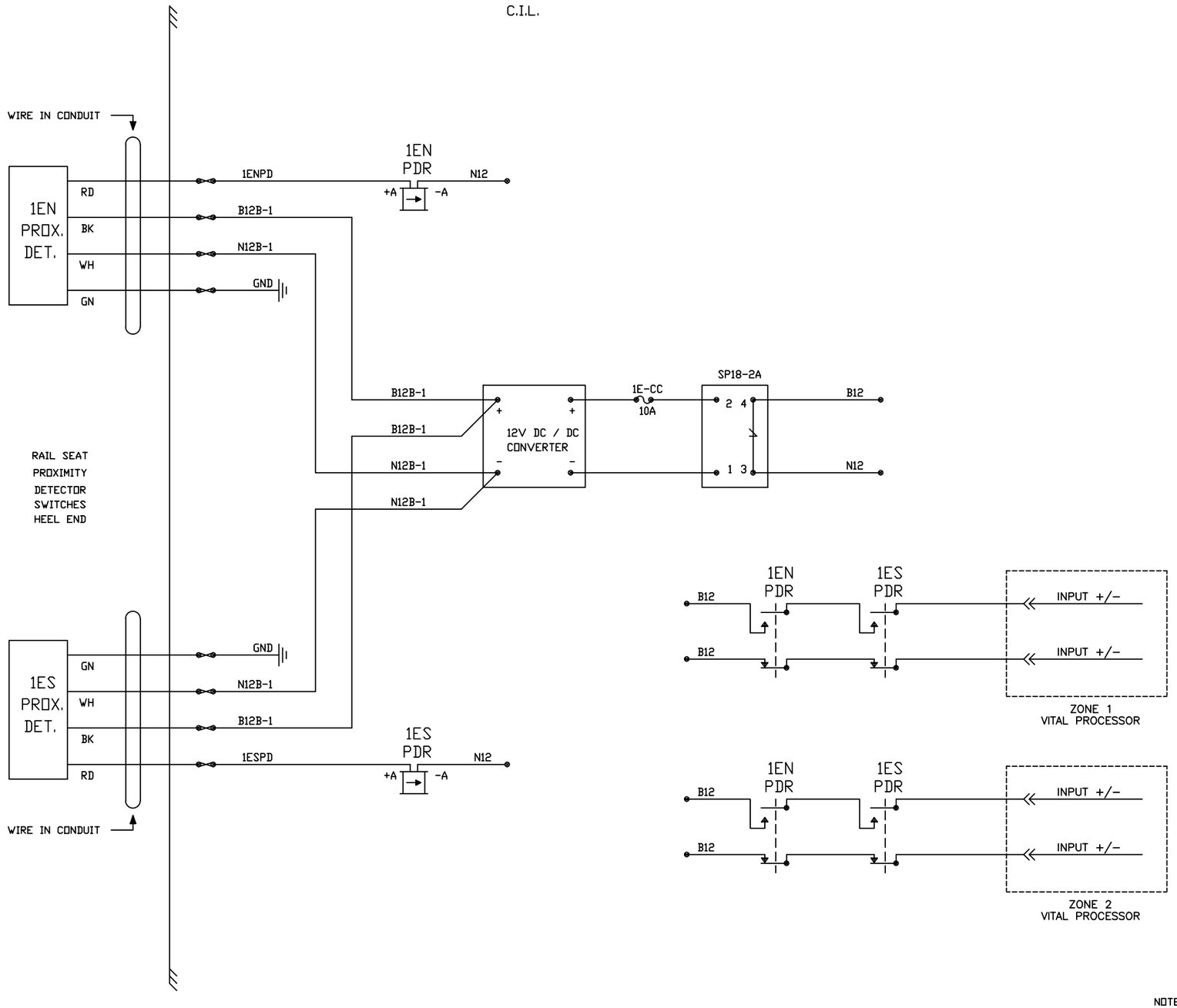

NOTES:
ALL WIRES #16 UNLESS OTHERWISE NOTED.

DESIGNED	RRL
DRAWN	RRL
CHECKED	JJL
APPROVED	XXX

NO.	DATE		DRWN	CHKD	APPVD	NO.	DATE		DRWN	CHKD	APPVD
REVISIONS						REVISIONS					

Gannett Fleming Transit & Rail Systems /CWA
GANNETT FLEMING/CWA, a joint venture
TWO PENN PLAZA, SUITE 552
380 SEVENTH AVENUE
NEW YORK, NY 10121-0101
PRJ: 057664

Metro-North Railroad
347 Madison Avenue
New York, N.Y. 10017

TITLE
ENGINEERING AND DESIGN OF CP 229 – CP 241
CP 230
DRAWBRIDGE TRACK 1 EAST RAIL SEAT

CONTRACT NO. 1000027511
SCALE
DATE 08-29-14
DRAWING NO. NHL2991009
SHEET 1055 OF _

LOC. B

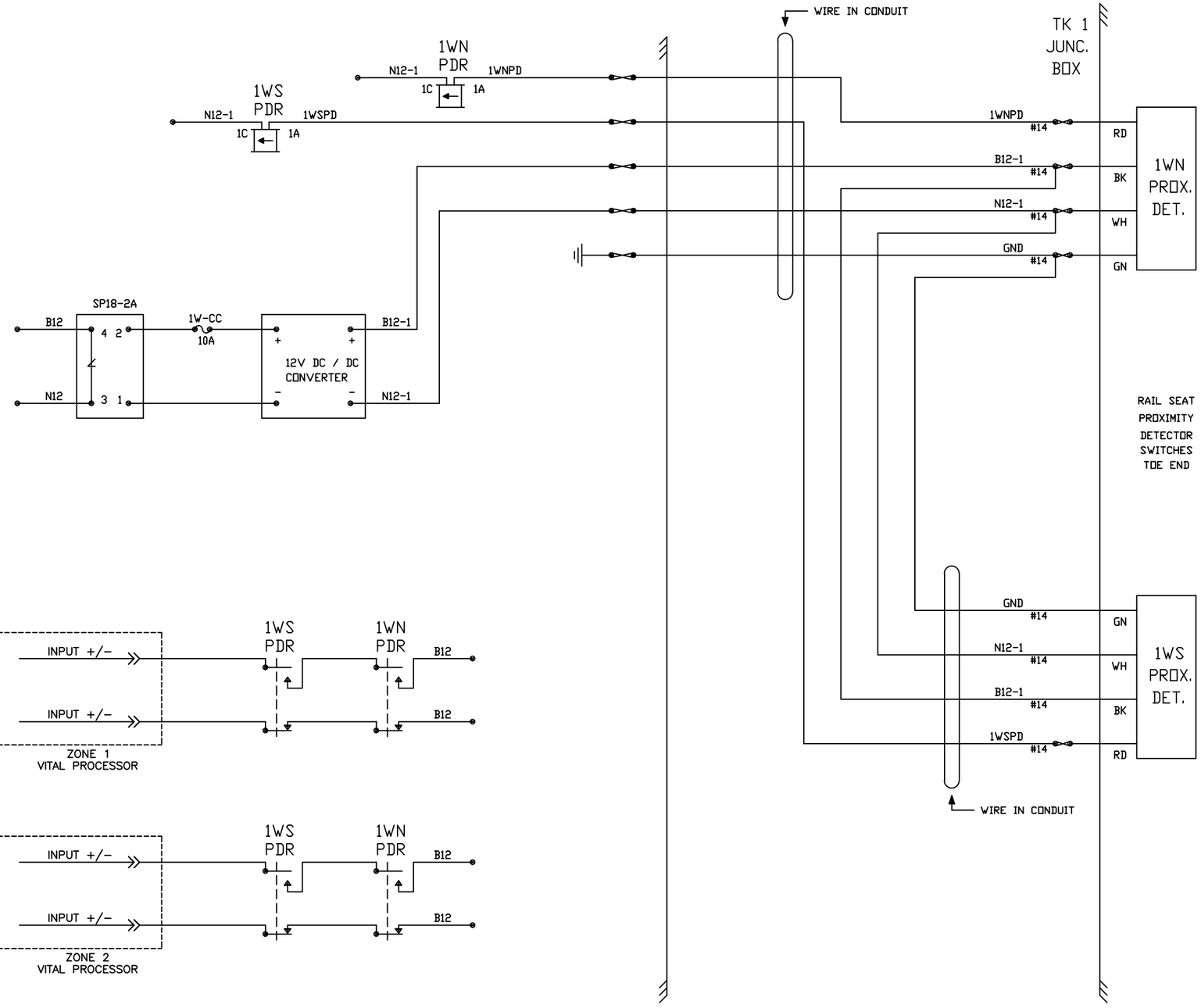

NOTES:
ALL WIRES #16 UNLESS OTHERWISE NOTED.
* TIME SETTING TO BE DETERMINED.

DESIGNED CEL													
DRAWN CEL													
CHECKED JJL													
APPROVED XXX													
		NO.	DATE		DRWN	CHKD	APPVD	NO.	DATE		DRWN	CHKD	APPVD
		REVISIONS						REVISIONS					

Gannett Fleming Transit & Rail Systems / CWA
GANNETT FLEMING/CWA, a joint venture
TWO PENN PLAZA, SUITE 552
380 SEVENTH AVENUE
NEW YORK, NY 10121-0101
PRJ: 057664

MTA Metro-North Railroad
347 Madison Avenue
New York, N.Y. 10017

TITLE
ENGINEERING AND DESIGN OF
CP 229 – CP 241
CP 230
DRAWBRIDGE TRACK 1 WEST RAIL SEAT

CONTRACT NO. 1000027511
SCALE
DATE 08-29-14
DRAWING NO. NHL2991010
SHEET 1056 OF _

RAILROAD SIGNAL INTERFACE

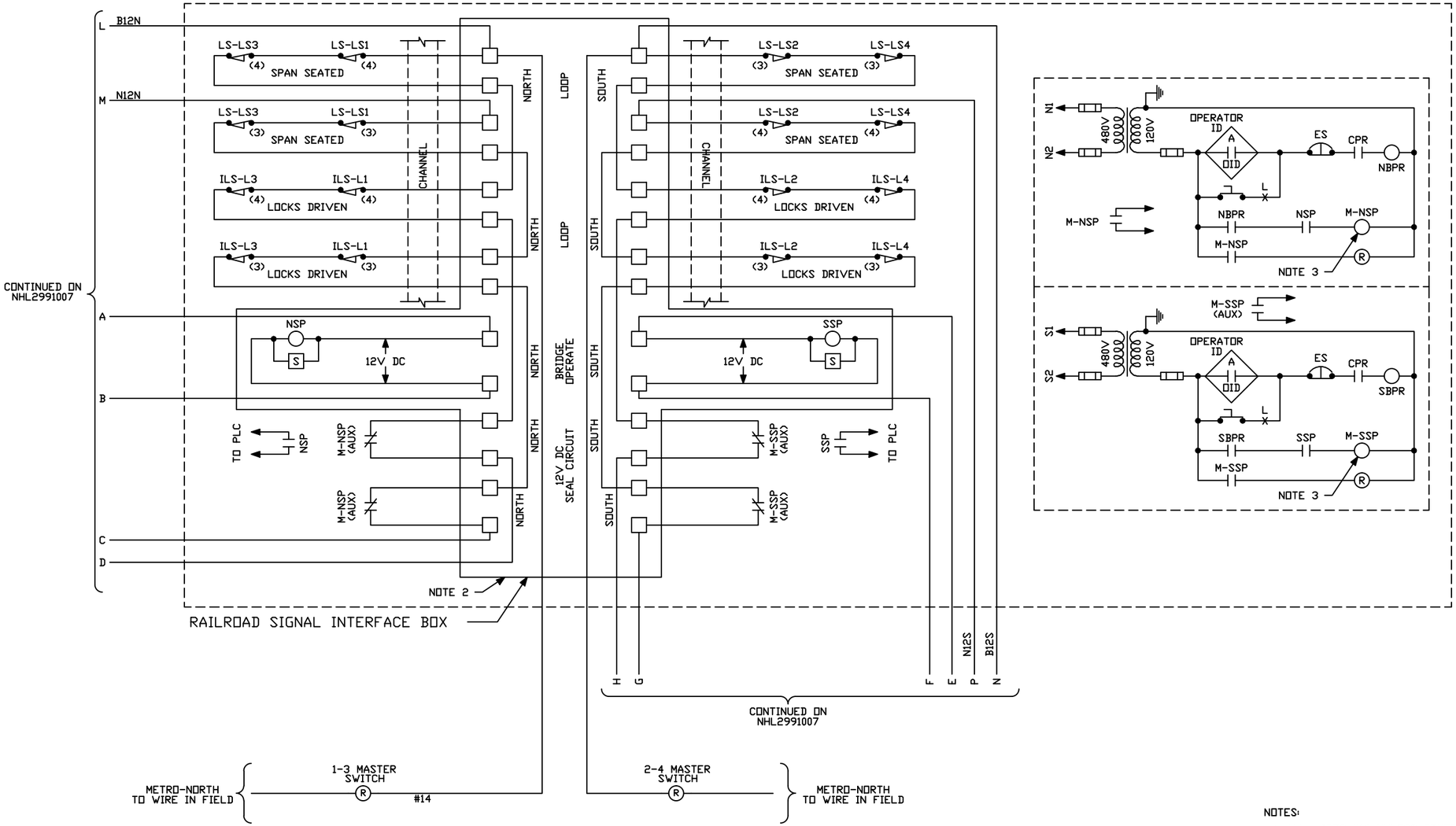

NOTES:

1. ALL WIRES #16 UNLESS OTHERWISE NOTED.
2. SS TERMINAL BOX, WITH LOCKABLE HASPS. TWO ROWS EACH CONTAINING 20 SLIDING LINK FRONT WIRED TERMINALS WITH MARKER STRIPS. TERMINAL STRIPS SHALL BE APPROVED EQUAL TO 'THE STATES COMPANY' PN M-2502D. MOUNT ON WALL IN ELECTRICAL ROOM.
3. NEMA SIZE 5, 3 POLE WITH 2 #2 NC AUXILLIARY CONTACTS.
4. WHEN OPENING REQUEST REACHES A POINT ALLOWING M-SSP AND M-NSP NC CONTACTS TO OPEN, BRIDGE MUST BE RAISED TO A POINT ALLOWING CYCLE CHECK TO BE ACCOMPLISHED.

DESIGNED	CEL
DRAWN	CEL
CHECKED	JJL
APPROVED	XXX

NO.	DATE		DRWN	CHKD	APPVD	NO.	DATE		DRWN	CHKD	APPVD
REVISIONS						REVISIONS					

Gannett Fleming Transit & Rail Systems / CWA
GANNETT FLEMING/CWA, a joint venture
TWO PENN PLAZA, SUITE 552
380 SEVENTH AVENUE
NEW YORK, NY 10121-0101
PRJ: 057664

Metro-North Railroad
347 Madison Avenue
New York, N.Y. 10017

TITLE
ENGINEERING AND DESIGN OF CP 229 – CP 241

CP 230
DRAWBRIDGE CIRCUITS AND POWER DISTRIBUTION

CONTRACT NO. 1000027511
SCALE
DATE 08-29-14
DRAWING NO. NHL2991011
SHEET 1057 OF _

TCML 308

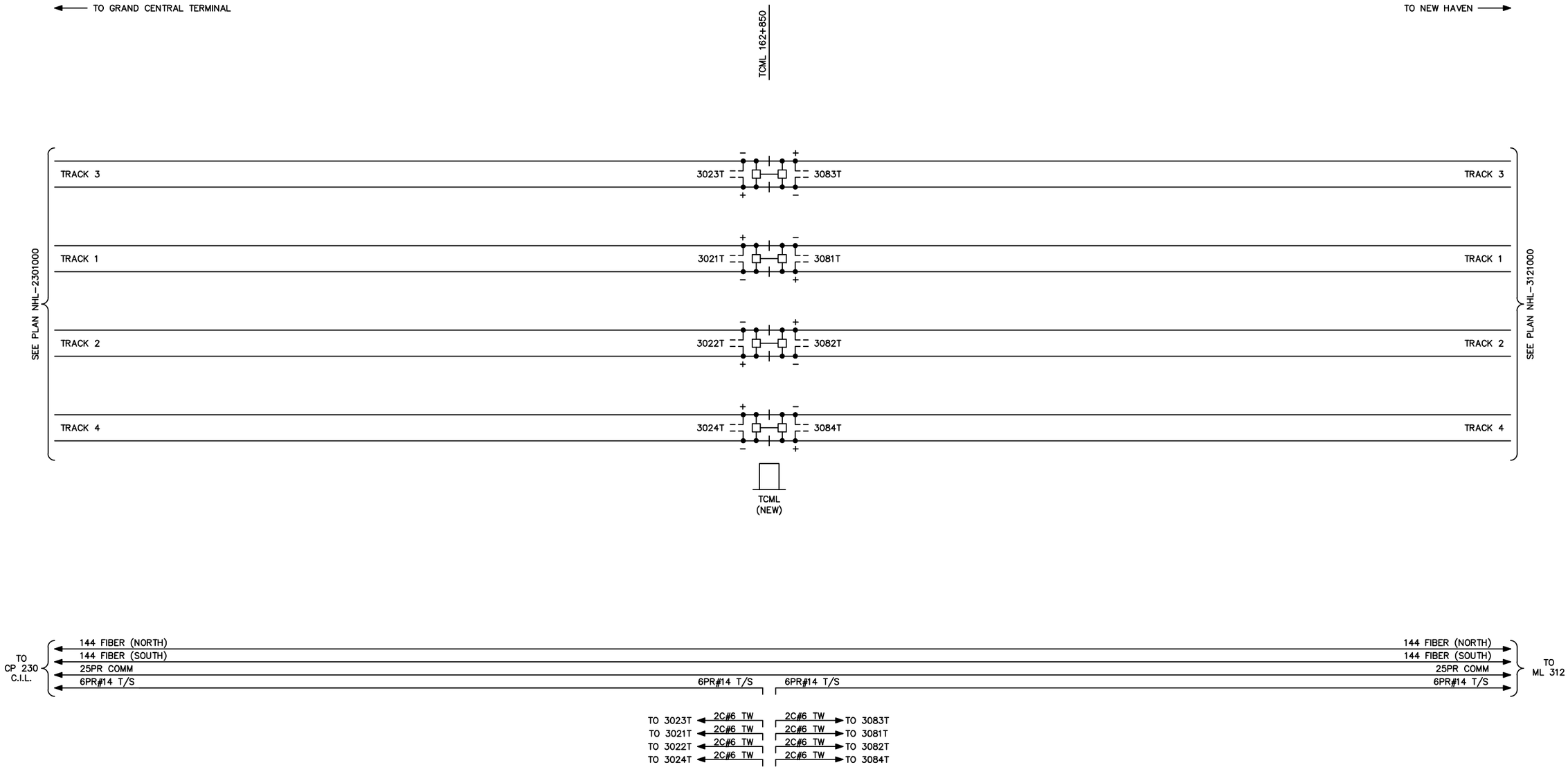

NOTES:

1. ALL CABLES SUPPLIED BY METRO-NORTH
2. ALL CABLES ARE UG UNLESS NOTED OTHERWISE.

DESIGNED	CEL
DRAWN	CEL
CHECKED	JJL
APPROVED	XXX

NO.	DATE		DRWN	CHKD	APPVD	NO.	DATE		DRWN	CHKD	APPVD
REVISIONS						REVISIONS					

Gannett Fleming Transit & Rail Systems /CWA
GANNETT FLEMING/CWA, a joint venture
TWO PENN PLAZA, SUITE 552
380 SEVENTH AVENUE
NEW YORK, NY 10121-0101
PRJ: 057664

Metro-North Railroad
347 Madison Avenue
New York, N.Y. 10017

TITLE
ENGINEERING AND DESIGN OF CP 229 – CP 241

TCML 308
TRACK AND CABLE PLAN

CONTRACT NO. 1000027511
SCALE
DATE 08-29-14
DRAWING NO. NHL3081000
SHEET 1058 OF _

TCML 308

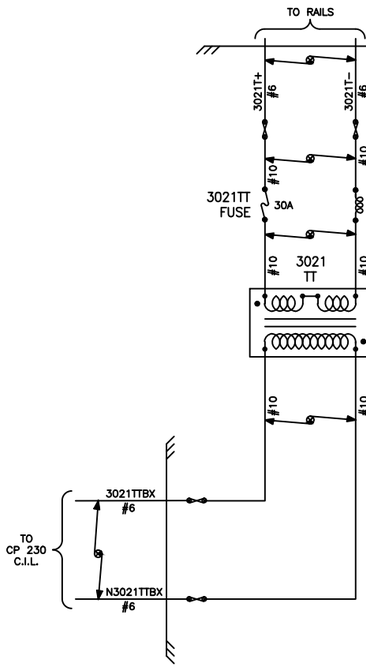

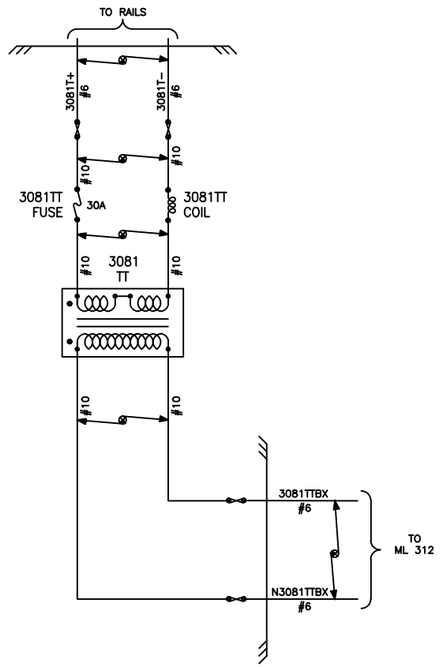

NOTES:
1. ALL WIRES #16 UNLESS OTHERWISE NOTED.
2. ⊗ = TWISTED PAIR
3. ★ = INSULATED NUT
4. BLACK / TWISTED PAIR / WHITE
5. CIRCUITS SHOWN ARE TYPICAL FOR SIMILAR TCML LOCATIONS

DESIGNED RRL													
DRAWN CBH													
CHECKED JJL													
APPROVED XXX													
		NO.	DATE	REVISIONS	DRWN	CHKD	APPVD	NO.	DATE	REVISIONS	DRWN	CHKD	APPVD

Gannett Fleming Transit & Rail Systems / CWA
GANNETT FLEMING/CWA, a joint venture
TWO PENN PLAZA, SUITE 552
380 SEVENTH AVENUE
NEW YORK, NY 10121–0101
PRJ: 057664

Metro-North Railroad
347 Madison Avenue
New York, N.Y. 10017

TITLE
ENGINEERING AND DESIGN OF
CP 229 – CP 241
TCML 308
TRACK CIRCUITS 3021T / 3081T

CONTRACT NO. 1000027511
SCALE
DATE 08–29–14
DRAWING NO. NHL3081001
SHEET 1059 OF _

ML 312

TCML 315

← TO GRAND CENTRAL TERMINAL

TO NEW HAVEN →

ML 164+691
CB–335 164+691

TCML 166+481

ML
(NEW)

CB–335

OLD GREENWICH STATION PLATFORM

SEE PLAN NHL–3081000

SEE PLAN NHL–3181000

TRACK 3 — 3083TR — 3153TR — TRACK 3

TRACK 1 — 3081TR — 3151TR — TRACK 1

TRACK 2 — 3082TR — 3122TR — TRACK 2

TRACK 4 — 3084TR — 3124TR — TRACK 4

OLD GREENWICH STATION PLATFORM

TCML
(NEW)

TO CP 230 C.I.L.

144 FIBER (NORTH) — 144 FIBER (NORTH) — 144 FIBER (NORTH) — 24 FIBER TIE CABLE → TO C.I.L.

144 FIBER (SOUTH) — 144 FIBER (SOUTH) — 144 FIBER (SOUTH) — 24 FIBER TIE CABLE → TO C.I.L.

25PR COMM — 25PR COMM — 25PR COMM — 25PR TIE CABLE → TO C.I.L.

TO NHL–308 — 6PR#14 T/S — 6PR#14 T/S — 6PR#14 T/S

TO 3082TR — 2C#6 TW — 2C#6 TW → TO 3122TR

TO 3084TR — 2C#6 TW — 2C#6 TW → TO 3124TR

2C#4 → CB–335 NO. XFMR

2C#4 → CB–335 SO. XFMR

144 FIBER (NORTH) → TO ML 318

144 FIBER (SOUTH) → TO ML 318

25PR COMM → TO ML 318

6PR#14 T/S → TO ML 318

TO 3083TR — 2C#6 TW — 2C#6 TW → TO 3153TR

TO 3081TR — 2C#6 TW — 2C#6 TW → TO 3151TR

NOTES:

1. ALL CABLES SUPPLIED BY METRO–NORTH
2. ALL CABLES ARE UG UNLESS NOTED OTHERWISE.

DESIGNED	CEL
DRAWN	CEL
CHECKED	JJL
APPROVED	XXX

NO.	DATE		DRWN	CHKD	APPVD

REVISIONS

NO.	DATE		DRWN	CHKD	APPVD

REVISIONS

Gannett Fleming Transit & Rail Systems /CWA
GANNETT FLEMING/CWA, a joint venture
TWO PENN PLAZA, SUITE 552
380 SEVENTH AVENUE
NEW YORK, NY 10121–0101
PRJ: 057664

Metro-North Railroad
347 Madison Avenue
New York, N.Y. 10017

TITLE
ENGINEERING AND DESIGN OF CP 229 – CP 241
ML 312 / TCML 315
TRACK AND CABLE PLAN

CONTRACT NO. 1000027511
SCALE
DATE 08–29–14
DRAWING NO. NHL3121000
SHEET 1060 OF _

ML 312

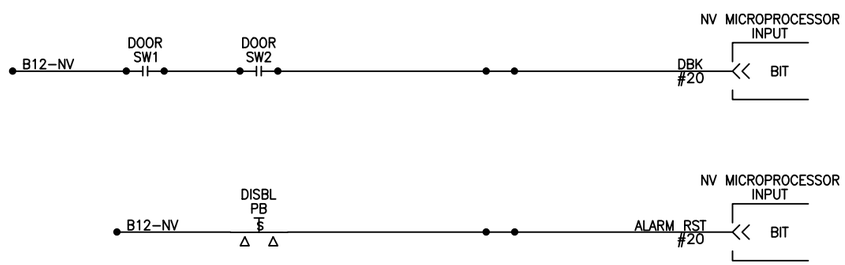

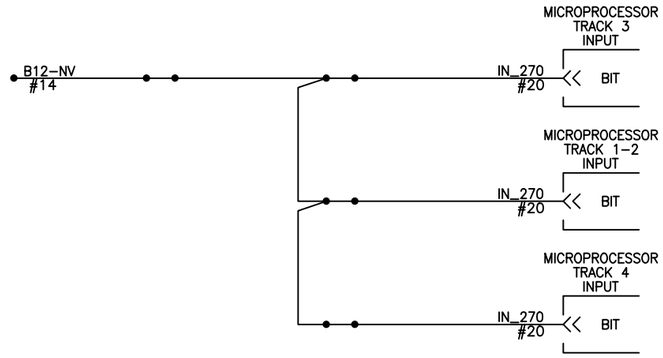

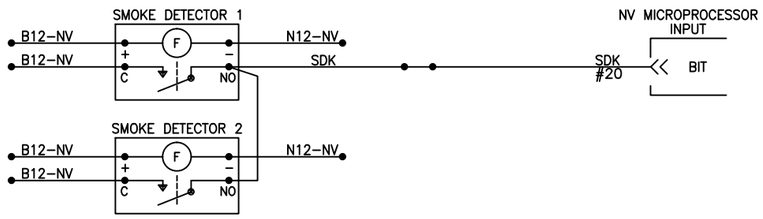

NOTES:

1. CONTRACTOR TO SIZE ALL WIRE PER EQUIPMENT, IN ACCORDANCE WITH THE SPECIFICATIONS.
2. INPUT WIRES, OUTPUT WIRES, POWER WIRES, SHALL BE IN SEPARATE BUNDLES.
3. TYPICAL CIRCUITS SHOWN ARE BASED UPON SPECIFIC PROCESSOR PRODUCTS AND ARE INTENDED TO DEFINE THE TYPES OF INTERFACE REQUIRED. CONTRACTOR SHALL PROVIDE DESIGN IN ACCORDANCE WITH ALL SPECIFICATION REQUIREMENTS AND BASED UPON SPECIFIC PROCESSOR TO BE SUPPLIED.
4. TYPICAL CIRCUITS SHOWN ARE SIMILAR FOR MASTER LOCATIONS: ML 318, ML 354, ML 360, ML 369, ML 379, ML 384, ML 393.

DESIGNED RRL													
DRAWN RRL													
CHECKED JJL													
APPROVED XXX													
		NO.	DATE		DRWN	CHKD	APPVD	NO.	DATE		DRWN	CHKD	APPVD
		REVISIONS						REVISIONS					

Gannett Fleming Transit & Rail Systems / CWA
GANNETT FLEMING/CWA, a joint venture
TWO PENN PLAZA, SUITE 552
380 SEVENTH AVENUE
NEW YORK, NY 10121–0101
PRJ: 057664

Metro-North Railroad
347 Madison Avenue
New York, N.Y. 10017

TITLE
ENGINEERING AND DESIGN OF
CP 229 – CP 241

ML 312
MISCELLANEOUS CIRCUITS

CONTRACT NO. 1000027511
SCALE NONE
DATE 08–29–14
DRAWING NO. NHL3121001
SHEET 1061 OF _

ML312

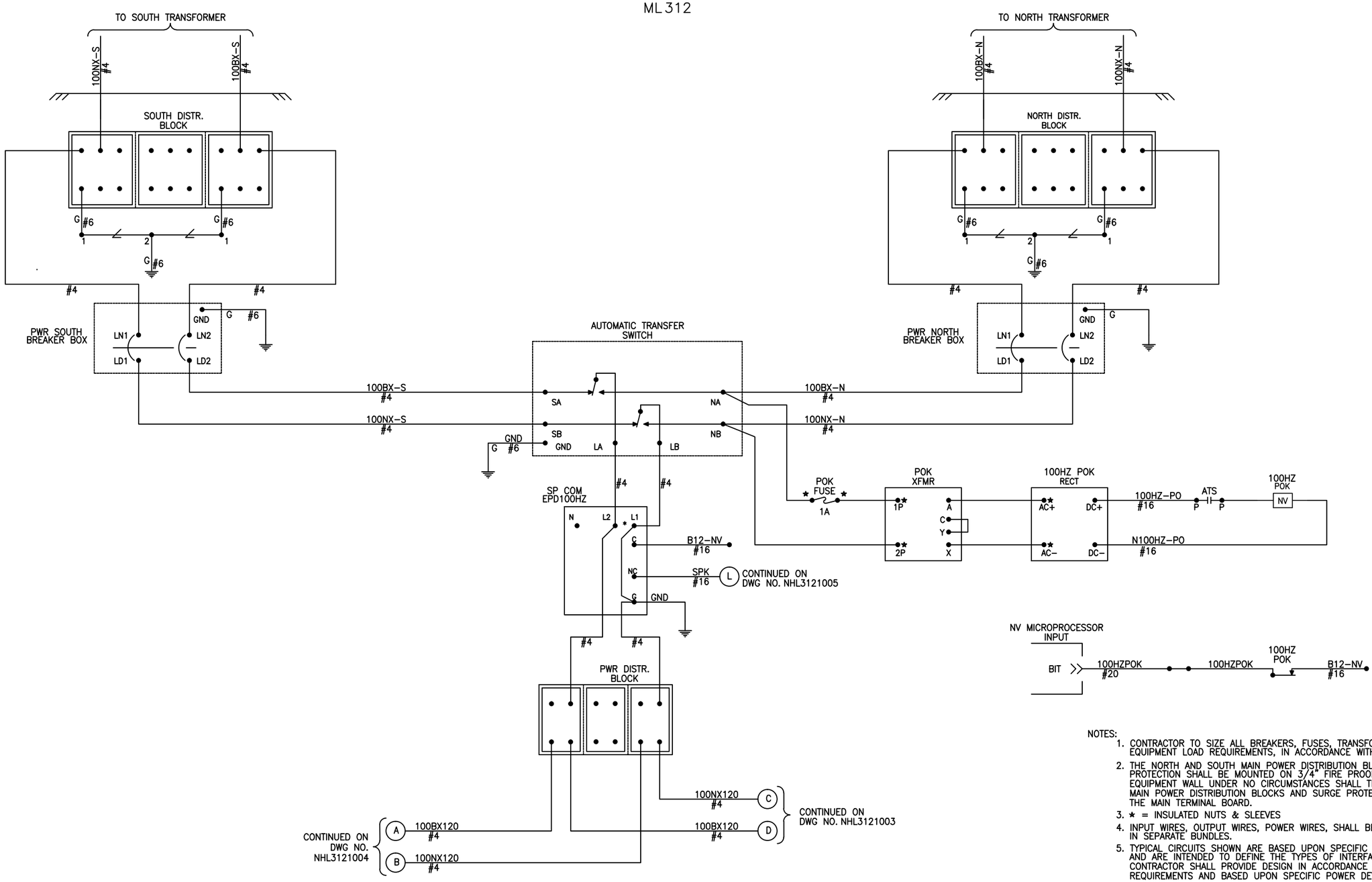

NOTES:

1. CONTRACTOR TO SIZE ALL BREAKERS, FUSES, TRANSFORMERS & WIRE PER EQUIPMENT LOAD REQUIREMENTS, IN ACCORDANCE WITH THE SPECIFICATIONS.
2. THE NORTH AND SOUTH MAIN POWER DISTRIBUTION BLOCKS AND SURGE PROTECTION SHALL BE MOUNTED ON 3/4" FIRE PROOF BOARD ON THE EQUIPMENT WALL UNDER NO CIRCUMSTANCES SHALL THE NORTH AND SOUTH MAIN POWER DISTRIBUTION BLOCKS AND SURGE PROTECTION BE MOUNTED ON THE MAIN TERMINAL BOARD.
3. ★ = INSULATED NUTS & SLEEVES
4. INPUT WIRES, OUTPUT WIRES, POWER WIRES, SHALL BE IN SEPARATE BUNDLES.
5. TYPICAL CIRCUITS SHOWN ARE BASED UPON SPECIFIC POWER PRODUCTS AND ARE INTENDED TO DEFINE THE TYPES OF INTERFACE REQUIRED. CONTRACTOR SHALL PROVIDE DESIGN IN ACCORDANCE WITH ALL SPECIFICATION REQUIREMENTS AND BASED UPON SPECIFIC POWER DEVICES TO BE SUPPLIED.
6. TYPICAL CIRCUITS SHOWN ARE SIMILAR FOR MASTER LOCATIONS: ML 318, ML 354, ML 360, ML 369, ML 379, ML 384, ML 393.

DESIGNED RRL													
DRAWN RRL													
CHECKED JJL													
APPROVED XXX													
		NO.	DATE		DRWN	CHKD	APPVD	NO.	DATE		DRWN	CHKD	APPVD
		REVISIONS						REVISIONS					

Gannett Fleming Transit & Rail Systems / CWA
GANNETT FLEMING/CWA, a joint venture
TWO PENN PLAZA, SUITE 552
380 SEVENTH AVENUE
NEW YORK, NY 10121–0101
PRJ: 057664

MTA Metro-North Railroad
347 Madison Avenue
New York, N.Y. 10017

TITLE
ENGINEERING AND DESIGN OF
CP 229 – CP 241
ML 312
100HZ TRANSFER SWITCH

CONTRACT NO. 1000027511
SCALE NONE
DATE 08–29–14
DRAWING NO. **NHL3121002**
SHEET 1062 OF _

ML 312

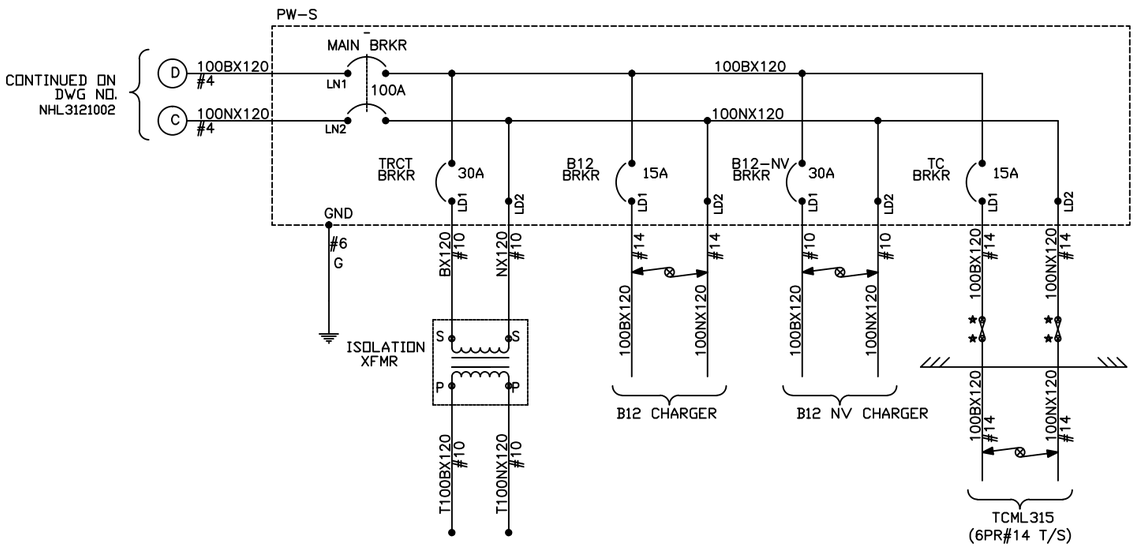

NOTES:

1. CONTRACTOR TO SIZE ALL BREAKERS, FUSES & WIRE PER EQUIPMENT LOAD REQUIREMENTS, IN ACCORDANCE WITH THE SPECIFICATIONS.
2. BATTERIES/RECTIFIERS SHALL BE PROVIDED AS REQUIRED BY DETAILED DESIGN AND IN ACCORDANCE WITH THE SPECIFICATIONS.
3. EXTERNAL CURRENT MONITORS ARE REQUIRED IF EQUIVALENT FUCTION CANNOT BE PROVIDED INTERNALLY IN BATTERY CHARGER.
4. ⋆ = INSULATED NUTS & SLEEVES
5. INPUT WIRES, OUTPUT WIRES, POWER WIRES, SHALL BE IN SEPARATE BUNDLES.
6. TYPICAL CIRCUITS SHOWN ARE BASED UPON SPECIFIC POWER PRODUCTS AND ARE INTENDED TO DEFINE THE TYPES OF INTERFACE REQUIRED. CONTRACTOR SHALL PROVIDE DESIGN IN ACCORDANCE WITH ALL SPECIFICATION REQUIREMENTS AND BASED UPON SPECIFIC POWER DEVICES TO BE SUPPLIED.
7. TYPICAL CIRCUITS SHOWN ARE SIMILAR FOR MASTER LOCATIONS: ML 318, ML 354, ML 360, ML 369, ML 379, ML 384, ML 393.
8. ⊗ = TWISTED PAIR

DESIGNED	RRL
DRAWN	RRL
CHECKED	JJL
APPROVED	XXX

NO.	DATE		DRWN	CHKD	APPVD

REVISIONS

NO.	DATE		DRWN	CHKD	APPVD

REVISIONS

Gannett Fleming Transit & Rail Systems / CWA
GANNETT FLEMING/CWA, a joint venture
TWO PENN PLAZA, SUITE 552
380 SEVENTH AVENUE
NEW YORK, NY 10121-0101
PRJ: 057664

Metro-North Railroad
347 Madison Avenue
New York, N.Y. 10017

TITLE
ENGINEERING AND DESIGN OF CP 229 – CP 241
ML 312
100HZ POWER DISTRIBUTION
SHEET 1 OF 2

CONTRACT NO. 1000027511
SCALE NONE
DATE 08-29-14
DRAWING NO. NHL3121003
SHEET 1063 OF _

ML 312

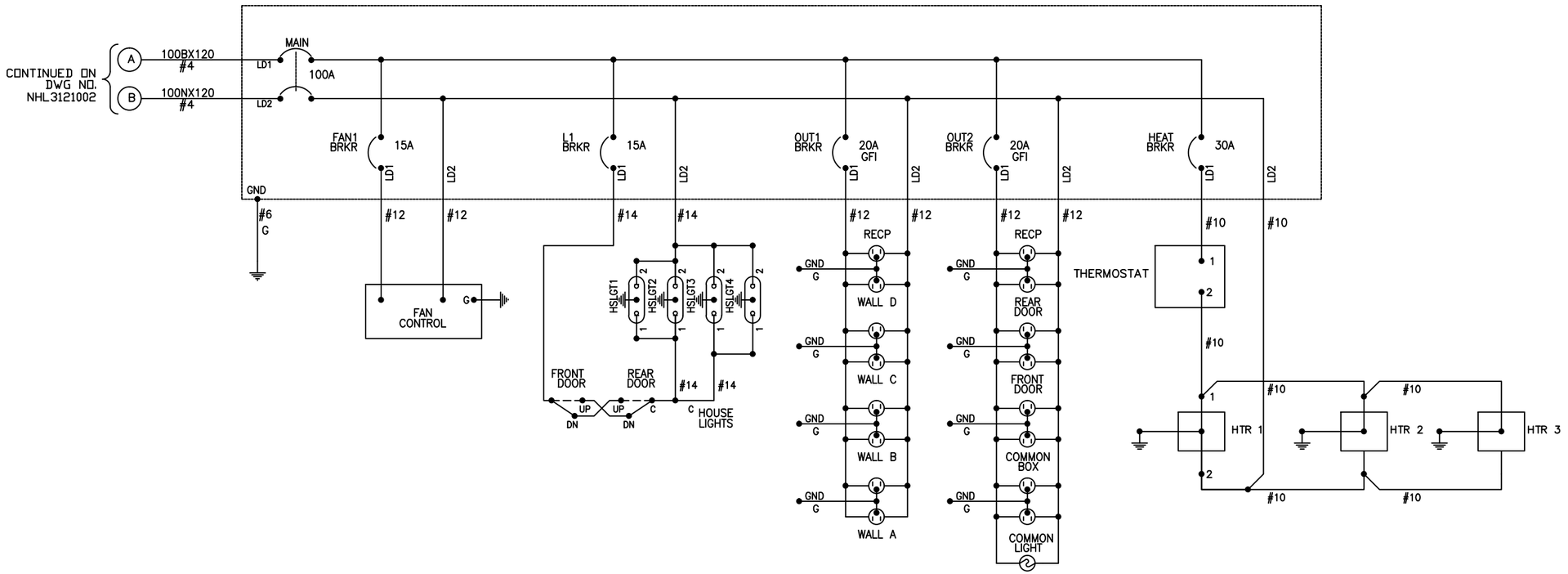

NOTES:

1. CONTRACTOR TO SIZE ALL BREAKERS, FUSES AND WIRE PER EQUIPMENT LOAD REQUIREMENTS, IN ACCORDANCE WITH THE SPECIFICATIONS.
2. ALL BREAKERS, FUSES, LIGHTS, RECEPTICALS, AND CONTROLS SHALL BE PROVIDED AS REQUIRED BY DETAILED DESIGN.
3. TYPICAL CIRCUITS SHOWN ARE BASED UPON SPECIFIC POWER PRODUCTS AND ARE INTENDED TO DEFINE THE TYPES OF INTERFACE REQUIRED. CONTRACTOR SHALL PROVIDE DESIGN IN ACCORDANCE WITH ALL SPECIFICATION REQUIREMENTS AND BASED UPON SPECIFIC POWER DEVICES TO BE SUPPLIED.
4. TYPICAL CIRCUITS SHOWN ARE SIMILAR FOR MASTER LOCATIONS: ML 318, ML 354, ML 360, ML 369, ML 379, ML 384, ML 393.

DESIGNED	RRL
DRAWN	RRL
CHECKED	JJL
APPROVED	XXX

NO.	DATE		DRWN	CHKD	APPVD	NO.	DATE	DRWN	CHKD	APPVD
REVISIONS						REVISIONS				

Gannett Fleming Transit & Rail Systems /CWA
GANNETT FLEMING/CWA, a joint venture
TWO PENN PLAZA, SUITE 552
380 SEVENTH AVENUE
NEW YORK, NY 10121-0101
PRJ: 057664

Metro-North Railroad
347 Madison Avenue
New York, N.Y. 10017

TITLE
ENGINEERING AND DESIGN OF CP 229 – CP 241

ML 312
100HZ POWER DISTRIBUTION
SHEET 2 OF 2

CONTRACT NO. 1000027511
SCALE NONE
DATE 08-29-14
DRAWING NO. NHL3121004
SHEET 1064 OF _

ML312

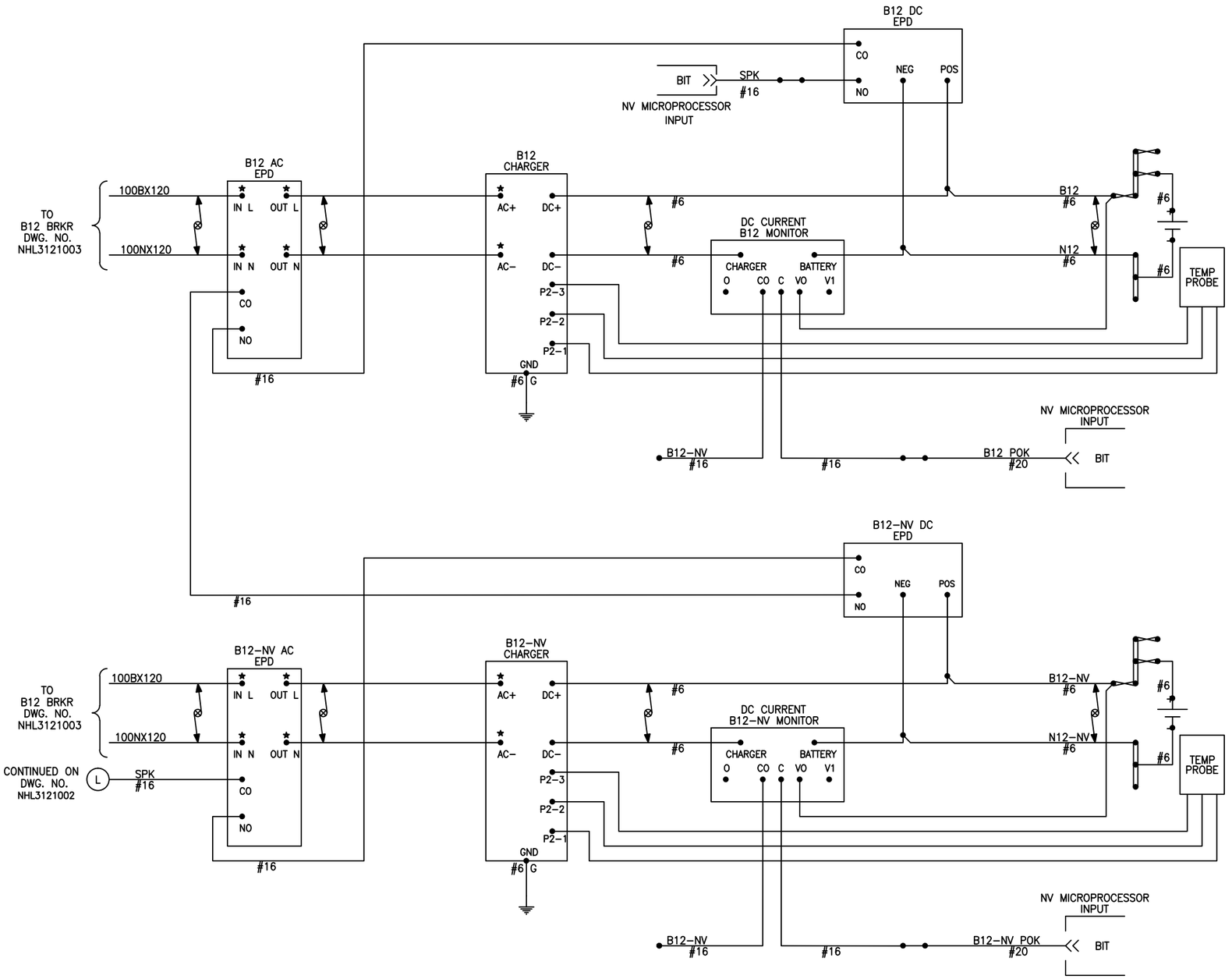

NOTES:

1. CONTRACTOR TO SIZE ALL BATTERIES, RECTIFIERS, FUSES & WIRE PER EQUIPMENT LOAD REQUIREMENTS, IN ACCORDANCE WITH THE SPECIFICATIONS.
2. BATTERIES/RECTIFIERS SHALL BE PROVIDED AS REQUIRED BY DETAILED DESIGN AND IN ACCORDANCE WITH THE SPECIFICATIONS.
3. EXTERNAL CURRENT MONITORS ARE REQUIRED IF EQUIVALENT FUNCTION CANNOT BE PROVIDED INTERNALLY IN BATTERY CHARGER.
4. ⋆ = INSULATED NUTS & SLEEVES
5. INPUT WIRES, OUTPUT WIRES, POWER WIRES, SHALL BE IN SEPARATE BUNDLES.
6. TYPICAL CIRCUITS SHOWN ARE BASED UPON SPECIFIC DC POWER PRODUCTS AND ARE INTENDED TO DEFINE THE TYPES OF INTERFACE REQUIRED. CONTRACTOR SHALL PROVIDE DESIGN IN ACCORDANCE WITH ALL SPECIFICATION REQUIREMENTS AND BASED UPON SPECIFIC POWER AND MONITORING EQUIPMENT TO BE SUPPLIED.
7. TYPICAL CIRCUITS SHOWN ARE SIMILAR FOR MASTER LOCATIONS: ML 318, ML 354, ML 360, ML 369, ML 379, ML 384, ML 393.

DESIGNED RRL													
DRAWN RRL													
CHECKED JJL													
APPROVED XXX													
		NO.	DATE		DRWN	CHKD	APPVD	NO.	DATE		DRWN	CHKD	APPVD
		REVISIONS						REVISIONS					

Gannett Fleming Transit & Rail Systems / CWA
GANNETT FLEMING/CWA, a joint venture
TWO PENN PLAZA, SUITE 552
380 SEVENTH AVENUE
NEW YORK, NY 10121–0101
PRJ: 057664

MTA Metro-North Railroad
347 Madison Avenue
New York, N.Y. 10017

TITLE
ENGINEERING AND DESIGN OF CP 229 – CP 241
ML 312
BATTERY CHARGER B12, B12-NV

CONTRACT NO. 1000027511
SCALE NONE
DATE 08–29–14
DRAWING NO. NHL3121005
SHEET 1065 OF _

ML 312

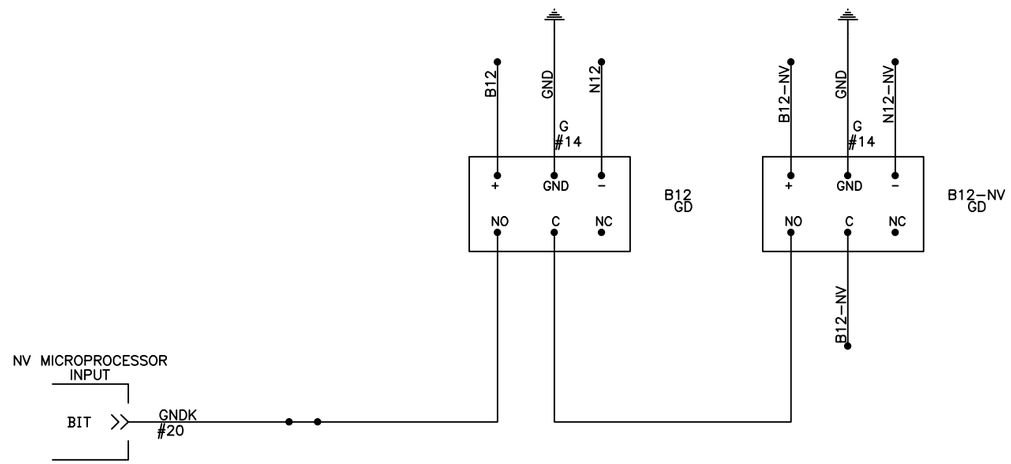

NOTES:

1. TYPICAL CIRCUITS SHOWN ARE BASED UPON SPECIFIC DETECTOR PRODUCTS AND ARE INTENDED TO DEFINE THE TYPES OF GROUND DETECTION REQUIRED. CONTRACTOR SHALL PROVIDE DESIGN IN ACCORDANCE WITH ALL SPECIFICATION REQUIREMENTS AND BASED UPON SPECIFIC GROUND DEVICES TO BE SUPPLIED.
2. TYPICAL CIRCUITS SHOWN ARE SIMILAR FOR THE FOLLOWING MASTER LOCATIONS: ML 318, ML 354, ML 360, ML 369, ML 379, ML 384 AND ML 393.
3. INPUT WIRES, OUTPUT WIRES, POWER WIRES, SHALL BE IN SEPARATE BUNDLES.

DESIGNED RRL														
DRAWN RRL														
CHECKED JJL														
APPROVED XXX														
		NO.	DATE		DRWN	CHKD	APPVD	NO.	DATE		DRWN	CHKD	APPVD	
		REVISIONS						REVISIONS						

Gannett Fleming Transit & Rail Systems / CWA
GANNETT FLEMING/CWA, a joint venture
TWO PENN PLAZA, SUITE 552
380 SEVENTH AVENUE
NEW YORK, NY 10121-0101
PRJ: 057664

Metro-North Railroad
347 Madison Avenue
New York, N.Y. 10017

TITLE
ENGINEERING AND DESIGN OF
CP 229 – CP 241
ML 312
GROUND DETECTOR NETWORK

CONTRACT NO. 1000027511
SCALE NONE
DATE 08-29-14
DRAWING NO. **NHL3121006**
SHEET 1066 OF _

ML 312

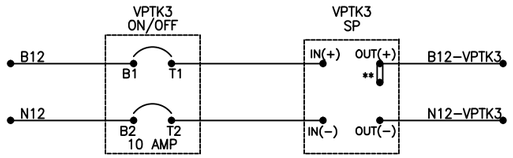

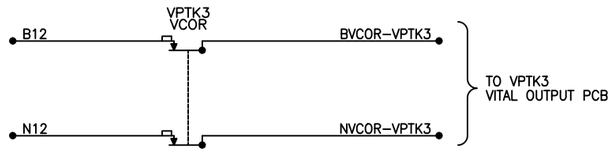

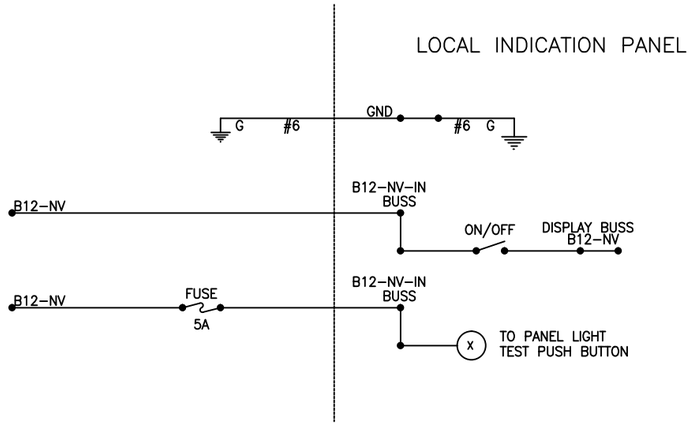

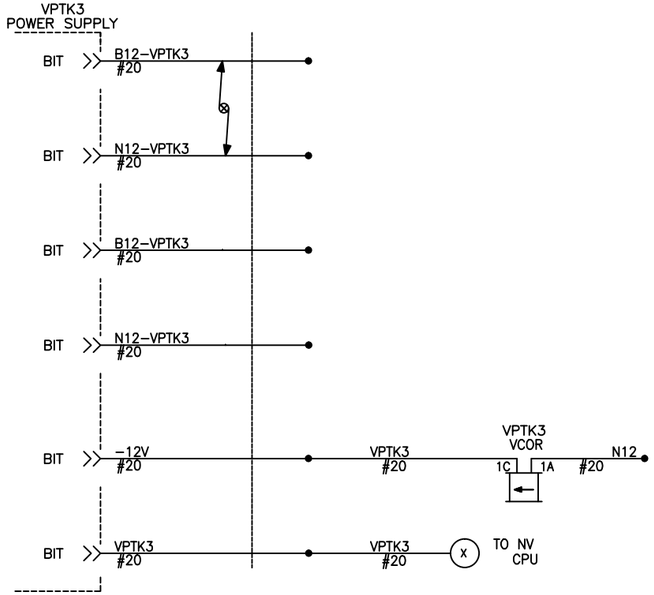

NOTES:

1. CONTRACTOR TO SIZE ALL BREAKERS, FUSES & WIRE PER EQUIPMENT LOAD REQUIREMENTS, IN ACCORDANCE WITH THE SPECIFICATIONS.
2. INPUT WIRES, OUTPUT WIRES, POWER WIRES, SHALL BE IN SEPARATE BUNDLES.
3. TYPICAL CIRCUITS SHOWN ARE BASED UPON SPECIFIC INTERFACE PRODUCTS AND ARE INTENDED TO DEFINE THE TYPES OF INTERFACE REQUIRED. CONTRACTOR SHALL PROVIDE DESIGN IN ACCORDANCE WITH ALL SPECIFICATION REQUIREMENTS AND BASED UPON SPECIFIC INTERFACE DEVICES TO BE SUPPLIED.
4. ** = 12V STRAP.
5. TYPICAL CIRCUITS SHOWN ARE SIMILAR FOR THE FOLLOWING MASTER LOCATIONS: ML 318, ML 354, ML 360, ML 369, ML 379, ML 384 AND ML 393.

DESIGNED RRL													
DRAWN RRL													
CHECKED JJL													
APPROVED XXX													
		NO.	DATE		DRWN	CHKD	APPVD	NO.	DATE		DRWN	CHKD	APPVD
		REVISIONS						REVISIONS					

Gannett Fleming Transit & Rail Systems / CWA
GANNETT FLEMING/CWA, a joint venture
TWO PENN PLAZA, SUITE 552
380 SEVENTH AVENUE
NEW YORK, NY 10121–0101
PRJ: 057664

Metro-North Railroad
347 Madison Avenue
New York, N.Y. 10017

TITLE
ENGINEERING AND DESIGN OF
CP 229 – CP 241
ML 312
DC POWER CIRCUIT
MICROPROCESSOR TRACK 3

CONTRACT NO. 1000027511
SCALE NONE
DATE 08–29–14
DRAWING NO. NHL3121007
SHEET 1067 OF _

TCML 315

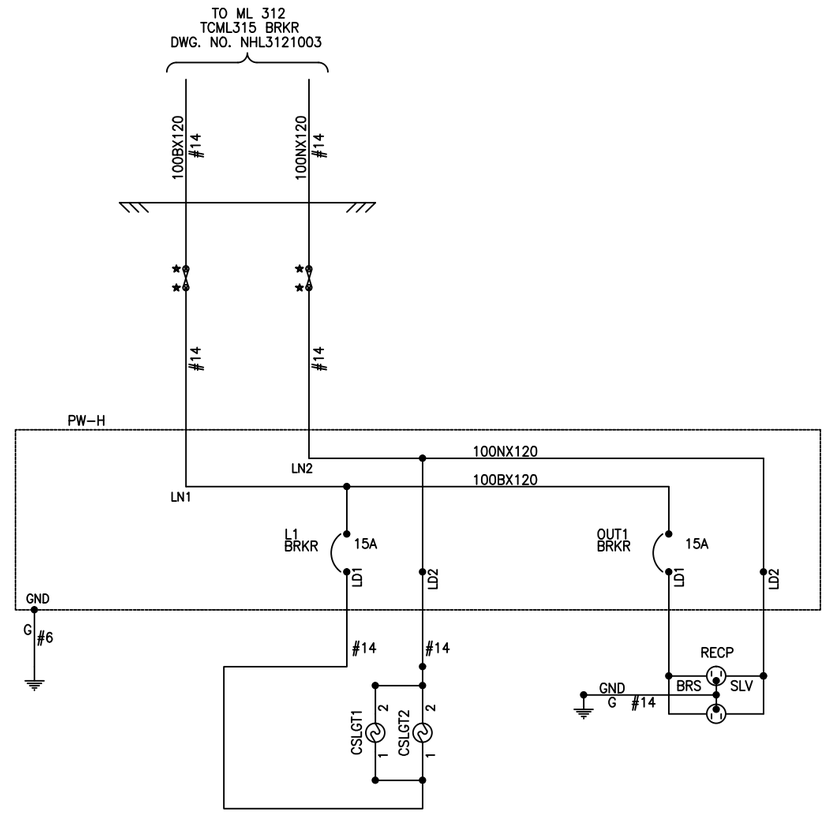

NOTES:

1. CONTRACTOR TO SIZE ALL BREAKERS, FUSES AND WIRE PER EQUIPMENT LOAD REQUIREMENTS, IN ACCORDANCE WITH THE SPECIFICATIONS.
2. ALL BREAKERS, FUSES, LIGHTS, RECEPTICALS, AND CONTROLS SHALL BE PROVIDED AS REQUIRED BY DETAILED DESIGN.
3. TYPICAL CIRCUITS SHOWN ARE BASED UPON SPECIFIC POWER PRODUCTS AND ARE INTENDED TO DEFINE THE TYPES OF INTERFACE REQUIRED. CONTRACTOR SHALL PROVIDE DESIGN IN ACCORDANCE WITH ALL SPECIFICATION REQUIREMENTS AND BASED UPON SPECIFIC POWER DEVICES TO BE SUPPLIED.
4. TYPICAL CIRCUITS SHOWN ARE SIMILAR FOR TRACK CASES AT FOLLOWING LOCATIONS: TCML 308, TCML 364, TCML 375, AND TCML 401.
5. POWERE WIRES AND GROUND WIRES, PUT IN SEPARATE BUNDLES.

DESIGNED RRL														
DRAWN RRL														
CHECKED JJL														
APPROVED XXX														
		NO.	DATE		DRWN	CHKD	APPVD	NO.	DATE		DRWN	CHKD	APPVD	
		REVISIONS						REVISIONS						

Gannett Fleming Transit & Rail Systems / CWA
GANNETT FLEMING/CWA, a joint venture
TWO PENN PLAZA, SUITE 552
380 SEVENTH AVENUE
NEW YORK, NY 10121-0101
PRJ: 057664

MTA Metro-North Railroad
347 Madison Avenue
New York, N.Y. 10017

TITLE
ENGINEERING AND DESIGN OF
CP 229 – CP 241
TCML 315
POWER CIRCUITS

CONTRACT NO. 1000027511
SCALE NONE | DATE 08-29-14
DRAWING NO. NHL3121008
SHEET 1068 OF _

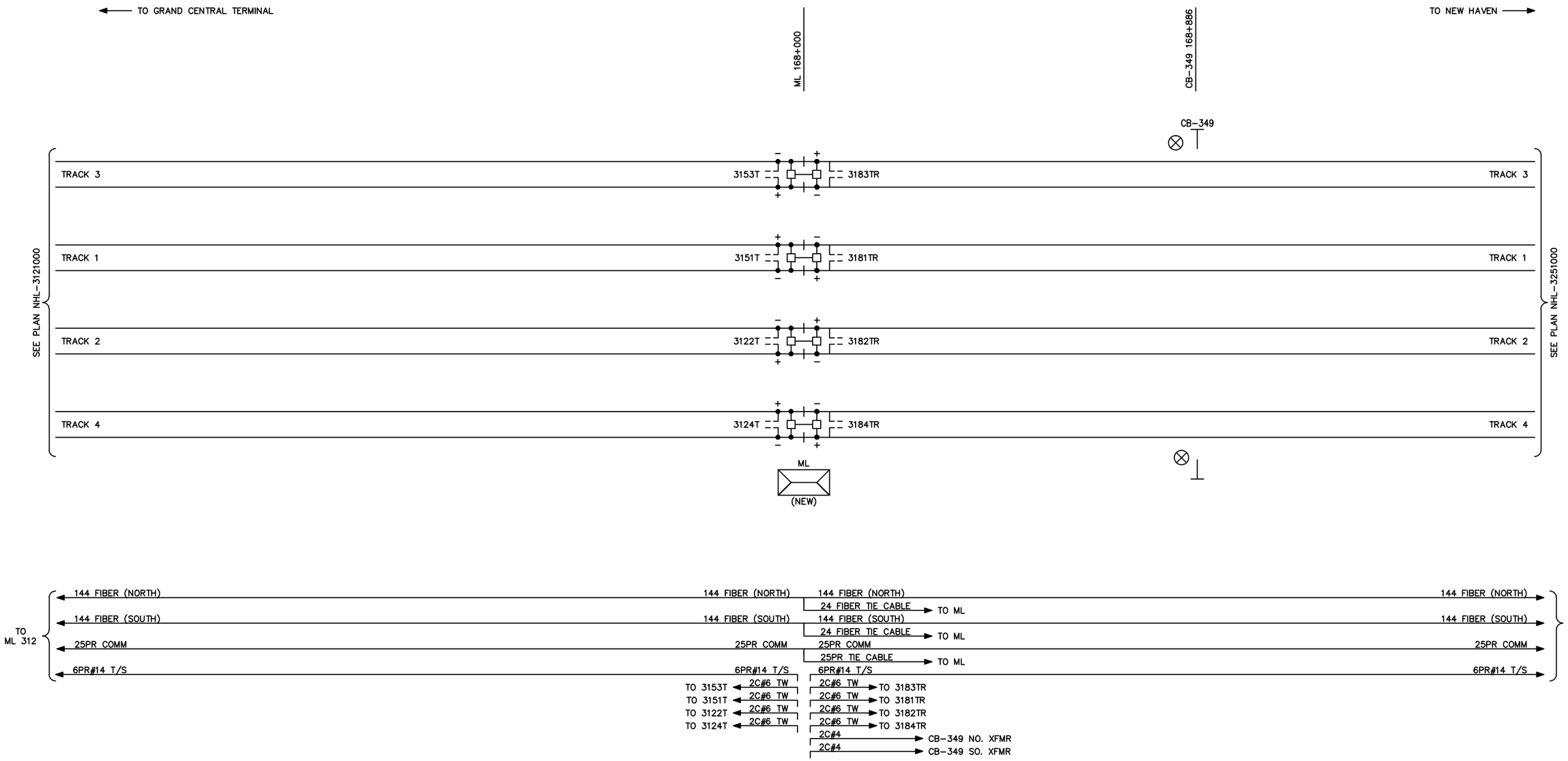

NOTES:

1. ALL CABLES SUPPLIED BY METRO-NORTH
2. ALL CABLES ARE UG UNLESS NOTED OTHERWISE.

DESIGNED	CEL
DRAWN	CEL
CHECKED	JJL
APPROVED	XXX

NO.	DATE		DRWN	CHKD	APPVD	NO.	DATE		DRWN	CHKD	APPVD
REVISIONS						REVISIONS					

Gannett Fleming Transit & Rail Systems /CWA
GANNETT FLEMING/CWA, a joint venture
TWO PENN PLAZA, SUITE 552
380 SEVENTH AVENUE
NEW YORK, NY 10121-0101
PRJ: 057664

Metro-North Railroad
347 Madison Avenue
New York, N.Y. 10017

TITLE
ENGINEERING AND DESIGN OF CP 229 – CP 241
ML 318
TRACK AND CABLE PLAN

CONTRACT NO. 1000027511
SCALE
DATE 08-29-14
DRAWING NO. NHL3181000
SHEET 1069 OF _

ML 318

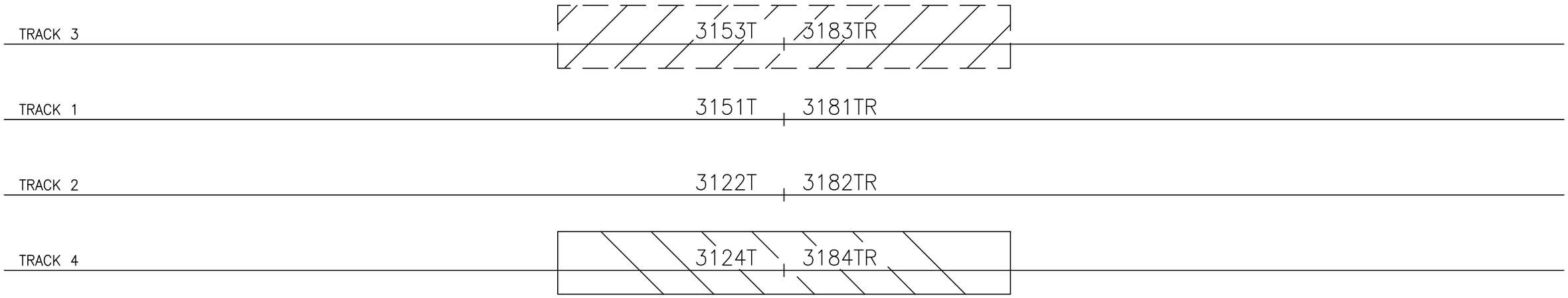

TRACK 3 ZONED PROCESSORS ZONE 1

TRACKS 1 & 2 ZONED PROCESSORS ZONE 2

TRACK 4 ZONED PROCESSORS ZONE 3

DESIGNED RRL													
DRAWN DSL													
CHECKED JJL													
APPROVED GAL													
		NO.	DATE	REVISIONS	DRWN	CHKD	APPVD	NO.	DATE	REVISIONS	DRWN	CHKD	APPVD

Gannett Fleming Transit & Rail Systems / CWA
GANNETT FLEMING/CWA, a joint venture
TWO PENN PLAZA, SUITE 552
380 SEVENTH AVENUE
NEW YORK, NY 10121-0101
PRJ: 057664

MTA Metro-North Railroad
347 Madison Avenue
New York, N.Y. 10017

TITLE
ENGINEERING AND DESIGN OF
CP 229 – CP 241
ML 318
MICROPROCESSOR ZONING PLAN

CONTRACT NO. 1000027511
SCALE
DATE 08-29-14
DRAWING NO. NHL3181001
SHEET 1070 OF _

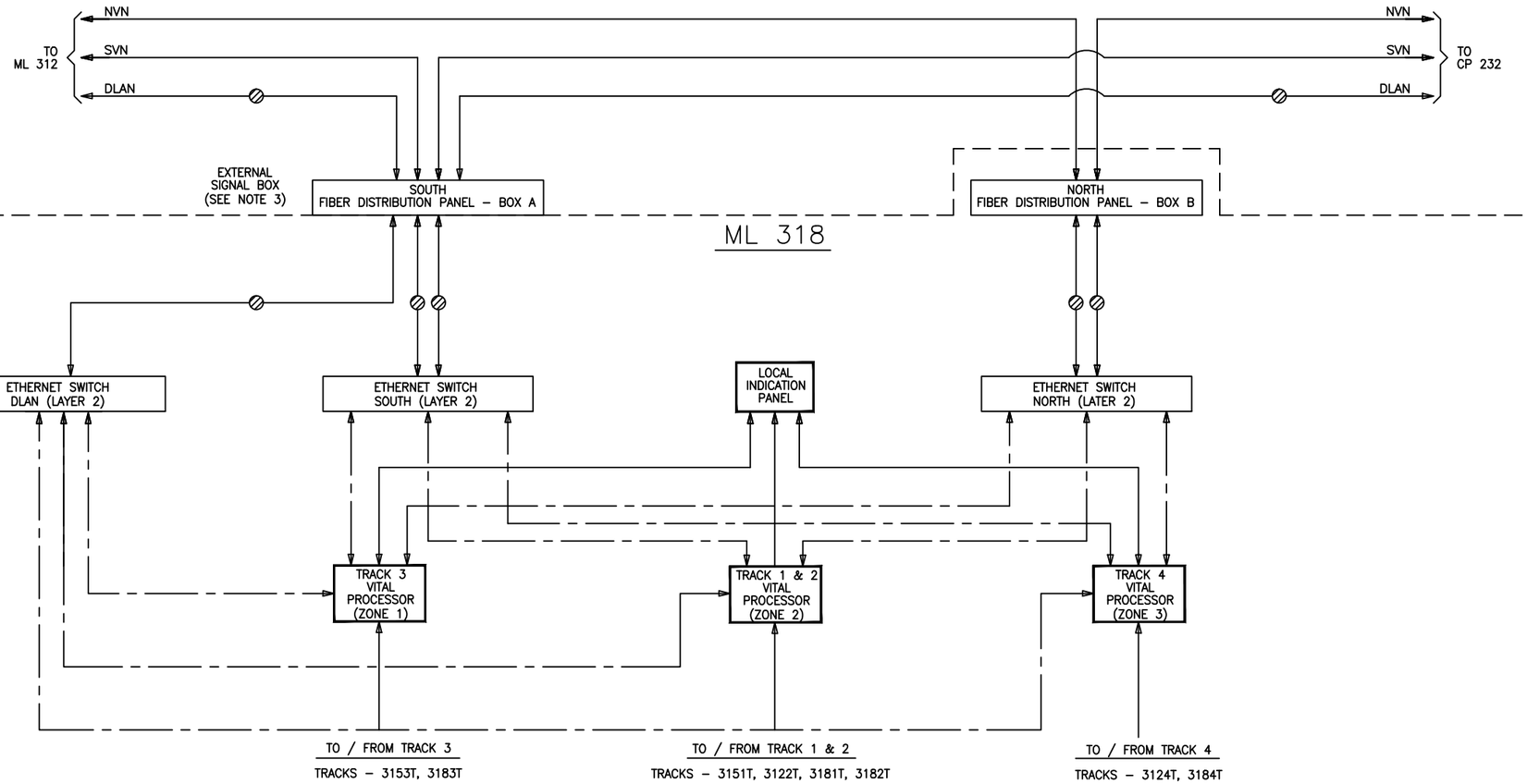

KEY

= VITAL DISCRETE I/O

= ETHERNET LINK

= FIBER OPTIC LINK (2 STRANDS)

NOTES:

1. TYPICAL CIRCUITS SHOWN ARE BASED UPON SPECIFIC VITAL PROCESSOR INTERLOCKING PRODUCTS AND ARE INTENDED TO DEFINE THE TYPES OF INTERFACE REQUIRED. CONTRACTOR SHALL PROVIDE DESIGN IN ACCORDANCE WITH ALL SPECIFICATION REQUIREMENTS AND BASED UPON SPECIFIC SIGNAL EQUIPMENT TO BE SUPPLIED.
2. ETHERNET SWITCHES SHALL BE POWERED THROUGH DC TO DC CONVERTER.
3. THE EXTERNAL SIGNAL BOX ILLUSTRATED ON THIS SHEET IS THE SAME BOX AS SHOWN ON THE NON VITAL MICROPROCESSOR BLOCK DIAGRAM.
4. DRAWING TO BE UTILIZED FOR SIMILAR MASTER LOCATIONS

DESIGNED RRL															
DRAWN CBH															
CHECKED JJL															
APPROVED XXX															
		NO.	DATE	REVISIONS	DRWN	CHKD	APPVD	NO.	DATE	REVISIONS	DRWN	CHKD	APPVD		

Gannett Fleming Transit & Rail Systems /CWA
GANNETT FLEMING/CWA, a joint venture
TWO PENN PLAZA, SUITE 552
380 SEVENTH AVENUE
NEW YORK, NY 10121–0101
PRJ: 057664

MTA Metro-North Railroad
347 Madison Avenue
New York, N.Y. 10017

TITLE
ENGINEERING AND DESIGN OF
CP 229 – CP 241
ML 318
VITAL MICROPROCESSOR BLOCK DIAGRAM

CONTRACT NO. 1000027511
SCALE
DATE 08–29–14
DRAWING NO. NHL3181002
SHEET 1071 OF _

ML 318

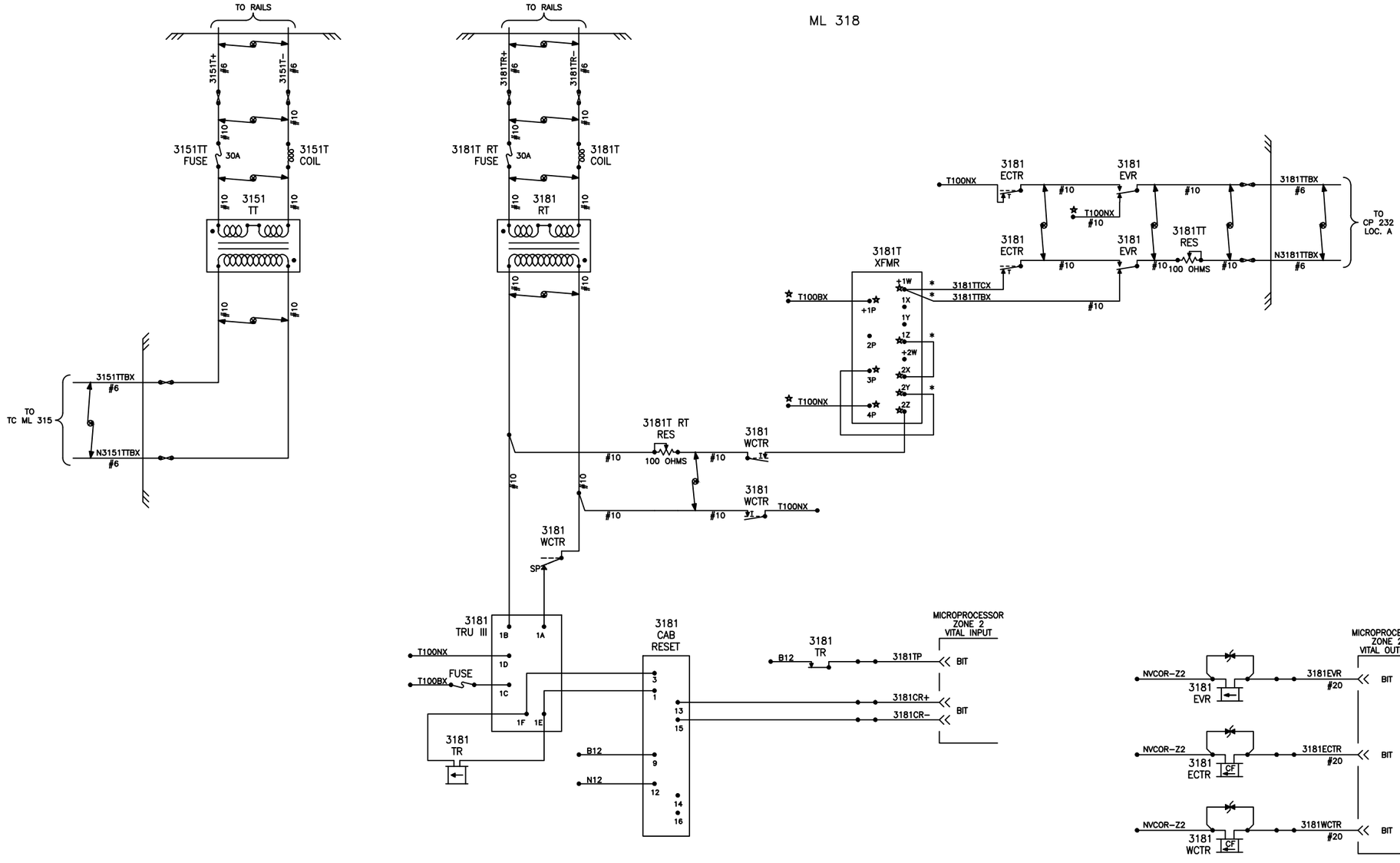

NOTES:
1. ALL WIRES #16 UNLESS OTHERWISE NOTED.
2. ⊗ = TWISTED PAIR
3. ★ = INSULATED NUT
4. BLACK / TWISTED PAIR / WHITE

DESIGNED RRL													
DRAWN CBH													
CHECKED JJL													
APPROVED XXX													
		NO.	DATE		DRWN	CHKD	APPVD	NO.	DATE		DRWN	CHKD	APPVD
		REVISIONS						REVISIONS					

Gannett Fleming Transit & Rail Systems / CWA
GANNETT FLEMING/CWA, a joint venture
TWO PENN PLAZA, SUITE 552
380 SEVENTH AVENUE
NEW YORK, NY 10121-0101
PRJ: 057664

MTA Metro-North Railroad
347 Madison Avenue
New York, N.Y. 10017

TITLE
ENGINEERING AND DESIGN OF
CP 229 – CP 241
ML 318
TRACK CIRCUITS 3151T/318T

CONTRACT NO. 1000027511
SCALE
DATE 08–29–14
DRAWING NO. NHL3181003
SHEET 1072 OF _

ML 318

ENTRY (R) BEKRE

DC POWER OFF (R) DCPOKRE

100Hz POWER OFF (R) 100POKRE

GROUND (R) GNDKRE

NETSW DIAG (R) DIAGSWKRE

NORTH SIGNAL LINE (R) NVNSWKRE

SOUTH SIGNAL LINE (R) SVNSWKRE

TRAFFIC WEST

(G) 3WFK–EGE

3153T (R) 3153BKRE

3183T (R) 3183BKRE

TRAFFIC EAST

(G) 3EFK–EGE

(G) 1WFK–EGE

3151T (R) 3151BKRE

3181T (R) 3181BKRE

(G) 1EFK–EGE

(G) 2WFK–EGE

3122T (R) 3122BKRE

3182T (R) 3182BKRE

(G) 2EFK–EGE

(G) 4WFK–EGE

3124T (R) 3124BKRE

3184T (R) 3184BKRE

(G) 4EFK–EGE

LAMP TEST ON

ON/OFF

LEGEND:

TWO POSITION PUSH BUTTON ON/OFF

(R) LED (COLOR INDICATED)

R LED (COLOR INDICATED)

DESIGNED RRL													
DRAWN RRL													
CHECKED JJL													
APPROVED XXX													
		NO.	DATE	REVISIONS	DRWN	CHKD	APPVD	NO.	DATE	REVISIONS	DRWN	CHKD	APPVD

Gannett Fleming Transit & Rail Systems / CWA
GANNETT FLEMING/CWA, a joint venture
TWO PENN PLAZA, SUITE 552
380 SEVENTH AVENUE
NEW YORK, NY 10121–0101
PRJ: 057664

MTA Metro-North Railroad
347 Madison Avenue
New York, N.Y. 10017

TITLE
ENGINEERING AND DESIGN OF
CP 229 – CP 241
ML 318
LOCAL INDICATION PANEL

CONTRACT NO. 1000027511
SCALE NONE
DATE 08–29–14
DRAWING NO. NHL3181004
SHEET 1073 OF _

CP 232 (SELLECK)

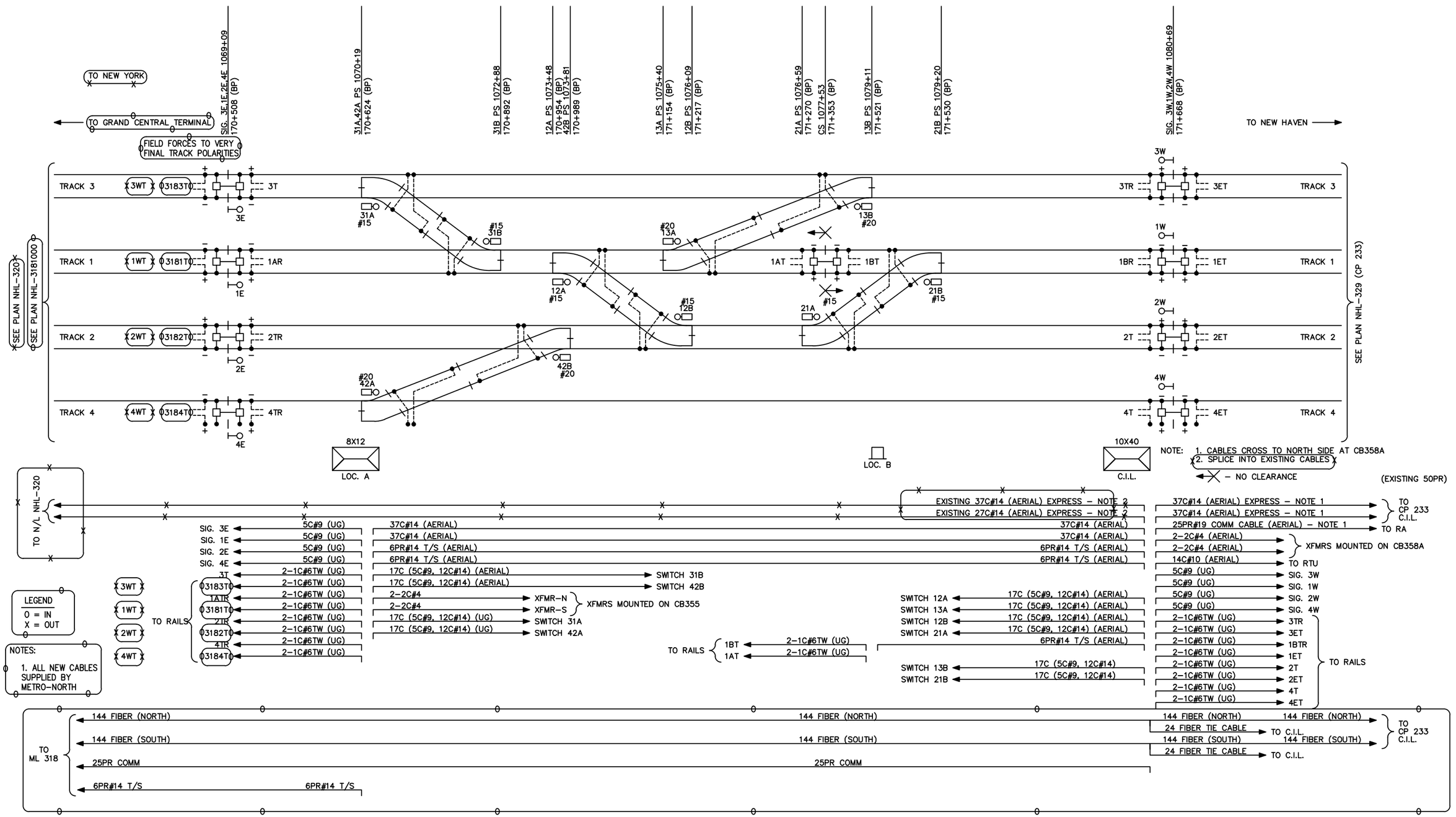

CIRCUIT ENGINEER	SR. SIGNAL ENGR.–DESIGN & STANDARDS	DIRECTOR C&S SYSTEMS	MTA Metro–North Railroad	NEW HAVEN LINE CP 232 TRACK AND CABLE PLAN	ISSUE DATE: / REV. 1 / /USERS/SIGNAL/NHL/NHL3	NHL–325 / SHEET 5 / NHL325 L325005

Gannett Fleming/CWA

CONTRACT # 1000027511

PROJECT SHEET # 1074

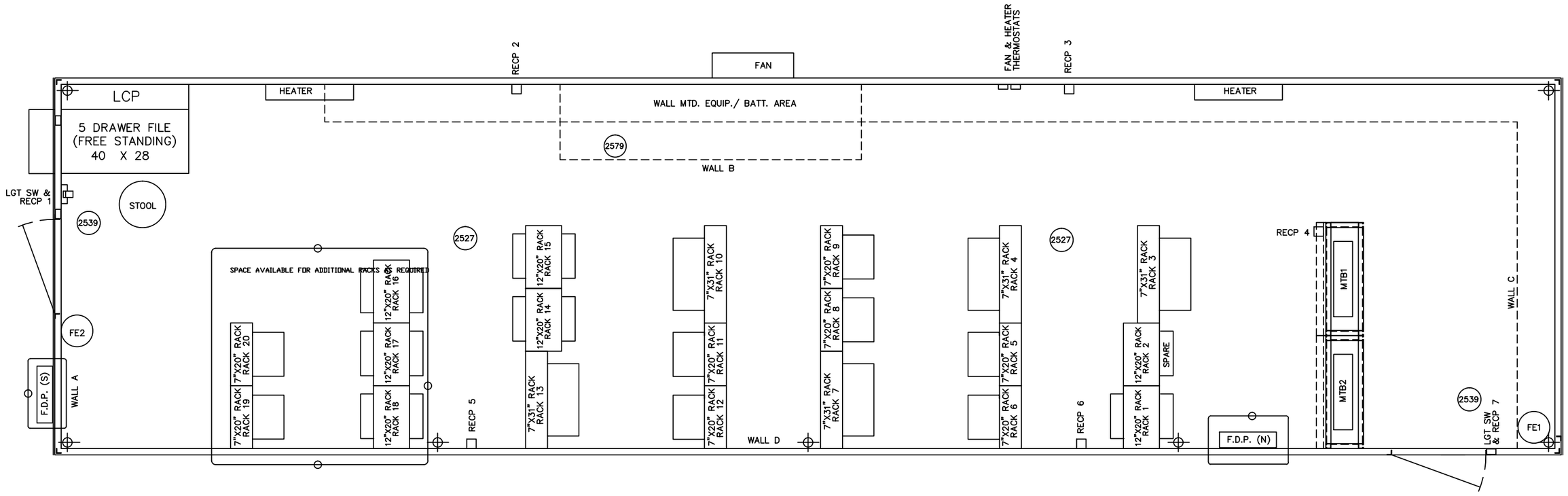

CIRCUIT ENGINEER	SR. SIGNAL ENGR.–DESIGN & STANDARDS	DIRECTOR C&S SYSTEMS	MTA Metro–North Railroad	NEW HAVEN LINE CP 232 C.I.L. – 10' X 40' HOUSE LAYOUT	ISSUE DATE: NHL–325 REV. SHEET 37 /USERS/SIGNAL/NHL/NHL3 NHL325

Gannett Fleming/CWA

CONTRACT #	PROJECT SHEET #
1000027511	1075

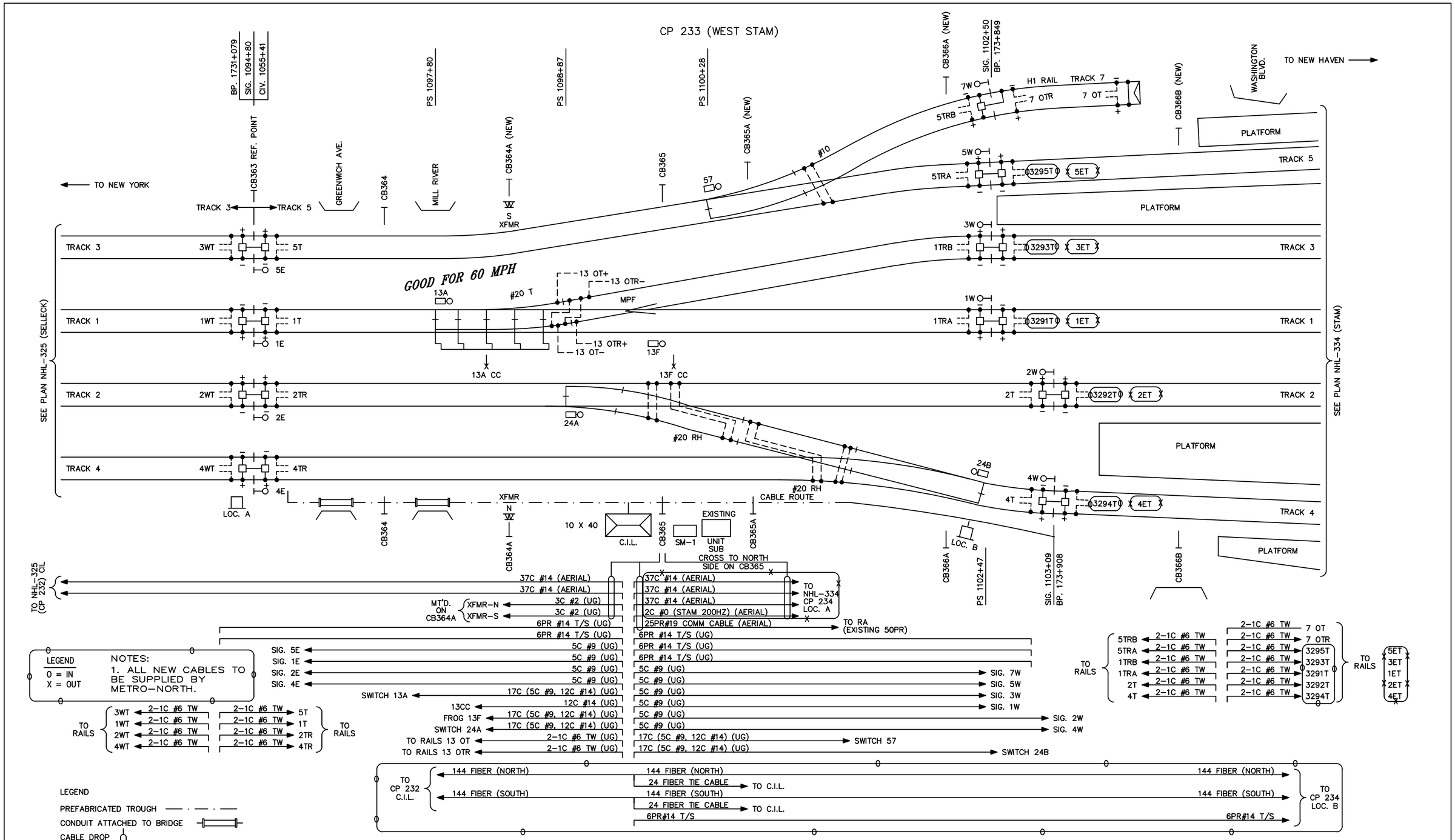

CIRCUIT ENGINEER	SR. SIGNAL ENGR.-DESIGN & STANDARDS	DIRECTOR C&S SYSTEMS	MTA Metro-North Railroad	NEW HAVEN LINE CP-233 TRACK AND CABLE PLAN	ISSUE DATE: REV. 2 \USERS\SIGNAL\NHL\NHL3\	NHL-329 SHEET 5 NHL329 L329005

Gannett Fleming/CWA

CONTRACT #	PROJECT SHEET #
1000027511	1076

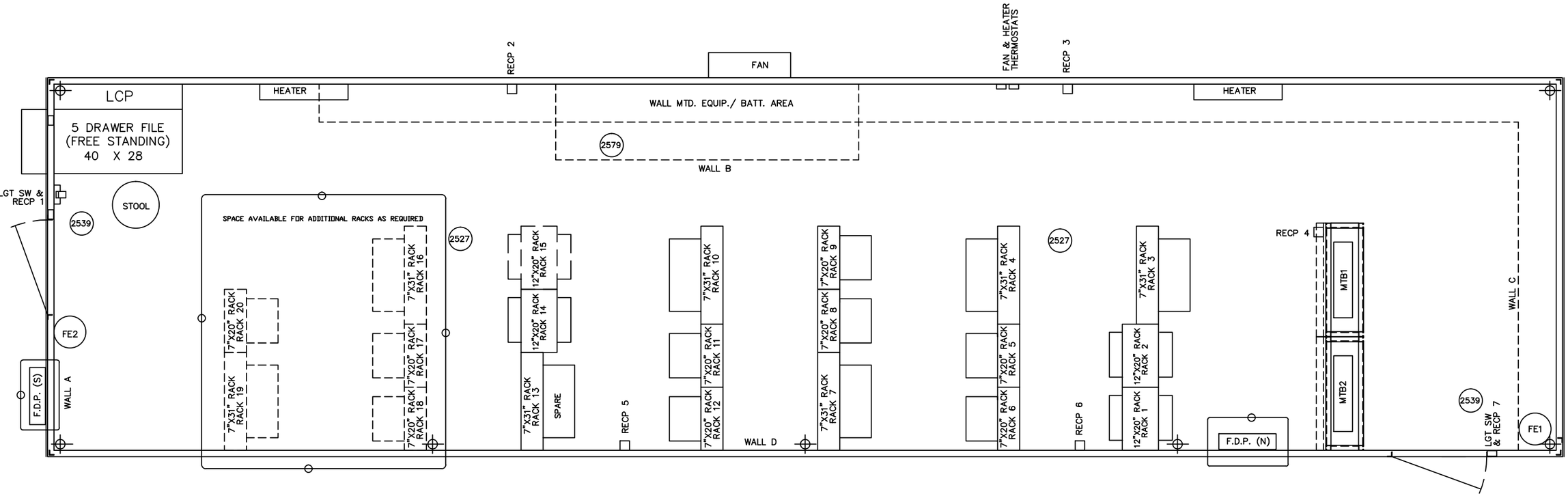

CIRCUIT ENGINEER	SR. SIGNAL ENGR.–DESIGN & STANDARDS	DIRECTOR C&S SYSTEMS	MTA Metro–North Railroad	NEW HAVEN LINE CP 233 C.I.L. – 10' X 40' HOUSE LAYOUT	ISSUE DATE: NHL–329 REV. SHEET 38 /USERS/SIGNAL/NHL/NHL3 NHL329

Gannett Fleming/CWA

CONTRACT #	PROJECT SHEET #
1000027511	1077

CP 234 (STAM)

SIG. 5E 174+919
53A PS 174+929
LOC. A 174+960
SIG. 3E 175+010
LOC. B 175+175
SM1 175+200
SIG. 1E,2E,4E 175+193
CB-370B 175+195
53B PS 175+214
31A PS 175+347
42A PS 175+437
W35A PS 175+538
CS TKS 175+540
LOC. C 175+650
CB-371A 175+573
SM2 175+600
31B PS 175+702
SM2 175+715
12A PS 175+726
W35B PS 175+747
57 PS 175+754
42B PS 175+796
CIL 175+894
12B PS 175+905
24A PS 175+925
SIG. 7W 175+932
SIG. 5W 176+005
SIG. 8E 176+046
SIG. 6E 176+047
21A PS 176+048
SM4 176+075
24B PS 176+103
46A PS 176+124
LOC. D 176+208
86 PS 176+264
SM5 176+280
21B PS 176+307
46B PS 176+335
SIG. 6W 176+342
LOC. E, CS TKS 1-4 176+373
E24A PS 176+440
13A PS 176+452
SM6 176+500
LOC. F 176+732
E24B PS 176+798
13B PS 176+810
35A PS 176+872
SM7 176+900
SIG. 55E 176+910
LOC. G 177+100
35B PS 177+284
LOC. H 177+500
CB-378 177+506
SIG. 55W,1W,2W,3W,4W 177+506

CIL
LOC. D
LOC. E
SM6
LOC. F
SM7
LOC. G
LOC. H
EXISTING LOC. E

← TO GRAND CENTRAL TERMINAL

TO NEW HAVEN →

SM1
SM2
SM3

CB-370B
CB-371A
CB-378

7W
7WATR
57
5W
POLARITY COMPENSATION POINT
55W

TRACK 5 3295TR 5ATR 5AT 5BT 5BTR 5CTR 5CT 5DTR 5DT 3375TR
5E 53A 53B W35A W35B 55E 35B 35A 3B2T 5D1T
TRACK 3 3293TR 3ATR 3AT 3BT 3BTR 3373TR
3E 31A 3A1T 1A1T 31B 13B 3B1T 1B1T 13A
TRACK 1 3291TR 1ATR 1AT 1BT 1BTR 3371TR
1E 12A 12B 21A 21B 1A2T 2A2T
TRACK 2 3292TR 2ATR 2AT 2BT 2BTR 3372TR
2E 42B 24A 24B E24A E24B 2B1T 4B1T
TRACK 4 3294TR 4AT 4ATR 4BTR 4BT 3374TR
4E 42A 4A1T 46A 46B 6W
TRACK 6 6EATR 6ATR 6AT 6BT
6E 86 66E 68
8EATR 8E

FOR REFERENCE ONLY
FOR CONTINUATION SEE SHEET 2 OF 2

LOC. A
LOC. B
LOC. C
SM4
SM5

SEE PLAN NHL-329
SEE PLAN NHL-3371000

#10 #15 #20

DESIGNED	CEL
DRAWN	CEL
CHECKED	JJL
APPROVED	XXX

NO.	DATE		DRWN	CHKD	APPVD

REVISIONS

NO.	DATE		DRWN	CHKD	APPVD

REVISIONS

Gannett Fleming Transit & Rail Systems / CWA
GANNETT FLEMING/CWA, a joint venture
TWO PENN PLAZA, SUITE 552
380 SEVENTH AVENUE
NEW YORK, NY 10121-0101
PRJ: 057664

MTA Metro-North Railroad
347 Madison Avenue
New York, N.Y. 10017

TITLE
ENGINEERING AND DESIGN OF
CP 229 – CP 241
CP 234
TRACK LAYOUT
SHEET 1 OF 2

CONTRACT NO. 1000027511
SCALE
DATE 08-29-14
DRAWING NO. NHL3341000
SHEET 1078 OF _

SIG. 66E 176+342
68 PS 176+390
LOC. J 176+414
SM8 176+438
810 PS 176+486
SIG. 66W 176+565
SIG. 8W 176+655
LOC. K 176+708
SIG 10W 176+762
SIG 10E 176+870
1012 PS 176+895
SM9 176+925
LOC. L 177+000
SIGS 1010W, 12W 177+XXX

STAMFORD YARD

TO GRAND CENTRAL TERMINAL

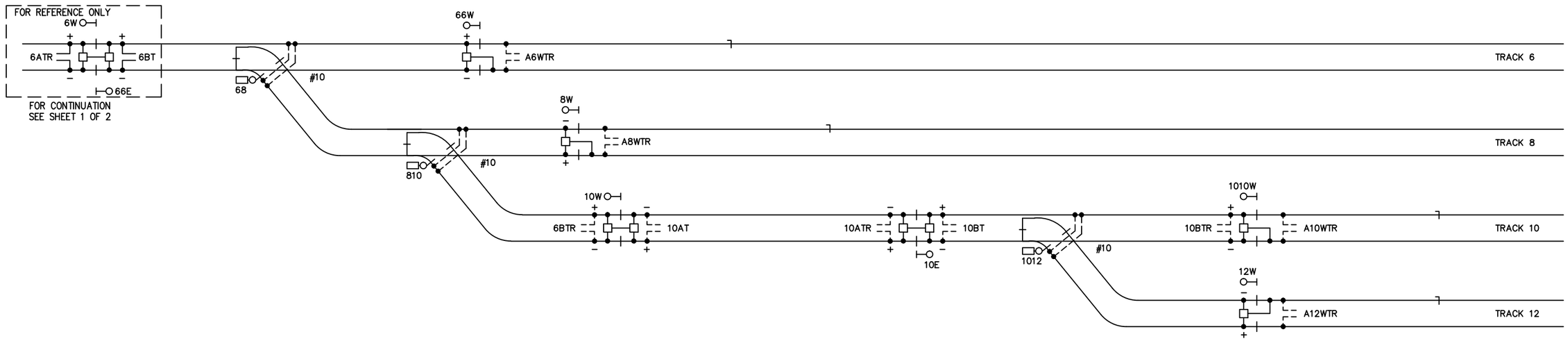

LOC.J SM8 LOC. K SM9 LOC. L

DESIGNED CEL													
DRAWN CEL													
CHECKED JJL													
APPROVED XXX													
		NO.	DATE		DRWN	CHKD	APPVD	NO.	DATE		DRWN	CHKD	APPVD
		REVISIONS						REVISIONS					

Gannett Fleming Transit & Rail Systems / CWA
GANNETT FLEMING/CWA, a joint venture
TWO PENN PLAZA, SUITE 552
380 SEVENTH AVENUE
NEW YORK, NY 10121-0101
PRJ: 057664

Metro-North Railroad
347 Madison Avenue
New York, N.Y. 10017

TITLE
ENGINEERING AND DESIGN OF
CP 229 – CP 241
CP 234
TRACK LAYOUT
SHEET 2 OF 2

CONTRACT NO. 1000027511
SCALE
DATE 08-29-14
DRAWING NO. NHL3341001
SHEET 1079 OF _

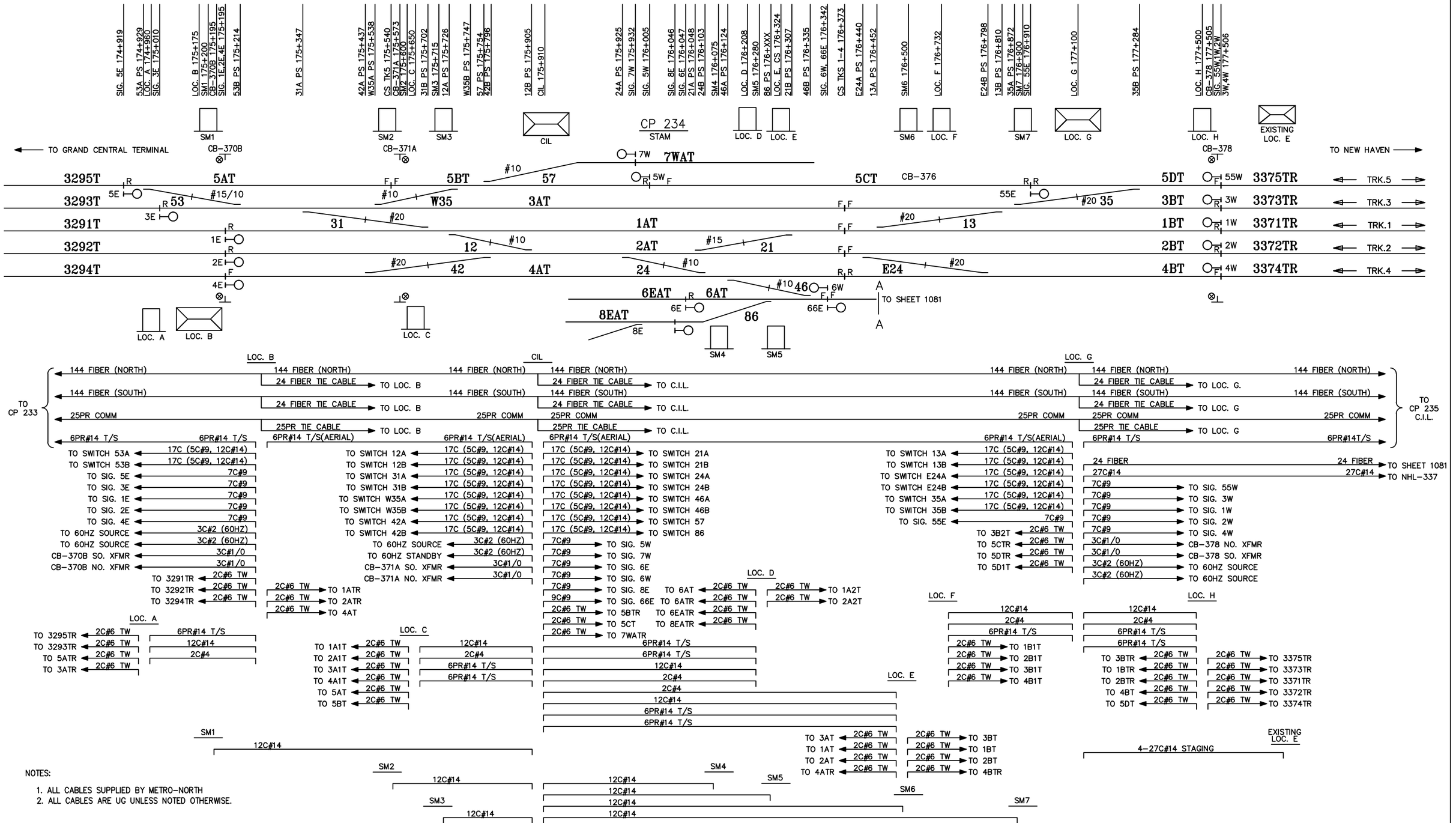

NOTES:

1. ALL CABLES SUPPLIED BY METRO-NORTH
2. ALL CABLES ARE UG UNLESS NOTED OTHERWISE.

DESIGNED CEL														
DRAWN CEL														
CHECKED JJL														
APPROVED XXX														
		NO.	DATE		DRWN	CHKD	APPVD	NO.	DATE		DRWN	CHKD	APPVD	
		REVISIONS						REVISIONS						

Gannett Fleming Transit & Rail Systems / CWA
GANNETT FLEMING/CWA, a joint venture
TWO PENN PLAZA, SUITE 552
380 SEVENTH AVENUE
NEW YORK, NY 10121-0101
PRJ: 057664

MTA Metro-North Railroad
347 Madison Avenue
New York, N.Y. 10017

TITLE
ENGINEERING AND DESIGN OF
CP 229 – CP 241
CP 234
CABLE PLAN
SHEET 1 OF 2

CONTRACT NO. 1000027511
SCALE
DATE 08-29-14
DRAWING NO. NHL3341002
SHEET 1080 OF _

68 PS 176+390 | LOC. J 176+414 | SM8 176+438 | 810 PS 176+486 | SIG 66W 176+565 | SIG 8W 176+655 | LOC. K 176+708 | SIG 10W 176+762 | SIG 10E 176+870 | 1012 PS 176+895 | SM9 176+925 | LOC. L 177+000 | SIG 1010W, 12W 177+XXX

← TO GRAND CENTRAL TERMINAL

STAMFORD YARD

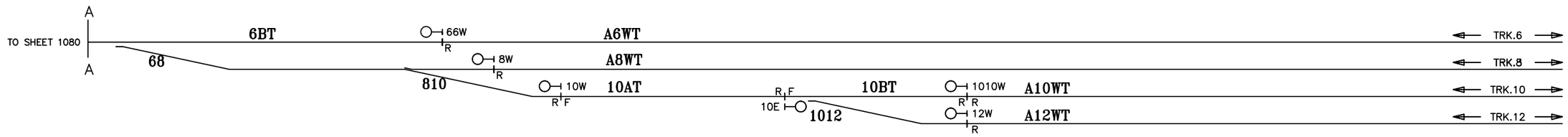

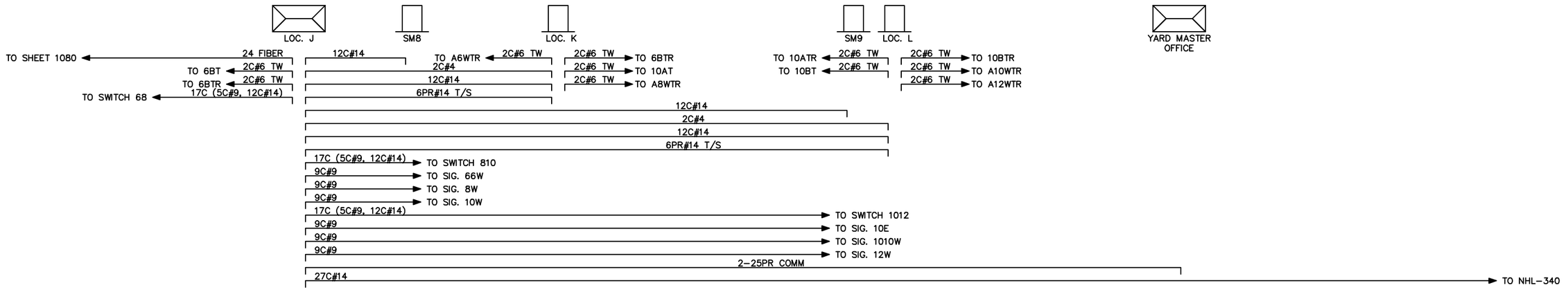

NOTES:

1. ALL CABLES SUPPLIED BY METRO-NORTH
2. ALL CABLES ARE UG UNLESS NOTED OTHERWISE

DESIGNED	CEL
DRAWN	CEL
CHECKED	JJL
APPROVED	XXX

NO.	DATE		DRWN	CHKD	APPVD

REVISIONS

NO.	DATE		DRWN	CHKD	APPVD

REVISIONS

Gannett Fleming Transit & Rail Systems / CWA
GANNETT FLEMING/CWA, a joint venture
TWO PENN PLAZA, SUITE 552
380 SEVENTH AVENUE
NEW YORK, NY 10121-0101
PRJ: 057664

Metro-North Railroad
347 Madison Avenue
New York, N.Y. 10017

TITLE
ENGINEERING AND DESIGN OF
CP 229 – CP 241

CP 234
CABLE PLAN
SHEET 2 OF 2

CONTRACT NO. 1000027511
SCALE
DATE 08-29-14
DRAWING NO. NHL3341003
SHEET 1081 OF _

CP 234

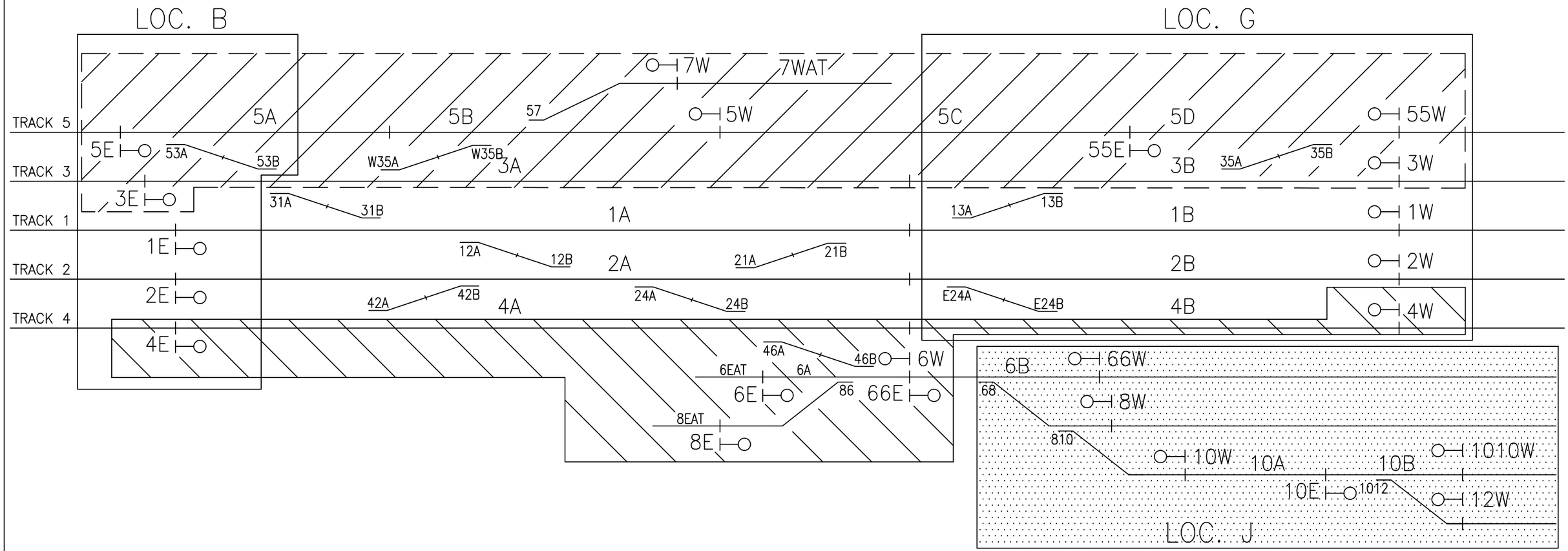

TRACK 3, 5 & 7 ZONED PROCESSORS ZONE 1

TRACKS 1 & 2 ZONED PROCESSORS ZONE 2

TRACK 4, 6 & 8 ZONED PROCESSORS ZONE 3

STAMFORD YARD PROCESSOR ZONE 4

DESIGNED	RRL
DRAWN	DSL
CHECKED	JJL
APPROVED	GAE

NO.	DATE		DRWN	CHKD	APPVD

REVISIONS

NO.	DATE		DRWN	CHKD	APPVD

REVISIONS

Gannett Fleming Transit & Rail Systems /CWA
GANNETT FLEMING/CWA, a joint venture
TWO PENN PLAZA, SUITE 552
380 SEVENTH AVENUE
NEW YORK, NY 10121-0101
PRJ: 057664

Metro-North Railroad
347 Madison Avenue
New York, N.Y. 10017

TITLE
ENGINEERING AND DESIGN OF
CP 229 – CP 241
CP 234
MICROPROCESSOR ZONING PLAN

CONTRACT NO. 1000027511
SCALE
DATE 08-29-14
DRAWING NO. NHL3341004
SHEET 1082 OF _

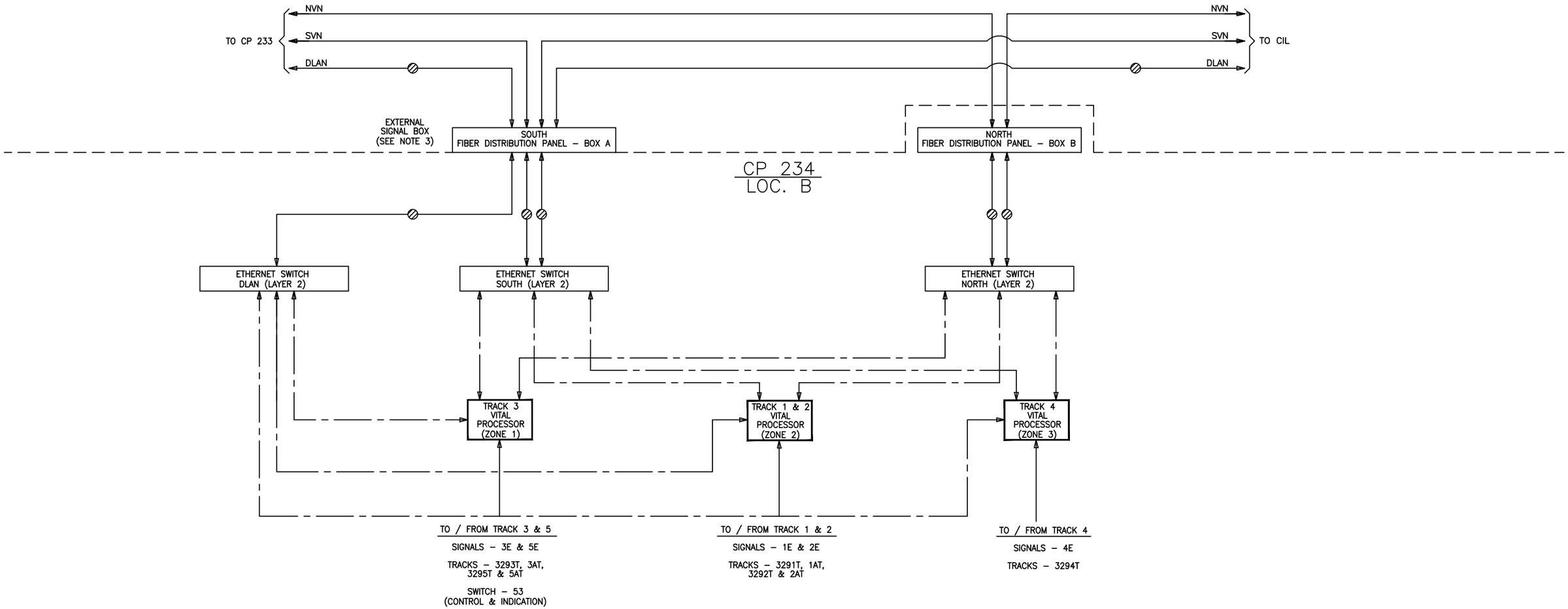

KEY

= VITAL DISCRETE I/O

= SERIAL LINK

= ETHERNET LINK

= FIBER OPTIC LINK (2 STRANDS)

NOTES:

1. TYPICAL CIRCUITS SHOWN ARE BASED UPON SPECIFIC VITAL PROCESSOR INTERLOCKING PRODUCTS AND ARE INTENDED TO DEFINE THE TYPES OF INTERFACE REQUIRED. CONTRACTOR SHALL PROVIDE DESIGN IN ACCORDANCE WITH ALL SPECIFICATION REQUIREMENTS AND BASED UPON SPECIFIC SIGNAL EQUIPMENT TO BE SUPPLIED.
2. ETHERNET SWITCHES SHALL BE POWERED THROUGH DC TO DC CONVERTER.
3. THE EXTERNAL SIGNAL BOX ILLUSTRATED ON THIS SHEET IS THE SAME BOX AS SHOWN ON THE NON VITAL MICROPROCESSOR BLOCK DIAGRAM.
4. CIRCUITS SHOWN ARE TYPICAL FOR INTERLOCKINGS WITH MULTIPLE PROCESSORS, SUCH AS CP241 LOC.A

DESIGNED	RRL
DRAWN	CBH
CHECKED	JJL
APPROVED	XXX

NO.	DATE		DRWN	CHKD	APPVD	NO.	DATE		DRWN	CHKD	APPVD
REVISIONS						REVISIONS					

Gannett Fleming Transit & Rail Systems / CWA
GANNETT FLEMING/CWA, a joint venture
TWO PENN PLAZA, SUITE 552
380 SEVENTH AVENUE
NEW YORK, NY 10121-0101
PRJ: 057664

Metro-North Railroad
347 Madison Avenue
New York, N.Y. 10017

TITLE
ENGINEERING AND DESIGN OF CP 229 – CP 241

CP 234
LOC. B
MICROPROCESSOR BLOCK DIAGRAM

CONTRACT NO. 1000027511
SCALE
DATE 08-29-14
DRAWING NO. NHL3341005
SHEET 1083 OF _

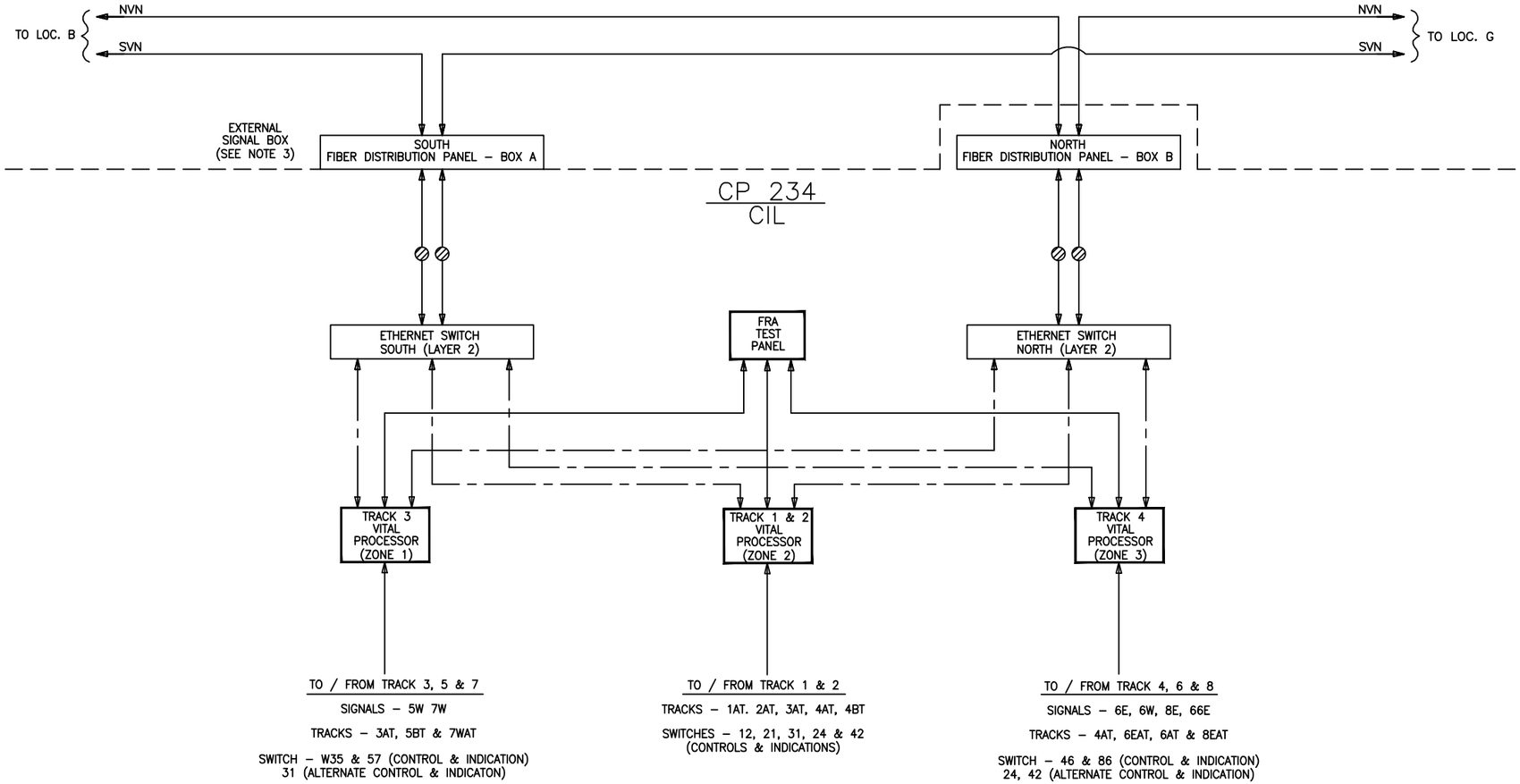

KEY

= VITAL DISCRETE I/O

= SERIAL LINK

= ETHERNET LINK

= FIBER OPTIC LINK (2 STRANDS)

NOTES:

1. TYPICAL CIRCUITS SHOWN ARE BASED UPON SPECIFIC VITAL PROCESSOR INTERLOCKING PRODUCTS AND ARE INTENDED TO DEFINE THE TYPES OF INTERFACE REQUIRED. CONTRACTOR SHALL PROVIDE DESIGN IN ACCORDANCE WITH ALL SPECIFICATION REQUIREMENTS AND BASED UPON SPECIFIC SIGNAL EQUIPMENT TO BE SUPPLIED.
2. ETHERNET SWITCHES SHALL BE POWERED THROUGH DC TO DC CONVERTER.
3. THE EXTERNAL SIGNAL BOX ILLUSTRATED ON THIS SHEET IS THE SAME BOX AS SHOWN ON THE NON VITAL MICROPROCESSOR BLOCK DIAGRAM.
4. CIRCUITS SHOWN ARE TYPICAL FOR INTERLOCKINGS WITH MULTIPLE PROCESSORS SUCH AS CP241 CIL

DESIGNED RRL														
DRAWN CBH														
CHECKED JJL														
APPROVED XXX														
		NO.	DATE	REVISIONS	DRWN	CHKD	APPVD	NO.	DATE	REVISIONS	DRWN	CHKD	APPVD	

Gannett Fleming Transit & Rail Systems / CWA
GANNETT FLEMING/CWA, a joint venture
TWO PENN PLAZA, SUITE 552
380 SEVENTH AVENUE
NEW YORK, NY 10121–0101
PRJ: 057664

MTA Metro-North Railroad
347 Madison Avenue
New York, N.Y. 10017

TITLE
ENGINEERING AND DESIGN OF
CP 229 – CP 241
CP 234
CIL
MICROPROCESSOR BLOCK DIAGRAM

CONTRACT NO. 1000027511
SCALE
DATE 08–29–14
DRAWING NO. NHL3341006
SHEET 1084 OF _

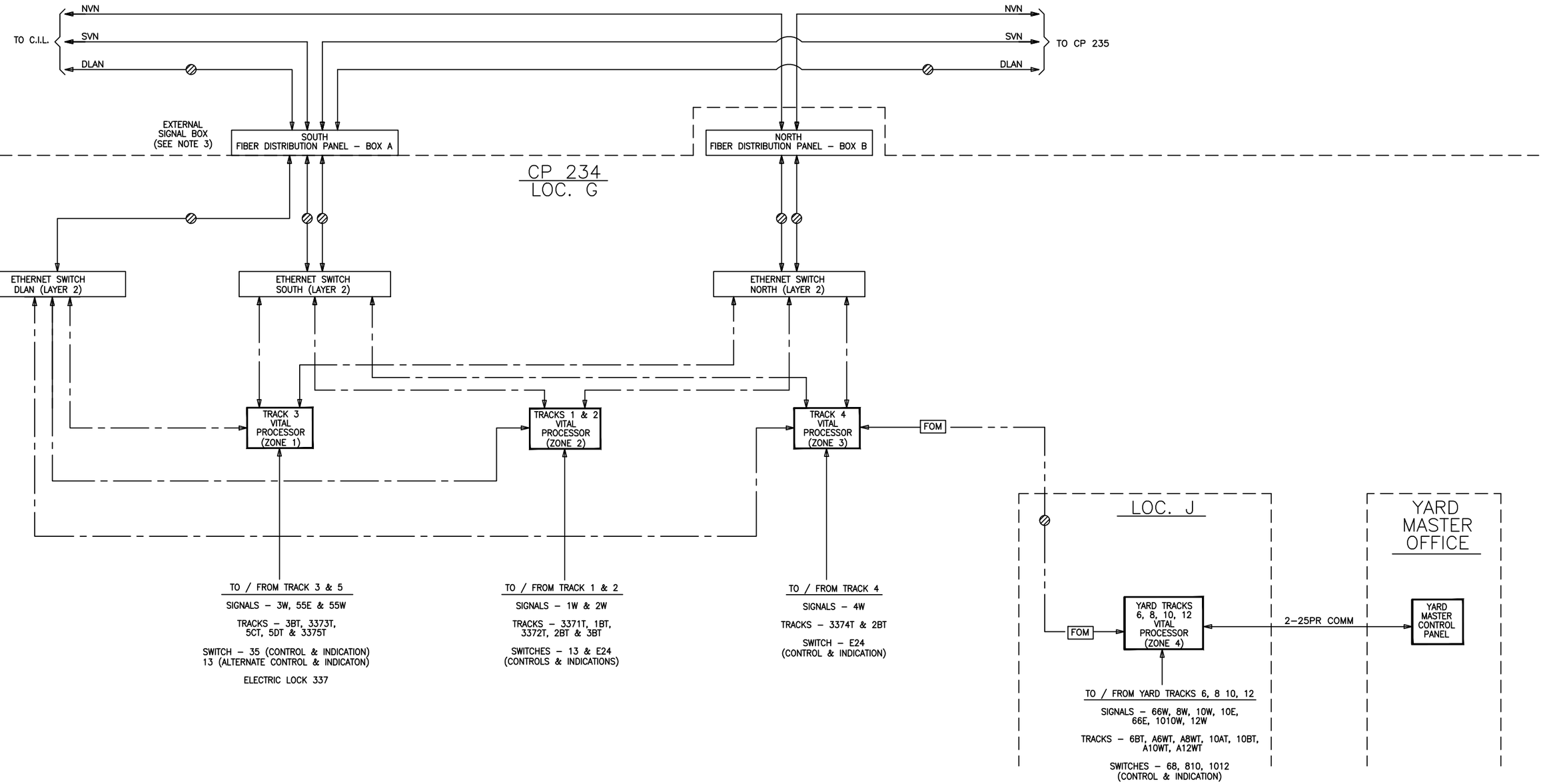

KEY

= VITAL DISCRETE I/O

= SERIAL LINK

= ETHERNET LINK

= FIBER OPTIC LINK (2 STRANDS)

NOTES:

1. TYPICAL CIRCUITS SHOWN ARE BASED UPON SPECIFIC VITAL PROCESSOR INTERLOCKING PRODUCTS AND ARE INTENDED TO DEFINE THE TYPES OF INTERFACE REQUIRED. CONTRACTOR SHALL PROVIDE DESIGN IN ACCORDANCE WITH ALL SPECIFICATION REQUIREMENTS AND BASED UPON SPECIFIC SIGNAL EQUIPMENT TO BE SUPPLIED.
2. ETHERNET SWITCHES SHALL BE POWERED THROUGH DC TO DC CONVERTER.
3. THE EXTERNAL SIGNAL BOX ILLUSTRATED ON THIS SHEET IS THE SAME BOX AS SHOWN ON THE NON VITAL MICROPROCESSOR BLOCK DIAGRAM.
4. CIRCUITS SHOWN ARE TYPICAL FOR INTERLOCKINGS WITH MULTIPLE PROCESSORS SUCH AS CP241 LOC. G

DESIGNED	RRL
DRAWN	CBH
CHECKED	JJL
APPROVED	XXX

NO.	DATE		DRWN	CHKD	APPVD

REVISIONS

NO.	DATE		DRWN	CHKD	APPVD

REVISIONS

Gannett Fleming Transit & Rail Systems /CWA
GANNETT FLEMING/CWA, a joint venture
TWO PENN PLAZA, SUITE 552
380 SEVENTH AVENUE
NEW YORK, NY 10121–0101
PRJ: 057664

Metro-North Railroad
347 Madison Avenue
New York, N.Y. 10017

TITLE
ENGINEERING AND DESIGN OF CP 229 – CP 241
CP 234
LOC. G & LOC. J
MICROPROCESSOR BLOCK DIAGRAM

CONTRACT NO. 1000027511
SCALE
DATE 08–29–14
DRAWING NO. NHL3341007
SHEET 1085 OF _

CIL

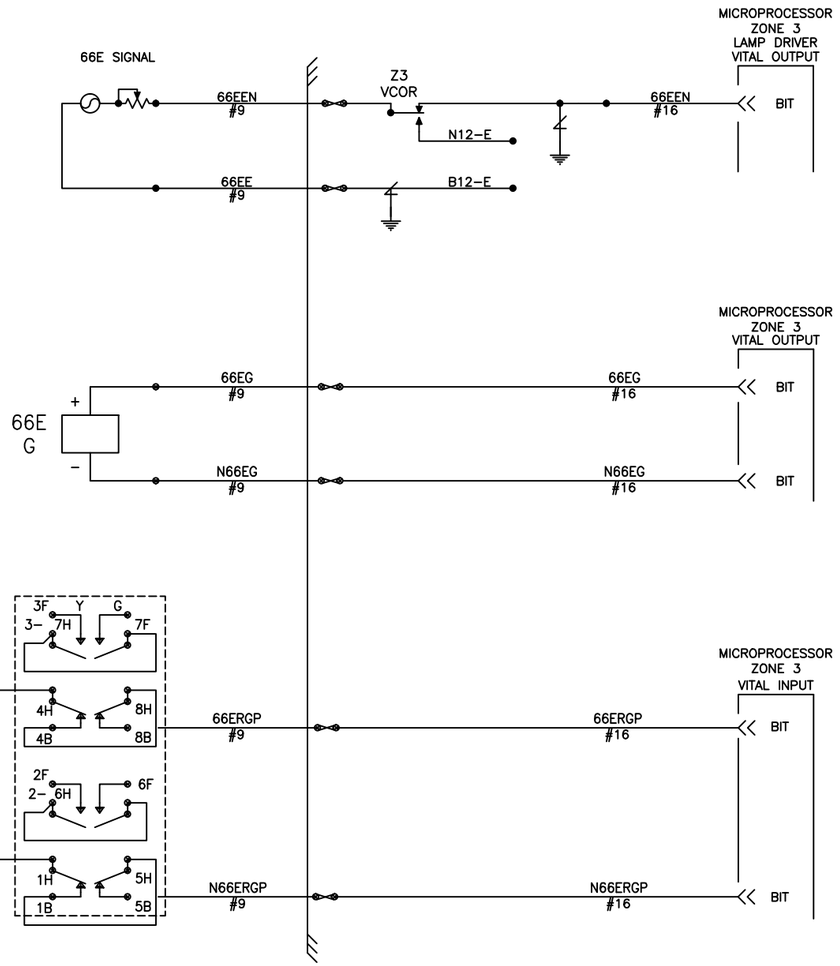

LOC. J

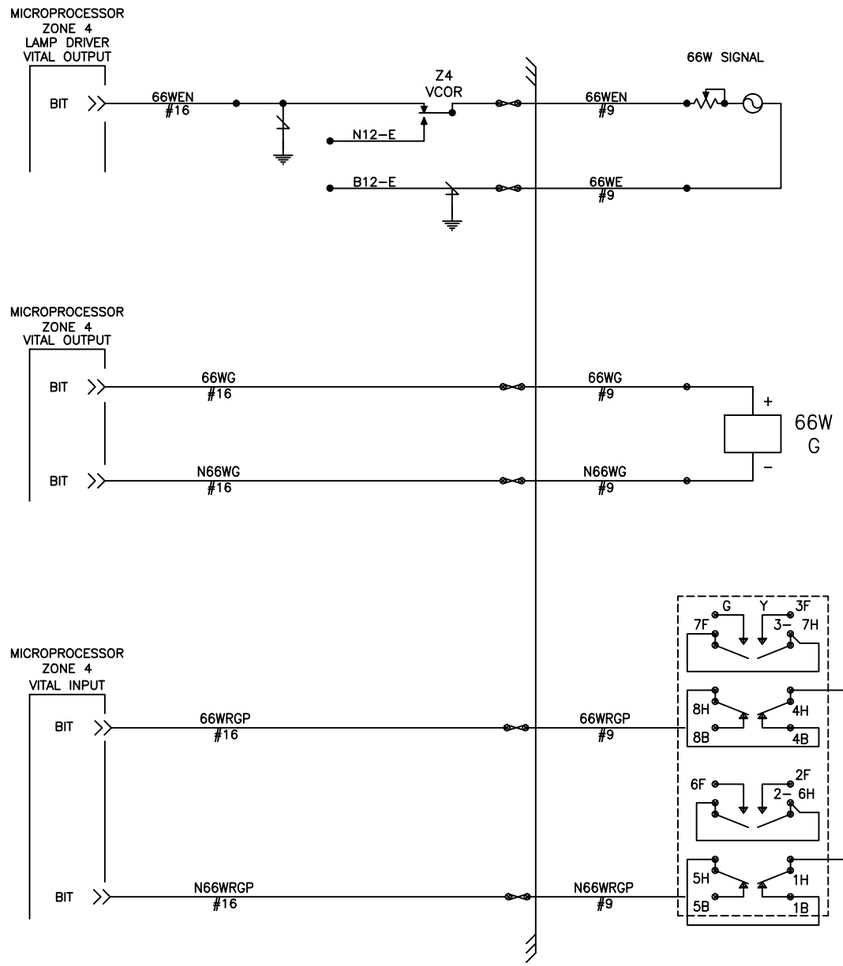

NOTES:

1.) ALL WIRES 10 AWG. UNLESS NOTED.

2.) SIGNAL LAMPS ARE RATED FOR 18 WATTS AT 10 VOLTS.

DESIGNED NJD													
DRAWN NJD													
CHECKED JJL													
APPROVED XXX													
		NO.	DATE	REVISIONS	DRWN	CHKD	APPVD	NO.	DATE	REVISIONS	DRWN	CHKD	APPVD

Gannett Fleming Transit & Rail Systems / CWA
GANNETT FLEMING/CWA, a joint venture
TWO PENN PLAZA, SUITE 552
380 SEVENTH AVENUE
NEW YORK, NY 10121-0101
PRJ: 057664

Metro-North Railroad
347 Madison Avenue
New York, N.Y. 10017

TITLE
ENGINEERING AND DESIGN OF
CP 229 – CP 241

CP 234
SIGNAL LIGHTING 66E, 66W

CONTRACT NO. 1000027511
SCALE
DATE 08-29-14
DRAWING NO. NHL3341008
SHEET 1086 OF _

EL 337

TO GRAND CENTRAL TERMINAL

TO NEW HAVEN

EL 178+126

50TR

TRACK 5

TRACK 3

TRACK 1

TRACK 2

TRACK 4

SEE PLAN NHL-3341000

SEE PLAN NHL-3401000

TO CP 234 LOC. G

144 FIBER (NORTH)
144 FIBER (SOUTH)
25PR COMM
6PR#14 T/S
27C#14

TO CP 235 C.I.L.

144 FIBER (NORTH)
144 FIBER (SOUTH)
25PR COMM
6PR#14 T/S

TO DERAIL — 12C#14

TO SWITCH — 12C#14

2C#6 TW → TO 50TR

NOTES:

1. ALL CABLES SUPPLIED BY METRO-NORTH
2. ALL CABLES ARE UG UNLESS NOTED OTHERWISE.

DESIGNED CEL	NO.	DATE		DRWN	CHKD	APPVD	NO.	DATE		DRWN	CHKD	APPVD
DRAWN CEL												
CHECKED JJL												
APPROVED XXX												
	REVISIONS						REVISIONS					

Gannett Fleming Transit & Rail Systems / CWA
GANNETT FLEMING/CWA, a joint venture
TWO PENN PLAZA, SUITE 552
380 SEVENTH AVENUE
NEW YORK, NY 10121-0101
PRJ: 057664

Metro-North Railroad
347 Madison Avenue
New York, N.Y. 10017

TITLE
ENGINEERING AND DESIGN OF CP 229 – CP 241
ELECTRIC LOCK 337
TRACK AND CABLE PLAN

CONTRACT NO. 1000027511
SCALE
DATE 08-29-14
DRAWING NO. NHL3371000
SHEET 1087 OF _

EL 340

← TO GRAND CENTRAL TERMINAL

EL 179+XXX

TO NEW HAVEN →

SEE PLAN NHL–3371000

SEE PLAN NHL–3441000

TRACK 5 — TRACK 5

TRACK 3 — TRACK 3

TRACK 1 — TRACK 1

TRACK 2 — TRACK 2

TRACK 4 — TRACK 4

40TR

TO CP 234 LOC. G:
- 144 FIBER (NORTH)
- 144 FIBER (SOUTH)
- 25PR COMM
- 6PR#14 T/S
- 27C#14

TO CP 234 LOC. J

144 FIBER (NORTH)
144 FIBER (SOUTH)
25PR COMM
6PR#14 T/S
→ TO CP 235 C.I.L.

TO DERAIL ← 12C#14
TO SWITCH ← 12C#14

2C#6 TW → TO 40TR

NOTES:

1. ALL CABLES SUPPLIED BY METRO–NORTH
2. ALL CABLES ARE UG UNLESS NOTED OTHERWISE.

DESIGNED	CEL
DRAWN	CEL
CHECKED	JJL
APPROVED	XXX

NO.	DATE		DRWN	CHKD	APPVD

REVISIONS

NO.	DATE		DRWN	CHKD	APPVD

REVISIONS

Gannett Fleming Transit & Rail Systems / CWA
GANNETT FLEMING/CWA, a joint venture
TWO PENN PLAZA, SUITE 552
380 SEVENTH AVENUE
NEW YORK, NY 10121–0101
PRJ: 057664

MTA Metro-North Railroad
347 Madison Avenue
New York, N.Y. 10017

TITLE
ENGINEERING AND DESIGN OF CP 229 – CP 241

ELECTRIC LOCK 340
TRACK AND CABLE PLAN

CONTRACT NO. 1000027511
SCALE
DATE 08–29–14
DRAWING NO. NHL3401000
SHEET 1088 OF _

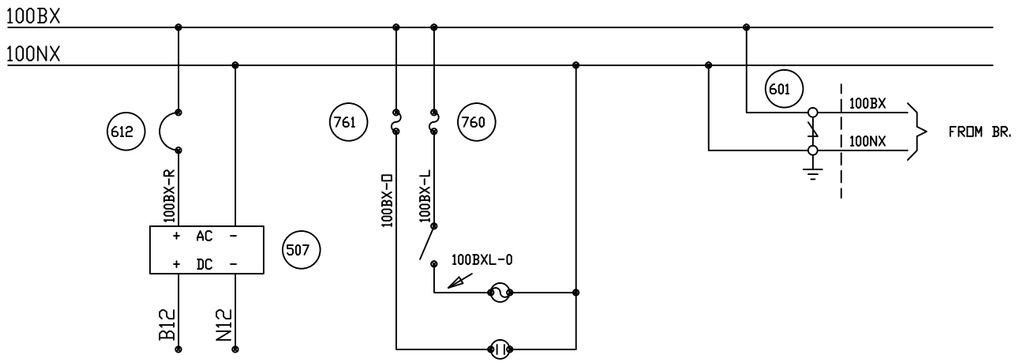

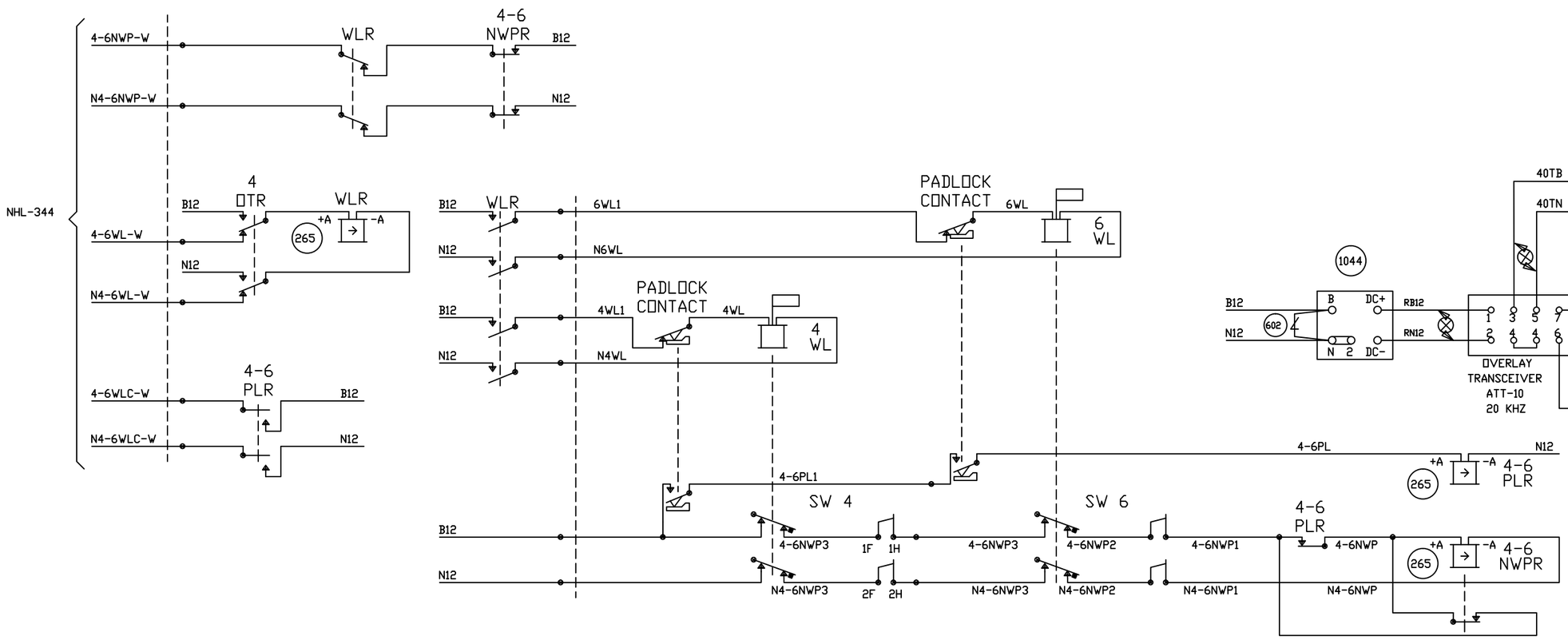

DESIGNED XXX DRAWN XXX CHECKED XXX APPROVED XXX		NO.	DATE		DRWN	CHKD	APPVD	NO.	DATE		DRWN	CHKD	APPVD
				REVISIONS						REVISIONS			

Gannett Fleming Transit & Rail Systems / CWA
GANNETT FLEMING/CWA, a joint venture
TWO PENN PLAZA, SUITE 552
380 SEVENTH AVENUE
NEW YORK, NY 10121-0101
PRJ: 057664

MTA Metro-North Railroad
347 Madison Avenue
New York, N.Y. 10017

TITLE
ENGINEERING AND DESIGN OF
CP 229 – CP 241
ELECTRIC LOCK 340
CIRCUITS

CONTRACT NO. 1000027511
SCALE
DATE 08-29-14
DRAWING NO. NHL3401001
SHEET 1089 OF _

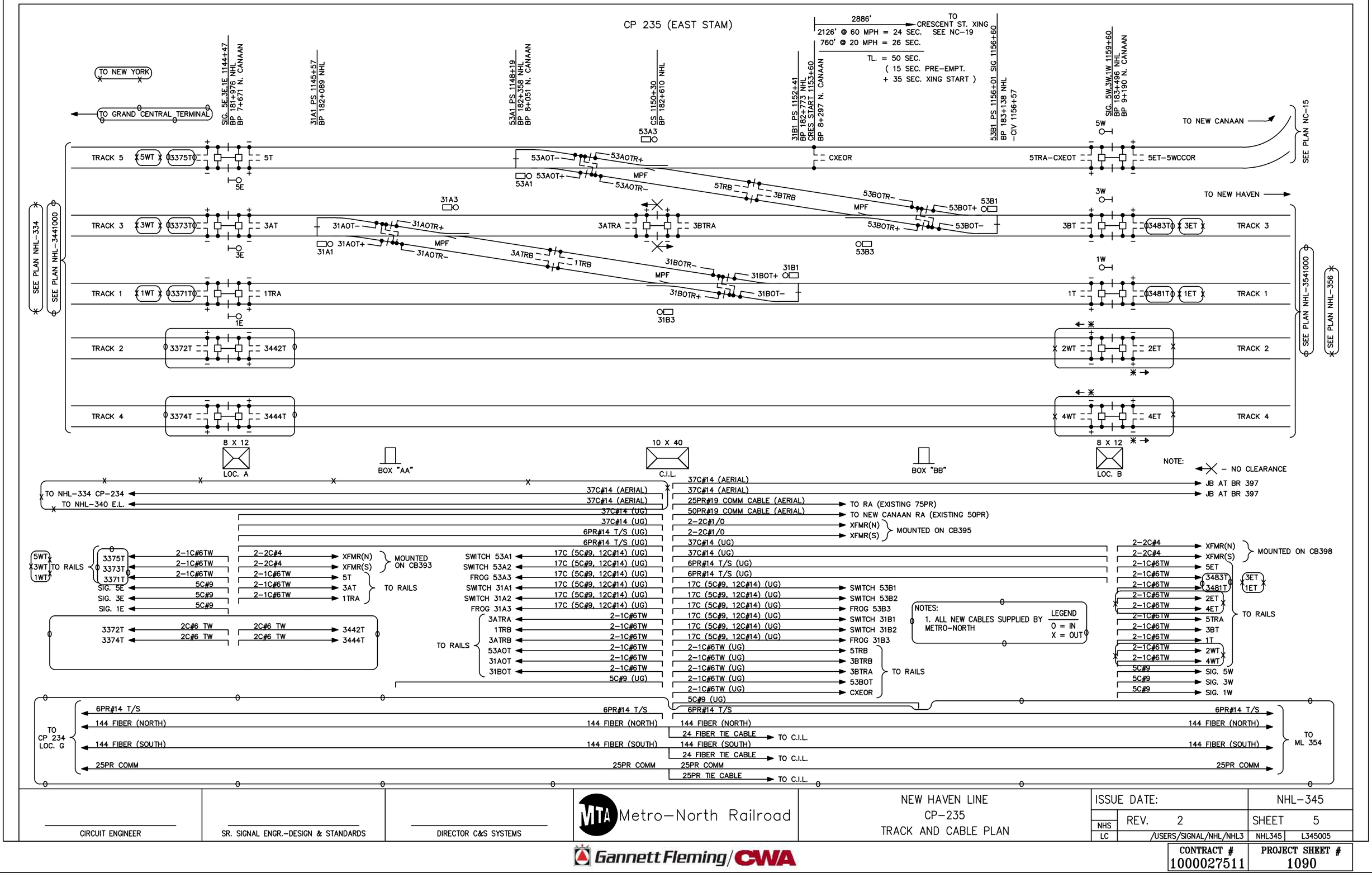

CIRCUIT ENGINEER

SR. SIGNAL ENGR.-DESIGN & STANDARDS

DIRECTOR C&S SYSTEMS

MTA Metro-North Railroad

NEW HAVEN LINE
CP-235
TRACK AND CABLE PLAN

ISSUE DATE:

NHS REV. 2

LC /USERS/SIGNAL/NHL/NHL3

NHL-345

SHEET 5

NHL345 L345005

Gannett Fleming/CWA

CONTRACT # 1000027511

PROJECT SHEET # 1090

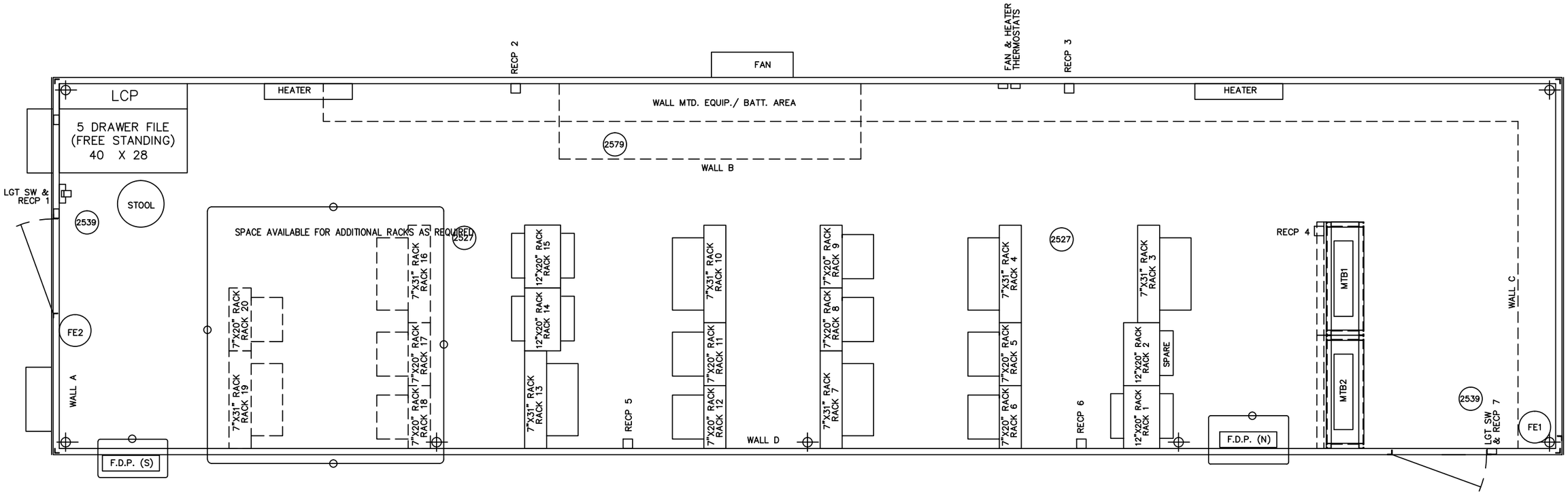

CIRCUIT ENGINEER	SR. SIGNAL ENGR.–DESIGN & STANDARDS	DIRECTOR C&S SYSTEMS	MTA Metro–North Railroad	NEW HAVEN LINE CP 235 C.I.L. – 10' X 40' HOUSE LAYOUT	ISSUE DATE:	NHL–345
					REV.	SHEET 39
					/USERS/SIGNAL/NHL/NHL3	NHL345

Gannett Fleming/CWA

CONTRACT #	PROJECT SHEET #
1000027511	1091

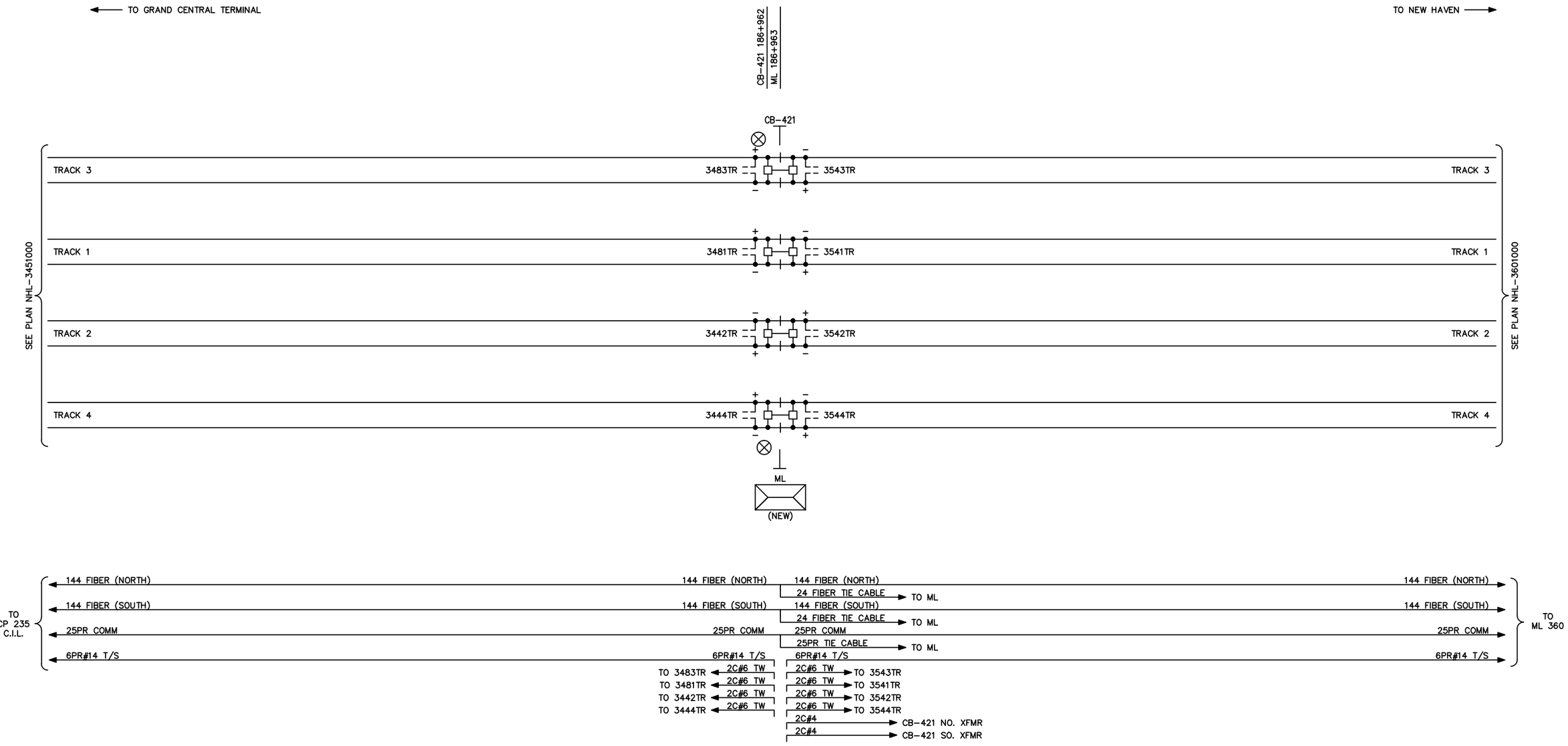

NOTES:

1. ALL CABLES SUPPLIED BY METRO-NORTH
2. ALL CABLES ARE UG UNLESS NOTED OTHERWISE.

DESIGNED	CEL
DRAWN	CEL
CHECKED	JJL
APPROVED	XXX

NO.	DATE		DRWN	CHKD	APPVD	NO.	DATE	DRWN	CHKD	APPVD
REVISIONS						REVISIONS				

Gannett Fleming Transit & Rail Systems / CWA
GANNETT FLEMING/CWA, a joint venture
TWO PENN PLAZA, SUITE 552
380 SEVENTH AVENUE
NEW YORK, NY 10121-0101
PRJ: 057664

Metro-North Railroad
347 Madison Avenue
New York, N.Y. 10017

TITLE
ENGINEERING AND DESIGN OF CP 229 – CP 241
ML 354
TRACK AND CABLE PLAN

CONTRACT NO. 1000027511
SCALE
DATE 08-29-14
DRAWING NO. NHL3541000
SHEET 1092 OF _

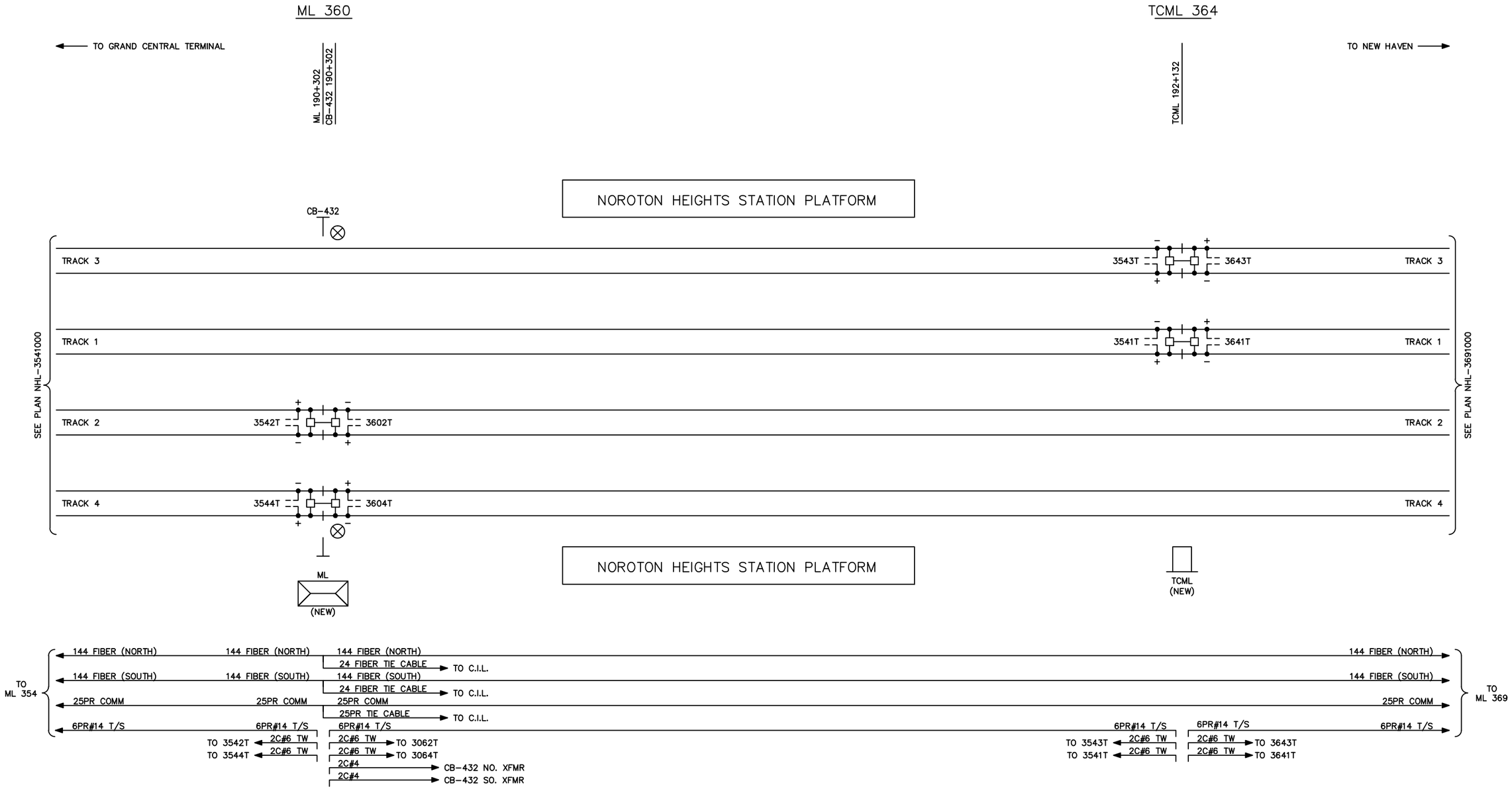

NOTES:

1. ALL CABLES SUPPLIED BY METRO-NORTH
2. ALL CABLES ARE UG UNLESS NOTED OTHERWISE.

DESIGNED CEL													
DRAWN CEL													
CHECKED JJL													
APPROVED XXX													
		NO.	DATE		DRWN	CHKD	APPVD	NO.	DATE		DRWN	CHKD	APPVD
		REVISIONS						REVISIONS					

Gannett Fleming Transit & Rail Systems /CWA
GANNETT FLEMING/CWA, a joint venture
TWO PENN PLAZA, SUITE 552
380 SEVENTH AVENUE
NEW YORK, NY 10121-0101
PRJ: 057664

Metro-North Railroad
347 Madison Avenue
New York, N.Y. 10017

TITLE
ENGINEERING AND DESIGN OF CP 229 – CP 241
ML 360 / TCML364
TRACK AND CABLE PLAN

CONTRACT NO. 1000027511
SCALE
DATE 08-29-14
DRAWING NO. NHL3601000
SHEET 1093 OF _

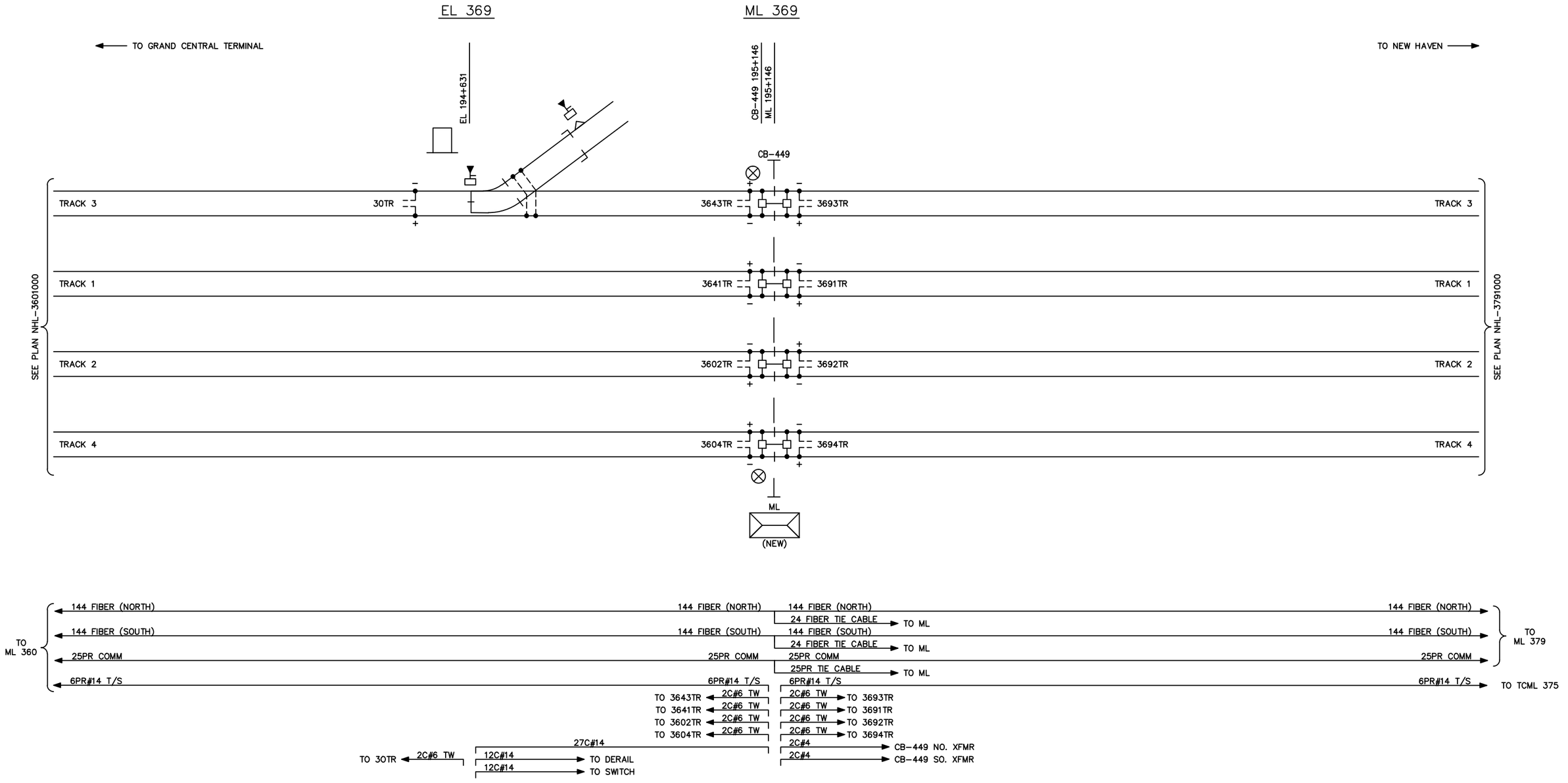

NOTES:

1. ALL CABLES SUPPLIED BY METRO-NORTH
2. ALL CABLES ARE UG UNLESS NOTED OTHERWISE.

DESIGNED CEL																							
DRAWN CEL																							
CHECKED JJL																							
APPROVED XXX																							
		NO.	DATE		DRWN	CHKD	APPVD	NO.	DATE		DRWN	CHKD	APPVD										
		REVISIONS						REVISIONS															

Gannett Fleming Transit & Rail Systems / CWA
GANNETT FLEMING/CWA, a joint venture
TWO PENN PLAZA, SUITE 552
380 SEVENTH AVENUE
NEW YORK, NY 10121-0101
PRJ: 057664

Metro-North Railroad
347 Madison Avenue
New York, N.Y. 10017

TITLE
ENGINEERING AND DESIGN OF CP 229 – CP 241
ML/EL 369
TRACK AND CABLE PLAN

CONTRACT NO. 1000027511
SCALE
DATE 08-29-14
DRAWING NO. NHL3691000
SHEET 1094 OF _

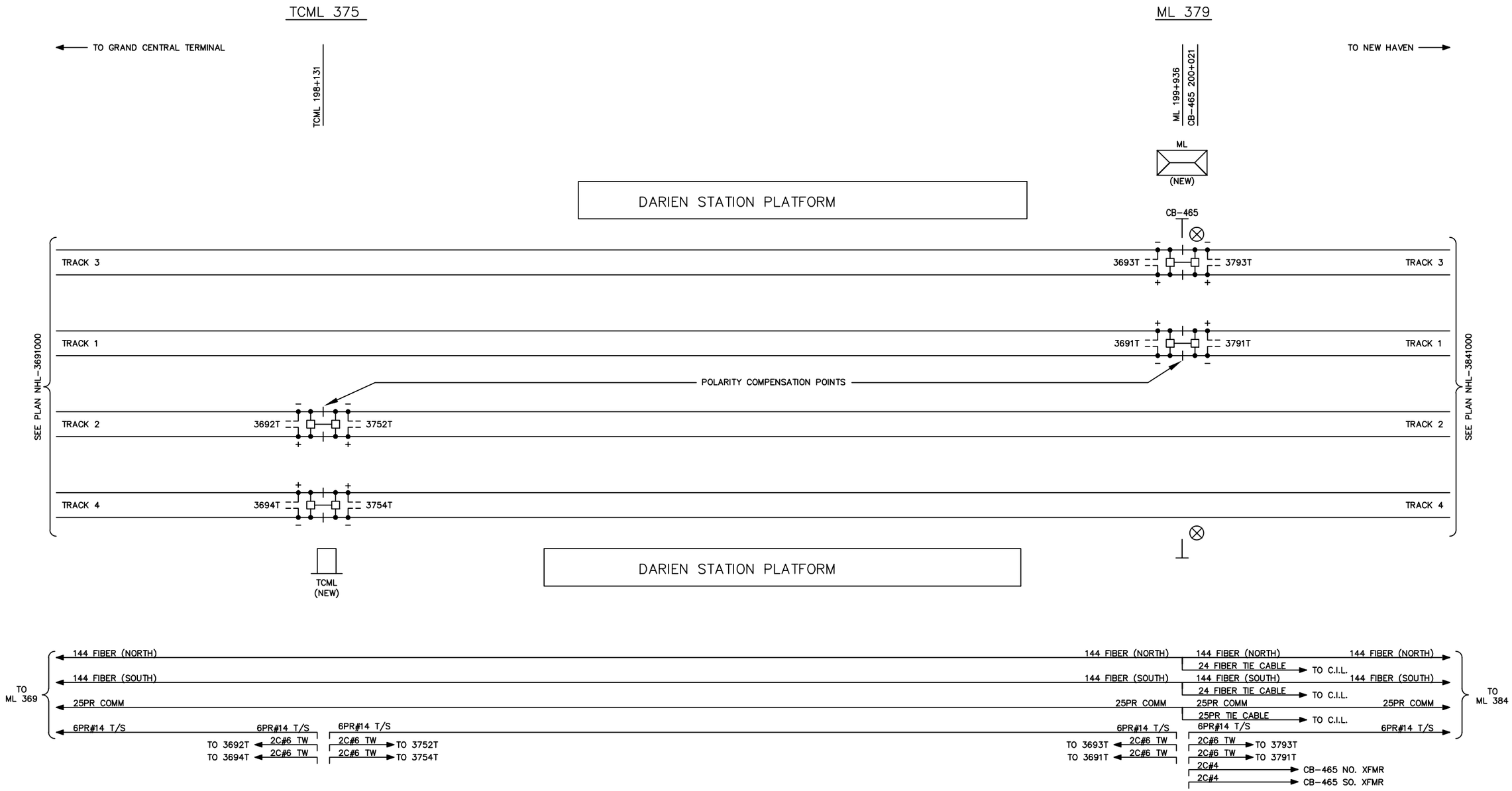

NOTES:

1. ALL CABLES SUPPLIED BY METRO-NORTH
2. ALL CABLES ARE UG UNLESS NOTED OTHERWISE.

DESIGNED	CEL
DRAWN	CEL
CHECKED	JJL
APPROVED	XXX

NO.	DATE		DRWN	CHKD	APPVD	NO.	DATE	DRWN	CHKD	APPVD
REVISIONS						REVISIONS				

Gannett Fleming Transit & Rail Systems / CWA
GANNETT FLEMING/CWA, a joint venture
TWO PENN PLAZA, SUITE 552
380 SEVENTH AVENUE
NEW YORK, NY 10121-0101
PRJ: 057664

Metro-North Railroad
347 Madison Avenue
New York, N.Y. 10017

TITLE
ENGINEERING AND DESIGN OF CP 229 – CP 241
TCML 375 / ML 379
TRACK AND CABLE PLAN

CONTRACT NO. 1000027511
SCALE
DATE 08-29-14
DRAWING NO. NHL3791000
SHEET 1095 OF _

ML 384

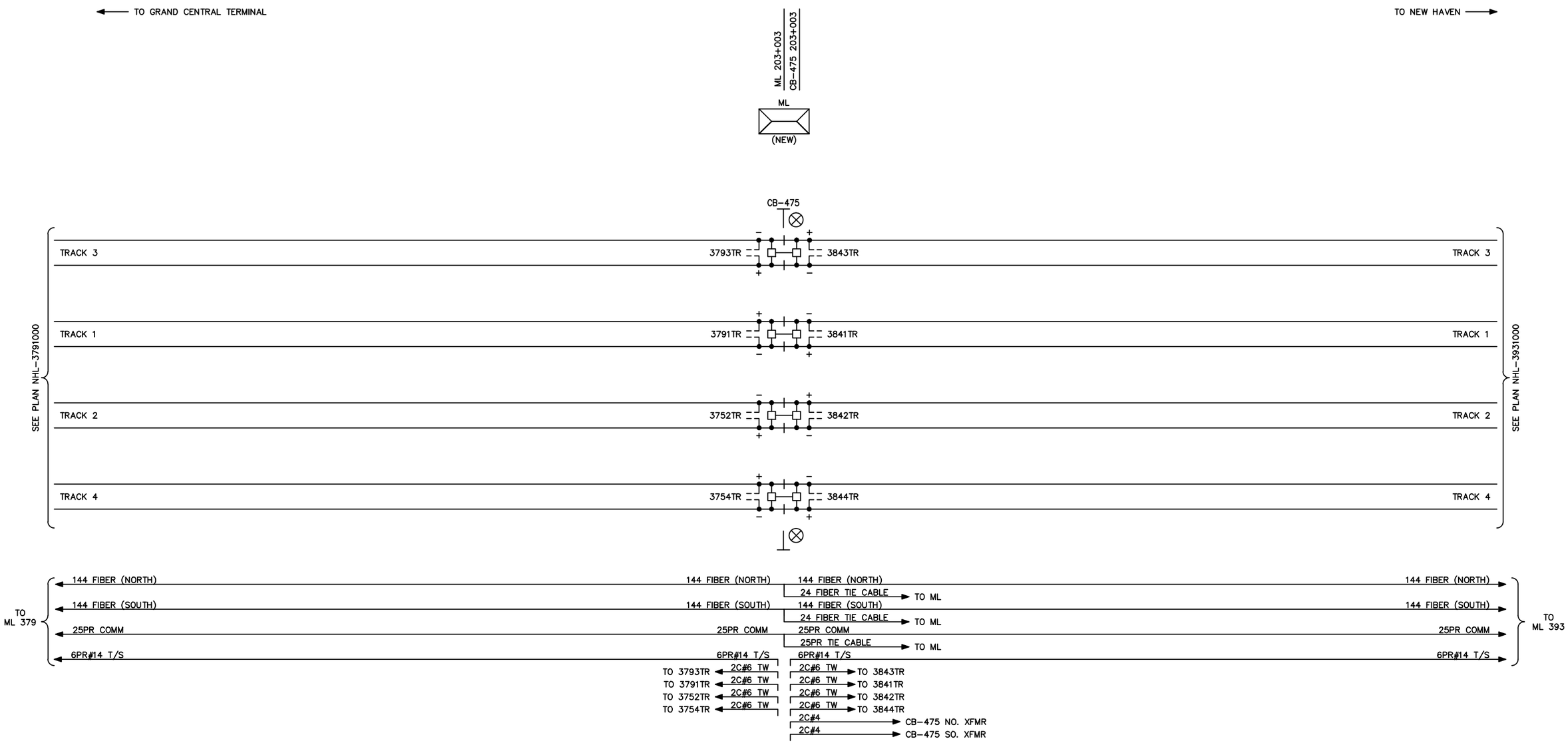

NOTES:

1. ALL CABLES SUPPLIED BY METRO-NORTH
2. ALL CABLES ARE UG UNLESS NOTED OTHERWISE.

DESIGNED	CEL
DRAWN	CEL
CHECKED	JJL
APPROVED	XXX

NO.	DATE		DRWN	CHKD	APPVD	NO.	DATE	DRWN	CHKD	APPVD
REVISIONS						REVISIONS				

Gannett Fleming Transit & Rail Systems / CWA
GANNETT FLEMING/CWA, a joint venture
TWO PENN PLAZA, SUITE 552
380 SEVENTH AVENUE
NEW YORK, NY 10121-0101
PRJ: 057664

Metro-North Railroad
347 Madison Avenue
New York, N.Y. 10017

TITLE
ENGINEERING AND DESIGN OF CP 229 – CP 241
ML 384
TRACK AND CABLE PLAN

CONTRACT NO. 1000027511
SCALE
DATE 08-29-14
DRAWING NO. NHL3841000
SHEET 1096 OF _

ML 393

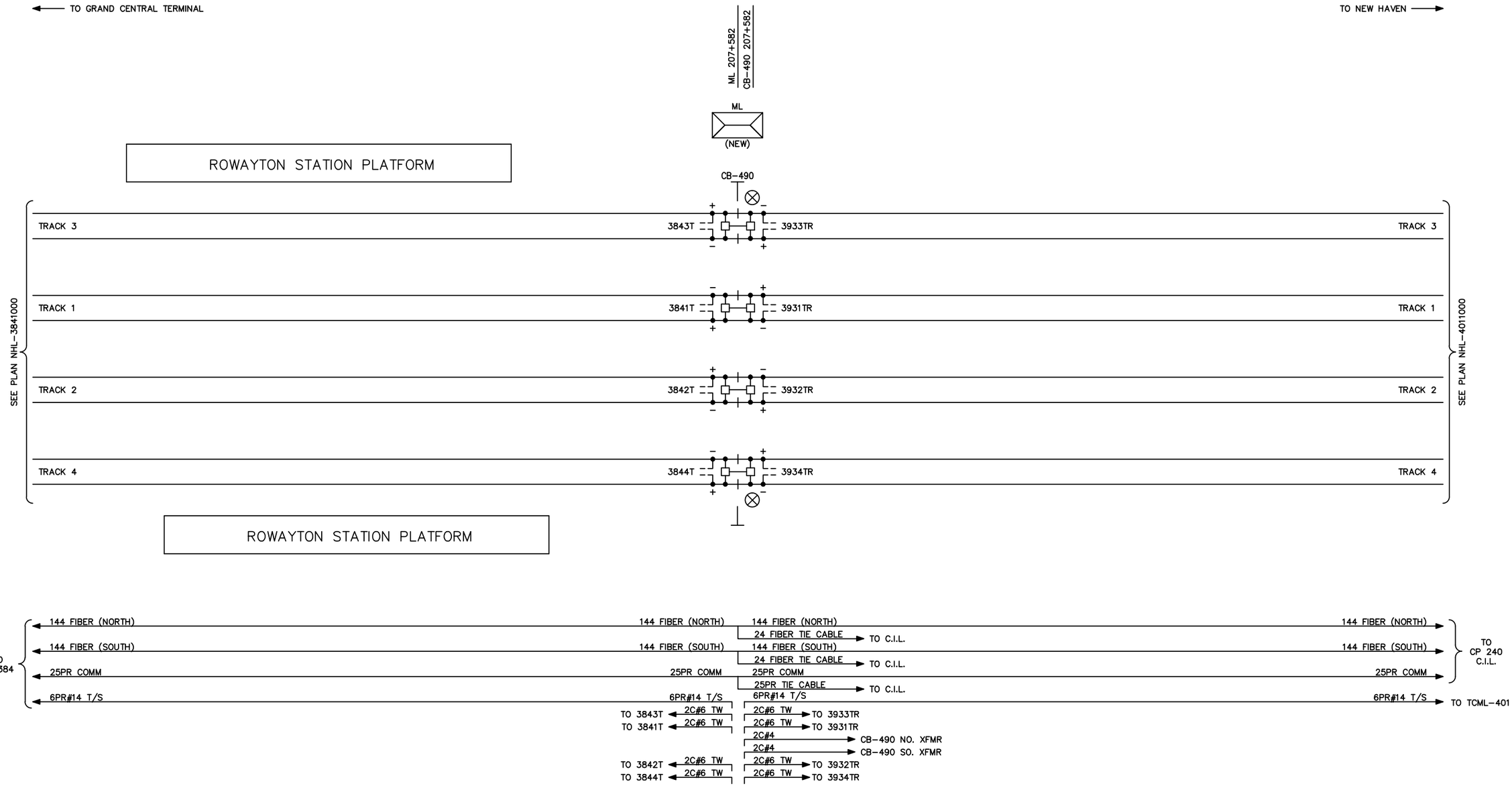

NOTES:

1. ALL CABLES SUPPLIED BY METRO-NORTH
2. ALL CABLES ARE UG UNLESS NOTED OTHERWISE.

DESIGNED CEL													
DRAWN CEL													
CHECKED JJL													
APPROVED XXX													
		NO.	DATE		DRWN	CHKD	APPVD	NO.	DATE		DRWN	CHKD	APPVD
		REVISIONS						REVISIONS					

Gannett Fleming Transit & Rail Systems /CWA
GANNETT FLEMING/CWA, a joint venture
TWO PENN PLAZA, SUITE 552
380 SEVENTH AVENUE
NEW YORK, NY 10121-0101
PRJ: 057664

Metro-North Railroad
347 Madison Avenue
New York, N.Y. 10017

TITLE
ENGINEERING AND DESIGN OF CP 229 – CP 241
ML 393
TRACK AND CABLE PLAN

CONTRACT NO. 1000027511
SCALE
DATE 08-29-14
DRAWING NO. NHL3931000
SHEET 1097 OF _

TCML 401

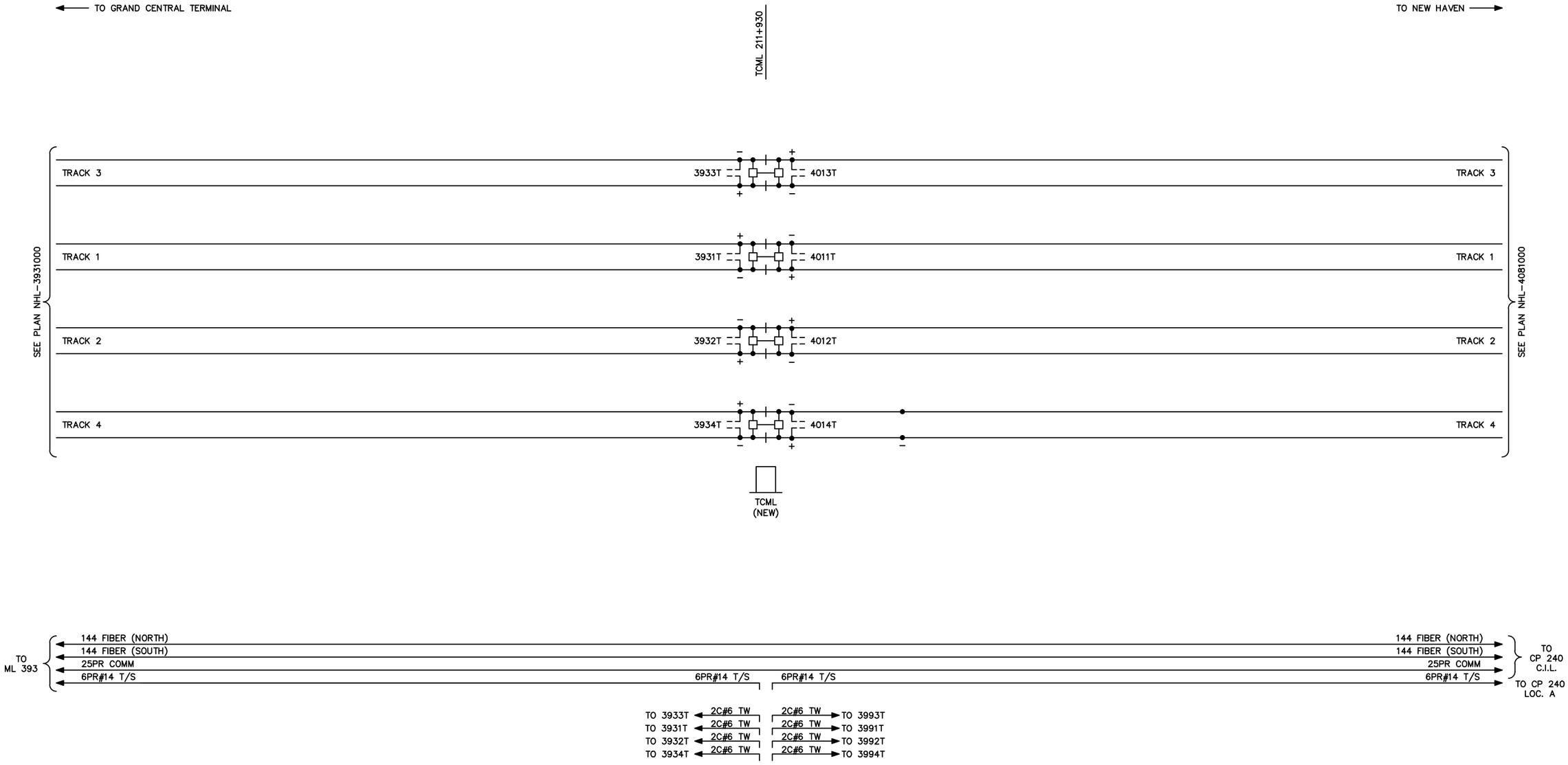

NOTES:

1. ALL CABLES SUPPLIED BY METRO-NORTH
2. ALL CABLES ARE UG UNLESS NOTED OTHERWISE.

DESIGNED CEL													
DRAWN CEL													
CHECKED JJL													
APPROVED XXX													
		NO.	DATE		DRWN	CHKD	APPVD	NO.	DATE		DRWN	CHKD	APPVD
		REVISIONS						REVISIONS					

Gannett Fleming Transit & Rail Systems / CWA
GANNETT FLEMING/CWA, a joint venture
TWO PENN PLAZA, SUITE 552
380 SEVENTH AVENUE
NEW YORK, NY 10121-0101
PRJ: 057664

MTA Metro-North Railroad
347 Madison Avenue
New York, N.Y. 10017

TITLE
ENGINEERING AND DESIGN OF CP 229 – CP 241

TCML 401
TRACK AND CABLE PLAN

CONTRACT NO. 1000027511
SCALE
DATE 08-29-14
DRAWING NO. NHL4011000
SHEET 1098 OF _

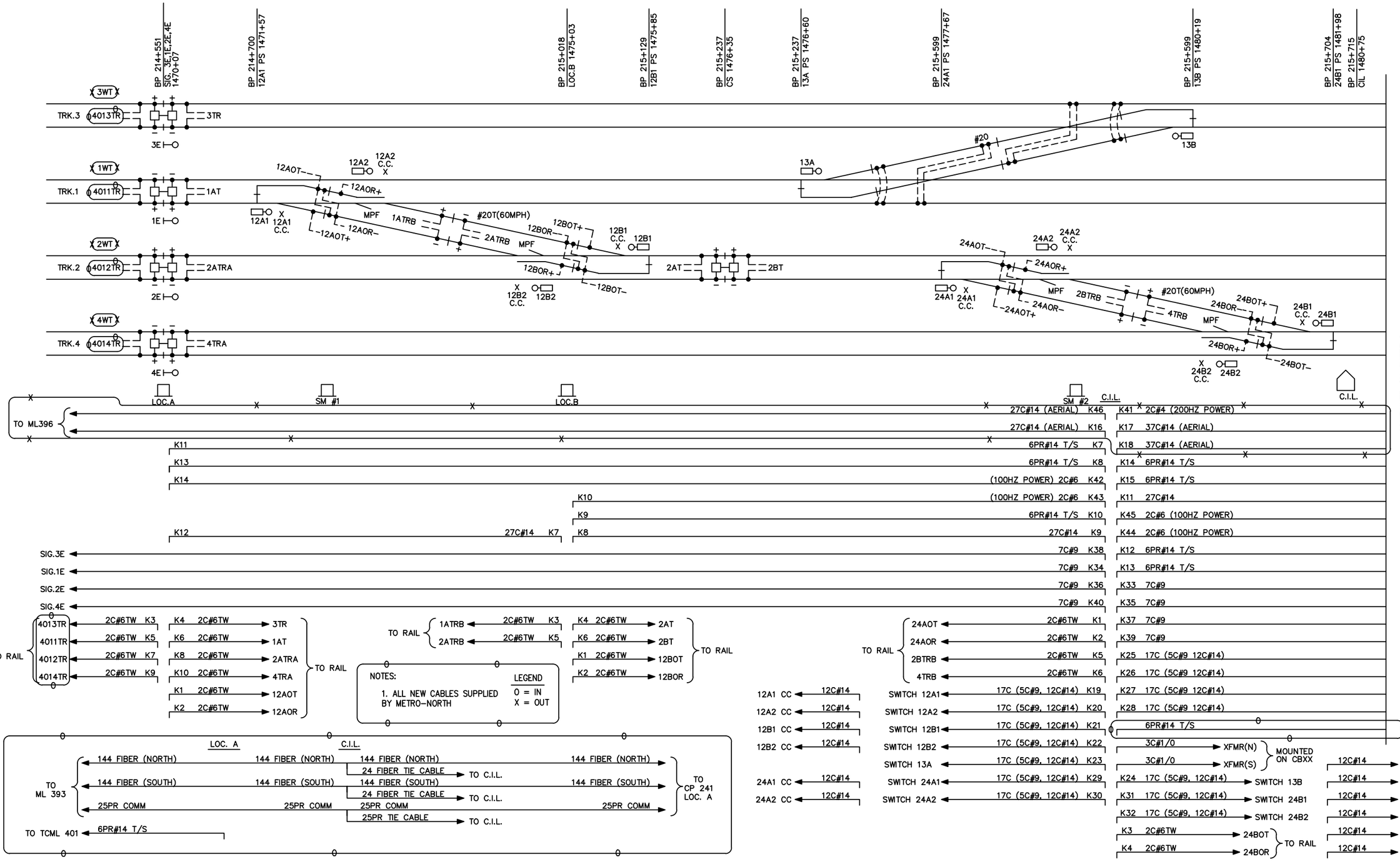

CONTINUED ON SHEET 8

CIRCUIT ENGINEER	SR. SIGNAL ENGR.-DESIGN & STANDARDS	DIRECTOR C&S SYSTEMS	MTA Metro-North Railroad	NEW HAVEN LINE CP 240 TRACK & CABLE PLAN	ISSUE DATE:	NHL-408
					REV.	SHEET 7
					/users/signal/NHL/NHL4	NHL408 L408007

Gannett Fleming/CWA

CONTRACT #	PROJECT SHEET #
1000027511	1099

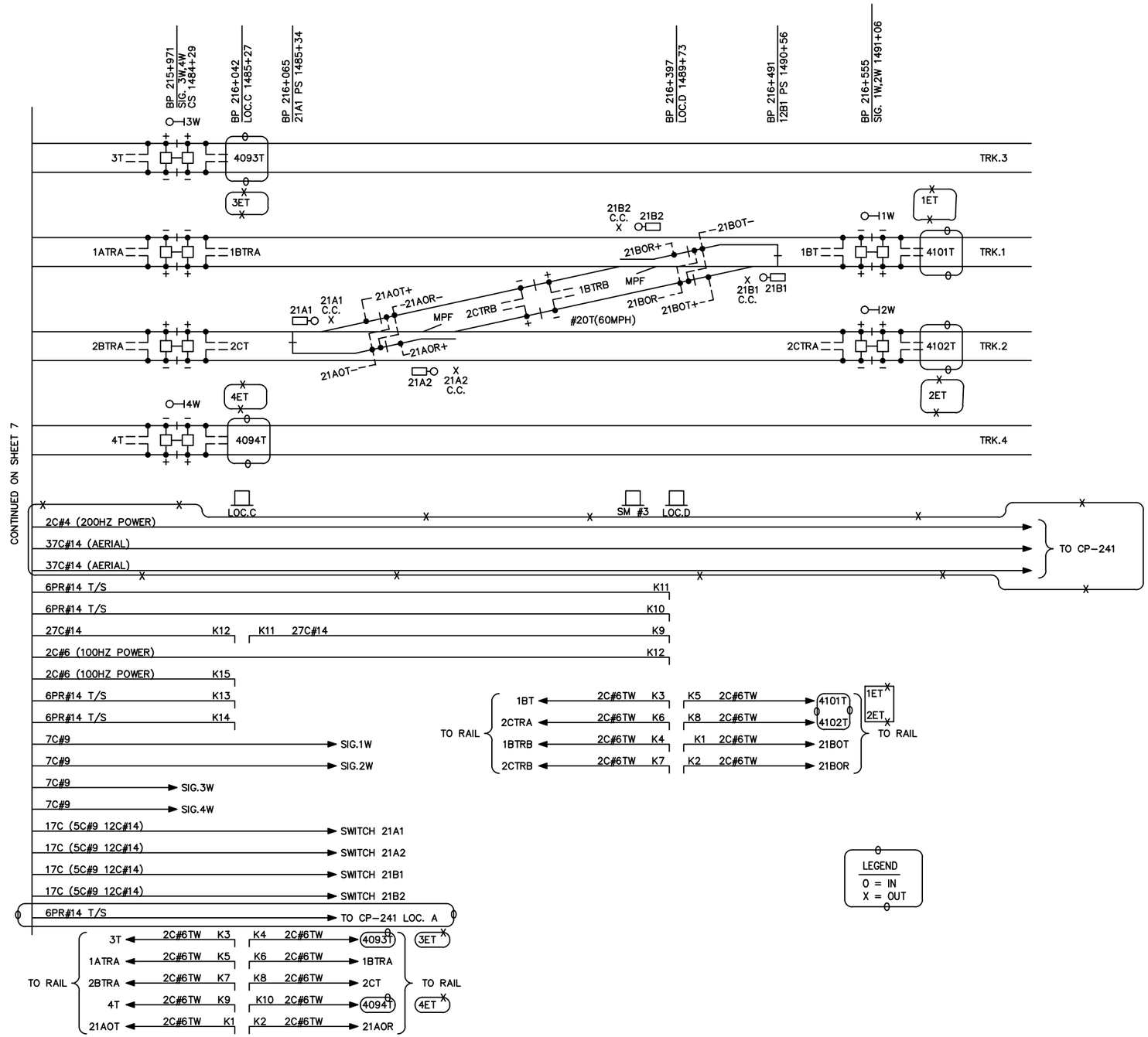

CIRCUIT ENGINEER	SR. SIGNAL ENGR.–DESIGN & STANDARDS	DIRECTOR C&S SYSTEMS	MTA Metro–North Railroad	NEW HAVEN LINE CP 240 TRACK & CABLE PLAN	ISSUE DATE: / REV. / /users/signal/NHL/NHL4

NHL–408
SHEET 8
NHL408 | L408008

Gannett Fleming/CWA

CONTRACT # 1000027511

PROJECT SHEET # 1100

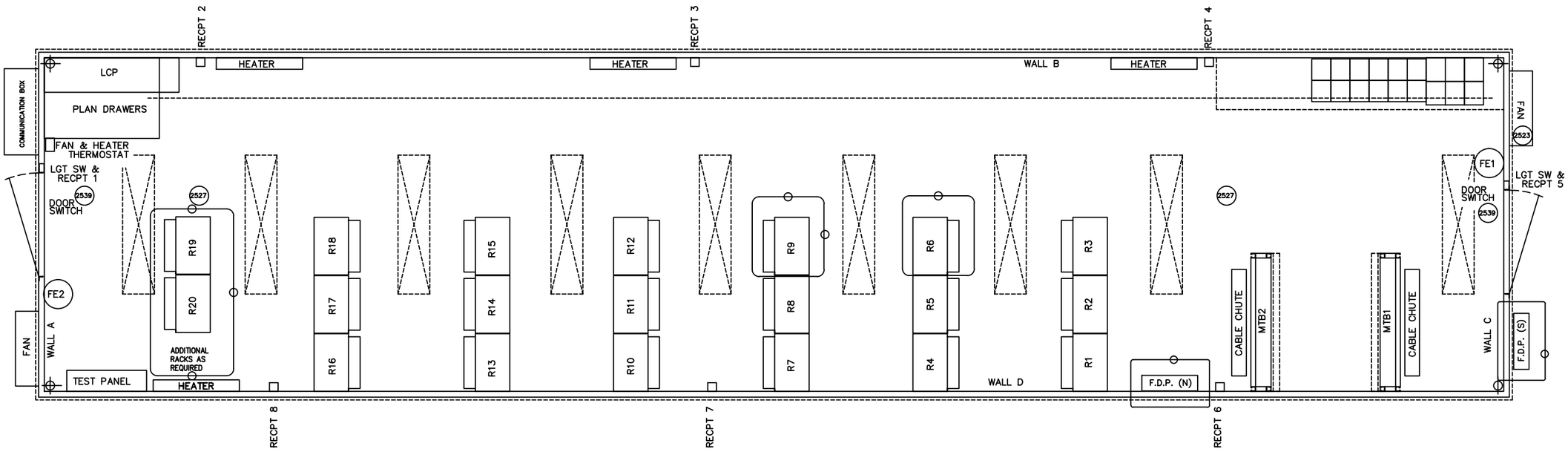

CIRCUIT ENGINEER	SR. SIGNAL ENGR.–DESIGN & STANDARDS	DIRECTOR C&S SYSTEMS	MTA Metro–North Railroad	NEW HAVEN LINE CP 240 C.I.L. – 10' X 46' HOUSE LAYOUT	ISSUE DATE: / REV. / /users/signal/NHL/NHL4	NHL–408 SHEET 40 NHL408

Gannett Fleming/CWA

CONTRACT #	PROJECT SHEET #
1000027511	1101

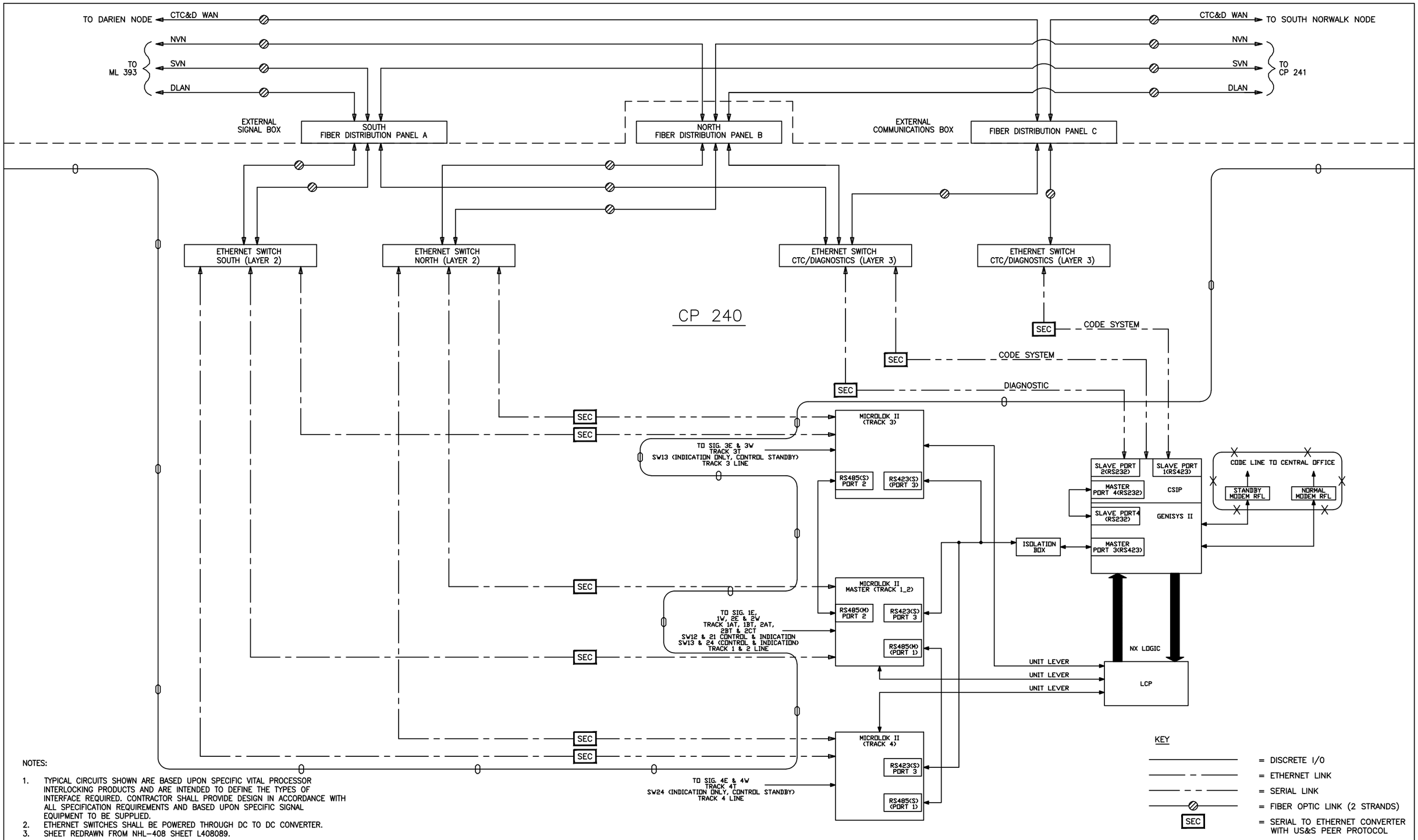

NOTES:

1. TYPICAL CIRCUITS SHOWN ARE BASED UPON SPECIFIC VITAL PROCESSOR INTERLOCKING PRODUCTS AND ARE INTENDED TO DEFINE THE TYPES OF INTERFACE REQUIRED. CONTRACTOR SHALL PROVIDE DESIGN IN ACCORDANCE WITH ALL SPECIFICATION REQUIREMENTS AND BASED UPON SPECIFIC SIGNAL EQUIPMENT TO BE SUPPLIED.
2. ETHERNET SWITCHES SHALL BE POWERED THROUGH DC TO DC CONVERTER.
3. SHEET REDRAWN FROM NHL-408 SHEET L408089.

DESIGNED	BEF
DRAWN	BEF
CHECKED	JJL
APPROVED	XXX

NO.	DATE		DRWN	CHKD	APPVD
		REVISIONS			

NO.	DATE		DRWN	CHKD	APPVD
		REVISIONS			

Gannett Fleming Transit & Rail Systems / CWA
GANNETT FLEMING/CWA, a joint venture
TWO PENN PLAZA, SUITE 552
380 SEVENTH AVENUE
NEW YORK, NY 10121-0101
PRJ: 057664

MTA Metro-North Railroad
347 Madison Avenue
New York, N.Y. 10017

TITLE
ENGINEERING AND DESIGN OF CP 229 – CP 241
CP 240
BLOCK DIAGRAM

CONTRACT NO. 1000027511
SCALE
DATE 08-29-14
DRAWING NO. NHL4081003
SHEET 1102 OF _

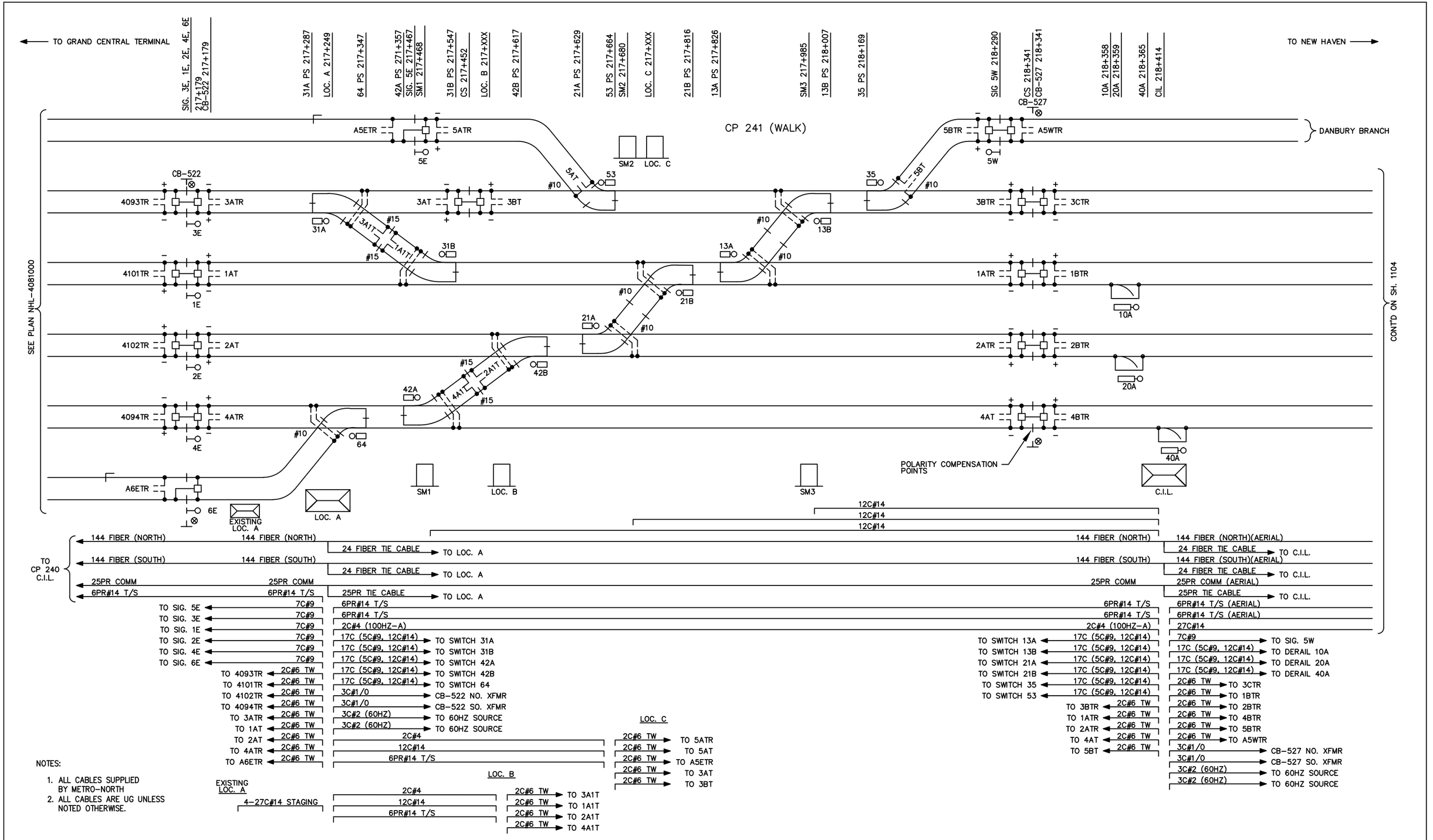

DESIGNED CEL													
DRAWN CEL													
CHECKED JJL													
APPROVED XXX													
		NO.	DATE		DRWN	CHKD	APPVD	NO.	DATE		DRWN	CHKD	APPVD
		REVISIONS						REVISIONS					

Gannett Fleming Transit & Rail Systems / CWA
GANNETT FLEMING/CWA, a joint venture
TWO PENN PLAZA, SUITE 552
380 SEVENTH AVENUE
NEW YORK, NY 10121-0101
PRJ: 057664

Metro-North Railroad
347 Madison Avenue
New York, N.Y. 10017

TITLE
ENGINEERING AND DESIGN OF
CP 229 – CP 241
CP 241
TRACK AND CABLE PLAN
SHEET 1 OF 2

CONTRACT NO. 1000027511
SCALE
DATE 08-29-14
DRAWING NO. NHL4131000
SHEET 1103 OF _

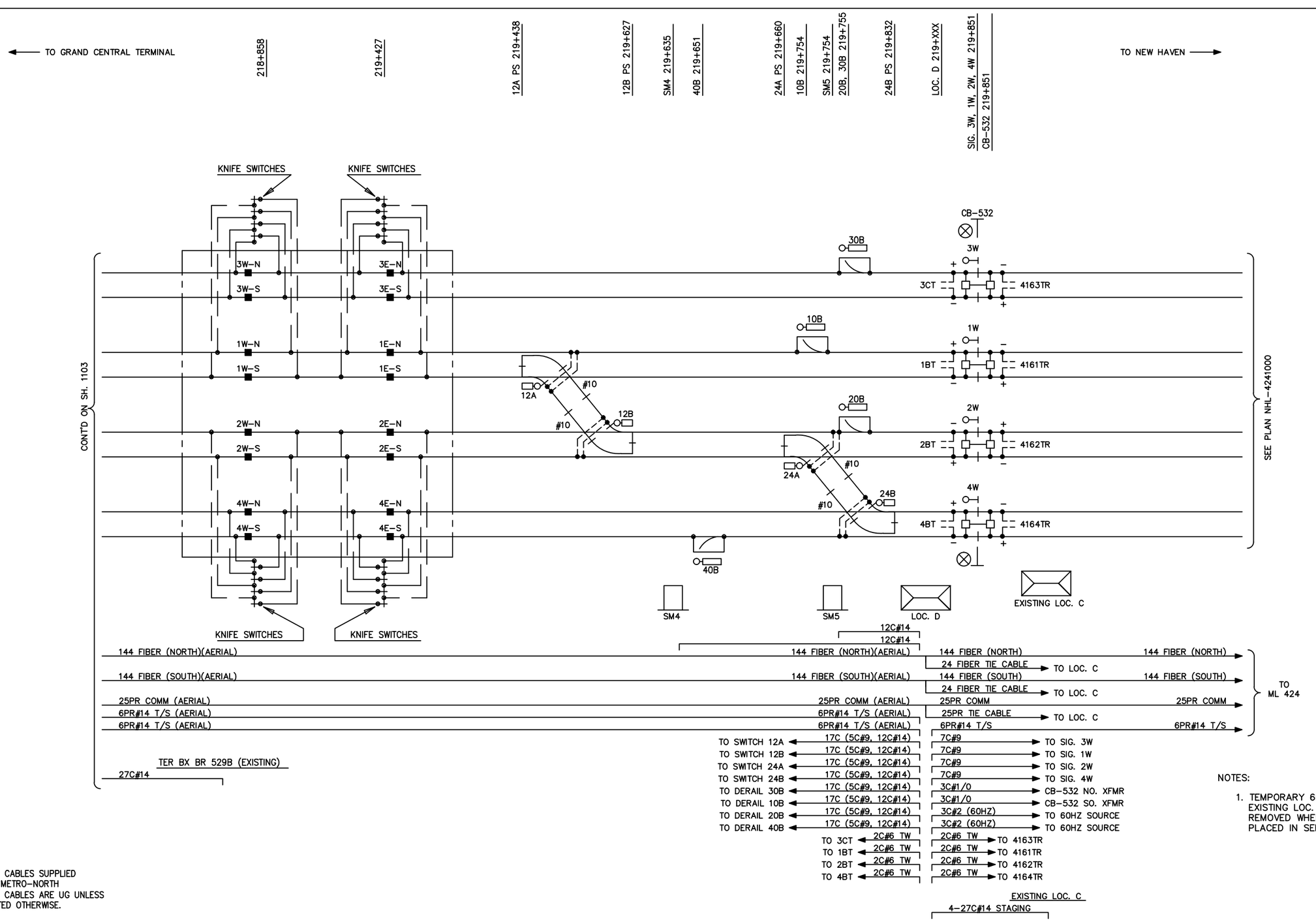

NOTES:

1. ALL CABLES SUPPLIED BY METRO-NORTH
2. ALL CABLES ARE UG UNLESS NOTED OTHERWISE.

NOTES:

1. TEMPORARY 6PR#14 T/S AND EXISTING LOC. C TO BE REMOVED WHEN SECTION 2 IS PLACED IN SERVICE.

DESIGNED CEL													
DRAWN CEL													
CHECKED JJL													
APPROVED XXX													
		NO.	DATE		DRWN	CHKD	APPVD	NO.	DATE		DRWN	CHKD	APPVD
		REVISIONS						REVISIONS					

Gannett Fleming Transit & Rail Systems / CWA
GANNETT FLEMING/CWA, a joint venture
TWO PENN PLAZA, SUITE 552
380 SEVENTH AVENUE
NEW YORK, NY 10121-0101
PRJ: 057664

MTA Metro-North Railroad
347 Madison Avenue
New York, N.Y. 10017

TITLE
ENGINEERING AND DESIGN OF
CP 229 – CP 241
CP 241
TRACK AND CABLE PLAN
SHEET 2 OF 2

CONTRACT NO. 1000027511
SCALE
DATE 08-29-14
DRAWING NO. NHL4131001
SHEET 1104 OF _

CP 241

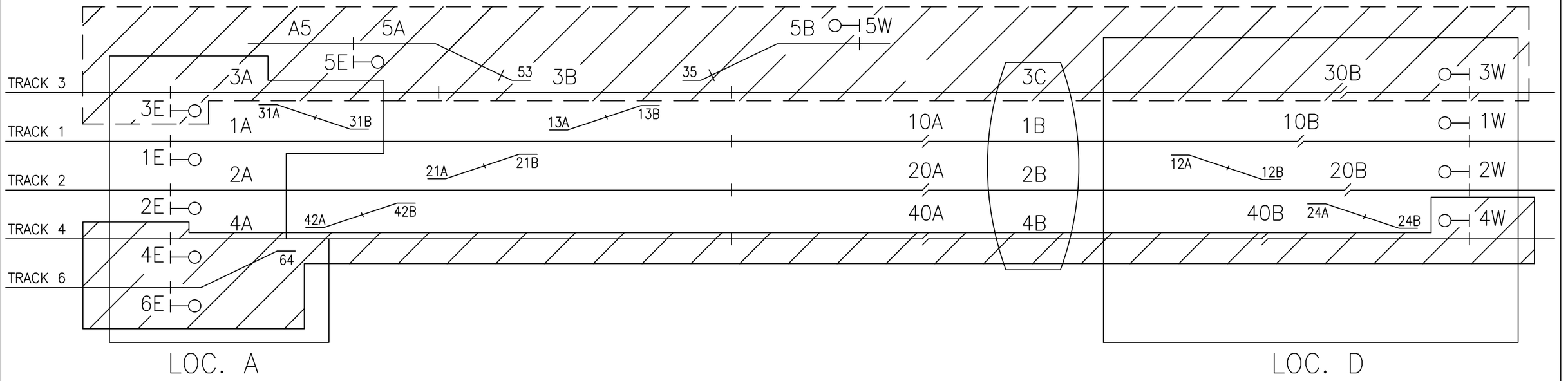

TRACK 3 & 5 ZONED PROCESSORS ZONE 1

TRACKS 1 & 2 ZONED PROCESSORS ZONE 2

TRACK 4 & 6 ZONED PROCESSORS ZONE 3

DESIGNED	RRL
DRAWN	DSL
CHECKED	JJL
APPROVED	GAE

NO.	DATE		DRWN	CHKD	APPVD	NO.	DATE	DRWN	CHKD	APPVD
REVISIONS						REVISIONS				

Gannett Fleming Transit & Rail Systems /CWA
GANNETT FLEMING/CWA, a joint venture
TWO PENN PLAZA, SUITE 552
380 SEVENTH AVENUE
NEW YORK, NY 10121-0101
PRJ: 057664

Metro-North Railroad
347 Madison Avenue
New York, N.Y. 10017

TITLE
ENGINEERING AND DESIGN OF CP 229 – CP 241

CP 241
MICROPROCESSOR ZONING PLAN

CONTRACT NO. 1000027511
SCALE
DATE 08-29-14
DRAWING NO. NHL4131002
SHEET 1105 OF _

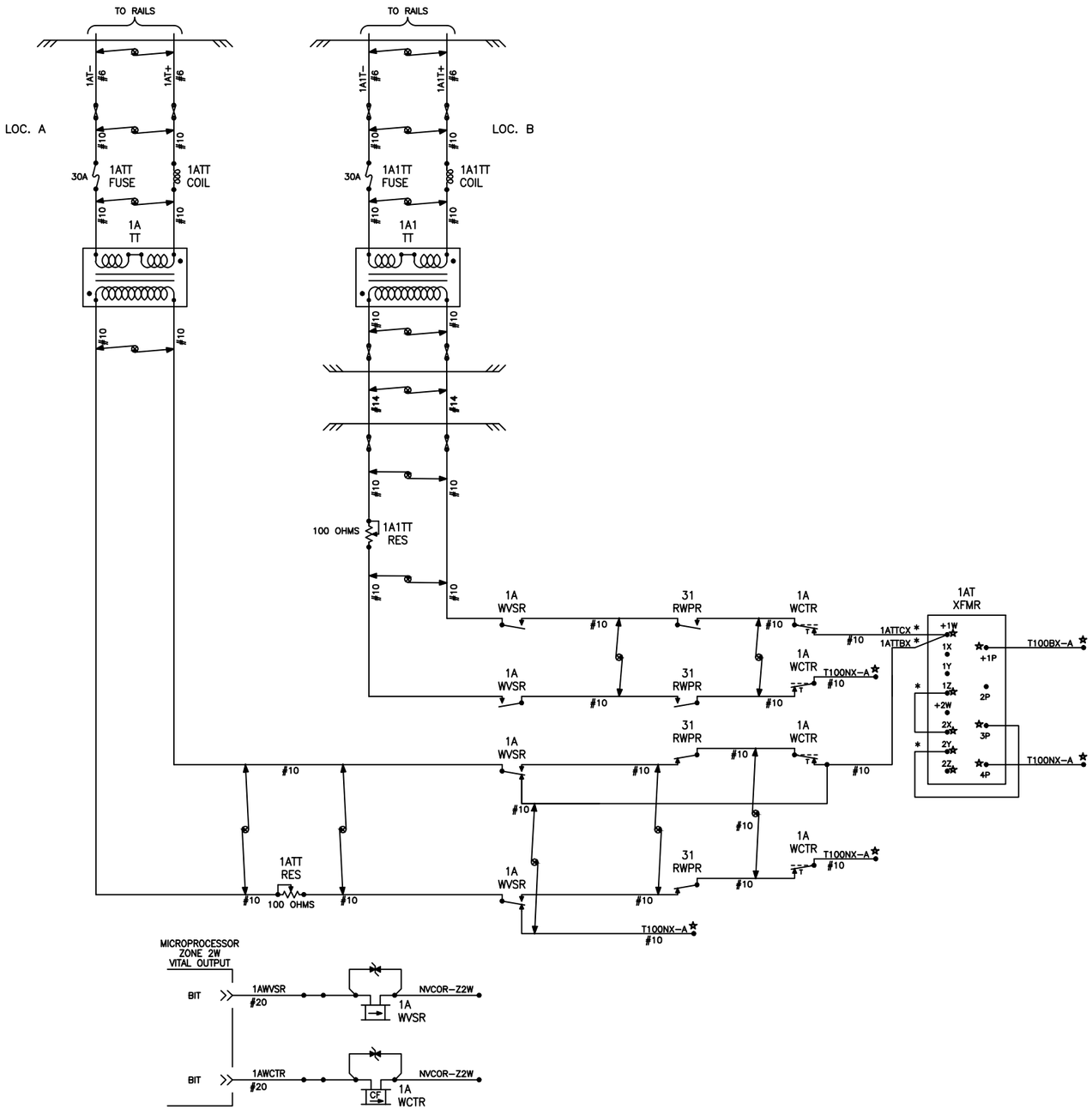

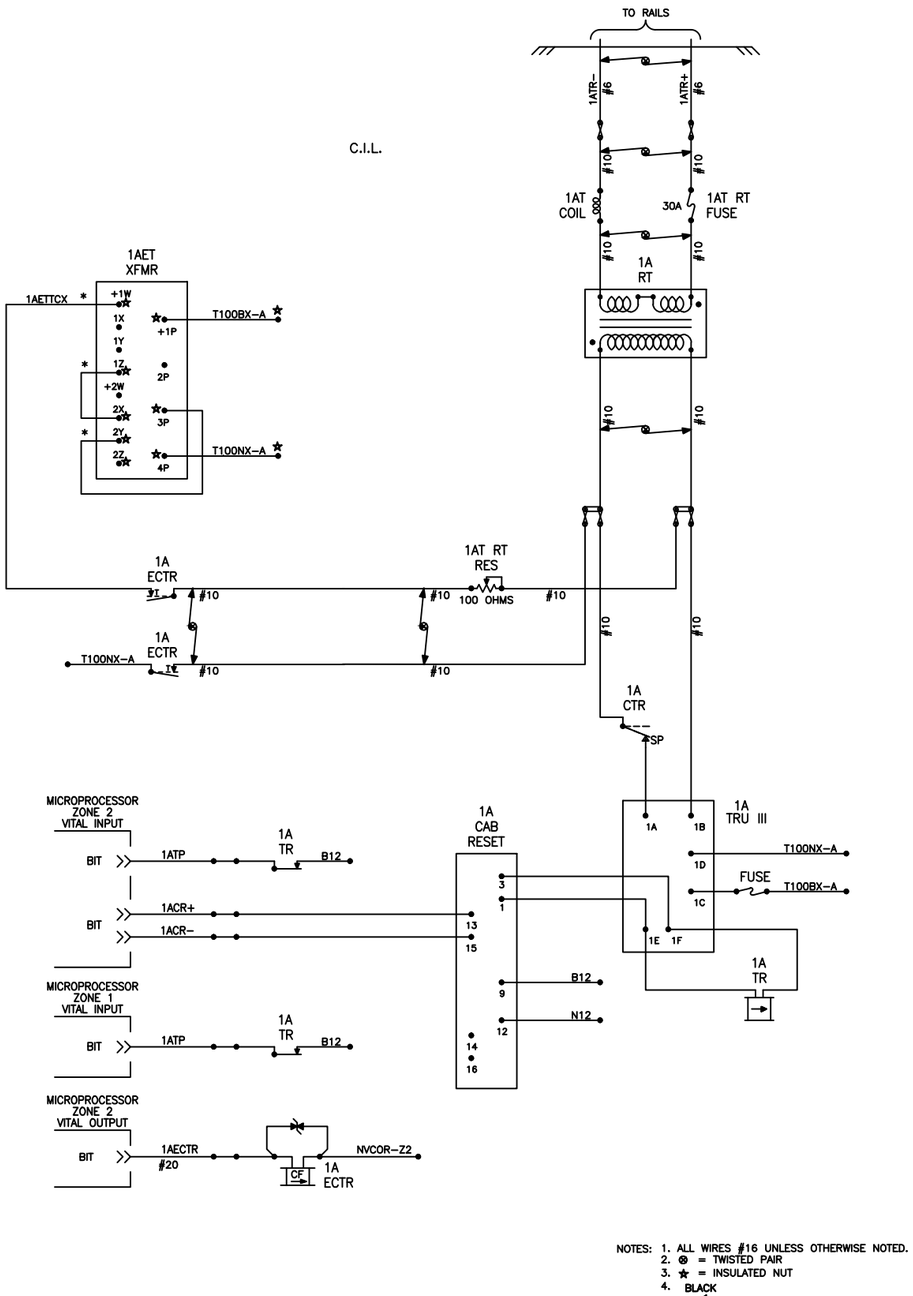

NOTES:
1. ALL WIRES #16 UNLESS OTHERWISE NOTED.
2. ⊗ = TWISTED PAIR
3. ★ = INSULATED NUT
4. BLACK / TWISTED PAIR / WHITE

DESIGNED NJD		NO.	DATE		DRWN	CHKD	APPVD	NO.	DATE		DRWN	CHKD	APPVD
DRAWN NJD													
CHECKED JJL													
APPROVED XXX													
		REVISIONS						REVISIONS					

Gannett Fleming Transit & Rail Systems / CWA
GANNETT FLEMING/CWA, a joint venture
TWO PENN PLAZA, SUITE 552
380 SEVENTH AVENUE
NEW YORK, NY 10121–0101
PRJ: 057664

Metro-North Railroad
347 Madison Avenue
New York, N.Y. 10017

TITLE
ENGINEERING AND DESIGN OF
CP 229 – CP 241
CP 241
INTERLOCKING TRACK CIRCUIT
TRACK 1AT

CONTRACT NO. 1000027511
SCALE
DATE 08–29–14
DRAWING NO. NHL4131003
SHEET 1106 OF _