CONNECTICUT DEPARTMENT OF TRANSPORTATION

Plans For

INTERSTATE 95 RESURFACING AND SAFETY IMPROVEMENTS

Town of

OLD LYME AND EAST LYME

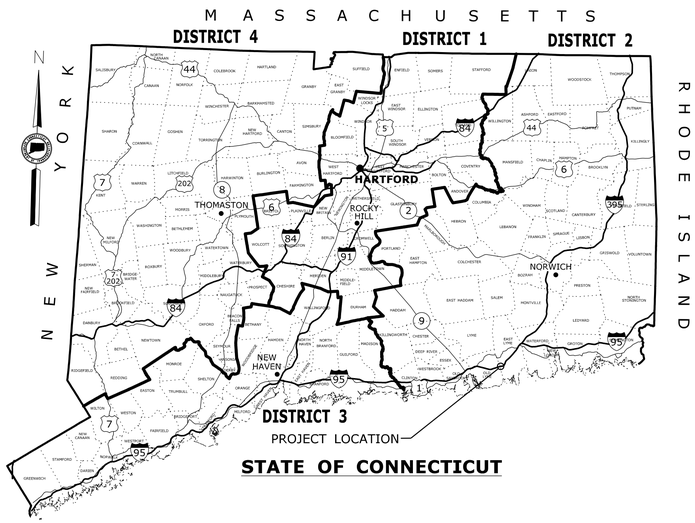

STATE OF CONNECTICUT

ROAD	MAINTENANCE RESPONSIBILITY	LENGTH
INTERSTATE 95	STATE	26,601 FT.

F.A.P. #	MAINTENANCE RESPONSIBILITY	PROJECT #
####(###)	STATE	####-####

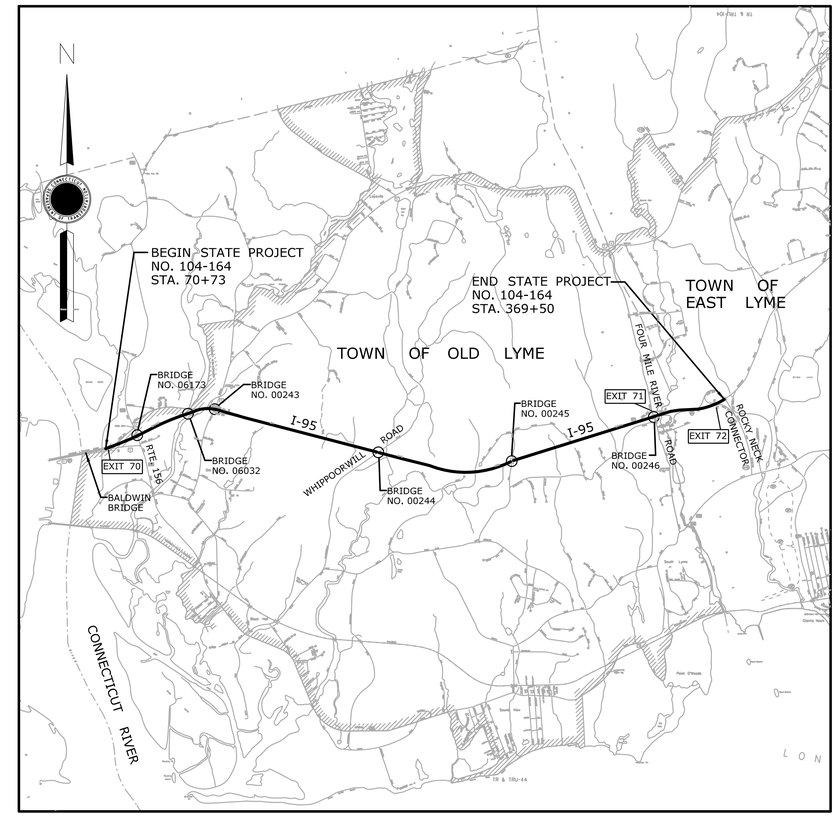

LOCATION PLAN

NOT TO SCALE

GENERAL NOTES:

1. FEDERAL AID PROJECT NO.
2. F.H.W.A. REGION NO. 1
3. CONSTRUCTION SPECIFICATIONS:
   Connecticut Department of Transportation, Standard Specifications for Roads, Bridges and Incidental Construction, Form 816, dated 2004; Supplemental Specifications, dated July 2012; and Special Provisions
4. 400 FOOT GRID BASED ON CONNECTICUT COORDINATE SYSTEM N.A.D. 1983
5. VERTICAL DATUM BASED ON NGVD 1929

DISCLAIMER

IT IS THE RESPONSIBILITY OF EACH BIDDER AND ALL OTHER INTERESTED PARTIES TO OBTAIN ALL BIDDING RELATED INFORMATION AND DOCUMENTS FROM OFFICAL SOURCES WITHIN THE DEPARTMENT.

PERSONS AND/OR ENTITIES WHICH REPRODUCE AND/OR MAKE SUCH INFORMATION AVAILABLE BY ANY MEANS ARE NOT AUTHORIZED BY THE DEPARTMENT TO DO SO AND MAY BE LIABLE FOR CLAIMS RESULTING FROM THE DISSEMINATION OF UNOFFICAL, INCOMPLETE AND/OR INACCURATE INFORMATION.

LIST OF SUBSETS

SUBSET NO.	SUBSET TITLE	*SUBSET SHEET COUNT
01	GENERAL	1
02	REVISIONS	1
03	HIGHWAY	80
04	TRAFFIC	3

*THE INITIAL SUBSET SHEET COUNT DOES NOT INCLUDE ADDENDUMS AND CHANGE ORDERS

PRELIMINARY DESIGN REVIEW

LIST OF DRAWINGS
SUBSET 01 - GENERAL

DRAWING TITLE	DRAWING NO.
TITLE SHEET	G-1

STANDARD CONVENTIONS

North Arrow W/No. Coor.
Edge Of Road
Concrete Pavement
Dirt Road
B.C.L.C.
Granite Curb
Guide Rail
Concrete Median Barrier
Bit. Walk
Conc. Sidewalk
Railroad Tracks
Grid Arrow
Limit Of Marsh
Stone Wall
Ledge Outcrop
Inland Wetland Limits
STATE LINE
Power Line
Swamp
Building
Transmission Tower
Chain Link Fence
Rustic Fence
Pipe Fence
Board Fence
Water Edge
Stream
Ditch
TOWN LINE
Riprap
Hedge Row
Tree Line
Shrub
Evergreen Tree
Deciduous Tree
Retaining Wall
Highway Line
Street Line
Property Line
Lot Line
Easement Line

THE DESIGN APPEARS TO CONFORM TO APPLICABLE CRITERIA. APPROVAL IS NOT TO BE CONSTRUED TO MEAN THAT ALL ASPECTS OF THE DESIGN HAVE BEEN PERSONALLY CHECKED BY THE UNDERSIGNED.

DESIGNED BY:

Luchs CONSULTING ENGINEERS
89 COLONY STREET
MERIDEN, CONNECTICUT 06451

Plans For
INTERSTATE 95
RESURFACING AND SAFETY IMPROVEMENTS

Town of
OLD LYME AND EAST LYME

STATE PROJECT NO.
104-164

DRAWING NO. **G-1**
SHEET NO. **01.01**

03 - HIGHWAY
INDEX OF DRAWINGS

DRAWING NUMBER	DRAWING TITLE	DRAWING NUMBER	DRAWING TITLE
INX-1 TO INX-5	INDEX PLANS		
TYP-1 TO TYP-4	TYPICAL SECTIONS		
MDS-1 TO MDS-14	MISCELLANEOUS DETAILS		
PLN-1 TO PLN-27	ROADWAY PLANS		
SED-1 TO SED-27	SEDIMENTATION AND EROSION CONTROL PLANS		
SL-1 TO SL-2	SIGHTLINE PLANS		

DESIGNED BY:
Luchs
CONSULTING ENGINEERS
89 COLONY STREET
MERIDEN, CONNECTICUT 06451

SEMI FINAL DESIGN REVIEW

REV.	DATE	REVISION DESCRIPTION	SHEET NO.
-	-	-	-
-	-	-	-
-	-	-	-
-	-	-	-
-	-	-	-
-	-	-	-

THE INFORMATION, INCLUDING ESTIMATED QUANTITIES OF WORK, SHOWN ON THESE SHEETS IS BASED ON LIMITED INVESTIGATIONS BY THE STATE AND IS IN NO WAY WARRANTED TO INDICATE THE CONDITIONS OF ACTUAL QUANTITIES OF WORK WHICH WILL BE REQUIRED.

Plotted Date: 3/21/2013

DESIGNER/DRAFTER: **RL/ETK/MF**
CHECKED BY: **D. DAGAN**

STATE OF CONNECTICUT
DEPARTMENT OF TRANSPORTATION

Filename: ...\Plan\HW_MSH_Subset03.dgn

SIGNATURE/
BLOCK:

PROJECT TITLE:
INTERSTATE 95 RESURFACING AND SAFETY IMPROVEMENTS

TOWN: **OLD LYME & EAST LYME**

DRAWING TITLE: **SUBSET 03 COVER SHEET**

PROJECT NO. **104-164**
DRAWING NO. **HWY-00**
SHEET NO. **03.01**

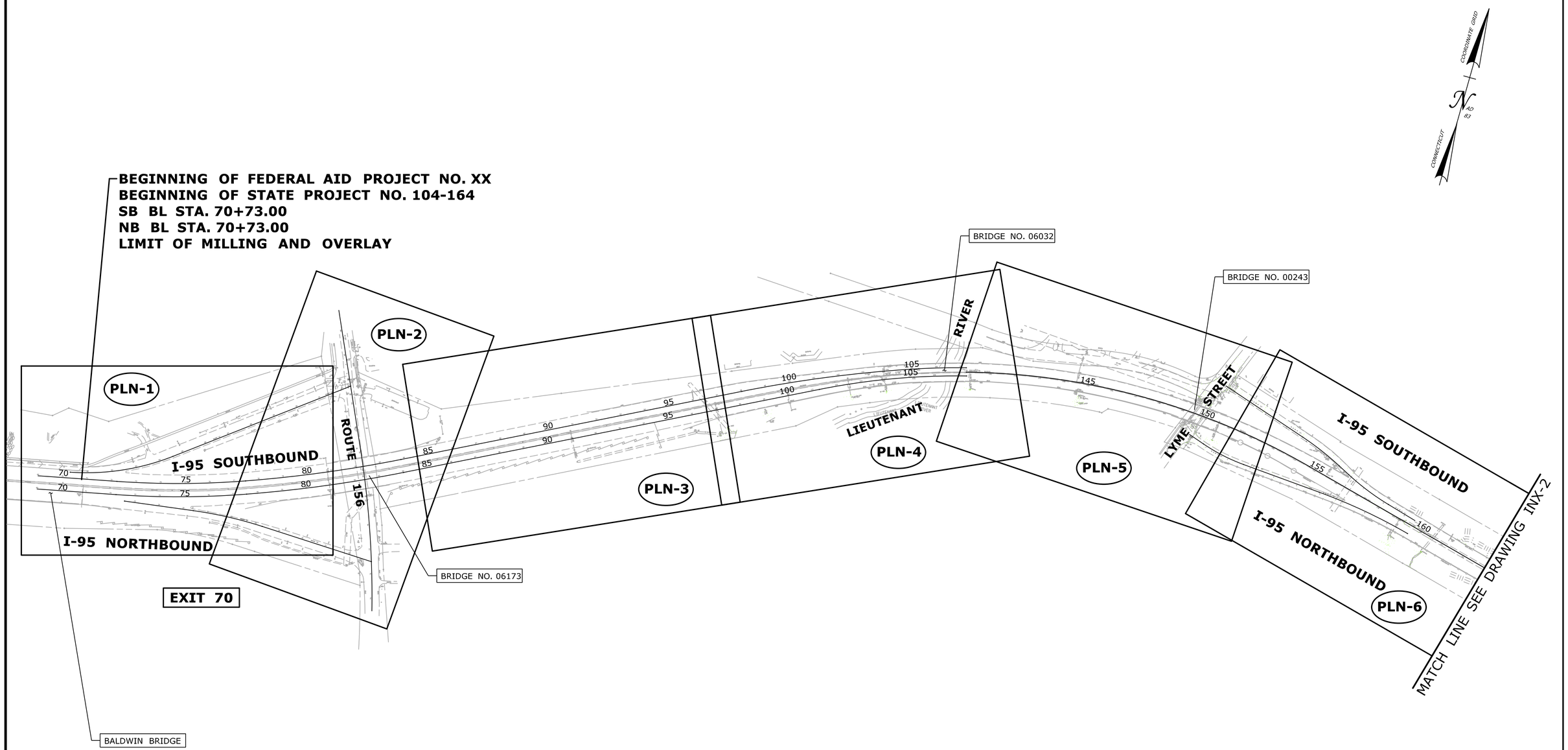

PRELIMINARY DESIGN REVIEW

REV.	DATE	REVISION DESCRIPTION	SHEET NO.
-	-	-	-
-	-	-	-
-	-	-	-
-	-	-	-
-	-	-	-
-	-	-	-

THE INFORMATION, INCLUDING ESTIMATED QUANTITIES OF WORK, SHOWN ON THESE SHEETS IS BASED ON LIMITED INVESTIGATIONS BY THE STATE AND IS IN NO WAY WARRANTED TO INDICATE THE CONDITIONS OF ACTUAL QUANTITIES OF WORK WHICH WILL BE REQUIRED.

Plotted Date: 3/7/2013

DESIGNER/DRAFTER: RL/MF/EK
CHECKED BY: D. DAGAN
SCALE IN FEET 0 200 400
SCALE 1"=200'

STATE OF CONNECTICUT
DEPARTMENT OF TRANSPORTATION

Filename: ...\Plan\HW_MSH_INX-1.dgn

SIGNATURE/ BLOCK:

PROJECT TITLE: INTERSTATE 95 RESURFACING AND SAFETY IMPROVEMENTS

TOWN: OLD LYME & EAST LYME

DRAWING TITLE: INDEX PLAN STA. 69 TO STA. 164

PROJECT NO. 104-164

DRAWING NO. INX-1

SHEET NO. 03.02

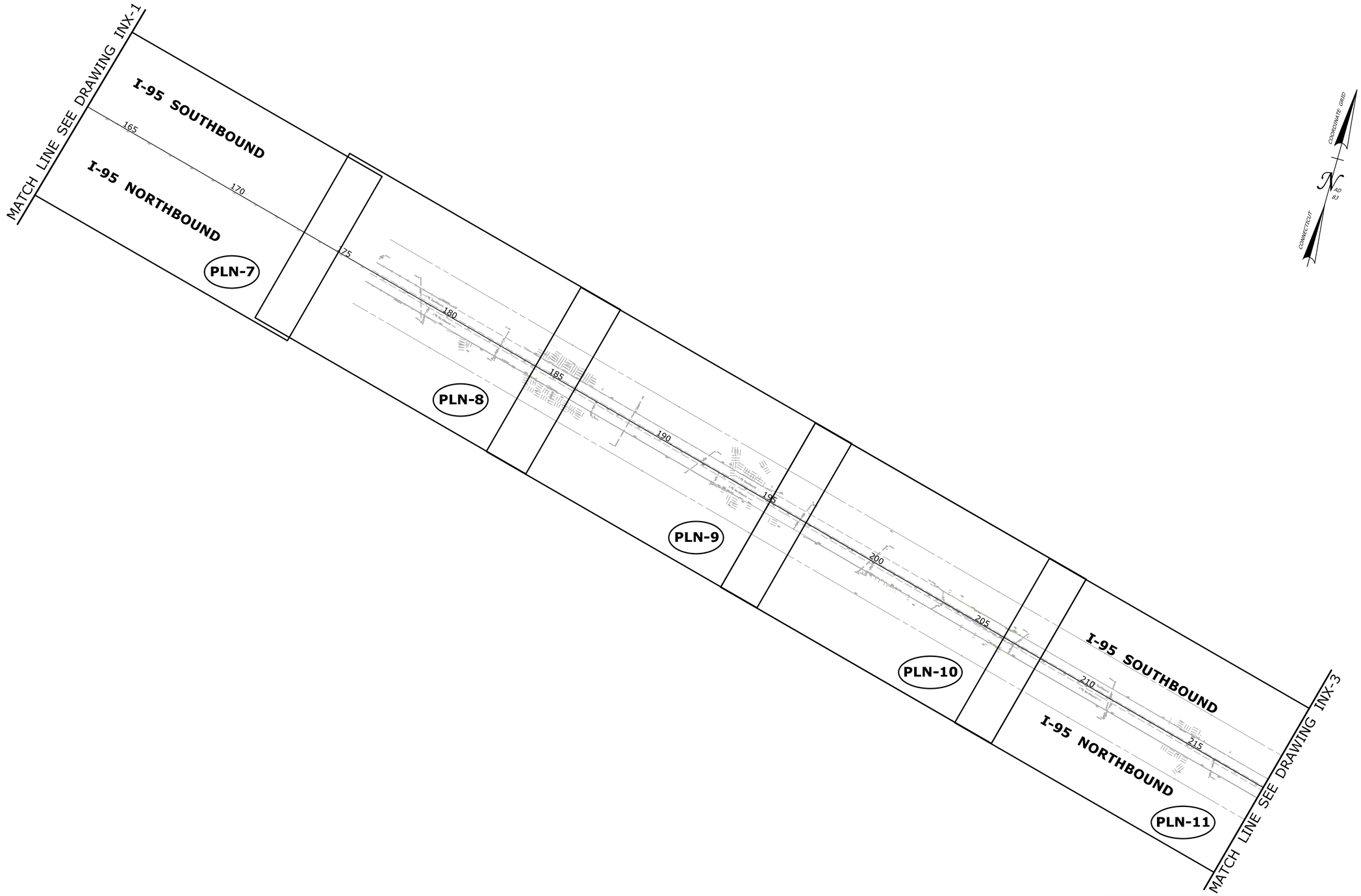

PRELIMINARY DESIGN REVIEW

REV.	DATE	REVISION DESCRIPTION	SHEET NO.
-	-	-	-
-	-	-	-
-	-	-	-
-	-	-	-
-	-	-	-
-	-	-	-

THE INFORMATION, INCLUDING ESTIMATED QUANTITIES OF WORK, SHOWN ON THESE SHEETS IS BASED ON LIMITED INVESTIGATIONS BY THE STATE AND IS IN NO WAY WARRANTED TO INDICATE THE CONDITIONS OF ACTUAL QUANTITIES OF WORK WHICH WILL BE REQUIRED.

Plotted Date: 3/7/2013

DESIGNER/DRAFTER: **RL/MF/EK**

CHECKED BY: **D. DAGAN**

SCALE IN FEET
0 200 400
SCALE 1"=200'

STATE OF CONNECTICUT
DEPARTMENT OF TRANSPORTATION

Filename: ...\Plan\HW_MSH_INX-2.dgn

SIGNATURE/ BLOCK:

PROJECT TITLE:
INTERSTATE 95 RESURFACING AND SAFETY IMPROVEMENTS

TOWN: **OLD LYME & EAST LYME**

DRAWING TITLE: **INDEX PLAN STA. 164 TO STA. 219**

PROJECT NO. **104-164**

DRAWING NO. **INX-2**

SHEET NO. **03.03**

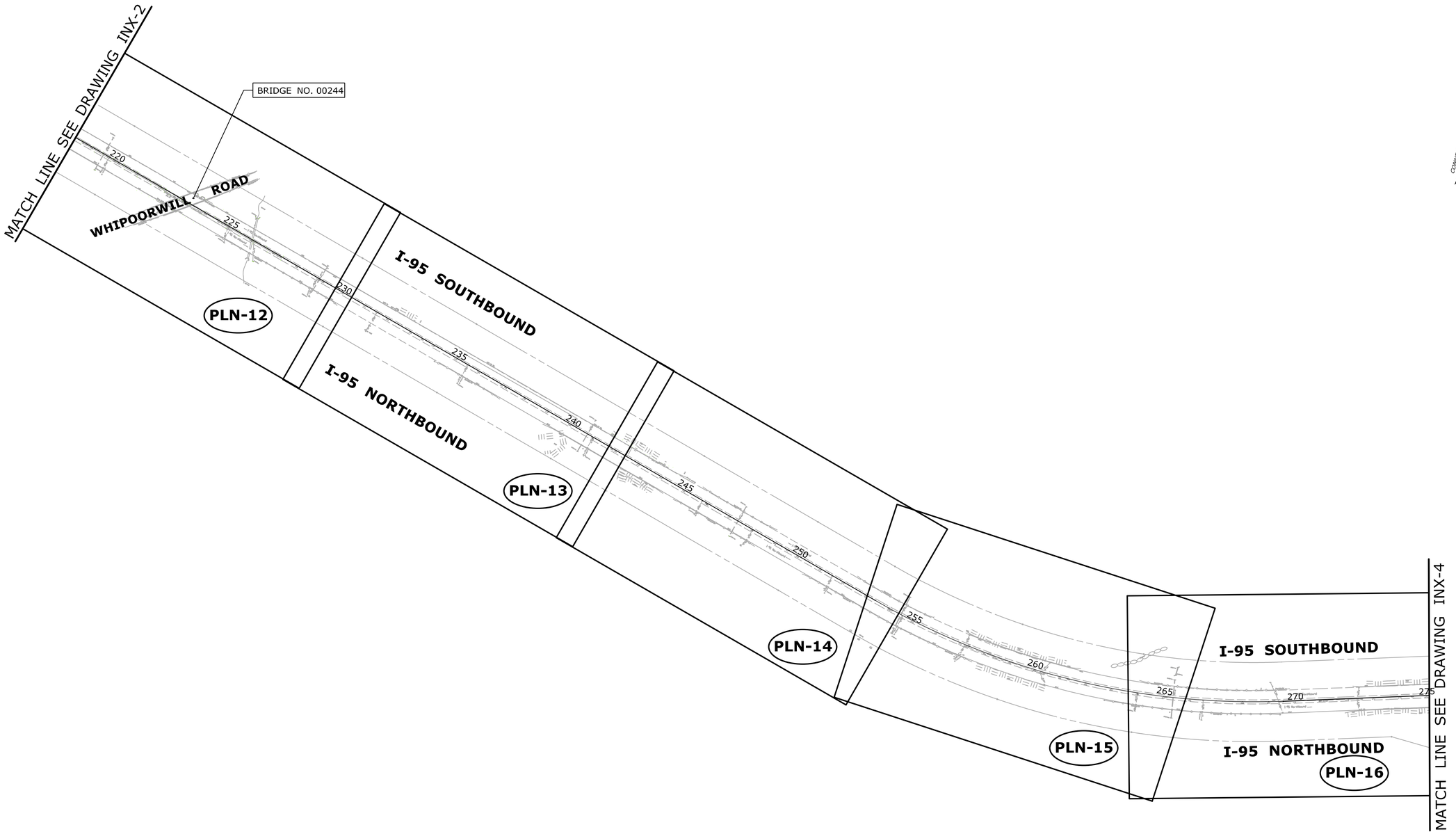

PRELIMINARY DESIGN REVIEW

REV.	DATE	REVISION DESCRIPTION	SHEET NO.
-	-	-	-
-	-	-	-
-	-	-	-
-	-	-	-
-	-	-	-
-	-	-	-

THE INFORMATION, INCLUDING ESTIMATED QUANTITIES OF WORK, SHOWN ON THESE SHEETS IS BASED ON LIMITED INVESTIGATIONS BY THE STATE AND IS IN NO WAY WARRANTED TO INDICATE THE CONDITIONS OF ACTUAL QUANTITIES OF WORK WHICH WILL BE REQUIRED.

Plotted Date: 3/7/2013

DESIGNER/DRAFTER: **RL/MF/EK**

CHECKED BY: **D. DAGAN**

SCALE IN FEET

0 200 400

SCALE 1"=200'

STATE OF CONNECTICUT
DEPARTMENT OF TRANSPORTATION

Filename: ...\Plan\HW_MSH_INX-3.dgn

SIGNATURE/
BLOCK:

PROJECT TITLE:

INTERSTATE 95
RESURFACING AND SAFETY
IMPROVEMENTS

TOWN: **OLD LYME & EAST LYME**

DRAWING TITLE:

INDEX PLAN
STA. 219 TO STA. 275

PROJECT NO. **104-164**

DRAWING NO. **INX-3**

SHEET NO. **03.04**

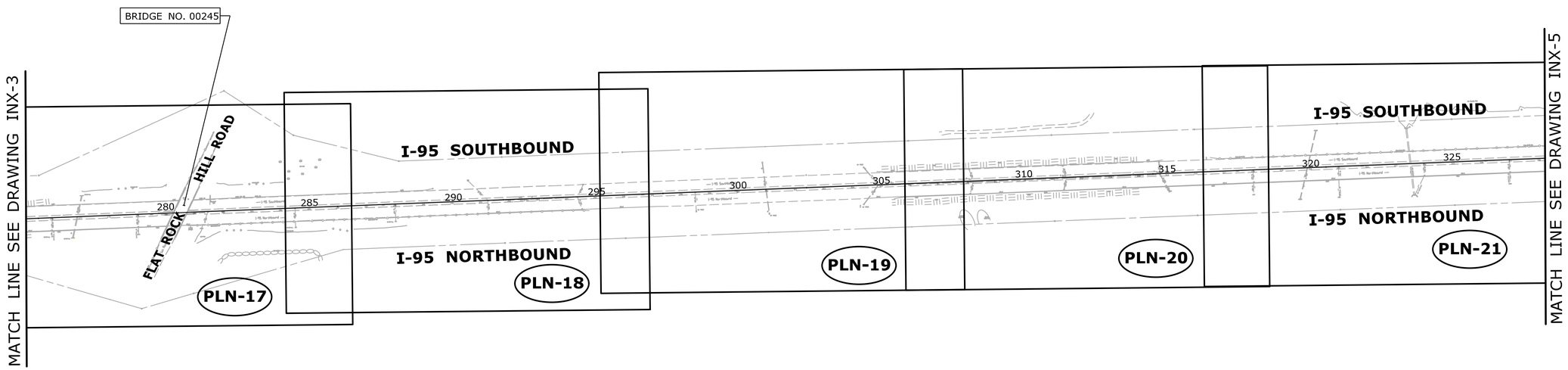

PRELIMINARY DESIGN REVIEW

REV.	DATE	REVISION DESCRIPTION	SHEET NO.
-	-	-	-
-	-	-	-
-	-	-	-
-	-	-	-
-	-	-	-
-	-	-	-

THE INFORMATION, INCLUDING ESTIMATED QUANTITIES OF WORK, SHOWN ON THESE SHEETS IS BASED ON LIMITED INVESTIGATIONS BY THE STATE AND IS IN NO WAY WARRANTED TO INDICATE THE CONDITIONS OF ACTUAL QUANTITIES OF WORK WHICH WILL BE REQUIRED.

Plotted Date: 3/7/2013

DESIGNER/DRAFTER: **RL/MF/EK**

CHECKED BY: **D. DAGAN**

SCALE IN FEET
0 200 400
SCALE 1"=200'

STATE OF CONNECTICUT
DEPARTMENT OF TRANSPORTATION

Filename: ...\Plan\HW_MSH_INX-4.dgn

SIGNATURE/ BLOCK:

PROJECT TITLE:
INTERSTATE 95 RESURFACING AND SAFETY IMPROVEMENTS

TOWN: **OLD LYME & EAST LYME**

DRAWING TITLE:
INDEX PLAN STA. 275 TO STA. 328

PROJECT NO. **104-164**

DRAWING NO. **INX-4**

SHEET NO. **03.05**

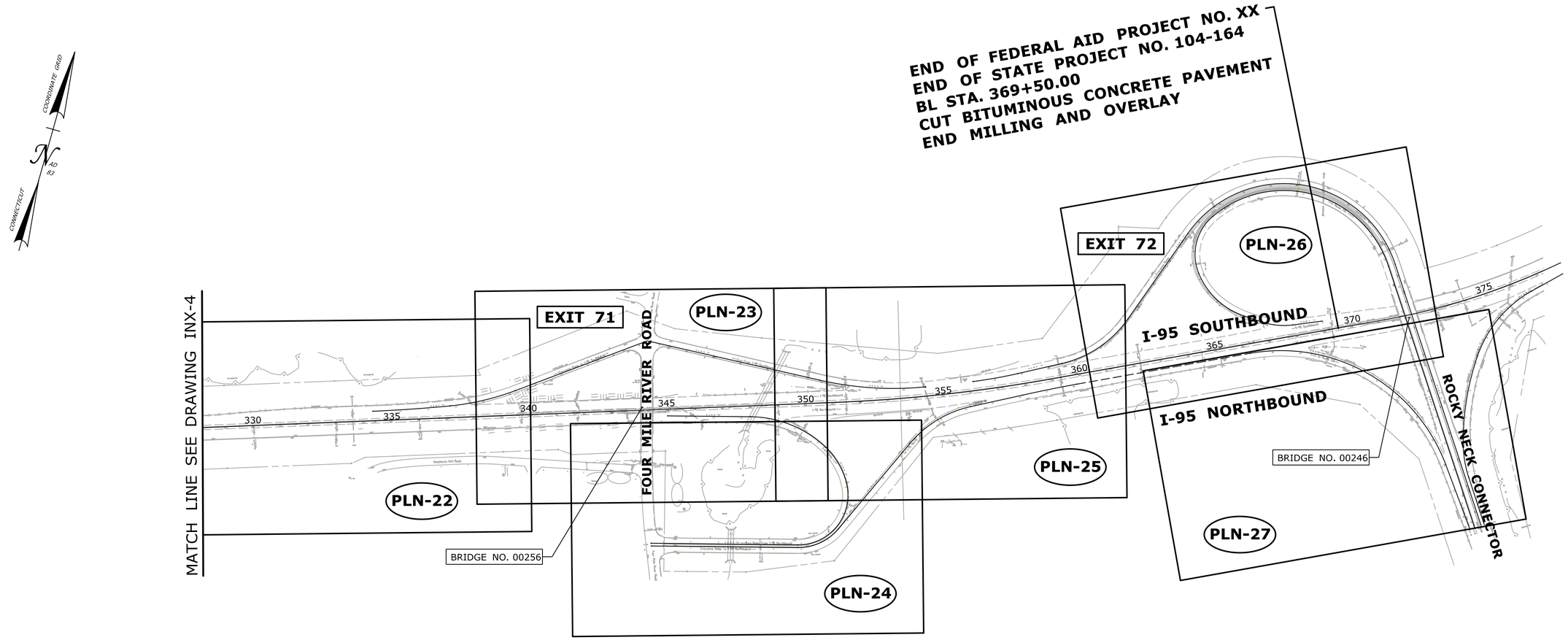

PRELIMINARY DESIGN REVIEW

REV.	DATE	REVISION DESCRIPTION	SHEET NO.
-	-	-	-
-	-	-	-
-	-	-	-
-	-	-	-
-	-	-	-
-	-	-	-

THE INFORMATION, INCLUDING ESTIMATED QUANTITIES OF WORK, SHOWN ON THESE SHEETS IS BASED ON LIMITED INVESTIGATIONS BY THE STATE AND IS IN NO WAY WARRANTED TO INDICATE THE CONDITIONS OF ACTUAL QUANTITIES OF WORK WHICH WILL BE REQUIRED.

Plotted Date: 3/7/2013

DESIGNER/DRAFTER: **RL/MF/EK**

CHECKED BY: **D. DAGAN**

SCALE IN FEET
0 200 400
SCALE 1"=200'

STATE OF CONNECTICUT
DEPARTMENT OF TRANSPORTATION

Filename: ...\Plan\HW_MSH_INX-5.dgn

SIGNATURE/
BLOCK:

PROJECT TITLE:
INTERSTATE 95 RESURFACING AND SAFETY IMPROVEMENTS

TOWN: **OLD LYME & EAST LYME**

DRAWING TITLE: **INDEX PLAN STA. 328 TO STA. 370**

PROJECT NO. **104-164**

DRAWING NO. **INX-5**

SHEET NO. **03.06**

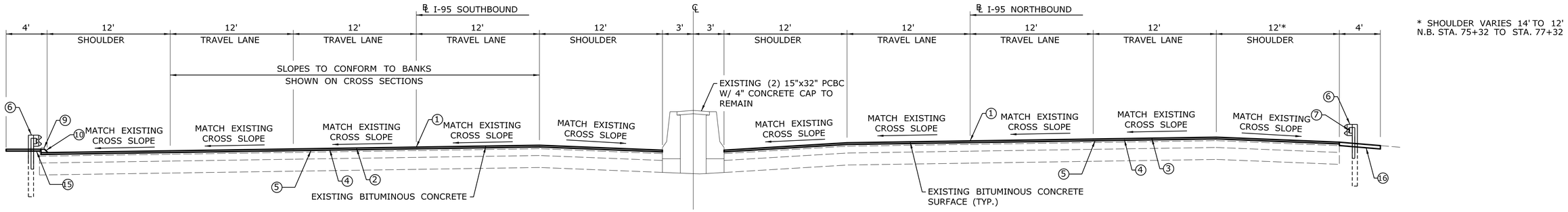

I-95 BANKED SECTION - 6 LANES
N.B. STA. 75+30 TO STA. 84+00

NOT TO SCALE

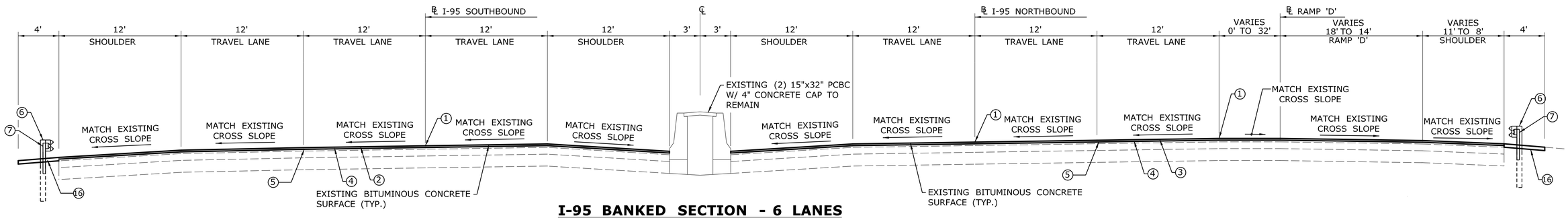

I-95 BANKED SECTION - 6 LANES
N.B. STA. 72+22 TO STA. 75+30

NOT TO SCALE

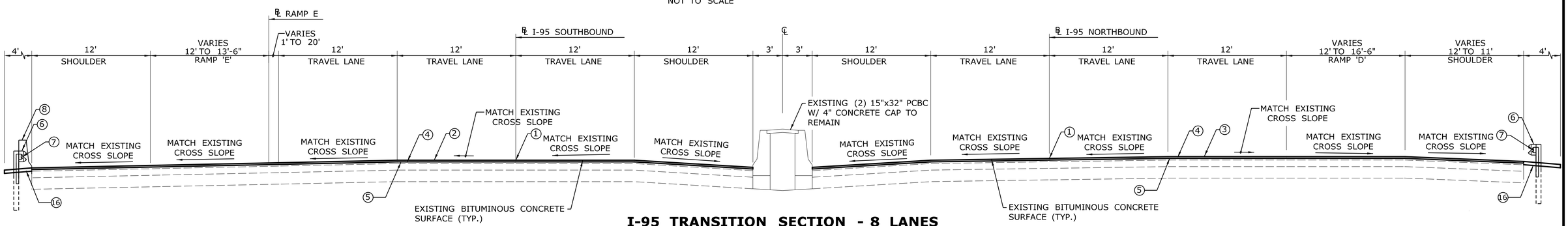

I-95 TRANSITION SECTION - 8 LANES
N.B. STA. 70+73 TO STA. 72+22

NOT TO SCALE

LEGEND

1. POINT OF APPLICATION OF GRADE
2. MILLING (2" DEPTH - SB TRAVELWAY AND SHOULDER)
3. FINE MILLING (2.75" DEPTH - NB TRAVELWAY AND SHOULDER)
4. 2" PMA S0.5 ON 1" HMA S0.25
5. MATERIAL FOR TACK COAT
6. GUIDE RAILING (SEE PLANS FOR LOCATIONS AND TYPE)
7. EXISTING METAL BEAM RAIL TO BE REMOVED (SEE PLANS FOR LOCATIONS)
8. EXISTING ROADWAY PARAPET WALL TO REMAIN (SEE PLANS FOR LOCATION)
9. BITUMINOUS CONCRETE LIP CURB TO BE REMOVED (SEE PLANS FOR LOCATIONS)
10. BITUMINOUS CONCRETE PARK CURB (SEE PLANS FOR LOCATIONS)
11. CUT BITUMINOUS CONCRETE PAVEMENT ON YELLOW SHOULDER LINE, REMOVE BITUMINOUS CONCRETE PAVEMENT FROM CUT TO EXIST. EGDE OF PAVEMENT
12. 7.5" HMA S1 (TWO EQUAL LIFTS)
13. 10" PROCESSED AGGREGATE BASE
14. F-SHAPE PRECAST CONCRETE BARRIER CURB WITH DRAINAGE SLOTS (30"x45")
15. 4" TOPSOIL AND TURF ESTABLISHMENT
16. 4" PROCESSED AGGREGATE BASE (4' WIDE) OR 2" BITUMINOUS CONCRETE (2' WIDE) - SEE PLANS FOR LOCATION
17. F-SHAPE PRECAST CONCRETE BARRIER CURB (21"x45")
18. VERTICAL FACE PRECAST CONCRETE BARRIER CURB (21"x45")
19. VERTICAL SHAPE PRECAST CONCRETE BARRIER CURB (21"x54")
20. 4" CONCRETE CAP (SEE PLANS FOR LOCATIONS)
21. GRAVEL FILL
22. CUT BITUMINOUS CONCRETE PAVEMENT AT EDGE OF SHOULDER, REMOVE BITUMINOUS CONCRETE PAVEMENT FROM CUT TO EXIST. EDGE OF PAVEMENT
23. 3" HMA S0.5
24. 5" HMA S1

NOTES

1. INTENT OF MILLING IS TO REMOVE ENTIRETY OF FIRST LIFT IN FLEXIBLE PAVEMENTS AND LEAVE NO SCABS. ADJUST MILLING DEPTH AS NECCESSARY AND REMILL TO REMOVE ANY SCABS. (STA. 70+73 TO STA. 105+40)
2. THE FINAL COURSE OF HMA S0.5 SHALL BE THE LAST PAVING OPERATION FOR THE ENTIRE LENGTH OF THE PROJECT.

PRELIMINARY DESIGN REVIEW

REV.	DATE	REVISION DESCRIPTION	SHEET NO.
-	-	-	-
-	-	-	-
-	-	-	-
-	-	-	-
-	-	-	-
-	-	-	-

THE INFORMATION, INCLUDING ESTIMATED QUANTITIES OF WORK, SHOWN ON THESE SHEETS IS BASED ON LIMITED INVESTIGATIONS BY THE STATE AND IS IN NO WAY WARRANTED TO INDICATE THE CONDITIONS OF ACTUAL QUANTITIES OF WORK WHICH WILL BE REQUIRED.

Plotted Date: 3/7/2013

DESIGNER/DRAFTER: **RL/MF/EK**
CHECKED BY: **D. DAGAN**
SCALE AS NOTED

STATE OF CONNECTICUT
DEPARTMENT OF TRANSPORTATION

Filename: ...\Sections\HW_MSH_TYP-01.DGN

SIGNATURE/ BLOCK:

PROJECT TITLE: **INTERSTATE 95 RESURFACING AND SAFETY IMPROVEMENTS**

TOWN: OLD LYME & EAST LYME

DRAWING TITLE: **TYPICAL SECTIONS**

PROJECT NO. **104-164**
DRAWING NO. **TYP-1**
SHEET NO. **03.07**

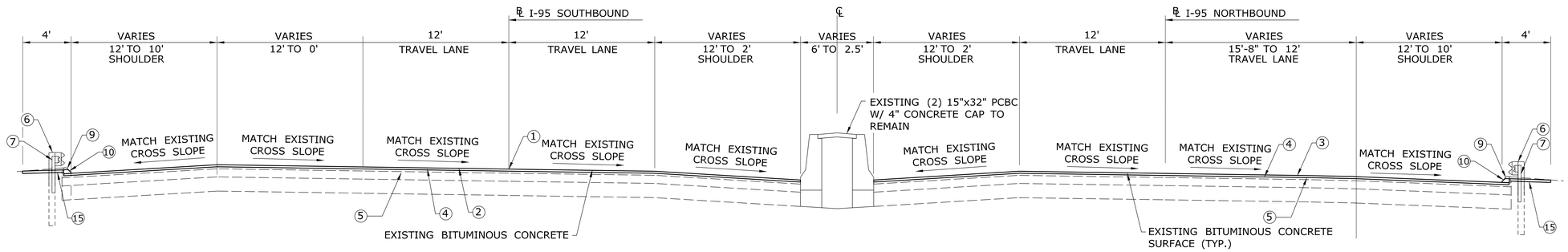

I-95 BANKED SECTION - TRANSITION TO 4 LANES
N.B. STA. 98+17 TO STA. 107+32(= STA. 140+0 AHEAD)

NOT TO SCALE

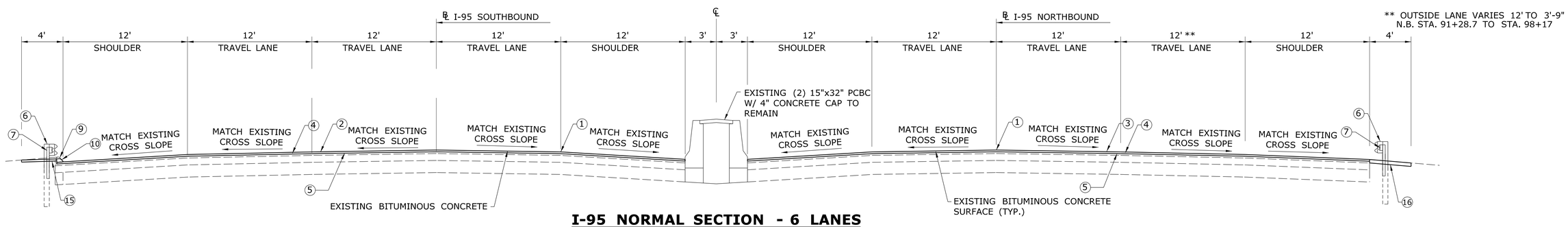

I-95 NORMAL SECTION - 6 LANES
N.B. STA. 84+00 TO STA. 98+17

NOT TO SCALE

LEGEND

1. POINT OF APPLICATION OF GRADE
2. MILLING (2" DEPTH - SB TRAVELWAY AND SHOULDER)
3. FINE MILLING (2.75" DEPTH - NB TRAVELWAY AND SHOULDER)
4. 2" PMA S0.5 ON 1" HMA S0.25
5. MATERIAL FOR TACK COAT
6. GUIDE RAILING (SEE PLANS FOR LOCATIONS AND TYPE)
7. EXISTING METAL BEAM RAIL TO BE REMOVED (SEE PLANS FOR LOCATIONS)
8. EXISTING ROADWAY PARAPET WALL TO REMAIN (SEE PLANS FOR LOCATION)
9. BITUMINOUS CONCRETE LIP CURB TO BE REMOVED (SEE PLANS FOR LOCATIONS)
10. BITUMINOUS CONCRETE PARK CURB (SEE PLANS FOR LOCATIONS)
11. CUT BITUMINOUS CONCRETE PAVEMENT ON YELLOW SHOULDER LINE, REMOVE BITUMINOUS CONCRETE PAVEMENT FROM CUT TO EXIST. EGDE OF PAVEMENT
12. 7.5" HMA S1 (TWO EQUAL LIFTS)
13. 10" PROCESSED AGGREGATE BASE
14. F-SHAPE PRECAST CONCRETE BARRIER CURB WITH DRAINAGE SLOTS (30"x45")
15. 4" TOPSOIL AND TURF ESTABLISHMENT
16. 4" PROCESSED AGGREGATE BASE (4' WIDE) OR 2" BITUMINOUS CONCRETE (2' WIDE) - SEE PLANS FOR LOCATION
17. F-SHAPE PRECAST CONCRETE BARRIER CURB (21"x45")
18. VERTICAL FACE PRECAST CONCRETE BARRIER CURB (21"x45")
19. VERTICAL SHAPE PRECAST CONCRETE BARRIER CURB (21"x54")
20. 4" CONCRETE CAP (SEE PLANS FOR LOCATIONS)
21. GRAVEL FILL
22. CUT BITUMINOUS CONCRETE PAVEMENT AT EDGE OF SHOULDER, REMOVE BITUMINOUS CONCRETE PAVEMENT FROM CUT TO EXIST. EDGE OF PAVEMENT
23. 3" HMA S0.5
24. 5" HMA S1

NOTES

1. INTENT OF MILLING IS TO REMOVE ENTIRETY OF FIRST LIFT IN FLEXIBLE PAVEMENTS AND LEAVE NO SCABS. ADJUST MILLING DEPTH AS NECCESSARY AND REMILL TO REMOVE ANY SCABS. (STA. 70+73 TO STA. 105+40)
2. THE FINAL COURSE OF HMA S0.5 SHALL BE THE LAST PAVING OPERATION FOR THE ENTIRE LENGTH OF THE PROJECT.

PRELIMINARY DESIGN REVIEW

REV.	DATE	REVISION DESCRIPTION	SHEET NO.
-	-	-	
-	-	-	
-	-	-	
-	-	-	
-	-	-	
-	-	-	

THE INFORMATION, INCLUDING ESTIMATED QUANTITIES OF WORK, SHOWN ON THESE SHEETS IS BASED ON LIMITED INVESTIGATIONS BY THE STATE AND IS IN NO WAY WARRANTED TO INDICATE THE CONDITIONS OF ACTUAL QUANTITIES OF WORK WHICH WILL BE REQUIRED.

Plotted Date: 3/7/2013

DESIGNER/DRAFTER: RL/MF/EK
CHECKED BY: D. DAGAN
SCALE AS NOTED

STATE OF CONNECTICUT
DEPARTMENT OF TRANSPORTATION

Filename: ...\Sections\HW_MSH_TYP-02.DGN

SIGNATURE/ BLOCK:

PROJECT TITLE: INTERSTATE 95 RESURFACING AND SAFETY IMPROVEMENTS

TOWN: OLD LYME & EAST LYME

DRAWING TITLE: TYPICAL SECTIONS -

PROJECT NO. 104-164

DRAWING NO. TYP-2

SHEET NO. 03.08

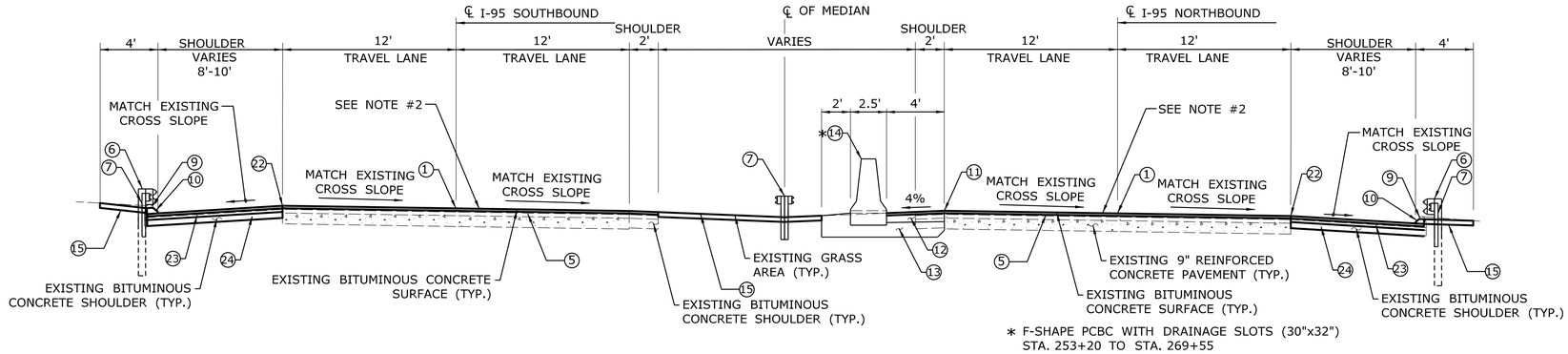

I-95 SUPERELEVATED SECTION
STA. 159+00 TO STA. 369+50

NOT TO SCALE

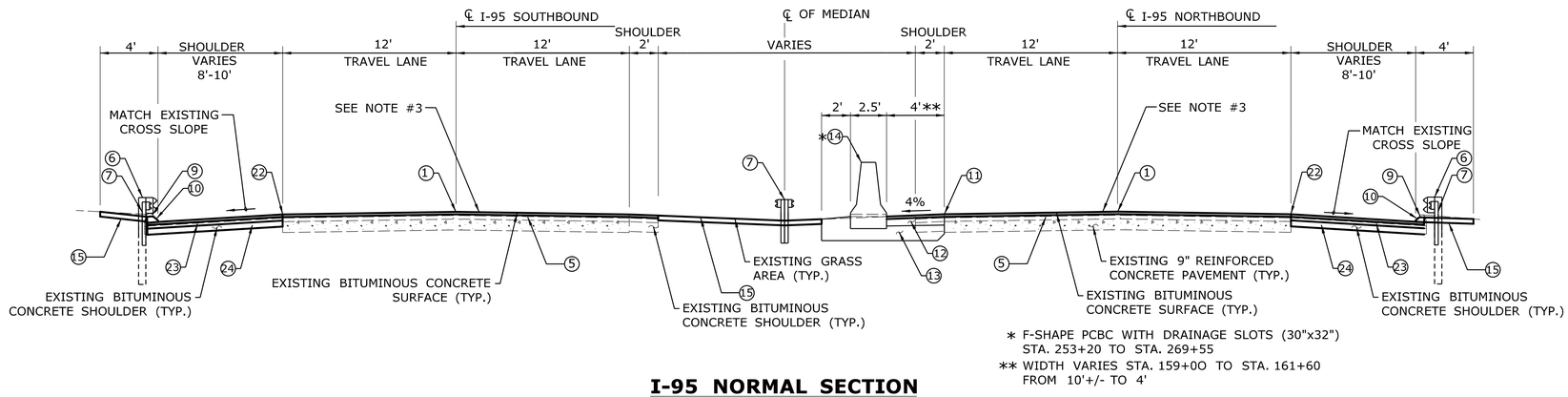

I-95 NORMAL SECTION
STA. 159+00 TO STA. 369+50

NOT TO SCALE

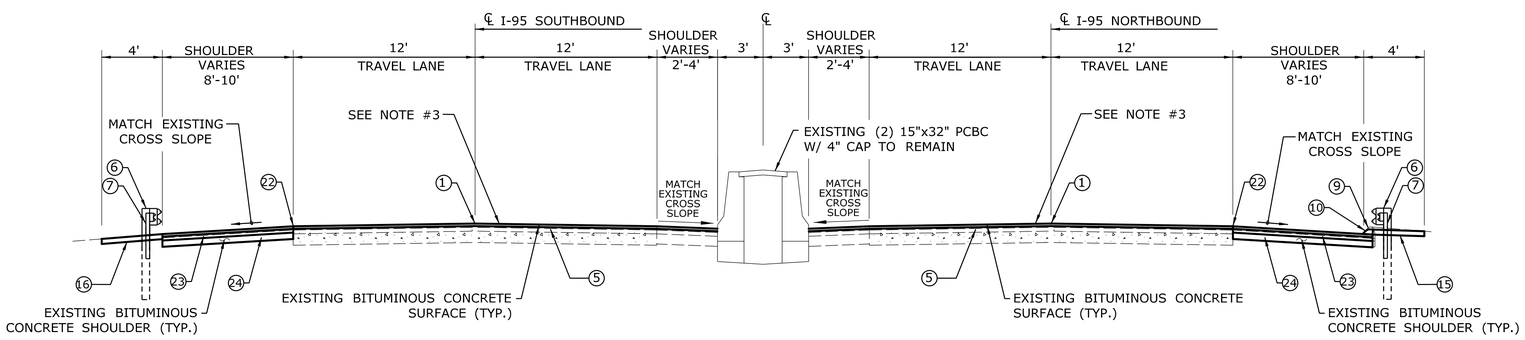

I-95 NORMAL SECTION - 4 LANES
STA. 107+32(=STA. 140+00 AHEAD) TO STA. 159+00

NOT TO SCALE

LEGEND

1. POINT OF APPLICATION OF GRADE
2. MILLING (2" DEPTH - SB TRAVELWAY AND SHOULDER)
3. FINE MILLING (2.75" DEPTH - NB TRAVELWAY AND SHOULDER)
4. 2" PMA S0.5 ON 1" HMA S0.25
5. MATERIAL FOR TACK COAT
6. GUIDE RAILING (SEE PLANS FOR LOCATIONS AND TYPE)
7. EXISTING METAL BEAM RAIL TO BE REMOVED (SEE PLANS FOR LOCATIONS)
8. EXISTING ROADWAY PARAPET WALL TO REMAIN (SEE PLANS FOR LOCATION)
9. BITUMINOUS CONCRETE LIP CURB TO BE REMOVED (SEE PLANS FOR LOCATIONS)
10. BITUMINOUS CONCRETE PARK CURB (SEE PLANS FOR LOCATIONS)
11. CUT BITUMINOUS CONCRETE PAVEMENT ON YELLOW SHOULDER LINE, REMOVE BITUMINOUS CONCRETE PAVEMENT FROM CUT TO EXIST. EGDE OF PAVEMENT
12. 7.5" HMA S1 (TWO EQUAL LIFTS)
13. 10" PROCESSED AGGREGATE BASE
14. F-SHAPE PRECAST CONCRETE BARRIER CURB WITH DRAINAGE SLOTS (30"x45")
15. 4" TOPSOIL AND TURF ESTABLISHMENT
16. 4" PROCESSED AGGREGATE BASE (4' WIDE) OR 2" BITUMINOUS CONCRETE (2' WIDE) - SEE PLANS FOR LOCATION
17. F-SHAPE PRECAST CONCRETE BARRIER CURB (21"x45")
18. VERTICAL FACE PRECAST CONCRETE BARRIER CURB (21"x45")
19. VERTICAL SHAPE PRECAST CONCRETE BARRIER CURB (21"x54")
20. 4" CONCRETE CAP (SEE PLANS FOR LOCATIONS)
21. GRAVEL FILL
22. CUT BITUMINOUS CONCRETE PAVEMENT AT EDGE OF SHOULDER, REMOVE BITUMINOUS CONCRETE PAVEMENT FROM CUT TO EXIST. EDGE OF PAVEMENT
23. 3" HMA S0.5
24. 5" HMA S1

NOTES

1. THE FINAL COURSE OF HMA S0.5 SHALL BE THE LAST PAVING OPERATION FOR THE ENTIRE LENGTH OF THE PROJECT.
2. NB AND SB TRAVELWAY (NORMAL-NON WEDGE SUPERELEVATED SECTIONS)
   - PERFORM PCC JOINT AND MID-SLAB CRACKING REPAIRS
   - FINE MILL 1.5" AND IN SAME NIGHT PAVE WITH FIRST LIFT WEDGE COURSE INCLUDING:
     - FILL AND COMPACT ANY DEPRESSIONS (SUCH AS OPEN LONGITUDINAL JOINTS AND POTHOLES) IN THE PAVEMENT SURFACE OVER 1" DEEP WITH ITEM 0601192A - SURFACE PATCH, BEFORE PLACING WEDGE COURSE
     - SWEEP WELL TO REMOVE ALL LOOSE MATERIAL
     - PLACE 1.5" PMA S0.375 LEVELING COURSE
   - PLACE 2" PMA S0.5 SURFACE COURSE
3. NB AND SB TRAVELWAY (WEDGE SECTIONS WHERE INCREASED CROSS SLOPE IS NEEDED)
   - PERFORM PCC JOINT AND MID-SLAB CRACKING REPAIRS
   - FINE MILL 1.5" AND IN SAME NIGHT PAVE WITH FIRST LIFT WEDGE COURSE INCLUDING:
     - FILL AND COMPACT ANY DEPRESSIONS (SUCH AS OPEN LONGITUDINAL JOINTS AND POTHOLES) IN THE PAVEMENT SURFACE OVER 1" DEEP WITH ITEM 0601192A - SURFACE PATCH, BEFORE PLACING WEDGE COURSE
     - SWEEP WELL TO REMOVE ALL LOOSE MATERIAL
     - PLACE PMA S0.375 WEDGE COURSE WITH THICKNESS OF 1.25" ON LOW SIDE (EDGE OF ROAD) AND THICKNESS OF UP TO 2.5" ON THE HIGH SIDE (MIDDLE OF ROAD) TO INCREASE CROSS SLOPE. HOWEVER DO NOT INCREASE FINAL ROAD CROSS SLOPE ABOVE 2%
   - PLACE 2" PMA S0.5 SURFACE COURSE
4. FULL DEPTH COMPOSITE PATCHES
   - FULL DEPTH CONCRETE PATCHING SHOULD BE PERFORMED BEFORE MILLING 1.5 INCHES OF THE EXISTING PAVEMENT SURFACE. USE ITEM NO. 0401152A, "CONCRETE REPLACEMENT FOR ROADWAY (FULL-DEPTH)"

   STRUCTURE OF PCC PATCHES
   - PLACE ROUGHLY 9 TO 14 INCHES OF PORTLAND CEMENT CONCRETE (PCC) AS NEEDED SO THAT THE TOP OF THE PCC IS EVEN WITH THE TOP OF THE EXISTING SURFACE. BOTTOM OF NEW PCC TO BE EVEN WITH THE BOTTOM OF EXISTING PCC IN EXISTING COMPOSITE PAVEMENT.
   - WHEN THE TRAVELWAY IS MILLED 1.5" THE TOP 1.5" OF THE PATCH WILL BE MILLED OFF
5. PAVEMENT STRUCTURE FOR BRIDGE NO. 06173 (I-95 OVER ROUTE 156) AND BRIDGE NO. 06032 (I-95 OVER LIEUTENANT RIVER)
   - PLACE 2" PMA S0.5 ON 1" HMA S0.25 AND ASPHALTIC PLUG JOINTS
6. PAVEMENT STRUCTURE FOR BRIDGE NO. 00243 (I-95 OVER LYME STREET)
   - SEE NOTE #2
7. PAVEMENT STRUCTURE FOR BRIDGE UNDERPASSES
   - SEE DRAWINGS PLN-12, PLN-17 AND PLN-23

PRELIMINARY DESIGN REVIEW

REV.	DATE	REVISION DESCRIPTION	SHEET NO.
-	-	-	-
-	-	-	-
-	-	-	-
-	-	-	-
-	-	-	-
-	-	-	-

THE INFORMATION, INCLUDING ESTIMATED QUANTITIES OF WORK, SHOWN ON THESE SHEETS IS BASED ON LIMITED INVESTIGATIONS BY THE STATE AND IS IN NO WAY WARRANTED TO INDICATE THE CONDITIONS OF ACTUAL QUANTITIES OF WORK WHICH WILL BE REQUIRED.

Plotted Date: 3/7/2013

DESIGNER/DRAFTER: RL/MF/EK
CHECKED BY: D. DAGAN
SCALE AS NOTED

STATE OF CONNECTICUT
DEPARTMENT OF TRANSPORTATION

Filename: ...\Sections\HW_MSH_TYP-03.DGN

SIGNATURE/ BLOCK:

PROJECT TITLE: INTERSTATE 95 RESURFACING AND SAFETY IMPROVEMENTS

TOWN: OLD LYME & EAST LYME

DRAWING TITLE: TYPICAL SECTIONS -

PROJECT NO. 104-164
DRAWING NO. TYP-3
SHEET NO. 03.09

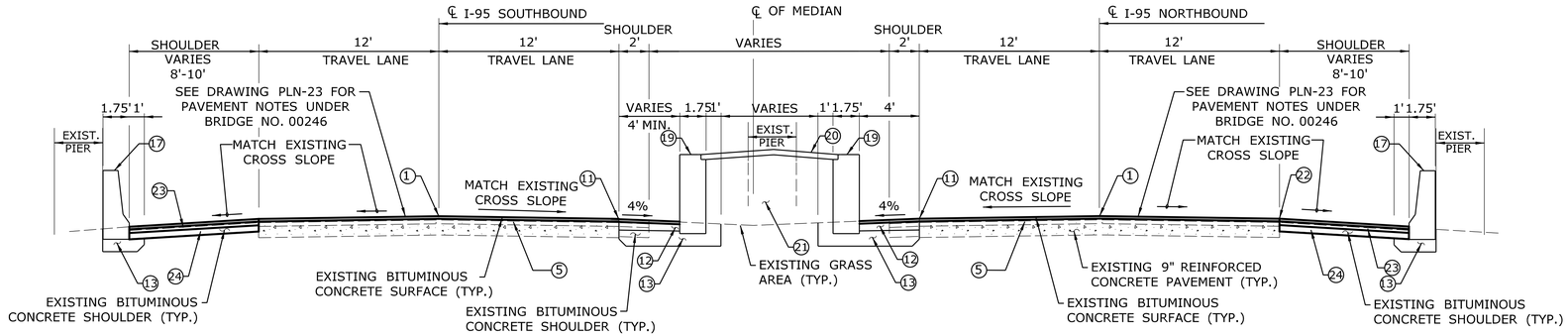

I-95 NORMAL SECTION
SPLIT MEDIAN BARRIER CURB (PIER PROTECTION)
BRIDGE NO. 00246 - FOUR MILE RIVER ROAD
STA. 343+12 TO STA. 349+80

NOT TO SCALE

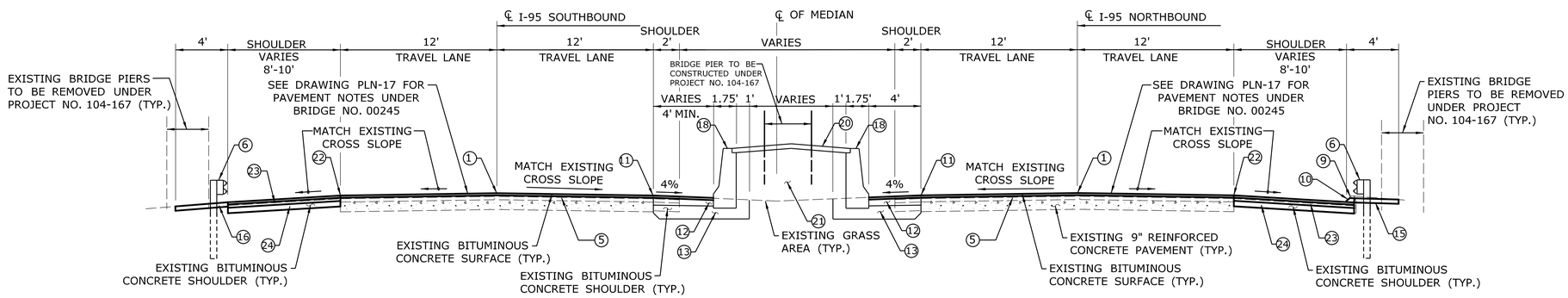

I-95 NORMAL SECTION
SPLIT MEDIAN BARRIER CURB (PIER PROTECTION)
BRIDGE NO. 00245 - FLAT ROCK HILL ROAD
STA. 279+35 TO STA. 285+95

NOT TO SCALE

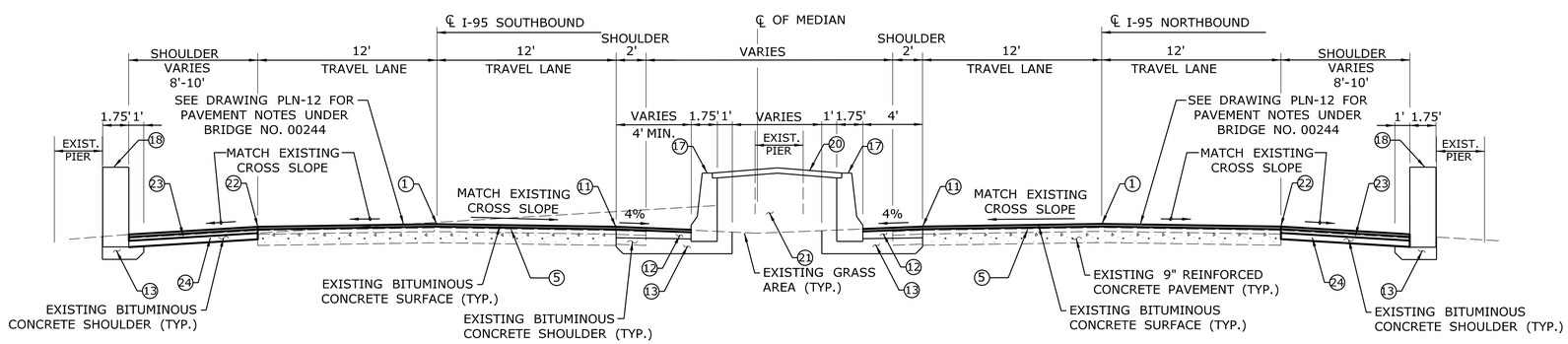

I-95 NORMAL SECTION
SPLIT MEDIAN BARRIER CURB (PIER PROTECTION)
BRIDGE NO. 00244 - WHIPPOORWILL ROAD
STA. 222+32 TO STA. 227+27

NOT TO SCALE

LEGEND

1. POINT OF APPLICATION OF GRADE
2. MILLING (2" DEPTH - SB TRAVELWAY AND SHOULDER)
3. FINE MILLING (2.75" DEPTH - NB TRAVELWAY AND SHOULDER)
4. 2" PMA S0.5 ON 1" HMA S0.25
5. MATERIAL FOR TACK COAT
6. GUIDE RAILING (SEE PLANS FOR LOCATIONS AND TYPE)
7. EXISTING METAL BEAM RAIL TO BE REMOVED (SEE PLANS FOR LOCATIONS)
8. EXISTING ROADWAY PARAPET WALL TO REMAIN (SEE PLANS FOR LOCATION)
9. BITUMINOUS CONCRETE LIP CURB TO BE REMOVED (SEE PLANS FOR LOCATIONS)
10. BITUMINOUS CONCRETE PARK CURB (SEE PLANS FOR LOCATIONS)
11. CUT BITUMINOUS CONCRETE PAVEMENT ON YELLOW SHOULDER LINE, REMOVE BITUMINOUS CONCRETE PAVEMENT FROM CUT TO EXIST. EGDE OF PAVEMENT
12. 7.5" HMA S1 (TWO EQUAL LIFTS)
13. 10" PROCESSED AGGREGATE BASE
14. F-SHAPE PRECAST CONCRETE BARRIER CURB WITH DRAINAGE SLOTS (30"x45")
15. 4" TOPSOIL AND TURF ESTABLISHMENT
16. 4" PROCESSED AGGREGATE BASE (4' WIDE) OR 2" BITUMINOUS CONCRETE (2' WIDE) - SEE PLANS FOR LOCATION
17. F-SHAPE PRECAST CONCRETE BARRIER CURB (21"x45")
18. VERTICAL FACE PRECAST CONCRETE BARRIER CURB (21"x45")
19. VERTICAL SHAPE PRECAST CONCRETE BARRIER CURB (21"x54")
20. 4" CONCRETE CAP (SEE PLANS FOR LOCATIONS)
21. GRAVEL FILL
22. CUT BITUMINOUS CONCRETE PAVEMENT AT EDGE OF SHOULDER, REMOVE BITUMINOUS CONCRETE PAVEMENT FROM CUT TO EXIST. EDGE OF PAVEMENT
23. 3" HMA S0.5
24. 5" HMA S1

NOTES

1. THE FINAL COURSE OF HMA S0.5 SHALL BE THE LAST PAVING OPERATION FOR THE ENTIRE LENGTH OF THE PROJECT.

PRELIMINARY DESIGN REVIEW

REV.	DATE	REVISION DESCRIPTION	SHEET NO.
-	-	-	-
-	-	-	-
-	-	-	-
-	-	-	-
-	-	-	-
-	-	-	-

THE INFORMATION, INCLUDING ESTIMATED QUANTITIES OF WORK, SHOWN ON THESE SHEETS IS BASED ON LIMITED INVESTIGATIONS BY THE STATE AND IS IN NO WAY WARRANTED TO INDICATE THE CONDITIONS OF ACTUAL QUANTITIES OF WORK WHICH WILL BE REQUIRED.

Plotted Date: 3/7/2013

DESIGNER/DRAFTER: RL/MF/EK
CHECKED BY: D. DAGAN
SCALE AS NOTED

STATE OF CONNECTICUT
DEPARTMENT OF TRANSPORTATION

Filename: ...\Sections\HW_MSH_TYP-04.DGN

SIGNATURE/ BLOCK:

PROJECT TITLE: INTERSTATE 95 RESURFACING AND SAFETY IMPROVEMENTS

TOWN: OLD LYME & EAST LYME

DRAWING TITLE: TYPICAL SECTIONS -

PROJECT NO. 104-164
DRAWING NO. TYP-4
SHEET NO. 03.10

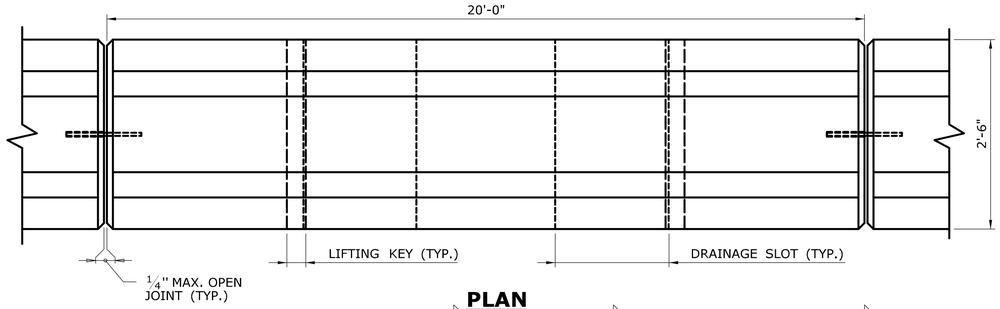

PLAN

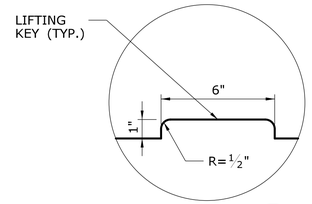

DETAIL A
SCALE: 3" = 1'-0"

GENERAL NOTES:

1. ALTERNATE DESIGNS FOR THE FOLLOWING ITEMS MAY BE SUBSTITUTED TO THE ENGINEER FOR APPROVAL :
   A) UNIT END CONNECTIONS SIMILAR TO DESIGNS SHOWN.
   B) LIFTING KEYS OR OTHER HANDLING DEVICES.
2. TERMINAL END TREATMENTS SHALL BE CONSTRUCTED AS SHOWN ON THE PLANS OR AS DIRECTED BY THE ENGINEER.

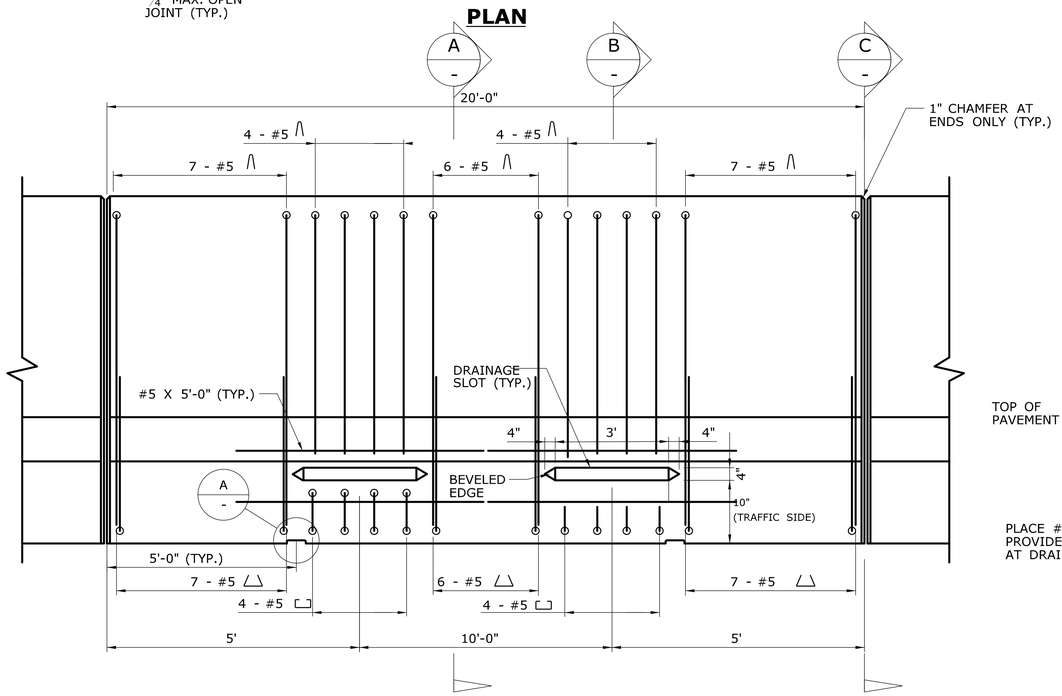

ELEVATION

30" x 45" PRECAST CONCRETE BARRIER CURB UNIT

VERTICAL SCALE: 1" = 1'-0"
HORIZONTAL SCALE: 1/2" = 1'-0"

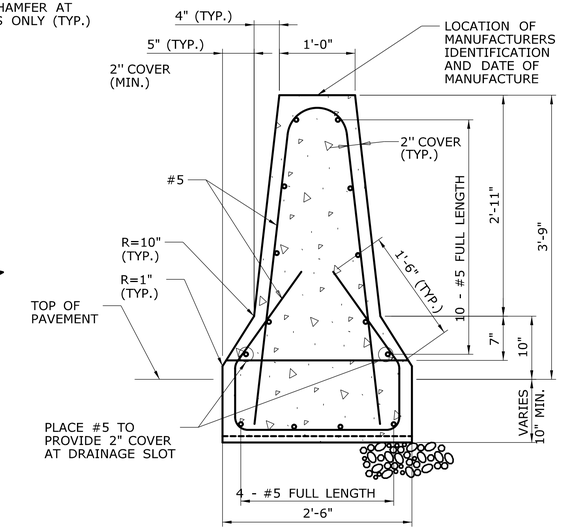

SECTION A
SCALE: 1" = 1'-0"

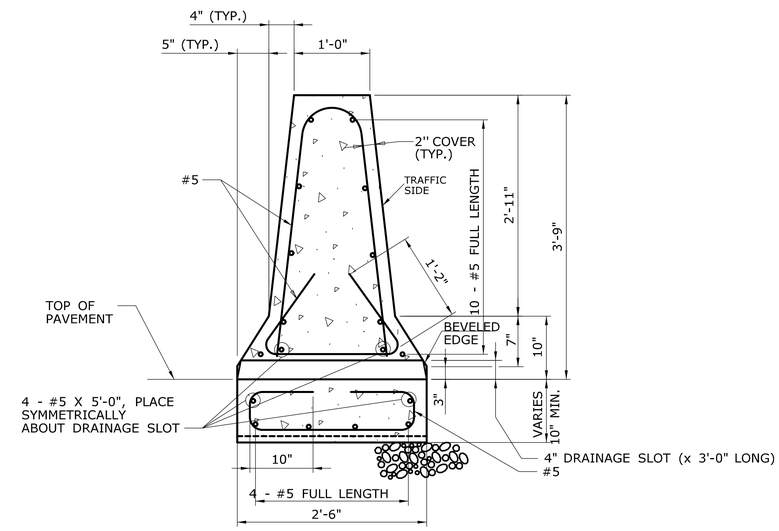

SECTION B
SCALE: 1" = 1'-0"

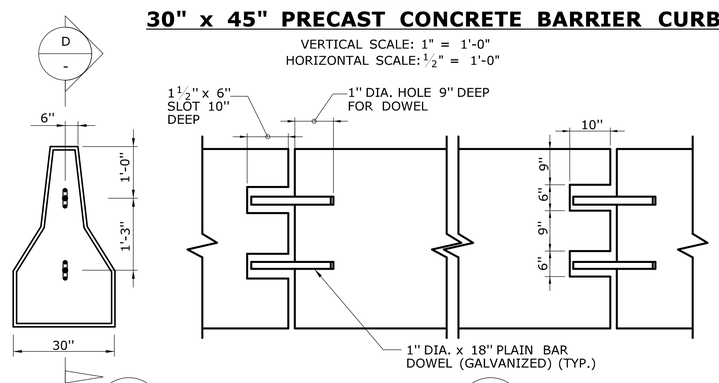

SECTION C
NTS

SECTION D
NTS

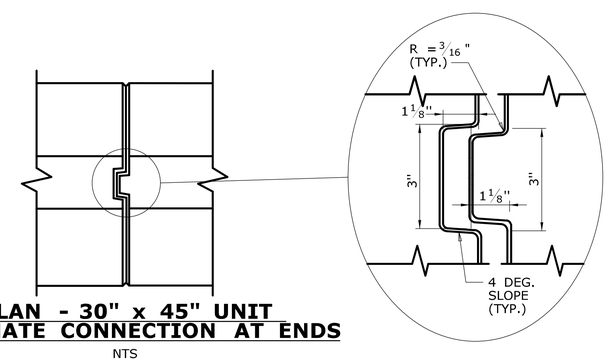

PLAN - 30" x 45" UNIT
ALTERNATE CONNECTION AT ENDS
NTS

PRELIMINARY DESIGN REVIEW

REV.	DATE	REVISION DESCRIPTION	SHEET NO.
-	-	-	-
-	-	-	-
-	-	-	-
-	-	-	-
-	-	-	-
-	-	-	-

THE INFORMATION, INCLUDING ESTIMATED QUANTITIES OF WORK, SHOWN ON THESE SHEETS IS BASED ON LIMITED INVESTIGATIONS BY THE STATE AND IS IN NO WAY WARRANTED TO INDICATE THE CONDITIONS OF ACTUAL QUANTITIES OF WORK WHICH WILL BE REQUIRED.

Plotted Date: 3/1/2013

DESIGNER/DRAFTER: RL/EK/MF
CHECKED BY: D. DAGAN
SCALE AS NOTED

STATE OF CONNECTICUT
DEPARTMENT OF TRANSPORTATION

Filename: ...\HW_MSH_MDS-1_FShapePCBCWithDS30X45.dgn

SIGNATURE/ BLOCK:

PROJECT TITLE: INTERSTATE 95 RESURFACING AND SAFETY IMPROVEMENTS

TOWN: OLD LYME & EAST LYME

DRAWING TITLE: F-SHAPE PRECAST CONCRETE BARRIER CURB WITH DRAINAGE SLOTS (30" x 45")

PROJECT NO. 104-164
DRAWING NO. MDS-1
SHEET NO. 03.11

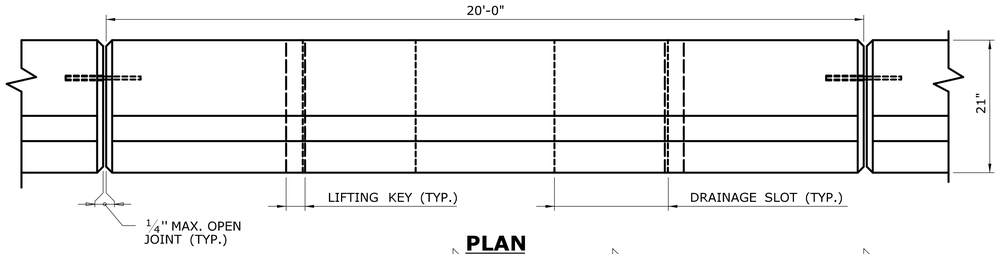

PLAN

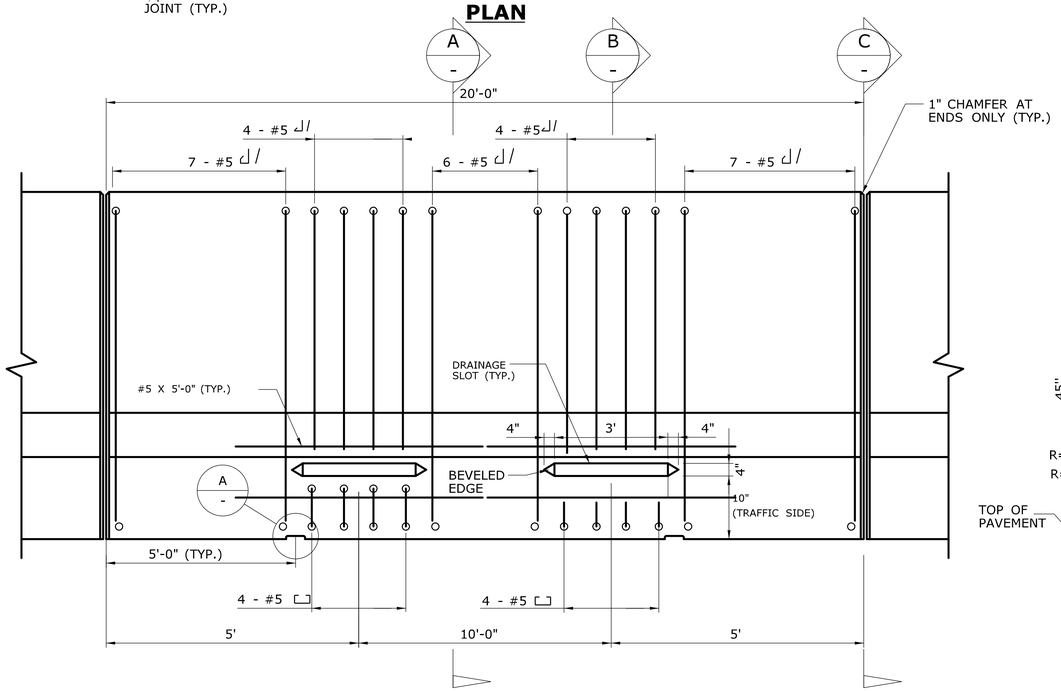

ELEVATION

30" x 45" PRECAST CONCRETE BARRIER CURB UNIT

VERTICAL SCALE: 1" = 1'-0"
HORIZONTAL SCALE: 1/2" = 1'-0"

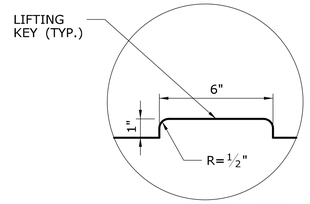

DETAIL A

SCALE: 3" = 1'-0"

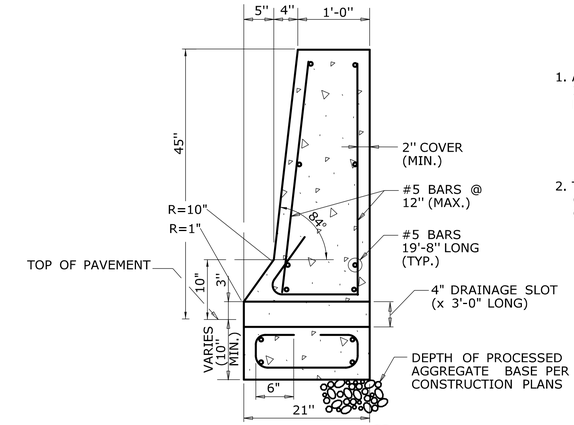

SECTION B

SCALE: 1" = 1'-0"

GENERAL NOTES:

1. ALTERNATE DESIGNS FOR THE FOLLOWING ITEMS MAY BE SUBSTITUTED TO THE ENGINEER FOR APPROVAL :
   A) UNIT END CONNECTIONS SIMILAR TO DESIGNS SHOWN.
   B) LIFTING KEYS OR OTHER HANDLING DEVICES.
2. TERMINAL END TREATMENTS SHALL BE CONSTRUCTED AS SHOWN ON THE PLANS OR AS DIRECTED BY THE ENGINEER.

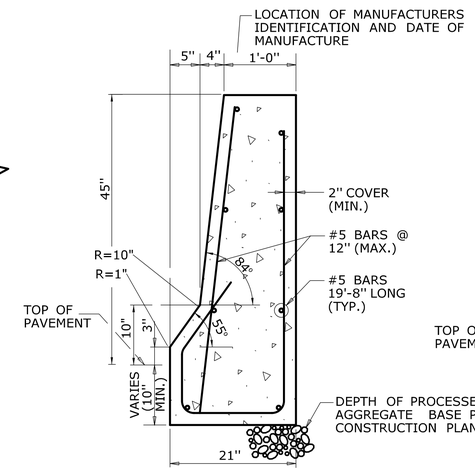

SECTION A

SCALE: 1" = 1'-0"

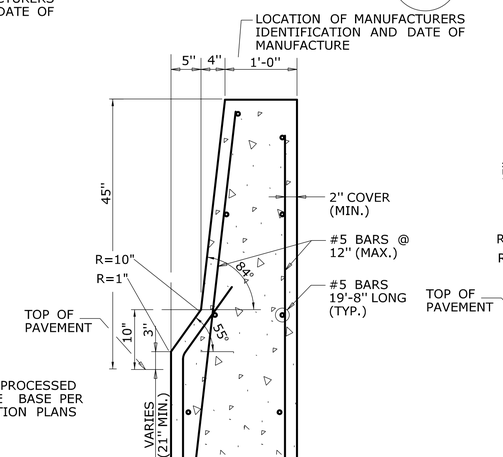

21" EMBEDMENT DEPTH

PROPOSED AT LOCATIONS SHOWN ON THE PLANS OR AS DIRECTED BY THE ENGINEER

SECTION A

SCALE: 1" = 1'-0"

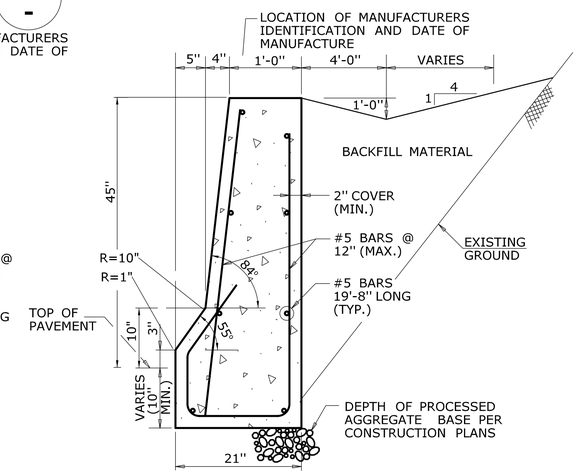

WITH BACKFILL

PROPOSED AT LOCATIONS SHOWN ON THE PLANS OR AS DIRECTED BY THE ENGINEER

SECTION A

SCALE: 1" = 1'-0"

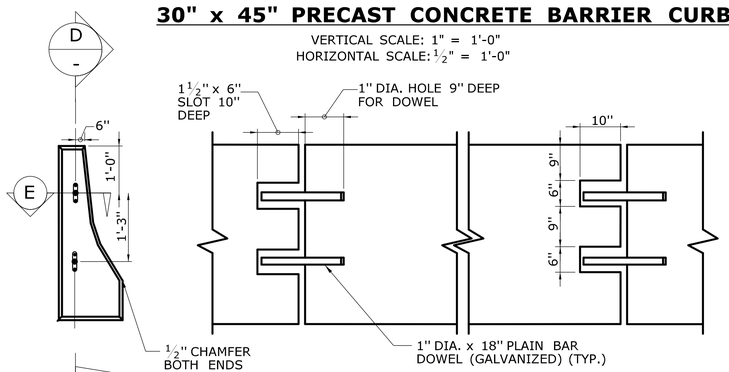

SECTION C

NTS

SECTION D

NTS

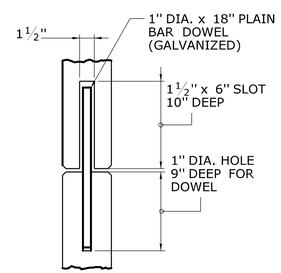

SECTION E

NTS

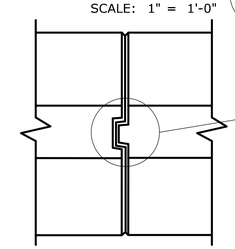

PLAN

ALTERNATE CONNECTION AT ENDS

NTS

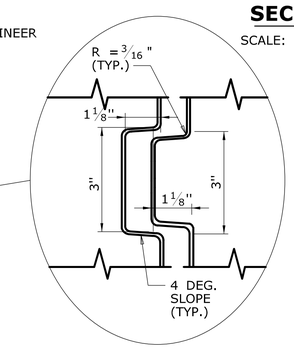

PRELIMINARY DESIGN REVIEW

REV.	DATE	REVISION DESCRIPTION	SHEET NO.
-	-	-	-
-	-	-	-
-	-	-	-
-	-	-	-
-	-	-	-
-	-	-	-

THE INFORMATION, INCLUDING ESTIMATED QUANTITIES OF WORK, SHOWN ON THESE SHEETS IS BASED ON LIMITED INVESTIGATIONS BY THE STATE AND IS IN NO WAY WARRANTED TO INDICATE THE CONDITIONS OF ACTUAL QUANTITIES OF WORK WHICH WILL BE REQUIRED.

Plotted Date: 3/4/2013

DESIGNER/DRAFTER: RL/EK/MF
CHECKED BY: D. DAGAN
SCALE AS NOTED

STATE OF CONNECTICUT
DEPARTMENT OF TRANSPORTATION

Filename: ...\HW_MSH_MDS-2_FShapePCBCWithDS21X45.dgn

SIGNATURE/ BLOCK:

PROJECT TITLE: INTERSTATE 95 RESURFACING AND SAFETY IMPROVEMENTS

TOWN: OLD LYME & EAST LYME

DRAWING TITLE: F-SHAPE PRECAST CONCRETE BARRIER CURB WITH DRAINAGE SLOTS (21" x 45")

PROJECT NO. 104-164
DRAWING NO. MDS-2
SHEET NO. 03.12

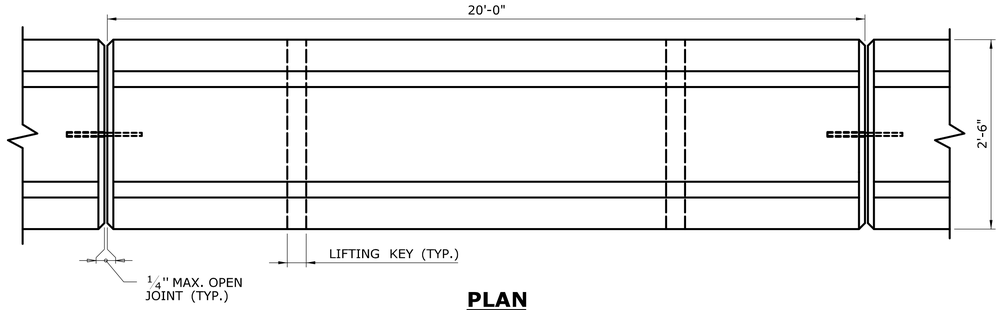

PLAN

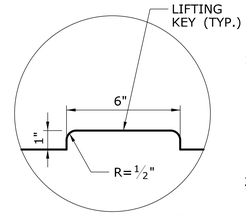

DETAIL A
SCALE: 3" = 1'-0"

GENERAL NOTES:

1. ALTERNATE DESIGNS FOR THE FOLLOWING ITEMS MAY BE SUBSTITUTED TO THE ENGINEER FOR APPROVAL :
   A) UNIT END CONNECTIONS SIMILAR TO DESIGNS SHOWN.
   B) LIFTING KEYS OR OTHER HANDLING DEVICES.
2. TERMINAL END TREATMENTS SHALL BE CONSTRUCTED AS SHOWN ON THE PLANS OR AS DIRECTED BY THE ENGINEER.

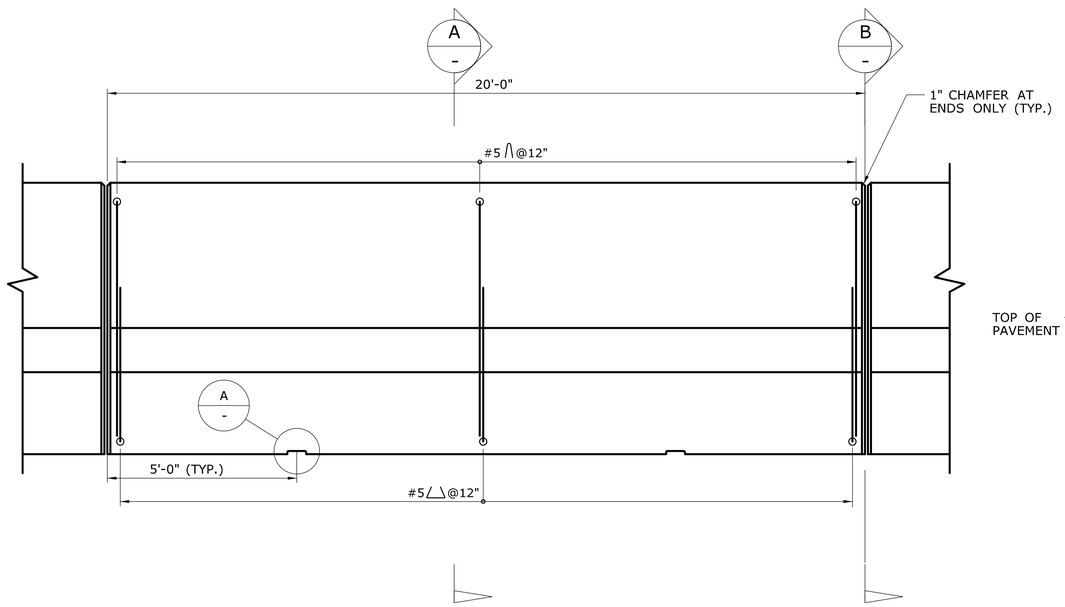

ELEVATION

30" x 32" PRECAST CONCRETE BARRIER CURB UNIT

VERTICAL SCALE: 1" = 1'-0"
HORIZONTAL SCALE: 1/2" = 1'-0"

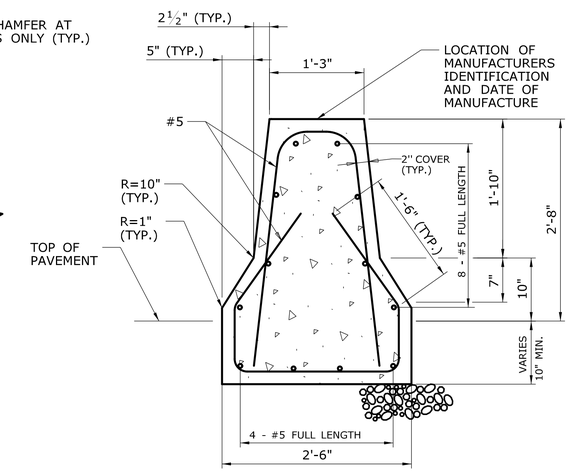

SECTION A
SCALE: 1" = 1'-0"

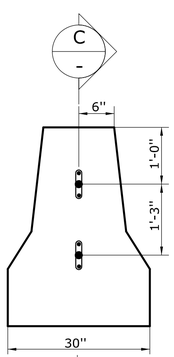

SECTION B
NTS

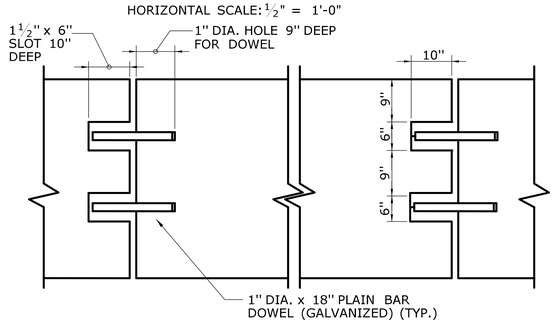

SECTION C
NTS

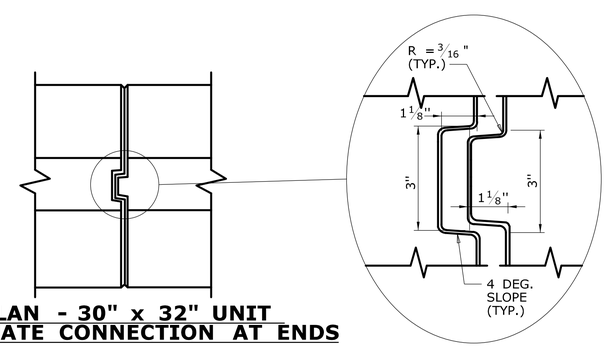

PLAN - 30" x 32" UNIT
ALTERNATE CONNECTION AT ENDS

PRELIMINARY DESIGN REVIEW

REV.	DATE	REVISION DESCRIPTION	SHEET NO.
-	-	-	-
-	-	-	-
-	-	-	-
-	-	-	-
-	-	-	-
-	-	-	-

THE INFORMATION, INCLUDING ESTIMATED QUANTITIES OF WORK, SHOWN ON THESE SHEETS IS BASED ON LIMITED INVESTIGATIONS BY THE STATE AND IS IN NO WAY WARRANTED TO INDICATE THE CONDITIONS OF ACTUAL QUANTITIES OF WORK WHICH WILL BE REQUIRED.

Plotted Date: 3/1/2013

DESIGNER/DRAFTER: RL/EK/MF
CHECKED BY: D. DAGAN
SCALE AS NOTED

STATE OF CONNECTICUT
DEPARTMENT OF TRANSPORTATION

Filename: ...\HW_MSH_MDS-3_FShapePCBC30X32.dgn

SIGNATURE/ BLOCK:

PROJECT TITLE: INTERSTATE 95 RESURFACING AND SAFETY IMPROVEMENTS

TOWN: OLD LYME & EAST LYME

DRAWING TITLE: F-SHAPE PRECAST CONCRETE BARRIER CURB (30" x 32")

PROJECT NO. 104-164
DRAWING NO. MDS-3
SHEET NO. 03.13

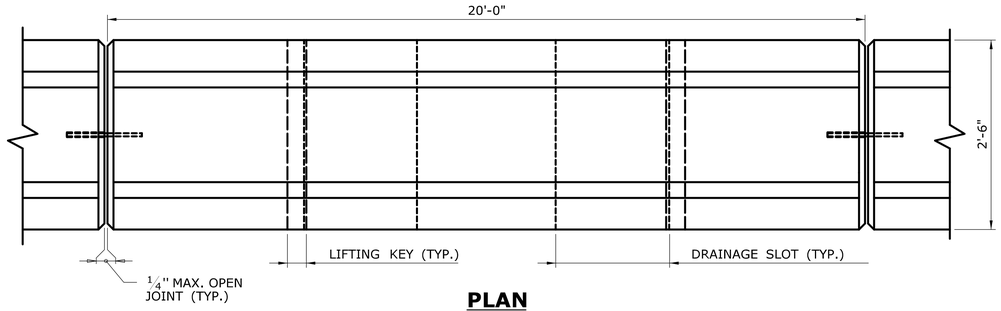

PLAN

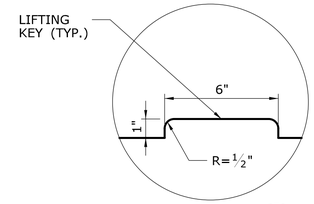

DETAIL A
SCALE: 3" = 1'-0"

GENERAL NOTES:

1. ALTERNATE DESIGNS FOR THE FOLLOWING ITEMS MAY BE SUBSTITUTED TO THE ENGINEER FOR APPROVAL :
   A) UNIT END CONNECTIONS SIMILAR TO DESIGNS SHOWN.
   B) LIFTING KEYS OR OTHER HANDLING DEVICES.
2. TERMINAL END TREATMENTS SHALL BE CONSTRUCTED AS SHOWN ON THE PLANS OR AS DIRECTED BY THE ENGINEER.

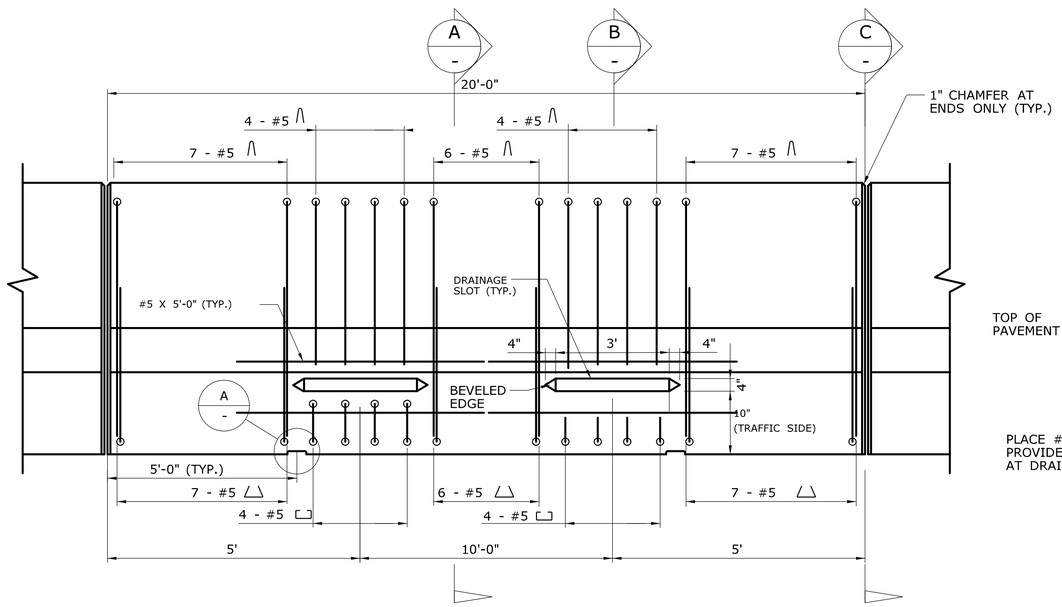

ELEVATION

30" x 32" PRECAST CONCRETE BARRIER CURB UNIT

VERTICAL SCALE: 1" = 1'-0"
HORIZONTAL SCALE: 1/2" = 1'-0"

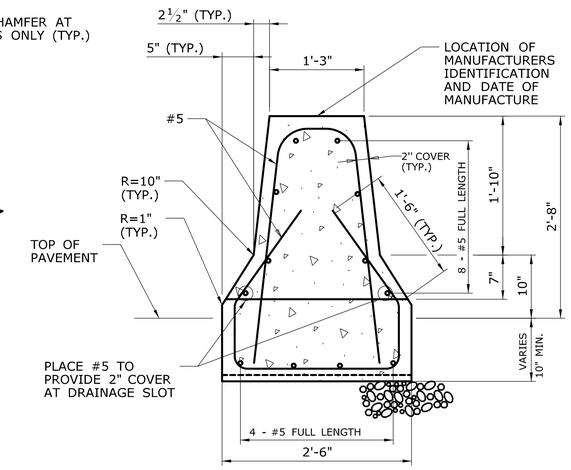

SECTION A
SCALE: 1" = 1'-0"

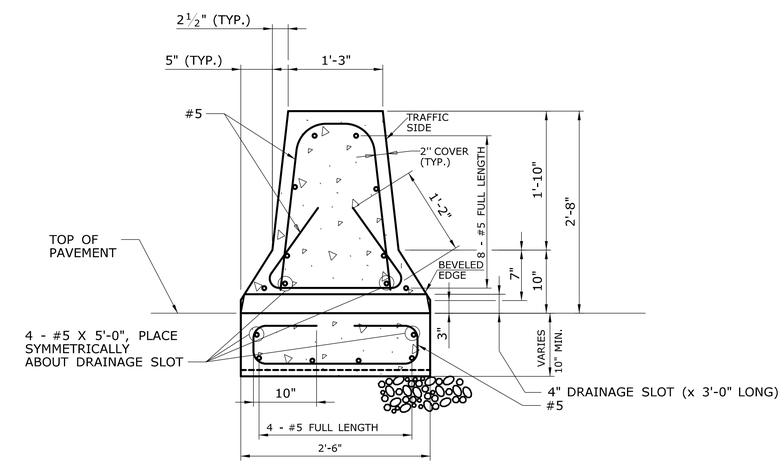

SECTION B
SCALE: 1" = 1'-0"

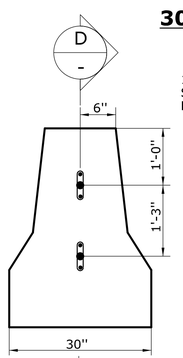

SECTION C
NTS

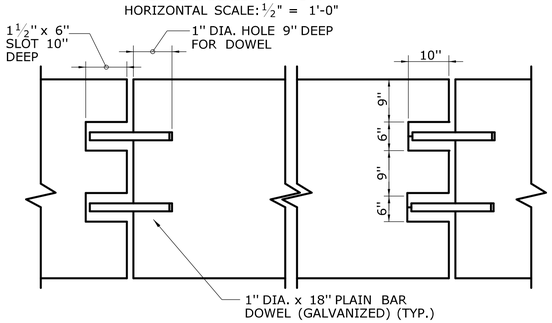

SECTION D
NTS

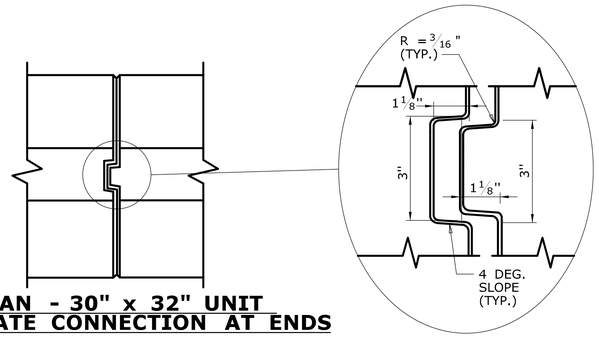

PLAN - 30" x 32" UNIT
ALTERNATE CONNECTION AT ENDS
NTS

PRELIMINARY DESIGN REVIEW

REV.	DATE	REVISION DESCRIPTION	SHEET NO.
-	-	-	-
-	-	-	-
-	-	-	-
-	-	-	-
-	-	-	-
-	-	-	-

THE INFORMATION, INCLUDING ESTIMATED QUANTITIES OF WORK, SHOWN ON THESE SHEETS IS BASED ON LIMITED INVESTIGATIONS BY THE STATE AND IS IN NO WAY WARRANTED TO INDICATE THE CONDITIONS OF ACTUAL QUANTITIES OF WORK WHICH WILL BE REQUIRED.

Plotted Date: 3/1/2013

DESIGNER/DRAFTER: RL/EK/MF
CHECKED BY: D. DAGAN
SCALE AS NOTED

STATE OF CONNECTICUT
DEPARTMENT OF TRANSPORTATION

Filename: ...\HW_MSH_MDS-4_FShapePCBCWithDS30X32.dgn

SIGNATURE/ BLOCK:

PROJECT TITLE:
INTERSTATE 95 RESURFACING AND SAFETY IMPROVEMENTS

TOWN: **OLD LYME & EAST LYME**

DRAWING TITLE: **F-SHAPE PRECAST CONCRETE BARRIER CURB WITH DRAINAGE SLOTS (30" x 32")**

PROJECT NO. **104-164**
DRAWING NO. **MDS-4**
SHEET NO. **03.14**

GENERAL NOTES :

1. ALTERNATE DESIGNS FOR THE LIFTING KEYS OR OTHER HANDLING DEVICES MAY BE SUBMITTED TO THE ENGINEER FOR APPROVAL.
2. COST OF THIS BARRIER SHALL BE PAID UNDER THE ITEM "F-SHAPE PRECAST CONCRETE BARRIER CURB (30"x45")".
3. 100' LENGTH OF 54" VERTICAL FACE BARRIER REQUIRED PRIOR TO OBJECT.

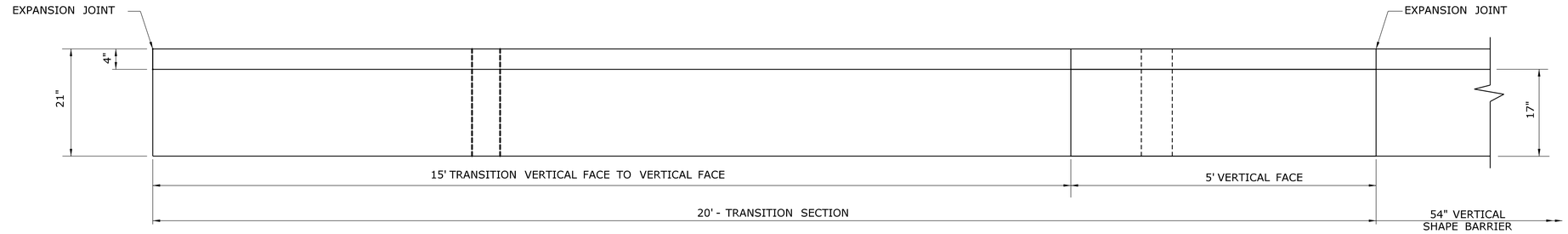

PLAN - BARRIER TRANSITION

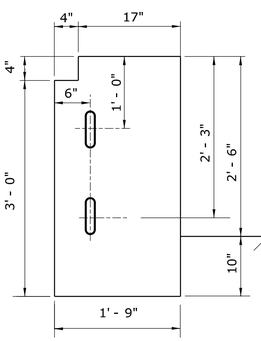

SECTION "A-A"

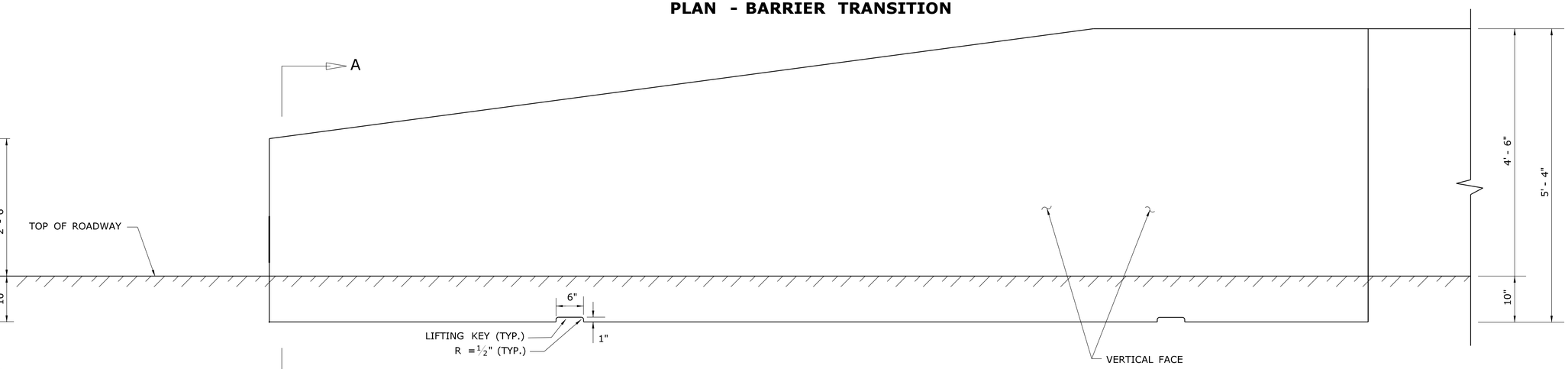

FRONT ELEVATION - BARRIER TRANSITION

NOTE:
REINFORCEMENT BARS NOT SHOWN
SEE SHEET MDS-6 FOR REINFORCING.

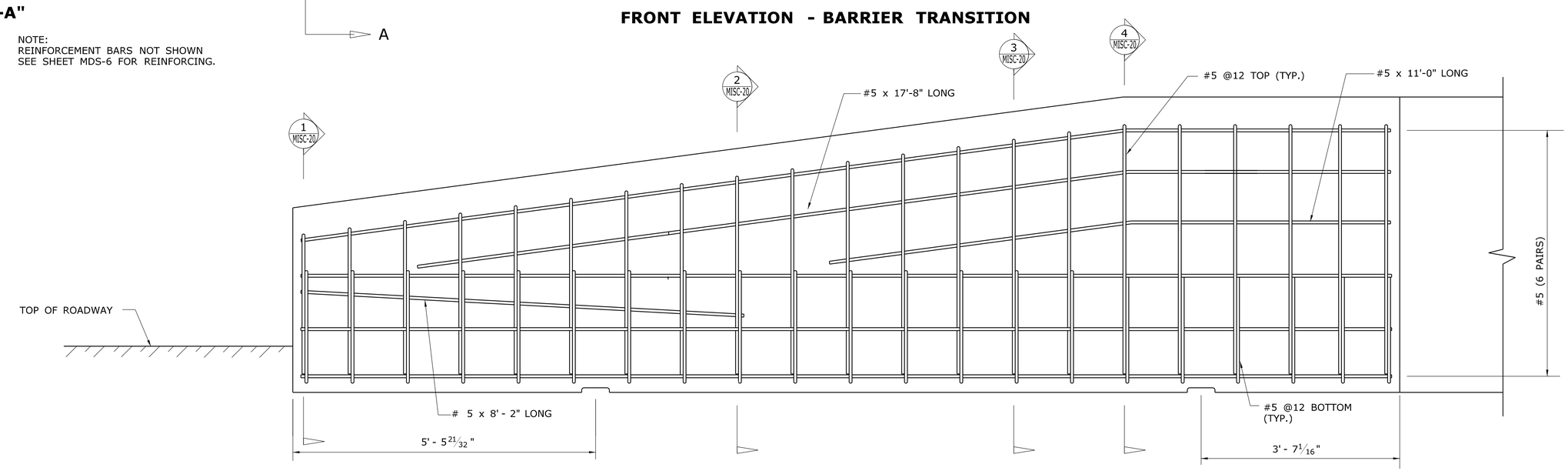

FRONT ELEVATION - TRANSITION BARRIER REINFORCEMENT

PRELIMINARY DESIGN REVIEW

REV.	DATE	REVISION DESCRIPTION	SHEET NO.
-	-	-	-
-	-	-	-
-	-	-	-
-	-	-	-
-	-	-	-
-	-	-	-

THE INFORMATION, INCLUDING ESTIMATED QUANTITIES OF WORK, SHOWN ON THESE SHEETS IS BASED ON LIMITED INVESTIGATIONS BY THE STATE AND IS IN NO WAY WARRANTED TO INDICATE THE CONDITIONS OF ACTUAL QUANTITIES OF WORK WHICH WILL BE REQUIRED.

Plotted Date: 3/4/2013

DESIGNER/DRAFTER: RL/EK/MF
CHECKED BY: D. DAGAN
SCALE AS NOTED

STATE OF CONNECTICUT
DEPARTMENT OF TRANSPORTATION

Filename: ...\HW_MSH_MDS-5_54VertTo30Vert.dgn

SIGNATURE/ BLOCK:

PROJECT TITLE: INTERSTATE 95 RESURFACING AND SAFETY IMPROVEMENTS

TOWN: OLD LYME & EAST LYME

DRAWING TITLE: TRANSITION OF 30" HIGH VERTICAL TO 54" VERTICAL-SHAPE CONCRETE BARRIER

PROJECT NO. 104-164
DRAWING NO. MDS-5
SHEET NO. 03.15

NOTE:

MINIMUM SPLICE LENGTH FOR ALL BARS IS 1'-9"

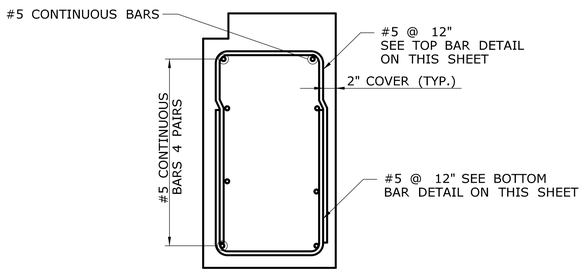

SECTION - BAR 1 (1 / MISC-19)

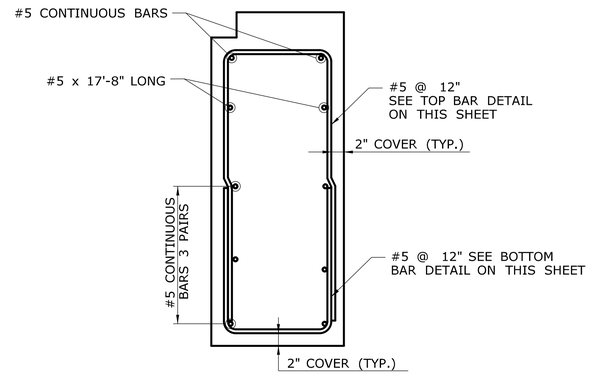

SECTION - BAR 9 (2 / MISC-19)

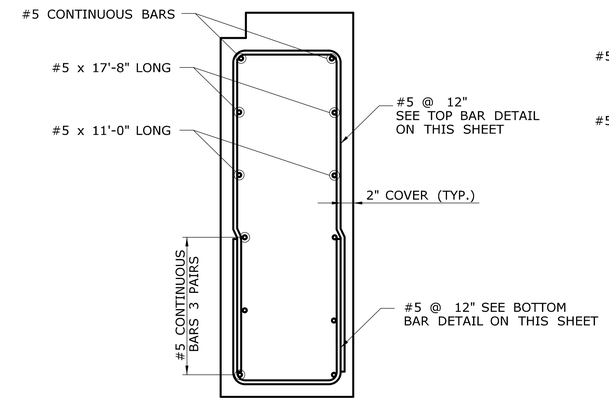

SECTION - BAR 14 (3 / MISC-19)

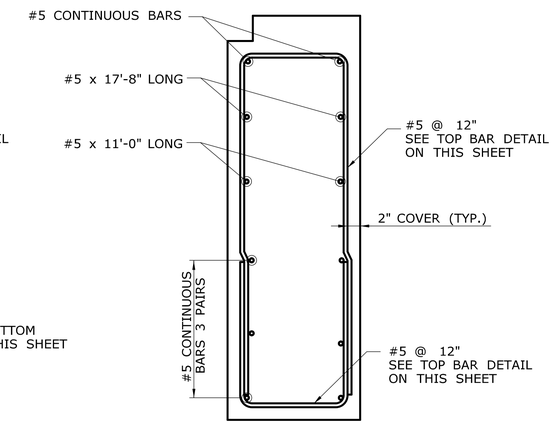

SECTION - BAR 16 (4 / MISC-19)

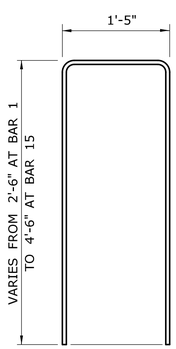

TOP BARS
BARS 1 TO 15

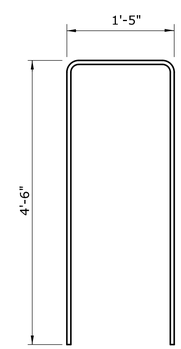

TOP BARS
BARS 16 TO 21

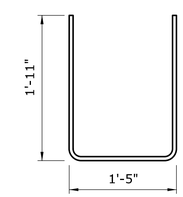

BOTTOM BARS
BARS 1 TO 21

PRELIMINARY DESIGN REVIEW

REV.	DATE	REVISION DESCRIPTION	SHEET NO.
-	-	-	-
-	-	-	-
-	-	-	-
-	-	-	-
-	-	-	-
-	-	-	-

THE INFORMATION, INCLUDING ESTIMATED QUANTITIES OF WORK, SHOWN ON THESE SHEETS IS BASED ON LIMITED INVESTIGATIONS BY THE STATE AND IS IN NO WAY WARRANTED TO INDICATE THE CONDITIONS OF ACTUAL QUANTITIES OF WORK WHICH WILL BE REQUIRED.

Plotted Date: 3/1/2013

DESIGNER/DRAFTER: RL/EK/MF
CHECKED BY: D. DAGAN
SCALE AS NOTED

STATE OF CONNECTICUT
DEPARTMENT OF TRANSPORTATION

Filename: ...\HW_MSH_MDS-6_54VertTo30Vert2.dgn

SIGNATURE/
BLOCK:

PROJECT TITLE:
INTERSTATE 95
RESURFACING AND SAFETY
IMPROVEMENTS

TOWN: OLD LYME & EAST LYME

DRAWING TITLE:
TRANSITION OF 30" HIGH VERTICAL
TO 54" VERTICAL-SHAPE CONCRETE BARRIER

PROJECT NO. 104-164
DRAWING NO. MDS-6
SHEET NO. 03.16

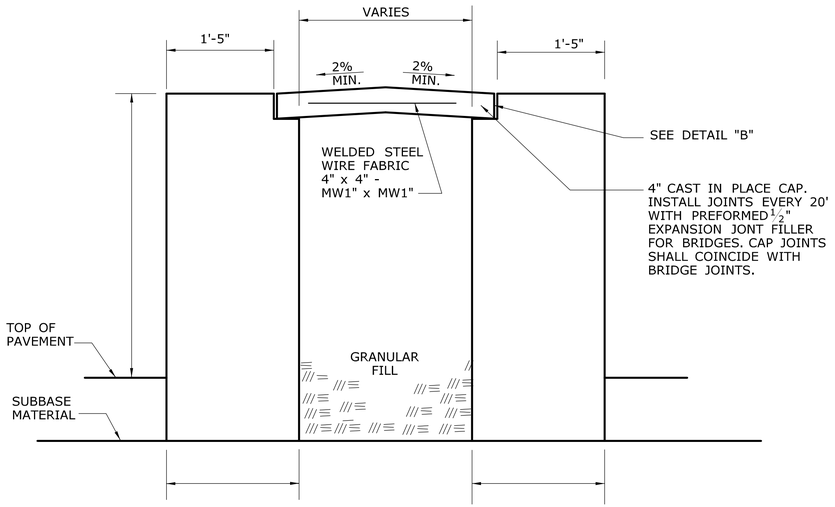

SECTION "A-A"

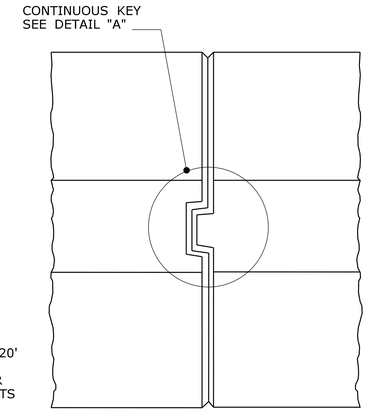

KEY CONNECTION AT ENDS PLAN VIEW

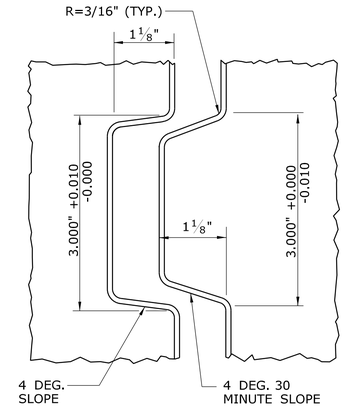

DETAIL "A"

GENERAL NOTES:

1. ALTERNATE DESIGNS FOR UNIT END CONNECTIONS SIMILAR TO THE DESIGNS SHOWN MAY BE SUBMITTED TO THE ENGINEER FOR APPROVAL.
2. TERMINAL END TREATMENTS SHALL BE CONSTRUCTED AS SHOWN ON THE PLANS OR AS DIRECTED BY THE ENGINEER.
3. THE JOINT SEAL, JOINT FILLER FOR BRIDGES, AND WELDED STEEL WIRE FABRIC SHALL BE PAID FOR AS PART OF CLASS "A" CONCRETE.

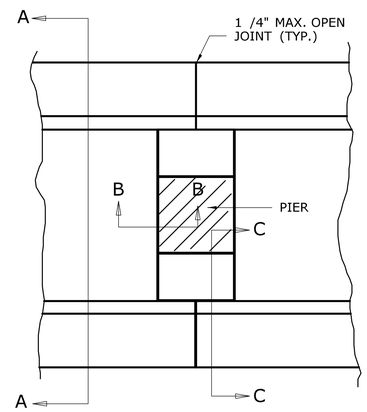

PLAN VIEW AT PIER

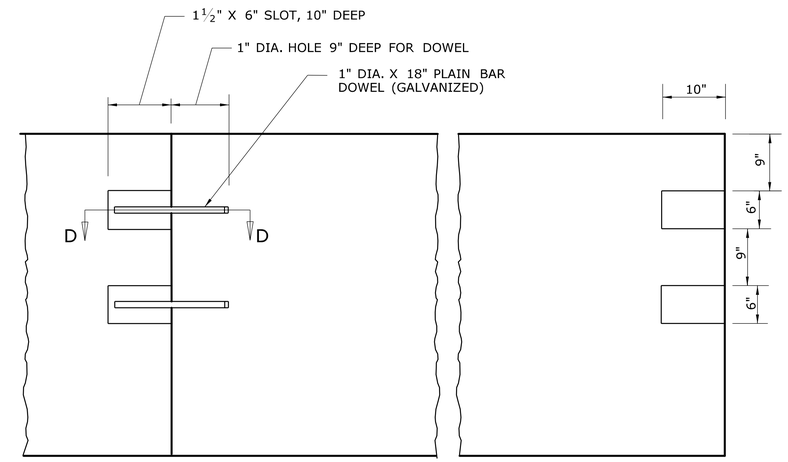

DOWEL CONNECTION AT ENDS PROFILE VIEW

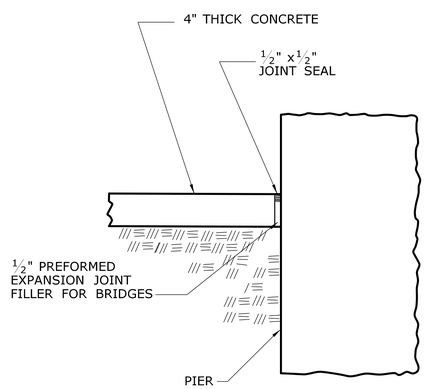

SECTION "B-B"

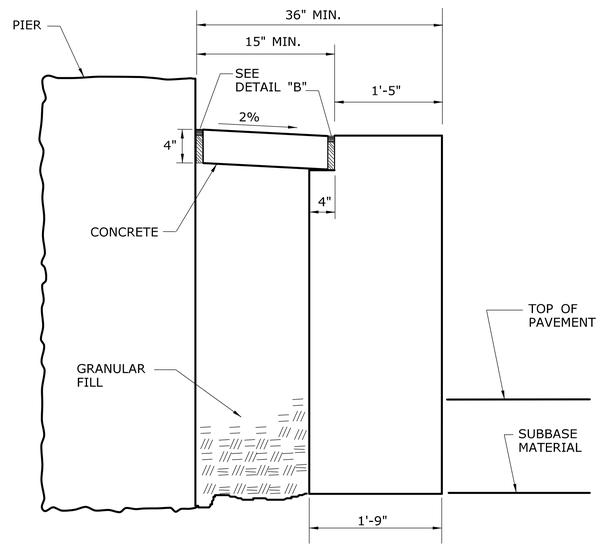

SECTION "C-C"

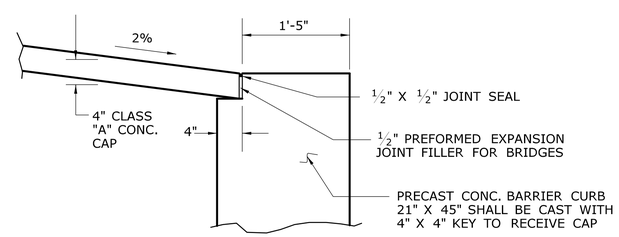

DETAIL "B"

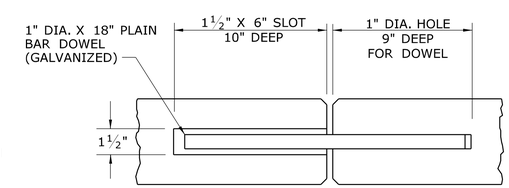

SECTION "D-D"

PRELIMINARY DESIGN REVIEW

REV.	DATE	REVISION DESCRIPTION	SHEET NO.
-	-	-	-
-	-	-	-
-	-	-	-
-	-	-	-
-	-	-	-
-	-	-	-

THE INFORMATION, INCLUDING ESTIMATED QUANTITIES OF WORK, SHOWN ON THESE SHEETS IS BASED ON LIMITED INVESTIGATIONS BY THE STATE AND IS IN NO WAY WARRANTED TO INDICATE THE CONDITIONS OF ACTUAL QUANTITIES OF WORK WHICH WILL BE REQUIRED.

Plotted Date: 3/1/2013

DESIGNER/DRAFTER: RL/EK/MF
CHECKED BY: D. DAGAN
SCALE AS NOTED

STATE OF CONNECTICUT
DEPARTMENT OF TRANSPORTATION

Filename: ...\HW_MSH_MDS-7_54VertTo30Vert3.dgn

SIGNATURE/ BLOCK:

PROJECT TITLE:
INTERSTATE 95 RESURFACING AND SAFETY IMPROVEMENTS

TOWN: OLD LYME & EAST LYME

DRAWING TITLE:
TRANSITION OF 30" HIGH VERTICAL TO 54" VERTICAL-SHAPE CONCRETE BARRIER

PROJECT NO. 104-164
DRAWING NO. MDS-7
SHEET NO. 03.17

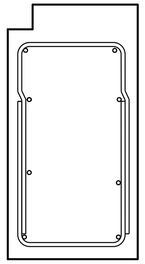

BAR 1

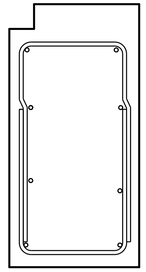

BAR 2

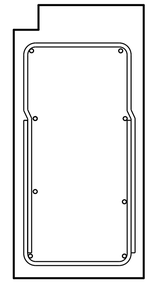

BAR 3

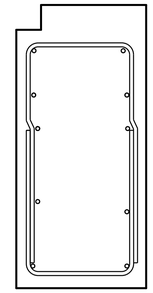

BAR 4

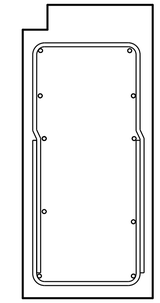

BAR 5

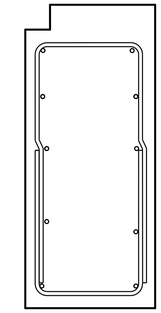

BAR 6

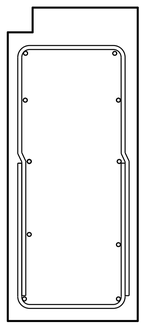

BAR 7

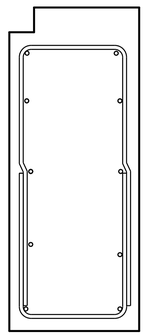

BAR 8

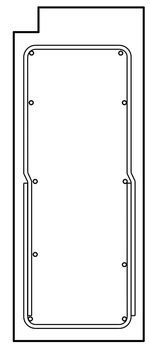

BAR 9

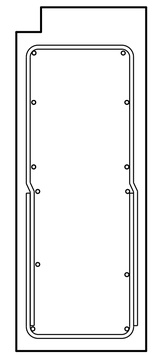

BAR 10

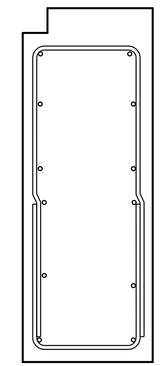

BAR 11

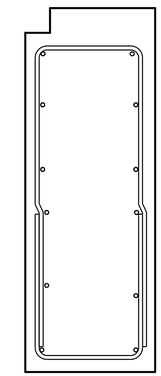

BAR 12

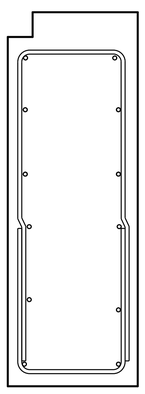

BAR 13

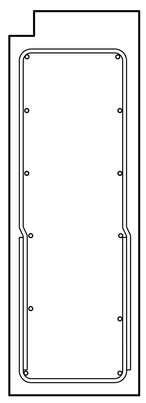

BAR 14

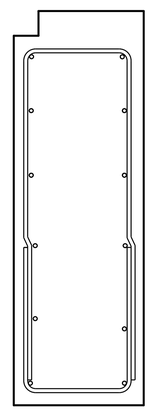

BAR 15

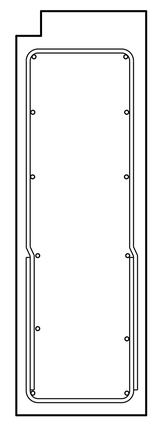

BAR 16

PRELIMINARY DESIGN REVIEW

REV.	DATE	REVISION DESCRIPTION	SHEET NO.
-	-	-	-
-	-	-	-
-	-	-	-
-	-	-	-
-	-	-	-
-	-	-	-

THE INFORMATION, INCLUDING ESTIMATED QUANTITIES OF WORK, SHOWN ON THESE SHEETS IS BASED ON LIMITED INVESTIGATIONS BY THE STATE AND IS IN NO WAY WARRANTED TO INDICATE THE CONDITIONS OF ACTUAL QUANTITIES OF WORK WHICH WILL BE REQUIRED.

Plotted Date: 3/1/2013

DESIGNER/DRAFTER: RL/EK/MF

CHECKED BY: D. DAGAN

SCALE AS NOTED

STATE OF CONNECTICUT
DEPARTMENT OF TRANSPORTATION

Filename: ...\HW_MSH_MDS-8_54VertTo30Vert4.dgn

SIGNATURE/
BLOCK:

PROJECT TITLE:
INTERSTATE 95
RESURFACING AND SAFETY
IMPROVEMENTS

TOWN: OLD LYME & EAST LYME

DRAWING TITLE:
TRANSITION OF 30" HIGH VERTICAL
TO 54" VERTICAL-SHAPE CONCRETE BARRIER

PROJECT NO. 104-164

DRAWING NO. MDS-8

SHEET NO. 03.18

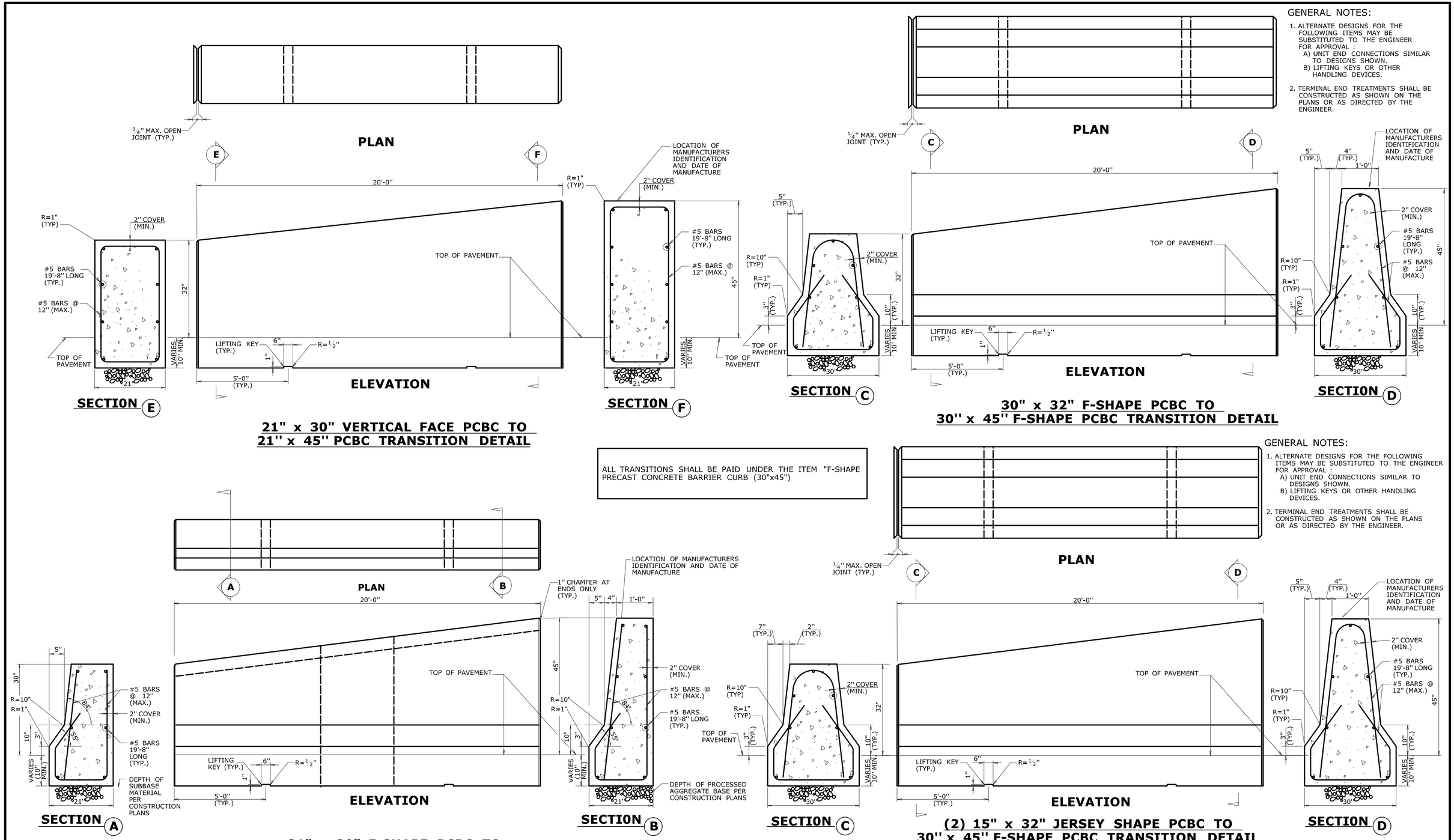

GENERAL NOTES:

1. ALTERNATE DESIGNS FOR THE FOLLOWING ITEMS MAY BE SUBSTITUTED TO THE ENGINEER FOR APPROVAL :
   A) UNIT END CONNECTIONS SIMILAR TO DESIGNS SHOWN.
   B) LIFTING KEYS OR OTHER HANDLING DEVICES.
2. TERMINAL END TREATMENTS SHALL BE CONSTRUCTED AS SHOWN ON THE PLANS OR AS DIRECTED BY THE ENGINEER.

ALL TRANSITIONS SHALL BE PAID UNDER THE ITEM "F-SHAPE PRECAST CONCRETE BARRIER CURB (30"x45")

PRELIMINARY DESIGN REVIEW

REV.	DATE	REVISION DESCRIPTION	SHEET NO.
-	-	-	
-	-	-	
-	-	-	
-	-	-	
-	-	-	
-	-	-	

THE INFORMATION, INCLUDING ESTIMATED QUANTITIES OF WORK, SHOWN ON THESE SHEETS IS BASED ON LIMITED INVESTIGATIONS BY THE STATE AND IS IN NO WAY WARRANTED TO INDICATE THE CONDITIONS OF ACTUAL QUANTITIES OF WORK WHICH WILL BE REQUIRED.

Plotted Date: 3/4/2013

DESIGNER/DRAFTER: RL/EK/MF
CHECKED BY: D. DAGAN
SCALE AS NOTED

STATE OF CONNECTICUT
DEPARTMENT OF TRANSPORTATION

Filename: ...\HW_MSH_MDS-9_MiscConcreteBCTransitions.dgn

SIGNATURE/ BLOCK:

PROJECT TITLE: INTERSTATE 95 RESURFACING AND SAFETY IMPROVEMENTS

TOWN: OLD LYME & EAST LYME

DRAWING TITLE: MISCELLANEOUS CONCRETE BARRIER CURB TRANSITIONS

PROJECT NO. 104-164
DRAWING NO. MDS-9
SHEET NO. 03.19

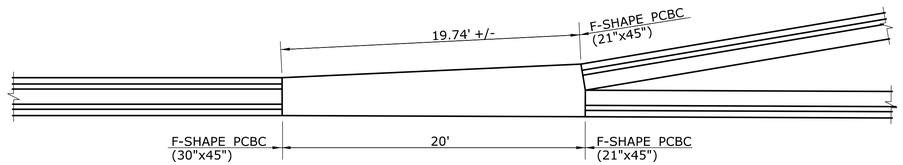

C-I-P CONCRETE MEDIAN BARRIER TRANSITION

(APPROXIMATE STA. 222+08 TO STA. 222+28)

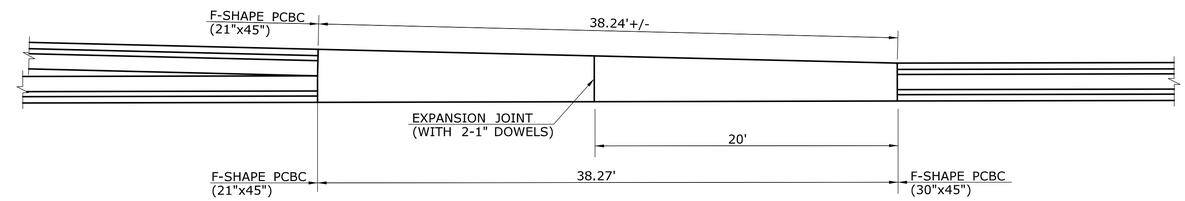

C-I-P CONCRETE MEDIAN BARRIER TRANSITION

(APPROXIMATE STA. 227+26 TO STA. 227+64)

ALL TRANSITIONS FROM F-SHAPE PCBC (30"x45") TO F-SHAPE PCBC (21"x45") SHALL BE PAID UNDER THE ITEM "F-SHAPE PRECAST CONCRETE BARRIER CURB (30"x45")

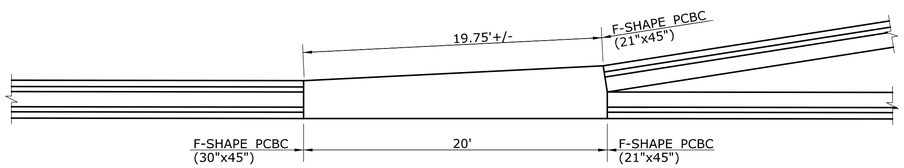

C-I-P CONCRETE MEDIAN BARRIER TRANSITION

(APPROXIMATE STA. 279+16 TO STA. 279+36)

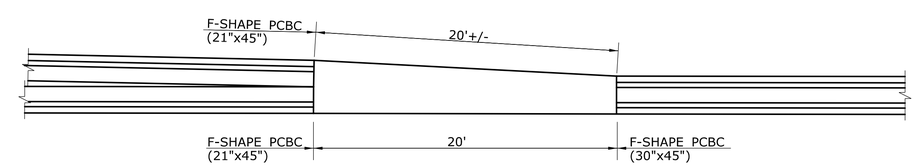

C-I-P CONCRETE MEDIAN BARRIER TRANSITION

(APPROXIMATE STA. 285+97 TO STA. 286+17)

PRELIMINARY DESIGN REVIEW

REV.	DATE	REVISION DESCRIPTION	SHEET NO.
-	-	-	
-	-	-	
-	-	-	
-	-	-	
-	-	-	
-	-	-	

THE INFORMATION, INCLUDING ESTIMATED QUANTITIES OF WORK, SHOWN ON THESE SHEETS IS BASED ON LIMITED INVESTIGATIONS BY THE STATE AND IS IN NO WAY WARRANTED TO INDICATE THE CONDITIONS OF ACTUAL QUANTITIES OF WORK WHICH WILL BE REQUIRED.

Plotted Date: 3/1/2013

DESIGNER/DRAFTER: **RL/EK/MF**
CHECKED BY: **D. DAGAN**
SCALE AS NOTED

STATE OF CONNECTICUT
DEPARTMENT OF TRANSPORTATION

Filename: ...\HW_MSH_MDS-10_MiscF_ShapeTransitions.dgn

SIGNATURE/
BLOCK:

PROJECT TITLE:
INTERSTATE 95 RESURFACING AND SAFETY IMPROVEMENTS

TOWN: **OLD LYME & EAST LYME**

DRAWING TITLE:
MISCELLANEOUS F-SHAPE PCBC (30"x45") TRANSITIONS TO F-SHAPE PCBC (21"x45")

PROJECT NO. **104-164**
DRAWING NO. **MDS-10**
SHEET NO. **03.20**

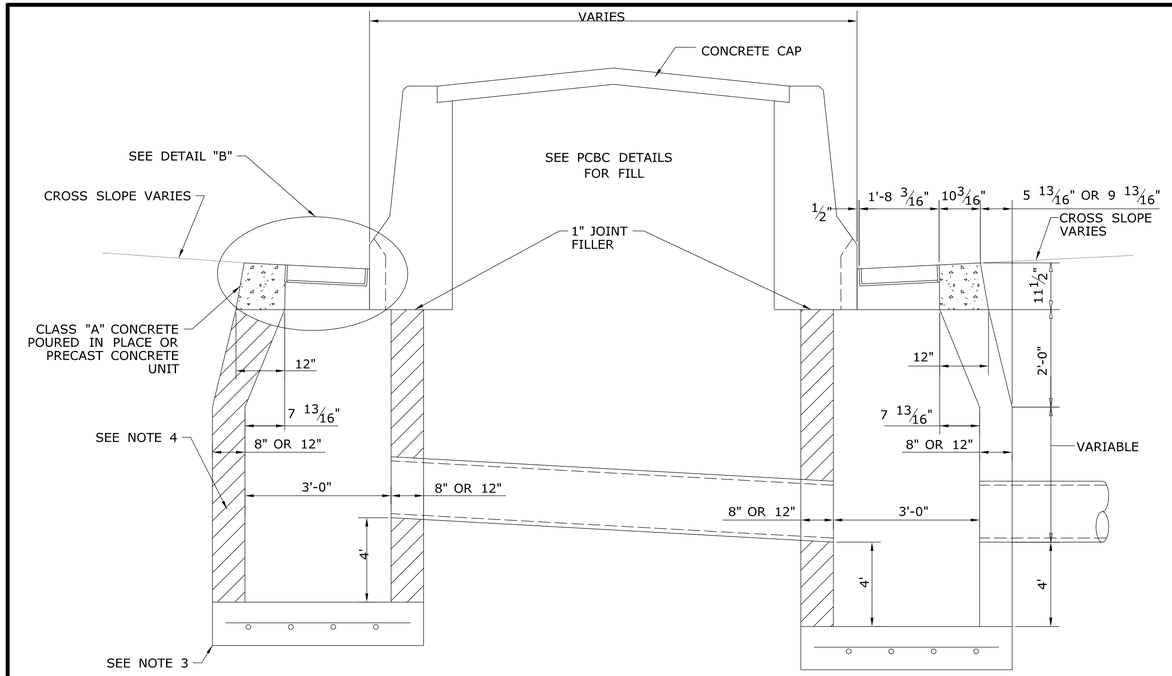

SECTION A - A

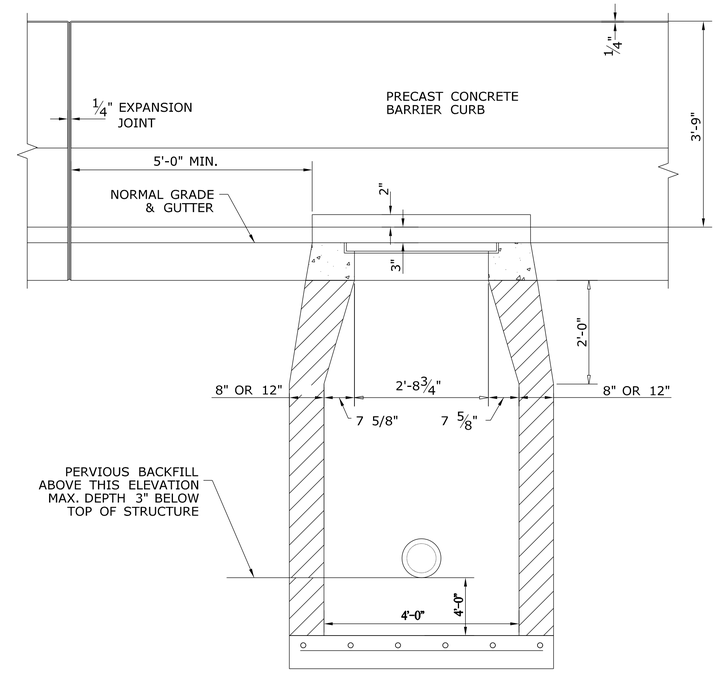

SECTION B - B

NOTES:

1.) FOR OTHER PERTINENT DETAILS AND DIMENSIONS NOT SHOWN SEE CDOT STANDARD SHEET NO. 507-K AND MISCELLANEOUS DETAILS.

2.) FOR CATCH BASINS UP TO 10' DEEP USE 8" REINFORCED CONCRETE SLAB BASE, #6 SHORT BARS AT 12" ON CENTER AND #5 LONG BARSAT 12" ON CENTER (MIN. 3" COVER). FOR CATCH BASINS OVER 10' DEEP USE 12" REINFORCED CONCRETE SLAB BASE, #6 SHORT BAR AT 12" ON CENTER AND #5 LONG BARS AT 12" ON CENTER (MIN. 3" COVER).

3.) FOR CATCH BASINS UP TO 10' DEEP USE 8" CLASS "A" CONCRETE WALLS, REINFORCED WITH #4 BARS AT 9" HORIZONTAL AND #4 BARS AT 12" VERTICAL (ONE LAYER AT C.L. OF WALL) (REINFORCEMENT TO BE CONTINUOUS AROUND CORNERS), OR 12" CONCRETE MASONRY UNITS. FOR CATCH BASINS OVER 10' DEEP USE 12" CLASS "A" CONCRETE WALLS, REINFORCED WITH #5 BARS AT 12" ON CENTER E.F. HORIZONTAL AND #4 BARS AT 12" ON CENTER E.F. VERTICAL (REINFORCEMENT TO HAVE 2" COVER AND TO BE CONTINUOUS AROUND CORNERS).

4.) ALL GRATES SHALL BE TYPE B. FOR DETAILS OF FRAME & GRATE SEE STANDARD DETAIL SHEET 507-K.

5.) THE COST OF MORTAR FILL AND JOINT SEAL SHALL BE INCLUDED IN THE CONTRACT UNIT PRICE FOR EACH 'C-M' CATCH BASIN.

6.) THE COST OF CASTING THROAT SHALL BE INCLUDED IN CONTRACT UNIT PRICE PER L.F. FOR PRECAST CONCRETE BARRIER CURB OF THE APPROPRIATE SHAPE AND SIZE.

7.) FOR DETAILS AND DIMENSIONS OF PRECAST CONCRETE BARRIER CURB INCLUDING REINFORCING STEEL NOT SHOWN, SEE MISCELLANEOUS DETAILS.

8.) THE COST OF PERMANENT CATCH BASIN TOPS AND THEIR INITIALINSTALLATION SHALL BE INCLUDED IN THE CONTRACT UNIT PRICE FOR EACH TYPE 'C-M' CATCH BASIN.

9.) THE COST OF THE PERVIOUS BACKFILL SHALL BE INCLUDED IN THE CONTRACT UNIT PRICE FOR EACH TYPE 'C-M' CATCH BASIN.

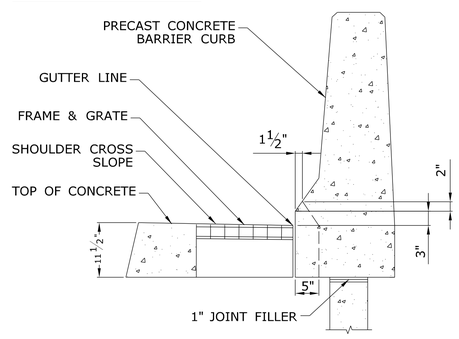

DETAIL "B"

NOTE:
TYPE 'CM-1' CATCH BASINS ARE LOCATED IN WIDE MEDIAN AREAS WHERE ONLY ONE PRECAST CONCRETE BARRIER CURB CROSSES THE TOP SLAB. THEREFORE, TOP SLABS SHALL ONLY HAVE ONE OPENING AS SHOWN ON ROADWAY SECTIONS.

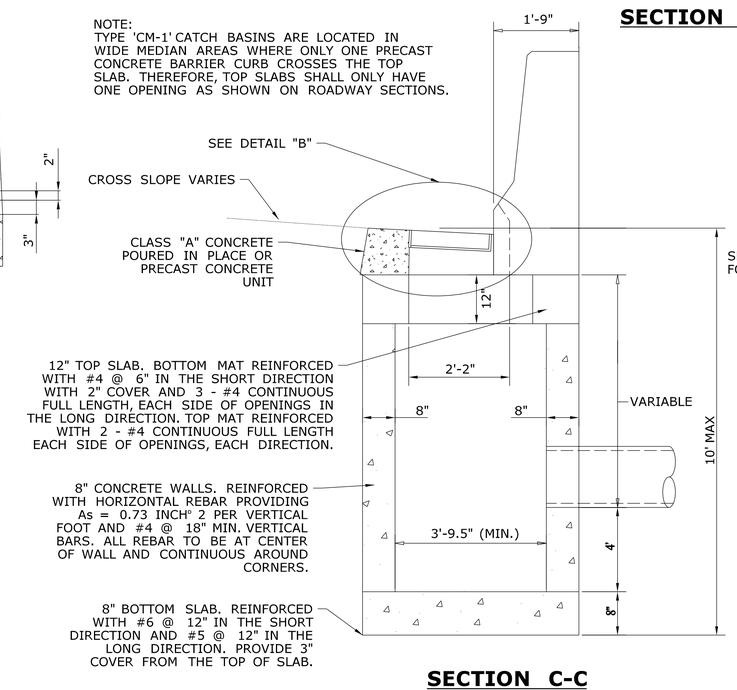

SECTION C-C

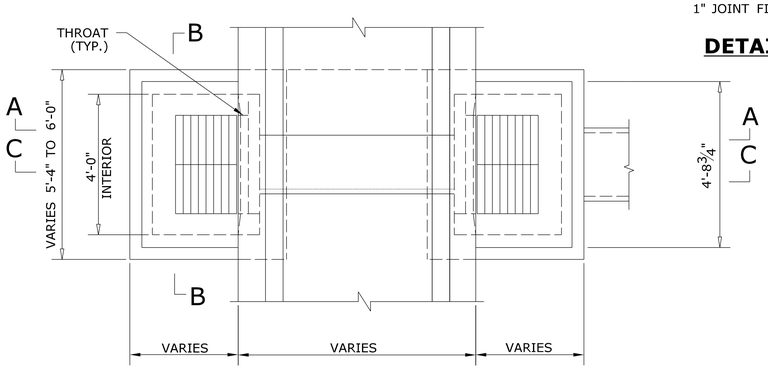

PLAN

TYPE 'C-M' CATCH BASIN

NOT TO SCALE

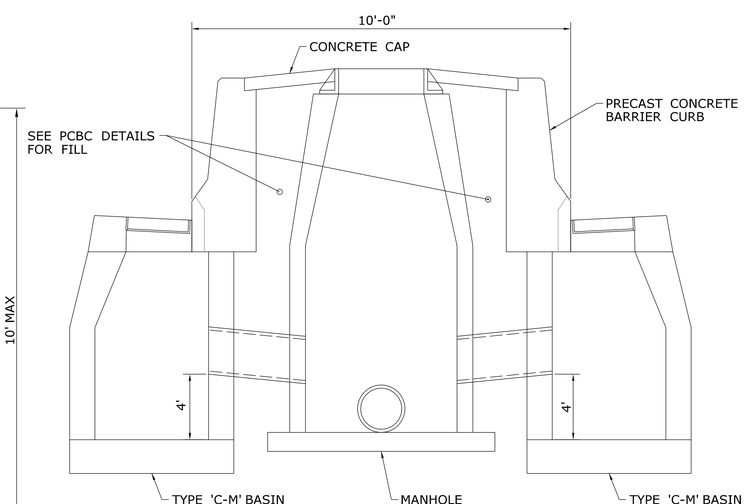

TYPE "C-M" CATCH BASIN WITH CONCRETE CAP AND MANHOLE

NOT TO SCALE

PRELIMINARY DESIGN REVIEW

REV.	DATE	REVISION DESCRIPTION	SHEET NO.
-	-	-	-
-	-	-	-
-	-	-	-
-	-	-	-
-	-	-	-
-	-	-	-

THE INFORMATION, INCLUDING ESTIMATED QUANTITIES OF WORK, SHOWN ON THESE SHEETS IS BASED ON LIMITED INVESTIGATIONS BY THE STATE AND IS IN NO WAY WARRANTED TO INDICATE THE CONDITIONS OF ACTUAL QUANTITIES OF WORK WHICH WILL BE REQUIRED.

Plotted Date: 3/1/2013

DESIGNER/DRAFTER: RL/EK/MF
CHECKED BY: D.DAGAN
SCALE AS NOTED

STATE OF CONNECTICUT
DEPARTMENT OF TRANSPORTATION

Filename: ...\HW_MSH_MDS-11_Type C-M Catch Basin.dgn

SIGNATURE/ BLOCK:

PROJECT TITLE: INTERSTATE 95 RESURFACING AND SAFETY IMPROVEMENTS

TOWN: OLD LYME & EAST LYME

DRAWING TITLE: TYPE "C-M" CATCH BASIN

PROJECT NO. 104-164
DRAWING NO. MDS-11
SHEET NO. 03.21

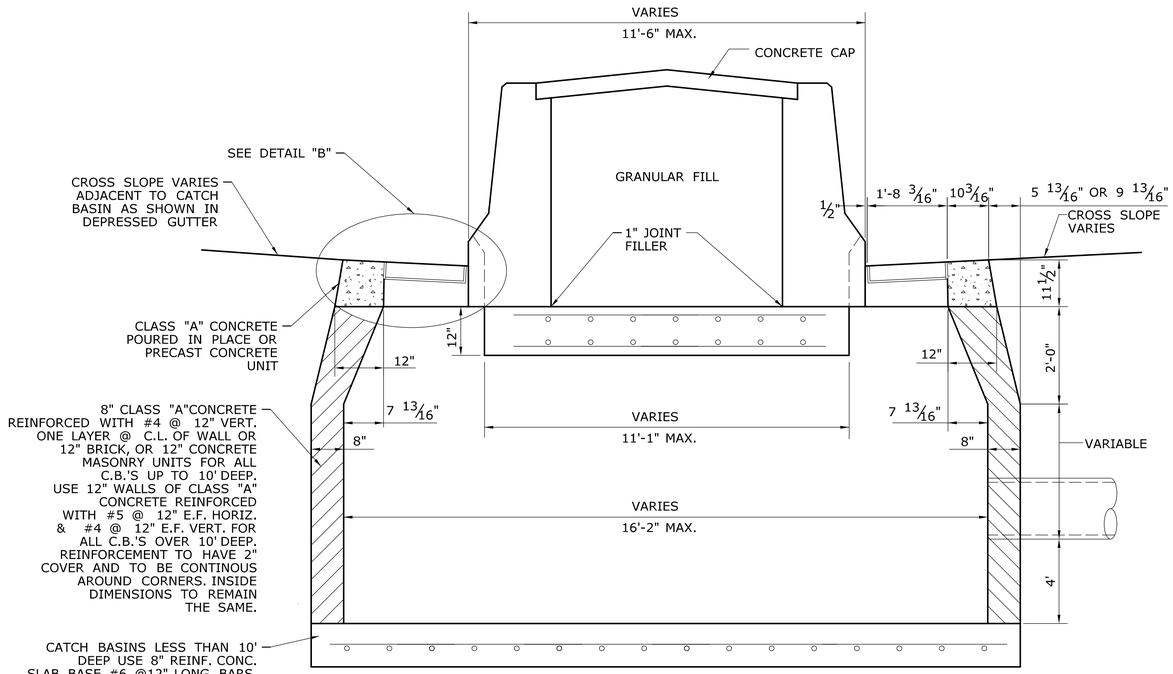

SECTION A - A

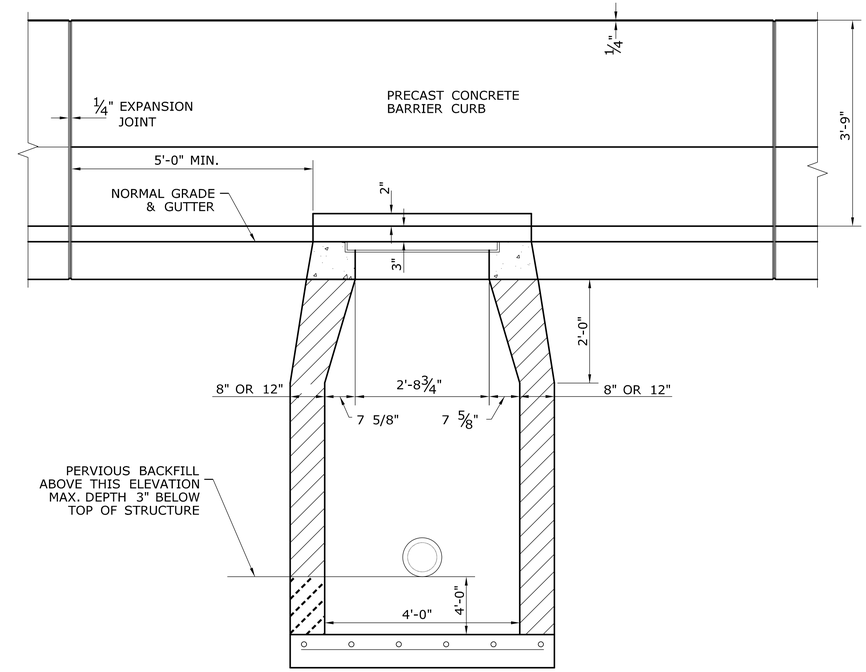

SECTION B - B

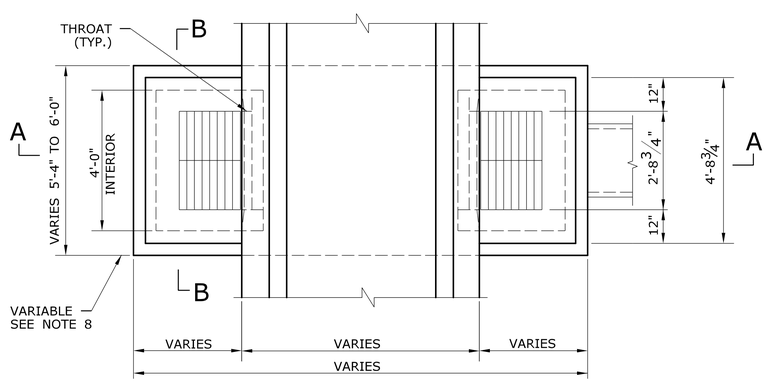

PLAN

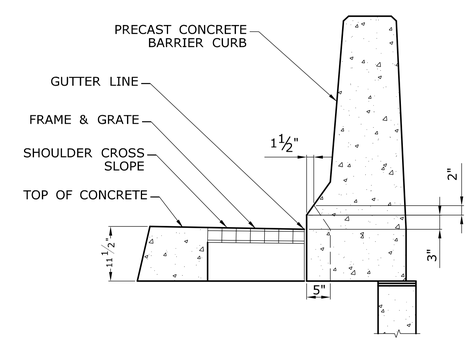

DETAIL "B"

TYPE 'C-M-2' CATCH BASIN

NOT TO SCALE

NOTES:

1.) FOR OTHER PERTINENT DETAILS AND DIMENSIONS NOT SHOWN SEE CDOT STANDARD SHEET NO. 507-K AND MISCELLANEOUS DETAILS.

2.) IF CONCRETE BARRIER CURB IS TO BE CAST IN PLACE, IT SHALL BE PAID FOR AT THE CONTRACT UNIT PRICE PER LINEAR FOOT FOR "F" SHAPE BARRIER CURB (21"x45"). WHICH PRICE SHALL INCLUDE ALL MATERIALS, EQUIPMENT, TOOLS, LABOR AND WORK INCIDENTAL THERETO.

3.) FOR CATCH BASINS UP TO 10' DEEP USE 8" REINFORCED CONCRETE SLAB BASE, #6 SHORT BARS AT 12" ON CENTER AND #5 LONG BARS AT 12" ON CENTER (MIN. 3" COVER). FOR CATCH BASINS OVER 10' DEEP USE 12" REINFORCED CONCRETE SLAB BASE, #6 SHORT BAR AT 12" ON CENTER AND #5 LONG BARS AT 12" ON CENTER (MIN. 3" COVER).

4.) FOR CATCH BASINS UP TO 10' DEEP USE 8" CLASS "A" CONCRETE WALLS, REINFORCED WITH #4 BARS AT 9" HORIZONTAL AND #4 BARS AT 12" VERTICAL (ONE LAYER AT C.L. OF WALL) (REINFORCEMENT TO BE CONTINUOUS AROUND CORNERS), OR 12" CONCRETE MASONRY UNITS. FOR CATCH BASINS OVER 10' DEEP USE 12" CLASS "A" CONCRETE WALLS, REINFORCED WITH #5 BARS AT 12" ON CENTER E.F. HORIZONTAL AND #4 BARS AT 12" ON CENTER E.F. VERTICAL (REINFORCEMENT TO HAVE 2" COVER AND TO BE CONTINUOUS AROUND CORNERS).

5.) ALL GRATES SHALL BE TYPE B. FOR DETAILS OF FRAME & GRATE SEE STANDARD DETAIL SHEET 507-K.

6.) THE COST OF MORTAR FILL AND JOINT SEAL SHALL BE INCLUDED IN THE CONTRACT UNIT PRICE FOR EACH 'C-M' CATCH BASIN.

7.) THE COST OF CASTING THROAT SHALL BE INCLUDED IN CONTRACT UNIT PRICE PER L.F. FOR "F" SHAPE BARRIER CURB (21"x45").

8.) FOR DETAILS AND DIMENSIONS OF PRECAST CONCRETE BARRIER CURB INCLUDING REINFORCING STEEL NOT SHOWN, SEE MISCELLANEOUS DETAILS.

9.) THE COST OF PERMANENT CATCH BASIN TOPS AND THEIR INITIALINSTALLATION SHALL BE INCLUDED IN THE CONTRACT UNIT PRICE FOR EACH TYPE 'C-M' CATCH BASIN.

10.) THE COST OF THE PERVIOUS BACKFILL SHALL BE INCLUDED IN THE CONTRACT UNIT PRICE FOR EACH TYPE 'C-M-2' CATCH BASIN.

PRELIMINARY DESIGN REVIEW

REV.	DATE	REVISION DESCRIPTION	SHEET NO.
-	-	-	-
-	-	-	-
-	-	-	-
-	-	-	-
-	-	-	-
-	-	-	-

THE INFORMATION, INCLUDING ESTIMATED QUANTITIES OF WORK, SHOWN ON THESE SHEETS IS BASED ON LIMITED INVESTIGATIONS BY THE STATE AND IS IN NO WAY WARRANTED TO INDICATE THE CONDITIONS OF ACTUAL QUANTITIES OF WORK WHICH WILL BE REQUIRED.

Plotted Date: 3/1/2013

DESIGNER/DRAFTER: RL/EK/MF
CHECKED BY: D.DAGAN
SCALE AS NOTED

STATE OF CONNECTICUT
DEPARTMENT OF TRANSPORTATION

Filename: ...\HW_MSH_MDS-12_Type C-M-2 Catch Basin.dgn

SIGNATURE/ BLOCK:

PROJECT TITLE: INTERSTATE 95 RESURFACING AND SAFETY IMPROVEMENTS

TOWN: OLD LYME & EAST LYME

DRAWING TITLE: TYPE "C-M-2" CATCH BASIN

PROJECT NO. 104-164

DRAWING NO. MDS-12

SHEET NO. 03.22

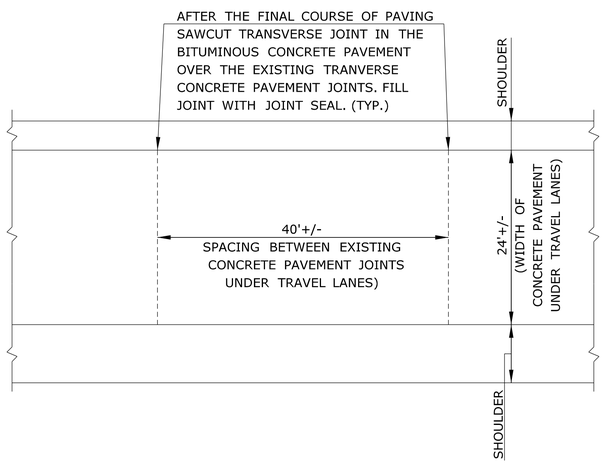

NOTE:
THE TRANSVERSE SAWCUT SHALL BE PAID FOR UNDER THE ITEM "SAWING AND SEALING JOINTS IN BITUMINOUS CONCRETE PAVEMENT".

TRANSVERSE SAWCUT DETAIL

NOT TO SCALE

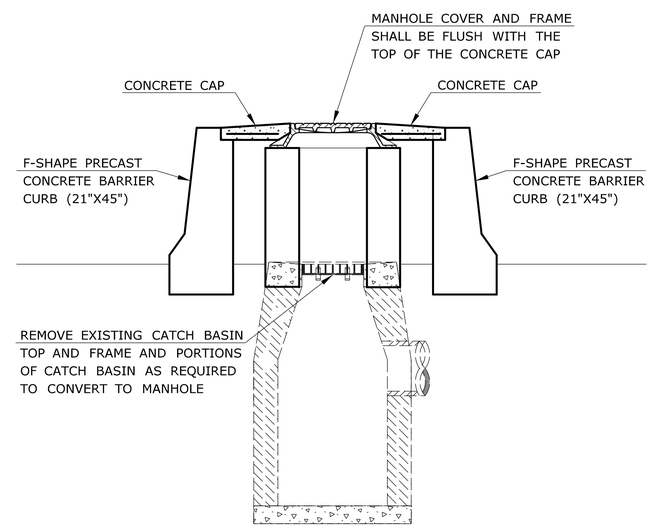

NOTE:
FOR DETAILS OF MANHOLE COVER AND FRAME, ETC., SEE APPROPRIATE STANDARD AND MISCELLANEOUS DETAIL.

CONVERT CATCH BASIN TO MANHOLE

NOT TO SCALE

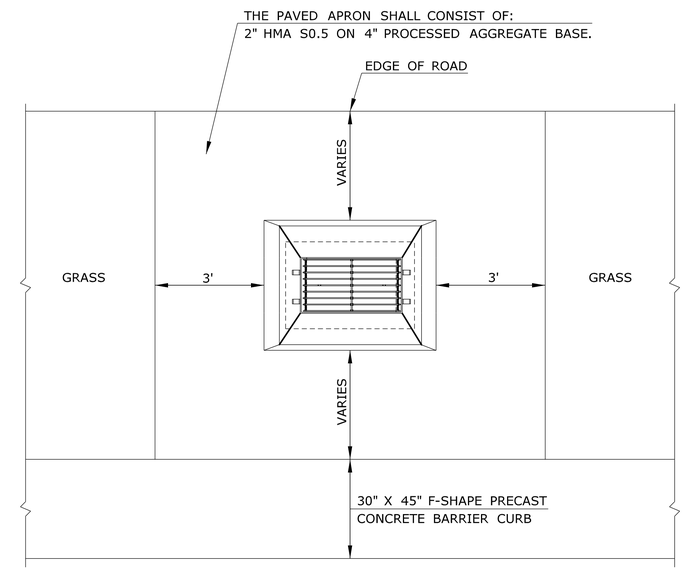

NOTE:
PAVED APRON SHALL BE PAID FOR UNDER THE ITEM "PAVED DITCH".

PAVED APRON DETAIL

NOT TO SCALE

PRELIMINARY DESIGN REVIEW

REV.	DATE	REVISION DESCRIPTION	SHEET NO.
-	-	-	-
-	-	-	-
-	-	-	-
-	-	-	-
-	-	-	-
-	-	-	-

THE INFORMATION, INCLUDING ESTIMATED QUANTITIES OF WORK, SHOWN ON THESE SHEETS IS BASED ON LIMITED INVESTIGATIONS BY THE STATE AND IS IN NO WAY WARRANTED TO INDICATE THE CONDITIONS OF ACTUAL QUANTITIES OF WORK WHICH WILL BE REQUIRED.

Plotted Date: 3/1/2013

DESIGNER/DRAFTER: RL/EK/MF
CHECKED BY: D. DAGAN
SCALE AS NOTED

STATE OF CONNECTICUT
DEPARTMENT OF TRANSPORTATION

Filename: ...\HW_MSH_MDS-13_MiscPvmt.dgn

SIGNATURE/ BLOCK:

PROJECT TITLE:
INTERSTATE 95 RESURFACING AND SAFETY IMPROVEMENTS

TOWN: OLD LYME & EAST LYME

DRAWING TITLE: CONVERT CB TO MH, PAVED APRON & TRANSVERSE SAWCUT

PROJECT NO. 104-164
DRAWING NO. MDS-13
SHEET NO. 03.23

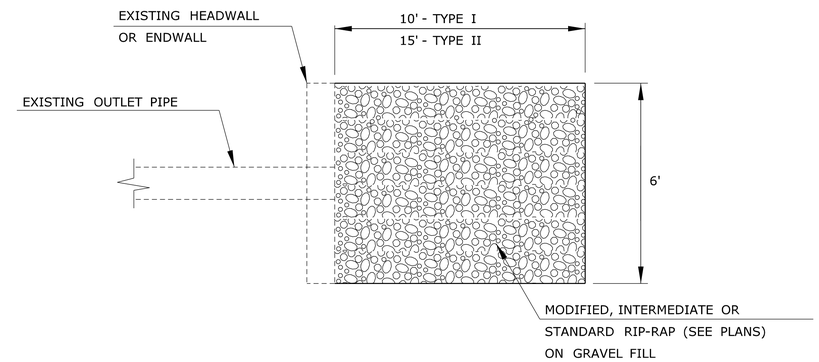

PLAN

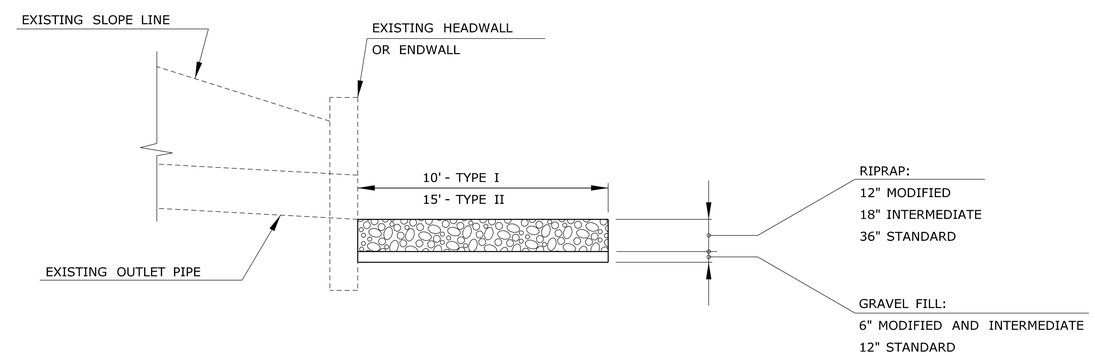

SIDE VIEW

RIP-RAP SPLASH PAD

NOT TO SCALE

PRELIMINARY DESIGN REVIEW

REV.	DATE	REVISION DESCRIPTION	SHEET NO.
-	-	-	-
-	-	-	-
-	-	-	-
-	-	-	-
-	-	-	-
-	-	-	-

THE INFORMATION, INCLUDING ESTIMATED QUANTITIES OF WORK, SHOWN ON THESE SHEETS IS BASED ON LIMITED INVESTIGATIONS BY THE STATE AND IS IN NO WAY WARRANTED TO INDICATE THE CONDITIONS OF ACTUAL QUANTITIES OF WORK WHICH WILL BE REQUIRED.

Plotted Date: 3/1/2013

DESIGNER/DRAFTER: **RL/EK/MF**

CHECKED BY: **D. DAGAN**

SCALE AS NOTED

STATE OF CONNECTICUT
DEPARTMENT OF TRANSPORTATION

Filename: ...\HW_MSH_MDS-14_Riprap.dgn

SIGNATURE/
BLOCK:

PROJECT TITLE:
INTERSTATE 95 RESURFACING AND SAFETY IMPROVEMENTS

TOWN: **OLD LYME & EAST LYME**

DRAWING TITLE: **RIPRAP SPLASH AND SCOUR PAD**

PROJECT NO. **104-164**

DRAWING NO. **MDS-14**

SHEET NO. **03.24**

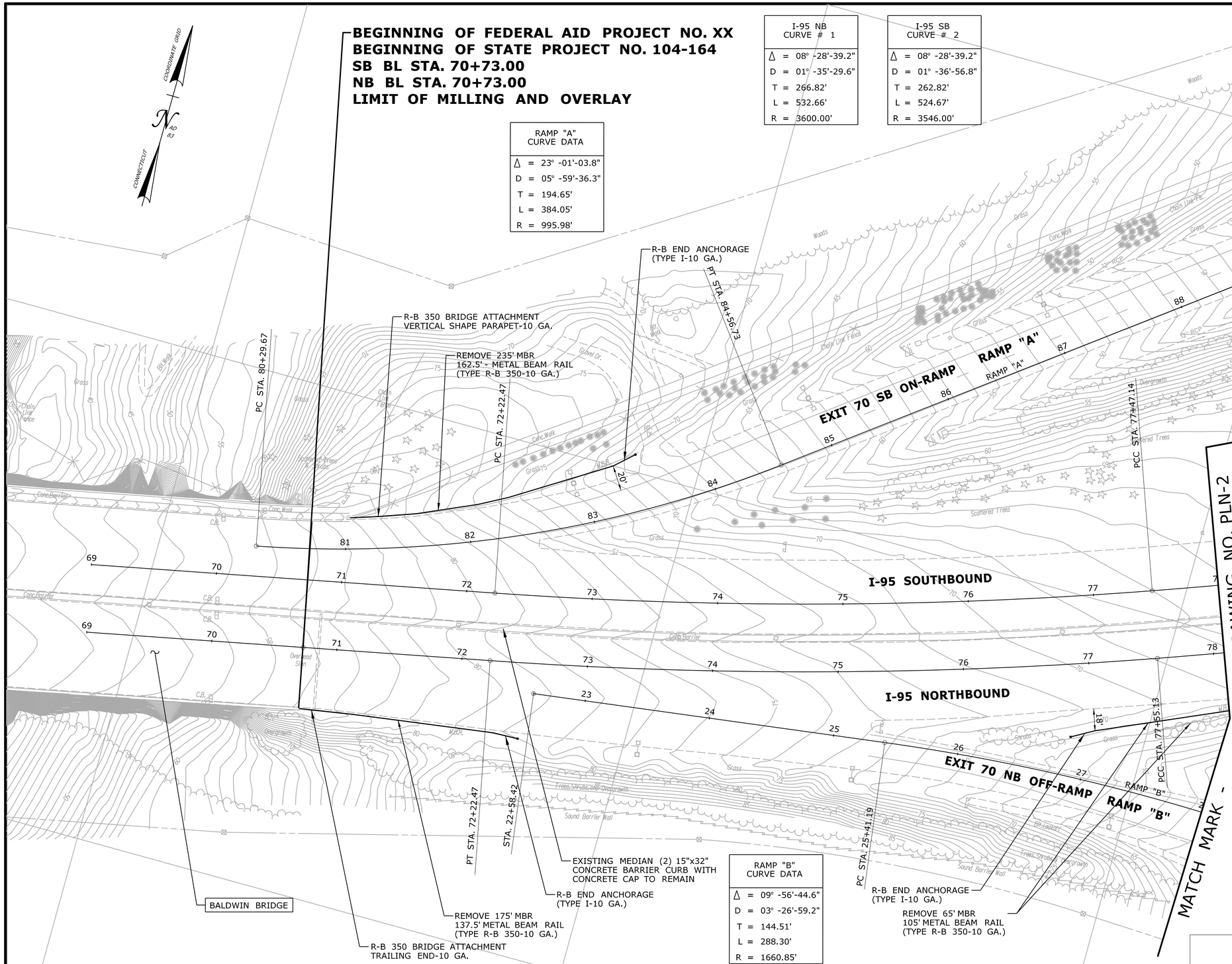

GENERAL NOTES

1. ALL TYPE "C-L" CATCH BASINS IN THE MEDIAN WHERE F-SHAPE PRECAST CONCRETE BARRIER CURB IS TO BE INSTALLED, SHALL HAVED A PAVED APRON. PAVED APRONS TO BE PAID FOR UNDER ITEM "PAVED DITCH".
2. TYPE "C-L" CATCH BASINS IN THE MEDIAN THAT MAY REQUIRE REPLACEMENT, WILL BE DETERMINED IN THE FIELD. AN UNASSIGNED QUANTITIY FOR THIS ITEM HAS BEEN INCLUDED IN THE CONTRACT DOCUMENTS.
3. ALL TRANSITIONS BETWEEN THE VARIOUS TYPES OF PRECAST CONCRETE BARRIER CURB TO BE PAID FOR UNDER ITEM "F-SHAPE PRECAST CONCRETE BARRIER CURB (30" x 45")".
4. PAVED MEDIAN TO BE PAID FOR UNDER ITEM "PAVED DITCH".
5. CONTRACTOR TO BE AWARE OF EXISTING ELECTRICAL ILLUMINATION CONDUITS AND HANDHOLES ALONG NORTHBOUND AND SOUTHBOUND EDGE OF PAVEMENT WHEN INSTALLING GUIDE RAILING AND PRECAST CONCRETE BARRIER CURB.
6. ALL EXISTING DRAINAGE STRUCTURES AND DRAINAGE PIPES (INCLUDING OUTLETS) WITHIN THE PROJECT LIMITS SHALL BE CLEANED PRIOR TO START OF CONSTRUCTION AND AFTER CONSTRUCTION.
7. AFTER FINAL OVERLAY, THE CONTRACTOR SHALL PERFORM A TRANSVERSE CUT IN THE BITUMINOUS CONCRETE PAVEMENT OVER THE EXISTING CONCRETE PAVEMENT TRANSVERSE JOINTS. THE CONTRACTOR SHALL ALSO SEAL THE JOINTS. TO BE PAID FOR UNDER ITEM "SAWING AND SEALING JOINTS IN BITUMINOUS CONCRETE PAVEMENT".
8. THE TOP OF FRAME ELEVATION FOR ALL CATCH BASINS SHALL BE DETERMINED IN THE FIELD.
9. UPON COMPLETION OF ALL WORK, THE CONTRACTOR SHALL INSTALL PERMANENT PAVEMENT MARKINGS WITHIN THE ENTIRE PROJECT LIMITS.
10. THE CONTRACTOR IS PROHIBITED FROM STORING ANY HAZARDOUS MATERIALS WITHIN THE 100-YEAR FLOODPLAIN OR FLOODWAY OF ANY WATERWAY.

PRELIMINARY DESIGN REVIEW

REV.	DATE	REVISION DESCRIPTION	SHEET NO.
-	-	-	-
-	-	-	-
-	-	-	-
-	-	-	-
-	-	-	-
-	-	-	-

THE INFORMATION, INCLUDING ESTIMATED QUANTITIES OF WORK, SHOWN ON THESE SHEETS IS BASED ON LIMITED INVESTIGATIONS BY THE STATE AND IS IN NO WAY WARRANTED TO INDICATE THE CONDITIONS OF ACTUAL QUANTITIES OF WORK WHICH WILL BE REQUIRED.

Plotted Date: 3/7/2013

DESIGNER/DRAFTER: RL/MF/EK
CHECKED BY: D. DAGAN
SCALE IN FEET 0 40 80
SCALE 1"=40'

STATE OF CONNECTICUT
DEPARTMENT OF TRANSPORTATION

Filename: ...\Plan\HW_MSH_PLN-1.dgn

SIGNATURE/ BLOCK:

PROJECT TITLE: INTERSTATE 95 RESURFACING AND SAFETY IMPROVEMENTS

TOWN: OLD LYME & EAST LYME

DRAWING TITLE: ROADWAY PLAN STA. 69 TO STA. 78

PROJECT NO. 104-164
DRAWING NO. PLN-1
SHEET NO. 03.25

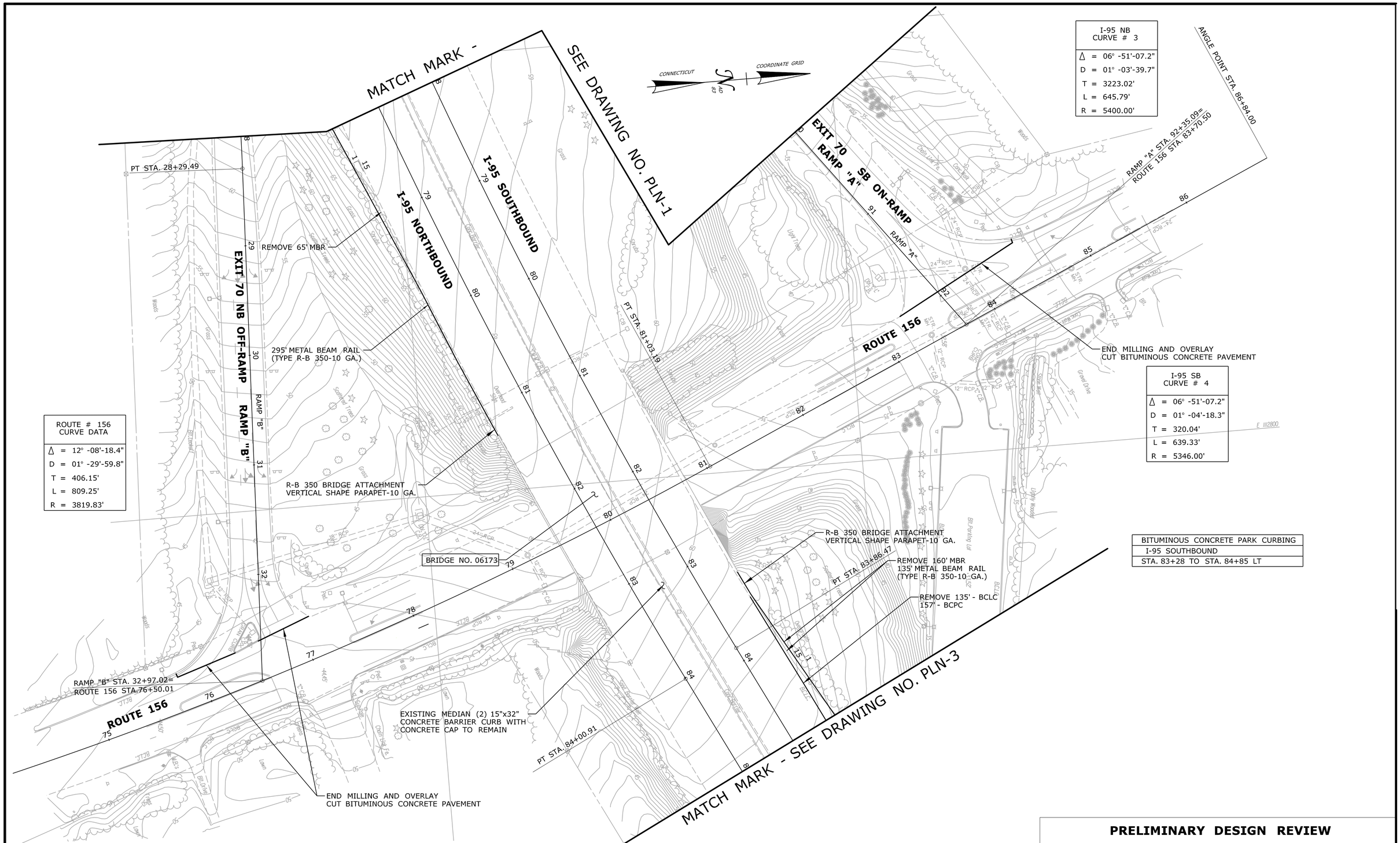

PRELIMINARY DESIGN REVIEW

REV.	DATE	REVISION DESCRIPTION	SHEET NO.
-	-	-	-
-	-	-	-
-	-	-	-
-	-	-	-
-	-	-	-
-	-	-	-

THE INFORMATION, INCLUDING ESTIMATED QUANTITIES OF WORK, SHOWN ON THESE SHEETS IS BASED ON LIMITED INVESTIGATIONS BY THE STATE AND IS IN NO WAY WARRANTED TO INDICATE THE CONDITIONS OF ACTUAL QUANTITIES OF WORK WHICH WILL BE REQUIRED.

Plotted Date: 3/7/2013

DESIGNER/DRAFTER: RL/MF/EK
CHECKED BY: D. DAGAN
SCALE IN FEET 0 40 80
SCALE 1"=40'

STATE OF CONNECTICUT
DEPARTMENT OF TRANSPORTATION

Filename: ...\Plan\HW_MSH_PLN-2.dgn

SIGNATURE/
BLOCK:

PROJECT TITLE:
INTERSTATE 95
RESURFACING AND SAFETY
IMPROVEMENTS

TOWN: OLD LYME & EAST LYME

DRAWING TITLE:
ROADWAY PLAN
STA. 78+0 TO STA. 84+85

PROJECT NO. 104-164
DRAWING NO. PLN-2
SHEET NO. 03.26

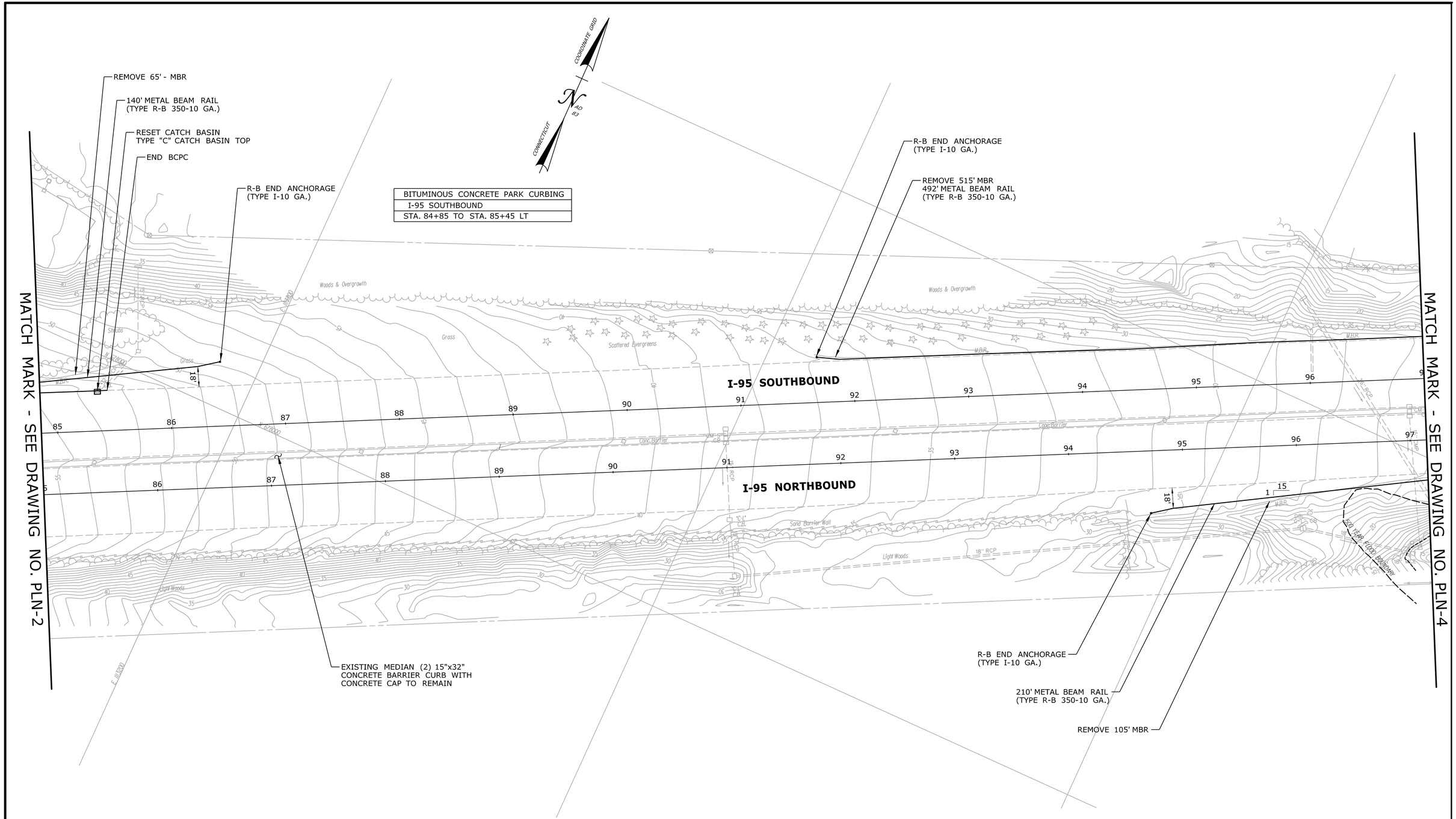

PRELIMINARY DESIGN REVIEW

REV.	DATE	REVISION DESCRIPTION	SHEET NO.
-	-	-	-
-	-	-	-
-	-	-	-
-	-	-	-
-	-	-	-
-	-	-	-

THE INFORMATION, INCLUDING ESTIMATED QUANTITIES OF WORK, SHOWN ON THESE SHEETS IS BASED ON LIMITED INVESTIGATIONS BY THE STATE AND IS IN NO WAY WARRANTED TO INDICATE THE CONDITIONS OF ACTUAL QUANTITIES OF WORK WHICH WILL BE REQUIRED.

Plotted Date: 3/7/2013

DESIGNER/DRAFTER: **RL/MF/EK**

CHECKED BY: **D. DAGAN**

SCALE IN FEET 0 40 80

SCALE 1"=40'

STATE OF CONNECTICUT
DEPARTMENT OF TRANSPORTATION

Filename: ...\Plan\HW_MSH_PLN-3.dgn

SIGNATURE/ BLOCK:

PROJECT TITLE: **INTERSTATE 95 RESURFACING AND SAFETY IMPROVEMENTS**

TOWN: **OLD LYME & EAST LYME**

DRAWING TITLE: **ROADWAY PLAN STA. 85 TO STA. 97**

PROJECT NO. **104-164**

DRAWING NO. **PLN-3**

SHEET NO. **03.27**

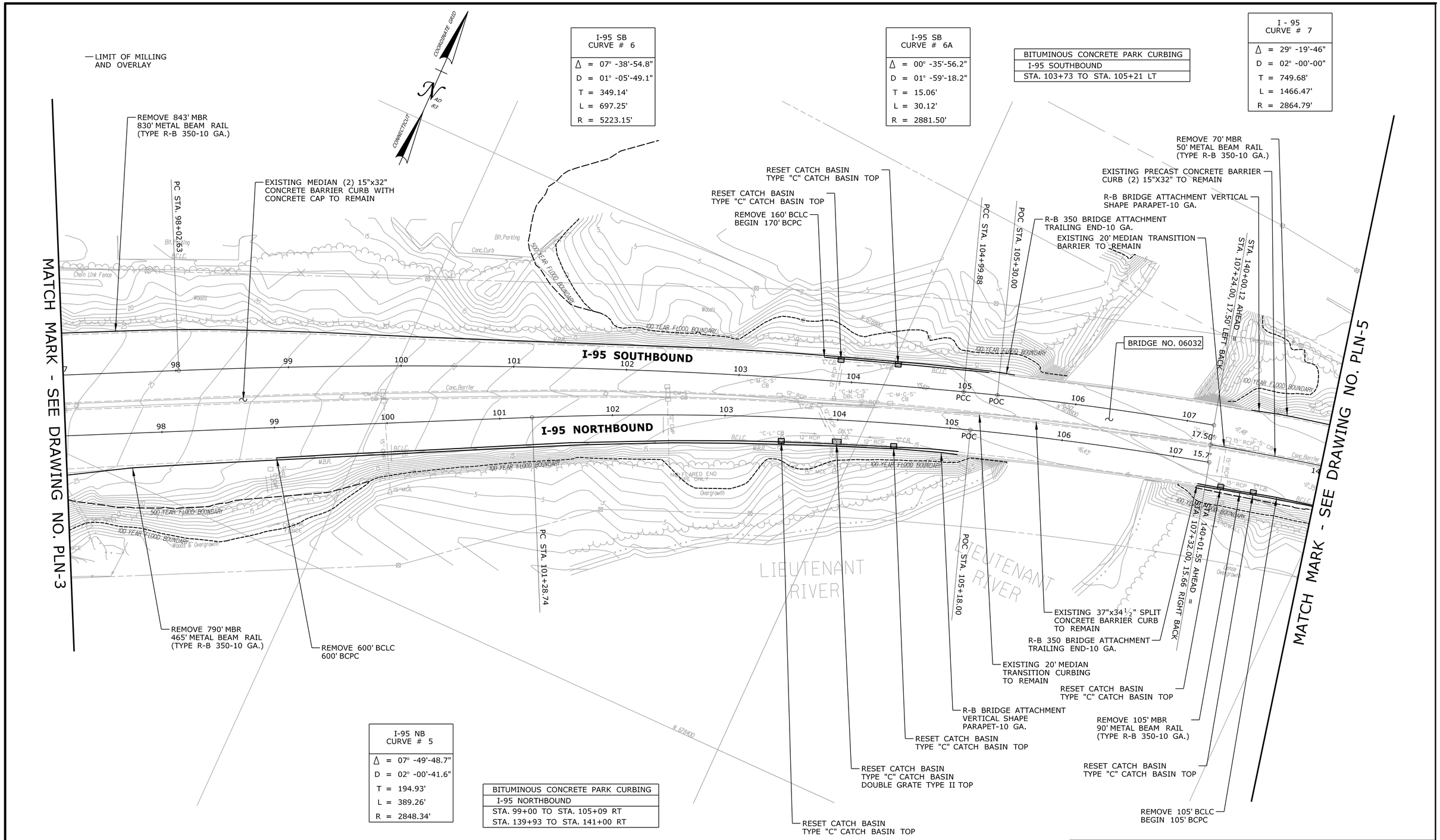

I-95 SB CURVE # 6	
Δ =	07° -38'-54.8"
D =	01° -05'-49.1"
T =	349.14'
L =	697.25'
R =	5223.15'

I-95 SB CURVE # 6A	
Δ =	00° -35'-56.2"
D =	01° -59'-18.2"
T =	15.06'
L =	30.12'
R =	2881.50'

BITUMINOUS CONCRETE PARK CURBING
I-95 SOUTHBOUND
STA. 103+73 TO STA. 105+21 LT

I - 95 CURVE # 7	
Δ =	29° -19'-46"
D =	02° -00'-00"
T =	749.68'
L =	1466.47'
R =	2864.79'

I-95 NB CURVE # 5	
Δ =	07° -49'-48.7"
D =	02° -00'-41.6"
T =	194.93'
L =	389.26'
R =	2848.34'

BITUMINOUS CONCRETE PARK CURBING
I-95 NORTHBOUND
STA. 99+00 TO STA. 105+09 RT
STA. 139+93 TO STA. 141+00 RT

PRELIMINARY DESIGN REVIEW

REV.	DATE	REVISION DESCRIPTION	SHEET NO.
-	-	-	-
-	-	-	-
-	-	-	-
-	-	-	-
-	-	-	-
-	-	-	-

THE INFORMATION, INCLUDING ESTIMATED QUANTITIES OF WORK, SHOWN ON THESE SHEETS IS BASED ON LIMITED INVESTIGATIONS BY THE STATE AND IS IN NO WAY WARRANTED TO INDICATE THE CONDITIONS OF ACTUAL QUANTITIES OF WORK WHICH WILL BE REQUIRED.

Plotted Date: 3/7/2013

DESIGNER/DRAFTER: **RL/MF/EK**

CHECKED BY: **D. DAGAN**

SCALE IN FEET 0 40 80

SCALE 1"=40'

STATE OF CONNECTICUT
DEPARTMENT OF TRANSPORTATION

Filename: ...\Plan\HW_MSH_PLN-4.dgn

SIGNATURE/ BLOCK:

PROJECT TITLE: **INTERSTATE 95 RESURFACING AND SAFETY IMPROVEMENTS**

TOWN: **OLD LYME & EAST LYME**

DRAWING TITLE: **ROADWAY PLAN STA. 97 TO STA. 141**

PROJECT NO. **104-164**

DRAWING NO. **PLN-4**

SHEET NO. **03.28**

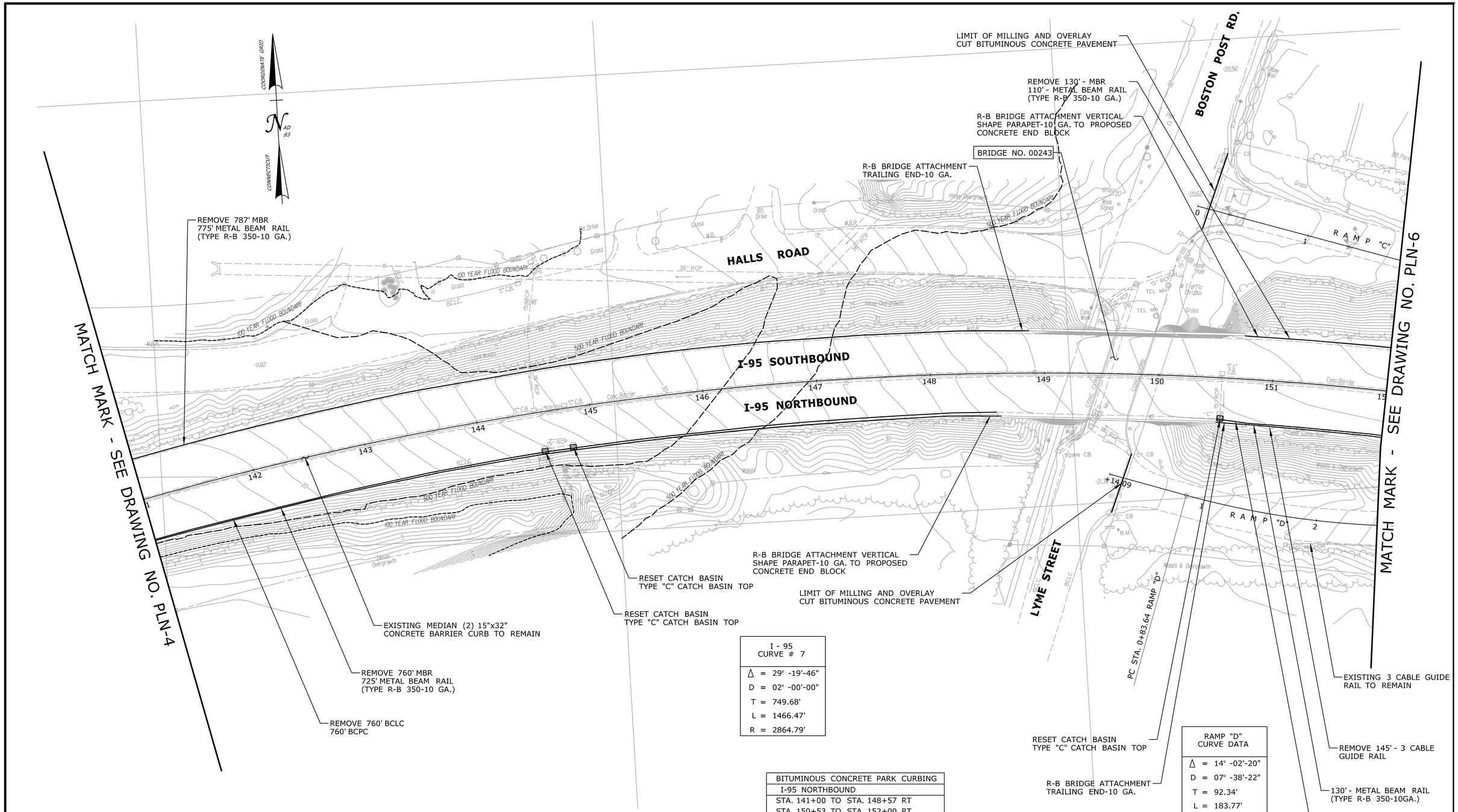

I - 95 CURVE # 7
Δ = 29° -19'-46"
D = 02° -00'-00"
T = 749.68'
L = 1466.47'
R = 2864.79'

BITUMINOUS CONCRETE PARK CURBING
I-95 NORTHBOUND
STA. 141+00 TO STA. 148+57 RT
STA. 150+53 TO STA. 152+00 RT

RAMP "D" CURVE DATA
Δ = 14° -02'-20"
D = 07° -38'-22"
T = 92.34'
L = 183.77'
R = 750.00'

PRELIMINARY DESIGN REVIEW

REV.	DATE	REVISION DESCRIPTION	SHEET NO.
-	-	-	-
-	-	-	-
-	-	-	-
-	-	-	-
-	-	-	-
-	-	-	-

THE INFORMATION, INCLUDING ESTIMATED QUANTITIES OF WORK, SHOWN ON THESE SHEETS IS BASED ON LIMITED INVESTIGATIONS BY THE STATE AND IS IN NO WAY WARRANTED TO INDICATE THE CONDITIONS OF ACTUAL QUANTITIES OF WORK WHICH WILL BE REQUIRED.

Plotted Date: 3/7/2013

DESIGNER/DRAFTER: **RL/MF/EK**
CHECKED BY: **D. DAGAN**
SCALE IN FEET
0 40 80
SCALE 1"=40'

STATE OF CONNECTICUT
DEPARTMENT OF TRANSPORTATION

Filename: ...\Plan\HW_MSH_PLN-5.dgn

SIGNATURE/
BLOCK:

PROJECT TITLE:
INTERSTATE 95 RESURFACING AND SAFETY IMPROVEMENTS

TOWN: **OLD LYME & EAST LYME**

DRAWING TITLE:
ROADWAY PLAN STA. 141 TO STA. 152

PROJECT NO. **104-164**
DRAWING NO. **PLN-5**
SHEET NO. **03.29**

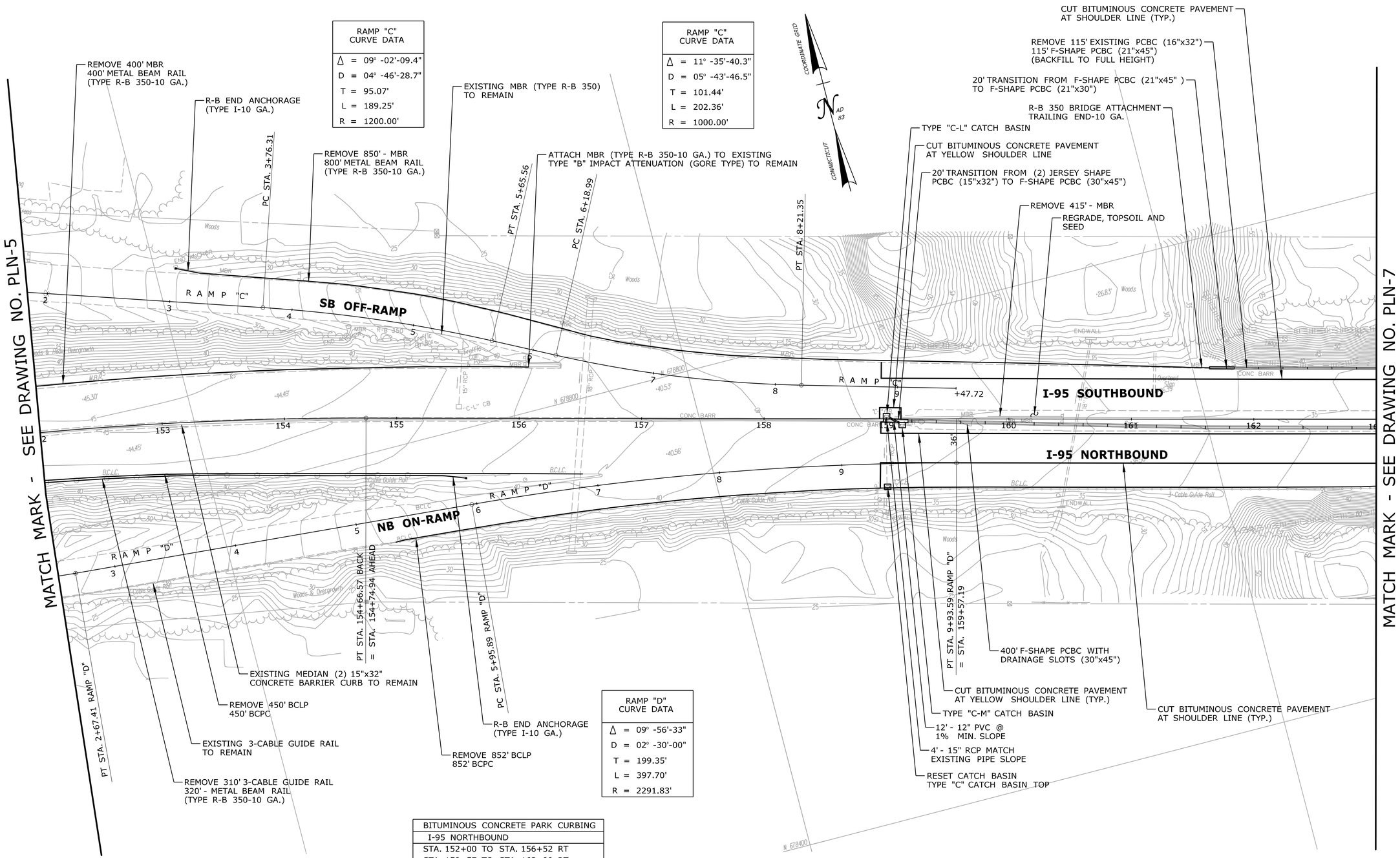

BITUMINOUS CONCRETE PARK CURBING
I-95 NORTHBOUND
STA. 152+00 TO STA. 156+52 RT
STA. 159+57 TO STA. 163+00 RT
I-95 NORTHBOUND ON-RAMP
STA. 5+30 TO STA. 9+93.6 RT

PRELIMINARY DESIGN REVIEW

REV.	DATE	REVISION DESCRIPTION	SHEET NO.
-	-	-	-
-	-	-	-
-	-	-	-
-	-	-	-
-	-	-	-
-	-	-	-

THE INFORMATION, INCLUDING ESTIMATED QUANTITIES OF WORK, SHOWN ON THESE SHEETS IS BASED ON LIMITED INVESTIGATIONS BY THE STATE AND IS IN NO WAY WARRANTED TO INDICATE THE CONDITIONS OF ACTUAL QUANTITIES OF WORK WHICH WILL BE REQUIRED.

Plotted Date: 3/21/2013

DESIGNER/DRAFTER: RL/MF/EK
CHECKED BY: D. DAGAN
SCALE IN FEET 0 40 80
SCALE 1"=40'

STATE OF CONNECTICUT
DEPARTMENT OF TRANSPORTATION

Filename: ...\Plan\HW_MSH_PLN-6.dgn

SIGNATURE/
BLOCK:

PROJECT TITLE:
INTERSTATE 95 RESURFACING AND SAFETY IMPROVEMENTS

TOWN: **OLD LYME & EAST LYME**

DRAWING TITLE: **ROADWAY PLAN STA. 152 TO STA. 163**

PROJECT NO. **104-164**
DRAWING NO. **PLN-6**
SHEET NO. **03.30**

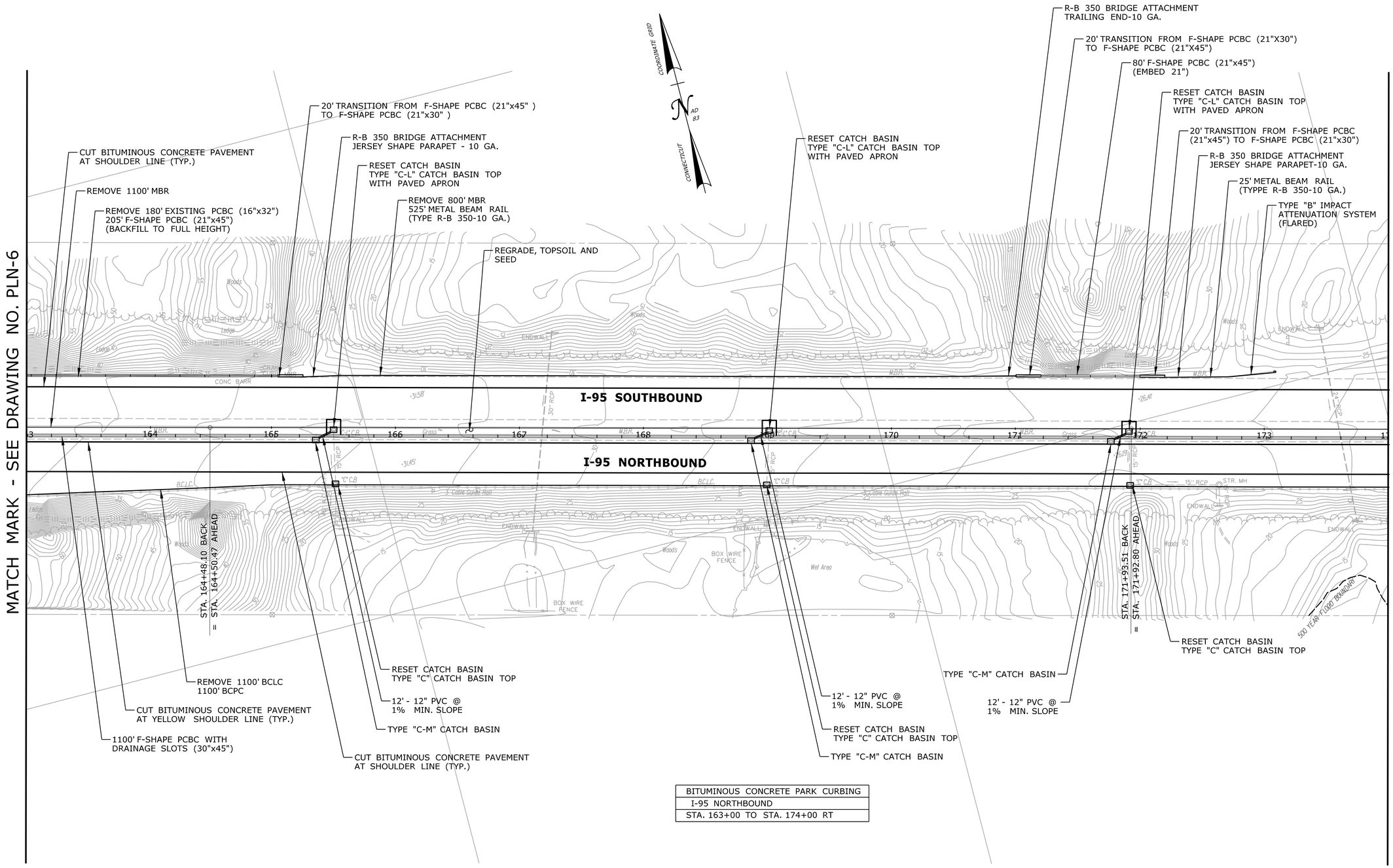

BITUMINOUS CONCRETE PARK CURBING
I-95 NORTHBOUND
STA. 163+00 TO STA. 174+00 RT

PRELIMINARY DESIGN REVIEW

REV.	DATE	REVISION DESCRIPTION	SHEET NO.
-	-	-	-
-	-	-	-
-	-	-	-
-	-	-	-
-	-	-	-
-	-	-	-

THE INFORMATION, INCLUDING ESTIMATED QUANTITIES OF WORK, SHOWN ON THESE SHEETS IS BASED ON LIMITED INVESTIGATIONS BY THE STATE AND IS IN NO WAY WARRANTED TO INDICATE THE CONDITIONS OF ACTUAL QUANTITIES OF WORK WHICH WILL BE REQUIRED.

Plotted Date: 3/7/2013

DESIGNER/DRAFTER: **RL/MF/EK**
CHECKED BY: **D. DAGAN**
SCALE IN FEET 0 40 80
SCALE 1"=40'

STATE OF CONNECTICUT
DEPARTMENT OF TRANSPORTATION

Filename: ...\Plan\HW_MSH_PLN-7.dgn

SIGNATURE/ BLOCK:

PROJECT TITLE:
INTERSTATE 95 RESURFACING AND SAFETY IMPROVEMENTS

TOWN: **OLD LYME & EAST LYME**

DRAWING TITLE: **ROADWAY PLAN STA. 163 TO STA. 174**

PROJECT NO. **104-164**
DRAWING NO. **PLN-7**
SHEET NO. **03.31**

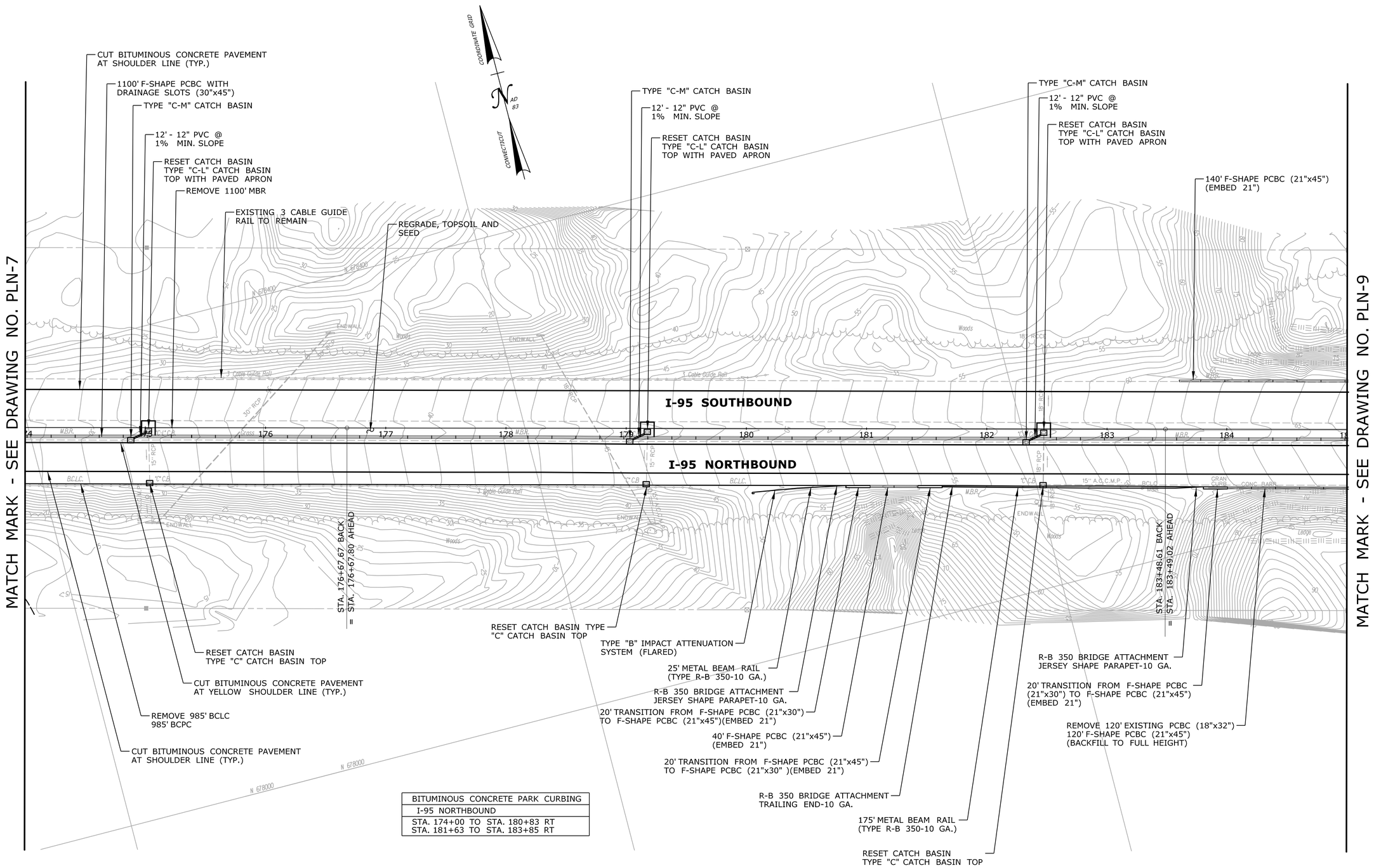

BITUMINOUS CONCRETE PARK CURBING
I-95 NORTHBOUND
STA. 174+00 TO STA. 180+83 RT STA. 181+63 TO STA. 183+85 RT

PRELIMINARY DESIGN REVIEW

REV.	DATE	REVISION DESCRIPTION	SHEET NO.
-	-	-	-
-	-	-	-
-	-	-	-
-	-	-	-
-	-	-	-
-	-	-	-

THE INFORMATION, INCLUDING ESTIMATED QUANTITIES OF WORK, SHOWN ON THESE SHEETS IS BASED ON LIMITED INVESTIGATIONS BY THE STATE AND IS IN NO WAY WARRANTED TO INDICATE THE CONDITIONS OF ACTUAL QUANTITIES OF WORK WHICH WILL BE REQUIRED.

Plotted Date: 3/7/2013

DESIGNER/DRAFTER: **RL/MF/EK**
CHECKED BY: **D. DAGAN**
SCALE IN FEET 0 40 80
SCALE 1"=40'

STATE OF CONNECTICUT
DEPARTMENT OF TRANSPORTATION

Filename: ...\Plan\HW_MSH_PLN-8.dgn

SIGNATURE/ BLOCK:

PROJECT TITLE: **INTERSTATE 95 RESURFACING AND SAFETY IMPROVEMENTS**

TOWN: **OLD LYME & EAST LYME**

DRAWING TITLE: **ROADWAY PLAN STA. 174 TO STA. 185**

PROJECT NO. **104-164**
DRAWING NO. **PLN-8**
SHEET NO. **03.32**

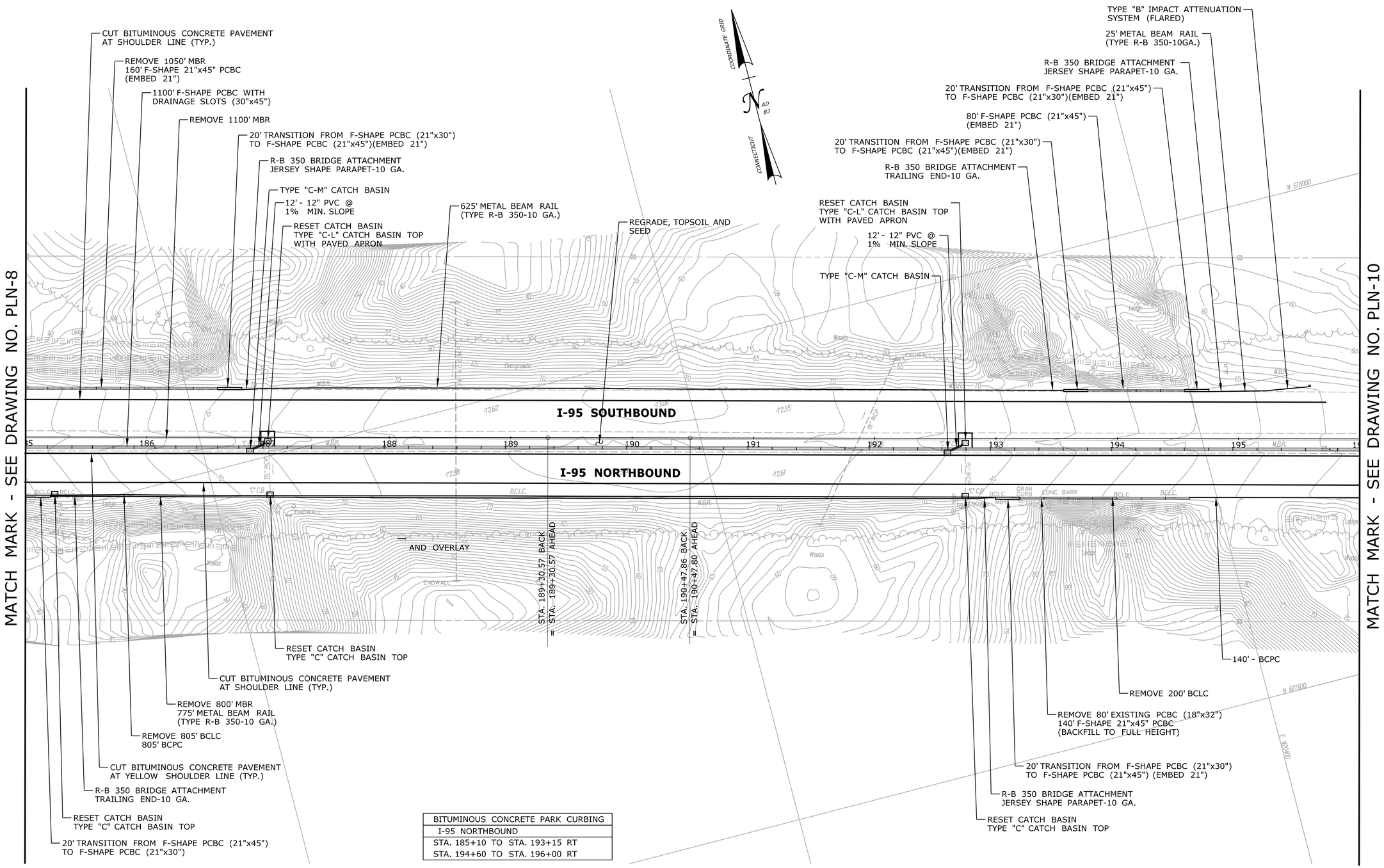

BITUMINOUS CONCRETE PARK CURBING
I-95 NORTHBOUND
STA. 185+10 TO STA. 193+15 RT
STA. 194+60 TO STA. 196+00 RT

PRELIMINARY DESIGN REVIEW

REV.	DATE	REVISION DESCRIPTION	SHEET NO.
-	-	-	-
-	-	-	-
-	-	-	-
-	-	-	-
-	-	-	-
-	-	-	-

THE INFORMATION, INCLUDING ESTIMATED QUANTITIES OF WORK, SHOWN ON THESE SHEETS IS BASED ON LIMITED INVESTIGATIONS BY THE STATE AND IS IN NO WAY WARRANTED TO INDICATE THE CONDITIONS OF ACTUAL QUANTITIES OF WORK WHICH WILL BE REQUIRED.

Plotted Date: 3/7/2013

DESIGNER/DRAFTER: **RL/MF/EK**

CHECKED BY: **D. DAGAN**

SCALE IN FEET 0 40 80

SCALE 1"=40'

STATE OF CONNECTICUT
DEPARTMENT OF TRANSPORTATION

Filename: ...\Plan\HW_MSH_PLN-9.dgn

SIGNATURE/ BLOCK:

PROJECT TITLE:

INTERSTATE 95 RESURFACING AND SAFETY IMPROVEMENTS

TOWN: **OLD LYME & EAST LYME**

DRAWING TITLE: **ROADWAY PLAN STA. 185 TO STA. 196**

PROJECT NO. **104-164**

DRAWING NO. **PLN-9**

SHEET NO. **03.33**

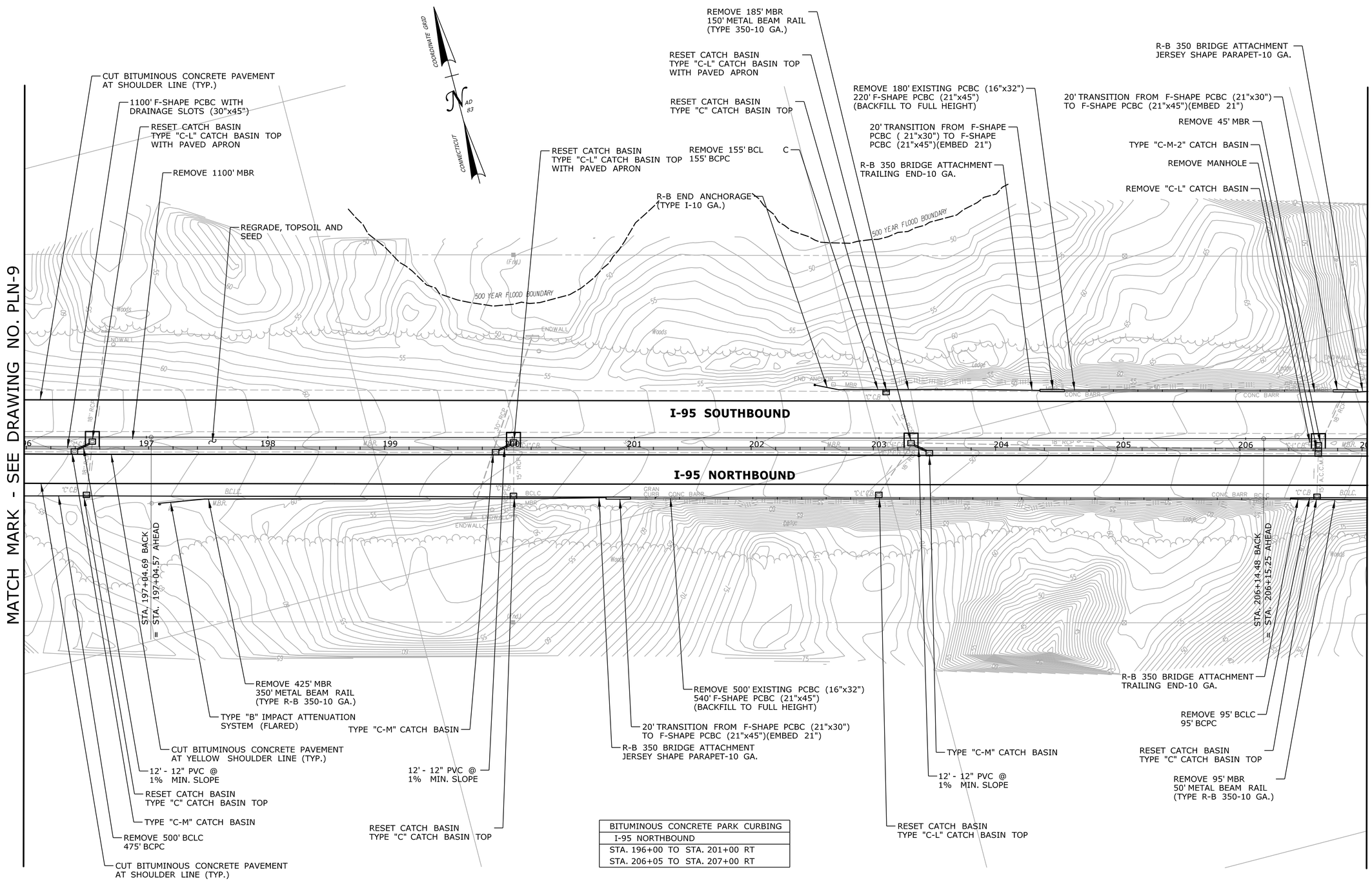

BITUMINOUS CONCRETE PARK CURBING
I-95 NORTHBOUND
STA. 196+00 TO STA. 201+00 RT
STA. 206+05 TO STA. 207+00 RT

PRELIMINARY DESIGN REVIEW

REV.	DATE	REVISION DESCRIPTION	SHEET NO.
-	-	-	-
-	-	-	-
-	-	-	-
-	-	-	-
-	-	-	-
-	-	-	-

THE INFORMATION, INCLUDING ESTIMATED QUANTITIES OF WORK, SHOWN ON THESE SHEETS IS BASED ON LIMITED INVESTIGATIONS BY THE STATE AND IS IN NO WAY WARRANTED TO INDICATE THE CONDITIONS OF ACTUAL QUANTITIES OF WORK WHICH WILL BE REQUIRED.

Plotted Date: 3/7/2013

DESIGNER/DRAFTER: **RL/MF/EK**

CHECKED BY: **D. DAGAN**

SCALE IN FEET 0 40 80

SCALE 1"=40'

STATE OF CONNECTICUT
DEPARTMENT OF TRANSPORTATION

Filename: ...\Plan\HW_MSH_PLN-10.dgn

SIGNATURE/ BLOCK:

PROJECT TITLE: **INTERSTATE 95 RESURFACING AND SAFETY IMPROVEMENTS**

TOWN: **OLD LYME & EAST LYME**

DRAWING TITLE: **ROADWAY PLAN STA. 196 TO STA. 207**

PROJECT NO. **104-164**

DRAWING NO. **PLN-10**

SHEET NO. **03.34**

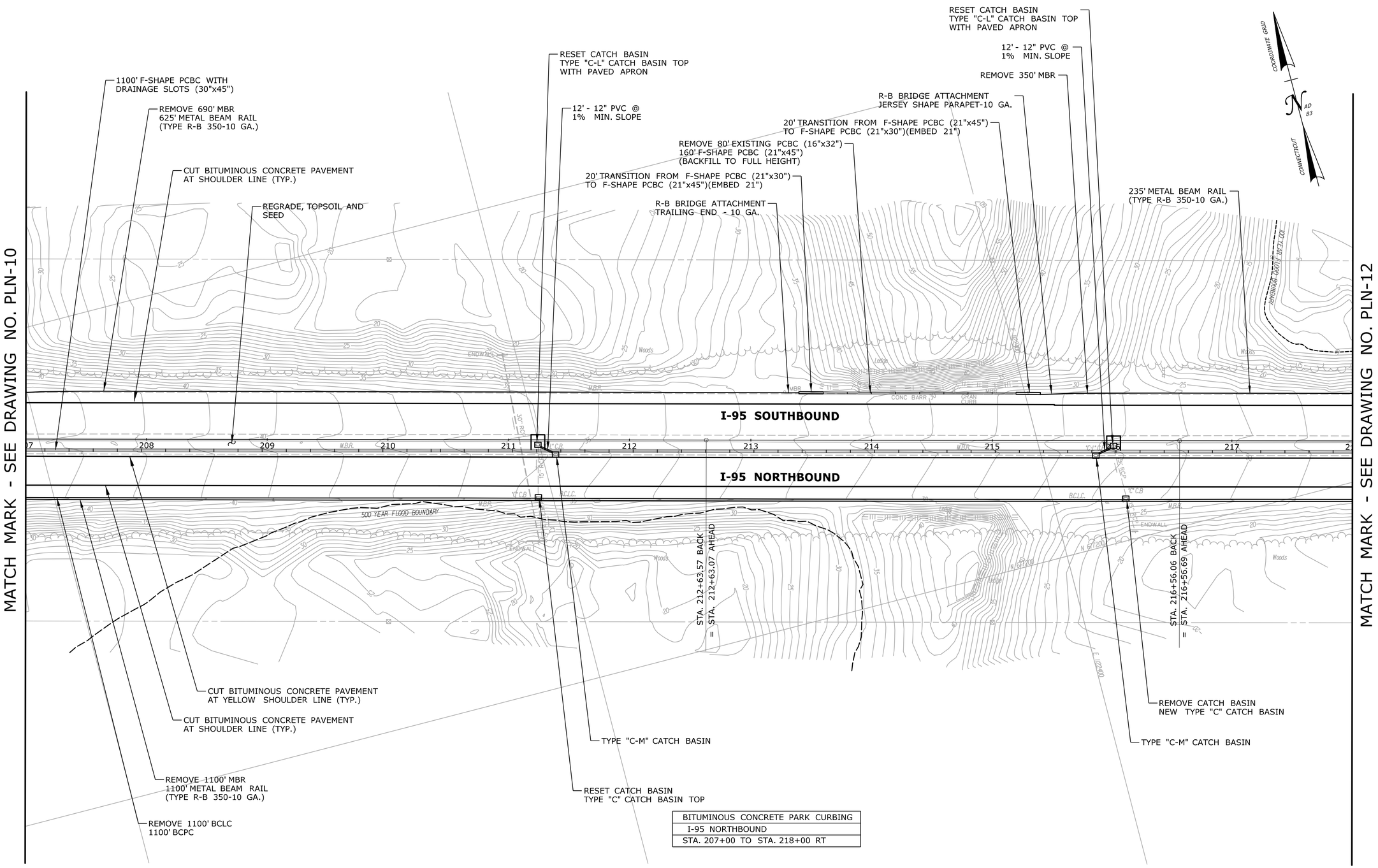

BITUMINOUS CONCRETE PARK CURBING
I-95 NORTHBOUND
STA. 207+00 TO STA. 218+00 RT

PRELIMINARY DESIGN REVIEW

REV.	DATE	REVISION DESCRIPTION	SHEET NO.
-	-	-	-
-	-	-	-
-	-	-	-
-	-	-	-
-	-	-	-
-	-	-	-

THE INFORMATION, INCLUDING ESTIMATED QUANTITIES OF WORK, SHOWN ON THESE SHEETS IS BASED ON LIMITED INVESTIGATIONS BY THE STATE AND IS IN NO WAY WARRANTED TO INDICATE THE CONDITIONS OF ACTUAL QUANTITIES OF WORK WHICH WILL BE REQUIRED.

Plotted Date: 3/21/2013

DESIGNER/DRAFTER: **RL/MF/EK**

CHECKED BY: **D. DAGAN**

SCALE IN FEET 0 40 80

SCALE 1"=40'

STATE OF CONNECTICUT
DEPARTMENT OF TRANSPORTATION

Filename: ...\Plan\HW_MSH_PLN-11.dgn

SIGNATURE/ BLOCK:

PROJECT TITLE:

INTERSTATE 95 RESURFACING AND SAFETY IMPROVEMENTS

TOWN: **OLD LYME & EAST LYME**

DRAWING TITLE: **ROADWAY PLAN STA. 207 TO STA. 218**

PROJECT NO. **104-164**

DRAWING NO. **PLN-11**

SHEET NO. **03.35**

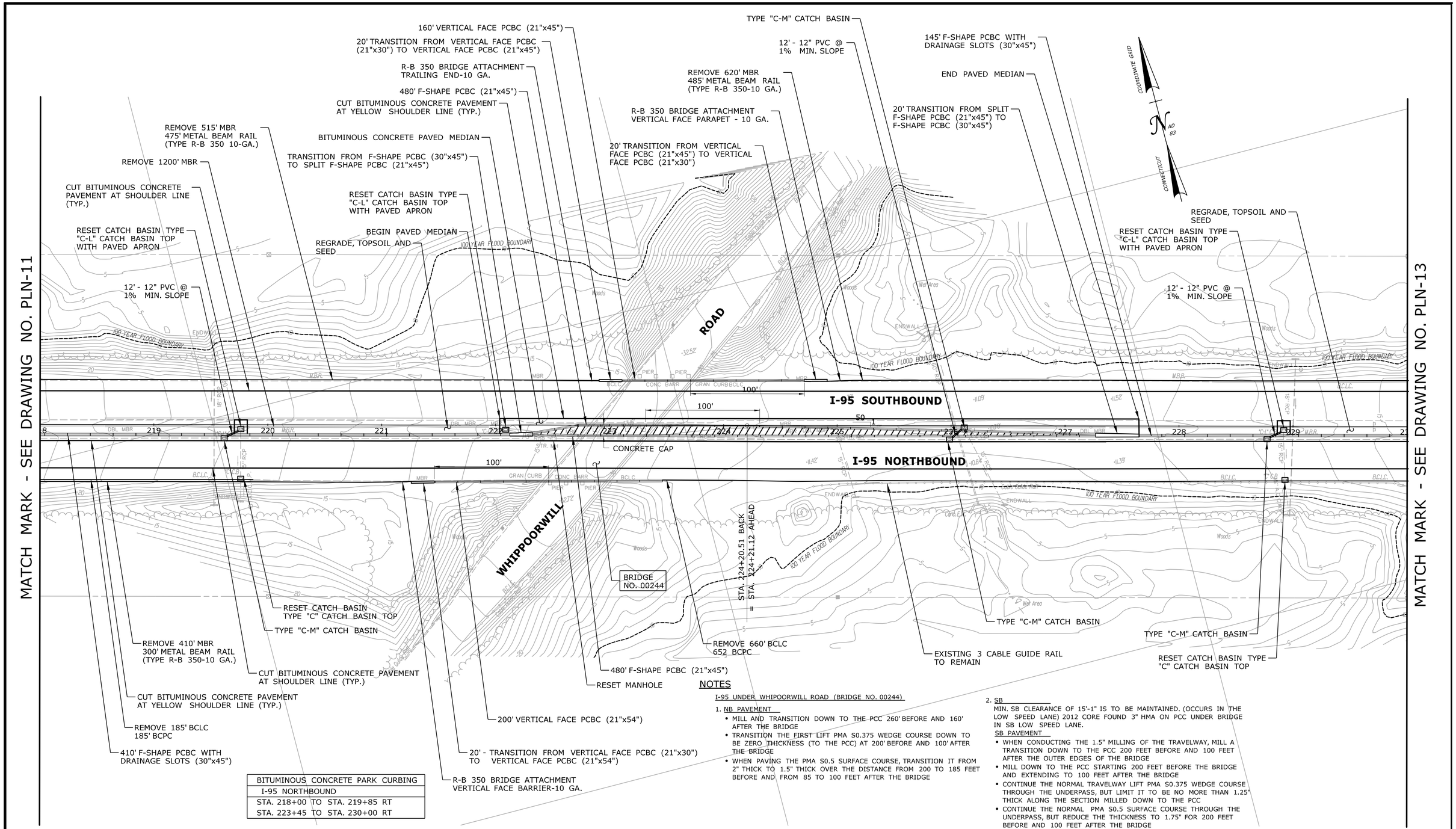

BITUMINOUS CONCRETE PARK CURBING
I-95 NORTHBOUND
STA. 218+00 TO STA. 219+85 RT
STA. 223+45 TO STA. 230+00 RT

NOTES

I-95 UNDER WHIPOORWILL ROAD (BRIDGE NO. 00244)

1. NB PAVEMENT
   - MILL AND TRANSITION DOWN TO THE PCC 260' BEFORE AND 160' AFTER THE BRIDGE
   - TRANSITION THE FIRST LIFT PMA S0.375 WEDGE COURSE DOWN TO BE ZERO THICKNESS (TO THE PCC) AT 200' BEFORE AND 100' AFTER THE BRIDGE
   - WHEN PAVING THE PMA S0.5 SURFACE COURSE, TRANSITION IT FROM 2" THICK TO 1.5" THICK OVER THE DISTANCE FROM 200 TO 185 FEET BEFORE AND FROM 85 TO 100 FEET AFTER THE BRIDGE

2. SB
   MIN. SB CLEARANCE OF 15'-1" IS TO BE MAINTAINED. (OCCURS IN THE LOW SPEED LANE) 2012 CORE FOUND 3" HMA ON PCC UNDER BRIDGE IN SB LOW SPEED LANE.
   SB PAVEMENT
   - WHEN CONDUCTING THE 1.5" MILLING OF THE TRAVELWAY, MILL A TRANSITION DOWN TO THE PCC 200 FEET BEFORE AND 100 FEET AFTER THE OUTER EDGES OF THE BRIDGE
   - MILL DOWN TO THE PCC STARTING 200 FEET BEFORE THE BRIDGE AND EXTENDING TO 100 FEET AFTER THE BRIDGE
   - CONTINUE THE NORMAL TRAVELWAY LIFT PMA S0.375 WEDGE COURSE THROUGH THE UNDERPASS, BUT LIMIT IT TO BE NO MORE THAN 1.25" THICK ALONG THE SECTION MILLED DOWN TO THE PCC
   - CONTINUE THE NORMAL PMA S0.5 SURFACE COURSE THROUGH THE UNDERPASS, BUT REDUCE THE THICKNESS TO 1.75" FOR 200 FEET BEFORE AND 100 FEET AFTER THE BRIDGE
   - EXISTING CLEARANCE UNDER THE BRIDGE MUST BE MAINTAINED

PRELIMINARY DESIGN REVIEW

REV.	DATE	REVISION DESCRIPTION	SHEET NO.
-	-	-	-
-	-	-	-
-	-	-	-
-	-	-	-
-	-	-	-
-	-	-	-

THE INFORMATION, INCLUDING ESTIMATED QUANTITIES OF WORK, SHOWN ON THESE SHEETS IS BASED ON LIMITED INVESTIGATIONS BY THE STATE AND IS IN NO WAY WARRANTED TO INDICATE THE CONDITIONS OF ACTUAL QUANTITIES OF WORK WHICH WILL BE REQUIRED.

Plotted Date: 3/7/2013

DESIGNER/DRAFTER: RL/MF/EK
CHECKED BY: D. DAGAN
SCALE IN FEET 0 40 80
SCALE 1"=40'

STATE OF CONNECTICUT
DEPARTMENT OF TRANSPORTATION

Filename: ...\Plan\HW_MSH_PLN-12.dgn

SIGNATURE/ BLOCK:

PROJECT TITLE: INTERSTATE 95 RESURFACING AND SAFETY IMPROVEMENTS

TOWN: OLD LYME & EAST LYME

DRAWING TITLE: ROADWAY PLAN STA. 218 TO STA. 230

PROJECT NO. 104-164
DRAWING NO. PLN-12
SHEET NO. 03.36

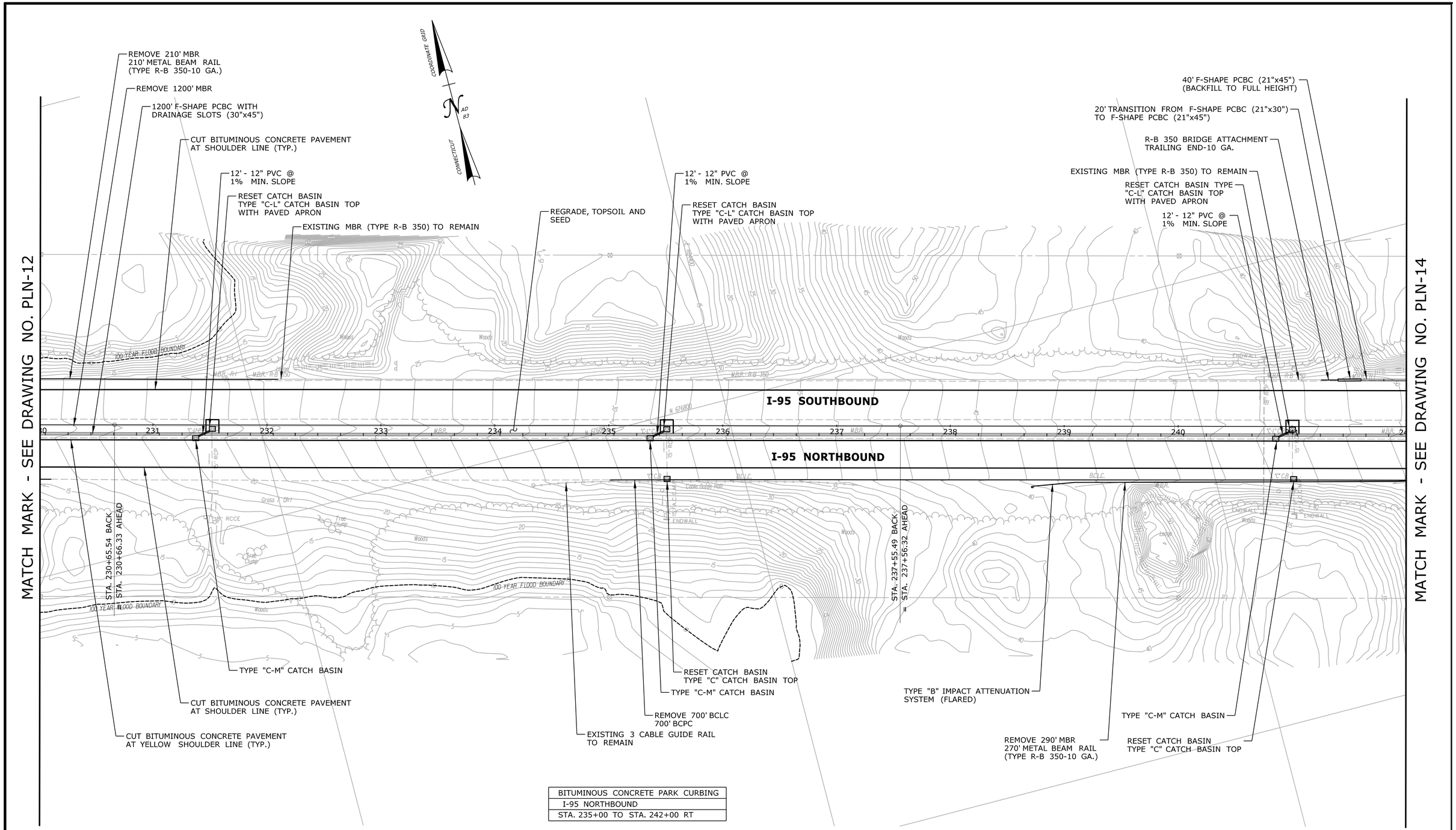

BITUMINOUS CONCRETE PARK CURBING
I-95 NORTHBOUND
STA. 235+00 TO STA. 242+00 RT

PRELIMINARY DESIGN REVIEW

REV.	DATE	REVISION DESCRIPTION	SHEET NO.
-	-	-	-
-	-	-	-
-	-	-	-
-	-	-	-
-	-	-	-
-	-	-	-

THE INFORMATION, INCLUDING ESTIMATED QUANTITIES OF WORK, SHOWN ON THESE SHEETS IS BASED ON LIMITED INVESTIGATIONS BY THE STATE AND IS IN NO WAY WARRANTED TO INDICATE THE CONDITIONS OF ACTUAL QUANTITIES OF WORK WHICH WILL BE REQUIRED.

Plotted Date: 3/7/2013

DESIGNER/DRAFTER: **RL/MF/EK**

CHECKED BY: **D. DAGAN**

SCALE IN FEET 0 40 80

SCALE 1"=40'

STATE OF CONNECTICUT
DEPARTMENT OF TRANSPORTATION

Filename: ...\Plan\HW_MSH_PLN-13.dgn

SIGNATURE/
BLOCK:

PROJECT TITLE:
INTERSTATE 95 RESURFACING AND SAFETY IMPROVEMENTS

TOWN: **OLD LYME & EAST LYME**

DRAWING TITLE: **ROADWAY PLAN STA. 230 TO STA. 242**

PROJECT NO. **104-164**

DRAWING NO. **PLN-13**

SHEET NO. **03.37**

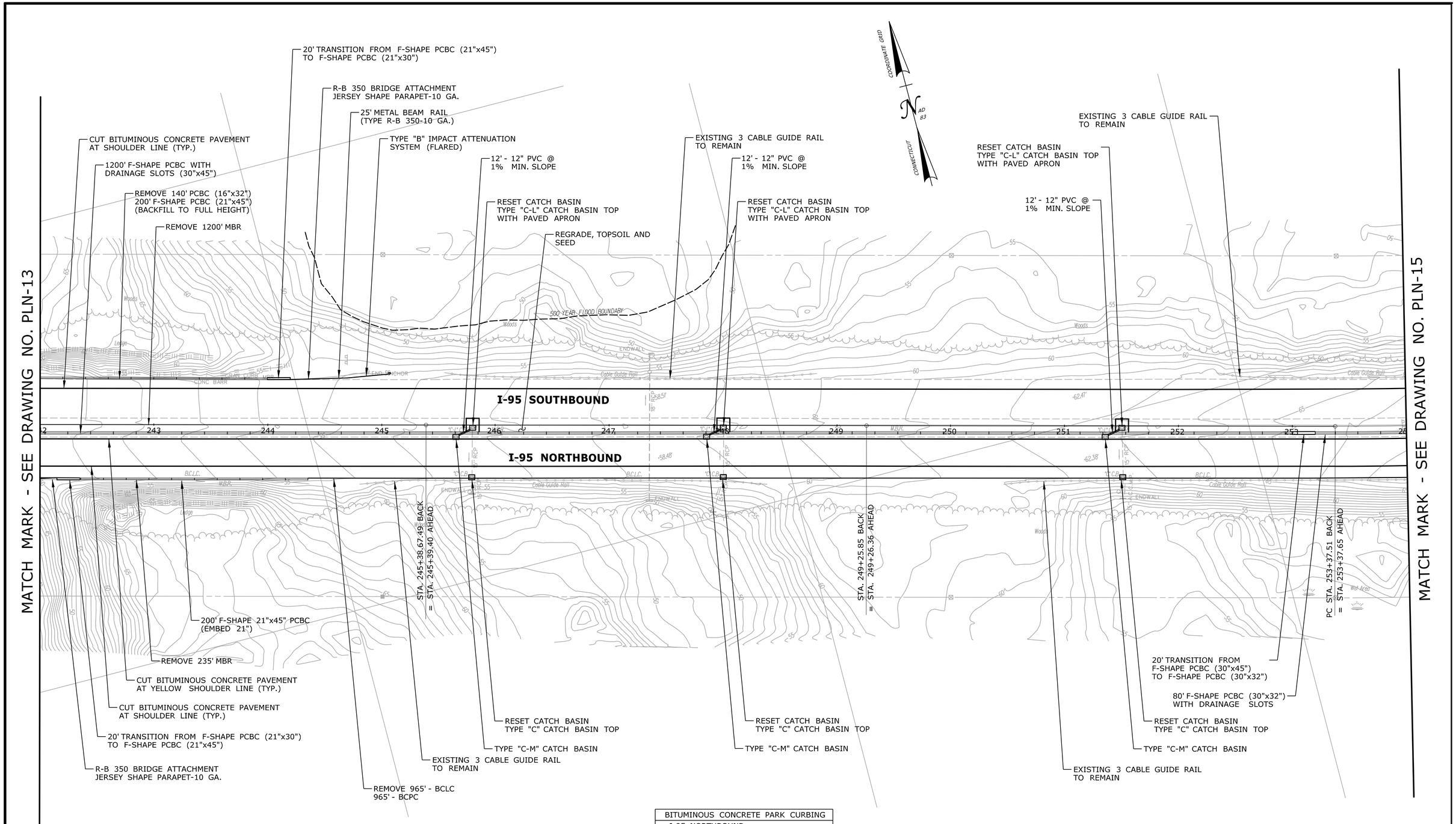

BITUMINOUS CONCRETE PARK CURBING
I-95 NORTHBOUND
STA. 242+00 TO STA. 242+15 RT STA. 244+45 TO STA. 254+00 RT

PRELIMINARY DESIGN REVIEW

REV.	DATE	REVISION DESCRIPTION	SHEET NO.
-	-	-	-
-	-	-	-
-	-	-	-
-	-	-	-
-	-	-	-
-	-	-	-

THE INFORMATION, INCLUDING ESTIMATED QUANTITIES OF WORK, SHOWN ON THESE SHEETS IS BASED ON LIMITED INVESTIGATIONS BY THE STATE AND IS IN NO WAY WARRANTED TO INDICATE THE CONDITIONS OF ACTUAL QUANTITIES OF WORK WHICH WILL BE REQUIRED.

Plotted Date: 3/7/2013

DESIGNER/DRAFTER: **RL/MF/EK**

CHECKED BY: **D. DAGAN**

SCALE IN FEET 0 40 80

SCALE 1"=40'

STATE OF CONNECTICUT
DEPARTMENT OF TRANSPORTATION

Filename: ...\Plan\HW_MSH_PLN-14.dgn

SIGNATURE/ BLOCK:

PROJECT TITLE: **INTERSTATE 95 RESURFACING AND SAFETY IMPROVEMENTS**

TOWN: **OLD LYME & EAST LYME**

DRAWING TITLE: **ROADWAY PLAN STA. 242 TO STA. 254**

PROJECT NO. **104-164**

DRAWING NO. **PLN-14**

SHEET NO. **03.38**

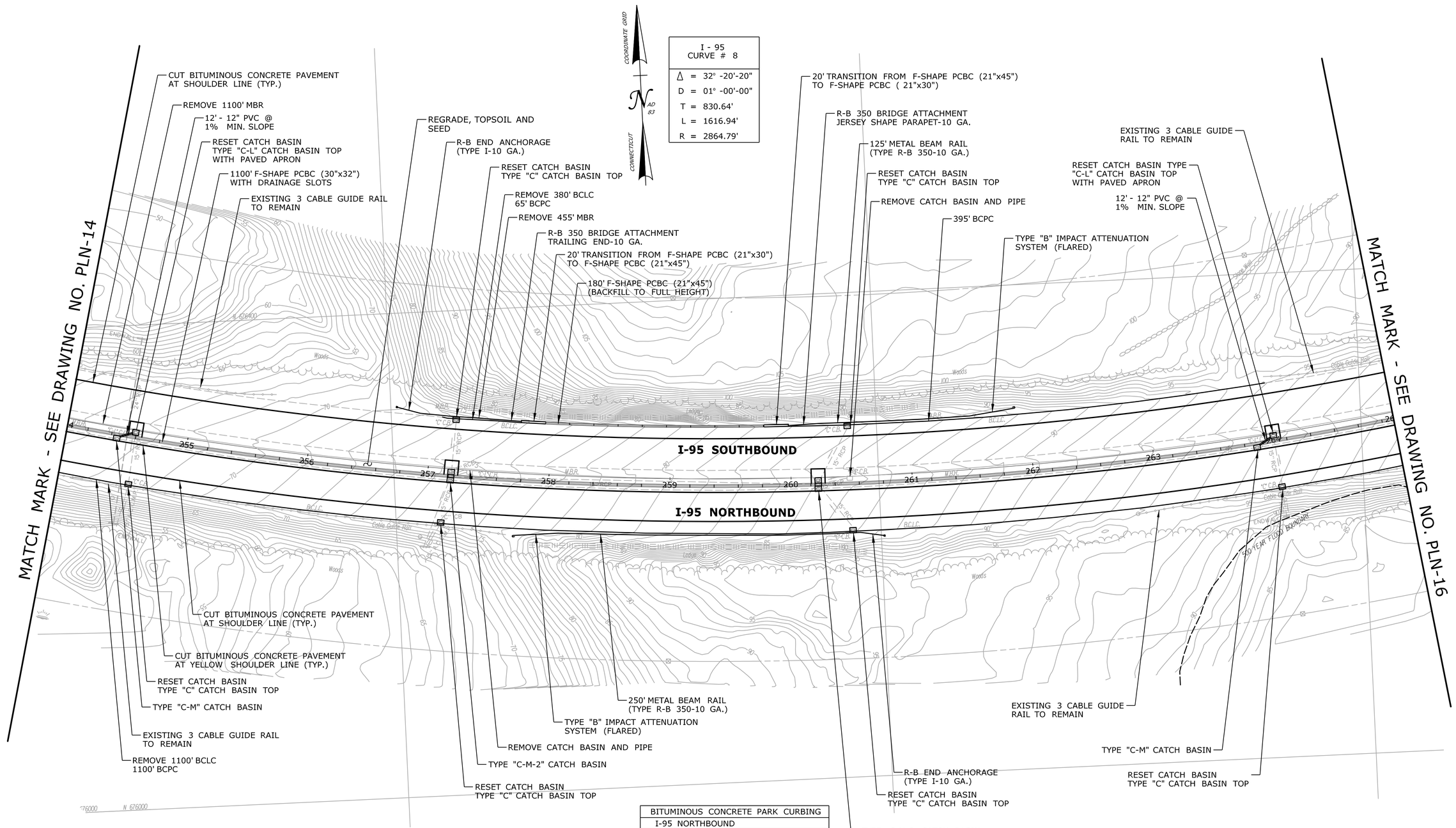

I - 95 CURVE # 8
Δ = 32° -20'-20"
D = 01° -00'-00"
T = 830.64'
L = 1616.94'
R = 2864.79'

BITUMINOUS CONCRETE PARK CURBING
I-95 NORTHBOUND
STA. 254+00 TO STA. 265+00 RT
I-95 SOUTHBOUND
STA. 257+05 TO STA. 257+75 LT STA. 259+95 TO STA. 264+00 LT

PRELIMINARY DESIGN REVIEW

REV.	DATE	REVISION DESCRIPTION	SHEET NO.
-	-	-	-
-	-	-	-
-	-	-	-
-	-	-	-
-	-	-	-
-	-	-	-

THE INFORMATION, INCLUDING ESTIMATED QUANTITIES OF WORK, SHOWN ON THESE SHEETS IS BASED ON LIMITED INVESTIGATIONS BY THE STATE AND IS IN NO WAY WARRANTED TO INDICATE THE CONDITIONS OF ACTUAL QUANTITIES OF WORK WHICH WILL BE REQUIRED.

Plotted Date: 3/7/2013

DESIGNER/DRAFTER: **RL/MF/EK**
CHECKED BY: **D. DAGAN**
SCALE IN FEET 0 40 80
SCALE 1"=40'

STATE OF CONNECTICUT
DEPARTMENT OF TRANSPORTATION

Filename: ...\Plan\HW_MSH_PLN-15.dgn

SIGNATURE/ BLOCK:

PROJECT TITLE: **INTERSTATE 95 RESURFACING AND SAFETY IMPROVEMENTS**

TOWN: **OLD LYME & EAST LYME**

DRAWING TITLE: **ROADWAY PLAN STA. 254 TO STA. 265**

PROJECT NO. **104-164**
DRAWING NO. **PLN-15**
SHEET NO. **03.39**

I - 95 CURVE # 8
Δ = 32° -20'-20"
D = 01° -00'-00"
T = 830.64'
L = 1616.94'
R = 2864.79'

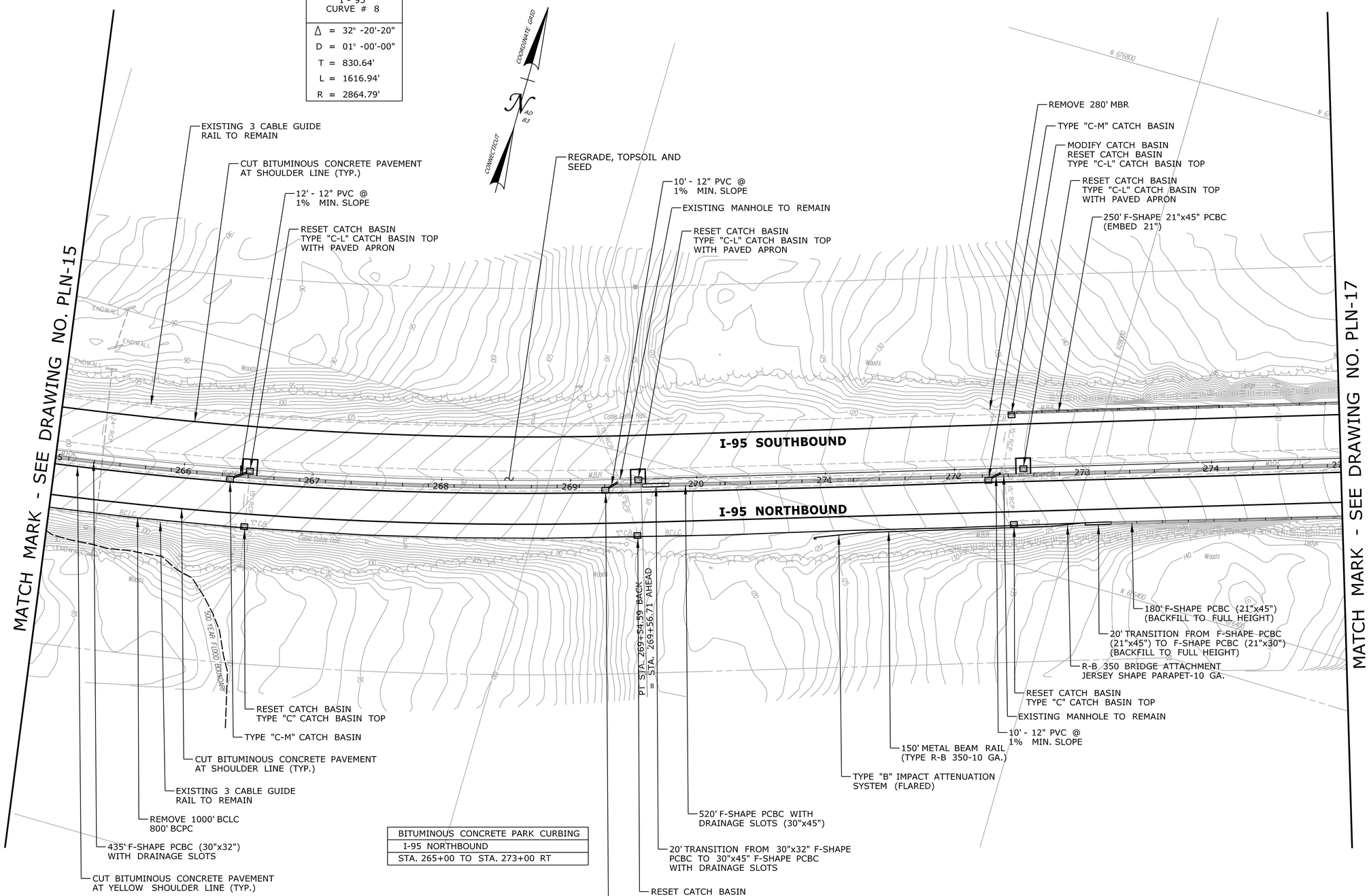

BITUMINOUS CONCRETE PARK CURBING
I-95 NORTHBOUND
STA. 265+00 TO STA. 273+00 RT

PRELIMINARY DESIGN REVIEW

REV.	DATE	REVISION DESCRIPTION	SHEET NO.
-	-	-	-
-	-	-	-
-	-	-	-
-	-	-	-
-	-	-	-
-	-	-	-

THE INFORMATION, INCLUDING ESTIMATED QUANTITIES OF WORK, SHOWN ON THESE SHEETS IS BASED ON LIMITED INVESTIGATIONS BY THE STATE AND IS IN NO WAY WARRANTED TO INDICATE THE CONDITIONS OF ACTUAL QUANTITIES OF WORK WHICH WILL BE REQUIRED.

Plotted Date: 3/7/2013

DESIGNER/DRAFTER: **RL/MF/EK**

CHECKED BY: **D. DAGAN**

SCALE IN FEET 0 40 80

SCALE 1"=40'

STATE OF CONNECTICUT
DEPARTMENT OF TRANSPORTATION

Filename: ...\Plan\HW_MSH_PLN-16.dgn

SIGNATURE/ BLOCK:

PROJECT TITLE:
INTERSTATE 95 RESURFACING AND SAFETY IMPROVEMENTS

TOWN: **OLD LYME & EAST LYME**

DRAWING TITLE: **ROADWAY PLAN STA. 265 TO STA. 275**

PROJECT NO. **104-164**

DRAWING NO. **PLN-16**

SHEET NO. **03.40**

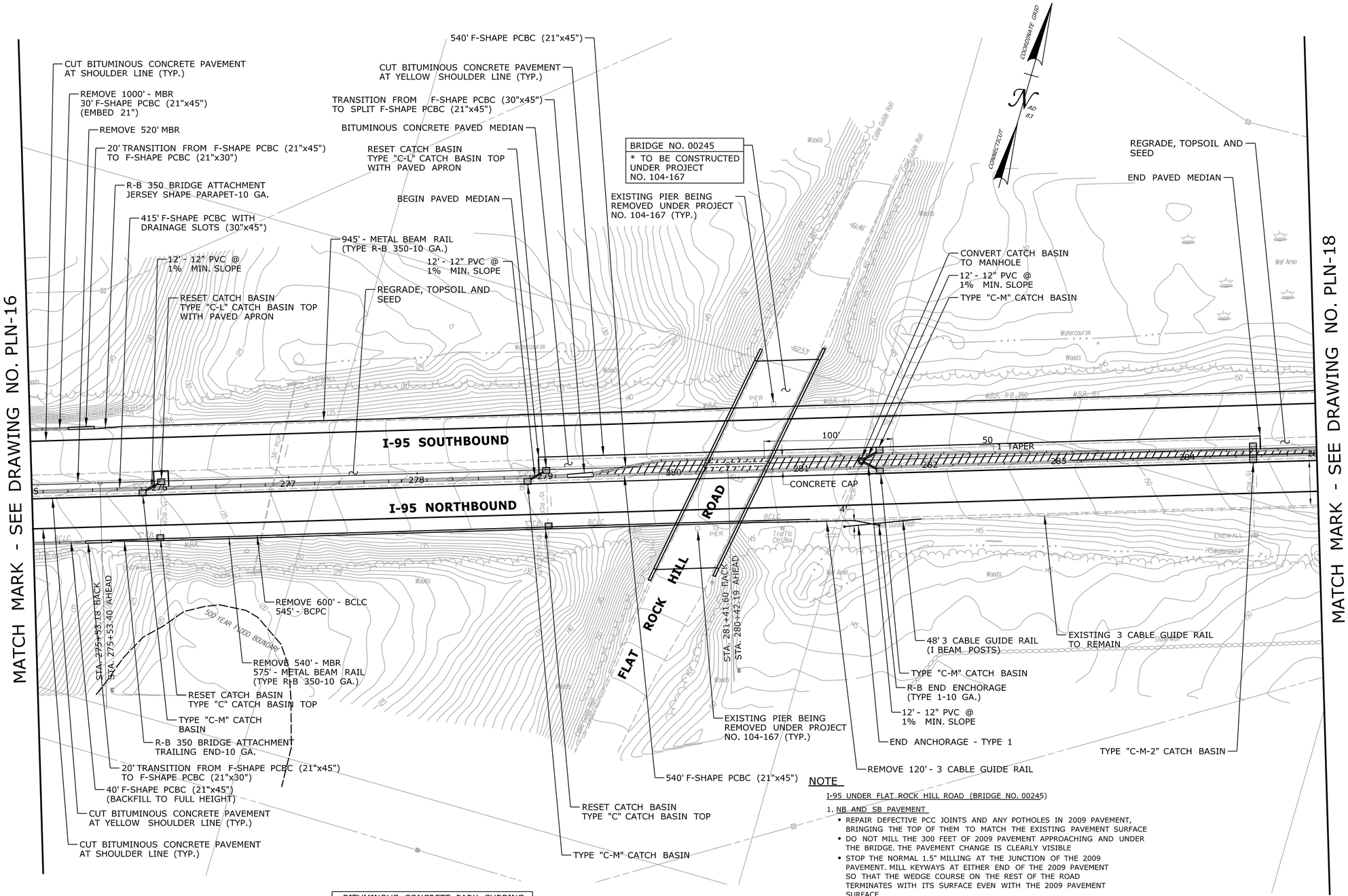

BITUMINOUS CONCRETE PARK CURBING
I-95 NORTHBOUND
STA. 275+00 TO STA. 281+05 RT

NOTE

I-95 UNDER FLAT ROCK HILL ROAD (BRIDGE NO. 00245)

1. NB AND SB PAVEMENT
   - REPAIR DEFECTIVE PCC JOINTS AND ANY POTHOLES IN 2009 PAVEMENT, BRINGING THE TOP OF THEM TO MATCH THE EXISTING PAVEMENT SURFACE
   - DO NOT MILL THE 300 FEET OF 2009 PAVEMENT APPROACHING AND UNDER THE BRIDGE. THE PAVEMENT CHANGE IS CLEARLY VISIBLE
   - STOP THE NORMAL 1.5" MILLING AT THE JUNCTION OF THE 2009 PAVEMENT. MILL KEYWAYS AT EITHER END OF THE 2009 PAVEMENT SO THAT THE WEDGE COURSE ON THE REST OF THE ROAD TERMINATES WITH ITS SURFACE EVEN WITH THE 2009 PAVEMENT SURFACE
   - DO NOT PLACE THE WEDGE COURSE OF PMA S0.375 ON THE 300 FEET OF 2009 PAVEMENT
   - OVERLAY WITH THE SAME 2" PMA S0.5 SURFACE LIFT THE REST OF THE ROAD IS RECIEVING

PRELIMINARY DESIGN REVIEW

REV.	DATE	REVISION DESCRIPTION	SHEET NO.
-	-	-	-
-	-	-	-
-	-	-	-
-	-	-	-
-	-	-	-
-	-	-	-

THE INFORMATION, INCLUDING ESTIMATED QUANTITIES OF WORK, SHOWN ON THESE SHEETS IS BASED ON LIMITED INVESTIGATIONS BY THE STATE AND IS IN NO WAY WARRANTED TO INDICATE THE CONDITIONS OF ACTUAL QUANTITIES OF WORK WHICH WILL BE REQUIRED.

Plotted Date: 3/7/2013

DESIGNER/DRAFTER: **RL/MF/EK**
CHECKED BY: **D. DAGAN**
SCALE IN FEET 0 40 80
SCALE 1"=40'

STATE OF CONNECTICUT
DEPARTMENT OF TRANSPORTATION

Filename: ...\Plan\HW_MSH_PLN-17.dgn

SIGNATURE/ BLOCK:

PROJECT TITLE: **INTERSTATE 95 RESURFACING AND SAFETY IMPROVEMENTS**

TOWN: **OLD LYME & EAST LYME**

DRAWING TITLE: **ROADWAY PLAN STA. 275 TO STA. 285**

PROJECT NO. **104-164**
DRAWING NO. **PLN-17**
SHEET NO. **03.41**

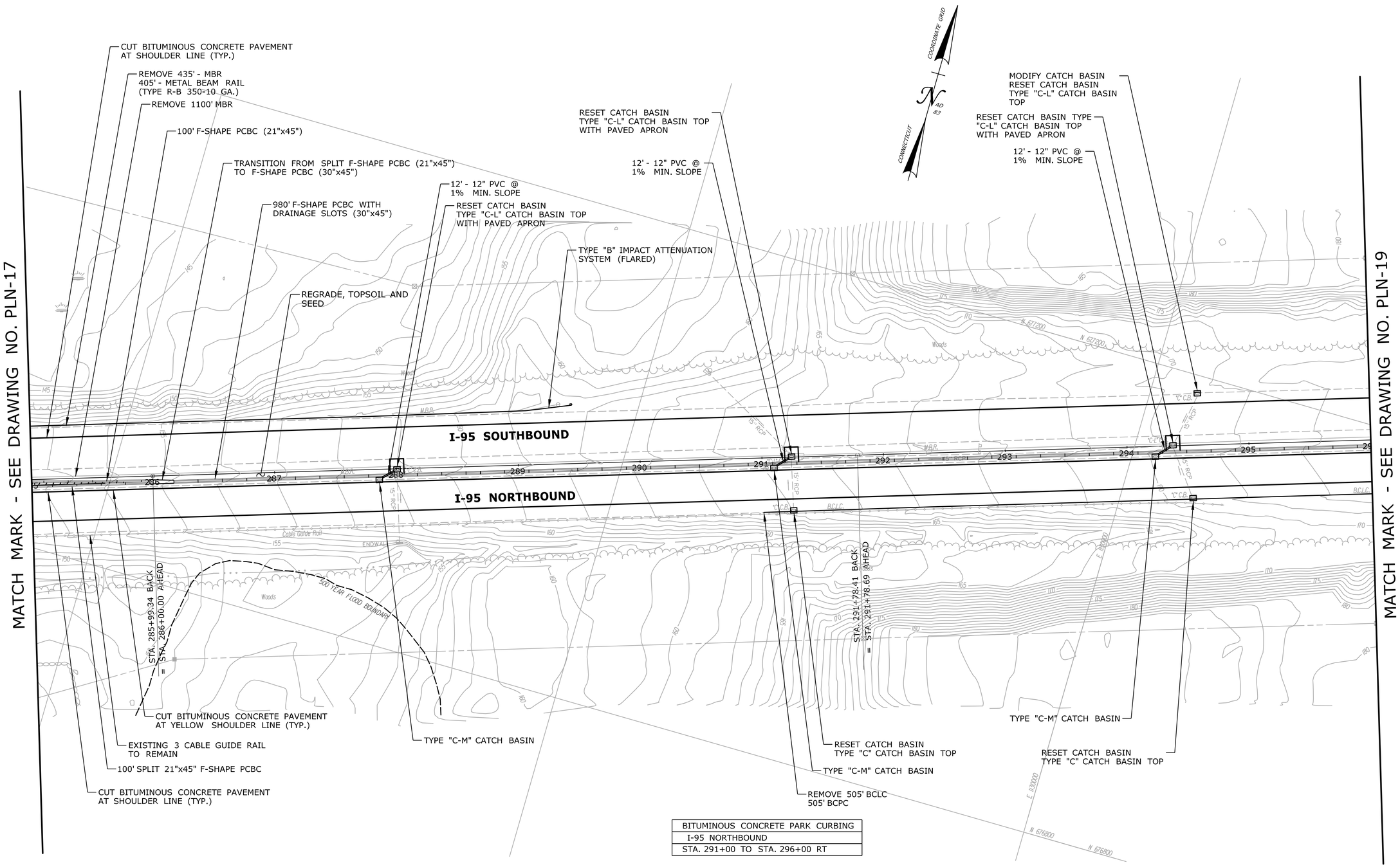

BITUMINOUS CONCRETE PARK CURBING
I-95 NORTHBOUND
STA. 291+00 TO STA. 296+00 RT

PRELIMINARY DESIGN REVIEW

REV.	DATE	REVISION DESCRIPTION	SHEET NO.
-	-	-	-
-	-	-	-
-	-	-	-
-	-	-	-
-	-	-	-
-	-	-	-

THE INFORMATION, INCLUDING ESTIMATED QUANTITIES OF WORK, SHOWN ON THESE SHEETS IS BASED ON LIMITED INVESTIGATIONS BY THE STATE AND IS IN NO WAY WARRANTED TO INDICATE THE CONDITIONS OF ACTUAL QUANTITIES OF WORK WHICH WILL BE REQUIRED.

Plotted Date: 3/7/2013

DESIGNER/DRAFTER: **RL/MF/EK**

CHECKED BY: **D. DAGAN**

SCALE IN FEET 0 40 80

SCALE 1"=40'

STATE OF CONNECTICUT
DEPARTMENT OF TRANSPORTATION

Filename: ...\Plan\HW_MSH_PLN-18.dgn

SIGNATURE/ BLOCK:

PROJECT TITLE:
INTERSTATE 95 RESURFACING AND SAFETY IMPROVEMENTS

TOWN: **OLD LYME & EAST LYME**

DRAWING TITLE: **ROADWAY PLAN STA. 285 TO STA. 296**

PROJECT NO. **104-164**

DRAWING NO. **PLN-18**

SHEET NO. **03.42**

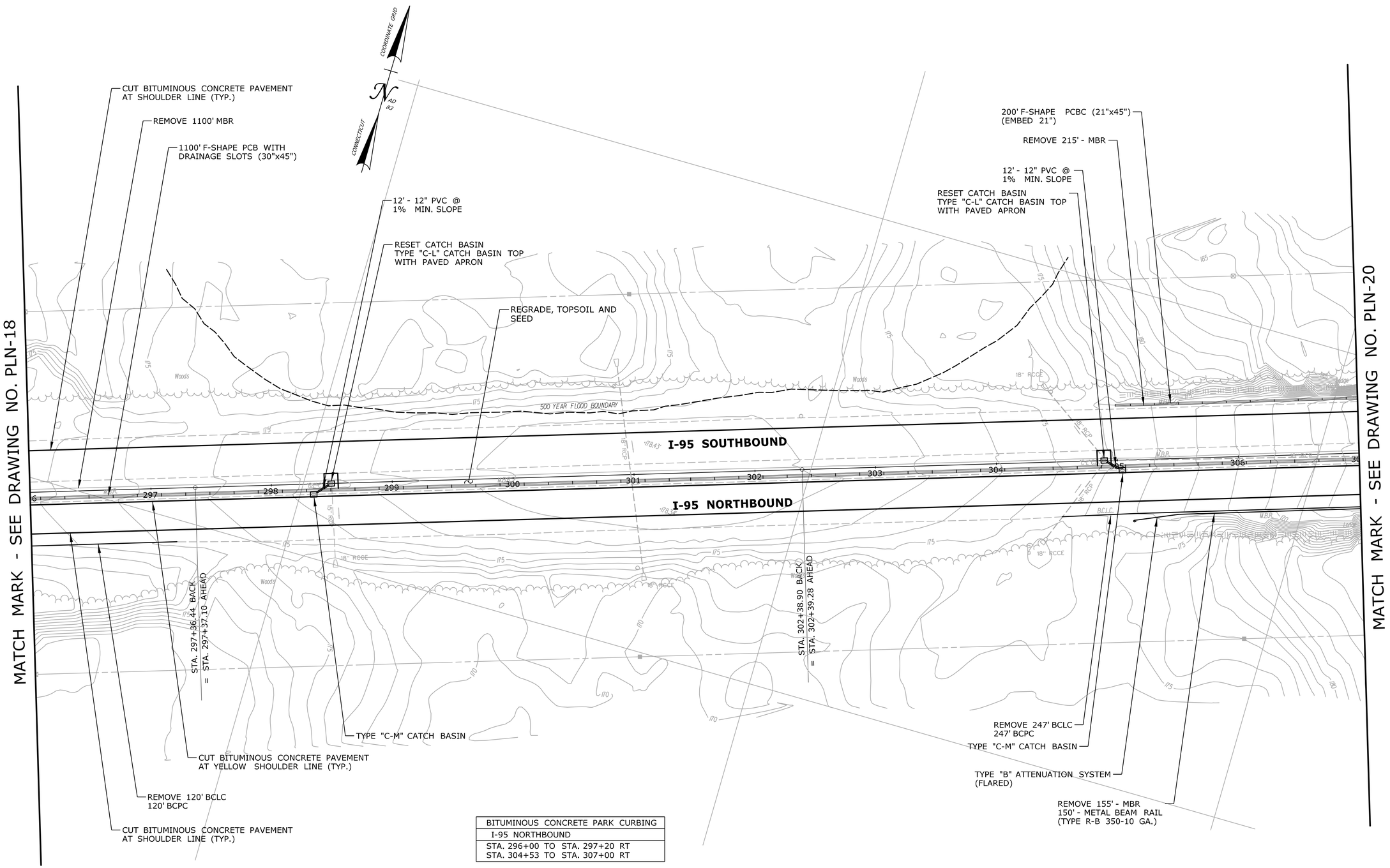

BITUMINOUS CONCRETE PARK CURBING
I-95 NORTHBOUND
STA. 296+00 TO STA. 297+20 RT STA. 304+53 TO STA. 307+00 RT

PRELIMINARY DESIGN REVIEW

REV.	DATE	REVISION DESCRIPTION	SHEET NO.
-	-	-	-
-	-	-	-
-	-	-	-
-	-	-	-
-	-	-	-
-	-	-	-

THE INFORMATION, INCLUDING ESTIMATED QUANTITIES OF WORK, SHOWN ON THESE SHEETS IS BASED ON LIMITED INVESTIGATIONS BY THE STATE AND IS IN NO WAY WARRANTED TO INDICATE THE CONDITIONS OF ACTUAL QUANTITIES OF WORK WHICH WILL BE REQUIRED.

Plotted Date: 3/7/2013

DESIGNER/DRAFTER: **RL/MF/EK**
CHECKED BY: **D. DAGAN**
SCALE IN FEET
0 40 80
SCALE 1"=40'

STATE OF CONNECTICUT
DEPARTMENT OF TRANSPORTATION

Filename: ...\Plan\HW_MSH_PLN-19.dgn

SIGNATURE/
BLOCK:

PROJECT TITLE:
INTERSTATE 95 RESURFACING AND SAFETY IMPROVEMENTS

TOWN: **OLD LYME & EAST LYME**

DRAWING TITLE: **ROADWAY PLAN STA. 296 TO STA. 307**

PROJECT NO. **104-164**
DRAWING NO. **PLN-19**
SHEET NO. **03.43**

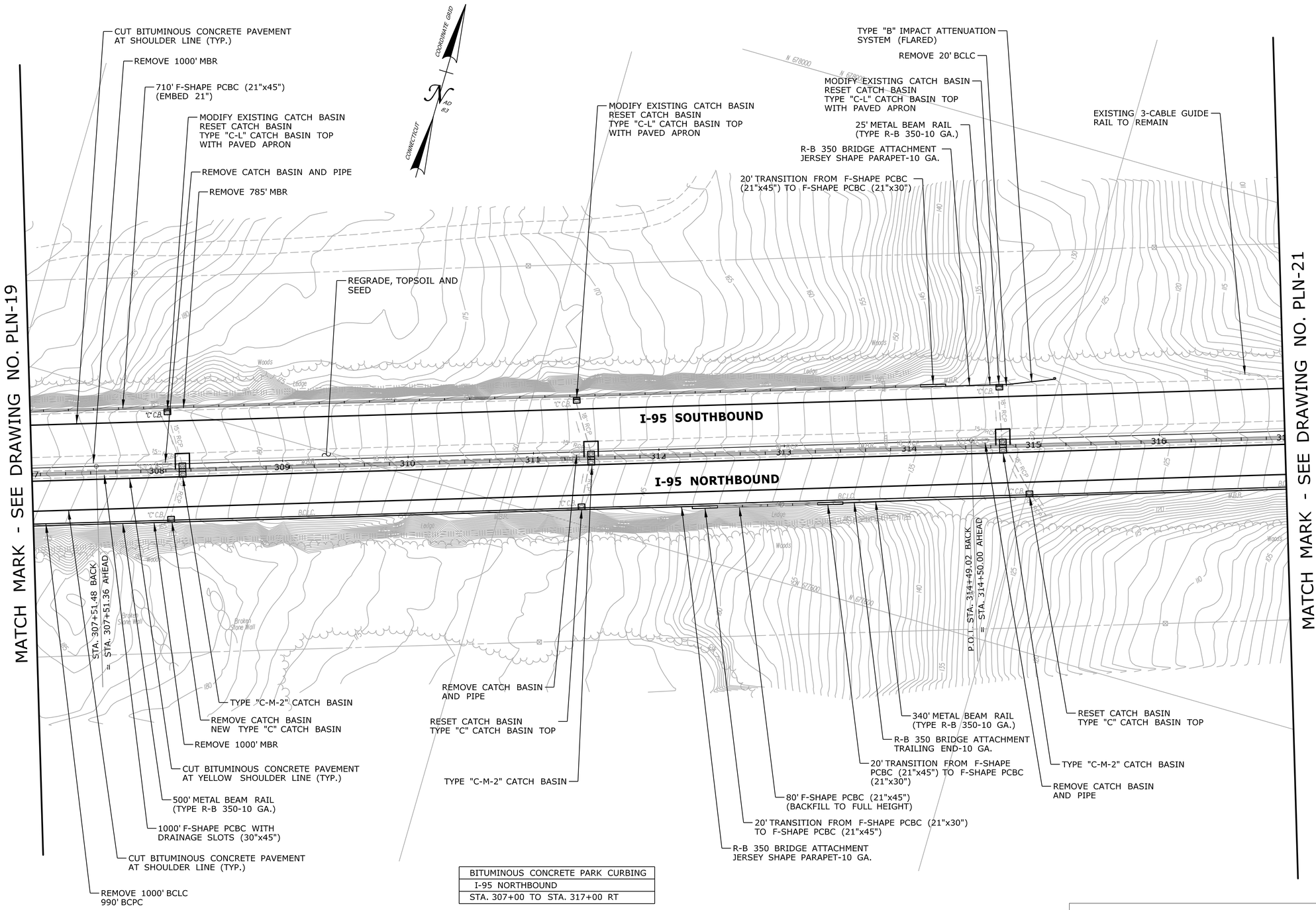

BITUMINOUS CONCRETE PARK CURBING
I-95 NORTHBOUND
STA. 307+00 TO STA. 317+00 RT

PRELIMINARY DESIGN REVIEW

REV.	DATE	REVISION DESCRIPTION	SHEET NO.
-	-	-	-
-	-	-	-
-	-	-	-
-	-	-	-
-	-	-	-
-	-	-	-

THE INFORMATION, INCLUDING ESTIMATED QUANTITIES OF WORK, SHOWN ON THESE SHEETS IS BASED ON LIMITED INVESTIGATIONS BY THE STATE AND IS IN NO WAY WARRANTED TO INDICATE THE CONDITIONS OF ACTUAL QUANTITIES OF WORK WHICH WILL BE REQUIRED.

Plotted Date: 3/7/2013

DESIGNER/DRAFTER: **RL/MF/EK**

CHECKED BY: **D. DAGAN**

SCALE IN FEET 0 40 80

SCALE 1"=40'

STATE OF CONNECTICUT
DEPARTMENT OF TRANSPORTATION

Filename: ...\Plan\HW_MSH_PLN-20.dgn

SIGNATURE/ BLOCK:

PROJECT TITLE: **INTERSTATE 95 RESURFACING AND SAFETY IMPROVEMENTS**

TOWN: **OLD LYME & EAST LYME**

DRAWING TITLE: **ROADWAY PLAN STA. 307 TO STA. 317**

PROJECT NO. **104-164**

DRAWING NO. **PLN-20**

SHEET NO. **03.44**

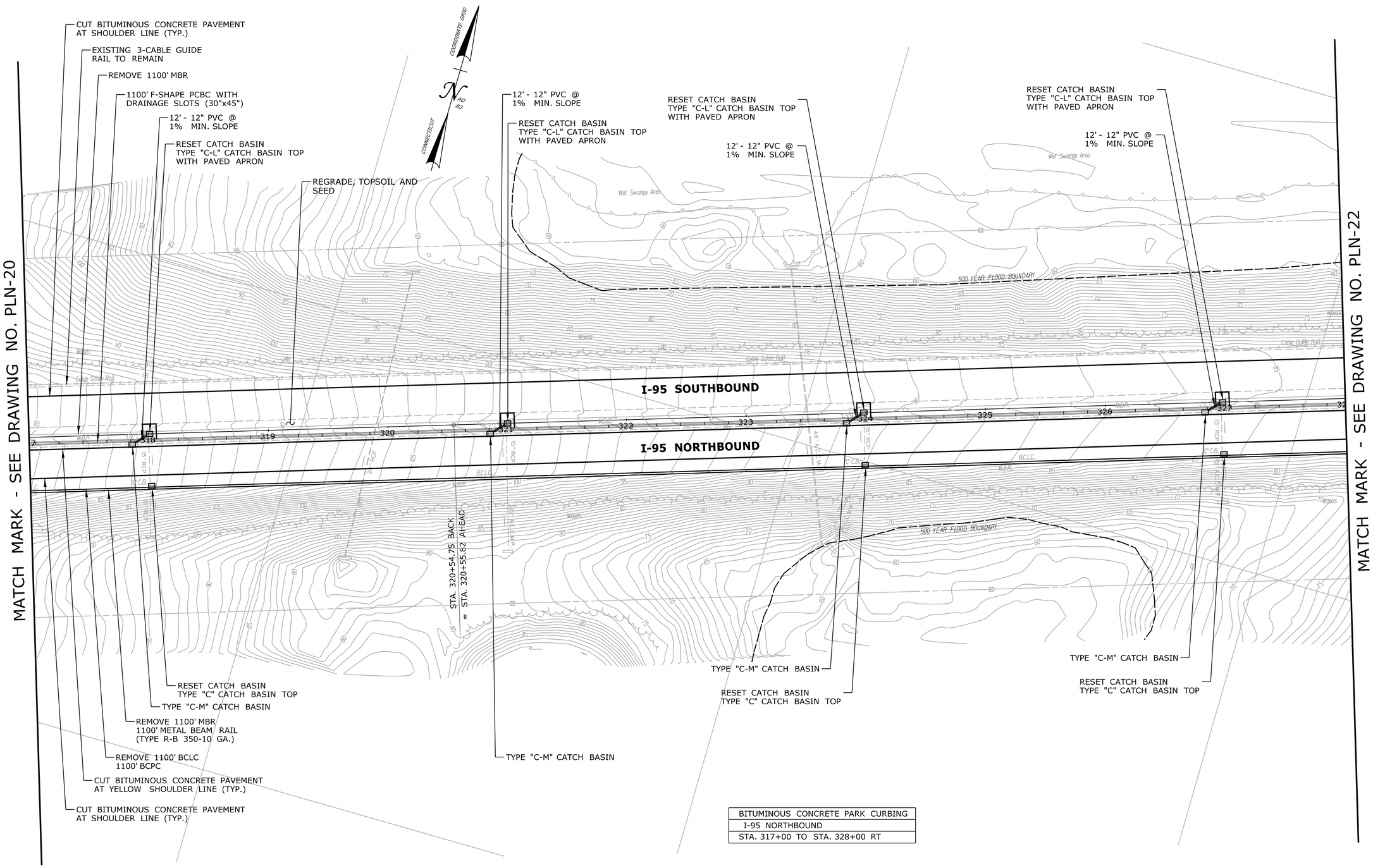

BITUMINOUS CONCRETE PARK CURBING
I-95 NORTHBOUND
STA. 317+00 TO STA. 328+00 RT

PRELIMINARY DESIGN REVIEW

REV.	DATE	REVISION DESCRIPTION	SHEET NO.
-	-	-	-
-	-	-	-
-	-	-	-
-	-	-	-
-	-	-	-
-	-	-	-

THE INFORMATION, INCLUDING ESTIMATED QUANTITIES OF WORK, SHOWN ON THESE SHEETS IS BASED ON LIMITED INVESTIGATIONS BY THE STATE AND IS IN NO WAY WARRANTED TO INDICATE THE CONDITIONS OF ACTUAL QUANTITIES OF WORK WHICH WILL BE REQUIRED.

Plotted Date: 3/7/2013

DESIGNER/DRAFTER: **RL/MF/EK**

CHECKED BY: **D. DAGAN**

SCALE IN FEET 0 40 80

SCALE 1"=40'

STATE OF CONNECTICUT
DEPARTMENT OF TRANSPORTATION

Filename: ...\Plan\HW_MSH_PLN-21.dgn

SIGNATURE/ BLOCK:

PROJECT TITLE: **INTERSTATE 95 RESURFACING AND SAFETY IMPROVEMENTS**

TOWN: **OLD LYME & EAST LYME**

DRAWING TITLE: **ROADWAY PLAN STA. 317 TO STA. 328**

PROJECT NO. **104-164**

DRAWING NO. **PLN-21**

SHEET NO. **03.45**

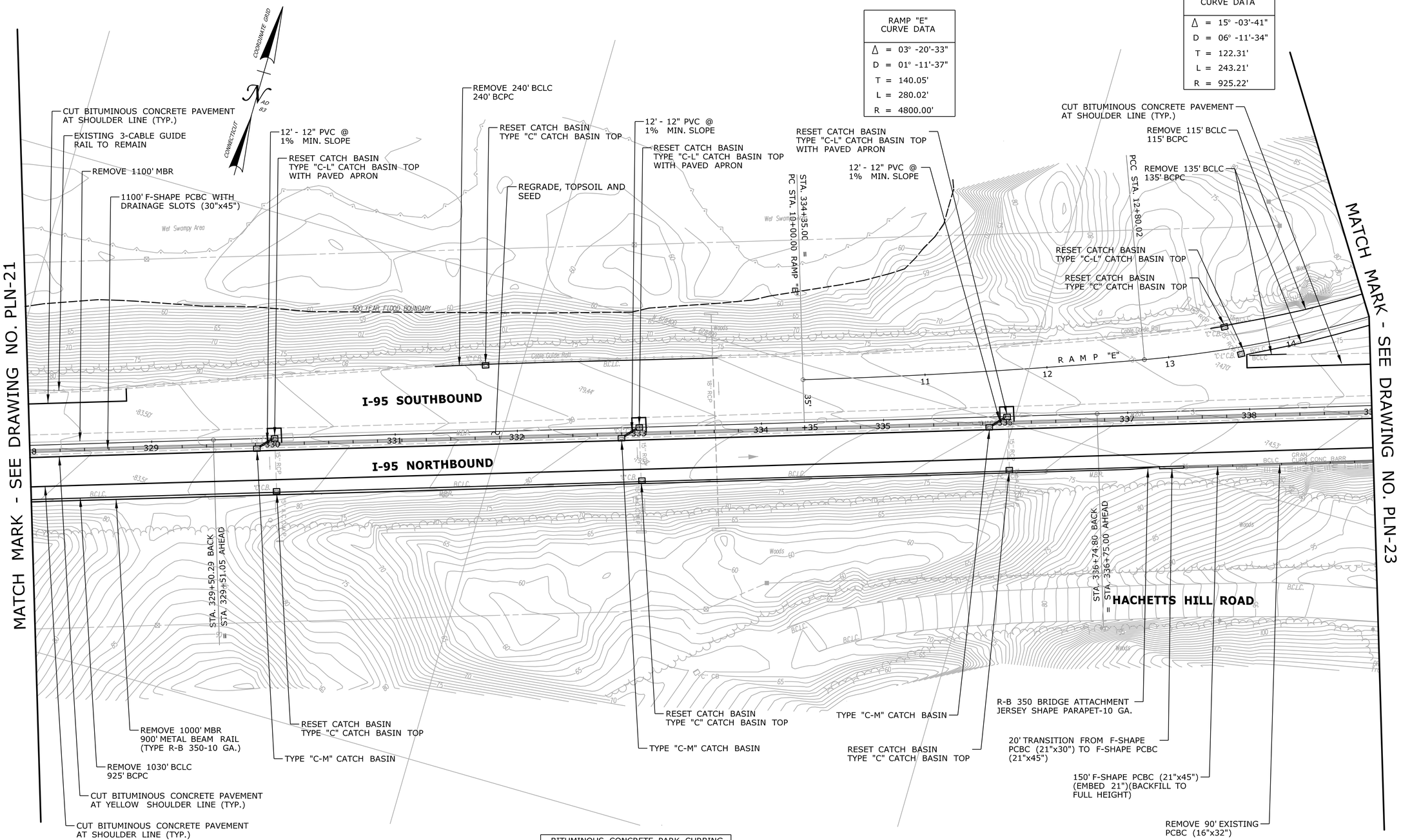

RAMP "E" CURVE DATA
Δ = 03° -20'-33"
D = 01° -11'-37"
T = 140.05'
L = 280.02'
R = 4800.00'

RAMP "E" CURVE DATA
Δ = 15° -03'-41"
D = 06° -11'-34"
T = 122.31'
L = 243.21'
R = 925.22'

BITUMINOUS CONCRETE PARK CURBING
I-95 NORTHBOUND
STA. 328+00 TO STA. 337+25 RT
I-95 SOUTHBOUND RAMP "E"
STA. 13+35 TO STA. 14+68 LT

PRELIMINARY DESIGN REVIEW

REV.	DATE	REVISION DESCRIPTION	SHEET NO.
-	-	-	-
-	-	-	-
-	-	-	-
-	-	-	-
-	-	-	-
-	-	-	-

THE INFORMATION, INCLUDING ESTIMATED QUANTITIES OF WORK, SHOWN ON THESE SHEETS IS BASED ON LIMITED INVESTIGATIONS BY THE STATE AND IS IN NO WAY WARRANTED TO INDICATE THE CONDITIONS OF ACTUAL QUANTITIES OF WORK WHICH WILL BE REQUIRED.

Plotted Date: 3/21/2013

DESIGNER/DRAFTER: **RL/MF/EK**

CHECKED BY: **D. DAGAN**

SCALE IN FEET 0 40 80

SCALE 1"=40'

STATE OF CONNECTICUT
DEPARTMENT OF TRANSPORTATION

Filename: ...\Plan\HW_MSH_PLN-22.dgn

SIGNATURE/ BLOCK:

PROJECT TITLE: **INTERSTATE 95 RESURFACING AND SAFETY IMPROVEMENTS**

TOWN: **OLD LYME & EAST LYME**

DRAWING TITLE: **ROADWAY PLAN STA. 328 TO STA. 339**

PROJECT NO. **104-164**

DRAWING NO. **PLN-22**

SHEET NO. **03.46**

NOTE

I-95 UNDER FOUR MILE RIVER ROAD (BRIDGE NO. 00246)

SB PAVEMENT

- WHEN CONDUCTING THE 1.5" MILLING OF THE TRAVELWAY, MILL A TRANSITION DOWN TO THE PCC 200 FEET BEFORE AND 100 FEET AFTER THE OUTER EDGES OF THE BRIDGE
- MILL DOWN TO THE PCC STARTING 200 FEET BEFORE THE BRIDGE AND EXTENDING TO 100 FEET AFTER THE BRIDGE
- CONTINUE THE NORMAL TRAVELWAY LIFT PMA S0.375 WEDGE COURSE THROUGH THE UNDERPASS, BUT LIMIT IT TO BE NO MORE THAN 1.25" THICK ALONG THE SECTION MILLED DOWN TO THE PCC
- CONTINUE THE NORMAL PMA S0.5 SURFACE COURSE THROUGH THE UNDERPASS, BUT REDUCE THE THICKNESS TO 1.75" FOR 200 FEET BEFORE AND 100 FEET AFTER THE BRIDGE
- EXISTING CLEARANCE UNDER THE BRIDGE MUST BE MAINTAINED

RAMP "E" CURVE DATA
Δ = 15° -03'-41"
D = 06° -11'-34"
T = 122.31'
L = 243.21'
R = 925.22'

BITUMINOUS CONCRETE PARK CURBING
I-95 SOUTHBOUND ON-RAMP "E"
STA. 14+70 TO STA. 19+60 LT STA. 14+70 TO STA. 20+00 RT

BITUMINOUS CONCRETE PARK CURBING
I-95 SOUTHBOUND OFF-RAMP "F"
STA. 31+30 TO STA. 36+40 LT STA. 30+85 TO STA. 36+40 RT

BITUMINOUS CONCRETE PARK CURBING
I-95 NORTHBOUND OFF-RAMP "G"
STA. 11+00 TO STA. 17+00LT STA. 11+00 TO STA. 11+75 RT

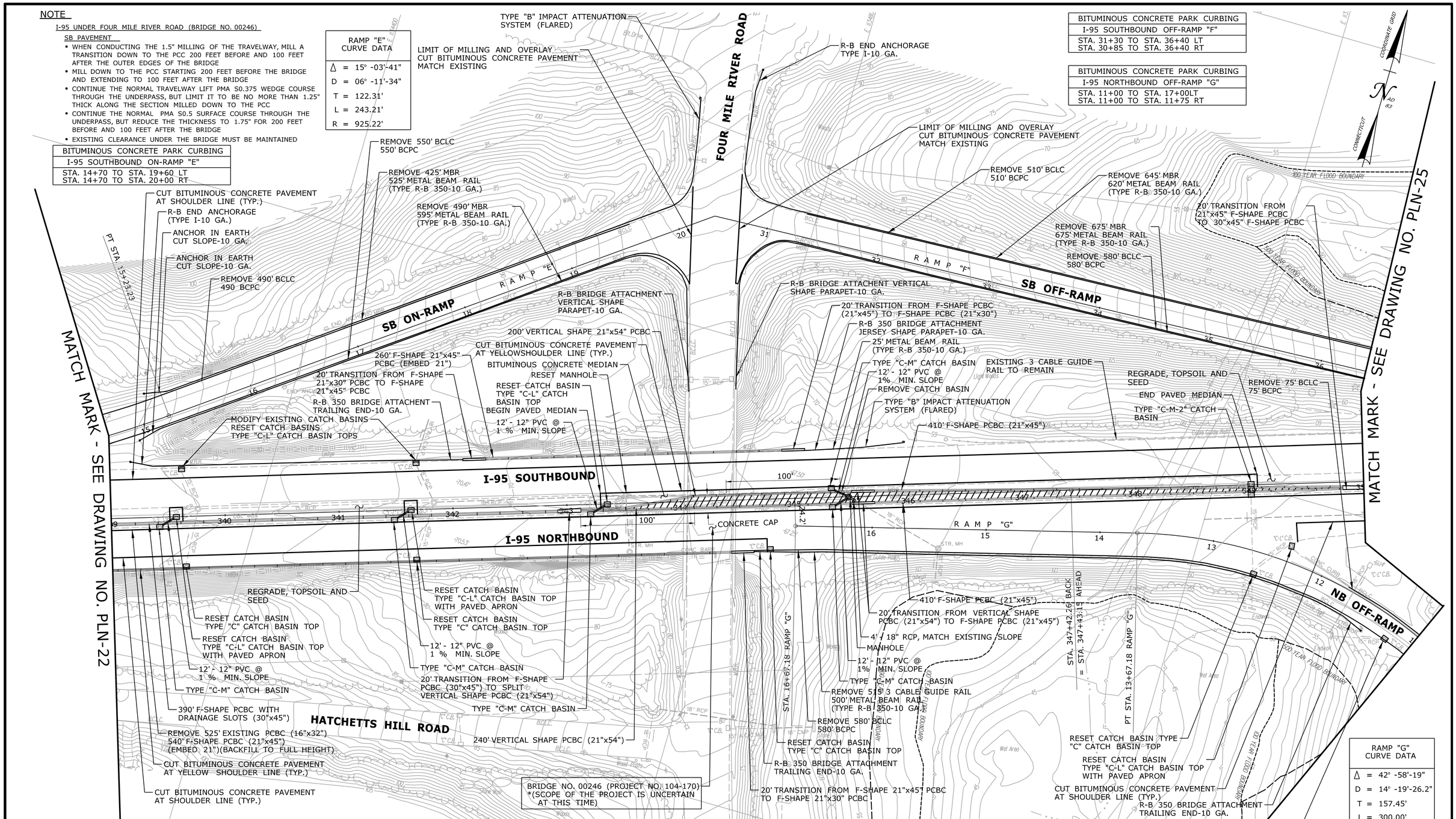

RAMP "G" CURVE DATA
Δ = 42° -58'-19"
D = 14° -19'-26.2"
T = 157.45'
L = 300.00'
R = 400.00'

PRELIMINARY DESIGN REVIEW

REV.	DATE	REVISION DESCRIPTION	SHEET NO.
-	-	-	-
-	-	-	-
-	-	-	-
-	-	-	-
-	-	-	-
-	-	-	-

THE INFORMATION, INCLUDING ESTIMATED QUANTITIES OF WORK, SHOWN ON THESE SHEETS IS BASED ON LIMITED INVESTIGATIONS BY THE STATE AND IS IN NO WAY WARRANTED TO INDICATE THE CONDITIONS OF ACTUAL QUANTITIES OF WORK WHICH WILL BE REQUIRED.

Plotted Date: 3/7/2013

DESIGNER/DRAFTER: **RL/MF/EK**

CHECKED BY: **D. DAGAN**

SCALE IN FEET 0 40 80

SCALE 1"=40'

STATE OF CONNECTICUT
DEPARTMENT OF TRANSPORTATION

Filename: ...\Plan\HW_MSH_PLN-23.dgn

SIGNATURE/ BLOCK:

PROJECT TITLE: **INTERSTATE 95 RESURFACING AND SAFETY IMPROVEMENTS**

TOWN: **OLD LYME & EAST LYME**

DRAWING TITLE: **ROADWAY PLAN STA. 339 TO STA. 350**

PROJECT NO. **104-164**

DRAWING NO. **PLN-23**

SHEET NO. **03.47**

RAMP "G" CURVE DATA
Δ = 31° -49'-52"
D = 21° -13'-14.4"
T = 76.99'
L = 150.00'
R = 270.00'

RAMP "G" CURVE DATA
Δ = 105° -11'-49"
D = 31° -49'-51.6"
T = 235.42'
L = 330.49'
R = 180.00'

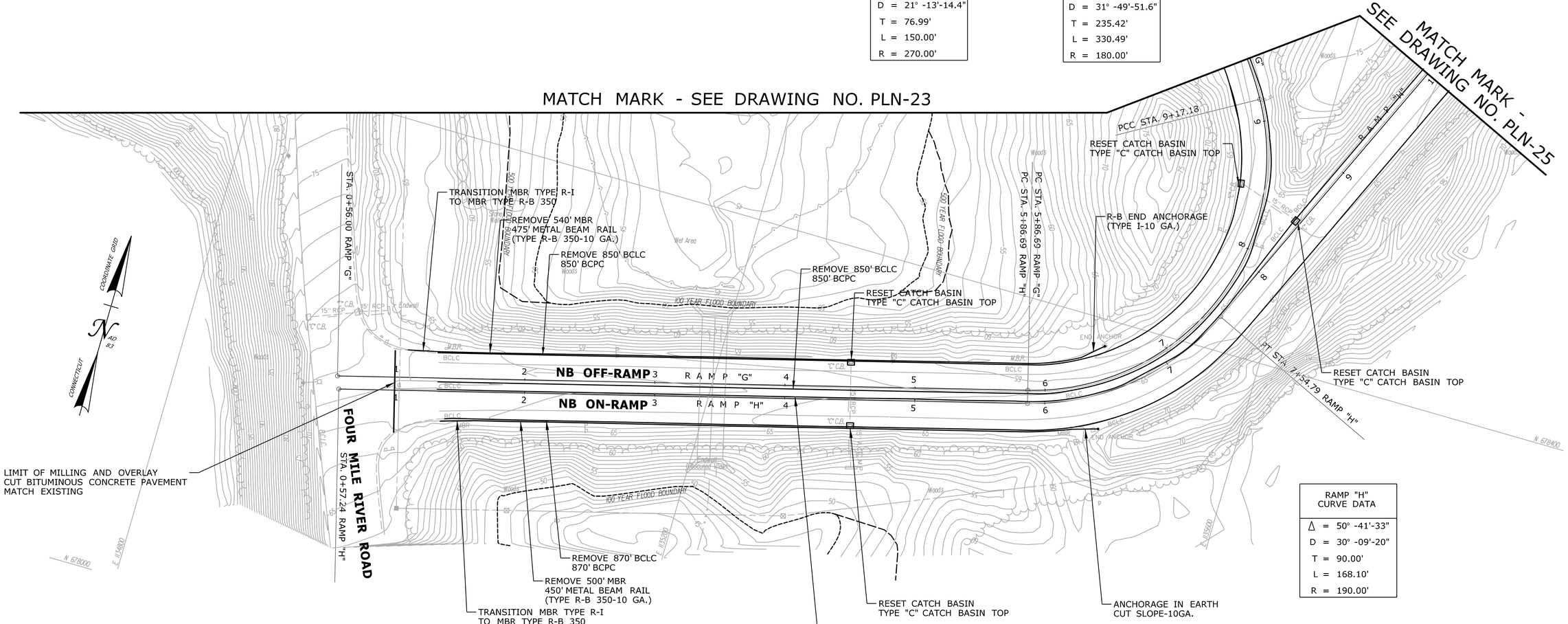

RAMP "H" CURVE DATA
Δ = 50° -41'-33"
D = 30° -09'-20"
T = 90.00'
L = 168.10'
R = 190.00'

BITUMINOUS CONCRETE PARK CURBING
I-95 NORTHBOUND OFF-RAMP "G"
STA. 1+33 TO STA. 9+50 LT STA. 1+33 TO STA. 9+50 RT
I-95 NORTHBOUND ON-RAMP "H"
STA. 1+33 TO STA. 10+00 LT STA. 1+36 TO STA. 10+00 RT

PRELIMINARY DESIGN REVIEW

REV.	DATE	REVISION DESCRIPTION	SHEET NO.
-	-	-	-
-	-	-	-
-	-	-	-
-	-	-	-
-	-	-	-
-	-	-	-

THE INFORMATION, INCLUDING ESTIMATED QUANTITIES OF WORK, SHOWN ON THESE SHEETS IS BASED ON LIMITED INVESTIGATIONS BY THE STATE AND IS IN NO WAY WARRANTED TO INDICATE THE CONDITIONS OF ACTUAL QUANTITIES OF WORK WHICH WILL BE REQUIRED.

Plotted Date: 3/7/2013

DESIGNER/DRAFTER: **RL/MF/EK**
CHECKED BY: **D. DAGAN**
SCALE IN FEET 0 40 80
SCALE 1"=40'

STATE OF CONNECTICUT
DEPARTMENT OF TRANSPORTATION

Filename: ...\Plan\HW_MSH_PLN-24.dgn

SIGNATURE/ BLOCK:

PROJECT TITLE:
INTERSTATE 95 RESURFACING AND SAFETY IMPROVEMENTS

TOWN: **OLD LYME & EAST LYME**

DRAWING TITLE: **ROADWAY PLAN STA. 1 TO STA. 10**

PROJECT NO. **104-164**
DRAWING NO. **PLN-24**
SHEET NO. **03.48**

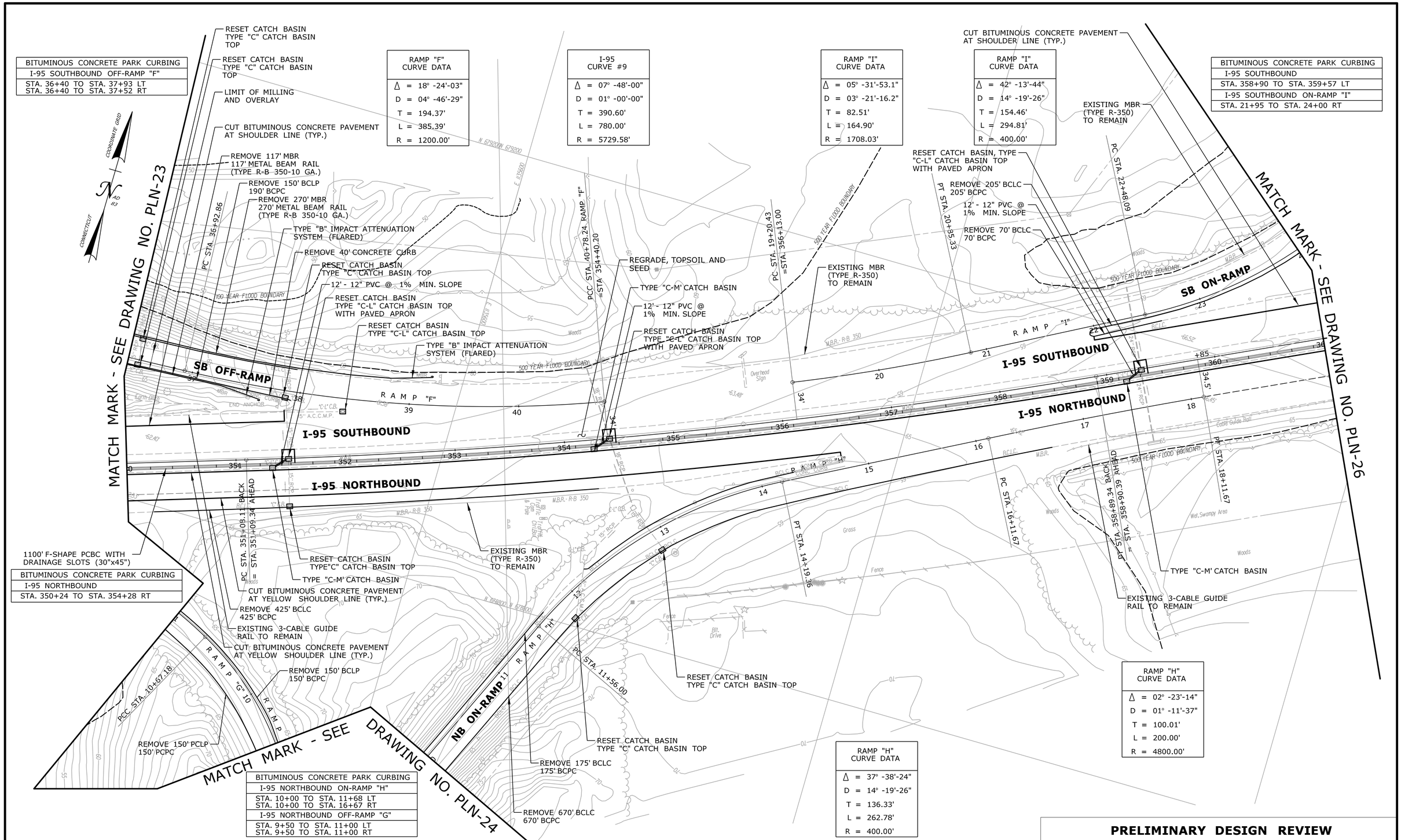

PRELIMINARY DESIGN REVIEW

REV.	DATE	REVISION DESCRIPTION	SHEET NO.
-	-	-	-
-	-	-	-
-	-	-	-
-	-	-	-
-	-	-	-
-	-	-	-

THE INFORMATION, INCLUDING ESTIMATED QUANTITIES OF WORK, SHOWN ON THESE SHEETS IS BASED ON LIMITED INVESTIGATIONS BY THE STATE AND IS IN NO WAY WARRANTED TO INDICATE THE CONDITIONS OF ACTUAL QUANTITIES OF WORK WHICH WILL BE REQUIRED.

Plotted Date: 3/7/2013

DESIGNER/DRAFTER: **RL/MF/EK**
CHECKED BY: **D. DAGAN**
SCALE IN FEET 0 40 80
SCALE 1"=40'

STATE OF CONNECTICUT
DEPARTMENT OF TRANSPORTATION

Filename: ...\Plan\HW_MSH_PLN-25.dgn

SIGNATURE/BLOCK:

PROJECT TITLE:
INTERSTATE 95 RESURFACING AND SAFETY IMPROVEMENTS

TOWN: **OLD LYME & EAST LYME**

DRAWING TITLE: **ROADWAY PLAN STA. 350 TO STA. 361**

PROJECT NO. **104-164**
DRAWING NO. **PLN-25**
SHEET NO. **03.49**

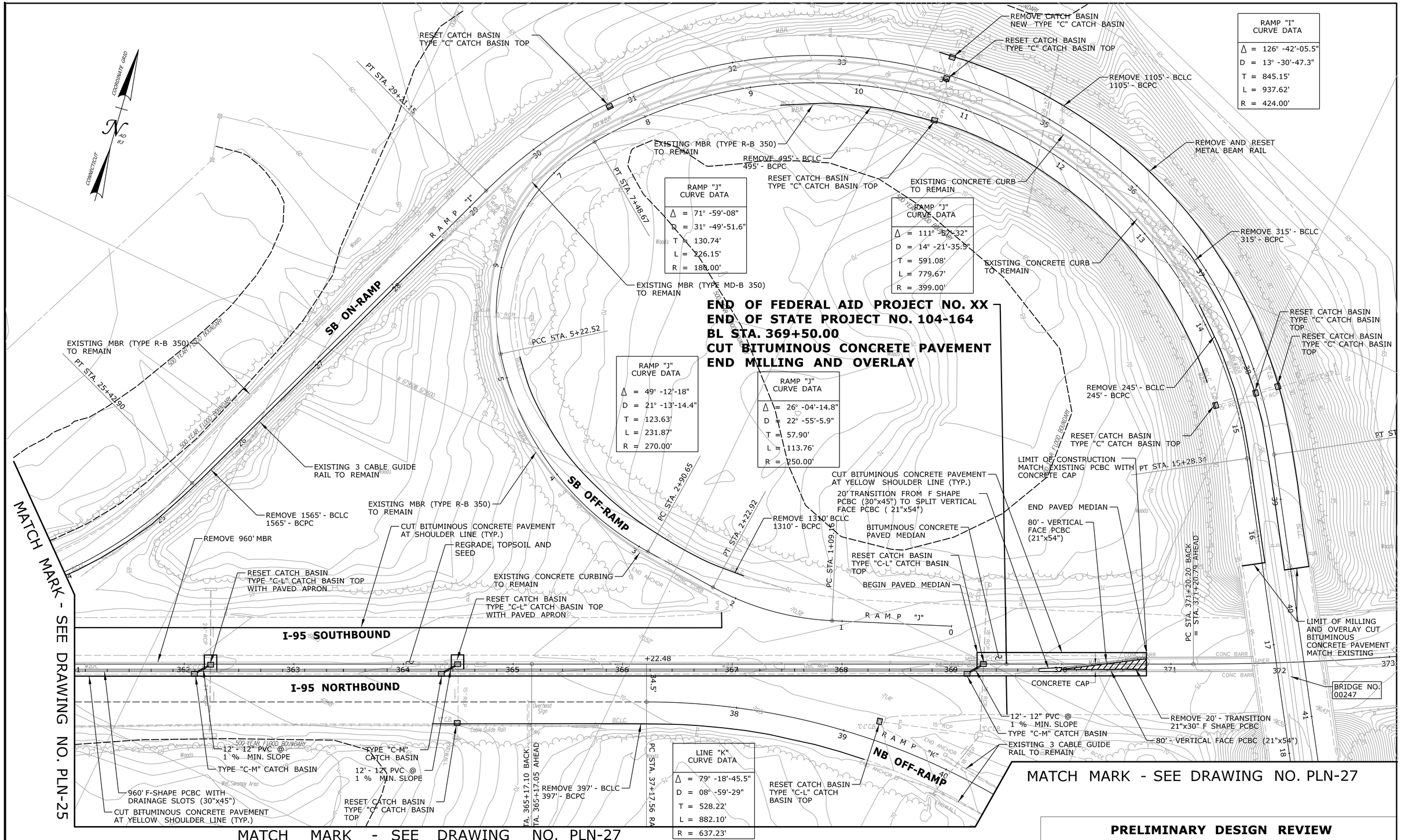

PRELIMINARY DESIGN REVIEW

REV.	DATE	REVISION DESCRIPTION	SHEET NO.
-	-		-
-	-		-
-	-		-
-	-		-
-	-		-
-	-		-

THE INFORMATION, INCLUDING ESTIMATED QUANTITIES OF WORK, SHOWN ON THESE SHEETS IS BASED ON LIMITED INVESTIGATIONS BY THE STATE AND IS IN NO WAY WARRANTED TO INDICATE THE CONDITIONS OF ACTUAL QUANTITIES OF WORK WHICH WILL BE REQUIRED.

Plotted Date: 3/7/2013

DESIGNER/DRAFTER: **RL/MF/EK**
CHECKED BY: **D. DAGAN**
SCALE IN FEET 0 40 80
SCALE 1"=40'

STATE OF CONNECTICUT
DEPARTMENT OF TRANSPORTATION

Filename: ...\Plan\HW_MSH_PLN-26.dgn

SIGNATURE/ BLOCK:

PROJECT TITLE:
INTERSTATE 95 RESURFACING AND SAFETY IMPROVEMENTS

TOWN: **OLD LYME & EAST LYME**

DRAWING TITLE: **ROADWAY PLAN STA. 361 TO STA. 373**

PROJECT NO. **104-164**
DRAWING NO. **PLN-26**
SHEET NO. **03.50**

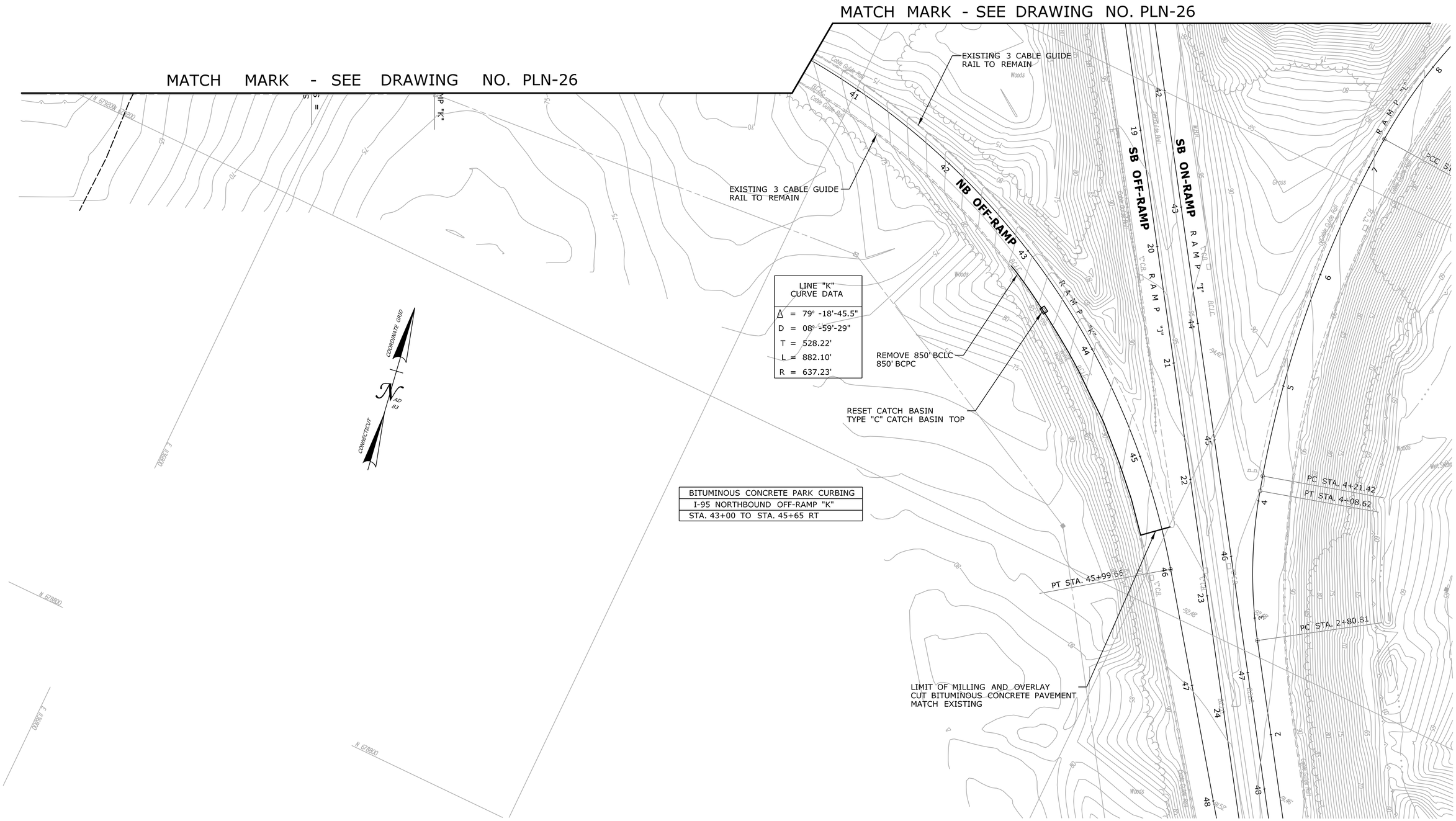

PRELIMINARY DESIGN REVIEW

REV.	DATE	REVISION DESCRIPTION	SHEET NO.
-		-	-
-		-	-
-		-	-
-		-	-
-		-	-
-		-	-

THE INFORMATION, INCLUDING ESTIMATED QUANTITIES OF WORK, SHOWN ON THESE SHEETS IS BASED ON LIMITED INVESTIGATIONS BY THE STATE AND IS IN NO WAY WARRANTED TO INDICATE THE CONDITIONS OF ACTUAL QUANTITIES OF WORK WHICH WILL BE REQUIRED.

Plotted Date: 3/7/2013

DESIGNER/DRAFTER: **RL/MF/EK**

CHECKED BY: **D. DAGAN**

SCALE IN FEET 0 40 80

SCALE 1"=40'

STATE OF CONNECTICUT
DEPARTMENT OF TRANSPORTATION

Filename: ...\Plan\HW_MSH_PLN-27.dgn

SIGNATURE/ BLOCK:

PROJECT TITLE:

INTERSTATE 95 RESURFACING AND SAFETY IMPROVEMENTS

TOWN: **OLD LYME & EAST LYME**

DRAWING TITLE: **ROADWAY PLAN STA. 40+50 TO STA. 48**

PROJECT NO. **104-164**

DRAWING NO. **PLN-27**

SHEET NO. **03.51**

BEGINNING OF FEDERAL AID PROJECT NO. XX
BEGINNING OF STATE PROJECT NO. 104-164
SB BL STA. 70+73.00
NB BL STA. 70+73.00
LIMIT OF MILLING AND OVERLAY

I-95 NB CURVE # 1
Δ = 08° -28'-39.2"
D = 01° -35'-29.6"
T = 266.82'
L = 532.66'
R = 3600.00'

I-95 SB CURVE # 2
Δ = 08° -28'-39.2"
D = 01° -36'-56.8"
T = 262.82'
L = 524.67'
R = 3546.00'

RAMP "A" CURVE DATA
Δ = 23° -01'-03.8"
D = 05° -59'-36.3"
T = 194.65'
L = 384.05'
R = 995.98'

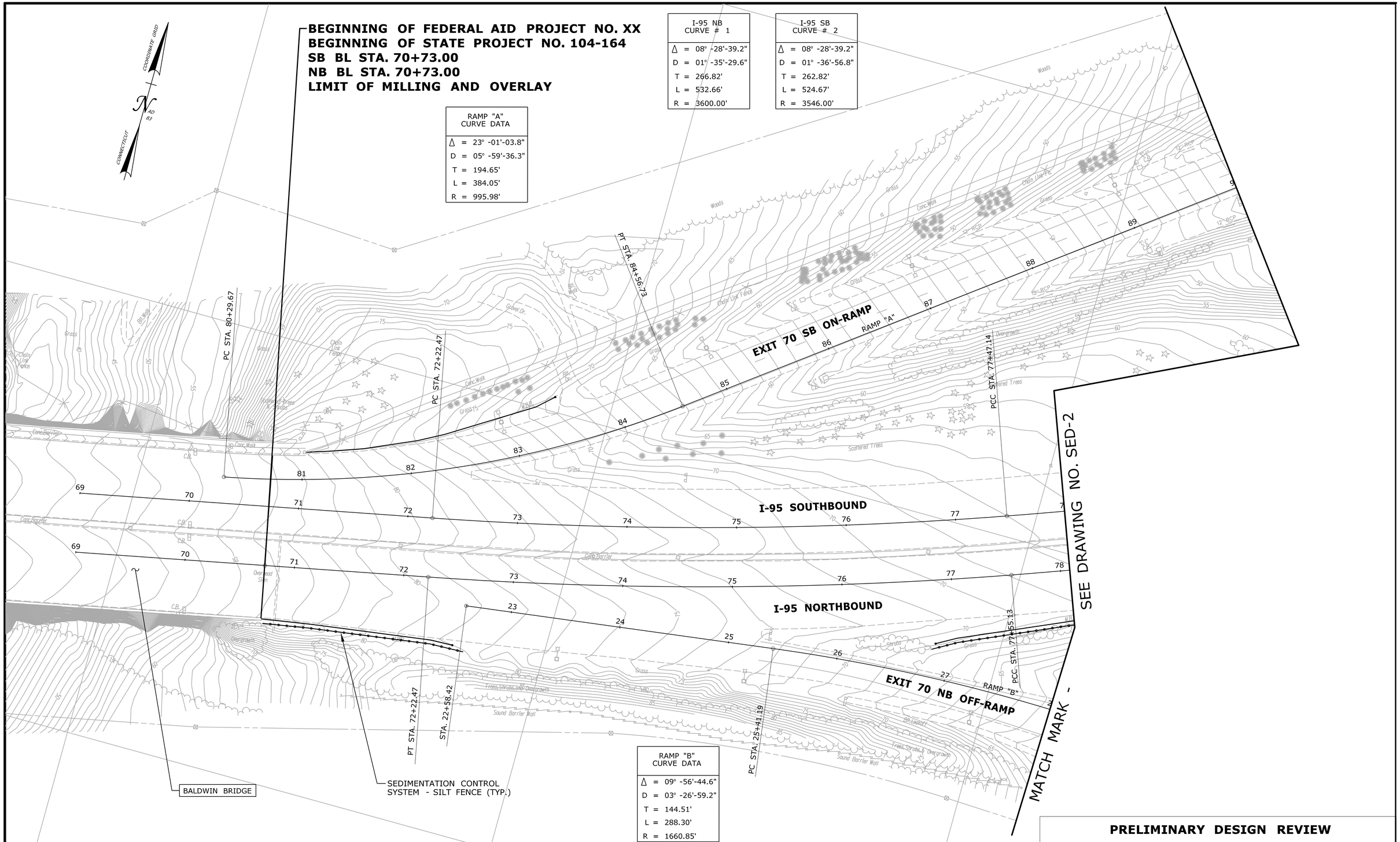

RAMP "B" CURVE DATA
Δ = 09° -56'-44.6"
D = 03° -26'-59.2"
T = 144.51'
L = 288.30'
R = 1660.85'

PRELIMINARY DESIGN REVIEW

REV.	DATE	REVISION DESCRIPTION	SHEET NO.
-	-	-	-
-	-	-	-
-	-	-	-
-	-	-	-
-	-	-	-
-	-	-	-

THE INFORMATION, INCLUDING ESTIMATED QUANTITIES OF WORK, SHOWN ON THESE SHEETS IS BASED ON LIMITED INVESTIGATIONS BY THE STATE AND IS IN NO WAY WARRANTED TO INDICATE THE CONDITIONS OF ACTUAL QUANTITIES OF WORK WHICH WILL BE REQUIRED.

Plotted Date: 3/21/2013

DESIGNER/DRAFTER: **RL/MF/EK**
CHECKED BY: **D. DAGAN**
SCALE IN FEET
0 40 80
SCALE 1"=40'

STATE OF CONNECTICUT
DEPARTMENT OF TRANSPORTATION

Filename: ...\Plan\HW_MSH_SED-1.dgn

SIGNATURE/ BLOCK:

PROJECT TITLE:
INTERSTATE 95 RESURFACING AND SAFETY IMPROVEMENTS

TOWN: **OLD LYME & EAST LYME**

DRAWING TITLE:
SEDIMENTATION AND EROSION CONTROL PLAN STA. 69 TO STA. 78

PROJECT NO. **104-164**
DRAWING NO. **SED-1**
SHEET NO. **03.52**

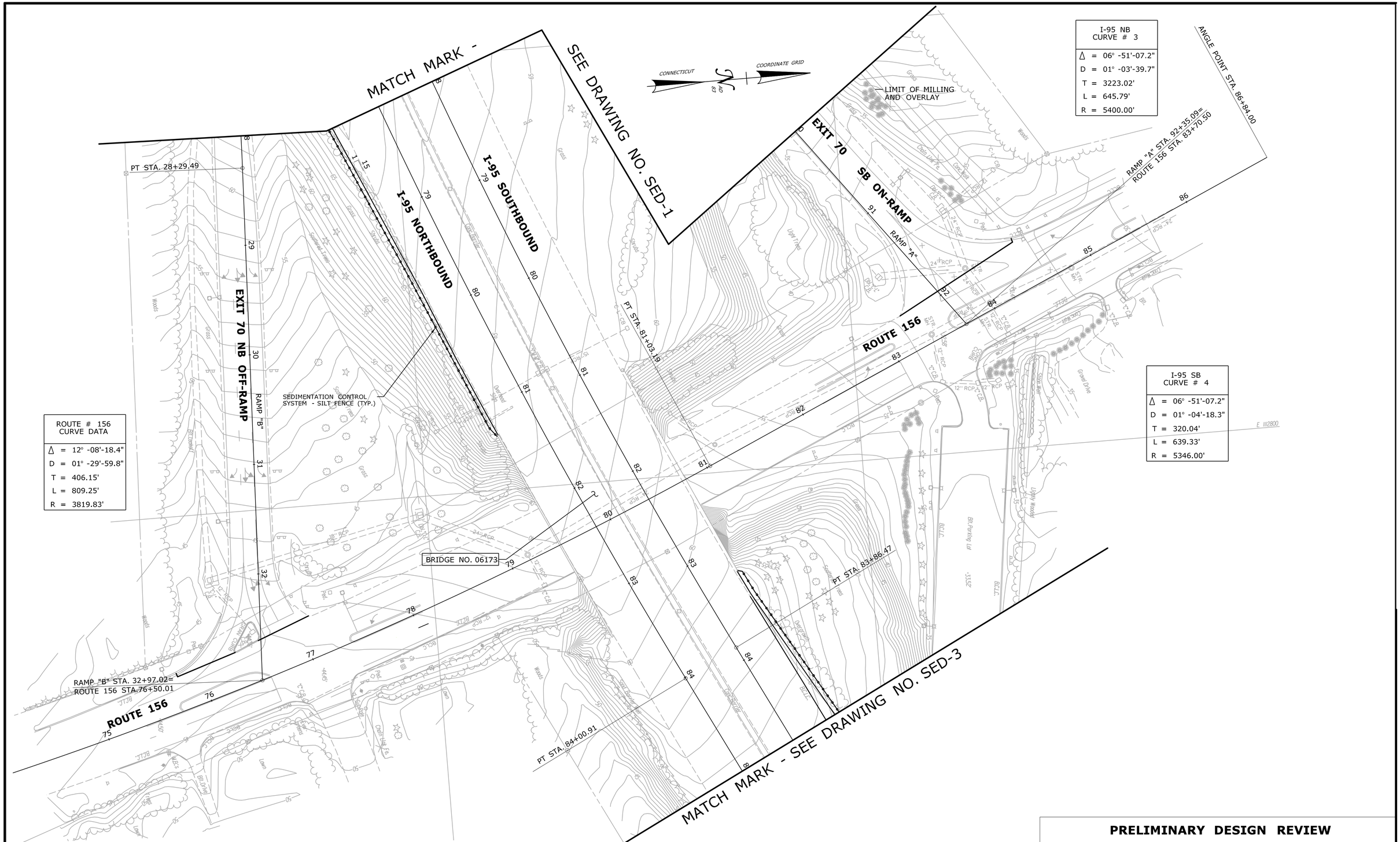

PRELIMINARY DESIGN REVIEW

REV.	DATE	REVISION DESCRIPTION	SHEET NO.
-	-	-	-
-	-	-	-
-	-	-	-
-	-	-	-
-	-	-	-
-	-	-	-

THE INFORMATION, INCLUDING ESTIMATED QUANTITIES OF WORK, SHOWN ON THESE SHEETS IS BASED ON LIMITED INVESTIGATIONS BY THE STATE AND IS IN NO WAY WARRANTED TO INDICATE THE CONDITIONS OF ACTUAL QUANTITIES OF WORK WHICH WILL BE REQUIRED.

Plotted Date: 3/21/2013

DESIGNER/DRAFTER: RL/MF/EK

CHECKED BY: D. DAGAN

SCALE IN FEET 0 40 80

SCALE 1"=40'

STATE OF CONNECTICUT
DEPARTMENT OF TRANSPORTATION

Filename: ...\Plan\HW_MSH_SED-2.dgn

SIGNATURE/ BLOCK:

PROJECT TITLE:
INTERSTATE 95 RESURFACING AND SAFETY IMPROVEMENTS

TOWN: **OLD LYME & EAST LYME**

DRAWING TITLE: **SEDIMENTATION AND EROSION CONTROL PLAN STA. 78+0 TO STA. 84+85**

PROJECT NO. **104-164**

DRAWING NO. **SED-2**

SHEET NO. **03.53**

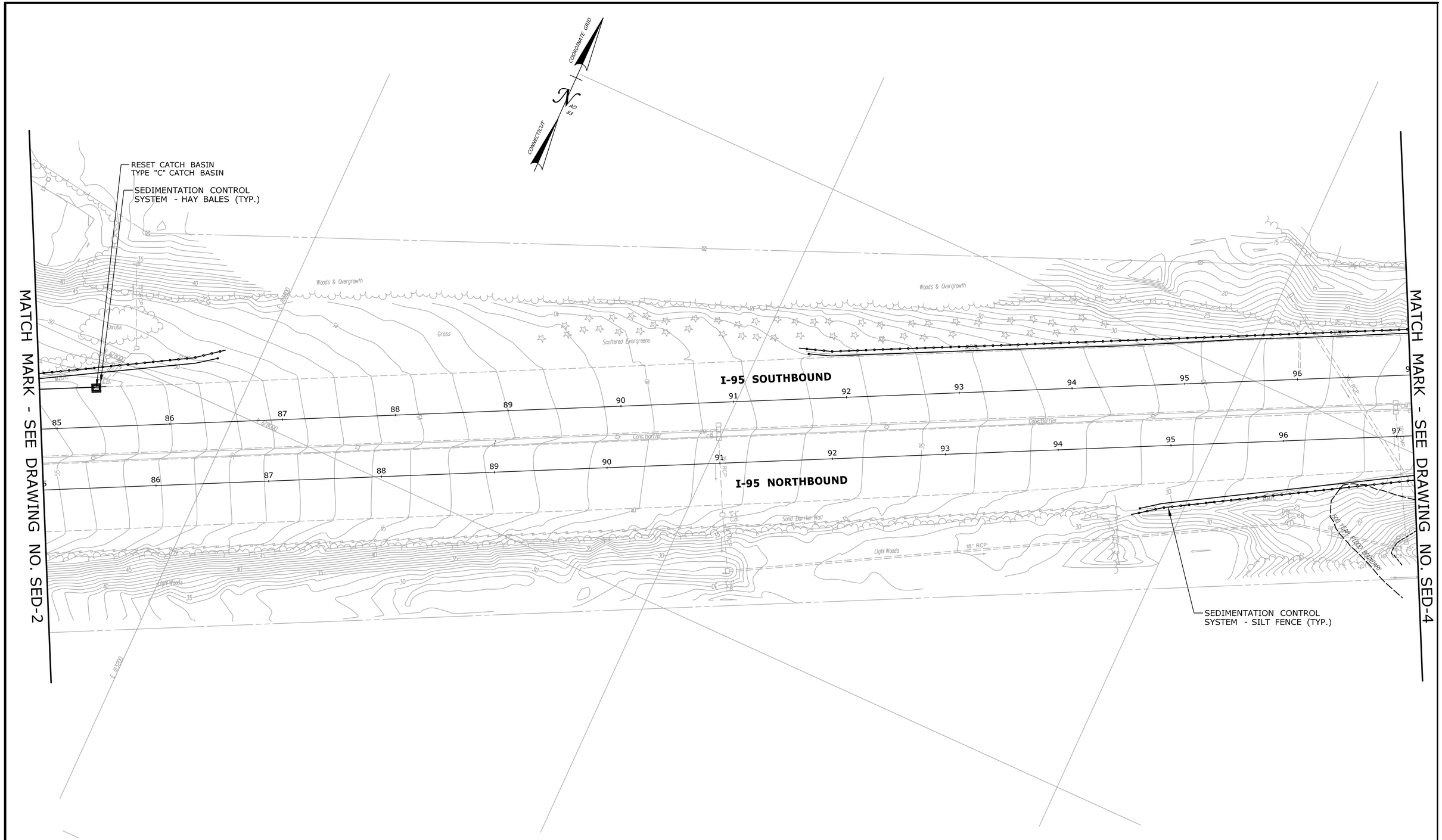

PRELIMINARY DESIGN REVIEW

REV.	DATE	REVISION DESCRIPTION	SHEET NO.
-	-	-	-
-	-	-	-
-	-	-	-
-	-	-	-
-	-	-	-
-	-	-	-

THE INFORMATION, INCLUDING ESTIMATED QUANTITIES OF WORK, SHOWN ON THESE SHEETS IS BASED ON LIMITED INVESTIGATIONS BY THE STATE AND IS IN NO WAY WARRANTED TO INDICATE THE CONDITIONS OF ACTUAL QUANTITIES OF WORK WHICH WILL BE REQUIRED.

Plotted Date: 3/21/2013

DESIGNER/DRAFTER: **RL/MF/EK**

CHECKED BY: **D. DAGAN**

SCALE IN FEET

0 40 80

SCALE 1"=40'

STATE OF CONNECTICUT
DEPARTMENT OF TRANSPORTATION

Filename: ...\Plan\HW_MSH_SED-3.dgn

SIGNATURE/
BLOCK:

PROJECT TITLE:

INTERSTATE 95
RESURFACING AND SAFETY IMPROVEMENTS

TOWN: **OLD LYME & EAST LYME**

DRAWING TITLE: **SEDIMENTATION AND EROSION CONTROL PLAN STA. 85 TO STA. 97**

PROJECT NO. **104-164**

DRAWING NO. **SED-3**

SHEET NO. **03.54**

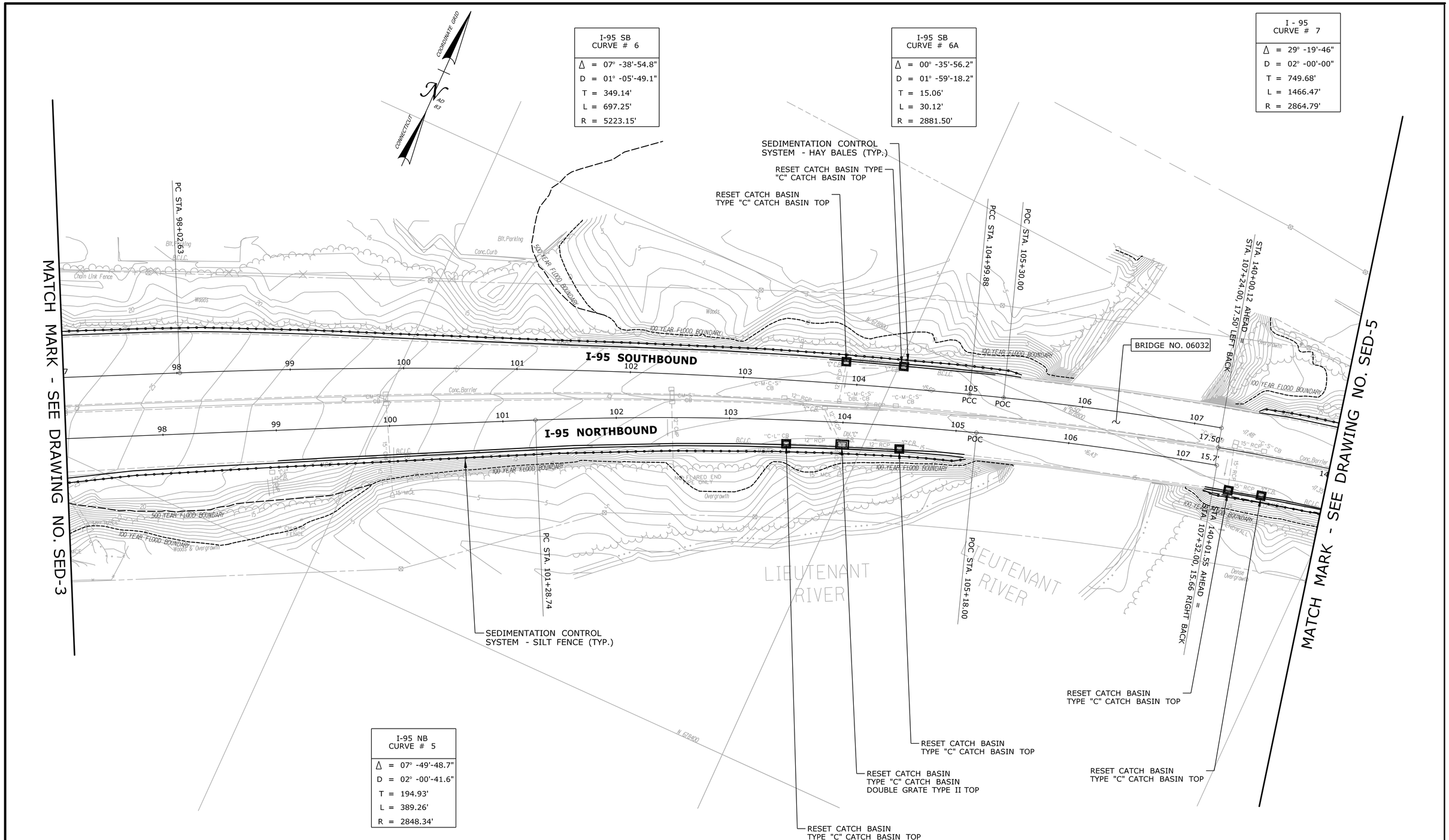

PRELIMINARY DESIGN REVIEW

REV.	DATE	REVISION DESCRIPTION	SHEET NO.
-	-	-	-
-	-	-	-
-	-	-	-
-	-	-	-
-	-	-	-
-	-	-	-

THE INFORMATION, INCLUDING ESTIMATED QUANTITIES OF WORK, SHOWN ON THESE SHEETS IS BASED ON LIMITED INVESTIGATIONS BY THE STATE AND IS IN NO WAY WARRANTED TO INDICATE THE CONDITIONS OF ACTUAL QUANTITIES OF WORK WHICH WILL BE REQUIRED.

Plotted Date: 3/21/2013

DESIGNER/DRAFTER: **RL/MF/EK**

CHECKED BY: **D. DAGAN**

SCALE IN FEET 0 40 80

SCALE 1"=40'

STATE OF CONNECTICUT
DEPARTMENT OF TRANSPORTATION

Filename: ...\Plan\HW_MSH_SED-4.dgn

SIGNATURE/ BLOCK:

PROJECT TITLE:

INTERSTATE 95 RESURFACING AND SAFETY IMPROVEMENTS

TOWN: **OLD LYME & EAST LYME**

DRAWING TITLE: **SEDIMENTATION AND EROSION CONTROL PLAN STA. 97 TO STA. 141**

PROJECT NO. **104-164**

DRAWING NO. **SED-4**

SHEET NO. **03.55**

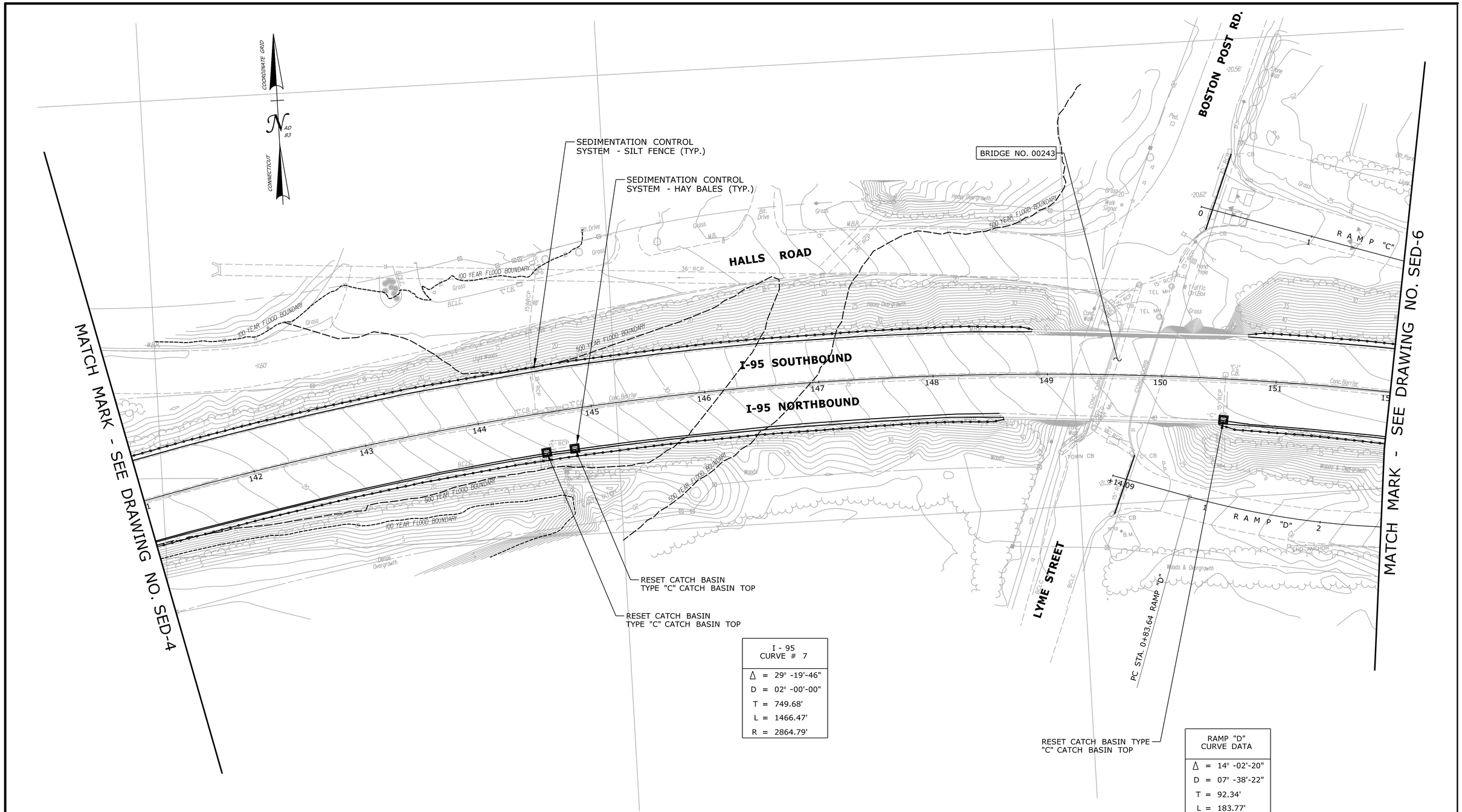

I - 95 CURVE # 7	
Δ	= 29° -19'-46"
D	= 02° -00'-00"
T	= 749.68'
L	= 1466.47'
R	= 2864.79'

RAMP "D" CURVE DATA	
Δ	= 14° -02'-20"
D	= 07° -38'-22"
T	= 92.34'
L	= 183.77'
R	= 750.00'

PRELIMINARY DESIGN REVIEW

REV.	DATE	REVISION DESCRIPTION	SHEET NO.
-	-	-	-
-	-	-	-
-	-	-	-
-	-	-	-
-	-	-	-
-	-	-	-

THE INFORMATION, INCLUDING ESTIMATED QUANTITIES OF WORK, SHOWN ON THESE SHEETS IS BASED ON LIMITED INVESTIGATIONS BY THE STATE AND IS IN NO WAY WARRANTED TO INDICATE THE CONDITIONS OF ACTUAL QUANTITIES OF WORK WHICH WILL BE REQUIRED.

Plotted Date: 3/21/2013

DESIGNER/DRAFTER: **RL/MF/EK**

CHECKED BY: **D. DAGAN**

SCALE IN FEET 0 40 80

SCALE 1"=40'

STATE OF CONNECTICUT
DEPARTMENT OF TRANSPORTATION

Filename: ...\Plan\HW_MSH_SED-5.dgn

SIGNATURE/ BLOCK:

PROJECT TITLE:
INTERSTATE 95 RESURFACING AND SAFETY IMPROVEMENTS

TOWN: **OLD LYME & EAST LYME**

DRAWING TITLE: **SEDIMENTATION AND EROSION CONTROL PLAN STA. 141 TO STA. 152**

PROJECT NO. **104-164**

DRAWING NO. **SED-5**

SHEET NO. **03.56**

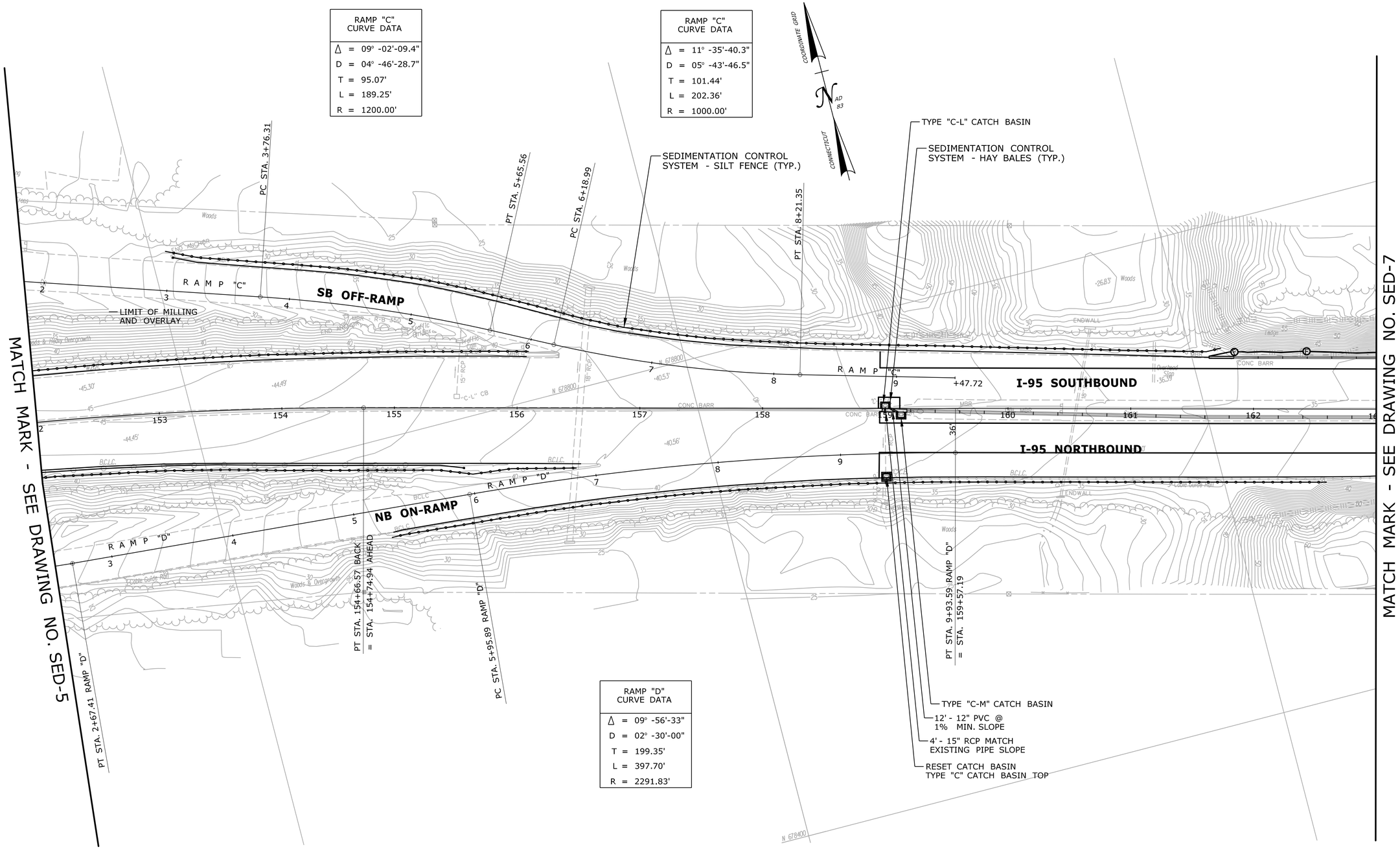

PRELIMINARY DESIGN REVIEW

REV.	DATE	REVISION DESCRIPTION	SHEET NO.
-	-	-	-
-	-	-	-
-	-	-	-
-	-	-	-
-	-	-	-
-	-	-	-

THE INFORMATION, INCLUDING ESTIMATED QUANTITIES OF WORK, SHOWN ON THESE SHEETS IS BASED ON LIMITED INVESTIGATIONS BY THE STATE AND IS IN NO WAY WARRANTED TO INDICATE THE CONDITIONS OF ACTUAL QUANTITIES OF WORK WHICH WILL BE REQUIRED.

Plotted Date: 3/21/2013

DESIGNER/DRAFTER: **RL/MF/EK**

CHECKED BY: **D. DAGAN**

SCALE IN FEET 0 40 80

SCALE 1"=40'

STATE OF CONNECTICUT
DEPARTMENT OF TRANSPORTATION

Filename: ...\Plan\HW_MSH_SED-6.dgn

SIGNATURE/ BLOCK:

PROJECT TITLE:
INTERSTATE 95 RESURFACING AND SAFETY IMPROVEMENTS

TOWN: **OLD LYME & EAST LYME**

DRAWING TITLE: **SEDIMENTATION AND EROSION CONTROL PLAN STA. 152 TO STA. 163**

PROJECT NO. **104-164**

DRAWING NO. **SED-6**

SHEET NO. **03.57**

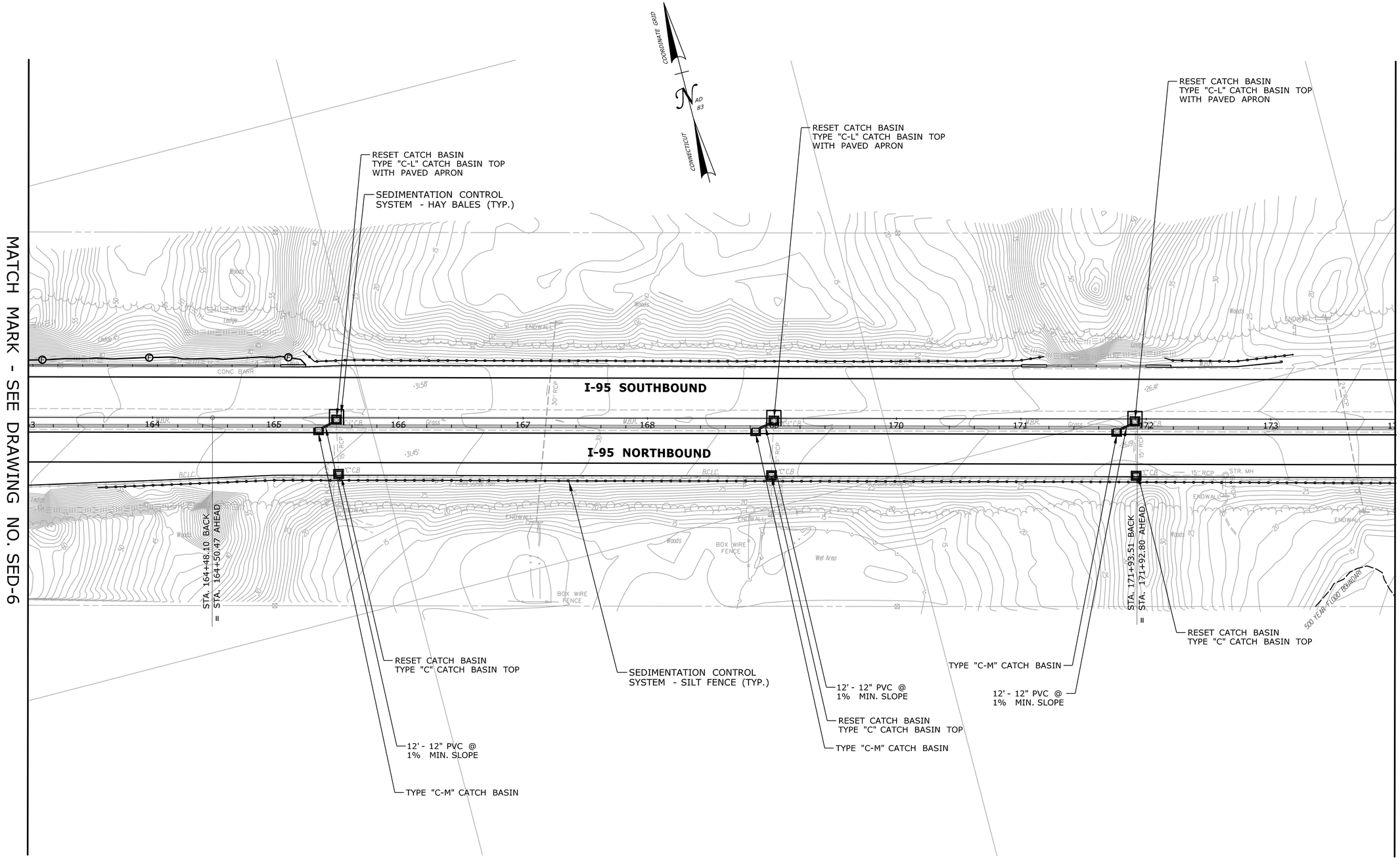

PRELIMINARY DESIGN REVIEW

REV.	DATE	REVISION DESCRIPTION	SHEET NO.
-	-	-	-
-	-	-	-
-	-	-	-
-	-	-	-
-	-	-	-
-	-	-	-

THE INFORMATION, INCLUDING ESTIMATED QUANTITIES OF WORK, SHOWN ON THESE SHEETS IS BASED ON LIMITED INVESTIGATIONS BY THE STATE AND IS IN NO WAY WARRANTED TO INDICATE THE CONDITIONS OF ACTUAL QUANTITIES OF WORK WHICH WILL BE REQUIRED.

Plotted Date: 3/21/2013

DESIGNER/DRAFTER: **RL/MF/EK**

CHECKED BY: **D. DAGAN**

SCALE IN FEET 0 40 80

SCALE 1"=40'

STATE OF CONNECTICUT
DEPARTMENT OF TRANSPORTATION

Filename: ...\Plan\HW_MSH_SED-7.dgn

SIGNATURE/ BLOCK:

PROJECT TITLE: **INTERSTATE 95 RESURFACING AND SAFETY IMPROVEMENTS**

TOWN: **OLD LYME & EAST LYME**

DRAWING TITLE: **SEDIMENTATION AND EROSION CONTROL PLAN STA. 163 TO STA. 174**

PROJECT NO. **104-164**

DRAWING NO. **SED-7**

SHEET NO. **03.58**

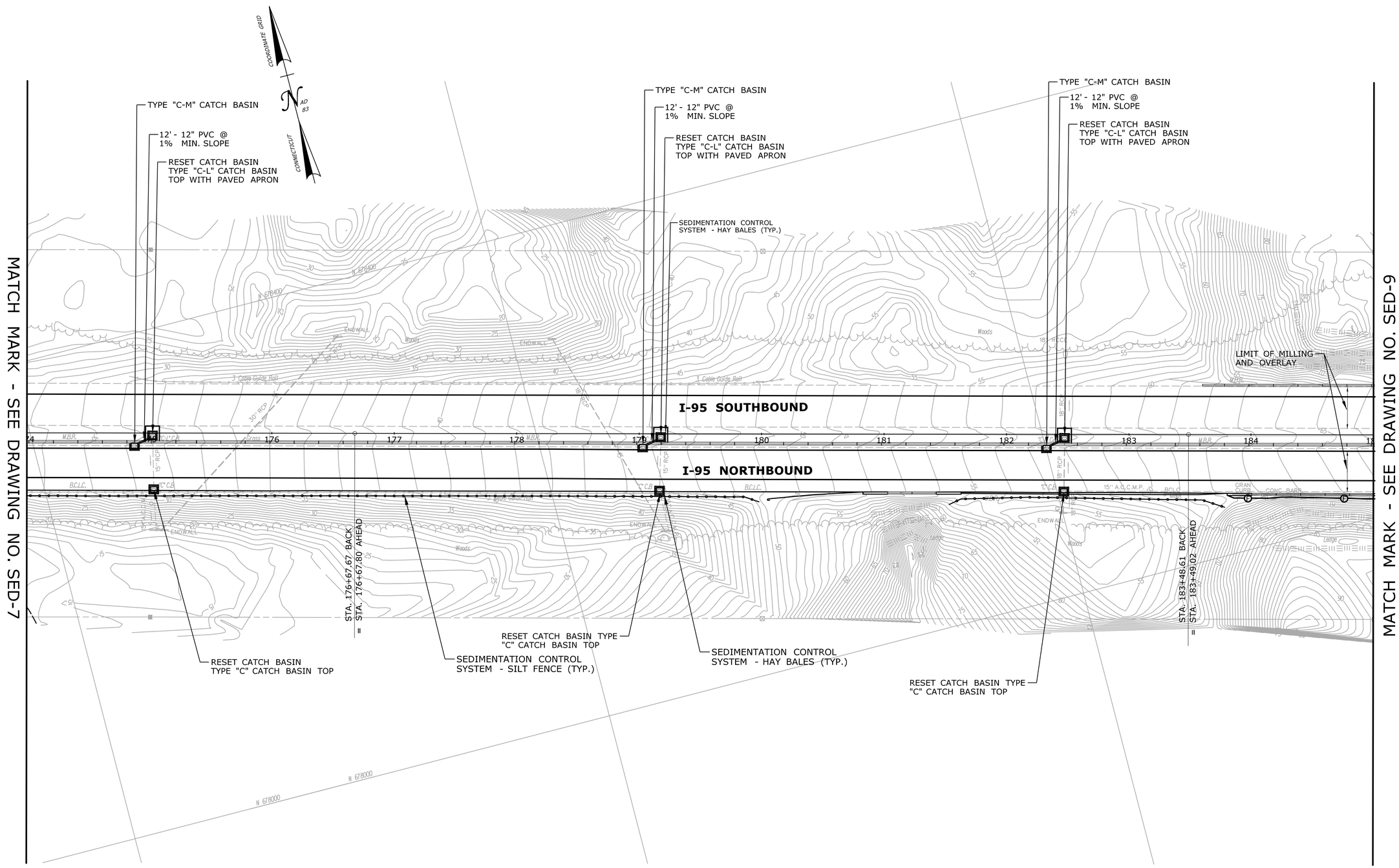

PRELIMINARY DESIGN REVIEW

REV.	DATE	REVISION DESCRIPTION	SHEET NO.
-	-	-	-
-	-	-	-
-	-	-	-
-	-	-	-
-	-	-	-
-	-	-	-

THE INFORMATION, INCLUDING ESTIMATED QUANTITIES OF WORK, SHOWN ON THESE SHEETS IS BASED ON LIMITED INVESTIGATIONS BY THE STATE AND IS IN NO WAY WARRANTED TO INDICATE THE CONDITIONS OF ACTUAL QUANTITIES OF WORK WHICH WILL BE REQUIRED.

Plotted Date: 3/21/2013

DESIGNER/DRAFTER: **RL/MF/EK**

CHECKED BY: **D. DAGAN**

SCALE IN FEET 0 40 80

SCALE 1"=40'

STATE OF CONNECTICUT
DEPARTMENT OF TRANSPORTATION

Filename: ...\Plan\HW_MSH_SED-8.dgn

SIGNATURE/ BLOCK:

PROJECT TITLE:
INTERSTATE 95 RESURFACING AND SAFETY IMPROVEMENTS

TOWN: **OLD LYME & EAST LYME**

DRAWING TITLE: **SEDIMENTATION AND EROSION CONTROL PLAN STA. 174 TO STA. 185**

PROJECT NO. **104-164**

DRAWING NO. **SED-8**

SHEET NO. **03.59**

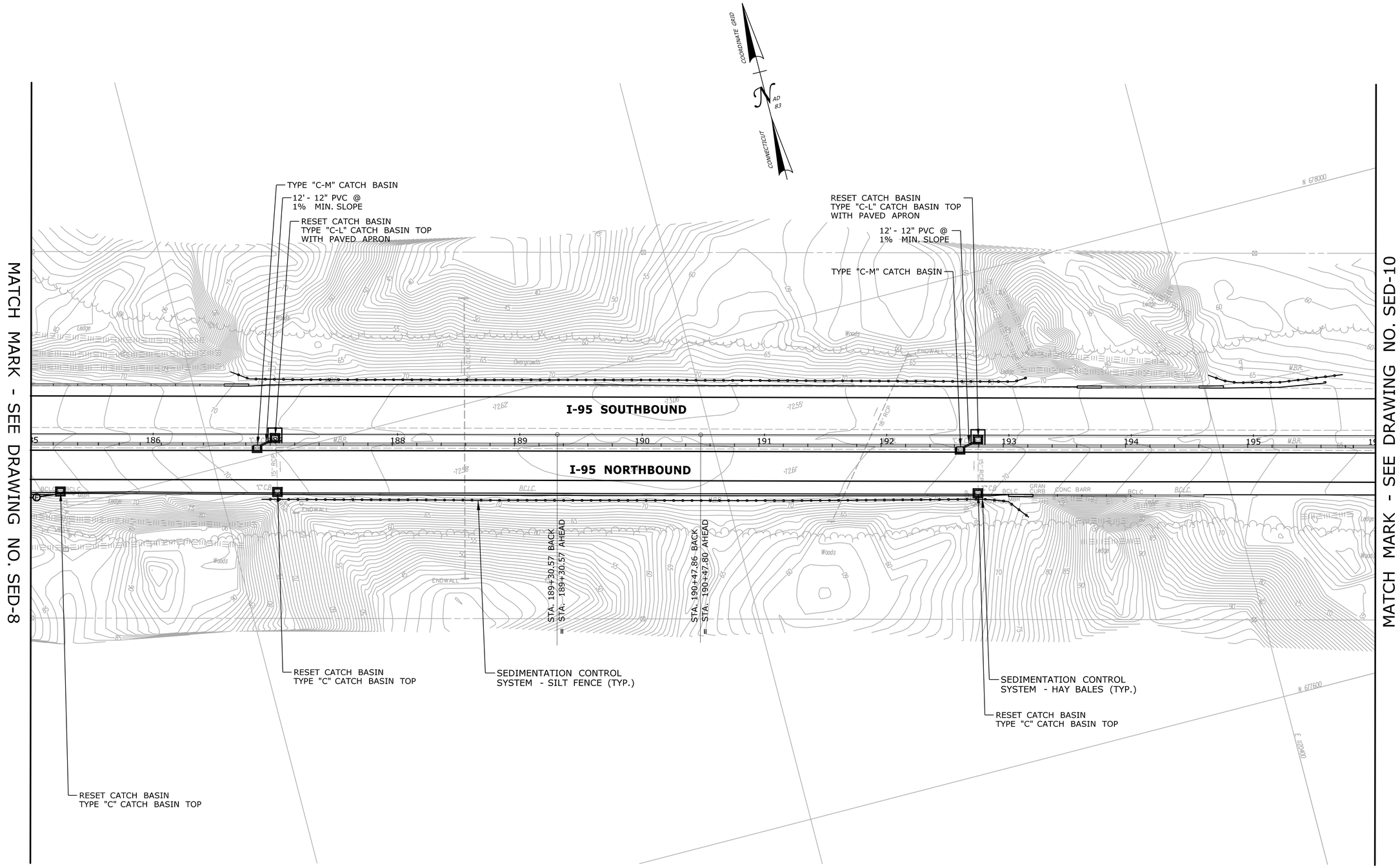

PRELIMINARY DESIGN REVIEW

REV.	DATE	REVISION DESCRIPTION	SHEET NO.
-	-	-	-
-	-	-	-
-	-	-	-
-	-	-	-
-	-	-	-
-	-	-	-

THE INFORMATION, INCLUDING ESTIMATED QUANTITIES OF WORK, SHOWN ON THESE SHEETS IS BASED ON LIMITED INVESTIGATIONS BY THE STATE AND IS IN NO WAY WARRANTED TO INDICATE THE CONDITIONS OF ACTUAL QUANTITIES OF WORK WHICH WILL BE REQUIRED.

Plotted Date: 3/21/2013

DESIGNER/DRAFTER: **RL/MF/EK**

CHECKED BY: **D. DAGAN**

SCALE IN FEET
0 40 80
SCALE 1"=40'

STATE OF CONNECTICUT
DEPARTMENT OF TRANSPORTATION

Filename: ...\Plan\HW_MSH_SED-9.dgn

SIGNATURE/ BLOCK:

PROJECT TITLE:
INTERSTATE 95 RESURFACING AND SAFETY IMPROVEMENTS

TOWN: **OLD LYME & EAST LYME**

DRAWING TITLE: **SEDIMENTATION AND EROSION CONTROL PLAN STA. 185 TO STA. 196**

PROJECT NO. **104-164**

DRAWING NO. **SED-9**

SHEET NO. **03.60**

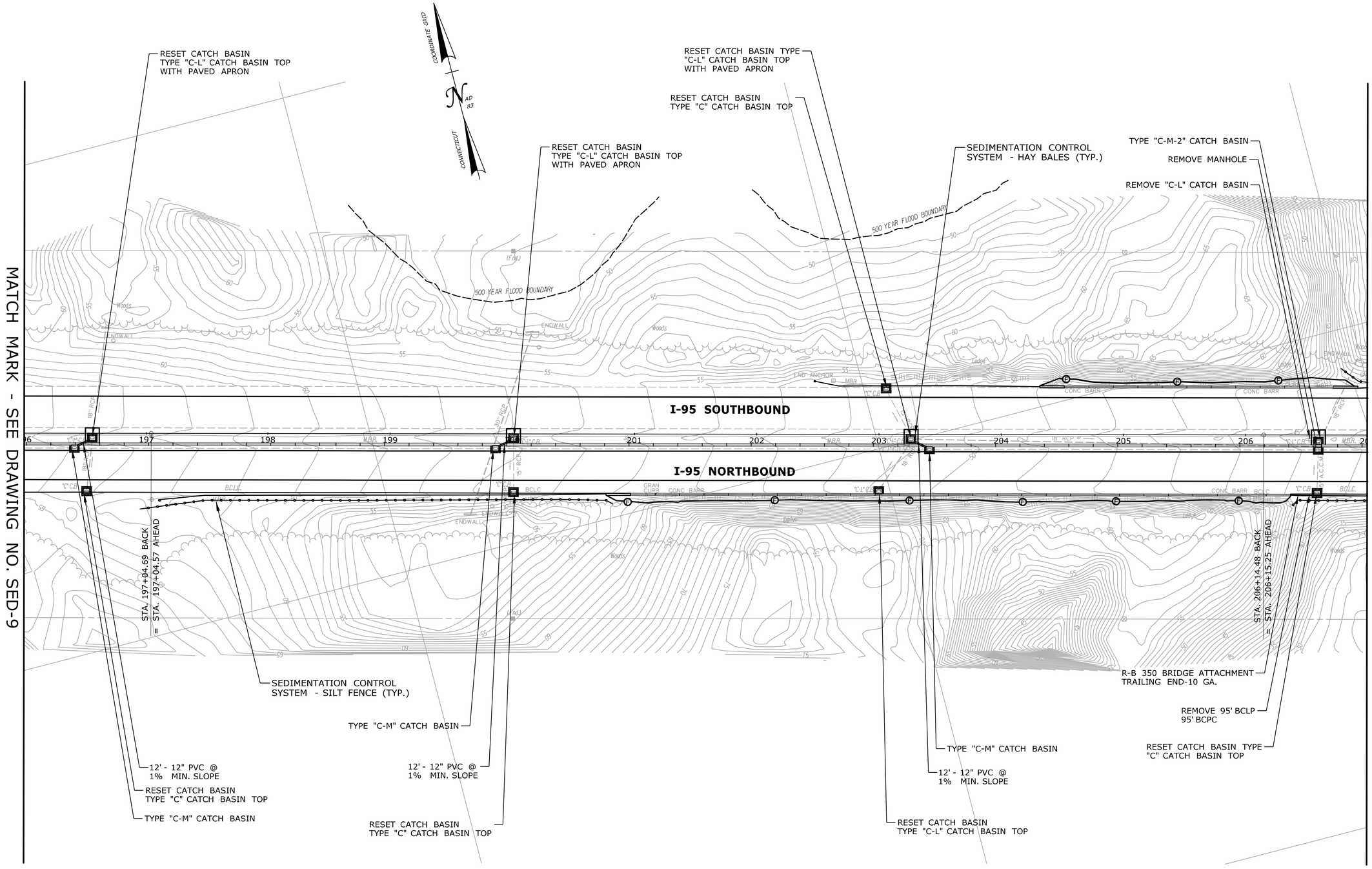

PRELIMINARY DESIGN REVIEW

REV.	DATE	REVISION DESCRIPTION	SHEET NO.
-	-	-	-
-	-	-	-
-	-	-	-
-	-	-	-
-	-	-	-
-	-	-	-

THE INFORMATION, INCLUDING ESTIMATED QUANTITIES OF WORK, SHOWN ON THESE SHEETS IS BASED ON LIMITED INVESTIGATIONS BY THE STATE AND IS IN NO WAY WARRANTED TO INDICATE THE CONDITIONS OF ACTUAL QUANTITIES OF WORK WHICH WILL BE REQUIRED.

Plotted Date: 3/21/2013

DESIGNER/DRAFTER: **RL/MF/EK**

CHECKED BY: **D. DAGAN**

SCALE IN FEET 0 40 80

SCALE 1"=40'

STATE OF CONNECTICUT
DEPARTMENT OF TRANSPORTATION

Filename: ...\Plan\HW_MSH_SED-10.dgn

SIGNATURE/ BLOCK:

PROJECT TITLE:

INTERSTATE 95 RESURFACING AND SAFETY IMPROVEMENTS

TOWN: **OLD LYME & EAST LYME**

DRAWING TITLE: **SEDIMENTATION AND EROSION CONTROL PLAN STA. 196 TO STA. 207**

PROJECT NO. **104-164**

DRAWING NO. **SED-10**

SHEET NO. **03.61**

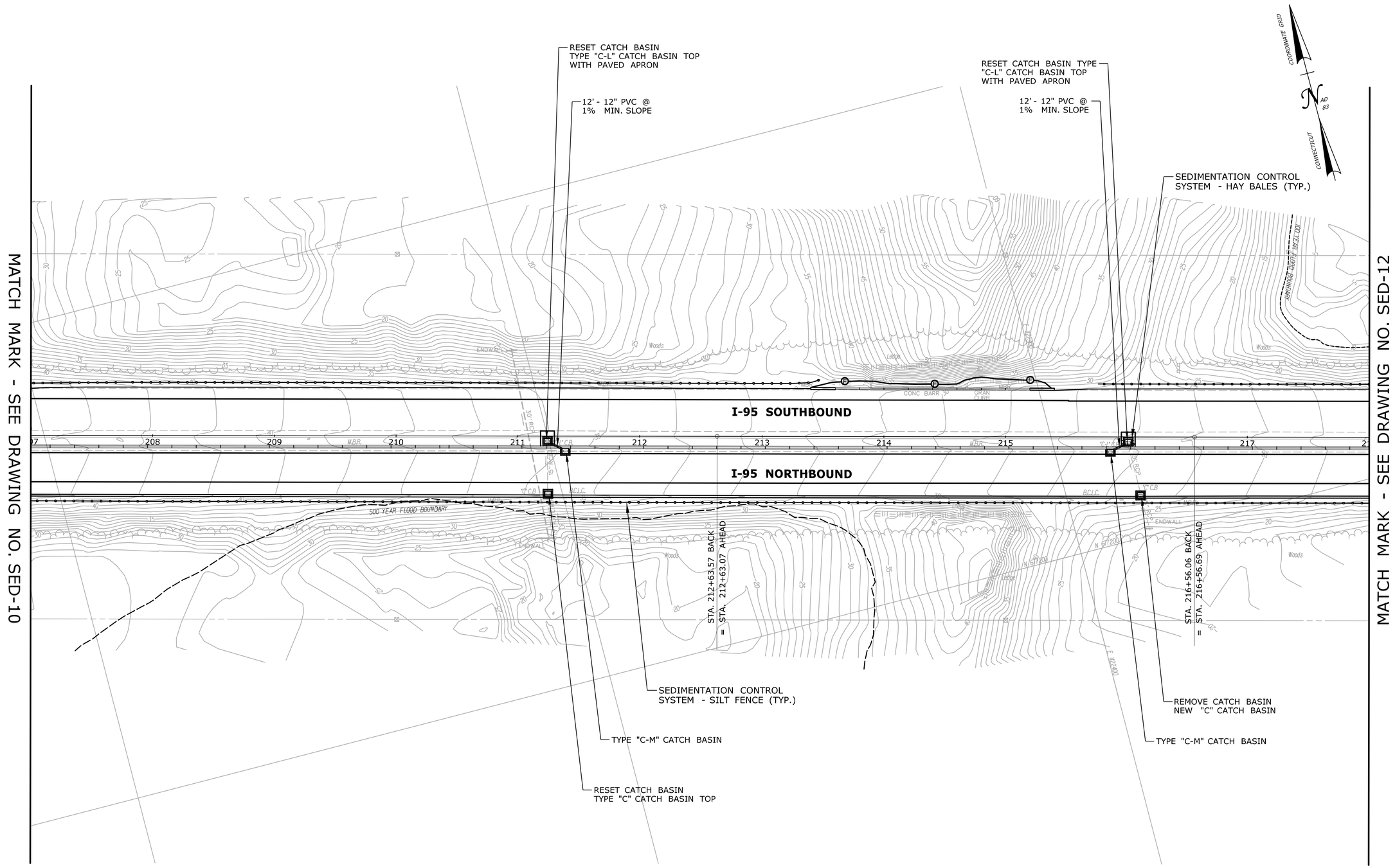

PRELIMINARY DESIGN REVIEW

REV.	DATE	REVISION DESCRIPTION	SHEET NO.
-	-	-	-
-	-	-	-
-	-	-	-
-	-	-	-
-	-	-	-
-	-	-	-

THE INFORMATION, INCLUDING ESTIMATED QUANTITIES OF WORK, SHOWN ON THESE SHEETS IS BASED ON LIMITED INVESTIGATIONS BY THE STATE AND IS IN NO WAY WARRANTED TO INDICATE THE CONDITIONS OF ACTUAL QUANTITIES OF WORK WHICH WILL BE REQUIRED.

Plotted Date: 3/21/2013

DESIGNER/DRAFTER: **RL/MF/EK**

CHECKED BY: **D. DAGAN**

SCALE IN FEET

0 40 80

SCALE 1"=40'

STATE OF CONNECTICUT
DEPARTMENT OF TRANSPORTATION

Filename: ...\Plan\HW_MSH_SED-11.dgn

SIGNATURE/ BLOCK:

PROJECT TITLE:

INTERSTATE 95 RESURFACING AND SAFETY IMPROVEMENTS

TOWN: **OLD LYME & EAST LYME**

DRAWING TITLE: **SEDIMENTATION AND EROSION CONTROL PLAN STA. 207 TO STA. 218**

PROJECT NO. **104-164**

DRAWING NO. **SED-11**

SHEET NO. **03.62**

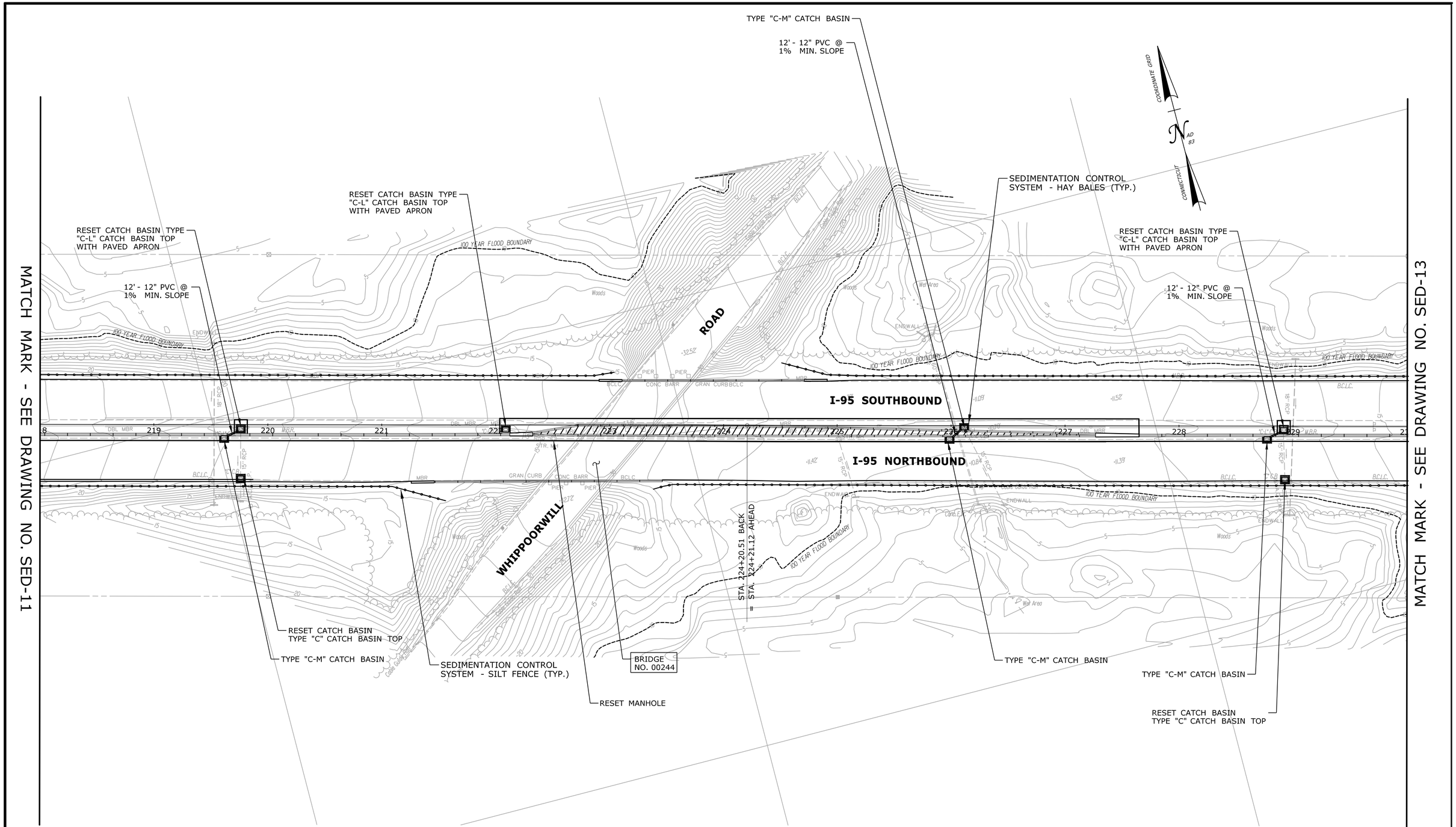

PRELIMINARY DESIGN REVIEW

REV.	DATE	REVISION DESCRIPTION	SHEET NO.
-	-	-	-
-	-	-	-
-	-	-	-
-	-	-	-
-	-	-	-
-	-	-	-

THE INFORMATION, INCLUDING ESTIMATED QUANTITIES OF WORK, SHOWN ON THESE SHEETS IS BASED ON LIMITED INVESTIGATIONS BY THE STATE AND IS IN NO WAY WARRANTED TO INDICATE THE CONDITIONS OF ACTUAL QUANTITIES OF WORK WHICH WILL BE REQUIRED.

Plotted Date: 3/7/2013

DESIGNER/DRAFTER: **RL/MF/EK**

CHECKED BY: **D. DAGAN**

SCALE IN FEET 0 40 80

SCALE 1"=40'

STATE OF CONNECTICUT
DEPARTMENT OF TRANSPORTATION

Filename: ...\Plan\HW_MSH_SED-12.dgn

SIGNATURE/ BLOCK:

PROJECT TITLE: **INTERSTATE 95 RESURFACING AND SAFETY IMPROVEMENTS**

TOWN: **OLD LYME & EAST LYME**

DRAWING TITLE: **SEDIMENTATION AND EROSION CONTROL PLAN STA. 218 TO STA. 230**

PROJECT NO. **104-164**

DRAWING NO. **SED-12**

SHEET NO. **03.63**

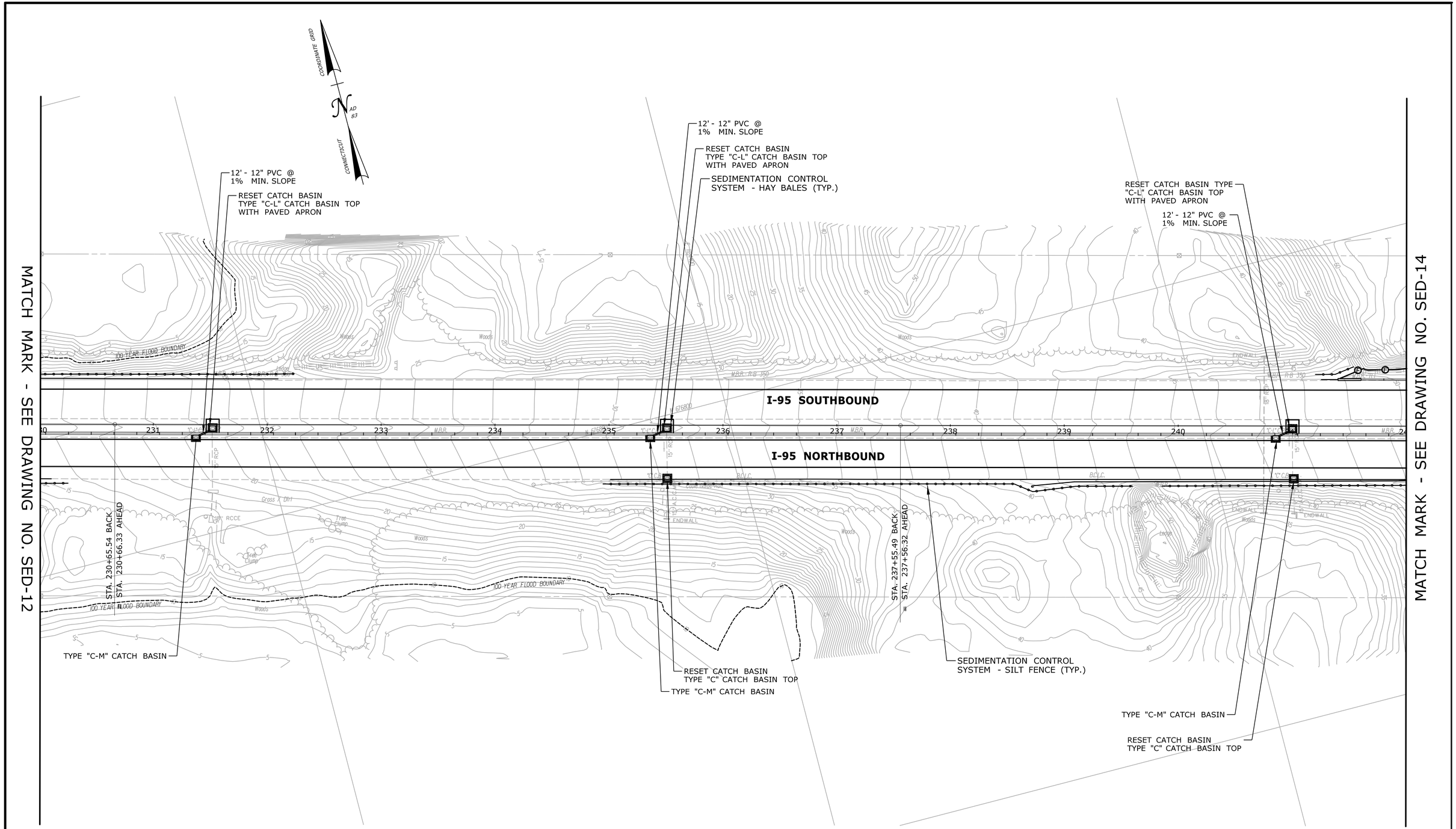

PRELIMINARY DESIGN REVIEW

REV.	DATE	REVISION DESCRIPTION	SHEET NO.
-	-	-	-
-	-	-	-
-	-	-	-
-	-	-	-
-	-	-	-
-	-	-	-

THE INFORMATION, INCLUDING ESTIMATED QUANTITIES OF WORK, SHOWN ON THESE SHEETS IS BASED ON LIMITED INVESTIGATIONS BY THE STATE AND IS IN NO WAY WARRANTED TO INDICATE THE CONDITIONS OF ACTUAL QUANTITIES OF WORK WHICH WILL BE REQUIRED.

Plotted Date: 3/21/2013

DESIGNER/DRAFTER: **RL/MF/EK**

CHECKED BY: **D. DAGAN**

SCALE IN FEET 0 40 80

SCALE 1"=40'

STATE OF CONNECTICUT
DEPARTMENT OF TRANSPORTATION

Filename: ...\Plan\HW_MSH_SED-13.dgn

SIGNATURE/ BLOCK:

PROJECT TITLE:

INTERSTATE 95 RESURFACING AND SAFETY IMPROVEMENTS

TOWN: **OLD LYME & EAST LYME**

DRAWING TITLE: **SEDIMENTATION AND EROSION CONTROL PLAN STA. 230 TO STA. 242**

PROJECT NO. **104-164**

DRAWING NO. **SED-13**

SHEET NO. **03.64**

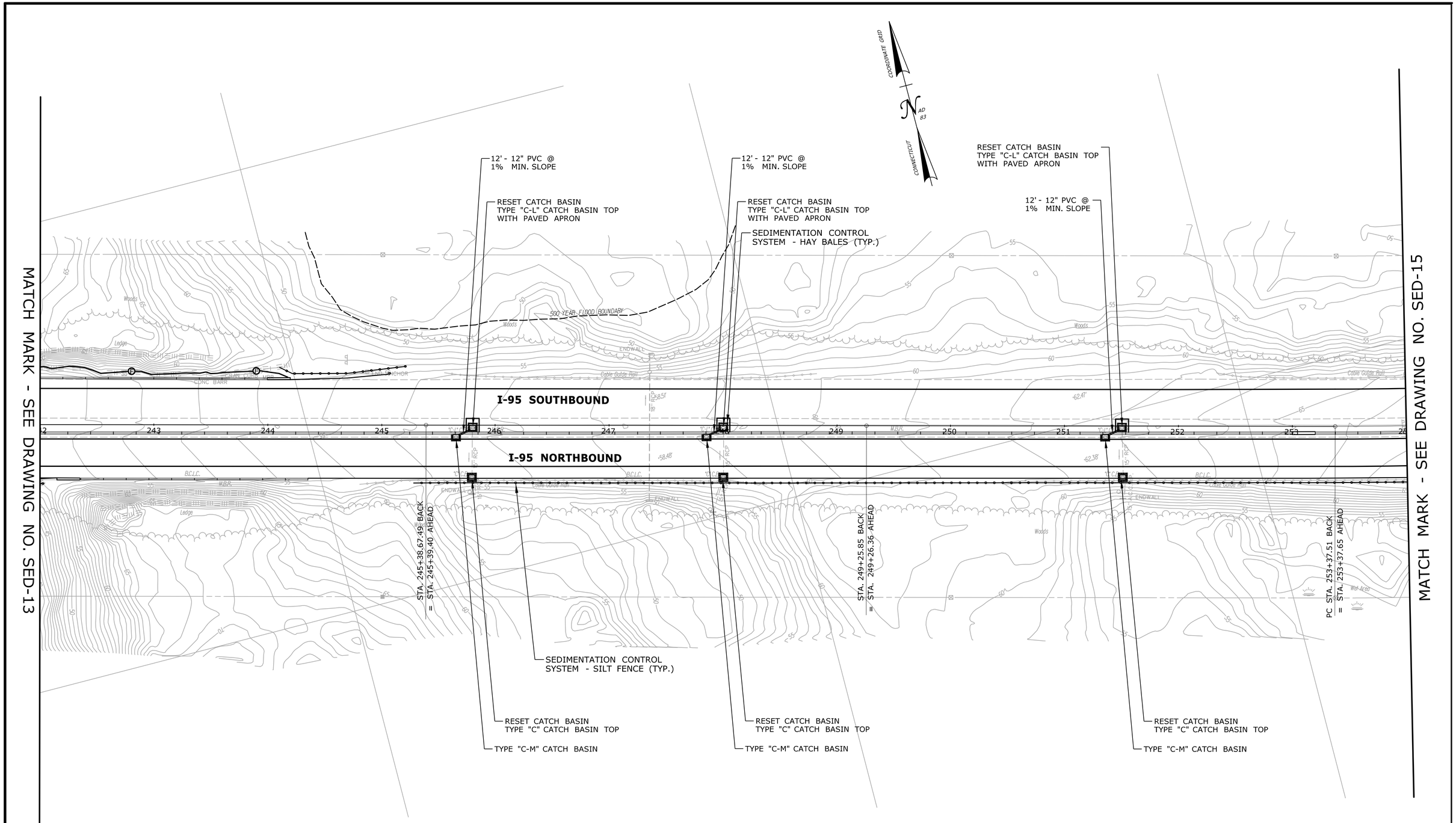

PRELIMINARY DESIGN REVIEW

REV.	DATE	REVISION DESCRIPTION	SHEET NO.
-	-	-	-
-	-	-	-
-	-	-	-
-	-	-	-
-	-	-	-
-	-	-	-

THE INFORMATION, INCLUDING ESTIMATED QUANTITIES OF WORK, SHOWN ON THESE SHEETS IS BASED ON LIMITED INVESTIGATIONS BY THE STATE AND IS IN NO WAY WARRANTED TO INDICATE THE CONDITIONS OF ACTUAL QUANTITIES OF WORK WHICH WILL BE REQUIRED.

Plotted Date: 3/21/2013

DESIGNER/DRAFTER: **RL/MF/EK**

CHECKED BY: **D. DAGAN**

SCALE IN FEET 0 40 80

SCALE 1"=40'

STATE OF CONNECTICUT
DEPARTMENT OF TRANSPORTATION

Filename: ...\Plan\HW_MSH_SED-14.dgn

SIGNATURE/ BLOCK:

PROJECT TITLE:

INTERSTATE 95 RESURFACING AND SAFETY IMPROVEMENTS

TOWN: **OLD LYME & EAST LYME**

DRAWING TITLE: **SEDIMENTATION AND EROSION CONTROL PLAN STA. 242 TO STA. 254**

PROJECT NO. **104-164**

DRAWING NO. **SED-14**

SHEET NO. **03.65**

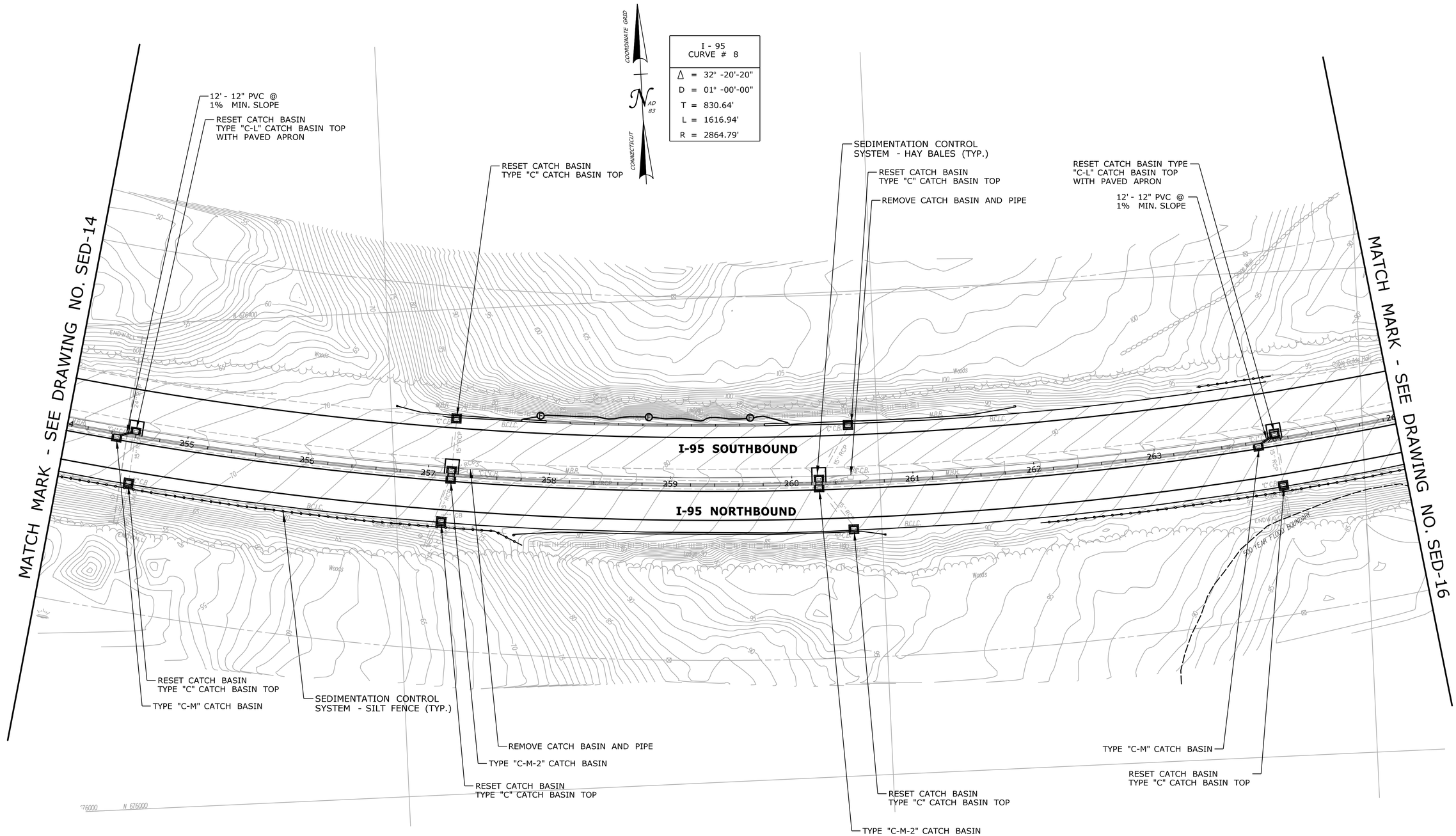

PRELIMINARY DESIGN REVIEW

REV.	DATE	REVISION DESCRIPTION	SHEET NO.
-	-	-	-
-	-	-	-
-	-	-	-
-	-	-	-
-	-	-	-
-	-	-	-

THE INFORMATION, INCLUDING ESTIMATED QUANTITIES OF WORK, SHOWN ON THESE SHEETS IS BASED ON LIMITED INVESTIGATIONS BY THE STATE AND IS IN NO WAY WARRANTED TO INDICATE THE CONDITIONS OF ACTUAL QUANTITIES OF WORK WHICH WILL BE REQUIRED.

Plotted Date: 3/21/2013

DESIGNER/DRAFTER: **RL/MF/EK**

CHECKED BY: **D. DAGAN**

SCALE IN FEET
0 40 80
SCALE 1"=40'

STATE OF CONNECTICUT
DEPARTMENT OF TRANSPORTATION

Filename: ...\Plan\HW_MSH_SED-15.dgn

SIGNATURE/
BLOCK:

PROJECT TITLE:
INTERSTATE 95
RESURFACING AND SAFETY
IMPROVEMENTS

TOWN: **OLD LYME & EAST LYME**

DRAWING TITLE:
SEDIMENTATION AND EROSION CONTROL PLAN
STA. 254 TO STA. 265

PROJECT NO. **104-164**

DRAWING NO. **SED-15**

SHEET NO. **03.66**

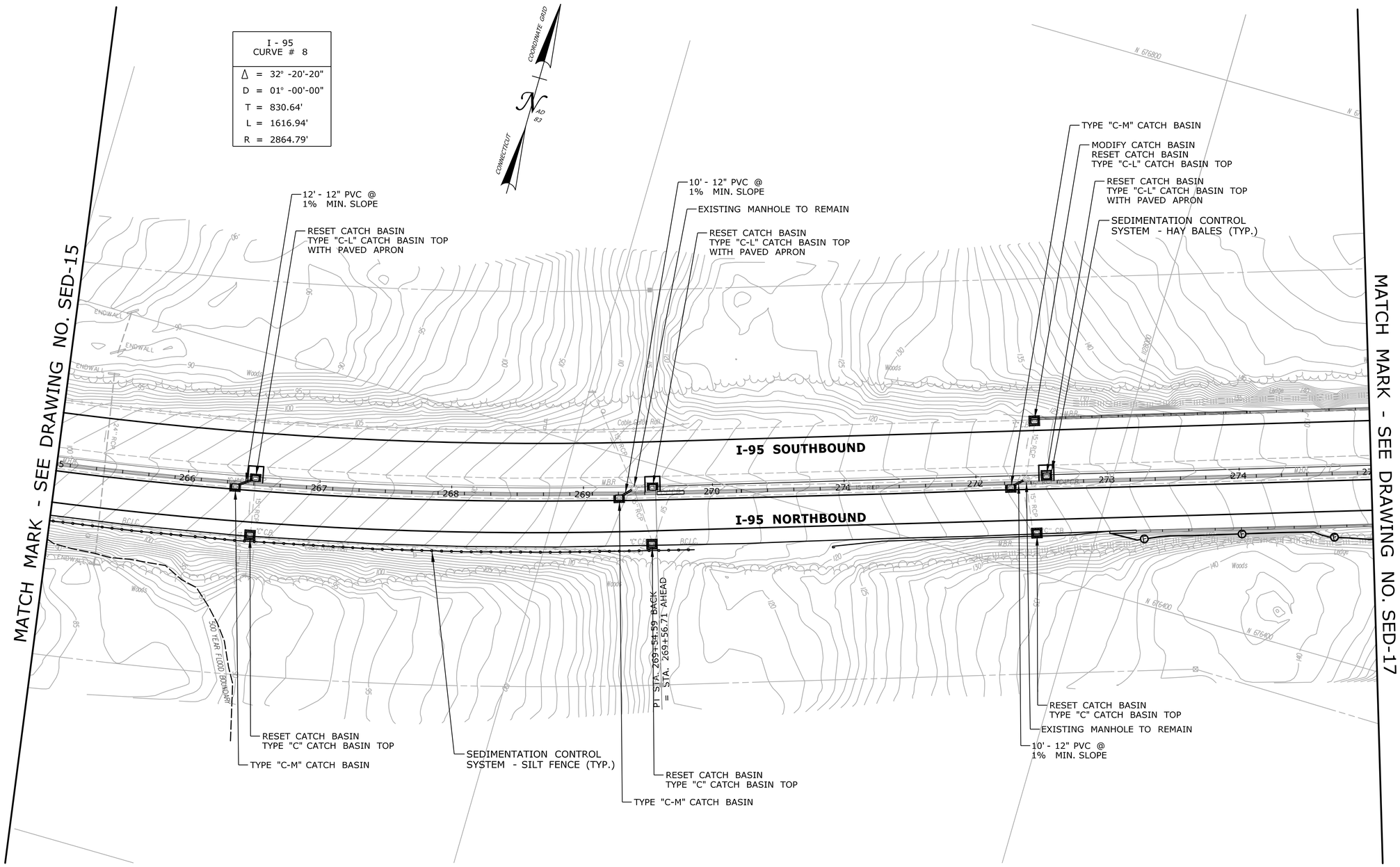

PRELIMINARY DESIGN REVIEW

REV.	DATE	REVISION DESCRIPTION	SHEET NO.
-	-	-	-
-	-	-	-
-	-	-	-
-	-	-	-
-	-	-	-
-	-	-	-

THE INFORMATION, INCLUDING ESTIMATED QUANTITIES OF WORK, SHOWN ON THESE SHEETS IS BASED ON LIMITED INVESTIGATIONS BY THE STATE AND IS IN NO WAY WARRANTED TO INDICATE THE CONDITIONS OF ACTUAL QUANTITIES OF WORK WHICH WILL BE REQUIRED.

Plotted Date: 3/21/2013

DESIGNER/DRAFTER: **RL/MF/EK**

CHECKED BY: **D. DAGAN**

SCALE IN FEET 0 40 80

SCALE 1"=40'

STATE OF CONNECTICUT
DEPARTMENT OF TRANSPORTATION

Filename: ...\Plan\HW_MSH_SED-16.dgn

SIGNATURE/ BLOCK:

PROJECT TITLE:

INTERSTATE 95 RESURFACING AND SAFETY IMPROVEMENTS

TOWN: **OLD LYME & EAST LYME**

DRAWING TITLE: **SEDIMENTATION AND EROSION CONTROL PLAN STA. 265 TO STA. 275**

PROJECT NO. **104-164**

DRAWING NO. **SED-16**

SHEET NO. **03.67**

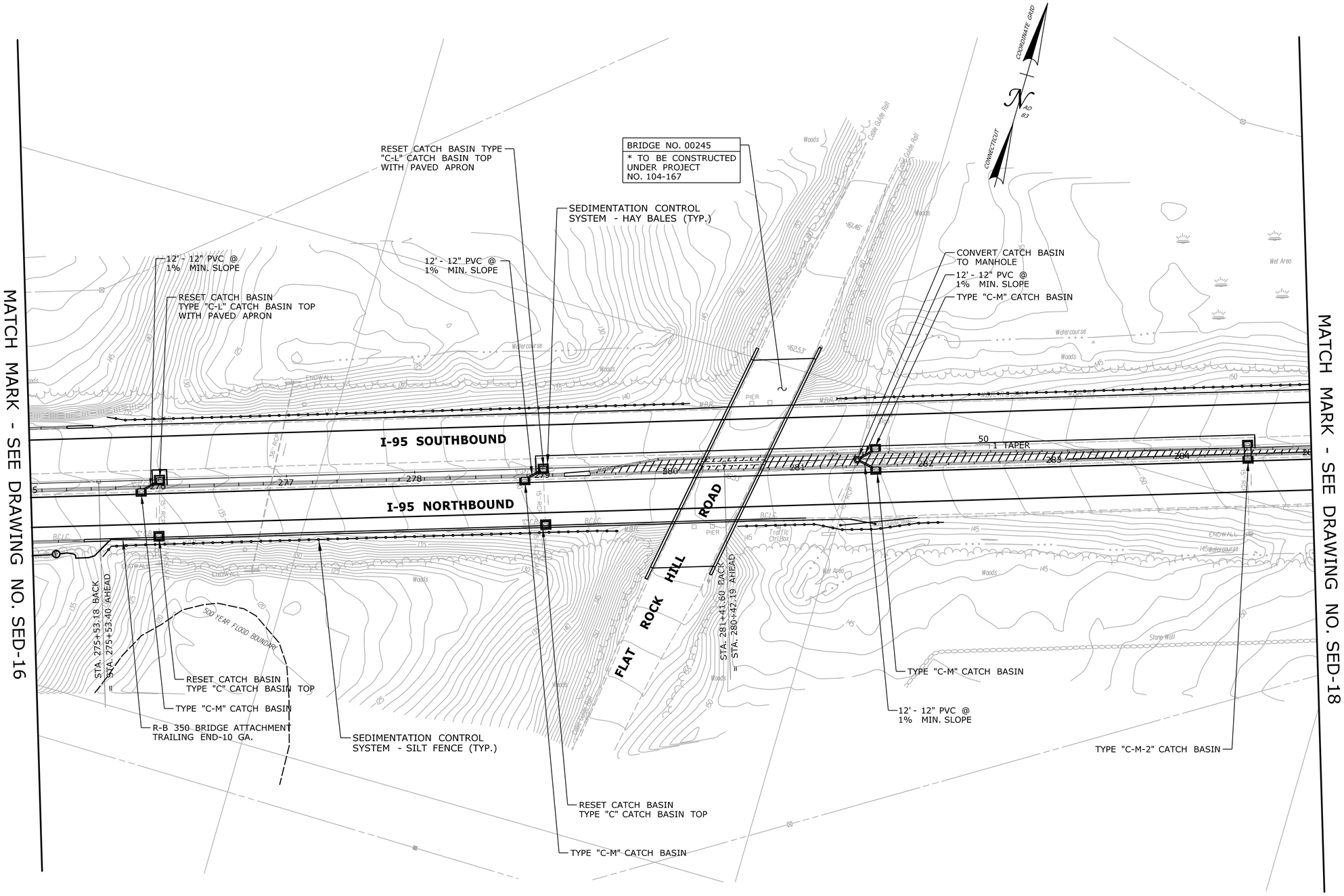

PRELIMINARY DESIGN REVIEW

REV.	DATE	REVISION DESCRIPTION	SHEET NO.
-	-	-	-
-	-	-	-
-	-	-	-
-	-	-	-
-	-	-	-
-	-	-	-

THE INFORMATION, INCLUDING ESTIMATED QUANTITIES OF WORK, SHOWN ON THESE SHEETS IS BASED ON LIMITED INVESTIGATIONS BY THE STATE AND IS IN NO WAY WARRANTED TO INDICATE THE CONDITIONS OF ACTUAL QUANTITIES OF WORK WHICH WILL BE REQUIRED.

Plotted Date: 3/21/2013

DESIGNER/DRAFTER: **RL/MF/EK**

CHECKED BY: **D. DAGAN**

SCALE IN FEET
0 40 80
SCALE 1"=40'

STATE OF CONNECTICUT
DEPARTMENT OF TRANSPORTATION

Filename: ...\Plan\HW_MSH_SED-17.dgn

SIGNATURE/ BLOCK:

PROJECT TITLE:
INTERSTATE 95 RESURFACING AND SAFETY IMPROVEMENTS

TOWN: **OLD LYME & EAST LYME**

DRAWING TITLE: **SEDIMENTATION AND EROSION CONTROL PLAN STA. 275 TO STA. 285**

PROJECT NO. **104-164**

DRAWING NO. **SED-17**

SHEET NO. **03.68**

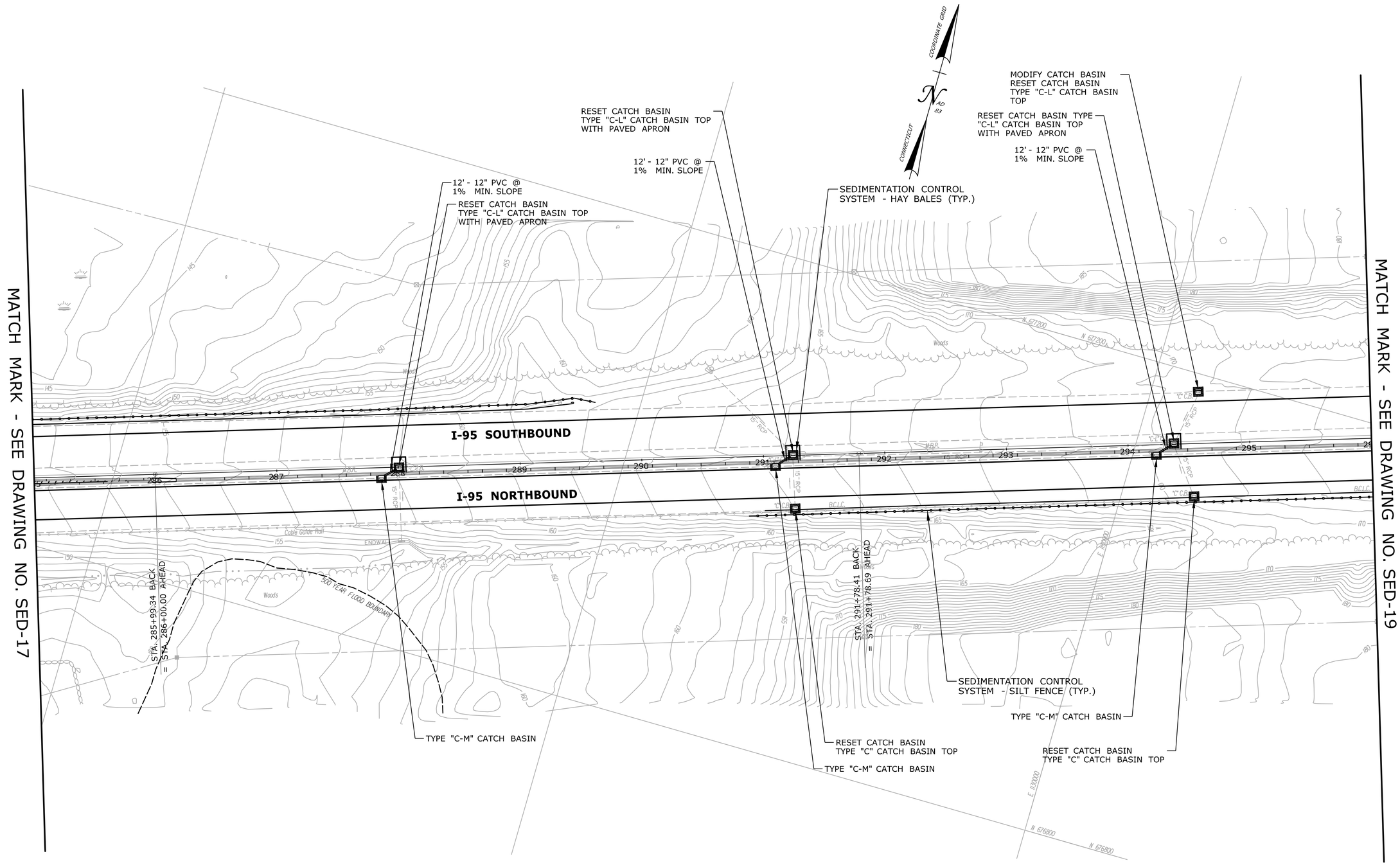

PRELIMINARY DESIGN REVIEW

REV.	DATE	REVISION DESCRIPTION	SHEET NO.
-	-	-	-
-	-	-	-
-	-	-	-
-	-	-	-
-	-	-	-
-	-	-	-

THE INFORMATION, INCLUDING ESTIMATED QUANTITIES OF WORK, SHOWN ON THESE SHEETS IS BASED ON LIMITED INVESTIGATIONS BY THE STATE AND IS IN NO WAY WARRANTED TO INDICATE THE CONDITIONS OF ACTUAL QUANTITIES OF WORK WHICH WILL BE REQUIRED.

Plotted Date: 3/21/2013

DESIGNER/DRAFTER: **RL/MF/EK**

CHECKED BY: **D. DAGAN**

SCALE IN FEET 0 40 80

SCALE 1"=40'

STATE OF CONNECTICUT
DEPARTMENT OF TRANSPORTATION

Filename: ...\Plan\HW_MSH_SED-18.dgn

SIGNATURE/ BLOCK:

PROJECT TITLE:
INTERSTATE 95 RESURFACING AND SAFETY IMPROVEMENTS

TOWN: **OLD LYME & EAST LYME**

DRAWING TITLE: **SEDIMENTATION AND EROSION CONTROL PLAN STA. 285 TO STA. 296**

PROJECT NO. **104-164**

DRAWING NO. **SED-18**

SHEET NO. **03.69**

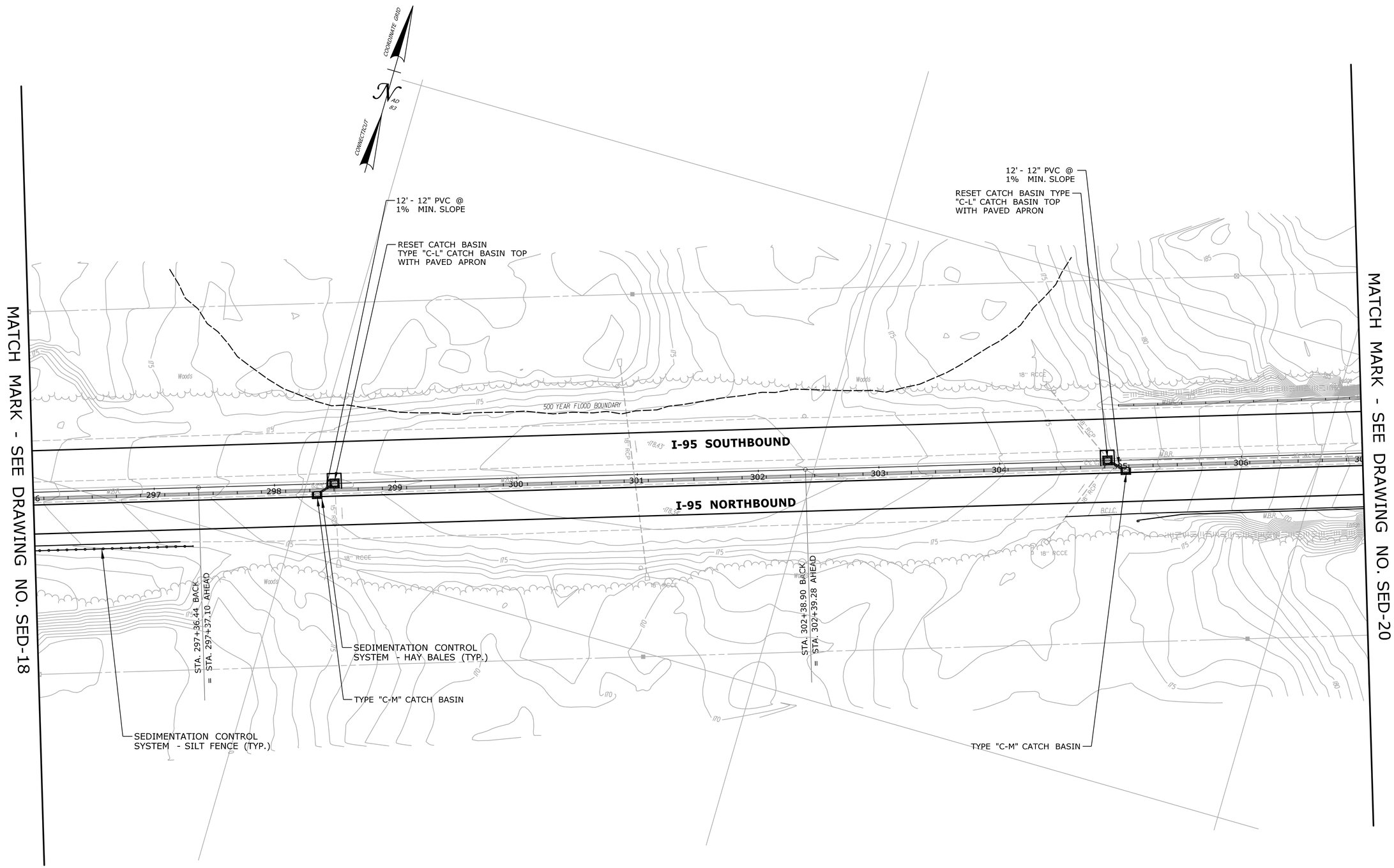

PRELIMINARY DESIGN REVIEW

REV.	DATE	REVISION DESCRIPTION	SHEET NO.
-	-	-	-
-	-	-	-
-	-	-	-
-	-	-	-
-	-	-	-
-	-	-	-

THE INFORMATION, INCLUDING ESTIMATED QUANTITIES OF WORK, SHOWN ON THESE SHEETS IS BASED ON LIMITED INVESTIGATIONS BY THE STATE AND IS IN NO WAY WARRANTED TO INDICATE THE CONDITIONS OF ACTUAL QUANTITIES OF WORK WHICH WILL BE REQUIRED.

Plotted Date: 3/21/2013

DESIGNER/DRAFTER: **RL/MF/EK**

CHECKED BY: **D. DAGAN**

SCALE IN FEET
0 40 80
SCALE 1"=40'

STATE OF CONNECTICUT
DEPARTMENT OF TRANSPORTATION

Filename: ...\Plan\HW_MSH_SED-19.dgn

SIGNATURE/ BLOCK:

PROJECT TITLE:
INTERSTATE 95 RESURFACING AND SAFETY IMPROVEMENTS

TOWN: **OLD LYME & EAST LYME**

DRAWING TITLE: **SEDIMENTATION AND EROSION CONTROL PLAN STA. 296 TO STA. 307**

PROJECT NO. **104-164**

DRAWING NO. **SED-19**

SHEET NO. **03.70**

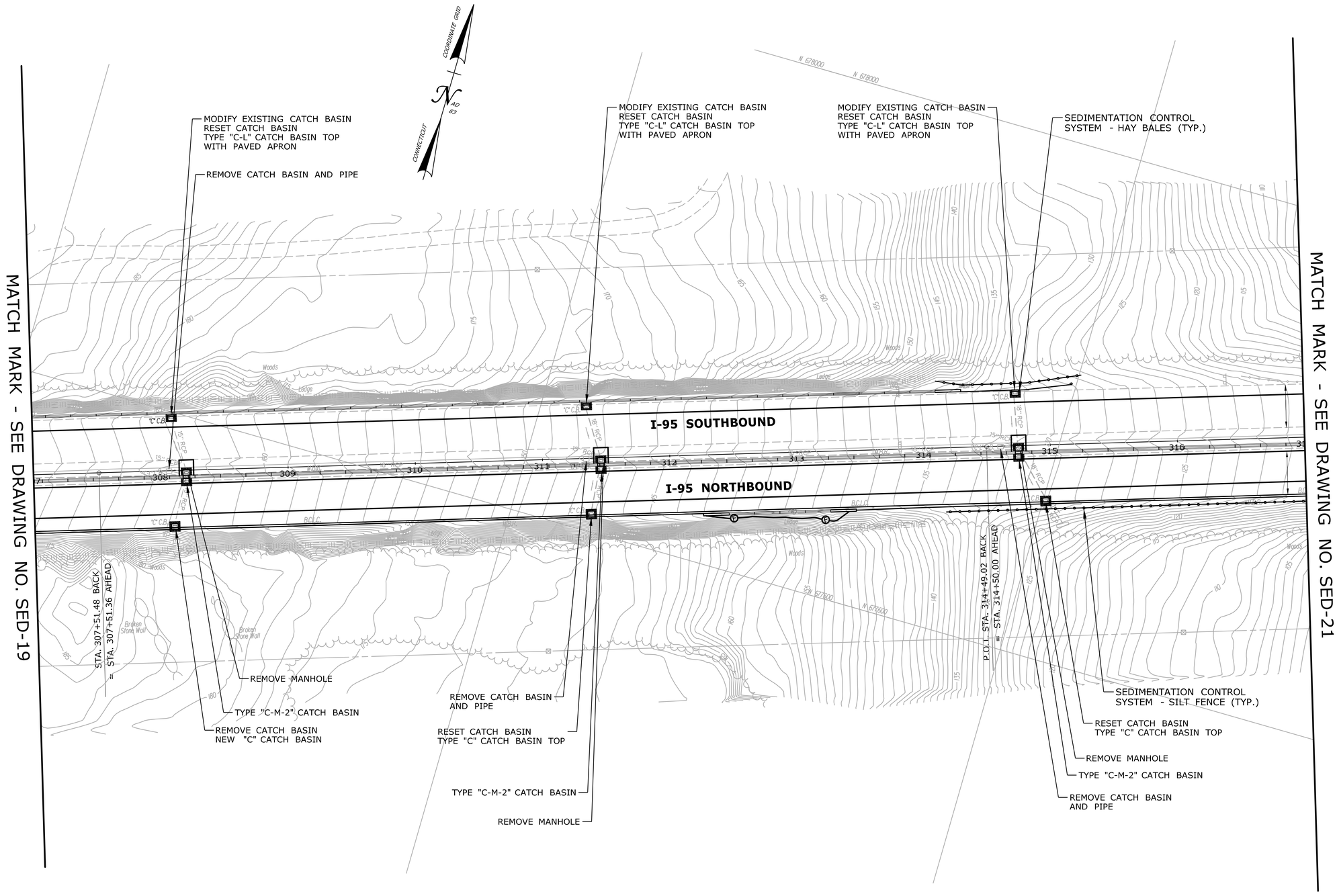

PRELIMINARY DESIGN REVIEW

REV.	DATE	REVISION DESCRIPTION	SHEET NO.
-	-	-	-
-	-	-	-
-	-	-	-
-	-	-	-
-	-	-	-
-	-	-	-

THE INFORMATION, INCLUDING ESTIMATED QUANTITIES OF WORK, SHOWN ON THESE SHEETS IS BASED ON LIMITED INVESTIGATIONS BY THE STATE AND IS IN NO WAY WARRANTED TO INDICATE THE CONDITIONS OF ACTUAL QUANTITIES OF WORK WHICH WILL BE REQUIRED.

Plotted Date: 3/21/2013

DESIGNER/DRAFTER: **RL/MF/EK**

CHECKED BY: **D. DAGAN**

SCALE IN FEET

0 40 80

SCALE 1"=40'

STATE OF CONNECTICUT
DEPARTMENT OF TRANSPORTATION

Filename: ...\Plan\HW_MSH_SED-20.dgn

SIGNATURE/
BLOCK:

PROJECT TITLE:

INTERSTATE 95
RESURFACING AND SAFETY
IMPROVEMENTS

TOWN: **OLD LYME & EAST LYME**

DRAWING TITLE: **SEDIMENTATION AND EROSION CONTROL PLAN STA. 307 TO STA. 317**

PROJECT NO. **104-164**

DRAWING NO. **SED-20**

SHEET NO. **03.71**

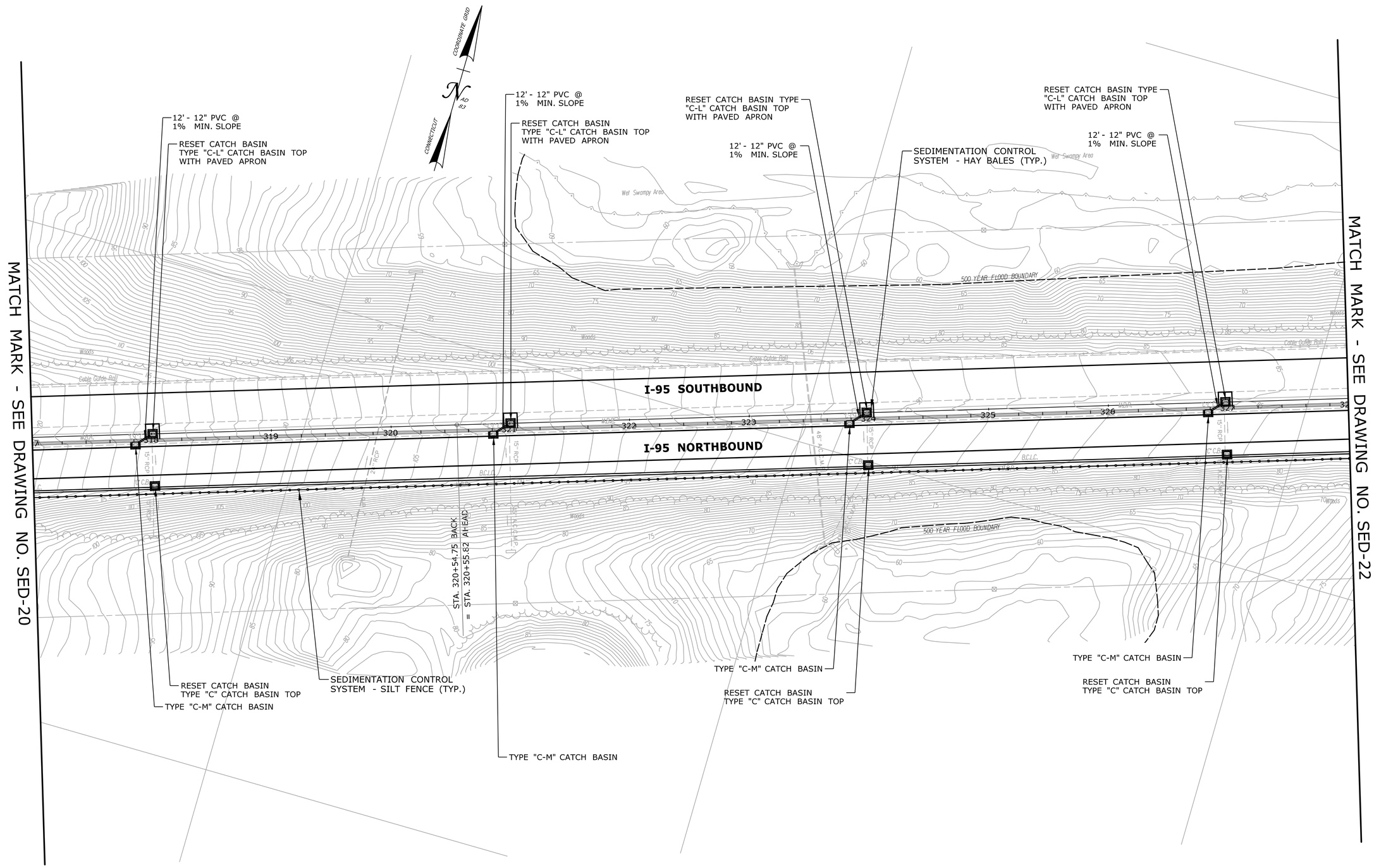

PRELIMINARY DESIGN REVIEW

REV.	DATE	REVISION DESCRIPTION	SHEET NO.
-	-	-	-
-	-	-	-
-	-	-	-
-	-	-	-
-	-	-	-
-	-	-	-

THE INFORMATION, INCLUDING ESTIMATED QUANTITIES OF WORK, SHOWN ON THESE SHEETS IS BASED ON LIMITED INVESTIGATIONS BY THE STATE AND IS IN NO WAY WARRANTED TO INDICATE THE CONDITIONS OF ACTUAL QUANTITIES OF WORK WHICH WILL BE REQUIRED.

Plotted Date: 3/21/2013

DESIGNER/DRAFTER: **RL/MF/EK**

CHECKED BY: **D. DAGAN**

SCALE IN FEET
0 40 80
SCALE 1"=40'

STATE OF CONNECTICUT
DEPARTMENT OF TRANSPORTATION

Filename: ...\Plan\HW_MSH_SED-21.dgn

SIGNATURE/ BLOCK:

PROJECT TITLE:
INTERSTATE 95 RESURFACING AND SAFETY IMPROVEMENTS

TOWN: **OLD LYME & EAST LYME**

DRAWING TITLE: **SEDIMENTATION AND EROSION CONTROL PLAN STA. 317 TO STA. 328**

PROJECT NO. **104-164**

DRAWING NO. **SED-21**

SHEET NO. **03.72**

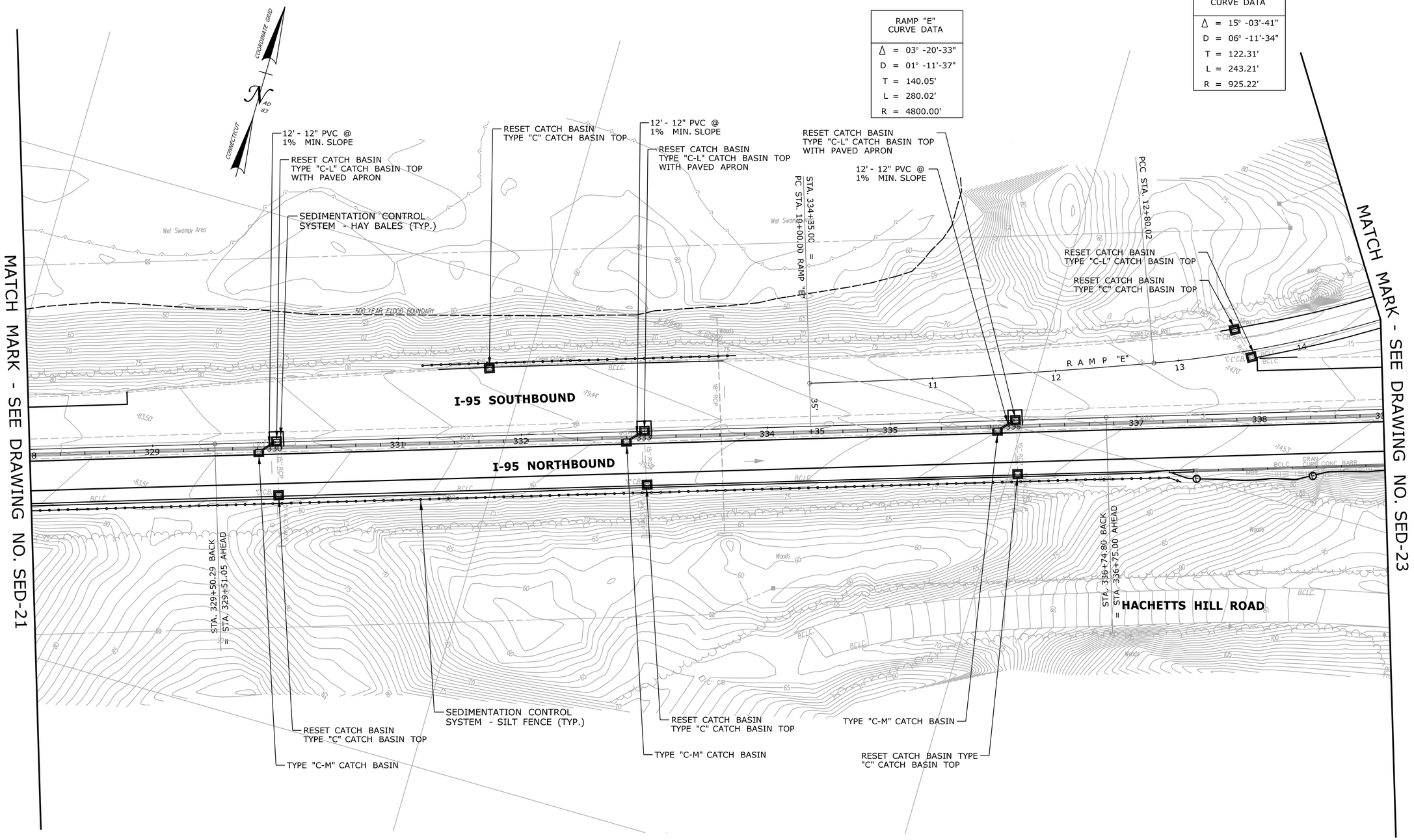

PRELIMINARY DESIGN REVIEW

REV.	DATE	REVISION DESCRIPTION	SHEET NO.
-	-	-	-
-	-	-	-
-	-	-	-
-	-	-	-
-	-	-	-
-	-	-	-

THE INFORMATION, INCLUDING ESTIMATED QUANTITIES OF WORK, SHOWN ON THESE SHEETS IS BASED ON LIMITED INVESTIGATIONS BY THE STATE AND IS IN NO WAY WARRANTED TO INDICATE THE CONDITIONS OF ACTUAL QUANTITIES OF WORK WHICH WILL BE REQUIRED.

Plotted Date: 3/21/2013

DESIGNER/DRAFTER: **RL/MF/EK**

CHECKED BY: **D. DAGAN**

SCALE IN FEET 0 40 80

SCALE 1"=40'

STATE OF CONNECTICUT
DEPARTMENT OF TRANSPORTATION

Filename: ...\Plan\HW_MSH_SED-22.dgn

SIGNATURE/ BLOCK:

PROJECT TITLE:
INTERSTATE 95 RESURFACING AND SAFETY IMPROVEMENTS

TOWN: **OLD LYME & EAST LYME**

DRAWING TITLE: **SEDIMENTATION AND EROSION CONTROL PLAN STA. 328 TO STA. 339**

PROJECT NO. **104-164**

DRAWING NO. **SED-22**

SHEET NO. **03.73**

RAMP "E" CURVE DATA
Δ = 15° -03'-41"
D = 06° -11'-34"
T = 122.31'
L = 243.21'
R = 925.22'

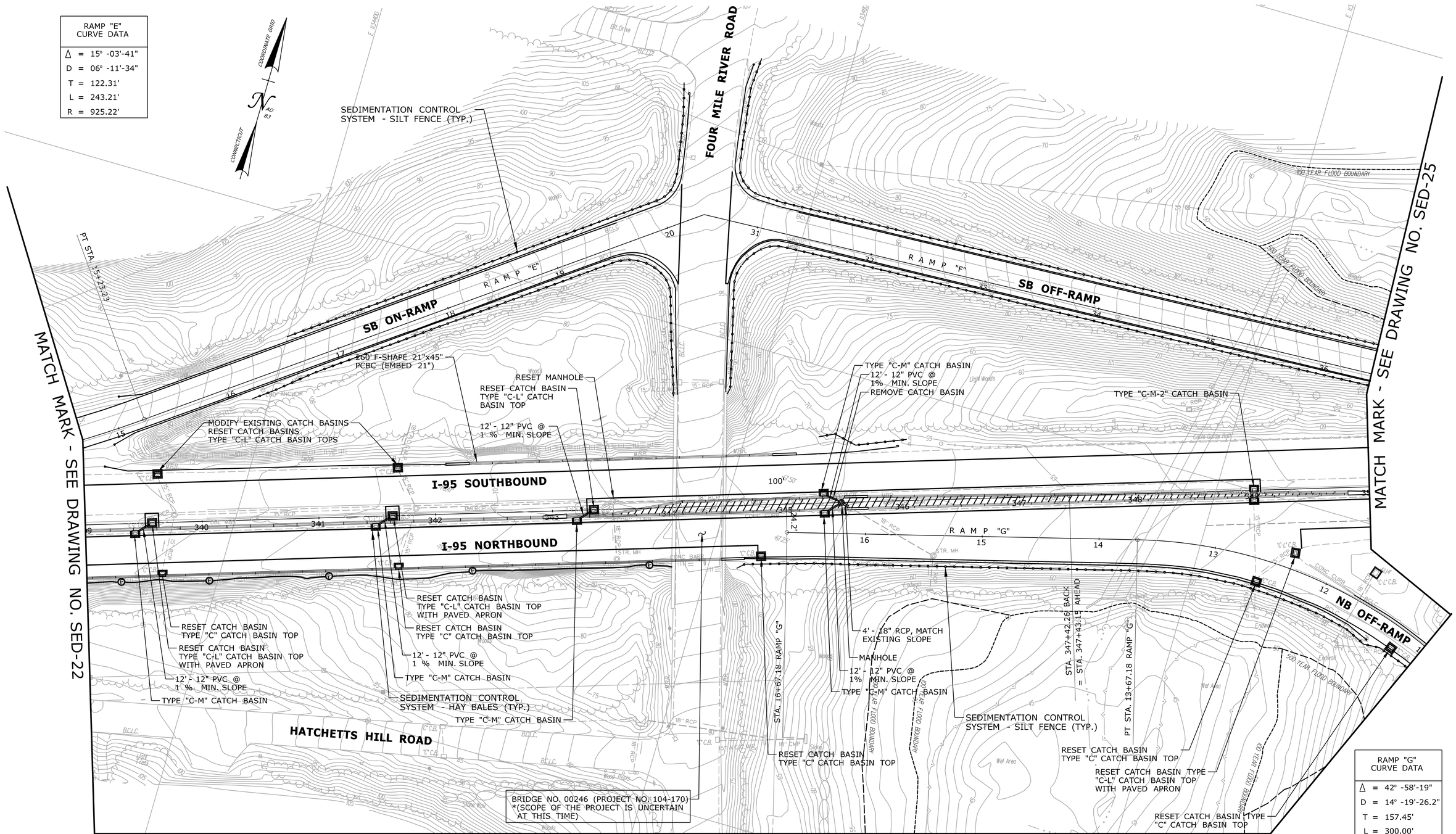

MATCH LINE - SEE DRAWING NO. SED-24

RAMP "G" CURVE DATA
Δ = 42° -58'-19"
D = 14° -19'-26.2"
T = 157.45'
L = 300.00'
R = 400.00'

PRELIMINARY DESIGN REVIEW

REV.	DATE	REVISION DESCRIPTION	SHEET NO.
-	-	-	-
-	-	-	-
-	-	-	-
-	-	-	-
-	-	-	-
-	-	-	-

THE INFORMATION, INCLUDING ESTIMATED QUANTITIES OF WORK, SHOWN ON THESE SHEETS IS BASED ON LIMITED INVESTIGATIONS BY THE STATE AND IS IN NO WAY WARRANTED TO INDICATE THE CONDITIONS OF ACTUAL QUANTITIES OF WORK WHICH WILL BE REQUIRED.

Plotted Date: 3/21/2013

DESIGNER/DRAFTER: **RL/MF/EK**
CHECKED BY: **D. DAGAN**
SCALE IN FEET 0 40 80
SCALE 1"=40'

STATE OF CONNECTICUT
DEPARTMENT OF TRANSPORTATION

Filename: ...\Plan\HW_MSH_SED-23.dgn

SIGNATURE/ BLOCK:

PROJECT TITLE: **INTERSTATE 95 RESURFACING AND SAFETY IMPROVEMENTS**

TOWN: **OLD LYME & EAST LYME**

DRAWING TITLE: **SEDIMENTATION AND EROSION CONTROL PLAN STA. 339 TO STA. 350**

PROJECT NO. **104-164**
DRAWING NO. **SED-23**
SHEET NO. **03.74**

RAMP "G" CURVE DATA
Δ = 31° -49'-52"
D = 21° -13'-14.4"
T = 76.99'
L = 150.00'
R = 270.00'

RAMP "G" CURVE DATA
Δ = 105° -11'-49"
D = 31° -49'-51.6"
T = 235.42'
L = 330.49'
R = 180.00'

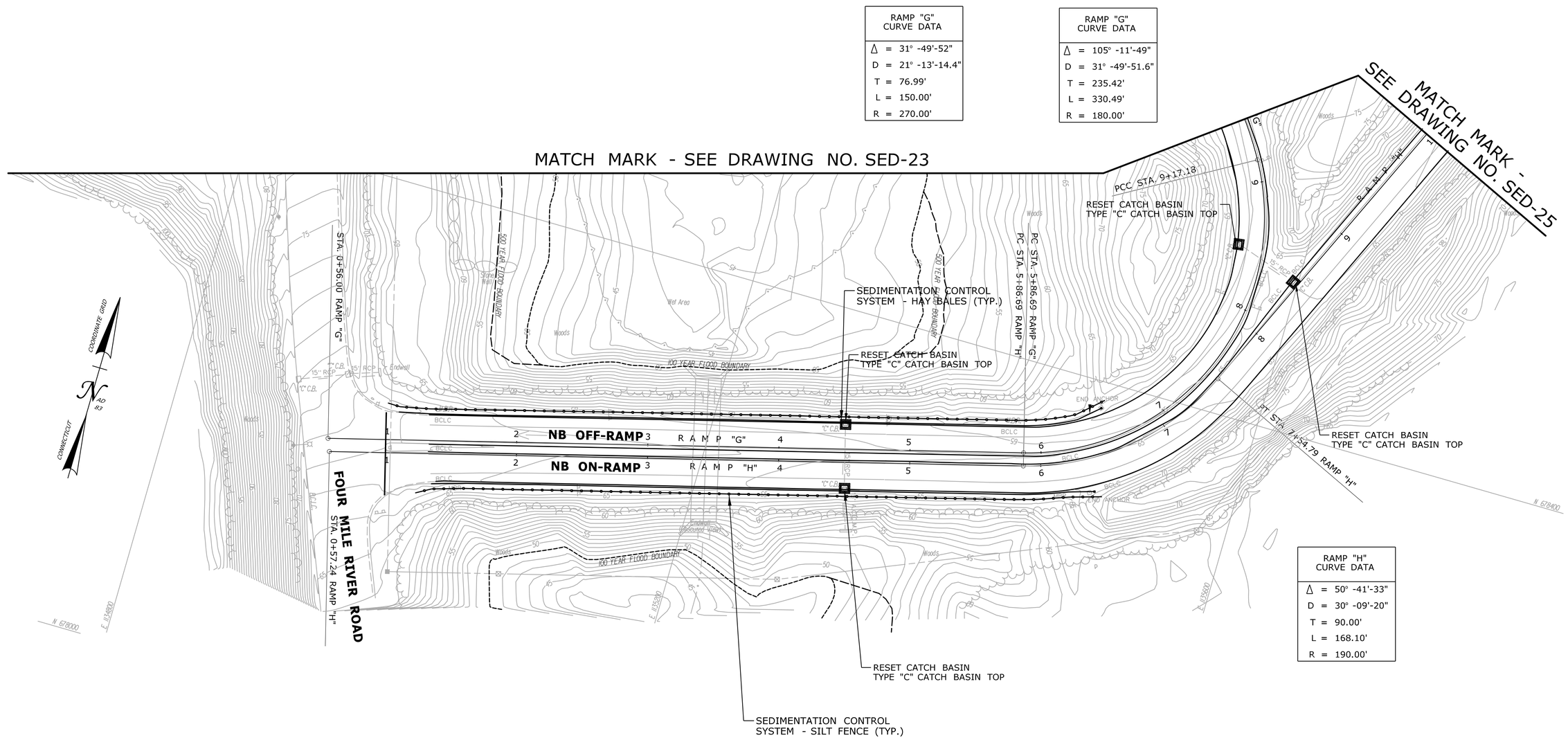

RAMP "H" CURVE DATA
Δ = 50° -41'-33"
D = 30° -09'-20"
T = 90.00'
L = 168.10'
R = 190.00'

PRELIMINARY DESIGN REVIEW

REV.	DATE	REVISION DESCRIPTION	SHEET NO.
-	-	-	-
-	-	-	-
-	-	-	-
-	-	-	-
-	-	-	-
-	-	-	-

THE INFORMATION, INCLUDING ESTIMATED QUANTITIES OF WORK, SHOWN ON THESE SHEETS IS BASED ON LIMITED INVESTIGATIONS BY THE STATE AND IS IN NO WAY WARRANTED TO INDICATE THE CONDITIONS OF ACTUAL QUANTITIES OF WORK WHICH WILL BE REQUIRED.

Plotted Date: 3/21/2013

DESIGNER/DRAFTER: **RL/MF/EK**

CHECKED BY: **D. DAGAN**

SCALE IN FEET 0 40 80

SCALE 1"=40'

STATE OF CONNECTICUT
DEPARTMENT OF TRANSPORTATION

Filename: ...\Plan\HW_MSH_SED-24.dgn

SIGNATURE/ BLOCK:

PROJECT TITLE:

INTERSTATE 95 RESURFACING AND SAFETY IMPROVEMENTS

TOWN: **OLD LYME & EAST LYME**

DRAWING TITLE: **SEDIMENTATION AND EROSION CONTROL PLAN STA. 1 TO STA. 10**

PROJECT NO. **104-164**

DRAWING NO. **SED-24**

SHEET NO. **03.75**

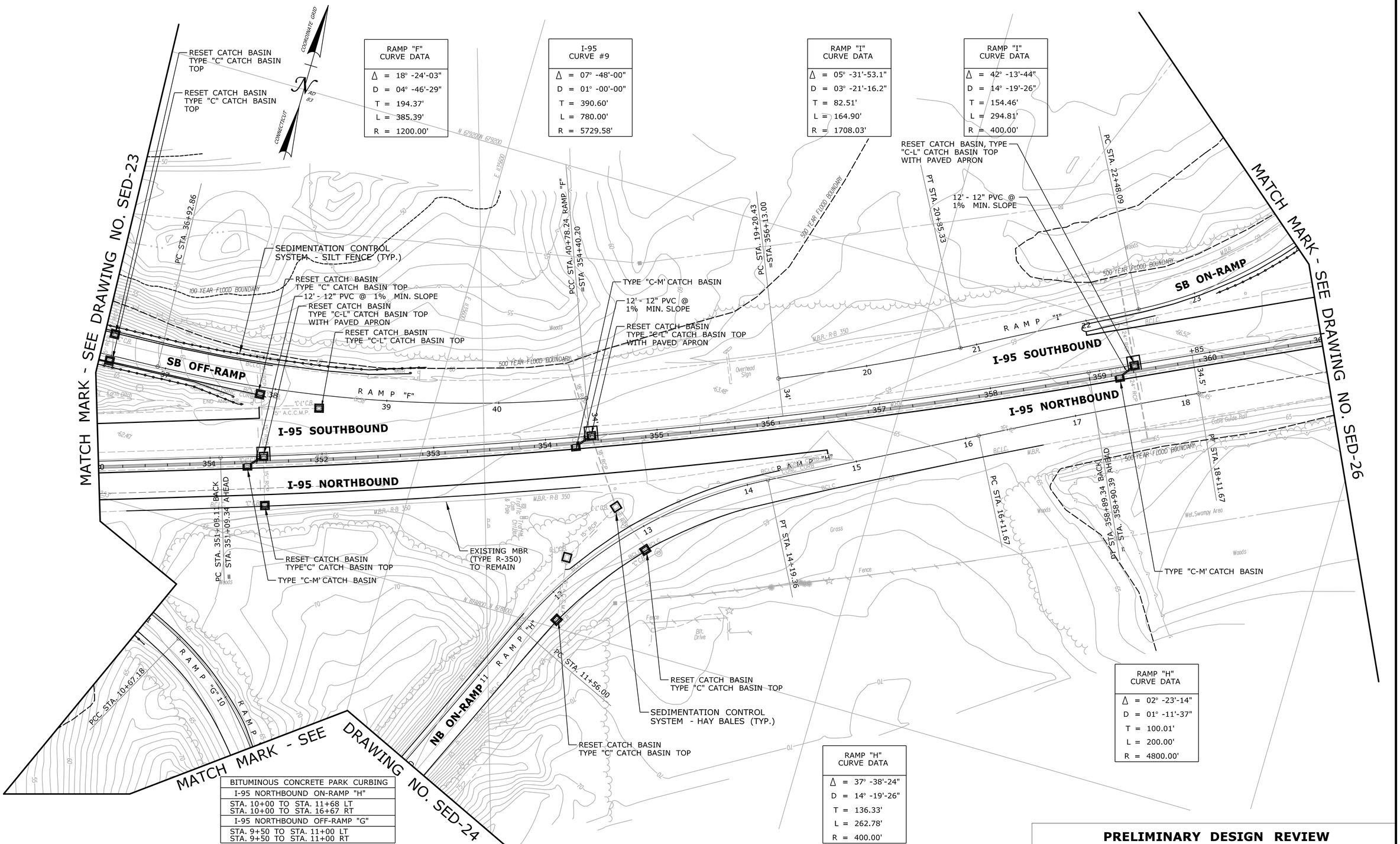

RAMP "F" CURVE DATA	
Δ	= 18° -24'-03"
D	= 04° -46'-29"
T	= 194.37'
L	= 385.39'
R	= 1200.00'

I-95 CURVE #9	
Δ	= 07° -48'-00"
D	= 01° -00'-00"
T	= 390.60'
L	= 780.00'
R	= 5729.58'

RAMP "I" CURVE DATA	
Δ	= 05° -31'-53.1"
D	= 03° -21'-16.2"
T	= 82.51'
L	= 164.90'
R	= 1708.03'

RAMP "I" CURVE DATA	
Δ	= 42° -13'-44"
D	= 14° -19'-26"
T	= 154.46'
L	= 294.81'
R	= 400.00'

RAMP "H" CURVE DATA	
Δ	= 02° -23'-14"
D	= 01° -11'-37"
T	= 100.01'
L	= 200.00'
R	= 4800.00'

RAMP "H" CURVE DATA	
Δ	= 37° -38'-24"
D	= 14° -19'-26"
T	= 136.33'
L	= 262.78'
R	= 400.00'

BITUMINOUS CONCRETE PARK CURBING
I-95 NORTHBOUND ON-RAMP "H"
STA. 10+00 TO STA. 11+68 LT STA. 10+00 TO STA. 16+67 RT
I-95 NORTHBOUND OFF-RAMP "G"
STA. 9+50 TO STA. 11+00 LT STA. 9+50 TO STA. 11+00 RT

PRELIMINARY DESIGN REVIEW

REV.	DATE	REVISION DESCRIPTION	SHEET NO.
-	-	-	-
-	-	-	-
-	-	-	-
-	-	-	-
-	-	-	-
-	-	-	-

THE INFORMATION, INCLUDING ESTIMATED QUANTITIES OF WORK, SHOWN ON THESE SHEETS IS BASED ON LIMITED INVESTIGATIONS BY THE STATE AND IS IN NO WAY WARRANTED TO INDICATE THE CONDITIONS OF ACTUAL QUANTITIES OF WORK WHICH WILL BE REQUIRED.

Plotted Date: 3/21/2013

DESIGNER/DRAFTER: **RL/MF/EK**
CHECKED BY: **D. DAGAN**
SCALE IN FEET
0 40 80
SCALE 1"=40'

STATE OF CONNECTICUT
DEPARTMENT OF TRANSPORTATION

Filename: ...\Plan\HW_MSH_SED-25.dgn

SIGNATURE/ BLOCK:

PROJECT TITLE:
INTERSTATE 95 RESURFACING AND SAFETY IMPROVEMENTS

TOWN: **OLD LYME & EAST LYME**

DRAWING TITLE:
SEDIMENTATION AND EROSION CONTROL PLAN STA. 350 TO STA. 361

PROJECT NO. **104-164**
DRAWING NO. **SED-25**
SHEET NO. **03.76**

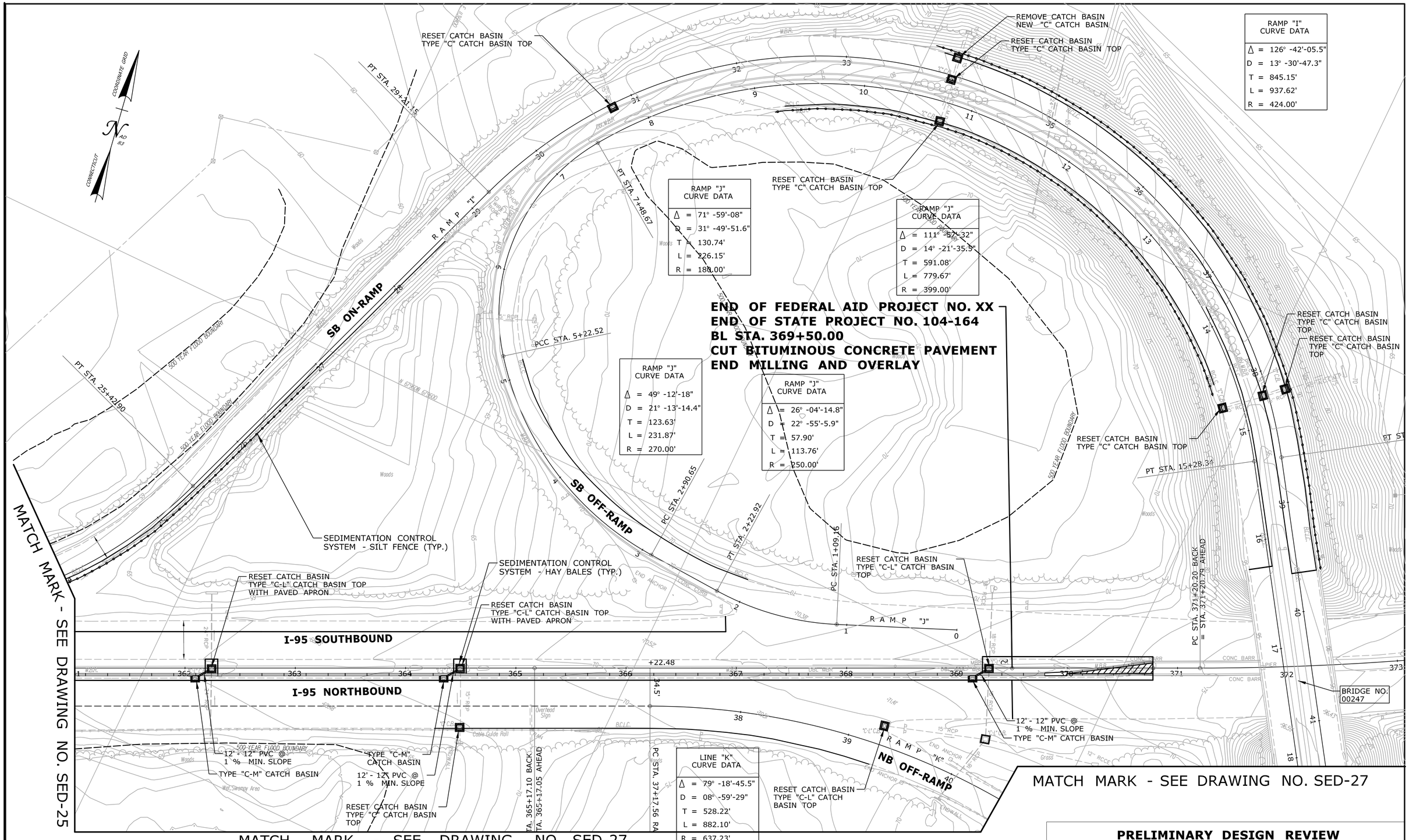

PRELIMINARY DESIGN REVIEW

REV.	DATE	REVISION DESCRIPTION	SHEET NO.
-		-	-
-		-	-
-		-	-
-		-	-
-		-	-
-		-	-

THE INFORMATION, INCLUDING ESTIMATED QUANTITIES OF WORK, SHOWN ON THESE SHEETS IS BASED ON LIMITED INVESTIGATIONS BY THE STATE AND IS IN NO WAY WARRANTED TO INDICATE THE CONDITIONS OF ACTUAL QUANTITIES OF WORK WHICH WILL BE REQUIRED.

Plotted Date: 3/21/2013

DESIGNER/DRAFTER: **RL/MF/EK**
CHECKED BY: **D. DAGAN**
SCALE IN FEET 0 40 80
SCALE 1"=40'

STATE OF CONNECTICUT
DEPARTMENT OF TRANSPORTATION

Filename: ...\Plan\HW_MSH_SED-26.dgn

SIGNATURE/ BLOCK:

PROJECT TITLE:
INTERSTATE 95 RESURFACING AND SAFETY IMPROVEMENTS

TOWN: **OLD LYME & EAST LYME**

DRAWING TITLE: **SEDIMENTATION AND EROSION CONTROL PLAN STA. 361 TO STA. 373**

PROJECT NO. **104-164**
DRAWING NO. **SED-26**
SHEET NO. **03.77**

MATCH MARK - SEE DRAWING NO. SED-26

MATCH MARK - SEE DRAWING NO. SED-26

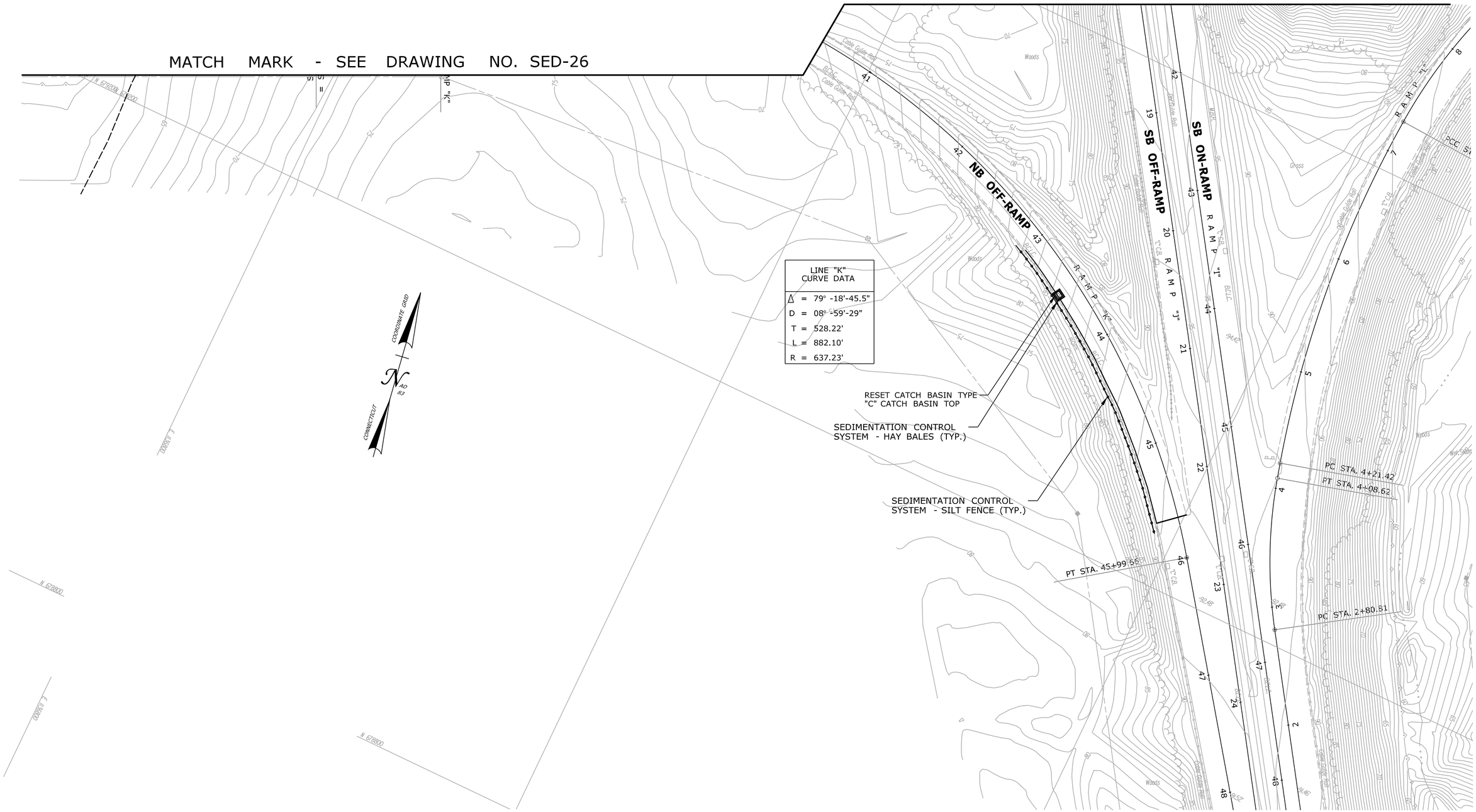

PRELIMINARY DESIGN REVIEW

REV.	DATE	REVISION DESCRIPTION	SHEET NO.
-	-		-
-	-		-
-	-		-
-	-		-
-	-		-
-	-		-

THE INFORMATION, INCLUDING ESTIMATED QUANTITIES OF WORK, SHOWN ON THESE SHEETS IS BASED ON LIMITED INVESTIGATIONS BY THE STATE AND IS IN NO WAY WARRANTED TO INDICATE THE CONDITIONS OF ACTUAL QUANTITIES OF WORK WHICH WILL BE REQUIRED.

Plotted Date: 3/21/2013

DESIGNER/DRAFTER: **RL/MF/EK**

CHECKED BY: **D. DAGAN**

SCALE IN FEET 0 40 80

SCALE 1"=40'

STATE OF CONNECTICUT
DEPARTMENT OF TRANSPORTATION

Filename: ...\Plan\HW_MSH_SED-27.dgn

SIGNATURE/ BLOCK:

PROJECT TITLE:

INTERSTATE 95 RESURFACING AND SAFETY IMPROVEMENTS

TOWN: **OLD LYME & EAST LYME**

DRAWING TITLE: **ROADWAY PLAN STA. 40+50 TO STA. 48**

PROJECT NO. **104-164**

DRAWING NO. **PLN-27**

SHEET NO. **03.78**

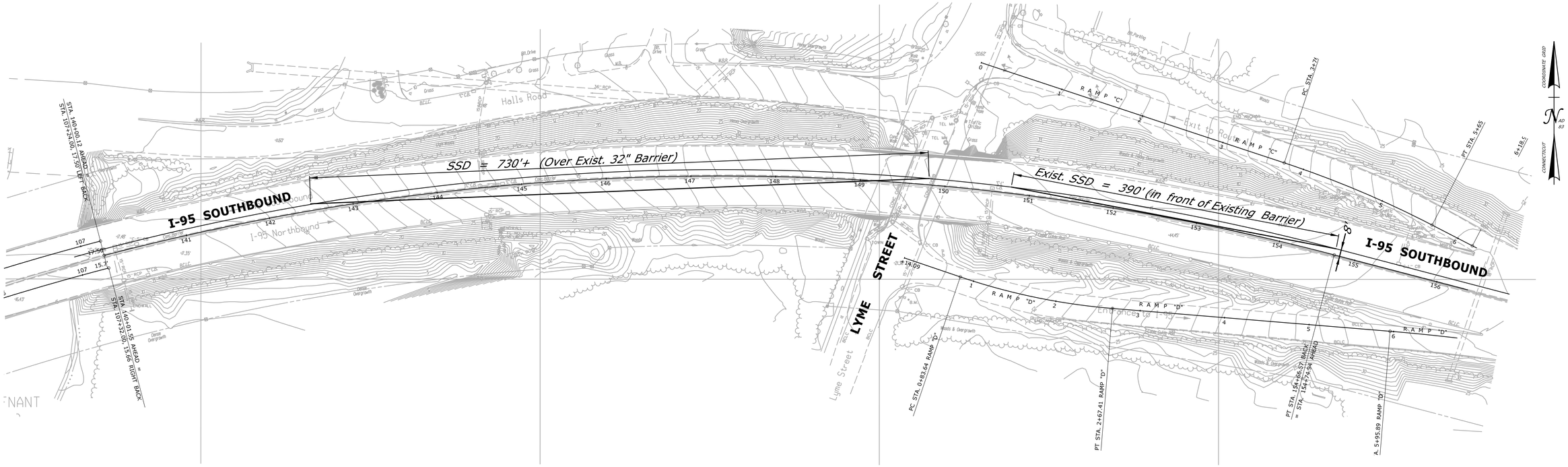

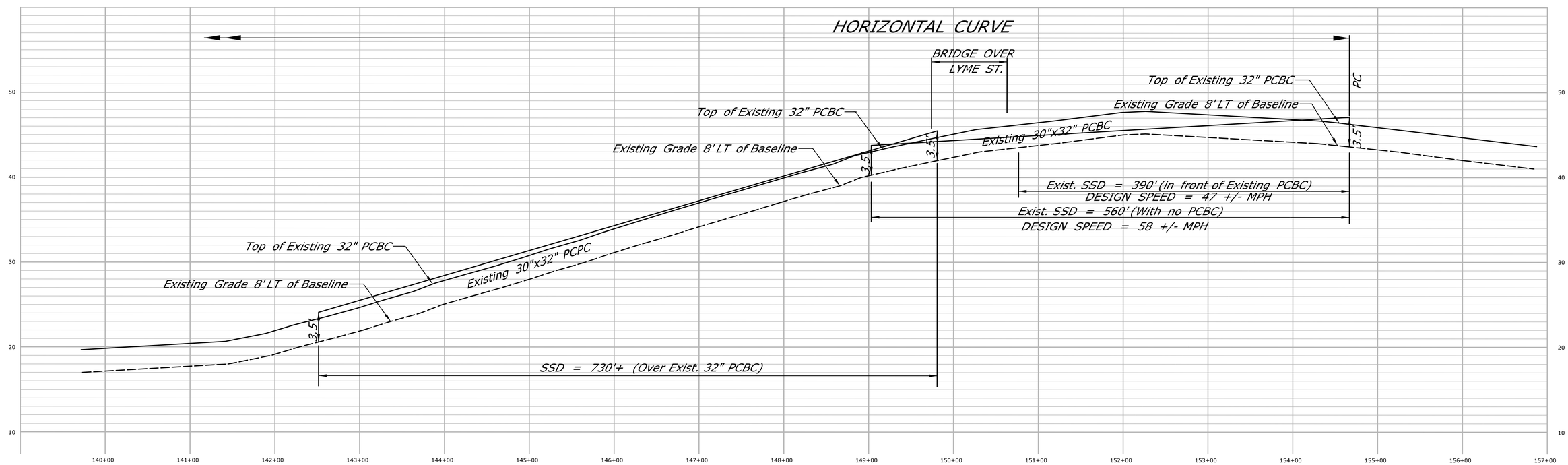

PRELIMINARY DESIGN REVIEW

REV.	DATE	REVISION DESCRIPTION	SHEET NO.
-	-	-	-
-	-	-	-
-	-	-	-
-	-	-	-
-	-	-	-
-	-	-	-

THE INFORMATION, INCLUDING ESTIMATED QUANTITIES OF WORK, SHOWN ON THESE SHEETS IS BASED ON LIMITED INVESTIGATIONS BY THE STATE AND IS IN NO WAY WARRANTED TO INDICATE THE CONDITIONS OF ACTUAL QUANTITIES OF WORK WHICH WILL BE REQUIRED.

Plotted Date: 3/21/2013

DESIGNER/DRAFTER: **RL/MF/EK**

CHECKED BY: **D. DAGAN**

SCALE IN FEET 0 60 120

SCALE 1"=60'

STATE OF CONNECTICUT
DEPARTMENT OF TRANSPORTATION

Filename: ...\Plan\HW_MSH_site line-1.dgn

SIGNATURE/ BLOCK:

PROJECT TITLE:

INTERSTATE 95 RESURFACING AND SAFETY IMPROVEMENTS

TOWN: **OLD LYME & EAST LYME**

DRAWING TITLE: **SIGHT LINE PLAN I-95 SOUTHBOUND**

PROJECT NO. **104-164**

DRAWING NO. **SL-1**

SHEET NO. **03.79**

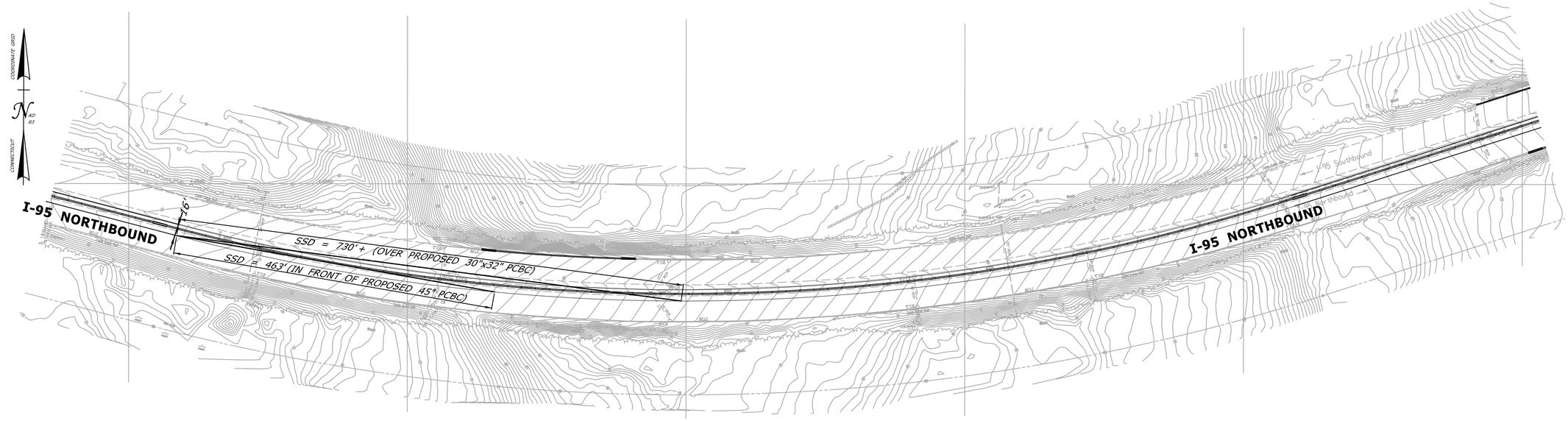

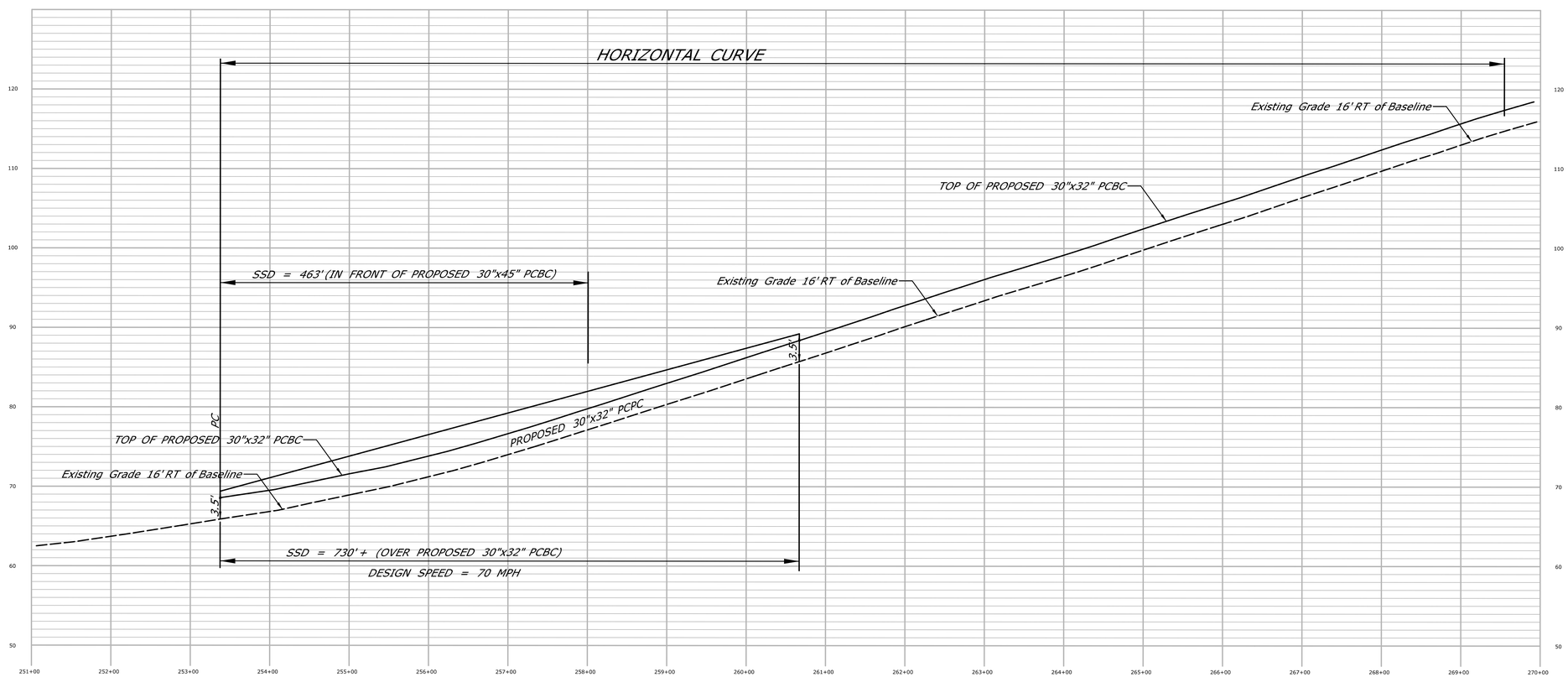

PRELIMINARY DESIGN REVIEW

REV.	DATE	REVISION DESCRIPTION	SHEET NO.
-	-	-	-
-	-	-	-
-	-	-	-
-	-	-	-
-	-	-	-
-	-	-	-

THE INFORMATION, INCLUDING ESTIMATED QUANTITIES OF WORK, SHOWN ON THESE SHEETS IS BASED ON LIMITED INVESTIGATIONS BY THE STATE AND IS IN NO WAY WARRANTED TO INDICATE THE CONDITIONS OF ACTUAL QUANTITIES OF WORK WHICH WILL BE REQUIRED.

Plotted Date: 3/21/2013

DESIGNER/DRAFTER: **RL/MF/EK**

CHECKED BY: **D. DAGAN**

SCALE IN FEET
0 80 160
SCALE 1"=80'

STATE OF CONNECTICUT
DEPARTMENT OF TRANSPORTATION

Filename: ...\Plan\HW_MSH_site line-2.dgn

SIGNATURE/
BLOCK:

PROJECT TITLE:
INTERSTATE 95 RESURFACING AND SAFETY IMPROVEMENTS

TOWN: **OLD LYME & EAST LYME**

DRAWING TITLE: **SIGHT LINE PLAN I-95 NORTHBOUND**

PROJECT NO. **104-164**

DRAWING NO. **SL-2**

SHEET NO. **03.80**

04 - TRAFFIC
INDEX OF DRAWINGS

DRAWING NUMBER	DRAWING TITLE	DRAWING NUMBER	DRAWING TITLE
MPT-1 TO MPT-2	STAGE CONSTRUCTION PLANS		

DESIGNED BY:
Luchs
CONSULTING ENGINEERS
89 COLONY STREET
MERIDEN, CONNECTICUT 06451

SEMI FINAL DESIGN REVIEW

REV.	DATE	REVISION DESCRIPTION	SHEET NO.
-	-	-	-
-	-	-	-
-	-	-	-
-	-	-	-
-	-	-	-
-	-	-	-

THE INFORMATION, INCLUDING ESTIMATED QUANTITIES OF WORK, SHOWN ON THESE SHEETS IS BASED ON LIMITED INVESTIGATIONS BY THE STATE AND IS IN NO WAY WARRANTED TO INDICATE THE CONDITIONS OF ACTUAL QUANTITIES OF WORK WHICH WILL BE REQUIRED.

Plotted Date: 3/21/2013

DESIGNER/DRAFTER: **RL/ETK/MF**
CHECKED BY: **D. DAGAN**

STATE OF CONNECTICUT
DEPARTMENT OF TRANSPORTATION

Filename: ...\Plan\HW_MSH_Subset04.dgn

SIGNATURE/
BLOCK:

PROJECT TITLE:
INTERSTATE 95 RESURFACING AND SAFETY IMPROVEMENTS

TOWN: **OLD LYME & EAST LYME**

DRAWING TITLE: **SUBSET 04 COVER SHEET**

PROJECT NO. **104-164**
DRAWING NO. **TRA-00**
SHEET NO. **04.01**

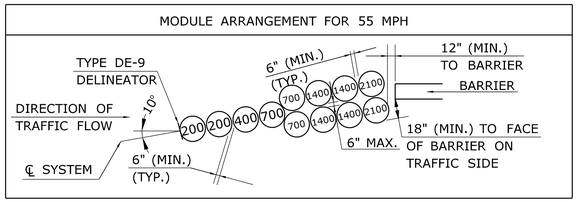

LEGEND

(400) TYPE A - IMPACT ATTENUATION MODULE, NUMBER IN CIRCLE (400) INDICATES MODULE MASS IN POUNDS.

TEMPORARY IMPACT ATTENUATION SYSTEM - TYPE A

NOT TO SCALE

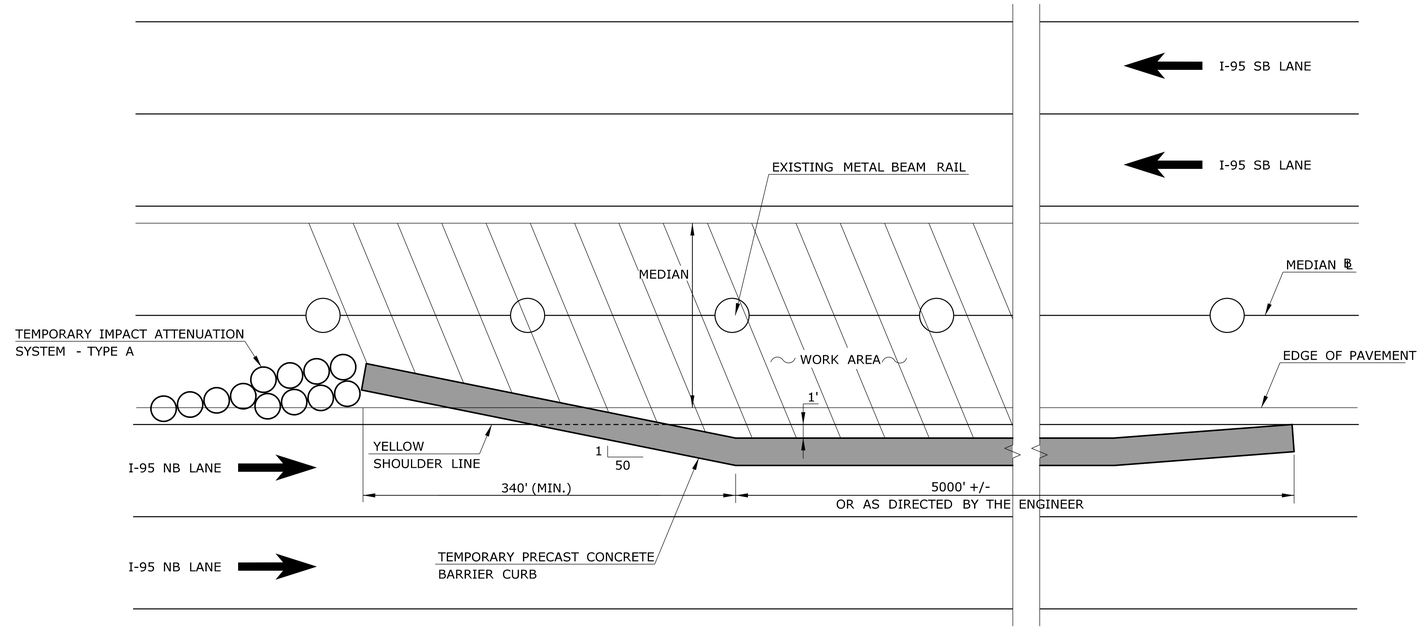

NOTES:

1. THE CONTRACTOR SHALL INSTALL APPROXIMATELY 5000 LF OF TPCBC OR AS DIRECTED BY THE ENGINEER FOR EACH PHASE OF WORK.
2. THE CONTRACTOR SHALL INSTALL TEMPORARY PRECAST CONCRETE BARRIER CURB (STRUCTURE) WHEN WORKING ON BRIDGE DECKS.
3. THE CONTRACTOR SHALL RELOCATE THE TEMPORARY IMPACT ATTENUATION SYSTEMS - TYPE A, TPCBC AND TPCBC (STRUCTURE) AS MANY TIMES AS REQUIRED FOR WORK IN THE MEDIAN.

TYPICAL TPCBC LAYOUT PLAN

NOT TO SCALE

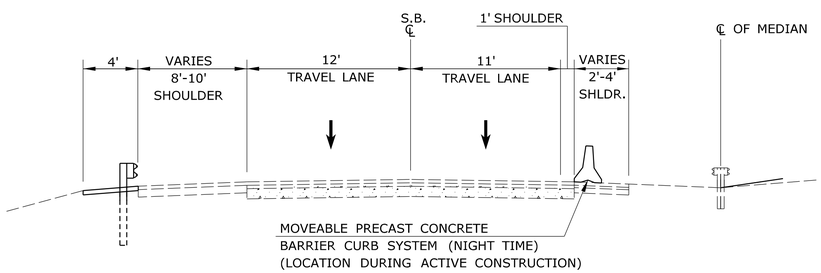

DAYTIME LANE OPERATION

NOT TO SCALE

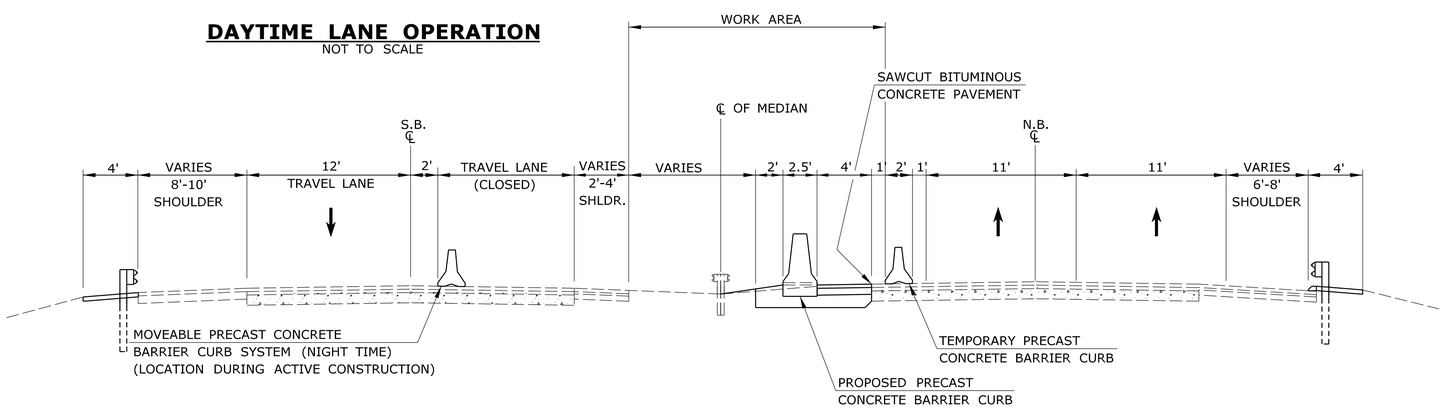

TYPICAL SECTION

NOT TO SCALE

NOTES (CONT.):

4. EXISTING CONFLICTING PAVEMENT MARKINGS SHALL BE COVERED WITH BLACK LINE MASK PAVEMENT MARKING TAPE, INCLUDING THOSE PAVEMENT MARKINGS OUTSIDE OF THE TRAVELWAY.
5. THE APPROPRIATE TYPE DE-7 AND DE-7A DELINEATORS SHALL BE INSTALLED ON THE TPCBC AS SPECIFIED ON THE TYPICAL SHEET "TYPICAL DELINEATION AND DELINEATOR AND OBJECT MARKER DETAILS". TYPE DE-9 DELINEATOR SHALL BE SECURELY FASTENED TO THE LEAD MODULE OF THE TEMPORARY IMPACT ATTENUATION SYSTEM.
6. THE CONTRACTOR SHALL ERECT AND MAINTAIN ALL SIGNING PATTERNS IN ACCORDANCE WITH TRAFFIC CONTROL PLANS CONTAINED IN THE SPECIAL PROVISION " MAINTENANCE AND PROTECTION OF TRAFFIC"
7. TEMPORARY SIGNS SHALL BE MOUNTED ON POSTS WHEN FEASIBLE.
8. ALL TEMPORARY SIGNS SHALL BE PAID UNDER ITEM NO. 1220013A - "CONSTRUCTION SIGNS - BRIGHT FLUORSCENT SHEETING".

PRELIMINARY DESIGN REVIEW

REV.	DATE	REVISION DESCRIPTION	SHEET NO.
-	-	-	-
-	-	-	-
-	-	-	-
-	-	-	-
-	-	-	-
-	-	-	-

THE INFORMATION, INCLUDING ESTIMATED QUANTITIES OF WORK, SHOWN ON THESE SHEETS IS BASED ON LIMITED INVESTIGATIONS BY THE STATE AND IS IN NO WAY WARRANTED TO INDICATE THE CONDITIONS OF ACTUAL QUANTITIES OF WORK WHICH WILL BE REQUIRED.

Plotted Date: 3/21/2013

DESIGNER/DRAFTER: RL/EK/MF

CHECKED BY: D. DAGAN

SCALE AS NOTED

STATE OF CONNECTICUT
DEPARTMENT OF TRANSPORTATION

Filename: ...\HW_MSH_MPT-1_TypeSections.dgn

SIGNATURE/
BLOCK:

PROJECT TITLE:
INTERSTATE 95
RESURFACING AND SAFETY
IMPROVEMENTS

TOWN: OLD LYME & EAST LYME

DRAWING TITLE:
MAINTENANCE AND
PROTECTION OF TRAFFIC
TYPICAL STAGING SECTION AND PLAN

PROJECT NO. 104-164

DRAWING NO. MPT-1

SHEET NO. 04.02

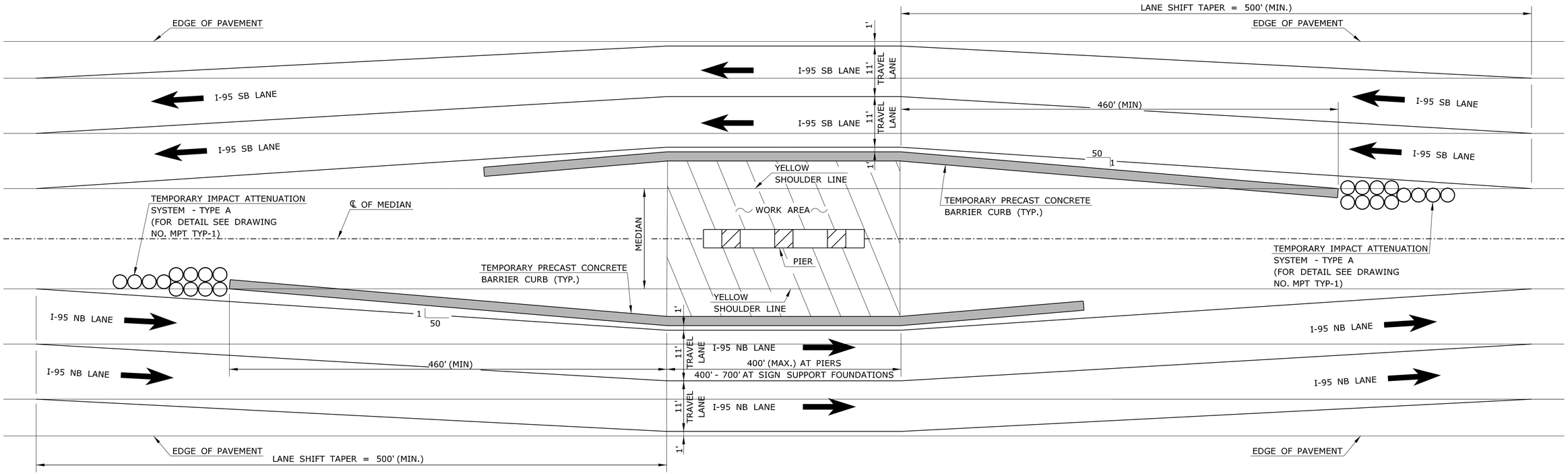

TYPICAL TPCBC LAYOUT PLAN

NOT TO SCALE

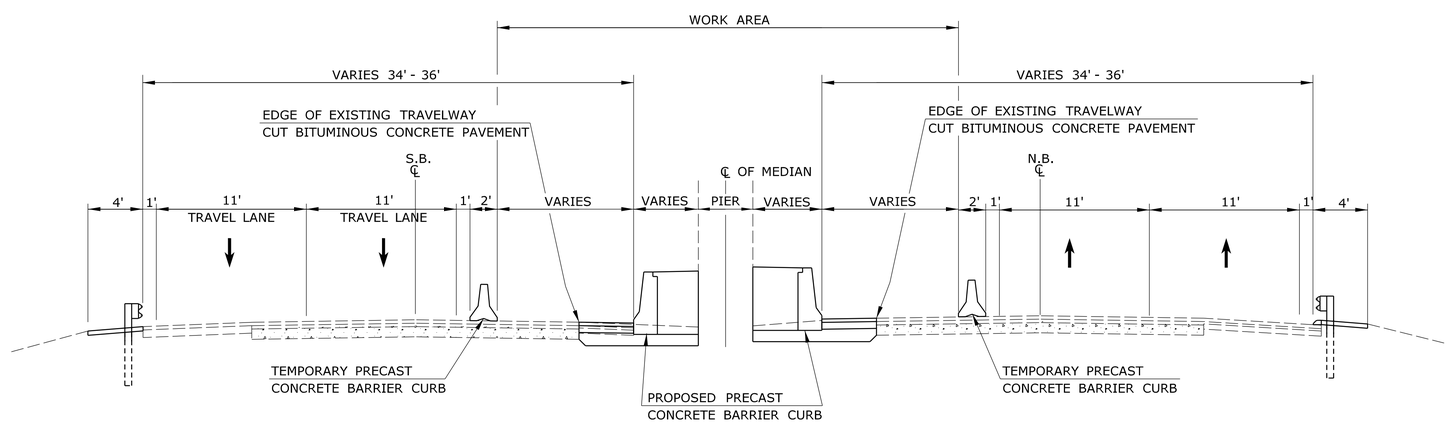

TYPICAL SECTION AT BRIDGE PIERS

NOT TO SCALE

NOTES:

1. EXISTING CONFLICTING PAVEMENT MARKINGS SHALL BE COVERED WITH BLACK LINE MASK PAVEMENT MARKING TAPE, INCLUDING THOSE PAVEMENT MARKINGS OUTSIDE OF THE TRAVELWAY.
2. THE APPROPRIATE TYPE DE-7 AND DE-7A DELINEATORS SHALL BE INSTALLED ON THE TPCBC AS SPECIFIED ON THE TYPICAL SHEET "TYPICAL DELINEATION AND DELINEATOR AND OBJECT MARKER DETAILS". TYPE DE-9 DELINEATOR SHALL BE SECURELY FASTENED TO THE LEAD MODULE OF THE TEMPORARY IMPACT ATTENUATION SYSTEM.
3. THE CONTRACTOR SHALL ERECT AND MAINTAIN ALL SIGNING PATTERNS IN ACCORDANCE WITH TRAFFIC CONTROL PLANS CONTAINED IN THE SPECIAL PROVISION " MAINTENANCE AND PROTECTION OF TRAFFIC"
4. TEMPORARY SIGNS SHALL BE MOUNTED ON POSTS WHEN FEASIBLE.
5. ALL TEMPORARY SIGNS SHALL BE PAID UNDER ITEM NO. 1220013A - "CONSTRUCTION SIGNS - BRIGHT FLUORSCENT SHEETING".

PRELIMINARY DESIGN REVIEW

REV.	DATE	REVISION DESCRIPTION	SHEET NO.
-	-	-	-
-	-	-	-
-	-	-	-
-	-	-	-
-	-	-	-
-	-	-	-

THE INFORMATION, INCLUDING ESTIMATED QUANTITIES OF WORK, SHOWN ON THESE SHEETS IS BASED ON LIMITED INVESTIGATIONS BY THE STATE AND IS IN NO WAY WARRANTED TO INDICATE THE CONDITIONS OF ACTUAL QUANTITIES OF WORK WHICH WILL BE REQUIRED.

Plotted Date: 3/21/2013

DESIGNER/DRAFTER: RL/EK/MF
CHECKED BY: D. DAGAN
SCALE AS NOTED

STATE OF CONNECTICUT
DEPARTMENT OF TRANSPORTATION

Filename: ...\HW_MSH_MPT-2_TypeSections.dgn

SIGNATURE/ BLOCK:

PROJECT TITLE: INTERSTATE 95 RESURFACING AND SAFETY IMPROVEMENTS

TOWN: OLD LYME & EAST LYME

DRAWING TITLE: MAINTENANCE AND PROTECTION OF TRAFFIC TYPICAL STAGING SETION AND PLAN

PROJECT NO. 104-164
DRAWING NO. MPT-2
SHEET NO. 04.03