13 - MEP

INDEX OF DRAWINGS

DRAWING NUMBER	DRAWING TITLE	DRAWING NUMBER	DRAWING TITLE	DRAWING NUMBER	DRAWING TITLE
MEPI-001	MEP - INDEX OF DRAWINGS	FEL-602	CONDUIT - SECTIONS & DETAILS SHEET 2 OF 3	RCS-002	REVENUE COLLECTION SYSTEM - MISCELLANEOUS DETAILS
FME-001	MECHANICAL GENERAL NOTES AND ABBREV.	FEL-603	CONDUIT - SECTIONS & DETAILS SHEET 3 OF 3		
FME-002	MECHANICAL LEGEND	FEL-604	ELECTRICAL POWER - ENLARGED ELEVATOR		
FME-101	MECHANICAL PLANS - STATION GROUND LEVEL	FEL-605	ELECTRICAL GROUNDING DETAILS 1 OF 2		
FME-102	MECHANICAL PLAN - PEDESTRIAN BRIDGE	FEL-606	ELECTRICAL GROUNDING DETAILS 2 OF 2		
FME-103	MECHANICAL PLAN - EQUIPMENT ROOMS	FEL-701	GENERAL ARRANGEMENT - ONE-LINE DIAG. MDP-A		
FME-601	MECHANICAL DETAILS	FEL-702	GENERAL ARRANGEMENT - ONE-LINE DIAG. MDP-B		
FME-801	MECHANICAL SCHEDULES	FLI-201	LIGHTING PLAN - PLATFORM PLAN PART A		
FPL-001	PLUMBING GENERAL NOTES, LEGEND AND ABBREV.	FLI-202	LIGHTING PLAN - PLATFORM PLAN PART B		
FPL-101	PLUMBING PLAN - PLATFORM PLAN PART A	FLI-203	LIGHTING PLAN - PLATFORM PLAN PART C		
FPL-102	PLUMBING PLAN - PLATFORM PLAN PART B	FLI-204	LIGHTING PLAN - STATION GROUND LEVEL EAST		
FPL-103	PLUMBING PLAN - PLATFORM PLAN PART C	FLI-205	LIGHTING PLAN - STATION GROUND LEVEL WEST		
FPL-104	PLUMBING PLAN - EQUIPMENT ROOMS	FLI-206	LIGHTING PLAN - PEDESTRIAN BRIDGE		
FPL-601	PLUMBING DETAILS	FLI-601	LIGHTING DETAILS		
FPL-801	PLUMBING SCHEDULES	FLI-801	LIGHTING CONTROL - PANEL SCHEDULES 1 OF 3		
FSM-001	HYDRONIC SNOW MELT - GENERAL NOTES AND ABBREV.	FLI-802	LIGHTING CONTROL - PANEL SCHEDULES 2 OF 3		
FSM-002	HYDRONIC SNOW MELT - LEGEND	FLI-803	LIGHTING CONTROL - PANEL SCHEDULES 3 OF 3		
FSM-101	HYDRONIC SNOW MELT - PLATFORM PLAN PART A	FLI-804	LIGHTING CONTROL - ONE-LINE-DIAGRAM		
FSM-102	HYDRONIC SNOW MELT - PLATFORM PLAN PART B	FLI-805	LIGHTING CONTROL - RELAY PANEL SCHEDULE		
FSM-103	HYDRONIC SNOW MELT - PLATFORM PLAN PART C	FLI-901	LIGHTING - FIXTURE SCHEDULE		
FSM-104	HYDRONIC SNOW MELT - EQUIPMENT ROOMS	FCI-001	COMM. SYSTEMS - GEN. & LEGEND NOTES		
FSM-105	HYDRONIC SNOW MELT - SNOW MELT ZONE PLAN	FCI-101	COMM. SYSTEMS - PLATFORM PLAN PART A		
FSM-601	HYDRONIC SNOW MELT - DETAILS SHEET 1 OF 3	FCI-102	COMM. SYSTEMS - PLATFORM PLAN PART B		
FSM-602	HYDRONIC SNOW MELT - DETAILS SHEET 2 OF 3	FCI-103	COMM. SYSTEMS - PLATFORM PLAN PART C		
FSM-603	HYDRONIC SNOW MELT - DETAILS SHEET 3 OF 3	FCI-104	COMM. SYSTEMS - PED. BRIDGE & COMM. ROOM PLANS		
FSM-701	HYDRONIC SNOW MELT - PIPING DIAGRAMS WEST	FCI-601	COMM. SYSTEMS - DETAILS		
FSM-702	HYDRONIC SNOW MELT - PIPING DIAGRAMS EAST	FCI-701	COMM. SYSTEMS - BL LIGHT, TVM & EMER. TEL. RISER DIAG.		
FSM-801	HYDRONIC SNOW MELT - SCHEDULES	FCI-702	COMM. SYSTEMS - PA/PIDS RISER DIAGRAM		
FEL-001	ELECTRICAL GENERAL NOTES, LEGEND AND ABBREV 1 OF 2	FAS-001	SECURITY SYSTEM - GENERAL NOTES, LEGENDS & ABBREV.		
FEL-002	ELECTRICAL GENERAL NOTES, LEGEND AND ABBREV 2 OF 2	FAS-101	SECURITY SYSTEM - PLATFORM PLAN PART A		
FEL-100	ELECTRICAL SITE PLAN	FAS-102	SECURITY SYSTEM - PLATFORM PLAN PART B		
FEL-101	ELECTRICAL POWER - PLATFORM PLAN PART A	FAS-103	SECURITY SYSTEM - PLATFORM PLAN PART C		
FEL-102	ELECTRICAL POWER - PLATFORM PLAN PART B	FAS-104	SECURITY SYSTEM - PARKING LOT PLAN		
FEL-103	ELECTRICAL POWER - PLATFORM PLAN PART C	FAS-105	SECURITY SYSTEM - PEDESTRIAN BRIDGE PLAN		
FEL-104	ELECTRICAL POWER - STATION GROUND LEVEL PLANS	FAS-601	SECURITY SYSTEM - DETAILS		
FEL-105	ELECTRICAL POWER - EQUIPMENT ROOMS PLANS	FAS-701	SECURITY SYSTEM - RISER NETWORK DIAGRAM 1 OF 2		
FEL-106	ELECTRICAL POWER - PEDESTRIAN BRIDGE PLANS	FAS-702	SECURITY SYSTEM - RISER NETWORK DIAGRAM 2 OF 2		
FEL-301	ELECTRICAL GROUNDING - PLATFORM PLAN PART A	FFD-001	FIRE ALARM - GEN. NOTES & LEGEND		
FEL-302	ELECTRICAL GROUNDING - PLATFORM PLAN PART B	FFD-101	FIRE ALARM - BRIDGE AND GRND LEVELS PLANS		
FEL-303	ELECTRICAL GROUNDING - PLATFORM PLAN PART C	FFD-701	FIRE ALARM - RISER DIAGRAM		
FEL-601	CONDUIT - SECTIONS & DETAILS SHEET 1 OF 3	RCS-001	REVENUE COLLECTION SYSTEM - GENERAL SITE PLAN		

DESIGNED BY:
Hatch Mott MacDonald
400 BLUE HILL DRIVE
SUITE 100, NORTH LOBBLY
WESTWOOD, MA. 02090
STATE OF CONNECTICUT DAVID G. NEWMAN No. 23278 LICENSED PROFESSIONAL ENGINEER
David G. Newman
I Sign and Certify
Vol. 3: Subset 13
2014.02.04
16:01:50-05'00'

DESIGNED BY:
Hatch Mott MacDonald
400 BLUE HILL DRIVE
SUITE 100, NORTH LOBBLY
WESTWOOD, MA. 02090
STATE OF CONNECTICUT NIZOM S. GHANTOUS No. 25134 LICENSED PROFESSIONAL ENGINEER
Nizom S. Ghantous
I Sign and Certify
Vol. 3: Subset 13
2014.02.04
16:02:16-05'00'

DESIGNED BY:
Baker
MICHAEL BAKER ENGINEERING, INC.
500 ENTERPRISE DRIVE
SUITE 2B
ROCKY HILL, CT 06067
STATE OF CONNECTICUT RAYMOND E. WHITBREAD No. 24259 LICENSED PROFESSIONAL ENGINEER
Ray Whitbread
2014.02.04
16:53:08-05'00'

REV.	DATE	REVISION DESCRIPTION	SHEET NO.
-	-	-	-
-	-	-	-
-	-	-	-
-	-	-	-
-	-	-	-
-	-	-	-

THE INFORMATION, INCLUDING ESTIMATED QUANTITIES OF WORK, SHOWN ON THESE SHEETS IS BASED ON LIMITED INVESTIGATIONS BY THE STATE AND IS IN NO WAY WARRANTED TO INDICATE THE CONDITIONS OF ACTUAL QUANTITIES OF WORK WHICH WILL BE REQUIRED.

Plotted Date: 2/3/2014

DESIGNER/DRAFTER: S. BIRKOK
CHECKED BY: D. NEWMAN
NOT TO SCALE

STATE OF CONNECTICUT
DEPARTMENT OF TRANSPORTATION

Filename: ...\FA_CGR_CPS_0170-2296_079__06_MEP__001.dgn

SIGNATURE/BLOCK
STATE OF CONNECTICUT DAVID G. NEWMAN No. 23278 LICENSED PROFESSIONAL ENGINEER
Hatch Mott MacDonald
Suite 100, North Lobby
400 Blue Hill Drive
Westwood, MA 02090

PROJECT TITLE:
NEW HAVEN - HARTFORD
SPRINGFIELD
RAIL CORRIDOR

TOWN: MERIDEN

DRAWING TITLE:
MEP
INDEX OF DRAWINGS

PROJECT NO. 170-3155
DRAWING NO. MEPI-001
SHEET NO. 03.13.001

Connecticut Department of Transportation
QA/QC Format Check

GENERAL NOTES

1. THE HEATING, VENTILATING AND AIR CONDITIONING (HVAC) CONTRACTOR SHALL VISIT THE SITE TO DETERMINE ALL PRE-EXISTING CONDITIONS AND WORK NECESSARY PRIOR TO SUBMISSION OF BID PRICE. EXTRA PAYMENT OR COMPENSATION FOR WORK REQUIRED DUE TO EXISTING CONDITIONS THAT WOULD HAVE BEEN OBSERVED DURING THE SITE EXAMINATION WILL NOT BE MADE.
2. THE HVAC CONTRACTOR SHALL BE FAMILIAR WITH ALL CONTRACT DOCUMENTS FOR ALL TRADES AND COORDINATE WITH OTHER CONTRACTORS.
3. DRAWINGS ARE DIAGRAMMATIC ONLY, FINAL ROUTING OF DUCTWORK, PIPING AND EQUIPMENT LOCATIONS SHALL BE DETERMINED IN THE FIELD. ADDITIONAL OFFSETS, ELBOWS, ETC., SHALL BE DEMOLISHED WITHOUT ADDITIONAL COST TO THE OWNER.
4. DIMENSIONS SHOWN ON PLANS ARE HORIZONTAL, DIMENSIONS SHOWN IN ELEVATION ARE VERTICAL EXCEPT THAT, IN WAY OF STRUCTURAL STEEL, DIMENSIONS ARE MEASURED PERPENDICULAR TO FLANGE.
5. ALL DUCTWORK SHALL BE CONSTRUCTED AND INSTALLED IN ACCORDANCE WITH THE LATEST EDITION OF SMACNA STANDARDS.
6. MINIMUM SIZE OF ALL HVAC PIPING SHALL BE 3/4" UNLESS OTHERWISE NOTED.
7. THE HVAC CONTRACTOR SHALL COORDINATE ALL ELECTRICAL AND PLUMBING REQUIREMENTS WITH THE ELECTRICAL AND PLUMBING CONTRACTORS.
8. THE HVAC CONTRACTOR SHALL FIELD MEASURE EXACT SIZES AND VERIFY ALL OPENINGS FOR SHAFTS AND LOUVERS PRIOR TO SUBMISSION OF SHOP DRAWINGS AND INSTALLATION.
9. ALL HVAC WORK SHALL BE IN ACCORDANCE WITH APPLICABLE FEDERAL, STATE AND LOCAL CODES.
10. ALL HVAC EQUIPMENT SHALL BE INSTALLED IN ACCORDANCE WITH THE MANUFACTURER'S RECOMMENDATIONS.
11. MANUFACTURERS' MODEL NUMBERS ARE SPECIFIED SOLELY TO ESTABLISH STANDARDS OF QUALITY FOR PERFORMANCE AND MATERIAL.
12. PROVIDE ACCESS PANELS FOR EQUIPMENT THAT REQUIRES PERIODIC SERVICE.
13. RUN DUCTS AND PIPING CONCEALED, UNLESS SPECIFIED OTHERWISE AND CLEAR OF CEILING INSERTS.
14. FIRE DAMPERS AND ACCESS PANELS SHALL BE INSTALLED AT ALL 2-HOUR RATED PARTITIONS, FLOOR PENETRATIONS AND WHERE REQUIRED BY NFPA 90A. REFER TO ARCHITECTURAL DRAWINGS FOR PARTITION LOCATIONS.
15. SHUTOFF VALVES SHALL BE INSTALLED IN THE SUPPLY AND RETURN PIPING TO ALL EQUIPMENT TO ALLOW FOR SERVICING. UNIONS OR FLANGES SHALL BE ARRANGED SUCH THAT EQUIPMENT CAN BE SERVICED WITHOUT CUTTING, AND WITH MINIMAL DISRUPTION OF PIPING SERVING THE EQUIPMENT.
16. INSULATE PIPING AS SPECIFIED; PERFORM TESTS SPECIFIED BEFORE INSULATING.
17. PROVIDE CLAMPS, OFFSETS, EXPANSION JOINTS, ANCHORS AND GUIDES AS NECESSARY TO PREVENT STRESS ON PIPING.
18. PROVIDE VENTS AT HIGH POINTS IN PIPING SYSTEMS AND DRAIN VALVES AT LOW POINTS.
19. PROVIDE GAUGE FITTINGS AND THERMOMETER WELLS AT HOT WATER SUPPLY AND RETURN BRANCHES AND AT INLETS AND OUTLETS.
20. PITCH PIPING 1 INCH IN 20 FEET IN DIRECTION OF FLOW.
21. PROVIDE BALANCING VALVES AT SYSTEM LOOP RETURNS, PROVIDE SHUT-OFF VALVES AT SYSTEM LOOP SUPPLIES.
22. THE HVAC CONTRACTOR SHALL FURNISH TO THE GENERAL CONTRACTOR ALL INFORMATION REQUIRED FOR SETTING OF WALL, AND PARTITION OPENINGS FOR HVAC WORK. THIS INFORMATION SHALL BE FURNISHED IN A TIMELY MANNER SUCH THAT CONSTRUCTION SCHEDULE IS NOT JEOPARDIZED.
23. HVAC CONTRACTOR SHALL VERIFY ALL THE EXISTING CONDITIONS SHOWN ON THE DRAWINGS INCLUDING DUCTWORK AND PIPING THAT ARE INSTALLED IN ENCLOSED CHASE.
24. ALL WORK SHALL BE COORDINATED WITH OWNER'S REPRESENTATIVE, AND THE OTHER TRADES.
25. WHERE DRAWINGS CONFLICT OR ARE UNCLEAR, ADVISE PROJECT ENGINEER IN WRITING BEFORE AWARD OF CONTRACT.
26. THE HVAC CONTRACTOR SHALL INVESTIGATE AVAILABLE SPACE FOR ALL EQUIPMENT IN CEILING BEFORE SUBMISSION OF SHOP DRAWINGS.
27. TEMPORARY DUCTWORK AND/OR PIPING REQUIRED FOR PHASING OR SUPPORTING EXISTING SERVICES OR OCCUPANCY FUNCTIONS SHALL BE PROVIDED NO ADDITIONAL COST TO THE OWNER.
28. COORDINATE ALL MOTOR, STARTER AND, DISCONNECT REQUIREMENTS WITH ELECTRICAL SUBCONTRACTOR FOR ALL EQUIPMENT REQUIRING SAME.
29. ALL EXPOSED EQUIPMENT (GRILLES, UNIT HEATER, ETC.) SHALL HAVE COLORS SELECTED BY THE PROJECT ENGINEER UNLESS OTHERWISE NOTED.
30. ALL HVAC EQUIPMENT SHALL BE INSTALLED IN SUCH A WAY SO THAT LIGHTS DO NOT BLOCK ACCESS TO UNITS AND RELATED ACCESSORIES.

GENERAL ABBREVIATIONS

A	COMPRESSED AIR
AC	AIR CONDITIONING UNIT
ACCU	AIR COOLED CONDENSING UNIT
ACD	AUTOMATIC CONTROL DAMPER
AD	ACCESS DOOR
AHU	AIR HANDLING UNIT
AFF	ABOVE FINISHED FLOOR
AFMD	AIR FLOW MEASURING DEVICE
AP	ACCESS PANEL
APD	AIR PRESSURE DROP (INCHES OF WATER)
AS	AIR SEPARATOR
ATC	AUTOMATIC TEMPERATURE CONTROL
AV	AIR VENT (AUTOMATIC)
B	BOILER
BDD	BACKDRAFT DAMPER
BHP	BRAKE HORSE POWER
BTU/H	BRITISH THERMAL UNITS PER HOUR
C	CONTRACTOR
CACU	COMPUTER ROOM A.C. UNIT
CC	COOLING COIL
CF	CHEMICAL FEED
CFH	CUBIC FEET PER HOUR
CFM	CUBIC FEET PER MINUTE
CH	CHILLER
CHWR	CHILLED WATER RETURN
CHWS	CHILLED WATER SUPPLY
CM	CONSTRUCTION MANAGER
CO	CLEAN OUT
COND	CONDENSATE
CP	CONDENSATE PUMP
CT	COOLING TOWER
CTR	COOLING TOWER RETURN
CTS	COOLING TOWER SUPPLY
CU	CONDENSING UNIT
CUH	CABINET UNIT HEATER
CW	CITY WATER
D	DRAIN
DBT	DRY BULB TEMP. DEGREES F.
DIA	DIAMETER
DOV	DRAIN OFF VALVE
DTR	DUAL TEMPERATURE WATER RETURN
DTS	DUAL TEMPERATURE WATER SUPPLY
DX	DIRECT EXPANSION
E	EXISTING (BEFORE SYMBOL)
EA	EXHAUST AIR DEVICE
EHC	ELECTRIC HEATING COIL
EAT	ENTERING AIR TEMPERATURE
EBB	ELECTRIC BASEBOARD
EC	ELECTRICAL CONTRACTOR
EF	EXHAUST FAN
ESP	EXTERNAL STATIC PRESSURE
ET	EXPANSION TANK
ETBR	EXISTING TO BE REMOVED
ETR	EXISTING TO REMAIN
EUH	ELECTRIC UNIT HEATER
EWT	ENTERING WATER TEMPERATURE
EXP	EXPANSION
F	FILL
FA	FRESH AIR
FCU	FAN COIL UNIT
FD	FIRE DAMPER
FF	FINAL FILTER
FLA	FULL LOAD AMPS
FOR	FUEL OIL RETURN
FOS	FUEL OIL SUPPLY
FPB	FAN POWERED TERMINAL BOX
FPM	FEET PER MINUTE
FPS	FEET PER SECOND
FS	FLOW SWITCH
FSD	FIRE & SMOKE DAMPER
G	NATURAL GAS
GA	GAUGE
GAL	GALLONS
GC	GENERAL CONTRACTOR
GPH	GALLONS PER HOUR
GPM	GALLONS PER MINUTE
GR	GLYCOL RETURN
GS	GLYCOL SUPPLY
GUH	GAS UNIT HEATER
H	HUMIDIFIER
HG	HOT GAS
HP	HORSEPOWER
HPR	HIGH PRESSURE CONDENSATE RETURN
HPS	HIGH PRESSURE STEAM SUPPLY (60# AND UP)
HTHW	HIGH TEMPERATURE HOT WATER
HV	HEATING & VENTILATING UNIT
HVAC	HEATING, VENTILATING & AIR CONDITIONING
HWR	HOT WATER RETURN
HWS	HOT WATER SUPPLY
HX	HEAT EXCHANGER
ID	INSIDE DIAMETER
IU	INDUCTION UNIT
KW	KILOWATT
KWH	KILOWATT HOUR
LAT	LEAVING AIR TEMPERATURE
LBS/HR	POUNDS PER HOUR
LPR	LOW PRESSURE CONDENSATE RETURN
LPS	LOW PRESSURE STEAM SUPPLY (2# TO 15#)
LRA	LOCKED ROTOR AMPS
LTHW	LOW TEMPERATURE HOT WATER
LWT	LEAVING WATER TEMPERATURE
MAX	MAXIMUM
MBH	1,000 BTU PER HOUR
MCF	1,000 CUBIC FEET
MD	MOTORIZED DAMPER
MFG'R	MANUFACTURER
MIN	MINIMUM
MPR	MEDIUM PRESSURE CONDENSATE RETURN
MPS	MEDIUM PRESSURE STEAM SUPPLY (16# TO 59#)
MTD	MOUNTED
MTHW	MEDIUM TEMPERATURE HOT WATER
MUA	MAKE-UP AIR
MV	AIR VENT (MANUAL)
NA	NOT APPLICABLE
NC	NORMALLY CLOSED
NIC	NOT IN CONTRACT
NO	NORMALLY OPEN
NOM	NOMINAL
NTS	NOT TO SCALE
OA	OUTSIDE AIR
OBD	OPPOSED BLADE DAMPER
OD	OUTSIDE DIAMETER
P	PUMP
PC	PLUMBING CONTRACTOR
PCHWR	PROCESSED CHILLED WATER RETURN
PCHWS	PROCESSED CHILLED WATER SUPPLY
PD	PRESSURE DROP (FEET OF WATER)
PF	PRE-FILTER
PH	PRE-HEAT COIL
PRV	PRESSURE REDUCING VALVE
PS	PRESSURE SWITCH
PSIA	POUNDS PER SQUARE INCH ABSOLUTE
PSIG	POUNDS PER SQUARE INCH GAGE
R	RETURN AIR DEVICE
RA	RETURN AIR
RAF	RETURN AIR FAN
RC	REHEAT COIL
RH	RELATIVE HUMIDITY
RL	REFRIGERANT LIQUID
RP	RADIANT PANEL
RPM	REVOLUTIONS PER MINUTE
RS	REFRIGERANT SUCTION
RTU	ROOF TOP UNIT
S	SUPPLY AIR DEVICE
SA	SUPPLY AIR
SAU	SOUND ATTENUATING UNIT
SD	SMOKE DAMPER
SF	SUPPLY AIR FAN
SG	SPECIFIC GRAVITY
SP	STATIC PRESSURE (INCHES OF WATER)
SPC	STATIC PRESSURE CONTROLLER
T	TRANSFER AIR DEVICE
TAC	THRU WALL AIR CONDITIONER
TB	TERMINAL BOX
TEMP	TEMPERATURE
TSP	TOTAL STATIC PRESSURE
TW	THERMOMETER WELL
TYP	TYPICAL
UC	UNDER CUT
UH	UNIT HEATER
UV	UNIT VENTILATOR
V	VOLTS
VAV	VARIABLE AIR VOLUME TERMINAL BOX
VD	VOLUME DAMPER
VFD	VARIABLE FREQUENCY DRIVE
VP	VACUUM PUMP
VTR	VENTED THROUGH ROOF
W	WATTS
WAC	WINDOW AIR CONDITIONER
WBT	WET BULB TEMP. DEGREES F.
WH	WALL HEATER
WMS	WIRE MESH SCREEN
WPD	WATER PRESSURE DROP (FEET)

REV.	DATE	REVISION DESCRIPTION	SHEET NO.
-	-	-	-
-	-	-	-
-	-	-	-
-	-	-	-
-	-	-	-
-	-	-	-

THE INFORMATION, INCLUDING ESTIMATED QUANTITIES OF WORK, SHOWN ON THESE SHEETS IS BASED ON LIMITED INVESTIGATIONS BY THE STATE AND IS IN NO WAY WARRANTED TO INDICATE THE CONDITIONS OF ACTUAL QUANTITIES OF WORK WHICH WILL BE REQUIRED.

Plotted Date: 1/16/2014

DESIGNER/DRAFTER: S. BIRKOK
CHECKED BY: D. NEWMAN

STATE OF CONNECTICUT
DEPARTMENT OF TRANSPORTATION

Filename: ...\FA_CGR_CPS_0170-2296_079_ _06_FME_ _001.dgn

SIGNATURE/BLOCK

STATE OF CONNECTICUT · DAVID G. NEWMAN · No. 23078 · LICENSED PROFESSIONAL ENGINEER

Hatch Mott MacDonald
Suite 100, North Lobby
400 Blue Hill Drive
Westwood, MA 02090

PROJECT TITLE:
NEW HAVEN - HARTFORD SPRINGFIELD RAIL CORRIDOR

TOWN: MERIDEN

DRAWING TITLE:
MECHANICAL GENERAL NOTES AND ABBREV.

PROJECT NO. 170-3155
DRAWING NO. FME-001
SHEET NO. 03.13.002

SHEETMETAL SYMBOLS

DOUBLE LINE		SINGLE LINE
	SUPPLY AIR DUCT TURN 90° UP	
	SUPPLY AIR DUCT TURN 90° DOWN	
	RET./EXH. AIR DUCT TURN 90° UP	
	RET./EXH. AIR DUCT TURN 90° DOWN	
	ROUND DUCT TURN 90° UP	
	ROUND DUCT TURN 90° DOWN	
	SUPPLY AIR DUCT UP & PENETRATING FLOOR ABOVE	
	RETURN/EXH. AIR DUCT UP & PENETRATING FLOOR ABOVE	
	ROUND DUCT UP & PENETRATING FLOOR ABOVE	

DOUBLE LINE		SINGLE LINE
VD	VOLUME DAMPER	VD
FSD	FIRE SMOKE DAMPER	FSD
BDD	BACKDRAFT DAMPER	BDD
FD	FIRE DAMPER	FD
SD	SMOKE DAMPER	SD
ACD	AUTOMATIC CONTROL DAMPER (ELECTRIC OR PNEUMATIC)	ACD
M	MOTORIZED DAMPER	M
H	DUCT MOUNTED HUMIDIFIER	H

DOUBLE LINE		SINGLE LINE
	FLEXIBLE DUCT	
	FLEXIBLE CONNECTION	
	BREAK &/OR CONTINUATION (RECT.)	
	BREAK &/OR CONTINUATION (ROUND)	
	EXISTING DUCTWORK AND EQUIPMENT TO REMAIN	
	EXISTING DUCTWORK AND/OR EQUIP. TO BE REMOVED	
	CONCENTRIC REDUCER	
	ECCENTRIC REDUCER	
	RECTANGULAR TO ROUND TRANSITION	

DOUBLE LINE		SINGLE LINE
	DUCT W/ 1" ACOUSTICAL LINER	
UP / DN	VERTICAL OFFSET UP OR DOWN (ARROW INDICATES DIRECTION OF FLOW) (RECT.)	
UP / DN	VERTICAL OFFSET UP OR DOWN (ARROW INDICATES DIRECTION OF FLOW) (ROUND)	
	DUCT REMOVED AND HOLE CAPPED/BLANKED OFF	
	HORIZONTAL OFFSET	

DOUBLE LINE		SINGLE LINE
	SMOOTH RADIUS ELBOW	
	ELBOW W/ TURNING VANES	
	TRUNK TEE	
	SQUARE BULLHEAD TEE W/TURNING VANES	

DOUBLE LINE		SINGLE LINE
	90° BRANCH TAKE-OFF	
	90° BRANCH TAKE-OFF (RECT. TO ROUND)	
	90° BRANCH TAKE-OFF (BELLMOUTH)	
	45° BRANCH TAKE-OFF (RECTANGULAR)	
	45° BRANCH TAKE-OFF (ROUND)	

SHEETMETAL SYMBOLS CONT.

DOUBLE LINE		SINGLE LINE
VD VD	LINEAR SIDEWALL DIFFUSER (W/SHEET METAL CONNECTION PLENUM W/1" LINING & BRANCH FOR EVERY 4' OF LINEAR.)	VD VD
VD VD	LINEAR SIDEWALL DIFFUSER (W/SHEET METAL CONNECTION PLENUM W/1" LINING & BRANCH FOR EVERY 4' OF LINEAR.) BOOT BY LD MFG'R	VD VD
	SIDEWALL DUCT MTD. REG./GRILLE	

PIPING SYMBOLS

- SUPPLY PIPING (TYP.)
- RETURN PIPING (TYP.)
- PUMPED CONDENSATE PIPING
- DRAIN PIPING
- BALL VALVE W/HOSE BIBB END, BRONZE CAP AND CHAIN
- GLOBE VALVE
- BALANCING VALVE
- ANGLE GLOBE VALVE
- BALL VALVE
- PRESSURE REDUCING VALVE
- HORIZONTAL CHECK VALVE
- 2-WAY CONTROL VALVE
- 3-WAY CONTROL VALVE
- BUTTERFLY VALVE
- QUICK CLOSING VALVE W/ FUSIBLE LINK
- SELF CONTAINED RADIATION VALVE
- "Y" STRAINER
- "Y" STRAINER W/ BLOW DOWN
- GATE VALVE
- GATE VALVE W/ HOSE BIBB END, BRONZE CAP & CHAIN
- PRESSURE REDUCING VALVE
- EXPANSION JOINT
- PRESSURE RELIEF VALVE
- DIRECTION OF FLOW
- PIPE DROP
- PIPE RISE/DROP
- PIPE RISE/DROP PENETRATION
- BRANCH CONNECTION
- BOTTOM CONNECTION 45° OR 90°
- CAPPED PIPE
- GRAPHIC BREAK &/OR CONTINUATION
- UNION
- FLEX PIPE CONNECTOR
- AV — AIR VENT (AUTOMATIC)
- MV — AIR VENT (MANUAL)
- FS — FLOW SWITCH
- PS — PRESSURE SWITCH

PIPING SYMBOLS CONT.

- THERMOMETER
- TW — THERMOMETER WELL
- PT — PRESS./ TEMP. TAP (PETE'S PLUG)
- PRESSURE GAUGE
- PRESSURE GAUGE W/ COIL SYPHON
- PRESSURE GAUGE W/ DAMPENER
- IN LINE PUMP
- BASKET STRAINER
- B — BUCKET TRAP
- THERMOSTATIC TRAP
- FLOAT & THERMOSTATIC TRAP & VALVE TRAIN
- DIRT LEG
- UP/DN — PITCH UP/DOWN IN DIRECTION OF ARROW
- PIPE GUIDE
- PIPE ANCHOR
- FLANGES
- RPBP — REDUCED PRESSURE BACKFLOW PREVENTER
- CLEAN-OUT FOR CONDENSATE DRAIN

GENERAL SYMBOLS

- 1 — REVISION NUMBER
- T — THERMOSTAT
- H — HUMIDISTAT (MOUNT 54" AFF)
- S — SPEED SWITCH
- SD — SMOKE DETECTOR
- RS — REMOTE SENSOR
- CONNECT TO EXISTING
- EXTENT OF REMOVAL
- DUCT SMOKE
- SUPPLY AIR ARROW
- RETURN/EXHAUST AIR ARROW
- UC — UNDERCUT DOOR
- DL — DOOR LOUVER

- - / XXX — DENOTES EQUIPMENT NOT REQUIRING ELECTRICAL INPUT
- UNIT / # — DENOTES EQUIPMENT REQUIRING ELECTRICAL INPUT
- # — DENOTES EQUIPMENT REQUIRING ELECTRICAL INPUT
- DENOTES HVAC DUCTWORK RISER
- # — DENOTES CONTROL DEVICES

AIR DISTRIBUTION DEVICE

- (2) X — (QUANTITY) TYPE
- XXX — FLOW RATE (CFM)

- VAV BOX
- 1 — DESIGNATION NUMBER
- SIZE: VAV-6 — SIZE
- MAX. CFM: 250 — MAXIMUM CFM
- MIN. CFM: 150 — MINIMUM CFM
- GPM: 1.0 — FLOW RATE

NOTE: NOT ALL SYMBOLS MAY BE APPLICABLE TO THIS PROJECT.

REV.	DATE	REVISION DESCRIPTION	SHEET NO.
-	-	-	-
-	-	-	-
-	-	-	-
-	-	-	-
-	-	-	-
-	-	-	-

THE INFORMATION, INCLUDING ESTIMATED QUANTITIES OF WORK, SHOWN ON THESE SHEETS IS BASED ON LIMITED INVESTIGATIONS BY THE STATE AND IS IN NO WAY WARRANTED TO INDICATE THE CONDITIONS OF ACTUAL QUANTITIES OF WORK WHICH WILL BE REQUIRED.

Plotted Date: 1/16/2014

DESIGNER/DRAFTER: **S. BIRKOK**

CHECKED BY: **D. NEWMAN**

STATE OF CONNECTICUT
DEPARTMENT OF TRANSPORTATION

Filename: ...\FA_CGR_CPS_0170-2296_079__06_FME__002.dgn

SIGNATURE/ BLOCK

STATE OF CONNECTICUT — DAVID G. NEWMAN — No. 29279 — LICENSED PROFESSIONAL ENGINEER

Hatch Mott MacDonald
Suite 100, North Lobby
400 Blue Hill Drive
Westwood, MA 02090

PROJECT TITLE: **NEW HAVEN - HARTFORD SPRINGFIELD RAIL CORRIDOR**

TOWN: **MERIDEN**

DRAWING TITLE: **MECHANICAL LEGEND**

PROJECT NO. **170-3155**

DRAWING NO. **FME-002**

SHEET NO. **03.13.003**

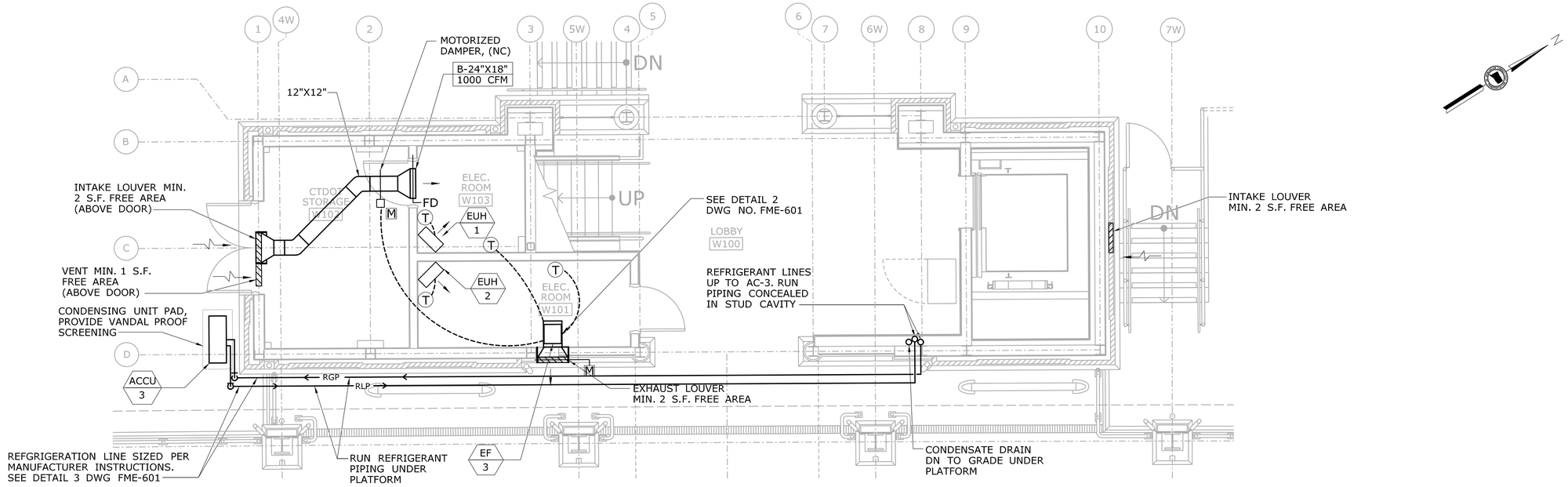

1 - WEST TOWER PLAN

SCALE: 1/4"=1'-0"

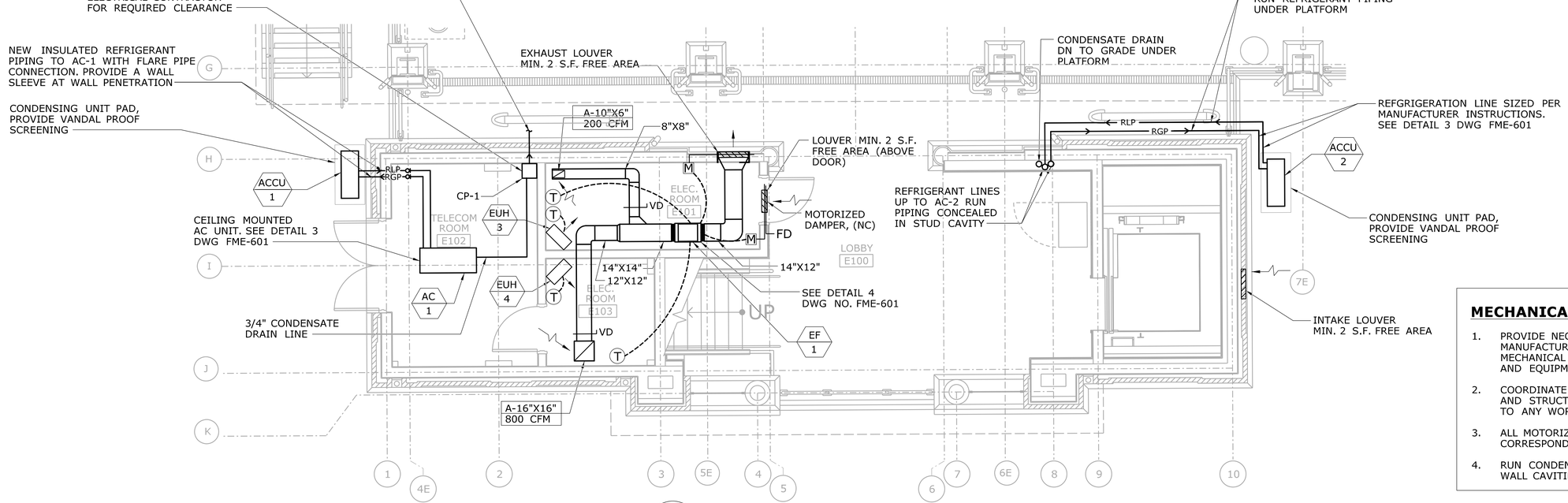

2 - EAST TOWER PLAN

SCALE: 1/4"=1'-0"

MECHANICAL NOTES:

1. PROVIDE NECESSARY CLEARANCES REQUIRED BY MANUFACTURERS, AND STATE ELECTRICAL AND MECHANICAL CODES FOR MECHANICAL COMPONENTS AND EQUIPMENTS.
2. COORDINATE ALL WORK WITH PLUMBING, ELECTRICAL AND STRUCTURAL DRAWINGS AND CONTRACTORS PRIOR TO ANY WORK.
3. ALL MOTORIZED DAMPERS ARE INTERLOCKED WITH CORRESPONDING EXHAUST FANS.
4. RUN CONDENSATE AND REFRIGERANT PIPING WITHIN WALL CAVITIES.

REV.	DATE	REVISION DESCRIPTION	SHEET NO.
-	-	-	-
-	-	-	-
-	-	-	-
-	-	-	-
-	-	-	-
-	-	-	-

THE INFORMATION, INCLUDING ESTIMATED QUANTITIES OF WORK, SHOWN ON THESE SHEETS IS BASED ON LIMITED INVESTIGATIONS BY THE STATE AND IS IN NO WAY WARRANTED TO INDICATE THE CONDITIONS OF ACTUAL QUANTITIES OF WORK WHICH WILL BE REQUIRED.

Plotted Date: 1/16/2014

DESIGNER/DRAFTER: S. BIRKOK
CHECKED BY: D. NEWMAN

STATE OF CONNECTICUT
DEPARTMENT OF TRANSPORTATION

Filename: ...\FA_CGR_CPS_0170-2296_079__06_FME__101.dgn

SIGNATURE/BLOCK

STATE OF CONNECTICUT DAVID G. NEWMAN No. 28278 LICENSED PROFESSIONAL ENGINEER

Hatch Mott MacDonald
Suite 100, North Lobby
400 Blue Hill Drive
Westwood, MA 02090

PROJECT TITLE:
NEW HAVEN - HARTFORD SPRINGFIELD RAIL CORRIDOR

TOWN: MERIDEN

DRAWING TITLE:
MECHANICAL PLAN STATION GROUND LEVEL

PROJECT NO. 170-3155
DRAWING NO. FME-101
SHEET NO. 03.13.004

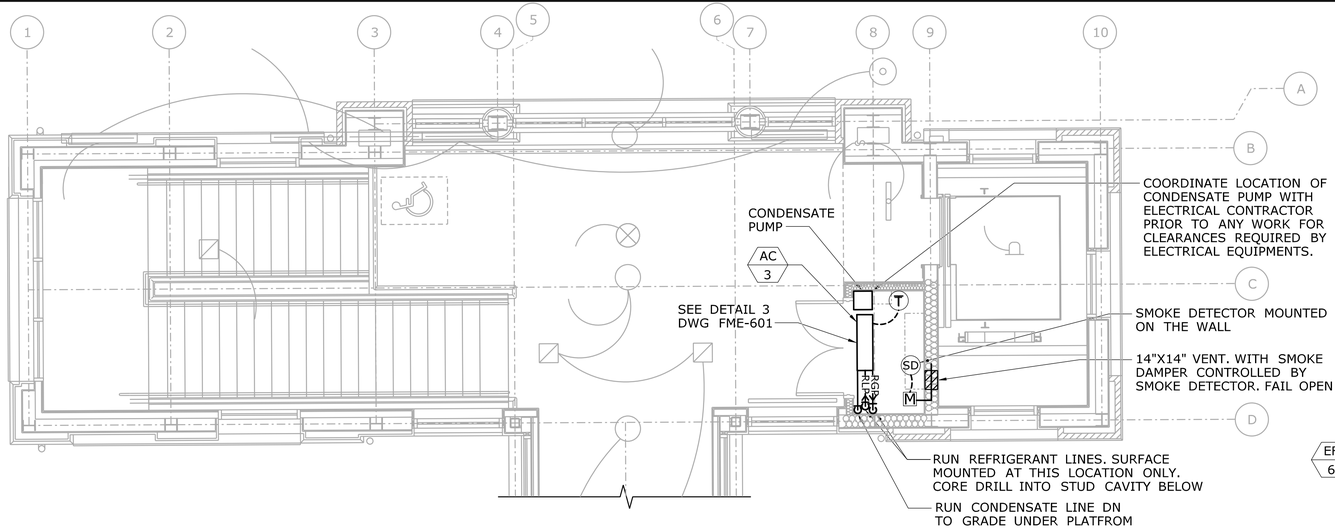

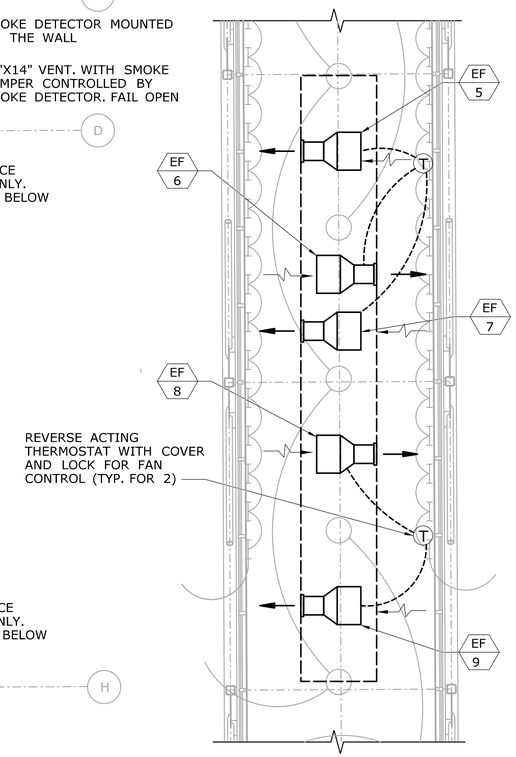

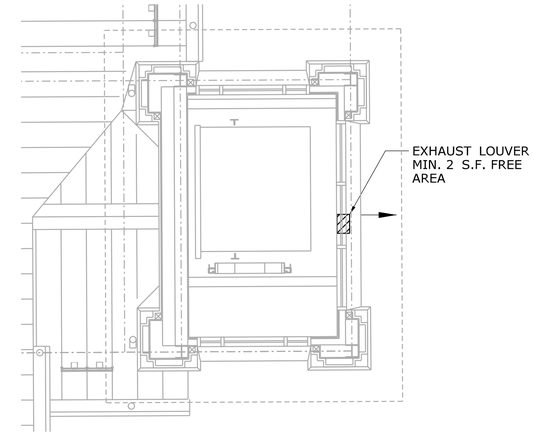

4 - ELEVATOR TOWER PLAN - WEST
SCALE: 1/4" = 1'-0"

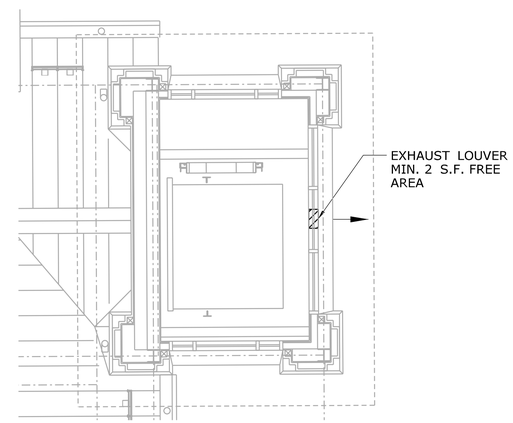

5 - ELEVATOR TOWER PLAN - EAST
SCALE: 1/4" = 1'-0"

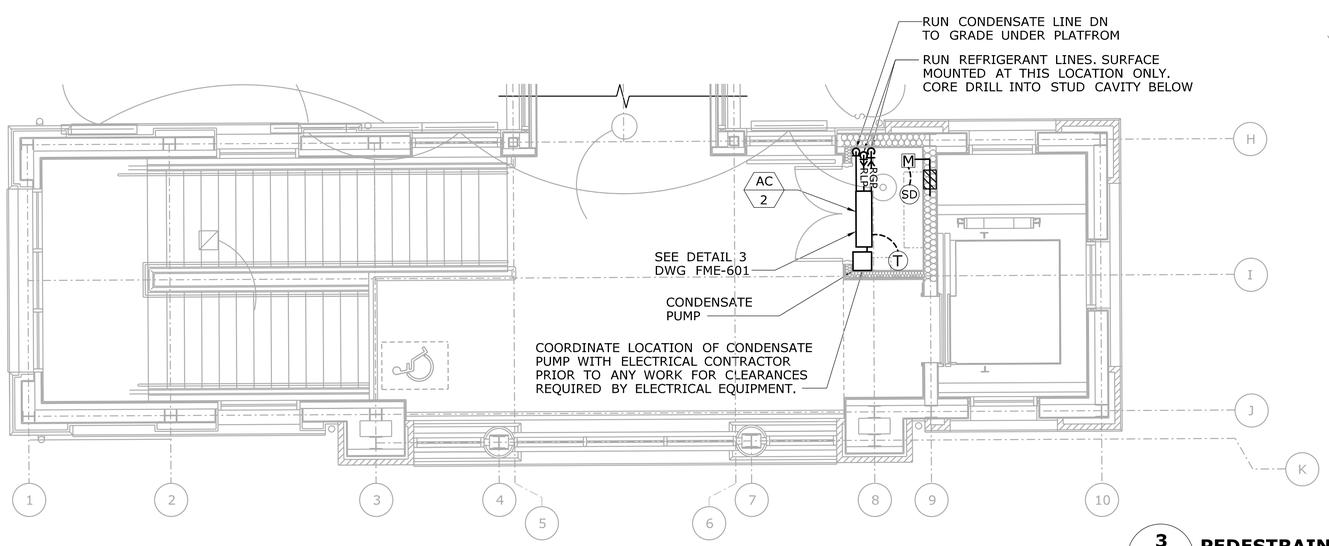

3 - PEDESTRAIN BRIDGE MECHANICAL PLAN
SCALE: 1/4" = 1'-0"

MECHANICAL NOTES:

1. PROVIDE 1" SOUND LINING FOR EXHAUST DUCTWORK (TYPICAL FOR EF-5, 6, 7, 8, AND 9).
2. COORDINATE ALL WORK WITH PLUMBING, ELECTRICAL AND STRUCTURAL DRAWINGS AND CONTRACTORS PRIOR TO ANY WORK.
3. ALL MOTORIZED DAMPERS ARE INTERLOCKED WITH CORRESPONDING EXHAUST FANS.
4. RUN CONDENSATE AND REFRIGERANT PIPING WITHIN WALL CAVITIES.

REV.	DATE	REVISION DESCRIPTION	SHEET NO.
-	-	-	-
-	-	-	-
-	-	-	-
-	-	-	-
-	-	-	-
-	-	-	-

THE INFORMATION, INCLUDING ESTIMATED QUANTITIES OF WORK, SHOWN ON THESE SHEETS IS BASED ON LIMITED INVESTIGATIONS BY THE STATE AND IS IN NO WAY WARRANTED TO INDICATE THE CONDITIONS OF ACTUAL QUANTITIES OF WORK WHICH WILL BE REQUIRED.

Plotted Date: 1/16/2014

DESIGNER/DRAFTER: **S. BIRKOK**
CHECKED BY: **D. NEWMAN**
SCALE AS NOTED

STATE OF CONNECTICUT
DEPARTMENT OF TRANSPORTATION

Filename: ...\FA_CGR_CPS_0170-2296_079__06_FME__102.dgn

SIGNATURE/ BLOCK
STATE OF CONNECTICUT DAVID G. NEWMAN No. 29279 LICENSED PROFESSIONAL ENGINEER

Hatch Mott MacDonald
Suite 100, North Lobby
400 Blue Hill Drive
Westwood, MA 02090

PROJECT TITLE:
NEW HAVEN - HARTFORD SPRINGFFIELD RAIL CORRIDOR

TOWN: **MERIDEN**

DRAWING TITLE:
MECHANICAL PLANS PEDESTRIAN BRIDGE

PROJECT NO. **170-3155**
DRAWING NO. **FME-102**
SHEET NO. **03.13.005**

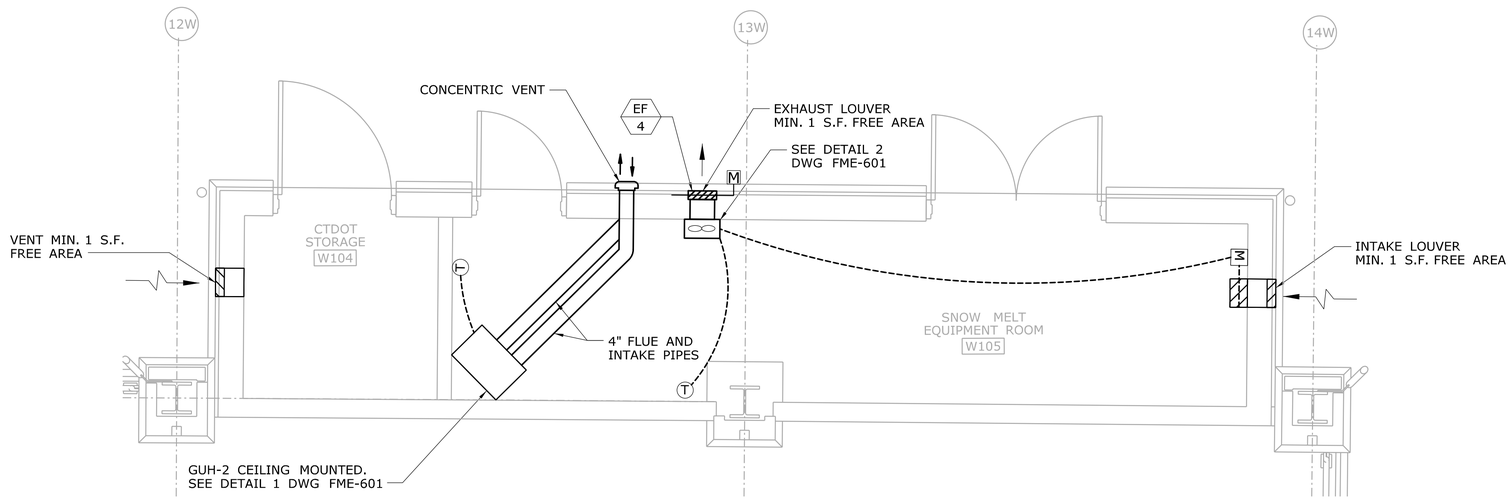

3 / - **WEST SNOW MELT EQUIPMENT ROOM**
SCALE: 3/8"=1'-0"

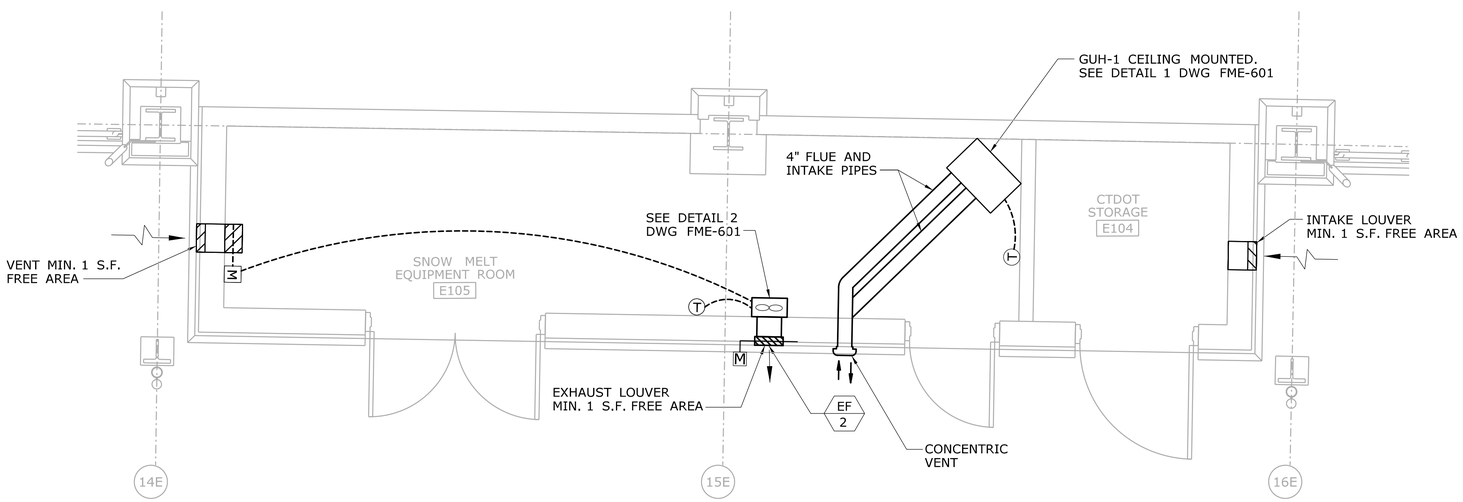

4 / - **EAST SNOW MELT EQUIPMENT ROOM**
SCALE: 3/8"=1'-0"

MECHANICAL NOTES:

1. COORDINATE ALL WORK WITH SNOW MELT EQUIPMENT PRIOR TO ANY WORK
2. COORDINATE ALL WOK WITH PLUMBING AND ELECTRICAL CONTRACTORS PRIOR TO ANY WORK.

REV.	DATE	REVISION DESCRIPTION	SHEET NO.
-	-	-	-
-	-	-	-
-	-	-	-
-	-	-	-
-	-	-	-
-	-	-	-

THE INFORMATION, INCLUDING ESTIMATED QUANTITIES OF WORK, SHOWN ON THESE SHEETS IS BASED ON LIMITED INVESTIGATIONS BY THE STATE AND IS IN NO WAY WARRANTED TO INDICATE THE CONDITIONS OF ACTUAL QUANTITIES OF WORK WHICH WILL BE REQUIRED.

Plotted Date: 1/16/2014

DESIGNER/DRAFTER: **S. BIRKOK**
CHECKED BY: **D. NEWMAN**
SCALE AS NOTED

STATE OF CONNECTICUT
DEPARTMENT OF TRANSPORTATION

Filename: ...\FA_CGR_CPS_0170-2296_079_06_FME_103.dgn

SIGNATURE/ BLOCK
STATE OF CONNECTICUT DAVID G. NEWMAN No. 23078 LICENSED PROFESSIONAL ENGINEER

Hatch Mott MacDonald
Suite 100, North Lobby
400 Blue Hill Drive
Westwood, MA 02090

PROJECT TITLE:
NEW HAVEN - HARTFORD SPRINGFIELD RAIL CORRIDOR

TOWN: **MERIDEN**

DRAWING TITLE:
MECHANICAL PLANS EQUIPMENT ROOMS

PROJECT NO. **170-3155**
DRAWING NO. **FME-103**
SHEET NO. **03.13.006**

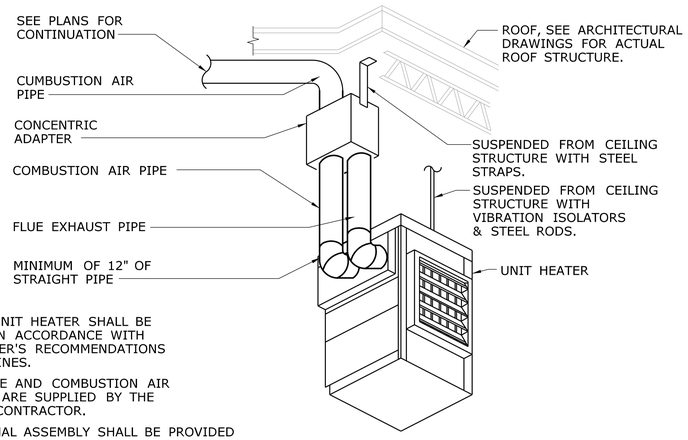

NOTES:

1. GAS-FIRED UNIT HEATER SHALL BE INSTALLED IN ACCORDANCE WITH MANUFACTURER'S RECOMMENDATIONS AND GUIDELINES.
2. THIMBLE, FLUE AND COMBUSTION AIR SUPPLY PIPE ARE SUPPLIED BY THE H.V.A.C. SUBCONTRACTOR.
3. VENT TERMINAL ASSEMBLY SHALL BE PROVIDED BY UNIT HEATER MANUFACTURER AND MUST BE A.G.A. CERTIFIED.
4. EXHAUST CAP MUST BE INSTALLED SO THAT BAFFLES ARE POSITIONED ON HORIZONTAL AND VERTICAL CENTERLINES AS INDICATED.
5. ALL PIPES SHALL BE 24 GAUGE GALVANIZED STEEL, CORROSION RESISTANCE.

1 / -

SEALED COMBUSTION GAS FIRED UNIT HEATER MOUNTING DETAIL

NTS

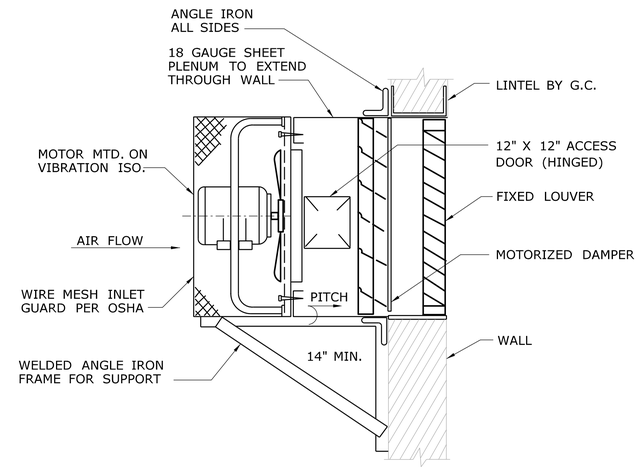

2 / -

SIDEWALL PROPELLER FAN

NTS

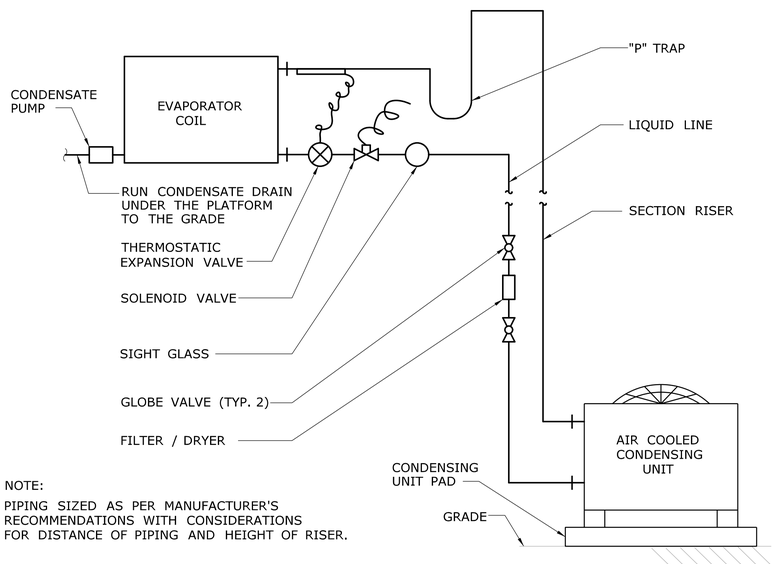

NOTE:

PIPING SIZED AS PER MANUFACTURER'S RECOMMENDATIONS WITH CONSIDERATIONS FOR DISTANCE OF PIPING AND HEIGHT OF RISER.

3 / -

TYPICAL SPLIT SYSTEM PIPING DETAIL

NTS

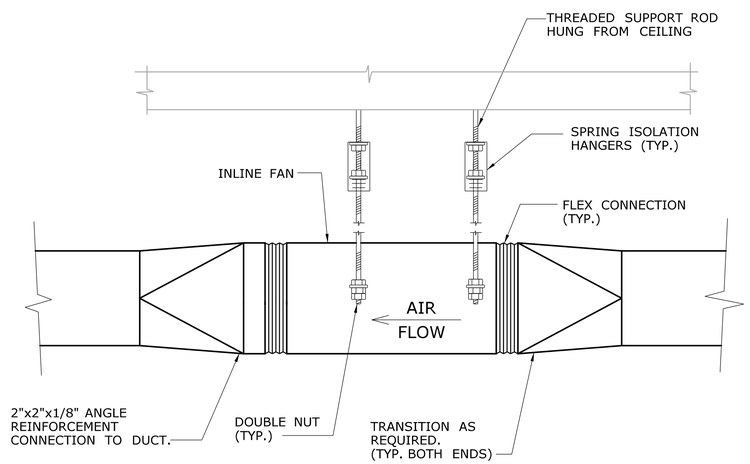

4 / -

IN-LINE PROPELLER FAN

NTS

REV.	DATE	REVISION DESCRIPTION	SHEET NO.
-	-	-	-
-	-	-	-
-	-	-	-
-	-	-	-
-	-	-	-
-	-	-	-

THE INFORMATION, INCLUDING ESTIMATED QUANTITIES OF WORK, SHOWN ON THESE SHEETS IS BASED ON LIMITED INVESTIGATIONS BY THE STATE AND IS IN NO WAY WARRANTED TO INDICATE THE CONDITIONS OF ACTUAL QUANTITIES OF WORK WHICH WILL BE REQUIRED.

Plotted Date: 1/16/2014

DESIGNER/DRAFTER: **S. BIRKOK**

CHECKED BY: **D. NEWMAN**

NOT TO SCALE

STATE OF CONNECTICUT
DEPARTMENT OF TRANSPORTATION

Filename: ...\FA_CGR_CPS_0170-2296_079_06_FME_601.dgn

SIGNATURE/ BLOCK

STATE OF CONNECTICUT · DAVID G. NEWMAN · No. 28279 · LICENSED PROFESSIONAL ENGINEER

Hatch Mott MacDonald
Suite 100, North Lobby
400 Blue Hill Drive
Westwood, MA 02090

PROJECT TITLE:

NEW HAVEN - HARTFORD SPRINGFIELD RAIL CORRIDOR

TOWN: **MERIDEN**

DRAWING TITLE: **MECHANICAL DETAILS**

PROJECT NO. **170-3155**

DRAWING NO. **FME-601**

SHEET NO. **03.13.007**

FAN SCHEDULE

DESIGNATION	LOCATION	SERVICE	TYPE	DRIVE	CFM	RPM	S.P. (IN)	MOTOR (BHP)	MOTOR (HP)	ELECTRICAL DATA V	PH	HZ	APPROX OPER. WEIGHT (LBS)	MANUFACTURER/MODEL NUMBER	OPTIONS/REMARKS
EF-1	ELECTRIC ROOM-EAST	ELECTRIC ROOM	INLINE	BELT	1,000	2,231	1.0	0.65	3/4	208	1	60	50	GREENHECK/BSQ-90-5	①②③④⑤⑥
EF-2	MECHANICAL ROOM-EAST	MECHANICAL ROOM	SIDE WALL	DIRECT	375	1650	0.25	78 W	1/20	115	1	60	39	GREENHECK/S1-10-428-P	①②③④⑤
EF-3	ELECTRIC ROOM-WEST	ELECTRIC ROOM	SIDE WALL	BELT	1,000	1714	0.375	0.17	1/4	115	1	60	50	GREENHECK/SB-1H20-4	①②③④⑤
EF-4	MECHANICAL ROOM-WEST	MECHANICAL ROOM	SIDE WALL	DIRECT	375	1650	0.25	78 W	1/20	115	1	60	39	GREENHECK/S1-10-428-P	①②③④⑤
EF-5	BRIDGE CEILING	BRIDGE	INLINE	DIRECT	1,500	1,450	0.375	-	822W	115	1	60	59	GREENHECK/CSP-A-1410	①③④⑤⑥⑦
EF-6	BRIDGE CEILING	BRIDGE	INLINE	DIRECT	1,500	1,450	0.375	-	822W	115	1	60	59	GREENHECK/CSP-A-1410	①③④⑤⑥⑦
EF-7	BRIDGE CEILING	BRIDGE	INLINE	DIRECT	1,500	1,450	0.375	-	822W	115	1	60	59	GREENHECK/CSP-A-1410	①③④⑤⑥⑦
EF-8	BRIDGE CEILING	BRIDGE	INLINE	DIRECT	1,500	1,450	0.375	-	822W	115	1	60	59	GREENHECK/CSP-A-1410	①③④⑤⑥⑦
EF-9	BRIDGE CEILING	BRIDGE	INLINE	DIRECT	1,500	1,450	0.375	-	822W	115	1	60	59	GREENHECK/CSP-A-1410	①③④⑤⑥⑦

① MOTORIZED BACKDRAFT DAMPER,
② DAMPER GUARD AND WALL COLLAR,
③ DISCONNECT SWITCH,
④ OSHA MOTOR SIDE GUARD.
⑤ REVERSE ACTING T'STAT (SET AT 85 F ADJ.),
⑥ PROVIDE WITH HANGING SPRING ISOLATORS,
⑦ INSULATE THE FAN WITH SOUND BARRIER COMPOSITES, SIMILAR TO BARYMAT BM-IC

UNIT HEATER SCHEDULE (GAS & ELECTRIC)

DESIGNATION	LOCATION	SERVICE	TYPE	FAN DATA CFM	RPM	HP	HEAT INPUT ELECTRIC (KW)	GAS (MBH)	ELECTRICAL DATA V	*	HZ	AMPS	FAN HP	WEIGHT (LBS)	MANUFACTURER/MODEL NUMBER	OPTIONS/REMARKS
EUH-1	ELECTRICAL ROOM-EAST	ELECTRICAL ROOM	HORIZ	350	1600	0.01	3.0 KW	-	480	3	60	3.6	0.01	27	Q-MARK/MUH0341	① ②
EUH-2	ELECTRICAL ROOM-EAST	ELECTRICAL ROOM	HORIZ	350	1600	0.01	3.0 KW	-	480	3	60	3.6	0.01	27	Q-MARK/MUH0341	① ②
GUH-1	SNOW MELTING EQ. ROOM-EAST	SNOW MELTING EQ. ROOM	HORIZ	450	1550	0.06		30	115	1	60		0.06	60	REZNOR/UDAS	① ② ⑤
EUH-3	ELECTRICAL ROOM-WEST	ELECTRICAL ROOM	HORIZ	350	1600	0.01	3.0 KW	-	480	3	60	3.6	0.01	27	Q-MARK/MUH0341	① ②
EUH-4	ELECTRICAL ROOM-WEST	ELECTRICAL ROOM	HORIZ	350	1600	0.01	3.0 KW	-	480	3	60	3.6	0.01	27	Q-MARK/MUH0341	① ②
GUH-2	SNOW MELTING EQ. ROOM-WEST	SNOW MELTING EQ. ROOM	HORIZ	450	1550	0.06		30	115	1	60		0.06	60	REZNOR/UDAS	① ② ⑤

① PROVIDE MOUNTING BRACKET
② PROVIDE UNIT MOUNTED THERMOSTAT
③ PROVIDE MOTOR STARTER AND DISCONNECT SWITCH
④ PROVIDE CONCENTRIC VENT KIT FOR SIDEWALL DISCHARGE.
⑤ PROVIDE WALL MOUNTED THERMOSTAT.

AIR-CONDITIONING UNIT SCHEDULE

SYMBOL	SERVICE	TOTAL COOLING MBH	SENS. COOLING MBH	HEATING MBA @47° F	TOTAL CFM	ELECTRICAL DATA V	PH	HZ	FAN MOTOR MCA	FLA	W	MANUFACTURER / MODEL NUMBER	REMARKS
AC-1	TELECOM ROOM	30.0	27.8	32	500	208	1	60	1	0.53	-	MITSUBISHI PCA-A30GA	① ② ③
AC-2	ELEVATOR MACHINE ROOM-EAST	18.0	17.6	19	350	208	1	60	1	0.33	-	MITSUBISHI PKA-A18GAL	① ② ③
AC-3	ELEVATOR MACHINE ROOM-WEST	18.0	17.6	19	350	208	1	60	1	0.33	-	MITSUBISHI PKA-A18GAL	① ② ③

① PROVIDE MULTI-SPEED CONTROL (3-SPEED MIN).
② PROVIDE WIRELESS REMOTE CONTROLLER; WIRELESS SIGNAL RECEIVER
③ PROVIDE AC CONDENSATE PUMP (CP-1); LITTLE GIANT VCC-20ULS; 1/30 HP; 120V-1P-60HZ; 70 GPH @ 5' HEAD. PROVIDE SAFETY SWITCH CONNECTS TO ACCOUNT FOR SHUTDOWN, ABS SWITCH COVER AND PUMP STAND; THERMAL OVERLOAD PROTECTION, STAINLESS STEEL MOTOR SHAFT.

AIR DISTRIBUTION DEVICE SCHEDULE

TYPE	SERVICE	AIR PATTERN	MANUFACTURER	REMARKS
A	RETURN/EXHAUST	-	TITUS/350ZFL	SEE NOTES BELOW.
B	SUPPLY	SIDEWALL	TITUS/301FS	SEE NOTES BELOW.

① PROVIDE OPPOSED BLADE DAMPER WITH THE DEVICES.
② PROVIDE TRANSITIONS FROM DUCTS TO DIFFUSER NECKS AS REQUIRED.

OUTDOOR CONDENSING UNIT SCHEDULE

SYMBOL	LOCATION	REFRIGERANT TYPE	SERVICE	RATED CAPACITY HTG (MBH)	CLG (MBH)	WINTER O.A. (° F)	SUMMER O.A. (° F)	SOUND PRESSURE (dBA)	WEIGHT (IBS)	ELECTRICAL DATA V	PH	HZ	MCA	MOCP	MANUFACTURER / MODEL NUMBER	REMARKS
ACCU-1	OUTSIDE-EAST	R-410A	AC-1	32.0	30.0	0	95	46	165	208	1	60	25	40	MITSUBISHI / PUZ-A30NHA	① ② ③ ④
ACCU-2	OUTSIDE-EAST	R-410A	AC-2	19.0	18.0	0	95	46	99	208	1	60	13	20	MITSUBISHI / PUZ-A18NHA	① ② ③ ④
ACCU-3	OUTSIDE-WEST	R-410A	AC-3	19.0	18.0	0	95	46	99	208	1	60	13	20	MITSUBISHI / PUZ-A18NHA	① ② ③ ④

① REFRIGERANT PIPING SHALL BE SIZED PER MANUFACTURER'S RECOMENDATION AND FIELD VERIFICATION OF PIPE LENGTHS.
② UNIT SHALL COME COMPLETE WITH REFRIGERANT LINE SET KIT.
③ PROVIDE MOUNTING BRACKET.
④ PROVIDE LOW AMBIENT CONTROL.

REV.	DATE	REVISION DESCRIPTION	SHEET NO.
-	-	-	-
-	-	-	-
-	-	-	-
-	-	-	-
-	-	-	-
-	-	-	-

THE INFORMATION, INCLUDING ESTIMATED QUANTITIES OF WORK, SHOWN ON THESE SHEETS IS BASED ON LIMITED INVESTIGATIONS BY THE STATE AND IS IN NO WAY WARRANTED TO INDICATE THE CONDITIONS OF ACTUAL QUANTITIES OF WORK WHICH WILL BE REQUIRED.

Plotted Date: 1/16/2014

DESIGNER/DRAFTER: **S. BIRKOK**
CHECKED BY: **D. NEWMAN**
NOT TO SCALE

STATE OF CONNECTICUT
DEPARTMENT OF TRANSPORTATION

Filename: ...\FA_CGR_CPS_0170-2296_079__06_FME__801.dgn

SIGNATURE/BLOCK
STATE OF CONNECTICUT · DAVID G. NEWMAN · No. 23078 · LICENSED PROFESSIONAL ENGINEER

Hatch Mott MacDonald
Suite 100, North Lobby
400 Blue Hill Drive
Westwood, MA 02090

PROJECT TITLE:
NEW HAVEN - HARTFORD SPRINGFIELD RAIL CORRIDOR

TOWN: **MERIDEN**

DRAWING TITLE: **MECHANICAL SCHEDULES**

PROJECT NO. **170-3155**
DRAWING NO. **FME-801**
SHEET NO. **03.13.008**

LEGEND & ABBREVIATIONS

AB	ABOVE
AD	AREA DRAIN
AFC	ABOVE FINISH CEILING
AFF	ABOVE FINISH FLOOR
AG	AIR GAP
ATC	ACOUSTIC TILE CEILING
BFV	BUTTERFLY VALVE
BV	BALL VALVE
BLV	BALANCING VALVE
BWV	BACKWATER VALVE
C&V	CAPPED & VALVED
CE	CAP EXISTING
CLG	CEILING
CONT	CONTINUOUS
CTE	CONNECT TO EXISTING
CO	CLEANOUT
CV	CHECK VALVE
CW	COLD WATER PIPING
DF	DRINKING FOUNTAIN
DN	DOWN THROUGH FLOOR
DP	DROP (OR RISE)
DWG	DRAWING
EL	ELEVATION
ETR	EXISTING TO REMAIN
ETX	EXISTING TO BE REMOVED
EWC	ELECTRIC WATER COOLER
FCO	FLUSH FLOOR CLEANOUT
FD	FLOOR DRAIN
FFE	FINISH FLOOR ELEVATION
	FLOW ARROW
FLR	FLOOR
FS	FLOOR SINK
FSP	FIRE STANDPIPE
FW	FILTERED WATER PIPING
G	FUEL GAS PIPING
	FUEL GAS PLUG VALVE
GM	GAS METER & REGULATOR SET
GT	GREASE TRAP
GV	GATE VALVE
GVB	FUEL GAS VALVE BOX
H&C	HOT & COLD WATER PIPING
HB	HOSE BIBB
HW	HOT WATER PIPING
HWR	HOT WATER RETURN PIPING
IE	INVERT ELEVATION
INV	INVERT
IW	INDIRECT WASTE PIPING
	KITCHEN EQUIPMENT DESIGNATION
L	LAVATORY
MSB	MOP SERVICE BASIN
NC	NORMALLY CLOSED
NIC	NOT IN CONTRACT
NPCW	UNSAFE (NON-POTABLE) COLD WATER PIPING
NPHW	UNSAFE (NON-POTABLE) HOT WATER PIPING
NPHWR	UNSAFE (NON-POTABLE) HOT WATER RETURN PIPING
NO	NORMALLY OPEN
NTS	NOT TO SCALE
OFCI	OWNER FURNISHED,CONTRACTOR INSTALLED
OFI	OWNER FURNISHED & INSTALLED
PG	PRESSURE GAGE
PL C	PLASTER CEILING
PLGD	PLUGGED
	PLUMBING FIXTURE DESIGNATION
PRV	PRESSURE REDUCING VALVE
PRVA	PRESSURE REGULATING VALVE ASSEMBLY
PS	PRESSURE SWITCH
PVB	PRESSURE VACUUM BREAKER
RD	ROOF DRAIN
RPBP	REDUCED PRESSURE BACKFLOW PREVENTOR
RV	RELIEF VALVE
RW	BURIED RAINWATER PIPING
RW	RAINWATER PIPING
SC	SPLINE CEILING
SH	SHOWER
SK	SINK
SL	SLOPE (w" PER FOOT)
S ORW	BURIED SOIL OR WASTE PIPING
S ORW	SOIL OR WASTE PIPING
	SOIL OR WASTE STACK
STR	STRAINER
SV	BURIED SPECIAL VENT PIPING
SV	SPECIAL VENT PIPING
SW	BURIED SPECIAL WASTE PIPING
SW	SPECIAL WASTE PIPING
T&P	TEMPERATURE & PRESSURE RELIEF VALVE
TG	TEMPERATURE GAGE
TMV	THERMOSTATIC MIXING VALVE
TOP	TOP OF PIPE ELEVATION
TP	TRAP PRIMER
TR	THROUGH ROOF
TS	TAMPER SWITCH
UN	UNION
UP	UP (THROUGH SLAB ABOVE)
UP & DN	UP & DOWN (THROUGH FLOOR SLAB)
UP & T	UP & TRAP
UCW	UNSAFE (NON-POTABLE) COLD WATER PIPING
UHW	UNSAFE (NON-POTABLE) HOT WATER PIPING
UHWR	UNSAFE (NON-POTABLE) HOT WATER RETURN PIPING
V	BURIED VENT PIPING
V	VENT PIPING
VB	VACUUM BREAKER
VR	VENT RISE
VS	VENT STACK
VTR	VENT THROUGH ROOF
W&T	WASTE & TRAP
W&V	WASTE & VENT
WC	WATER CLOSET
WCO	WALL CLEANOUT
WFA	WATER FILTER ASSEMBLY
WH	WALL HYDRANT
WHA	WATER HAMMER ARRESTOR
WMV	WASHING MACHINE VALVE
WS	WASHER SANITARY

PLUMBING GENERAL NOTES:

1. ALL WORK SHALL BE PERFORMED IN ACCORDANCE WITH ALL STATE AND LOCAL COUNTY CODES, REGULATIONS AND ORDINANCES.
2. THE CONTRACTOR SHALL OBTAIN A FULL SET OF PLANS AND SPECIFICATIONS FOR THIS PROJECT AND COORDINATE WITH THE OTHER TRADES.
3. IT SHALL BE THE RESPONSIBILITY OF THE CONTRACTOR TO COORDINATE HIS WORK WITH THE WORK OF ALL OTHER TRADES AND TO PROVIDE ALL REQUIRED OFFSETS IN THE PIPING TO ACCOMPLISH THIS COORDINATION WITH NO ADDITIONAL COST.
4. ALL PLUMBING PLANS ARE DIAGRAMMATIC IN FORM.
5. THE CONTRACTOR SHALL PROVIDE DIMENSIONS, OPERATING WEIGHT, AND OPENINGS TO GENERAL CONTRACTOR AFTER OBTAINING APPROVAL OF EQUIPMENT SHOP DRAWINGS FOR COORDINATION. PHYSICAL DIMENSIONS AND WEIGHTS SHOWN ON THE DRAWING EQUIPMENT SCHEDULES ARE SUBJECT TO CHANGE.
6. ALL NEW EQUIPMENT SHALL BE INSTALLED IN ACCORDANCE WITH THE UNIT MANUFACTURER'S RECOMMENDATIONS.

NOTES:

1. NOT ALL SYMBOLS MAY BE APPLICABLE TO THIS PROJECT.

REV.	DATE	REVISION DESCRIPTION	SHEET NO.
-	-	-	-
-	-	-	-
-	-	-	-
-	-	-	-
-	-	-	-
-	-	-	-

THE INFORMATION, INCLUDING ESTIMATED QUANTITIES OF WORK, SHOWN ON THESE SHEETS IS BASED ON LIMITED INVESTIGATIONS BY THE STATE AND IS IN NO WAY WARRANTED TO INDICATE THE CONDITIONS OF ACTUAL QUANTITIES OF WORK WHICH WILL BE REQUIRED.

Plotted Date: 1/16/2014

DESIGNER/DRAFTER: **S. BIRKOK**

CHECKED BY: **D. NEWMAN**

STATE OF CONNECTICUT
DEPARTMENT OF TRANSPORTATION

Filename: ...\FA_CGR_CPS_0170-2296_079_ _06_FPL_ _001.dgn

SIGNATURE/ BLOCK

STATE OF CONNECTICUT · DAVID G. NEWMAN · No. 29279 · LICENSED · PROFESSIONAL ENGINEER

Hatch Mott MacDonald
Suite 100, North Lobby
400 Blue Hill Drive
Westwood, MA 02090

PROJECT TITLE:
NEW HAVEN - HARTFORD SPRINGFIELD RAIL CORRIDOR

TOWN: **MERIDEN**

DRAWING TITLE: **PLUMBING GEN. NOTES, LEGEND & ABBREV.**

PROJECT NO. **170-3155**

DRAWING NO. **FPL-001**

SHEET NO. **03.13.009**

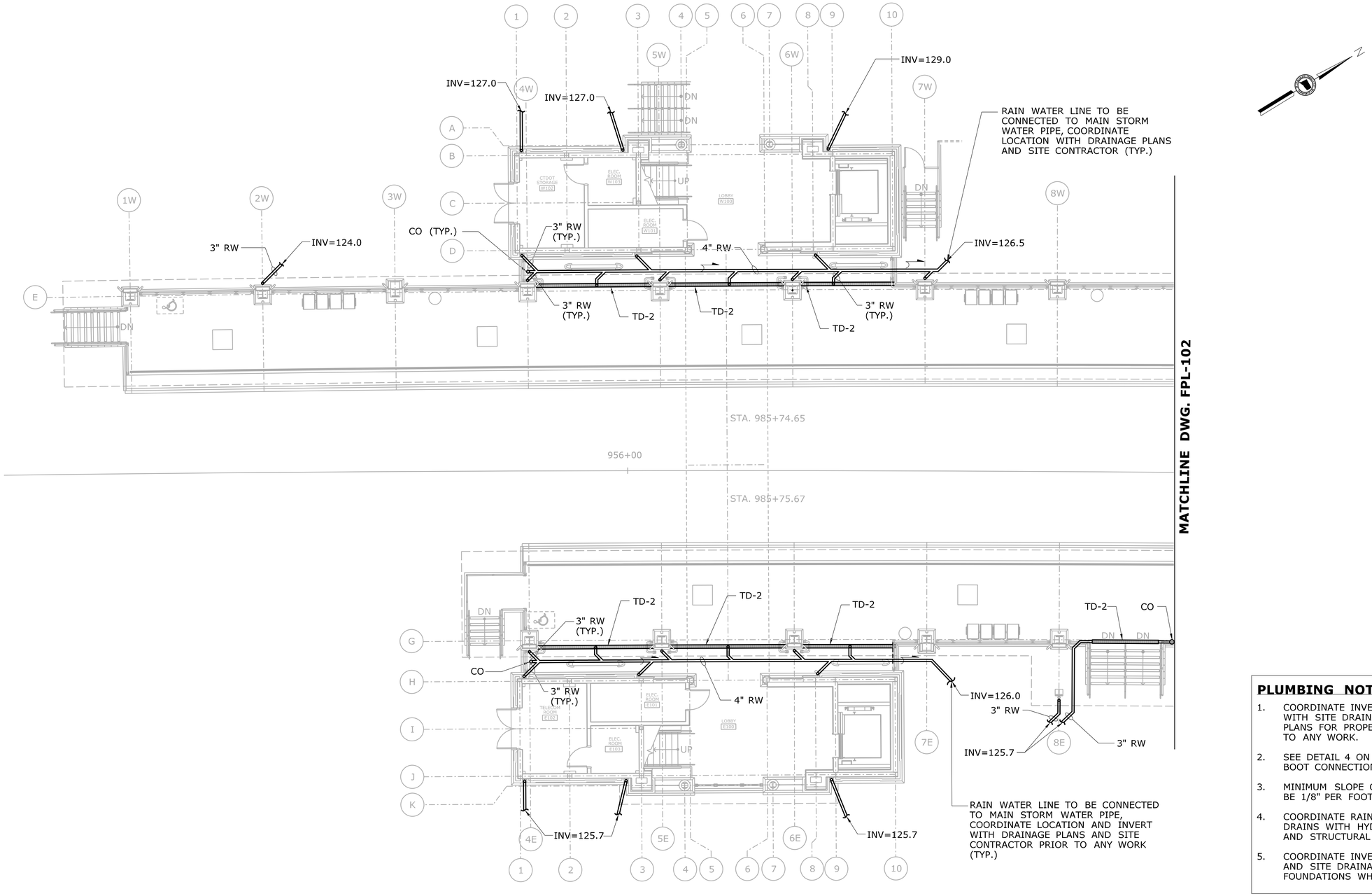

PLUMBING PLAN - PART A

SCALE: 1/8"=1'-0"

PLUMBING NOTES:

1. COORDINATE INVERT OF RAIN WATER PIPING WITH SITE DRAINAGE AND ARCHITECTURAL PLANS FOR PROPER SLOPE OF THE PIPING PRIOR TO ANY WORK.
2. SEE DETAIL 4 ON DWG FPL-601 FOR DOWNSPOUT BOOT CONNECTION.
3. MINIMUM SLOPE OF RAIN WATER PIPING SHALL BE 1/8" PER FOOT.
4. COORDINATE RAIN WATER PIPING AND TRENCH DRAINS WITH HYDRONIC SNOW MELT PIPING AND STRUCTURAL DRAWINGS PRIOR TO ANY WORK.
5. COORDINATE INVERT ELEVATIONS WITH STRUCTURAL AND SITE DRAINAGE TO AVOID PENETRATING FOUNDATIONS WHERE POSSIBLE

REV.	DATE	REVISION DESCRIPTION	SHEET NO.
-	-	-	-
-	-	-	-
-	-	-	-
-	-	-	-
-	-	-	-
-	-	-	-

THE INFORMATION, INCLUDING ESTIMATED QUANTITIES OF WORK, SHOWN ON THESE SHEETS IS BASED ON LIMITED INVESTIGATIONS BY THE STATE AND IS IN NO WAY WARRANTED TO INDICATE THE CONDITIONS OF ACTUAL QUANTITIES OF WORK WHICH WILL BE REQUIRED.

Plotted Date: 1/21/2014

DESIGNER/DRAFTER: **S. BIRKOK**

CHECKED BY: **D. NEWMAN**

SCALE AS NOTED

STATE OF CONNECTICUT
DEPARTMENT OF TRANSPORTATION

Filename: ...\FA_CGR_CPS_0170-2296_079_06_FPL_101.dgn

SIGNATURE/BLOCK

STATE OF CONNECTICUT DAVID G. NEWMAN No. 23078 LICENSED PROFESSIONAL ENGINEER

Hatch Mott MacDonald
Suite 100, North Lobby
400 Blue Hill Drive
Westwood, MA 02090

PROJECT TITLE:

NEW HAVEN - HARTFORD SPRINGFIELD RAIL CORRIDOR

TOWN: **MERIDEN**

DRAWING TITLE: **PLUMBING PLATFORM PLAN PART A**

PROJECT NO. **170-3155**

DRAWING NO. **FPL-101**

SHEET NO. **03.13.010**

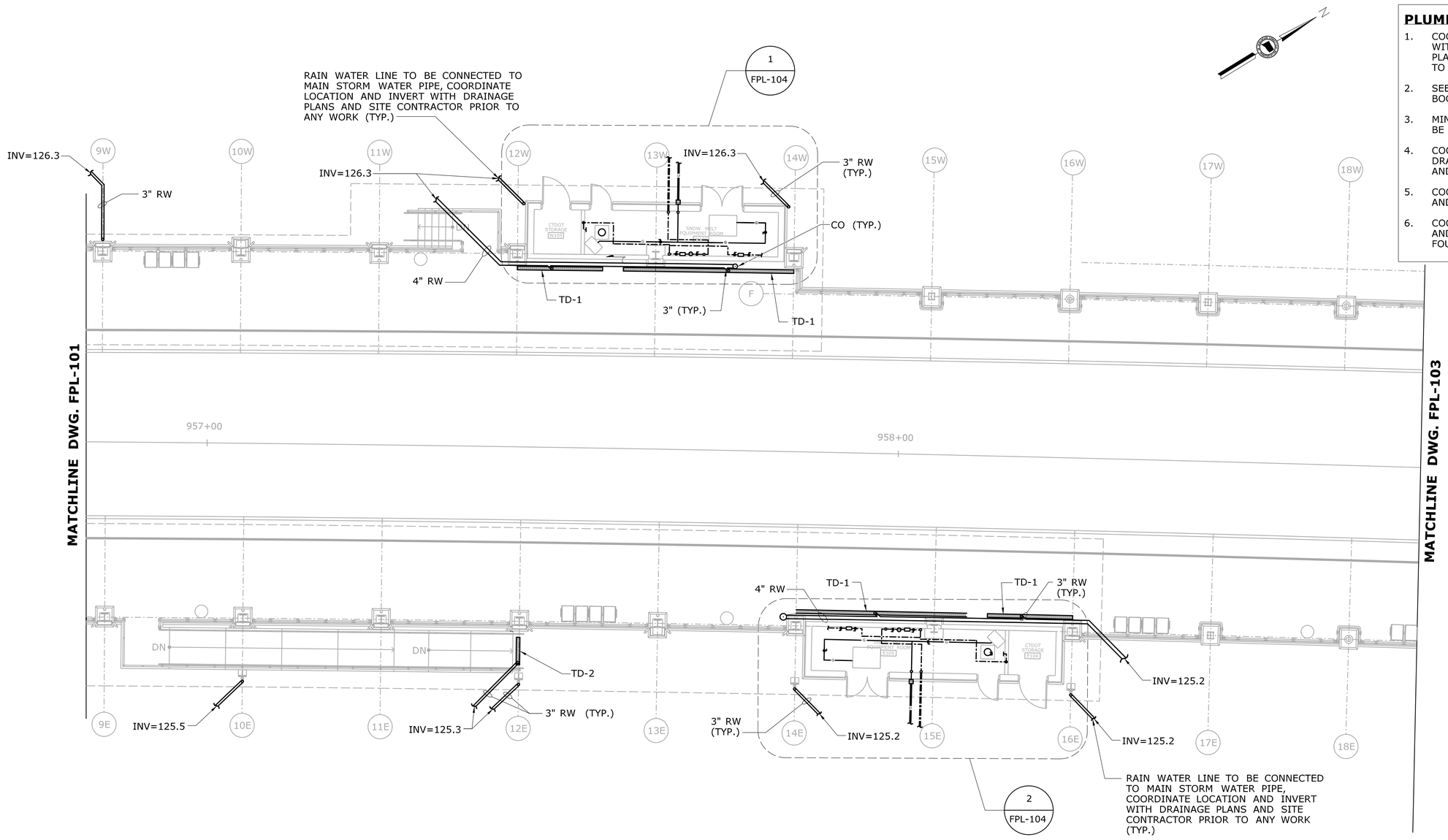

PLUMBING NOTES:

1. COORDINATE INVERT OF RAIN WATER PIPING WITH SITE DRAINAGE AND ARCHITECTURAL PLANS FOR PROPER SLOPE OF THE PIPING PRIOR TO ANY WORK.
2. SEE DETAIL 4 ON DWG FPL-601 FOR DOWNSPOUT BOOT CONNECTION.
3. MINIMUM SLOPE OF RAIN WATER PIPING SHALL BE 1/8" PER FOOT.
4. COORDINATE RAIN WATER PIPING AND TRENCH DRAINS WITH HYDRONIC SNOW MELT PIPING AND STRUCTURAL DRAWINGS PRIOR TO ANY WORK.
5. COORDINATE RAIN WATER PIPING WITH WATER AND GAS SERVICE PIPING PRIOR TO ANY WORK.
6. COORDINATE INVERT ELEVATIONS WITH STRUCTURAL AND SITE DRAINAGE PLANS TO AVOID PENETRATING FOUNDATIONS WHERE POSSIBLE.

PLUMBING PLAN - PART B

SCALE: 1/8"=1'-0"

REV.	DATE	REVISION DESCRIPTION	SHEET NO.
-	-	-	-
-	-	-	-
-	-	-	-
-	-	-	-
-	-	-	-
-	-	-	-

THE INFORMATION, INCLUDING ESTIMATED QUANTITIES OF WORK, SHOWN ON THESE SHEETS IS BASED ON LIMITED INVESTIGATIONS BY THE STATE AND IS IN NO WAY WARRANTED TO INDICATE THE CONDITIONS OF ACTUAL QUANTITIES OF WORK WHICH WILL BE REQUIRED.

Plotted Date: 1/16/2014

DESIGNER/DRAFTER: **S. BIRKOK**

CHECKED BY: **D. NEWMAN**

SCALE AS NOTED

STATE OF CONNECTICUT
DEPARTMENT OF TRANSPORTATION

Filename: ...\FA..CGR..CPS..0170-2296..079...06..FPL...102-Drain.dgn

SIGNATURE/ BLOCK

STATE OF CONNECTICUT · DAVID G. NEWMAN · No. 28279 · LICENSED PROFESSIONAL ENGINEER

Hatch Mott MacDonald
Suite 100, North Lobby
400 Blue Hill Drive
Westwood, MA 02090

PROJECT TITLE:
NEW HAVEN - HARTFORD SPRINGFIELD RAIL CORRIDOR

TOWN: **MERIDEN**

DRAWING TITLE: **PLUMBING PLATFORM PLAN PART B**

PROJECT NO. **170-3155**

DRAWING NO. **FPL-102**

SHEET NO. **03.13.011**

PLUMBING NOTES:

1. COORDINATE INVERT OF RAIN WATER PIPING WITH SITE DRAINAGE AND ARCHITECTURAL PLANS FOR PROPER SLOPE OF THE PIPING PRIOR TO ANY WORK.
2. SEE DETAIL 4 ON DWG FPL-601 FOR DOWNSPOUT BOOT CONNECTION.
3. MINIMUM SLOPE OF RAIN WATER PIPING SHALL BE 1/8" PER FOOT.
4. COORDINATE RAIN WATER PIPING AND TRENCH DRAINS WITH HYDRONIC SNOW MELT PIPING AND STRUCTURAL DRAWINGS PRIOR TO ANY WORK.
5. COORDINATE INVERT ELEVATIONS WITH STRUCTURAL AND SITE DRAINAGE TO AVOID PENETRATING FOUNDATIONS WHERE POSSIBLE

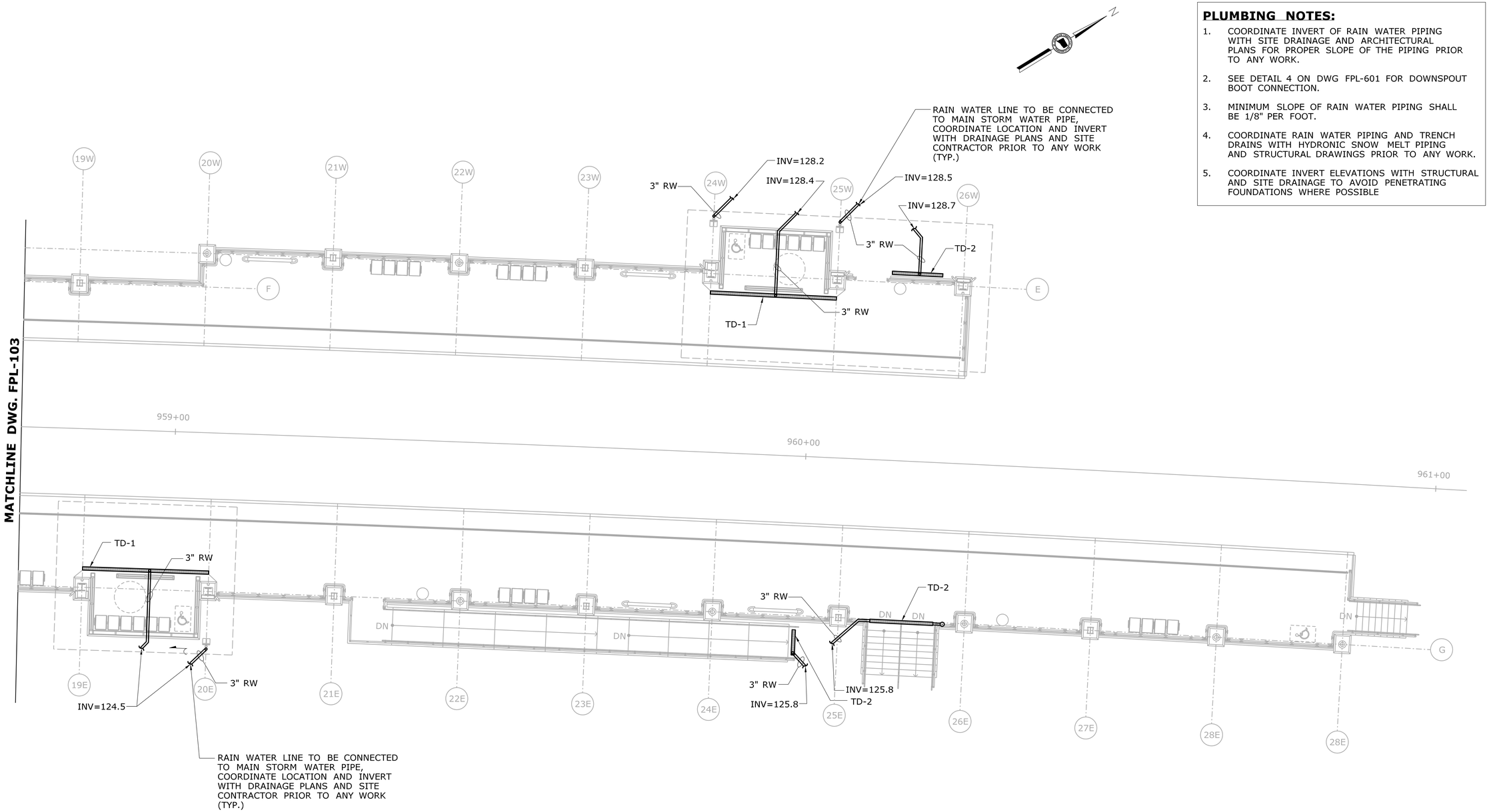

PLUMBING PLAN - PART C

SCALE: 1/8"=1'-0"

REV.	DATE	REVISION DESCRIPTION	SHEET NO.
-	-	-	-
-	-	-	-
-	-	-	-
-	-	-	-
-	-	-	-
-	-	-	-

THE INFORMATION, INCLUDING ESTIMATED QUANTITIES OF WORK, SHOWN ON THESE SHEETS IS BASED ON LIMITED INVESTIGATIONS BY THE STATE AND IS IN NO WAY WARRANTED TO INDICATE THE CONDITIONS OF ACTUAL QUANTITIES OF WORK WHICH WILL BE REQUIRED.

Plotted Date: 1/21/2014

DESIGNER/DRAFTER: **S. BIRKOK**

CHECKED BY: **D. NEWMAN**

SCALE AS NOTED

STATE OF CONNECTICUT
DEPARTMENT OF TRANSPORTATION

Filename: ...\FA_CGR_CPS_0170-2296_079__06_FPL__103.dgn

SIGNATURE/ BLOCK

STATE OF CONNECTICUT DAVID G. NEWMAN No. 29278 LICENSED PROFESSIONAL ENGINEER

Hatch Mott MacDonald
Suite 100, North Lobby
400 Blue Hill Drive
Westwood, MA 02090

PROJECT TITLE: **NEW HAVEN - HARTFORD SPRINGFIELD RAIL CORRIDOR**

TOWN: **MERIDEN**

DRAWING TITLE: **PLUMBING PLATFORM PLAN PART C**

PROJECT NO. **170-3155**

DRAWING NO. **FPL-103**

SHEET NO. **03.13.012**

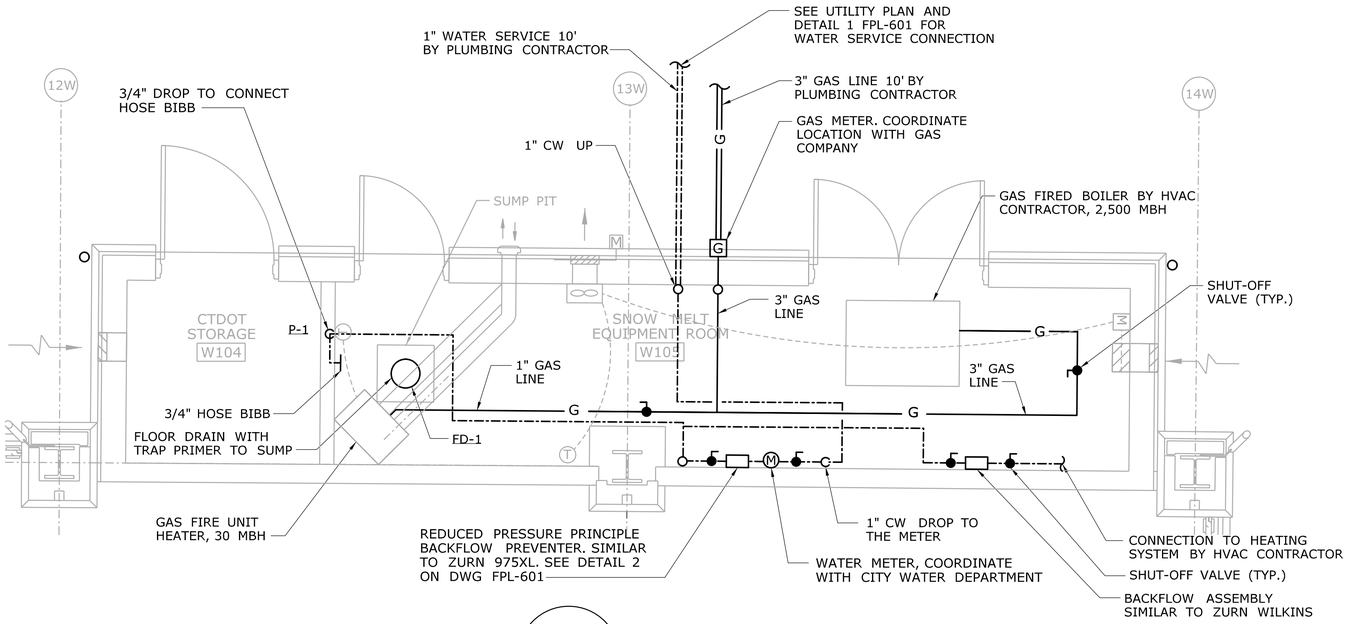

1 / FPL-102 **PLUMBING PLAN - SNOW MELT EQUIPMENT ROOM - WEST**

SCALE: 3/8" = 1'-0"

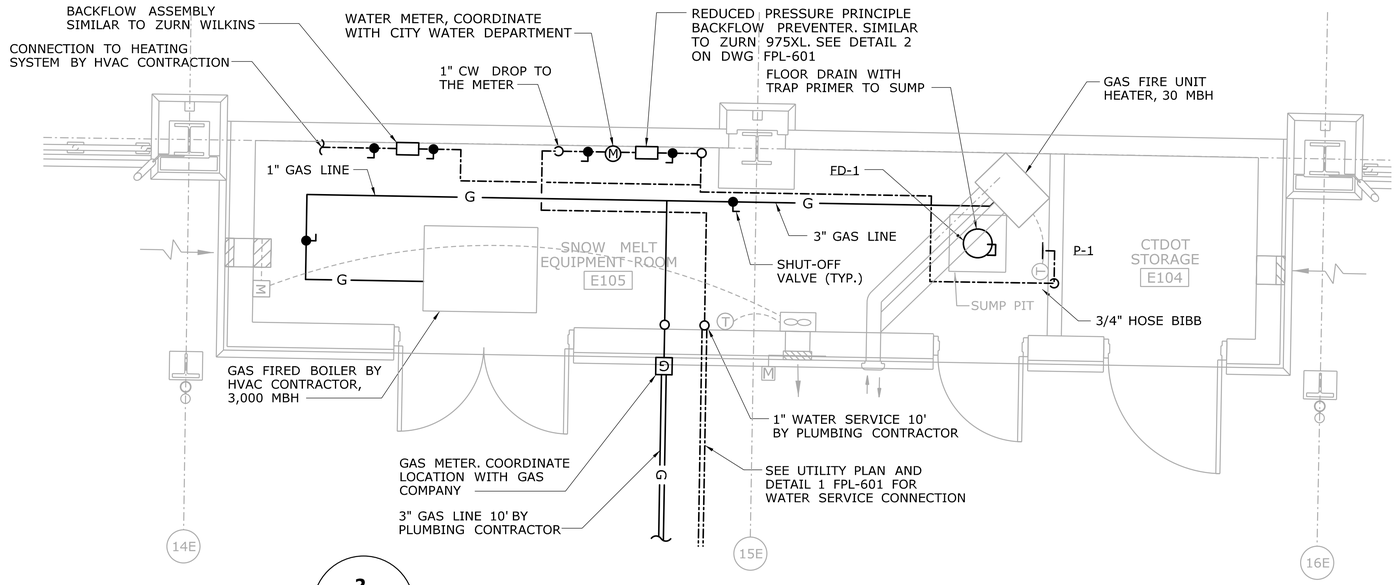

2 / FPL-102 **PLUMBING PLAN - SNOW MELT EQUIPMENT ROOM - EAST**

SCALE: 1/4" = 1'-0"

PLUMBING NOTES:

1. COORDINATE ALL WORK AND EQUIPMENT WITH OTHER TRADES AND EQUIPMENT PRIOR TO ANY WORK.

REV.	DATE	REVISION DESCRIPTION	SHEET NO.
-	-	-	-
-	-	-	-
-	-	-	-
-	-	-	-
-	-	-	-
-	-	-	-

THE INFORMATION, INCLUDING ESTIMATED QUANTITIES OF WORK, SHOWN ON THESE SHEETS IS BASED ON LIMITED INVESTIGATIONS BY THE STATE AND IS IN NO WAY WARRANTED TO INDICATE THE CONDITIONS OF ACTUAL QUANTITIES OF WORK WHICH WILL BE REQUIRED.

Plotted Date: 1/16/2014

DESIGNER/DRAFTER: **S. BIRKOK**

CHECKED BY: **D. NEWMAN**

SCALE AS NOTED

STATE OF CONNECTICUT DEPARTMENT OF TRANSPORTATION

Filename: ...\FA_CGR_CPS_0170-2296_079_..06_FPL_..104.dgn

SIGNATURE/BLOCK

STATE OF CONNECTICUT · DAVID G. NEWMAN · No. 28279 · LICENSED PROFESSIONAL ENGINEER

Hatch Mott MacDonald
Suite 100, North Lobby
400 Blue Hill Drive
Westwood, MA 02090

PROJECT TITLE: **NEW HAVEN - HARTFORD SPRINGFIELD RAIL CORRIDOR**

TOWN: **MERIDEN**

DRAWING TITLE: **PLUMBING PLAN- EQUIPMENT ROOMS**

PROJECT NO. **170-3155**

DRAWING NO. **FPL-104**

SHEET NO. **03.13.013**

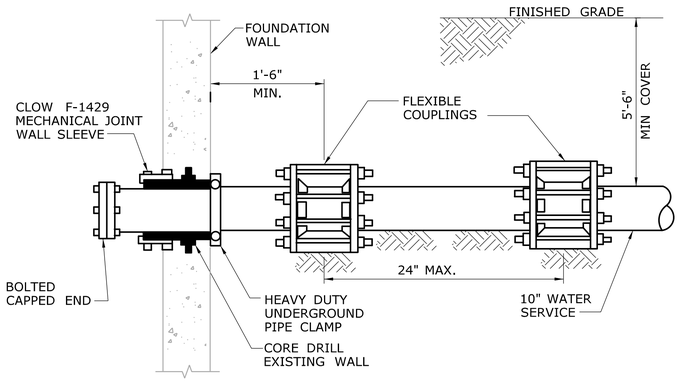

1 - WATER SERVICE THRU EXT. WALL DETAIL
NOT TO SCALE

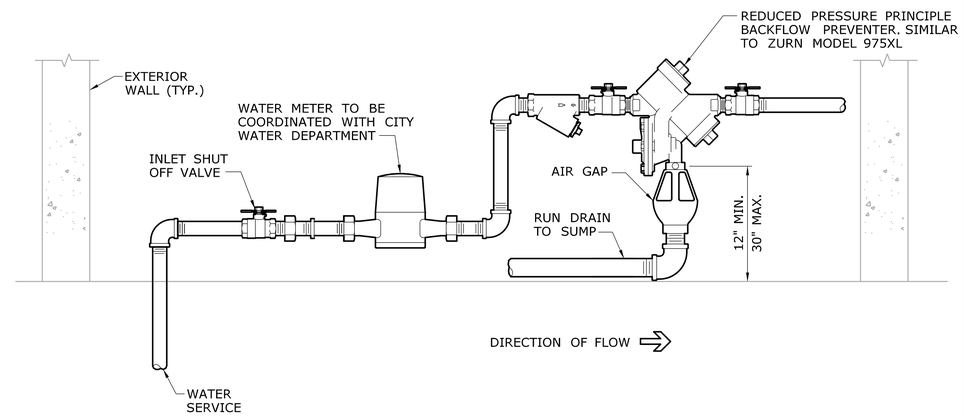

2 - REDUCED PRESSURE PRINCIPLE BACKFLOW PREVENTER ASSEMBLY AND WATER METER DETAIL AT SNOW MELT EQUIPMENT ROOMS
NOT TO SCALE

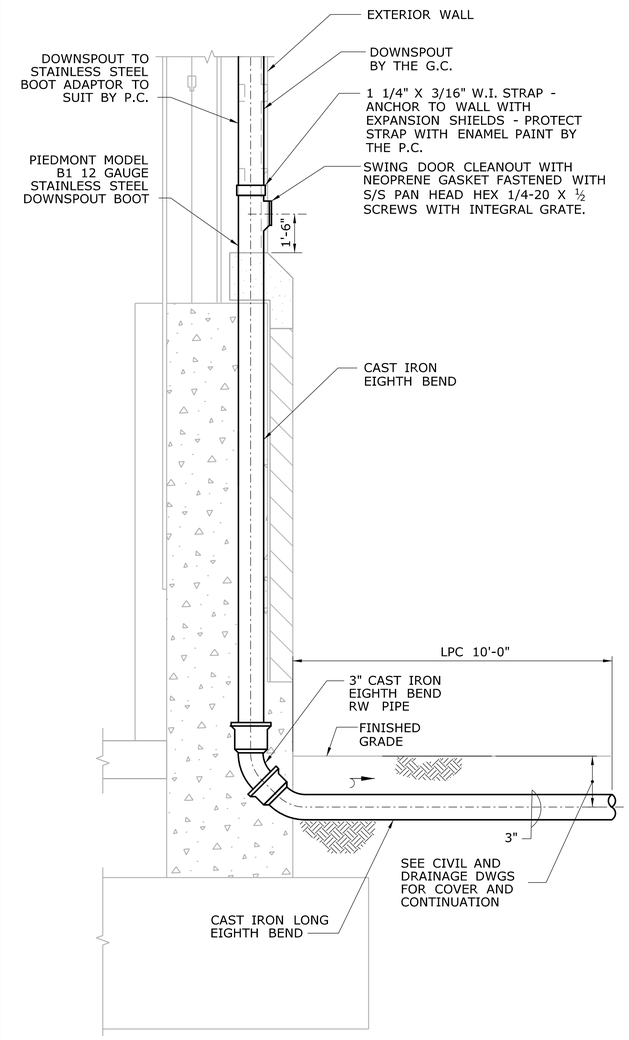

5 - DOWNSPOUT BOOT DIAGRAM (TYPICAL AT TOWERS)
NOT TO SCALE

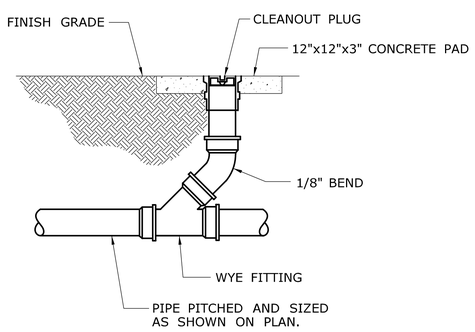

3 - GROUND CLEANOUT
NOT TO SCALE

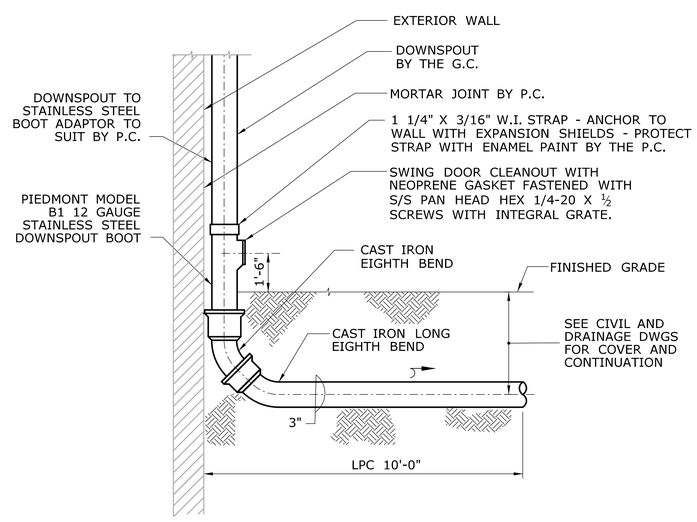

4 - DOWNSPOUT BOOT DIAGRAM (TYPICAL)
NOT TO SCALE

REV.	DATE	REVISION DESCRIPTION	SHEET NO.
-	-	-	-
-	-	-	-
-	-	-	-
-	-	-	-
-	-	-	-
-	-	-	-

THE INFORMATION, INCLUDING ESTIMATED QUANTITIES OF WORK, SHOWN ON THESE SHEETS IS BASED ON LIMITED INVESTIGATIONS BY THE STATE AND IS IN NO WAY WARRANTED TO INDICATE THE CONDITIONS OF ACTUAL QUANTITIES OF WORK WHICH WILL BE REQUIRED.

Plotted Date: 1/16/2014

DESIGNER/DRAFTER: **S. BIRKOK**
CHECKED BY: **D. NEWMAN**
SCALE AS NOTED

STATE OF CONNECTICUT
DEPARTMENT OF TRANSPORTATION

Filename: ...\FA_CGR_CPS_0170-2296_079_06_FPL_601.dgn

SIGNATURE/ BLOCK

STATE OF CONNECTICUT DAVID G. NEWMAN No. 23079 LICENSED PROFESSIONAL ENGINEER

Hatch Mott MacDonald
Suite 100, North Lobby
400 Blue Hill Drive
Westwood, MA 02090

PROJECT TITLE: **NEW HAVEN - HARTFORD SPRINGFIELD RAIL CORRIDOR**

TOWN: **MERIDEN**

DRAWING TITLE: **PLUMBING DETAILS**

PROJECT NO. **170-3155**
DRAWING NO. **FPL-601**
SHEET NO. **03.13.014**

DRAINAGE EQUIPMENT SCHEDULE

SYMBOL	TYPE	MFGR	MODEL	OUTLET	STRAINER	REMARKS
TD-1	TRENCH DRAIN	ZURN	Z-884	3-1/4	CAST IRON	NON-SLOPED, HEEL PROOF GRATE, VANDAL PROOF, SEDIMENT BUCKET CONTRACTOR TO DETERMINE EXACT LENGTH OF DRAIN
TD-2	TRENCH DRAIN	POLYCAST	601	4-3/8"	CAST IRON	INTEGRAL SLOPED, HEEL PROOF GRATE, VANDAL PROOF, SEDIMENT BUCKET CONTRACTOR TO DETERMINE EXACT LENGTH OF DRAIN
FD-1	FLOOR DRAIN	ZURN	Z-541	4"	CAST IRON	PROVIDE WITH SEDIMENT BASKET

PLUMBING FIXTURE CONNECTION SCHEDULE

FIXTURE	SYMBOL	SOIL/ WASTE	VENT	COLD WATER	HOT WATER
HOSE BIBB	P-1	-	-	3/4"	-

REV.	DATE	REVISION DESCRIPTION	SHEET NO.
-	-	-	-
-	-	-	-
-	-	-	-
-	-	-	-
-	-	-	-
-	-	-	-

THE INFORMATION, INCLUDING ESTIMATED QUANTITIES OF WORK, SHOWN ON THESE SHEETS IS BASED ON LIMITED INVESTIGATIONS BY THE STATE AND IS IN NO WAY WARRANTED TO INDICATE THE CONDITIONS OF ACTUAL QUANTITIES OF WORK WHICH WILL BE REQUIRED.

Plotted Date: 1/16/2014

DESIGNER/DRAFTER: **S. BIRKOK**

CHECKED BY: **D. NEWMAN**

NOT TO SCALE

STATE OF CONNECTICUT
DEPARTMENT OF TRANSPORTATION

Filename: ...\FA..CGR..CPS..0170-2296..079...06..FPL...801.dgn

SIGNATURE/ BLOCK

STATE OF CONNECTICUT · DAVID G. NEWMAN · No. 28279 · LICENSED · PROFESSIONAL ENGINEER

Hatch Mott MacDonald
Suite 100, North Lobby
400 Blue Hill Drive
Westwood, MA 02090

PROJECT TITLE:

NEW HAVEN - HARTFORD SPRINGFIELD RAIL CORRIDOR

TOWN: **MERIDEN**

DRAWING TITLE: **PLUMBING SCHEDULES**

PROJECT NO. **170-3155**

DRAWING NO. **FPL-801**

SHEET NO. **03.13.015**

GENERAL NOTES

1. THE HEATING, VENTILATING AND AIR CONDITIONING (HVAC) CONTRACTOR SHALL VISIT THE SITE TO DETERMINE ALL PRE-EXISTING CONDITIONS AND WORK NECESSARY PRIOR TO SUBMISSION OF BID PRICE. EXTRA PAYMENT OR COMPENSATION FOR WORK REQUIRED DUE TO EXISTING CONDITIONS THAT WOULD HAVE BEEN OBSERVED DURING THE SITE EXAMINATION WILL NOT BE MADE.
2. THE HVAC CONTRACTOR SHALL BE FAMILIAR WITH ALL CONTRACT DOCUMENTS FOR ALL TRADES AND COORDINATE WITH OTHER CONTRACTORS.
3. DRAWINGS ARE DIAGRAMMATIC ONLY, FINAL ROUTING OF DUCTWORK, PIPING AND EQUIPMENT LOCATIONS SHALL BE DETERMINED IN THE FIELD. ADDITIONAL OFFSETS, ELBOWS, ETC., SHALL BE DEMOLISHED WITHOUT ADDITIONAL COST TO THE OWNER.
4. DIMENSIONS SHOWN ON PLANS ARE HORIZONTAL, DIMENSIONS SHOWN IN ELEVATION ARE VERTICAL EXCEPT THAT, IN WAY OF STRUCTURAL STEEL, DIMENSIONS ARE MEASURED PERPENDICULAR TO FLANGE.
5. ALL DUCTWORK SHALL BE CONSTRUCTED AND INSTALLED IN ACCORDANCE WITH THE LATEST EDITION OF SMACNA STANDARDS.
6. MINIMUM SIZE OF ALL HVAC PIPING SHALL BE 3/4" UNLESS OTHERWISE NOTED.
7. THE HVAC CONTRACTOR SHALL COORDINATE ALL ELECTRICAL AND PLUMBING REQUIREMENTS WITH THE ELECTRICAL AND PLUMBING CONTRACTORS.
8. THE HVAC CONTRACTOR SHALL FIELD MEASURE EXACT SIZES AND VERIFY ALL OPENINGS FOR SHAFTS AND LOUVERS PRIOR TO SUBMISSION OF SHOP DRAWINGS AND INSTALLATION.
9. ALL HVAC WORK SHALL BE IN ACCORDANCE WITH APPLICABLE FEDERAL, STATE AND LOCAL CODES.
10. ALL HVAC EQUIPMENT SHALL BE INSTALLED IN ACCORDANCE WITH THE MANUFACTURER'S RECOMMENDATIONS.
11. MANUFACTURERS' MODEL NUMBERS ARE SPECIFIED SOLELY TO ESTABLISH STANDARDS OF QUALITY FOR PERFORMANCE AND MATERIAL.
12. PROVIDE ACCESS PANELS FOR EQUIPMENT THAT REQUIRES PERIODIC SERVICE.
13. RUN DUCTS AND PIPING CONCEALED, UNLESS SPECIFIED OTHERWISE AND CLEAR OF CEILING INSERTS.
14. FIRE DAMPERS AND ACCESS PANELS SHALL BE INSTALLED AT ALL 2-HOUR RATED PARTITIONS, FLOOR PENETRATIONS AND WHERE REQUIRED BY NFPA 90A. REFER TO ARCHITECTURAL DRAWINGS FOR PARTITION LOCATIONS.
15. SHUTOFF VALVES SHALL BE INSTALLED IN THE SUPPLY AND RETURN PIPING TO ALL EQUIPMENT TO ALLOW FOR SERVICING. UNIONS OR FLANGES SHALL BE ARRANGED SUCH THAT EQUIPMENT CAN BE SERVICED WITHOUT CUTTING, AND WITH MINIMAL DISRUPTION OF PIPING SERVING THE EQUIPMENT.
16. INSULATE PIPING AS SPECIFIED; PERFORM TESTS SPECIFIED BEFORE INSULATING.
17. PROVIDE CLAMPS, OFFSETS, EXPANSION JOINTS, ANCHORS AND GUIDES AS NECESSARY TO PREVENT STRESS ON PIPING.
18. PROVIDE VENTS AT HIGH POINTS IN PIPING SYSTEMS AND DRAIN VALVES AT LOW POINTS.
19. PROVIDE GAUGE FITTINGS AND THERMOMETER WELLS AT HOT WATER SUPPLY AND RETURN BRANCHES AND AT INLETS AND OUTLETS.
20. PITCH PIPING 1 INCH IN 20 FEET IN DIRECTION OF FLOW.
21. PROVIDE BALANCING VALVES AT SYSTEM LOOP RETURNS, PROVIDE SHUT-OFF VALVES AT SYSTEM LOOP SUPPLIES.
22. THE HVAC CONTRACTOR SHALL FURNISH TO THE GENERAL CONTRACTOR ALL INFORMATION REQUIRED FOR SETTING OF WALL, AND PARTITION OPENINGS FOR HVAC WORK. THIS INFORMATION SHALL BE FURNISHED IN A TIMELY MANNER SUCH THAT CONSTRUCTION SCHEDULE IS NOT JEOPARDIZED.
23. HVAC CONTRACTOR SHALL VERIFY ALL THE EXISTING CONDITIONS SHOWN ON THE DRAWINGS INCLUDING DUCTWORK AND PIPING THAT ARE INSTALLED IN ENCLOSED CHASE.
24. ALL WORK SHALL BE COORDINATED WITH OWNER'S REPRESENTATIVE, AND THE OTHER TRADES.
25. WHERE DRAWINGS CONFLICT OR ARE UNCLEAR, ADVISE PROJECT ENGINEER IN WRITING BEFORE AWARD OF CONTRACT.
26. THE HVAC CONTRACTOR SHALL INVESTIGATE AVAILABLE SPACE FOR ALL EQUIPMENT IN CEILING BEFORE SUBMISSION OF SHOP DRAWINGS.
27. TEMPORARY DUCTWORK AND/OR PIPING REQUIRED FOR PHASING OR SUPPORTING EXISTING SERVICES OR OCCUPANCY FUNCTIONS SHALL BE PROVIDED NO ADDITIONAL COST TO THE OWNER.
28. COORDINATE ALL MOTOR, STARTER AND, DISCONNECT REQUIREMENTS WITH ELECTRICAL SUBCONTRACTOR FOR ALL EQUIPMENT REQUIRING SAME.
29. ALL EXPOSED EQUIPMENT (GRILLES, UNIT HEATER, ETC.) SHALL HAVE COLORS SELECTED BY THE PROJECT ENGINEER UNLESS OTHERWISE NOTED.
30. ALL HVAC EQUIPMENT SHALL BE INSTALLED IN SUCH A WAY SO THAT LIGHTS DO NOT BLOCK ACCESS TO UNITS AND RELATED ACCESSORIES.

GENERAL ABBREVIATIONS

A	COMPRESSED AIR
AC	AIR CONDITIONING UNIT
ACCU	AIR COOLED CONDENSING UNIT
ACD	AUTOMATIC CONTROL DAMPER
AD	ACCESS DOOR
AHU	AIR HANDLING UNIT
AFF	ABOVE FINISHED FLOOR
AFMD	AIR FLOW MEASURING DEVICE
AP	ACCESS PANEL
APD	AIR PRESSURE DROP (INCHES OF WATER)
AS	AIR SEPARATOR
ATC	AUTOMATIC TEMPERATURE CONTROL
AV	AIR VENT (AUTOMATIC)
B	BOILER
BDD	BACKDRAFT DAMPER
BHP	BRAKE HORSE POWER
BTU/H	BRITISH THERMAL UNITS PER HOUR
C	CONTRACTOR
CACU	COMPUTER ROOM A.C. UNIT
CC	COOLING COIL
CF	CHEMICAL FEED
CFH	CUBIC FEET PER HOUR
CFM	CUBIC FEET PER MINUTE
CH	CHILLER
CHWR	CHILLED WATER RETURN
CHWS	CHILLED WATER SUPPLY
CM	CONSTRUCTION MANAGER
CO	CLEAN OUT
COND	CONDENSATE
CP	CONDENSATE PUMP
CT	COOLING TOWER
CTR	COOLING TOWER RETURN
CTS	COOLING TOWER SUPPLY
CU	CONDENSING UNIT
CUH	CABINET UNIT HEATER
CW	CITY WATER
D	DRAIN
DBT	DRY BULB TEMP. DEGREES F.
DIA	DIAMETER
DOV	DRAIN OFF VALVE
DTR	DUAL TEMPERATURE WATER RETURN
DTS	DUAL TEMPERATURE WATER SUPPLY
DX	DIRECT EXPANSION
E	EXISTING (BEFORE SYMBOL)
EA	EXHAUST AIR DEVICE
EHC	ELECTRIC HEATING COIL
EAT	ENTERING AIR TEMPERATURE
EBB	ELECTRIC BASEBOARD
EC	ELECTRICAL CONTRACTOR
EF	EXHAUST FAN
ESP	EXTERNAL STATIC PRESSURE
ET	EXPANSION TANK
ETBR	EXISTING TO BE REMOVED
ETR	EXISTING TO REMAIN
EUH	ELECTRIC UNIT HEATER
EWT	ENTERING WATER TEMPERATURE
EXP	EXPANSION
F	FILL
FA	FRESH AIR
FCU	FAN COIL UNIT
FD	FIRE DAMPER
FF	FINAL FILTER
FLA	FULL LOAD AMPS
FOR	FUEL OIL RETURN
FOS	FUEL OIL SUPPLY
FPB	FAN POWERED TERMINAL BOX
FPM	FEET PER MINUTE
FPS	FEET PER SECOND
FS	FLOW SWITCH
FSD	FIRE & SMOKE DAMPER
G	NATURAL GAS
GA	GAUGE
GAL	GALLONS
GC	GENERAL CONTRACTOR
GPH	GALLONS PER HOUR
GPM	GALLONS PER MINUTE
GR	GLYCOL RETURN
GS	GLYCOL SUPPLY
GUH	GAS UNIT HEATER
H	HUMIDIFIER
HG	HOT GAS
HP	HORSEPOWER
HPR	HIGH PRESSURE CONDENSATE RETURN
HPS	HIGH PRESSURE STEAM SUPPLY (60# AND UP)
HTHW	HIGH TEMPERATURE HOT WATER
HV	HEATING & VENTILATING UNIT
HVAC	HEATING, VENTILATING & AIR CONDITIONING
HWR	HOT WATER RETURN
HWS	HOT WATER SUPPLY
HX	HEAT EXCHANGER
ID	INSIDE DIAMETER
IU	INDUCTION UNIT
KW	KILOWATT
KWH	KILOWATT HOUR
LAT	LEAVING AIR TEMPERATURE
LBS/HR	POUNDS PER HOUR
LPR	LOW PRESSURE CONDENSATE RETURN
LPS	LOW PRESSURE STEAM SUPPLY (2# TO 15#)
LRA	LOCKED ROTOR AMPS
LTHW	LOW TEMPERATURE HOT WATER
LWT	LEAVING WATER TEMPERATURE
MAX	MAXIMUM
MBH	1,000 BTU PER HOUR
MCF	1,000 CUBIC FEET
MD	MOTORIZED DAMPER
MFG'R	MANUFACTURER
MIN	MINIMUM
MPR	MEDIUM PRESSURE CONDENSATE RETURN
MPS	MEDIUM PRESSURE STEAM SUPPLY (16# TO 59#)
MTD	MOUNTED
MTHW	MEDIUM TEMPERATURE HOT WATER
MUA	MAKE-UP AIR
MV	AIR VENT (MANUAL)
NA	NOT APPLICABLE
NC	NORMALLY CLOSED
NIC	NOT IN CONTRACT
NO	NORMALLY OPEN
NOM	NOMINAL
NTS	NOT TO SCALE
OA	OUTSIDE AIR
OBD	OPPOSED BLADE DAMPER
OD	OUTSIDE DIAMETER
P	PUMP
PC	PLUMBING CONTRACTOR
PCHWR	PROCESSED CHILLED WATER RETURN
PCHWS	PROCESSED CHILLED WATER SUPPLY
PD	PRESSURE DROP (FEET OF WATER)
PF	PRE-FILTER
PH	PRE-HEAT COIL
PRV	PRESSURE REDUCING VALVE
PS	PRESSURE SWITCH
PSIA	POUNDS PER SQUARE INCH ABSOLUTE
PSIG	POUNDS PER SQUARE INCH GAGE
R	RETURN AIR DEVICE
RA	RETURN AIR
RAF	RETURN AIR FAN
RC	REHEAT COIL
RH	RELATIVE HUMIDITY
RL	REFRIGERANT LIQUID
RP	RADIANT PANEL
RPM	REVOLUTIONS PER MINUTE
RS	REFRIGERANT SUCTION
RTU	ROOF TOP UNIT
S	SUPPLY AIR DEVICE
SA	SUPPLY AIR
SAU	SOUND ATTENUATING UNIT
SD	SMOKE DAMPER
SF	SUPPLY AIR FAN
SG	SPECIFIC GRAVITY
SMWS	SNOW MELT WATER SUPPLY
SMWR	SNOW MELT WATER RETURN
SP	STATIC PRESSURE (INCHES OF WATER)
SPC	STATIC PRESSURE CONTROLLER
T	TRANSFER AIR DEVICE
TAC	THRU WALL AIR CONDITIONER
TB	TERMINAL BOX
TEMP	TEMPERATURE
TSP	TOTAL STATIC PRESSURE
TW	THERMOMETER WELL
TYP	TYPICAL
UC	UNDER CUT
UH	UNIT HEATER
UV	UNIT VENTILATOR
V	VOLTS
VAV	VARIABLE AIR VOLUME TERMINAL BOX
VD	VOLUME DAMPER
VFD	VARIABLE FREQUENCY DRIVE
VP	VACUUM PUMP
VTR	VENTED THROUGH ROOF
W	WATTS
WAC	WINDOW AIR CONDITIONER
WBT	WET BULB TEMP. DEGREES F.
WH	WALL HEATER
WMS	WIRE MESH SCREEN
WPD	WATER PRESSURE DROP (FEET)

REV.	DATE	REVISION DESCRIPTION	SHEET NO.
-	-	-	-
-	-	-	-
-	-	-	-
-	-	-	-
-	-	-	-
-	-	-	-

THE INFORMATION, INCLUDING ESTIMATED QUANTITIES OF WORK, SHOWN ON THESE SHEETS IS BASED ON LIMITED INVESTIGATIONS BY THE STATE AND IS IN NO WAY WARRANTED TO INDICATE THE CONDITIONS OF ACTUAL QUANTITIES OF WORK WHICH WILL BE REQUIRED.

Plotted Date: 1/16/2014

DESIGNER/DRAFTER: S. BIRKOK
CHECKED BY: D. NEWMAN

STATE OF CONNECTICUT
DEPARTMENT OF TRANSPORTATION

Filename: ...\FA_CGR_CPS_0170-2296_079_ _06_FSM_ _001.dgn

SIGNATURE/BLOCK

STATE OF CONNECTICUT DAVID G. NEWMAN No. 23078 LICENSED PROFESSIONAL ENGINEER

Hatch Mott MacDonald
Suite 100, North Lobby
400 Blue Hill Drive
Westwood, MA 02090

PROJECT TITLE:
NEW HAVEN - HARTFORD SPRINGFIELD RAIL CORRIDOR

TOWN: MERIDEN

DRAWING TITLE:
SNOW MELT GENERAL NOTES AND ABBREV.

PROJECT NO. 170-3155
DRAWING NO. FSM-001
SHEET NO. 03.13.016

SHEETMETAL SYMBOLS

DOUBLE LINE		SINGLE LINE
	SUPPLY AIR DUCT TURN 90° UP	
	SUPPLY AIR DUCT TURN 90° DOWN	
	RET./EXH. AIR DUCT TURN 90° UP	
	RET./EXH. AIR DUCT TURN 90° DOWN	
	ROUND DUCT TURN 90° UP	
	ROUND DUCT TURN 90° DOWN	
	SUPPLY AIR DUCT UP & PENETRATING FLOOR ABOVE	
	RETURN/EXH. AIR DUCT UP & PENETRATING FLOOR ABOVE	
	ROUND DUCT UP & PENETRATING FLOOR ABOVE	

DOUBLE LINE		SINGLE LINE
VD	VOLUME DAMPER	VD
FSD	FIRE SMOKE DAMPER	FSD
BDD	BACKDRAFT DAMPER	BDD
FD	FIRE DAMPER	FD
SD	SMOKE DAMPER	SD
ACD	AUTOMATIC CONTROL DAMPER (ELECTRIC OR PNEUMATIC)	ACD
MD	MOTORIZED DAMPER	MD
H	DUCT MOUNTED HUMIDIFIER	H

DOUBLE LINE		SINGLE LINE
	FLEXIBLE DUCT	
	FLEXIBLE CONNECTION	
	BREAK &/OR CONTINUATION (RECT.)	
	BREAK &/OR CONTINUATION (ROUND)	
	EXISTING DUCTWORK AND EQUIPMENT TO REMAIN	
	EXISTING DUCTWORK AND/OR EQUIP. TO BE REMOVED	
	CONCENTRIC REDUCER	
	ECCENTRIC REDUCER	
	RECTANGULAR TO ROUND TRANSITION	

DOUBLE LINE		SINGLE LINE
	DUCT W/ 1" ACOUSTICAL LINER	
UP / DN	VERTICAL OFFSET UP OR DOWN (ARROW INDICATES DIRECTION OF FLOW) (RECT.)	
UP / DN	VERTICAL OFFSET UP OR DOWN (ARROW INDICATES DIRECTION OF FLOW) (ROUND)	
	DUCT REMOVED AND HOLE CAPPED/BLANKED OFF	
	HORIZONTAL OFFSET	

DOUBLE LINE		SINGLE LINE
	SMOOTH RADIUS ELBOW	
	ELBOW W/ TURNING VANES	
	TRUNK TEE	
	SQUARE BULLHEAD TEE W/TURNING VANES	

DOUBLE LINE		SINGLE LINE
	90° BRANCH TAKE-OFF	
	90° BRANCH TAKE-OFF (RECT. TO ROUND)	
	90° BRANCH TAKE-OFF (BELLMOUTH)	
	45° BRANCH TAKE-OFF (RECTANGULAR)	
	45° BRANCH TAKE-OFF (ROUND)	

SHEETMETAL SYMBOLS CONT.

DOUBLE LINE		SINGLE LINE
VD VD	LINEAR SIDEWALL DIFFUSER (W/SHEET METAL CONNECTION PLENUM W/1" LINING & BRANCH FOR EVERY 4' OF LINEAR.)	VD VD
VD VD	LINEAR SIDEWALL DIFFUSER (W/SHEET METAL CONNECTION PLENUM W/1" LINING & BRANCH FOR EVERY 4' OF LINEAR.) BOOT BY LD MFG'R	VD VD
	SIDEWALL DUCT MTD. REG./GRILLE	

PIPING SYMBOLS

- SUPPLY PIPING (TYP.)
- RETURN PIPING (TYP.)
- PUMPED CONDENSATE PIPING
- DRAIN PIPING
- BALL VALVE W/HOSE BIBB END, BRONZE CAP AND CHAIN
- GLOBE VALVE
- BALANCING VALVE
- ANGLE GLOBE VALVE
- BALL VALVE
- PRESSURE REDUCING VALVE
- HORIZONTAL CHECK VALVE
- 2-WAY CONTROL VALVE
- 3-WAY CONTROL VALVE
- BUTTERFLY VALVE
- QUICK CLOSING VALVE W/ FUSIBLE LINK
- SELF CONTAINED RADIATION VALVE
- "Y" STRAINER
- "Y" STRAINER W/ BLOW DOWN
- GATE VALVE
- GATE VALVE W/ HOSE BIBB END, BRONZE CAP & CHAIN
- PRESSURE REDUCING VALVE
- EXPANSION JOINT
- PRESSURE RELIEF VALVE
- DIRECTION OF FLOW
- PIPE DROP
- PIPE RISE/DROP
- PIPE RISE/DROP PENETRATION
- BRANCH CONNECTION
- BOTTOM CONNECTION 45° OR 90°
- CAPPED PIPE
- GRAPHIC BREAK &/OR CONTINUATION
- UNION
- FLEX PIPE CONNECTOR
- AV — AIR VENT (AUTOMATIC)
- MV — AIR VENT (MANUAL)
- FS — FLOW SWITCH
- PS — PRESSURE SWITCH

PIPING SYMBOLS CONT.

- THERMOMETER
- TW — THERMOMETER WELL
- PT — PRESS./ TEMP. TAP (PETE'S PLUG)
- PRESSURE GAUGE
- PRESSURE GAUGE W/ COIL SYPHON
- PRESSURE GAUGE W/ DAMPENER
- IN LINE PUMP
- BASKET STRAINER
- B — BUCKET TRAP
- THERMOSTATIC TRAP
- FLOAT & THERMOSTATIC TRAP & VALVE TRAIN
- DIRT LEG
- UP/DN — PITCH UP/DOWN IN DIRECTION OF ARROW
- PIPE GUIDE
- PIPE ANCHOR
- FLANGES
- RPBP — REDUCED PRESSURE BACKFLOW PREVENTER
- CLEAN-OUT FOR CONDENSATE DRAIN

GENERAL SYMBOLS

- 1 — REVISION NUMBER
- T — THERMOSTAT
- H — HUMIDISTAT (MOUNT 54" AFF)
- S — SPEED SWITCH
- SD — SMOKE DETECTOR
- RS — REMOTE SENSOR
- CONNECT TO EXISTING
- EXTENT OF REMOVAL
- DUCT SMOKE
- SUPPLY AIR ARROW
- RETURN/EXHAUST AIR ARROW
- UC — UNDERCUT DOOR
- DL — DOOR LOUVER

- - / XXX — DENOTES EQUIPMENT NOT REQUIRING ELECTRICAL INPUT
- UNIT / # — DENOTES EQUIPMENT REQUIRING ELECTRICAL INPUT
- # — DENOTES EQUIPMENT REQUIRING ELECTRICAL INPUT
- DENOTES HVAC DUCTWORK RISER
- # — DENOTES CONTROL DEVICES

AIR DISTRIBUTION DEVICE

- (2) X — (QUANTITY) TYPE
- XXX — FLOW RATE (CFM)

- VAV BOX
- 1 — DESIGNATION NUMBER
- SIZE: VAV-6 — SIZE
- MAX. CFM: 250 — MAXIMUM CFM
- MIN. CFM: 150 — MINIMUM CFM
- GPM: 1.0 — FLOW RATE

NOTE: NOT ALL SYMBOLS MAY BE APPLICABLE TO THIS PROJECT.

REV.	DATE	REVISION DESCRIPTION	SHEET NO.
-	-	-	-
-	-	-	-
-	-	-	-
-	-	-	-
-	-	-	-
-	-	-	-

THE INFORMATION, INCLUDING ESTIMATED QUANTITIES OF WORK, SHOWN ON THESE SHEETS IS BASED ON LIMITED INVESTIGATIONS BY THE STATE AND IS IN NO WAY WARRANTED TO INDICATE THE CONDITIONS OF ACTUAL QUANTITIES OF WORK WHICH WILL BE REQUIRED.

Plotted Date: 1/16/2014

DESIGNER/DRAFTER: **S. BIRKOK**
CHECKED BY: **D. NEWMAN**

STATE OF CONNECTICUT
DEPARTMENT OF TRANSPORTATION

Filename: ...\FA_CGR_CPS_0170-2296_079__06_FSM__002.dgn

SIGNATURE/ BLOCK

STATE OF CONNECTICUT — DAVID G. NEWMAN — No. 23279 — LICENSED PROFESSIONAL ENGINEER

Hatch Mott MacDonald
Suite 100, North Lobby
400 Blue Hill Drive
Westwood, MA 02090

PROJECT TITLE: **NEW HAVEN - HARTFORD SPRINGFIELD RAIL CORRIDOR**

TOWN: **MERIDEN**

DRAWING TITLE: **HYDRONIC SNOW MELT LEGEND**

PROJECT NO. **170-3155**
DRAWING NO. **FSM-002**
SHEET NO. **03.13.017**

FLOW BALANCE WEST				
MANIFOLD/ZONE	NO. OF CIRCUITS	FLOW RATE (GPM)	PRESSURE DROP (FT H_2O)	AREA (FT^2)
WM-1	3	10.1	17.1	311
WM-2	5	16.7	16.9	516
WM-3	5	16.9	17.6	523
WM-4	5	16.9	17.5	522
WM-5	5	17.2	18.5	533

NOTES:

1. REFER TO STRUCTURAL DRAWINGS FOR MANIFOLD BOX AND PIPE TROUGH DETAILS.
2. REFER TO FSM-105 FOR TYPICAL SNOW MELT ZONE LAYOUT.
3. REFER TO PLUMBING DRAWINGS FOR SNOW MELT PIPING COORDINATION WITH TRENCH DRAINS.
4. COORDINATE ALL WORK WITH PLUMBING CONTRACTOR PRIOR TO ANY WORK.
5. COORDINATE TROUGH AND MANIFOLD LOCATIONS WITH ARCHITECTURAL AND STRUCTURAL DRAWINGS.

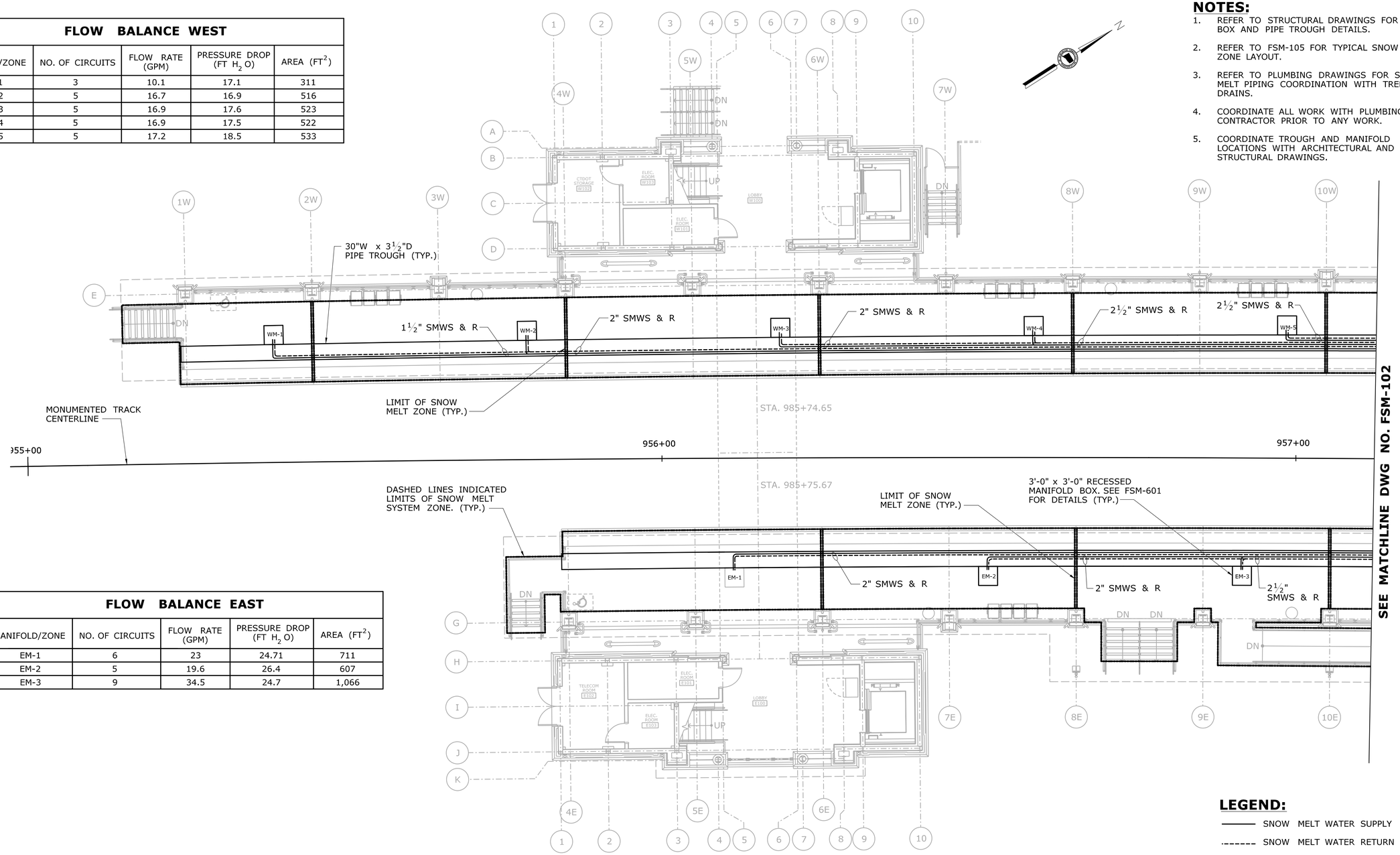

FLOW BALANCE EAST				
MANIFOLD/ZONE	NO. OF CIRCUITS	FLOW RATE (GPM)	PRESSURE DROP (FT H_2O)	AREA (FT^2)
EM-1	6	23	24.71	711
EM-2	5	19.6	26.4	607
EM-3	9	34.5	24.7	1,066

LEGEND:

- SNOW MELT WATER SUPPLY
- SNOW MELT WATER RETURN
- LIMITS OF SNOW MELT SYSTEM

MANIFOLD AND DISTRIBUTION PIPING LAYOUT PLAN - PART A

SCALE: 1/8" = 1'-0"

REV.	DATE	REVISION DESCRIPTION	SHEET NO.
-	-	-	-
-	-	-	-
-	-	-	-
-	-	-	-
-	-	-	-
-	-	-	-

THE INFORMATION, INCLUDING ESTIMATED QUANTITIES OF WORK, SHOWN ON THESE SHEETS IS BASED ON LIMITED INVESTIGATIONS BY THE STATE AND IS IN NO WAY WARRANTED TO INDICATE THE CONDITIONS OF ACTUAL QUANTITIES OF WORK WHICH WILL BE REQUIRED.

Plotted Date: 1/16/2014

DESIGNER/DRAFTER: **S. BIRKOK**

CHECKED BY: **D. NEWMAN**

SCALE: 1/8" = 1'-0"

STATE OF CONNECTICUT
DEPARTMENT OF TRANSPORTATION

Filename: ...\FA..CGR..CPS..0170-2296..079...06..FSM...101.dgn

SIGNATURE/BLOCK

STATE OF CONNECTICUT DAVID G. NEWMAN No. 23078 LICENSED PROFESSIONAL ENGINEER

Hatch Mott MacDonald
Suite 100, North Lobby
400 Blue Hill Drive
Westwood, MA 02090

PROJECT TITLE:

NEW HAVEN - HARTFORD SPRINGFIELD RAIL CORRIDOR

TOWN: **MERIDEN**

DRAWING TITLE: **HYDRONIC SNOW MELT PLATFORM PLAN PART A**

PROJECT NO. **170-3155**

DRAWING NO. **FSM-101**

SHEET NO. **03.13.018**

FLOW BALANCE WEST				
MANIFOLD/ZONE	NO. OF CIRCUITS	FLOW RATE (GPM)	PRESSURE DROP (FT H_2O)	AREA (FT^2)
WM-6	5	20.5	29.7	633
WM-7	5	18.49	22.4	572
WM-8	3	9.9	16.74	306
WM-9	3	10	16.7	308
WM-10	3	10.1	17.5	313
WM-11	5	17	17.8	526

NOTES:

1. REFER TO STRUCTURAL DRAWINGS FOR MANIFOLD BOX AND PIPE TROUGH DETAILS.
2. REFER TO FSM-105 FOR TYPICAL SNOW MELT ZONE LAYOUT.
3. REFER TO PLUMBING DRAWINGS FOR SNOW MELT PIPING COORDINATION WITH TRENCH DRAINS.
4. COORDINATE ALL WORK WITH PLUMBING CONTRACTOR PRIOR TO ANY WORK.
5. COORDINATE TROUGH AND MANIFOLD LOCATIONS WITH ARCHITECTURAL AND STRUCTURAL DRAWINGS.

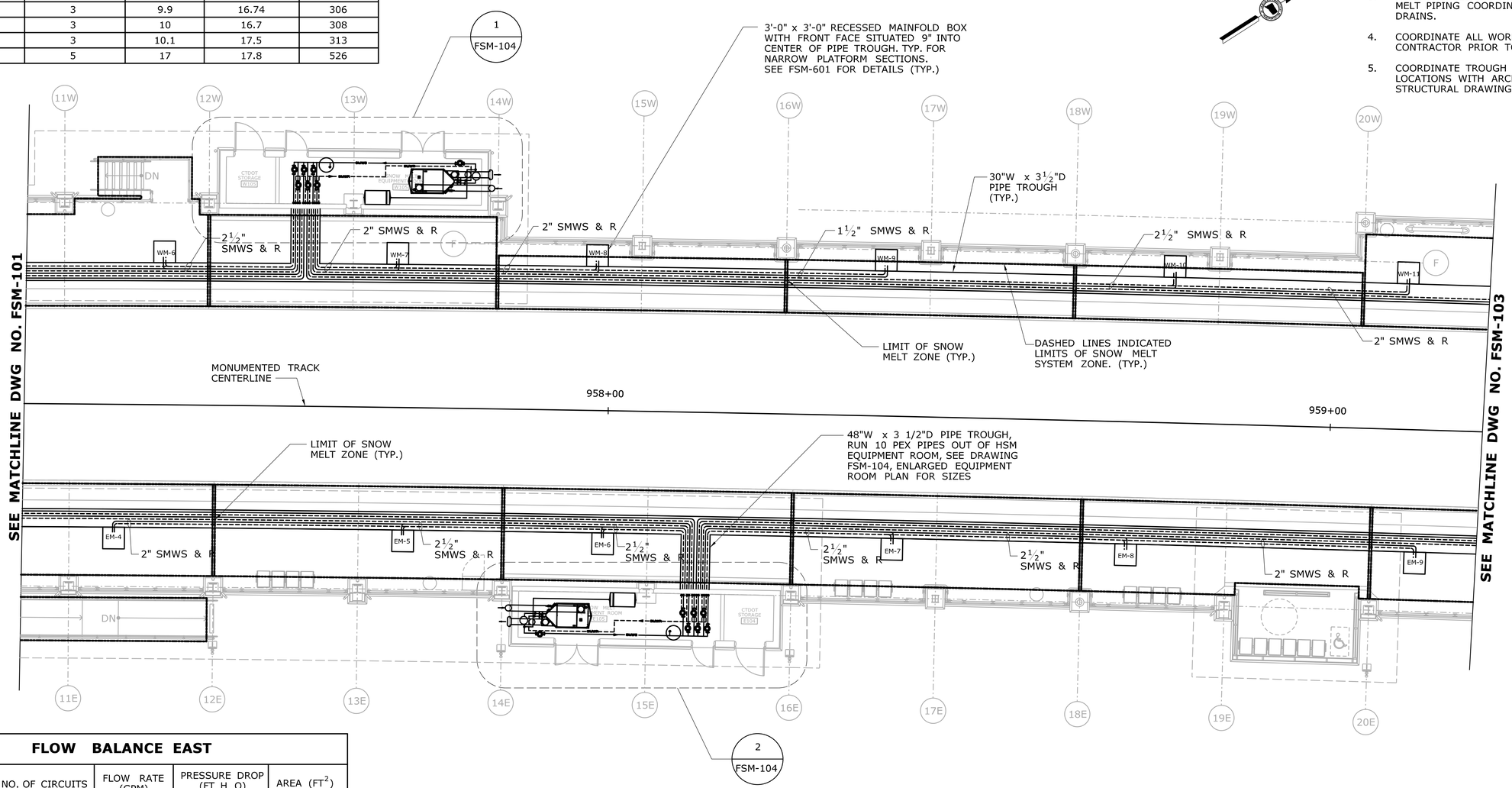

FLOW BALANCE EAST				
MANIFOLD/ZONE	NO. OF CIRCUITS	FLOW RATE (GPM)	PRESSURE DROP (FT H_2O)	AREA (FT^2)
EM-4	5	18.98	24.1	587
EM-5	5	18.7	23.146	578
EM-6	5	20.3	28.8	627
EM-7	5	16.84	17.4	521
EM-8	6	22.9	24.5	709
EM-9	8	31.7	27.1	980

LEGEND:

- SNOW MELT WATER SUPPLY
- SNOW MELT WATER RETURN
- LIMITS OF SNOW MELT SYSTEM

MANIFOLD AND DISTRIBUTION PIPING PLAN - PART B

SCALE: ⅛" = 1'-0"

REV.	DATE	REVISION DESCRIPTION	SHEET NO.
-	-	-	-
-	-	-	-
-	-	-	-
-	-	-	-
-	-	-	-
-	-	-	-

THE INFORMATION, INCLUDING ESTIMATED QUANTITIES OF WORK, SHOWN ON THESE SHEETS IS BASED ON LIMITED INVESTIGATIONS BY THE STATE AND IS IN NO WAY WARRANTED TO INDICATE THE CONDITIONS OF ACTUAL QUANTITIES OF WORK WHICH WILL BE REQUIRED.

Plotted Date: 1/16/2014

DESIGNER/DRAFTER: S. BIRKOK
CHECKED BY: D. NEWMAN
SCALE: 1/8" = 1'-0"

STATE OF CONNECTICUT
DEPARTMENT OF TRANSPORTATION

Filename: ...\FA_CGR_CPS_0170-2296_079_06_FSM_102.dgn

SIGNATURE/BLOCK
STATE OF CONNECTICUT DAVID G. NEWMAN No. 23278 LICENSED PROFESSIONAL ENGINEER

Hatch Mott MacDonald
Suite 100, North Lobby
400 Blue Hill Drive
Westwood, MA 02090

PROJECT TITLE: NEW HAVEN - HARTFORD SPRINGFIELD RAIL CORRIDOR

TOWN: MERIDEN

DRAWING TITLE: HYDRONIC SNOW MELT PLATFORM PLAN PART B

PROJECT NO. 170-3155
DRAWING NO. FSM-102
SHEET NO. 03.13.019

FLOW BALANCE WEST				
MANIFOLD/ZONE	NO. OF CIRCUITS	FLOW RATE (GPM)	PRESSURE DROP (FT H_2O)	AREA (FT^2)
WM-12	4	16.2	28.9	502
WM-13	6	23.4	25.9	723

NOTES:

1. REFER TO STRUCTURAL DRAWINGS FOR MANIFOLD BOX AND PIPE TROUGH DETAILS.
2. REFER TO FSM-104 FOR TYPICAL SNOW MELT ZONE LAYOUT.
3. REFER TO PLUMBING DRAWINGS FOR SNOW MELT PIPING COORDINATION WITH TRENCH DRAWINGS.
4. COORDINATE ALL WORK WITH PLUMBING CONTRACTOR PRIOR TO ANY WORK.

LEGEND:

- SNOW MELT SUPPLY
- SNOW MELT RETURN
- LIMITS OF SNOW MELT SYSTEM

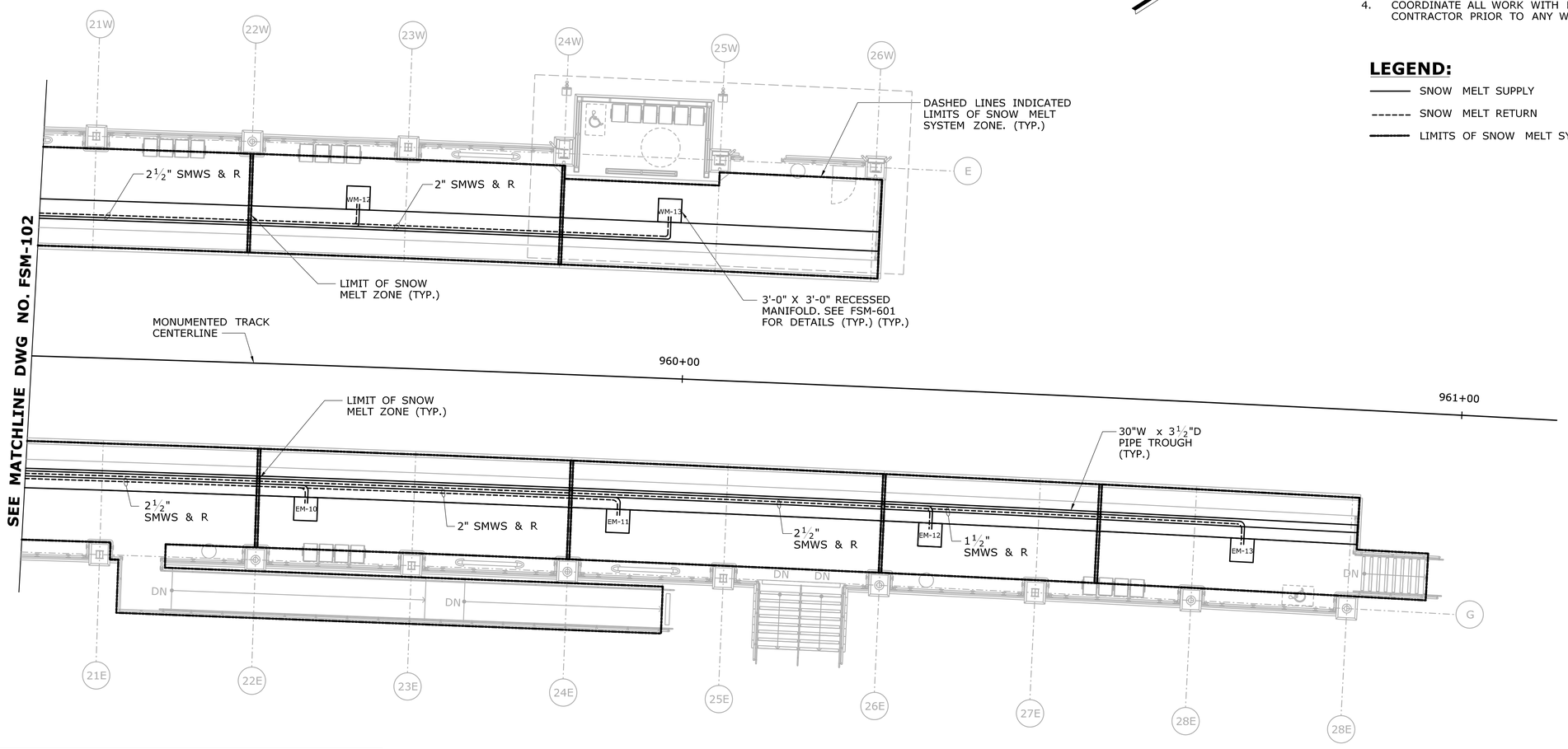

FLOW BALANCE EAST				
MANIFOLD/ZONE	NO. OF CIRCUITS	FLOW RATE (GPM)	PRESSURE DROP (FT H_2O)	AREA (FT^2)
EM-10	6	20.73	18.6	641
EM-11	6	22	24.3	706
EM-12	11	41.9	24.3	1,294
EM-13	3	11.6	25	357

MANIFOLD AND DISTRIBUTION PIPING PLAN - PART C

SCALE: $\frac{1}{8}$" = 1'-0"

REV.	DATE	REVISION DESCRIPTION	SHEET NO.
-	-	-	-
-	-	-	-
-	-	-	-
-	-	-	-
-	-	-	-
-	-	-	-

THE INFORMATION, INCLUDING ESTIMATED QUANTITIES OF WORK, SHOWN ON THESE SHEETS IS BASED ON LIMITED INVESTIGATIONS BY THE STATE AND IS IN NO WAY WARRANTED TO INDICATE THE CONDITIONS OF ACTUAL QUANTITIES OF WORK WHICH WILL BE REQUIRED.

Plotted Date: 1/16/2014

DESIGNER/DRAFTER: **S. BIRKOK**

CHECKED BY: **D. NEWMAN**

SCALE: $\frac{1}{8}$" = 1'-0"

STATE OF CONNECTICUT
DEPARTMENT OF TRANSPORTATION

Filename: ...\FA_CGR_CPS_0170-2296_079_-_06_FSM_-_103.dgn

SIGNATURE/ BLOCK

STATE OF CONNECTICUT · DAVID G. NEWMAN · No. 28279 · LICENSED PROFESSIONAL ENGINEER

Hatch Mott MacDonald
Suite 100, North Lobby
400 Blue Hill Drive
Westwood, MA 02090

PROJECT TITLE:
NEW HAVEN - HARTFORD SPRINGFIELD RAIL CORRIDOR

TOWN: **MERIDEN**

DRAWING TITLE:
HYDRONIC SNOW MELT PLATFORM PLAN PART C

PROJECT NO. **170-3155**

DRAWING NO. **FSM-103**

SHEET NO. **03.13.020**

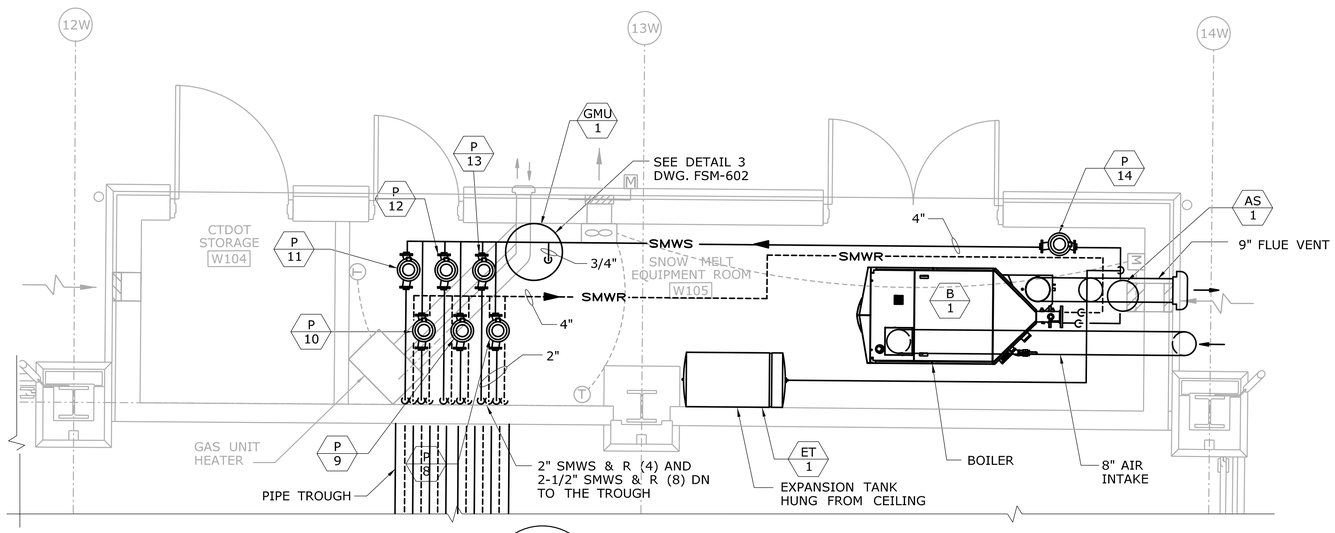

1

FSM-102

WEST SNOW MELT EQUIPMENT ROOM

SCALE: 3/8"=1'-0"

MECHANICAL NOTES:

1. COORDINATE ALL WORK WITH OTHER TRADES PRIOR TO ANY WORK.
2. PROVIDE NECESSARY CLEARANCES REQUIRED BY MANUFACTURER.
3. SEE PIPING DIAGRAM FOR MORE COMPONENTS AND SIZING.
4. COORDINATE TROUGH AND MANIFOLD LOCATIONS WITH ARCHITECTURAL AND STRUCTURAL DRAWINGS.
5. SEE DETAIL 4 ON DWG 602 FOR MAKE-UP WATER CONNECTION.

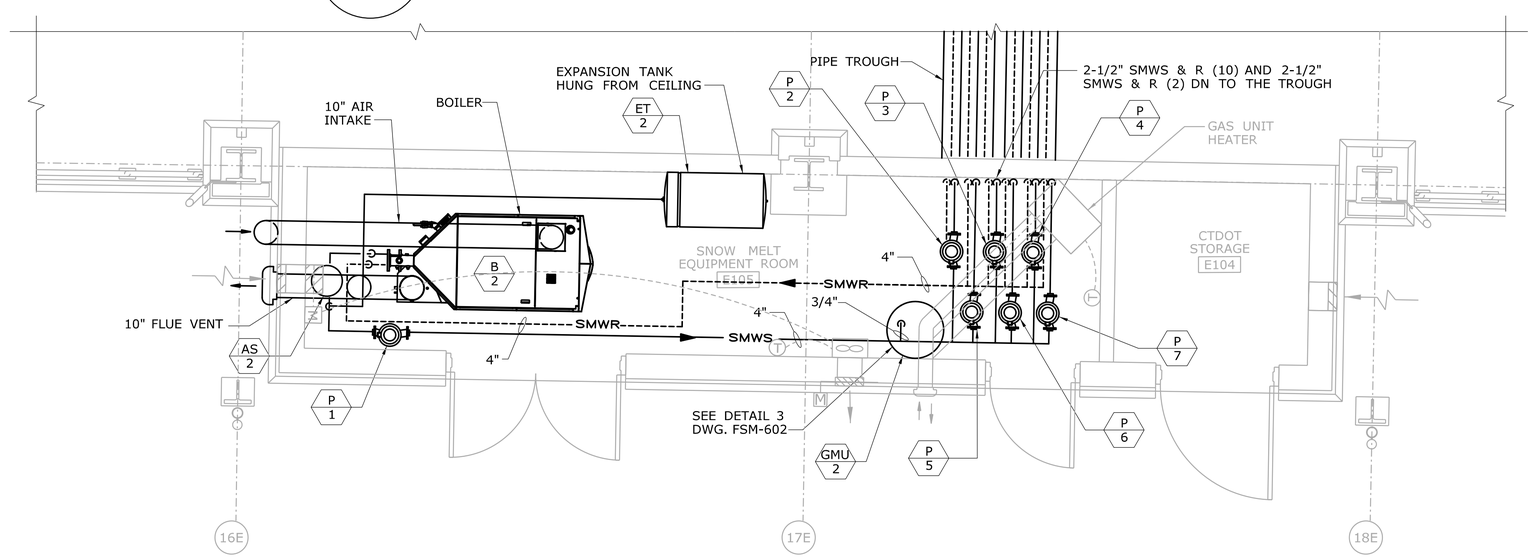

2

FSM-102

EAST SNOW MELT EQUIPMENT ROOM

SCALE: 3/8"=1'-0"

REV.	DATE	REVISION DESCRIPTION	SHEET NO.
-	-	-	-
-	-	-	-
-	-	-	-
-	-	-	-
-	-	-	-
-	-	-	-

THE INFORMATION, INCLUDING ESTIMATED QUANTITIES OF WORK, SHOWN ON THESE SHEETS IS BASED ON LIMITED INVESTIGATIONS BY THE STATE AND IS IN NO WAY WARRANTED TO INDICATE THE CONDITIONS OF ACTUAL QUANTITIES OF WORK WHICH WILL BE REQUIRED.

Plotted Date: 1/16/2014

DESIGNER/DRAFTER: **S. BIRKOK**

CHECKED BY: **D. NEWMAN**

SCALE AS NOTED

STATE OF CONNECTICUT
DEPARTMENT OF TRANSPORTATION

Filename: ...\FA_CGR_CPS_0170-2296_079__06_FSM__104.dgn

SIGNATURE/ BLOCK

STATE OF CONNECTICUT · DAVID G. NEWMAN · No. 28278 · LICENSED PROFESSIONAL ENGINEER

Hatch Mott MacDonald
Suite 100, North Lobby
400 Blue Hill Drive
Westwood, MA 02090

PROJECT TITLE:

NEW HAVEN - HARTFORD SPRINGFIELD RAIL CORRIDOR

TOWN: **MERIDEN**

DRAWING TITLE: **HYDRONIC SNOW MELT EQUIPMENT ROOMS**

PROJECT NO. **170-3155**

DRAWING NO. **FSM-104**

SHEET NO. **03.13.021**

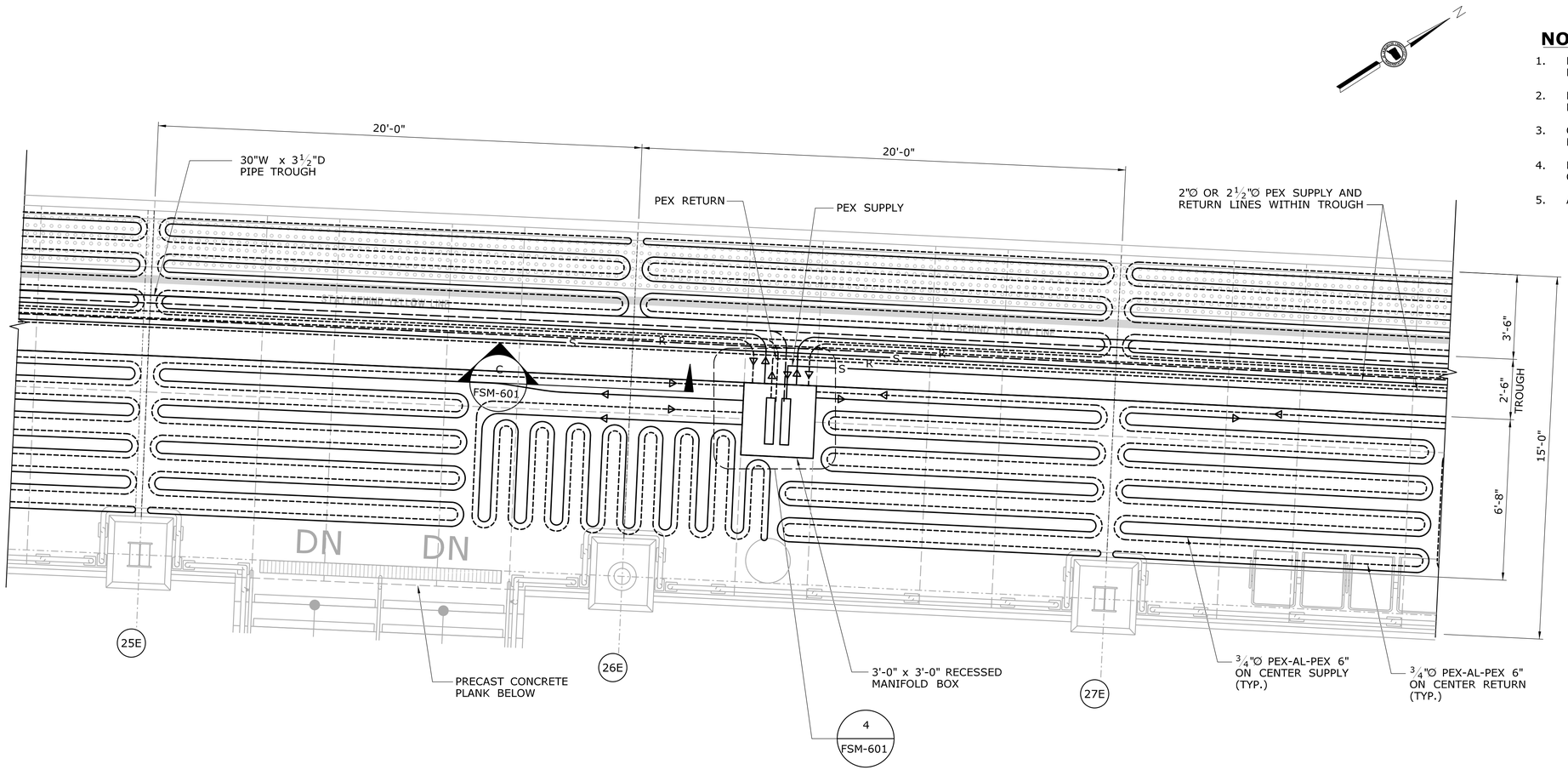

NOTES:

1. REFER TO STRUCTURAL DRAWINGS FOR MANIFOLD BOX LOCATION AND PIPE TROUGH DETAILS.
2. REFER TO FSM-101 TROUGH FSM-103 FOR MANIFOLD BOX ARRANGEMENT.
3. COORDINATE HSM PIPING WITH PLATFORM MOUNTED EQUIPMENT.
4. PROVIDE PVC SLEEVE FOR PIPING PASSING THROUGH CONTROL JOINTS, (TYPICAL FOR ALL PIPING).
5. ALL ZONES SHALL HAVE REVERSE RETURN PIPING.

3 / - **TYPICAL SNOW MELT ZONE**

SCALE: ⅜" = 1'-0"

REV.	DATE	REVISION DESCRIPTION	SHEET NO.
-	-	-	-
-	-	-	-
-	-	-	-
-	-	-	-
-	-	-	-
-	-	-	-

THE INFORMATION, INCLUDING ESTIMATED QUANTITIES OF WORK, SHOWN ON THESE SHEETS IS BASED ON LIMITED INVESTIGATIONS BY THE STATE AND IS IN NO WAY WARRANTED TO INDICATE THE CONDITIONS OF ACTUAL QUANTITIES OF WORK WHICH WILL BE REQUIRED.

Plotted Date: 1/16/2014

DESIGNER/DRAFTER: **S. BIRKOK**

CHECKED BY: **D. NEWMAN**

SCALE AS NOTED

STATE OF CONNECTICUT
DEPARTMENT OF TRANSPORTATION

Filename: ...\FA_CGR_CPS_0170-2296_079_06_FSM_105.dgn

SIGNATURE/ BLOCK

STATE OF CONNECTICUT · DAVID G. NEWMAN · No. 29079 · LICENSED PROFESSIONAL ENGINEER

Hatch Mott MacDonald
Suite 100, North Lobby
400 Blue Hill Drive
Westwood, MA 02090

PROJECT TITLE:
NEW HAVEN - HARTFORD SPRINGFIELD RAIL CORRIDOR

TOWN:
MERIDEN

DRAWING TITLE:
HYDRONIC SNOW MELT SNOW MELT ZONE PLAN

PROJECT NO. **170-3155**

DRAWING NO. **FSM-105**

SHEET NO. **03.13.022**

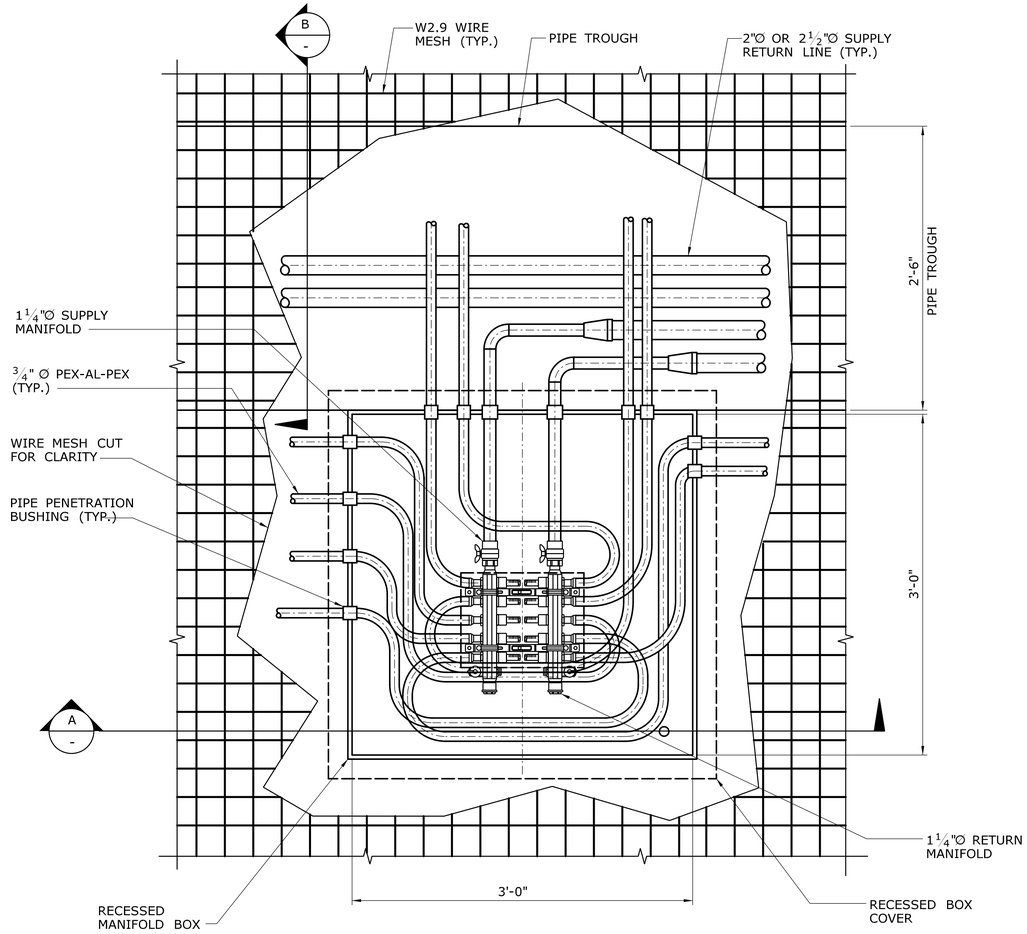

1
FSM-105

MANIFOLD RECESSED BOX DETAIL

SCALE: 1 1/2" = 1'-0"

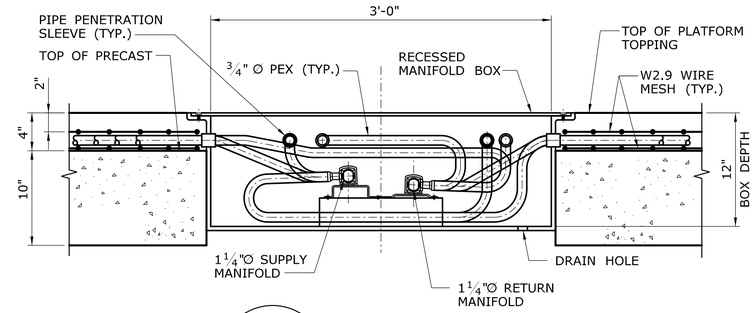

A
FSM-601

SECTION

SCALE: 1 1/2" = 1'-0"

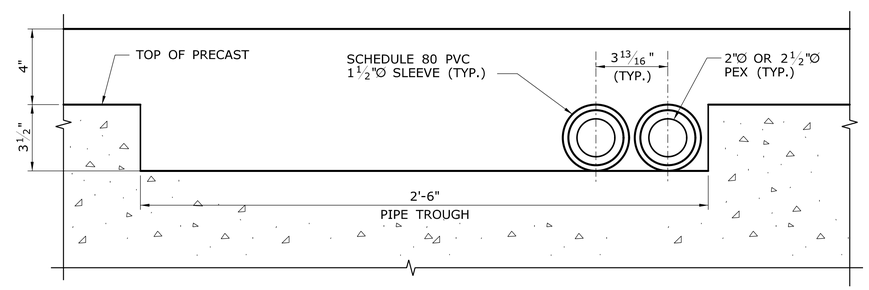

B
FSM-601

SECTION

SCALE: 3" = 1'-0"

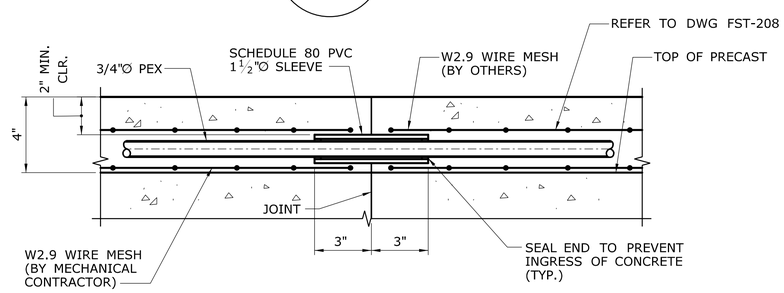

C
FSM-105

SECTION AT CONTROL JOINTS

SCALE: 3" = 1'-0"

NOTE:

1. MANIFOLD BOX OPENINGS SHALL BE FIELD COORDINATED WITH PIPING LAYOUT FOR EACH HEATING ZONE.

REV.	DATE	REVISION DESCRIPTION	SHEET NO.

THE INFORMATION, INCLUDING ESTIMATED QUANTITIES OF WORK, SHOWN ON THESE SHEETS IS BASED ON LIMITED INVESTIGATIONS BY THE STATE AND IS IN NO WAY WARRANTED TO INDICATE THE CONDITIONS OF ACTUAL QUANTITIES OF WORK WHICH WILL BE REQUIRED.

Plotted Date: 1/16/2014

DESIGNER/DRAFTER: S. BIRKOK
CHECKED BY: D. NEWMAN
SCALE AS NOTED

STATE OF CONNECTICUT
DEPARTMENT OF TRANSPORTATION

Filename: ...\FA_CGR_CPS_0170-2296_079__06_FSM__601.dgn

SIGNATURE/ BLOCK

Hatch Mott MacDonald
Suite 100, North Lobby
400 Blue Hill Drive
Westwood, MA 02090

PROJECT TITLE: NEW HAVEN - HARTFORD SPRINGFIELD RAIL CORRIDOR

TOWN: MERIDEN

DRAWING TITLE: HYDRONIC SNOW MELT DETAILS SHT. 1 OF 3

PROJECT NO. 170-3155
DRAWING NO. FSM-601
SHEET NO. 03.13.023

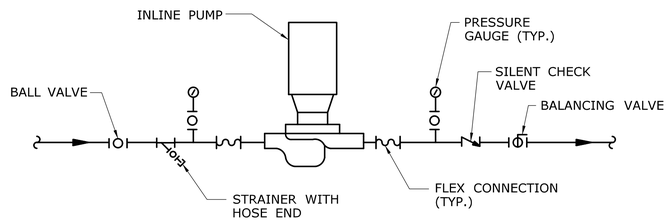

NOTES:
1. VALVES SHALL BE SAME SIZE AS PIPE, REDUCE AS REQUIRED TO PUMP CONNECTIONS.
2. SUBSTITUTE BUTTERFLY VALVES FOR BALL VALVES FOR PIPING GREATER THAN 2".

2 / - INLINE PUMP PIPING (EACH PUMP)
NTS

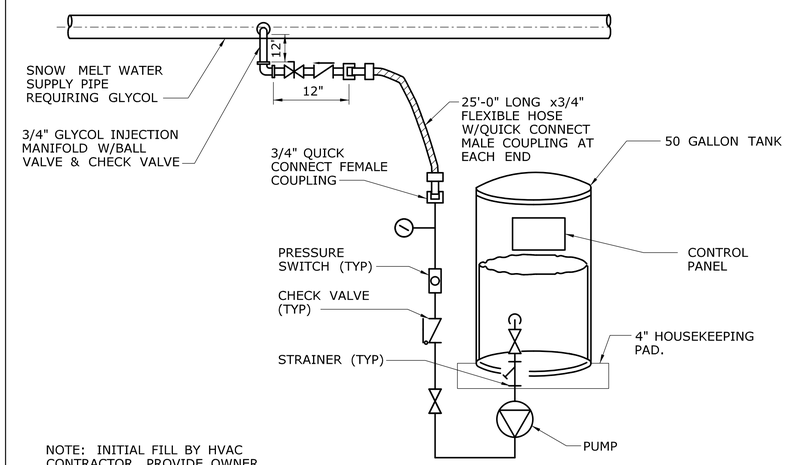

NOTE: INITIAL FILL BY HVAC CONTRACTOR. PROVIDE OWNER WITH TEST RESULTS.

3 / - GLYCOL FEEDER DETAIL
NTS

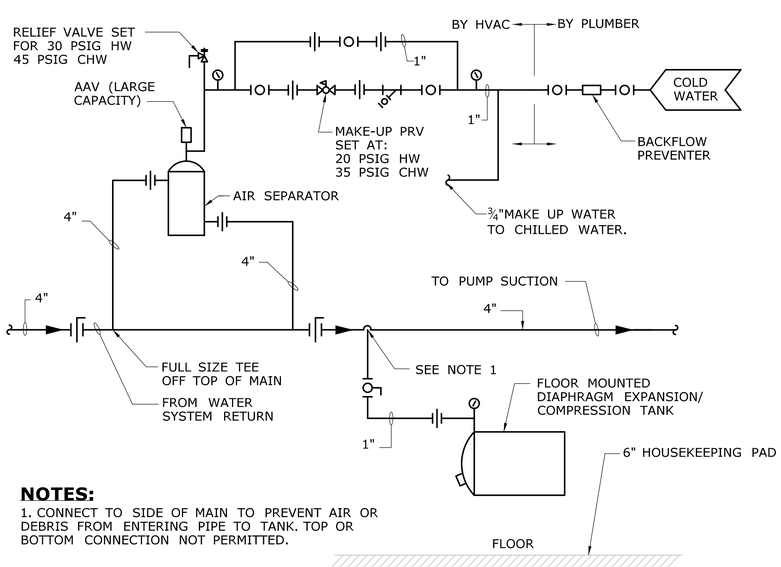

NOTES:
1. CONNECT TO SIDE OF MAIN TO PREVENT AIR OR DEBRIS FROM ENTERING PIPE TO TANK. TOP OR BOTTOM CONNECTION NOT PERMITTED.

4 / - MAKE-UP WATER DIAGRAM EXPANSION TANK & AIR SEPARATOR FOR CLOSED LOOP WATER SYSTEM
NTS

REV.	DATE	REVISION DESCRIPTION	SHEET NO.
-	-	-	-
-	-	-	-
-	-	-	-
-	-	-	-
-	-	-	-
-	-	-	-

THE INFORMATION, INCLUDING ESTIMATED QUANTITIES OF WORK, SHOWN ON THESE SHEETS IS BASED ON LIMITED INVESTIGATIONS BY THE STATE AND IS IN NO WAY WARRANTED TO INDICATE THE CONDITIONS OF ACTUAL QUANTITIES OF WORK WHICH WILL BE REQUIRED.

Plotted Date: 1/22/2014

DESIGNER/DRAFTER: S. BIRKOK
CHECKED BY: D. NEWMAN
NOT TO SCALE

STATE OF CONNECTICUT
DEPARTMENT OF TRANSPORTATION

Filename: ...\FA_CGR_CPS_0170-2296_079__06_FSM__602.dgn

SIGNATURE/ BLOCK
STATE OF CONNECTICUT DAVID G. NEWMAN No. 29278 LICENSED PROFESSIONAL ENGINEER

Hatch Mott MacDonald
Suite 100, North Lobby
400 Blue Hill Drive
Westwood, MA 02090

PROJECT TITLE:
NEW HAVEN - HARTFORD SPRINGFIELD RAIL CORRIDOR

TOWN: **MERIDEN**

DRAWING TITLE:
HYDRONIC SNOW MELT DETAILS SHEET 2 OF 3

PROJECT NO. **170-3155**
DRAWING NO. **FSM-602**
SHEET NO. **03.13.024**

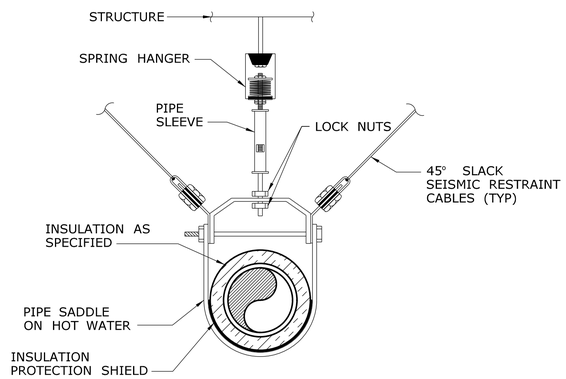

NOTE:

1. FOR TYPE OF HANGER AND INSULATION REQUIREMENTS REFER TO SPECIFICATIONS.

5 / - PIPE HANGER DETAIL
NTS

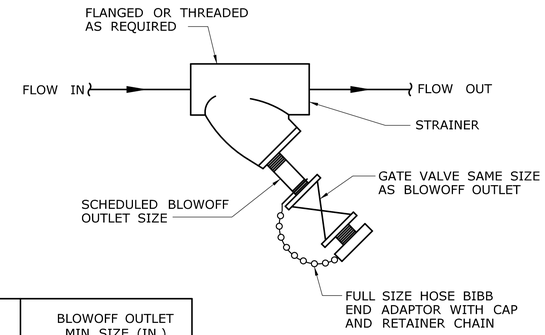

STRAINER SIZE (IN.)	BLOWOFF OUTLET MIN. SIZE (IN.)
3/4	1/2
1 TO 2 1/2	3/4
3 & 4	1

6 / - STRAINER ASSEMBLY
NTS

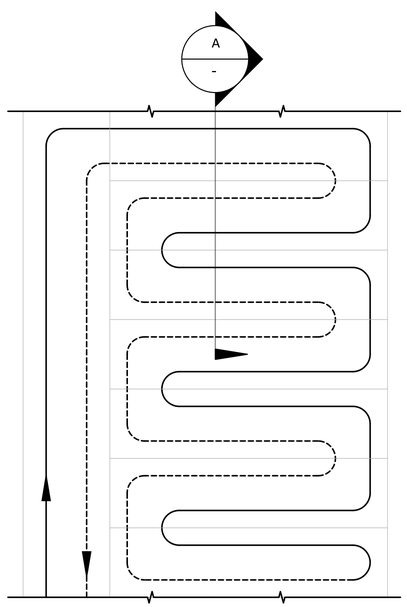

7 / - REVERSE-RETURN PATTERN CONCRETE STAIR INSTALLATION - PLAN VIEW

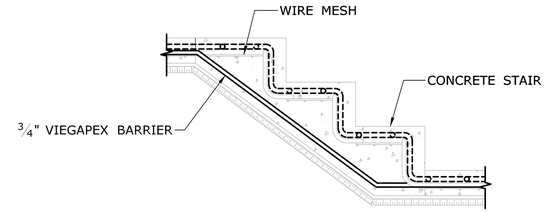

NOTE:

1. COORDINATE PIPING WITH STAIR ANCHORS LOCATION AND CONSTRUCTION PRIOR TO ANY WORK. REFER TO ARCHITECTURAL AND STRUCTURAL DRAWINGS.

A / - SECTION THROUGH CONCRETE STAIR WITH TUBING EMBEDDED

REV.	DATE	REVISION DESCRIPTION	SHEET NO.
-	-	-	-
-	-	-	-
-	-	-	-
-	-	-	-
-	-	-	-
-	-	-	-

THE INFORMATION, INCLUDING ESTIMATED QUANTITIES OF WORK, SHOWN ON THESE SHEETS IS BASED ON LIMITED INVESTIGATIONS BY THE STATE AND IS IN NO WAY WARRANTED TO INDICATE THE CONDITIONS OF ACTUAL QUANTITIES OF WORK WHICH WILL BE REQUIRED.

Plotted Date: 1/21/2014

DESIGNER/DRAFTER: **S. BIRKOK**
CHECKED BY: **D. NEWMAN**
NOT TO SCALE

STATE OF CONNECTICUT
DEPARTMENT OF TRANSPORTATION

Filename: ...\FA_CGR_CPS_0170-2296_079__06_FSM__603.dgn

SIGNATURE/ BLOCK

STATE OF CONNECTICUT DAVID G. NEWMAN No. 29078 LICENSED PROFESSIONAL ENGINEER

Hatch Mott MacDonald
Suite 100, North Lobby
400 Blue Hill Drive
Westwood, MA 02090

PROJECT TITLE:
NEW HAVEN - HARTFORD SPRINGFIELD RAIL CORRIDOR

TOWN: **MERIDEN**

DRAWING TITLE:
HYDRONIC SNOW MELT DETAILS SHEET 3 OF 3

PROJECT NO. **170-3155**
DRAWING NO. **FSM-603**
SHEET NO. **03.13.025**

NOTES:

1. PROVIDE FULLY AUTOMATIC SNOW MELT CONTROL SYSTEM WITH ALL SENSORS, CONDUITS, WIRING, HANGERS, AND ALL ASSOCIATED COMPONENTS AS PER SCHEDULES, DETAILS, AND SPECIFICATIONS.
2. FOLLOW MANUFACTURER'S INSTALLATION INSTRUCTIONS.

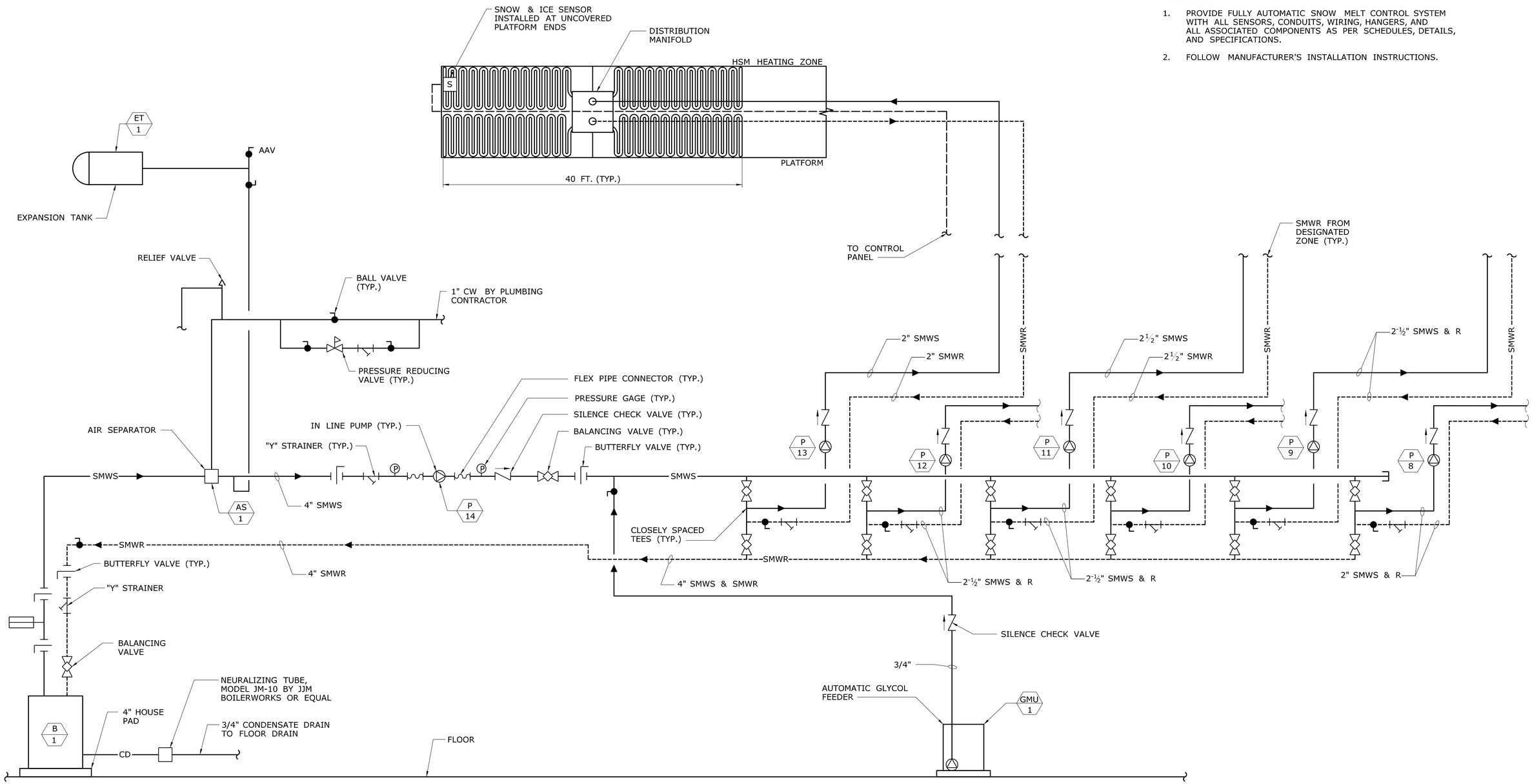

HYDRONIC SNOW MELT EQUIPMENT ROOM
SCHEMATIC DIAGRAM - WEST
NOT TO SCALE

REV.	DATE	REVISION DESCRIPTION	SHEET NO.
-	-	-	-
-	-	-	-
-	-	-	-
-	-	-	-
-	-	-	-
-	-	-	-

THE INFORMATION, INCLUDING ESTIMATED QUANTITIES OF WORK, SHOWN ON THESE SHEETS IS BASED ON LIMITED INVESTIGATIONS BY THE STATE AND IS IN NO WAY WARRANTED TO INDICATE THE CONDITIONS OF ACTUAL QUANTITIES OF WORK WHICH WILL BE REQUIRED.

Plotted Date: 1/16/2014

DESIGNER/DRAFTER: **S. BIRKOK**
CHECKED BY: **D. NEWMAN**
NOT TO SCALE

STATE OF CONNECTICUT
DEPARTMENT OF TRANSPORTATION

Filename: ...\FA_CGR_CPS_0170-2296_079__06_FSM__701.dgn

SIGNATURE/ BLOCK

STATE OF CONNECTICUT DAVID G. NEWMAN No. 29279 LICENSED PROFESSIONAL ENGINEER

Hatch Mott MacDonald
Suite 100, North Lobby
400 Blue Hill Drive
Westwood, MA 02090

PROJECT TITLE:
NEW HAVEN - HARTFORD SPRINGFIELD RAIL CORRIDOR

TOWN: **MERIDEN**

DRAWING TITLE: **MECHANICAL PIPING DIAGRAM WEST**

PROJECT NO. **170-3155**
DRAWING NO. **FSM-701**
SHEET NO. **03.13.026**

NOTES:

1. PROVIDE FULLY AUTOMATIC SNOW MELT CONTROL SYSTEM WITH ALL SENSORS, CONDUITS, WIRING, HANGERS, AND ALL ASSOCIATED COMPONENTS AS PER SCHEDULES, DETAILS, AND SPECIFICATIONS.
2. FOLLOW MANUFACTURER'S INSTALLATION INSTRUCTIONS.

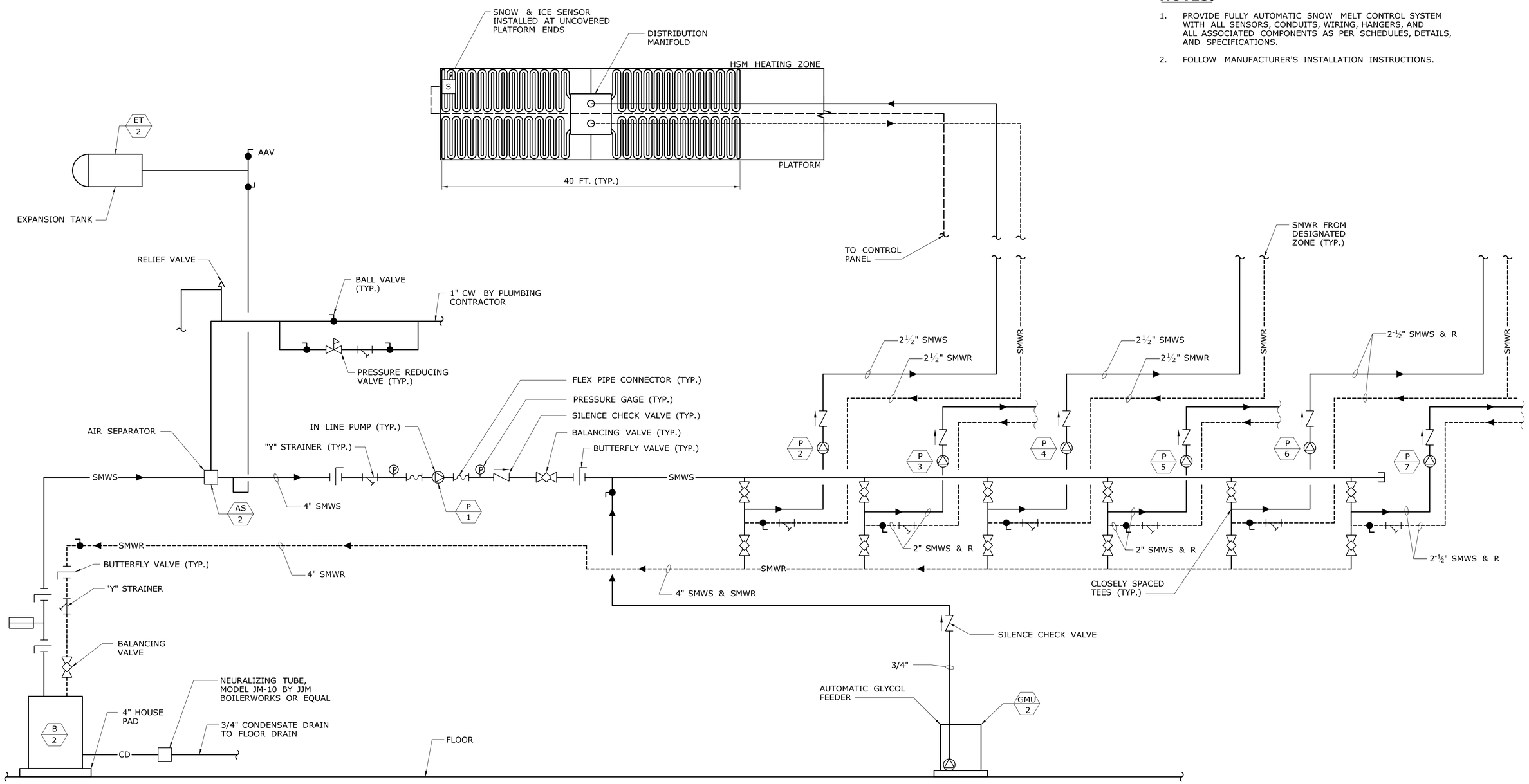

HYDRONIC SNOW MELT EQUIPMENT ROOM
SCHEMATIC DIAGRAM - EAST
NOT TO SCALE

REV.	DATE	REVISION DESCRIPTION	SHEET NO.
-	-	-	-
-	-	-	-
-	-	-	-
-	-	-	-
-	-	-	-
-	-	-	-

THE INFORMATION, INCLUDING ESTIMATED QUANTITIES OF WORK, SHOWN ON THESE SHEETS IS BASED ON LIMITED INVESTIGATIONS BY THE STATE AND IS IN NO WAY WARRANTED TO INDICATE THE CONDITIONS OF ACTUAL QUANTITIES OF WORK WHICH WILL BE REQUIRED.

Plotted Date: 1/16/2014

DESIGNER/DRAFTER: **S. BIRKOK**
CHECKED BY: **D. NEWMAN**
NOT TO SCALE

STATE OF CONNECTICUT
DEPARTMENT OF TRANSPORTATION

Filename: ...\FA_CGR_CPS_0170-2296_079__06_FSM__702.dgn

SIGNATURE/ BLOCK

Hatch Mott MacDonald
Suite 100, North Lobby
400 Blue Hill Drive
Westwood, MA 02090

PROJECT TITLE:
NEW HAVEN - HARTFORD SPRINGFIELD RAIL CORRIDOR

TOWN: **MERIDEN**

DRAWING TITLE: **MECHANICAL PIPING DIAGRAMS EAST**

PROJECT NO. **170-3155**
DRAWING NO. **FSM-702**
SHEET NO. **03.13.027**

PUMP SCHEDULE

DSGNTN	LOCATION	SERVICE	TYPE	GPM	TOTAL HEAD (FT.)	NPSH	MOTOR						MANUFACTURER/MODEL NUMBER	REMARKS
							MAX BHP	HP	RPM	V	PH	HZ		
P-1	SNOW MELT EQUIPMENT ROOM-EAST	BOILER PUMP	INLINE	307	40	4.17	6	7.5	3600	460	3	60	B & G/SERIES 80-5X5X7	1 2
P-2	SNOW MELT EQUIPMENT ROOM-EAST	EM-1	INLINE	23	51	14.8	1.25	1.5	3600	460	3	60	B & G/SERIES 90-1AAB	1
P-3	SNOW MELT EQUIPMENT ROOM-EAST	EM-2,3	INLINE	55	77	9.48	2.72	3	3600	460	3	60	B & G/SERIES 90-1.25AAB	1
P-4	SNOW MELT EQUIPMENT ROOM-EAST	EM-4,5,6	INLINE	59	61	10.62	2.29	3	3600	460	3	60	B & G/SERIES 90-1.25AAB	1
P-5	SNOW MELT EQUIPMENT ROOM-EAST	EM-7,8,9	INLINE	72	93	13.88	4.57	5	3600	460	3	60	B & G/SERIES 90-1.5AAB	1
P-6	SNOW MELT EQUIPMENT ROOM-EAST	EM-10,11	INLINE	44	65	14.8	1.91	2	3600	460	3	60	B & G/SERIES 90-1AAB	1
P-7	SNOW MELT EQUIPMENT ROOM-EAST	EM-12,13	INLINE	54	93	9.21	3.45	5	3600	460	3	60	B & G/SERIES 90-1.25AAB	1
P-8	SNOW MELT EQUIPMENT ROOM-WEST	WM-1	INLINE	24	74	14.8	1.91	2	3600	460	3	60	B & G/SERIES 90-1AAB	1
P-9	SNOW MELT EQUIPMENT ROOM-WEST	WM-2,3,4	INLINE	45	58	8.2	1.88	2	3600	460	3	60	B & G/SERIES 90-1.25AAB	1
P-10	SNOW MELT EQUIPMENT ROOM-WEST	WM-5,6,7	INLINE	39	36	14.8	0.94	1	3600	460	3	60	B & G/SERIES 90-1AAB	1
P-11	SNOW MELT EQUIPMENT ROOM-WEST	WM-8,9	INLINE	39	35	14.8	0.94	1	3600	460	3	60	B & G/SERIES 90-1AAB	1
P-12	SNOW MELT EQUIPMENT ROOM-WEST	WM-10,11	INLINE	34	44	14.8	1.14	1.5	3600	460	3	60	B & G/SERIES 90-1AAB	1
P-13	SNOW MELT EQUIPMENT ROOM-WEST	WM-12,13	INLINE	28	68	14.8	1.76	2	3600	460	3	60	B & G/SERIES 90-1AAB	1
P-14	SNOW MELT EQUIPMENT ROOM-WEST	BOILER PUMP	INLINE	209	40	4.17	6	7.5	3600	460	3	60	B & G SERIES 80/5X5X7	1 2

1 PROVIDE PREMIUM EFFICIENT MOTORS.
2 PROVIDE INVERTER DUTY MOTOR AND VFD.

GLYCOL MAKE-UP UNIT SCHEDULE

DSGNTN	LOCATION	TANK SIZE	PUMP HP	V	P	HZ	MANUFACTURER/MODEL NO.	REMARKS
GMU-1	SNOW MELT EQUIPMENT ROOM	50	1/3	120	1	60	NEPTUNE/G-50-1A	1 2 3
GMU-2	SNOW MELT EQUIPMENT ROOM	50	1/3	120	1	60	NEPTUNE/G-50-1A	1 2 3

1 SIMPLEX PUMP SYSTEM.
2 AUDIBLE ALARM WITH SILENCING RELAY
3 CONTROL PANEL

BOILER SCHEDULE

ITEM	LOCATION	MFG'R	MODEL	I=B=R		GAS	BURNER MTR (EACH)			EWT	LWT	REMARKS
				MBH	IBR OUT MBH		V	*	HZ			
B-1	BOILER ROOM-WEST	LOCHINVAR	FB2500	2,500	2,300	NAT.	120	1	60	150	130	SUPPLY OUTDOOR RESET
B-2	BOILER ROOM-EAST	LOCHINVAR	FB3000	3,000	2,760	NAT.	120	1	60	150	130	SUPPLY OUTDOOR RESET

PROVIDE EACH BOILER WITH PACKAGED CONTROLS, CONCENTRIC VENT KIT, BOILER MANUFACTURER'S NEUTRALIZATION KIT.

EXPANSION TANK SCHEDULE

DESIGNATION	LOCATION	SERVICE	TANK RATING PSI	TANK DIAMETER	TANK HEIGHT	TANK ACCEPT. CAP.	MANUFACTURER/MODEL NUMBER	OPTIONS/REMARKS
ET-1	SNOW MELT EQUIPMENT ROOM-WEST	BOILER SYSTEM	175	24	43-7/8	68.0	BELL & GOSSETT/D-120V	-
ET-2	SNOW MELT EQUIPMENT ROOM-EAST	BOILER SYSTEM	175	24	43-7/8	68.0	BELL & GOSSETT/D-120V	-

AIR SEPARATOR SCHEDULE

ITEM	LOCATION	SERVICE	MANUFACTURER / MODEL NUMBER	(CAPACITY) GPM	SIZE		REMARKS
					LENGTH	DIAMETER	
AS-1	MECH. RM.-WEST	HOT WATER SYSTEM	B&G / R-4	209	18	10-3/4	1
AS-2	MECH. RM.-EAST	HOT WATER SYSTEM	B&G / R-3	307	32	12-3/4	1

1 PROVIDE INTERNAL STRAINER.

VARIABLE FREQUENCY DRIVE SCHEDULE

UNIT NUMBER	LOCATION	SERVICE	UNIT HP	EQUIP TYPE	ELECTRICAL DATA			EMERG. POWER	AIC RATINGS	BY-PASS	MANUFACTURER/ MODEL NUMBER	OPTIONS/REMARKS
					V	∅	Hz					
VFD-1	SNOW MELT EQUIPMENT ROOM	P-1	7.5	PUMP	460	3	60	NO	65 K	YES	ABB/ACH550	18 PULSE
VFD-2	SNOW MELT EQUIPMENT ROOM	P-14	7.5	PUMP	460	3	60	NO	65 K	YES	ABB/ACH550	18 PULSE

REV.	DATE	REVISION DESCRIPTION	SHEET NO.
-	-	-	-
-	-	-	-
-	-	-	-
-	-	-	-
-	-	-	-
-	-	-	-

THE INFORMATION, INCLUDING ESTIMATED QUANTITIES OF WORK, SHOWN ON THESE SHEETS IS BASED ON LIMITED INVESTIGATIONS BY THE STATE AND IS IN NO WAY WARRANTED TO INDICATE THE CONDITIONS OF ACTUAL QUANTITIES OF WORK WHICH WILL BE REQUIRED.

Plotted Date: 1/16/2014

DESIGNER/DRAFTER: S. BIRKOK
CHECKED BY: D. NEWMAN
NOT TO SCALE

STATE OF CONNECTICUT
DEPARTMENT OF TRANSPORTATION

Filename: ...\FA_CGR_CPS_0170-2296_079_06_FSM__801.dgn

SIGNATURE/ BLOCK

STATE OF CONNECTICUT · DAVID G. NEWMAN · No. 28279 · LICENSED PROFESSIONAL ENGINEER

Hatch Mott MacDonald
Suite 100, North Lobby
400 Blue Hill Drive
Westwood, MA 02090

PROJECT TITLE: NEW HAVEN - HARTFORD SPRINGFIELD RAIL CORRIDOR

TOWN: MERIDEN

DRAWING TITLE: HYDRONIC SNOW MELT SCHEDULES

PROJECT NO. 170-3155
DRAWING NO. FSM-801
SHEET NO. 03.13.028

GENERAL NOTES:

1. ALL WORK SHALL CONFORM TO THE REQUIREMENTS OF THE NATIONAL ELECTRICAL CODE, NATIONAL ELECTRIC SAFETY CODE, NFPA, OSHA REGULATIONS AND ALL OTHER EXISTING CODES AND REGULATIONS OF AUTHORITIES HAVING JURISDICTION.
2. THE CONTRACT DRAWINGS ARE DIAGRAMMATIC IN NATURE AND NOT EVERY DETAIL OR CONDUIT IS SHOWN. EXISTING CONDITIONS AND DIMENSIONS SHALL BE VERIFIED IN THE FIELD BEFORE COMMENCING ANY FABRICATION, ORDERING ANY MATERIAL, OR PERFORMING ANY WORK. ANY DEPARTURE FROM CONCEPT SHOWN ON THE CONTRACT DRAWINGS SHALL BE SUBMITTED TO THE ENGINEER FOR APPROVAL. ALL ELECTRICAL EQUIPMENT SHOWN ON THE DRAWINGS AND/OR REQUIRED FOR THE FULL INTEGRITY OF THE CONTRACT SHALL BE FURNISHED, INSTALLED AND CONNECTED BY THE CONTRACTOR, EXCEPT WHERE EQUIPMENT SHOWN IS IDENTIFIED AS "EXISTING" OR OTHERWISE NOTED ON THE DRAWINGS.
3. UNLESS OTHERWISE NOTED, EQUIPMENT AND MATERIALS TO BE PROVIDED SHALL BEAR LISTING AND LABELING BY A NATIONALLY RECOGNIZED TESTING AGENCY WHERE SUCH STANDARD HAD BEEN ESTABLISHED FOR THAT TYPE OF EQUIPMENT/MATERIAL.
4. THE CONTRACTOR SHALL SUBMIT DETAILED EQUIPMENT LAYOUT PLANS, SECTIONS, AND MOUNTING DETAILS SHOWING PROPOSED LOCATION OF ALL EQUIPMENT AND REQUIRED WORKING/SERVICE CLEARANCES PRIOR TO INSTALLATION.
5. CONTRACTOR SHALL VISIT THE PROJECT SITE AND EXAMINE AND CONFIRM EXISTING CONDITIONS. ALL CHANGES SHALL BE PRESENTED DURING SHOP DRAWING SUBMITTALS FOR ENGINEER'S APPROVAL.
6. CONDUITS SHALL CONTAIN AN INSULATED GROUND WIRE BONDED TO ENCLOSURES AND SIZED IN ACCORDANCE WITH THE REQUIREMENTS OF NEC, IF SIZE IS NOT SHOWN ON THE CONTRACT DRAWINGS.
7. THE CONTRACTOR SHALL PROVIDE CONDUIT FITTINGS, CONNECTORS, CLAMPS, HARDWARE, HANGERS, AND SUPPORTS AS NECESSARY FOR A COMPLETE INSTALLATION.
8. THE CONTRACTOR SHALL PROVIDE TAGS FOR EQUIPMENT, CONDUITS, AND CABLES THAT ARE INSTALLED UNDER THIS CONTRACT. TAG IDENTIFICATIONS SHALL BE IN ACCORDANCE WITH CONTRACT DRAWINGS. TAGS FOR CONDUITS SHALL BE AS DESCRIBED IN SPECIFICATIONS.
9. UNUSED OPENINGS IN CONDUITS, BOXES, DISCONNECT SWITCHES, CABINETS, AND PANEL BOARDS SHALL BE CAPPED OR PLUGGED.
10. PROVIDE ALL NECESSARY TEMPORARY WIRING TO MAINTAIN EXISTING INSTALLATIONS WHICH MUST REMAIN IN SERVICE DURING CONSTRUCTION PERIOD.
11. MINIMUM SIZE CONDUCTOR TO BE USED IS #10AWG. (EXCEPT FOR CONTROLS).
12. MINIMUM SIZE CONDUIT TO BE USED IS ¾".
13. SCHEDULE ALL DISCONNECTION AND INTERRUPTIONS OF ELECTRICAL SERVICE, COMMUNICATIONS AND SUPERVISORY SYSTEMS WITH THE OWNER AND ENGINEER.
14. CONTRACTORS SHALL FOLLOW ALL OWNER SITE SAFETY WORK PROCESSES AND PROCEDURES, FOR EXAMPLE, WORK PERMITS, SAFETY TASK ANALYSES, LOCKOUT TAGOUT (LOTO), LOCK, TAG AND TRY, AND RED TAG, ETC.
15. CONTRACTORS SHALL COORDINATE ALL WORK ACTIVITIES WITH OPERATIONS, MAINTENANCE, AND OTHER CONTRACTORS.

ABBREVIATIONS:

A OR AMP	AMPERES
ACT	ABOVE COUNTER TOP (6")
AF	AMP FRAME
AFF	ABOVE FINISHED FLOOR
AHU	AIR HANDLING UNIT
AIC	AMPERE INTERRUPTING CAPACITY
AM	AMMETER
APPROX	APPROXIMATELY
AS	AMMETER SELECTION SWITCH
ASYM	ASYMMETRICAL
AT	AMP TRIP
ATS	AUTOMATIC TRANSFER SWITCH
AUX	AUXILIARY
AWG	AMERICAN WIRE GAUGE
BLDG	BUILDING
C, CDT	CONDUIT
CB	CIRCUIT BREAKER
CKT	CIRCUIT
CLF	CURRENT LIMITING FUSE
CO	COMPANY
COL	COLUMN
CNTL	CONTROL
CS	COMBINATION STARTER
CT	CURRENT TRANSFORMER
Cu	COPPER
DIA	DIAMETER
DS OR DISC	DISCONNECT SWITCH
DWG(S)	DRAWING(S)
EG	EQUIPMENT GROUND
EGC	EQUIPMENT GROUND CONDUCTOR
ELEC	ELECTRIC, ELECTRICAL
EM	EMERGENCY
EMT	ELECTRICAL METALLIC TUBING
EOL	END OF LINE
ESTOP	EMERGENCY STOP
EX	EXISTING
EXP	EXPLOSION PROOF
F	FUSE
FCR	FLOAT CONTROL RELAY
FL, FLR	FLOOR
FT	FEET
G OR GND	GROUND
GA	GAUGE
GALV	GALVANIZED
GEC	GROUNDING ELECTRODE CONDUCTOR
GEN	GENERATOR
GF	GROUND FAULT
GFCI	GROUND FAULT CIRCUIT INTERRUPTER
GFI	GROUND FAULT INTERRUPTER
H-O-A	HAND-OFF-AUTOMATIC
HP	HORSEPOWER
HVAC	HEATING, VENTILATION & AIR CONDITIONING
IG	ISOLATED GROUND
ISBR	INTRINSICALLY SAFE BARRIER RELAY
IMC	INTERMEDIATE METAL CONDUIT
IN	INCH
IR	INFRARED
ISCA	INSTANTANEOUS SHORT CIRCUIT AVAILABLE
JB OR J	JUNCTION BOX
kVA	KILOVOLT - AMPS
kW	KILOWATTS
kWH	KILOWATT-HOUR
L	LENGTH
LA	LIGHTNING ARRESTOR
LFMC	LIQUIDTIGHT FLEXIBLE METAL CONDUIT
LTG	LIGHTING
MAX	MAXIMUM
MCB OR MB	MAIN CIRCUIT BREAKER
MCC	MOTOR CONTROL CENTER
MECH	MECHANICAL
MER	MECHANICAL EQUIPMENT ROOM
MFR	MANUFACTURER
MH OR MTG	MOUNTING HEIGHT
MIN	MINIMUM
MLO	MAIN LUGS ONLY
MS	MANUAL SWITCH
MTD	MOUNTED
N	NEUTRAL
NC	NORMALLY CLOSED
NEC	NATIONAL ELECTRICAL CODE
NEMA	NATIONAL ELECTRICAL MFRS ASSOCIATION
NF	NON-FUSIBLE
NFPA	NATIONAL FIRE PROTECTION ASSOCIATION
No.	NUMBER
NO	NORMALLY OPEN
NTS	NOT TO SCALE
O.C.	ON CENTER
OCPD	OVERCURRENT PROTECTIVE DEVICE
O/F	OVERFILL
OHE	OVERHEAD ELECTRICAL
OSHA	OCCUPATIONAL SAFETY & HEALTH ADMINISTRATION
Ø	PHASE
P	POLE
PERM	PERMANENT

ABBREVIATIONS (CONT.):

PFC	POWER FACTOR CAPACITOR
PH	PHASE
PLC	PROGRAMMABLE LOGIC CONTROLLER
PNL	PANEL
PR	PAIR
PVC	POLYVINYLCHLORIDE CONDUIT
PWR	POWER
R&R	REMOVE AND RELOCATE
R	RELOCATE
RE	RELOCATED
RECEPT	RECEPTACLE
REF	REFERENCE
RGS	RIGID GALVANIZED STEEL
RMS	ROOT MEAN SQUARE
SF	SEAL FITTING
SH	SHIELDED
SS	STAINLESS STEEL
SPD	SURGE PROTECTION DEVICE
SW	SWITCH
SWBD	SWITCHBOARD
SYM	SYMMETRICAL
TEL	TELEPHONE
TWIS	TWISTED INDIVIDUAL SHIELD
TWOS	TWISTED OUTER SHIELD
TYP	TYPICAL
UG	UNDERGROUND
UL	UNDERWRITER'S LABORATORIES
UV	ULTRAVIOLET
V	VOLTS
VA	VOLT AMPS
VAC	VOLTS ALTERNATING CURRENT
VDC	VOLTS DIRECT CURRENT
VFD	VARIABLE FREQUENCY DRIVE
VM	VOLTMETER
VMS	VOLTMETER SELECTOR SWITCH
W	WATT
W/	WITH
W/O	WITHOUT
WM	WATTMETER
WP	WEATHER PROOF
XFMR	TRANSFORMER

ONE-LINE DIAGRAM:

CONNECTION TO ELECTRICAL UTILITY. VOLTAGE, PHASES AS INDICATED

M — UTILITY METER

G — XX kW, YY V — GENERATOR
- 'XX' DESIGNATES POWER RATING
- 'YY' DESIGNATES VOLTAGE

X:Y (Z) — CURRENT TRANSFORMER (CT).
'X:Y' INDICATES RATIO
'Z' INDICATES QUANTITY (1 PER PHASE UNLESS OTHERWISE INDICATED)

X:Y (Z) — POTENTIAL TRANSFORMER (PT).
'X:Y' INDICATES RATIO
'Z' INDICATES QUANTITY (1 PER PHASE UNLESS OTHERWISE INDICATED)

XFMR WW, XX kVA, YY-QQV, Z% — TWO WINDING TRANSFORMER, PHASES AS DETERMINED BY OCPD
- 'Z' INDICATES % IMPEDANCE ANSI STANDARD IF NOT SPECIFIED
- 'WW' INDICATES STRUCTURE DESIGNATION
- 'XX' INDICATES POWER RATING
- 'YY' INDICATES PRIMARY VOLTAGE
- 'QQ' INDICATES SECONDARY VOLTAGE WINDINGS AS INDICATED
- '△' INDICATES DELTA CONNECTION
- '⋎' INDICATES WYE CONNECTION WITH GROUNDED NEUTRAL

ONE-LINE DIAGRAM (CONT.):

N, E, L — WTS, XXA, Y — TRANSFER SWITCH
- 'W' INDICATES
A: AUTOMATIC
M: MANUAL
- 'XX' INDICATES RATING IN AMPS
- 'Y' INDICATES NUMBER OF POLES

XXA, Y — SWITCH
- 'XX' INDICATES AMPERE RATING
- 'Y' INDICATES NUMBER OF POLES

COMBINATION STARTER

XXAT/W, YYAF, Z — LOW VOLTAGE MOLDED CASE CIRCUIT BREAKER.
- 'XX' INDICATES TRIP RATING IN AMPS (IF TRIP INTEGRAL)
- 'YY' INDICATES FRAME RATING, ID SPECIFIED
- 'W' INDICATES NUMBER OF POLES (3 UNLESS OTHERWISE NOTED)
- 'Z' DESIGNATES TYPE:
BLANK: THERMAL MAGNETIC
LSI: ELECTRONIC TRIP
MCP: MOTOR CIRCUIT PROTECTOR
GFI: GROUND FAULT INTERRUPTING

XXA, Y — FUSE
- 'XX' INDICATES TRIP RATING IN AMPS
- '⋎' INDICATES CLASSIFICATION (IF SPECIFIED)

《 》 — ANGLED BRACKETS INDICATE DRAWOUT DEVICE

XX — PROTECTIVE RELAY, METERING, OR INTERLOCKING DEVICE.
'XX' DESIGNATIONS:
A: AMMETER
V: VOLTMETER
PF: POWER FACTOR
K: KIRK KEY INTERLOCK
I: ELECTRICAL INTERLOCK
25: SYNCHRONISM CHECK
27: UNDER VOLTAGE
46: CURRENT UNBALANCE
47: PHASE-SEQUENCE VOLTAGE
50: INSTANTANEOUS OVERCURRENT
51: TIME OVERCURRENT
52: AC CIRCUIT BREAKER
55: POWER FACTOR
59: OVER VOLTAGE
64: GROUND PROTECTIVE RELAY
81: FREQUENCY
86: LOCKING OUT RELAY
* SPECIFIC MINIMUM FUNCTIONS TO BE LISTED BY ANSI/IEEE DEVICE NUMBERS

TRIP FRAME

X — FULL VOLTAGE NON REVERSING CONTACTOR
'X' DESIGNATES NEMA SIZE OR:
BC: BYPASS CONTACTOR
OC: OUTPUT ISOLATION CONTACTOR
IC: INPUT ISOLATION CONTACTOR

XXA/Y — LIGHTING CONTACTOR
- 'XX' DESIGNATES AMPERE RATING
- 'Y' DESIGNATES NUMBER OF POLES

X — MOTOR OVERLOAD.
RATED FOR DEVICE PROTECTING.
CLASS 20 UNLESS OTHERWISE INDICATED.
- 'X' DESIGNATES TYPE:
T-THERMAL
E-ELECTRONIC

ONE-LINE DIAGRAM (CONT.):

F, R, X — FULL VOLTAGE REVERSING CONTACTOR RATED FOR DEVICE PROTECTING. CLASS 20 UNLESS OTHERWISE INDICATED.
- 'X' DESIGNATES NEMA SIZE:
- 'F' INDICATES FORWARD CONTACTOR
- 'R' INDICATES REVERSING CONTACTOR

H, L, X — TWO SPEED STARTER
- 'X' DESIGNATES NEMA SIZE:
- 'H' INDICATES HIGH SPEED CONTACTOR
- 'L' INDICATES LOW SPEED CONTACTOR

X, Y% — REDUCED VOLTAGE AUTOTRANSFOMER
- 'X' DESIGNATES NEMA SIZE:
- 'Y' INDICATES TAP PERCENTAGE

VFD XXA — VARIABLE FREQUENCY DRIVE.
- 'XX' INDICATES MINIMUM AMP RATING (IF NOT SPECIFIED, VFD TO MATCH HORSEPOWER RATING OF MOTOR SUPPLIED.)

CS XXA — COMBINATION STARTER
'XX' - MINIMUM AMP RATING

RVSS XXA — REDUCED VOLTAGE SOFT START.
- 'XX' INDICATES MINIMUM AMP RATING (IF NOT SPECIFIED, RVSS TO MATCH HORSEPOWER RATING OF MOTOR SUPPLIED.)

XXA/Y — NON-FUSED DISCONNECT SWITCH
- 'XX' DESIGNATES AMPERE RATING OF DISCONNECT
- 'Y' DESIGNATES NUMBER OF POLES

XXA/Y — FUSED DISCONNECT SWITCH
- 'XX' DESIGNATES AMPERE RATING OF DISCONNECT
- 'Y' DESIGNATES NUMBER OF POLES

WW, XX HP — MOTOR
- 'WW' INDICATES EQUIPMENT DESIGNATION
- 'XX' INDICATES HORSEPOWER RATING.

PANEL: X — PANELBOARD
- 'X' INDICATES STRUCTURE DESIGNATION.

UPS — UNINTERRUPTIBLE POWER SUPPLY

SPD — SURGE SUPPRESSION DEVICE.

XX — LIGHTNING ARRESTORS
- 'XX' INDICATES
IC: INTERMEDIATE CLASS
DC: DISTRIBUTION CLASS
SC: STATION CLASS

EARTH GROUND

ZZ — RESISTOR
- 'ZZ' INDICATES IMPEDANCE IN OHMS

MISCELLANEOUS ELEC. EQUIPMENT SUCH AS PANEL, ETC. EQUIPMENT TYPE AND RATINGS TO BE INDICATED

ELEC. EQUIPMENT BOUNDARY, INDICATES MULTIPLE DEVICES ENCLOSED WITHIN BORDER ARE LOCATED WITHIN THE SAME ENCLOSURE, OR MOUNTED TO SAME PANEL RACK.

REV.	DATE	REVISION DESCRIPTION	SHEET NO.
-	-	-	-
-	-	-	-
-	-	-	-
-	-	-	-
-	-	-	-
-	-	-	-

THE INFORMATION, INCLUDING ESTIMATED QUANTITIES OF WORK, SHOWN ON THESE SHEETS IS BASED ON LIMITED INVESTIGATIONS BY THE STATE AND IS IN NO WAY WARRANTED TO INDICATE THE CONDITIONS OF ACTUAL QUANTITIES OF WORK WHICH WILL BE REQUIRED.

Plotted Date: 1/16/2014

DESIGNER/DRAFTER: **W. CAREY**
CHECKED BY: **D. NEWMAN**
NOT TO SCALE

STATE OF CONNECTICUT
DEPARTMENT OF TRANSPORTATION

Filename: ...\FA..CGR..CPS..0170-2296..079...06..FEL...001.dgn

SIGNATURE/BLOCK:
STATE OF CONNECTICUT DOT & GRANTSUM LICENSED PROFESSIONAL ENGINEER
Hatch Mott MacDonald
Suite 100, North Lobby
400 Blue Hill Drive
Westwood, MA 02090

PROJECT TITLE:
NEW HAVEN - HARTFORD SPRINGFIELD RAIL CORRIDOR

TOWN: **MERIDEN**

DRAWING TITLE: **GENERAL NOTES, LEGEND & ABBR. SHEET 1 OF 2**

PROJECT NO. **170-3155**
DRAWING NO. **FEL-001**
SHEET NO. **03.13.029**

LIGHTING:

NOTE:
SEE LIGHTING FIXTURE SCHEDULE DWG. FLI-901
FOR LIGHTING FIXTURE SYMBOLS.

$XX — WALL SWITCH
XX - WAYS OF SWITCHING

X — CEILING MOUNTED OCCUPANCY SENSOR.

X — WALL MOUNTED OCCUPANCY SENSOR.
X - SENSOR ZONE

E — EMERGENCY LIGHT

STA — STATION ENTRANCE SIGN

RACEWAYS:

CONDUIT RUN CONCEALED ABOVE CEILING OR IN WALLS

CONDUIT RUN BELOW GRADE OR IN SLAB

CONDUIT RUN EXPOSED PARALLEL OR PERPENDICULAR TO BUILDING LINES

XXXX-YY — HOMERUN TO PANELBOARD. MINIMUM CONDUIT SIZE SHALL BE 3/4"."XXXX"- PANELBOARD NAME
"YY"- CIRCUIT NUMBER

FLEXIBLE CONDUIT

CONDUIT TURNING DOWN

CONDUIT TURNING UP

CONDUIT CAP

CONDUIT EXPANSION FITTING

HH — HANDHOLE

MH — MANHOLE

PB — PULL BOX

JB — JUNCTION BOX

CABLE TRAY (DRAWN TO SCALE ON PLANS)

XXXX-Y — CONDUIT

GROUNDING & LIGHTNING PROTECTION:

CONNECTION TO GROUND GRID, MECHANICAL OR CADWELD CONNECTION AS NOTED

GROUND ROD

GROUND TEST STATION

GROUND ANODE

VEHICLE GROUNDING STATION

DIRECT BURIED GROUND CONDUCTOR

GROUND CONDUTOR CONNECTION TO EQUIPMENT

LIGHTNING PROTECTION AIR TERMINAL

LIGHTNING PROTECTION SYSTEM CONDUCTOR

LIGHTNING PROTECTION SYSTEM DOWN CONDUCTOR

GROUNDING CONDUCTOR CONNECTION TO FUTURE EQUIPMENT

POWER EQUIPMENT

480Y/277 VOLT, 3Ø, 4W MAIN DISTRIBUTION PANEL

120Y/208 VOLT, 3Ø, 4W POWER PANEL

480Y/277 VOLT, 3Ø, 4W LIGHTING PANEL

480Y/277 VOLT, 3Ø, 4W EMER. POWER PANEL

120Y/208 VOLT, 3Ø, 4W EMER. POWER PANEL

OUTLETS AND RECEPTACLES:

XX — DUPLEX RECEPTACLE, MOUNT 18" AFF UNLESS OTHERWISE NOTED.

FOR ALL RECEPTACLES, 'XX' DESIGNATES:

GFCI - GROUND FAULT CIRCUIT INTERRUPTER
WP - WEATHERPROOF

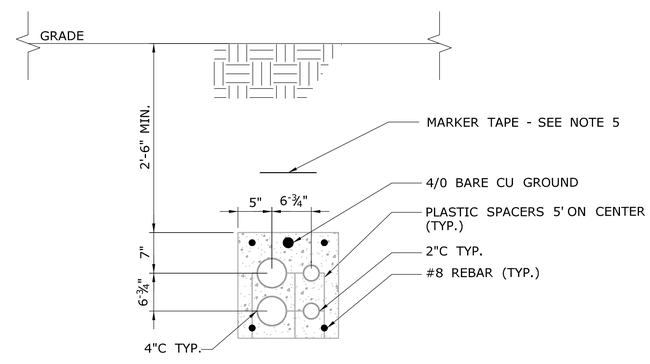

TYPICAL DUCTBANK SECTION

SCALE: NTS

DUCTBANK NOTES:

1. A COMPACTED BASE OF CRUSHED STONE OF 12" MINIMUM DEPTH SHALL BE INSTALLED ON A LEVEL COMPACTED SUB-GRADE WITH A MINIMUM SOIL BEARING CAPACITY OF 1000 LBS PER SQ. FT.
2. CONCRETE SHALL CONFORM WITH ACI BUILDING CODE REQUIREMENTS FOR REINFORCED CONCRETE, AND SHALL HAVE A MINIMUM ULTIMATE STRENGTH OF 3000 PSI AT 28 DAYS. A MAXIMUM OF 1½" COARSE AGGREGATE AND AIR ENTRAINMENT FOR A TOTAL AIR CONTENT OF 3%-6% BY VOLUME.
3. REINFORCING STEEL SHALL BE NEW DEFORMED BARS MEETING ASTM A615 SPECIFICATION FOR GRADE NO. 60 STEEL. THE REINFORCING SHOWN IS TYPICAL FOR FIELD FABRICATION. REINFORCING BARS SHOULD HAVE 2" MIN. CONCRETE COVER.
4. THE TOP SURFACE SHALL BE SMOOTH AND LEVEL WITH A 1" CHAMFER ALONG THE UPPER EDGES.
5. ALL DUCTBANKS SHALL BE IDENTIFIED BY A RED MARKER TAPE SHALL RUN DIRECTLY ABOVE THE ENTIRE LENGTH OF EACH CONDUIT SECTION, WITH A MINIMU VERTICAL SEPARATION OF 12".

REV.	DATE	REVISION DESCRIPTION	SHEET NO.
-	-	-	-
-	-	-	-
-	-	-	-
-	-	-	-
-	-	-	-
-	-	-	-

THE INFORMATION, INCLUDING ESTIMATED QUANTITIES OF WORK, SHOWN ON THESE SHEETS IS BASED ON LIMITED INVESTIGATIONS BY THE STATE AND IS IN NO WAY WARRANTED TO INDICATE THE CONDITIONS OF ACTUAL QUANTITIES OF WORK WHICH WILL BE REQUIRED.

Plotted Date: 1/28/2014

DESIGNER/DRAFTER: **W. CAREY**
CHECKED BY: **D. NEWMAN**

STATE OF CONNECTICUT
DEPARTMENT OF TRANSPORTATION

Filename: ...\FA..CGR..CPS..0170-2296..079...06..FEL...002.dgn

SIGNATURE/BLOCK:
STATE OF CONNECTICUT JOHN R. CHRISTIANSEN LICENSED PROFESSIONAL ENGINEER
Hatch Mott MacDonald
Suite 100, North Lobby
400 Blue Hill Drive
Westwood, MA 02090

PROJECT TITLE:
NEW HAVEN - HARTFORD SPRINGFIELD RAIL CORRIDOR

TOWN: **MERIDEN**

DRAWING TITLE:
GENERAL NOTES, LEGEND & ABBR. SHEET 2 OF 2

PROJECT NO. **170-3155**
DRAWING NO. **FEL-002**
SHEET NO. **03.13.030**

NOTES:

1. SEE DRAWINGS FEL-101 THROUGH FEL-105 AND FLI SERIES FOR ADDITIONAL CONDUCTOR AND CONDUIT DETAILS.

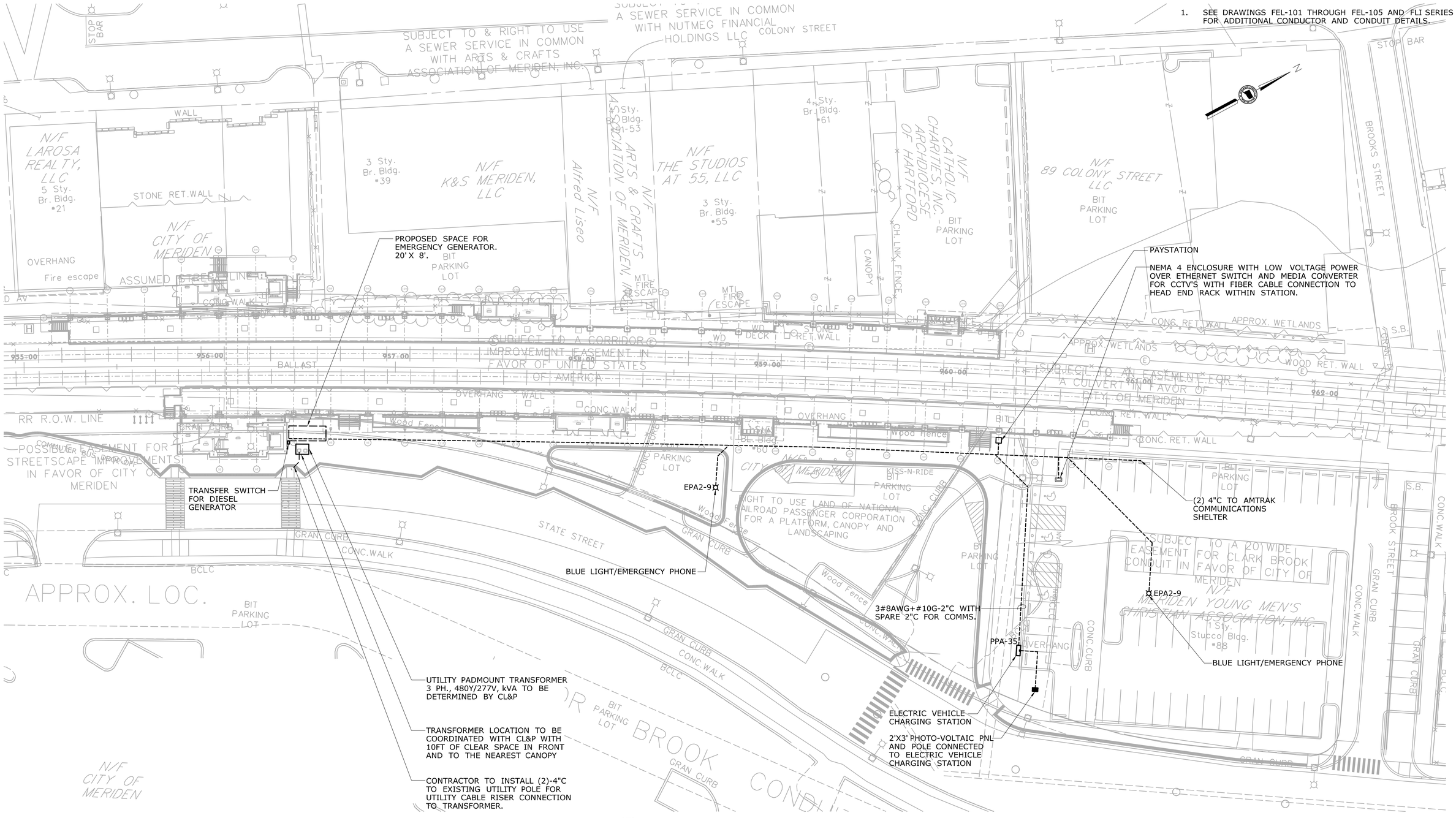

1 - MERIDEN STATION - SITE PLAN

SCALE: 1"=25'-0"

REV.	DATE	REVISION DESCRIPTION	SHEET NO.

THE INFORMATION, INCLUDING ESTIMATED QUANTITIES OF WORK, SHOWN ON THESE SHEETS IS BASED ON LIMITED INVESTIGATIONS BY THE STATE AND IS IN NO WAY WARRANTED TO INDICATE THE CONDITIONS OF ACTUAL QUANTITIES OF WORK WHICH WILL BE REQUIRED.

Plotted Date: 1/28/2014

DESIGNER/DRAFTER: **W. CAREY**

CHECKED BY: **D. NEWMAN**

SCALE: 1" = 25'-0"

STATE OF CONNECTICUT DEPARTMENT OF TRANSPORTATION

Filename: ...\FA..CGR..CPS..0170-2296..079...06..FEL..100.dgn

SIGNATURE/BLOCK:

Hatch Mott MacDonald
Suite 100, North Lobby
400 Blue Hill Drive
Westwood, MA 02090

PROJECT TITLE: **NEW HAVEN - HARTFORD SPRINGFIELD RAIL CORRIDOR**

TOWN: **MERIDEN**

DRAWING TITLE: **ELECTRICAL SITE PLAN**

PROJECT NO. **170-3155**

DRAWING NO. **FEL-100**

SHEET NO. **03.13.031**

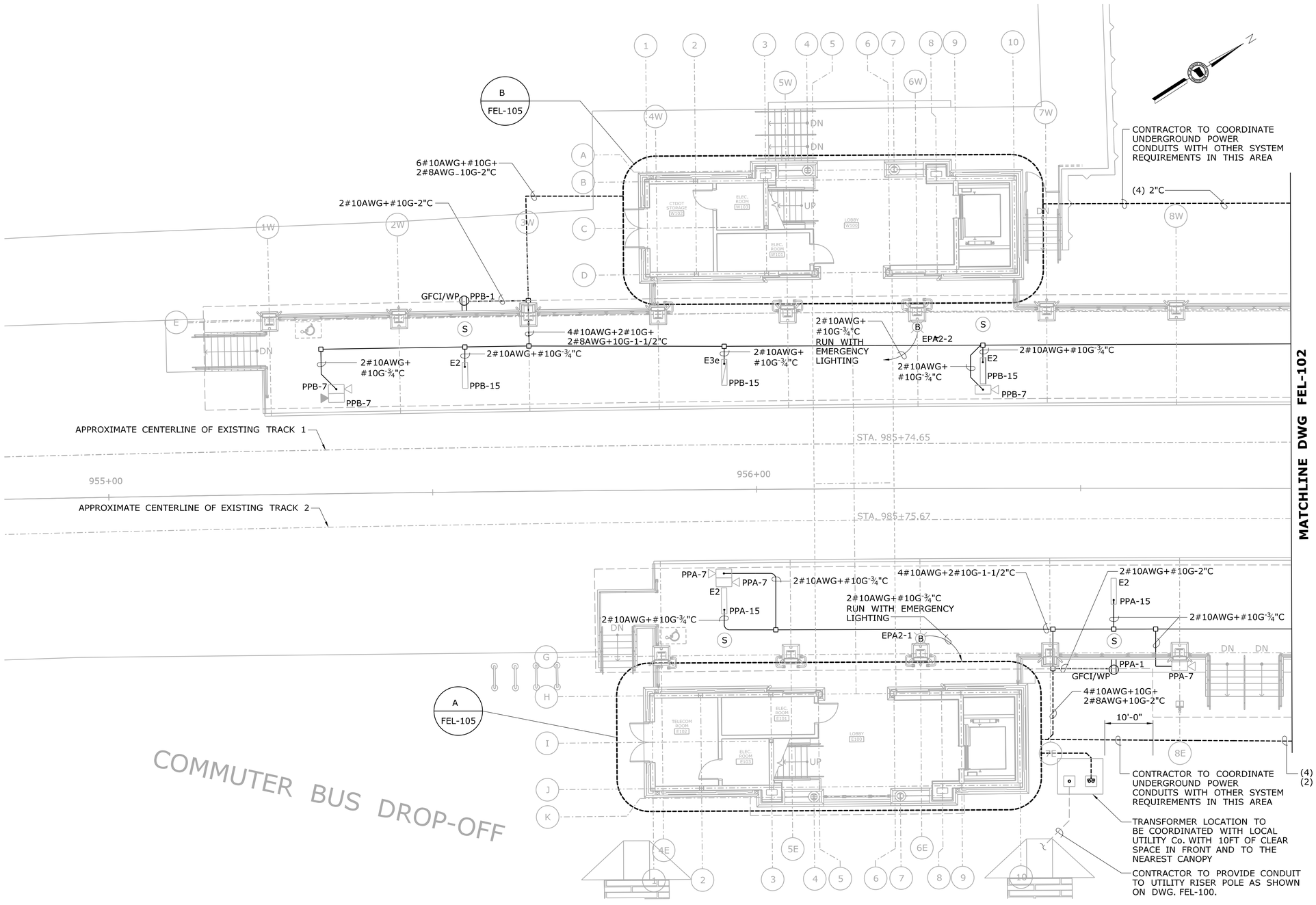

POWER PLAN - PART A

SCALE: 1/8" = 1'-0"

NOTES:

1. CIRCUITS ARE SHOWN DIAGRAMMATICALLY, SEE DRAWING FEL-601 FOR CONDUIT RUNS IN CANOPY.
2. ALL RECEPTACLES ARE FOR MAINTENANCE USE ONLY MOUNTED ON THE STEM WALL, ON THE BACK OF THE PLATFORM.
3. CONDUIT SIZES ARE PER NEC 2011 WITH ALLOWANCE FOR EXTRA CONDUCTORS.
4. CONDUIT ROUTES ARE SHOWN DIAGRAMMATICALLY. REFER TO DETAILS ON DWG. FEL-601 AND FEL-602 FOR TYPICAL LAYOUTS.
5. CANOPY MOUNTED CONDUITS AND JUNCTION BOXES TO BE KEPT AT A MINIMUM.
6. CONNECTION IN CANOPY FROM JUNCTION BOX TO FIXTURES IS LIQUIDTIGHT FLEXIBLE CONDUIT.
7. UNDERGROUND CONDUITS ARE TO BE CONCRETE INCASED 2" AND GROUPED TOGETHER 30" MINIMUM BELOW GRADE WHERE PRACTICAL.
8. CONDUITS TO WEST TOWER TO BE ROUTED UNDER THE PEDESTRIAN OVERPASS, SEE DWG. FEL-603.

REV.	DATE	REVISION DESCRIPTION	SHEET NO.
-	-	-	-
-	-	-	-
-	-	-	-
-	-	-	-
-	-	-	-
-	-	-	-

THE INFORMATION, INCLUDING ESTIMATED QUANTITIES OF WORK, SHOWN ON THESE SHEETS IS BASED ON LIMITED INVESTIGATIONS BY THE STATE AND IS IN NO WAY WARRANTED TO INDICATE THE CONDITIONS OF ACTUAL QUANTITIES OF WORK WHICH WILL BE REQUIRED.

Plotted Date: 1/28/2014

DESIGNER/DRAFTER: D. CHERBELEATA
CHECKED BY: D. NEWMAN
SCALE: 1/8" = 1'-0"

STATE OF CONNECTICUT
DEPARTMENT OF TRANSPORTATION

Filename: ...\FA_CGR_CPS_0170-2296_079_ _06_FEL_ _101.dgn

SIGNATURE/BLOCK:
STATE OF CONNECTICUT ROBIN E. GRAHAM 25 LICENSED PROFESSIONAL ENGINEER
Hatch Mott MacDonald
Suite 100, North Lobby
400 Blue Hill Drive
Westwood, MA 02090

PROJECT TITLE: NEW HAVEN - HARTFORD SPRINGFIELD RAIL CORRIDOR

TOWN: MERIDEN

DRAWING TITLE: ELECTRICAL POWER PLATFORM PLAN PART A

PROJECT NO. 170-3155
DRAWING NO. FEL-101
SHEET NO. 03.13.032

NOTES:

1. CIRCUITS ARE SHOWN DIAGRAMMATICALLY, SEE DRAWING FEL-601 FOR CONDUIT RUNS IN CANOPY.
2. ALL RECEPTACLES ARE FOR MAINTENANCE USE ONLY MOUNTED ON THE STEM WALL, ON THE BACK OF THE PLATFORM.
3. CONDUIT SIZES ARE PER NEC 2011 WITH ALLOWANCE FOR EXTRA CONDUCTORS.
4. CONDUIT ROUTES ARE SHOWN DIAGRAMMATICALLY. REFER TO DETAILS ON DWG. FEL-601 AND FEL-602 FOR TYPICAL LAYOUTS.
5. CANOPY MOUNTED CONDULETS AND JUNCTION BOXES TO BE KEPT AT A MINIMUM.
6. CONDUITS TO WEST TOWER TO BE ROUTED UNDER THE PEDESTRIAN OVERPASS, SEE DWG. FEL-603.

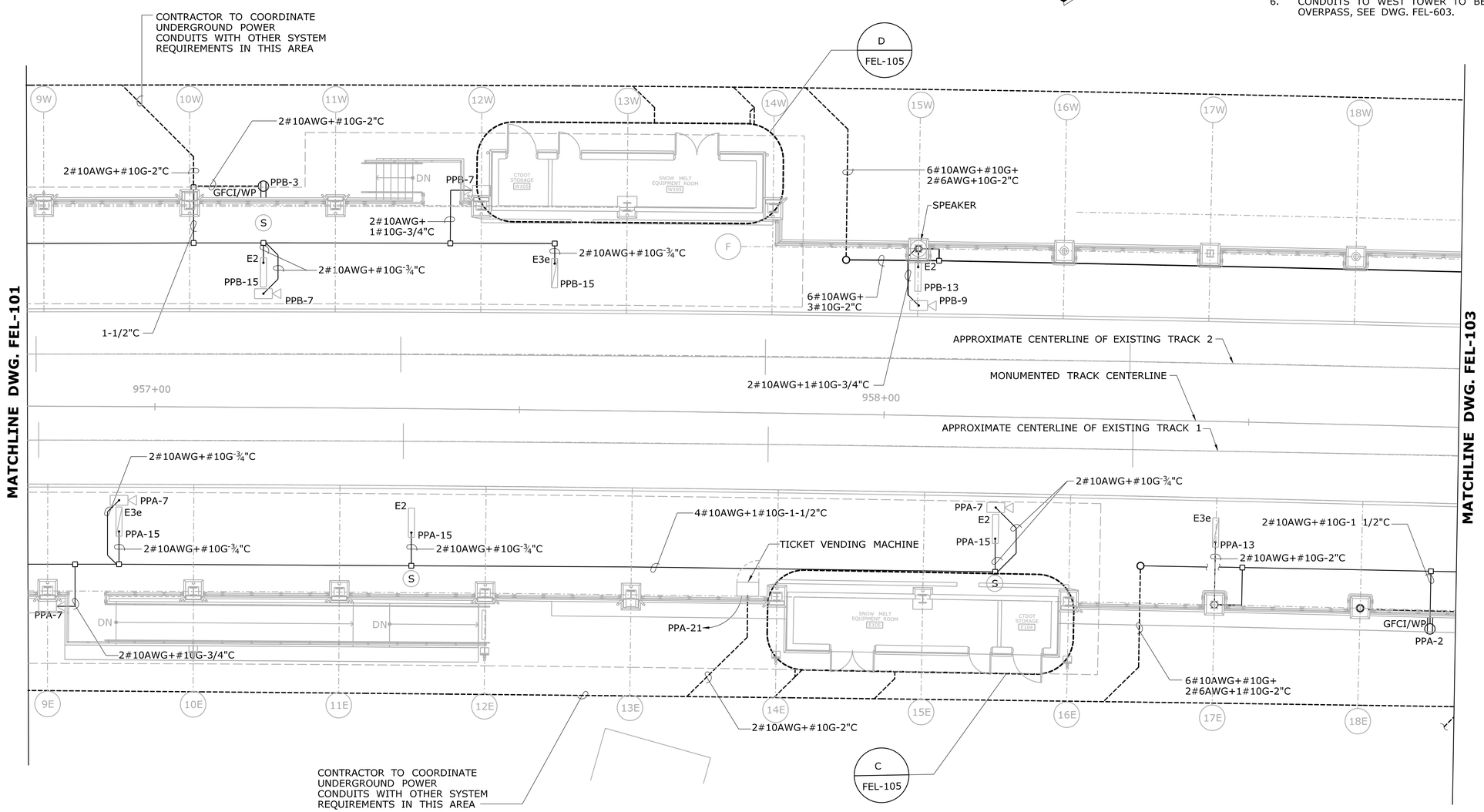

POWER PLAN PART B

SCALE: 1/8" = 1'-0"

REV.	DATE	REVISION DESCRIPTION	SHEET NO.
-	-	-	-
-	-	-	-
-	-	-	-
-	-	-	-
-	-	-	-
-	-	-	-

THE INFORMATION, INCLUDING ESTIMATED QUANTITIES OF WORK, SHOWN ON THESE SHEETS IS BASED ON LIMITED INVESTIGATIONS BY THE STATE AND IS IN NO WAY WARRANTED TO INDICATE THE CONDITIONS OF ACTUAL QUANTITIES OF WORK WHICH WILL BE REQUIRED.

Plotted Date: 1/28/2014

DESIGNER/DRAFTER: D. CHERBELETEA
CHECKED BY: D. NEWMAN
SCALE: 1/8" = 1'-0"

STATE OF CONNECTICUT
DEPARTMENT OF TRANSPORTATION

Filename: ...\FA_CGR_CPS_0170-2296_079_06_FEL_102.dgn

SIGNATURE/BLOCK:
STATE OF CONNECTICUT · RODNEY L. GRANT · LICENSED PROFESSIONAL ENGINEER
Hatch Mott MacDonald
Suite 100, North Lobby
400 Blue Hill Drive
Westwood, MA 02090

PROJECT TITLE:
NEW HAVEN - HARTFORD SPRINGFIELD RAIL CORRIDOR

TOWN: **MERIDEN**

DRAWING TITLE: **ELECTRICAL POWER PLATFORM PLAN PART B**

PROJECT NO. **170-3155**
DRAWING NO. **FEL-102**
SHEET NO. **03.13.033**

NOTES:

1. CONDUIT SIZES ARE PER NEC 2011 WITH ALLOWANCE FOR EXTRA CONDUCTORS.
2. CONDUIT ROUTES ARE SHOWN DIAGRAMMATICALLY. REFER TO DETAILS ON DWG. FEL-601 AND FEL-602 FOR TYPICAL LAYOUTS.
3. CANOPY MOUNTED CONDUITS AND JUNCTION BOXES TO BE KEPT AT A MINIMUM.
4. CONNECTION IN CANOPY FROM JUNCTION BOX TO FIXTURES IS LIQUIDTIGHT FLEXIBLE CONDUIT.
5. UNDERGROUND CONDUITS ARE TO BE CONCRETE INCASED 2" AND GROUPED TOGETHER 30" MINIMUM BELOW GRADE WHERE PRACTICAL.
6. CONDUITS WEST TOWER TO BE ROUTED UNDER THE PEDESTRIAN OVERPASS, SEE DWG. FEL-603.

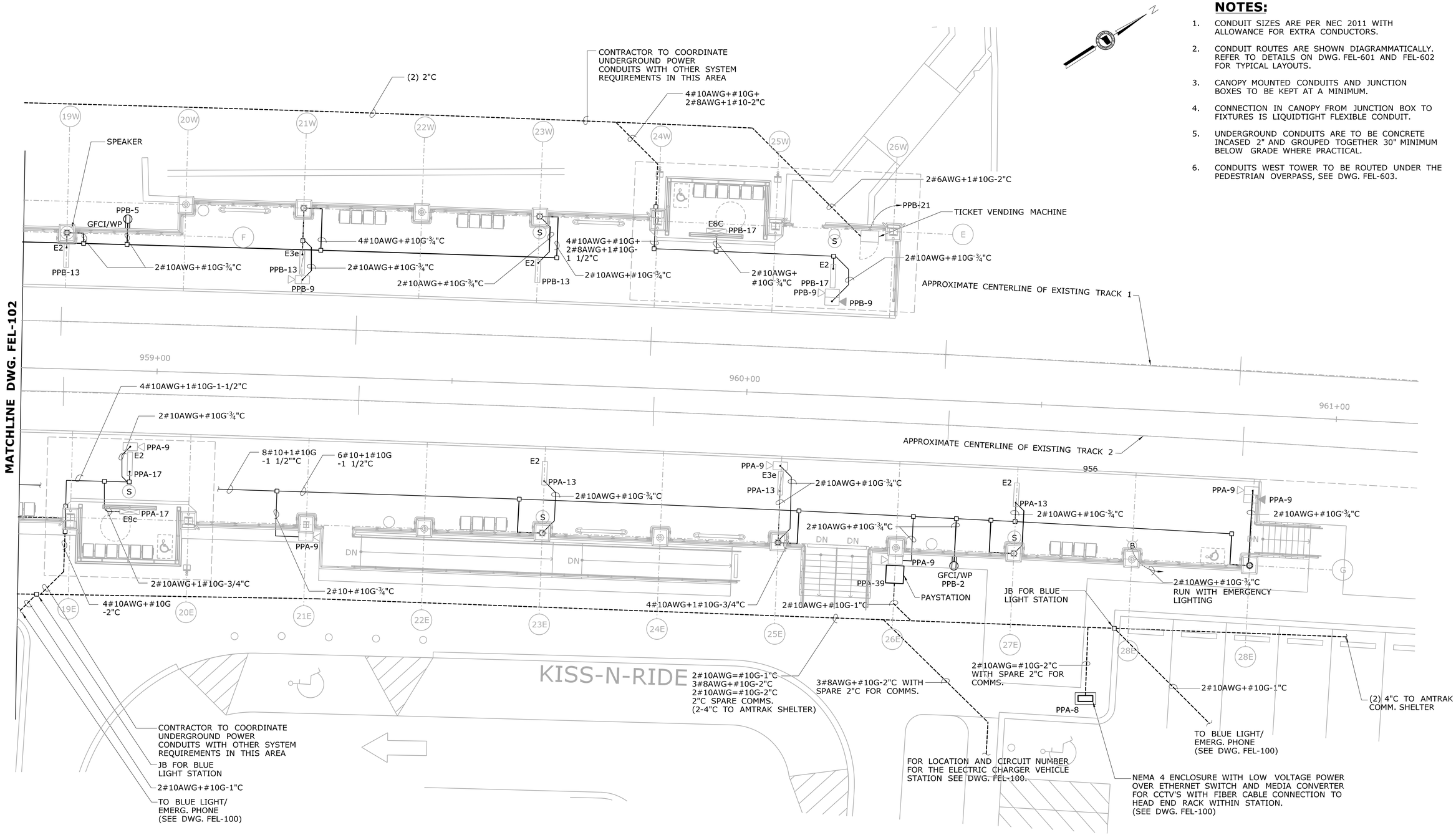

POWER PLAN PART C

SCALE: 1/8" = 1'-0"

REV.	DATE	REVISION DESCRIPTION	SHEET NO.
-	-	-	-
-	-	-	-
-	-	-	-
-	-	-	-
-	-	-	-
-	-	-	-

THE INFORMATION, INCLUDING ESTIMATED QUANTITIES OF WORK, SHOWN ON THESE SHEETS IS BASED ON LIMITED INVESTIGATIONS BY THE STATE AND IS IN NO WAY WARRANTED TO INDICATE THE CONDITIONS OF ACTUAL QUANTITIES OF WORK WHICH WILL BE REQUIRED.

Plotted Date: 1/28/2014

DESIGNER/DRAFTER: **D. CHERBELEATA**

CHECKED BY: **D. NEWMAN**

SCALE AS NOTED

STATE OF CONNECTICUT DEPARTMENT OF TRANSPORTATION

Filename: ...\FA_CGR_CPS_0170-2296_079__06_FEL__103.dgn

SIGNATURE/ BLOCK:

STATE OF CONNECTICUT DOT & GRANTSUM LICENSED PROFESSIONAL ENGINEER

Hatch Mott MacDonald
Suite 100, North Lobby
400 Blue Hill Drive
Westwood, MA 02090

PROJECT TITLE: **NEW HAVEN - HARTFORD SPRINGFIELD RAIL CORRIDOR**

TOWN: **MERIDEN**

DRAWING TITLE: **ELECTRICAL POWER PLATFORM PLAN PART C**

PROJECT NO. **170-3155**

DRAWING NO. **FEL-103**

SHEET NO. **03.13.034**

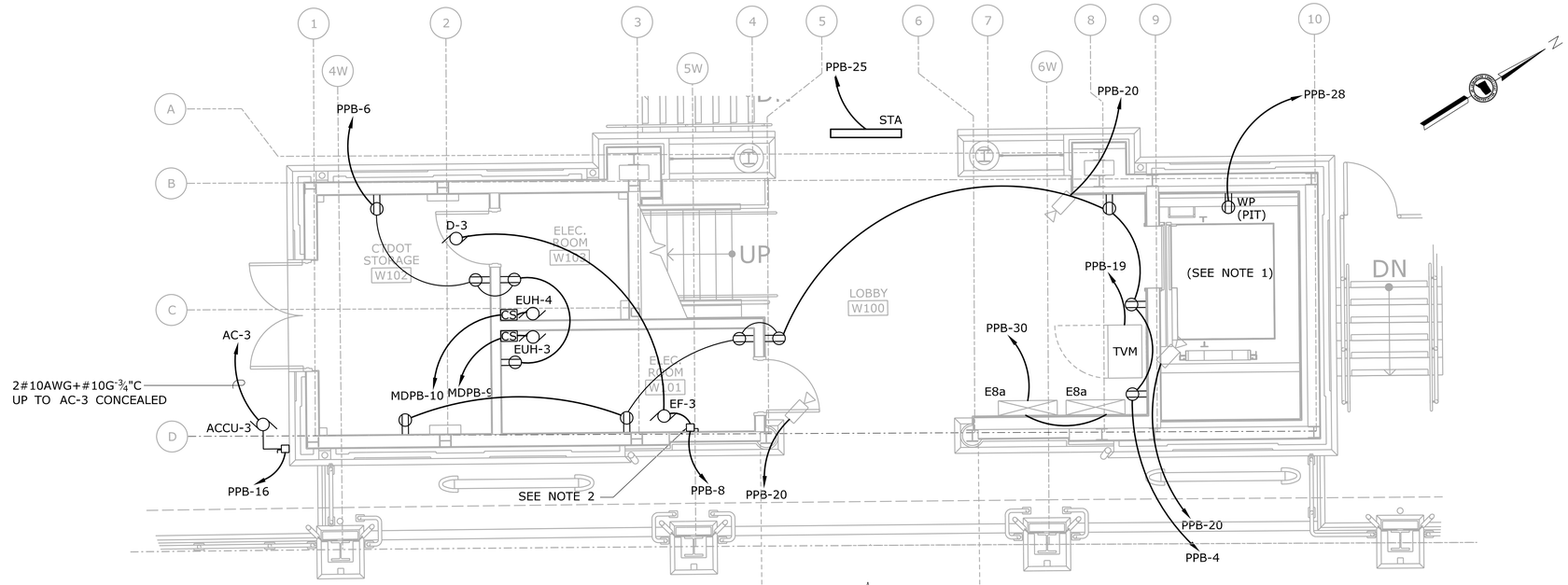

NOTES:

1. SEE DWG. FEL-604 FOR ELEVATOR EQUIPMENT REQUIREMENTS.
2. ALL DISCONNECT SWITCHES ARE 30A.

POWER PLAN - WEST TOWER GROUND LEVEL

SCALE: ¼" = 1'-0"

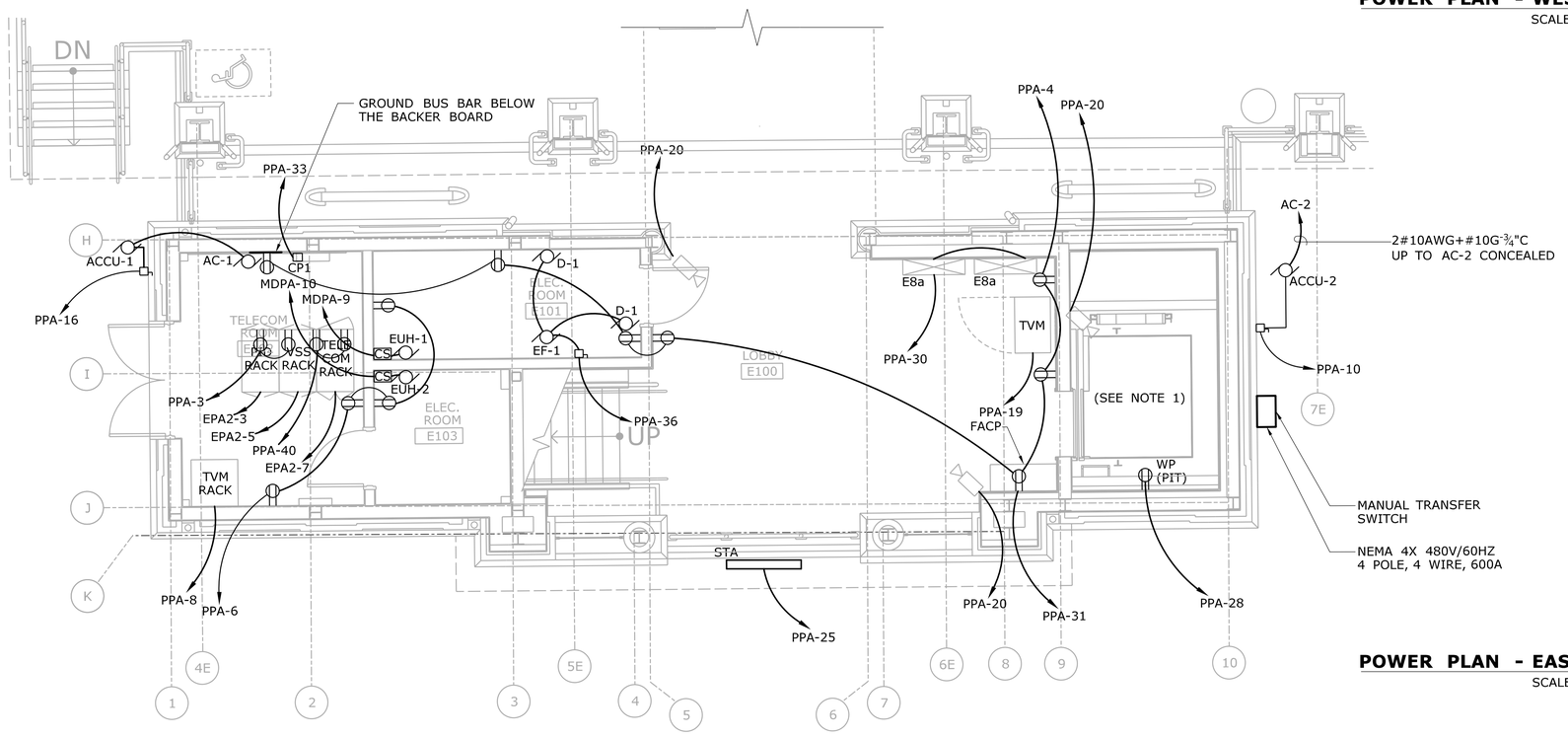

POWER PLAN - EAST TOWER GROUND LEVEL

SCALE: ¼" = 1'-0"

REV.	DATE	REVISION DESCRIPTION	SHEET NO.
-	-	-	-
-	-	-	-
-	-	-	-
-	-	-	-
-	-	-	-
-	-	-	-

THE INFORMATION, INCLUDING ESTIMATED QUANTITIES OF WORK, SHOWN ON THESE SHEETS IS BASED ON LIMITED INVESTIGATIONS BY THE STATE AND IS IN NO WAY WARRANTED TO INDICATE THE CONDITIONS OF ACTUAL QUANTITIES OF WORK WHICH WILL BE REQUIRED.

Plotted Date: 1/22/2014

DESIGNER/DRAFTER: **D. CHERBELEATA**
CHECKED BY: **D. NEWMAN**
SCALE: ¼" = 1'-0"

STATE OF CONNECTICUT
DEPARTMENT OF TRANSPORTATION

Filename: ...\FA_CGR_CPS_0170-2296_079__06_FEL__104.dgn

SIGNATURE/BLOCK:
STATE OF CONNECTICUT · HUGH S. GRANT · LICENSED PROFESSIONAL ENGINEER
Hatch Mott MacDonald
Suite 100, North Lobby
400 Blue Hill Drive
Westwood, MA 02090

PROJECT TITLE:
NEW HAVEN - HARTFORD SPRINGFIELD RAIL CORRIDOR

TOWN: **MERIDEN**

DRAWING TITLE: **ELEC. POWER PLAN-EAST TOWER GROUND LEVEL**

PROJECT NO. **170-3155**
DRAWING NO. **FEL-104**
SHEET NO. **03.13.035**

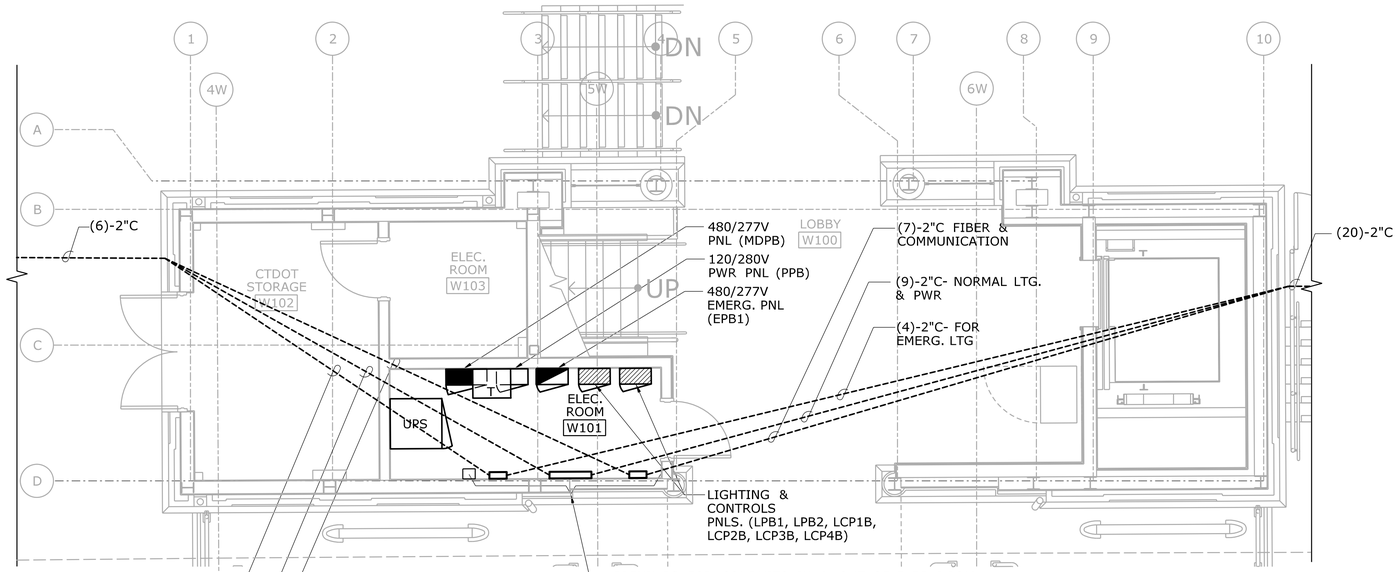

STATION GROUND LEVEL - WEST (B / FEL-101)
SCALE: 1/4" = 1'-0"

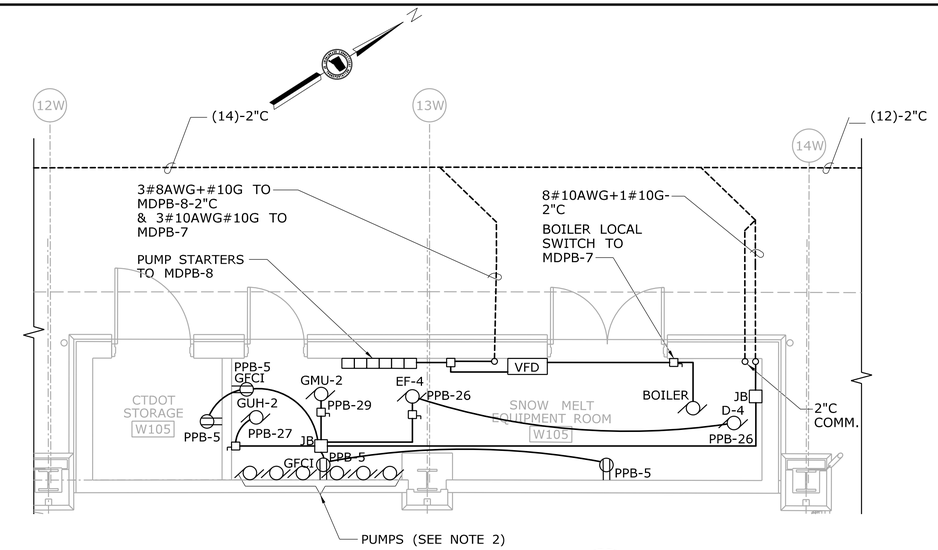

SNOW MELT ROOM - WEST (D / FEL-102)
SCALE: 1/4" = 1'-0"

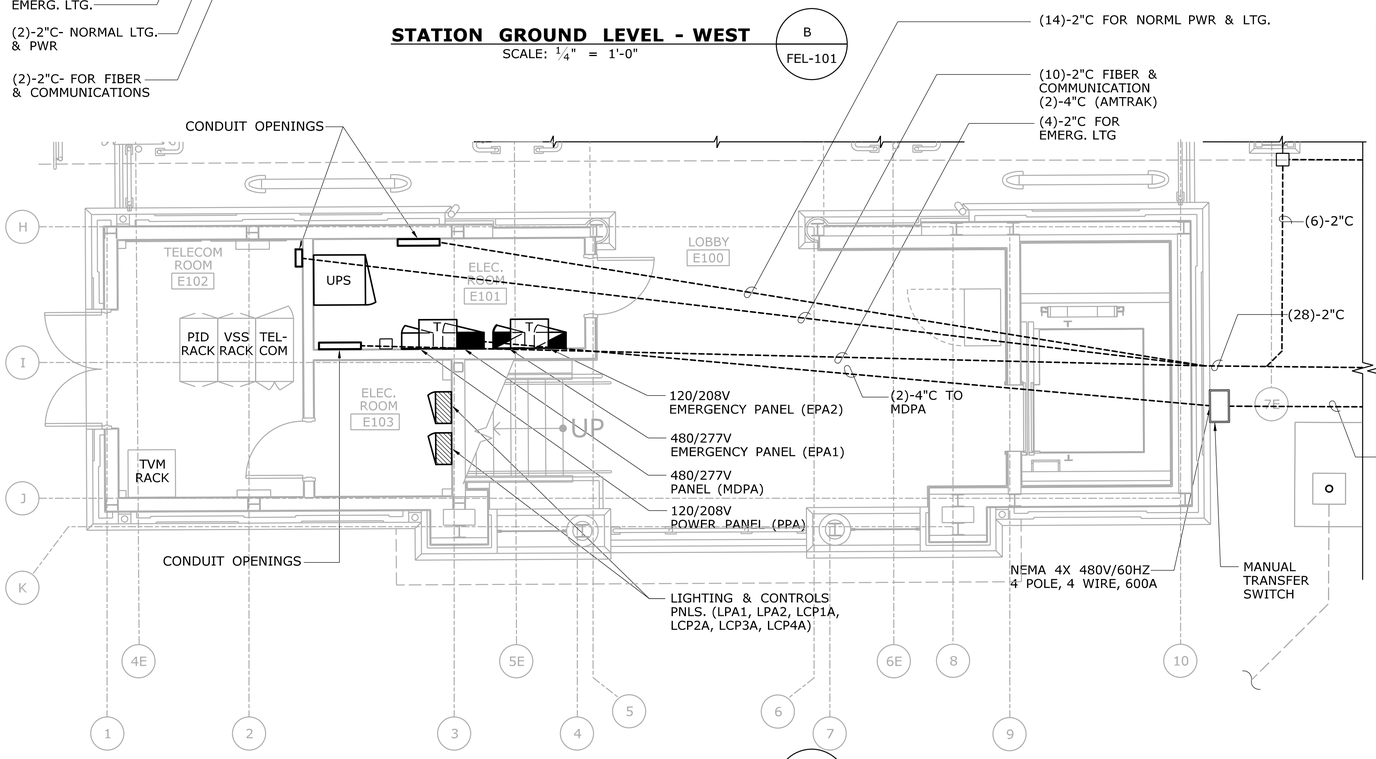

STATION GROUND LEVEL - EAST (A / FEL-101)
SCALE: 1/4" = 1'-0"

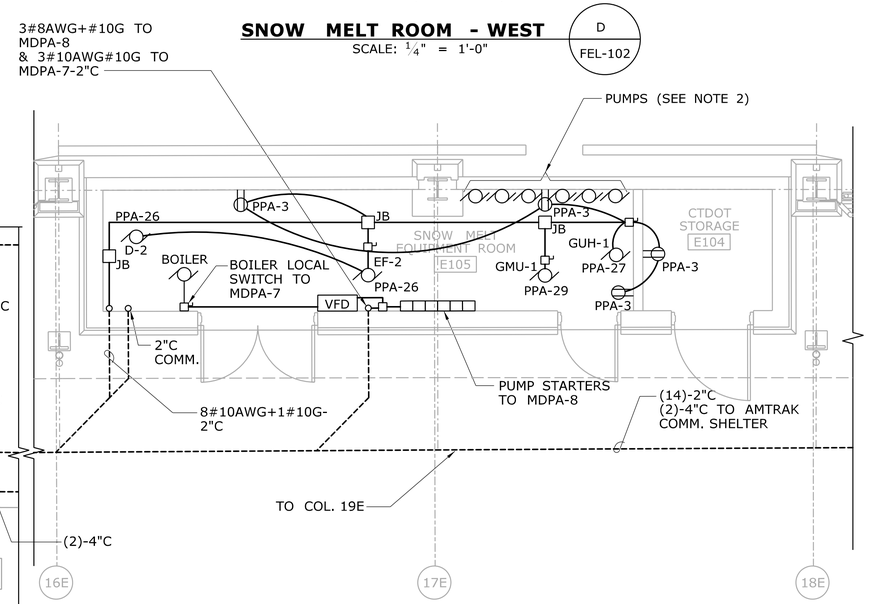

SNOW MELT ROOM - EAST (C / FEL-102)
SCALE: 1/4" = 1'-0"

NOTES:

1. SEE DWG. FLI-801, 802, 803-PANEL SCHEDULES FOR MOTOR, CONDUCTOR & CONDUIT SIZES.
2. SEE ONE LINE DIAGRAMS FEL-701 & FEL-702.
3. TOTAL NUMBER OF CONDUITS SHOWN ON THIS DWG. INCLUDES LIGHTING AND COMMUNICATION.

REV.	DATE	REVISION DESCRIPTION	SHEET NO.
-	-	-	-
-	-	-	-
-	-	-	-
-	-	-	-
-	-	-	-
-	-	-	-

THE INFORMATION, INCLUDING ESTIMATED QUANTITIES OF WORK, SHOWN ON THESE SHEETS IS BASED ON LIMITED INVESTIGATIONS BY THE STATE AND IS IN NO WAY WARRANTED TO INDICATE THE CONDITIONS OF ACTUAL QUANTITIES OF WORK WHICH WILL BE REQUIRED.

Plotted Date: 1/28/2014

DESIGNER/DRAFTER: D.CHERBELEATA
CHECKED BY: D. NEWMAN
SCALE: 1/4" = 1'-0"

STATE OF CONNECTICUT
DEPARTMENT OF TRANSPORTATION

Filename: ...\FA..CGR..CPS..0170-2296..079...06..FEL...105.dgn

SIGNATURE/BLOCK:
STATE OF CONNECTICUT ROBIN K. GRANTHAM 25 LICENSED PROFESSIONAL ENGINEER

Hatch Mott MacDonald
Suite 100, North Lobby
400 Blue Hill Drive
Westwood, MA 02090

PROJECT TITLE:
NEW HAVEN - HARTFORD SPRINGFIELD RAIL CORRIDOR

TOWN: MERIDEN

DRAWING TITLE:
ELECTRICAL POWER EQUIPMENT ROOMS PLANS

PROJECT NO. 170-3155
DRAWING NO. FEL-105
SHEET NO. 03.13.036

NOTES:

1. ALL DISCONNECT SWITCHES ARE 30A.

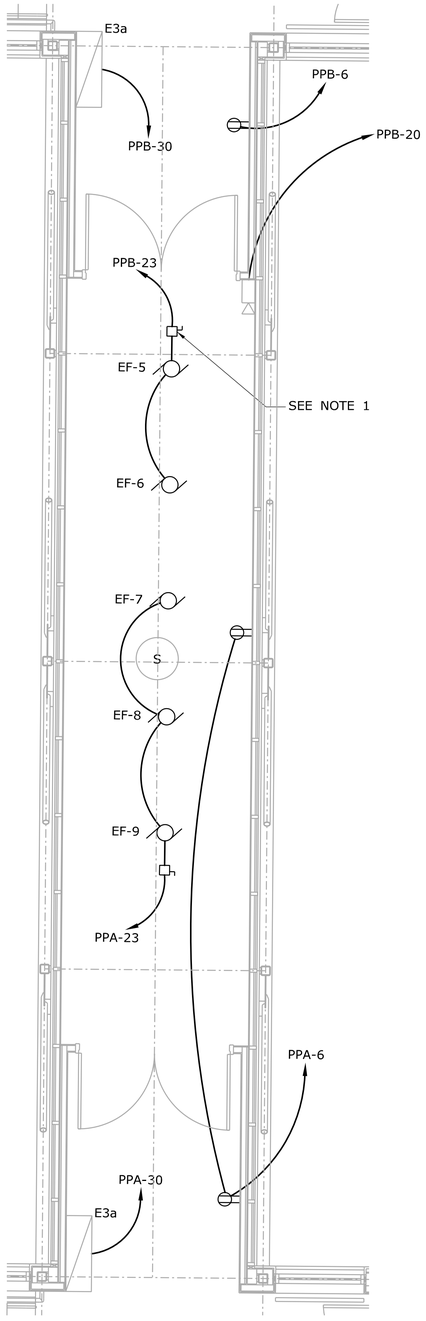

PEDESTRIAN BRIDGE PLAN

SCALE: 1/4" = 1'-0"

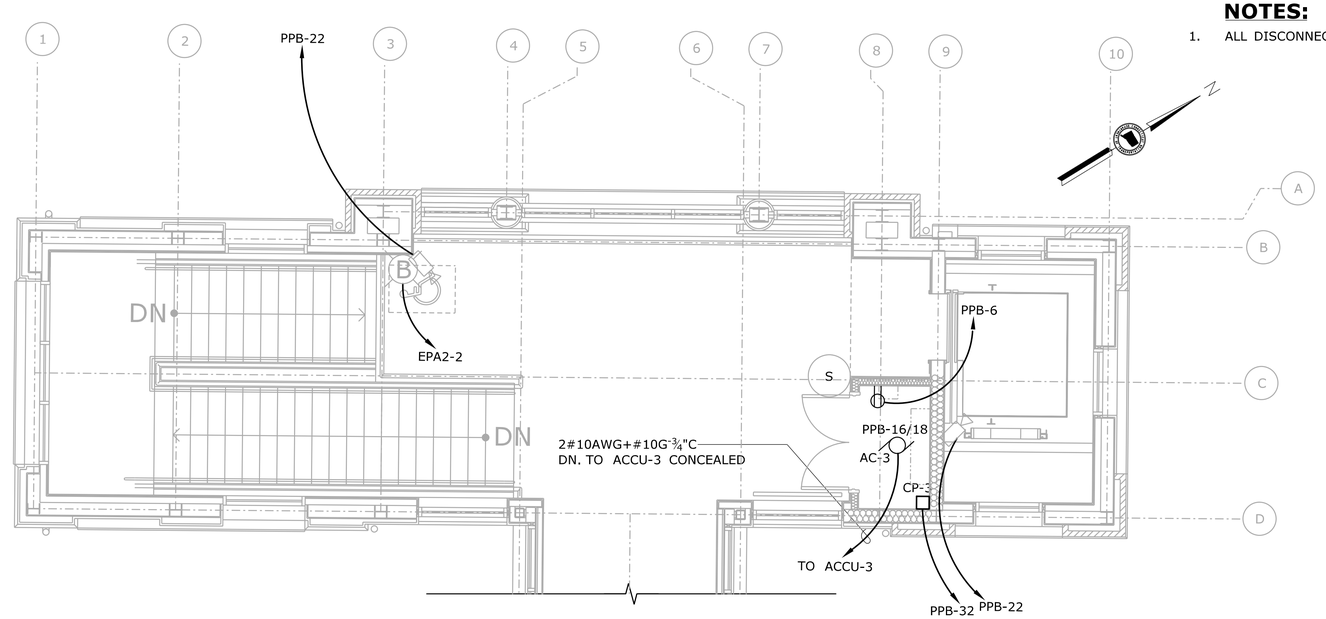

ENLARGED PLAN - WEST TOWER

SCALE: 1/4" = 1'-0"

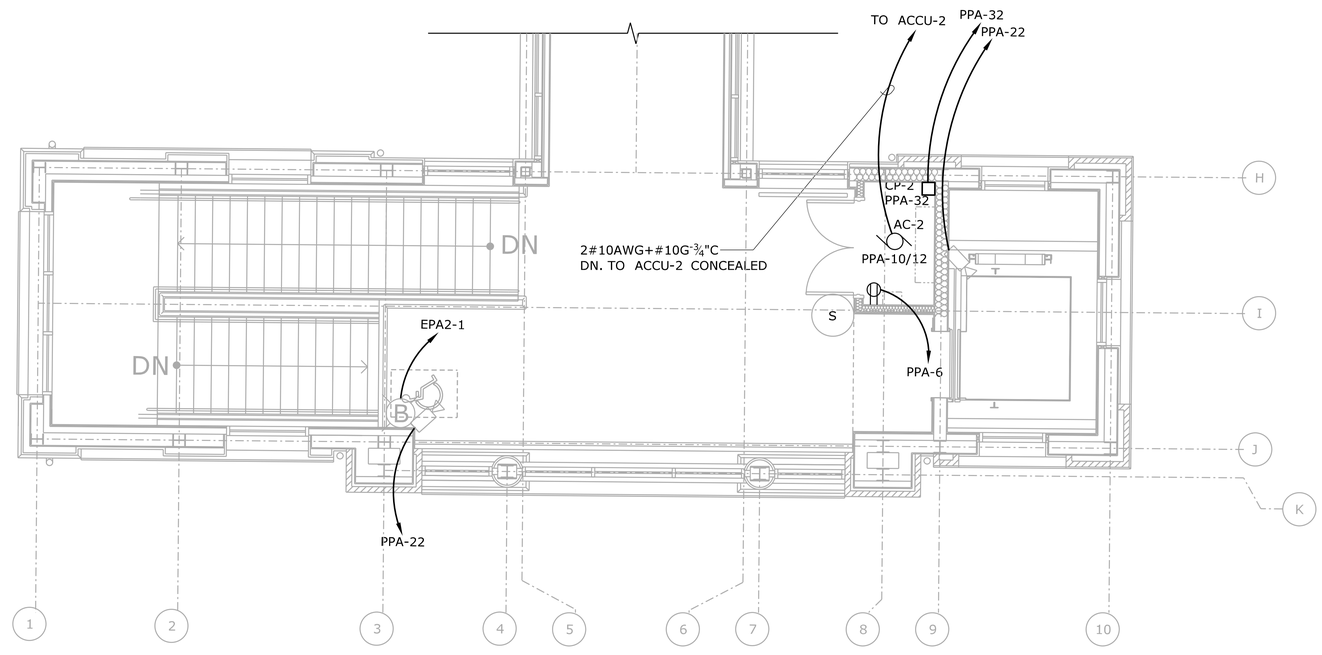

ENLARGED PLAN - EAST TOWER

SCALE: 1/4" = 1'-0"

REV.	DATE	REVISION DESCRIPTION	SHEET NO.
-	-	-	-
-	-	-	-
-	-	-	-
-	-	-	-
-	-	-	-
-	-	-	-

THE INFORMATION, INCLUDING ESTIMATED QUANTITIES OF WORK, SHOWN ON THESE SHEETS IS BASED ON LIMITED INVESTIGATIONS BY THE STATE AND IS IN NO WAY WARRANTED TO INDICATE THE CONDITIONS OF ACTUAL QUANTITIES OF WORK WHICH WILL BE REQUIRED.

Plotted Date: 1/27/2014

DESIGNER/DRAFTER: **D.CHERBELEATA**

CHECKED BY: **D. NEWMAN**

SCALE: 1/4" = 1'-0"

STATE OF CONNECTICUT
DEPARTMENT OF TRANSPORTATION

Filename: ...\FA_CGR_CPS_0170-2296_079_-_06_FEL_-_106.dgn

SIGNATURE/ BLOCK:

STATE OF CONNECTICUT · ROBERT S. GRAVINO · LICENSED PROFESSIONAL ENGINEER

Hatch Mott MacDonald
Suite 100, North Lobby
400 Blue Hill Drive
Westwood, MA 02090

PROJECT TITLE:

NEW HAVEN - HARTFORD SPRINGFIELD RAIL CORRIDOR

TOWN: **MERIDEN**

DRAWING TITLE: **ELECTRICAL POWER PED. BRIDGE PLANS**

PROJECT NO. **170-3155**

DRAWING NO. **FEL-106**

SHEET NO. **03.13.037**

NOTES:

1. CONTRACTOR TO FURNISH 4/0 AWG BARE COPPER CONDUCTOR.
2. GROUND ROD SHALL BE ¾" DIAMETER 10FT LONG COPPER CLAD STEEL LOCATED AS SHOWN ON PLANS.
3. BURIED CONNECTIONS SHALL BE EXOTHERMIC WELD TYPE PER MANUFACTURERS INSTRUCTIONS.
4. INSTALL 1/0 AWG CU BONDING CABLES FROM THE BARE 4/0 AWG CU PERIMETER GROUNDING CABLE TO ALL ABOVE GRADE CONNECTION, SUCH AS STEEL COLUMNS, HANDRAILS, AND PASSENGER BENCHES.
5. FOR ADDITIONAL PLATFORM GROUNDING CONNECTIONS SEE DWG. FEL-605 & FEL-606.
6. CONTRACTORS TO ATTACH EXISTING BUILDING GROUND CABLE WHERE EXPOSED.

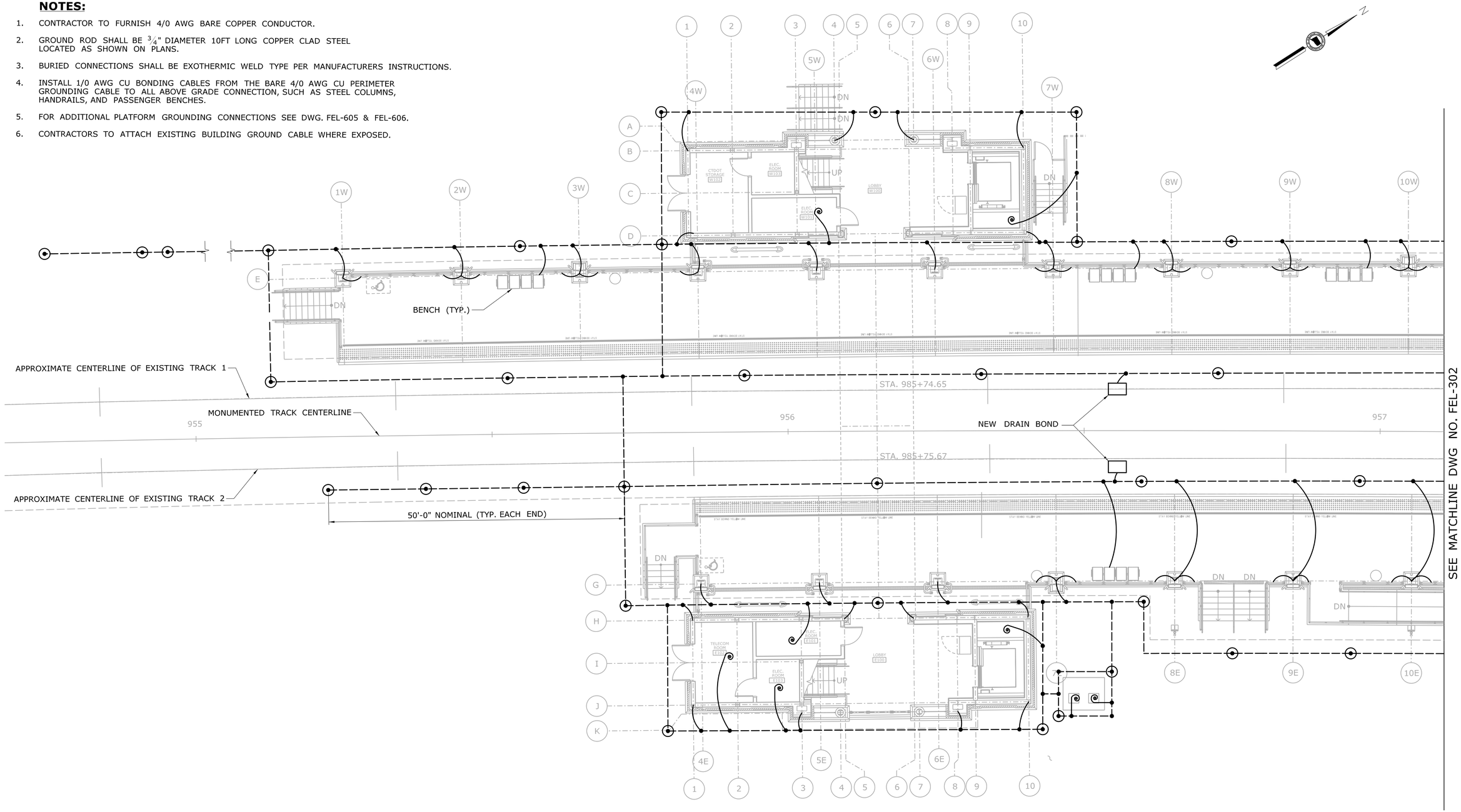

GROUNDING PLAN - PART A

SCALE: ⅛" = 1'-0"

REV.	DATE	REVISION DESCRIPTION	SHEET NO.
-	-	-	-
-	-	-	-
-	-	-	-
-	-	-	-
-	-	-	-
-	-	-	-

THE INFORMATION, INCLUDING ESTIMATED QUANTITIES OF WORK, SHOWN ON THESE SHEETS IS BASED ON LIMITED INVESTIGATIONS BY THE STATE AND IS IN NO WAY WARRANTED TO INDICATE THE CONDITIONS OF ACTUAL QUANTITIES OF WORK WHICH WILL BE REQUIRED.

Plotted Date: 1/16/2014

DESIGNER/DRAFTER: **W. CAREY**

CHECKED BY: **D. NEWMAN**

SCALE: ⅛" = 1'-0"

STATE OF CONNECTICUT
DEPARTMENT OF TRANSPORTATION

Filename: ...\FA_CGR_CPS_0170-2296_079_-_06_FEL_-_301.dgn

SIGNATURE/ BLOCK:

Hatch Mott MacDonald
Suite 100, North Lobby
400 Blue Hill Drive
Westwood, MA 02090

PROJECT TITLE:

NEW HAVEN - HARTFORD SPRINGFIELD RAIL CORRIDOR

TOWN: **MERIDEN**

DRAWING TITLE: **ELEC. GROUNDING PLATFORM PLAN PART A**

PROJECT NO. **170-3155**

DRAWING NO. **FEL-301**

SHEET NO. **03.13.038**

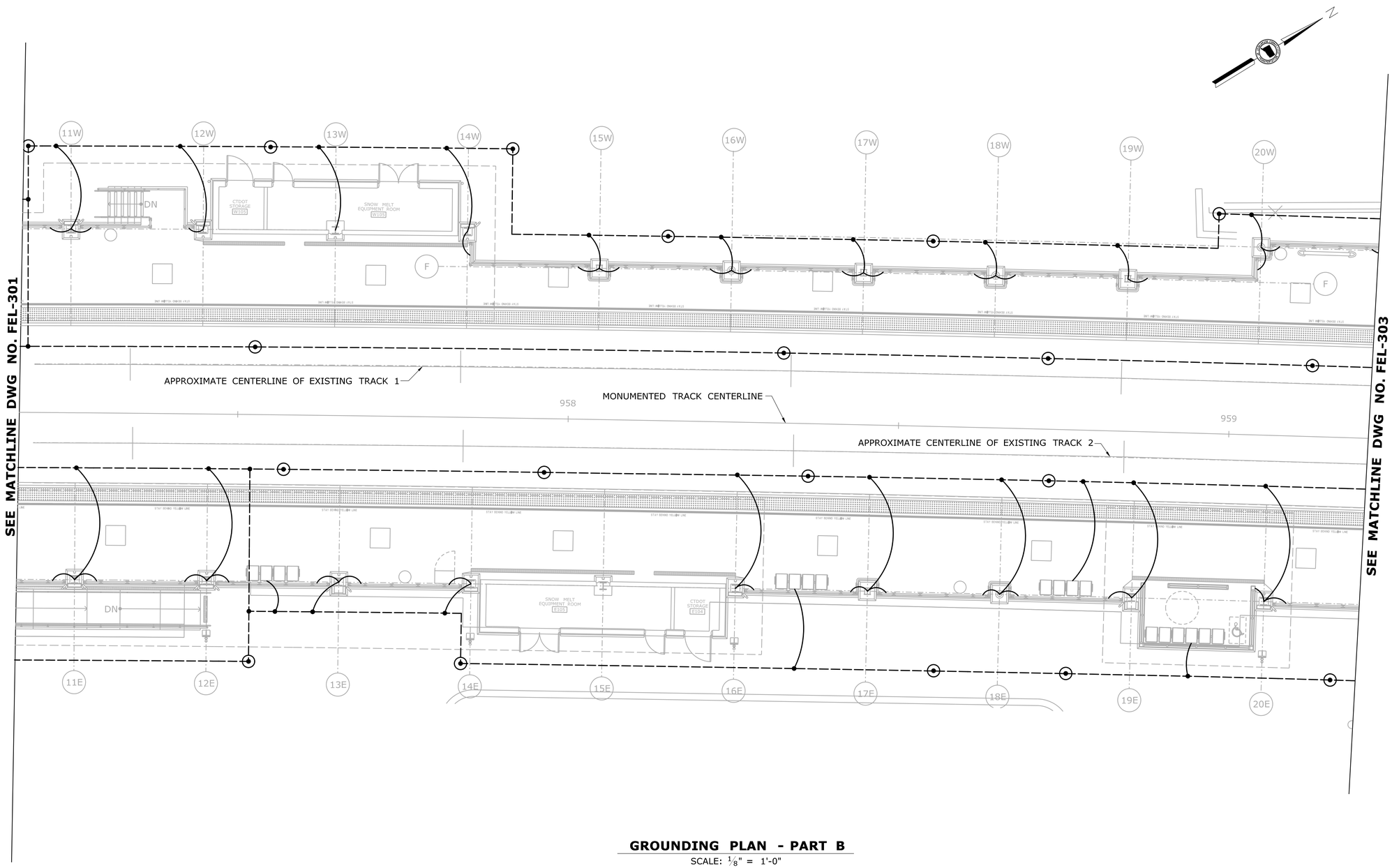

GROUNDING PLAN - PART B

SCALE: 1/8" = 1'-0"

REV.	DATE	REVISION DESCRIPTION	SHEET NO.
-	-	-	-
-	-	-	-
-	-	-	-
-	-	-	-
-	-	-	-
-	-	-	-

THE INFORMATION, INCLUDING ESTIMATED QUANTITIES OF WORK, SHOWN ON THESE SHEETS IS BASED ON LIMITED INVESTIGATIONS BY THE STATE AND IS IN NO WAY WARRANTED TO INDICATE THE CONDITIONS OF ACTUAL QUANTITIES OF WORK WHICH WILL BE REQUIRED.

Plotted Date: 1/16/2014

DESIGNER/DRAFTER: **W. CAREY**

CHECKED BY: **D. NEWMAN**

SCALE: 1/8" = 1'-0"

STATE OF CONNECTICUT
DEPARTMENT OF TRANSPORTATION

Filename: ...\FA_CGR_CPS_0170-2296_079_06_FEL_302.dgn

SIGNATURE/ BLOCK:

Hatch Mott MacDonald
Suite 100, North Lobby
400 Blue Hill Drive
Westwood, MA 02090

PROJECT TITLE:

NEW HAVEN - HARTFORD SPRINGFIELD RAIL CORRIDOR

TOWN: **MERIDEN**

DRAWING TITLE: **ELEC. GROUNDING PLATFORM PLAN PART B**

PROJECT NO. **170-3155**

DRAWING NO. **FEL-302**

SHEET NO. **03.13.039**

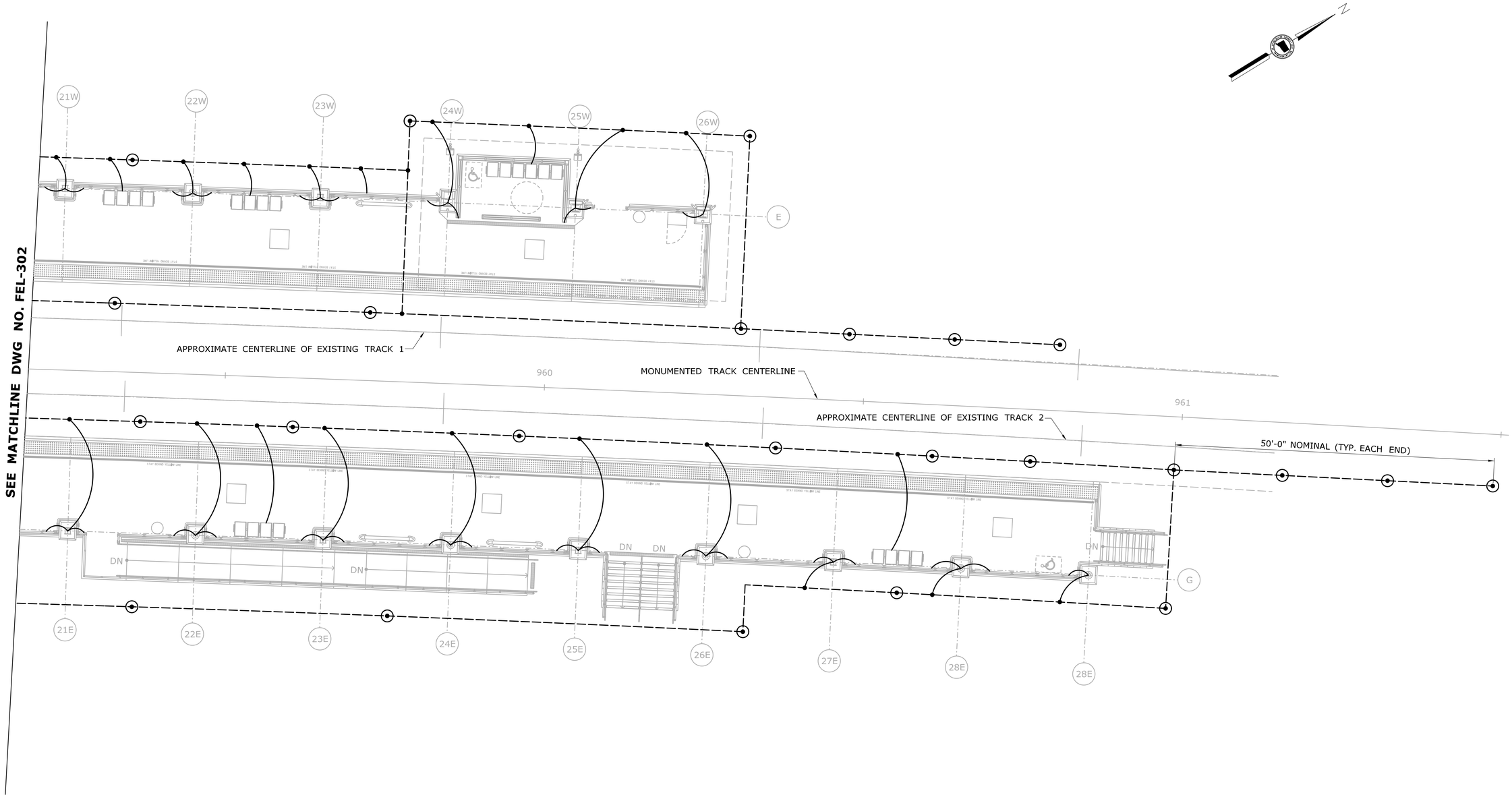

GROUNDING PLAN - PART C

SCALE: 1/8" = 1'-0"

REV.	DATE	REVISION DESCRIPTION	SHEET NO.
-	-	-	-
-	-	-	-
-	-	-	-
-	-	-	-
-	-	-	-
-	-	-	-

THE INFORMATION, INCLUDING ESTIMATED QUANTITIES OF WORK, SHOWN ON THESE SHEETS IS BASED ON LIMITED INVESTIGATIONS BY THE STATE AND IS IN NO WAY WARRANTED TO INDICATE THE CONDITIONS OF ACTUAL QUANTITIES OF WORK WHICH WILL BE REQUIRED.

Plotted Date: 1/16/2014

DESIGNER/DRAFTER: **W. CAREY**

CHECKED BY: **D. NEWMAN**

SCALE: 1/8" = 1'-0"

STATE OF CONNECTICUT
DEPARTMENT OF TRANSPORTATION

Filename: ...\FA..CGR..CPS..0170-2296..079...06..FEL...303.dgn

SIGNATURE/ BLOCK:

STATE OF CONNECTICUT BOOM & GRANT LICENSED PROFESSIONAL ENGINEER

Hatch Mott MacDonald
Suite 100, North Lobby
400 Blue Hill Drive
Westwood, MA 02090

PROJECT TITLE:

NEW HAVEN - HARTFORD SPRINGFIELD RAIL CORRIDOR

TOWN: **MERIDEN**

DRAWING TITLE: **ELEC. GROUNDING PLATFORM PLAN PART C**

PROJECT NO. **170-3155**

DRAWING NO. **FEL-303**

SHEET NO. **03.13.040**

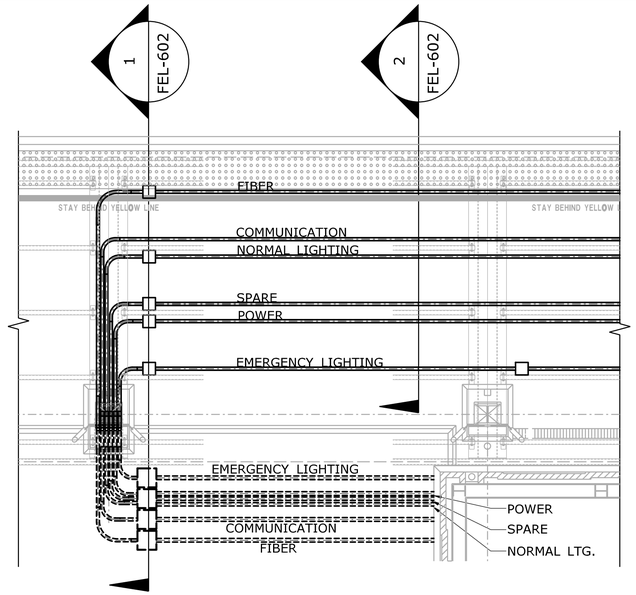

TYPICAL CANOPY COLUMN RISER CONDUIT PLAN (SIMILAR FOR COLS. 7E, 19E, 3W, 10W & 24W)

SCALE: 1/4" = 1'-0"

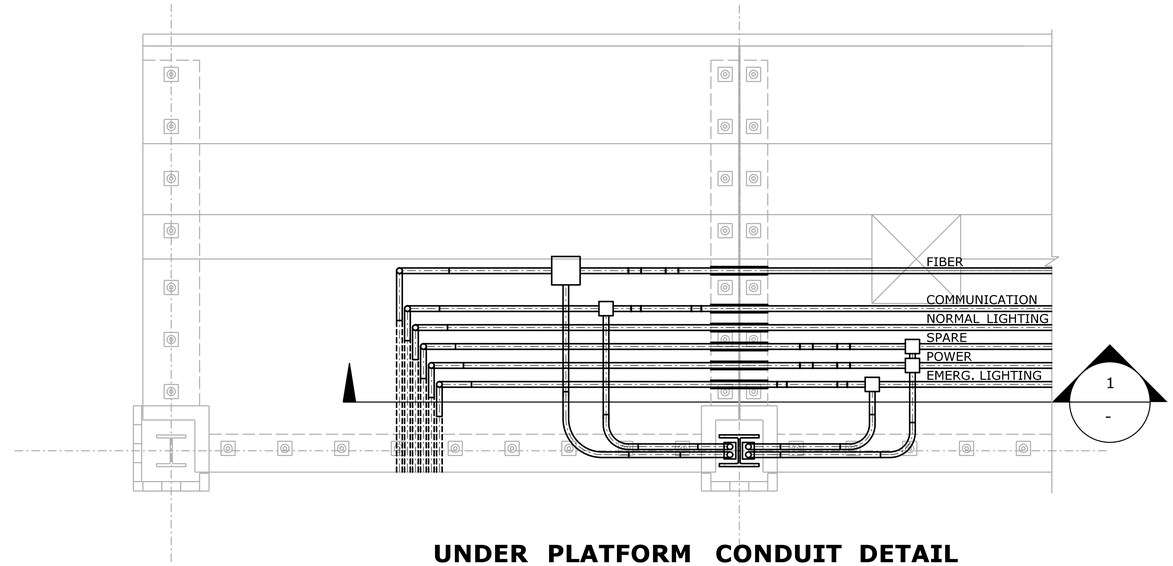

UNDER PLATFORM CONDUIT DETAIL

SCALE: 3/8" = 1'-0"

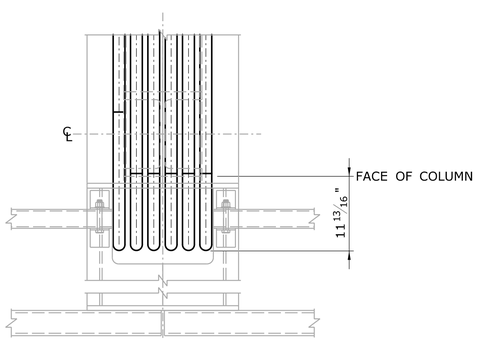

CONDUITS ON TOP OF CANOPY DETAIL

SCALE: 1" = 1'-0"

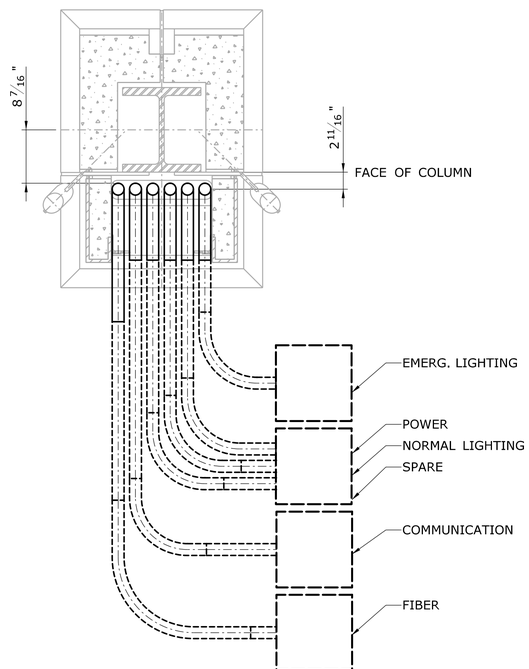

CONDUITS AT BASE OF COLUMN DETAIL

SCALE: 1" = 1'-0"

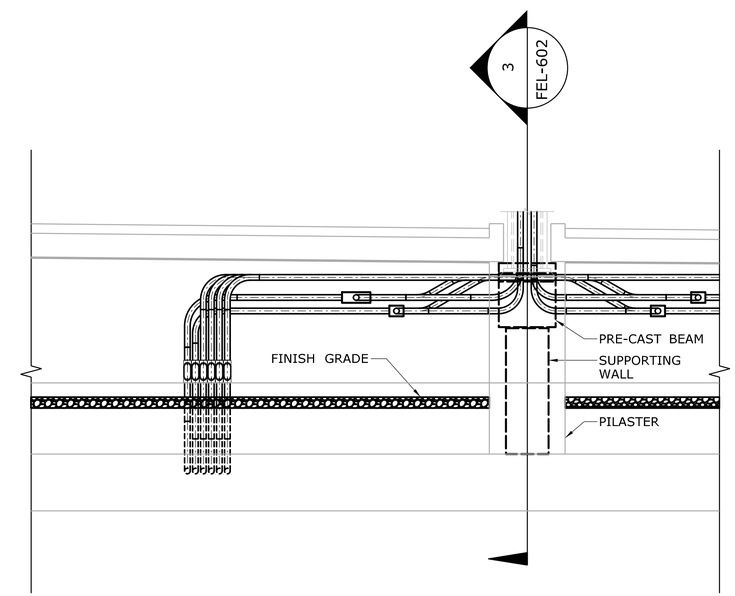

1 / - **SECTION**

SCALE: 3/8" = 1'-0"

REV.	DATE	REVISION DESCRIPTION	SHEET NO.
-	-	-	-
-	-	-	-
-	-	-	-
-	-	-	-
-	-	-	-
-	-	-	-

THE INFORMATION, INCLUDING ESTIMATED QUANTITIES OF WORK, SHOWN ON THESE SHEETS IS BASED ON LIMITED INVESTIGATIONS BY THE STATE AND IS IN NO WAY WARRANTED TO INDICATE THE CONDITIONS OF ACTUAL QUANTITIES OF WORK WHICH WILL BE REQUIRED.

Plotted Date: 1/28/2014

DESIGNER/DRAFTER: **W. CAREY**

CHECKED BY: **D. NEWMAN**

SCALE: AS NOTED

STATE OF CONNECTICUT
DEPARTMENT OF TRANSPORTATION

Filename: ...\FA..CGR..CPS..0170-2296..079...06..FEL..601.dgn

SIGNATURE/ BLOCK:

STATE OF CONNECTICUT JOHN K. GRANTHAM LICENSED PROFESSIONAL ENGINEER

Hatch Mott MacDonald
Suite 100, North Lobby
400 Blue Hill Drive
Westwood, MA 02090

PROJECT TITLE:

NEW HAVEN - HARTFORD SPRINGFIELD RAIL CORRIDOR

TOWN: **MERIDEN**

DRAWING TITLE: **CONDUIT - SECTIONS & DETAILS SHEET 1 OF 3**

PROJECT NO. **170-3155**

DRAWING NO. **FEL-601**

SHEET NO. **03.13.041**

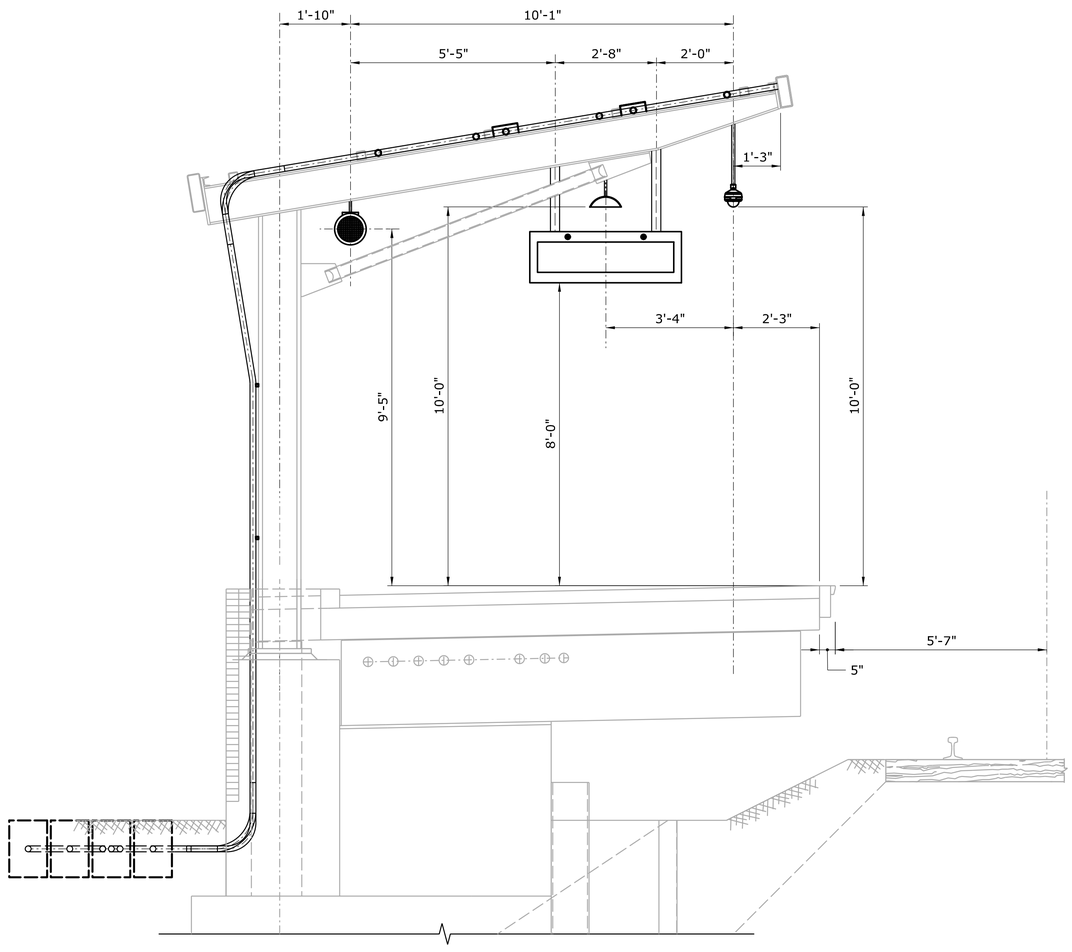

1 FEL-601 **SECTION 1**
SCALE: ½" = 1'-0"

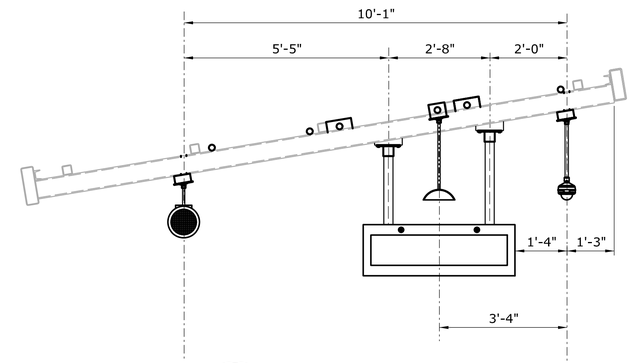

2 FEL-601 **SECTION 2**
SCALE: ½" = 1'-0"

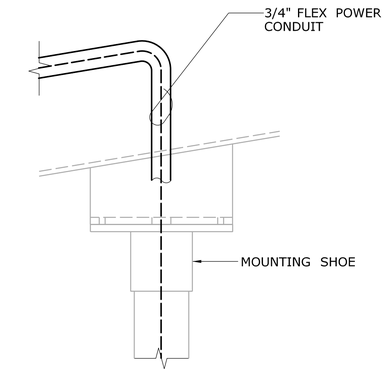

DETAIL 1
NOT TO SCALE

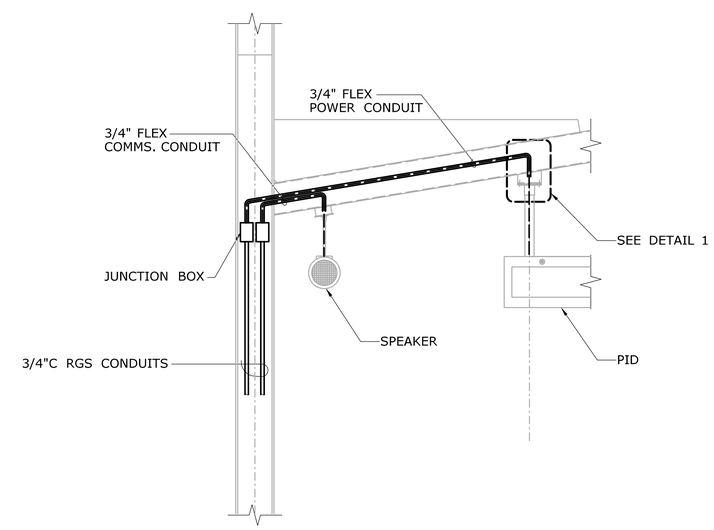

3 FEL-601 **SECTION 3**
SCALE: ½" = 1'-0"

REV.	DATE	REVISION DESCRIPTION	SHEET NO.
-	-	-	-
-	-	-	-
-	-	-	-
-	-	-	-
-	-	-	-
-	-	-	-

THE INFORMATION, INCLUDING ESTIMATED QUANTITIES OF WORK, SHOWN ON THESE SHEETS IS BASED ON LIMITED INVESTIGATIONS BY THE STATE AND IS IN NO WAY WARRANTED TO INDICATE THE CONDITIONS OF ACTUAL QUANTITIES OF WORK WHICH WILL BE REQUIRED.

Plotted Date: 1/22/2014

DESIGNER/DRAFTER: **W. CAREY**
CHECKED BY: **D. NEWMAN**
SCALE AS NOTED

STATE OF CONNECTICUT
DEPARTMENT OF TRANSPORTATION

Filename: ...\FA_CGR_CPS_0170-2296_079__06_FEL__602.dgn

SIGNATURE/ BLOCK:
STATE OF CONNECTICUT · ROBERT A. GRANTHAM · 25 · LICENSED PROFESSIONAL ENGINEER
Hatch Mott MacDonald
Suite 100, North Lobby
400 Blue Hill Drive
Westwood, MA 02090

PROJECT TITLE:
NEW HAVEN - HARTFORD SPRINGFIELD RAIL CORRIDOR

TOWN: **MERIDEN**

DRAWING TITLE:
CONDUIT - SECTIONS & DETAILS SHEET 2 OF 3

PROJECT NO. **170-3155**
DRAWING NO. **FEL-602**
SHEET NO. **03.13.042**

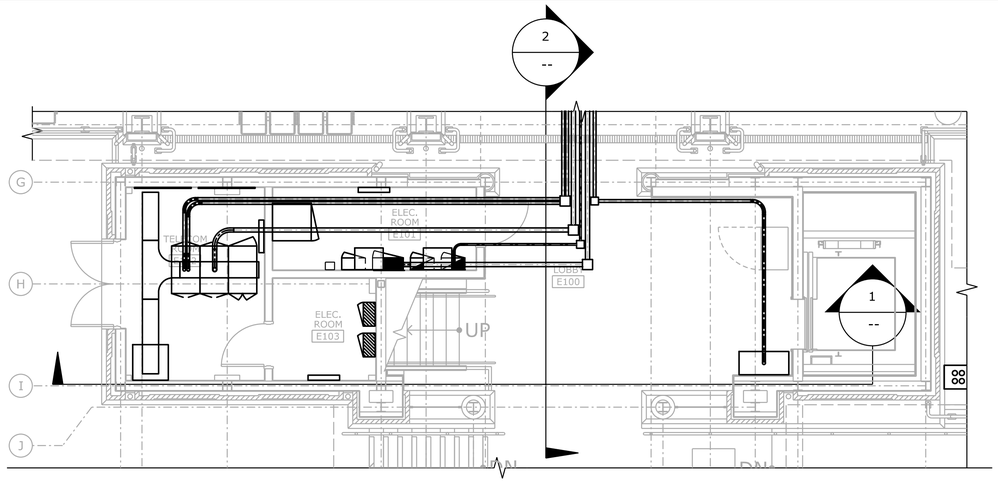

CONDUITS UNDER PEDESTRIAN OVERPASS FOR ALL STATIONS

SCALE: 3/16" = 1'-0"

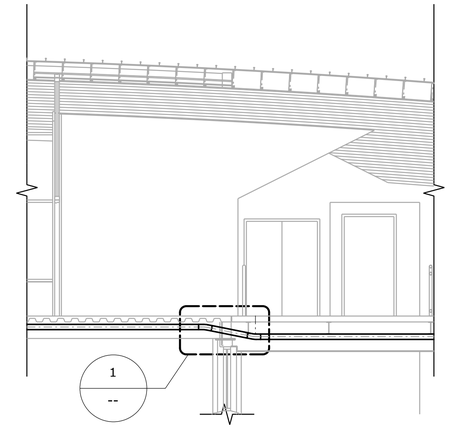

2 -- **SECTION 2**

SCALE: 3/16" = 1'-0"

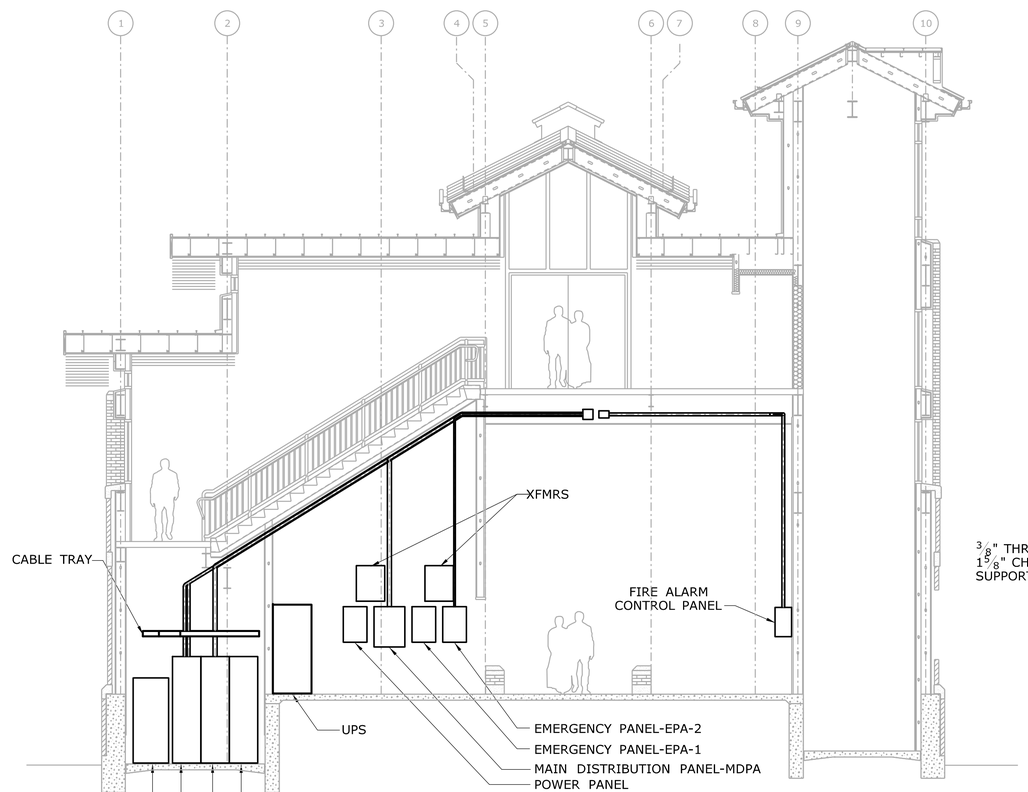

1 -- **SECTION 1**

SCALE: 3/16" = 1'-0"

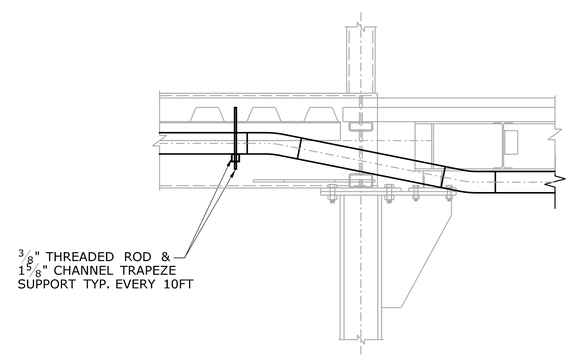

1 -- **DETAIL 1**

SCALE: 3/4" = 1'-0"

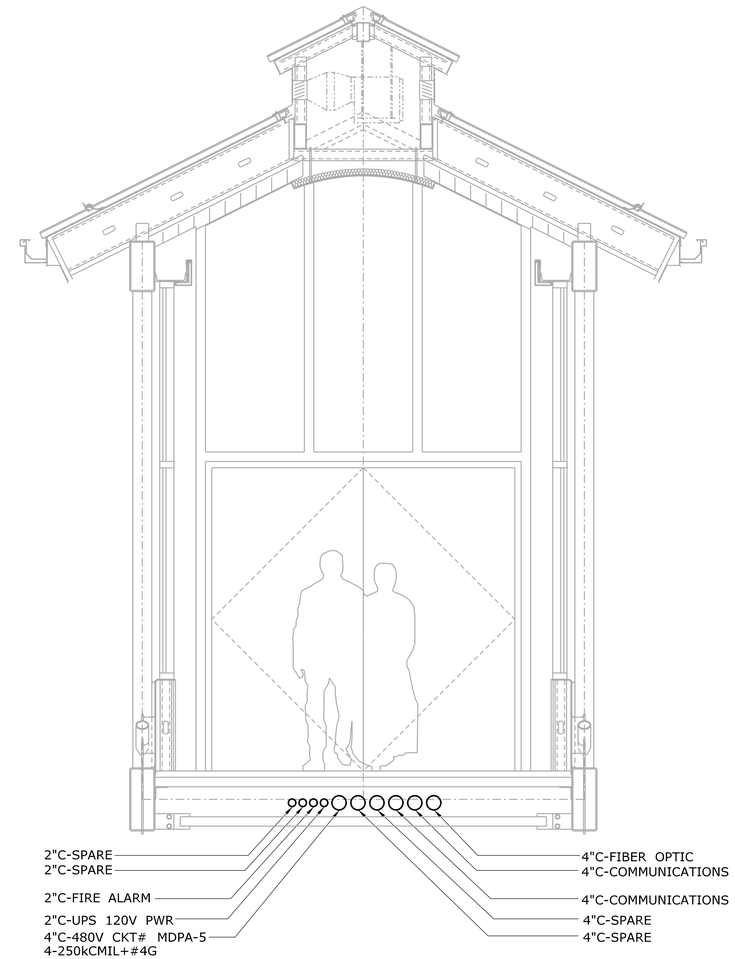

REV.	DATE	REVISION DESCRIPTION	SHEET NO.
-	-	-	-
-	-	-	-
-	-	-	-
-	-	-	-
-	-	-	-
-	-	-	-

THE INFORMATION, INCLUDING ESTIMATED QUANTITIES OF WORK, SHOWN ON THESE SHEETS IS BASED ON LIMITED INVESTIGATIONS BY THE STATE AND IS IN NO WAY WARRANTED TO INDICATE THE CONDITIONS OF ACTUAL QUANTITIES OF WORK WHICH WILL BE REQUIRED.

Plotted Date: 1/16/2014

DESIGNER/DRAFTER: **W. CAREY**

CHECKED BY: **D. NEWMAN**

SCALE AS NOTED

STATE OF CONNECTICUT
DEPARTMENT OF TRANSPORTATION

Filename: ...\FA..CGR..CPS..0170-2296..079...06..FEL..603.dgn

SIGNATURE/ BLOCK:

Hatch Mott MacDonald
Suite 100, North Lobby
400 Blue Hill Drive
Westwood, MA 02090

PROJECT TITLE:

NEW HAVEN - HARTFORD SPRINGFIELD RAIL CORRIDOR

TOWN: **MERIDEN**

DRAWING TITLE: **CONDUIT - SECTIONS & DETAILS SHEET 3 OF 3**

PROJECT NO. **170-3155**

DRAWING NO. **FEL-603**

SHEET NO. **03.13.043**

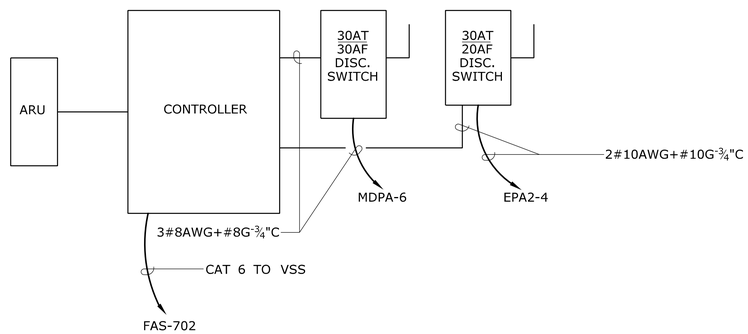

ELEVATOR CONTROLLER RISER DIAGRAM

SCALE: 1" = 1'-0"

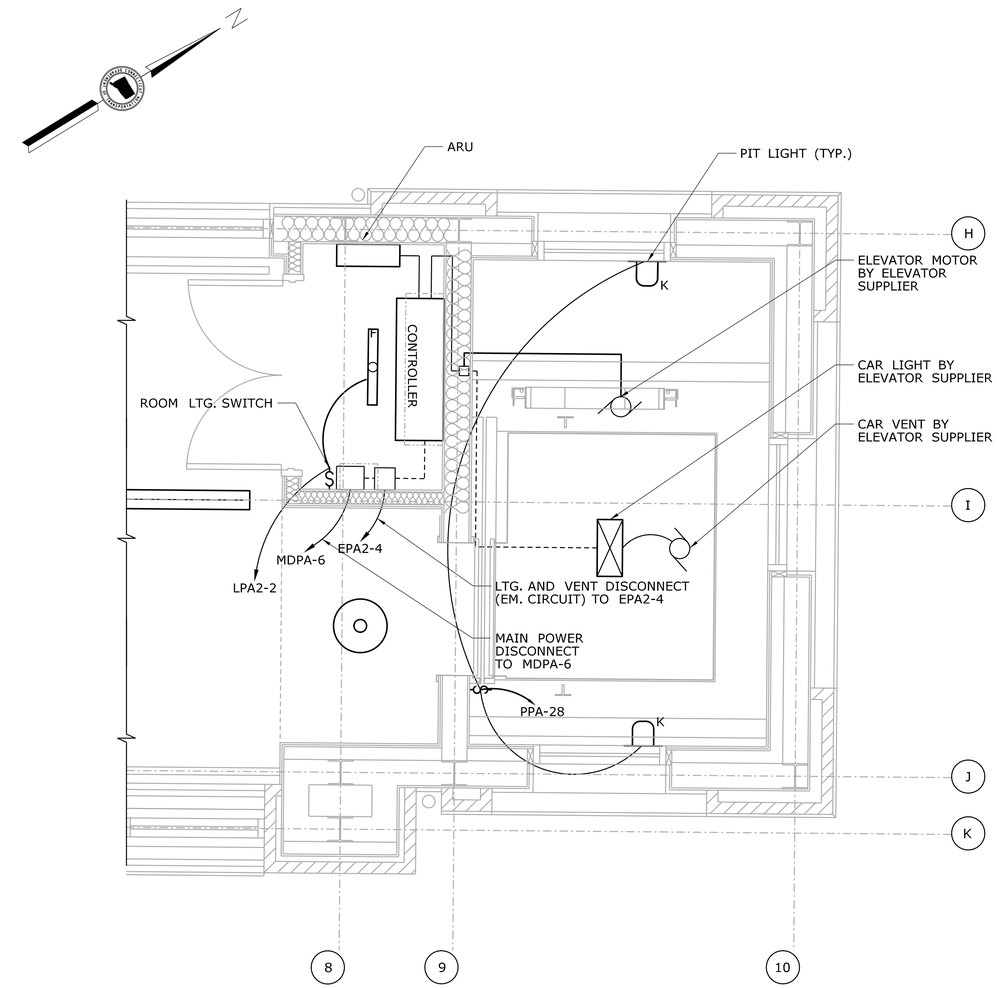

ENLARGED ELEVATOR PEDESTRIAN BRIDGE LEVEL PLAN - EAST TOWER (TYP.)

SCALE: ½" = 1'-0"

REV.	DATE	REVISION DESCRIPTION	SHEET NO.
-	-	-	-
-	-	-	-
-	-	-	-
-	-	-	-
-	-	-	-
-	-	-	-

THE INFORMATION, INCLUDING ESTIMATED QUANTITIES OF WORK, SHOWN ON THESE SHEETS IS BASED ON LIMITED INVESTIGATIONS BY THE STATE AND IS IN NO WAY WARRANTED TO INDICATE THE CONDITIONS OF ACTUAL QUANTITIES OF WORK WHICH WILL BE REQUIRED.

Plotted Date: 1/16/2014

DESIGNER/DRAFTER: D.CHERBELEATA
CHECKED BY: D. NEWMAN
SCALE AS NOTED

STATE OF CONNECTICUT
DEPARTMENT OF TRANSPORTATION

Filename: ...\FA_CGR_CPS_0170-2296_079_06_FEL_604.dgn

SIGNATURE/ BLOCK:

Hatch Mott MacDonald
Suite 100, North Lobby
400 Blue Hill Drive
Westwood, MA 02090

PROJECT TITLE:
NEW HAVEN - HARTFORD
SPRINGFIELD
RAIL CORRIDOR

TOWN: MERIDEN

DRAWING TITLE:
POWER PLAN
ENLARGED ELEVATOR

PROJECT NO. 170-3155
DRAWING NO. FEL-604
SHEET NO. 03.13.044

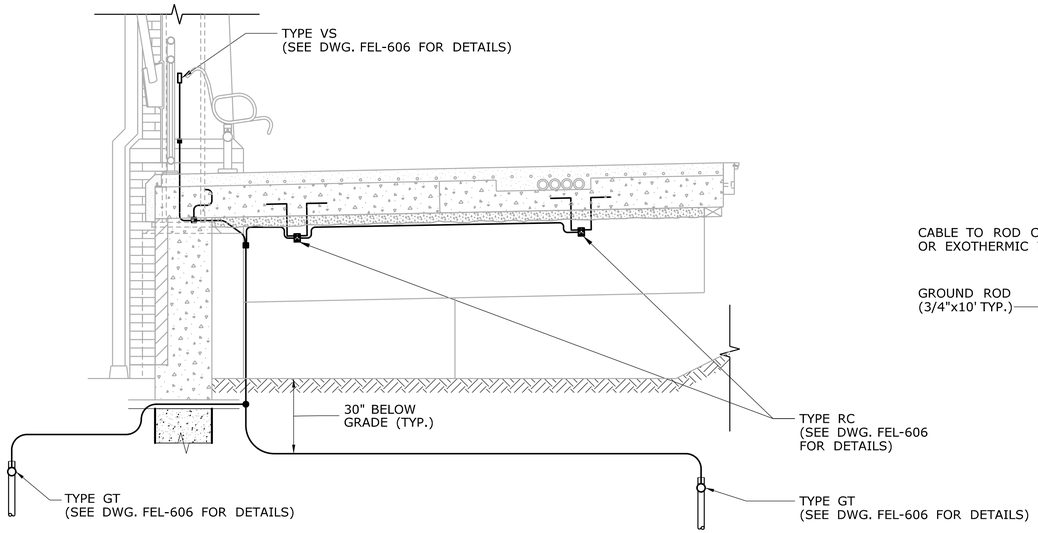

CONNECTION AT BASE OF STEEL COLUMN

NOT TO SCALE

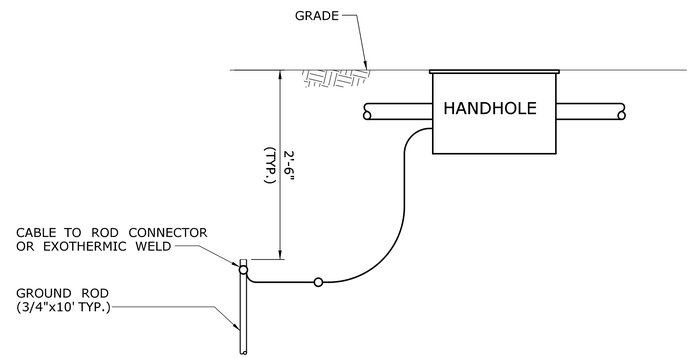

TYPICAL HANDHOLE/GROUND ROD TO GROUND CABLE

NOT TO SCALE

GROUNDING NOTES

1. MAIN GRID CABLE TO BE A MIN. OF 18" BELOW FINISHED FLOORS AND 30" BELOW FINISHED GRADE.
2. GROUND RODS TO BE 10'x$^{3}/_{4}$" DIAM. COPPER CLAD STEEL, DRIVEN TO 2'-6" BELOW FINISHED GRADE.
3. ANY GROUND CONDUCTOR DAMAGED DURING CONSTRUCTION TO BE REPAIRED BEFORE COVERING.
4. GROUND RISERS TO BE A MINIMUM OF 3'-0" ABOVE FINISHED GRADE UNLESS OTHERWISE NOTED.
5. GROUND RISERS TO STUB-UP THRU A SCH 40 PVC SLEEVE TO PREVENT PHYSICAL DAMAGE
6. RESISTANCE NOT TO EXCEED 2 OHMS
7. ALL GROUND CONDUCTORS TO BE SOFT DRAWN STRANDED BARE COPPER.
8. ALL BURIED CONNECTIONS TO BE EXOTHERMIC (CADWELD) TYPE. BUILDING STEEL CONNECTIONS TO BE (CADWELD) TYPE. EXPOSED CONNECTIONS, SUCH AS TO SWITCHGEAR, MOTORS, GENERATORS, ETC., TO BE MECHANICAL COMPRESSION TYPE.
9. GROUND CONDUCTORS SHALL NOT BE INSTALLED IN ANY WAY THAT WOULD INTERFERE WITH EQUIPMENT REMOVAL.
10. SIZES: MAIN GRID: #4/0 AWG
    STRUCTURAL STEEL: 1-#4/0 AWG
    NON-STRUCTURAL STEEL: 1-#1/0 AWG
11. CONTRACTOR MUST COORDINATE LOCATION OF SNOW MELT PIPING AND SLEEVES PRIOR TO DRILLING THROUGH PLATFORMS.

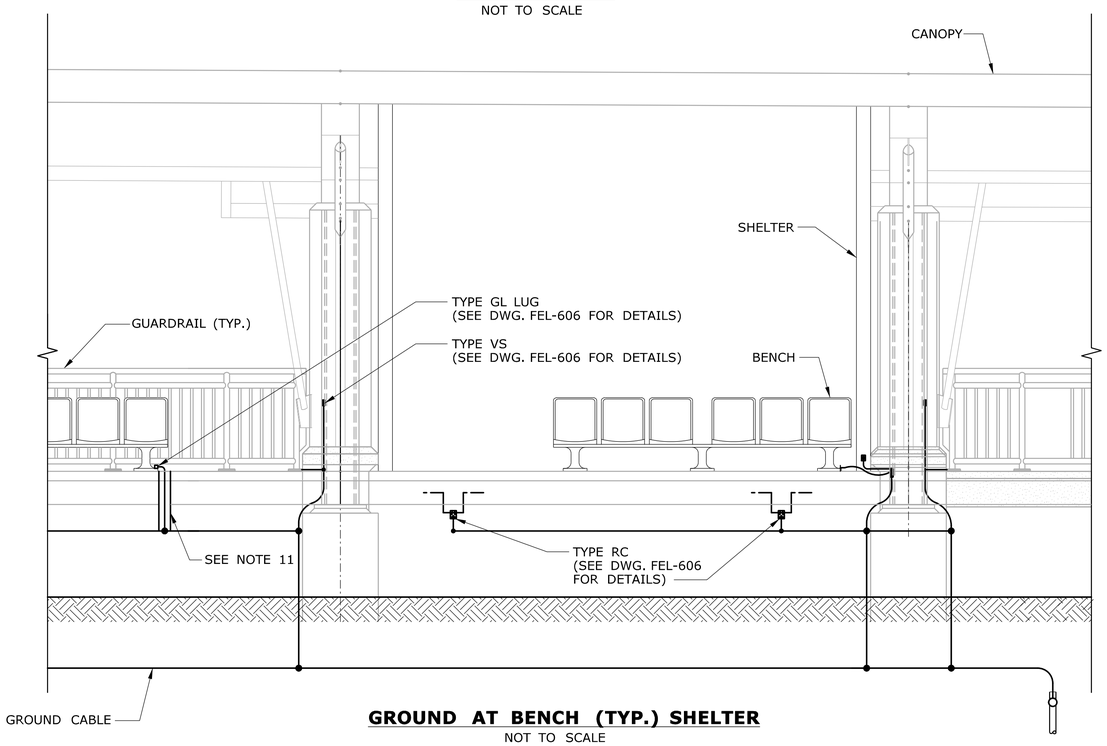

GROUND AT BENCH (TYP.) SHELTER

NOT TO SCALE

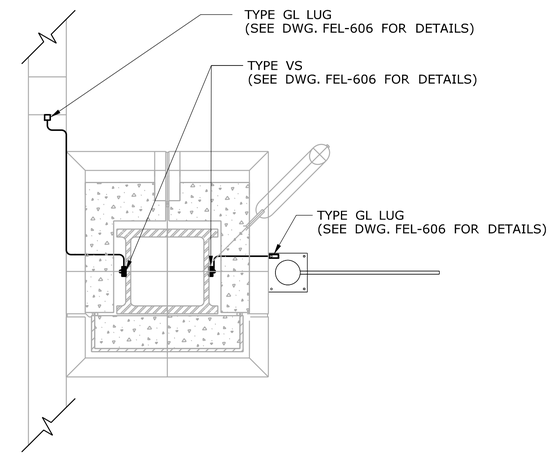

GROUND CABLE TO RAILING

NOT TO SCALE

REV.	DATE	REVISION DESCRIPTION	SHEET NO.
-	-	-	-
-	-	-	-
-	-	-	-
-	-	-	-
-	-	-	-
-	-	-	-

THE INFORMATION, INCLUDING ESTIMATED QUANTITIES OF WORK, SHOWN ON THESE SHEETS IS BASED ON LIMITED INVESTIGATIONS BY THE STATE AND IS IN NO WAY WARRANTED TO INDICATE THE CONDITIONS OF ACTUAL QUANTITIES OF WORK WHICH WILL BE REQUIRED.

Plotted Date: 1/21/2014

DESIGNER/DRAFTER: **W. CAREY**
CHECKED BY: **D. NEWMAN**

NOT TO SCALE

STATE OF CONNECTICUT
DEPARTMENT OF TRANSPORTATION

Filename: ...\FA..CGR..CPS..0170-2296..079...06..FEL...605.dgn

SIGNATURE/ BLOCK:

Hatch Mott MacDonald
Suite 100, North Lobby
400 Blue Hill Drive
Westwood, MA 02090

PROJECT TITLE:
NEW HAVEN - HARTFORD SPRINGFIELD RAIL CORRIDOR

TOWN: **MERIDEN**

DRAWING TITLE:
ELECTRICAL GROUNDING DETAILS SHEET 1 OF 2

PROJECT NO. **170-3155**
DRAWING NO. **FEL-605**
SHEET NO. **03.13.045**

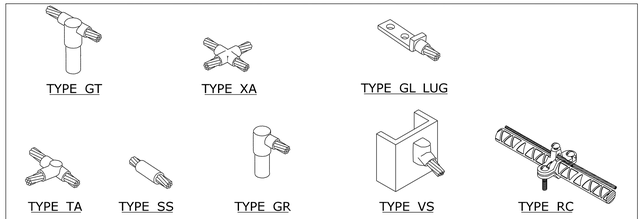

CADWELD BILL OF MATERIALS		
TYPE	CATALOG#	DESCRIPTION
TA	TAC-2Q2Q, WELD METAL #150	HORIZONTAL TEE
VS	VSC-2Q, WELD METAL #115	VERTICAL STEEL CONNECTION
SS	SSC-2Q, WELD METAL #90	IN-LINE SPLICE CONNECTION
GT	GTC-182Q, WELD METAL #115	CABLE TO GROUND ROD
RC	#RC100	REBAR CLAMP

CADWELD DETAILS

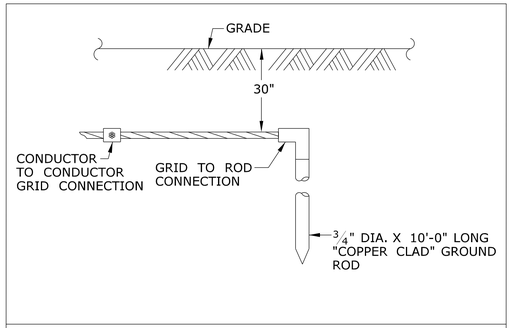

GROUNDING ROD DETAIL

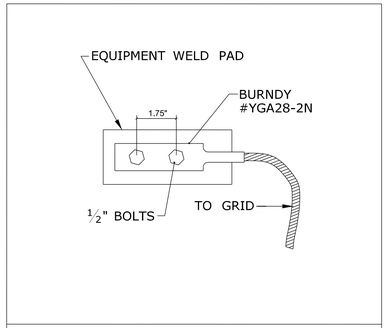

TYPICAL EQUIPMENT GROUND PAD

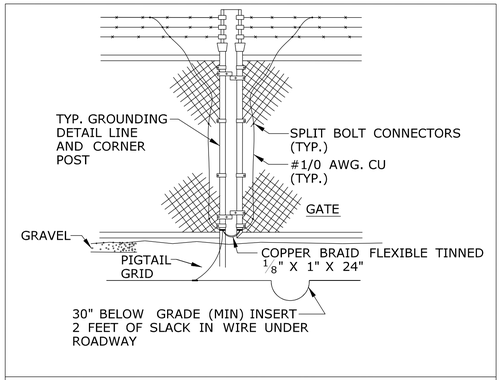

CHAIN LINK FENCE GROUNDING AT GATE

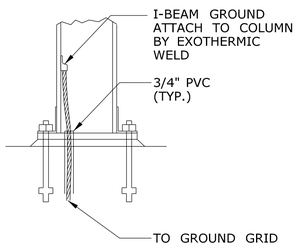

TYPICAL COLUMN WELD GROUNDING DETAIL

REV.	DATE	REVISION DESCRIPTION	SHEET NO.
-	-	-	-
-	-	-	-
-	-	-	-
-	-	-	-
-	-	-	-
-	-	-	-

THE INFORMATION, INCLUDING ESTIMATED QUANTITIES OF WORK, SHOWN ON THESE SHEETS IS BASED ON LIMITED INVESTIGATIONS BY THE STATE AND IS IN NO WAY WARRANTED TO INDICATE THE CONDITIONS OF ACTUAL QUANTITIES OF WORK WHICH WILL BE REQUIRED.

Plotted Date: 1/21/2014

DESIGNER/DRAFTER: **W. CAREY**

CHECKED BY: **D. NEWMAN**

NOT TO SCALE

STATE OF CONNECTICUT
DEPARTMENT OF TRANSPORTATION

Filename: ...\FA_CGR_CPS_0170-2296_079_06_FEL_606.dgn

SIGNATURE/ BLOCK:

Hatch Mott MacDonald
Suite 100, North Lobby
400 Blue Hill Drive
Westwood, MA 02090

PROJECT TITLE:

NEW HAVEN - HARTFORD SPRINGFIELD RAIL CORRIDOR

TOWN: **MERIDEN**

DRAWING TITLE: **ELECTRICAL GROUNDING DETAILS SHEET 2 OF 2**

PROJECT NO. **170-3155**

DRAWING NO. **FEL-606**

SHEET NO. **03.13.046**

NOTES:

1. THE LOAD TO BE COVERED BY THE GENERATOR IS STILL IN DISCUSSION, FINAL SIZE TO BE DETERMINED FOR BOTH GENERATOR AND MANUAL SWITCH.
2. SIZE OF UTILITY TRANSFORMER AND METERING EQUIPMENT TO BE DETERMINED AFTER DISCUSSION WITH THE UTILITY COMPANY.
3. SEE DWG. FLI-801, FLI-802 AND FLI-803 FOR PANEL SCHEDULES.
4. CONTRACTOR TO PROVIDE SHORT CIRCUIT CALCULATIONS AFTER EQUIPMENT HAS BEEN SELECTED.

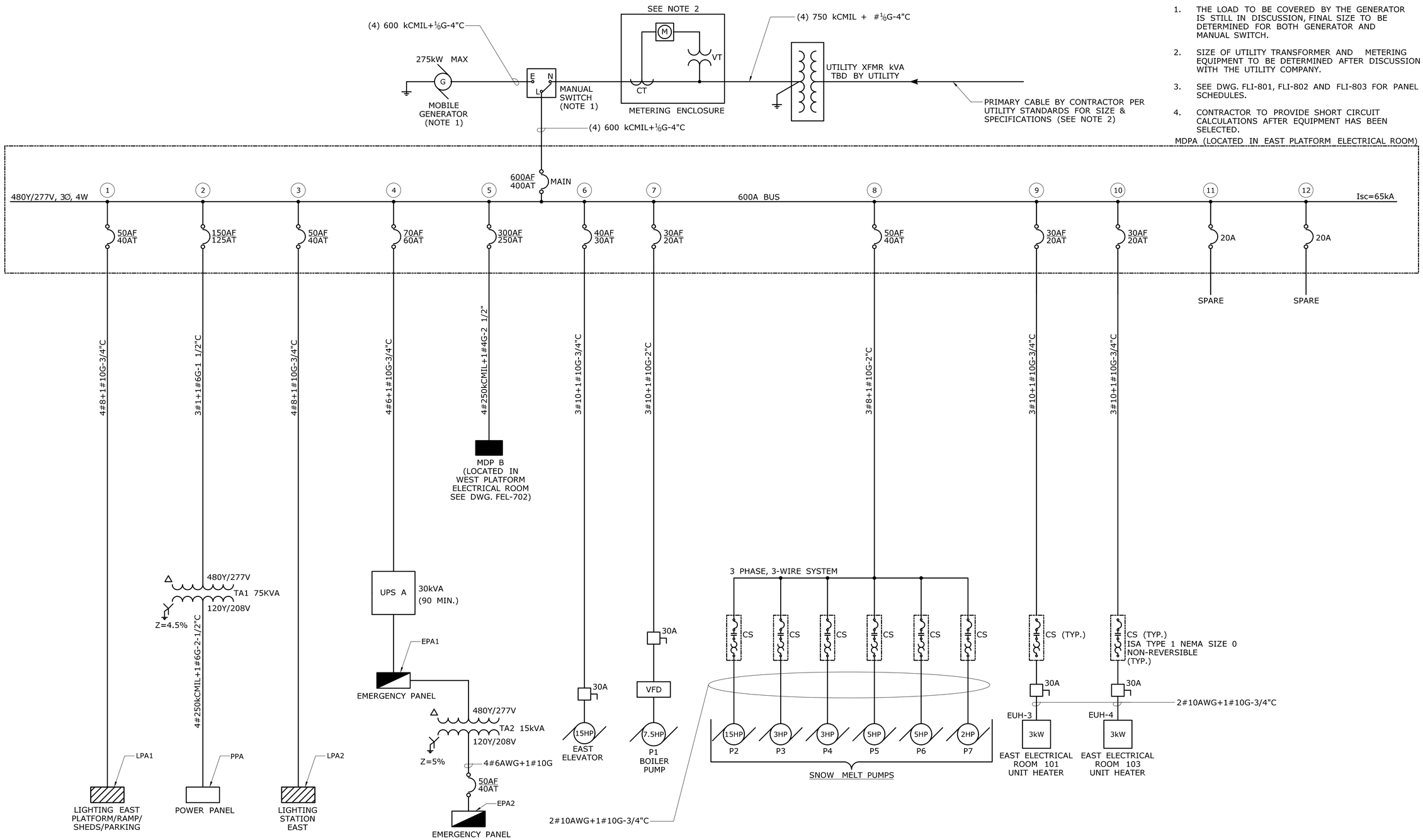

REV.	DATE	REVISION DESCRIPTION	SHEET NO.
-	-	-	-
-	-	-	-
-	-	-	-
-	-	-	-
-	-	-	-
-	-	-	-

THE INFORMATION, INCLUDING ESTIMATED QUANTITIES OF WORK, SHOWN ON THESE SHEETS IS BASED ON LIMITED INVESTIGATIONS BY THE STATE AND IS IN NO WAY WARRANTED TO INDICATE THE CONDITIONS OF ACTUAL QUANTITIES OF WORK WHICH WILL BE REQUIRED.

Plotted Date: 1/16/2014

DESIGNER/DRAFTER: **D.CHERBELEATA**
CHECKED BY: **D. NEWMAN**
SCALE AS NOTED

STATE OF CONNECTICUT
DEPARTMENT OF TRANSPORTATION

Filename: ...\FA_CGR_CPS_0170-2296_079_06_FEL_701.dgn

SIGNATURE/ BLOCK:
STATE OF CONNECTICUT · ROBERT L. GRATTON · LICENSED PROFESSIONAL ENGINEER
Hatch Mott MacDonald
Suite 100, North Lobby
400 Blue Hill Drive
Westwood, MA 02090

PROJECT TITLE:
NEW HAVEN-HARTFORD SPRINGFIELD RAIL CORRIDOR

TOWN: **MERIDEN**

DRAWING TITLE:
GENERAL ARRANGEMENT ONE-LINE DIAGRAM-MDP-A

PROJECT NO. **170-3155**
DRAWING NO. **FEL-701**
SHEET NO. **03.13.047**

NOTES:

1. SEE DWG. FLI-801, 802 AND 803 FOR PANEL SCHEDULES.

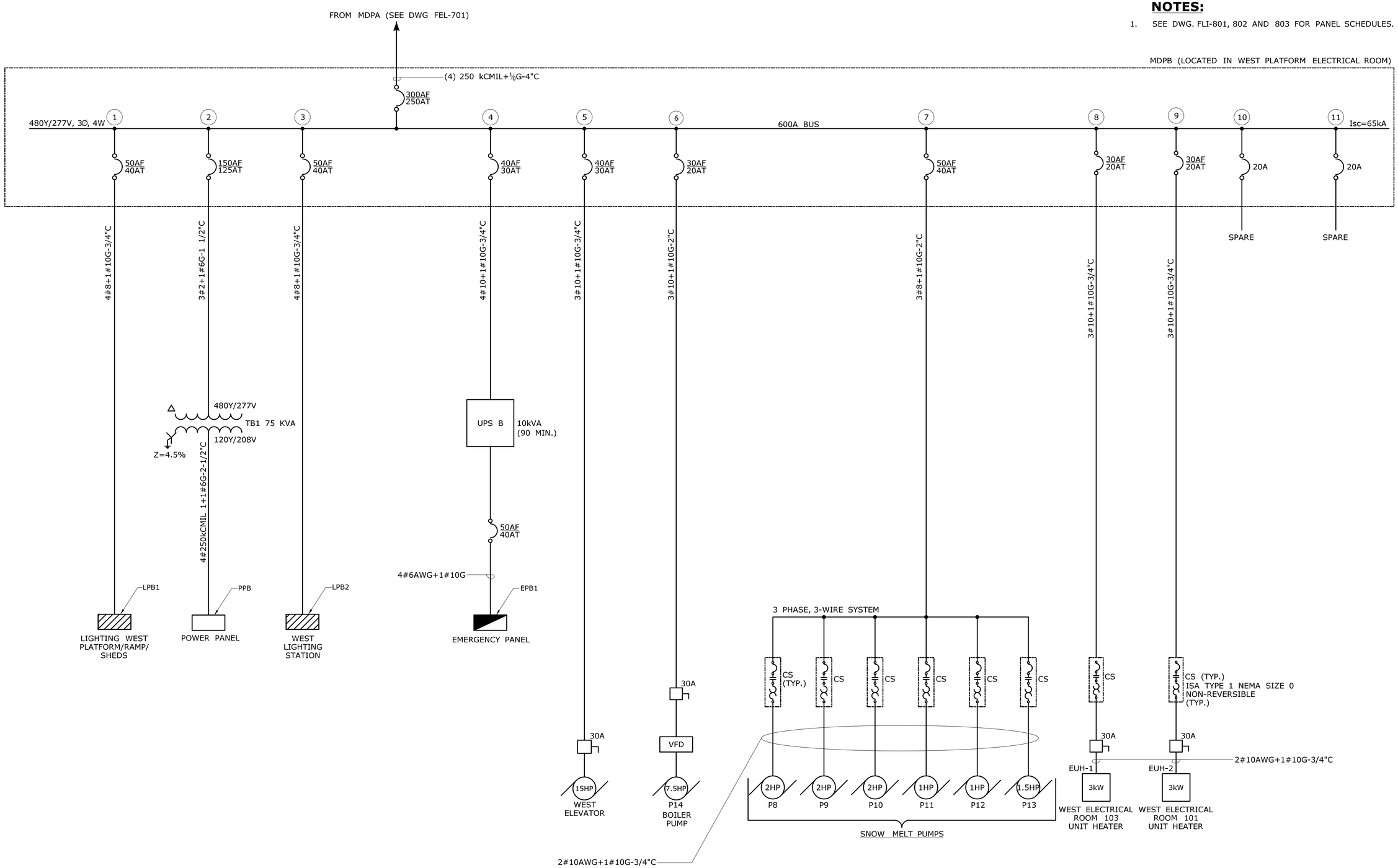

REV.	DATE	REVISION DESCRIPTION	SHEET NO.
-	-	-	-
-	-	-	-
-	-	-	-
-	-	-	-
-	-	-	-
-	-	-	-
-	-	-	-

THE INFORMATION, INCLUDING ESTIMATED QUANTITIES OF WORK, SHOWN ON THESE SHEETS IS BASED ON LIMITED INVESTIGATIONS BY THE STATE AND IS IN NO WAY WARRANTED TO INDICATE THE CONDITIONS OF ACTUAL QUANTITIES OF WORK WHICH WILL BE REQUIRED.

Plotted Date: 1/16/2014

DESIGNER/DRAFTER: **D.CHERBELEATA**

CHECKED BY: **D. NEWMAN**

SCALE AS NOTED

STATE OF CONNECTICUT
DEPARTMENT OF TRANSPORTATION

Filename: ...\FA..CGR..CPS..0170-2296..079...06..FEL...702.dgn

SIGNATURE/ BLOCK:

STATE OF CONNECTICUT
ROBERT A. GRATTON
LICENSED PROFESSIONAL ENGINEER

Hatch Mott MacDonald
Suite 100, North Lobby
400 Blue Hill Drive
Westwood, MA 02090

PROJECT TITLE:

NEW HAVEN-HARTFORD SPRINGFIELD RAIL CORRIDOR

TOWN: **MERIDEN**

DRAWING TITLE:

GENERAL ARRANGEMENT ONE-LINE DIAGRAM-MDP-B

PROJECT NO. **170-3155**

DRAWING NO. **FEL-702**

SHEET NO. **03.13.048**

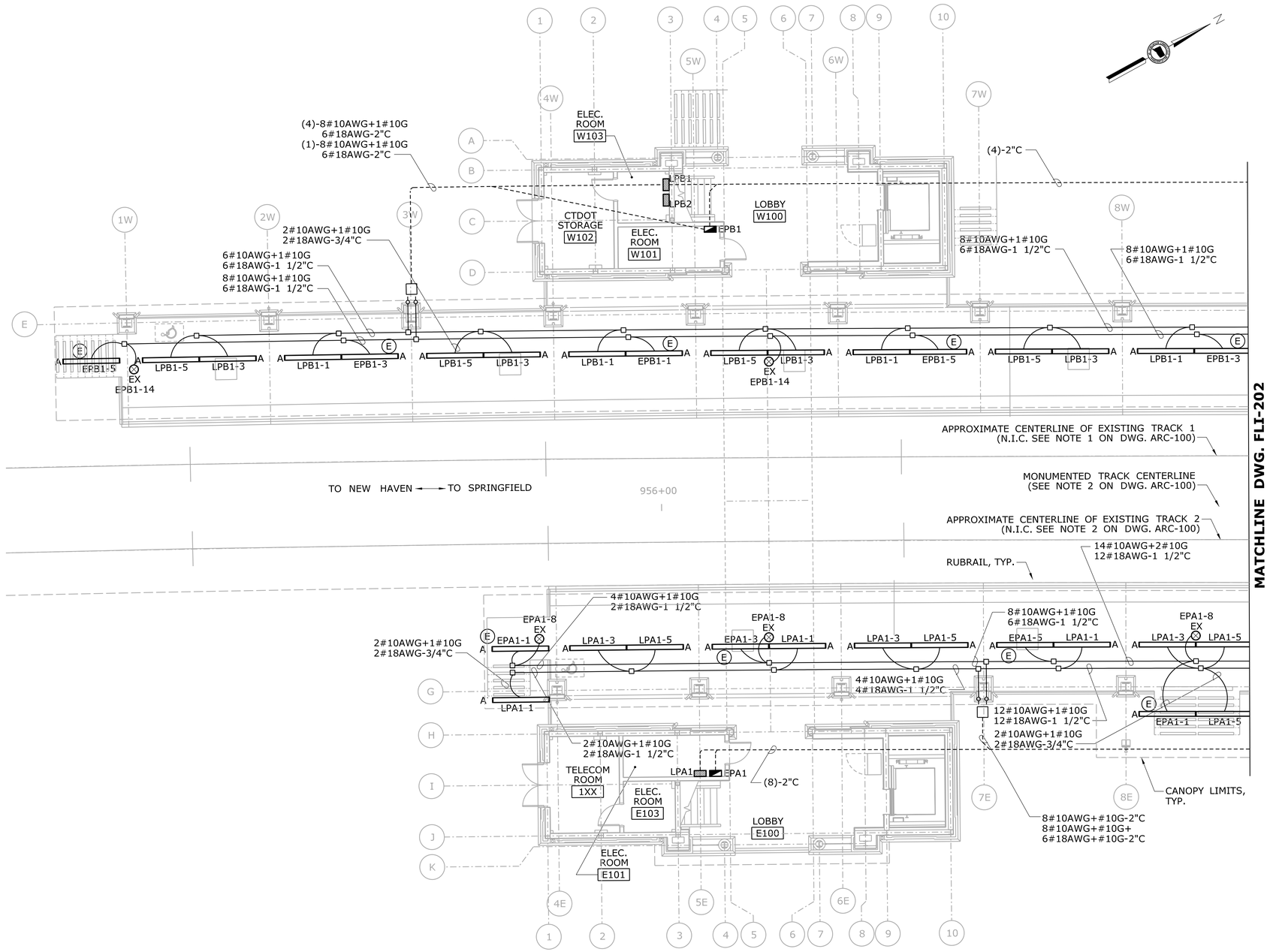

PARTIAL PLATFORM PLAN A

SCALE: 1/8" = 1'-0"

NOTES:

1. CONDUIT SIZES ARE PER NEC 2011 WITH ALLOWANCE FOR EXTRA CONDUCTORS.
2. CONDUIT ROUTES ARE SHOWN DIAGRAMMATICALLY. REFER TO DETAILS ON DWG. FEL-601 AND FEL-602 FOR TYPICAL LAYOUTS.
3. CANOPY MOUNTED CONDULETS AND JUNCTION BOXES TO BE KEPT AT A MINIMUM.
4. CONNECTION IN CANOPY FROM JUNCTION BOX TO FIXTURES IS LIQUIDTIGHT FLEXIBLE CONDUIT.
5. UNDERGROUND CONDUITS ARE TO BE CONCRETE ENCASED 2" AND GROUPED TOGETHER 30" MINIMUM BELOW GRADE WHERE PRACTICAL.
6. CONDUCTORS FOR LIGHT DIMMING TO BE RUN IN THE SAME CONDUIT WITH ELECTRIC LIGHT PROVIDED THEY HAVE 600V INSULATION.
7. EMERGENCY LIGHTING AND UPS CIRCUITS MUST BE SEGREGATED FROM OTHER SYSTEMS PER NEC.
8. EMERGENCY BLUE LIGHT PHONES POWER TO BE RUN WITH EMERGENCY LIGHTING CIRCUITS.

REV.	DATE	REVISION DESCRIPTION	SHEET NO.
-	-	-	-
-	-	-	-
-	-	-	-
-	-	-	-
-	-	-	-
-	-	-	-

THE INFORMATION, INCLUDING ESTIMATED QUANTITIES OF WORK, SHOWN ON THESE SHEETS IS BASED ON LIMITED INVESTIGATIONS BY THE STATE AND IS IN NO WAY WARRANTED TO INDICATE THE CONDITIONS OF ACTUAL QUANTITIES OF WORK WHICH WILL BE REQUIRED.

Plotted Date: 1/27/2014

DESIGNER/DRAFTER: D.CHERBELEATA
CHECKED BY: D. NEWMAN
SCALE: 1/8" = 1'-0"

STATE OF CONNECTICUT
DEPARTMENT OF TRANSPORTATION

Filename: ...\FA_CGR_CPS_0170-2296_079_ _06_FLI_ _201.dgn

SIGNATURE/BLOCK:
STATE OF CONNECTICUT 100% SIGNATURE LICENSED PROFESSIONAL ENGINEER
Hatch Mott MacDonald
Suite 100, North Lobby
400 Blue Hill Drive
Westwood, MA 02090

PROJECT TITLE:
NEW HAVEN - HARTFORD SPRINGFIELD RAIL CORRIDOR

TOWN: MERIDEN

DRAWING TITLE:
LIGHTING PLATFORM PLAN A

PROJECT NO. 170-3155
DRAWING NO. FLI-201
SHEET NO. 03.13.049

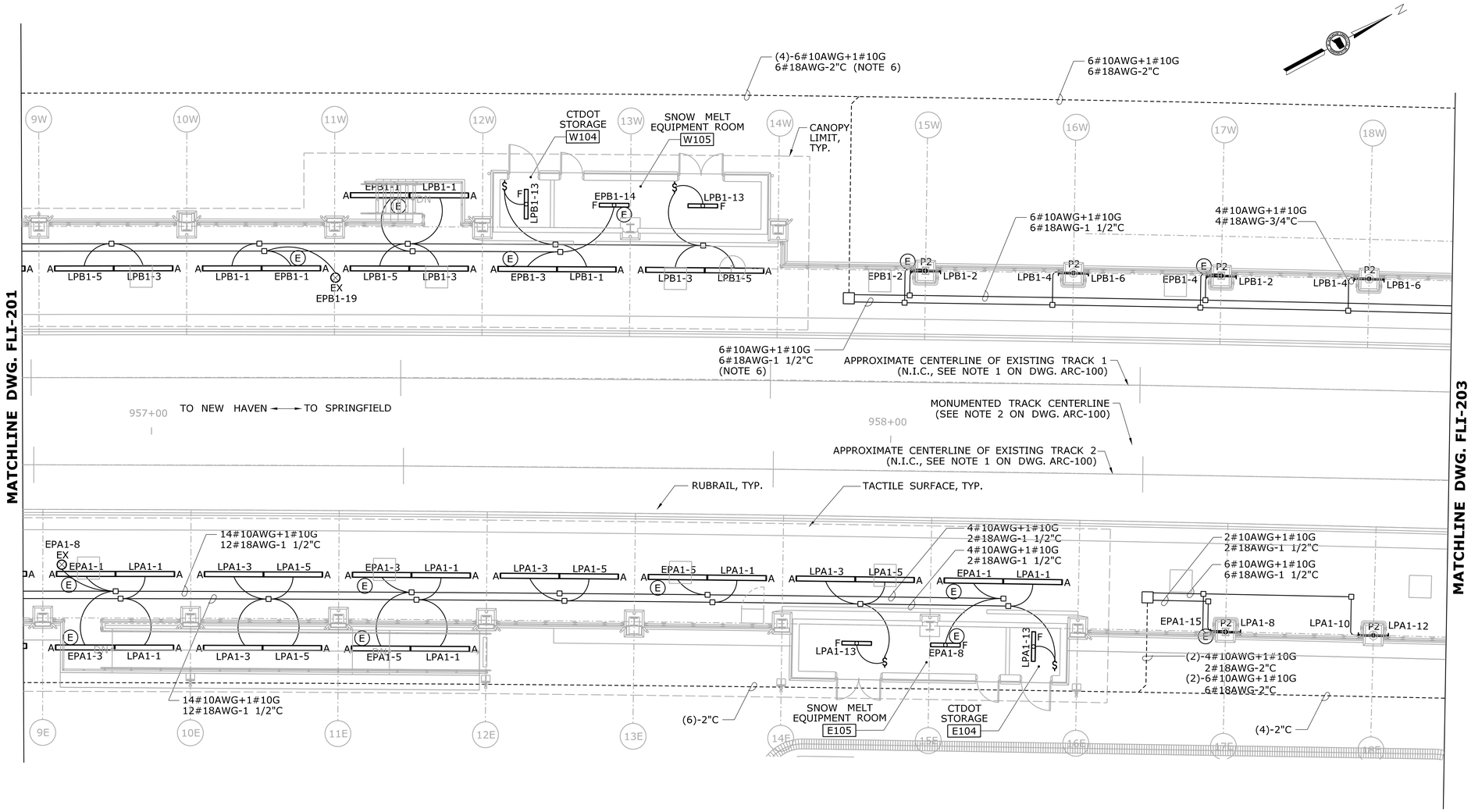

PARTIAL PLATFORM PLAN B

SCALE: 1/8" = 1'-0"

NOTES:

1. CONDUIT SIZES ARE PER NEC 2011 WITH ALLOWANCE FOR EXTRA CONDUCTORS.
2. CONDUIT ROUTES ARE SHOWN DIAGRAMMATICALLY. REFER TO DETAILS ON DWG. FEL-601 AND FEL-602 FOR TYPICAL LAYOUTS.
3. CANOPY MOUNTED CONDULETS AND JUNCTION BOXES TO BE KEPT AT A MINIMUM.
4. CONNECTION IN CANOPY FROM JUNCTION BOX TO FIXTURES IS LIQUIDTIGHT FLEXIBLE CONDUIT.
5. UNDERGROUND CONDUITS ARE TO BE CONCRETE ENCASED 2" AND GROUPED TOGETHER 30" MINIMUM BELOW GRADE WHERE PRACTICAL.
6. CONDUCTORS FOR LIGHT DIMMING TO BE RUN IN THE SAME CONDUIT WITH ELECTRIC LIGHT PROVIDED THEY HAVE 600V INSULATION.
7. EMERGENCY LIGHTING AND UPS CIRCUITS MUST BE SEGREGATED FROM OTHER SYSTEMS PER NEC.
8. EMERGENCY BLUE LIGHT PHONES POWER TO BE RUN WITH EMERGENCY LIGHTING CIRCUITS.

REV.	DATE	REVISION DESCRIPTION	SHEET NO.
-	-	-	-
-	-	-	-
-	-	-	-
-	-	-	-
-	-	-	-
-	-	-	-

THE INFORMATION, INCLUDING ESTIMATED QUANTITIES OF WORK, SHOWN ON THESE SHEETS IS BASED ON LIMITED INVESTIGATIONS BY THE STATE AND IS IN NO WAY WARRANTED TO INDICATE THE CONDITIONS OF ACTUAL QUANTITIES OF WORK WHICH WILL BE REQUIRED.

Plotted Date: 1/27/2014

DESIGNER/DRAFTER: D.CHERBELEATA
CHECKED BY: D. NEWMAN
SCALE: 1/8" = 1'-0"

STATE OF CONNECTICUT
DEPARTMENT OF TRANSPORTATION

Filename: ...\FA_CGR_CPS_0170-2296_079_06_FLI_202.dgn

SIGNATURE/BLOCK:
STATE OF CONNECTICUT
ROOK & GRAVINESE
REGISTERED PROFESSIONAL ENGINEER
Hatch Mott MacDonald
Suite 100, North Lobby
400 Blue Hill Drive
Westwood, MA 02090

PROJECT TITLE:
NEW HAVEN - HARTFORD
SPRINGFIELD
RAIL CORRIDOR

TOWN: MERIDEN

DRAWING TITLE:
LIGHTING
PLATFORM PLAN B

PROJECT NO. 170-3155
DRAWING NO. FLI-202
SHEET NO. 03.13.050

NOTES:

1. CONDUIT SIZES ARE PER NEC 2011 WITH ALLOWANCE FOR EXTRA CONDUCTORS.
2. CONDUIT ROUTES ARE SHOWN DIAGRAMMATICALLY. REFER TO DETAILS ON DWG. FEL-601 AND FEL-602 FOR TYPICAL LAYOUTS.
3. CANOPY MOUNTED CONDULETS AND JUNCTION BOXES TO BE KEPT AT A MINIMUM.
4. CONNECTION IN CANOPY FROM JUNCTION BOX TO FIXTURES IS LIQUIDTIGHT FLEXIBLE CONDUIT.
5. UNDERGROUND CONDUITS ARE TO BE CONCRETE ENCASED 2" AND GROUPED TOGETHER 30" MINIMUM BELOW GRADE WHERE PRACTICAL.
6. CONDUCTORS FOR LIGHT DIMMING TO BE RUN IN THE SAME CONDUIT WITH ELECTRIC LIGHT PROVIDED THEY HAVE 600V INSULATION.
7. EMERGENCY LIGHTING AND UPS CIRCUITS MUST BE SEGREGATED FROM OTHER SYSTEMS PER NEC.
8. EMERGENCY BLUE LIGHT PHONES POWER TO BE RUN WITH EMERGENCY LIGHTING CIRCUITS.

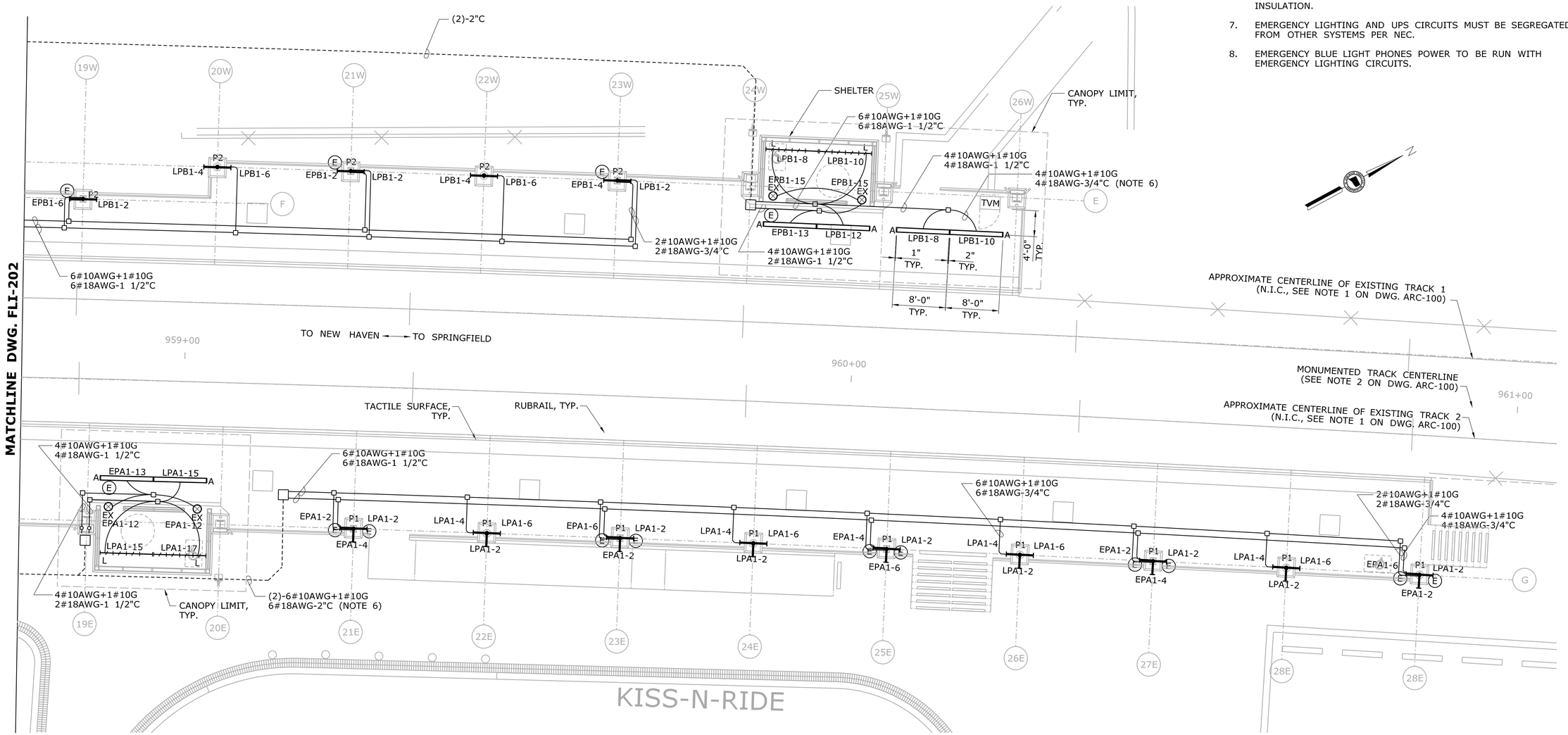

PARTIAL PLATFORM PLAN C

SCALE: 1/8" = 1'-0"

REV.	DATE	REVISION DESCRIPTION	SHEET NO.
-	-	-	-
-	-	-	-
-	-	-	-
-	-	-	-
-	-	-	-
-	-	-	-

THE INFORMATION, INCLUDING ESTIMATED QUANTITIES OF WORK, SHOWN ON THESE SHEETS IS BASED ON LIMITED INVESTIGATIONS BY THE STATE AND IS IN NO WAY WARRANTED TO INDICATE THE CONDITIONS OF ACTUAL QUANTITIES OF WORK WHICH WILL BE REQUIRED.

Plotted Date: 1/16/2014

DESIGNER/DRAFTER: D.CHERBELEATA
CHECKED BY: D. NEWMAN
SCALE: 1/8" = 1'-0"

STATE OF CONNECTICUT
DEPARTMENT OF TRANSPORTATION

Filename: ...\FA..CGR..CPS..0170-2296..079...06..FLI...203.dgn

SIGNATURE/BLOCK:
STATE OF CONNECTICUT DOT & GRANTSUM LICENSED PROFESSIONAL ENGINEER
Hatch Mott MacDonald
Suite 100, North Lobby
400 Blue Hill Drive
Westwood, MA 02090

PROJECT TITLE:
NEW HAVEN - HARTFORD
SPRINGFIELD
RAIL CORRIDOR

TOWN: MERIDEN

DRAWING TITLE:
LIGHTING
PLATFORM PLAN C

PROJECT NO. 170-3155
DRAWING NO. FLI-203
SHEET NO. 03.13.051

NOTES:

1. FIELD MEASUREMENTS ARE REQUIRED FOR FINAL DESIGN OF RAMP FIXTURES, FULL LENGTH TO BE ILLUMINATED.
2. SEE DWG. FLI-901 FOR LIGHTING FIXTURE SCHEDULE.

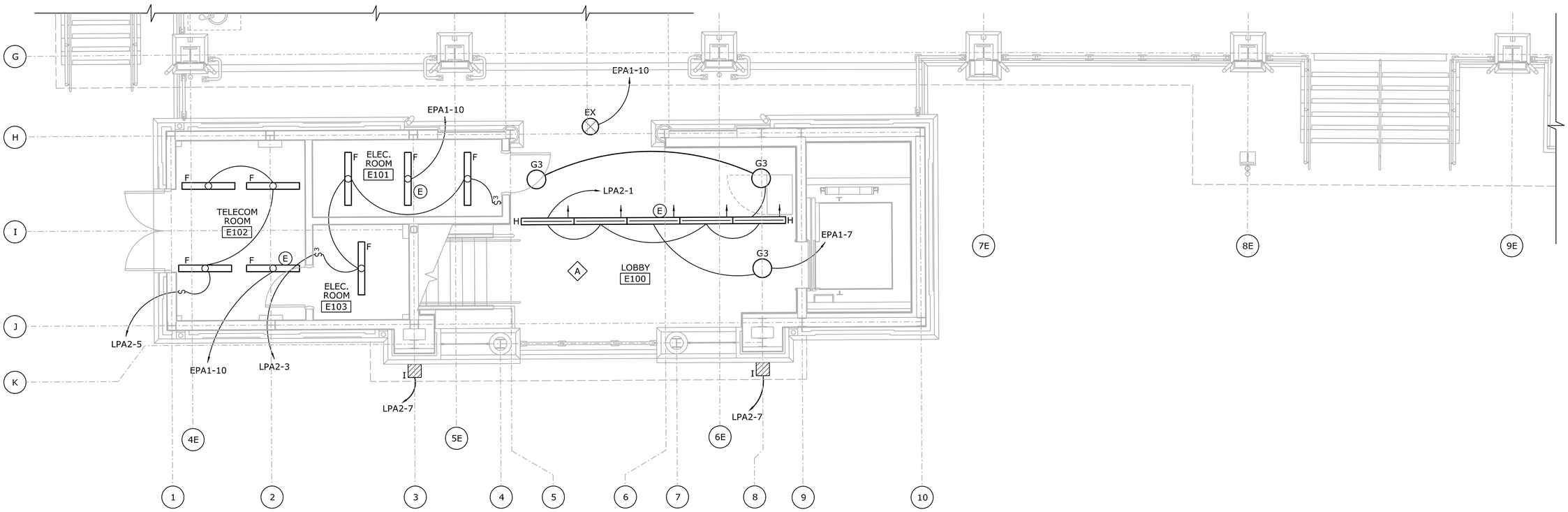

STATION GROUND LEVEL - EAST

SCALE: 1/4" = 1'-0"

REV.	DATE	REVISION DESCRIPTION	SHEET NO.
-	-	-	-
-	-	-	-
-	-	-	-
-	-	-	-
-	-	-	-
-	-	-	-

THE INFORMATION, INCLUDING ESTIMATED QUANTITIES OF WORK, SHOWN ON THESE SHEETS IS BASED ON LIMITED INVESTIGATIONS BY THE STATE AND IS IN NO WAY WARRANTED TO INDICATE THE CONDITIONS OF ACTUAL QUANTITIES OF WORK WHICH WILL BE REQUIRED.

Plotted Date: 1/28/2014

DESIGNER/DRAFTER: **D.CHERBELEATA**

CHECKED BY: **D. NEWMAN**

SCALE: 1/4" = 1'-0"

STATE OF CONNECTICUT
DEPARTMENT OF TRANSPORTATION

Filename: ...\FA_CGR_CPS_0170-2296_079__06_FLI__204.dgn

SIGNATURE/ BLOCK:

Hatch Mott MacDonald
Suite 100, North Lobby
400 Blue Hill Drive
Westwood, MA 02090

PROJECT TITLE:

NEW HAVEN - HARTFORD SPRINGFIELD RAIL CORRIDOR

TOWN: **MERIDEN**

DRAWING TITLE: **LIGHTING PLAN STA. GRND. LEVEL-EAST**

PROJECT NO. **170-3155**

DRAWING NO. **FLI-204**

SHEET NO. **03.13.052**

NOTES:

1. SEE DWG. FLI-901 FOR LIGHTING FIXTURE SCHEDULE.

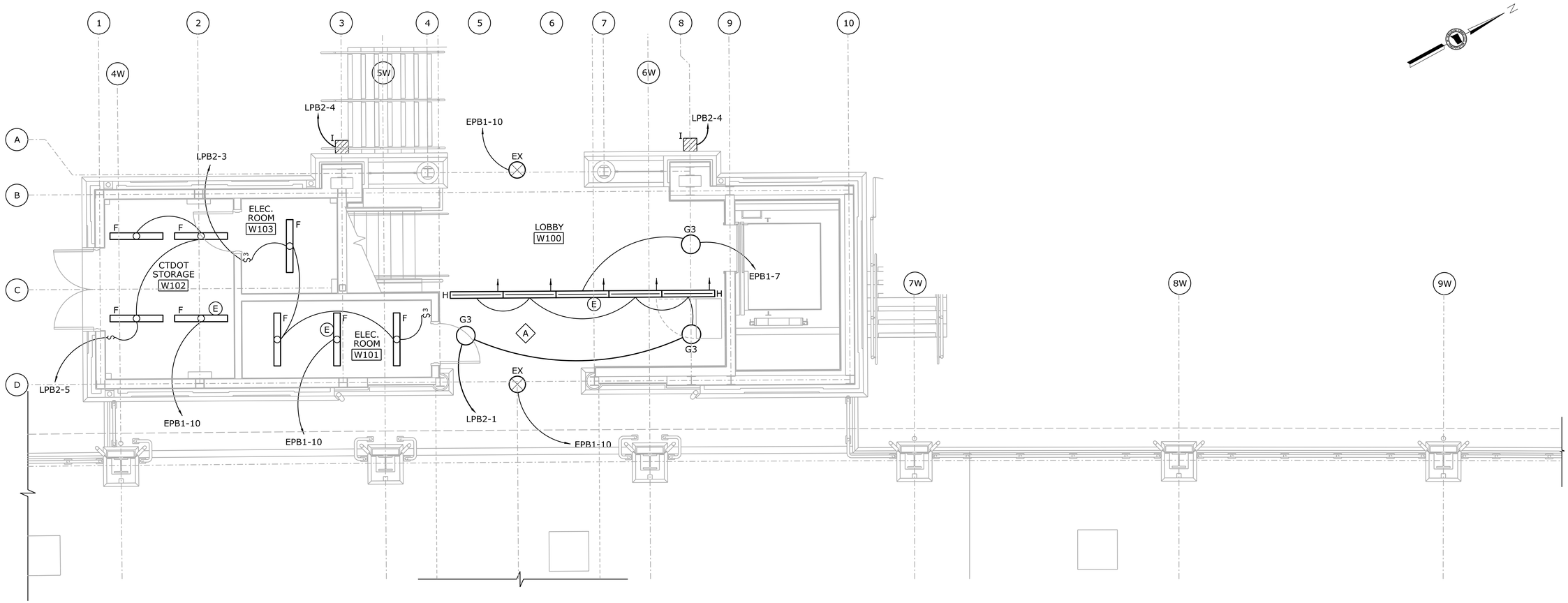

STATION GROUND LEVEL - WEST

SCALE: 1/4" = 1'-0"

REV.	DATE	REVISION DESCRIPTION	SHEET NO.
-	-	-	-
-	-	-	-
-	-	-	-
-	-	-	-
-	-	-	-
-	-	-	-

THE INFORMATION, INCLUDING ESTIMATED QUANTITIES OF WORK, SHOWN ON THESE SHEETS IS BASED ON LIMITED INVESTIGATIONS BY THE STATE AND IS IN NO WAY WARRANTED TO INDICATE THE CONDITIONS OF ACTUAL QUANTITIES OF WORK WHICH WILL BE REQUIRED.

Plotted Date: 1/28/2014

DESIGNER/DRAFTER: **D.CHERBELEATA**

CHECKED BY: **D. NEWMAN**

SCALE: 1/4" = 1'-0"

STATE OF CONNECTICUT
DEPARTMENT OF TRANSPORTATION

Filename: ...\FA..CGR..CPS..0170-2296..079...06..FLI...205.dgn

SIGNATURE/ BLOCK:

Hatch Mott MacDonald
Suite 100, North Lobby
400 Blue Hill Drive
Westwood, MA 02090

PROJECT TITLE:

NEW HAVEN - HARTFORD SPRINGFIELD RAIL CORRIDOR

TOWN: **MERIDEN**

DRAWING TITLE: **LIGHTING PLAN STA. GRND. LEVEL-WEST**

PROJECT NO. **170-3155**

DRAWING NO. **FLI-205**

SHEET NO. **03.13.053**

NOTES:

1. SEE DWG. FLI-901 FOR LIGHTING FIXTURE SCHEDULE.

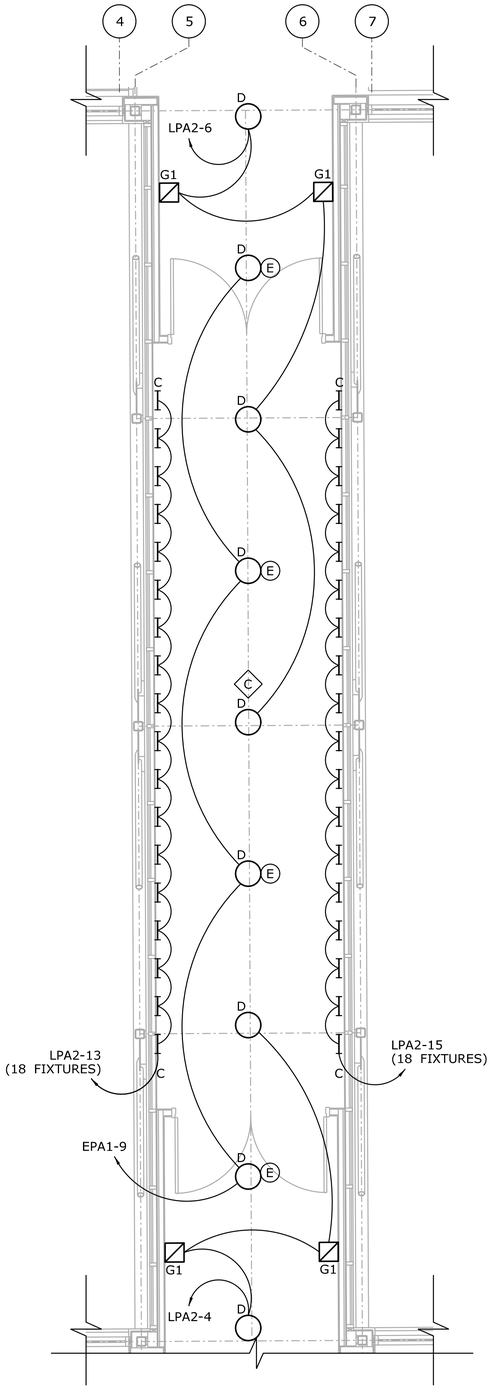

PEDESTRAIN BRIDGE PLAN

SCALE: 1/4" = 1'-0"

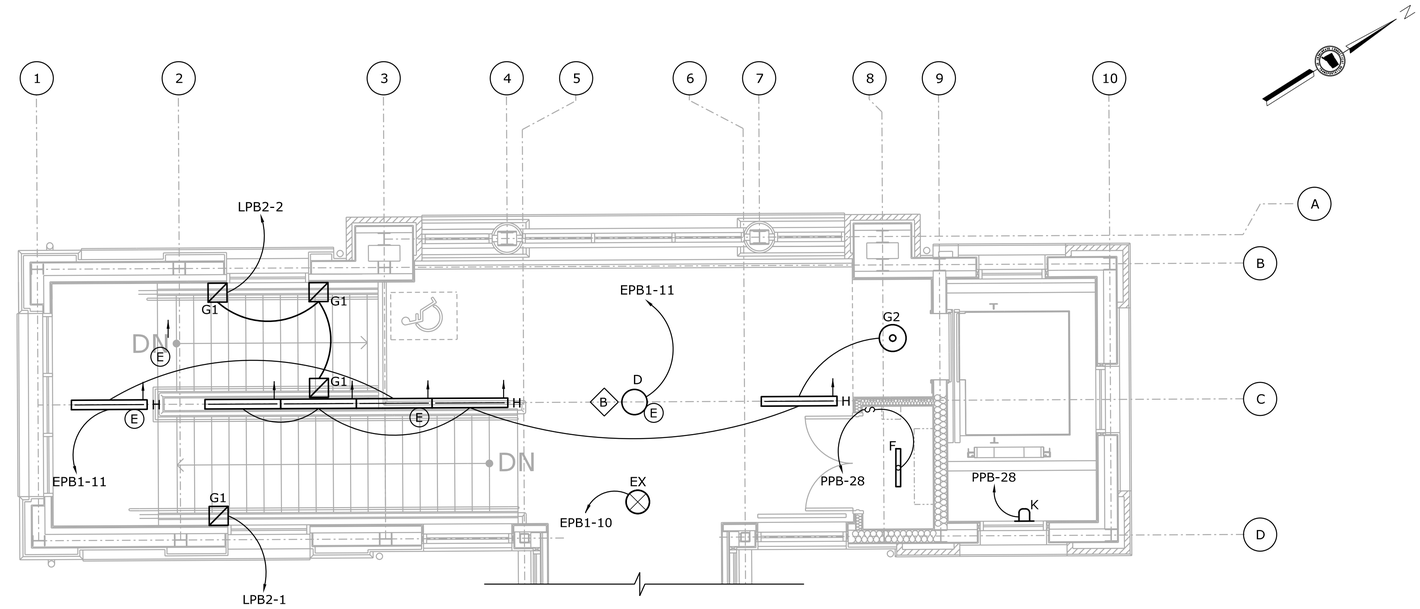

ENLARGED PLAN - WEST TOWER

SCALE: 1/4" = 1'-0"

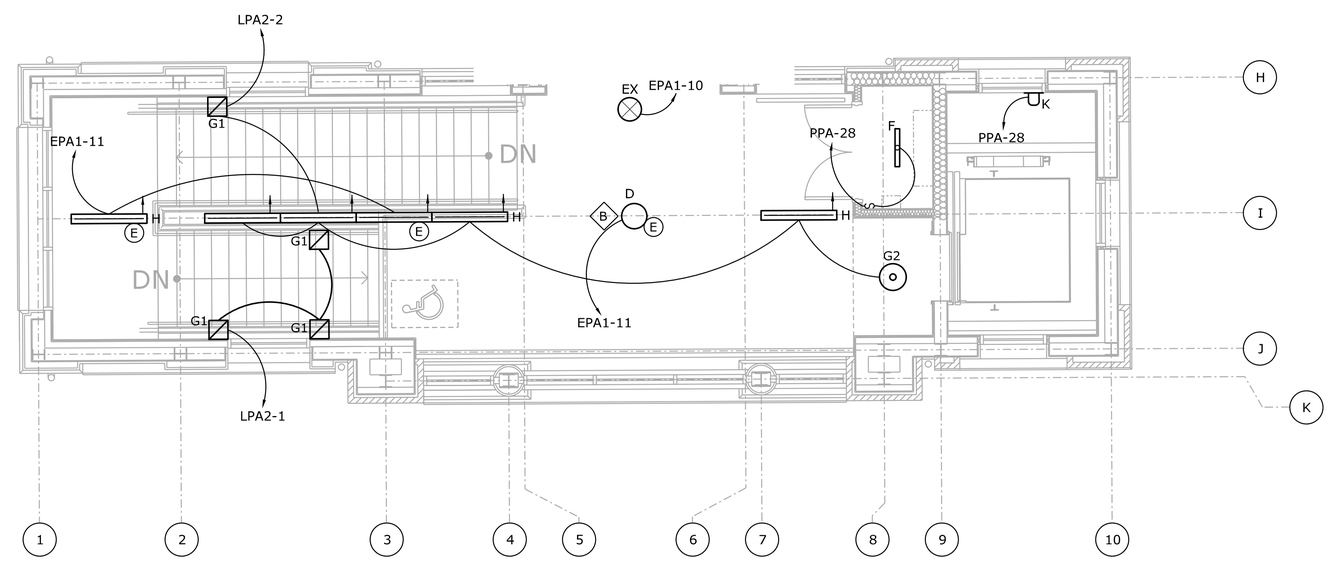

ENLARGED PLAN - EAST TOWER

SCALE: 1/4" = 1'-0"

REV.	DATE	REVISION DESCRIPTION	SHEET NO.
-	-	-	-
-	-	-	-
-	-	-	-
-	-	-	-
-	-	-	-
-	-	-	-

THE INFORMATION, INCLUDING ESTIMATED QUANTITIES OF WORK, SHOWN ON THESE SHEETS IS BASED ON LIMITED INVESTIGATIONS BY THE STATE AND IS IN NO WAY WARRANTED TO INDICATE THE CONDITIONS OF ACTUAL QUANTITIES OF WORK WHICH WILL BE REQUIRED.

Plotted Date: 1/28/2014

DESIGNER/DRAFTER: **D.CHERBELEATA**

CHECKED BY: **D.NEWMAN**

SCALE AS NOTED

STATE OF CONNECTICUT
DEPARTMENT OF TRANSPORTATION

Filename: ...\FA_CGR_CPS_0170-2296_079_ _06_FLI_ _206.dgn

SIGNATURE/ BLOCK:

STATE OF CONNECTICUT · RODNEY K. GRANTOM · 25 · LICENSED PROFESSIONAL ENGINEER

Hatch Mott MacDonald
Suite 100, North Lobby
400 Blue Hill Drive
Westwood, MA 02090

PROJECT TITLE:

NEW HAVEN - HARTFORD SPRINGFIELD RAIL CORRIDOR

TOWN: **MERIDEN**

DRAWING TITLE: **LIGHTING PLAN PEDESTRIAN BRIDGE**

PROJECT NO. **170-3155**

DRAWING NO. **FLI-206**

SHEET NO. **03.13.054**

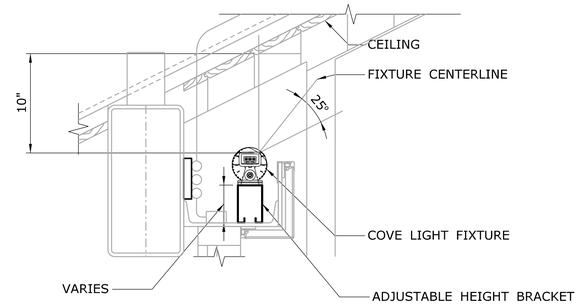

1 / -- **DETAIL 1**
SCALE: 1-½" = 1'-0"

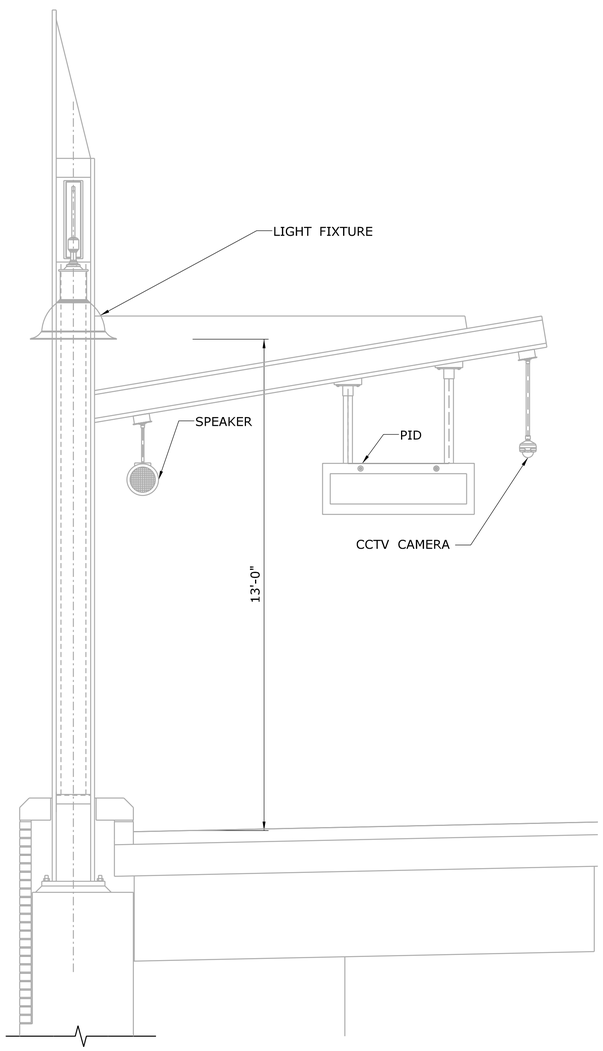

STANDARD PLATFORM LIGHT POLE
SCALE: 1/2" = 1'-0"

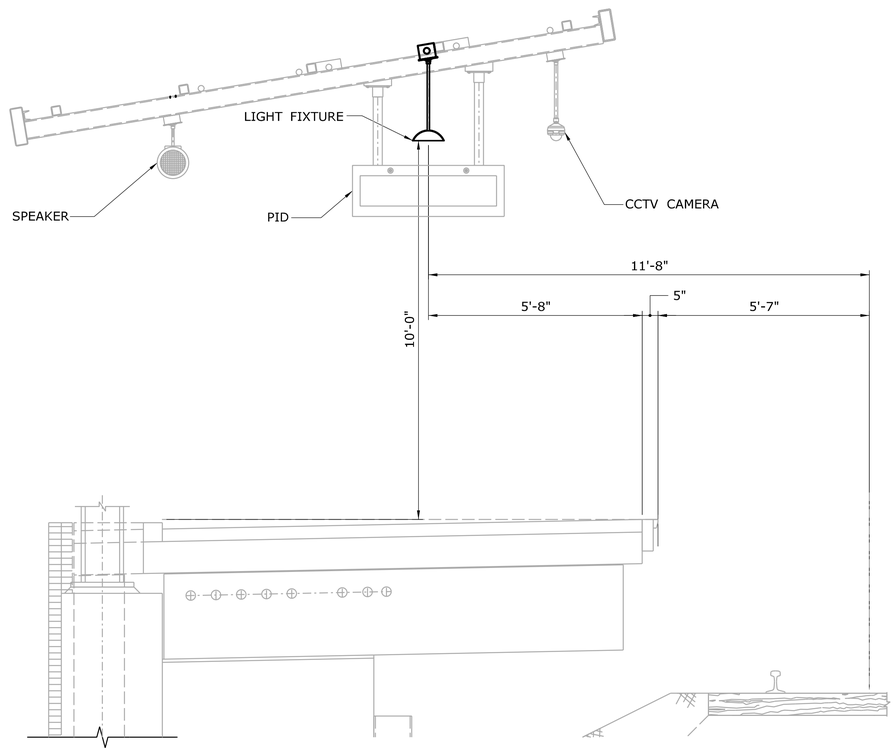

TYPICAL MOUNTING DETAIL FOR CANOPY SECTION
SCALE: 1/2" = 1'-0"

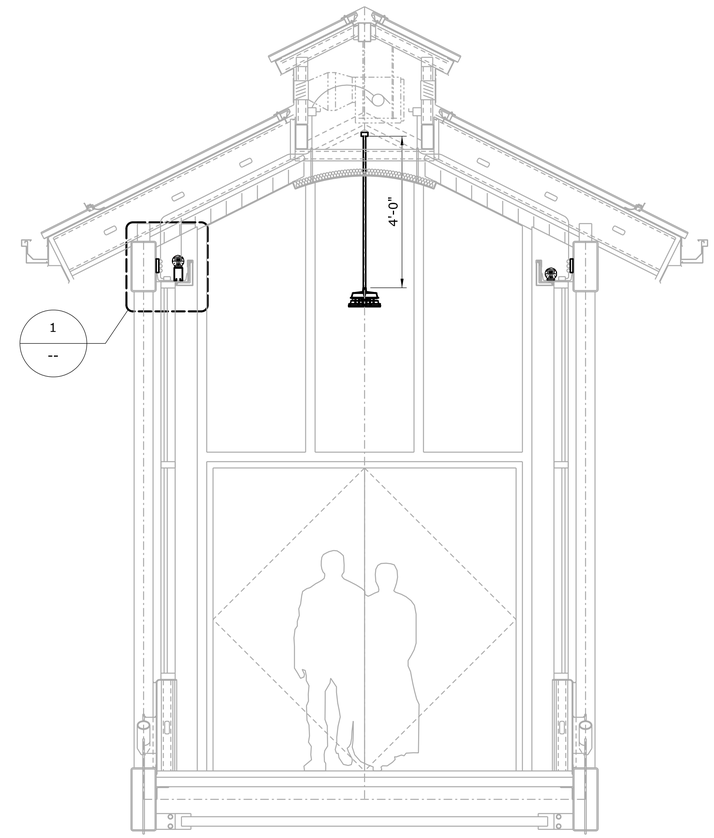

TYPICAL LIGHT FIXTURE ON PEDESTRIAN BRIDGE
SCALE: 1/2" = 1'-0"

REV.	DATE	REVISION DESCRIPTION	SHEET NO.
-	-	-	-
-	-	-	-
-	-	-	-
-	-	-	-
-	-	-	-
-	-	-	-

THE INFORMATION, INCLUDING ESTIMATED QUANTITIES OF WORK, SHOWN ON THESE SHEETS IS BASED ON LIMITED INVESTIGATIONS BY THE STATE AND IS IN NO WAY WARRANTED TO INDICATE THE CONDITIONS OF ACTUAL QUANTITIES OF WORK WHICH WILL BE REQUIRED.

Plotted Date: 1/28/2014

DESIGNER/DRAFTER: **D. CHERBELEATA**
CHECKED BY: **D. NEWMAN**
SCALE: AS NOTED

STATE OF CONNECTICUT
DEPARTMENT OF TRANSPORTATION

Filename: ...\FA_CGR_CPS_0170-2296_079__06_FLI__601.dgn

SIGNATURE/ BLOCK:
Hatch Mott MacDonald
Suite 100, North Lobby
400 Blue Hill Drive
Westwood, MA 02090

PROJECT TITLE: **NEW HAVEN - HARTFORD SPRINGFIELD RAIL CORRIDOR**

TOWN: **MERIDEN**

DRAWING TITLE: **LIGHTING ELEVATIONS & DETAILS**

PROJECT NO. **170-3155**
DRAWING NO. **FLI-601**
SHEET NO. **03.13.055**

MERIDEN - EAST ROOM

PANEL LPA1
LOCATION STATION ELEC. RM. E103
VOLT'S 480/277V
PHASE 3
WIRE 4
SOLID NEUTRAL. YES W/GROUND BUS 14kA 40A MB

FED FROM MDPA
NEMA 1 ENCLOSURE

		CKT. BKR.						CKT. BKR.				
CONDUCTOR/CONDUIT	CIRCUIT DESCRIPTION	NO.	TRIP	POLE	KVA	Ø	KVA	POLE	TRIP	NO.	CIRCUIT DESCRIPTION	CONDUCTOR/CONDUIT
2#10AWG+1#10G-1 1/2"C	LIGHTING EAST PLATFORM (SOUTH)	*1	15	1	0.49	A	1.5	1	15	2*	LIGHTING EAST PLATFORM (CENTER)	2#10AWG+1#10G-1 1/2"C
2#10AWG+1#10G-1 1/2"C	LIGHTING EAST PLATFORM (SOUTH)	*3	15	1	0.4	B	0.67	1	15	4*	LIGHTING EAST PLATFORM (CENTER)	2#10AWG+1#10G-1 1/2"C
2#10AWG+1#10G-1 1/2"C	LIGHTING EAST PLATFORM (SOUTH)	*5	15	1	0.36	C	0.67	1	15	6*	LIGHTING EAST PLATFORM (CENTER)	2#10AWG+1#10G-1 1/2"C
2#10AWG+1#10G-1 1/2"C	LIGHTING EAST PARKING LOT	*7	20	1	1.0	A	0.09	1	15	8*	LIGHTING EAST PLATFORM (NORTH)	2#10AWG+1#10G-1 1/2"C
2#10AWG+1#10G-1 1/2"C	LIGHTING EAST PARKING LOT	*9	20	1	1.0	B	0.09	1	15	10*	LIGHTING EAST PLATFORM (NORTH)	2#10AWG+1#10G-1 1/2"C
2#10AWG+1#10G-1 1/2"C	LIGHTING EAST PARKING LOT	*11	20	1	1.0	C	0.09	1	15	12*	LIGHTING EAST PLATFORM (NORTH)	2#10AWG+1#10G-1 1/2"C
2#10AWG+1#10G-1 1/2"C	LIGHTING EAST MECHANICAL AND UTILITY ROOMS	13	15	1	0.11	A	0.18	1	15	14	LIGHTING RELAY PANELS SUPPLY	2#10AWG+1#10G-3/4"C
2#10AWG+1#10G-1 1/2"C	LIGHTING EAST PLATFORM (NORTH)	15	15	1	0.13	B	--	1	15	16	SPARE	
2#10AWG+1#10G-1 1/2"C	LIGHTING EAST PLATFORM (NORTH)	17	15	1	0.09	C	--	1	15	18	SPARE	
		19				A				20		
		21				B				22		
		23				C				24		

A PH.: 3.19 | B PH.: 2.29 | C PH.: 2.21

TOTAL kVA = 7.69

MERIDEN - WEST ROOM

PANEL LPA1
LOCATION STATION ELEC. RM. W101
VOLT'S 480/277V
PHASE 3
WIRE 4
SOLID NEUTRAL. YES W/GROUND BUS 14kA 40A MB

FED FROM MDPB
NEMA 1 ENCLOSURE

		CKT. BKR.						CKT. BKR.				
CONDUCTOR/CONDUIT	CIRCUIT DESCRIPTION	NO.	TRIP	POLE	KVA	Ø	KVA	POLE	TRIP	NO.	CIRCUIT DESCRIPTION	CONDUCTOR/CONDUIT
2#10AWG+1#10G-1 1/2"C	LIGHTING WEST PLATFORM (CENTER)	*1	15	1	0.31	A	0.44	1	15	2*	LIGHTING WEST PLATFORM (CENTER)	2#10AWG+1#10G-1 1/2"C
2#10AWG+1#10G-1 1/2"C	LIGHTING WEST PLATFORM (CENTER)	*3	15	1	0.31	B	0.44	1	15	4*	LIGHTING WEST PLATFORM (CENTER)	2#10AWG+1#10G-1 1/2"C
2#10AWG+1#10G-1 1/2"C	LIGHTING WEST PLATFORM (CENTER)	*5	15	1	0.31	C	0.44	1	15	6*	LIGHTING WEST PLATFORM (CENTER)	2#10AWG+1#10G-1 1/2"C
	SPARE	7	20	1	--	A	0.04	1	15	8*	LIGHTING WEST PLATFORM (SOUTH)	2#10AWG+1#10G-1 1/2"C
	SPARE	9	20	1	--	B	0.04	1	15	10*	LIGHTING WEST PLATFORM (SOUTH)	2#10AWG+1#10G-1 1/2"C
	SPARE	11	20	1	--	C	0.04	1	15	12*	LIGHTING WEST PLATFORM (SOUTH)	2#10AWG+1#10G-1 1/2"C
2#10AWG+1#10G-1 1/2"C	LIGHTING WEST MECHANICAL AND UTILITY ROOMS	13	15	1	0.11	A	0.18	1	15	14	LIGHTING RELAY PANELS SUPPLY	2#10AWG+1#10G-3/4"C
	SPARE	15	15	1	--	B	--	1	15	16	SPARE	
	SPARE	17	15	1	--	C	--	1	15	18	SPARE	
		19				A				20		
		21				B				22		
		23				C				24		

A PH.: 1.08 | B PH.: 0.79 | C PH.: 0.79

TOTAL kVA = 2.66

MERIDEN - EAST ROOM

PANEL LPA2
LOCATION STATION ELEC. RM. E103
VOLT'S 480/277V
PHASE 3
WIRE 4
SOLID NEUTRAL. YES W/GROUND BUS 14kA 40A MB

FED FROM MDPA
NEMA 1 ENCLOSURE

		CKT. BKR.						CKT. BKR.				
CONDUCTOR/CONDUIT	CIRCUIT DESCRIPTION	NO.	TRIP	POLE	KVA	Ø	KVA	POLE	TRIP	NO.	CIRCUIT DESCRIPTION	CONDUCTOR/CONDUIT
2#10AWG+1#10G-3/4"C	LIGHTING STATION GROUND EAST LOBBY	*1	15	1	0.41	A	0.23	1	15	2*	LIGHTING STATION E. STAIRS AND 2ND FLOOR	2#10AWG+1#10G-3/4"C
2#10AWG+1#10G-3/4"C	LIGHTING STATION GROUND ELECTRICAL ROOMS	3	15	1	0.17	B	0.25	1	15	4*	LIGHTING STATION BRIDGE	2#10AWG+1#10G-3/4"C
2#10AWG+1#10G-3/4"C	LIGHTING STATION GROUND COMMUNICATION ROOM	5	15	1	0.17	C	0.36	1	15	6*	LIGHTING STATION BRIDGE	2#10AWG+1#10G-3/4"C
2#10AWG+1#10G-3/4"C	EAST ENTRANCE FACADE LTG.	*7	15	1	0.03	A	--	1	15	8	SPARE	
	SPARE	9	15	1	--	B	--	1	15	10	SPARE	
	SPARE	11	15	1	--	C	--	1	15	12	SPARE	
2#10AWG+1#10G-3/4"C	LIGHTING STATION BRIDGE	*13	15	1	0.16	A	--	1	15	14		
2#10AWG+1#10G-3/4"C	LIGHTING STATION BRIDGE	*15	15	1	0.16	B	--	1	15	16		
		17	15	1	--	C	--	1	15	18		
		19				A				20		
		21				B				22		
		23				C				24		

A PH.: 0.83 | B PH.: 0.58 | C PH.: 0.53

TOTAL kVA = 1.94

MERIDEN - WEST ELECTRICAL ROOM

PANEL LPB2
LOCATION STATION ELEC. RM. W101
VOLT'S 480/277V
PHASE 3
WIRE 4
SOLID NEUTRAL. YES W/GROUND BUS 14kA 40A MB

FED FROM MDPB
NEMA 1 ENCLOSURE

		CKT. BKR.						CKT. BKR.				
CONDUCTOR/CONDUIT	CIRCUIT DESCRIPTION	NO.	TRIP	POLE	KVA	Ø	KVA	POLE	TRIP	NO.	CIRCUIT DESCRIPTION	CONDUCTOR/CONDUIT
2#10AWG+1#10G-3/4"C	LIGHTING STATION GROUND WEST LOBBY	*1	15	1	0.41	A	0.23	1	15	2*	LIGHTING SECOND FLOOR	2#10AWG+1#10G-3/4"C
2#10AWG+1#10G-3/4"C	LIGHTING STATION GROUND ELECTRICAL ROOM & CLOSET	3	15	1	0.17	B	0.03	1	15	4*	WEST ENTRANCE FACADE LTG.	2#10AWG+1#10G-3/4"C
2#10AWG+1#10G-3/4"C	LIGHTING STATION GROUND MAINTENANCE ROOM	5	15	1	0.17	C	--	1	15	6	SPARE	
		7				A				8		
		9				B				10		
		11				C				12		
		13				A				14		
		15				B				16		
		17				C				18		
		19				A				20		
		21				B				22		
		23				C				24		

A PH.: 0.64 | B PH.: 0.2 | C PH.: 0.17

TOTAL kVA = 1.01

*-THESE CIRCUITS ARE CONTROLLED

REV.	DATE	REVISION DESCRIPTION	SHEET NO.
-	-	-	-
-	-	-	-
-	-	-	-
-	-	-	-
-	-	-	-
-	-	-	-

THE INFORMATION, INCLUDING ESTIMATED QUANTITIES OF WORK, SHOWN ON THESE SHEETS IS BASED ON LIMITED INVESTIGATIONS BY THE STATE AND IS IN NO WAY WARRANTED TO INDICATE THE CONDITIONS OF ACTUAL QUANTITIES OF WORK WHICH WILL BE REQUIRED.

Plotted Date: 1/21/2014

DESIGNER/DRAFTER: D.CHERBELEATA
CHECKED BY: D. NEWMAN
NOT TO SCALE

STATE OF CONNECTICUT
DEPARTMENT OF TRANSPORTATION

Filename: ...\FA..CGR..CPS..0170-2296..079...06..FLI...801.dgn

SIGNATURE/BLOCK:
Hatch Mott MacDonald
Suite 100, North Lobby
400 Blue Hill Drive
Westwood, MA 02090

PROJECT TITLE:
NEW HAVEN - HARTFORD
SPRINGFIELD
RAIL CORRIDOR

TOWN: MERIDEN

DRAWING TITLE:
LIGHTING
PNL. SCHD. 1 OF 3

PROJECT NO. 170-3155
DRAWING NO. FLI-801
SHEET NO. 03.13.056

MERIDEN - EAST ROOM

PANEL EPA1 (EMERGENCY)
LOCATION STATION ELEC. RM. E101
VOLT'S 480/277V
PHASE 3
WIRE 4
SOLID NEUTRAL. YES W/GROUND BUS 14kA 40A MB

FED FROM UPSA
NEMA 1 ENCLOSURE

		CKT. BKR.						CKT. BKR.				
CONDUCTOR/CONDUIT	CIRCUIT DESCRIPTION	NO.	TRIP	POLE	KVA	Ø	KVA	POLE	TRIP	NO.	CIRCUIT DESCRIPTION	CONDUCTOR/CONDUIT
2#10AWG+1#10G-1 1/2"C	LIGHTING EAST PLATFORM (SOUTH)	*1	15	1	0.19	A	0.67	1	15	*2	LIGHTING EAST PLATFORM (NORTH)	2#10AWG+1#10G-1 1/2"C
2#10AWG+1#10G-1 1/2"C	LIGHTING EAST PLATFORM (SOUTH)	*3	15	1	0.14	B	0.5	1	15	*4	LIGHTING EAST PLATFORM (NORTH)	2#10AWG+1#10G-1 1/2"C
2#10AWG+1#10G-1 1/2"C	LIGHTING EAST PLATFORM (SOUTH)	*5	15	1	0.14	C	0.5	1	15	*6	LIGHTING EAST PLATFORM (NORTH)	2#10AWG+1#10G-1 1/2"C
2#10AWG+1#10G-3/4"C	LIGHTING STATION GROUND EAST LOBBY	*7	15	1	0.27	A	0.02	1	15	8	EXIT SIGNS SOUTH PLATFORM	2#10AWG+1#10G-1 1/2"C
2#10AWG+1#10G-3/4"C	LIGHTING STATION BRIDGE	*9	15	1	0.68	B	0.02	1	15	10	EXIT SIGNS EAST TOWER	2#10AWG+1#10G-3/4"C
2#10AWG+1#10G-3/4"C	LIGHTING STATION E. STAIRS AND SECOND FLOOR	*11	15	1	0.13	C	0.01	1	15	12	EXIT SIGNS NORTH PLATFORM	2#10AWG+1#10G-1 1/2"C
2#10AWG+1#10G-1 1/2"C	LIGHTING EAST PLATFORM (CENTER)	*13	15	1	0.04	A	--				TRANSFORMER TA2 TO PANEL EPA1	4#10AWG+1#10G
2#10AWG+1#10G-1 1/2"C	LIGHTING EAST PLATFORM (CENTER)	*15	15	1	0.11	B	9	3	15	14		
	SPARE	17	15	1	--	C						
		19				A				20		
		21				B				22		
		23				C				24		

A PH.: 4.19 | B PH.: 4.45 | C PH.: 3.78

TOTAL kVA = 12.42

MERIDEN - WEST ELECTRICAL ROOM

PANEL EPB1 (EMERGENCY)
LOCATION STATION ELEC. RM. W101
VOLT'S 480/277V
PHASE 3
WIRE 4
SOLID NEUTRAL. YES W/GROUND BUS 14kA 40A MB

FED FROM UPSB
NEMA 1 ENCLOSURE

		CKT. BKR.						CKT. BKR.				
CONDUCTOR/CONDUIT	CIRCUIT DESCRIPTION	NO.	TRIP	POLE	KVA	Ø	KVA	POLE	TRIP	NO.	CIRCUIT DESCRIPTION	CONDUCTOR/CONDUIT
2#10AWG+1#10G-1 1/2"C	LIGHTING WEST PLATFORM (CENTER)	*1	15	1	0.13	A	0.18	1	15	*2	LIGHTING WEST PLATFORM (CENTER)	2#10AWG+1#10G-1 1/2"C
2#10AWG+1#10G-1 1/2"C	LIGHTING WEST PLATFORM (CENTER)	*3	15	1	0.13	B	0.18	1	15	*4	LIGHTING WEST PLATFORM (CENTER)	2#10AWG+1#10G-1 1/2"C
2#10AWG+1#10G-1 1/2"C	LIGHTING WEST PLATFORM (CENTER)	*5	15	1	0.09	C	0.09	1	15	*6	LIGHTING WEST PLATFORM (CENTER)	2#10AWG+1#10G-1 1/2"C
2#10AWG+1#10G-3/4"C	LIGHTING STATION GROUND WEST LOBBY	*7	15	1	0.27	A	--	1	15	8	SPARE	
	SPARE	9	15	1	--	B	0.02	1	15	10	EXIT SIGNS STATION	2#10AWG+1#10G-3/4"C
2#10AWG+1#10G-3/4"C	LIGHTING STATION W. STAIRS AND 2ND FLOOR	*11	15	1	0.13	C	--	1	15	12	SPARE	
2#10AWG+1#10G-1 1/2"C	LIGHTING WEST PLATFORM (NORTH)	*13	15	1	0.04	A	0.06	1	15	14	EXIT SIGNS SOUTH PLATFORM	2#10AWG+1#10G-1 1/2"C
2#10AWG+1#10G-1 1/2"C	EXIT SIGNS WEST PLATFORM (NORTH)	15	15	1	0.01	B	--	1	15	16	SPARE	
		17				C	--	1	15	18	SPARE	
		19				A				20		
		21				B				22		
		23				C				24		

A PH.: 0.68 | B PH.: 0.34 | C PH.: 0.31

TOTAL kVA = 1.33

MERIDEN - EAST ROOM

PANEL EPA2 (EMERGENCY)
LOCATION STATION ELEC. RM. E101
VOLT'S 208/120V
PHASE 3
WIRE 4
SOLID NEUTRAL. YES W/GROUND BUS 14kA 40A MB

FED FROM EPA1
NEMA 1 ENCLOSURE

		CKT. BKR.						CKT. BKR.				
CONDUCTOR/CONDUIT	CIRCUIT DESCRIPTION	NO.	TRIP	POLE	KVA	Ø	KVA	POLE	TRIP	NO.	CIRCUIT DESCRIPTION	CONDUCTOR/CONDUIT
2#10AWG+1#10G-3/4"C	BLUE LIGHT STATIONS EAST TOWER	1	15	1	0.22	A	0.22	1	15	2	BLUE LIGHT STATIONS WEST TOWER	2#10AWG+1#10G-3/4"C
2#10AWG+1#10G-3/4"C	COMMUNICATION PID RACK (PROVISION)	3	20	1	0.27	B	0.53	1	15	4	ELEVATOR CAR LIGHTING AND AC-EAST	2#10AWG+1#10G-3/4"C
2#10AWG+1#10G-3/4"C	COMMUNICATION VSS RACK (PROVISION)	5	20	1	0.27	C	0.53	1	15	6	ELEVATOR CAR LIGHTING AND AC-WEST	2#10AWG+1#10G-3/4"C
2#10AWG+1#10G-3/4"C	COMMUNICATION TELECOM RACK (PROVISION)	7	20	1	0.27	A	0.27	1	20	8	TVM RACK	2#10AWG+1#10G-3/4"C
2#10AWG+1#10G-2"C	BLUE LIGHT STATION PARKING	9	20	1	0.22	B	0.11	1	20	10	BLUE LIGHT STATION EAST PLATFORM (NORTH)	2#10AWG+1#10G-1 1/2"C
2#10AWG+1#10G-1 1/2"C	BLUE LIGHT STATION EAST PLATFORM (SOUTH)	11	20	1	0.11	C	0.11		20	12	BLUE LIGHT STATION WEST PLATFORM (SOUTH)	2#10AWG+1#10G-1 1/2"C
2#10AWG+1#10G-1 1/2"C	BLUE LIGHT STATION WEST PLATFORM (NORTH)	13	20	1	0.11	A				14		
		15				B				16		
		17				C				18		
		19				A				20		
		21				B				22		
		23				C				24		

A PH.: 1.09 | B PH.: 1.13 | C PH.: 1.02

TOTAL kVA = 3.24

MERIDEN - EAST ROOM

PANEL MDPA
LOCATION STATION ELEC. RM. E101
VOLT'S 480/277V
PHASE 3
WIRE 4
SOLID NEUTRAL. YES W/GROUND BUS 65kA 400A MB

FED FROM UTILITY TRANSFORMER
NEMA 1 ENCLOSURE

		CKT. BKR.						CKT. BKR.				
CONDUCTOR/CONDUIT	CIRCUIT DESCRIPTION	NO.	TRIP	POLE	KVA	Ø	KVA	POLE	TRIP	NO.	CIRCUIT DESCRIPTION	CONDUCTOR/CONDUIT
4#8AWG+1#10G-3/4"C	PANEL LPA1	1	40	3	7.68		75	3	125	2	TRANSFORMER TA1 TO PPA	3#1AWG+1#6G-1 1/2"C
4#8AWG+1#10G-3/4"C	PANEL LPA2	3	40	3	1.91		25	3	60	4	UPSA TO EPA1	4#10AWG+1#10G-3/4"C
4#250kCMIL+1#4G-3/4"C	PANEL MDPB	5	250	3	120		15.54	3	30	6	ELEVATOR EAST TOWER	3#10AWG+1#10G-3/4"C
3#10AWG+1#10G-2"C	BOILER P1 (EAST SNOW SHED)	7	20	3	7		18.18	3	40	8	PUMPS (EAST SNOW SHED)	3#8AWG+1#10G-2"C
3#10AWG+1#10G-3/4"C	HEATER EUH-3	9	20	3	3.75		3.75	3	20	10	HEATER EUH-4	3#10AWG+1#10G-3/4"C
	SPARE	11	--	3	--		--			12	SPARE	
	SPARE	13	--	3	--					14		
		15								16		
		17								18		
		19								20		
		21								22		
		23								24		

A PH.: 92.6 | B PH.: 92.6 | C PH.: 92.6

TOTAL kVA = 277.81

REV.	DATE	REVISION DESCRIPTION	SHEET NO.
-	-	-	-
-	-	-	-
-	-	-	-
-	-	-	-
-	-	-	-
-	-	-	-

THE INFORMATION, INCLUDING ESTIMATED QUANTITIES OF WORK, SHOWN ON THESE SHEETS IS BASED ON LIMITED INVESTIGATIONS BY THE STATE AND IS IN NO WAY WARRANTED TO INDICATE THE CONDITIONS OF ACTUAL QUANTITIES OF WORK WHICH WILL BE REQUIRED.

Plotted Date: 1/16/2014

DESIGNER/DRAFTER: D.CHERBELEATA
CHECKED BY: D. NEWMAN
NOT TO SCALE

STATE OF CONNECTICUT
DEPARTMENT OF TRANSPORTATION

Filename: ...\FA..CGR..CPS..0170-2296..079...06..FLI...802.dgn

SIGNATURE/BLOCK:
Hatch Mott MacDonald
Suite 100, North Lobby
400 Blue Hill Drive
Westwood, MA 02090

PROJECT TITLE: NEW HAVEN - HARTFORD SPRINGFIELD RAIL CORRIDOR

TOWN: MERIDEN

DRAWING TITLE: LIGHTING PNL. SCHD. 2 OF 3

PROJECT NO. 170-3155
DRAWING NO. FLI-802
SHEET NO. 03.13.057

MERIDEN - EAST ROOM

PANEL PPA
LOCATION STATION ELEC. RM. E101
VOLT'S 208/120V
PHASE 3
WIRE 4
SOLID NEUTRAL. YES W/GROUND BUS 18kA 125A MB

FED FROM MDPA
NEMA 1 ENCLOSURE

CONDUCTOR/CONDUIT	CIRCUIT DESCRIPTION	CKT. BKR. NO.	TRIP	POLE	KVA	Ø	KVA	CKT. BKR. POLE	TRIP	NO.	CIRCUIT DESCRIPTION	CONDUCTOR/CONDUIT
2#10AWG+1#10G-2"C	RECEPTACLES EAST PLATFORM (SOUTH)	1	20	1	0.18	A	0.18	1	20	2	RECEPTACLES EAST PLATFORM (NORTH)	2#10AWG+1#10G-1-1/2"C
2#10AWG+1#10G-3/4"C	COMMS RACK RECEPT	3	20	1	0.4	B	0.18	1	20	4	RECEPTACLES EAST TOWER AND DOWNSTAIRS	2#10AWG+1#10G-1-1/2"C
2#10AWG+1#10G-1-1/2"C	RECEPTACLES EAST PLATFORM MECHANICAL & UTILITY ROOM	5	20	1	0.18	C	0.18	1	30	6	RECEPTACLES EAST TOWER AND BRIDGE	2#10AWG+1#10G-1-1/2"C
2#10AWG+1#10G-1-1/2"C	CAMERAS EAST PLATFORM (SOUTH)	7	20	1	0.5	A	1.5	1	20	8	CAMERAS PARKING LOT	2#4AWG+1#10G-2"C
2#10AWG+1#10G-1-1/2"C	CAMERAS EAST PLATFORM (SOUTH)	9	20	1	0.38	B	2.75	2	20	10	ACCU-2 AND AC2	2#10AWG+1#10G-3/4"C
2#10AWG+1#10G-1-1/2"C	CAMERAS EAST PLATFORM (NORTH)	11	20	1	0.5	C						
2#10AWG+1#10G-1-1/2"C	PID'S PLATFORM (CENTER)	13	20	1	0.9	A	0.12	1	20	14	ELEVATOR MANAGING SYSTEM	2#10AWG+1#10G-3/4"C
2#10AWG+1#10G-1-1/2"C	PID'S PLATFORM (SOUTH)	15	20	1	1.2	B	4.63	2	40	16	ACCU-1 AND AC1	2#8AWG+1#10G-3/4"C
2#10AWG+1#10G-1-1/2"C	PID'S PLATFORM (NORTH)	17	20	1	0.6	C						
2#10AWG+1#10G-3/4"C	TVM	19	20	1	0.75	A	0.38	1	20	20	CAMERAS (STATION)	2#10AWG+1#10G-3/4"C
2#6AWG+1#10G-2"C	TVM PLATFORM	21	20	1	0.75	B	0.38	1	20	22	CAMERAS (BRIDGE)	2#10AWG+1#10G-3/4"C
2#8AWG+1#10G-3/4"C	EXHAUST FANS EF5, EF6, EF7	23	40	1	3.08	C	--	1	20	24	SPARE	
2#10AWG+1#10G-3/4"C	ENTRANCE SIGN	25	20	1	0.06	A	0.05	1	20	26	EXHAUST FAN AND DAMPER EF2 AND D2	2#10AWG+1#10G-3/4"C
2#10AWG+1#10G-2"C	GAS HEATER GUH-1	27	20	1	0.06	B	1.20	1	20	28	ELEVATOR PIT LIGHTING AND RECEPTACLES	2#10AWG+1#10G-3/4"C
2#10AWG+1#10G-2"C	GLYCOL PUMP GMU-1	29	20	1	0.31	C	1.2	1	20	30	PID'S STATION	2#10AWG+1#10G-3/4"C
2#10AWG+1#10G-3/4"C	FACP	31	20	1	0.2	A	0.03	1	20	32	CONDENSATE PUMP CP-2	2#10AWG+1#10G-3/4"C
2#10AWG+1#10G-3/4"C	CONDENSATE PUMP CP-1	33	20	1	0.03	B	0.05	1	20	34	RAMP HEAT TRACE PROVISION	2#10AWG+1#10G-3/4"C
3#8AWG+1#10G-2"C	ELECTRIC VEHICLE CHARGING STATION	35	40	2	7.8	C A	0.24	2	20	36	EXHAUST FAN AND DAMPER EF1 AND D1	2#10AWG+1#10G-3/4"C
2#10AWG+1#10G-2"C	PAYSTATION	39	20	1	0.75	B	0.4	1	20	40	COMMS RACK RECEPT	2#10AWG+1#10G-3/4"C
	SPARE	41	20	1	--	C	--	1	20	42	SPARE	

A PH.: 8.87 | B PH.: 10.15 | C PH.: 13.45

TOTAL kVA = 32.47

MERIDEN - WEST ROOM

PANEL PPB
LOCATION STATION ELEC. RM. W101
VOLT'S 208/120V
PHASE 3
WIRE 4
SOLID NEUTRAL. YES W/GROUND BUS 18kA 125A MB

FED FROM MDPB (TB1)
NEMA 1 ENCLOSURE

CONDUCTOR/CONDUIT	CIRCUIT DESCRIPTION	CKT. BKR. NO.	TRIP	POLE	KVA	Ø	KVA	CKT. BKR. POLE	TRIP	NO.	CIRCUIT DESCRIPTION	CONDUCTOR/CONDUIT
2#10AWG+1#10G-2"C	RECEPTACLES WEST PLATFORM (SOUTH)	1	20	1	0.18	A	0.18	1	20	2	RECEPTACLE WEST PLATFORM	2#10AWG+1#10G-1-1/2"C
2#10AWG+1#10G-2"C	RECEPTACLES WEST PLATFORM (CENTER)	3	20	1	0.18	B	0.18	1	20	4	RECEPTACLES WEST TOWER AND BRIDGE	2#10AWG+1#10G-1-1/2"C
2#10AWG+1#10G-1-1/2"C	RECEPTACLES WEST PLATFORM (NORTH)	5	20	1	0.18	C	0.18	1	20	6	RECEPTACLES WEST TOWER AND BRIDGE	2#10AWG+1#10G-1-1/2"C
2#10AWG+1#10G-1-1/2"C	CAMERAS WEST PLATFORM (SOUTH)	7	20	1	0.5	A	0.24	1	20	8	EXHAUST FAN AND DAMPER EF3 AND D3	2#10AWG+1#10G-1-1/2"C
2#10AWG+1#10G-1-1/2"C	CAMERAS WEST PLATFORM (SOUTH)	9	20	1	0.5	B	--	1	20	10	SPARE	
2#10AWG+1#10G-1-1/2"C	CAMERAS WEST PLATFORM (NORTH)	11	20	1	0.5	C	--	1	20	12	SPARE	
2#6AWG+1#10G-2"C	PID'S PLATFORM (CENTER)	13	20	1	1.2	A	0.12	1	20	14	ELEVATOR MANAGING SYSTEM	2#10AWG+1#10G-3/4"C
2#8AWG+1#10G-2"C	PID'S PLATFORM (SOUTH)	15	20	1	1.5	B	2.75	2	20	16	ACCU-3 AND AC3	2#10AWG+1#10G-3/4"C
2#10AWG+1#10G-3/4"C	PID'S PLATFORM (NORTH)	17	20	1	0.6	C						
2#10AWG+1#10G-3/4"C	TVM	19	20	1	0.75	A	0.38	1	20	20	CAMERAS (STATION)	2#10AWG+1#10G-3/4"C
2#6AWG+1#10G-2"C	TVM	21	20	1	0.75	B	0.38	1	20	22	CAMERAS (BRIDGE)	2#10AWG+1#10G-3/4"C
2#8AWG+1#10G-3/4"C	EXHAUST FANS EF8 AND EF9	23	40	1	2.06	C	--	1	20	24	SPARE	
	SPARE	25	20	1	--	A	0.05	1	20	26	EXHAUST FAN AND DAMPER EF4 AND D4	2#10AWG+1#10G-3/4"C
2#10AWG+1#10G-2"C	GAS HEATER GUH-2	27	20	1	0.06	B	1.20	1	20	28	ELEVATOR PIT LIGHTING AND RECEPTACLES	2#10AWG+1#10G-3/4"C
2#10AWG+1#10G-2"C	GLYCOL PUMP GMU-2	29	20	1	0.31	C	1.20	1	20	30	PID'S STATION	2#10AWG+1#10G-3/4"C
	SPARE	31	20	1	--	A	0.03	1	20	32	CONDENSATE PUMP CP-3	2#10AWG+1#10G-3/4"C
	SPARE	33	20	1	--	B	0.05	1	20	34	RAMP HEAT TRACE PROVISION	2#10AWG+1#10G-3/4"C
3#8AWG+1#10G-2"C	ELECTRIC VEHICLE CHARGING STATION	35	20	1	--	C	--	1	20	36	SPARE	
	SPARE	37	20	1	--	A	--	1	20	38	SPARE	
	SPARE	39	20	1	--	B	--	1	20	40	SPARE	
	SPARE	41	20	1	--	C	--	1	20	42	SPARE	

A PH.: 3.63 | B PH.: 6.68 | C PH.: 6.9

TOTAL kVA = 17.21

MERIDEN - WEST ROOM

PANEL MDPB
LOCATION STATION ELEC RM. W101
VOLT'S 480/277V
PHASE 3
WIRE 4
SOLID NEUTRAL. YES W/GROUND BUS 35kA 250A MB

FED FROM MDPA
NEMA 1 ENCLOSURE

CONDUCTOR/CONDUIT	CIRCUIT DESCRIPTION	CKT. BKR. NO.	TRIP	POLE	KVA	Ø	KVA	CKT. BKR. POLE	TRIP	NO.	CIRCUIT DESCRIPTION	CONDUCTOR/CONDUIT
4#8AWG+1#10G-3/4"C	PANEL LPB1	1	40	3	2.69		75	3	120	2	TRANSFORMER TB1 TO PPB	3#1AWG+1#6G-3/4"C
4#8AWG+1#10G-3/4"C	PANEL LPB2	3	40	3	0.97		25	3	30	4	UPSB TO EPB1	4#10AWG+1#10G-3/4"C
	SPARE	5	40	3	8.88		15.54	3	30	6	ELEVATOR WEST	4#10AWG+1#10G-3/4"C
3#10AWG+1#10G-2"C	BOILER (WEST SNOW SHED)	7	15	3	7.77		8.88	3	40	8	PUMPS (WEST SNOW SHED)	3#8AWG+1#10G-2"C
3#10AWG+1#10G-3/4"C	HEATER EUH-1	9	20	3	3.75		3.75	3	20	10	HEATER EUH-2	3#10AWG+1#10G-3/4"C
	SPARE	11	20	3	--		--	3	20	12	SPARE	
		13	20	3	--		--	--	--	14		
		15								16		
		17								18		
		19								20		
		21								22		
		23								24		

A PH.: 47.8 | B PH.: 47.8 | C PH.: 47.8

TOTAL kVA = 143.4

NOTES:

1. CONDUCTORS ARE GROUPED BY VOLTAGE SYSTEMS AND RUN TOGETHER IN CONDUITS WHEN POSSIBLE, SEE PLANS SERIES 'FEL' FOR ADDITIONAL INFORMATION ON CONDUITS AND ONE LINE DIAGRAMS ON FEL-701, 702.
2. UNDERGROUND CONDUITS ARE 2" PVC.
3. MAIN CONDUITS IN CANOPY AND UNDER THE PLATFORM ARE 1 1/2" RIGID GALVANIZED STEEL.
4. MINIMUM CONDUIT SIZE IS 3/4".
5. EMERGENCY SYSTEMS ARE SEGREGATED FROM OTHER SYSTEMS.
6. CONTRACTOR SHALL BALANCE THE LOADS ACROSS PHASES AS MUCH AS POSSIBLE.

REV.	DATE	REVISION DESCRIPTION	SHEET NO.
-	-	-	-
-	-	-	-
-	-	-	-
-	-	-	-
-	-	-	-
-	-	-	-

THE INFORMATION, INCLUDING ESTIMATED QUANTITIES OF WORK, SHOWN ON THESE SHEETS IS BASED ON LIMITED INVESTIGATIONS BY THE STATE AND IS IN NO WAY WARRANTED TO INDICATE THE CONDITIONS OF ACTUAL QUANTITIES OF WORK WHICH WILL BE REQUIRED.

Plotted Date: 1/22/2014

DESIGNER/DRAFTER: D.CHERBELEATA
CHECKED BY: D. NEWMAN
NOT TO SCALE

STATE OF CONNECTICUT
DEPARTMENT OF TRANSPORTATION

Filename: ...\FA..CGR..CPS..0170-2296..079...06..FLI...803.dgn

SIGNATURE/BLOCK:
Hatch Mott MacDonald
Suite 100, North Lobby
400 Blue Hill Drive
Westwood, MA 02090

PROJECT TITLE:
NEW HAVEN - HARTFORD
SPRINGFIELD
RAIL CORRIDOR

TOWN: MERIDEN

DRAWING TITLE:
LIGHTING
PNL. SCHD. 3 OF 3

PROJECT NO. 170-3155
DRAWING NO. FLI-803
SHEET NO. 03.13.058

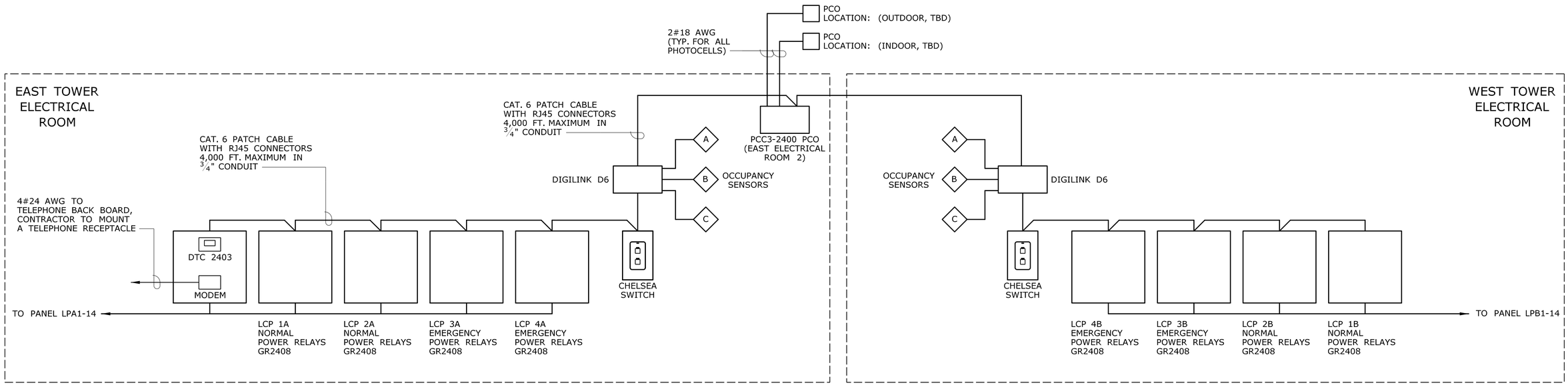

TYPICAL CONTROL SYSTEM SINGLE LINE DIAGRAM

NOTES:

1. DAISY-CHAIN CAT. 6 PATCH CABLE WITH RJ45 CONNECTORS FROM DIGITAL DEVICE TO DIGITAL DEVICE.
2. REFER TO MANUFACTURERS INSTRUCTIONS FOR LONG DISTANCE RUNS BETWEEN DIGITAL DEVICES.
3. UP TO 4,000 FT. TOTAL BUS LENGTH.
4. CRIMP AND TEST EACH CABLE WITH ALAN CIRCUIT TESTER PRIOR TO INSTALLATION.
5. SEE DWG. FLI-805 FOR PANEL RELAY SCHEDULE.

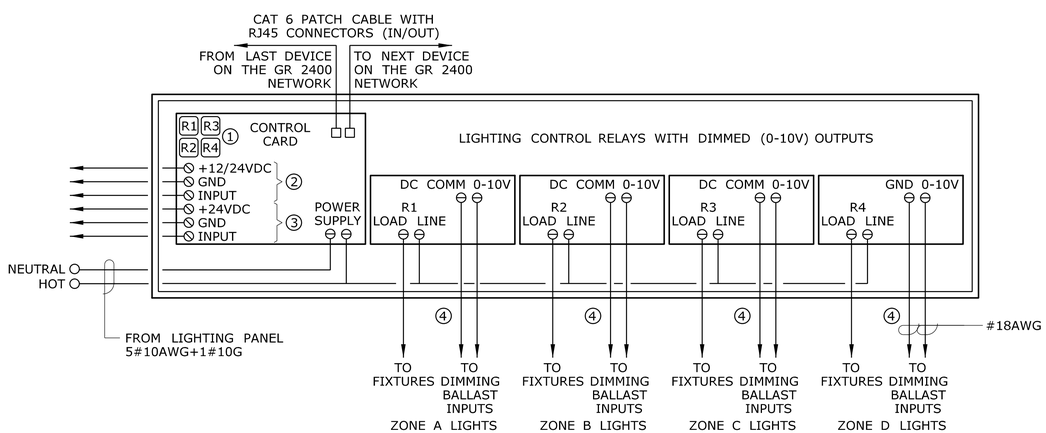

NOTES:

1. MANUAL SWITCH BUTTONS FOR EACH RELAY.
2. OCCUPANCE SENSOR INPUTS, TYPICAL OF 2, WILL OPERATE WITH ANY LOW VOLTAGE OCCUPANCY SENSOR. POWER SUPPLY OUT FOR 12V, 15V OR 24V SENSORS, 3#18 AWG SHIELDED.
3. PHOTOCELLS INPUTS, TYPICAL OF 2, SPECIFY INDOOR PHOTOCELL (PCI) 3#18 AWG SHIELDED. PHOTOCELLS MUST BE ABLE TO CONTROL RELAYS AT EXACT FOOTCANDLE LEVELS (CALLED TRIGGERS). TRIGGERS SHALL BE ADJUSTABLE FOR EACH RELAY, AND SHALL BE PROGRAMMED FROM THE DTC IN THE MASTER RELAY PANEL OR FROM A DESKTOP COMPUTER.
4. MATRIXABLE CONTACT CLOSURE INPUTS PROGRAMMABLE FOR MOMENTARY OR MAINTAINED TYPE SWITCHES, INCLUDING STANDARD STRAP MOUNT WALL SWITCHES.
5. LIGHTING RELAYS: N/C, ZERO CROSS, 20A, 277V.

TYPICAL GR 2400I (2404 AND 2408) - DIM WIRING DETAIL

SCALE: NTS

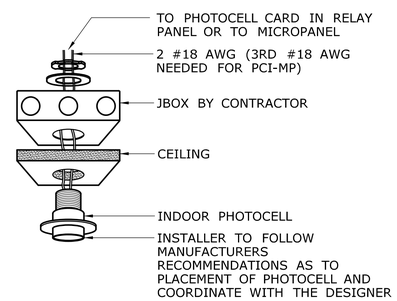

INDOOR PHOTOCELL

SCALE: NTS

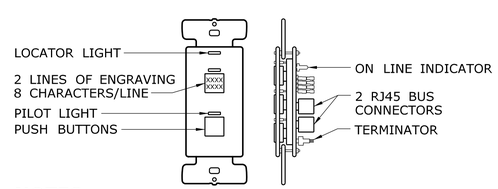

NOTES:

1. SWITCH BUTTONS ARE FACTORY ENGRAVED.
2. PUSH BUTTONS MAY CONTROL ANY RELAY(S) IN ANY COMBINATION.
3. LED PILOT LIGHTS INDICATE STATUS.
4. SWITCH LINKED TO THE GR 2400 DIGITAL BUS VIA CAT. 5 PATCH CABLE WITH RJ45 CONNECTORS.
5. DECORA STYLE FACE PLATE BY CONTRACTOR.

CHELSEA DIGITAL SWITCH

SCALE: NTS

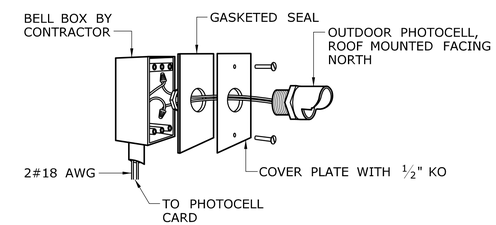

OUTDOOR PHOTOCELL

SCALE: NTS

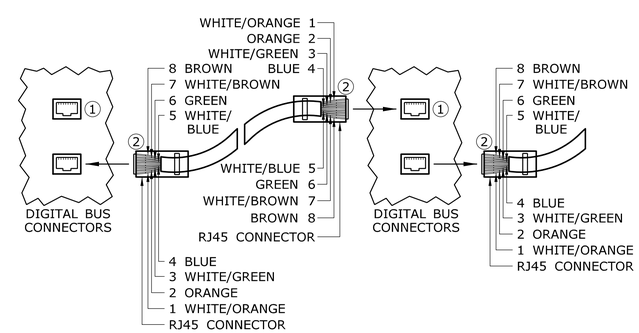

① RJ45 DIGITAL BUS CONNECTORS ARE LOCATED ON EVERY DIGITAL DEVICE (DIGITAL DEVICES ARE DEFINED AS: RELAY PANELS, DIGITAL SWITCHES AND ALL DIGITAL ACCESSORIES).

② RJ45 CONNECTORS USE THE SAME COLOR CODING AS ETHERNET, AND ARE MADE AS STRAIGHT THROUGH CABLES. CROSS OVER CABLES WILL CAUSE SYSTEM FAILURE. ALL CABLES SUPPLIED BY CONTRACTOR.

TYPICAL LOW VOLTAGE NETWORK HOOK UP

SCALE: NTS

REV.	DATE	REVISION DESCRIPTION	SHEET NO.
-	-	-	-
-	-	-	-
-	-	-	-
-	-	-	-
-	-	-	-
-	-	-	-

THE INFORMATION, INCLUDING ESTIMATED QUANTITIES OF WORK, SHOWN ON THESE SHEETS IS BASED ON LIMITED INVESTIGATIONS BY THE STATE AND IS IN NO WAY WARRANTED TO INDICATE THE CONDITIONS OF ACTUAL QUANTITIES OF WORK WHICH WILL BE REQUIRED.

Plotted Date: 1/27/2014

DESIGNER/DRAFTER: D.CHERBELEATA
CHECKED BY: D. NEWMAN

STATE OF CONNECTICUT
DEPARTMENT OF TRANSPORTATION

Filename: ...\FA_CGR_CPS_0170-2296_079__06_FLI__804.dgn

SIGNATURE/BLOCK:
STATE OF CONNECTICUT HUGH S. CHAMBERLIN LICENSED PROFESSIONAL ENGINEER
Hatch Mott MacDonald
Suite 100, North Lobby
400 Blue Hill Drive
Westwood, MA 02090

PROJECT TITLE: NEW HAVEN - HARTFORD SPRINGFIELD RAIL CORRIDOR

TOWN: MERIDEN

DRAWING TITLE: LIGHTING CONTROL ONE-LINE DIAGRAM

PROJECT NO. 170-3155
DRAWING NO. FLI-804
SHEET NO. 03.13.059

ID: LCP 1A
LOCATION: ELECTRICAL ROOM EAST
SUPPLY CIRCUIT: LPA1-14 VOLTAGE: 277V

RELAY PANEL SCHEDULE - LCP 1A - PLATFORM-NORMAL

RELAY	ZONE	TYPE	SOURCE	DESCRIPTION	RELAY	ZONE	TYPE	SOURCE	DESCRIPTION
1	P-A	NC	LPA1	LPA1-1, 3, 5	2	P-B	NC	LPA1	LPA1-2, 4, 6
3	P-C	NC	LPA1	LPA1-8, 10, 12	4	P-D	NC	LPA1	LPA1-15, 17
5				SPARE	6				SPARE
7				SPARE	8	P-M	NC	LPA1	LPA1-7, 9, 11

ID: LCP 1B
LOCATION: ELECTRICAL ROOM WEST
SUPPLY CIRCUIT: LPB1-14 VOLTAGE: 277V

RELAY PANEL SCHEDULE - LCP 1B - PLATFORM-NORMAL

RELAY	ZONE	TYPE	SOURCE	DESCRIPTION	RELAY	ZONE	TYPE	SOURCE	DESCRIPTION
1	P-A	NC	LPB1	LPB1-1, 3, 5	2	P-B	NC	LPB1	LPB1-2, 4, 6
3	P-C	NC	LPB1	LPB1-8, 10, 12	4				SPARE
5				SPARE	6				SPARE
7				SPARE	8				SPARE

ID: LCP 2A
LOCATION: ELECTRICAL ROOM EAST
SUPPLY CIRCUIT: LPA1-14 VOLTAGE: 277V

RELAY PANEL SCHEDULE - LCP 2A - STATION-NORMAL

RELAY	ZONE	TYPE	SOURCE	DESCRIPTION	SENSOR ZONE	RELAY	ZONE	TYPE	SOURCE	DESCRIPTION	SENSOR ZONE
1	S-A	NC	LPA2	LPA2-1, 7	A	2	S-B	NC	LPA2	LPA2-2	B
3	S-C	NC	LPA2	LPA2-4, 6		4	S-C	NC	LPA2	LPA2-13, 15	C
5				SPARE		6				SPARE	
7				SPARE		8				SPARE	

ID: LCP 2B
LOCATION: ELECTRICAL ROOM WEST
SUPPLY CIRCUIT: LPB1-14 VOLTAGE: 277V

RELAY PANEL SCHEDULE - LCP 2B - STATION-NORMAL

RELAY	ZONE	TYPE	SOURCE	DESCRIPTION	SENSOR ZONE	RELAY	ZONE	TYPE	SOURCE	DESCRIPTION	SENSOR ZONE
1	S-A	NC	LPB2	LPB2-1, 4	A	2	S-B	NC	LPB2	LPB2-2	B
3				SPARE		4				SPARE	C
5				SPARE		6				SPARE	
7				SPARE		8				SPARE	

ID: LCP 3A
LOCATION: ELECTRICAL ROOM EAST
SUPPLY CIRCUIT: LPA1-14 VOLTAGE: 277V

RELAY PANEL SCHEDULE - LCP 3A - PLATFORM-EMERGENCY

RELAY	ZONE	TYPE	SOURCE	DESCRIPTION	RELAY	ZONE	TYPE	SOURCE	DESCRIPTION
1	PE-A	NC	EPA1	EPA1-1, 3, 5	2	PE-B	NC	EPA1	EPA1-2, 4, 6
3	PE-C	NC	EPA1	EPA1-8, 10, 12	4				SPARE
5				SPARE	6				SPARE
7				SPARE	8				SPARE

ID: LCP 3B
LOCATION: ELECTRICAL ROOM WEST
SUPPLY CIRCUIT: LPB1-14 VOLTAGE: 277V

RELAY PANEL SCHEDULE - LCP 3B - PLATFORM-EMERGENCY

RELAY	ZONE	TYPE	SOURCE	DESCRIPTION	RELAY	ZONE	TYPE	SOURCE	DESCRIPTION
1	PE-A	NC	EPB1	EPB1-1, 3, 5	2	PE-B	NC	EPB1	EPB1-2, 4, 6
3	PE-C	NC	EPB1	EPB1-13	4				SPARE
5				SPARE	6				SPARE
7				SPARE	8				SPARE

ID: LCP 4A
LOCATION: ELECTRICAL ROOM EAST
SUPPLY CIRCUIT: LPA1-14 VOLTAGE: 277V

RELAY PANEL SCHEDULE - LCP 4A - STATION-EMERGENCY

RELAY	ZONE	TYPE	SOURCE	DESCRIPTION	SENSOR ZONE	RELAY	ZONE	TYPE	SOURCE	DESCRIPTION	SENSOR ZONE
1	SE-A	NC	EPA1	EPA1-7	A	2	SE-B	NC	EPA1	EPA1-9	C
3	SE-C	NC	EPA1	EPA1-11	B	4	SE-D	NC	EPA1	EPA1-13, 15	
5				SPARE		6				SPARE	
7				SPARE		8				SPARE	

ID: LCP 4B
LOCATION: ELECTRICAL ROOM WEST
SUPPLY CIRCUIT: LPB1-14 VOLTAGE: 277V

RELAY PANEL SCHEDULE - LCP 4B - STATION-EMERGENCY

RELAY	ZONE	TYPE	SOURCE	DESCRIPTION	RELAY	ZONE	TYPE	SOURCE	DESCRIPTION
1	SE-A	NC	EPB1	EPB1-7	2	SE-B	NC	EPB1	EPB1-11
3				SPARE	4				SPARE
5				SPARE	6				SPARE
7				SPARE	8				SPARE

REV.	DATE	REVISION DESCRIPTION	SHEET NO.
-	-	-	-
-	-	-	-
-	-	-	-
-	-	-	-
-	-	-	-
-	-	-	-

THE INFORMATION, INCLUDING ESTIMATED QUANTITIES OF WORK, SHOWN ON THESE SHEETS IS BASED ON LIMITED INVESTIGATIONS BY THE STATE AND IS IN NO WAY WARRANTED TO INDICATE THE CONDITIONS OF ACTUAL QUANTITIES OF WORK WHICH WILL BE REQUIRED.

Plotted Date: 1/21/2014

DESIGNER/DRAFTER: D.CHERBELEATA
CHECKED BY: D. NEWMAN

STATE OF CONNECTICUT
DEPARTMENT OF TRANSPORTATION

Filename: ...\FA..CGR..CPS..0170-2296..079...06..FLI...805.dgn

SIGNATURE/BLOCK:
Hatch Mott MacDonald
Suite 100, North Lobby
400 Blue Hill Drive
Westwood, MA 02090

PROJECT TITLE: NEW HAVEN - HARTFORD SPRINGFIELD RAIL CORRIDOR

TOWN: MERIDEN

DRAWING TITLE: LIGHTING CONTROL RELAY PANEL SCHEDULE

PROJECT NO. 170-3155
DRAWING NO. FLI-805
SHEET NO. 03.13.060

NOTES:

1. CONTRACTOR SHALL BE RESPONSIBLE FOR ALL FIELD COORDINATIONS AND MEASUREMENTS.
2. SOME FIXTURE TYPES CHANGED JUST BEFORE THE 90% SUBMISSION AND THEY MAY NOT BE REPRESENTED IN THE CALCULATIONS. ALL CALCULATIONS WILL BE RESUBMITTED FOR FINAL DESIGN.

STATION LIGHTING - EQUIPMENT SCHEDULE

FIXTURE TYPE	DESCRIPTION	SYMBOL	LAMP	VOLTAGE	MOUNTING	MOUNTING HEIGHT	REMARKS
A	LED		30W	277V	PENDANT	10'-0" PLATFORM 9'-0" PLATFORM RAMPS	PLATFORM, PLATFORM RAMPS AND STAIRS PEERLESS STATION STM9 44L-8FT-BI-DIRECTIONAL-R8-277-D32-SCT-LP835-F3A-24-C099 WHITE
B	LED		100W	277V	SURFACE	7.8 FT.	GATEWAY CANOPY - WALLINGFORD ONLY VOIGT LTG - TTMO SLOTTLIGHTER T307-LED-750LM-DSL ASYM-SM 4'-WH 277
B1	LED		50W	277V	SURFACE	7.8 FT.	GATEWAY CANOPY - WALLINGFORD ONLY VOIGT LIGHTING; TTMO SLOTTLIGHTER T30FSL-LED-750LM-D1 ASYM-SM 2'-WH 277
C	LED		8W	277V	COVE	VARIES ALONG COVE	PASSENGERS OVERPASS PHILLIPS EW COVE MX POWERCORE 3500K-MEDIUM-12-277VAC UL-1FT 1C ITEM# 523-000050-09
D	LED		100W	277V	PENDANT	VARIES WITH CEILING HEIGHT	PASSENGERS OVERPASS LUMENPULSE LUMENBEAM; LBGP-277-35K-WFL-SCAN4-LSLH-CC RAL8019-DIM
EX	LED		5W	277V	SIGN		PLATFORM, STATION DUAL LITE EXIT LIGHTING, LED1ACRWW
F	LED		50W	277V	CEILING	CEILING	MAINTAINANCE ROOMS, SNOW MELT SHEDS, UTILITY ROOMS LITHONIA LIGHTING; LED WRAPAROUND LBL4 LP835-753573917601-4'-4000-3500K-#12ACR-277V-50W
G1	LED		14W	277V	SCONCE	VARIES SEE ARCH. DWGS.	STATION STAIRS, BRIDGE US ARCHITECTURAL LIGHTING; 3500K-#12OCR-277V-50W CAMBER CBR1-LED 277-RALB019
G2	LED		16W	277V	RECESSED DOWNLIGHT	CEILING	STATIONS - 2ND FLOOR GOTHAM; 4"EVO-2700K-10-6AR-WD-LS-277
G3	LED		35W	277V	RECESSED DOWNLIGHT	CEILING	STATIONS - 2ND FLOOR GOTHAM; 6"EVO-3500K-22-6AR-MD-LS-277
H	LED		60W	277V	CEILING	14 FT. (9 FT. LANDING)	TOWER 1ST FLOOR AND 2ND FLOOR LITHONIA PROTEON PTNSL4-WD-277-LP841-DWH-CRE-AFAC 120 WITH UPLIGHT MODULE
I	LED		14W	277V	SCONCE	8 FT.	TOWER ENTRANCE (FACADE) US ARCHITECTURAL LIGHTING; CAMBER CBR2-LED 277-RAL8019
K	LED		20W	277V	WALL	3 FT.	ELEVATOR PIT PHOENIX; VA-W-LED-13-WW-GPC-G-(120V)
L	LED		20W	277V	RECESSED	CEILING	PASSENGER SHELTERS (PLATFORMS) LITHONIA LIGHTING; ZL2-L24-2600L-277-LP835-CL
P1	LED		2X50W+ 1X70W	277V	POLE	13 FT.	DOMUS50 DMS50-SG-RM/40W49LED4K-ES-LE2S-CUSTOMIZED POLE PER DWG. ARC-512 AND ARC-513; BRACKET PC-3B-BKTX DOMUS50 DMS50-SG-RM/70W64LED4K-ES-LE2S-BLACK
P2	LED		2X50W	277V	POLE	13 FT.	DOMUS50 DMS50-SG-RM/40W49LED4K-ES-LE2S-CUSTOMIZED POLE PER DWG. ARC-512 AND ARC-513; BRACKET PC-3B-BKTX-BLACK
R1	LED	41"	8W	277V	RAIL	RAIL	RAIL MOUNTED/FRONT STAIRS AND RAMPS WAGNER LUMENRAIL; GR2190.4 LENS: LULS 3K60TF-42
R2	LED	21"	4W	277V	RAIL	RAIL	RAIL MOUNTED/FRONT STAIRS AND RAMPS WAGNER LUMENRAIL; GR2190.4 LENS: LULS 3K60TF-24
T	LED		24W	277V	WALL	8.2 FT.	ENTRANCE/GATEWAY CANOPIES VISA LIGHTING; ADVANTUS DV3100-24-LED NWT12-120-SWF(SL)-OBRZ-DIM10

REV.	DATE	REVISION DESCRIPTION	SHEET NO.
-	-	-	-
-	-	-	-
-	-	-	-
-	-	-	-
-	-	-	-
-	-	-	-

THE INFORMATION, INCLUDING ESTIMATED QUANTITIES OF WORK, SHOWN ON THESE SHEETS IS BASED ON LIMITED INVESTIGATIONS BY THE STATE AND IS IN NO WAY WARRANTED TO INDICATE THE CONDITIONS OF ACTUAL QUANTITIES OF WORK WHICH WILL BE REQUIRED.

Plotted Date: 1/28/2014

DESIGNER/DRAFTER: D.CHERBELEATA
CHECKED BY: D. NEWMAN

STATE OF CONNECTICUT
DEPARTMENT OF TRANSPORTATION

Filename: ...\FA_CGR_CPS_0170-2296_079__06_FLI__901.dgn

SIGNATURE/BLOCK:

Hatch Mott MacDonald
Suite 100, North Lobby
400 Blue Hill Drive
Westwood, MA 02090

PROJECT TITLE:
NEW HAVEN - HARTFORD
SPRINGFIELD
RAIL CORRIDOR

TOWN: MERIDEN

DRAWING TITLE: LIGHTING FIXTURE SCHEDULE

PROJECT NO. 170-3155
DRAWING NO. FLI-901
SHEET NO. 03.13.061

COMMUNICATION:

- ANTENNA
- COMMUNICATION ENCLOSURE/RACK
- (B) BLUE LIGHT/EMERGENCY CALL BOX
- RB RADIO REBROADCAST REPEATER
- TW TWO-WAY RADIO AMPLIFIER
- D DOOR ACCESS CONTROL MONITORING POINT
- (S) PUBLIC ADDRESS SPEAKER
- PASSENGER INFORMATION DISPLAY SIGN TYPE E2
- PASSENGER INFORMATION DISPLAY SIGN TYPE E3a/e
- PASSENGER INFORMATION DISPLAY SIGN TYPE E8a/c
- TVM TICKET VENDING MACHINE
- PIDS PASSENGER INFORMATION DISPLAY SYSTEM

ABBREVIATIONS:

- TVM TICKET VENDING MACHINE
- PIDS PASSENGER INFORMATION DISPLAY SYSTEM
- VSS VIDEO SURVEILLANCE SYSTEM
- TELEPHONE /DATA OUTLET

SIGN SCHEDULE

SIGN TYPE	USE/DESCRIPTION	CONTENT	MOUNTING
E2	NEXT TRAIN INFORMATION/DATE & TIME	VISUAL ECHO OF AUDIO ANNOUNCEMENTS	SUSPENDED, FROM CANOPY (DOUBLE-SIDED)
E3a	VARIABLE MESSAGING	VISUAL ECHO OF AUDIO ANNOUNCEMENTS	WALLMOUNT (SINGLE-SIDED)
E3e	VARIABLE MESSAGING	VISUAL ECHO OF AUDIO ANNOUNCEMENTS	SUSPENDED, FROM CANOPY (DOUBLE-SIDED)
E8a	TRAIN LISTING AND VARIABLE MESSAGING - SINGLE SCREEN	INFO LIST FOR MULTIPLE DEPARTURES & ARRIVALS MIXED IN TIME ORDER ALTERNATING WITH VARIABLE MESSAGE ANNOUNCEMENTS ON ONE SCREEN	WALLMOUNT (SINGLE-SIDED)
E8c	TRAIN LISTING AND VARIABLE MESSAGING	INFO LIST FOR MULTIPLE DEPARTURES & ARRIVALS MIXED IN TIME ORDER ALTERNATING WITH VARIABLE MESSAGE ANNOUNCEMENTS ON ONE SCREEN	CEILING HUNG (SINGLE-SIDED PENDANT MOUNT)

NOTES:

1. MOUNTING HEIGHT OF TELEPHONE PER ADA STANDARDS.
2. SIGN MOUNTING HEIGHT 8'-0" MINIMUM, SIGNS INSTALLED AS SHOWN ON PLANS.
3. PIDS SIGNAGE PER GRAPHIC SIGNAGE STANDARD MANUAL (LATEST EDITION).
4. REFER TO ARCHITECTURAL DRAWINGS FOR EXACT LOCATIONS OF PIDS.
5. REFER TO STRUCTURAL DRAWINGS FOR MOUNTING DETAILS TO STEEL.

REV.	DATE	REVISION DESCRIPTION	SHEET NO.
-	-	-	-
-	-	-	-
-	-	-	-
-	-	-	-
-	-	-	-
-	-	-	-

THE INFORMATION, INCLUDING ESTIMATED QUANTITIES OF WORK, SHOWN ON THESE SHEETS IS BASED ON LIMITED INVESTIGATIONS BY THE STATE AND IS IN NO WAY WARRANTED TO INDICATE THE CONDITIONS OF ACTUAL QUANTITIES OF WORK WHICH WILL BE REQUIRED.

Plotted Date: 1/28/2014

DESIGNER/DRAFTER: W. CAREY
CHECKED BY: D. NEWMAN
NOT TO SCALE

STATE OF CONNECTICUT
DEPARTMENT OF TRANSPORTATION

Filename: ...\FA..CGR..CPS..0170-2296..079...06..FCI...001.dgn

SIGNATURE/ BLOCK:

Hatch Mott MacDonald
Suite 100, North Lobby
400 Blue Hill Drive
Westwood, MA 02090

PROJECT TITLE: NEW HAVEN-HARTFORD SPRINGFIELD RAIL CORRIDOR

TOWN: MERIDEN

DRAWING TITLE: COMM. SYSTEMS GEN. NOTES & LEGEND

PROJECT NO. 170-3155
DRAWING NO. FCI-001
SHEET NO. 03.13.062

NOTES:

1. REFER TO LEGEND SYMBOLS ON DWG. FCI-001.
2. REFER TO RISER DIAGRAMS ON DWGS. FCI-701/FCI-702.

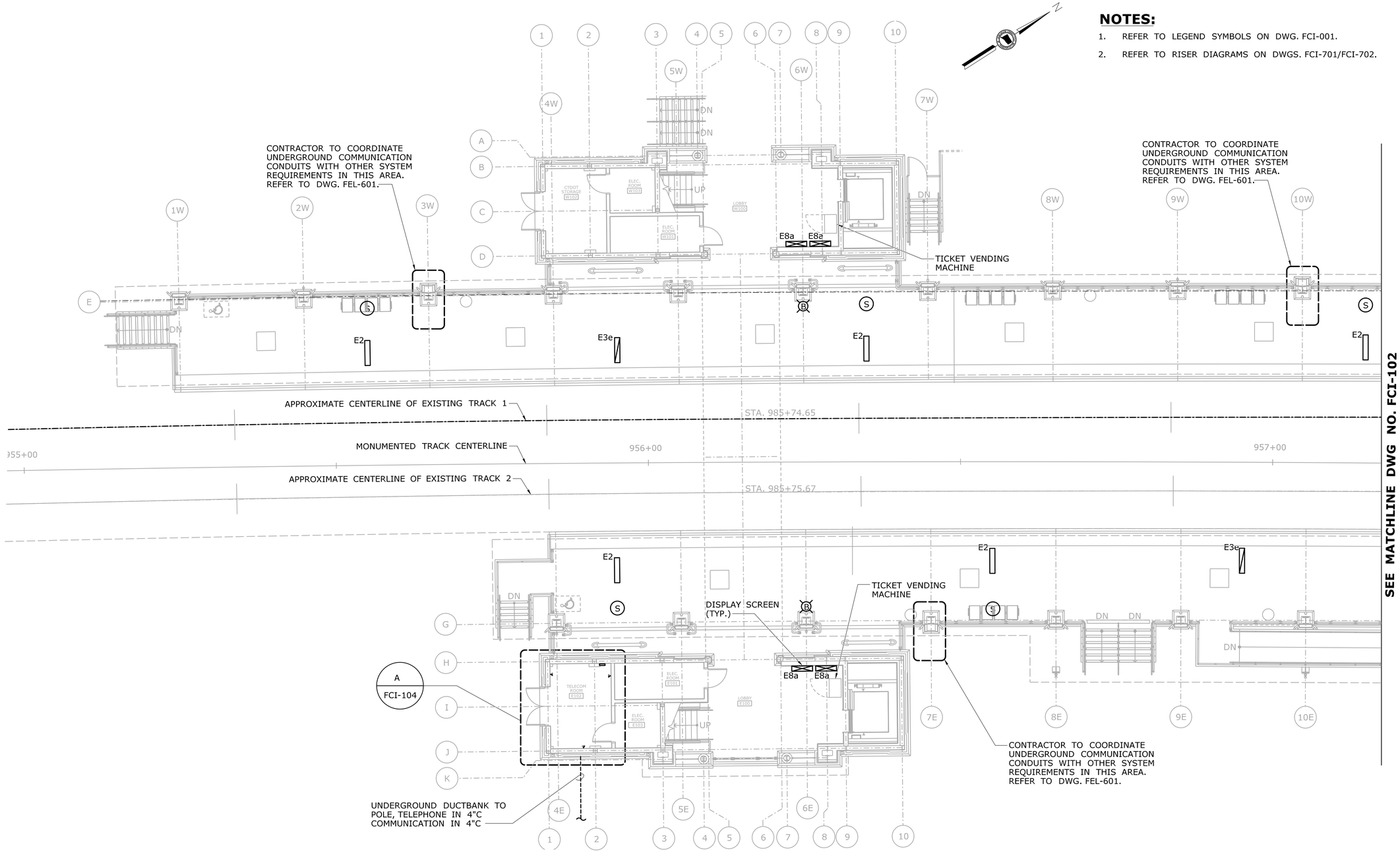

COMMUNICATION SYSTEMS PLAN - PART A

SCALE: 1/8" = 1'-0"

REV.	DATE	REVISION DESCRIPTION	SHEET NO.
-	-	-	-
-	-	-	-
-	-	-	-
-	-	-	-
-	-	-	-
-	-	-	-

THE INFORMATION, INCLUDING ESTIMATED QUANTITIES OF WORK, SHOWN ON THESE SHEETS IS BASED ON LIMITED INVESTIGATIONS BY THE STATE AND IS IN NO WAY WARRANTED TO INDICATE THE CONDITIONS OF ACTUAL QUANTITIES OF WORK WHICH WILL BE REQUIRED.

Plotted Date: 1/28/2014

DESIGNER/DRAFTER: **W. CAREY**

CHECKED BY: **D. NEWMAN**

SCALE: 1/8" = 1'-0"

STATE OF CONNECTICUT
DEPARTMENT OF TRANSPORTATION

Filename: ...\FA_CGR_CPS_0170-2296_079_06_FCI_101.dgn

SIGNATURE/BLOCK:

Hatch Mott MacDonald
Suite 100, North Lobby
400 Blue Hill Drive
Westwood, MA 02090

PROJECT TITLE:

NEW HAVEN - HARTFORD SPRINGFIELD RAIL CORRIDOR

TOWN: **MERIDEN**

DRAWING TITLE: **COMM. SYSTEMS PLAN PART A**

PROJECT NO. **170-3155**

DRAWING NO. **FCI-101**

SHEET NO. **03.13.063**

NOTES:

1. REFER TO LEGEND SYMBOLS ON DWG. FCI-001.
2. REFER TO RISER DIAGRAMS ON DWGS. FCI-701/FCI-702.

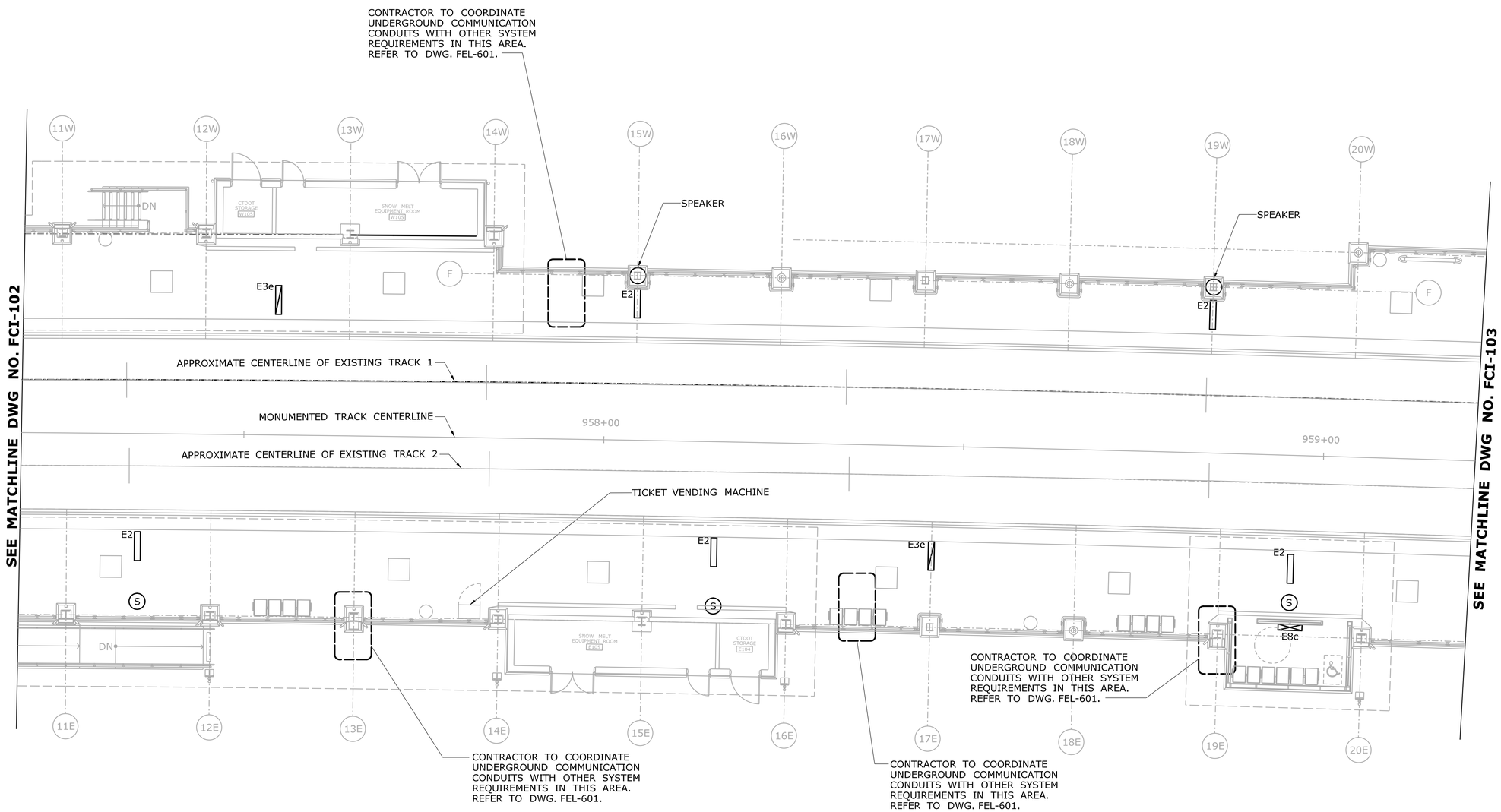

COMMUNICATION SYSTEMS PLAN - PART B

SCALE: 1/8" = 1'-0"

REV.	DATE	REVISION DESCRIPTION	SHEET NO.
-	-	-	-
-	-	-	-
-	-	-	-
-	-	-	-
-	-	-	-
-	-	-	-
-	-	-	-

THE INFORMATION, INCLUDING ESTIMATED QUANTITIES OF WORK, SHOWN ON THESE SHEETS IS BASED ON LIMITED INVESTIGATIONS BY THE STATE AND IS IN NO WAY WARRANTED TO INDICATE THE CONDITIONS OF ACTUAL QUANTITIES OF WORK WHICH WILL BE REQUIRED.

Plotted Date: 1/16/2014

DESIGNER/DRAFTER: **W. CAREY**

CHECKED BY: **D. NEWMAN**

SCALE: 1/8" = 1'-0"

STATE OF CONNECTICUT
DEPARTMENT OF TRANSPORTATION

Filename: ...\FA_CGR_CPS_0170-2296_079_06_FCI_102.dgn

SIGNATURE/ BLOCK:

STATE OF CONNECTICUT RODNEY K. GRAVELINE 25 LICENSED PROFESSIONAL ENGINEER

Hatch Mott MacDonald
Suite 100, North Lobby
400 Blue Hill Drive
Westwood, MA 02090

PROJECT TITLE:
NEW HAVEN - HARTFORD SPRINGFIELD RAIL CORRIDOR

TOWN: **MERIDEN**

DRAWING TITLE: **COMM. SYSTEMS PLAN PART B**

PROJECT NO. **170-3155**

DRAWING NO. **FCI-102**

SHEET NO. **03.13.064**

NOTES:

1. REFER TO LEGEND SYMBOLS ON DWG. FCI-001.
2. REFER TO RISER DIAGRAMS ON DWGS. FCI-701/FCI-702.

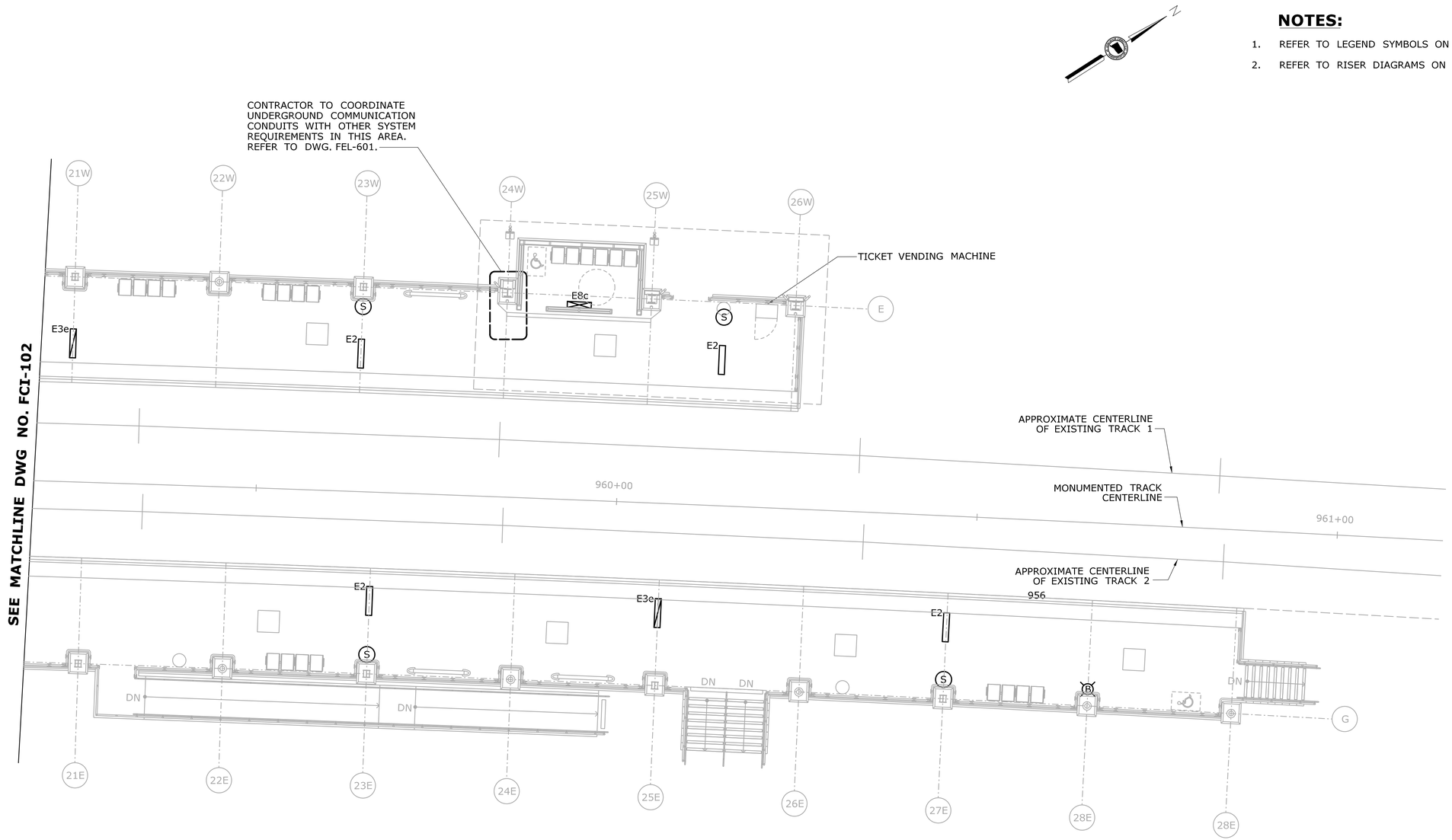

COMMUNICATION SYSTEMS PLAN - PART C

SCALE: 1/8" = 1'-0"

REV.	DATE	REVISION DESCRIPTION	SHEET NO.
-	-	-	-
-	-	-	-
-	-	-	-
-	-	-	-
-	-	-	-
-	-	-	-

THE INFORMATION, INCLUDING ESTIMATED QUANTITIES OF WORK, SHOWN ON THESE SHEETS IS BASED ON LIMITED INVESTIGATIONS BY THE STATE AND IS IN NO WAY WARRANTED TO INDICATE THE CONDITIONS OF ACTUAL QUANTITIES OF WORK WHICH WILL BE REQUIRED.

Plotted Date: 1/16/2014

DESIGNER/DRAFTER: **W. CAREY**

CHECKED BY: **D. NEWMAN**

SCALE: 1/8" = 1'-0"

STATE OF CONNECTICUT
DEPARTMENT OF TRANSPORTATION

Filename: ...\FA..CGR..CPS..0170-2296..079...06..FCI...103.dgn

SIGNATURE/ BLOCK:

STATE OF CONNECTICUT BROWN & GRANTSON PROFESSIONAL ENGINEER LICENSED

Hatch Mott MacDonald
Suite 100, North Lobby
400 Blue Hill Drive
Westwood, MA 02090

PROJECT TITLE:
NEW HAVEN - HARTFORD SPRINGFIELD RAIL CORRIDOR

TOWN: **MERIDEN**

DRAWING TITLE: **COMM. SYSTEMS PLAN PART C**

PROJECT NO. **170-3155**

DRAWING NO. **FCI-103**

SHEET NO. **03.13.065**

NOTES:

1. REFER TO LEGEND SYMBOLS ON DWG. FCI-001.
2. REFER TO RISER DIAGRAMS ON DWGS. FCI-701/FCI-702.

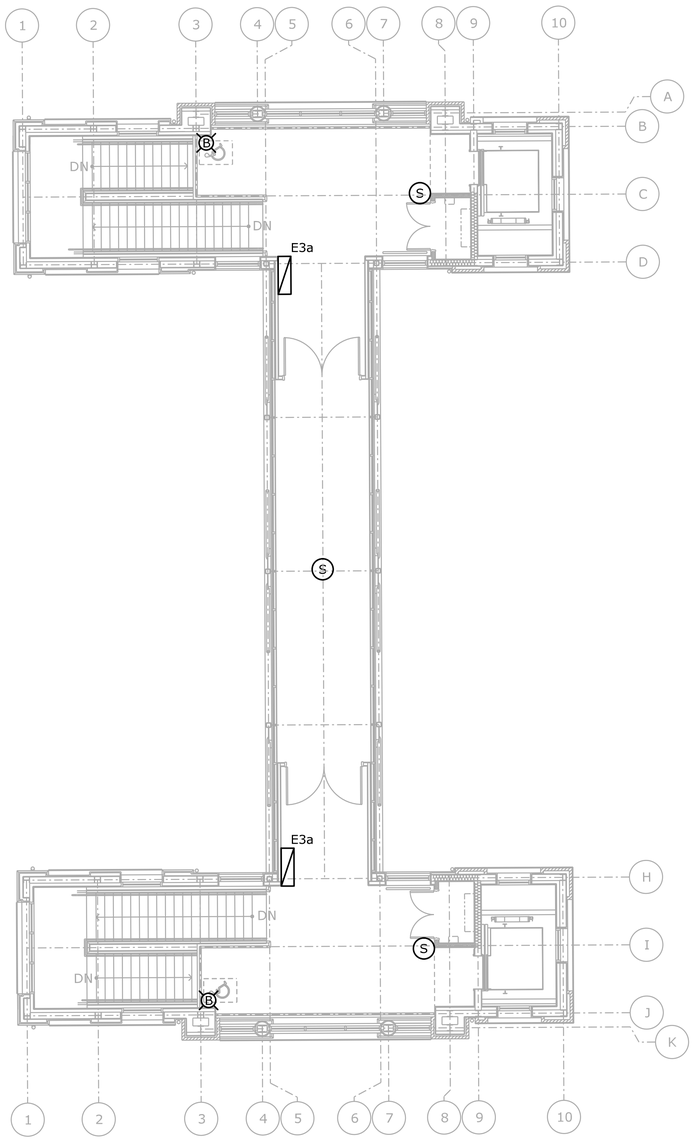

COMMUNICATION SYSTEMS PLAN - PEDESTRIAN BRIDGE

SCALE: 1/8" = 1'-0"

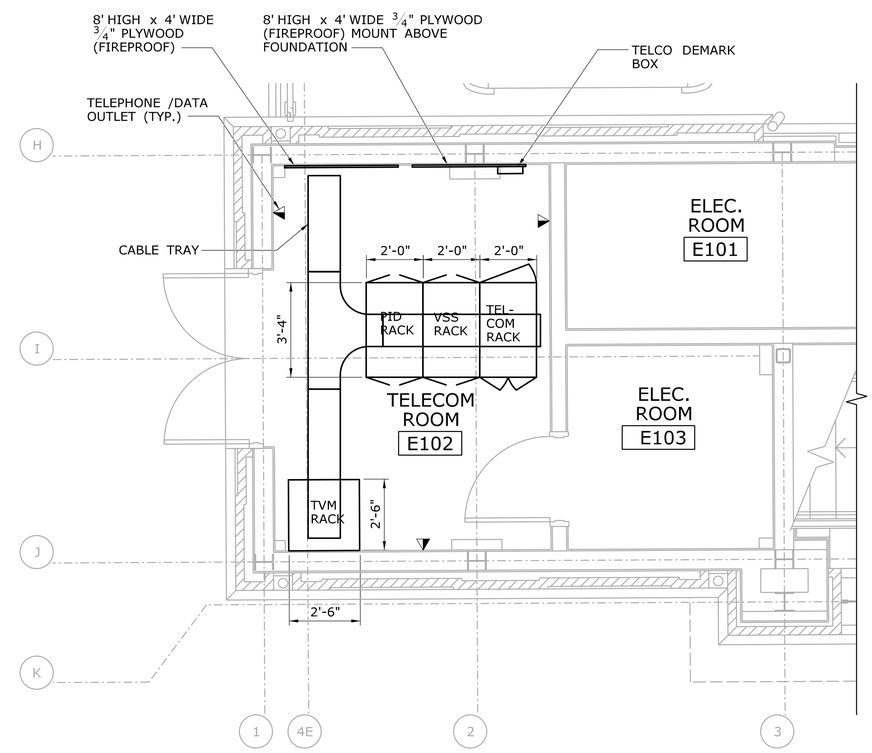

A / FCI-101 **COMMUNICATION ROOM LAYOUT**

SCALE: 3/8" = 1'-0"

REV.	DATE	REVISION DESCRIPTION	SHEET NO.
-	-	-	-
-	-	-	-
-	-	-	-
-	-	-	-
-	-	-	-
-	-	-	-

THE INFORMATION, INCLUDING ESTIMATED QUANTITIES OF WORK, SHOWN ON THESE SHEETS IS BASED ON LIMITED INVESTIGATIONS BY THE STATE AND IS IN NO WAY WARRANTED TO INDICATE THE CONDITIONS OF ACTUAL QUANTITIES OF WORK WHICH WILL BE REQUIRED.

Plotted Date: 1/28/2014

DESIGNER/DRAFTER: **W. CAREY**

CHECKED BY: **D. NEWMAN**

SCALE: 1/8" = 1'-0"

STATE OF CONNECTICUT
DEPARTMENT OF TRANSPORTATION

Filename: ...\FA_CGR_CPS_0170-2296_079__06_FCI__104.dgn

SIGNATURE/ BLOCK:

Hatch Mott MacDonald
Suite 100, North Lobby
400 Blue Hill Drive
Westwood, MA 02090

PROJECT TITLE: **NEW HAVEN - HARTFORD SPRINGFFIELD RAIL CORRIDOR**

TOWN: **MERIDEN**

DRAWING TITLE: **COMM. SYSTEMS PED. BRIDGE PLAN**

PROJECT NO. **170-3155**

DRAWING NO. **FCI-104**

SHEET NO. **03.13.066**

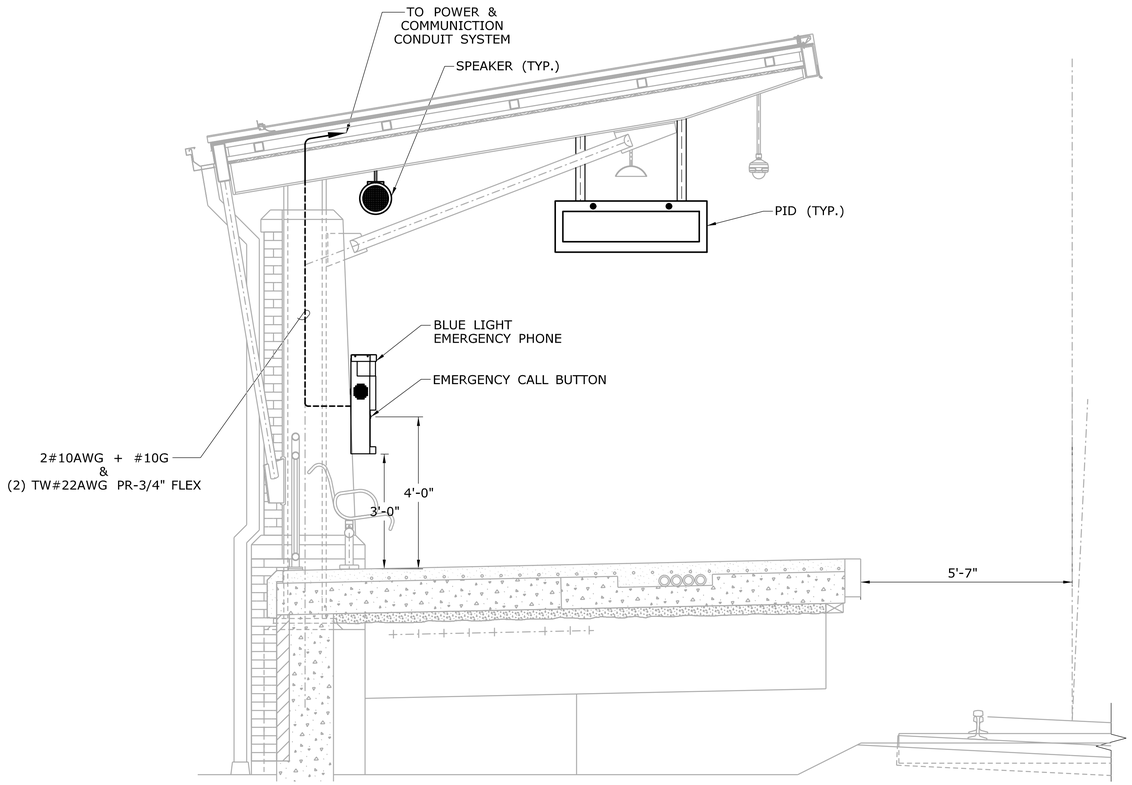

COMMUNICATION EQUIPMENT MOUNTING DETAILS
SCALE: 1/2" = 1'-0"

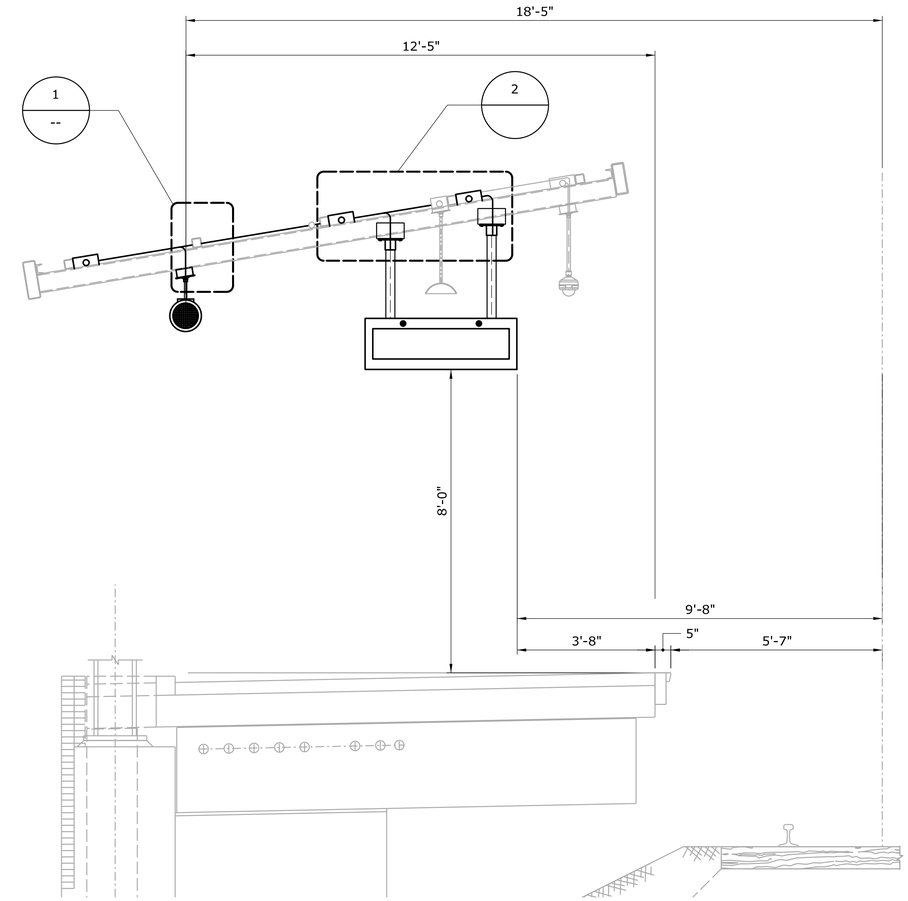

COMMUNICATION EQUIPMENT MOUNTING DETAILS
SCALE: 1/2" = 1'-0"

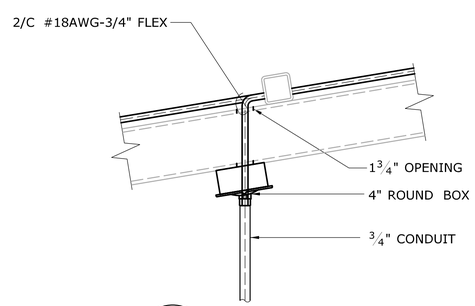

1 / --
DETAIL 1
SCALE: 1 1/2" = 1'-0"

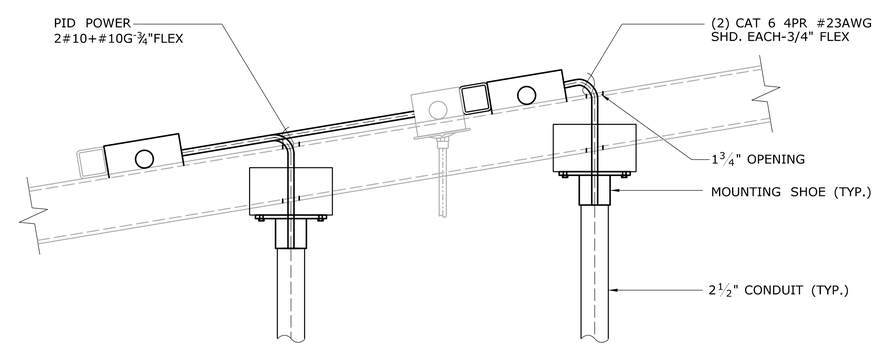

2 / --
DETAIL 2
SCALE: 1 1/2" = 1'-0"

REV.	DATE	REVISION DESCRIPTION	SHEET NO.
-	-	-	-
-	-	-	-
-	-	-	-
-	-	-	-
-	-	-	-
-	-	-	-

THE INFORMATION, INCLUDING ESTIMATED QUANTITIES OF WORK, SHOWN ON THESE SHEETS IS BASED ON LIMITED INVESTIGATIONS BY THE STATE AND IS IN NO WAY WARRANTED TO INDICATE THE CONDITIONS OF ACTUAL QUANTITIES OF WORK WHICH WILL BE REQUIRED.

Plotted Date: 1/16/2014

DESIGNER/DRAFTER: **W. CAREY**
CHECKED BY: **D. NEWMAN**
SCALE AS NOTED

STATE OF CONNECTICUT
DEPARTMENT OF TRANSPORTATION

Filename: ...\FA_CGR_CPS_0170-2296_079__06_FCI__601.dgn

SIGNATURE/ BLOCK:
STATE OF CONNECTICUT · TODD E. GRANTHAM · LICENSED PROFESSIONAL ENGINEER
Hatch Mott MacDonald
Suite 100, North Lobby
400 Blue Hill Drive
Westwood, MA 02090

PROJECT TITLE:
NEW HAVEN - HARTFORD SPRINGFIELD RAIL CORRIDOR

TOWN: **MERIDEN**

DRAWING TITLE: **COMM. SYSTEMS DETAILS**

PROJECT NO. **170-3155**
DRAWING NO. **FCI-601**
SHEET NO. **03.13.067**

NOTES:

1. SEE DWG. FCI-101 TO FCI-104 FOR EQUIPMENT LOCATIONS.

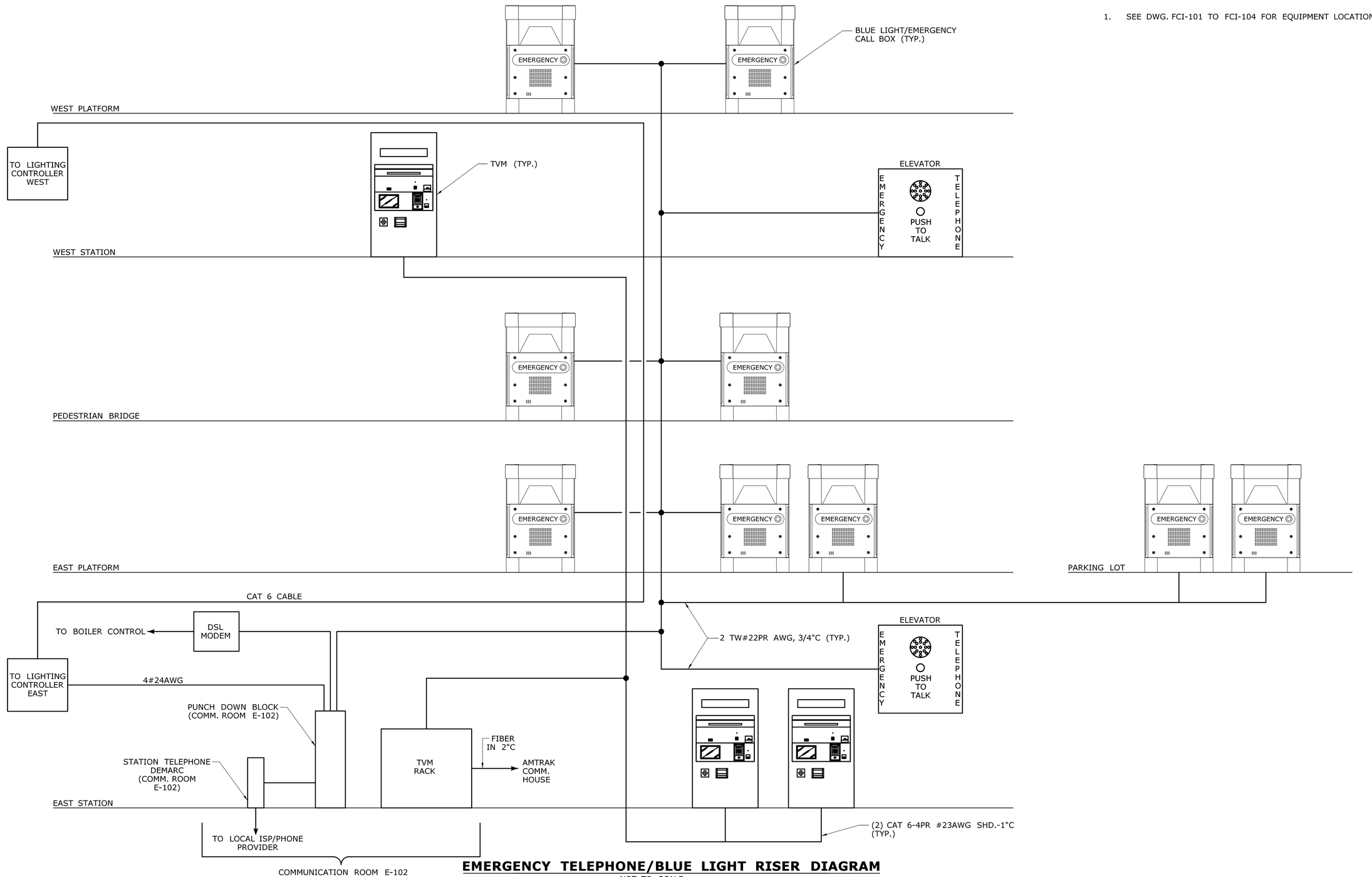

EMERGENCY TELEPHONE/BLUE LIGHT RISER DIAGRAM

NOT TO SCALE

REV.	DATE	REVISION DESCRIPTION	SHEET NO.
-	-	-	-
-	-	-	-
-	-	-	-
-	-	-	-
-	-	-	-
-	-	-	-
-	-	-	-

THE INFORMATION, INCLUDING ESTIMATED QUANTITIES OF WORK, SHOWN ON THESE SHEETS IS BASED ON LIMITED INVESTIGATIONS BY THE STATE AND IS IN NO WAY WARRANTED TO INDICATE THE CONDITIONS OF ACTUAL QUANTITIES OF WORK WHICH WILL BE REQUIRED.

Plotted Date: 1/16/2014

DESIGNER/DRAFTER: **W. CAREY**

CHECKED BY: **D. NEWMAN**

NOT TO SCALE

STATE OF CONNECTICUT
DEPARTMENT OF TRANSPORTATION

Filename: ...\FA_CGR_CPS_0170-2296_079_06_FCI_701.dgn

SIGNATURE/BLOCK:

Hatch Mott MacDonald
Suite 100, North Lobby
400 Blue Hill Drive
Westwood, MA 02090

PROJECT TITLE:

NEW HAVEN-HARTFORD SPRINGFIELD RAIL CORRIDOR

TOWN: **MERIDEN**

DRAWING TITLE: **COMM. SYS.-BL LIGHT, TVM & EMER. TEL. RISER DIAG.**

PROJECT NO. **170-3155**

DRAWING NO. **FCI-701**

SHEET NO. **03.13.068**

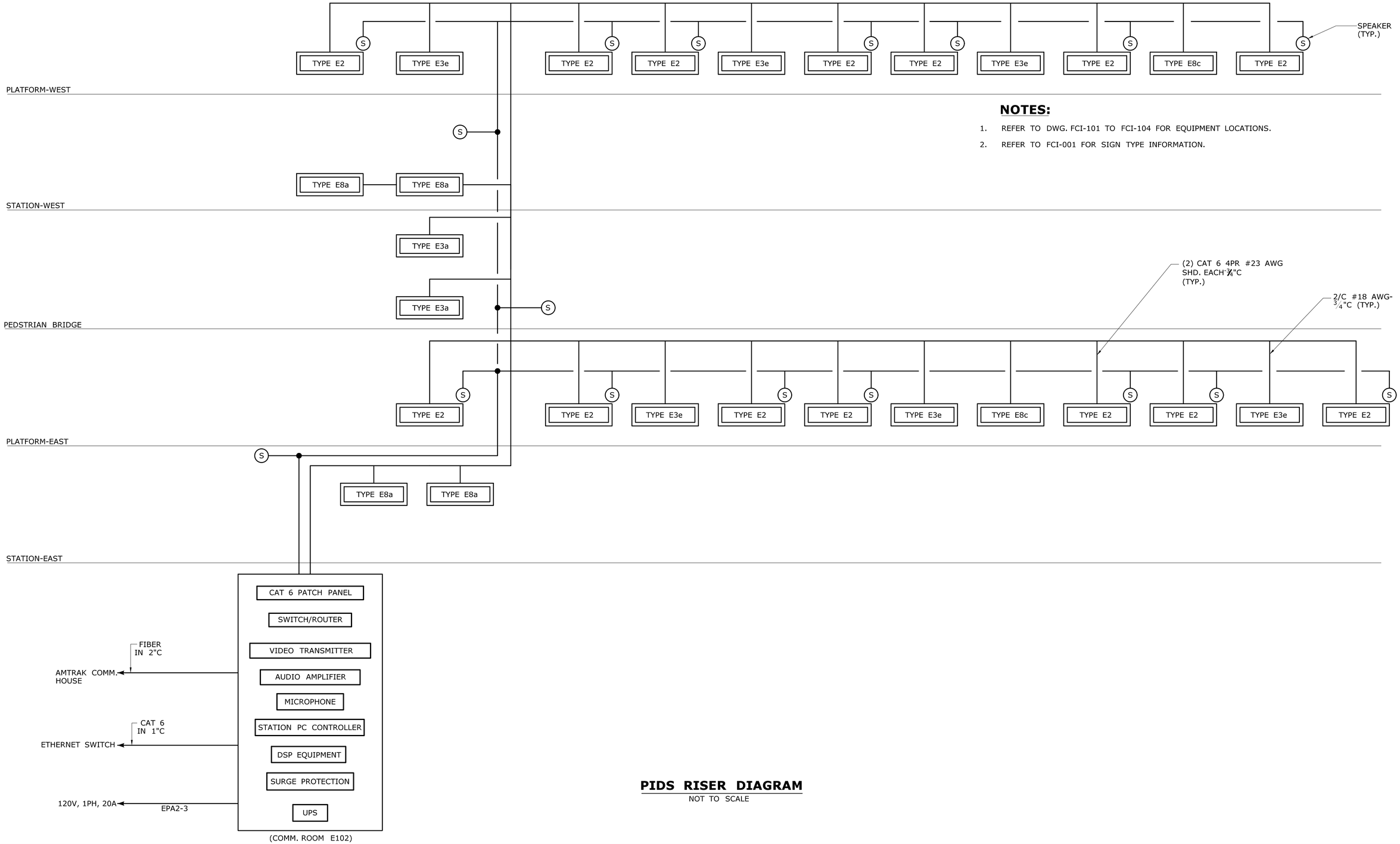

NOTES:

1. REFER TO DWG. FCI-101 TO FCI-104 FOR EQUIPMENT LOCATIONS.
2. REFER TO FCI-001 FOR SIGN TYPE INFORMATION.

PIDS RISER DIAGRAM

NOT TO SCALE

REV.	DATE	REVISION DESCRIPTION	SHEET NO.
-	-	-	-
-	-	-	-
-	-	-	-
-	-	-	-
-	-	-	-
-	-	-	-

THE INFORMATION, INCLUDING ESTIMATED QUANTITIES OF WORK, SHOWN ON THESE SHEETS IS BASED ON LIMITED INVESTIGATIONS BY THE STATE AND IS IN NO WAY WARRANTED TO INDICATE THE CONDITIONS OF ACTUAL QUANTITIES OF WORK WHICH WILL BE REQUIRED.

Plotted Date: 1/22/2014

DESIGNER/DRAFTER: **W. CAREY**

CHECKED BY: **D. NEWMAN**

NOT TO SCALE

STATE OF CONNECTICUT
DEPARTMENT OF TRANSPORTATION

Filename: ...\FA_CGR_CPS_0170-2296_079__06_FCI__702.dgn

SIGNATURE/ BLOCK:

Hatch Mott MacDonald
Suite 100, North Lobby
400 Blue Hill Drive
Westwood, MA 02090

PROJECT TITLE:

NEW HAVEN-HARTFORD SPRINGFIELD RAIL CORRIDOR

TOWN: **MERIDEN**

DRAWING TITLE: **COMM. SYSTEMS PA/PIDS RISER DIAGRAMS**

PROJECT NO. **170-3155**

DRAWING NO. **FCI-702**

SHEET NO. **03.13.069**

SECURITY LEGEND:

- PB — PUSHBUTTON
- CAMERA
- FUTURE CAMERA
- INFRARED CAMERA
- B — DOOR BELL
- DC — DOOR CONTACT
- SCP — SECURITY SYSTEM CONTROL PANEL
- EL — ELECTRIC DOOR LOCK
- KS — KEY SWITCH
- P — PANIC BAR

ABBREVIATIONS:

VSS VIDEO SURVEILLANCE SYSTEM

CAMERA SCHEDULE

CAMERA TYPE	ENCLOSURE TYPE	MOUNT TYPE	LENS TYPE	POWER SUPPLY	F/O CONNECTION	WIRE REQUIRED
C1	OUTDOOR WP/VANDAL RESISTANT WITH HEATER	WALL/POLE	5MP-4.5-10mm f1.6	EXTERNAL	EXTERNAL	-
C2	OUTDOOR WP/VANDAL RESISTANT WITH HEATER	PENDANT	5MP-4.5-10mm f1.6	EXTERNAL	EXTERNAL	-
C3	IR OUTDOOR WP/VANDAL RESISTANT WITH HEATER	PENDANT	5MP-4.5-10mm f1.6	EXTERNAL	EXTERNAL	-

NOTES:

1. ALL EQUIPMENT AND CONNECTIONS SHALL BE FURNISHED AND INSTALLED BY THE CONTRACTOR.
2. SEE PLANS FOR CAMERA LOCATIONS.
3. ALL EQUIPMENT SHALL BE LATEST TECHNOLOGY WITH COMMERCIAL OFF THE SHELF AVAILABILITY PER AMTRAK STANDARDS.
4. THE CONTRACTOR SHALL INSURE CAMERA LOCATIONS ARE NOT OBSTRUCTED.
5. PROVIDE TWO FIXED CAMERAS WITHIN ONE ENCLOSURE VIEWING OPPOSITE DIRECTIONS.
6. CONTRACTOR SHALL PROVIDE OPTIMIZED CAMERA VIEWING ANGLE AND FIELD OF VIEW BASED ON SELECTED CAMERA SPECIFICATIONS.

REV.	DATE	REVISION DESCRIPTION	SHEET NO.
-	-	-	-
-	-	-	-
-	-	-	-
-	-	-	-
-	-	-	-
-	-	-	-

THE INFORMATION, INCLUDING ESTIMATED QUANTITIES OF WORK, SHOWN ON THESE SHEETS IS BASED ON LIMITED INVESTIGATIONS BY THE STATE AND IS IN NO WAY WARRANTED TO INDICATE THE CONDITIONS OF ACTUAL QUANTITIES OF WORK WHICH WILL BE REQUIRED.

Plotted Date: 1/16/2014

DESIGNER/DRAFTER: **W. CAREY**
CHECKED BY: **D. NEWMAN**

NOT TO SCALE

STATE OF CONNECTICUT
DEPARTMENT OF TRANSPORTATION

Filename: ...\FA..CGR..CPS..0170-2296..079...06..FAS...001.dgn

SIGNATURE/ BLOCK:

Hatch Mott MacDonald
Suite 100, North Lobby
400 Blue Hill Drive
Westwood, MA 02090

PROJECT TITLE:
NEW HAVEN - HARTFORD SPRINGFIELD RAIL CORRIDOR

TOWN: **MERIDEN**

DRAWING TITLE:
SECURITY SYSTEMS GEN. NOTES & LEGEND

PROJECT NO. **170-3155**
DRAWING NO. **FAS-001**
SHEET NO. **03.13.070**

NOTES:

1. REFER TO LEGEND SYMBOLS ON DWG. FAS-001.
2. REFER TO RISER DIAGRAMS ON DWGS. FAS-701/FAS-702.

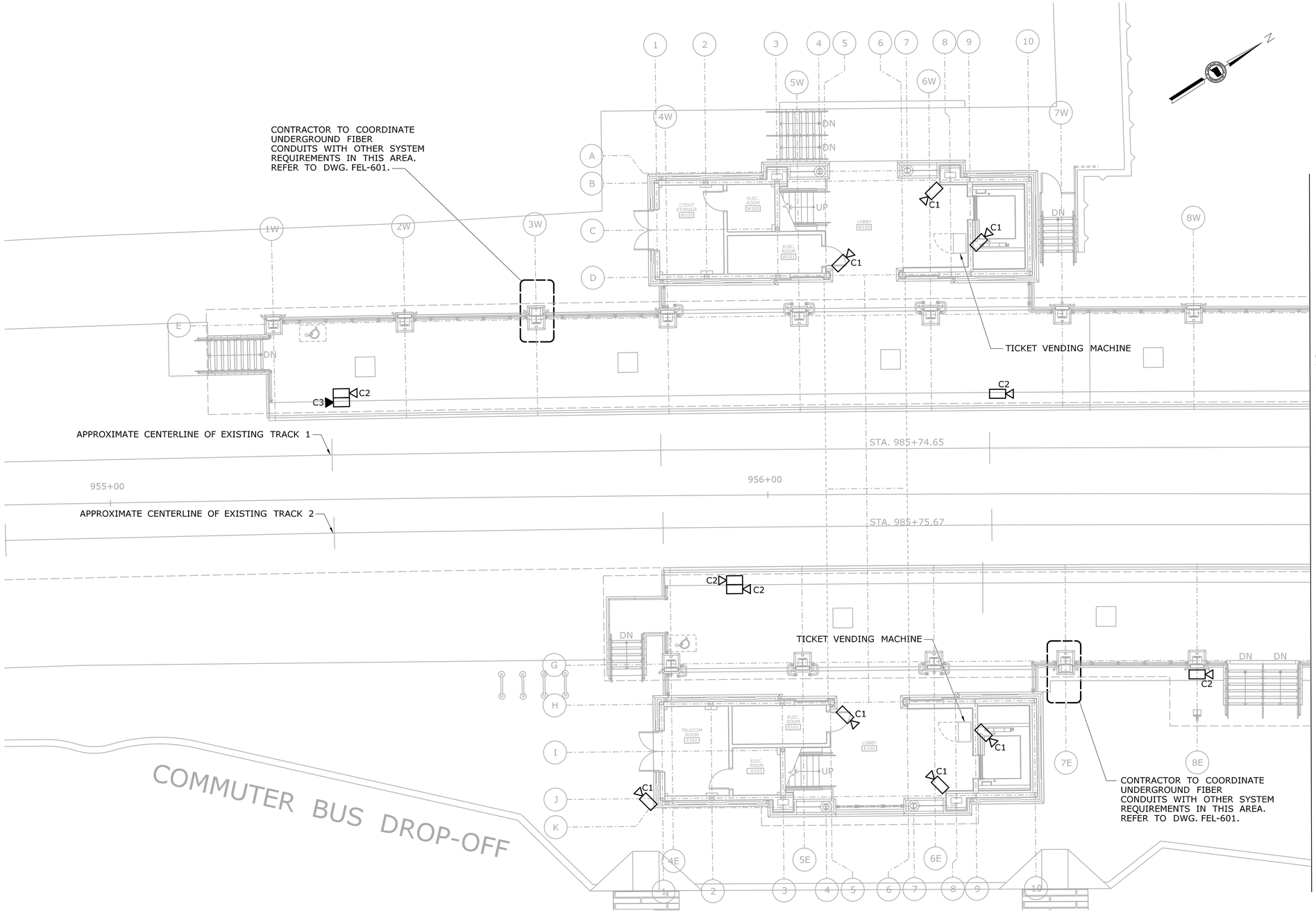

SECURITY SYSTEMS PLAN - PART A

SCALE: 1/8" = 1'-0"

REV.	DATE	REVISION DESCRIPTION	SHEET NO.
-	-	-	-
-	-	-	-
-	-	-	-
-	-	-	-
-	-	-	-
-	-	-	-

THE INFORMATION, INCLUDING ESTIMATED QUANTITIES OF WORK, SHOWN ON THESE SHEETS IS BASED ON LIMITED INVESTIGATIONS BY THE STATE AND IS IN NO WAY WARRANTED TO INDICATE THE CONDITIONS OF ACTUAL QUANTITIES OF WORK WHICH WILL BE REQUIRED.

Plotted Date: 1/16/2014

DESIGNER/DRAFTER: **W. CAREY**

CHECKED BY: **D. NEWMAN**

SCALE: 1/8" = 1'-0"

STATE OF CONNECTICUT
DEPARTMENT OF TRANSPORTATION

Filename: ...\FA_CGR_CPS_0170-2296_079_06_FAS_101.dgn

SIGNATURE/BLOCK:

STATE OF CONNECTICUT ROBIN S. CHAMPION LICENSED PROFESSIONAL ENGINEER

Hatch Mott MacDonald
Suite 100, North Lobby
400 Blue Hill Drive
Westwood, MA 02090

PROJECT TITLE:

NEW HAVEN - HARTFORD SPRINGFIELD RAIL CORRIDOR

TOWN: **MERIDEN**

DRAWING TITLE: **SECURITY SYSTEMS PLATFORM PLAN PART A**

PROJECT NO. **170-3155**

DRAWING NO. **FAS-101**

SHEET NO. **03.13.071**

NOTES:

1. REFER TO LEGEND SYMBOLS ON DWG. FAS-001.
2. REFER TO RISER DIAGRAMS ON DWGS. FAS-701/FAS-702.

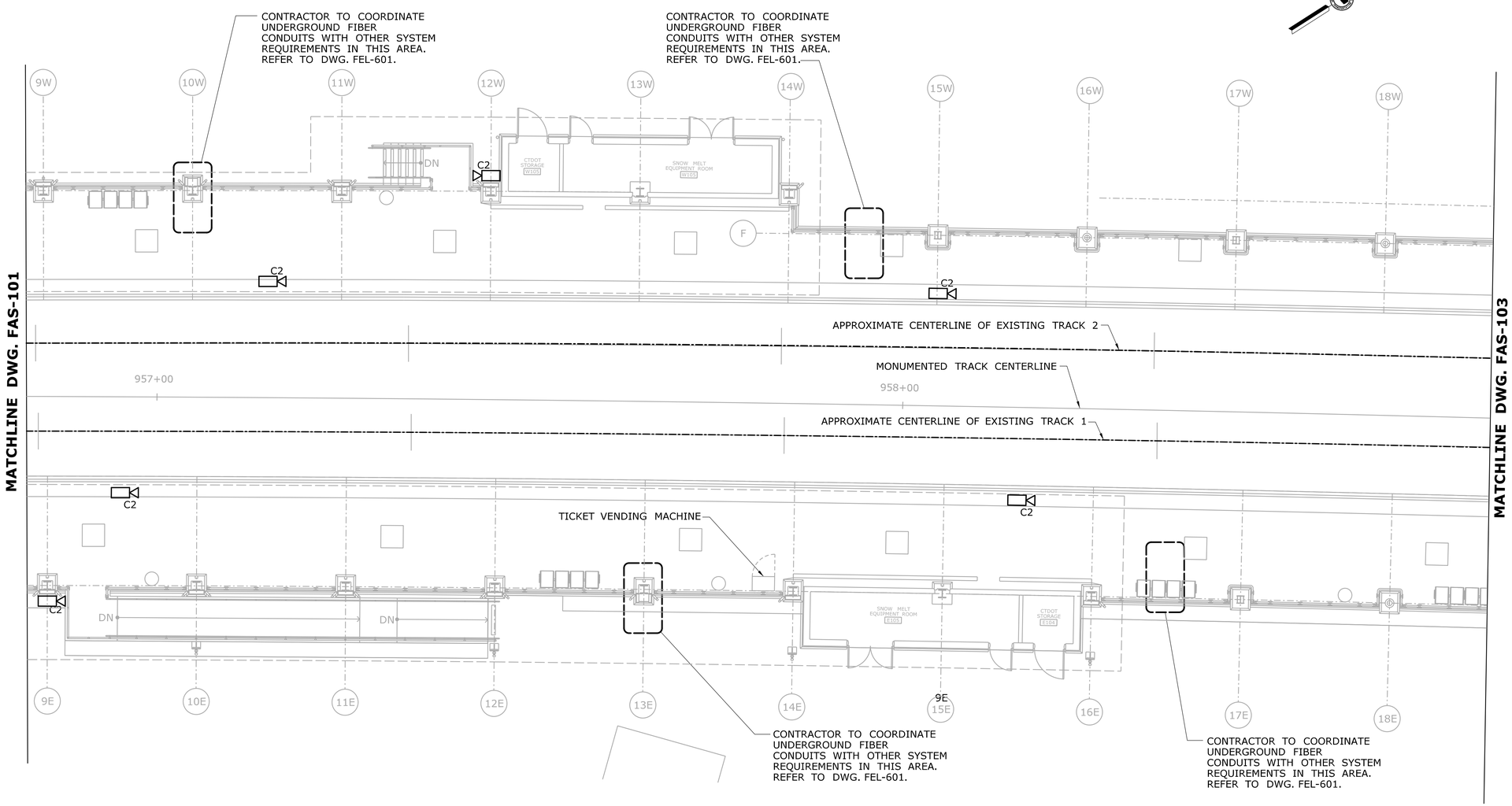

SECURITY SYSTEMS PLAN PART B

SCALE: 1/8" = 1'-0"

REV.	DATE	REVISION DESCRIPTION	SHEET NO.
-	-	-	-
-	-	-	-
-	-	-	-
-	-	-	-
-	-	-	-
-	-	-	-

THE INFORMATION, INCLUDING ESTIMATED QUANTITIES OF WORK, SHOWN ON THESE SHEETS IS BASED ON LIMITED INVESTIGATIONS BY THE STATE AND IS IN NO WAY WARRANTED TO INDICATE THE CONDITIONS OF ACTUAL QUANTITIES OF WORK WHICH WILL BE REQUIRED.

Plotted Date: 1/16/2014

DESIGNER/DRAFTER: **W. CAREY**

CHECKED BY: **D. NEWMAN**

SCALE: 1/8" = 1'-0"

STATE OF CONNECTICUT
DEPARTMENT OF TRANSPORTATION

Filename: ...\FA_CGR_CPS_0170-2296_079_06_FAS_102.dgn

SIGNATURE/ BLOCK:

STATE OF CONNECTICUT JOHN E. CHANTOUSIS LICENSED PROFESSIONAL ENGINEER

Hatch Mott MacDonald
Suite 100, North Lobby
400 Blue Hill Drive
Westwood, MA 02090

PROJECT TITLE:

NEW HAVEN - HARTFORD SPRINGFIELD RAIL CORRIDOR

TOWN: **MERIDEN**

DRAWING TITLE: **SECURITY SYSTEMS PLATFORM PLAN PART B**

PROJECT NO. **170-3155**

DRAWING NO. **FAS-102**

SHEET NO. **03.13.072**

NOTES:

1. REFER TO LEGEND SYMBOLS ON DWG. FAS-001.
2. REFER TO RISER DIAGRAMS ON DWGS. FAS-701/FAS-702.

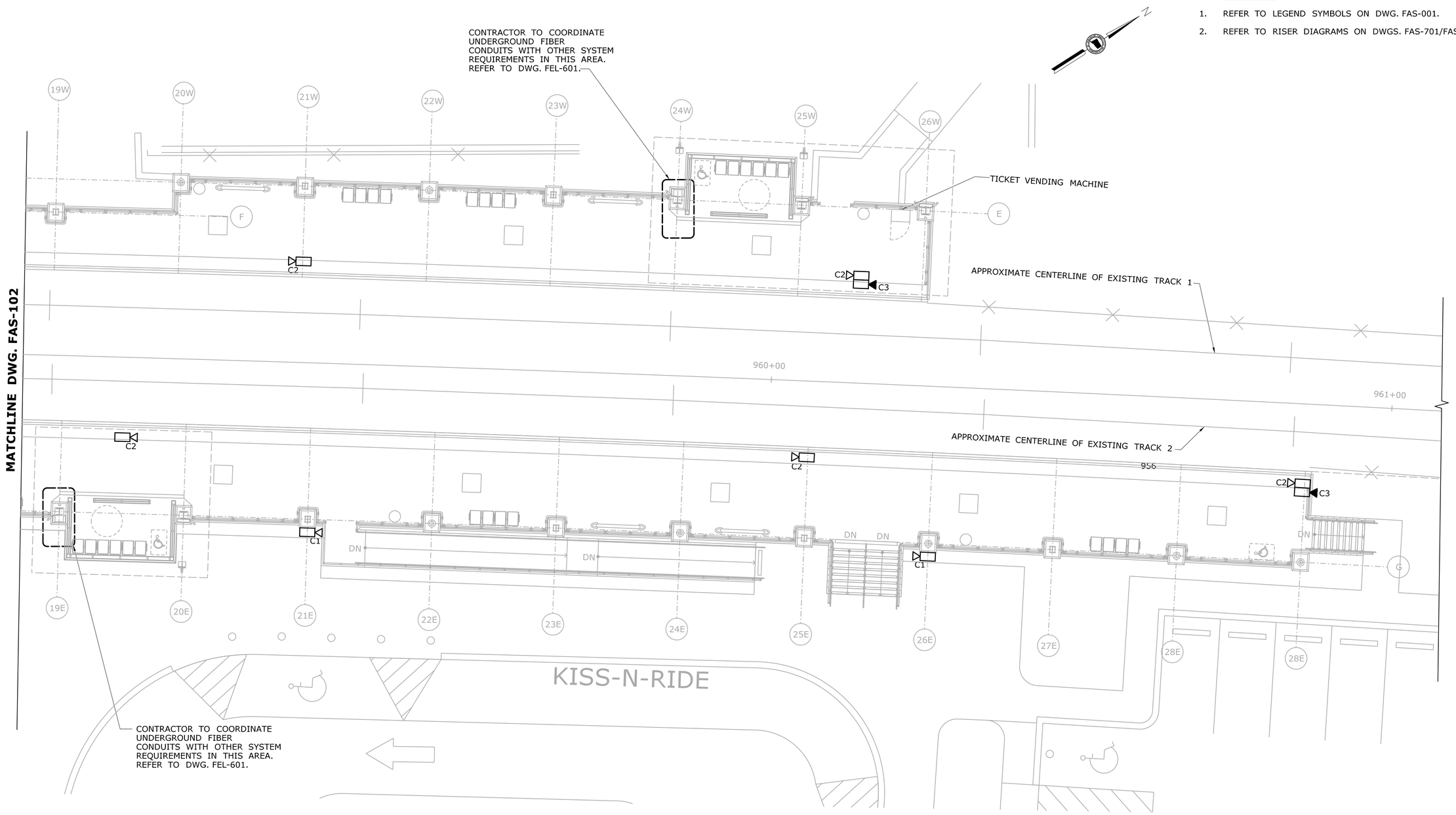

SECURITY SYSTEMS PLAN PART C

SCALE: 1/8" = 1'-0"

REV.	DATE	REVISION DESCRIPTION	SHEET NO.
-	-	-	-
-	-	-	-
-	-	-	-
-	-	-	-
-	-	-	-
-	-	-	-

THE INFORMATION, INCLUDING ESTIMATED QUANTITIES OF WORK, SHOWN ON THESE SHEETS IS BASED ON LIMITED INVESTIGATIONS BY THE STATE AND IS IN NO WAY WARRANTED TO INDICATE THE CONDITIONS OF ACTUAL QUANTITIES OF WORK WHICH WILL BE REQUIRED.

Plotted Date: 1/16/2014

DESIGNER/DRAFTER: **W. CAREY**

CHECKED BY: **D. NEWMAN**

SCALE: 1/8" = 1'-0"

STATE OF CONNECTICUT
DEPARTMENT OF TRANSPORTATION

Filename: ...\FA_CGR_CPS_0170-2296_079_06_FAS_103.dgn

SIGNATURE/BLOCK:

STATE OF CONNECTICUT · RODNEY K. GRANTHAM · LICENSED PROFESSIONAL ENGINEER

Hatch Mott MacDonald
Suite 100, North Lobby
400 Blue Hill Drive
Westwood, MA 02090

PROJECT TITLE:
NEW HAVEN - HARTFORD SPRINGFIELD RAIL CORRIDOR

TOWN: **MERIDEN**

DRAWING TITLE: **SECURITY SYSTEMS PLATFORM PLAN PART C**

PROJECT NO. **170-3155**

DRAWING NO. **FAS-103**

SHEET NO. **03.13.073**

NOTES:

1. REFER TO LEGEND SYMBOLS ON DWG. FAS-001.
2. REFER TO RISER DIAGRAMS ON DWGS. FAS-701/FAS-702.

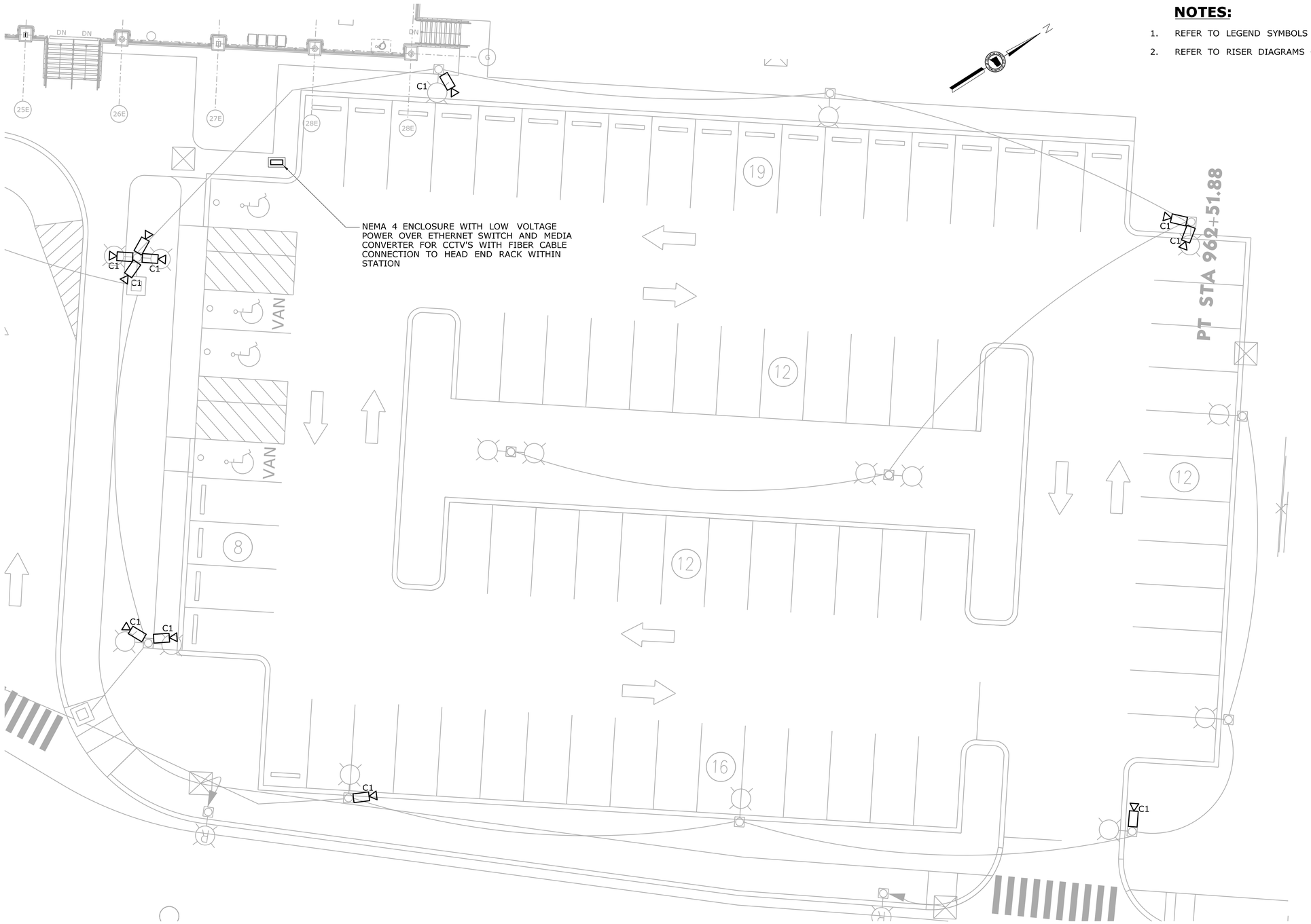

SECURITY SYSTEMS PARKING LOT PLAN

SCALE: $^{3}/_{32}$" = 1'-0"

REV.	DATE	REVISION DESCRIPTION	SHEET NO.
-	-	-	-
-	-	-	-
-	-	-	-
-	-	-	-
-	-	-	-
-	-	-	-

THE INFORMATION, INCLUDING ESTIMATED QUANTITIES OF WORK, SHOWN ON THESE SHEETS IS BASED ON LIMITED INVESTIGATIONS BY THE STATE AND IS IN NO WAY WARRANTED TO INDICATE THE CONDITIONS OF ACTUAL QUANTITIES OF WORK WHICH WILL BE REQUIRED.

Plotted Date: 1/16/2014

DESIGNER/DRAFTER: **W. CAREY**

CHECKED BY: **D. NEWMAN**

SCALE AS NOTED

STATE OF CONNECTICUT
DEPARTMENT OF TRANSPORTATION

Filename: ...\FA_CGR_CPS_0170-2296_079_06_FAS_104.dgn

SIGNATURE/ BLOCK:

STATE OF CONNECTICUT · ROBIN S. CHAMPION · LICENSED PROFESSIONAL ENGINEER

Hatch Mott MacDonald
Suite 100, North Lobby
400 Blue Hill Drive
Westwood, MA 02090

PROJECT TITLE:
NEW HAVEN - HARTFORD SPRINGFIELD RAIL CORRIDOR

TOWN: **MERIDEN**

DRAWING TITLE: **SECURITY SYSTEMS PARKING LOT PLAN**

PROJECT NO. **170-3155**

DRAWING NO. **FAS-104**

SHEET NO. **03.13.074**

NOTES:

1. REFER TO LEGEND SYMBOLS ON DWG. FAS-001.
2. REFER TO RISER DIAGRAMS ON DWGS. FAS-701/FAS-702.
3. CAMERAS SHOWN WITHIN ELEVATOR CAR WILL BE SUPPLIED WITH THE ELEVATOR VENDOR BUT CONNECTED TO THE VSS RACK BY CONTRACTOR OF THIS WORK.

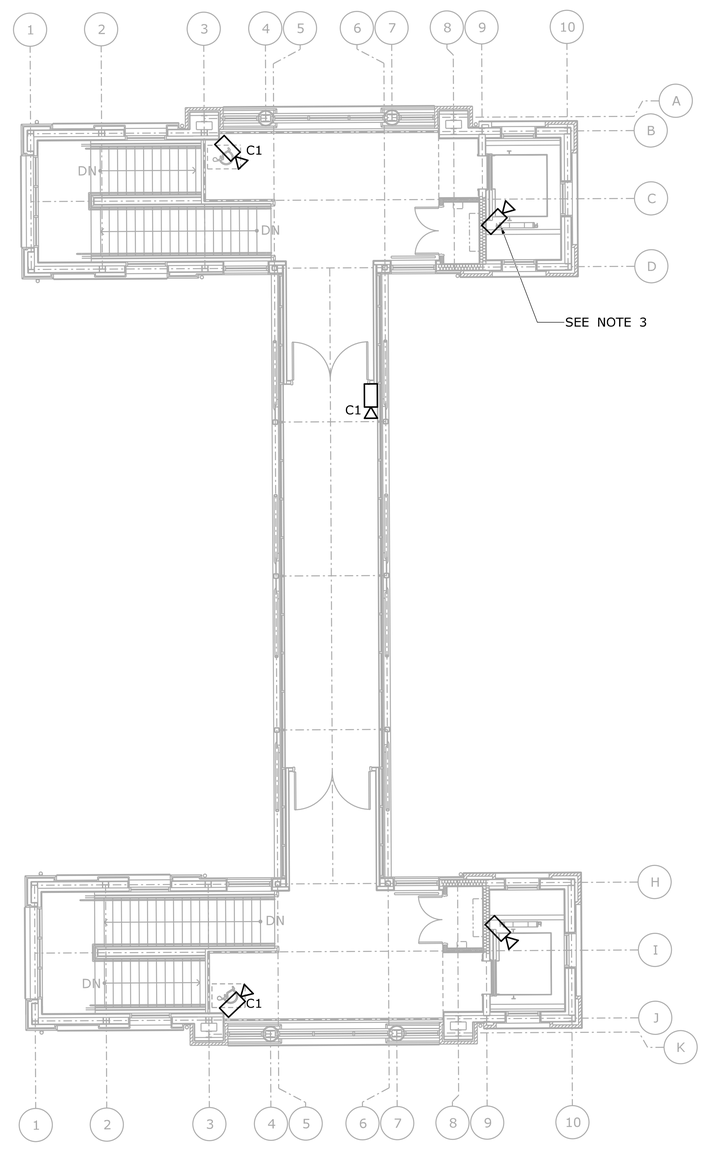

SECURITY SYSTEMS PLAN - PEDESTRIAN BRIDGE

SCALE: 1/8" = 1'-0"

REV.	DATE	REVISION DESCRIPTION	SHEET NO.
-	-	-	-
-	-	-	-
-	-	-	-
-	-	-	-
-	-	-	-
-	-	-	-

THE INFORMATION, INCLUDING ESTIMATED QUANTITIES OF WORK, SHOWN ON THESE SHEETS IS BASED ON LIMITED INVESTIGATIONS BY THE STATE AND IS IN NO WAY WARRANTED TO INDICATE THE CONDITIONS OF ACTUAL QUANTITIES OF WORK WHICH WILL BE REQUIRED.

Plotted Date: 1/16/2014

DESIGNER/DRAFTER: **W. CAREY**

CHECKED BY: **D. NEWMAN**

SCALE: 1/8" = 1'-0"

STATE OF CONNECTICUT
DEPARTMENT OF TRANSPORTATION

Filename: ...\FA_CGR_CPS_0170-2296_079_06_FAS_105.dgn

SIGNATURE/ BLOCK:

Hatch Mott MacDonald
Suite 100, North Lobby
400 Blue Hill Drive
Westwood, MA 02090

PROJECT TITLE:

NEW HAVEN - HARTFORD SPRINGFFIELD RAIL CORRIDOR

TOWN: **MERIDEN**

DRAWING TITLE: **SECURITY SYSTEMS - PEDESTRIAN BRIDGE**

PROJECT NO. **170-3155**

DRAWING NO. **FAS-105**

SHEET NO. **03.13.075**

NOTES:

1. SEE DRAWING FEL-601 & 602 FOR TYPICAL CONDUIT DETAILS.
2. FIBER CABLE MUST RUN WITHIN CONDUIT ELBOWS WITH A MINIMUM BEND RADIUS THAT MEETS CABLE MANUFACTURER REQUIREMENTS.

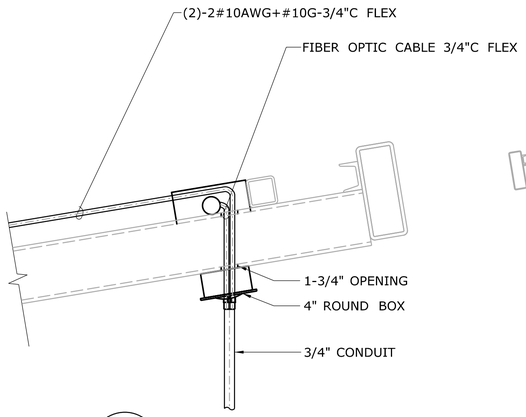

1 / --

DETAIL 1
SCALE: 1-½" = 1'-0"

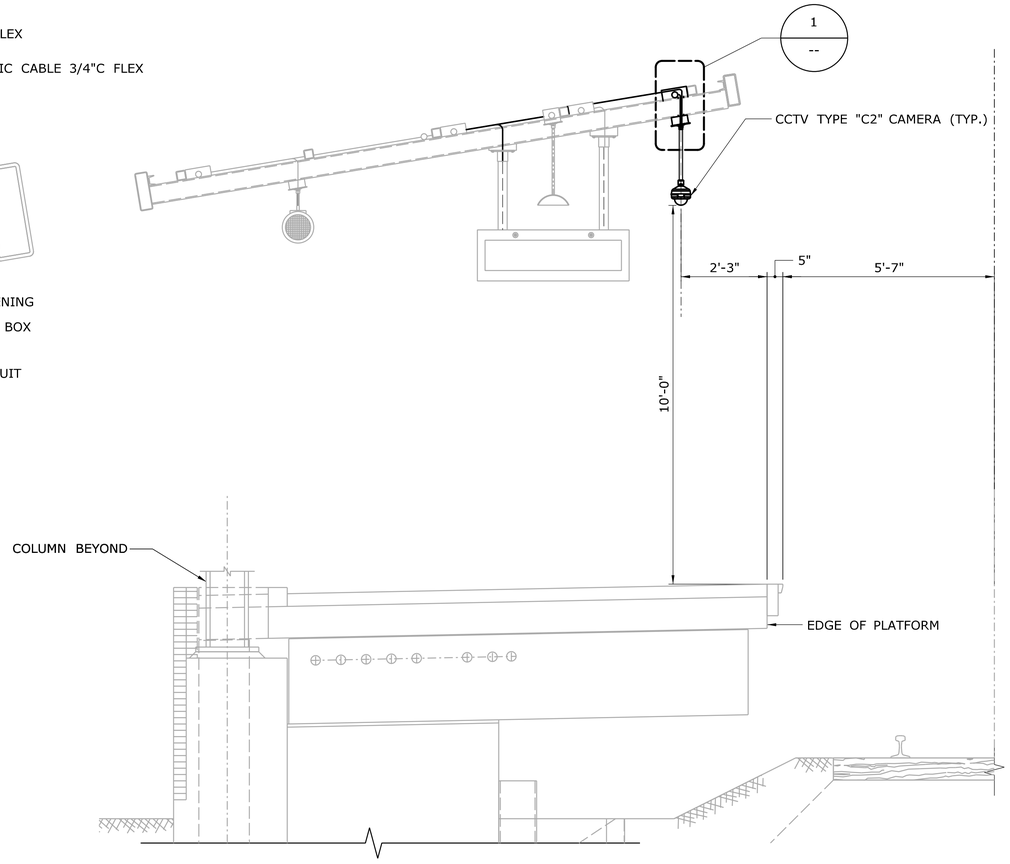

PENDANT MOUNTED CAMERA SECTION
SCALE: ½" = 1'-0"

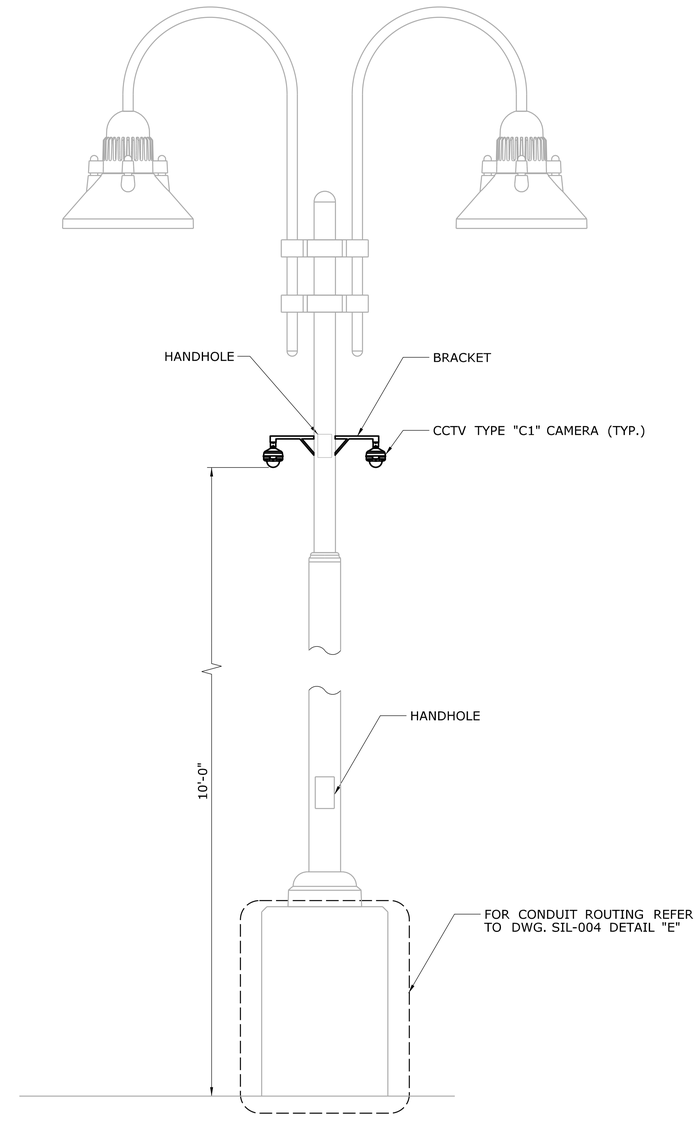

POLE MOUNTED CAMERA DETAIL
SCALE: ½" = 1'-0"

REV.	DATE	REVISION DESCRIPTION	SHEET NO.
-	-	-	-
-	-	-	-
-	-	-	-
-	-	-	-
-	-	-	-
-	-	-	-

THE INFORMATION, INCLUDING ESTIMATED QUANTITIES OF WORK, SHOWN ON THESE SHEETS IS BASED ON LIMITED INVESTIGATIONS BY THE STATE AND IS IN NO WAY WARRANTED TO INDICATE THE CONDITIONS OF ACTUAL QUANTITIES OF WORK WHICH WILL BE REQUIRED.

Plotted Date: 1/28/2014

DESIGNER/DRAFTER: **W. CAREY**
CHECKED BY: **D. NEWMAN**
SCALE AS NOTED

STATE OF CONNECTICUT
DEPARTMENT OF TRANSPORTATION

Filename: ...\FA_CGR_CPS_0170-2296_079_06_FAS_601.dgn

SIGNATURE/BLOCK:
STATE OF CONNECTICUT · RODNEY K. GRANTOM · LICENSED PROFESSIONAL ENGINEER
Hatch Mott MacDonald
Suite 100, North Lobby
400 Blue Hill Drive
Westwood, MA 02090

PROJECT TITLE:
NEW HAVEN - HARTFORD SPRINGFIELD RAIL CORRIDOR

TOWN: **MERIDEN**

DRAWING TITLE: **SECURITY SYSTEMS DETAILS**

PROJECT NO. **170-3155**
DRAWING NO. **FAS-601**
SHEET NO. **03.13.076**

NOTES:

1. SEE DRAWING FAS-001 FOR LEGEND, NOTES AND SCHEDULE.

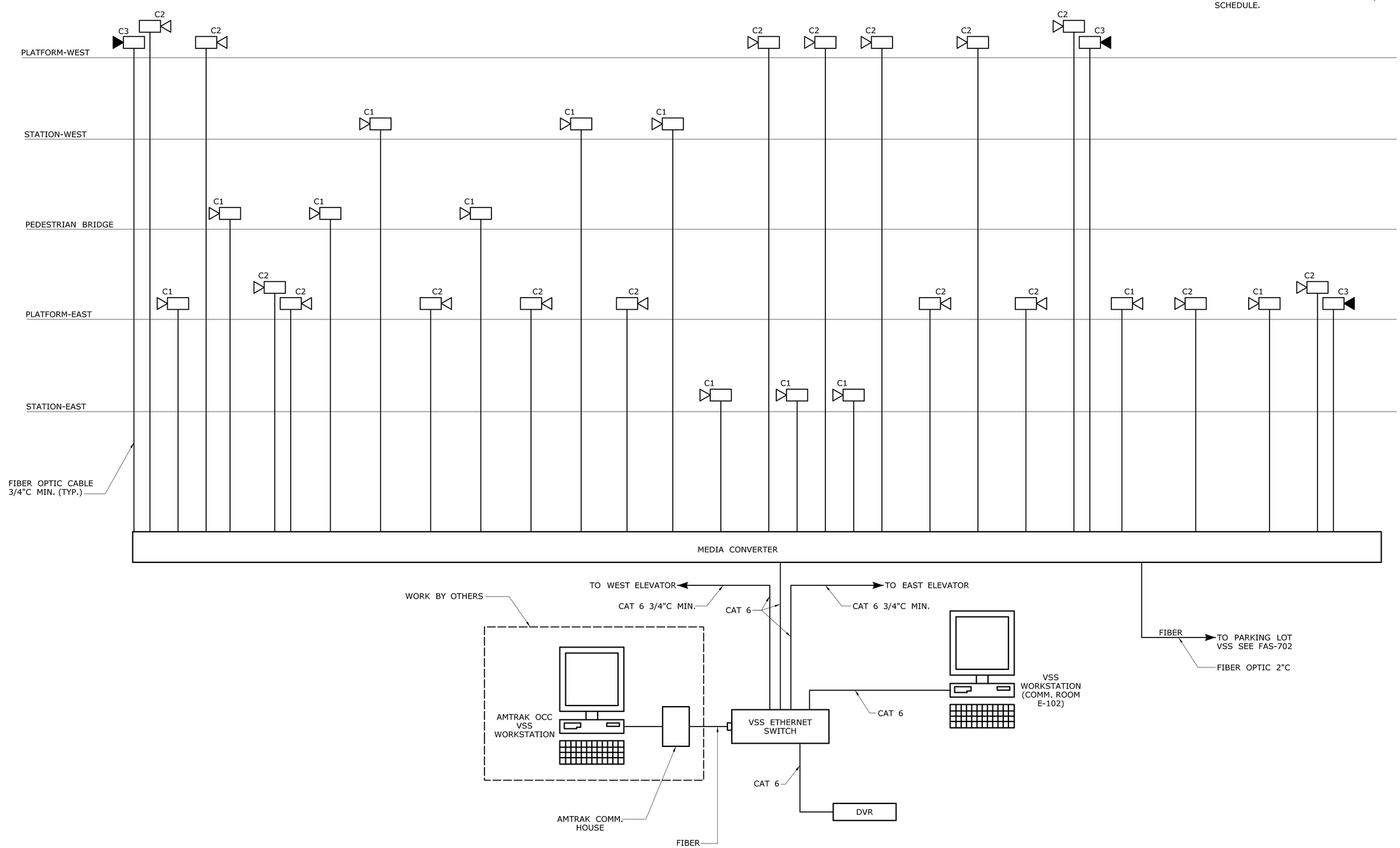

SECURITY SYSTEMS NETWORK DIAGRAM

NOT TO SCALE

REV.	DATE	REVISION DESCRIPTION	SHEET NO.
-	-	-	-
-	-	-	-
-	-	-	-
-	-	-	-
-	-	-	-
-	-	-	-

THE INFORMATION, INCLUDING ESTIMATED QUANTITIES OF WORK, SHOWN ON THESE SHEETS IS BASED ON LIMITED INVESTIGATIONS BY THE STATE AND IS IN NO WAY WARRANTED TO INDICATE THE CONDITIONS OF ACTUAL QUANTITIES OF WORK WHICH WILL BE REQUIRED.

Plotted Date: 1/27/2014

DESIGNER/DRAFTER: **W. CAREY**

CHECKED BY: **D. NEWMAN**

NOT TO SCALE

STATE OF CONNECTICUT
DEPARTMENT OF TRANSPORTATION

Filename: ...\FA..CGR..CPS..0170-2296..079...06..FAS...701.dgn

SIGNATURE/ BLOCK:

STATE OF CONNECTICUT · RODNEY K. GRANTHAM · 25 · LICENSED PROFESSIONAL ENGINEER

Hatch Mott MacDonald
Suite 100, North Lobby
400 Blue Hill Drive
Westwood, MA 02090

PROJECT TITLE:

NEW HAVEN - HARTFORD SPRINGFIELD RAIL CORRIDOR

TOWN: **MERIDEN**

DRAWING TITLE: **SECURITY SYSTEMS RISER DIAGRAM 1 OF 2**

PROJECT NO. **170-3155**

DRAWING NO. **FAS-701**

SHEET NO. **03.13.077**

NOTES:

1. SEE DRAWING FAS-001 FOR LEGEND, NOTES AND SCHEDULE.

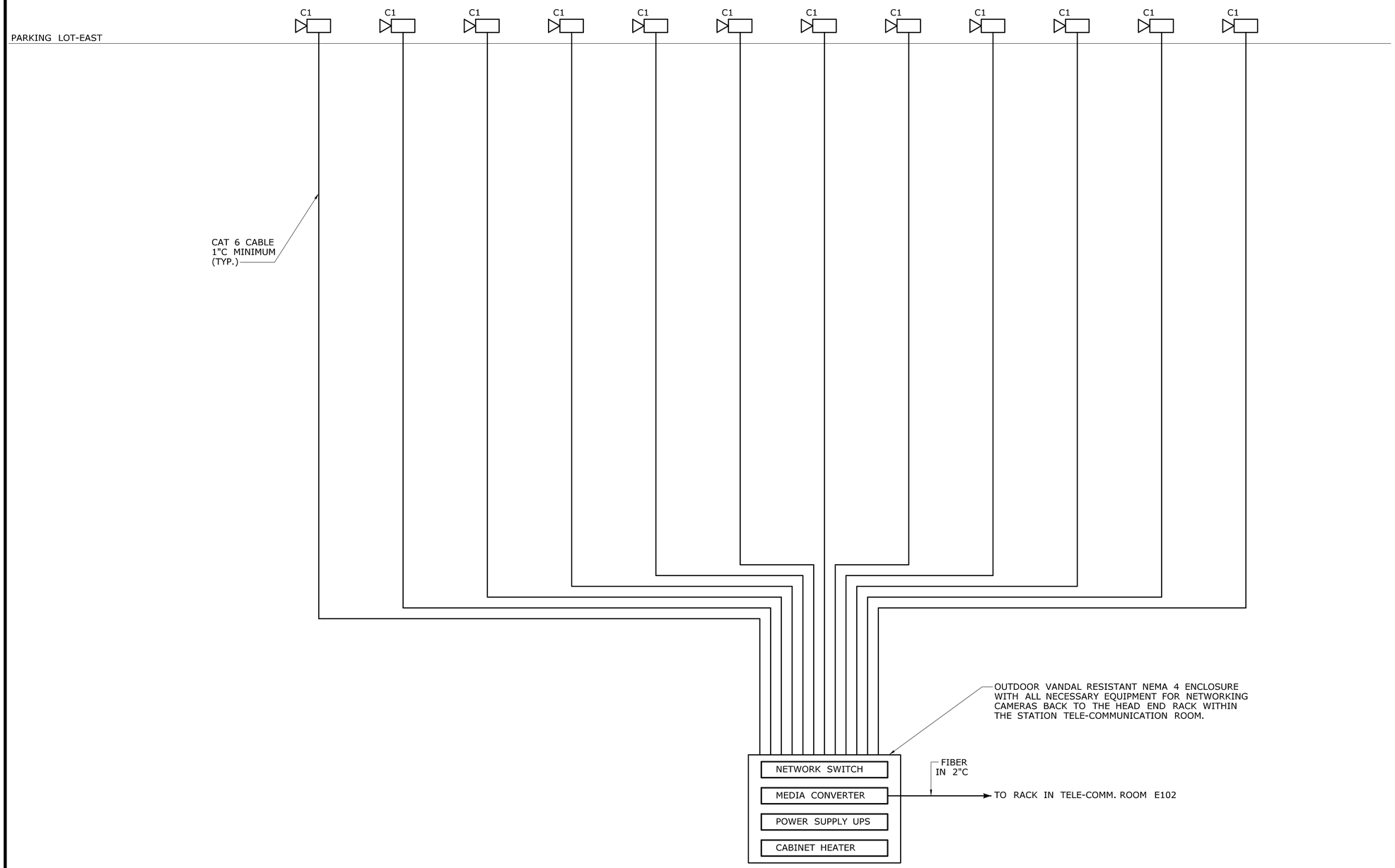

SECURITY SYSTEMS NETWORK DIAGRAM

NOT TO SCALE

REV.	DATE	REVISION DESCRIPTION	SHEET NO.
-	-	-	-
-	-	-	-
-	-	-	-
-	-	-	-
-	-	-	-
-	-	-	-

THE INFORMATION, INCLUDING ESTIMATED QUANTITIES OF WORK, SHOWN ON THESE SHEETS IS BASED ON LIMITED INVESTIGATIONS BY THE STATE AND IS IN NO WAY WARRANTED TO INDICATE THE CONDITIONS OF ACTUAL QUANTITIES OF WORK WHICH WILL BE REQUIRED.

Plotted Date: 1/28/2014

DESIGNER/DRAFTER: **W. CAREY**

CHECKED BY: **D. NEWMAN**

NOT TO SCALE

STATE OF CONNECTICUT
DEPARTMENT OF TRANSPORTATION

Filename: ...\FA..CGR..CPS..0170-2296..079...06..FAS...702.dgn

SIGNATURE/ BLOCK:

Hatch Mott MacDonald
Suite 100, North Lobby
400 Blue Hill Drive
Westwood, MA 02090

PROJECT TITLE:

NEW HAVEN - HARTFORD SPRINGFIELD RAIL CORRIDOR

TOWN: **MERIDEN**

DRAWING TITLE: **SECURITY SYSTEMS RISER DIAGRAM 2 OF 2**

PROJECT NO. **170-3155**

DRAWING NO. **FAS-702**

SHEET NO. **03.13.078**

FIRE ALARM

- FACP — FIRE ALARM CONTROL PANEL
- F — FIRE ALARM MANUAL PULL STATION
- S — FIRE ALARM SMOKE DETECTOR
- H — HEAT DETECTOR
- SD — FIRE ALARM DUCT SMOKE DETECTOR
- F — FIRE ALARM STROBE LIGHT WALL MOUNTED
- F — FIRE ALARM SPEAKER/STROBE LIGHT COMBINATION WALL MOUNTED
- H — HORN UNIT ONLY
- R — FIRE ALARM RELAY
- END OF LINE RESISTOR (EOL)
- R WP — REMOTE ALARM INDICATOR WITH TEST SWITCH (WEATHER-PROOF)
- DOOR HOLD OPEN

NOTES:

1. ALL WIRING SHALL BE PER FIRE ALARM MANUFACTURERS RECOMMENDATIONS.
2. ALL STROBES SHALL BE RATED AT 75 CANDELAS.
3. ALL MANUAL PULL STATIONS LOCATED IN PUBLIC AREAS SHALL HAVE A PLEXIGLASS COVER INSTALLED OVER IT.
4. FIRE ALARM MANUFACTURER SHALL PROVIDE ALL END OF LINE RESISTOR VALUES AND SHALL DESIGNATE THE LOCATION IN THE CIRCUIT.
5. FIRE ALARM RISER SHOWN FOR DIAGRAMMATIC PURPOSES ONLY. ACTUAL DEVICE QUANTITIES AND WIRING REQUIREMENTS SHALL BE PER CONTRACT DOCUMENTS AND FIRE ALARM MANUFACTURER.
6. PROVIDE RELAYS FOR ELEVATOR RECALL AND FIREMAN'S HAT OPERATION AND MOUNT NEXT TO EACH ELEVATOR CONTROLLER. PROVIDE WIRING FROM FACP TO EACH RELAY PER FIRE ALARM MANUFACTURERS REQUIREMENTS IN 3/4"C MINIMUM.

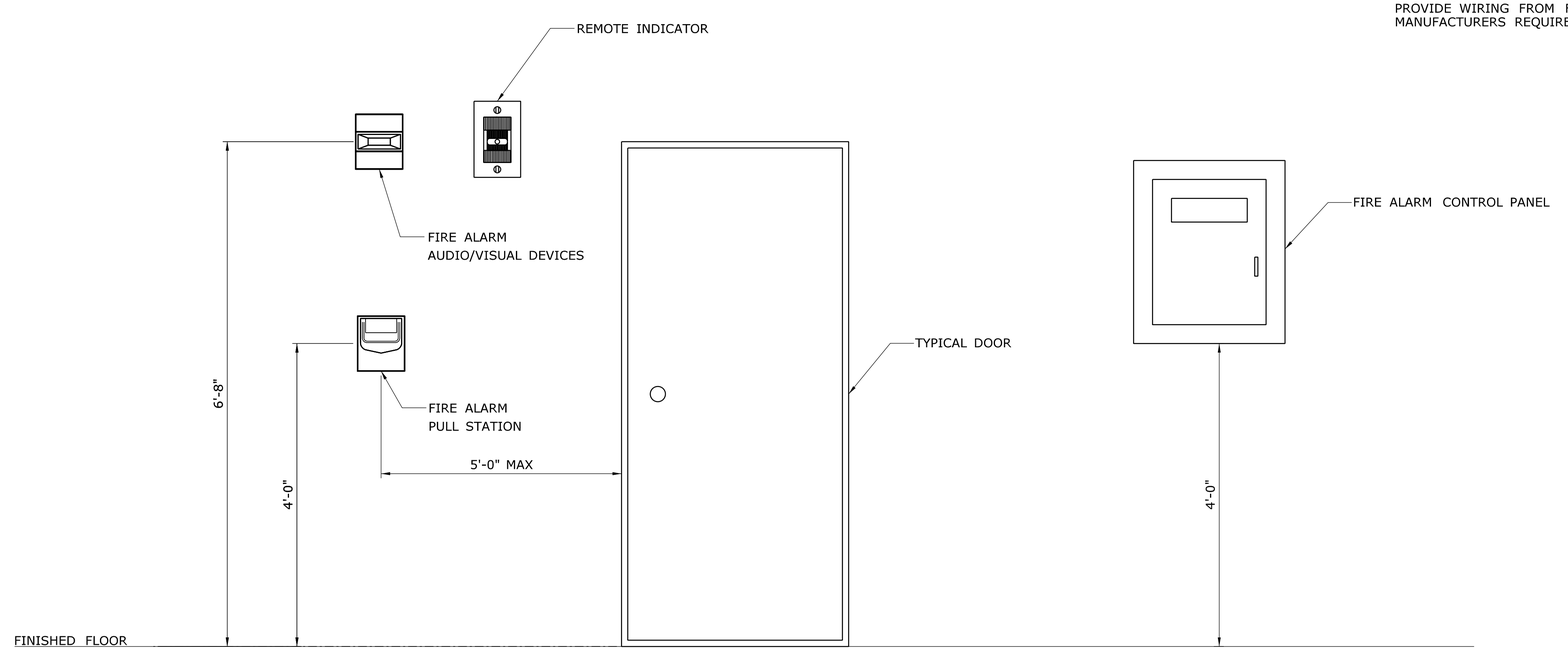

MOUNTING DETAILS

NOT TO SCALE

REV.	DATE	REVISION DESCRIPTION	SHEET NO.
-	-	-	-
-	-	-	-
-	-	-	-
-	-	-	-
-	-	-	-
-	-	-	-

THE INFORMATION, INCLUDING ESTIMATED QUANTITIES OF WORK, SHOWN ON THESE SHEETS IS BASED ON LIMITED INVESTIGATIONS BY THE STATE AND IS IN NO WAY WARRANTED TO INDICATE THE CONDITIONS OF ACTUAL QUANTITIES OF WORK WHICH WILL BE REQUIRED.

Plotted Date: 1/28/2014

DESIGNER/DRAFTER: **W. CAREY**

CHECKED BY: **D. NEWMAN**

NOT TO SCALE

STATE OF CONNECTICUT
DEPARTMENT OF TRANSPORTATION

Filename: ...\FA_CGR_CPS_0170-2296_079__06_FFD__001.dgn

SIGNATURE/ BLOCK:

Hatch Mott MacDonald
Suite 100, North Lobby
400 Blue Hill Drive
Westwood, MA 02090

PROJECT TITLE:

NEW HAVEN-HARTFORD SPRINGFIELD RAIL CORRIDOR

TOWN: **MERIDEN**

DRAWING TITLE: **FIRE ALARM GEN. NOTES & LEGEND**

PROJECT NO. **170-3155**

DRAWING NO. **FFD-001**

SHEET NO. **03.13.079**

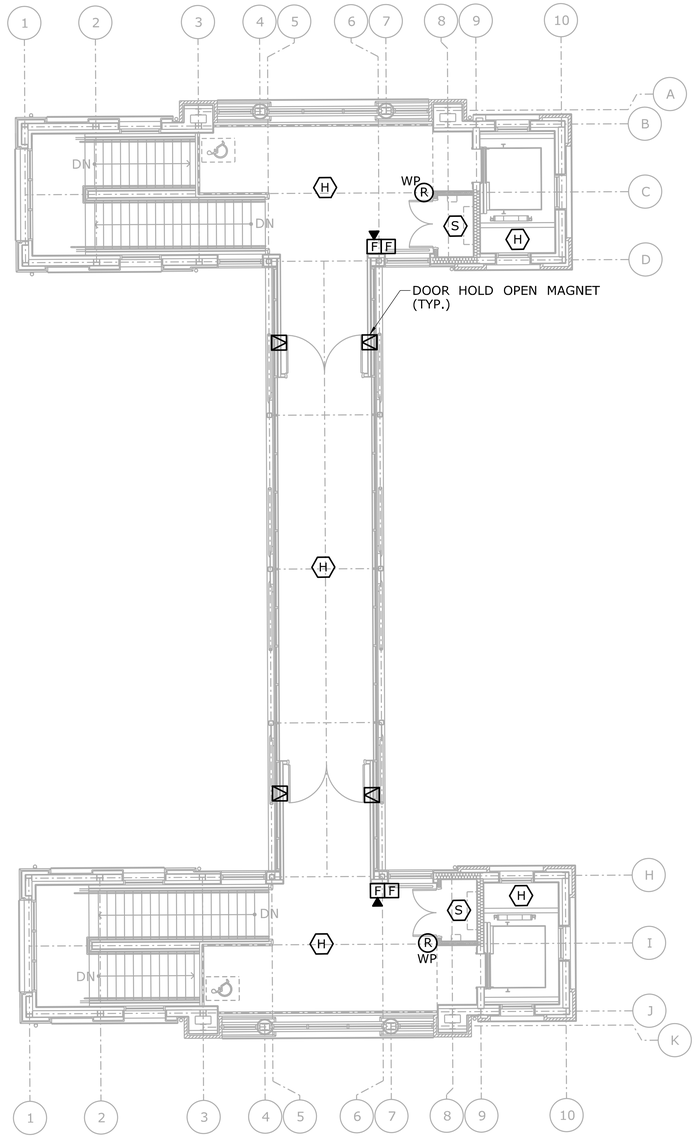

PEDESTRIAN BRIDGE - FIRE ALARM PLAN

SCALE: 1/8" = 1'-0"

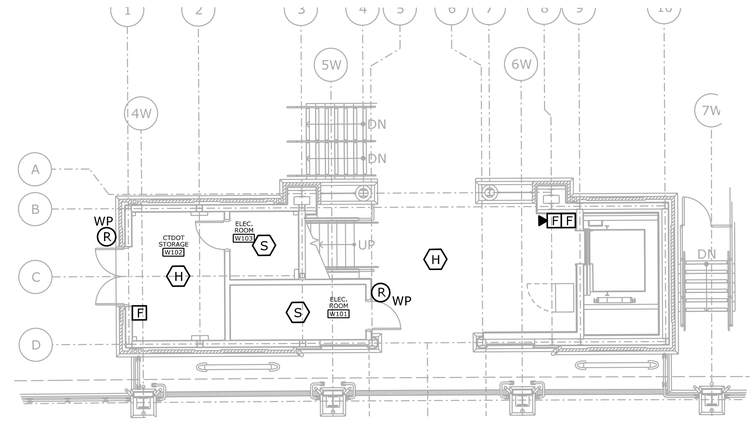

WEST TOWER GROUND LEVEL

SCALE: 1/8" = 1'-0"

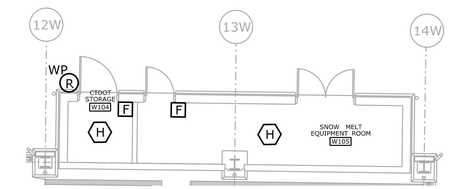

EQUIPMENT ROOM WEST PLATFORM

SCALE: 1/8" = 1'-0"

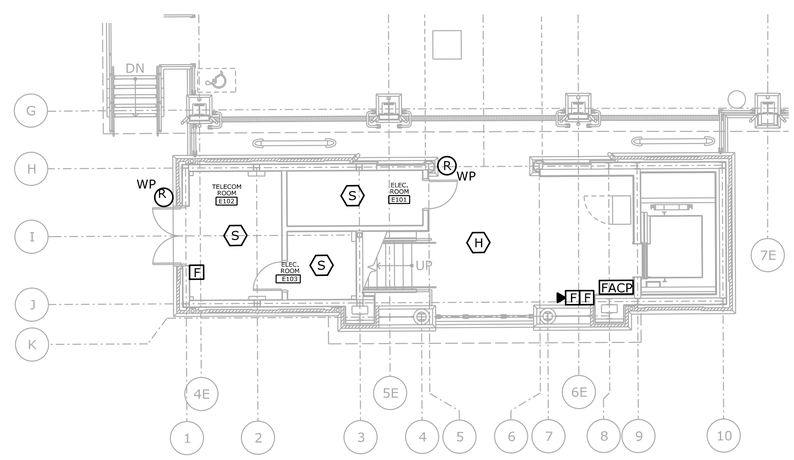

EAST TOWER GROUND LEVEL

SCALE: 1/8" = 1'-0"

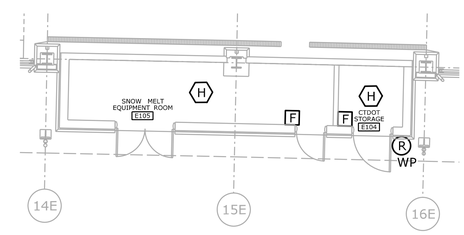

EQUIPMENT ROOM EAST PLATFORM

SCALE: 1/8" = 1'-0"

REV.	DATE	REVISION DESCRIPTION	SHEET NO.
-	-	-	-
-	-	-	-
-	-	-	-
-	-	-	-
-	-	-	-
-	-	-	-

THE INFORMATION, INCLUDING ESTIMATED QUANTITIES OF WORK, SHOWN ON THESE SHEETS IS BASED ON LIMITED INVESTIGATIONS BY THE STATE AND IS IN NO WAY WARRANTED TO INDICATE THE CONDITIONS OF ACTUAL QUANTITIES OF WORK WHICH WILL BE REQUIRED.

Plotted Date: 1/16/2014

DESIGNER/DRAFTER: **W. CAREY**

CHECKED BY: **D.NEWMAN**

SCALE: 1/8" = 1'-0"

STATE OF CONNECTICUT
DEPARTMENT OF TRANSPORTATION

Filename: ...\FA_CGR_CPS_0170-2296_079__06_FFD__101.dgn

SIGNATURE/ BLOCK:

STATE OF CONNECTICUT WILLIAM S. GRAMLICH LICENSED PROFESSIONAL ENGINEER

Hatch Mott MacDonald
Suite 100, North Lobby
400 Blue Hill Drive
Westwood, MA 02090

PROJECT TITLE:

NEW HAVEN - HARTFORD SPRINGFIELD RAIL CORRIDOR

TOWN: **MERIDEN**

DRAWING TITLE:

FIRE ALARM PLAN BRIDGE & GND. LEVELS

PROJECT NO. **170-3155**

DRAWING NO. **FFD-101**

SHEET NO. **03.13.080**

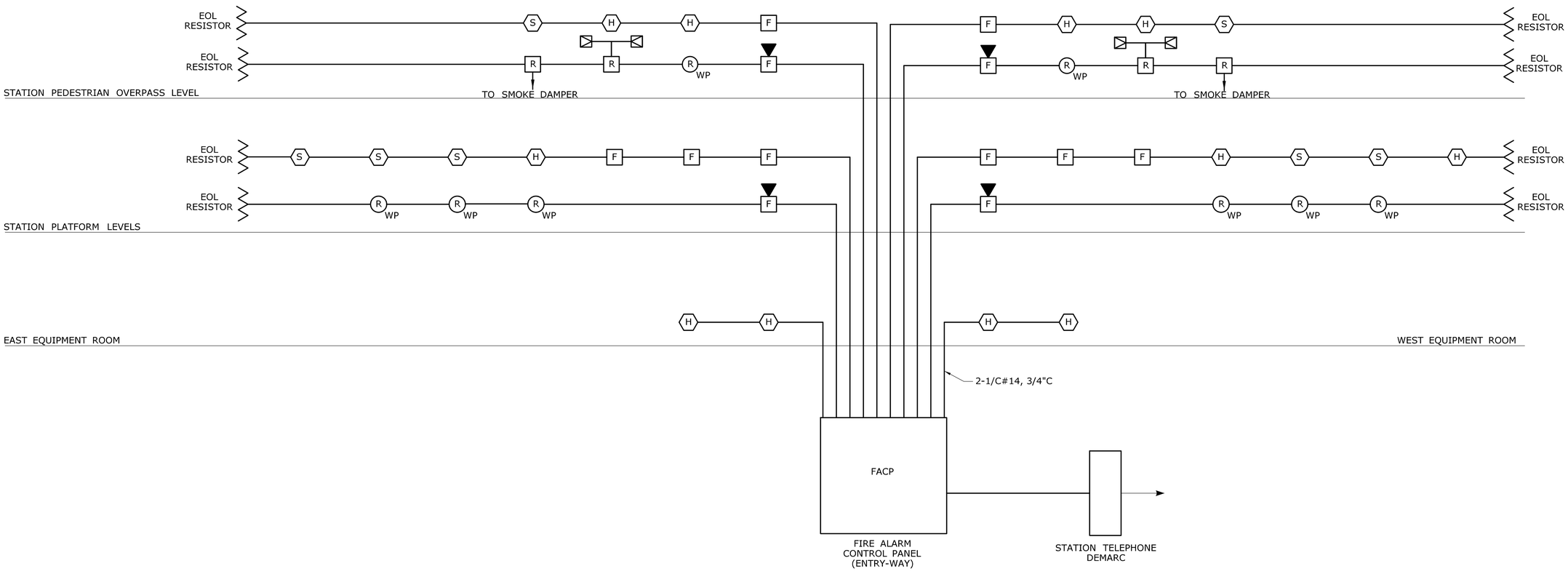

FIRE ALARM RISER DIAGRAM

NOT TO SCALE

REV.	DATE	REVISION DESCRIPTION	SHEET NO.
-	-	-	-
-	-	-	-
-	-	-	-
-	-	-	-
-	-	-	-
-	-	-	-

THE INFORMATION, INCLUDING ESTIMATED QUANTITIES OF WORK, SHOWN ON THESE SHEETS IS BASED ON LIMITED INVESTIGATIONS BY THE STATE AND IS IN NO WAY WARRANTED TO INDICATE THE CONDITIONS OF ACTUAL QUANTITIES OF WORK WHICH WILL BE REQUIRED.

Plotted Date: 1/16/2014

DESIGNER/DRAFTER: **W. CAREY**

CHECKED BY: **D. NEWMAN**

NOT TO SCALE

STATE OF CONNECTICUT
DEPARTMENT OF TRANSPORTATION

Filename: ...\FA..CGR..CPS..0170-2296..079...06..FFD...701.dgn

SIGNATURE/ BLOCK:

Hatch Mott MacDonald
Suite 100, North Lobby
400 Blue Hill Drive
Westwood, MA 02090

PROJECT TITLE:

NEW HAVEN-HARTFORD SPRINGFIELD RAIL CORRIDOR

TOWN: **MERIDEN**

DRAWING TITLE: **FIRE ALARM RISER DIAGRAM**

PROJECT NO. **170-3155**

DRAWING NO. **FFD-701**

SHEET NO. **03.13.081**

LEGEND:

SIGN TEXT

X — LOCATION #
X — TEXT # (SEE RCS-002)

TOTAL PARKING SPACES

79

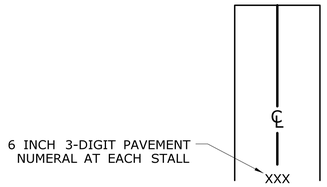

TYPICAL STALL NUMERAL

SCALE: NTS

GENERAL NOTES:

1. FOR SIGN TEXT SEE RCS-002.
2. NUMBER EACH SURFACE STALL WITH UNIQUE 3-DIGIT IDENTIFIER. USE YELLOW EPOXY RESIN PAVEMENT MARKINGS.
3. COORDINATE STALL NUMBERING SEQUENCE WITH ENGINEER. STALL MARKINGS SHALL BE AS PER PAVEMENT MARKING PLAN.
4. COORDINATE REVENUE COLLECTION SYSTEM SIGNS WITH PROJECT SIGNAGE PLAN.
5. FOR LOCATIONS AND DETAILS OF PBS METERS, SEE ELECTRICAL DRAWINGS.

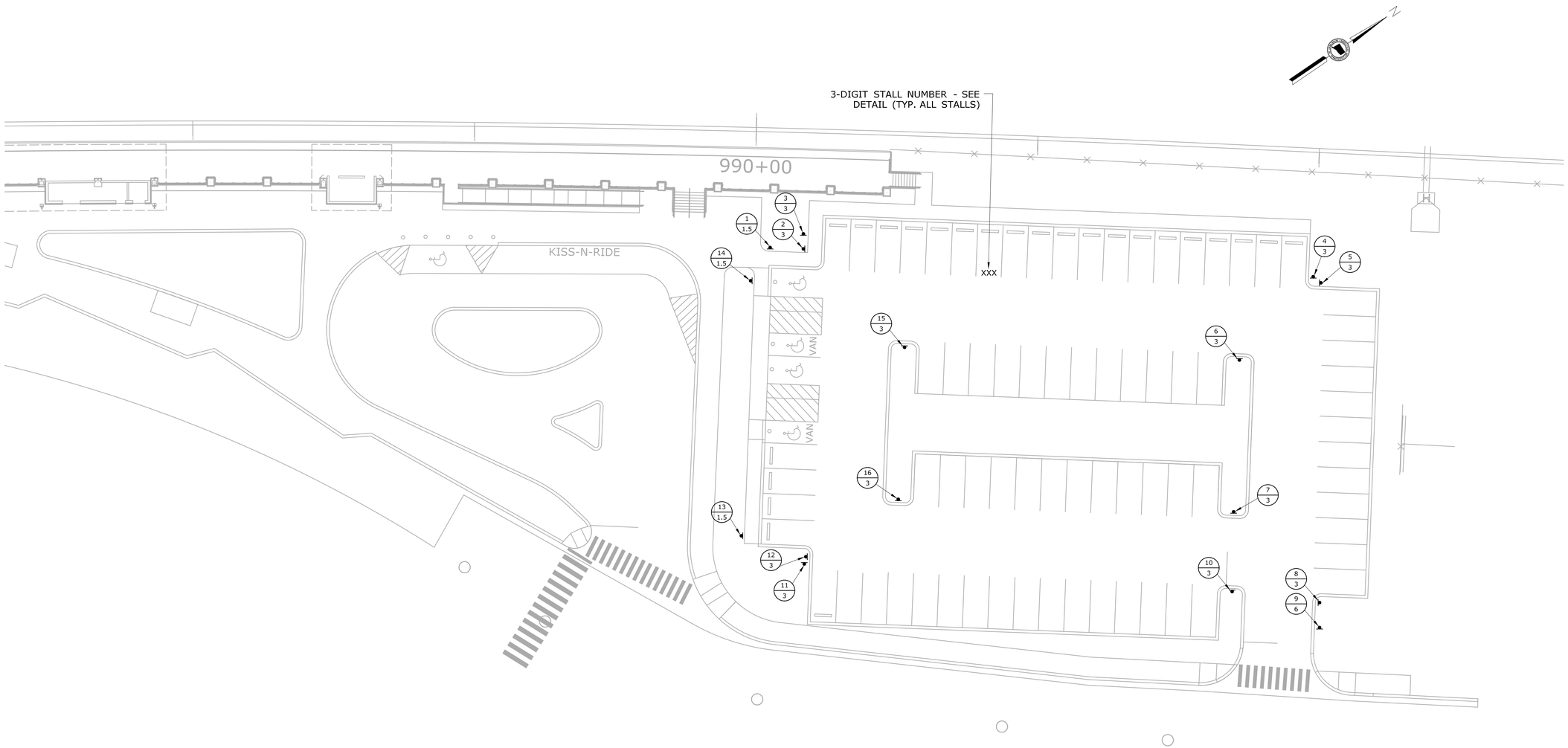

REV.	DATE	REVISION DESCRIPTION	SHEET NO.
-	-	-	-
-	-	-	-
-	-	-	-
-	-	-	-
-	-	-	-
-	-	-	-

THE INFORMATION, INCLUDING ESTIMATED QUANTITIES OF WORK, SHOWN ON THESE SHEETS IS BASED ON LIMITED INVESTIGATIONS BY THE STATE AND IS IN NO WAY WARRANTED TO INDICATE THE CONDITIONS OF ACTUAL QUANTITIES OF WORK WHICH WILL BE REQUIRED.

Plotted Date: 2/3/2014

DESIGNER/DRAFTER: **D. PEKAROVIC**
CHECKED BY: **A. SARDILLI**
SCALE IN FEET
0 20 40
SCALE 1"=20'

STATE OF CONNECTICUT
DEPARTMENT OF TRANSPORTATION

Filename: ...\FA_CGR_CPS_0170-2296_079__06_RCS_001.dgn

SIGNATURE/ BLOCK:
Baker
Michael Baker Engineering Inc.
500 Enterprise Drive
Suite 2B
Rocky Hill, CT 06067

STATE OF CONNECTICUT
MICHAEL A. SARDILLI
No. 24,000
LICENSED
PROFESSIONAL ENGINEER

PROJECT TITLE:
NEW HAVEN - HARTFORD SPRINGFIELD RAIL CORRIDOR

TOWN: **MERIDEN**

DRAWING TITLE:
REVENUE COLLECTION SYSTEM GENERAL SITE PLAN

PROJECT NO. **170-3155**
DRAWING NO. **RCS-001**
SHEET NO. **03.13.082**

RCS - SIGN TEXT DATA (SEE RCS - 1)

TEXT NO.	LOCATIONS	TEXT (REF MTA MNR STATION DESIGN GUIDELINES, 2007)	SIZE H x W	COLOR	
				BACK	CHAR
1	1, 13, 14	METERED PARKING ALL SPACES REMEMBER YOUR SPACE NUMBER POST MOUNTED	2' x 3'	WHITE/ BLACK	BLACK/ WHITE
3	2, 3, 4, 5, 6, 7, 8, 10, 11, 12, 15, 16	METER PARKING ONLY 000 - 000 PAY AT PAY STATION POST MOUNTED	1' x 18"	RED/ WHITE/ RED	WHITE/ RED/ WHITE
5	1, 13, 14	PARKING PAY STATION POST MOUNTED	2' x 2'	WHITE	BLACK
6	9	PERMIT PARKING ONLY MON-FRI 5am - 10am METERED OR PERMIT PARKING ALL OTHERTIMES POST MOUNTED	3' x 4'	SEE TEXT	SEE TEXT

GENERAL NOTES:

1. ALL CONDUIT BENDS IN ACCORDANCE WITH NEC.
2. PLUG AND CAP CONDUIT UNTIL PBS EQUIPMENT IS INSTALLED. CAPPED CONDUIT SHALL BE FLUSH WITH ADJACENT SIDEWALK TO PREVENT TRIPPING HAZARD.
3. MAINTAIN 18" MINIMUM CLEARANCE BETWEEN PBS REAR PANEL AND SOLID OBJECT / SURFACE.
4. PROVIDE SLEEVE IN SLAB FOR PBS ENCLOSURE POWER CONNECTION. COORDINATE WITH MANUFACTURER'S REQUIREMENTS.
5. FOR SIGN TEXT #2 & #3, APPLY ARROW HEADS AND STALL NUMBERS IN THE FIELD (SEE RCS-001).
6. MAINTAIN 3' CLEARANCE BETWEEN MULTIPLE PBS METERS.

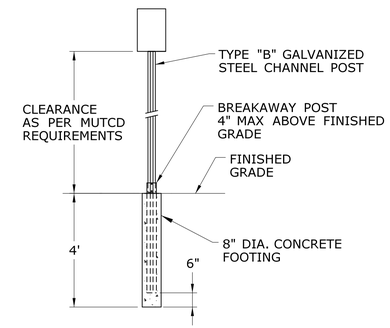

SIGN POST MOUNTING DETAIL

SCALE: N.T.S.

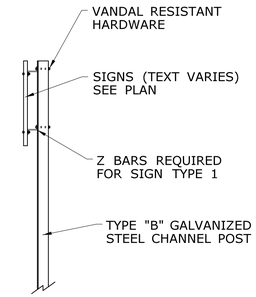

SIGN POST MOUNTING DETAIL

SCALE: N.T.S.

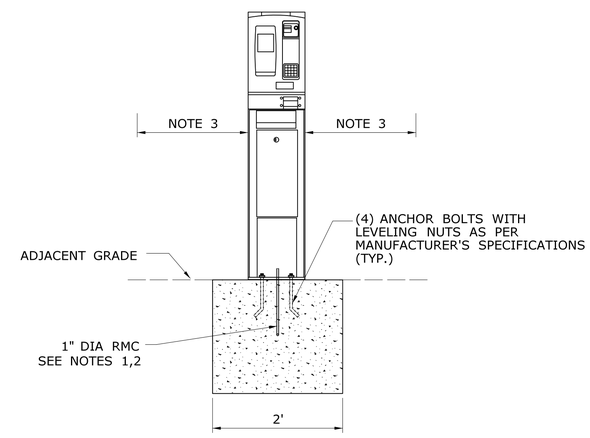

PBS ON GRADE FOUNDATION FRONT VIEW

SCALE: N.T.S.

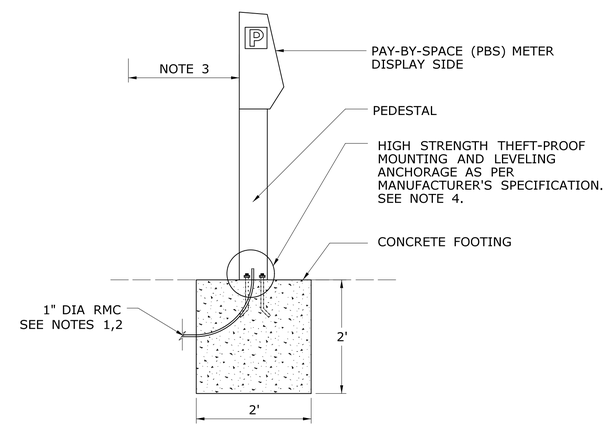

PBS ON GRADE FOUNDATION SIDE VIEW

SCALE: N.T.S.

NOTE: TOP OF FOOTING WILL MATCH ADJACENT GRADE

REV.	DATE	REVISION DESCRIPTION	SHEET NO.
-	-	-	-
-	-	-	-
-	-	-	-
-	-	-	-
-	-	-	-
-	-	-	-

THE INFORMATION, INCLUDING ESTIMATED QUANTITIES OF WORK, SHOWN ON THESE SHEETS IS BASED ON LIMITED INVESTIGATIONS BY THE STATE AND IS IN NO WAY WARRANTED TO INDICATE THE CONDITIONS OF ACTUAL QUANTITIES OF WORK WHICH WILL BE REQUIRED.

Plotted Date: 2/3/2014

DESIGNER/DRAFTER: **D. PEKAROVIC**
CHECKED BY: **A.SARDILLI**
NOT TO SCALE

STATE OF CONNECTICUT DEPARTMENT OF TRANSPORTATION

Filename: ...\FA_CGR_CPS_0170-2296_079__06_RCS_002.dgn

SIGNATURE/ BLOCK: Baker
Michael Baker Engineering Inc.
500 Enterprise Drive
Suite 2B
Rocky Hill, CT 06067

PROJECT TITLE: **NEW HAVEN - HARTFORD SPRINGFIELD RAIL CORRIDOR**

TOWN: **MERIDEN**

DRAWING TITLE: **REVENUE COLLECTION SYSTEM MISCELLANEOUS DETAILS**

PROJECT NO. **170-3155**
DRAWING NO. **RCS-002**
SHEET NO. **03.13.083**