03 - CIVIL

INDEX OF DRAWINGS

DRAWING NUMBER	DRAWING TITLE	DRAWING NUMBER	DRAWING TITLE	DRAWING NUMBER	DRAWING TITLE
CVI-001	DRAWING INDEX				
EXT-001	EXISTING CONDITIONS PLAN				
TIE-001	SURVEY CONTROL POINTS TIES AND NOTES				
DMO-001	DEMOLITION PLAN				
STG-001 - STG-002	STAGING PLAN				
CIV-001	SITE PLAN				
CIV-002	CURB TIE PLAN				
DRG-001 - DRG-006	GRADING AND DRAINAGE PLAN				
SED-001	SEDIMENT CONTROL PLAN				
UTL-001	UTILITY PLAN				
DET-001 - DET-006	MISCELLANEOUS DETAILS				

THE DESIGN APPEARS TO CONFORM TO APPLICABLE CRITERIA. APPROVAL IS NOT TO BE CONSTRUED TO MEAN THAT ALL APSECTS OF THE DESIGN HAVE BEEN PERSONALLY CHECKED BY THE UNDERSIGNED.

SUBMITTED BY: TRANSPORTATION PRINCIPAL ENGINEER -

DESIGNED BY:

VANASSE HANGEN BRUSTLIN, INC.
100 GREAT MEADOW RD
SUITE 200
WETHERSFIELD, CT 06109

STATE OF CONNECTICUT
STEPHEN J. O'NEILL
No. 19323
LICENSED
PROFESSIONAL ENGINEER

Stephen O'Neill
2014.02.03
13:43:07
-05'00'

REV.	DATE	REVISION DESCRIPTION	SHEET NO.
-	-	-	-
-	-	-	-
-	-	-	-
-	-	-	-
-	-	-	-
-	-	-	-

THE INFORMATION, INCLUDING ESTIMATED QUANTITIES OF WORK, SHOWN ON THESE SHEETS IS BASED ON LIMITED INVESTIGATIONS BY THE STATE AND IS IN NO WAY WARRANTED TO INDICATE THE CONDITIONS OF ACTUAL QUANTITIES OF WORK WHICH WILL BE REQUIRED.

Plotted Date: 2/3/2014

DESIGNER/DRAFTER: -

CHECKED BY: -

STATE OF CONNECTICUT
DEPARTMENT OF TRANSPORTATION

Filename: ...\FA_CGR_CPS_0170-2296_007_06_CVI_IOD_001.dgn

SIGNATURE/ BLOCK:

STATE OF CONNECTICUT
STEPHEN J. O'NEILL
No. 19323
LICENSED
PROFESSIONAL ENGINEER

VHB, INC.
100 GREAT MEADOW RD
SUITE 200
WETHERSFIELD, CT 06109
860.807.4300

PROJECT TITLE:

NEW HAVEN - HARTFORD SPRINGFIELD RAIL CORRIDOR

TOWN: **MERIDEN**

DRAWING TITLE: **DRAWING INDEX**

PROJECT NO. **170-3155**

DRAWING NO. **CVI-001**

SHEET NO. **03.03.001**

Connecticut Department of Transportation
QA/QC Format Check

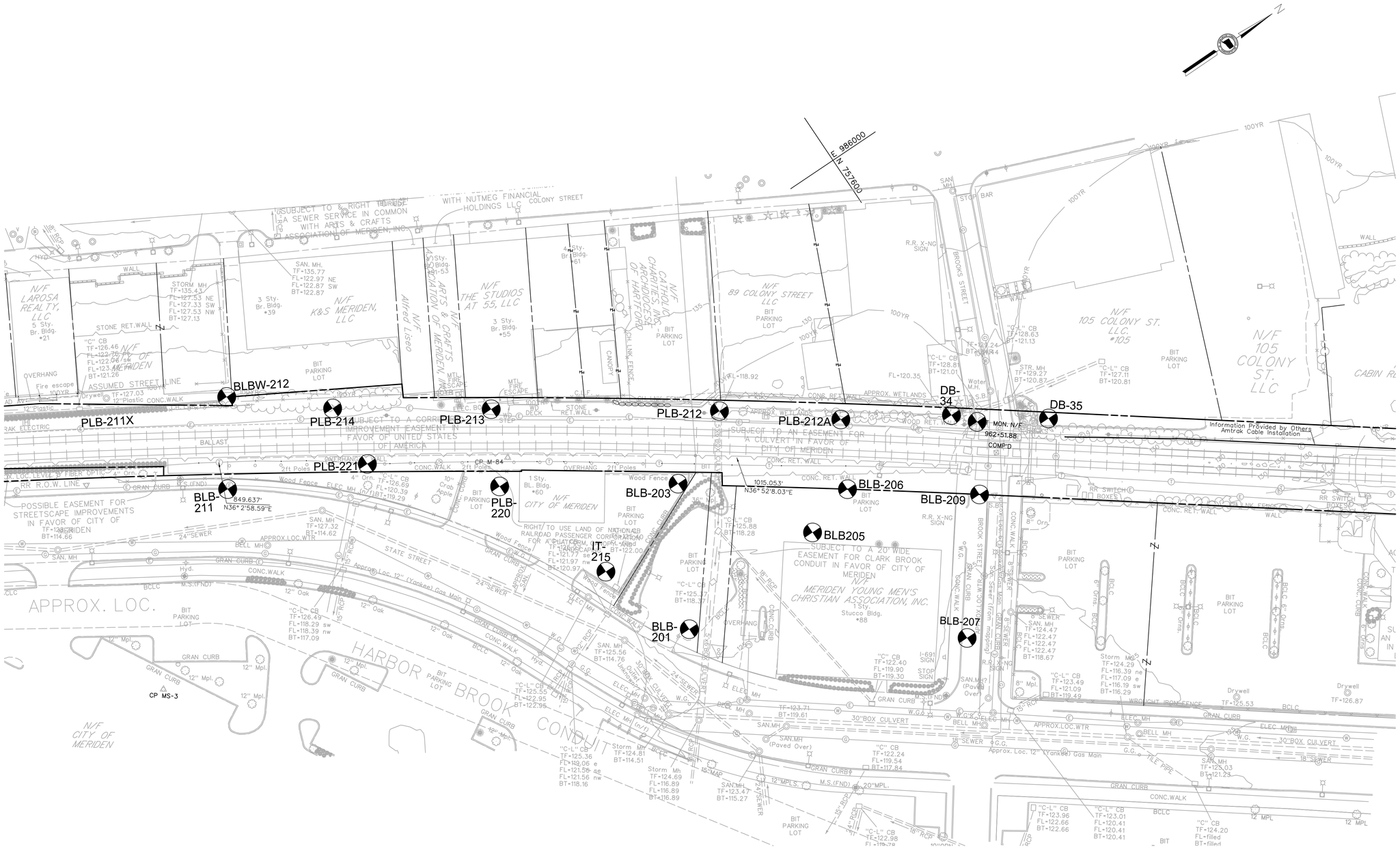

REV.	DATE	REVISION DESCRIPTION	SHEET NO.
-	-	-	-
-	-	-	-
-	-	-	-
-	-	-	-
-	-	-	-
-	-	-	-

THE INFORMATION, INCLUDING ESTIMATED QUANTITIES OF WORK, SHOWN ON THESE SHEETS IS BASED ON LIMITED INVESTIGATIONS BY THE STATE AND IS IN NO WAY WARRANTED TO INDICATE THE CONDITIONS OF ACTUAL QUANTITIES OF WORK WHICH WILL BE REQUIRED.

Plotted Date: 2/3/2014

DESIGNER/DRAFTER: **CONNDOT**

CHECKED BY: **CONNDOT**

SCALE IN FEET 0 40 80

SCALE 1"=40'

STATE OF CONNECTICUT
DEPARTMENT OF TRANSPORTATION

Filename: ...\FA_CGR_CPS_0170-2296_079_-06_CSP_-_EXISTING CONDITIONS.dgn

SIGNATURE/ BLOCK:

OFFICE OF ENGINEERING

APPROVED BY:

PROJECT TITLE:

NEW HAVEN - HARTFORD SPRINGFIELD RAIL CORRIDOR

TOWN: **MERIDEN**

DRAWING TITLE: **EXISTING CONDITIONS PLAN**

PROJECT NO. **170-3155**

DRAWING NO. **EXT-001**

SHEET NO. **03.03.002**

HORIZONTAL CONTROL POINTS (FIELD TIES NOT TO SCALE)

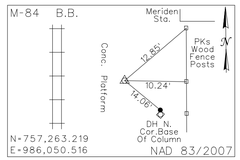

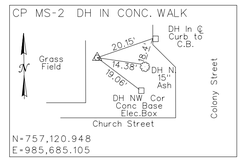

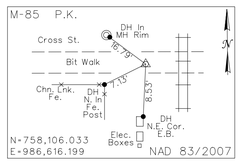

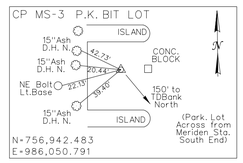

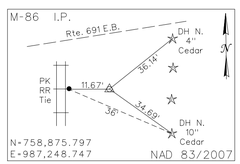

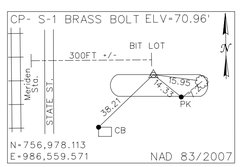

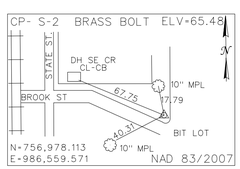

BENCH MARK DESCRIPTIONS

B.M. M-214 Elev. 129.20
D.H. NW Cor. Conc. Platform @ Meriden Station
NAVD 1988 HSR BK "D" PG. 36

B.M. M-215 Elev. 132.86
SW Cor. Bolt R.R. @ Cross St.
NAVD 1988 HSR BK "D" PG. 36

SURVEY NOTES

1.) SURVEY BY DISTRICT 1 SURVEYS

2.) FIELD BOOKS:

3.) 400 FOOT GRID BASED ON NAD 83/2007

4.) VERTICAL DATUM BASED ON NAVD 88

5.) THE PROPERTY AND STREET LINES DEPICTED HAVE BEEN COMPILED FROM VARIOUS SOURCES AND ARE NOT TO BE CONSTRUED AS NECESSARILY BEING OBTAINED AS THE RESULT OF A FIELD SURVEY, NOR DO THEY REPRESENT A PROPERTY BOUNDARY OPINION

6.) MAPPING COMPILED FROM PHOTOGRAPHY DATED 3-18-2010

7.) PHOTOGRAMMETRY BY: AERO-METRIC, INC.
AERO-METRIC PROJECT NUMBER 1-110308

8.) UNDERGROUND UTLITY, STRUCTURE AND FACILITY LOCATIONS DEPICTED AND NOTED HEREON HAVE BEEN COMPILED, IN PART, FROM RECORD MAPPING SUPPLIED BY THE RESPECTIVE UTILITY COMPANIES OR GOVERNMENTAL AGENCIES, LIMITED FIELD LOCATIONS AND OTHER SOURCES. THESE LOCATIONS MUST BE CONSIDERED AS APPROXIMATE IN NATURE. ADDITIONALLY, OTHER SUCH FEATURES MAY EXIST ON THE SITE, THE EXISTANCE OF WHICH ARE UKNOWN. THE SIZE LOCATION AND EXISTANCE OF ALL SUCH FEATURES MUST BE FIELD DETERMINED AND VERIFIED BY THE APPROPRIATE AUTHORITIES PRIOR TO CONSTRUCTION. CALL BEFORE YOU DIG 1-800-922-4455.

9.) UTILITIES ARE SUPPLIED BY THE FOLLOWING COMPANIES:
AMTRAK
LEVEL 3 COMMUNICATIONS
CONNECTICUT LIGHT AND POWER
YANKEE GAS

REV.	DATE	REVISION DESCRIPTION	SHEET NO.
-	-	-	-
-	-	-	-
-	-	-	-
-	-	-	-
-	-	-	-
-	-	-	-

THE INFORMATION, INCLUDING ESTIMATED QUANTITIES OF WORK, SHOWN ON THESE SHEETS IS BASED ON LIMITED INVESTIGATIONS BY THE STATE AND IS IN NO WAY WARRANTED TO INDICATE THE CONDITIONS OF ACTUAL QUANTITIES OF WORK WHICH WILL BE REQUIRED.

Plotted Date: 2/3/2014

DESIGNER/DRAFTER: CONNDOT
CHECKED BY: CONNDOT
NOT TO SCALE

STATE OF CONNECTICUT
DEPARTMENT OF TRANSPORTATION

Filename: ...\FA..CGR..CPS..0170-2296..079...06..GDS...SURVEY CONTROL POINTS SHEET 001.dgn

SIGNATURE/ BLOCK:
OFFICE OF ENGINEERING
APPROVED BY:

PROJECT TITLE:
NEW HAVEN - HARTFORD SPRINGFIELD RAIL COORIDOR

TOWN: MERIDEN

DRAWING TITLE:
SURVEY CONTROL POINTS TIES AND NOTES

PROJECT NO. 170-3155
DRAWING NO. TIE-001
SHEET NO. 03.03.003

LEGEND:

- APPROXIMATE LIMITS OF FOUNDATION FROM EXISTING BUILDING, PREVIOUSLY DEMOLISHED, TO BE REMOVED BY CONTRACTOR.
- EXISTING BUILDING TO BE DEMOLISHED BY CONTRACTOR
- EXISTING CONCRETE SIDEWALK AND CURBING TO BE REMOVED
- APPROXIMATE LIMITS OF EXISTING BITUMINOUS AND/OR GRAVEL DRIVEWAY AND WALKWAYS TO BE REMOVED BY CONTRACTOR.

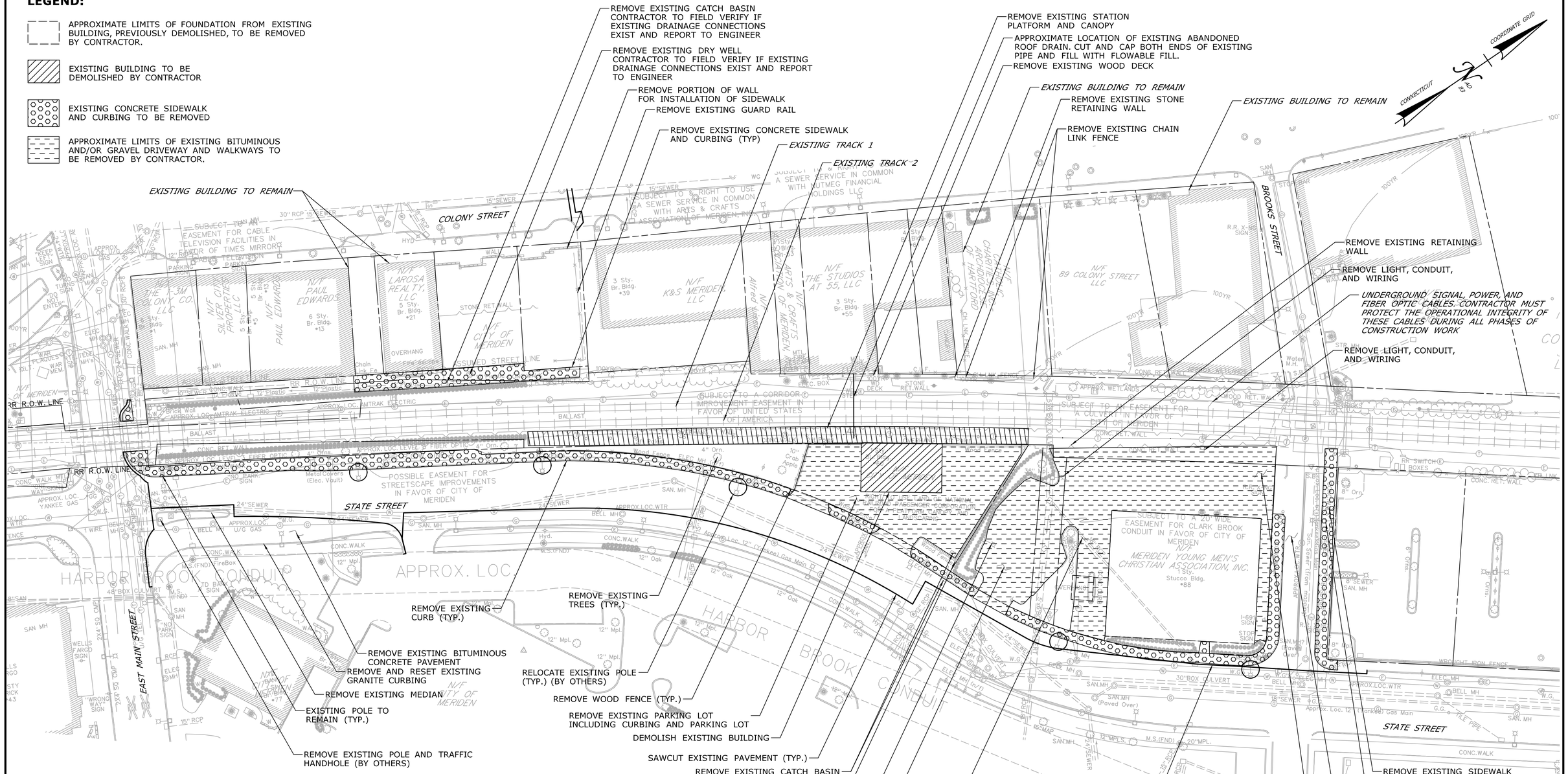

NOTES:

1. DEMOLITION ACTIVITIES TO BE COORDINATED WITH STAGING PLANS.
2. IT IS ASSUMED THAT THE FOUNDATION WALLS HAVE BEEN REMOVED TO AT LEAST 2 FEET BELOW GRADE AT TIME OF DEMOLITION.
3. THE EXISTING FOUNDATIONS SHALL BE REMOVED TO 2 FEET BELOW THE FINISHED GRADE IN ACCORDANCE WITH THE ITEM "ROCK EXCAVATION".
4. ALL TREES, SHRUBS, AND VEGETATION WITHIN THE PROJECT LIMITS SHALL BE REMOVED IN ACCORDANCE WITH FORM 816, SECTION 2.02 AND THE ITEM "CLEARING AND GRUBBING".
5. CONTRACTOR SHALL DEMOLISH EXISTING STATION BUILDING.
6. THE CONTRACTOR SHALL COORDINATE WITH THE UTILITY COMPANIES TO DETERMINE ALL UTILITY CONNECTIONS TO EXISTING STRUCTURES WITHIN THE PROJECT LIMITS. ALL UTILITIES IDENTIFIED ON STRUCTURES TO BE DEMOLISHED SHALL BE CUT AND CAPPED PRIOR TO SITE DEMOLITION.
7. ANY EXISTING ITEMS IN CONFLICT WITH THE PROPOSED DESIGN SHALL BE REMOVED BY THE CONTRACTOR UNLESS OTHERWISE NOTED AND AS DIRECTED BY THE ENGINEER.

REV.	DATE	REVISION DESCRIPTION	SHEET NO.
-	-	-	-
-	-	-	-
-	-	-	-
-	-	-	-
-	-	-	-
-	-	-	-

THE INFORMATION, INCLUDING ESTIMATED QUANTITIES OF WORK, SHOWN ON THESE SHEETS IS BASED ON LIMITED INVESTIGATIONS BY THE STATE AND IS IN NO WAY WARRANTED TO INDICATE THE CONDITIONS OF ACTUAL QUANTITIES OF WORK WHICH WILL BE REQUIRED.

Plotted Date: 1/23/2014

DESIGNER/DRAFTER: **D. CIVITILLO**
CHECKED BY: **B. ANDERSON**
SCALE IN FEET 0 40 80
SCALE 1"=40'

STATE OF CONNECTICUT
DEPARTMENT OF TRANSPORTATION

Filename: ...\FA..CGR..CPS..0170-2296..079..06..CSP..DEMO

SIGNATURE/BLOCK:
STATE OF CONNECTICUT STEPHEN J. KAPELL No. 19323 LICENSED PROFESSIONAL ENGINEER

VHB, INC.
100 GREAT MEADOW RD
SUITE 200
WETHERSFIELD, CT 06109
860.807.4300

PROJECT TITLE:
NEW HAVEN - HARTFORD SPRINGFIELD RAIL CORRIDOR

TOWN: **MERIDEN**

DRAWING TITLE: **DEMOLITION PLAN**

PROJECT NO. **170-3155**
DRAWING NO. **DMO-001**
SHEET NO. **03.03.004**

LEGEND

- CONSTRUCTION AREA
- LAYDOWN / STAGING / ACCESS AREA
- CONTRACTOR ACCESS AREA
- TEMPORARY PRECAST BARRIER CURB
- TYPE III BARRICADES
- TEMPORARY IMPACT ATTENUATOR (TYPE A)

2100 LBS | 1400 LBS | 1400 LBS | 700 LBS
2100 LBS | 1400 LBS | 1400 LBS

TEMPORARY IMPACT ATTENUATOR (TYPE A) CONFIGURATION

NOTES:

1. THE EXACT LOCATIONS OF THE TEMPORARY CHAIN LINK FENCE SHALL BE APPROVED BY THE ENGINEER AND SHALL FULLY ENCLOSE THE SITE TO PROHIBIT ACCESS FROM UNAUTHORIZED PERSONS.
2. ALL EXCAVATED MATERIAL SHALL BE PROCESSED THROUGH THE WASTE STOCKPILE AREA PRIOR TO DISPOSAL. CONNDOT TO PERFORM SAMPLING AND TESTING.
3. FOR FINAL TREATMENTS AND GRADING, SEE DRAWING NOS. CIV-001 AND DRG-001 THROUGH DRG-006.

STAGE 1 (APPROXIMATELY XXX CALENDAR DAYS). MAINTAIN EXISTING STATION BUILDING AND PARKING. INSTALL TEMPORARY FENCING TO PROVIDE RESTRICTED ACCESS TO SITE. DEMOLISH BUILDINGS AND ROUGH GRADE.

WASTE STOCKPILE AREA (WSA) NOT SHOWN. LOCATION TO BE DETERMINED IN CONJUNCTION WITH CTDOT ENVIRONMENTAL COMPLIANCE

REMOVE MEDIAN AT EAST MAIN STREET AND COORDINATE REMOVAL OF SIGNAL EQUIPMENT WITH OTHERS PRIOR TO THE BEGINNING OF WORK ON STATE STREET.

INSTALL TEMPORARY PRECAST BARRIER CURB AND TYPE III BARRICADES ON STATE STREET TO ALLOW CONSTRUCTION OF EAST STAIR TOWER AND PORTION OF THE EAST SIDEWALK. CLOSE STATE STREET TO NON-CONSTRUCTION VEHICLES BETWEEN EAST MAIN STREET AND THE STATION ENTRANCE AS SHOWN.

CONTRACTOR TO MAINTAIN ONE 12' LANE IN THE SOUTHBOUND DIRECTION FOR VEHICULAR TRAFFIC ON STATE STREET.

CONTRACTOR SHALL MAINTAIN PEDESTRIAN ACCESS TO THE EXISTING STATION AND PLATFORMS DURING CONSTRUCTION OF THE NEW STATION AND PLATFORMS.

CONSTRUCT EAST AND WEST STAIR TOWERS AND PEDESTRIAN BRIDGE BRIDGE.

CONSTRUCT WEST PLATFORM AND PORTIONS OF THE EAST PLATFORM.

CONSTRUCT PROTECTIVE FENCE ALONG RAILROAD TRACKS ON WEST SIDE. BROOKS STREET CLOSED TO THRU TRAFFIC (NIC, BY OTHERS).

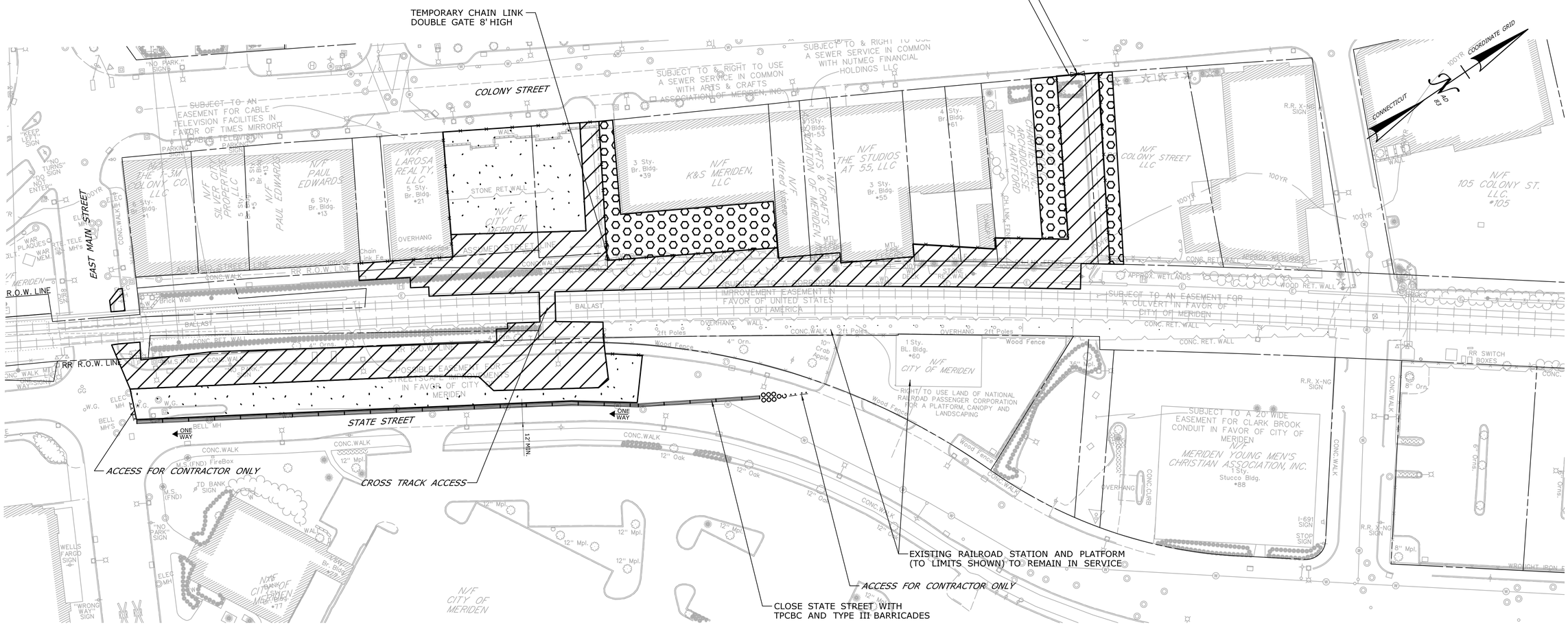

REV.	DATE	REVISION DESCRIPTION	SHEET NO.
-	-	-	-
-	-	-	-
-	-	-	-
-	-	-	-
-	-	-	-
-	-	-	-

THE INFORMATION, INCLUDING ESTIMATED QUANTITIES OF WORK, SHOWN ON THESE SHEETS IS BASED ON LIMITED INVESTIGATIONS BY THE STATE AND IS IN NO WAY WARRANTED TO INDICATE THE CONDITIONS OF ACTUAL QUANTITIES OF WORK WHICH WILL BE REQUIRED.

Plotted Date: 1/21/2014

DESIGNER/DRAFTER: **B. ANDERSON**
CHECKED BY: **P. VITALIANO**
SCALE IN FEET
0 40 80
SCALE 1"=40'

STATE OF CONNECTICUT
DEPARTMENT OF TRANSPORTATION

Filename: ...\FA_CGR_CPS_0170-2296_079__06_CSP__PHASE 1.dgn

SIGNATURE/BLOCK:
STATE OF CONNECTICUT STEPHEN J. VITALIANO No. 19325 LICENSED PROFESSIONAL ENGINEER
VHB, INC.
100 GREAT MEADOW RD
SUITE 200
WETHERSFIELD, CT 06109
860.807.4300

PROJECT TITLE:
NEW HAVEN - HARTFORD SPRINGFIELD RAIL CORRIDOR

TOWN: **MERIDEN**

DRAWING TITLE: **STAGING PLAN**

PROJECT NO. **170-3155**
DRAWING NO. **STG-001**
SHEET NO. **03.03.005**

LEGEND:

- CONSTRUCTION AREA
- LAYDOWN / STAGING / ACCESS AREA
- CONTRACTOR ACCESS AREA
- TEMPORARY PRECAST BARRIER CURB
- TYPE III BARRICADES
- IMPACT ATTENUATOR (TYPE A)

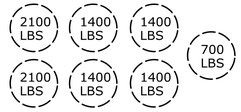

TEMPORARY IMPACT ATTENUATOR (TYPE A) CONFIGURATION

NOTES:

1. THE EXACT LOCATIONS OF THE TEMPORARY CHAIN LINK FENCE SHALL BE APPROVED BY THE ENGINEER AND SHALL FULLY ENCLOSE THE SITE TO PROHIBIT ACCESS FROM UNAUTHORIZED PERSONS.
2. ALL EXCAVATED MATERIAL SHALL BE PROCESSED THROUGH THE WASTE STOCKPILE AREA PRIOR TO DISPOSAL. CONNDOT TO PERFORM SAMPLING AND TESTING.
3. FOR FINAL TREATMENTS AND GRADING, SEE DRAWING NOS. CIV-001 AND DRG-001 THROUGH DRG-006.

STAGE 2 (APPROXIMATELY XXX CALENDAR DAYS).

WASTE STOCKPILE AREA (WSA) NOT SHOWN. LOCATION TO BE DETERMINED IN CONJUNCTION WITH CTDOT ENVIRONMENTAL COMPLIANCE

CONTRACTOR TO MAINTAIN ONE 12' LANE IN THE SOUTHBOUND DIRECTION FOR VEHICULAR TRAFFIC ON STATE STREET.

DEMOLISH EXISTING PLATFORM AND BUILDING AND COMPLETE CONSTRUCTION OF THE EAST PLATFORM.

CONSTRUCT PROTECTIVE FENCING ALONG RAILROAD TRACKS ON EAST SIDE.

CONSTRUCT KISS AND RIDE AND BUS DROP OFF AREA INCLUDING ASSOCIATED DRAINAGE AND SITE LIGHTING.

COMPLETE CONSTRUCTION OF SURFACE PARKING LOT.

CLEAN EXISTING CATCH BASINS.

REMOVE FIELD TRAILERS UPON COMPLETION OF AREA SURFACE LOT AND OPEN FOR PUBLIC USE.

FINAL PUNCH LIST, PROJECT CLOSEOUT AND COMPLETION.

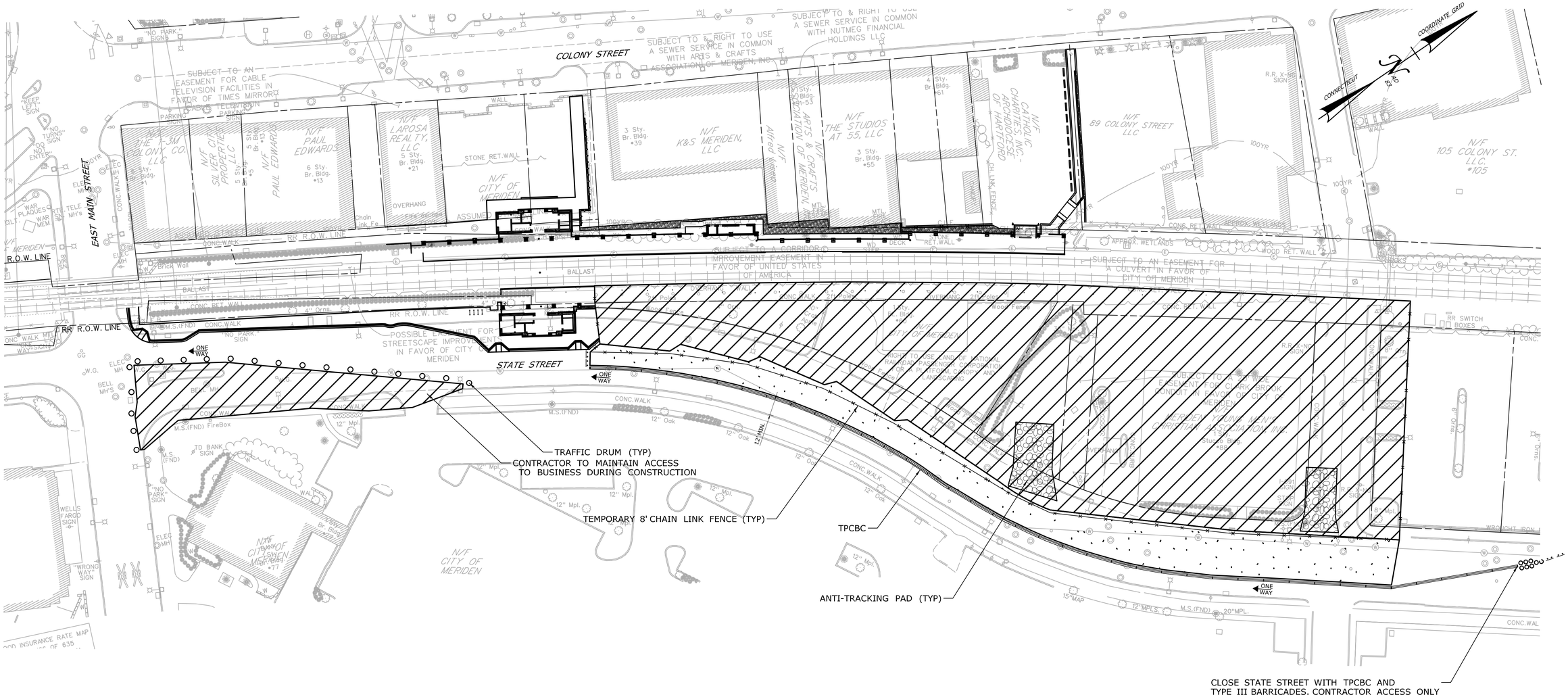

REV.	DATE	REVISION DESCRIPTION	SHEET NO.
-	-	-	-
-	-	-	-
-	-	-	-
-	-	-	-
-	-	-	-
-	-	-	-

THE INFORMATION, INCLUDING ESTIMATED QUANTITIES OF WORK, SHOWN ON THESE SHEETS IS BASED ON LIMITED INVESTIGATIONS BY THE STATE AND IS IN NO WAY WARRANTED TO INDICATE THE CONDITIONS OF ACTUAL QUANTITIES OF WORK WHICH WILL BE REQUIRED.

Plotted Date: 1/21/2014

DESIGNER/DRAFTER: **B. ANDERSON**
CHECKED BY: **P. VITALIANO**
SCALE IN FEET 0 40 80
SCALE 1"=40'

STATE OF CONNECTICUT
DEPARTMENT OF TRANSPORTATION

Filename: ...\FA..CGR..CPS..0170-2296..079...06..CSP...PHASE 2.dgn

SIGNATURE/BLOCK:
STATE OF CONNECTICUT STEPHEN J. SCHELLHAS No. 19325 LICENSED PROFESSIONAL ENGINEER
VHB, INC.
100 GREAT MEADOW RD
SUITE 200
WETHERSFIELD, CT 06109
860.807.4300

PROJECT TITLE:
NEW HAVEN - HARTFORD SPRINGFIELD RAIL CORRIDOR

TOWN: **MERIDEN**

DRAWING TITLE: **STAGING PLAN**

PROJECT NO. **170-3155**
DRAWING NO. **STG-002**
SHEET NO. **03.03.006**

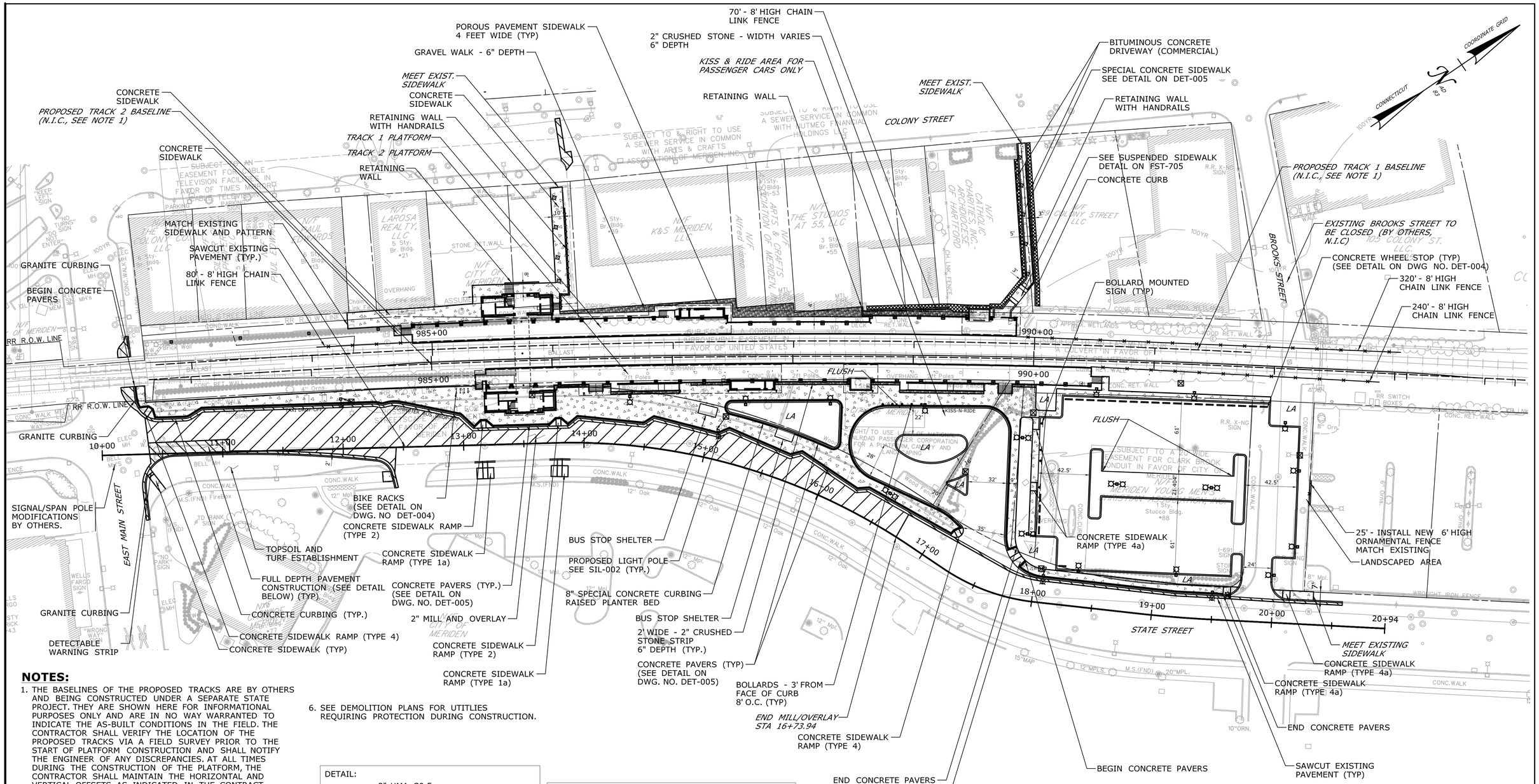

NOTES:

1. THE BASELINES OF THE PROPOSED TRACKS ARE BY OTHERS AND BEING CONSTRUCTED UNDER A SEPARATE STATE PROJECT. THEY ARE SHOWN HERE FOR INFORMATIONAL PURPOSES ONLY AND ARE IN NO WAY WARRANTED TO INDICATE THE AS-BUILT CONDITIONS IN THE FIELD. THE CONTRACTOR SHALL VERIFY THE LOCATION OF THE PROPOSED TRACKS VIA A FIELD SURVEY PRIOR TO THE START OF PLATFORM CONSTRUCTION AND SHALL NOTIFY THE ENGINEER OF ANY DISCREPANCIES. AT ALL TIMES DURING THE CONSTRUCTION OF THE PLATFORM, THE CONTRACTOR SHALL MAINTAIN THE HORIZONTAL AND VERTICAL OFFSETS AS INDICATED IN THE CONTRACT DOCUMENTS.
2. SEE SIGNING AND PAVEMENT MARKING PLANS FOR PAVEMENT MARKINGS AND SIGN LOCATIONS.
3. SEE CONNECTICUT DEPARTMENT OF TRANSPORTATION STANDARD DETAIL HW-811_01 FOR CURBING DETAILS.
4. SEE CURB TIE PLAN, DRAWING TIE-001, FOR MORE DETAILED INFORMATION REGARDING CURBING TYPE AND LAYOUT.
5. SAWCUT 2' FROM EXISTING OR PROPOSED CURBING, WHICHEVER IS CLOSEST TO THE CENTERLINE OF THE ROADWAY.
6. SEE DEMOLITION PLANS FOR UTITLIES REQUIRING PROTECTION DURING CONSTRUCTION.

DETAIL:

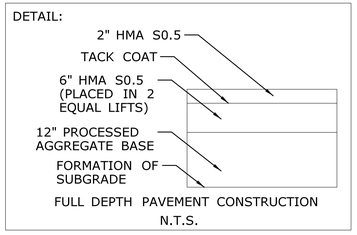

FULL DEPTH PAVEMENT CONSTRUCTION
N.T.S.

DETAIL:

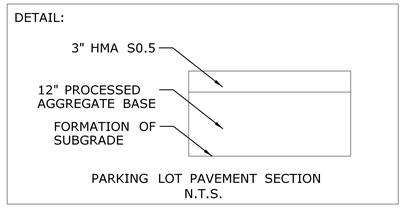

PARKING LOT PAVEMENT SECTION
N.T.S.

REV.	DATE	REVISION DESCRIPTION	SHEET NO.
-	-	-	-
-	-	-	-
-	-	-	-
-	-	-	-
-	-	-	-
-	-	-	-

THE INFORMATION, INCLUDING ESTIMATED QUANTITIES OF WORK, SHOWN ON THESE SHEETS IS BASED ON LIMITED INVESTIGATIONS BY THE STATE AND IS IN NO WAY WARRANTED TO INDICATE THE CONDITIONS OF ACTUAL QUANTITIES OF WORK WHICH WILL BE REQUIRED.

Plotted Date: 1/21/2014

DESIGNER/DRAFTER: **J. MIKRUT**
CHECKED BY: **P. VITALIANO**
SCALE IN FEET
0 40 80
SCALE 1"=40'

STATE OF CONNECTICUT
DEPARTMENT OF TRANSPORTATION

Filename: ...\FA_CGR_CPS_0170-2296_079_-_06_CSP_-_SITE.dgn

SIGNATURE/BLOCK:
STATE OF CONNECTICUT STEPHEN J. DONELL No. 19323 LICENSED PROFESSIONAL ENGINEER

VHB, INC.
100 GREAT MEADOW RD
SUITE 200
WETHERSFIELD, CT 06109
860.807.4300

PROJECT TITLE:
NEW HAVEN - HARTFORD SPRINGFIELD RAIL CORRIDOR

TOWN: **MERIDEN**

DRAWING TITLE: **SITE PLAN**

PROJECT NO. **170-3155**
DRAWING NO. **CIV-001**
SHEET NO. **03.03.007**

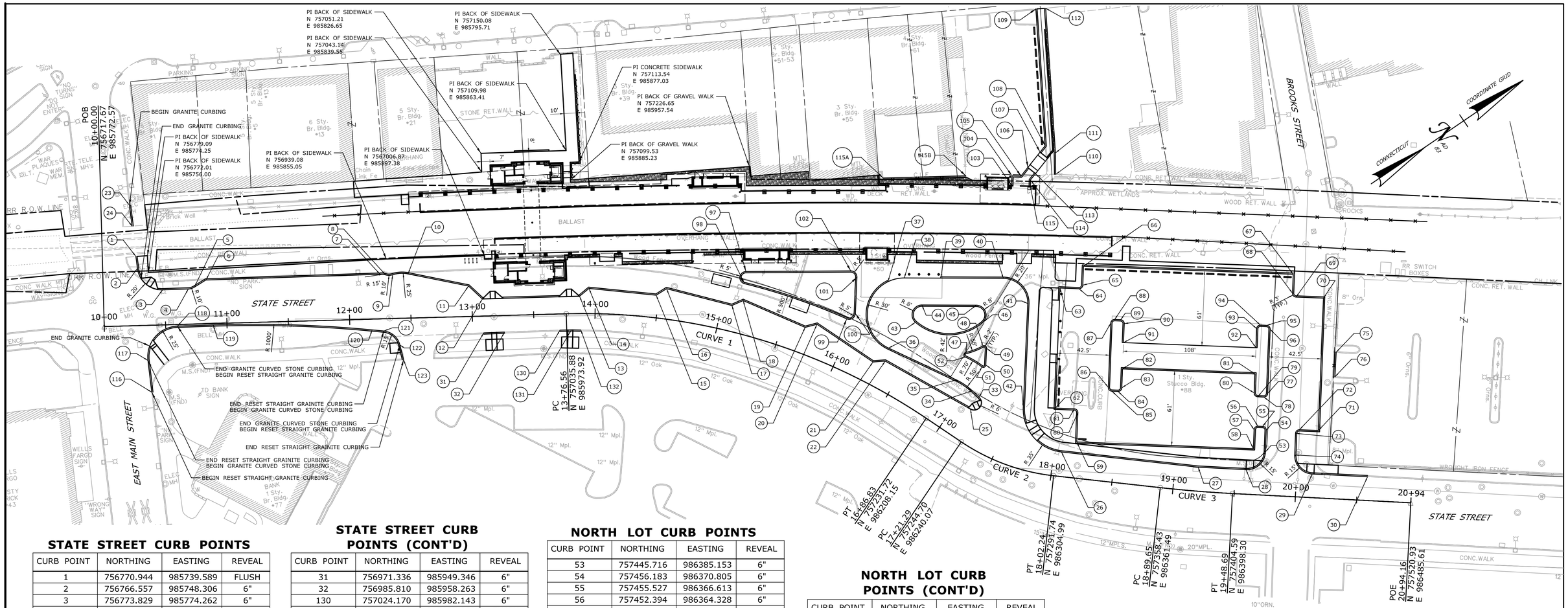

STATE STREET CURB POINTS

CURB POINT	NORTHING	EASTING	REVEAL
1	756770.944	985739.589	FLUSH
2	756766.557	985748.306	6"
3	756773.829	985774.262	6"
4	756791.599	985785.358	6"
5	756796.550	985786.870	6"
6	756807.487	985787.248	6"
7	756927.920	985862.479	6"
8	756931.401	985865.489	6"
9	756936.239	985868.612	6"
10	756947.045	985875.030	6"
11	756982.413	985910.724	6"
12	756985.899	985925.728	6"
13	757052.829	985968.078	6"
14	757062.780	985967.089	6"
15	757105.104	986002.212	6"
16	757115.100	986002.507	6"
17	757151.673	986043.585	6"
18	757161.511	986045.376	6"
19	757191.219	986091.663	6"
20	757200.656	986094.970	6"
21	757221.369	986145.921	6"
22	757230.040	986150.902	6"
23	756789.866	985701.994	6"
24	756782.167	985717.292	FLUSH
25	757265.838	986222.091	FLUSH
26	757307.855	986292.431	6"
27	757393.442	986364.933	6"
28	757424.595	986388.310	6"
29	757467.398	986421.317	6"
30	757503.554	986448.327	6"

STATE STREET CURB POINTS (CONT'D)

CURB POINT	NORTHING	EASTING	REVEAL
31	756971.336	985949.346	6"
32	756985.810	985958.263	6"
130	757024.170	985982.143	6"
131	757032.023	985987.099	FLUSH
132	757038.343	985991.529	6"

KISS-N-RIDE CURB POINTS

CURB POINT	NORTHING	EASTING	REVEAL
33	757277.052	986218.078	6"
34	757275.348	986210.506	6"
35	757269.447	986195.767	6"
36	757238.132	986143.560	6"
37	757267.952	986098.409	FLUSH
38	757280.693	986103.296	FLUSH
39	757305.311	986119.985	FLUSH
40	757347.492	986148.579	6"
41	757352.575	986176.714	6"
42	757302.298	986244.967	6"
43	757268.115	986138.349	6"
44	757280.323	986129.624	6"
45	757316.974	986154.470	6"
46	757313.390	986169.040	6"
47	757288.468	986181.689	6"
48	757302.951	986185.030	6"
49	757304.365	986188.207	6"
50	757296.252	986199.220	6"
51	757292.751	986198.685	6"
52	757286.073	986184.618	6"

NORTH LOT CURB POINTS

CURB POINT	NORTHING	EASTING	REVEAL
53	757445.716	986385.153	6"
54	757456.183	986370.805	6"
55	757455.527	986366.613	6"
56	757452.394	986364.328	6"
57	757488.203	986364.984	6"
58	757439.068	986377.506	6"
59	757322.733	986292.639	6"
60	757336.821	986273.328	6"
61	757336.166	986269.136	6"
62	757323.644	986260.001	FLUSH
63	757381.400	986180.829	6"
64	757393.922	986189.964	6"
65	757398.114	986189.308	6"
66	757407.248	986176.786	6"
67	757545.396	986277.565	6"
68	757536.261	986290.087	6"
69	757536.916	986294.279	6"
70	757554.993	986307.466	6"
71	757491.345	986394.718	6"
72	757478.823	986385.583	6"
73	757474.631	986386.239	6"
74	757464.257	986400.460	6"
75	757538.929	986349.842	6"
76	757526.933	986365.910	6"
77	757473.863	986346.569	6"
78	757469.671	986347.224	6"
79	757465.682	986344.315	6"
80	757465.027	986340.123	6"
81	757474.162	986327.600	6"
82	757386.911	986263.951	6"
83	757377.776	986276.473	6"
84	757373.584	986277.128	6"
85	757369.593	986274.217	6"

NORTH LOT CURB POINTS (CONT'D)

CURB POINT	NORTHING	EASTING	REVEAL
86	757368.938	986270.025	6"
87	757399.822	986227.689	6"
88	757404.014	986227.033	6"
89	757408.005	986229.945	6"
90	757408.660	986234.136	6"
91	757399.525	986246.659	FLUSH
92	757486.777	986310.308	FLUSH
93	757495.911	986297.786	6"
94	757500.103	986297.131	6"
95	757504.091	986300.040	6"
96	757504.747	986304.232	6"

RAISED PLANTER BED CURB POINTS

CURB POINT	NORTHING	EASTING	REVEAL
97	757176.552	986027.036	8"
98	757170.085	986034.560	8"
99	757223.212	986104.777	8"
100	757231.476	986105.088	8"
101	757248.987	986081.031	8"
102	757247.722	986074.177	8"

WEST SIDEWALK LAYOUT POINTS

CURB POINT	NORTHING	EASTING	REVEAL
103	757395.397	986089.663	6"
104	757399.969	986083.196	8"
105	757405.945	986087.421	9"
106	757414.450	986084.730	22.8"
107	757429.705	986079.903	19.2"
108	757436.013	986077.907	8"
109	757492.031	985981.095	6"
110	757430.207	986102.045	6"
111	757439.737	986087.444	6"
112	757498.956	985985.102	6"
113	757416.862	986092.352	26.4"
114	757410.555	986094.353	18"
115	757407.719	986098.365	18"
115A	757311.886	986026.136	6"
115B	757368.742	986062.151	6"

NOTES:

1. ALL CURBING IS CONCRETE UNLESS OTHERWISE NOTED
2. ALL CURB RADII ARE 3' UNLESS OTHERWISE NOTED
3. STRAIGHT GRANITE CURBING ON EAST SIDE OF STATE STREET SHALL BE RESET FROM EXISTING GRANITE CURBING. CURVED GRANITE CURBING SHALL BE NEW.

STATE STREET EAST CURB POINTS

CURB POINT	NORTHING	EASTING	REVEAL
116	756719.947	985838.603	6"
117	756731.813	985815.389	6"
118	756767.314	985805.562	6"
119	756792.050	985821.008	6"
120	756897.250	985896.587	6"
121	756904.623	985902.645	6"
122	756909.196	985919.364	6"
123	757904.986	985930.932	6"

CURVE DATA

CURVE	DELTA	D	T	L	R	PI NORTHING	PI EASTING
1	35° 33'13.18"	11° 27'32.96"	160.31	310.26	500.00	757171.35	986059.64
2	27° 36'31.73"	34° 06'16.67"	41.28	80.95	168.00	757260.24	986278.31
3	3° 22'59.08"	5° 43'46.48"	29.53	59.05	1000.00	757380.97	986380.58

REV.	DATE	REVISION DESCRIPTION	SHEET NO.
-	-	-	-
-	-	-	-
-	-	-	-
-	-	-	-
-	-	-	-
-	-	-	-

THE INFORMATION, INCLUDING ESTIMATED QUANTITIES OF WORK, SHOWN ON THESE SHEETS IS BASED ON LIMITED INVESTIGATIONS BY THE STATE AND IS IN NO WAY WARRANTED TO INDICATE THE CONDITIONS OF ACTUAL QUANTITIES OF WORK WHICH WILL BE REQUIRED.

Plotted Date: 1/21/2014

DESIGNER/DRAFTER: **J. MIKRUT**
CHECKED BY: **P. VITALIANO**
SCALE IN FEET
0 40 80
SCALE 1"=40'

STATE OF CONNECTICUT
DEPARTMENT OF TRANSPORTATION

Filename: ...\FA..CGR..CPS..0170-2296..079...06..CSP...TIE.dgn

SIGNATURE/BLOCK:
STATE OF CONNECTICUT STEPHEN J. VITALIANO No. 19323 LICENSED PROFESSIONAL ENGINEER

VHB, INC.
100 GREAT MEADOW RD
SUITE 200
WETHERSFIELD, CT 06109
860.807.4300

PROJECT TITLE:
NEW HAVEN - HARTFORD SPRINGFIELD RAIL CORRIDOR

TOWN: **MERIDEN**

DRAWING TITLE: **CURB TIE PLAN**

PROJECT NO. **170-3155**
DRAWING NO. **CIV-002**
SHEET NO. **03.03.008**

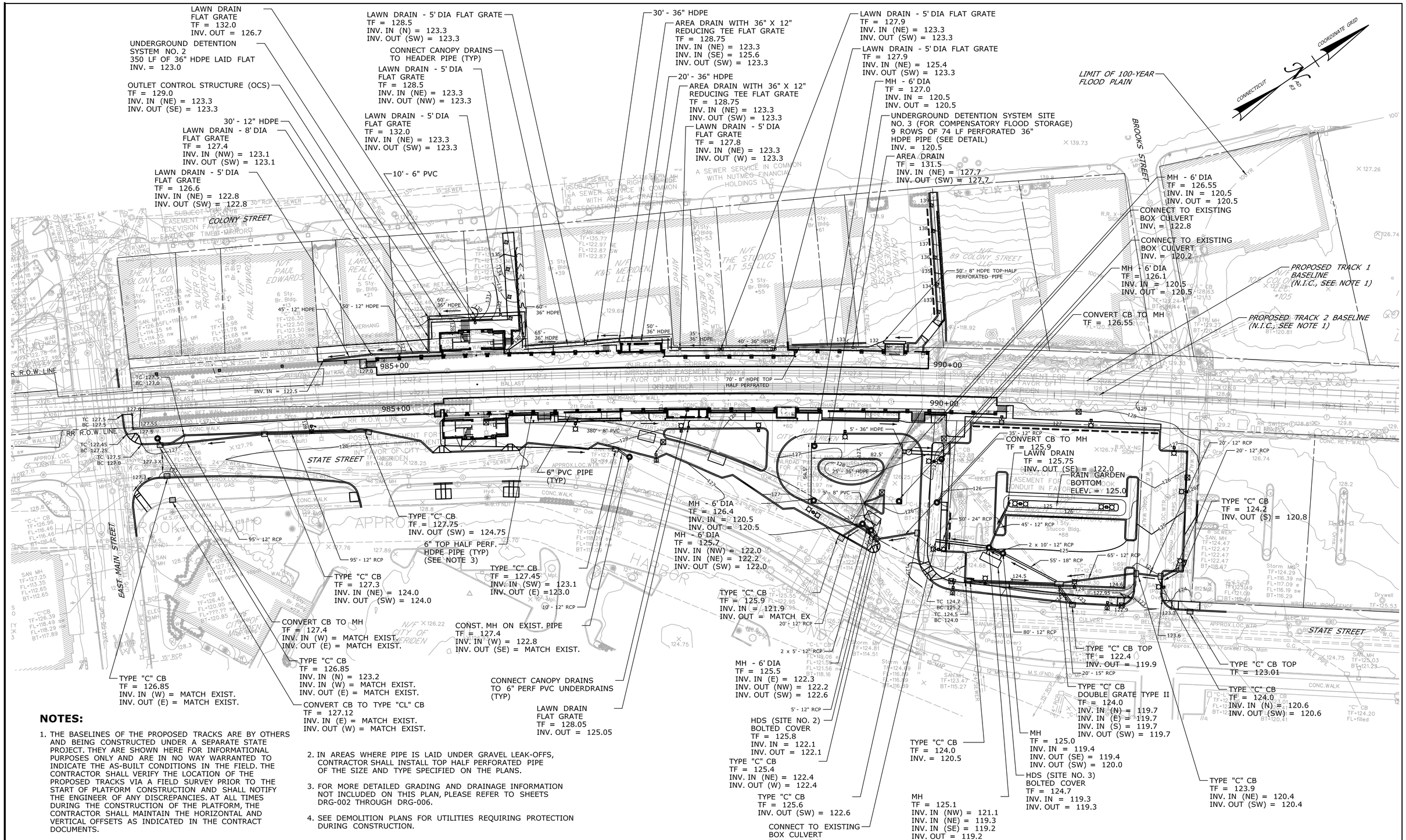

NOTES:

1. THE BASELINES OF THE PROPOSED TRACKS ARE BY OTHERS AND BEING CONSTRUCTED UNDER A SEPARATE STATE PROJECT. THEY ARE SHOWN HERE FOR INFORMATIONAL PURPOSES ONLY AND ARE IN NO WAY WARRANTED TO INDICATE THE AS-BUILT CONDITIONS IN THE FIELD. THE CONTRACTOR SHALL VERIFY THE LOCATION OF THE PROPOSED TRACKS VIA A FIELD SURVEY PRIOR TO THE START OF PLATFORM CONSTRUCTION AND SHALL NOTIFY THE ENGINEER OF ANY DISCREPANCIES. AT ALL TIMES DURING THE CONSTRUCTION OF THE PLATFORM, THE CONTRACTOR SHALL MAINTAIN THE HORIZONTAL AND VERTICAL OFFSETS AS INDICATED IN THE CONTRACT DOCUMENTS.
2. IN AREAS WHERE PIPE IS LAID UNDER GRAVEL LEAK-OFFS, CONTRACTOR SHALL INSTALL TOP HALF PERFORATED PIPE OF THE SIZE AND TYPE SPECIFIED ON THE PLANS.
3. FOR MORE DETAILED GRADING AND DRAINAGE INFORMATION NOT INCLUDED ON THIS PLAN, PLEASE REFER TO SHEETS DRG-002 THROUGH DRG-006.
4. SEE DEMOLITION PLANS FOR UTILITIES REQUIRING PROTECTION DURING CONSTRUCTION.

REV.	DATE	REVISION DESCRIPTION	SHEET NO.
-	-	-	-
-	-	-	-
-	-	-	-
-	-	-	-
-	-	-	-
-	-	-	-

THE INFORMATION, INCLUDING ESTIMATED QUANTITIES OF WORK, SHOWN ON THESE SHEETS IS BASED ON LIMITED INVESTIGATIONS BY THE STATE AND IS IN NO WAY WARRANTED TO INDICATE THE CONDITIONS OF ACTUAL QUANTITIES OF WORK WHICH WILL BE REQUIRED.

Plotted Date: 1/21/2014

DESIGNER/DRAFTER: **J. MIKRUT**
CHECKED BY: **P. VITALIANO**
SCALE IN FEET
0 40 80
SCALE 1"=40'

STATE OF CONNECTICUT
DEPARTMENT OF TRANSPORTATION

Filename: ...\FA..CGR..CPS..0170-2296..079...06..CSP...GRD

SIGNATURE/BLOCK:
STATE OF CONNECTICUT STEPHEN J. VITALIANO No. 19323 LICENSED PROFESSIONAL ENGINEER
VHB, INC.
100 GREAT MEADOW RD
SUITE 200
WETHERSFIELD, CT 06109
860.807.4300

PROJECT TITLE:
NEW HAVEN - HARTFORD
SPRINGFIELD
RAIL CORRIDOR

TOWN: **MERIDEN**

DRAWING TITLE: **GRADING AND DRAINAGE PLAN**

PROJECT NO. **170-3155**
DRAWING NO. **DRG-001**
SHEET NO. **03.03.009**

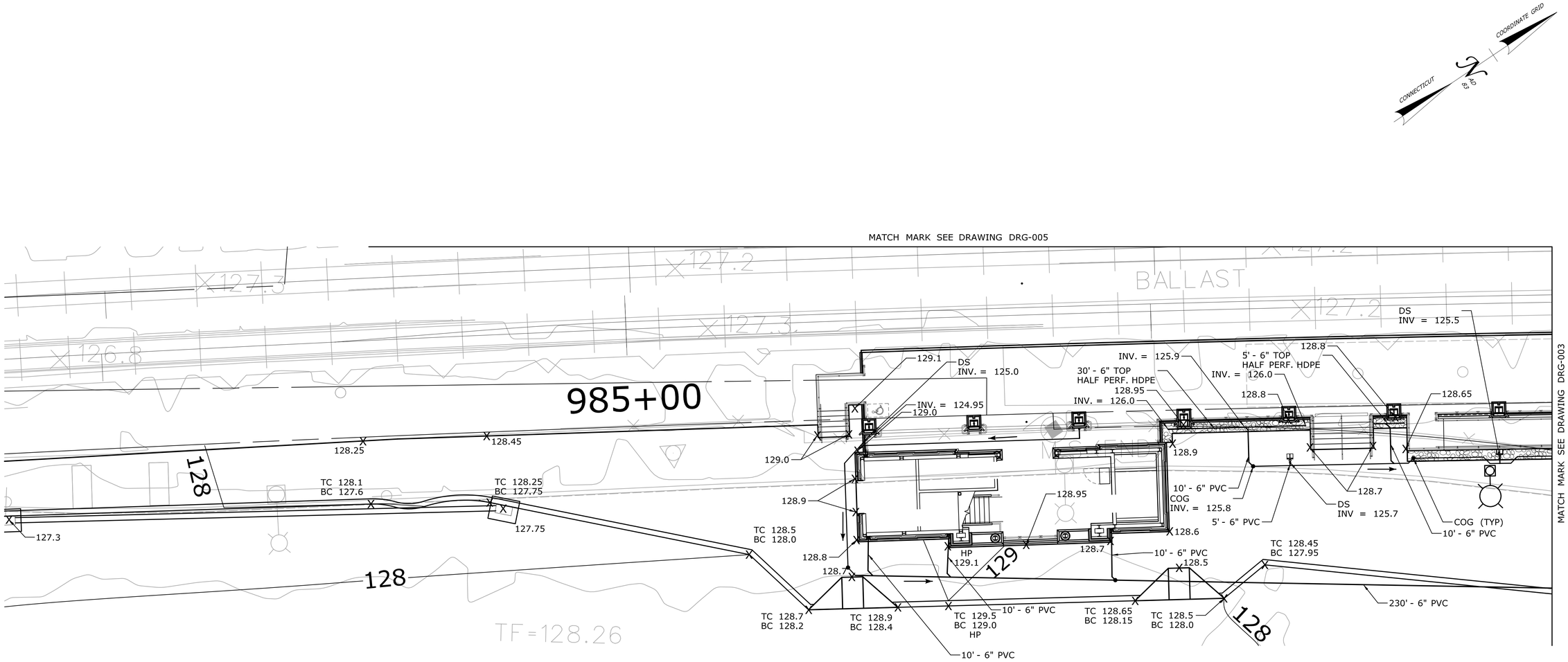

MATCH MARK SEE DRAWING DRG-003

REV.	DATE	REVISION DESCRIPTION	SHEET NO.
-	-	-	-
-	-	-	-
-	-	-	-
-	-	-	-
-	-	-	-
-	-	-	-

THE INFORMATION, INCLUDING ESTIMATED QUANTITIES OF WORK, SHOWN ON THESE SHEETS IS BASED ON LIMITED INVESTIGATIONS BY THE STATE AND IS IN NO WAY WARRANTED TO INDICATE THE CONDITIONS OF ACTUAL QUANTITIES OF WORK WHICH WILL BE REQUIRED.

Plotted Date: 1/21/2014

DESIGNER/DRAFTER: **J. MIKRUT**

CHECKED BY: **P. VITALIANO**

SCALE IN FEET
0 10 20
SCALE 1"=10'

STATE OF CONNECTICUT
DEPARTMENT OF TRANSPORTATION

Filename: ...\FA..CGR..CPS..0170-2296..079...06..CSP...GRD..2

SIGNATURE/ BLOCK:

STATE OF CONNECTICUT
STEPHEN T. MAGEE
No. 19323
LICENSED
PROFESSIONAL ENGINEER

VHB, INC.
100 GREAT MEADOW RD
SUITE 200
WETHERSFIELD, CT 06109
860.807.4300

PROJECT TITLE:
NEW HAVEN - HARTFORD SPRINGFIELD RAIL CORRIDOR

TOWN: **MERIDEN**

DRAWING TITLE: **GRADING AND DRAINAGE PLAN**

PROJECT NO. **170-3155**
DRAWING NO. **DRG-002**
SHEET NO. **03.03.010**

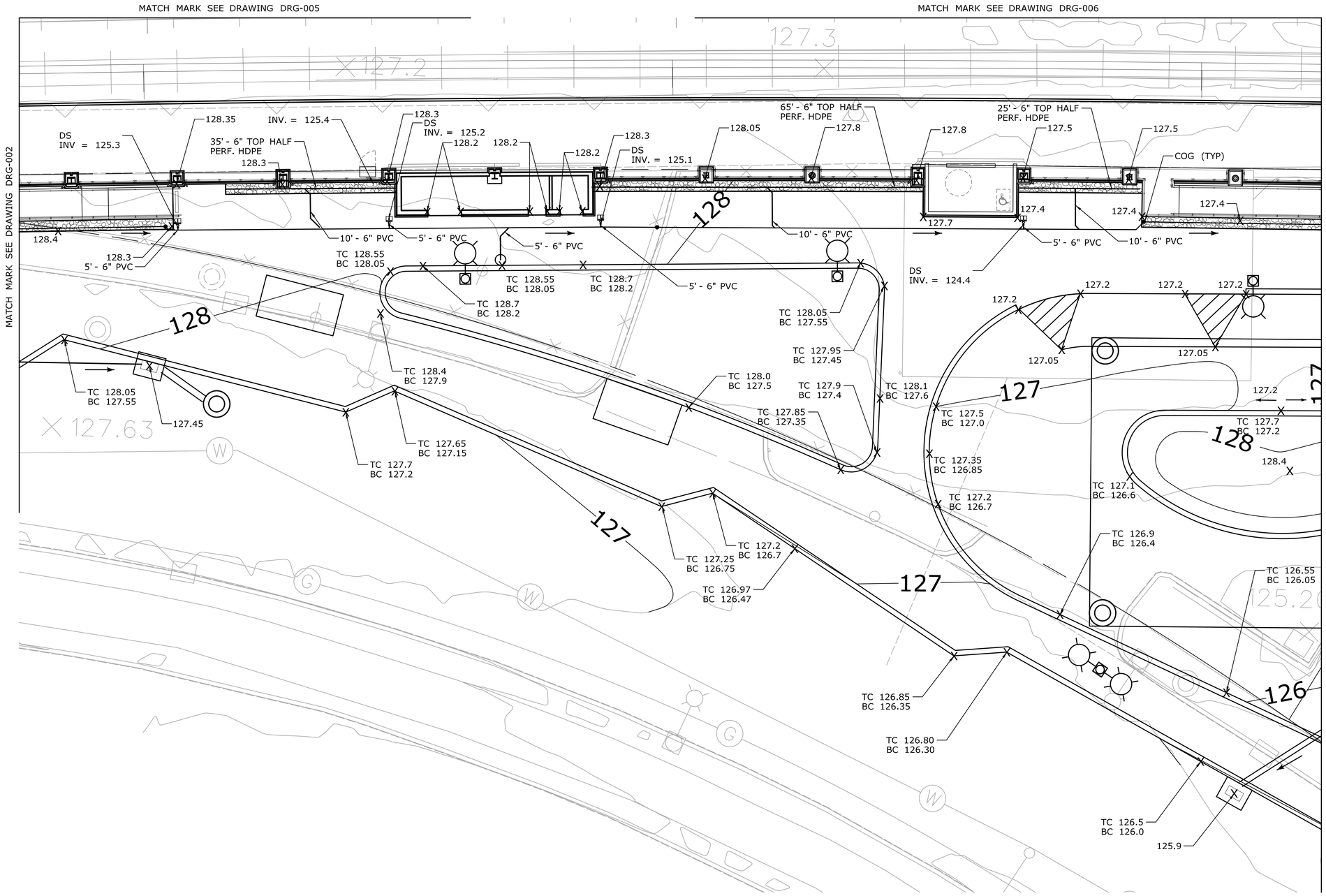

REV.	DATE	REVISION DESCRIPTION	SHEET NO.
-	-	-	-
-	-	-	-
-	-	-	-
-	-	-	-
-	-	-	-
-	-	-	-

THE INFORMATION, INCLUDING ESTIMATED QUANTITIES OF WORK, SHOWN ON THESE SHEETS IS BASED ON LIMITED INVESTIGATIONS BY THE STATE AND IS IN NO WAY WARRANTED TO INDICATE THE CONDITIONS OF ACTUAL QUANTITIES OF WORK WHICH WILL BE REQUIRED.

Plotted Date: 1/21/2014

DESIGNER/DRAFTER: **J. MIKRUT**

CHECKED BY: **P. VITALIANO**

SCALE IN FEET

0 10 20

SCALE 1"=10'

STATE OF CONNECTICUT
DEPARTMENT OF TRANSPORTATION

Filename: ...\FA..CGR..CPS..0170-2296..079...06..CSP...GRD..3

SIGNATURE/ BLOCK:

STATE OF CONNECTICUT STEPHEN J. MILL No. 19325 LICENSED PROFESSIONAL ENGINEER

VHB, INC.
100 GREAT MEADOW RD
SUITE 200
WETHERSFIELD, CT 06109
860.807.4300

PROJECT TITLE:

NEW HAVEN - HARTFORD SPRINGFIELD RAIL CORRIDOR

TOWN: **MERIDEN**

DRAWING TITLE: **GRADING AND DRAINAGE PLAN**

PROJECT NO. **170-3155**

DRAWING NO. **DRG-003**

SHEET NO. **03.03.011**

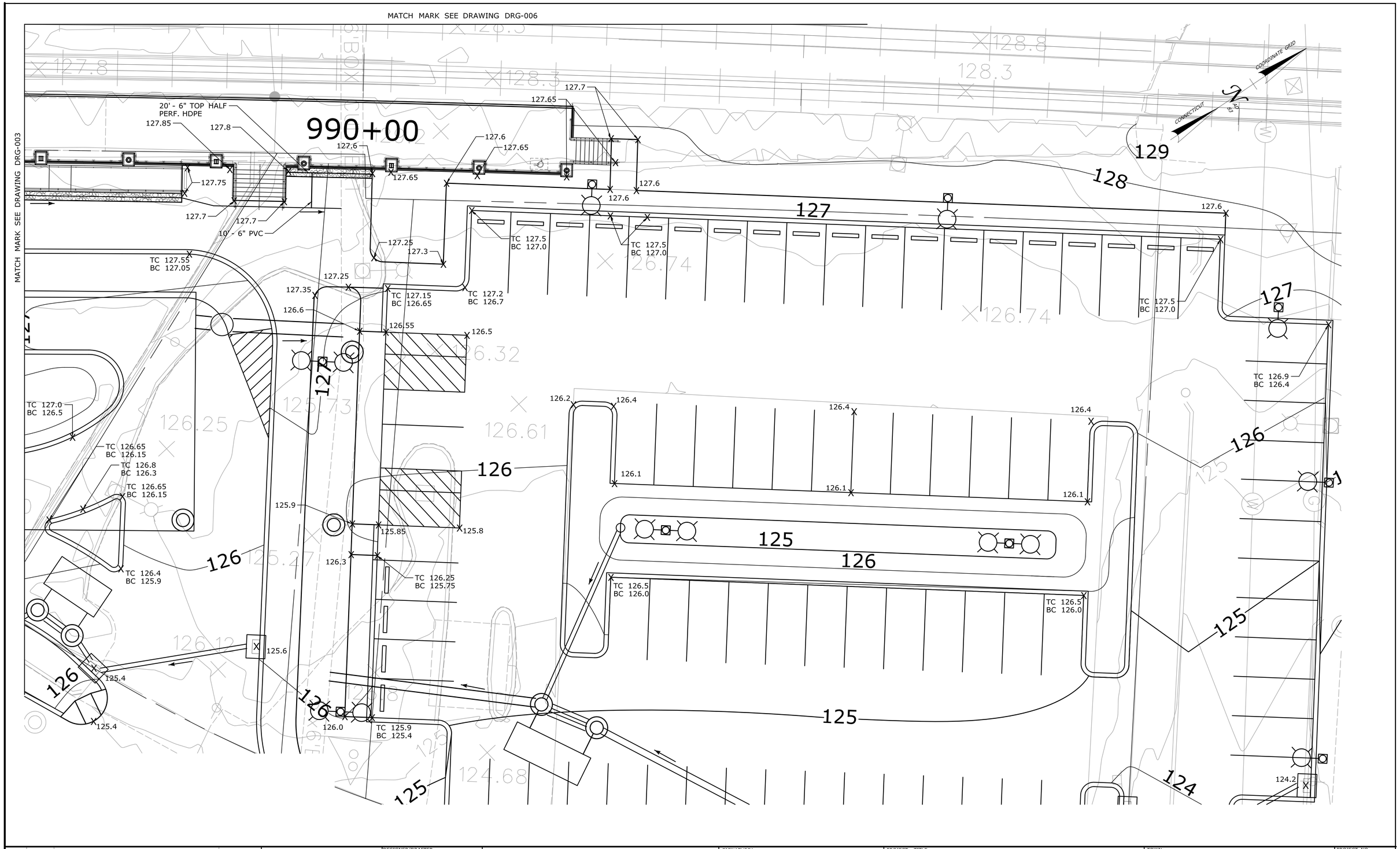

REV.	DATE	REVISION DESCRIPTION	SHEET NO.
-	-	-	-
-	-	-	-
-	-	-	-
-	-	-	-
-	-	-	-
-	-	-	-

THE INFORMATION, INCLUDING ESTIMATED QUANTITIES OF WORK, SHOWN ON THESE SHEETS IS BASED ON LIMITED INVESTIGATIONS BY THE STATE AND IS IN NO WAY WARRANTED TO INDICATE THE CONDITIONS OF ACTUAL QUANTITIES OF WORK WHICH WILL BE REQUIRED.

Plotted Date: 1/21/2014

DESIGNER/DRAFTER: **J. MIKRUT**

CHECKED BY: **P. VITALIANO**

SCALE IN FEET 0 10 20

SCALE 1"=10'

STATE OF CONNECTICUT
DEPARTMENT OF TRANSPORTATION

Filename: ...\FA..CGR..CPS..0170-2296..079...06..CSP...GRD..4

SIGNATURE/ BLOCK:

STATE OF CONNECTICUT · STEPHEN J. DONELL · No. 19323 · LICENSED PROFESSIONAL ENGINEER

VHB, INC.
100 GREAT MEADOW RD
SUITE 200
WETHERSFIELD, CT 06109
860.807.4300

PROJECT TITLE:

NEW HAVEN - HARTFORD SPRINGFIELD RAIL CORRIDOR

TOWN: **MERIDEN**

DRAWING TITLE: **GRADING AND DRAINAGE PLAN**

PROJECT NO. **170-3155**

DRAWING NO. **DRG-004**

SHEET NO. **03.03.012**

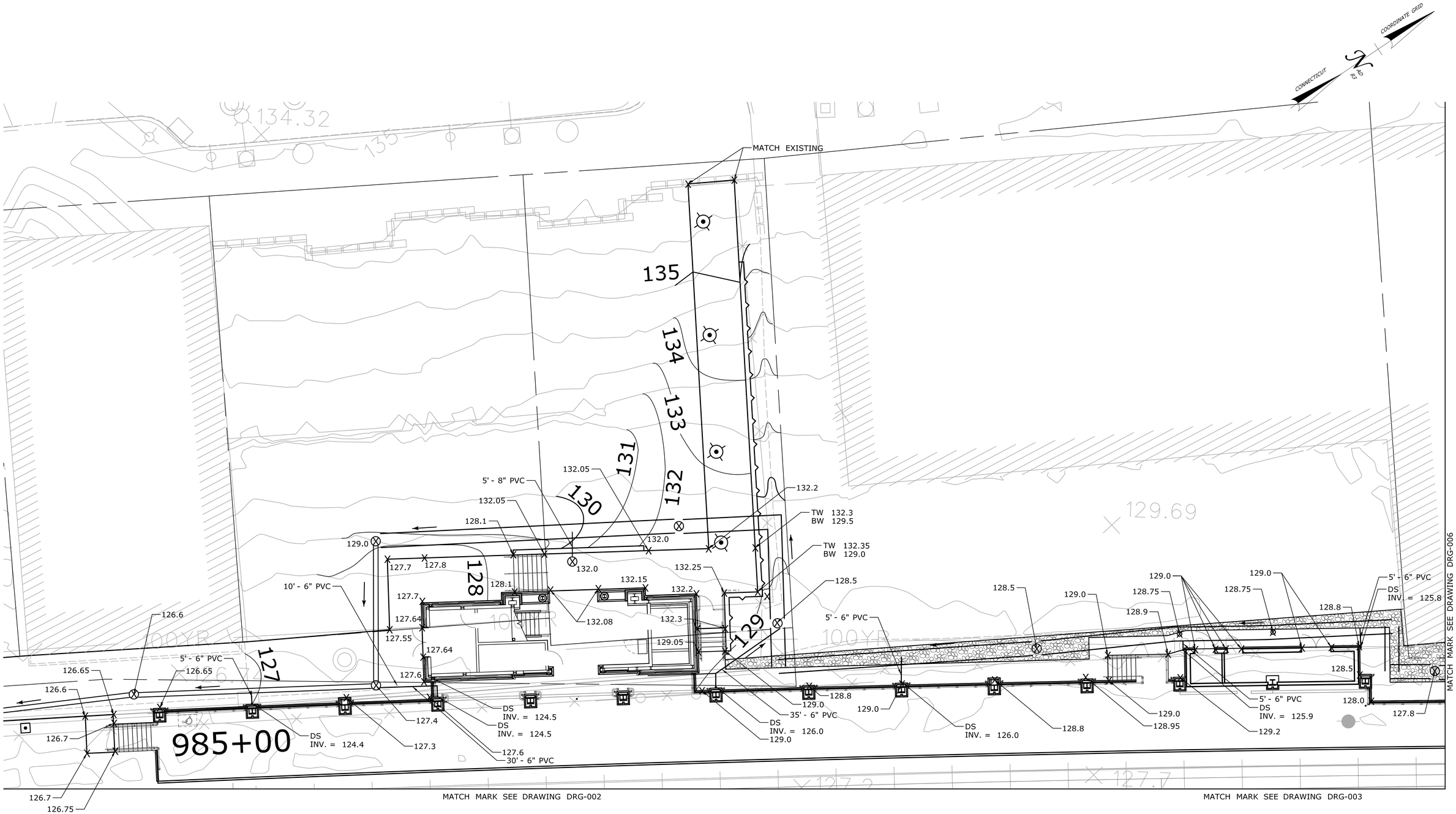

REV.	DATE	REVISION DESCRIPTION	SHEET NO.
-	-	-	-
-	-	-	-
-	-	-	-
-	-	-	-
-	-	-	-
-	-	-	-

THE INFORMATION, INCLUDING ESTIMATED QUANTITIES OF WORK, SHOWN ON THESE SHEETS IS BASED ON LIMITED INVESTIGATIONS BY THE STATE AND IS IN NO WAY WARRANTED TO INDICATE THE CONDITIONS OF ACTUAL QUANTITIES OF WORK WHICH WILL BE REQUIRED.

Plotted Date: 1/21/2014

DESIGNER/DRAFTER: **J. MIKRUT**

CHECKED BY: **P. VITALIANO**

SCALE IN FEET 0 10 20

SCALE 1"=10'

STATE OF CONNECTICUT
DEPARTMENT OF TRANSPORTATION

Filename: ...\FA..CGR..CPS..0170-2296..079...06..CSP...GRD..5

SIGNATURE/ BLOCK:

STATE OF CONNECTICUT · STEPHEN J. DONELL · Lic. No. 19323 · LICENSED PROFESSIONAL ENGINEER

VHB, INC.
100 GREAT MEADOW RD
SUITE 200
WETHERSFIELD, CT 06109
860.807.4300

PROJECT TITLE:

NEW HAVEN - HARTFORD SPRINGFIELD RAIL CORRIDOR

TOWN: **MERIDEN**

DRAWING TITLE: **GRADING AND DRAINAGE PLAN**

PROJECT NO. **170-3155**

DRAWING NO. **DRG-005**

SHEET NO. **03.03.013**

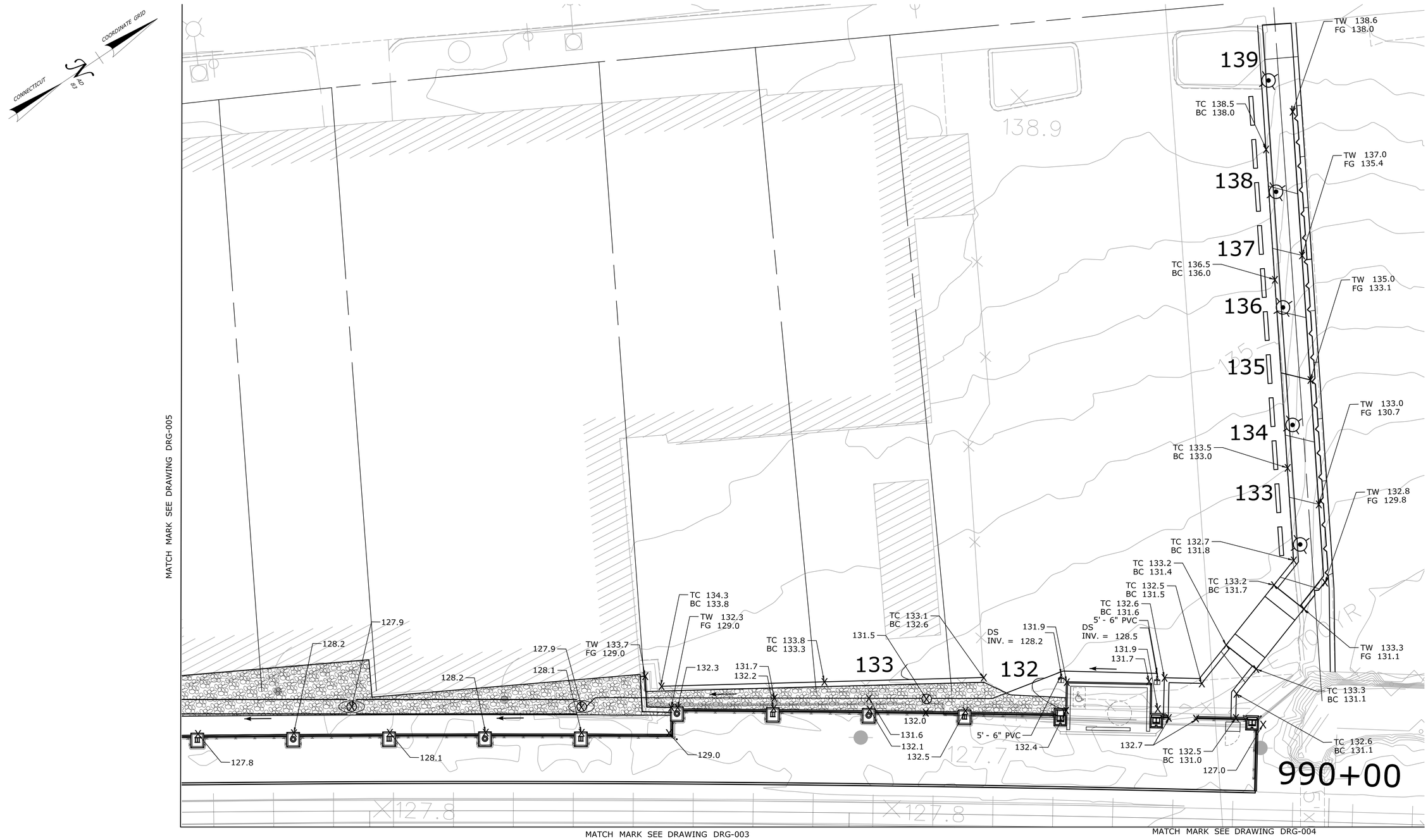

REV.	DATE	REVISION DESCRIPTION	SHEET NO.
-	-	-	-
-	-	-	-
-	-	-	-
-	-	-	-
-	-	-	-
-	-	-	-

THE INFORMATION, INCLUDING ESTIMATED QUANTITIES OF WORK, SHOWN ON THESE SHEETS IS BASED ON LIMITED INVESTIGATIONS BY THE STATE AND IS IN NO WAY WARRANTED TO INDICATE THE CONDITIONS OF ACTUAL QUANTITIES OF WORK WHICH WILL BE REQUIRED.

Plotted Date: 1/21/2014

DESIGNER/DRAFTER: **J. MIKRUT**

CHECKED BY: **P. VITALIANO**

SCALE IN FEET

0 10 20

SCALE 1"=10'

STATE OF CONNECTICUT
DEPARTMENT OF TRANSPORTATION

Filename: ...\FA..CGR..CPS..0170-2296..079...06..CSP...GRD..6

SIGNATURE/ BLOCK:

STATE OF CONNECTICUT · STEPHEN J. SCHELL · No. 18323 · LICENSED · PROFESSIONAL ENGINEER

VHB, INC.
100 GREAT MEADOW RD
SUITE 200
WETHERSFIELD, CT 06109
860.807.4300

PROJECT TITLE:

NEW HAVEN - HARTFORD SPRINGFIELD RAIL CORRIDOR

TOWN: **MERIDEN**

DRAWING TITLE: **GRADING AND DRAINAGE PLAN**

PROJECT NO. **170-3155**

DRAWING NO. **DRG-006**

SHEET NO. **03.03.014**

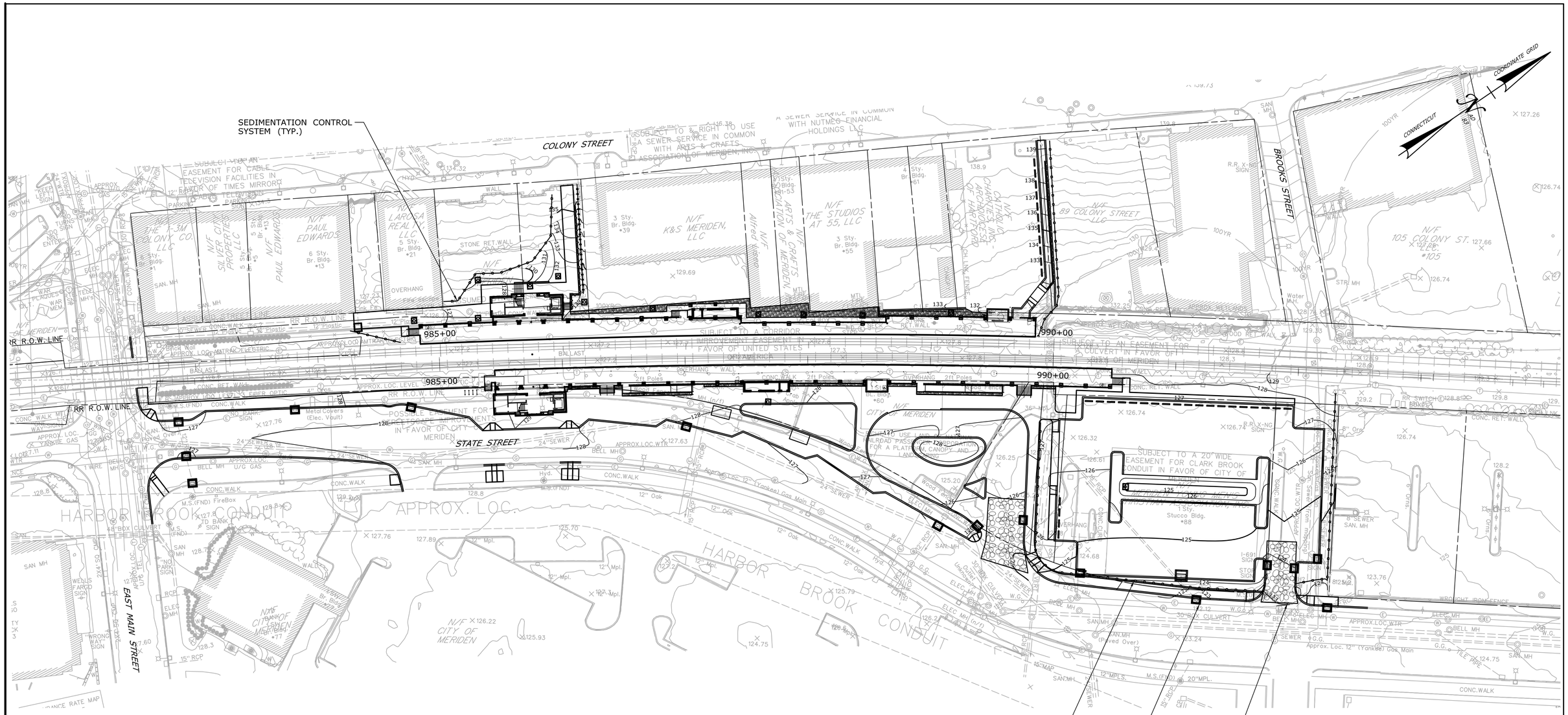

NOTE

UNLESS OTHERWISE NOTED, THE CONTRACTOR SHALL PLACE SEDIMENT CONTROL SYSTEMS (SILT SACKS) AT EXISTING AND NEW CATCH BASINS DURING CONSTRUCTION.

LEGEND

- SEDIMENT CONTROL SYSTEM AT CATCH BASIN/DRAINAGE STRUCTURE
- SEDIMENTATION CONTROL SYSTEM
- ANTI-TRACKING PAD

REV.	DATE	REVISION DESCRIPTION	SHEET NO.
-	-	-	-
-	-	-	-
-	-	-	-
-	-	-	-
-	-	-	-
-	-	-	-

THE INFORMATION, INCLUDING ESTIMATED QUANTITIES OF WORK, SHOWN ON THESE SHEETS IS BASED ON LIMITED INVESTIGATIONS BY THE STATE AND IS IN NO WAY WARRANTED TO INDICATE THE CONDITIONS OF ACTUAL QUANTITIES OF WORK WHICH WILL BE REQUIRED.

Plotted Date: 1/21/2014

DESIGNER/DRAFTER: **J. MIKRUT**

CHECKED BY: **P. VITALIANO**

SCALE IN FEET 0 40 80

SCALE 1"=40'

STATE OF CONNECTICUT
DEPARTMENT OF TRANSPORTATION

Filename: ...\FA..CGR..CPS..0170-2296..079...06..CSP...SED

SIGNATURE/BLOCK:

STATE OF CONNECTICUT STEPHEN J. DWYER No. 19323 LICENSED PROFESSIONAL ENGINEER

VHB, INC.
100 GREAT MEADOW RD
SUITE 200
WETHERSFIELD, CT 06109
860.807.4300

PROJECT TITLE:

NEW HAVEN - HARTFORD SPRINGFIELD RAIL CORRIDOR

TOWN: **MERIDEN**

DRAWING TITLE: **SEDIMENT CONTROL PLAN**

PROJECT NO. **170-3155**

DRAWING NO. **SED-001**

SHEET NO. **03.03.015**

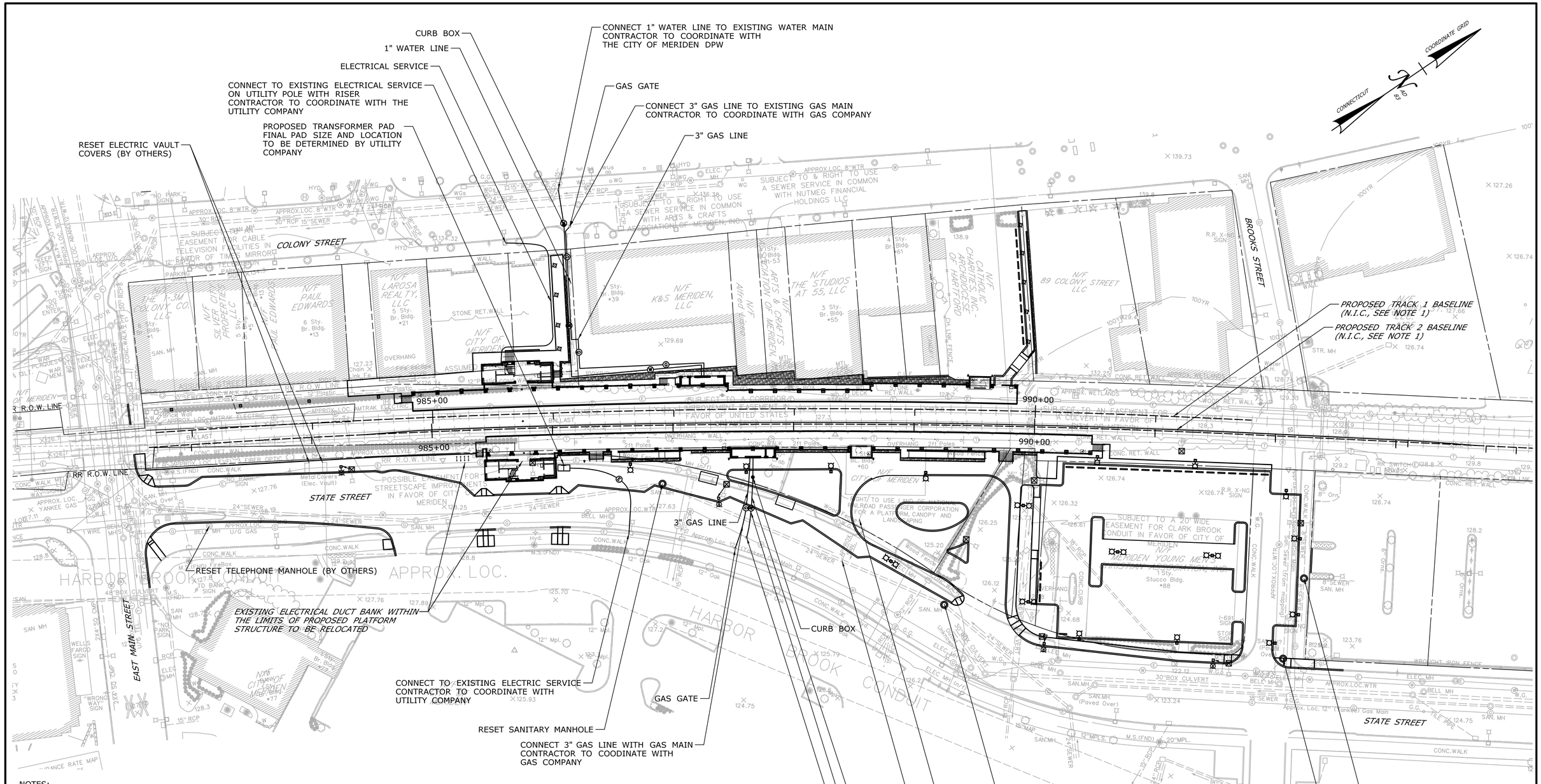

NOTES:

1. THE BASELINES OF THE PROPOSED TRACKS ARE BY OTHERS AND BEING CONSTRUCTED UNDER A SEPARATE STATE PROJECT. THEY ARE SHOWN HERE FOR INFORMATIONAL PURPOSES ONLY AND ARE IN NO WAY WARRANTED TO INDICATE THE AS-BUILT CONDITIONS IN THE FIELD. THE CONTRACTOR SHALL VERIFY THE LOCATION OF THE PROPOSED TRACKS VIA A FIELD SURVEY PRIOR TO THE START OF PLATFORM CONSTRUCTION AND SHALL NOTIFY THE ENGINEER OF ANY DISCREPANCIES. AT ALL TIMES DURING THE CONSTRUCTION OF THE PLATFORM, THE CONTRACTOR SHALL MAINTAIN THE HORIZONTAL AND VERTICAL OFFSETS AS INDICATED IN THE CONTRACT DOCUMENTS.
2. SEE MERIDEN PLUMBING PLANS - EQUIPMENT ROOM DWG. NO. FPL-104 FOR EXACT UTILITY CONNECTIONS TO BUILDING.
3. PLEASE NOTE THAT A SECOND SEWER LATERAL MAY EXIST AT THIS LOCATION. CONTRACTOR SHALL FIELD VERIFY AND COORDINATE WITH THE CITY OF MERIDEN DPW.
4. SEE DEMOLITION PLANS FOR UTILITIES REQUIRING PROTECTION DURING CONSTRUCTION.

REV.	DATE	REVISION DESCRIPTION	SHEET NO.
-	-	-	-
-	-	-	-
-	-	-	-
-	-	-	-
-	-	-	-
-	-	-	-

THE INFORMATION, INCLUDING ESTIMATED QUANTITIES OF WORK, SHOWN ON THESE SHEETS IS BASED ON LIMITED INVESTIGATIONS BY THE STATE AND IS IN NO WAY WARRANTED TO INDICATE THE CONDITIONS OF ACTUAL QUANTITIES OF WORK WHICH WILL BE REQUIRED.

Plotted Date: 1/22/2014

DESIGNER/DRAFTER: **B. ANDERSON**
CHECKED BY: **P. VITALIANO**
SCALE IN FEET 0 40 80
SCALE 1"=40'

STATE OF CONNECTICUT
DEPARTMENT OF TRANSPORTATION

Filename: ...\FA..CGR..CPS..0170-2296..079...06..CSP...UTL

SIGNATURE/BLOCK:
STATE OF CONNECTICUT STEVEN J. SCHELL No. 19323 LICENSED PROFESSIONAL ENGINEER

VHB, INC.
100 GREAT MEADOW RD
SUITE 200
WETHERSFIELD, CT 06109
860.807.4300

PROJECT TITLE:
NEW HAVEN - HARTFORD SPRINGFIELD RAIL CORRIDOR

TOWN: **MERIDEN**

DRAWING TITLE: **UTILITY PLAN**

PROJECT NO. **170-3155**
DRAWING NO. **UTL-001**
SHEET NO. **03.03.016**

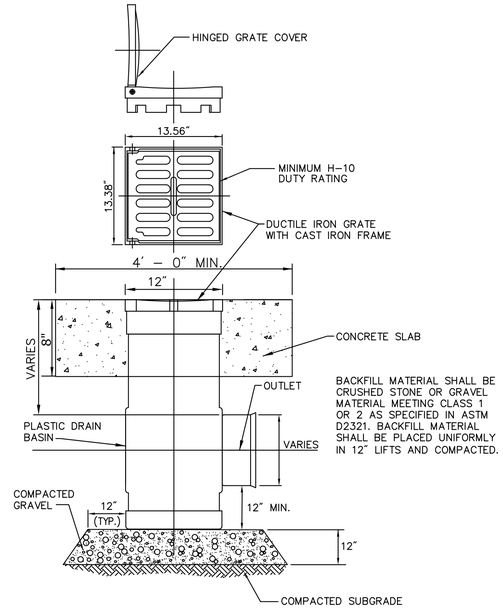

NOTE: THE EXACT SIZE AND ORIENTATION OF EACH AREA DRAIN IS TO BE PROVIDED BY THE MANUFACTURER BASED ON DRAINAGE PIPE SIZE AND ORIENTATION. AREA DRAINS SHALL BE BY NYOPLAST OR APPROVED EQUAL.

AREA DRAIN

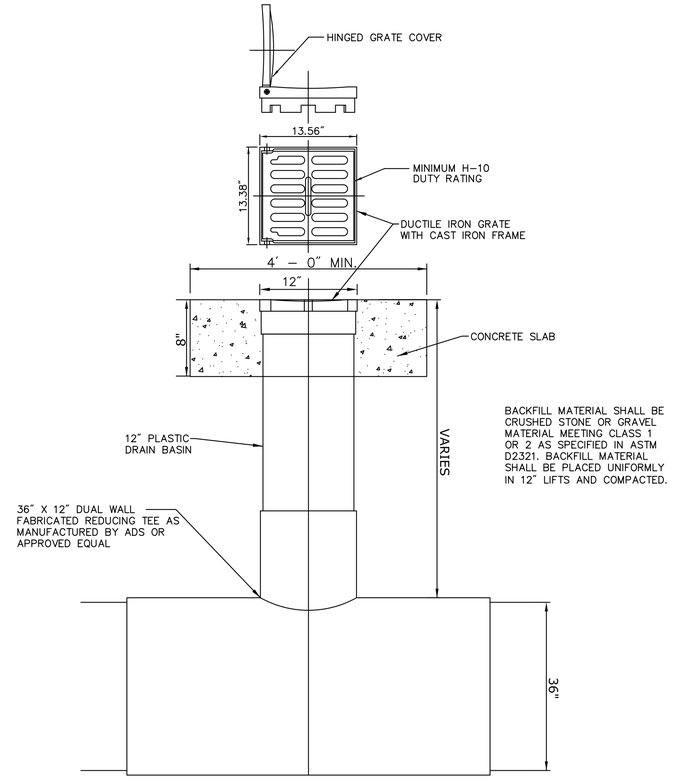

NOTE: THE EXACT SIZE AND ORIENTATION OF EACH AREA DRAIN IS TO BE PROVIDED BY THE MANUFACTURER BASED ON DRAINAGE PIPE SIZE AND ORIENTATION. AREA DRAINS SHALL BE BY NYOPLAST OR APPROVED EQUAL.

AREA DRAIN WITH 36" X 12" REDUCING TEE

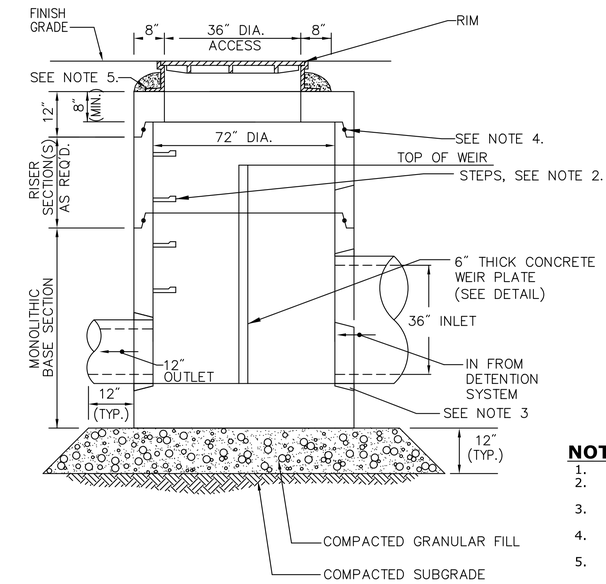

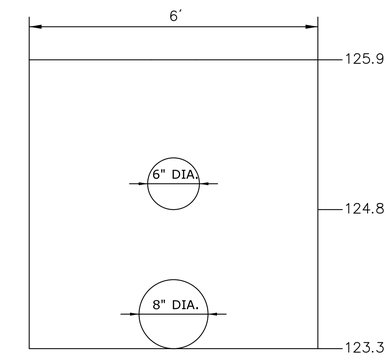

OCS UNDERGROUND DETENTION 2
RIM=129.0

WEIR PLATE

NOTES:

1. ALL SECTIONS SHALL BE DESIGNED FOR HS-20 LOADING.
2. COPOLYMER MANHOLE STEPS SHALL BE INSTALLED AT 12" O.C. FOR THE FULL DEPTH OF THE STRUCTURE.
3. PROVIDE "V" KNOCKOUTS FOR PIPES WITH 2" MAX. CLEARANCE TO OUTSIDE OF PIPE. MORTAR ALL PIPE CONNECTIONS.
4. JOINT SEALANT BETWEEN PRECAST SECTIONS SHALL BE PREFORMED BUTYL RUBBER.
5. DRAIN MANHOLE FRAME AND COVER (4" DEPTH) SHALL BE SET IN FULL MORTAR BED.

OUTLET CONTROL STRUCTURE (OCS)

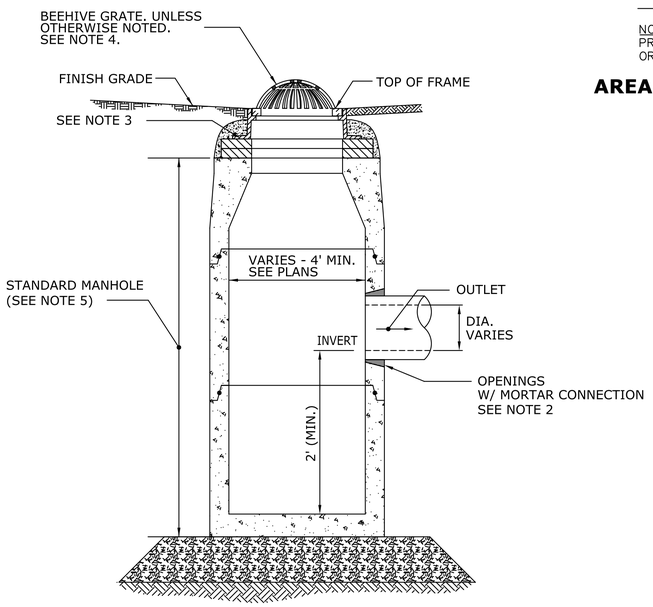

Section

LAWN DRAIN

NOTES:

1. ALL SECTIONS SHALL BE DESIGNED FOR HS-20 LOADING.
2. PROVIDE OPENINGS FOR PIPES WITH 2" MAX. CLEARANCE TO OUTSIDE OF PIPE. MORTAR ALL PIPE CONNECTIONS.
3. BEEHIVE FRAME AND GRATE SHALL BE SET IN FULL MORTAR BED. ADJUST TO GRADE WITH CLAY BRICK AND MORTAR (4 BRICK COURSES MAXIMUM).
4. BEEHIVE FRAME AND GRATE TO BE NEENAH FOUNDRY CATALOG NO. R-2560-EA OR APPROVED EQUAL. WHERE FLAT GRATE IS SPECIFIED ON GRADING AND DRAINAGE PLAN FRAME AND GRATE TO BE NEENAH FOUNDRY CATALOG NO. R-2569 OR APPROVED EQUAL.
5. STRUCTURE WITHIN LIMITS SHOWN SHALL BE CONSTRUCTED IN ACCORDANCE WITH CONNDOT STANDARD SHEET NO. HW-507_10 WITH THE EXCEPTION OF THE 2 FT DEEP SUMP AS SHOWN.

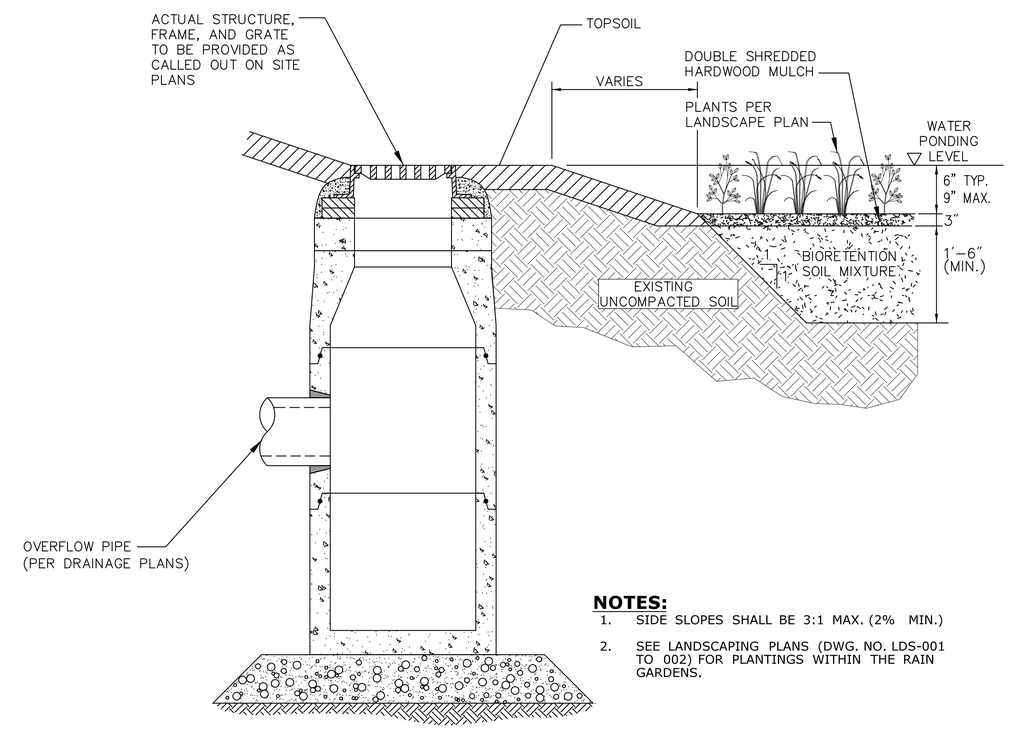

NOTES:

1. SIDE SLOPES SHALL BE 3:1 MAX. (2% MIN.)
2. SEE LANDSCAPING PLANS (DWG. NO. LDS-001 TO 002) FOR PLANTINGS WITHIN THE RAIN GARDENS.

RAIN GARDEN

REV.	DATE	REVISION DESCRIPTION	SHEET NO.
-	-	-	-
-	-	-	-
-	-	-	-
-	-	-	-
-	-	-	-
-	-	-	-

THE INFORMATION, INCLUDING ESTIMATED QUANTITIES OF WORK, SHOWN ON THESE SHEETS IS BASED ON LIMITED INVESTIGATIONS BY THE STATE AND IS IN NO WAY WARRANTED TO INDICATE THE CONDITIONS OF ACTUAL QUANTITIES OF WORK WHICH WILL BE REQUIRED.

Plotted Date: 1/21/2014

DESIGNER/DRAFTER: **J. MIKRUT**
CHECKED BY: **P. VITALIANO**
NOT TO SCALE

STATE OF CONNECTICUT
DEPARTMENT OF TRANSPORTATION

Filename: ...\FA..CGR..CPS..0170-2296..079...06..CSP...MDS..01

SIGNATURE/BLOCK:
STATE OF CONNECTICUT · STEPHEN J. DOLLIT · No. 19323 · LICENSED PROFESSIONAL ENGINEER
VHB, INC.
100 GREAT MEADOW RD
SUITE 200
WETHERSFIELD, CT 06109
860.807.4300

PROJECT TITLE: **NEW HAVEN - HARTFORD SPRINGFIELD RAIL CORRIDOR**

TOWN: **MERIDEN**

DRAWING TITLE: **MISCELLANEOUS DETAILS**

PROJECT NO. **170-3155**
DRAWING NO. **DET-001**
SHEET NO. **03.03.017**

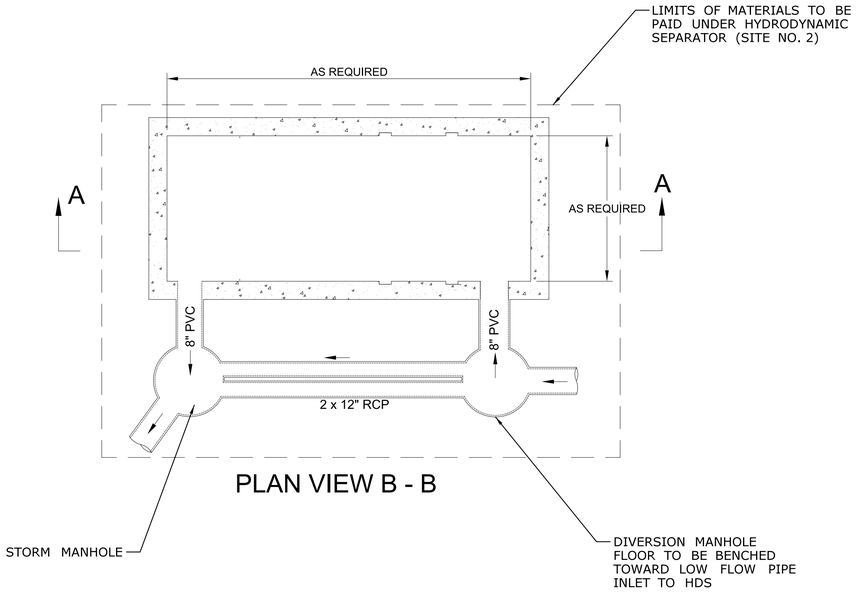

PLAN VIEW B - B

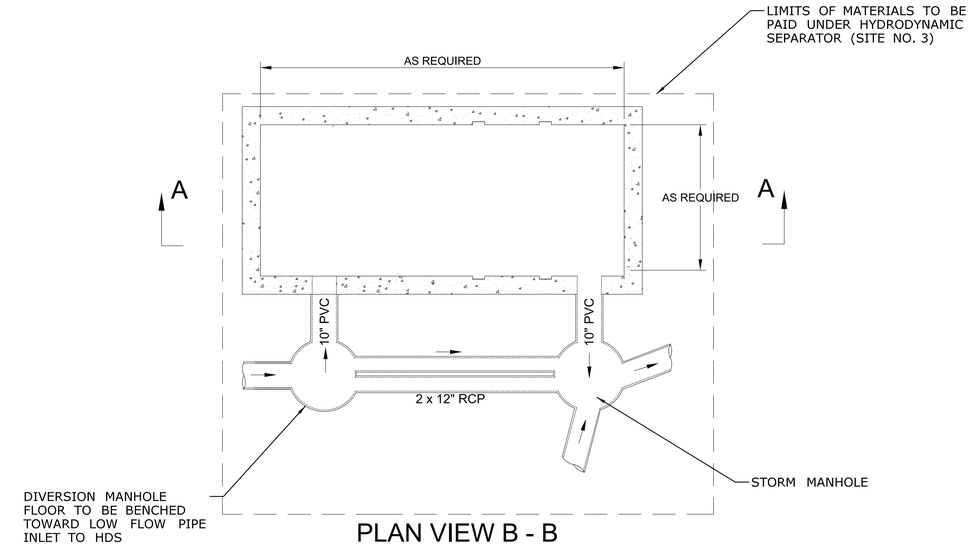

PLAN VIEW B - B

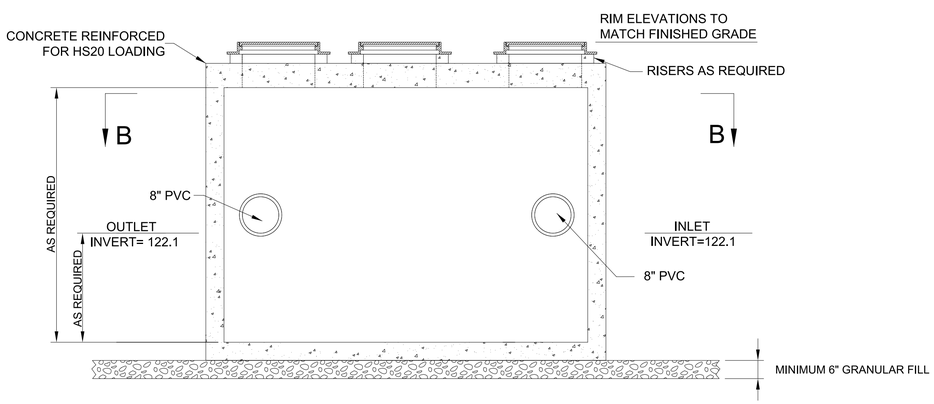

SECTION A - A

NOTES:
HYDRODYNAMIC SEPARATOR SHOWN FOR ILLUSTRATIVE PURPOSES ONLY. SEE HYDRODYNAMIC SEPARATOR SPECIAL PROVISION FOR DESIGN DATA AND APPROVED PRODUCTS AND MANUFACTURER INFORMATION.

HYDRODYNAMIC SEPARATOR (SITE NO. 2)

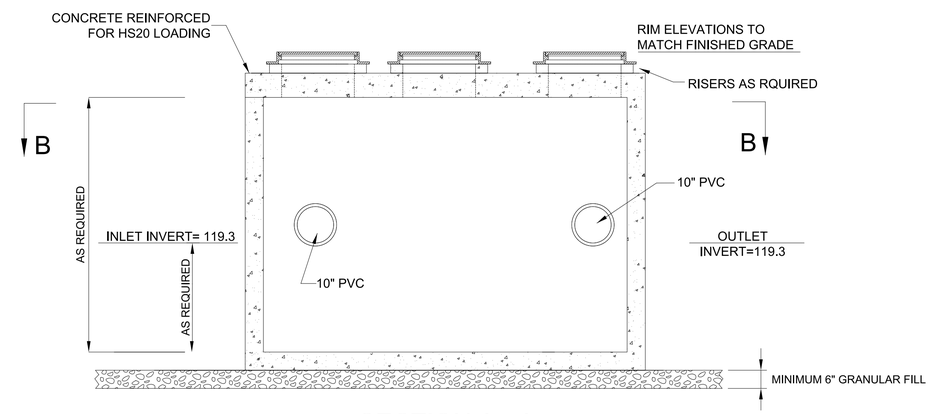

SECTION A - A

NOTES:
HYDRODYNAMIC SEPARATOR SHOWN FOR ILLUSTRATIVE PURPOSES ONLY. SEE HYDRODYNAMIC SEPARATOR SPECIAL PROVISION FOR DESIGN DATA AND APPROVED PRODUCTS AND MANUFACTURER INFORMATION.

HYDRODYNAMIC SEPARATOR (SITE NO. 3)

REV.	DATE	REVISION DESCRIPTION	SHEET NO.
-	-	-	-
-	-	-	-
-	-	-	-
-	-	-	-
-	-	-	-
-	-	-	-

THE INFORMATION, INCLUDING ESTIMATED QUANTITIES OF WORK, SHOWN ON THESE SHEETS IS BASED ON LIMITED INVESTIGATIONS BY THE STATE AND IS IN NO WAY WARRANTED TO INDICATE THE CONDITIONS OF ACTUAL QUANTITIES OF WORK WHICH WILL BE REQUIRED.

Plotted Date: 1/21/2014

DESIGNER/DRAFTER: **J. MIKRUT**
CHECKED BY: **P. VITALIANO**
NOT TO SCALE

STATE OF CONNECTICUT
DEPARTMENT OF TRANSPORTATION

Filename: ...\FA..CGR..CPS..0170-2296..079...06..CSP...MDS..02

SIGNATURE/ BLOCK:

STATE OF CONNECTICUT STEPHEN J. DONELL No. 19323 LICENSED PROFESSIONAL ENGINEER

VHB, INC.
100 GREAT MEADOW RD
SUITE 200
WETHERSFIELD, CT 06109
860.807.4300

PROJECT TITLE: **NEW HAVEN - HARTFORD SPRINGFIELD RAIL CORRIDOR**

TOWN: **MERIDEN**

DRAWING TITLE: **MISCELLANEOUS DETAILS**

PROJECT NO. **170-3155**
DRAWING NO. **DET-002**
SHEET NO. **03.03.018**

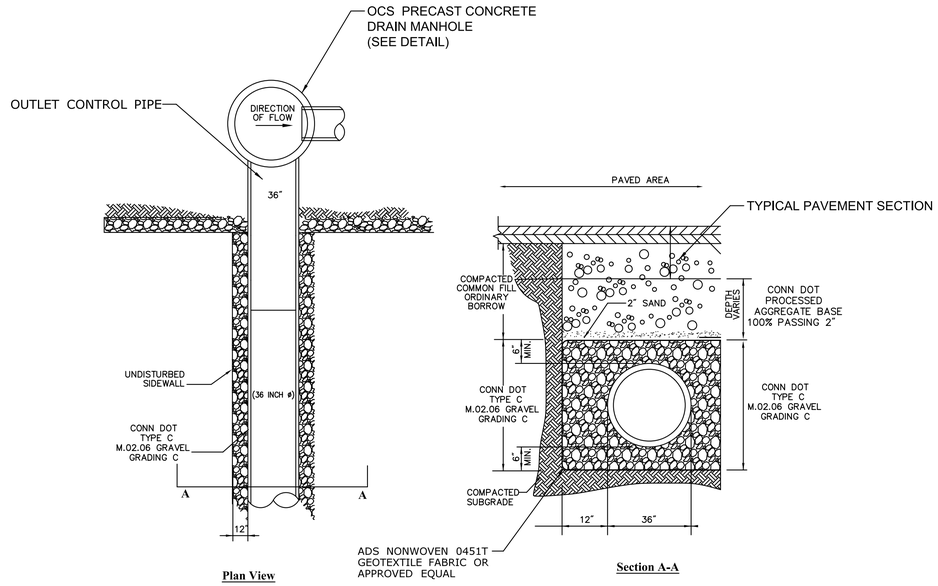

Plan View

Section A-A

UNDERGROUND DETENTION SYSTEM NO. 2

NOTE:

UNDERGROUND DETENTION SYSTEM NO. 2:
350 LF OF 36" DIA. HIGH DENSITY PLYETHYLENE SMOOTH INTERIOR PIPE; INV. = 123.0, UNDERGROUND DETENTION SYSTEM TO BE MANUFACTURED BY ADS OR APPROVED EQUAL.

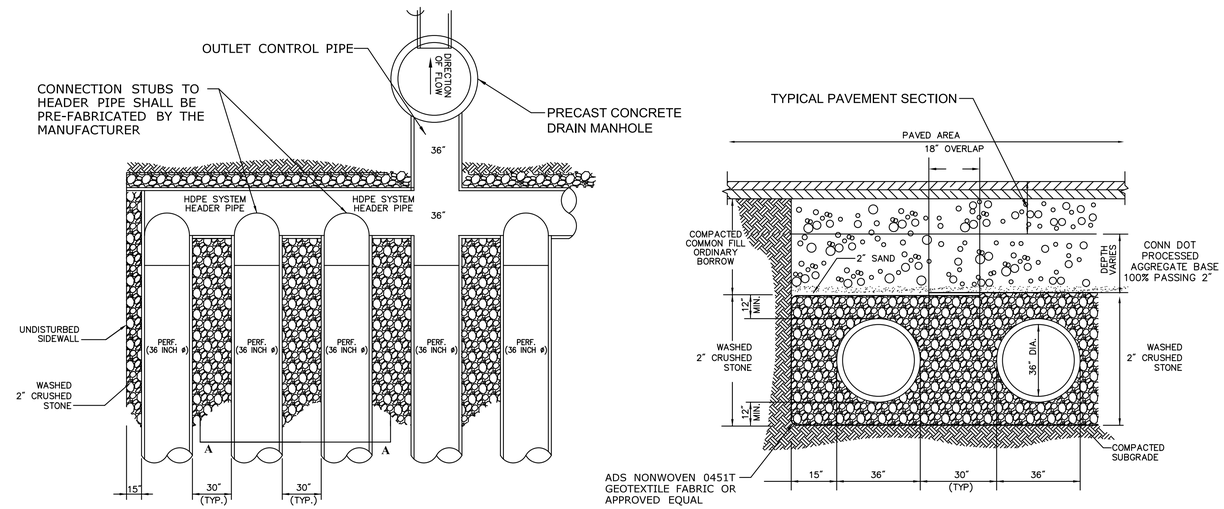

Plan View

Section A-A

UNDERGROUND DETENTION SYSTEM NO. 3

NOTE:

UNDERGROUND DETENTION SYSTEM NO. 3:
9 ROWS OF 74 LF OF 36" DIA. PERFORATED HIGH DENSITY PLYETHYLENE SMOOTH INTERIOR PIPE; INV. = 120.5, UNDERGROUND DETENTION SYSTEM TO BE MANUFACTURED BY ADS OR APPROVED EQUAL

POROUS PAVEMENT - HMA

SIEVE SIZE	% PASSING
1/2"	85-100
3/8"	55-75
#4	10-25
#8	5-10
#200	2-4

BINDER CONTENT (AASHTO T164)
6.0-6.5%

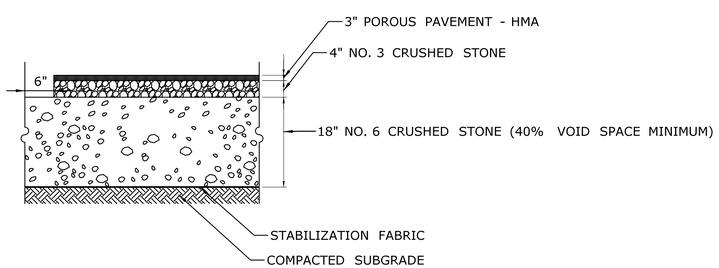

NOTE:

SEE SPECIAL PROVISIONS FOR MORE INFORMATION REGARDING POROUS PAVEMENT

POROUS PAVEMENT SECTION

SCALE: NTS

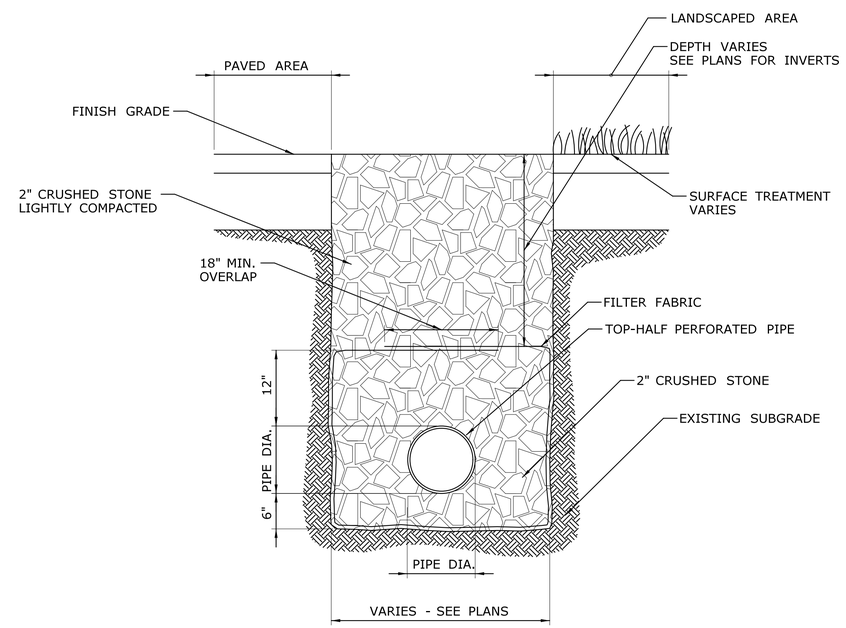

TOP-HALF PERFORATED PIPE

SCALE: NTS

REV.	DATE	REVISION DESCRIPTION	SHEET NO.
-	-	-	-
-	-	-	-
-	-	-	-
-	-	-	-
-	-	-	-
-	-	-	-

THE INFORMATION, INCLUDING ESTIMATED QUANTITIES OF WORK, SHOWN ON THESE SHEETS IS BASED ON LIMITED INVESTIGATIONS BY THE STATE AND IS IN NO WAY WARRANTED TO INDICATE THE CONDITIONS OF ACTUAL QUANTITIES OF WORK WHICH WILL BE REQUIRED.

Plotted Date: 1/21/2014

DESIGNER/DRAFTER: **D. CIVITILLO**
CHECKED BY: **B. ANDERSON**
NOT TO SCALE

STATE OF CONNECTICUT
DEPARTMENT OF TRANSPORTATION

Filename: ...\FA..CGR..CPS..0170-2296..079...06..CSP...MDS..03.dgn

SIGNATURE/ BLOCK:

STATE OF CONNECTICUT STEPHEN J. MARCILL No. 19323 LICENSED PROFESSIONAL ENGINEER

VHB, INC.
100 GREAT MEADOW RD
SUITE 200
WETHERSFIELD, CT 06109
860.807.4300

PROJECT TITLE:
NEW HAVEN - HARTFORD SPRINGFIELD RAIL CORRIDOR

TOWN: **MERIDEN**

DRAWING TITLE: **MISCELLANEOUS DETAILS**

PROJECT NO. **170-3155**
DRAWING NO. **DET-003**
SHEET NO. **03.03.019**

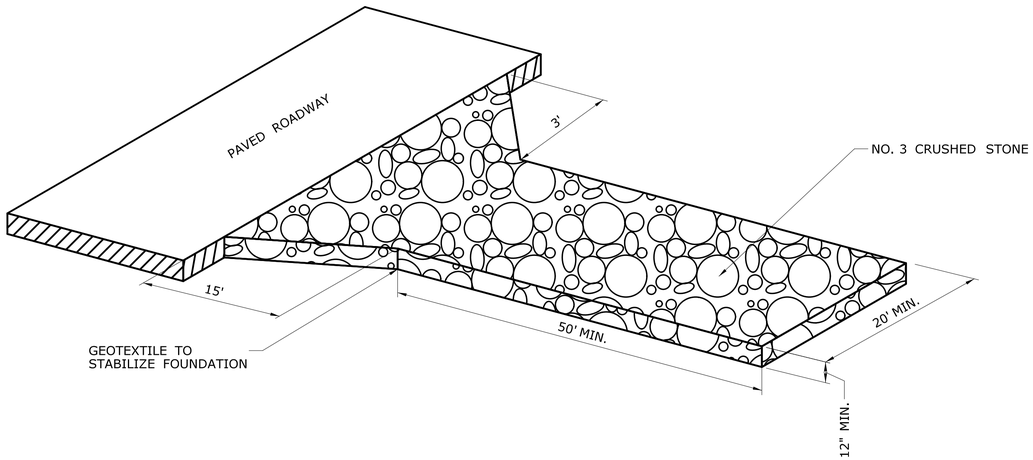

ANTI-TRACKING PAD

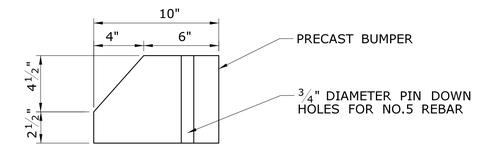

SECTION

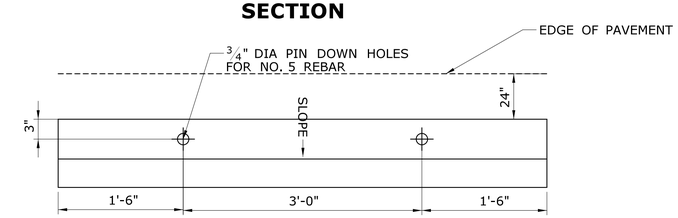

PLAN VIEW

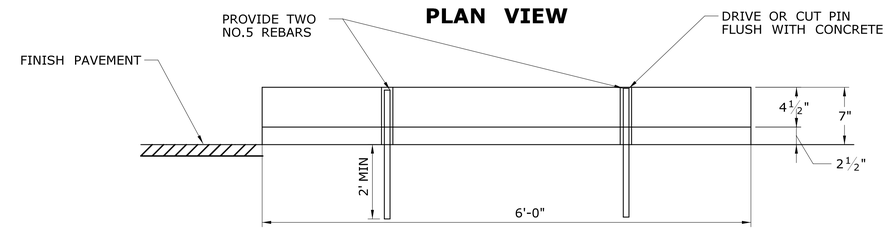

SLOPED SIDE ELEVATION

CONCRETE WHEEL STOP

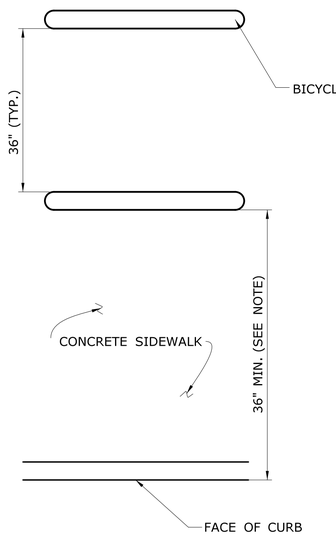

PLAN VIEW

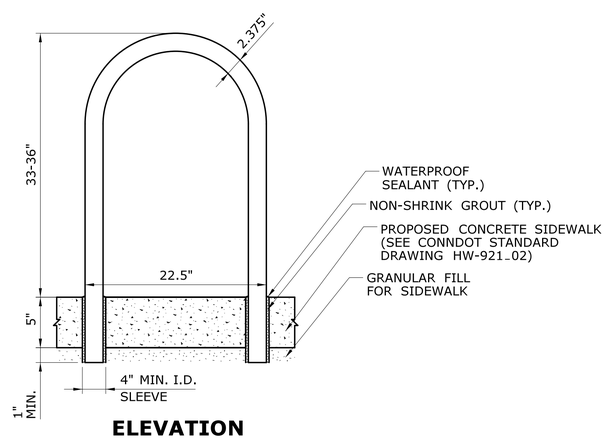

ELEVATION

BICYCLE STAND

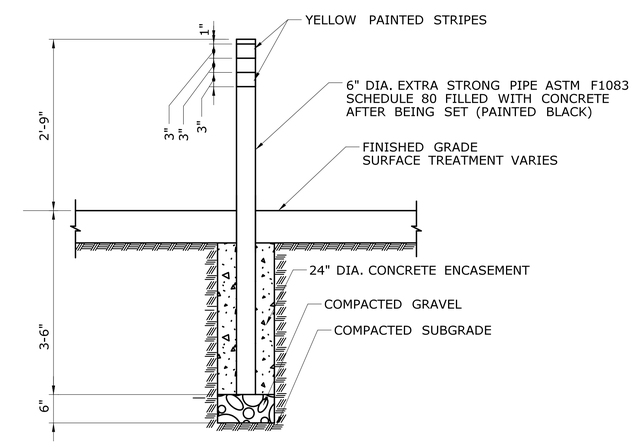

NOTE:
ALL PARTS OF BOLLARD SHALL BE CLEANED IN ACCORDANCE WITH THE PAINT MANUFACTURER'S PRINTED INSTRUCTIONS AND COATED WITH ONE COAT OF ZINC RICH EPOXY POLYAMIDE PRIMER AND ONE COAT OF BLACK COLORED LOW GLOSS EPOXY ENAMEL ABOVE THE GROUND. STRIPES SHALL BE PAINTED YELLOW.

STEEL BOLLARD

SCALE: NTS

REV.	DATE	REVISION DESCRIPTION	SHEET NO.
-	-	-	-
-	-	-	-
-	-	-	-
-	-	-	-
-	-	-	-
-	-	-	-

THE INFORMATION, INCLUDING ESTIMATED QUANTITIES OF WORK, SHOWN ON THESE SHEETS IS BASED ON LIMITED INVESTIGATIONS BY THE STATE AND IS IN NO WAY WARRANTED TO INDICATE THE CONDITIONS OF ACTUAL QUANTITIES OF WORK WHICH WILL BE REQUIRED.

Plotted Date: 1/21/2014

DESIGNER/DRAFTER: **D. CIVITILLO**
CHECKED BY: **B. ANDERSON**
NOT TO SCALE

STATE OF CONNECTICUT
DEPARTMENT OF TRANSPORTATION

Filename: ...\FA..CGR..CPS..0170-2296..079...06..CSP...MDS..04

SIGNATURE/ BLOCK:
STATE OF CONNECTICUT · STEPHEN J. CAPELLI · No. 19323 · LICENSED PROFESSIONAL ENGINEER
VHB, INC.
100 GREAT MEADOW RD
SUITE 200
WETHERSFIELD, CT 06109
860.807.4300

PROJECT TITLE:
NEW HAVEN - HARTFORD SPRINGFIELD RAIL CORRIDOR

TOWN: **MERIDEN**

DRAWING TITLE: **MISCELLANEOUS DETAILS**

PROJECT NO. **170-3155**
DRAWING NO. **DET-004**
SHEET NO. **03.03.020**

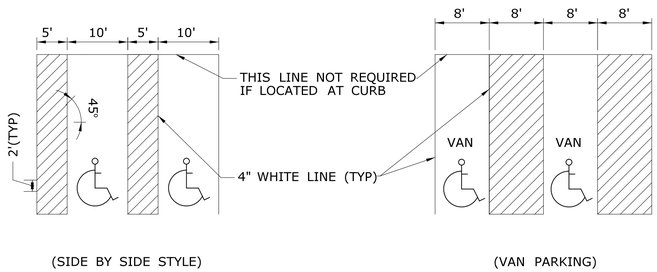

PARKING STALLS FOR HANDICAPPED

NOTE:

THE ABOVE DETAIL SUPERCEDES THE "PARKING STALLS FOR HANDICAPPED" DETAIL ON CONNDOT STANDARD DRAWING NO. TR-1210_03.

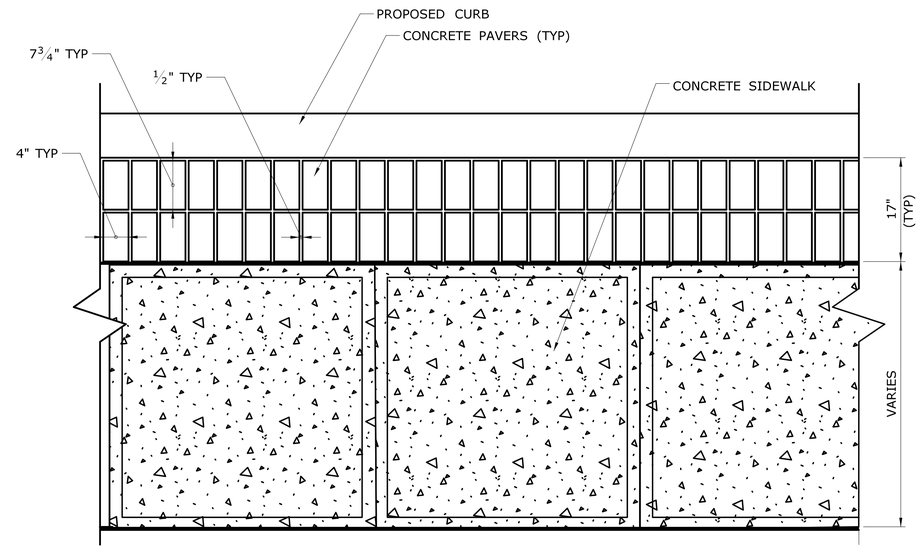

CONCRETE PAVER DETAIL

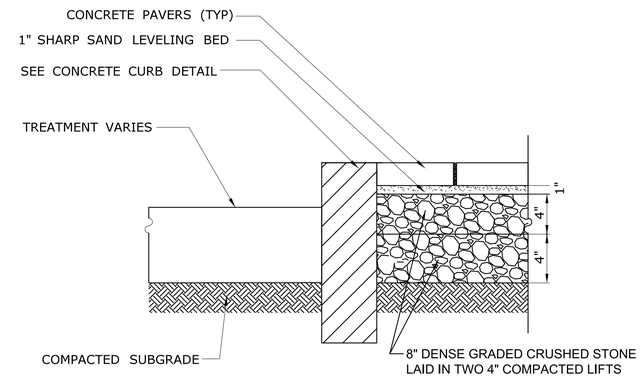

STONE BASE FOR CONCRETE PAVER DETAIL

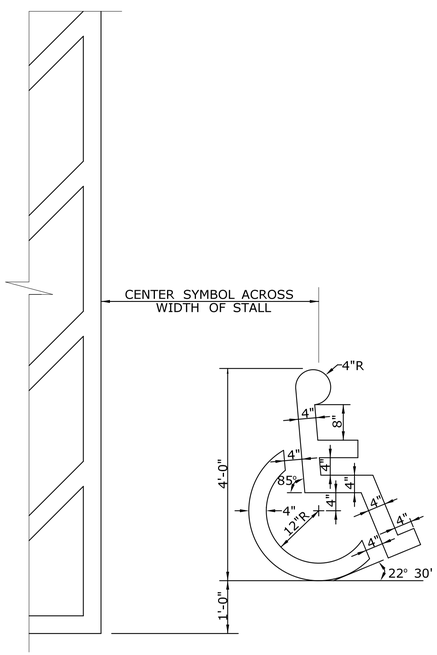

ACCESSIBLE PARKING SPACE SYMBOL

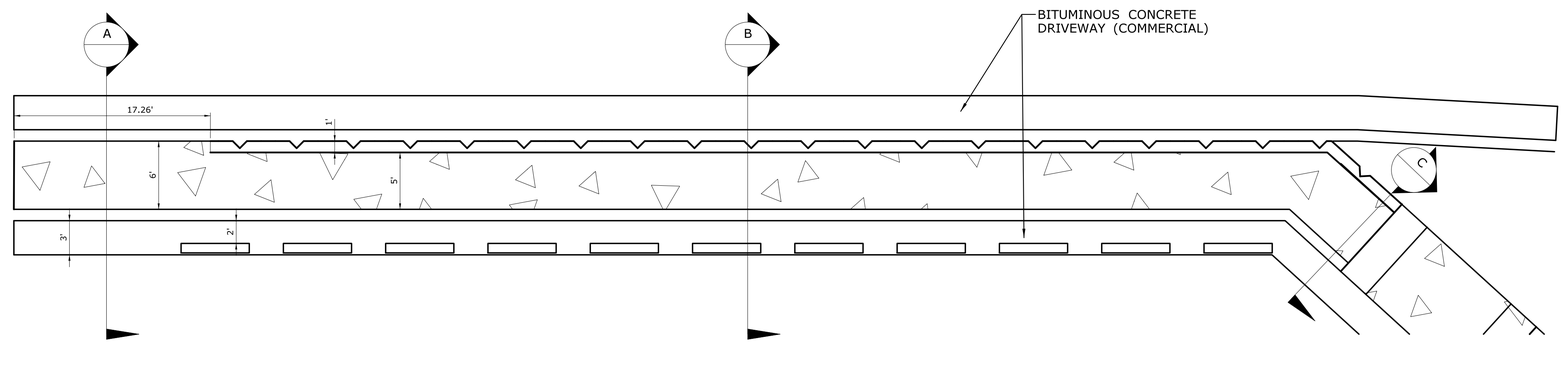

PLAN

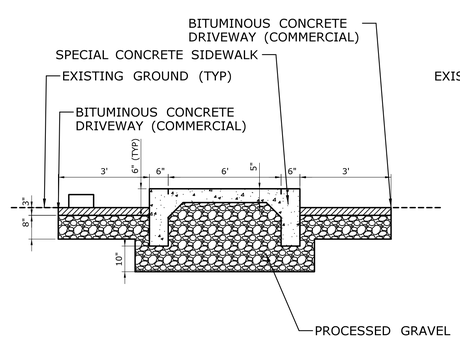

SECTION A

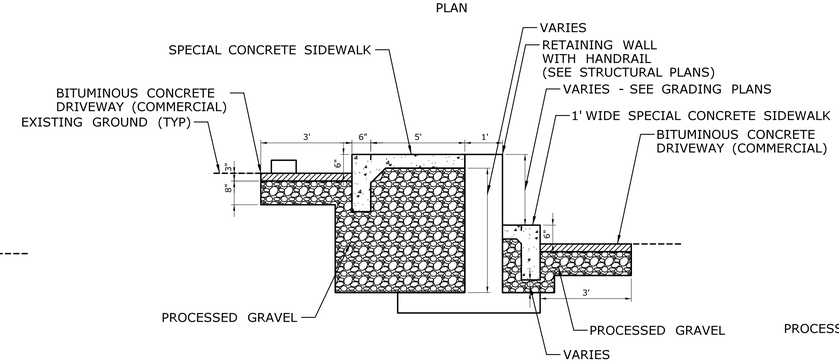

SECTION B

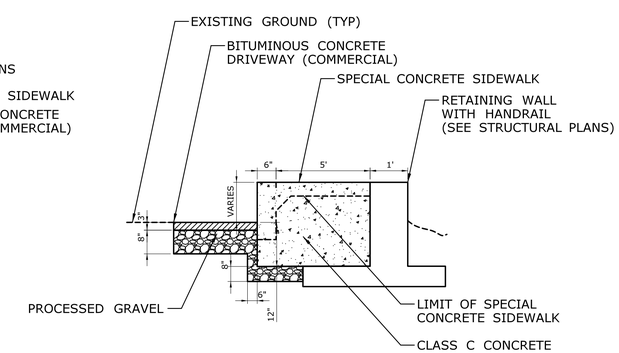

SECTION C

SPECIAL CONCRETE SIDEWALK DETAIL

REV.	DATE	REVISION DESCRIPTION	SHEET NO.
-	-	-	-
-	-	-	-
-	-	-	-
-	-	-	-
-	-	-	-
-	-	-	-

THE INFORMATION, INCLUDING ESTIMATED QUANTITIES OF WORK, SHOWN ON THESE SHEETS IS BASED ON LIMITED INVESTIGATIONS BY THE STATE AND IS IN NO WAY WARRANTED TO INDICATE THE CONDITIONS OF ACTUAL QUANTITIES OF WORK WHICH WILL BE REQUIRED.

Plotted Date: 1/21/2014

DESIGNER/DRAFTER: **D. CIVITILLO**

CHECKED BY: **B. ANDERSON**

NOT TO SCALE

STATE OF CONNECTICUT
DEPARTMENT OF TRANSPORTATION

Filename: ...\FA_CGR_CPS_0170-2296_079__06_CSP__MDS_05

SIGNATURE/ BLOCK:

STATE OF CONNECTICUT STEPHEN J. SCHELL No. 19325 LICENSED PROFESSIONAL ENGINEER

VHB, INC.
100 GREAT MEADOW RD
SUITE 200
WETHERSFIELD, CT 06109
860.807.4300

PROJECT TITLE:

NEW HAVEN - HARTFORD SPRINGFIELD RAIL CORRIDOR

TOWN: **MERIDEN**

DRAWING TITLE: **MISCELLANEOUS DETAILS**

PROJECT NO. **170-3155**

DRAWING NO. **DET-005**

SHEET NO. **03.03.021**

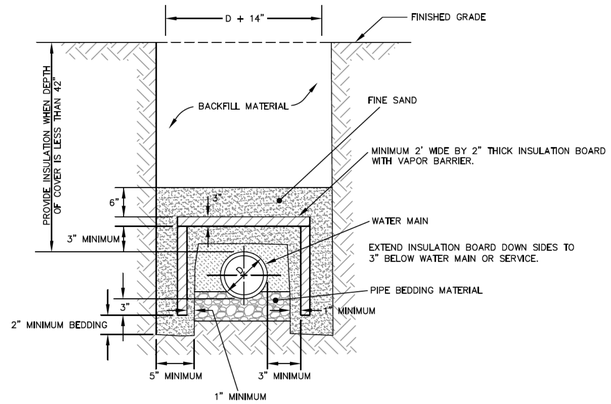

NOTES:

1. INSULATION BOARD TO BE FOAMGLAS OR APPROVED EQUAL MEETING ASTM C-552 WITH A COMPRESSIVE STRENGTH OF 90 PSI.
2. VAPOR BARRIER TO BE PITTCOTE 300 OR APPROVED EQUAL.
3. BACKFILL MATERIAL AROUND INSULATION MUST BE FINE SAND FREE FROM ROOTS, ORGANIC MATTER, OR OTHER INJURIOUS MATERIALS.
4. MAINTAIN 3" MINIMUM CLEARANCE FROM WATER MAIN ON ALL SIDES.
5. FOR REDUCTION IN COVER ONLY WHERE RESULTANT COVER IS LESS THAN 42".

WATER MAIN TRENCH INSULATION DETAIL

NOT TO SCALE

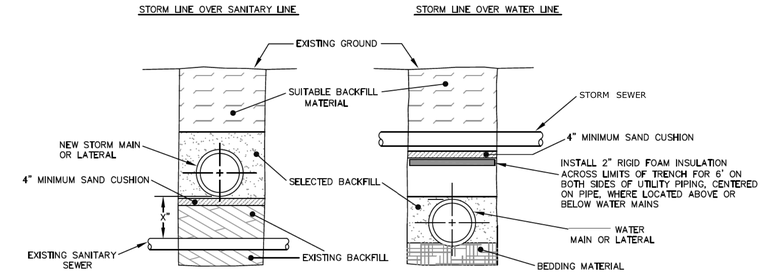

EXISTING SANITARY LINE

1. IF "X" IS 4" TO 18", REPLACE SANITARY SEWER WITH 18' LONG D.I.P.
2. IF "X" IS 18" TO 36", LINE SANITARY SEWER FROM MANHOLE TO MANHOLE

WATER LINE

1. FOR SEPARATION OF WATER AND STORM SEWER BETWEEN 4" AND 18"
2. 2" INSULATION LAYER TO BE INSTALLED BETWEEN WATER MAIN AND ALL PROPOSED SANITARY AND STORM SEWERS WHERE VERTICAL SEPARATION IS LESS THAN 18"
3. INSULATION DIMENSIONS EQUAL TO NEW TRENCH WIDTH BY WATER MAIN O.D. PLUS 4'

• NEW JOINTS TO BE CENTERED EQUIDISTANT FROM WATER MAIN
• PIPE JOINT REPAIR CLAMPS OR EQUIVALENT TO BE USED ON ALL NEW MAINS AND LATERALS

STORM LINE CONFLICTS

NOT TO SCALE

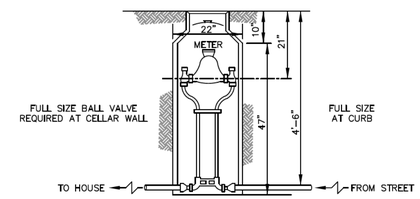

METER PIT DETAIL

NOT TO SCALE

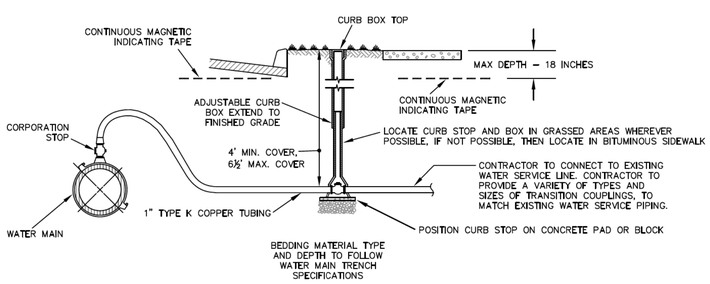

TYPICAL 1" WATER SERVICE CONNECTION

NOT TO SCALE

NOTE:
CITY OF MERIDEN TO CONNECT ALL SERVICE TAPS, AND PROVIDE CORPORATION STOP AND SWING.

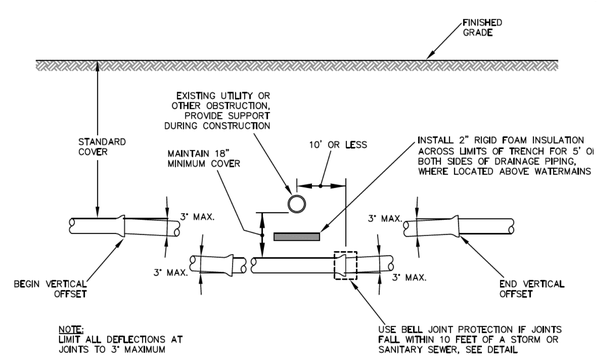

NOTE:
LIMIT ALL DEFLECTIONS AT JOINTS TO 3° MAXIMUM

USE BELL JOINT PROTECTION IF JOINTS FALL WITHIN 10 FEET OF A STORM OR SANITARY SEWER, SEE DETAIL

GRADUAL VERTICAL OFFSET

NOT TO SCALE

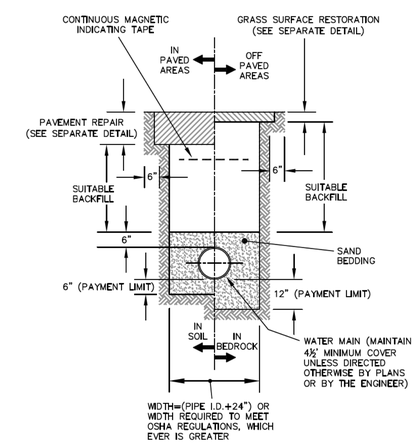

WATER MAIN TRENCH

NOT TO SCALE

REV.	DATE	REVISION DESCRIPTION	SHEET NO.
-	-	-	-
-	-	-	-
-	-	-	-
-	-	-	-
-	-	-	-
-	-	-	-

THE INFORMATION, INCLUDING ESTIMATED QUANTITIES OF WORK, SHOWN ON THESE SHEETS IS BASED ON LIMITED INVESTIGATIONS BY THE STATE AND IS IN NO WAY WARRANTED TO INDICATE THE CONDITIONS OF ACTUAL QUANTITIES OF WORK WHICH WILL BE REQUIRED.

Plotted Date: 1/22/2014

DESIGNER/DRAFTER: MERIDEN ENGR
CHECKED BY: MERIDEN ENGR
NOT TO SCALE

STATE OF CONNECTICUT
DEPARTMENT OF TRANSPORTATION

Filename: ...\FA_CGR_CPS_0170-2296_079__06_CSP__MDS_06

SIGNATURE/BLOCK:
STATE OF CONNECTICUT STEPHEN J. HEFFERNAN No. 19325 LICENSED PROFESSIONAL ENGINEER
VHB, INC.
100 GREAT MEADOW RD
SUITE 200
WETHERSFIELD, CT 06109
860.807.4300

PROJECT TITLE:
NEW HAVEN - HARTFORD
SPRINGFIELD
RAIL CORRIDOR

TOWN: MERIDEN

DRAWING TITLE: MISCELLANEOUS DETAILS

PROJECT NO. 170-3155
DRAWING NO. DET-006
SHEET NO. 03.03.022