TABLE OF CONTENTS OF SPECIAL PROVISIONS

Note: This Table of Contents has been prepared for the convenience of those using this contract with the sole express purpose of locating quickly the information contained herein; and no claims shall arise due to omissions, additions, deletions, etc., as this Table of Contents shall not be considered part of the contract.

Table of Contents

CONTRACT TIME AND LIQUIDATED DAMAGES 3
NOTICE TO CONTRACTOR – PRE-BID QUESTIONS AND ANSWERS 4
NOTICE TO CONTRACTOR – PAINTING REQUIREMENTS 5
NOTICE TO CONTRACTOR – USE OF STATE POLICE OFFICERS 6
NOTICE TO CONTRACTOR – VOLUNTARY PARTNERING 7
NOTICE TO CONTRACTOR – PROTECTION OF EXISTING 8
UNDERGROUND UTILITIES AND BRIDGE CONDUITS 8
NOTICE TO CONTRACTOR – CONNECTICUT DEPARTMENT OF 9
TRANSPORTATION DISCLAIMER 9
NOTICE TO CONTRACTOR – BEST MANAGEMENT PRACTICE 10
REQUIREMENTS FOR WORKING ADJACENT TO PUBLIC 10
WATERSHED, WELL HEAD PROTECTION AREA, AQUIFER 10
PROTECTION AREA (APA) AND/OR SOLE SOURCE AQUIFER AREA 10
(SSA) 10
NOTICE TO CONTRACTOR – HAZARDOUS MATERIALS 14
INVESTIGATIONS 14
NOTICE TO CONTRACTOR – SECTION 4.06 AND M.04 MIX 16
DESIGNATION EQUIVALENCY 16
NOTICE TO CONTRACTOR – SUPERPAVE DESIGN LEVEL INFORMATION 17
NOTICE TO CONTRACTOR – TRAFFIC DRUMS AND TRAFFIC CONES 18
NOTICE TO CONTRACTOR – NCHRP 350 REQ. FOR WORK ZONE 19
TRAFFIC CONTROL DEVICES 19
SECTION 1.02 – PROPOSAL REQUIREMENTS AND CONDITIONS 20
SECTION 1.07 – LEGAL RELATIONS AND RESPONSIBILITIES 21
SECTION 1.08 – PROSECUTION AND PROGRESS 22
SECTION 1.10 – ENVIRONMENTAL COMPLIANCE 24
SECTION 4.06 BITUMINOUS CONCRETE 26
SECTION 9.21 CONCRETE SIDEWALKS AND RAMPS 50
SECTION 12.00 – GENERAL CLAUSES FOR HIGHWAY SIGNING 52
SECTION 12.08 – SIGN FACE-SHEET ALUMINUM 54
SECTION M.04 BITUMINOUS CONCRETE 55
ON THE JOB TRAINING (OJT) WORKFORCE DEVELOPMENT PILOT 89
SMALL CONTRACTOR AND SMALL CONTRACTOR MINORITY 93
BUSINESS ENTERPRISES (SET-ASIDE) 93
ITEM #0020903A – LEAD COMPLIANCE FOR MISCELLANEOUS 105
EXTERIOR TASKS 105
ITEM #0020904A – LEAD COMPLIANCE FOR ABRASIVE BLAST CLEANING 122
ITEM #0202479A – REMOVAL OF HMA WEARING SURFACE 135
ITEM #0210100A – ANTI –TRACKING PAD 137
ITEM #0511003A – CLEAN EXISTING SCUPPERS 138
ITEM #0520036A – ASPHALTIC PLUG EXPANSION JOINT SYSTEM 139
ITEM #0520038A – PREFORMED SILICONE JOINT SEALING SYSTEM 146
ITEM #0522129A – CLEAN AND LUBRICATE EXISTING BEARINGS 149
ITEM #0601307A – LATEX MODIFIED CONCRETE 151
ITEM #0601318A – PARTIAL DEPTH PATCH 157
ITEM #0602911A – DRILLING HOLES AND GROUTING ANCHOR BOLTS 167
ITEM #0602972A – BOLT AND RIVET REPLACEMENT 169
ITEM #0603222A – DISPOSAL OF LEAD DEBRIS FROM ABRASIVE 170
BLAST CLEANING 170
ITEM #0603352A – TEMPORARY SUPPORT ASSEMBLY 178
ITEM #0603563A – CLASS 1 CONTAINMENT AND COLLECTION OF 180
SURFACE PREPARATION DEBRIS (SITE NO. 1) 180
ITEM #0603768A – STRUCTURAL STEEL 185
ITEM #0603923A – ABRASIVE BLAST CLEANING AND FIELD 190
PAINTING OF STRUCTURE (SITE #1) 190
ITEM #0950005A – TURF ESTABLISHMENT 202
ITEM #0969062A – CONSTRUCTION FIELD OFFICE, MEDIUM 204

ITEM #0970006A – TRAFFICPERSON \(MUNICIPAL POLICE OFFICER\) 212
ITEM #0970007A – TRAFFICPERSON (UNIFORMED FLAGGER) 212
ITEM #0971001A – MAINTENANCE AND PROTECTION OF TRAFFIC 215
ITEM #0975004A – MOBILIZATION AND PROJECT CLOSEOUT 234
ITEM #0979003A – CONSTRUCTION BARRICADE TYPE III 236
ITEM #0980001A – CONSTRUCTION STAKING 237
ITEM #1111201A – TEMPORARY DETECTION (SITE NO. 1) 240
ITEM #1118051A – TEMPORARY SIGNALIZATION (SITE NO. 1) 243
ITEM #1210101A – 4” WHITE EPOXY RESIN PAVEMENT MARKINGS.....248
ITEM #1210102A – 4” YELLOW EPOXY RESIN PAVEMENT MARKINGS 248
ITEM #1210105A – EPOXY RESIN PAVEMENT MARKINGS, SYMBOLS 248
AND LEGENDS 248
ITEM #1220013A – CONSTRUCTION SIGNS - BRIGHT FLUORESCENT 251
SHEETING 251
PERMITS AND/OR SUPPLEMENTAL TO FORM 816 AND REQUIRED PROVISIONS.....255

June 18, 2014
FEDERAL AID PROJECT NO. N/A
STATE PROJECT NO. 96-193

Rehabilitation of S.R. 816 over Housatonic River Bridge No. 00507

Towns of Newtown and Southbury
Federal Aid Project No. N/A

The State of Connecticut, Department of Transportation, Standard Specifications for Roads, Bridges and Incidental Construction, Form 816, 2004, as revised by the Supplemental Specifications dated January 2014 (otherwise referred to collectively as "ConnDOT Form 816") is hereby made part of this contract, as modified by the Special Provisions contained herein. . The State of Connecticut Department of Transportation's "Construction Contract Bidding and Award Manual" ("Manual"), May 14, 2010 edition or latest issue, is hereby made part of this contract. If the provisions of this Manual conflict with provisions of other Department documents (not including statutes or regulations), the provisions of the Manual will govern. The Manual is available upon request from the Transportation Manager of Contracts. The Special Provisions relate in particular to the Rehabilitation of S.R. 816 over Housatonic River Bridge No. 00507 in the Towns of Newtown and Southbury.

CONTRACT TIME AND LIQUIDATED DAMAGES

Three Hundred Twenty-Nine (329) calendar days will be allowed for completion of the work on this project and the liquidated damages charge to apply will be Two Thousand One Hundred Dollars ($ 2,100.00) per calendar day.

NOTICE TO CONTRACTOR – PRE-BID QUESTIONS AND ANSWERS

Questions pertaining to DOT advertised construction projects must be presented through the CTDOT Pre-Bid Q and A Website. The Department cannot guarantee that all questions will be answered prior to the bid date. **PLEASE NOTE - at 12:01 am, the day before the bid, the subject project(s) being bid will be removed from the Q and A Website, Projects Advertised Section, at which time questions can no longer be submitted through the Q and A Website. At this time, the Q and A for those projects will be considered final, unless otherwise stated and/or the bid is postponed to a future date and time to allow for further questions and answers to be posted.**

If a question needs to be asked the day before the bid date, please contact the Contracts Unit staff and email your question to dotcontracts@ct.gov immediately.

Contractors must identify their company name, contact person, contact email address and phone number when asking a question. The email address and phone number will not be made public.

The questions and answers (if any) located on the Q and A Website are hereby made part of the bid/contract solicitation documents (located on the State Contracting Portal), and resulting contract for the subject project(s). It is the bidder's responsibility to monitor, review, and become familiar with the questions and answers, as with all bid requirements and contract documents, prior to bidding. By signing the bid proposal and resulting contract, the bidder acknowledges receipt of, and agrees to the incorporation of the final list of Q and A, into the contract document.

Contractors will not be permitted to file a future claim based on lack of receipt, or knowledge of the questions and answers associated with a project. All bidding requirements and project information, including but not limited to contract plans, specifications, addenda, Q and A, Notice to Contractors, etc., are made public on the State Contracting Portal and/or the CTDOT website.

NOTICE TO CONTRACTOR – PAINTING REQUIREMENTS

- Contractor Documentation and Non-responsive Bids -

All painting contractors and painting subcontractors to be used for lead paint removal, containment and collection, surface preparation, or coating of structural steel must have been certified by the Society for Protective Coatings (SSPC) Painting Contractor Certification Program (PCCP), QP-1 and QP-2, before the day of bid opening. This certification must be full and not interim. The painting contractors and painting subcontractors must remain so certified for the duration of the project. If a contractor's or subcontractor's certification expires, the painting firm will not be allowed to perform any work until the certification is reissued. Requests for extension of time for any delay to the completion of the project due to an inactive certification will not be considered and liquidated damages will apply. At the option of the Engineer, if such a delay continues for more than 60 calendar days, the Department may engage another SSPC certified contractor to perform the painting work at the prime contractor's expense. If a low bidder proves not to have been certified before and on the day of bid opening, its bid will be rejected as non-responsive. Upon request by the Department, the bidder shall provide the Department with documentation of such certifications within five (5) days of such request.

NOTICE TO CONTRACTOR – USE OF STATE POLICE OFFICERS

The Department will reimburse services of State Police Officers as a direct payment to the Department of Emergency Services and Public Protection. Payment for State Police Officers utilized by the Contractor for its convenience, not approved by the Engineer, is the responsibility of the Contractor. No separate payment item for State Police Officers is included in this contract.

Any costs associated with coordination and scheduling of State Police Officers will be included under the cost of Item No. 0971001A – Maintenance and Protection of Traffic.

NOTICE TO CONTRACTOR – VOLUNTARY PARTNERING

The Connecticut Department of Transportation (ConnDOT) intends to encourage the foundation of a cohesive partnership with the Contractor and its principal subcontractors on this project. This partnership will be structured to draw on the strengths of each organization to identify and achieve reciprocal goals. The objectives are effective and efficient contract performance and completion within budget, on schedule, and in accordance with plans and specifications.

This partnership will be bilateral in makeup, and participation will be totally voluntary. Any cost associated with effectuating this partnering will be agreed to by both parties and will be shared equally.

To implement this partner initiative, the Contractor and ConnDOT will meet and plan a partnering development seminar/team building workshop. At this planning session arrangements will be made to determine attendees at the workshop, agenda of the workshop, duration and location. Persons required to be in attendance will be the ConnDOT District Engineer and key project personnel, the Contractor's on-site project manager and key supervision personnel of both the prime and principal subcontractors. The project design engineers and key local government personnel will also be required to have Regional/District and Corporate/State level managers on the project team.

Follow-up workshops will be held periodically throughout the duration of the Contract as agreed by the Contractor and ConnDOT.

The establishment of a partnership charter on a project will not change the legal relationship of the parties to the Contract nor relieve either party from any of the terms of the Contract.

ConnDOT and the Contractor will jointly select a facilitator to conduct the partnering workshops. The Contractor will obtain the services of the chosen facilitator and ConnDOT will reimburse the Contractor for fifty percent (50%) of the costs agreed to between ConnDOT and the Contractor.

NOTICE TO CONTRACTOR – PROTECTION OF EXISTING UNDERGROUND UTILITIES AND BRIDGE CONDUITS

The Contractor is directed to exercise caution when installing new beam rail and temporary utilities adjacent to underground communications facilities near the east approach.

The existing conduits running adjacent to the bridge shall be protected in place and are excluded from blast cleaning operations. The Contractor is directed to exercise caution during all work near existing conduits.

The Contractor shall coordinate their activities with AT&T at least two weeks prior to the start of this work. The utility liaison for AT&T is:

AT&T Connecticut (The Southern New England Telephone Company)
Mr. Eric Clark
Manager-CSP Engineering
1441 North Colony Road
Meriden, CT 06450·4101
PHONE: (203) 238-7407 EXT: FAX: (203) 237-8902
E-MAIL: ec9795@att.com

NOTICE TO CONTRACTOR – CONNECTICUT DEPARTMENT OF TRANSPORTATION DISCLAIMER

Connecticut Department of Transportation bidding and other information and documents which are obtained through the Internet or other sources, not authorized by the Department, are not to be construed to be official information for the purposes of bidding or conducting other business with the Department.

It is the responsibility of each bidder and all other interested parties to obtain all bidding related information and documents from authorized official sources of the Department, such as, the Department of Administrative Services (DAS) State Contracting Portal and Bid Express (bidx.com).

Persons and/or entities which reproduce and/or make such information available by any means are not authorized by the Department to do so and may be liable for claims resulting from the dissemination of unofficial, incomplete and/or inaccurate information.

NOTICE TO CONTRACTOR – BEST MANAGEMENT PRACTICE REQUIREMENTS FOR WORKING ADJACENT TO PUBLIC WATERSHED, WELL HEAD PROTECTION AREA, AQUIFER PROTECTION AREA (APA) AND/OR SOLE SOURCE AQUIFER AREA (SSA)

The Contractor is herby notified that the location of the project occurs within a public watershed, well head protection area, APA, and/or SSA. The Contractor is hereby notified that the location of Project No. 0096-0193 occurs adjacent to one of these sensitive areas. As a result of this location, special requirements must be followed for cleaning machinery, storage of materials, and servicing/fueling equipment.

1. All Contractors and their employees must be informed of the sensitive area that they are working in. No pollutants may be discharged that could have adverse effects on the public drinking water supply. Any fuel or other hazardous chemical spills must be reported immediately to the DEEP Oil and Chemical Spills Unit at (860) 424-3338,the Department of Public Health's Drinking Water Division at 860-509-7333, and Aquarion Water Company of Connecticut at 203-337-5950.

2. Contractors must adhere to specialized cleanup procedures while working within the watershed, well head protection area, APA and/or SSA. No cleaning of any machinery shall be performed within one hundred feet (100') of any water body within the sensitive area.
    a. Specifically for cleanup associated with the pavers and material transfer vehicles (MTV), the Contractor must move the machine off line onto a tarp. The tarp must be in an acceptable condition so as to prevent liquids and solids from passing through to the ground beneath. The cleanup area shall have oil absorbent pads placed on the tarp. The pavers and MTV shall be cleaned over the absorbent pads in a manner that will allow the pads to collect any liquids that are used for cleanup.
    b. Specifically for cleanup associated with dump trucks, a liquid tight five gallon pail shall be placed at each corner of the dump body below the lower hinges to capture any materials generated during the cleanup.

3. All materials generated during the cleanup procedures shall be removed off-site at the end of each day and disposed of in a manner consistent with all applicable laws and regulations. These materials shall not be buried outside of the roadway limits.

4. Servicing and fueling of equipment shall be conducted outside of a public watershed area, APA, SSA, and/or well head protection area.
    a. If equipment cannot be serviced and refueled outside of the watershed area, well head protection area, APA, or SSA then the Contractor shall utilize the proper spoils handling areas that are identified on the plans.

b. Servicing and fueling of equipment is not permitted within a 500 foot radius of a non-community well and within a 1000 foot radius of a community well.
c. Any fuel and/or hazardous materials that must be kept within these sensitive areas during working hours shall be stored in an enclosed spill proof container.
d. Spill containment systems must be utilized during fueling operations, and shall be manufactured by Sentry Lite Berms, Collapse-a-tainer, or approved equal. It shall have a minimum capacity of 80-gallons and shall be made of plastic or vinyl which is inert to all fuel types.
e. Fuel spill remediation kits shall be stored on-site so that spills may be contained and cleaned quickly.

5. The Contractor shall submit to the Engineer the desired location of trailer(s), construction staging/laydown areas, containment systems, and sedimentation control systems for review and approval prior to the start of construction.

6. Millings may be re-used as asphalt material. Disposal of excess millings must be performed off-site in a manner consistent with all applicable laws and regulations. At no time can millings be dumped or buried outside of the roadway limits.

7. The Contractor will be required to submit a spill response and containment plan for review and approval, for materials and equipment intended to be utilized within the staging area. The goal of this plan will be to contain the hazard, control the spread and remove the contamination. If spill materials extend beyond the control measures, soil removal may be necessary to remove the contaminants. Soil samples may need to be taken to verify that all contaminated soil has been removed.

8. At a minimum, construction fencing will be used to secure all phases of work and the fueling areas. A spill kit shall be maintained near the fueling area at all times. During fueling, absorbent pads will be placed around the fuel tank filler neck and on the ground below the fill point to protect against potential spills. Onsite fueling during periods of precipitation should be deferred to offsite locations or avoided. Additional requirements may be necessary if this is not possible. Storage of fuel, lubricants, and cleaning solvents will not be permitted in the staging area except for the quantity of which may be used during the day's operations. Excess materials will be stored off site in an area outside of the SSA/APA.

9. The storage of vehicles and equipment overnight shall be approved by the Engineer. All vehicles and equipment to be stored onsite shall not be refueled at the end of the workday and shall be inspected for leaks.

10. Onsite vehicle maintenance is typically not permitted unless it is an emergency circumstance. Minor, low risk repairs to large equipment which cannot be easily moved must be approved by the Engineer.

11. Construction materials may only be stored in designated areas. Only inert materials shall be stored outside, such as steel parts, sand, fill material, etc.

12. Solid waste dumpsters must be designated for different types of waste (cardboard, construction, solid waste, etc.). Liquid, toxic and hazardous waste shall not be discarded anywhere onsite. Site generated waste must be discarded in the respective waste containers daily and shall not be allowed to accumulate at other site areas. Dumpsters containing municipal waste shall be covered at all times.

13. Storage of coating debris resulting from abrasive blast cleaning operations will not be permitted in the staging area except for the quantity of which that is produced in one work shift. Such debris will be required to be stored off site, in a secure storage area.

14. Concrete cleaning shall be done within a containment area similar to what is used for fueling to avoid discharges of contaminated water to the ground. All concrete trucks and mixers shall be cleaned on this containment area.

15. Chemical dust suppressants will not be allowed to be used on site. Only potable water shall be utilized for dust control. During construction, sanding and plowing shall be utilized to control snow and ice. No salt or other deicing materials will be allowed.

16. Pesticides will not be allowed onsite during construction. Only organic-blended, slow-release nitrogen fertilizers will be used to establish plantings and lawns at the site. All materials must be used in accordance with the manufacturer recommendations and in accordance with all local, state and federal regulations.

17. Project controls shall consist of signage, contract provisions and meetings to inform workers about the sensitive nature of the land. At weekly meetings, the Engineer and Contractor shall review environmental concerns as they relate to the Aquifer Protection Area.

18. The Engineer and Contractor will conduct daily inspections of:

    - Inspect fueling areas for spills/leaks
    - Inspect dumpster areas for spills/leaks
    - Inspect fencing around equipment left in place overnight
    - Inspect sanitary facilities
    - Inspect storage of materials

19. As required, the Engineer will:

    - Review and approve requests for repairs and fueling outside the designated area
    - Observe fueling operations
    - Periodically inspect fueling operations

- Respond to reports of spills and leaks (including notifying CTDEEP, CTDOT as required)
- Ensure Contractor is disposing of site waste in a timely manner
- Inspect perimeter fencing
- Discuss environmental compliance with Contractors

20. At all times, the Contractor will be required to comply with all federal, state, and local laws and requirements for the handling of hazardous materials.

NOTICE TO CONTRACTOR – HAZARDOUS MATERIALS INVESTIGATIONS

A limited hazardous materials site investigation has been conducted at Bridge No. 00507, which carries Route 816 over the Housatonic River in Newtown/Southbury, Connecticut. The scope of inspection was limited to the representative components projected for impact.

The results of the investigation indicated the presence of lead based paint (LBP) on structural steel/metal bridge components, asphalt shoulder/lane dividers and concrete parapet walls scheduled for impact.

Results obtained from TCLP waste stream sampling and analysis for leachable lead in the paint associated with the metal/structural steel, characterized the paint waste stream as **RCRA Hazardous waste (>5.0mg/l)**.

Results obtained from TCLP waste stream sampling and analysis for leachable lead in the paint associated with the concrete parapet walls, characterized the paint waste stream as **Non-Hazardous C&D bulky waste**.

Results obtained from TCLP waste stream sampling and analysis for leachable lead for the painted asphalt roadway, characterized the painted asphalt waste stream as **Non-Hazardous C&D bulky waste**.

All steel and metal generated from work tasks (painted or not) shall be segregated and recycled as scrap metal at a scrap metal recycling facility. The recycling of scrap metal (regardless of lead paint concentration) is exempt from USEPA RCRA and CTDEEP Hazardous Waste Regulation.

Expansion joint caulking, black rubbery guardrail dampener black jersey barrier underlayment and black tar vapor barrier were sampled for asbestos content, and were found to not contain asbestos

No bird guano accumulations were observed in accessible areas of the bridge.

The Contractor is hereby notified that these hazardous materials requiring special management or disposal procedures will be encountered during various construction activities conducted within the project limits. The Contractor will be required to implement appropriate health and safety measures for all construction activities impacting these materials. These measures shall include, but are not limited to, air monitoring, engineering controls, personal protective equipment and decontamination, equipment decontamination and personnel training. WORKER HEALTH AND SAFETY PROTOCOLS WHICH ADDRESS POTENTIAL AND/OR ACTUAL RISK OF EXPOSURE TO SITE SPECIFIC HAZARDS ARE SOLELY THE RESPONSIBILITY OF THE CONTRACTOR.

The Department, as Generator, will provide an authorized representative to sign all manifests and waste profile documentation required by disposal facilities for disposal of hazardous materials.

The Sections which shall be reviewed by the Contractor include, but are not limited to, the following:

- Item No. 0020904A – Lead Compliance for Abrasive Blast Cleaning
- Item No. 0603222A – Disposal of Lead Debris from Abrasive Blast Cleaning
- Item No. 0020903A – Lead Compliance for Miscellaneous Exterior Tasks

The Contractor is alerted to the fact that a Department environmental consultant may be on site for abatement and related activities, to collect environmental samples (if necessary), and to observe site conditions for the State.

Information pertaining to the results of the limited hazardous materials investigation discussed can be found in the document listed below. This document shall be available for review at the Office of Contracts, 2800 Berlin Turnpike, Newington, Connecticut.

- HazMat Inspection Letter, Bridge No. 00507, Route 816 over Housatonic River, Newtown/Southbury, CT, TRC Environmental Corporation, March 27, 2014.

NOTICE TO CONTRACTOR – SECTION 4.06 AND M.04 MIX DESIGNATION EQUIVALENCY

Sections 4.06 and M.04 have been replaced in their entirety with the Special Provisions included as part of this contract. These Special Provisions reflect changes in mix designations for various types of hot-mix asphalt (HMA). The following table is to be used to associate mix designations noted on the plans with that in the contract specifications and related documents. Mix designations on each row are equivalent and refer to a single mix, which shall be subject to the requirements of the Special Provisions replacing Sections 4.06 and M.04.

Mix Designation Equivalency Table

Official Mix Designation	Equivalent Mix Designation (a)	Equivalent Mix Designation (b)
(c)	Superpave 1.5 inch	Superpave 37.5 mm
HMA S1	Superpave 1.0 inch	Superpave 25.0 mm
HMA S0.5	Superpave 0.5 inch	Superpave 12.5 mm
HMA S0.375	Superpave 0.375 inch	Superpave 9.5 mm
HMA S0.25	Superpave 0.25 inch	Superpave 6.25 mm
(d)	Superpave #4	Superpave #4
Bituminous Concrete Class 1	N/A*	N/A*
Bituminous Concrete Class 2	N/A*	N/A*
Bituminous Concrete Class 3	N/A*	N/A*
Bituminous Concrete Class 4	N/A*	N/A*
Bituminous Concrete Class 12	N/A*	N/A*

(a) This mix designation is generally included with projects where the English measurement system is used. The mix designation may contain both the English measurement system designation and the SI (metric) measurement system designation, one of which would be in parenthesis.

(b) This mix designation is generally included with projects where the SI (metric) measurement system is used. The mix designation may contain both the English measurement system designation and the SI measurement system designation, one of which would be in parenthesis.

(c) This mix is no longer in use except by contract-specific Special Provision; if this mix is called for in the Plans but no such Special Provision is included for this contract a suitable substitute must be approved by the Engineer.

(d) This mix is no longer in use except by contract-specific Special Provision; if this mix is called for in the Plans but no such Special Provision is included for this contract a suitable substitute must be approved by the Engineer.

***** N/A = Not applicable; mix designation has not changed.

NOTICE TO CONTRACTOR – SUPERPAVE DESIGN LEVEL INFORMATION

Hot-Mix Asphalt (HMA) and Polymer-Modified Asphalt (PMA) constructed according to the Superpave mix-design system are required to attain a Superpave Design Level and are required to use a Performance Graded (PG) binder. The Superpave Design Levels required for this project are listed in Table 1. The required PG binder is indicated for each mix with an "X" in the appropriate box in Table 1.

TABLE 1 – Superpave Design Level and Performance Graded (PG) Binder

Mix Designation	PG Binder		Glen Road (S.R. 816)	Route _____ _____ _____ _____	Route _____ _____ _____ _____	Route _____ _____ _____ _____	Route _____ _____ _____ _____
	PG 64-22	PG 76-22	Design Level	Design Level	Design Level	Design Level	Design Level
HMA S0.25	-	-	-	-	-	-	-
HMA S0.375	-	-	-	-	-	-	-
HMA S0.5	X	-	2	-	-	-	-
HMA S1		-	-	-	-	-	-
PMA S0.25	-	-	-	-	-	-	-
PMA S0.375	-	-	-	-	-	-	-
PMA S0.5	-	-	-	-	-	-	-
PMA S1	-	-	-	-	-	-	-

Note: Please note that PMA mix designations typically use PG 76-22 and HMA mix designations use PG 64-22.

NOTICE TO CONTRACTOR – TRAFFIC DRUMS AND TRAFFIC CONES

Traffic Drums and 42-inch (1 m) Traffic Cones shall have four six-inch (150 mm) wide stripes (two - white and two - orange) of flexible bright fluorescent sheeting.

The material for the stripes shall be one of the following, or approved equal:

- 3M Scotchlite Diamond Grade Flexible Work Zone Sheeting, Model 3910 for the white stripes and Model 3914 for the orange stripes,

- Avery Dennison WR-7100 Series Reboundable Prismatic Sheeting, Model WR-7100 for the white stripes and Model WR-7114 for the orange stripes.

NOTICE TO CONTRACTOR – NCHRP 350 REQ. FOR WORK ZONE TRAFFIC CONTROL DEVICES

CATEGORY 1 DEVICES (traffic cones, traffic drums, tubular markers, flexible delineator posts)

Prior to using the Category 1 Devices on the project, the Contractor shall submit to the Engineer a copy of the manufacturer's self-certification that the devices conform to NCHRP Report 350.

CATEGORY 2 DEVICES (construction barricades, construction signs and portable sign supports)

Prior to using Category 2 Devices on the project, the Contractor shall submit to the Engineer a copy of the Letter of Acceptance issued by the FHWA to the manufacturer documenting that the devices (both sign and portable support tested together) conform to NCHRP Report 350 (TL-3).

Specific requirements for these devices are included in the Special Provisions.

Information regarding NCHRP Report 350 devices may be found at the following web sites:

FHWA: http://safety.fhwa.dot.gov/roadway_dept/road_hardware/index.htm

ATSSA: http://www.atssa.com/resources/NCHRP350Crashtesting.asp

NOTE: The portable wooden sign supports that have been traditionally used by most contractors in the State of Connecticut do NOT meet NCHRP Report 350 criteria and shall not be utilized on any project advertised after October 01, 2000.

CATEGORY 3 DEVICES (Truck-Mounted Attenuators & Work Zone Crash Cushions)

Prior to using Category 3 Devices on the project, the Contractor shall submit to the Engineer a copy of the Letter of Acceptance issued by the FHWA to the manufacturer documenting that the devices conform to NCHRP Report 350.

SECTION 1.02 – PROPOSAL REQUIREMENTS AND CONDITIONS

Article 1.02.04 – Examination of Plans, Specifications, Special Provisions and Site of Work:

Replace the third sentence of the last paragraph with:

The Department cannot ensure a response to inquiries received later than ten (10) days prior to the original scheduled opening of the related bid.

SECTION 1.07 – LEGAL RELATIONS AND RESPONSIBILITIES

Article 1.07.10 - Contractor's Duty to Indemnify the State against Claims for Injury or Damage:

Add the following after the only paragraph:

"It is further understood and agreed by the parties hereto, that the Contractor shall not use the defense of Sovereign Immunity in the adjustment of claims or in the defense of any suit, including any suit between the State and the Contractor, unless requested to do so by the State."

SECTION 1.08 – PROSECUTION AND PROGRESS

Article 1.08.01—Transfer of Work or Contract:

The first sentence of the first paragraph is hereby changed to read as follows:

The Contractor shall perform with its own organization Contract work with a value under the Contract of at least 30% of the original total Contract value.

Article 1.08.04 – Limitation of Operations - Add the following:

In order to provide for traffic operations as outlined in the Special Provision "Maintenance and Protection of Traffic," the Contractor will not be permitted to perform any work which will interfere with the described traffic operations on all project roadways as follows:

Glen Road (S.R. 816) and River Road

Monday through Friday between 6:00 a.m. and 9:00 a.m. & between 3:00 p.m. and 6:00 p.m.
Saturday and Sunday between 10:00 a.m. and 6:00 p.m.

During truss repairs, the Contractor will be allowed to maintain an alternating one-way traffic operation controlled by Temporary Signalization for a duration not to exceed 210 consecutive days, to perform steel repairs to the truss, floorbeams, and stringers, and to perform abrasive blast cleaning and painting operations. Alternating one-way traffic operations shall be suspended during winter shutdown or prolonged periods of inactivity by the Contractor, as determined by the Engineer.

The Contractor will be allowed to close Glen Road (S.R. 816) and detour traffic for a duration that shall not exceed seven days, to perform deck resurfacing operations with Latex Modified Concrete, installation of deck joints, installation of approach railing and application of pavement markings.

The Contractor shall notify the Engineer at least 30 days in advance of the start of the Glen Road closure.

During construction, the existing number of lanes of traffic will be considered to be the number of lanes shown on the Maintenance and Protection of Traffic Plans contained in the contract plans.

All Other Roadways

Monday through Friday between 6:00 a.m. and 9:00 a.m. & between 3:00 p.m. and 6:00 p.m.
Saturday and Sunday between 10:00 a.m. and 6:00 p.m.

Additional Lane Closure Restrictions

It is anticipated that work on adjacent projects will be ongoing simultaneously with this project. The Contractor shall be aware of those projects and anticipate that coordination will be required to maintain proper traffic flow at all times on all project roadways, in a manner consistent with these specifications and acceptable to the Engineer.

The Contractor will not be allowed to perform any work that will interfere with traffic operations on a roadway when traffic operations are being restricted on that same roadway, unless there is at least a one mile clear area length where the entire roadway is open to traffic or the closures have been coordinated and are acceptable to the Engineer. The one mile clear area length shall be measured from the end of the first work area to the beginning of the signing pattern for the next work area.

SECTION 1.10 – ENVIRONMENTAL COMPLIANCE

Article 1.10.03 Water Pollution Control:

Delete all of Best Management Practice Number 14, and replace with the following:

The Contractor is hereby notified that Bald Eagles *(Haliaeetus leucocephalus)* may be present at or near the project site during the construction period. Specifically, there is the potential that Bald Eagles may roost in some of the trees within or adjacent to the project area, or forage in the river near the bridge site. Roosting activity would include perching in the trees, either temporarily or for over-night periods. Bald Eagles are currently listed as a state threatened species as well as protected under both the Federal Bald and Golden Eagle Protection Act and the Migratory Bird Treaty Act. These laws prohibit disturbing the birds while they are roosting, feeding, or nesting. Though Bald Eagles are not known to nest within or near the project site, new activities such as the bridge repair construction work may present an increased risk of disturbance when the birds are roosting or feeding nearby. In order to protect this species, the proposed construction activities at the bridge shall be completed during non-nesting season months (Aug –Jan), if a nest is observed and confirmed within 600' of the project area. Also during the non-breeding months, machinery and equipment shall maintain a minimum of 600' from areas of high eagle usage, most importantly winter roosting sites. The cutting of large trees must be reviewed and approved by a biologist from the Department of Transportation's Office of Environmental Planning (OEP). This Best Management Practice outlines Bald Eagle protection measures and special requirements to be followed by the Contractor at the project site, as listed below.

1. All Contractors, subcontractors, and their employees must be informed of this Best Management Practice and the fact that Bald Eagles are protected from disturbance or bothering by federal laws and that certain construction activities may constitute disturbance when Bald Eagles are present within or near the project site. Such activities include, but are not limited to, clearing of roosting trees, loud noises, leaving exposed trash or hazardous materials, and use of helicopters for project support.

2. To protect the roosting habitat in the project area, the Contractor shall construct the planned staging area in strict accordance with the plans in regard to clearing limits and tree preservation (Refer to Plan Sheet PLN-01). Efforts shall be taken to minimize the amount of tree clearing associated with constructing and maintaining the staging area. Prior to any clearing and grubbing or ground disturbing activities the Contractor shall arrange with a biologist from OEP to be on site and conduct a walkthrough of the area depicted on Plan Sheet PLN- 01.

3. Contractors must not remove or alter specifically-designated trees in the project area where Bald Eagles may roost. These trees will be marked with flagging by CT DOT prior to construction, and the Contractor shall maintain the flagging for

the duration of the project so as to inform workers that the trees are to be protected from clearing activities. The approximate locations of the roosting trees to remain are shown on Plan Sheet PLN-01.

4. The Contractor shall inform the Engineer when Bald Eagles are observed using the roosting trees. In particular, the Contractor shall look for roosting Bald Eagle use during the early morning and evening hours (e.g., suggesting over-night roosting is occurring), or during the daylight hours (e.g., suggesting potential use of roosting trees associated with foraging for fish in the river). The patterns of use reported by the Contractor may be used by CTDOT OEP to modify the guidelines and restrictions presented herein. The Contractor shall keep a log of Bald Eagle use at the site and present this information to the Engineer on a weekly basis. Information to be recorded shall include:

    a. Date and time of observations;
    b. Number of eagles observed;
    c. Type of use observed (e.g., roosting in trees, flying over the site, foraging for fish in the river, "other", etc.).

5. The Contractor shall keep the construction site clean of trash at all times to avoid the potential for scavenging by Bald Eagles. Bald Eagles are scavengers by nature, and may attempt to consume discarded food items or other materials left on site. All trash shall be kept in securely closed containers or removed from the site daily. The Contractor shall also promptly remove any animal carcasses (e.g., resulting from vehicle collisions) that are found in the project area.

6. When Bald Eagles are observed at or near the site, the Contractor shall avoid extremely loud or sudden noises that may disturb these birds. If loud activities are necessary, they shall be scheduled to occur during the middle of the day, only when eagles are not present. Prior to conducting any activities involving loud or sudden noises, particularly blasting, the Contractor shall scan the trees and air at and near the project site to check for the presence of eagles, and shall prohibit the activity from occurring until eagles are no longer present.

7. Helicopter use shall be avoided to the extent practicable due to the typically high level of Bald Eagle disturbance caused by this activity. Helicopters shall not be used at the project when eagles are present or potentially nearby.

Photographs and the laws protecting Bald Eagles will be provided by OEP in the form of species ID sheets. These ID sheets shall be posted in the Contractor's and DOT field offices.

SECTION 4.06 BITUMINOUS CONCRETE

Section 4.06 is being deleted in its entirety and replaced with the following:

4.06.01—Description
4.06.02—Materials
4.06.03—Construction Methods
4.06.04—Method of Measurement
4.06.05—Basis of Payment

4.06.01—Description: Work under this section shall include the production, delivery and placement of a non-segregated, smooth and dense bituminous concrete mixture brought to proper grade and cross section. This section shall also include the method and construction of longitudinal joints. The Contractor shall furnish ConnDOT with a Quality Control Plan as described in Article 4.06.03.

The terms listed below as used in this specification are defined as:

Bituminous Concrete: A concrete material that uses a bituminous material (typically asphalt) as the binding agent and stone and sand as the principal aggregate components. Bituminous concrete may also contain any of a number of additives engineered to modify specific properties and/or behavior of the concrete material. For the purposes of this Specification, references to bituminous concrete apply to all of its sub-categories, for instance those defined on the basis of production and placement temperatures, such as hot-mix asphalt (HMA) or warm-mix asphalt (WMA), those categories derived from the mix-design procedure used, such as "Marshall" mixes or "Superpave" mixes, or those defined on the basis of composition, such as polymer-modified asphalt (PMA).

Course: A lift or multiple lifts comprised of the same bituminous concrete mixture placed as part of the pavement structure.

Density Lot: All material placed in a single lift and as defined in Article 4.06.03.

Disintegration: Wearing away or fragmentation of the pavement. Disintegration will be evident in the following forms: Polishing, weathering-oxidizing, scaling, spalling, raveling, potholes or loss of material.

Dispute Resolution: A procedure used to resolve conflicts resulting from discrepancies between the Engineer and the Contractor's density results that may affect payment.

Hot Mix Asphalt (HMA): A bituminous concrete mixture typically produced at 325°F.

Lift: An application of a bituminous concrete mixture placed and compacted to a specified thickness in a single paver pass.

Marshall: A bituminous concrete mix design used in mixtures designated as "Bituminous Concrete Class ( )".

Polymer Modified Asphalt (PMA): A bituminous concrete mixture containing a polymer modified asphalt binder in accordance with contract specifications.

Production Lot: All material placed during a continuous daily paving operation.

Quality Assurance (QA): All those planned and systematic actions necessary to provide confidence that a product or facility will perform as designed.

Quality Control (QC): The sum total of activities performed by the vendor (Producer, Manufacturer, and Contractor) to ensure that a product meets contract specification requirements.

Superpave: A bituminous concrete mix design used in mixtures designated as "S*" Where "S" indicates Superpave and * indicates the sieve related to the nominal maximum aggregate size of the mix.

Segregation: A non-uniform distribution of a bituminous concrete mixture in terms of volumetrics, gradation or temperature.

Warm Mix Asphalt (WMA): A bituminous concrete mixture that can be produced and placed at reduced temperatures than HMA using a qualified additive or technology.

4.06.02—Materials: All materials shall conform to the requirements of Section M.04.

1. Materials Supply: The bituminous concrete mixture must be from one source of supply and originate from one Plant unless authorized by the Engineer. Bituminous Concrete plant QC plan requirements are defined in Section M.04.

2. Recycle Option: The Contractor has the option of recycling reclaimed asphalt pavement (RAP) or Crushed Recycled Container Glass (CRCG) in bituminous concrete mixtures in accordance with Section M.04. CRCG shall not be used in the final lift of the surface course.

4.06.03—Construction Methods:

1. Material Documentation: All vendors producing bituminous concrete must have their truck-weighing scales, storage scales, and mixing plant automated to provide a detailed ticket.

Delivery tickets must include the following information:

a. State of Connecticut printed on ticket.
b. Name of producer, identification of plant, and specific storage bin (silo) if used.
c. Date and time of day.

d. Mixture Designation If RAP is used, the plant printouts shall include RAP dry weight, percentage and daily moisture content. If WMA technology is used, the technology and the additive rate or the water injection rate must be noted on the ticket. Class 3 mixtures for machine-placed curbing must state "curb mix only".
e. Net weight of mixture loaded into truck (When RAP is used, RAP moisture shall be excluded from mixture net weight).
f. Gross weight (Either equal to the net weight plus the tare weight or the loaded scale weight).
g. Tare weight of truck – Daily scale weight.
h. Project number, purchase order number, name of Contractor (if Contractor other than Producer).
i. Truck number for specific identification of truck.
j. Individual aggregate, RAP, and virgin asphalt high/target/low weights shall be printed on batch plant tickets (For drum plants and silo loadings, the plant printouts shall be printed out at 5 minute intervals maintained by the vendor for a period of three years after the completion of the project).
k. For every mixture designation the running daily total delivered and sequential load number.

The net weight of mixture loaded into the truck must be equal to the cumulative measured weight of its components.

The Contractor must notify the Engineer immediately if, during the production day, there is a malfunction of the weighing or recording system in the automated plant or truck-weighing scales. Manually written tickets containing all required information will be allowed for one hour, but for no longer, provided that each load is weighed on State-approved scales. At the Engineer’s sole discretion, trucks may be approved to leave the plant if a State inspector is present to monitor weighing. If such a malfunction is not fixed within forty-eight hours, mixture will not be approved to leave the plant until the system is fixed to the Engineer's satisfaction. No damages will be considered should the State be unable to provide an inspector at the plant.

The State reserves the right to have an inspector present to monitor batching and /or weighing operations.

2. Transportation of Mixture: Trucks with loads of bituminous concrete being delivered to State projects must not exceed the statutory or permitted load limits referred to as gross vehicle weight (GVW). The Contractor shall furnish a list of all vehicles and allowable weights transporting mixture.

The State reserves the right to check the gross and tare weight of any delivery truck. A variation of 0.4 percent or less in the gross or tare weight shown on the delivery ticket and the certified scale weight shall be considered evidence that the weight shown on the delivery ticket is correct. If the gross or tare weight varies from that shown on the delivery ticket by more than 0.4 percent, the Engineer will recalculate the net weight. The Contractor shall take action to correct discrepancy to the satisfaction of the Engineer.

If a truck delivers mixture to the project and the ticket indicates that the truck is overweight, the load will not be rejected but a "Measured Weight Adjustment" will be taken in accordance with Article 4.06.04.

The mixture shall be transported from the mixing plant in trucks that have previously been cleaned of all foreign material and that have no gaps through which mixture might inadvertently escape. The Contractor shall take care in loading trucks uniformly so that segregation is minimized. Loaded trucks shall be tightly covered with waterproof covers acceptable to the Engineer. Mesh covers are prohibited. The front and rear of the cover must be fastened to minimize air infiltration. The Contractor shall assure that all trucks are in conformance with this specification. Trucks found not to be in conformance shall not be allowed to be loaded until re-inspected to the satisfaction of the Engineer.

Truck body coating and cleaning agents must not have a deleterious effect on the transported mixture. The use of solvents or fuel oil, in any concentration, is strictly prohibited for the coating of the inside of truck bodies. When acceptable coating or agents are applied, truck bodies shall be raised immediately prior to loading to remove any excess agent in an environmentally acceptable manner.

3. Paving Equipment: The Contractor shall have the necessary paving and compaction equipment at the project site to perform the work. All equipment shall be in good working order and any equipment that is worn, defective or inadequate for performance of the work shall be repaired or replaced by the Contractor to the satisfaction of the Engineer. During the paving operation, the use of solvents or fuel oil, in any concentration, is strictly prohibited as a release agent or cleaner on any paving equipment (i.e., rollers, pavers, transfer devices, etc.).

Refueling of equipment is prohibited in any location on the paving project where fuel might come in contact with bituminous concrete mixtures already placed or to be placed. Solvents for use in cleaning mechanical equipment or hand tools shall be stored clear of areas paved or to be paved. Before any such equipment and tools are cleaned, they shall be moved off the paved or to be paved area; and they shall not be returned for use until after they have been allowed to dry.

Pavers: Each paver shall have a receiving hopper with sufficient capacity to provide for a uniform spreading operation and a distribution system that places the mix uniformly, without segregation. The paver shall be equipped with and use a vibratory screed system with heaters or burners. The screed system shall be capable of producing a finished surface of the required evenness and texture without tearing, shoving, or gouging the mixture. Pavers with extendible screed units as part of the system shall have auger extensions and tunnel extenders as necessary. Automatic screed controls for grade and slope shall be used at all times unless otherwise authorized by the Engineer. The controls shall automatically adjust the screed to compensate for irregularities in the preceding course or existing base. The controls shall maintain the proper transverse slope and be readily adjustable, and shall operate from a fixed or moving reference such as a grade wire or floating beam.

Rollers: All rollers shall be self-propelled and designed for compaction of bituminous concrete. Rollers types shall include steel-wheeled, pneumatic or a combination thereof and may be capable of operating in a static or dynamic mode. Rollers that operate in a dynamic mode shall have drums that use a vibratory or oscillatory system or combination of. The vibratory system achieves compaction through vertical amplitude forces. Rollers with this system shall be equipped with indicators that provide the operator with amplitude, frequency and speed settings/readouts to measure the impacts per foot during the compaction process. The oscillatory system achieves compaction through horizontal shear forces. Rollers with this system shall be equipped with frequency indicators. Rollers can operate in the dynamic mode using the oscillatory system on concrete structures such as bridges and catch basins if at the lowest frequency setting.

Pneumatic tire rollers shall be self-propelled and equipped with wide-tread compaction tires capable of exerting an average contact pressure from 60 to 90 pounds per square inch uniformly over the surface, adjusting ballast and tire inflation pressure as required. The Contractor shall furnish evidence regarding tire size; pressure and loading to confirm that the proper contact pressure is being developed and that the loading and contact pressure are uniform for all wheels.

Lighting: For paving operations, which will be performed during hours of darkness, the paving equipment shall be equipped with lighting fixtures as described below, or with approved lighting fixtures of equivalent light output characteristics. A sufficient number of spare lamps shall be available on site as replacements in the event of failures. The Contractor shall provide brackets and hardware for mounting light fixtures and generators to suit the configuration of the rollers and pavers. Mounting brackets and hardware shall provide for secure connection of the fixtures, minimize vibration, and allow for adjustable positioning and aiming of the light fixtures. Lighting shall be aimed to maximize the illumination on each task and minimize glare to passing traffic. The Contractor shall provide generators on rollers and pavers of the type, size, and wattage, to adequately furnish 120 V AC of electric power to operate the specified lighting equipment. A sufficient amount of fuel shall be available on site. There shall be switches to control the lights. Wiring shall be weatherproof and installed to all applicable codes. The minimum lighting requirements are found in tables 4.06-1 and 4.06-2:

Table 4.06-1: Paver Lighting

Fixture	Quantity	Remarks
Type A	3	Mount over screed area
Type B (narrow) or Type C (spot)	2	Aim to auger and guideline
Type B (wide) or Type C (flood)	2	Aim 25 feet behind paving machine

Table 4.06-2: Roller Lighting

Fixture*	Quantity	Remarks
Type B (wide)	2	Aim 50 feet in front of and behind roller
Type B (narrow)	2	Aim 100 feet in front of and behind roller
OR		
Type C (flood)	2	Aim 50 feet in front of and behind roller
Type C (spot)	2	Aim 100 feet in front of and behind roller

*All fixtures shall be mounted above the roller.

Type A: Fluorescent fixture shall be heavy-duty industrial type. It shall be enclosed and sealed to keep out dirt and dampness. It shall be UL listed as suitable for wet locations. The fixture shall contain two 4-foot long lamps - Type "F48T12CWHO". The integral ballast shall be a high power factor, cold weather ballast, and 120 volts for 800 MA HO lamps. The housing shall be aluminum, and the lens shall be acrylic with the lens frame secured to the housing by hinging latches. The fixture shall be horizontal surface mounting, and be made for continuous row installation.

Type B: The floodlight fixture shall be heavy-duty cast aluminum housing, full swivel and tilt mounting, tempered-glass lens, sealed door, reflector to provide a wide distribution or narrow distribution as required, mogul lamp socket for 250 watt Metal Halide lamp, 120 volt integral ballast, and be UL listed as suitable for wet locations.
Type C: The power beam holder shall have ribbed die cast aluminum housing and a clear tempered-glass lens to enclose the fixture. There shall be an arm fully adjustable for aiming, with a male-threaded mount with serrated teeth and lock nuts. There shall be a 120-volt heatproof socket with extended fixture wiring for an "Extended Mogul End Prong" lamp base. The fixture shall have gaskets, and shall be UL listed as suitable for wet locations. The lamps shall be 1000-watt quartz PAR64, both Q1000PAR64MFL (flood) and Q1000PARNSP (spot) will be required.

Material Transfer Vehicle (MTV): A MTV shall be used when placing a bituminous concrete surface course as indicated in the contract documents. A surface course is defined as the total thickness of the same bituminous concrete mix that extends up to and includes the final wearing surface whether it is placed in a single or multiple lifts, and regardless of any time delays between lifts.

The MTV must be a self-propelled vehicle specifically designed for the purpose of delivering the bituminous concrete mixture from the delivery truck to the paver. The MTV must have the capability to remix the bituminous concrete mixture.

The use of a MTV will be subject to the requirements stated in Article 1.07.05- Load Restrictions. The Engineer may limit the use of the vehicle if it is determined that the use of the MTV may damage highway components, utilities, or bridges. The Contractor shall submit to the Engineer at time of pre-construction the following information:

- The make and model of the MTV to be used.
- The individual axle weights and axle spacing for each separate piece of paving equipment (haul vehicle, MTV and paver).
- A working drawing showing the axle spacing in combination with all three pieces of equipment that will comprise the paving echelon.

4. Seasonal Requirements: Paving, including placement of temporary pavements, shall be divided into two seasons, In-Season and Extended Season. In-Season paving shall occur from May 1 – October 14, and Extended Season shall occur from October 15- April 30. The following requirements shall apply unless otherwise authorized or directed by the Engineer:

- Bituminous concrete mixes shall not be placed when the air or subbase temperature is below 40°F regardless of the season.
- Should paving operations be scheduled during the Extended Season, the Contractor's Quality Control Plan for placement described in Section 9. "Contractor Quality Control Plan for Placement" shall include a separate section titled "Extended Season Paving" and address minimum delivered mix temperature, maximum paver speed, enhanced rolling patterns and the method to balance mixture delivery and placement operations. Work covered by the section on Extended Season paving shall not commence until the Engineer's comments have been incorporated into the section and approved.
- Should placement of the final lift of bituminous concrete be scheduled during the Extended Season, the Contractor is required to submit this plan to the Engineer for review 30 days prior to the paving operation.

5. Superpave Test Section: The Engineer may require the Contractor to place a test section whenever the requirements of this specification or Section M.04 are not met.

The Contractor shall submit the quantity of mixture to be placed and the location of the test section for review and acceptance by the Engineer. The equipment used in the construction of a passing test section shall be used throughout production.

If a test section fails to meet specifications, the Contractor shall stop production, make necessary adjustments to the job mix formula, plant operations, or procedures for placement and compaction. The Contractor shall construct test sections, as allowed by the Engineer, until all the required specifications are met. All test sections shall also be subject to removal as set forth in Article 1.06.04.

6. Transitions for Roadway Surface: Transitions shall be formed at any point on the roadway where the pavement surface deviates, vertically, from the uniform longitudinal profile as specified on the plans. Whether formed by milling or by bituminous concrete mixture, all transition lengths shall conform to the criteria below unless otherwise specified.

<u>Permanent Transitions</u>: A permanent transition is defined as any transition that remains as a permanent part of the work. All permanent transitions, leading and trailing ends shall meet the following length requirements:

a) Posted speed limit is greater than 35 MPH: 30 feet per inch of vertical change (thickness)
b) Posted speed limit is 35 MPH or less: 15 feet per inch of vertical change (thickness).
c) Bridge Overpass and underpass transition length will be 75 feet either
    (1) Before and after the bridge expansion joint, or
    (2) Before or after the parapet face of the overpass.

In areas where it is impractical to use the above described permanent transition lengths the use of a shorter permanent transition length may be permitted when approved by the Engineer.

Temporary Transitions: A temporary transition is defined as a transition that does not remain a permanent part of the work. All temporary transitions shall meet the following length requirements:

a) Posted speed limit is greater than 35 MPH
   (1) Leading Transitions = 15 feet per inch of vertical change (thickness)
   (2) Trailing Transitions = 6 feet per inch of vertical change (thickness)

b) Posted speed limit is 35 MPH or less
   (1) Leading and Trailing = 4 feet per inch of vertical change (thickness)

Note: Any temporary transition to be in-place over the winter shutdown period, holidays, or during extended periods of inactivity (more than 7 calendar days) shall conform to the "Permanent Transition" requirements shown above.

7. Spreading and Finishing of Mixture: Prior to the placement of the bituminous concrete, the underlying base course shall be brought to the plan grade and cross section within the allowable tolerance. Immediately before placing the mixture, the area to be surfaced shall be cleaned by sweeping or by other means acceptable to the Engineer. The bituminous concrete mixture shall not be placed whenever the surface is wet or frozen. The Engineer will verify the mix temperature by means of a probe or infrared type of thermometer. A probe type thermometer, verified by the Department on an annual basis, must be used in order to reject a load of mixture based on temperatures outside the range stated in the placement QC plan.

Placement: The bituminous concrete mixture shall be placed and compacted to provide a smooth, dense surface with a uniform texture and no segregation at the specified thickness and dimensions indicated in the plans and specifications.

When unforeseen weather conditions prevent further placement of the mix, the Engineer is not obligated to accept or place the bituminous concrete mixture that is in transit from the plant.

In advance of paving, traffic control requirements shall be set up daily, maintained throughout placement, and shall not be removed until all associated work including density testing is completed.

The Contractor shall inspect the newly placed pavement for defects in the mixture or placement before rolling is started. Any deviation from standard crown or section shall be immediately remedied by placing additional mixture or removing surplus mixture. Such defects shall be corrected to the satisfaction of the Engineer.

Where it is impractical due to physical limitations to operate the paving equipment, the Engineer may permit the use of other methods or equipment. Where hand spreading is permitted, the mixture shall be placed by means of suitable shovels and other tools, and in a uniformly loose layer at a thickness that will result in a completed pavement meeting the designed grade and elevation.

Placement Tolerances: Each lift of bituminous concrete placed at a uniform specified thickness shall meet the following requirements for thickness and area. Any pavement exceeding these limits shall be subject to an adjustment or removal. Lift tolerances will not relieve the Contractor from meeting the final designed grade. Lifts of specified non-uniform thickness, i.e. wedge or shim course, shall not be subject to thickness and area adjustments.

a) Thickness- Where the total thickness of the lift of mixture exceeds that shown on the plans beyond the tolerances shown in Table 4.06-3, the longitudinal limits of such variation including locations and intervals of the measurements will be documented by the Engineer for use in calculating an adjustment in accordance with Article 4.06.04.

TABLE 4.06-3 Thickness Tolerances

Mixture Designation	Lift Tolerance
Class 4 and S1	+/- ⅜ inch
Class 1, 2 and 12 and S0.25, S0.375, S0.5	+/- ¼ inch

Where the thickness of the lift of mixture is less than that shown on the plans beyond the tolerances shown in Table 4.06-3, the Contractor, with the approval of the Engineer, shall take corrective action in accordance with this specification.

b) Area- Where the width of the lift exceeds that shown on the plans by more than the specified thickness of each lift, the longitudinal limits of such variation including locations and intervals of the measurements will be documented by the Engineer for use in calculating the adjustment in Article 4.06.04.

c) Delivered Weight of Mixture - When the delivery ticket shows that the truck exceeds the allowable gross weight for the vehicle type the quantity of tons representing the overweight amount will be documented by the Engineer for use in calculating an adjustment in accordance with Article 4.06.04.

Transverse Joints: All transverse joints shall be formed by saw-cutting a sufficient distance back from the previous run, existing bituminous concrete pavement or bituminous concrete driveways to expose the full thickness of the lift. A brush of tack coat shall be used on any cold joint immediately prior to additional bituminous concrete mixture being placed.

Tack Coat Application: A thin uniform coating of tack coat shall be applied to the pavement immediately before overlaying and be allowed sufficient time to break (set). All surfaces in contact with the bituminous concrete that have been in place longer than 3 calendar days shall have an application of tack coat. The tack coat shall be applied by a non-gravity pressurized spray system that results in uniform overlapping coverage at an application rate of 0.03 to 0.05 gallons per square yard for a non-milled surface and an application rate of 0.05 to 0.07 gallons per square yard for a milled surface. For areas where both milled and un-milled surfaces occur, the tack coat shall be an application rate of 0.03 to 0.05 gallons per square yard. The Engineer must approve the equipment and the method of measurement prior to use. The material for tack coat shall not be heated in excess of 160°F and shall not be further diluted.

Compaction: The Contractor shall compact the mixture to meet the density requirements as stated in Article 4.06.03 and eliminate all roller marks without displacement, shoving, cracking, or aggregate breakage.

The Contractor shall only operate rollers in the dynamic mode using the oscillatory system at the lowest frequency setting on concrete structures such as bridges and catch basins. The use of the vibratory system on concrete structures is prohibited. Rollers operating in the dynamic mode shall be shut off when reversing directions.

If the Engineer determines that the use of compaction equipment in the dynamic vibratory mode may damage highway components, utilities, or adjacent property, the Contractor shall provide alternate compaction equipment. The Engineer may allow the Contractor to operate rollers in the dynamic mode using the oscillatory system at the lowest frequency setting.

These allowances will not relieve the Contractor from meeting pavement compaction requirements.

Surface Requirements: The pavement surface of any lift shall meet the following requirements for smoothness and uniformity. Any irregularity of the surface exceeding these requirements shall be corrected by the Contractor.

a) Smoothness- Each lift of the surface course shall not vary more than ¼ inch from a Contractor-supplied 10 foot straightedge. For all other lifts of bituminous concrete, the tolerance shall be ⅜ inch. Such tolerance will apply to all paved areas.

b) Uniformity- The paved surface shall not exhibit segregation, rutting, cracking, disintegration, flushing or vary in composition as determined by the Engineer.

8. Longitudinal Joint Construction Methods: Unless noted on the plans or the contract documents or directed by the Engineer, the Contractor shall use Method I- Notched Wedge Joint (see figure 4.06-1) when constructing longitudinal joints where lift thicknesses are between 1½ and 3 inches, except for S1 and Class 4 mixes. Method II Butt Joint (see figure 4.06-2) shall be used for lifts less than 1½ inches or greater than 3 inches, and S1 and Class 4 mixes. During placement of multiple lifts of bituminous concrete, the longitudinal joint shall be constructed in such a manner that it is located at least 6 inches from the joint in the lift immediately below. The joint in the final lift shall be at the centerline or at lane lines. Each longitudinal joint shall maintain a consistent offset from the centerline of the roadway along its entire length.

Method I - Notched Wedge Joint:

Figure 4.06-1

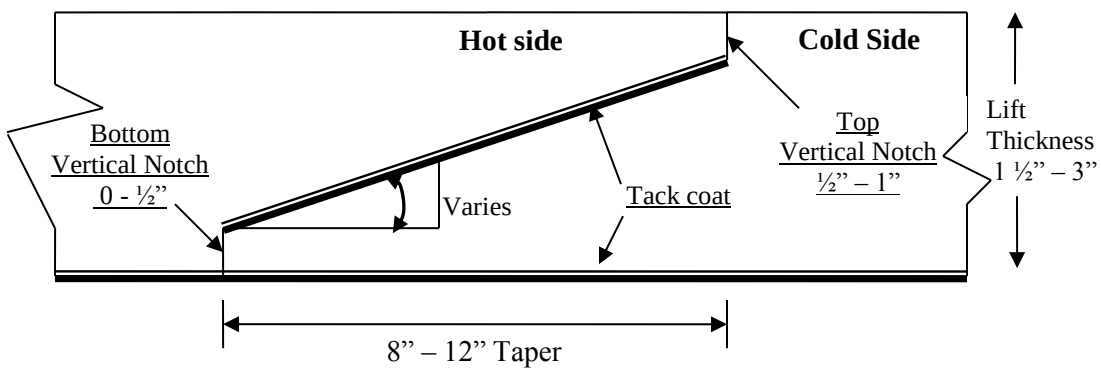

A notched wedge joint shall be constructed, as shown in the figure using a device that is capable of adjusting the top and bottom vertical notches independently and is attached to the paver screed.
The taper portion of the joint must be placed over the longitudinal joint in the lift immediately below. The top vertical notch must be located at the centerline or lane line in the final lift. The requirement for paving full width “curb to curb” as described in Method II may be waived if addressed in the QC plan and approved by the Engineer.

The taper portion of the wedge joint shall be compacted and not be exposed to traffic for more than 5 calendar days.

The pavement surface under the wedge joint must have an application of tack coat material. Prior to placing the completing pass (hot side), an application of tack coat must be applied to the exposed surface of the tapered section; regardless of time elapsed between paver passes. The in-place time allowance described in Sub article 4.06.03-7 does not apply to joint construction.

Any exposed wedge joint must be located to allow for the free draining of water from the road surface.

The Engineer reserves the right to define the paving limits when using a wedge joint that will be exposed to traffic.

<u>Method II - Butt Joint</u>:

Figure 4.06-2

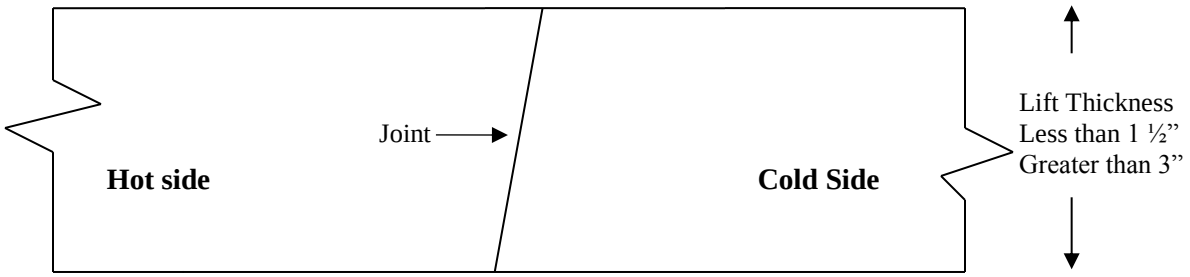

When adjoining passes are placed, the Contractor shall utilize equipment that creates a near vertical edge (refer to figure). The completing pass (hot side) shall have sufficient mixture so that the compacted thickness is not less than the previous pass (cold side). The end gate on the paver should be set so there is an overlap onto the cold side of the joint.

The Contractor shall not allow any butt joint to be incomplete at the end of a work shift unless otherwise allowed by the Engineer. When using this method, the Contractor is not allowed to leave a vertical edge exposed at the end of a work shift and must complete paving of the roadway full width "curb to curb."

<u>Method III- Butt Joint with Hot Poured Rubberized Asphalt Treatment</u>: When required by the contract or allowed by the Engineer, Method III (see figure 4.06-3) may be used.

Figure 4.06-3

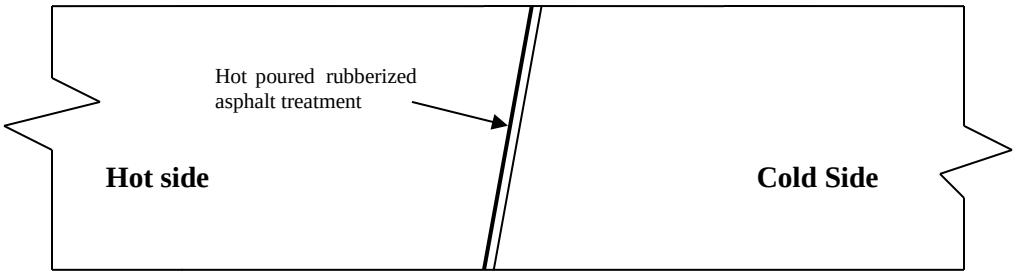

All of the requirements of Method II must be met with Method III. In addition, the longitudinal vertical edge must be treated with a joint seal material meeting the requirements of Section M.04 prior to placing a completing pass. The joint seal material shall be applied in accordance with the manufacturer's recommendation so as to provide a uniform coverage and avoid excess bleeding onto the newly placed pavement.

9. Contractor Quality Control (QC) Requirements for Placement:

The Contractor shall be responsible for maintaining adequate quality control procedures throughout the placement operations. Therefore, the Contractor must ensure that the materials, mixture and work provided by Subcontractors, Suppliers and Producers also meet contract specification requirements.

Quality Control Plan: Prior to placement the Contractor shall submit a QCP to the Engineer for approval. The QCP shall be submitted at the pre-construction meeting or a minimum 30 days prior to any production or paving. The QCP shall be in the format provided by the Engineer (http://www.ct.gov/dot/lib/dot/documents/dconstruction/pat/qcp_outline_hma_placement.pdf). Work covered by the QCP shall not commence until the Engineer's comments have been incorporated into the QCP and approved. The QCP shall detail every aspect of the placement process and if required, include a separate section on Extended Season paving as described in Section 4. "Seasonal Requirements". Information provided shall include the organization and procedures which the Contractor shall use to control all project site activity. The QCP must address the actions, inspection, or sampling and testing necessary to keep the production and placement operations in control, to determine when an operation has gone out of control and to respond to correct the situation in a timely fashion. The QCP shall also include details on when and who will communicate with personnel at the bituminous concrete plant to determine when immediate changes to the production or placement processes are needed, and to implement the required changes.

In addition the QCP shall also include the name and qualifications of a Quality Control Manager (QCM). The QCM shall be responsible for the administration of the QCP, and any modifications that may become necessary. The QCM shall have the ability to direct all Contractor personnel on the project during paving operations. All Contractor sampling, inspection and test reports shall be reviewed and signed by the QCM prior to submittal to the Engineer.

Approval of the QCP will be based on the inclusion of all of the required information. Approval of the QCP does not relieve the Contractor of its responsibility to comply with the project specifications. The Contractor may modify the QCP as work progresses and must document the changes in writing prior to commencing the next paving operation. These changes include but are not limited to changes in quality control procedures or personnel. Placement may be suspended by the Engineer until the revisions to the QCP have been put into effect.

The Quality Control Plan shall also include the name and qualifications of any outside testing laboratory performing any QC functions on behalf of the Contractor.

Quality Control Inspection, Sampling and Testing: The Contractor shall perform all quality control sampling and testing, provide inspection, and exercise management control to ensure that bituminous concrete production and placement conforms to the requirements as outlined in its QCP during all phases of the work.

a) Control Charts: The Contractor shall develop and maintain density control charts and shall submit them to the Engineer. The control charts shall include the project number, test numbers, test parameter, applicable upper and lower specification limits, and test data. The control charts shall be used as part of the quality control system to document the placement process. The control chart(s) shall be updated each day of production, and e a copy shall be submitted prior to the next day's production.

b) Records of Inspection and Testing: For each day of placement, the Contractor shall document all test results and inspections on forms approved by the Engineer. The document shall be certified by the Quality Control Manager or his representative that the information in the document is accurate, and that all work complies with the requirements of the contract.

The Contractor shall submit complete and accurate density sampling, testing and inspection documents to the Engineer within 48 hours. The documents shall be submitted in a manner acceptable to the Engineer.

The Contractor may obtain one (1) mat core and one (1) joint core per day for process control, provided this process is detailed in the QCP. The results of these process control cores shall not be used to dispute the Department determinations from the acceptance cores. The Contractor shall submit the location of each process control core to the Engineer for approval prior to taking the core. Additional cores may be obtained to correlate a density gauge used by the contractor for quality control as approved by the Engineer. The core holes shall be filled to the same requirements described in Sub article 4.06.03-10.

10. **Density Testing of Bituminous Concrete Utilizing Core Samples:** This procedure describes the frequency and the method the Contractor shall use to obtain pavement cores for acceptance from the project. Coring shall be performed on each lift specified to a thickness of one and one-half (1 ½) inches or more. Each lift including the longitudinal joints shall be compacted to the degree specified in Tables 4.06-9 and 4.06-10. The density of each core shall be determined using the production lot's average maximum theoretical gravity established from the plant production testing. Bituminous concrete Class 4 and HMA S1 are excluded from the longitudinal joint density requirements.

The Contractor shall extract cores (4 or 6 inch diameter for S0.25, S0.375 and S0.5 mixes, 6 inch diameter for S1.0 mixtures -wet sawed) from sampling locations determined by the Engineer. The Engineer must witness the extraction and labeling of cores, as well as the filling of the core holes. The cores shall be labeled by the Contractor with the project number, lot number, and sub-lot number on the top surface of the core. When labeling the core lot number, include whether the core is from a mat lot or joint lot by using an "M" for a mat core and "J" for a joint core. For example, a core from the first sub-lot of the first mat lot shall be labeled with "Lot M1 – 1". The first number refers to the lot and the second number refers to the sub-lot. Refer to

Figure 4.06-4. The side of the cores shall be labeled with the core lot number and date placed. The project inspector shall fill out a MAT-109 containing the same information to accompany the cores. The Contractor shall deliver the cores and MAT-109 to the Department's Central Testing Lab in a safe manner to ensure no damage occurs to the cores. The Contractor shall use a container approved by the Engineer. In general the container shall consist of an attached lid container made out of plastic capable of being locked shut and tamper proof. The Contractor shall use foam, bubble wrap, or another suitable material to prevent the cores from being damaged during transportation. Once the cores and MAT-109 are in the container the Engineer will secure the lid using a security seal. The security seal's identification number must be documented on the MAT-109. The Central Lab will break the security seal and take possession of the cores upon receipt.

Figure 4.06-4

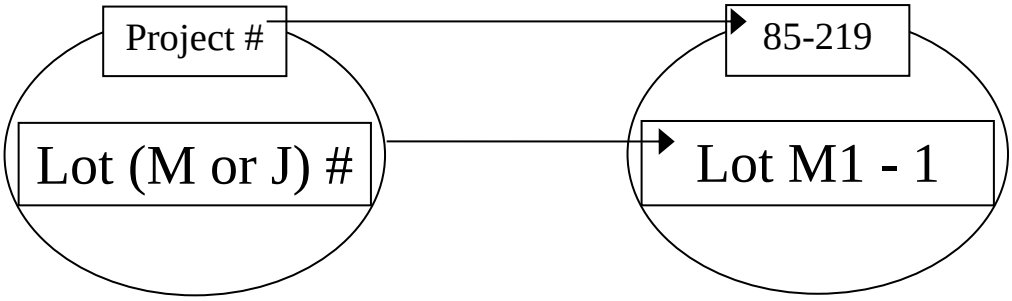

Frequency of sampling is in accordance with the following tables:

TABLE 4.06-4 - TESTING REQUIREMENT FOR BRIDGE DENSITY LOT

Length of Each Structure (Feet)	MAT – No. of Cores	JOINT - No. of cores
≤ 500'	See Table 4.06-5(A or B)	See Table 4.06-5(A or B)
501' – 1500'	3	3
1501' – 2500'	4	4
2501' and greater	5	5

All material placed on structures less than or equal to 500 feet in length shall be included as part of a standard lot as follows:

TABLE 4.06-5A – TESTING REQUIREMENT FOR DENSITY LOTS ≥ 500 TONS

Lot Type	No. of Mat Cores		No. of Joint Cores		Target Lot Size (Tons)
Lot Without Bridge(1)	4		4		2000
Lot With Bridge(s)(1)(2)	4 plus	1 per structure (≤ 300')	4 plus	1 per structure (≤ 300')	2000
		2 per structure (301' – 500')		2 per structure (301' – 500')	

TABLE 4.06-5B – TESTING REQUIREMENT FOR DENSITY LOTS < 500 TONS

Lot Type	No. of Mat Cores	No. of Joint Cores	Lot Size (Tons)
Lot Without Bridge(1)	3	3	1 per lift
Lot With Bridge(s)(1)(2)	3	3	1 per lift

Note (1): The number of "Required Paver Passes for Full Width" shall be used to determine the sub-lot sizes within the lot. The number of paver passes for full width is determined by the contractor.

Note (2): If a non-bridge mat or joint core location randomly falls on a structure, the core is to be obtained on the structure in addition to the core(s) required on the structure.

A density lot will be complete when the full designed paving width of the established lot length has been completed and shall include all longitudinal joints that exist between the curb lines regardless of date(s) paved. Quantity of material placed on structures less than or equal to 500 feet long is inclusive of the standard lot. Prior to paving, the total length of the project to be paved shall be split up into lots that contain approximately 2000 tons each. Areas such as highway ramps may be combined to create one lot. In general, combined areas should be set up to target a 2000 ton lot size. One adjustment will apply for each lot. The tons shall be determined using the yield calculation in Article 4.06.04. The last lot shall be the difference between the total payable tons for the project and the sum of the previous lots.

After the compaction process has been completed, the material shall be allowed to cool sufficiently to allow the cutting and removal of the core without damage. The Contractor shall core to a depth that allows extraction so that the uppermost layer being tested for density will not be affected.

A mat core shall not be taken any closer than one foot from the edge of a paver pass. If a random number locates a core less than one foot from any edge, locate the core so that the sample is one foot from the edge.

Joint cores must be taken so that the center of the core is 5 inches from the visible joint on the hot mat side. Refer to figure 4.06-5.

Figure 4.06-5

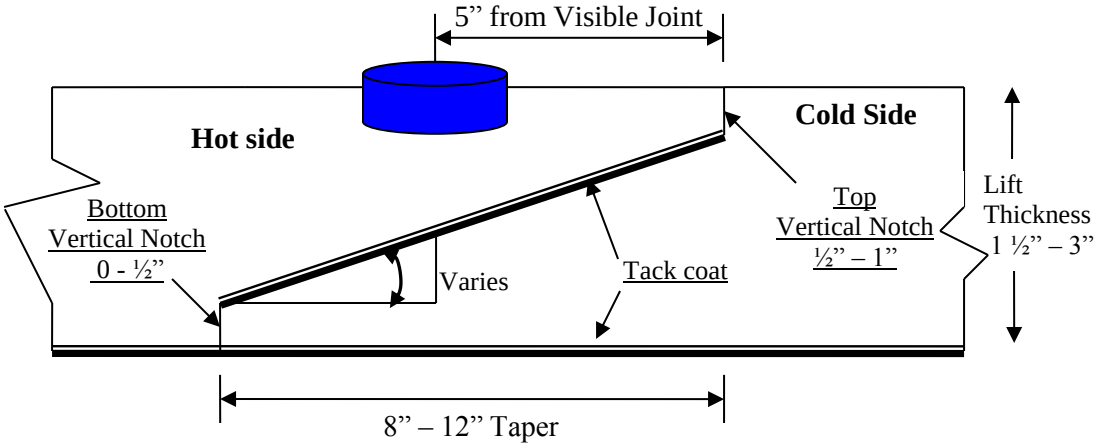

Cores may be obtained daily or weekly. All cores must be cut within 5 calendar days of placement. Any core that is damaged or obviously defective while being obtained will be replaced with a new core from a location within 2 feet measured in a longitudinal direction.

Core holes shall be filled immediately upon core extraction. Prior to being filled, the hole shall be prepared by removing any free water and applying tack coat using a brush or other means to uniformly cover the cut surface. The core hole shall be filled with a mixture containing the same nominal maximum aggregate size and compacted with a hand compactor or other mechanical means to the maximum compaction possible. The bituminous concrete mixture shall be compacted to ⅛ inch above the finished pavement prior to opening the roadway to traffic.

11. Acceptance Inspection, Sampling and Testing: Inspection, sampling, and testing to be used by the Engineer shall be performed at the minimum frequency specified in Section M.04 and stated herein.

Sampling for acceptance shall be established using ASTM D 3665, or a statistically based procedure of random sampling approved by the Engineer.

Plant Material Acceptance: The Contractor shall provide the required acceptance sampling, testing and inspection during all phases of the work in accordance with Section M.04. The Department will perform verification testing on the Contractor’s acceptance test results. Should binder content or air void results exceed the specified tolerances in the Department’s current QA Program for Materials, Acceptance and Assurance Testing Policies and Procedures, the Department will investigate to determine an assignable cause. Contractor’s test results for a subject lot or sub lot may be replaced with verification’s result for the purpose of assessing adjustments. The verification procedure is included in the Department’s current QA Program for Materials.

Density Acceptance: The Engineer will perform all acceptance testing on the cores in accordance with AASHTO T 331(M).

12. Density Dispute Resolution Process: The Contractor and Engineer will work in partnership to avoid potential conflicts and to resolve any differences that may arise during quality control or acceptance testing for density. Both parties will review their sampling and testing procedures and results and share their findings. If the Contractor disputes the Engineer's test results, the Contractor must submit in writing a request to initiate the Dispute Resolution Process within 10 calendar days of the notification of the test results. No request for dispute resolution will be allowed unless the Contractor provides quality control results within the timeframe described in Sub article 4.06.03-9 supporting its position. Should the dispute not be resolved through evaluation of existing testing data or procedures, the Engineer may authorize the Contractor to obtain a new set of core samples per disputed lot. The core samples must be extracted no later than 30 calendar days from the date of Engineer's authorization. The number and type (mat, joint, or structure) of the cores taken for dispute resolution must reflect the number and type of the cores taken for acceptance. The location of each core shall be 36" from the original acceptance core location forward along a line parallel to the baseline that results in the same type (mat, joint, or structure) of core. All such core samples shall be extracted and filled using the procedure outlined in Article 4.06.03. The results from the dispute resolution cores shall be added to the results from the acceptance cores and averaged for determining the final in-place density value.

13. Corrective Work Procedures: Any portion of the completed pavement that does not meet the requirements of the specification shall be corrected at the expense of the Contractor. Any corrective courses placed as the final wearing surface shall not be less than 1½ inches in thickness after compaction.

If pavement placed by the Contractor does not meet the specifications, and the Engineer requires its replacement or correction, the Contractor shall:

a) Propose a corrective procedure to the Engineer for review and approval prior to any corrective work commencing. The proposal shall include:
   - Limits of pavement to be replaced or corrected, indicating stationing or other landmarks that are readily distinguishable.
   - Proposed work schedule.
   - Construction method and sequence of operations.
   - Methods of maintenance and protection of traffic.
   - Material sources.
   - Names and telephone numbers of supervising personnel.

b) Perform all corrective work in accordance with the Contract and the approved corrective procedure.

14. Protection of the Work: The Contractor shall protect all sections of the newly finished pavement from damage that may occur as a result of the Contractor's operations for the duration of the Project. Prior to the Engineer's authorization to open the pavement to traffic, the Contractor is responsible to protect the pavement from damage.

15. Cut Bituminous Concrete Pavement: Work under this item shall consist of making a straight-line cut in the bituminous concrete pavement to the lines delineated on the plans or as directed by the Engineer. The cut shall provide a straight, clean, vertical face with no cracking, tearing or breakage along the cut edge.

4.06.04—Method of Measurement:

1. Bituminous Concrete Class ( ) or HMA S* or PMA S*: The quantity of bituminous concrete measured for payment will be determined by the documented net weight in tons accepted by the Engineer in accordance with this specification and Section M.04.

2. Adjustments: Adjustments may be applied to bituminous concrete quantities and will be measured for payment using the following formulas:

Yield Factor for Adjustment Calculation = 0.0575 Tons/SY/inch

Actual Area = [(Measured Length (ft)) x (Avg. of width measurements (ft))]

Actual Thickness (t) = Total tons delivered / [Actual Area (SY) x 0.0575 Tons/SY/inch]

a) Area: If the average width exceeds the allowable tolerance, an adjustment will be made using the following formula. The tolerance for width is equal to the specified thickness (in.) of the lift being placed.

Tons Adjusted for Area (T_A) = [(L x W_{adj})/9] x (t) x 0.0575 Tons/SY/inch = (-) Tons

Where: L = Length (ft)
(t) = Actual thickness (inches)
W_{adj} = (Designed width (ft) + tolerance /12) - Measured Width)

b) Thickness: If the actual thickness is less than the allowable tolerance, the Contractor shall submit a repair procedure to the Engineer for approval. If the actual thickness exceeds the allowable tolerance, an adjustment will be made using the following formula:

Tons Adjusted for Thickness (T_T) = A x t_{adj} x 0.0575 = (-) Tons

Where: A = Area = {[L x (Designed width + tolerance (lift thickness)/12)] / 9}
t_{adj} = Adjusted thickness = [(Dt + tolerance) - Actual thickness]
Dt = Designed thickness (inches)

c) Weight: If the quantity of bituminous concrete representing the mixture delivered to the project is in excess of the allowable gross vehicle weight (GVW) for each vehicle, an adjustment will be made using the following formula:

Tons Adjusted for Weight (T_W) = GVW – DGW= (-) Tons

Where: DGW = Delivered gross weight as shown on the delivery ticket or measured on a certified scale.

d) Mixture Adjustment: If the quantity of bituminous concrete representing the produced mixture exceeds one or more of the production tolerances for Marshall (Table 4.06-6) or Superpave mix designs (Table 4.06-7 and 4.06-8) , an adjustment will be made using the following formulas. The Department's Division of Material Testing will calculate the daily adjustment values for T_{MD} and T_{SD}.

(1) *Marshall Design*- The tolerances shown in Table 4.06-6 for gradation and binder content will be used to determine whether a mixture adjustment will apply. If the mixture does not meet the requirements of Section M.04, an adjustment will be computed using the following formula:

Tons Adjusted for Marshall Design (T_{MD}) = M x 0.10

Where: M= Tons of bituminous concrete mixture exceeding the tolerances in Table 4.06-5.

TABLE 4.06-6
TOLERANCES FOR CONSECUTIVE TESTS (MARSHALL)

Classes	Criteria	% Tolerances (+/-)
-	Binder	0.4
1, 2, 4, 5, 5A & 5B	#200	2.0
1, 2, 4	#50	4
1, 2, 5, 5A & 5B	#30	5
1, 2, 4, 5, 5A & 5B	#8	6
1, 2, 4, 5, 5A & 5B	#4	7
1, 2, 4, 5, 5A & 5B	⅜ & ½ inch	8

(2) *Superpave Design*- The adjustment values in Table 4.06-7 and 4.06-8 shall be calculated for each sub lot based on the Air Void and Liquid Binder Content test results for that sub lot. The total adjustment for each day's production (lot) will be computed using tables and the following formulas:

Tons Adjusted for Superpave Design (T_{SD}) = $[(AdjAV_t + AdjPB_t) / 100]$ X Tons

Percent Adjustment for Air Voids = $AdjAV_t = [AdjAV_1 + AdjAV_2 + AdjAV_i + \ldots + AdjAV_n)] /n$

Where: $AdjAV_t$ = Total percent air void adjustment value for the lot
$AdjAV_i$ = Adjustment value from Table 4.06-7 resulting from each sub lot or the average of the adjustment values resulting from multiple tests within a sub lot, as approved by the Engineer.
n = number of sub lots based on Table M.04.03-1

TABLE 4.06-7
ADJUSTMENT VALUES FOR AIR VOIDS (SUPERPAVE)

Adjustment Value ($AdjAV_i$) (%)	**S0.25, S0.375, S0.5, S1 Air Voids (AV)**
+2.5	3.8 - 4.2
+3.125*(AV-3)	3.0 - 3.7
-3.125*(AV-5)	4.3 – 5.0
20*(AV-3)	2.3 – 2.9
-20*(AV-5)	5.1 – 5.7
-20.0	$\leq$ 2.2 or $\geq$ 5.8

Percent Adjustment for Liquid Binder = $AdjPB_t = [(AdjPB_1 + AdjPB_2 + AdjPB_i + \ldots + AdjPB_n)] / n$

Where: $AdjPB_t$= Total percent liquid binder adjustment value for the lot
$AdjPB_i$ = Adjustment value from Table 4.06-7 resulting from each sub lot
n = number of binder tests in a production lot

TABLE 4.06-8

Adjustment Value ($AdjAV_i$) (%)	**S0.25, S0.375, S0.5, S1 Pb (refer to Table M.04.03-5)**
0.0	Equal to or above the min. liquid content
- 10.0	Below the min. liquid content

e) Density Adjustment: The quantity of bituminous concrete measured for payment for a specified lift of pavement 1½ inches or greater may be adjusted for density. Separate density adjustments will be made for each lot and will not be combined to establish one density adjustment. If either the Mat or Joint adjustment value is "remove and replace", the density lot shall be removed and replaced (curb to curb).

Tons Adjusted for Density (T_D) = $[\{(PA_M \times .50) + (PA_J \times .50)\} / 100]$ X Density Lot Tons

Where: T_D = Total tons adjusted for density for each lot
PA_M = Mat density percent adjustment from Table 4.06-9
PA_J = Joint density percent adjustment from Table 4.06-10

TABLE 4.06-9
ADJUSTMENT VALUES FOR PAVEMENT MAT DENSITY

Average Core Result Percent Mat Density	Percent Adjustment (Bridge and Non-Bridge) (1,2)
97.1 - 100	-1.667*(ACRPD-98.5)
94.5 – 97.0	+2.5
93.5 – 94.4	+2.5*(ACRPD-93.5)
92.0 – 93.4	0
90.0 – 91.9	-5*(92-ACRPD)
88.0 – 89.9	-10*(91-ACRPD)
87.0 – 87.9	-30
86.9 or less	Remove and Replace (curb to curb)

TABLE 4.06-10
ADJUSTMENT VALUES FOR PAVEMENT JOINT DENSITY

Average Core Result Percent Joint Density	Percent Adjustment (Bridge and Non-Bridge) (1,2)
97.1 – 100	-1.667*(ACRPD-98.5)
93.5 – 97.0	+2.5
92.0 – 93.4	+1.667*(ACRPD-92)
91.0 – 91.9	0
89.0 – 90.9	-7.5*(91-ACRPD)
88.0 – 88.9	-15*(90-ACRPD)
87.0 – 87.9	-30
86.9 or less	Remove and Replace (curb to curb)

(1) ACRPD = Average Core Result Percent Density
(2) All Percent Adjustments to be rounded to the second decimal place. For example, 1.667 is to be rounded to 1.67.

3. Transitions for Roadway Surface: The installation of permanent transitions shall be measured under the appropriate item used in the formation of the transition.

The quantity of material used for the installation of temporary transitions shall be measured for payment under the appropriate item used in the formation of the transition. The installation and

removal of a bond breaker, and the removal and disposal of any temporary transition formed by milling or with bituminous concrete pavement is not measured for payment.

4. Cut Bituminous Concrete Pavement: The quantity of bituminous concrete pavement cut will be measured in accordance with Article 2.02.04.

5. Material for Tack Coat: The quantity of tack coat will be measured for payment by the number of gallons furnished and applied on the Project and approved by the Engineer. No tack coat material shall be included that is placed in excess of the tolerance described in Article 4.06.03.

Method of Measurement:

a. Container Method- Material furnished in a container will be measured to the nearest ½ gallon. The volume will be determined by either measuring the volume in the original container by a method approved by the Engineer or using a separate graduated container capable of measuring the volume to the nearest ½ gallon. The container in which the material is furnished must include the description of material, including lot number or batch number and manufacturer or product source.

b. Truck Method- The Engineer will establish a weight per gallon of the bituminous material based on the specific gravity at 60ºF for the material furnished. The number of gallons furnished will be determined by weighing the material on scales furnished by and at the expense of the Contractor.

6. Material Transfer Vehicle (MTV) **- The furnishing and use of a MTV will be measured separately for payment based on the actual number of surface course tons delivered to a paver using the MTV.**

4.06.05—Basis of Payment:

1. Bituminous Concrete Class ( ), HMA S* or PMA S*: The furnishing and placing of bituminous concrete will be paid for at the Contract unit price per ton for "Bituminous Concrete, Class ( )" or “HMA S*” or “PMA S*”.

- All costs associated with providing illumination of the work area are included in the general cost of the work.
- All costs associated with constructing longitudinal joints are included in the general cost of the work.
- All costs associated with obtaining cores for core correlation and dispute resolution are included in the general cost of the work.

2. Bituminous Concrete Adjustment Costs: The adjustment will be calculated using the formulas shown below if all of the measured adjustments in Article 4.06.04 do not equal zero. A payment will be made for a positive adjustment. A deduction from monies due the Contractor will be made for a negative adjustment.

Production Lot: $[T_T + T_A + T_W + (T_{MD} \text{ or } T_{SD})]$ x Unit Price = Est. (P)

Density Lot: T_D X Unit Price = Est. (D)

Where: Unit Price = Contract unit price per ton per type of mixture
T_* = Total tons of each adjustment calculated in Article 4.06.04

Est. ( ) = Pay Unit represented in dollars representing incentive or disincentive.

The estimated cost figure if included in the bid proposal or estimate is not to be altered in any manner by the bidder. If the bidder should alter the amount shown, the altered figure will be disregarded and the original cost figure will be used to determine the amount of the bid for the Contract.

3. Transitions for Roadway Surface: The installation of permanent transitions shall be paid under the appropriate item used in the formation of the transition. The quantity of material used for the installation of temporary transitions shall be paid under the appropriate pay item used in the formation of the transition. The installation and removal of a bond breaker, and the removal and disposal of any temporary transition formed by milling or with bituminous concrete pavement is included in the general cost of the work.

4. The cutting of bituminous concrete pavement will be paid in accordance with Article 2.02.05.

5. Material for tack coat will be paid for at the Contract unit price per gallon for "Material for Tack Coat".

6. The Material Transfer Vehicle (MTV) will be paid at the Contract unit price per ton for a "Material Transfer Vehicle".

Pay Item*	Pay Unit*
Bituminous Concrete, Class ( )	ton
HMA S*	ton
PMA S*	ton
Bituminous Concrete Adjustment Cost	est.
Material for Tack Coat	gal.
Material Transfer Vehicle	ton

*For contracts administered by the State of Connecticut, Department of Administrative Services, the pay items and pay units are as shown in contract award price schedule.

SECTION 9.21 CONCRETE SIDEWALKS AND RAMPS

Section 9.21 is being deleted in its entirety and replaced with the following:

9.21.01 – Description
9.21.02 – Materials
9.21.03 – Construction Methods
9.21.04 – Method of Measurement
9.21.05 – Basis of Payment

9.21.01—Description: This item shall consist of concrete sidewalks and ramps constructed on a gravel or reclaimed miscellaneous aggregate base course in the locations and to the dimensions and details shown on the plans or as ordered and in accordance with these specifications.

9.21.02—Materials: Materials for this work shall conform to the requirements of Article M.03.01 for Class "F" Concrete.

Gravel or reclaimed miscellaneous aggregate for base shall conform to Article M.02.01 for granular fill.

Detectable warning strips shall be a prefabricated detectable warning tile chosen from the Department's Qualified Products List for retrofit and/or cast in place applications.

9.21.03—Construction Methods:

1. **Excavation:** Excavation, including removal of any existing sidewalk (bituminous or concrete) and curbing, shall be made to the required depths below the finished grade, as shown on the plans or as directed. All soft and yielding material shall be removed and replaced with suitable material.

   When connecting new concrete sidewalk to a section of existing concrete sidewalk, the connection point shall be at the nearest joint in the existing sidewalk.

   The Contractor shall establish the limits required to achieve grades for each ramp prior to removal of existing sidewalk and ramps. The Contractor shall document and notify the Engineer of any control points that may conflict with the design grades or configuration of ramps shown on the plans. Control points can be but are not limited to ROW, utility poles, drainage structures, buildings, fences, walls or other features found near the proposed ramp. When control points are encountered within the limits of the ramp, the Engineer will determine if an alternative ramp type is required or the ramp is to be constructed as shown on the plans.
2. **Gravel or Reclaimed Miscellaneous Aggregate Base:** The gravel or reclaimed miscellaneous aggregate base shall be placed in layers not over 6 inches in depth and to such a depth that after compaction it shall be at the specified depth below the finished grade of the walk. The base shall be wetted and rolled or tamped after the spreading of each layer.
3. **Forms:** Forms shall be of metal or wood, straight, free from warp and of sufficient strength to resist springing from the pressure of the concrete. If made of wood, they shall be of 2-inch surfaced plank except that at sharp curves thinner material may be used. If made of metal, they shall be of an approved section and have a flat surface on the top. Forms shall be of a depth equal to the depth of the sidewalk. Forms shall be securely staked, braced and held firmly to the required line and grade and shall be sufficiently tight to prevent leakage of mortar. All forms shall be cleaned and oiled or wetted before concrete is placed against them. Sheet metal templates 1/8 inch in thickness, of the full depth and width of the walk, shall be spaced at intervals of 12 feet or as directed. If the concrete is placed in alternate sections, these templates shall remain in place until concrete has been placed on both sides of the template. As soon as the concrete has obtained its initial set, the templates shall be removed.
4. **Concrete:** The concrete shall be proportioned, mixed, placed, etc., in accordance with the provisions of Section 6.01 for Class "F" Concrete. Concrete shall be cured in accordance with the provisions of Article 4.01.03 for Concrete Pavement.
5. **Finishing:** The surface of the concrete shall be finished with a wood float or by other approved means. The outside edges of the slab and all joints shall be edged with a 1/4-inch radius edging tool. Each slab shall be divided into two or more sections by forming dummy joints with a jointing tool as directed.

6. Backfilling and Removal of Surplus Material: The sides of the sidewalk shall be backfilled with suitable material thoroughly compacted and finished flush with the top of the sidewalk. All surplus material shall be removed and the site left in a neat and presentable condition to the satisfaction of the Engineer.

7. Detectable Warning Strip: The detectable warning strip for new construction shall be set directly in poured concrete and each tile shall be weighted down to prevent the tile from floating after placement in wet concrete in accordance with curing procedures. Install detectable warning strip, according to the plans and the Manufacturer's specifications, or as directed by the Engineer.

The detectable warning strip for retrofit construction shall be installed according to the plans in the direction of pedestrian route and contained wholly within painted crosswalk when present. Its installation shall conform to all Manufactures requirements.

9.21.04—Method of Measurement: This work will be measured for payment as follows:

1. Concrete Sidewalk or Sidewalk Ramp: This work will be measured by the actual number of square feet of completed and accepted concrete sidewalk or ramp.

2. **Excavation:** Excavation below the finished grade of the sidewalk or ramp, backfilling, and disposal of surplus material will not be measured for payment, but the cost shall be included in the price bid for the sidewalk or ramp. Excavation above the finished grade of the sidewalk or ramp will be measured and paid for in accordance with Section 2.02

3. Gravel or Reclaimed Miscellaneous Aggregate Base: This work will not be measured for payment, but the cost shall be considered as included in the price bid for the sidewalk or ramp.

4. Detectable Warning Strip: For new construction (cast in place), the detectable warning strip will be measured for payment by the actual number of each ramp where a detectable warning strip has been installed and accepted regardless of the number of tiles installed.

5. Retrofit Detectable Warning Strip: For retrofit construction (surface applied), the detectable warning strip will be measured for payment by the actual number of each ramp where a detectable warning strip has been installed and accepted regardless of the number of tiles installed.

6. Construction Staking: The establishment of control points and limits of grading will be measured in accordance with the item Construction Staking.

9.21.05—Basis of Payment: Construction of a concrete sidewalk or ramp will be paid for at the contract unit price per square foot for "Concrete Sidewalk," or "Concrete Sidewalk Ramp" complete in place, which price shall include all excavation as specified above, backfill, disposal of surplus material, curb removal and any monolithic or separately cast sidewalk curb when required for the sidewalk ramp as shown on the plans, gravel or reclaimed miscellaneous aggregate base, equipment, tools, materials and labor incidental thereto.

A new detectable warning strip will be paid for at the contract unit price for each ramp where the detectable warning strip has been installed complete in place. This price shall include all tiles, materials, equipment, tools and labor incidental thereto.

Retrofitting the existing concrete sidewalk with a detectable warning strip will be paid for at the contract unit price for each ramp where the retrofit detectable warning strip has been installed complete in place. This price will include all tiles, saw cutting concrete, adhesive, drilling holes for fasteners, materials, equipment, tools and labor incidental there to.

The establishment of control points and limits of grading will be paid for in accordance with the item Construction Staking.

Pay Item	Pay Unit
Concrete Sidewalk	s.f.
Concrete Sidewalk Ramp	s.f.
Detectable Warning Strip	Each
Retrofit Detectable Warning Strip	Each

SECTION 12.00 – GENERAL CLAUSES FOR HIGHWAY SIGNING

Description:
Work under this item shall conform to the requirements of Section 12.00 supplemented as follows:

12.00.06 – Data Labels:
For the purpose of developing and maintaining a highway sign inventory and for the purpose of sampling and testing reflective sheeting, the Contractor shall affix a Data Label(s) to the back of each sign face-extruded aluminum sign and each sign face-sheet aluminum sign in the vicinity of the lower left hand corner or quadrant. Data Labels shall be 2 (two) separate 5 (five) inch by 3 (three) inch (125mm by 75mm), non-reflective weatherproof films with black copy on a yellow background having a pressure sensitive adhesive backing.

A "Fabrication" Data Label is to include information about the sign fabricator, date of fabrication and the sheeting manufacturer - type. An "Installation" Data Label is to include The State Project Number or Maintenance Permit Number that installed the sign and date of installation.

The cost of the data labels coded and in place on the sign shall be included in the unit cost of the respective sign material. Payment for the respective quantities of each sign face-extruded aluminum sign and each sign face-sheet aluminum sign may be withheld until all Data Label(s) have been installed to the satisfaction of the Engineer.

The Data Label designs, with additional notes relative to design requirements are attached herewith.

DATA LABELS

NON REFLECTIVE, WEATHERPROOF FILM
BLACK COPY, YELLOW BACKGROUND

CONN DOT
SIGN FACE DATA LABEL

Fabricator: (Insert NAME or State)
Sheeting Manufacturer - Type
(Insert NAME - TYPE)

Date Fabricated - Month / Year

J	F	M	A	M	J	J	A	S	O	N	D
12	13	14	15	16	17	18	19	20	21	22	23

CONN DOT
SIGN FACE DATA LABEL

Installed By:
Project No.: (Insert 000-0000 or State)
Permit No.: (Insert D_-000000)

Date Installed - Month / Year

J	F	M	A	M	J	J	A	S	O	N	D
12	13	14	15	16	17	18	19	20	21	22	23

Data Labels To Be 5 Inch By 3 Inch Each (125mm x 75mm) With Face Designs As Shown Above.

All Copy Ink Must Be Durable And Not Fade, Discolor, Or Smudge.

All Variable Legends To Be Included At Label Fabrication.

Only One "Installed By" Permit Or Project Number Should Be Provided.

Sign Fabrication And / Or Installation By State Forces, Insert "State."
The Month And Year Of Fabrication And Installation May Be Punched Or Marked Out

The Back Of The Data Label Must Contain A Pre-coated Pressure-Sensitive Adhesive Covered By A Removable Liner.
At Application, The Liner Must Be removable Without Soaking In Water Or Other Solvents.
The Adhesive Must Form A Durable Bond To Surfaces That Are Smooth, Clean, Corrosion-Free And Weather Resistant.

Completed Data Labels Must Not Discolor, Crack, Craze, Blister, Delaminate, Peel, Chalk, Or Lose Adhesion When Subjected To Temperatures From -30 Degrees to 200 Degrees Fahrenheit.

SECTION 12.08 – SIGN FACE-SHEET ALUMINUM

Work under this item shall conform to the requirements of Section 12.08 amended as follows:

General: Delete all references to parapet mounted sign supports.

Article M.18.15 – Sign Mounting Bolts: *Replace with the following*:

Bolts used for sign mounting shall be stainless steel and conform to ASTM F593, Group 1 or 2 (Alloy Types 304 or 316). Locking nuts shall be stainless steel and shall conform to ASTM F594 (Alloy Types 304 or 316). Washers shall also be stainless steel and shall conform to ASTM A240 (Alloy Types 304 or 316).

SECTION M.04 BITUMINOUS CONCRETE

Section M.04 is being deleted in its entirety and replaced with the following:

M.04.01—Bituminous Concrete Materials and Facilities
M.04.02—Mix Design and Job Mix Formula (JMF)
M.04.03—Production Requirements

M.04.01—Bituminous Concrete Materials and Facilities: Each source of material, and facility or plant used to produce and test bituminous concrete must be qualified on an annual basis by the Engineer. Test Procedures and Specifications referenced herein are in accordance with the latest AASHTO and ASTM Standard Test Procedures and Specifications. Such references when noted with an (M) have been modified by the Engineer and are detailed in Table M.04.03-6.

The Contractor shall submit to the Engineer all sources of coarse aggregate, fine aggregate, mineral filler, PG binder, and if applicable any additives such as but not limited to anti-strip, warm mix, and polymer modifiers. The Contractor shall submit a Material Safety Data Sheet (MSDS) for each grade of binder, and additive to be used on the Project. The Contractor shall not change any material sources without prior approval of the Engineer.

An adequate quantity of each size aggregate, mineral filler, bitumen, and additives, shall be maintained at the bituminous concrete plant site at all times while the plant is in operation to ensure that the plant can consistently produce bituminous concrete mixtures that meet the job mix formula (JMF) as specified in Article M.04.02. The quantity of such material shall be reviewed by the Engineer on an individual plant basis and is dependent upon the plant's daily production capacity. A total quantity of any material on site that amounts to less than one day's production capacity may be cause for the job mix formula to be rejected.

1. Coarse Aggregate:

a. Requirements: The coarse aggregate shall consist of clean, hard, tough, durable fragments of crushed stone or crushed gravel of uniform quality. Aggregates from multiple sources of supply must not be mixed or stored in the same stockpile.

b. Basis of Approval: The request for approval of the source of supply shall include a washed sieve analysis in accordance with AASHTO T 27. The Gsa, Gsb, and Pw_a shall be determined in accordance with AASHTO T 85. The coarse aggregate must not contain more than 1% crusher dust, sand, soft disintegrated pieces, mud, dirt, organic and other injurious materials. When tested for abrasion using AASHTO T 96, the aggregate loss must not exceed 40%. When tested for soundness using AASHTO T 104 with a magnesium sulfate solution, the coarse aggregate must not have a loss exceeding 10% at the end of 5 cycles.

For all bituminous mixtures, materials shall also meet the coarse aggregate angularity criteria as specified in Tables M.04.02-2 thru M.04.02-4 for blended aggregates retained

on the #4 sieve when tested according to ASTM D 5821. The amount of aggregate particles of the coarse aggregate blend retained on the #4 sieve that are flat or elongated shall be determined in accordance with ASTM D 4791 and shall not exceed 10% by weight when tested to a 3:1 ratio, as shown in Tables M.04.02-2 thru M.04.02-4.

2. Fine Aggregate:

Requirements: The fine aggregate from each source quarry/pit deposit shall consist of clean, hard, tough, rough-surfaced and angular grains of natural sand; manufactured sand prepared from washed stone screenings; stone screenings, slag or gravel; or combinations thereof, after mechanical screening or manufactured by a process approved by the Engineer. The Contractor is prohibited from mixing two or more sources of fine aggregate on the ground for the purpose of feeding into a plant.

a. All fine aggregate shall meet the listed criteria shown in items #1 thru #7 of Table M.04.01-1. Table M.04.01-1 indicates the quality tests and criteria required for all fine aggregate sources. Individually approved sources of supply shall not be mixed or stored in the same stockpile. The fine aggregates must be free from injurious amounts of clay, loam, and other deleterious materials.

For Superpave mixtures, in addition to the above requirements, the fine aggregate angularity shall be determined by testing the materials passing the #8 sieve in accordance with AASHTO T 304, Method A. Qualification shall be based on the criteria listed in Tables M.04.02-2 thru M.04.02-4. The fine aggregate shall also be tested for clay content as a percentage contained in materials finer than the #8 sieve in accordance with AASHTO T 176.

Table M.04.01-1: Fine Aggregate Criteria by Pit/Quarry Source

Item	Title	AASHTO Protocol(s)	Criteria
1	Grading	T 27 & T 11	100% Passing 3/8 inch 95% Passing the #4 min.
2	Absorption	T 84	3% maximum
3	Plasticity limits	T 90	0 or not detectable
4	L.A. Wear	T 96	50% maximum(fine agg. particle size # 8 and above)
5	Soundness by Magnesium Sulfate	T 104	20% maximum @ 5 cycles
6	Clay Lumps and Friable Particles	T 112	3% maximum
7	Deleterious Material	As determined by the Engineer	Organic or inorganic calcite, hematite, shale, clay or clay lumps, friable materials, coal-lignite, shells, loam, mica, clinkers, or organic matter (wood, etc). -Shall not contain more than 3% by mass of any individual listed constituent and not more than 5% by mass in total of all listed constituents.
8	Petrographic Analysis	ASTM C 295	Terms defined in Section M.04.01-2c.

b. Basis of Approval: A Quality Control Plan for Fine Aggregate (QCPFA) provided by the Contractor shall be submitted for review and approval for each new source documenting how conformance to Items 1 through 7 as shown in Table M.04.01-1 is monitored. The QCPFA must be resubmitted any time the process, location or manner of how the fine aggregate (FA) is manufactured changes, or as requested by the Engineer. The QCPFA must include the locations and manufacturing processing methods. The QCPFA for any source may be suspended by the Engineer due to the production of inconsistent mixtures.

The Contractor shall submit all test results to the Engineer for review. The Contractor shall also include a washed sieve analysis in accordance with AASHTO T 27/T 11. Any fine aggregate component or final combined product shall have 100% passing the 3/8 inch sieve and a minimum of 95% passing the # 4. The Gsa, Gsb, and Pw_a shall be determined in accordance with AASHTO T 84.

The Contractor will be notified by the Engineer if any qualified source of supply fails any portion of Table M.04.01-1. One retest will be allowed for the Contractor to make corrections and/or changes to the process. If, upon retest, the material does not meet the requirements of items 1-7, additional testing will be required in accordance with item 8.

c. The Contractor may provide a Petrographic analysis of the material performed by a third party acceptable to the Engineer at its' own expense. The Contractor shall submit the results of the analysis with recommended changes to the manufacturing process to the Engineer. The Contractor shall submit fine aggregate samples for testing by the Engineer after the recommended changes have been made.

The Contractor may request the use of such fine aggregate on select project(s) for certain applications of bituminous concrete pavement. Such material will be monitored for a period no less than 48 months, at no cost to the State. Terms of any evaluation and suitable application will be determined by the Engineer.

3. Mineral Filler:

a. Requirements: Mineral filler shall consist of finely divided mineral matter such as rock dust, including limestone dust, slag dust, hydrated lime, hydraulic cement, or other accepted mineral matter. At the time of use it shall be freely flowing and devoid of agglomerations. Mineral filler shall be introduced and controlled at all times during production in a manner acceptable to the Engineer.

b. Basis of Approval: The request for approval of the source of supply shall include the location, manufacturing process, handling and storage methods for the material. Mineral filler shall conform to the requirements of AASHTO M-17

4. Liquid Bituminous Materials:

a. General:

i Liquid PG binders shall be uniformly mixed and blended and be free of contaminants such as fuel oils and other solvents. Binders shall be properly heated and stored to prevent damage or separation.

ii. The blending at mixing plants of PG binder from different suppliers is strictly prohibited. Contractors who blend PG binders will be classified as a supplier and will be required to certify the binder in accordance with AASHTO R-26(M). The binder shall meet the requirements of AASHTO M-320(M) and AASHTO R-29(M). The Contractor shall submit a Certified Test Report and bill of lading representing each delivery in accordance with AASHTO R-26(M). The Certified Test Report must also indicate the binder specific gravity at 77ºF; rotational viscosity at 275ºF and 329ºF and the mixing and compaction viscosity-temperature chart for each shipment.

iii. The Contractor shall submit the name(s) of personnel responsible for receipt, inspection, and record keeping of PG binder materials. Contractor plant personnel shall document specific storage tank(s) where binder will be transferred and stored until used, and provide binder samples to the Engineer upon request. The person(s) shall assure that each shipment (tanker truck) is accompanied by a statement certifying that the transport vehicle was inspected before loading and was found acceptable for the material shipped and that the binder will be free of contamination from any residual material, along with two (2) copies of the bill of lading.

iv. Basis of Approval: The request for approval of the source of supply shall list the location where the material will be manufactured, and the handling and storage methods, along with necessary certification in accordance with AASHTO R-26(M). Only suppliers/refineries that have an approved "Quality Control Plan for Performance Graded Binders" formatted in accordance with AASHTO R-26(M) will be allowed to supply PG binders to Department projects.

b. Neat Performance Grade (PG) Binder:

i. PG binder shall be classified by the supplier as a "Neat" binder for each lot and be so labeled on each bill of lading. Neat PG binders shall be free from modification with: fillers, extenders, reinforcing agents, adhesion promoters, thermoplastic polymers, acid modification and other additives, and shall indicate such information on each bill of lading and certified test report.

ii. The asphalt binder shall be Performance Grade PG 64-22.

c. Modified Performance Grade (PG) Binder

Unless otherwise noted, the asphalt binder shall be Performance Grade PG 76-22 asphalt modified with a Styrene-Butadiene-Styrene (SBS) polymer. The polymer modifier shall be added at either the refinery or terminal and delivered to the bituminous concrete production facility as homogenous blend. The stability of the modified binder shall be verified in accordance with ASTM D7173 using the Dynamic Shear Rheometer (DSR). The DSR G*/sin(δ) results from the top and bottom sections of the ASTM D7173 test shall not differ by more than 10%. The results of ASTM D7173 shall be included on the Certified Test Report. The binder shall meet the requirements of AASHTO M-320(M) and AASHTO R-29(M).

d. Warm Mix Additive or Technology:

i. The warm mix additive or technology must be listed on the NEAUPG Qualified Warm Mix Asphalt (WMA) Technologies List at the time of bid, which may be accessed online at http://www.neaupg.uconn.edu/wma_info.html.

ii. The warm mix additive shall be blended with the asphalt binder in accordance with the manufacturer's recommendations.

iii. The blended binder shall meet the requirements of AASHTO M-320(M) and AASHTO R-29(M) for the specified binder grade. The Contractor shall submit a Certified Test Report showing the results of the testing demonstrating the binder grade. In addition, it must include the grade of the virgin binder, the brand name of the warm mix additive, the manufacturer's suggested rate for the WMA additive, the water injection rate (when applicable) and the WMA Technology manufacturer's recommended mixing and compaction temperature ranges.

iv. Cut-backs (medium cure type);

i. Requirements: The liquid petroleum materials shall be produced by fluxing an asphalt base with appropriate petroleum distillates to produce the grade specified.

ii. Basis of Approval: The request for approval of the source of supply shall be submitted at least seven days prior to its use listing the location where the materials will be produced, and manufacturing, processing, handling and storage methods. The Contractor shall submit a Certified Test Report in accordance with Section 1.06 and a Material Safety Data Sheet (MSDS) for the grade to be used on the Project. The liquid asphalt shall be MC-250 conforming to AASHTO M-82.

e. Emulsions

i. Requirements: The emulsified asphalt shall be homogeneous and not be used if exposed to freezing temperatures.

ii. Basis of Approval**:** The request for approval of the source of supply must include the location where the materials will be produced, and manufacturing, processing, handling and storage methods.

1. Emulsified asphalts shall conform to the requirements of AASHTO M-140. Materials used for tack coat shall not be diluted and meet grade RS-1. When ambient temperatures are 80˚F and rising, grade SS-1 or SS-lh may be substituted if accepted by the Engineer. Each shipment shall be accompanied with a Certified Test Report listing Saybolt viscosity, residue by evaporation, penetration of residue, and weight per gallon.

2. Cationic emulsified asphalt shall conform to the requirements of AASHTO M-208(M). Materials used for tack coat shall not be diluted and meet grade CRS-1. The settlement and demulsibility test will not be performed unless deemed necessary by the Engineer. When ambient temperatures are 80˚F and rising, grade CSS-1 or CSS-lh may be substituted if accepted by the Engineer. Each shipment shall be accompanied with a Certified Test Report listing Saybolt viscosity, residue by evaporation, penetration of residue, and weight per gallon.

5. Reclaimed Asphalt Pavement (RAP):

a. Requirements: RAP shall consist of asphalt pavement constructed with asphalt and aggregate reclaimed by cold milling or other removal techniques approved by the Engineer. For bituminous concrete mixtures containing RAP, the Contractor shall submit a JMF in accordance with Article M.04.02 to the Engineer for review.

b. Basis of Approval: The RAP material will be accepted on the basis of one of the following criteria:

i. When the source of all RAP material is from pavements previously constructed on Department projects, the Contractor shall provide a materials certificate listing the detailed locations and lengths of those pavements and that the RAP is only from those locations listed.

ii. When the RAP material source or quality is not known, the Contractor shall test the material and provide the following information along with a request for approval to the Engineer at least 30 calendar days prior to the start of the paving operation. The request shall include a material certificate stating that the RAP consists of aggregates that meet the specification requirements of sub articles M.04.01-1 through 3 and that the binder in the RAP is substantially free of solvents, tars and other contaminants. The Contractor is prohibited from using unapproved material on Department projects

and shall take necessary action to prevent contamination of approved RAP stockpiles. Stockpiles of unapproved material shall remain separate from all other RAP materials at all times. The request for approval shall include the following:

1. A 50-pound sample of the RAP to be incorporated into the recycled mixture.
2. A 25-pound sample of the extracted aggregate from the RAP.
3. A statement that RAP material has been crushed to 100% passing the ½ inch sieve and remains free from contaminants such as joint compound, wood, plastic, and metals.

6. Crushed Recycled Container Glass (CRCG):

a. Requirements: The Contractor may propose to use clean and environmentally-acceptable CRCG in an amount not greater than 5% by weight of total aggregate.

b. Basis of Approval: The Contractor shall submit to the Engineer a request to use CRCG. The request shall state that the CRCG contains no more than 1% by weight of contaminants such as paper, plastic and metal and conform to the following gradation:

CRCG Grading Requirements	
Sieve Size	Percent Passing
3/8-inch	100
No. 4	35-100
No. 200	0.0-10.0

7. Joint Seal Material:

Requirements: Joint seal material shall be a hot-poured rubber compound intended for use in sealing joints and cracks in bituminous concrete pavements. Joint seal material must meet the requirements of AASHTO M-324 – Type 2.

8. Plant Requirements:

a. Mixing Plant and Machinery:

The mixing plant used in the preparation of the bituminous concrete shall comply with AASHTO M-156(M)/ASTM D 995 for a Batch Plant or a Drum Dryer Mixer Plant, and be approved by the Engineer.

b. Storage Silos:

For all mixes, the Contractor may use silos for short-term storage of Superpave mixtures with prior notification and approval of the Engineer. A silo must have heated cones and an unheated silo cylinder if it does not contain a separate internal heating system. Prior approval must be obtained for storage times greater than those indicated. When multiple

silos are filled, the Contractor shall discharge one silo at a time. Simultaneous discharge of multiple silos is not permitted.

Type of silo cylinder	Maximum storage time for all classes (hr)	
	HMA	WMA/PMA
Open Surge	4	Mfg Recommendations
Unheated – Non-insulated	8	Mfg Recommendations
Unheated – Insulated	18	Mfg Recommendations
Heated – No inert gas	TBD by the Engineer	

c. Documentation System: The mixing plant documentation system shall include equipment for accurately proportioning the components of the mixture by weight and in the proper order, controlling the cycle sequence and timing the mixing operations. Recording equipment shall monitor the batching sequence of each component of the mixture and produce a printed record of these operations on each delivery ticket, as specified herein. Material feed controls shall be automatically or manually adjustable to provide proportions within the tolerances listed below for any batch size.

An asterisk (*) shall be automatically printed next to any individual batch weight(s) exceeding the tolerances in ASTM D 995 section 8.7.3. The entire batching and mixing interlock cut-off circuits shall interrupt and stop the automatic batching operations when an error exceeding the acceptable tolerance occurs in proportioning.

There must be provisions so that scales are not manually adjusted during the printing process. In addition, the system shall be interlocked to allow printing only when the scale has come to a complete rest. A unique printed character (m) shall automatically be printed on the truck and batch plant printout when the automatic batching sequence is interrupted or switched to auto-manual or full manual during proportioning. For each day's production, each project shall be provided a clear, legible copy of these recordings on each delivery ticket.

d. Aggregates: The Contractor shall ensure that aggregate stockpiles are managed to provide uniform gradation and particle shape, prevent segregation and cross contamination in a manner acceptable to the Engineer. For drum plants only, the Contractor shall determine the percent moisture content at a minimum, prior to production and half way through production.

e. Mixture: The dry and wet mix times shall be sufficient to provide proper coating (minimum 95% as determined by AASHTO T 195(M)) of all particles with bitumen and produce a uniform mixture.

The Contractor shall make necessary adjustments to ensure all types of bituminous concrete mixtures contain no more than 0.5% moisture throughout when tested in accordance with AASHTO T 329.

f. RAP: The Contractor shall indicate the percent of RAP, the moisture content (as a minimum determined twice daily – prior to production and halfway through production), and the net dry weight of RAP added to the mixture on each truck ticket. For each day of production, the production shall conform to the job mix formula and RAP percentage and no change shall be made without the prior approval of the Engineer.

g. Asphalt Binder: The last day of every month, a binder log shall be submitted when the monthly production for the Department exceeds 5000 tons. Blending of PG binders from different suppliers or grades at the bituminous concrete production facility is strictly prohibited.

h. Warm mix additive: For mechanically foamed WMA, the maximum water injection rate shall not exceed 2.0% water by total weight of binder and the water injection rate shall be constantly monitored during production.

i. Field Laboratory: The Contractor shall furnish the Engineer an acceptable field laboratory at the production facility to test bituminous concrete mixtures during production. The field laboratory shall have a minimum of 300 square feet, have a potable water source and drainage in accordance with the CT Department of Public Health Drinking Water Division, be equipped with all necessary testing equipment as well as with a PC, printer, and telephone with a dedicated hard-wired phone line. In addition, the PC shall have a high speed internet connection with a minimum upstream of 384 Kbps and a functioning web browser with unrestricted access to https://ctmail.ct.gov. This equipment shall be maintained in clean and good working order at all times and be made available for use by the Engineer.

The laboratory shall be equipped with a suitable heating system capable of maintaining a minimum temperature of 65°F. It shall be clean and free of all materials and equipment not associated with the laboratory. Windows shall be installed to provide sufficient light and ventilation. During summer months adequate cooling or ventilation must be provided so the indoor air temperature shall not exceed the ambient outdoor temperature. Light fixtures and outlets shall be installed at convenient locations, and a telephone shall be within audible range of the testing area. The laboratory shall be equipped with an adequate workbench that has a suitable length, width, and sampling tables, and be approved by the Engineer.

The field laboratory testing apparatus, supplies, and safety equipment shall be capable of performing all tests in their entirety that are referenced in AASHTO R 35(M), *Standard Practice for Superpave Volumetric Design for Hot-Mix Asphalt (HMA)* and AASHTO M 323, *Standard Specification for Superpave Volumetric Mix Design*. In addition, the quantity of all equipment and supplies necessary to perform the tests must be sufficient to initiate and complete the number of tests identified in Table M.04.03-2 for the quantity of mixture produced at the facility on a daily basis. The Contractor shall ensure that the

Laboratory is adequately supplied at all times during the course of the project with all necessary testing materials and equipment.

The Contractor shall maintain a list of laboratory equipment used in the acceptance testing processes including but not limited to, balances, scales, manometer/vacuum gauge, thermometers, gyratory compactor, clearly showing calibration and/or inspection dates, in accordance with AASHTO R-18.The Contractor shall notify the Engineer if any modifications are made to the equipment within the field laboratory. The Contractor shall take immediate action to replace, repair, and/or recalibrate any piece of equipment that is out of calibration, malfunctioning, or not in operation.

M.04.02—Mix Design and Job Mix Formula (JMF)

1. Marshall Method - Class 1, 2, 3, 4, 5, 5A, 5B and 12:

a. Requirements: When specified, the Marshall method shall be employed to develop a bituminous concrete mix design that includes a JMF consisting of target values for gradation and bitumen content for each class of bituminous concrete designated for the project in accordance with the latest Asphalt Institute's MS-2 manual. Each class of bituminous concrete must meet the requirements as shown in Table M.04.02-1.

b. Basis of Approval: The Contractor shall submit to the Engineer a request for approval of the JMF annually in accordance with one of the methods described herein. Prior to the start of any paving operations, the JMF and production percentage of bitumen must be accepted by the Engineer, and the Contractor must demonstrate the ability to meet the accepted JMF and production percentage of bitumen for each class of mixture. Additionally, the fraction of material retained between any two consecutive sieves shall not be less than 4%.

The Engineer will test each class of mixture for compliance with the submitted JMF and Table M.04.02-1. The maximum theoretical density (Gmm) will be determined by AASHTO T 209(M). If the mixture does not meet the requirements, the JMF shall be adjusted within the ranges shown in Table M.04.02-1 until an acceptable mixture is produced. All equipment, tests and computations shall conform to the Marshall method in accordance with AASHTO T 245(M).

An accepted JMF from the previous operating season may be acceptable to the Engineer provided that there are no changes in the sources of supply for the coarse aggregate, fine aggregate, recycled material (if applicable) and the plant operation had been consistently producing acceptable mixture.

The Contractor shall not change sources of supply after a JMF has been accepted. Before a new source of supply for materials is used, a new JMF shall be submitted to the Engineer for approval.

c. Marshall Mixture (Virgin): For bituminous concrete mixtures that contain no recycled material, the limits prescribed in Table M.04.02-1 govern. The Contractor shall submit to the Engineer for approval, a JMF with the individual fractions of the aggregate expressed as percentages of the total weight of the mix and the source(s) of all materials. The JMF shall indicate two bitumen contents; the JMF target percentage and a production percentage (actual amount added to mix) of bitumen for each mix class by total weight. For surface course Class 1, a 0.45 power gradation chart shall also be submitted on which is plotted the percentage passing each sieve. The JMF shall also indicate the target temperature of completed mixture as it is dumped from the mixer and tested in accordance with Article M.04.03.

d. Marshall Mixtures with RAP: In addition to subarticles M.04.02 – 1a through c, RAP in bituminous concrete shall comply with requirements stated in Article M.04.01, and as stated herein. Upon approval of the Engineer, a maximum of 15% RAP may be used with no binder grade modification. RAP material shall not be used with any other recycling option.
The Contractor may increase the RAP percentage in 5% increments up to a maximum of 30% provided a new JMF is accepted by the Engineer. The following information shall be included in the JMF submittal:
- Gradation and asphalt content of the RAP.
- Percentage of RAP to be used.
- Virgin aggregate source(s).
- Total binder content based on total mixture weight.
- Production pull percentage of added virgin binder based on total mixture weight.
- Gradation of combined bituminous concrete mixture (including RAP).
- Grade of virgin added, if greater than 15% of total mix weight.

e. Marshall Mixture with CRCG: In addition to subarticle M.04.02 – 1a through c, for bituminous concrete that contains CRCG, the Contractor shall submit a materials certificate to the Engineer stating that the mixture and its components comply with requirements stated in subarticle M.04.01 - (6). Additionally, 1% hydrated lime, or other accepted non-stripping agent, shall be added to all mixtures containing CRCG. CRCG material shall not be used with any other recycling option.

2. Cold Patch Method - Class 5, 5A, 5B:

a. Requirements: This mixture must be capable of being stockpiled and workable at all times. A non-stripping agent accepted by the Engineer shall be used in accordance with manufacturer's recommendations. The Contractor shall take necessary steps to ensure that this mixture uses aggregate containing no more than 1% moisture and is not exposed to any rain, snow, or standing water for a period of 6 hours after being mixed. This mixture shall be mixed and stockpiled at the point of production on a paved surface at a height not greater than 4 feet during the first 48 hours prior to its use.

i. Class 5A mixture shall have 3/8 to ½ inch polypropylene fibers that have been approved by the Engineer added at a rate of 6 pounds per ton of mixture.
ii. Class 5B mixture shall have ¼ inch polyester fibers that have been approved by the Engineer added at the rate of 2 1/2 pounds per ton of mixture.
iii. Class 5 mixture shall not contain fibers.

b. Basis of Approval: The aggregates, fibers and binder (MC-250) shall meet the requirements as specified in sub articles M.04.01-1 through 4 and in Table M.04.02-1. The use of recycled material is not permitted with these classes of bituminous concrete. Mixtures not conforming to the binder content as shown in Table M.04.02-1 shall be subject to rejection. There is a two test minimum per day of production. Mixtures not conforming to the gradation as shown in Table M.04.02-1 shall be subject to payment adjustment as specified in Section 4.06.

TABLE M.04.02 – 1 MASTER RANGES FOR MARSHALL BITUMINOUS-CONCRETE MIXTURES

Notes: (a) 75 blow (Marshall Criteria). (b) 3-6% when used for a roadway wearing surface. (c) For divided highways with 4 or more lanes, a stability of 1500 lbs is required. (d) Contains an accepted non-stripping compound. (e) To help prevent stripping, the mixed material will be stockpiled on a paved surface and at a height not greater than 4 feet during the first 48 hours. (f) As determined by AASHTO T 245(M). (g) The percent passing the #200 sieve shall not exceed the percentage of bituminous asphalt binder determined by AASHTO T 164 or AASHTO T 308(M). (h) Mixture with 5% or more aggregate retained on ¾" sieve. (i) Mixtures finer than condition (h) above. (j) Class 5 mixture shall contain no fibers. Class 5A mixture shall have 3/8 to ½ inch polypropylene fibers that have been previously accepted by the Engineer added at a minimum rate of 6 pounds per ton of mixture. Class 5B mixture shall have ¼ inch polyester fibers that have been previously accepted by the Engineer added at the minimum rate of 2 1/2 pounds per ton of mixture

CLASS	1	2	3	4	12	5 (e)(j)	5A (e)(j)	5B (e)(j)	JMF % Tol. (±)
Grade of PG Binder content %	PG 64-22 5.0 – 6.5	PG 64-22 5.0 – 8.0	PG 64-22 6.5 - 9.0	PG 64-22 4.0 - 6.0	PG 64-22 7.5 - 10.0	MC-250 (d) 6.0 - 7.5	MC-250 (d) 6.0 - 7.5	MC-250 (d) 6.0 - 7.5	0.4
Sieve Size	Percent Passing (%)								
# 200	3.0 – 8.0 (g)	3.0 – 8.0 (g)	3.0 – 8.0 (g)	0.0 – 5.0 (g)	3.0 – 10.0 (g)	0.0 - 2.5	0 .0- 2.5	0.0 - 2.5	2.0
# 50	6 – 26	8 – 26	10 - 30	5 - 18	10 - 40				4
# 30	10 - 32	16 - 36	20 - 40		20 - 60	2 - 15	2 – 15	2 - 15	5
# 8	28 - 50	40 - 64	40 - 70	20 - 40	60 - 95	10 - 45	10 – 45	10 - 45	6
# 4	40 - 65	55 - 80	65 - 87	30 - 55	80 - 95	40 - 100	40 – 100	40 - 100	7
¼"									
3/8 "	60 - 82	90 - 100	95 - 100	42 - 66	98 - 100	100	100	100	8
½ "	70 - 100	100	100		100				8
¾"	90 - 100			60 - 80					8
1"	100								
2"				100					
Additionally, the fraction of material retained between any two consecutive sieves shall not be less than 4%									
Mixture Temperature									
Binder	325°F maximum					140-185° F			
Aggregate	280-350° F					100-175° F			
Mixtures	**265-325° F**				**275-325°F**	**120-175° F**			**25 °F**
Mixture Properties									
VOIDS - %	3.0 – 6.0 (a)	2.0 – 5.0 (b)	0 – 4.0		0 - 5.0 (a)				
Stability (f) lbs. min.	1200 (c)	1000	1000		1000				
FLOW (f) in.	.08 - .15	.08 - .15	.08 - .18		.08 - .15				
VMA % - min.	15(h) :16 (i)								

3. Superpave Design Method – S0.25, S0.375, S0.5, and S1

a. Requirements: The Contractor or its representative shall design and submit Superpave mix designs annually for approval. The design laboratory developing the mixes shall be approved by the Engineer. The mix design shall be based on the specified Equivalent Single-Axle Loads (ESAL). Each bituminous concrete mix type must meet the requirements shown in Tables M.04.02-2 thru Table M.04.02-5 and in accordance with AASHTO M 323(M) and AASHTO R 35(M). The mix design shall include the nominal maximum aggregate size and a JMF consisting of target values for gradation and bitumen content for each bituminous concrete mix type designated for the project.

The contractor shall provide test results with supporting documentation from an AASHTO Materials Reference Laboratory (AMRL) with the use of NETTCP Certified Technicians for the following tests;

1. Aggregate consensus properties for each type & level, as specified in Table M.04.02-3. In addition the Gsa, Gsb, Pw_a shall also be provided for each component aggregate.

2. New mixes shall be tested in accordance with AASHTO T 283(M) *Standard Method of Test for Resistance of Compacted Hot-Mix Asphalt (HMA) to Moisture-Induced Damage*, (TSR). The compacted specimens may be fabricated at a bituminous concrete facility and then tested at an AMRL accredited facility.

   The AASHTO T 283(M) test results, specimens, and corresponding JMF sheet (Form MAT-429s) shall be submitted by the Contractor for review.

The Contractor shall supply the Engineer with 1 gallon of the specified PG binder and 1 gallon of the same PG binder with the warm mix additive blended into it. The MSDS for the WMA additive shall be included with every submittal.

In addition, minimum binder content values apply to all types of bituminous concrete mixtures, as stated in Table M.04.02-5. For mixtures containing RAP, the virgin production and the anticipated proportion of binder contributed by the RAP cannot be less than the total permitted binder content value for that type nor the JMF minimum binder content.

i. Superpave Mixture (virgin): For bituminous concrete mixtures that contain no recycled material, the limits prescribed in Tables M.04.02-2 thru Table M.04.02-5 apply. The Contractor shall submit a JMF, on a form provided by the Engineer, with the individual fractions of the aggregate expressed as percentages of the total weight of the mix and the source(s) of all materials to the Engineer for approval. The JMF shall indicate the corrected target binder content and applicable binder correction factor (ignition oven or extractor) for each mix type by total weight of mix. The mineral filler (dust) shall be defined as that portion of blended mix that

passes the #200 sieve by weight when tested in accordance with AASHTO T 30(M). The dust-to-effective asphalt (D/Pbe) ratio shall be between 0.6 and 1.2 by weight. The dry/wet mix times and hot bin proportions (batch plants only) for each type shall be included in the JMF.

The percentage of aggregate passing each sieve shall be plotted on a 0.45 power gradation chart and shall be submitted for all bituminous concrete mixtures. This chart shall delineate the percentage of material passing each test sieve size as defined by the JMF. The percentage of aggregate passing each standard sieve shall fall within the specified control points, but outside the restricted zone limits as shown in Tables M.04.02-2 thru Table M.04.02-5. Mixes with documented performance history which pass through the restricted zone may be permitted for use as long as all other physical and volumetric criteria meets specifications as specified in Tables M.04.02-2 thru Table M.04.02-5 and with prior approval from the Engineer. A change in the JMF requires that a new chart be submitted.

ii. Superpave Mixtures with RAP: Use of approved RAP may be allowed with the following conditions:

- RAP amounts up to 15% may be used with no binder grade modification.

- RAP amounts up to 20% may be used provided a new JMF is approved by the Engineer. The JMF submittal shall include the grade of virgin binder added and test results that show the combined binder (recovered binder from the RAP, virgin binder at the mix design proportions and warm mix asphalt additive if used) meets the requirements of the specified binder grade.

Unless approved by the Engineer, RAP material shall not be used with any other recycling option.

b. Basis of Approval: On an annual basis, the Contractor shall submit to the Engineer any bituminous concrete mix design, and JMF anticipated for use on Department projects. Prior to the start of any paving operations, the mix design and JMF must be approved by the Engineer. Bituminous concrete mixture supplied to the project without an approved mix design and JMF will be rejected. The following information must be included in the mix design submittal:

a. Gradation, specific gravities and asphalt content of the RAP,
b. Source of RAP and percentage to be used.
c. Warm mix Technology and manufacturer's recommended additive rate and tolerances, mixing and compaction temperature ranges for the mix with and without the warm-mix technology incorporated.
d. Result of TSR testing, and if applicable Anti-strip manufacturer, and dosage rate.
e. Target Temperature at plant discharge.

Note – Testing to be performed shall be done in accordance with section M.04.03.

The JMF shall be accepted if the Plant mixture and materials meet all criteria as specified in Tables M.04.02-2 thru Table M.04.02-5. If the mixture does not meet the requirements, the contractor shall adjust the JMF within the ranges shown in Tables M.04.02-2 thru Table M.04.02-5 until an acceptable mixture is produced. All equipment, tests, and computations shall conform to the latest AASHTO R-35(M) and AASHTO M-323(M).

Any JMF, once approved, shall only be acceptable for use when it is produced by the designated plant, it utilizes the same component aggregates and binder source, and it continues to meet all criteria as specified herein, and component aggregates are maintained within the tolerances shown in Table M.04.02-2.

The Contractor shall not change any component source of supply including consensus properties after a JMF has been accepted. Before a new source of materials is used, a revised JMF shall be submitted to the Engineer for approval. Any approved JMF applies only to the plant for which it was submitted. Only one mix with one JMF will be approved for production at any one time. Switching between approved JMF mixes with different component percentages or sources of supply is prohibited.

Superpave mixture with CRCG: In addition to subarticles M.04.02 – 3 a through c, for bituminous concrete mixtures that contain CRCG, the Contractor shall submit a materials certificate to the Engineer stating that the CRCG complies with requirements stated in Article M.04.01, as applicable. Additionally, 1% hydrated lime, or other accepted non-stripping agent, shall be added to all mixtures containing CRCG. CRCG material shall not be used with any other recycling option.

c. Mix Status: Each facility will have each type of bituminous concrete mixture evaluated based on the previous year of production, for the next construction paving season, as determined by the Engineer. Based on the rating a type of mixture receives it will determine whether the mixture can be produced without the completion of a PPT. Ratings will be provided to each bituminous concrete producer annually prior to the beginning of the paving season.

The rating criteria are based on compliance with Air Voids and Voids in Mineral Aggregate (VMA) as indicated in Table M.04.03-3: *Superpave Master Range for Bituminous Concrete Mixture Production*, and are as follows:

Criteria A: Based on Air Voids. Percentage of acceptance results with passing air voids.

Criteria B: Based on Air Voids and VMA. The percentage of acceptance results with passing VMA, and the percentage of acceptance results with passing air voids, will be averaged.

The final rating assigned will be the lower of the rating obtained with Criteria A or Criteria B.

Ratings are defined as:

"A" – Approved:
A rating of "A" is assigned to each mixture type from a production facility with a current rating of 70% passing or greater.

"PPT" – Pre-Production Trial:
Rating assigned to each mixture type from a production facility when:

1. there are no passing acceptance production results submitted to the Department from the previous year;
2. there is a source change in one or more aggregate components from the JMF on record by more than 10% by weight;
3. there is a change in RAP percentage ,
4. the mixture has a rating of less than 70% from the previous season;
5. a new JMF not previously submitted.

Bituminous concrete mixtures rated with a "PPT" cannot be shipped or used on Department projects. A passing "PPT" test shall be performed with NETTCP certified personnel on that type of mixture by the bituminous concrete producer and meet all specifications (Table M.04.02-2 Table M.04.02-5) before production shipment may be resumed.
Contractors that have mix types rated a "PPT" may use one of the following methods to change the rating to an "A."

Option A: Schedule a day when a Department inspector can be at the facility to witness a passing "PPT" test or,

Option B: When the Contractor or their representative performs a "PPT" test without being witnessed by an inspector, the Contractor shall submit the test results and a split sample including 2 gyratory molds, 5,000 grams of boxed bituminous concrete for binder and gradation determination, and 5,000 grams of cooled loose bituminous concrete for Gmm determination for verification testing and approval. Passing verifications will designate the bituminous concrete type to be on an "A" status. Failing verifications will require the contractor to submit additional trials.

Option C: When the Contractor or their representative performs a "PPT" test without being witnessed by a Department inspector, the Engineer may verify the mix in the Contractor's laboratory. Passing verifications will designate the bituminous concrete type to be an "A" status. Failing verifications will require the Contractor to submit additional trials.

When Option (A) is used and the "PPT" test meets all specifications, the "PPT" test is considered a passing test and the rating for that mix is changed to "A". When the "PPT" test is not witnessed, the "PPT" Option (B) or (C) procedure must be followed. If the "PPT" Option (B) procedure is followed, the mixtures along with the test results must be delivered to the Materials Testing Lab. The test results must meet the "C" tolerances established by the Engineer. The tolerance Table is included in the Department's current QA Program for Materials, Acceptance and Assurance Testing Policies and Procedures.

"U" – No Acceptable Mix Design on File:

Rating assigned to a type of mixture that does not have a JMF submitted, or the JMF submitted has not been approved, or is incomplete. A mix design or JMF must be submitted annually seven (7) days prior in order to obtain an "A," or "PPT" status for that mix. A "U" will be used only to designate the mix status until the mix design has been approved, and is accompanied with all supporting data as specified. Bituminous concrete mixtures rated with a "U" cannot be used on Department projects.

TABLE M.04.02– 2: SUPERPAVE MASTER RANGE FOR BITUMINOUS CONCRETE MIXTURE DESIGN CRITERIA

Notes: (1) Minimum Pb as specified in Table M.04.02-5. (2) Voids in Mineral Aggregates shall be computed as specified herein. (3) Control point range is also defined as the master range for that mix. (4) Dust is considered to be the percent of materials passing the #200 sieve. (5) For WMA, lower minimum aggregate temperature will require Engineer's approval. (6) For WMA and PMA, the mix temperature shall meet manufacturer's recommendations.

	S0.25				**S0.375**				**S0.5**				**S1**			
Sieve	CONTROL POINTS (3)		*RESTRICTED ZONE*		CONTROL POINTS(3)		*RESTRICTED ZONE*		CONTROL POINTS(3)		*RESTRICTED ZONE*		CONTROL POINTS(3)		*RESTRICTED ZONE*	
inches	Min (%)	Max (%)	*Max (%)*	*Min (%)*	Min (%)	Max (%)	*Min (%)*	*Max (%)*	Min (%)	Max (%)	*Min (%)*	*Max (%)*	Min (%)	Max (%)	*Min (%)*	*Max (%)*
2.0	-	-	-	-	-	-	-	-	-	-	-	-	-	-	-	-
1.5	-	-	-	-	-	-	-	-	-	-	-	-	100	-	-	-
1.0	-	-	-	-	-	-	-	-	-	-	-	-	90	100	-	-
3/4	-	-	-	-	-	-	-	-	100	-	-	-	-	90	-	-
1/2	100	-	-	-	100	-	-	-	90	100	-	-	-	-	-	-
3/8	97	100	-	-	90	100	-	-	-	90	-	-	-	-	-	-
#4	-	90	-	-	-	90	-	-	-	-	-	-	-	-	*39.5*	*39.5*
#8	32	67	*47.2*	*47.2*	32	67	*47.2*	*47.2*	28	58	*39.1*	*39.1*	19	45	*26.8*	*30.8*
#16	-	-	*31.6*	*37.6*	-	-	*31.6*	*37.6*	-	-	*25.6*	*31.6*	-	-	*18.1*	*24.1*
#30	-	-	*23.5*	*27.5*	-	-	*23.5*	*27.5*	-	-	*19.1*	*23.1*	-	-	*13.6*	*17.6*
#50	-	-	*18.7*	*18.7*	-	-	*18.7*	*18.7*	-	-	*15.5*	*15.5*	-	-	*11.4*	*11.4*
#100	-	-	-	-	-	-	-	-	-	-	-	-	-	-	-	-
#200	2.0	10.0	-	-	2.0	10.0	-	-	2.0	10.0	-	-	1.0	7.0	-	-
Pb (1)	-	-	-	-	-	-	-	-	-	-	-	-	-	-	-	-
VMA (2) (%)	16.0 ± 1				16.0 ± 1				15.0 ± 1				13.0 ± 1			
VA (%)	4.0 ± 1				4.0 ± 1				4.0 ± 1				4.0 ± 1			
Gse	JMF value				JMF value				JMF value				JMF value			
Gmm	JMF ± 0.030				JMF ± 0.030				JMF ± 0.030				JMF ± 0.030			
Dust/Pbe(4)	0.6 – 1.2				0.6 – 1.2				0.6 – 1.2				0.6 – 1.2			
Agg. Temp(5)	280 – 350F				280 – 350F				280 – 350F				280 – 350F			
Mix Temp(6)	265 – 325 F				265 – 325 F				265 – 325 F				265 – 325 F			
Design TSR	≥ 80%				≥ 80%				≥ 80%				≥ 80%			
T-283 Stripping	Minimal, as determined by the Engineer															

TABLE M.04.02–3
SUPERPAVE MASTER RANGE FOR CONSENSUS PROPERTIES OF COMBINED AGGREGATE STRUCTURES

Notes: (1) If less than 25 % of a given layer is within 4 inches of the anticipated top surface, the layer may be considered to be below 4 inches for mixture design purposes.

Traffic Level	Design ESALs (80 kN)	Coarse Aggregate Angularity (1) ASTM D 5821	Fine Aggregate Angularity (7) AASHTO T 304	Flat or Elongated Particles ASTM D 4791	Sand Equivalent AASHTO T 176
-----	(million)			>#4	-----
1*	< 0.3	55/- -	40	10	40
2	0.3 to < 3.0	75/- -	40	10	40
3	≥ 3.0	95/90	45	10	45
	Design ESALs are the anticipated project traffic level expected on the design lane, projected over a 20 year period, regardless of the actual expected design life of the roadway.	Criteria presented as minimum values. 95/90 denotes that a minimum of 95% of the coarse aggregate, by mass, shall have one fractured face and that a minimum of 90% shall have two fractured faces.	Criteria presented as minimum percent air voids in loosely compacted fine aggregate passing the #8 sieve.	Criteria presented as maximum Percent by mass of flat or elongated particles of materials retained on the #4 sieve, determined at 3:1 ratio.	Criteria presented as minimum values for fine aggregate passing the #8 sieve.

*** NOTE: Level 1 for use by Towns and Municipalities ONLY.**

TABLE M.04.02– 4: SUPERPAVE MASTER RANGE FOR TRAFFIC LEVELS AND DESIGN VOLUMETRIC PROPERTIES.

Traffic Level	Design ESALs	Number of Gyrations by Superpave Gyratory Compactor			Percent Density of Gmm from HMA/WMA specimen			Voids Filled with Asphalt (VFA) Based on Nominal mix size – inch			
	(million)	Nini	Ndes	Nmax	Nini	Ndes	Nmax	0.25	0.375	0.5	1
1*	< 0.3	6	50	75	≤ 91.5	96.0	≤ 98.0	70 - 80	70 - 80	70 - 80	67 - 80
2	0.3 to < 3.0	7	75	115	≤ 90.5	96.0	≤ 98.0	65 - 78	65 - 78	65 - 78	65 - 78
3	≥ 3.0	8	100	160	≤ 90.0	96.0	≤ 98.0	73 – 76	73 - 76	65 - 75	65 - 75

*** NOTE: Level 1 for use by Towns and Municipalities ONLY.**

TABLE M.04.02– 5: SUPERPAVE MINIMUM BINDER CONTENT BY MIX TYPE & LEVEL.

Mix Type	Level	Binder Content Minimum (1)
S0.25	1*	5.6
S0.25	2	5.5
S0.25	3	5.4
S0.375	1*	5.6
S0.375	2	5.5
S0.375	3	5.4
S0.5	1*	5.0
S0.5	2	4.9
S0.5	3	4.8
S1	1*	4.6
S1	2	4.5
S1	3	4.4

*** NOTE: Level 1 for use by Towns and Municipalities ONLY.**

M.04.03— Production Requirements:

1. Quality Control Plan and Processes: The Contractor shall submit a Quality Control Plan (QCP) for bituminous concrete production specifically for the plant producing the bituminous concrete mixture for review and approval of the Engineer on an annual basis.

The QCP shall describe the organization and procedures which the Contractor shall use to administer quality control. The QCP shall include the procedures used to control the production process, to determine when immediate changes to the processes are needed, and to implement the required changes. The QCP must detail the inspection, sampling and testing protocols to be used, and the frequency for each.

Control Chart(s) shall be developed and maintained for critical aspect(s) of the production process as determined by the Contractor. The control chart(s) shall identify the material property, applicable upper and lower control limits, and be updated with current test data. The control chart(s) shall be used as part of the quality control system to document variability of the bituminous concrete production process. The control chart(s) shall be submitted to the Engineer upon request.

The QCP shall also include the name and qualifications of a Quality Control Manager. The Quality Control Manager shall be responsible for the administration of the QCP, including compliance with the plan and any plan modifications. All daily QC sampling, inspection and test reports shall be reviewed by the Quality Control Manager and be submitted to the Engineer upon request.

The QCP shall also include the name and qualifications of any outside testing laboratory performing any QC functions on behalf of the Contractor. The QCP must also include a list of sampling & testing methods and frequencies used during production, and the names of all Quality Control personnel and their duties.

Approval of the QCP does not imply any warranty by the Engineer that adherence to the plan will result in production of bituminous concrete that complies with these specifications. The Contractor shall submit any changes to the QCP as work progresses.

2. **Acceptance Sampling & Testing Methods:** Acceptance samples of mixtures shall be obtained from the hauling vehicles and tested by the Contractor at the facility during each day's production.

The hauling vehicle from which samples are obtained shall be selected using stratified – random sampling based on the total estimated tons of production in accordance with ASTM D 3665, except that the first test shall be randomly taken from the first 151 tons or as directed by the Engineer.

The number of sub lots and tests required per sub lot is based on the total estimated tons of production per day as indicated in Table M.04.03-1. Quantities of the same type/level mix per plant may be combined daily for multiple state projects to determine the number of sub lots. The payment adjustment for air voids and liquid binder will be calculated per sub lot as described in Section 4.06.

An acceptance test shall not be performed within 150 tons of production from a previous acceptance test unless approved by the Engineer. Quality Control tests are not subject to this restriction. Unless otherwise tested, a minimum of one (1) acceptance test shall be performed for every four days of production at a facility for each type/level mix (days of production may or may not be consecutive days).

The Contractor shall submit all acceptance tests results to the Engineer within 24 hours or prior to the next day's production. All acceptance test specimens and supporting documentation must be retained by the Contractor. Verification testing will be performed by the Engineer on the retained specimens in accordance with the Department's QA Program for Materials.

Should the Department be unable to verify the Contractor's acceptance test result(s) due to a failure of the Contractor to retain acceptance test specimens or supporting documentation, the Contractor shall review its quality control plan, determine the cause of the nonconformance and respond in writing within 24 hours to the Engineer describing the corrective action taken at the plant. In addition the Contractor must provide supporting documentation or test results to validate the subject acceptance test result(s). The Engineer may invalidate any positive adjustments for material corresponding to the acceptance test(s). Failure of the Contractor to adequately address quality control issues at a facility may result in suspension of production for Department projects at that facility.

Contractor personnel performing acceptance sampling and testing must be present at the facility prior to, and during production, and be certified as a NETTCP HMA Plant Technician or Interim HMA Plant Technician and be in good standing. Production of material for use on State projects must be suspended by the Contractor if such personnel are not present.

Technicians found by the Engineer to be non-compliant with NETTCP or Department policies may be removed by the Engineer from participating in the acceptance testing process for Department projects until their actions can be reviewed.

Anytime during production that testing equipment becomes inoperable, production can continue for a maximum of 1 hour. The Contractor shall obtain box sample(s) in accordance with Table M.04.03-1 to satisfy the daily acceptance testing requirement for the quantity shipped to the project. The box sample(s) shall be tested once the equipment issue has been resolved to the satisfaction of the Engineer. Production beyond 1 hour may be considered by the Engineer. Production will not be permitted beyond that day until the subject equipment issue has been resolved.

Table M.04.03 – 1: Acceptance Testing Frequency per Type/Level/Plant

Daily quantity produced in tons (lot)	Number of Sub Lots/Tests
0 to 150	0, Unless requested by the Engineer
151 to 600	1
601 to 1,200	2
1,201 to 1,800	3
1,801 or greater	1 per 600 tons or portions thereof

i. Marshall Mix Acceptance Sampling and Testing Procedures: When the Marshall mix design is specified, the following acceptance procedures and AASHTO test methods shall be used:

Table M.04.03 – 2: Marshall Acceptance Test Procedures

Protocol	Reference	Description
1	**AASHTO T 30(M)**	Mechanical Analysis of Extracted Aggregate
2	**AASHTO T 40(M)**	Sampling Bituminous Materials
3	**AASHTO T 308(M)**	Binder content by Ignition Oven method (adjusted for aggregate correction factor)
4	**AASHTO T 245(M)**	Resistance to Plastic Flow of Bituminous Mixtures Using Marshall Apparatus
5	**AASHTO T 209(M)**	Theoretical Maximum Specific Gravity and Density of Bituminous Paving Mixtures
6	**AASHTO T 269(M)**	Percent Air Voids in Compacted Dense and Open Bituminous Paving Mixtures
7	**AASHTO T 329**	Moisture Content of Hot-Mix Asphalt (HMA) by Oven Method

a. Cessation of Supply: Marshall Mix Production shall cease for the Project from any facility that consistently fails to produce mixture that meets the JMF and volumetric properties. The criteria for ceasing the supply of a class of mixture from any plant are as follows:

i. Off-Test Status: The results of AASHTO T 164 or AASHTO T 308(M) and T 30(M) will be used to determine if the mixture is within the tolerances shown in Table M.04.02-1. The Contractor will be notified that a plant is "off test" for a class of mixture when the test results indicate that any single value for bitumen content or gradation are not within the tolerances shown in Table M.04.02-1 for that class of mixture.

ii. When multiple plants and silos are located at one site, mixture supplied to one project is considered as coming from one source for the purpose of applying the “off test” adjusted payment.

iii. If a test indicates that the bitumen content or gradation are outside the tolerances, the Contractor may make a single JMF change on classes 1, 2, 3, 4 and 12 as allowed by the Engineer prior to any additional testing. A JMF change shall include the date and

name of the Engineer that allowed it. Consecutive test results outside the requirements of Table M.04.02-1 JMF tolerances may result in rejection of the mixture.

iv. The Engineer may cease supply of mixture from the plant when the test results from three non-consecutive samples of a class of mixture are not within the JMF tolerances or the test results from two non-consecutive samples not within the master range indicated in Table M.04.02-1 during any one production period, due to inconsistent production.

v. Any modification to the JMF shall not exceed 50% of the JMF tolerances indicated in Table M.04.02-1 for any given component of the mixture without approval of the Engineer. When such an adjustment is made to the bitumen, the corresponding production percentage of bitumen shall be revised accordingly.

b. Adjustments for Off Test Mixture under Cessation of Supply: The bituminous concrete plant shall cease supplying to the project:

i. When the test results from three consecutive samples are "off test" and not within the JMF tolerances or,

ii. The test results from two consecutive samples are "off test" and not within the ranges indicated in Table M.04.02 – 1 or,

iii. When the percent of material passing the minus #200 sieve material exceeds the percent of extracted bitumen content for three consecutive samples during any production period of the values stated in Table M.04.02-1:

a. The quantity of mixtures shipped to the project determined to be "off test" and outside the tolerances will be tabulated by the Engineer and will be adjusted in accordance with Section 4.06.

b. Following cessation, a trial production period will be required at the plant for that class of mixture. Use of that class of mixture from that plant will be prohibited on the Project until the plant has demonstrated the ability to consistently produce acceptable mixture.

c. When the Engineer has accepted the mixtures from the trial production period, the use of that mixture on the Project may resume.

ii. Superpave Mix Acceptance Sampling and Testing Procedures: When the Superpave mix design is specified, the following acceptance and AASHTO test procedures shall be used:

Table M.04.03– 3: Superpave Acceptance Testing Procedures

Protocol	Reference	Description
1	AASHTO T 168(M)	Sampling of bituminous concrete
2	AASHTO T 308(M)	Binder content by Ignition Oven method (adjusted for aggregate correction factor)
3	AASHTO T 30(M)	Gradation of extracted aggregate for bituminous concrete mixture
4	AASHTO T 312(M)	(1)Superpave Gyratory molds compacted to N_{des}
5	AASHTO T 166(M)	(2)Bulk specific gravity of bituminous concrete
6	AASHTO R 35(M)	(2)Air voids, VMA
7	AASHTO T 209(M)	Maximum specific gravity of bituminous concrete (average of two tests)
8	AASHTO T 329	Moisture content of Production bituminous concrete

The Contractor shall perform moisture susceptibility (TSR) testing annually for all design levels of HMA-, WMA-, and PMA- S0.5 plant-produced mixtures, in accordance with the latest version of AASHTO T 283(M).

If any material source changes from the previous year, or during the production season, a mix design TSR as well as a production TSR is required for the new mixture. The AASHTO T 283(M) test shall be performed at an AASHTO Materials Reference Laboratory (AMRL) by NETTCP Certified Technicians. The test results and specimens shall be submitted to the Engineer for review. This shall be completed within 30 days from the start of production. Superpave mixtures that require anti-strip additives (either liquid or mineral) shall continue to meet all requirements specified herein for binder and bituminous concrete. The Contractor shall submit the name, manufacturer, percent used, and MSDS sheet for the anti-strip additive (if applicable) to the Engineer. In addition, compaction of samples shall be accomplished utilizing an accepted Superpave Gyratory Compactor (SGC), supplied by the Contractor. The SGC shall be located at the facility supplying mixture to the project.

a. Determination of Off-Test Status:

i. Off Test Status: Superpave mixes shall be considered *"off test"* when any Control Point Sieve, VA, VMA, and Gmm values are outside of the limits specified in Table M.04.03-3 and the computed binder content (Pb) established by AASHTO T308(M) or as documented on the vehicle delivery ticket is below the minimum binder content stated in sub article M.04.03-5. Note that further testing of samples or portions of samples not initially tested for this purpose cannot be used to change the status.

ii. Any time the bituminous concrete mixture is considered Off-test:

1. The Contractor shall notify the Engineer (and project staff) when the plant is *"off test"* for a type of mixture. When multiple plants and silos are located at one site, mixture supplied to one project is considered as coming from one source for the purpose of applying the *"off test"* determination.

2. The Contractor must take immediate actions to correct the deficiency, minimize *"off test"* production to the project, and obtain an additional Process Control (PC) test after any corrective action to verify production is in conformance to the specifications. A PC test will not be used for acceptance and is solely for the use of the Contractor in its quality control process.

b. Cessation of Supply for Superpave Mixtures with no Payment Adjustment: Production of bituminous concrete shall cease for the Project from any plant that consistently fails to produce mixture that meets the JMF and volumetric properties. The quantity of Superpave mixtures shipped to the project that is "off-test" will not be adjusted for deficient mixtures.

A Contractor shall cease to supply mixture from a plant when:

1. Bituminous concrete mixture is "off test" on three (3) consecutive tests for VMA or Gmm, regardless of date of production due to inconsistency (i.e., small production requires 1 test per day for multiple days).

2. Bituminous concrete mixture is "off test" on two (2) consecutive tests for the Control Point sieves in one day's production.

Following cessation, the Contractor shall immediately make necessary material or process corrections and run a Pre-Production Trial (PPT) for that type of mixture. Use of that type of mixture from that plant will be prohibited on the Project until the Contractor has demonstrated the ability to produce acceptable mixture from that facility. When the Contractor has a passing test and has received approval from the Engineer, the use of that mixture to the Project may resume.

c. Cessation of Supply for Superpave Mixtures with Payment Adjustment:
Production of bituminous concrete shall cease for the Project from any plant that consistently fails to produce mixture that meets the Superpave minimum binder content by mix type and level listed in Table M.04.02-5. The quantity of Superpave mixtures shipped to the project that is "off-test" will be adjusted for deficient mixtures in accordance with Section 4.06.

A Contractor shall cease to supply mixture from a plant when the binder content (Pb) is below the requirements of Table M.04.03-5 on the ignition oven test result after two (2) consecutive tests, regardless of the date of production.

Following cessation, the Contractor shall immediately make necessary material or process corrections and run a Pre-Production Trial (PPT) for that type of mixture. Use of that type of mixture from that plant will be prohibited on the Project until the Contractor has demonstrated the ability to produce acceptable mixture from that facility. When the Contractor has a passing test and has received approval from the Engineer, the use of that mixture to the Project may resume.

d. JMF Changes for Superpave Mixture Production: It is understood that a JMF change is effective from the time it was submitted forward and is not retroactive to the previous test or tests. JMF changes are permitted to allow for trends in aggregate and mix properties but every effort shall be employed by the Contractor to minimize this to ensure a uniform and dense pavement.

JMF changes to the G_{mm} or mix Absorption Correction Factor (A_{cf}) are only permitted prior to or after a production shift for all bituminous-concrete types of mixtures and only when they:

i. Are requested in writing and pre-approved by the Engineer;
ii. Are based on a minimum of a two test trend;
iii. Are documented with a promptly submitted revised JMF on form provided by the Engineer.
iv. A revised JMF submittal shall include the date and name of the Engineer that allowed it.

TABLE M.04.03– 3: SUPERPAVE MASTER RANGE FOR BITUMINOUS CONCRETE MIXTURE PRODUCTION

Notes: (1) 300°F minimum after October 15. (2) Minimum Pb as specified in Table M.04.03-5 (3) Control point range is also defined as the master range for that mix. (4) JMF tolerances shall be defined as the limits for production compliance. VA & Pb payment is subject to adjustments, as defined in sub-article 4.06.04 - 2. (5) For WMA, lower minimum aggregate temperature will require Engineer's approval. (6) For WMA and/or polymer modified asphalt, the mix temperature shall meet manufacturer's recommendations. In addition, for WMA, the maximum mix temperature shall not exceed 325°F once the WMA technology is incorporated.

	S0.25		**S0.375**		**S0.5**		**S1**		**Tolerances**
Sieve	CONTROL POINTS (4)		CONTROL POINTS (4)		CONTROL POINTS (4)		CONTROL POINTS (4)		**JMF Limits** (4)
inches	Min(%)	Max(%)	Min(%)	Max(%)	Min(%)	Max(%)	Min(%)	Max(%)	±Tol
2.0	-	-	-	-	-	-	-	-	
1.5	-	-	-	-	-	-	100	-	
1.0	-	-	-	-	-	-	90	100	
3/4	-	-	-	-	100	-	-	90	
1/2	100	-	100	-	90	100	-	-	
3/8	97	100	90	100	-	90	-	-	
#4	-	90	-	90	-	-	-	-	
#8	32	67	32	67	28	58	19	45	
#16	-	-	-	-	-	-	-	-	
#200	2.0	10.0	2.0	10.0	2.0	10.0	1.0	7.0	
Pb(2)	-	-	-	-	-	-	-	-	note (2)
VMA (%)	16.0		16.0		15.0		13.0		1.0
VA (%)	4.0		4.0		4.0		4.0		1.0
Gmm	JMF value		JMF value		JMF value		JMF value		0.030
Agg. Temp (5)	280 – 350F		280 – 350F		280 – 350F		280 – 350F		
Mix Temp (6)	265 – 325 F (1)		265 – 325 F (1)		265 – 325 F (1)		265 – 325 F (1)		
Prod. TSR	N/A		N/A		≥80%		N/A		
T-283 Stripping	N/A		N/A		Minimal as determined by the Engineer		N/A		

TABLE M.04.03– 4: SUPERPAVE MASTER RANGE FOR TRAFFIC LEVELS AND DESIGN VOLUMETRIC PROPERTIES.

Traffic Level	Design ESALs (million)	Number of Gyrations by Superpave Gyratory Compactor	
		Nini	Ndes
1*	< 0.3	6	50
2	0.3 to < 3.0	7	75
3	≥3.0	8	100

*** NOTE: Level 1 for use by Towns and Municipalities ONLY.**

TABLE M.04.03– 5: SUPERPAVE MINIMUM BINDER CONTENT BY MIX TYPE & LEVEL.

Mix Type	Level	Binder Content Minimum (1)
S0.25	1*	5.6
S0.25	2	5.5
S0.25	3	5.4
S0.375	1*	5.6
S0.375	2	5.5
S0.375	3	5.4
S0.5	1*	5.0
S0.5	2	4.9
S0.5	3	4.8
S1	1*	4.6
S1	2	4.5
S1	3	4.4

*** NOTE: Level 1 for use by Towns and Municipalities ONLY.**

Table M.04.03-6:
Modifications to Standard AASHTO and ASTM Test Specifications and Procedures.

AASHTO Standard Specification	
Reference	**Modification**
M 320	1. Mass change for PG 64-22 shall be a maximum loss of 0.5% when tested in accordance with AASHTO T 240. 2. The two bottles used for the mass change determination may be re-heated and used for further testing.
AASHTO Standard Methods of Test	
Reference	**Modification**
T 27	Section 7.7 Samples are not washed
T 30	Section 6.2 thru 6.5 Samples are not routinely washed
T 168	Samples are taken at one point in the pile. All types of bituminous concrete except Class 4 are scooped from the sample container instead of remixing and quartering. (Method verified by laboratory study). Samples from a hauling vehicle are taken from only one point instead of three as specified. Selection of Samples: Sampling is equally important as the testing, and the sampler shall use every precaution to obtain samples that are truly representative of the bituminous mixture. Box Samples: In order to enhance the rate of processing samples taken in the field by construction or maintenance personnel the samples will be tested in the order received and data processed to be determine conformance to material specifications and to prioritize inspections by laboratory personnel.
T 195	Section 4.3 only one truck load of mixture is sampled. Samples are taken from opposite sides of the load.
T 209	Article 9.5.1 Bowl is suspended 2 minutes prior to reading rather than 10 minutes. This makes no significant difference in results. Section 7.2 The average of two bowls is used proportionally in order to satisfy minimum mass requirements. 8.3 Omit Pycnometer method.
T 245	Article 3.3.2 A compacting temperature of 140 to 146°C (284 to 295°F) is used Article 3.5.2 Seventy-five (75) blows per side are used on Classes 1 and 12, per ConnDOT design requirements Section 3.1 for production testing: one specimen is molded for each extraction test for production over 275 metric tons/day (300 tons/day). Other mixtures: two specimens per extraction test.
T 283	When foaming technology is used, the material used for the fabrication of the specimens shall be cooled to room temperature, and then reheated to the manufactures recommended compaction temperature prior to fabrication of the

	specimens.
T 308	In addition to the standard testing procedure, the Department has adopted a procedure that addresses a correction factor that is calculated using the composite aggregate percentages (**C**omposite **A**ggregate **C**orrection **F**actor **M**ethod **(CACF)**). The aggregate is burned in compliance with the standard AASHTO procedure Method A exclusively. All modifications are listed for this method only. A2.2 and A2.3 Omit A2.4 Omit. Replace with: Determine an aggregate gradation for each aggregate component "blank" in accordance with T30. A2.5 Omit. Replace with: The individual aggregate samples are to be dried in an oven at a maximum temperature of 148 ± 5ºC (300 ± 9º F) to a constant weight. RAP samples are to be oven dried at a maximum temperature of 110 ± 5ºC (230 ± 9º F) to a constant weight. RAP samples will be burned for total binder content only and not to arrive at a correction factor for a mixture. A2.6 and A2.7 and A2.8 Omit. A2.8.1 Omit Note 2 A2.9 Omit. Replace with: Perform a gradation analysis on the residual aggregate in accordance with T30 and compare it to the gradation performed prior to burning. A2.9.1 and A2.9.2 Omit The correction factors for each size aggregate are provided by the Contractor to the Engineer prior to the Annual Plant Inspection. The Engineer may verify the correction factors. The Composite Aggregate Correction Factor (CACF) for any mixture may be calculated by summing the result of the correction factor for each individual aggregate multiplied by the percentage of that aggregate in the overall mixture. (Note: All correction factors must be re-calculated every time the percentage of any aggregate changes within the mixture.) If the average corrected Pb content from the ignition oven differs by 0.3% or more from the average bituminous concrete facility production weigh ticket in five (5) consecutive tests regardless of the production date (moving average), the Contractor shall immediately investigate, determine an assignable cause and correct the issue. When two consecutive moving average differences are 0.3% or more, the Engineer may require a new correction factor calculation for all the aggregate components in the mix. In addition to the standard testing procedure, the Department has adopted a procedure that addresses the time involved between sampling the hot-mix asphalt specimen and the beginning of the test. 6.3 Omit. Replace with: The test specimen must be ready to be placed in an approved ignition furnace for testing within ten minutes of being obtained from the hauling vehicle and the test shall start immediately after.

T 331	6.1 Cores are dried to a constant mass prior to testing using a core-dry machine.

AASHTO Standard Recommended Practices

Reference	Modification
R 35	**<u>Volumetric Calculations of VMA and Correction Factor</u>** VMA_a - Voids in Mineral Aggregate from (Va + Vbe) the mix: A. VMA calculated from the mix shall be determined in accordance with *Formula 5.16.1A.* It can be correlated that the VMA calculated from AASHTO R-35 is equivalent to VMA_a when the Pb_a x (100-Pb_t) / 100 is known and substituted for A_{cf}, as shown in *Formula 5.16.1A (ii).* Test results from VMA_a shall therefore be required to meet all contract specifications. Values of VMA_a that are out of specifications during production may be cause for the contractor to determine assignable reason, take corrective action, and modify the Job Mix Formula (JMF), as needed. Continued VMA_a data that is out of specifications may be cause for the Engineer to order cessation of supply. *Formula 5.16.1A.* Determining the VMA of bituminous concrete by the mix or air voids & effective binder method: $$VMA_a = V_a + \left[\frac{(Gmb_d \times (Pb_t - A_{cf})}{G_b} \right]$$ Where: VMA_a = VMA calculated from plant production mix(V_a + Vb_e) Gmb_d = Bulk specific gravity as determined by AASHTO T 166(M) Pb_t = Total Binder Content (corrected) by AASHTO T 308(M) A_{cf} = Absorption correction factor provided by Contractor (refer to B. i and ii) B. Determining the bituminous concrete mix binder correction factor for each class by use of percent absorption of water by AASHTO T 84/85, AASHTO M 323 and D_f method. This value shall be performed by the Contractor during the mix design only and submitted as a JMF value. Two methods for determining the A_{cf} are shown, although method (i) will be the desired method to be used. Both methods are equivalent when the Gsa, Gsb and Pwa are recent and valid for the mix. *i.* $A_{cf} = Df \times Pwa \times (100 - Pb_t) / 100$ *ii.* $A_{cf} = (Pb_a \text{ from annual JMF submittal}) \times (100 - Pb_t) / 100$ Where: Df = as determined by Formula 5.16.1B. Pwa = as determined by AASHTO T 84/85 Pb_a = as determined by AASHTO M 323 (from annual JMF submittal) D_f (Density Factor): The Contractor shall calculate the bituminous concrete

	mix design D_f (*derived from formula X1.2 APPENDIX X1 of AASHTO R 35)* for each class of material, in accordance with *Formula 5.16.1B.* *Formula 5.16.1B.* Determining the Density Factor *(D_f)* of mix design bituminous concrete: $$D_f = \left(\frac{Gse - Gsb}{Gsa - Gsb}\right)$$ Where: D_f = Density Factor or multiplier determined by AASHTO R-35(M) Gse = Effective Specific Gravity determined by AASHTO M-323 at plant Gsa = Apparent Specific Gravity determined by AASHTO T 84/85 of mix design Gsb = Bulk Specific Gravity determined by AASHTO T 84/85 of mix design
R 26	Quality Control Plans must be formatted in accordance with AASHTO R 26, certifying suppliers of performance-graded asphalt binders, Section 9.0, Suppliers Quality Control Plan, and "NEAUPG Model PGAB QC Plan." 1. The Department requires that all laboratory technician(s) responsible for testing PG-binders be certified or Interim Qualified by the New England Transportation Technician Certification Program (NETTCP) as a PG Asphalt Binder Lab Technician. 2. Sampling of asphalt binders should be done under the supervision of qualified technician. NECTP "Manual of Practice," Chapter 2 Page 2-4 (Key Issues 1-8). 3. A copy of the Manual of Practice for testing asphalt binders in accordance with the Superpave PG Grading system shall be in the testing laboratory. 4. All laboratories testing binders for the Department are required to be accredited by the AASHTO Materials Reference Laboratory (AMRL). 5. Sources interested in being approved to supply PG-binders to the Department by use of an "in-line blending system," must record properties of blended material, and additives used. 6. Each source of supply of PG-binder must indicate that the binders contain no additives used to modify or enhance their performance properties. Binders that are manufactured using additives, modifiers, extenders etc., shall disclose the type of additive, percentage and any handling specifications/limitations required. Suppliers shall provide AASHTO M-320 Table 2 testing at a minimum of once per month on one sample of material. Each supplier shall rotate the PG grade each month (including polymer-modified asphalt (PMA)), so that data can be collected for all the grades produced.

ON-THE-JOB TRAINING (OJT) WORKFORCE DEVELOPMENT PILOT

Description

To provide construction industry related job opportunities to minorities, women and economically disadvantaged individuals; and to increase the likelihood of a diverse and inclusive workforce on Connecticut Department of Transportation (ConnDOT) projects.

All contractors (existing and newcomers) will be automatically placed in the Workforce Development Pilot. Standard OJT requirements typically associated with individual projects will no longer be applied at the project level for new projects. Instead, these requirements will be applicable on an annual basis for each contractor performing work on ConnDOT projects.

The OJT Workforce Development Pilot will allow a contractor to train employees on Federal, State and privately funded projects located in Connecticut. However, contractors should give priority to training employees on ConnDOT Federal-Aid funded projects.

Funding

The Department will establish an OJT fund annually from which contractors may bill the Department directly for eligible trainee hours. The funds for payment of trainee hours on federal-aid projects will be allocated from the ½ of 1% provided for OJT funding, and will be based on hours trained, not to exceed a maximum of $25,000.00 per year; per contractor.

Minorities and Women

Developing, training and upgrading of minorities, women and economically disadvantaged individuals toward journeyperson level status is the primary objective of this special training provision. Accordingly, the Contractor shall make every effort to enroll minority, women and economically disadvantaged individuals as trainees to the extent that such persons are available within a reasonable area of recruitment. This training commitment is not intended, and shall not be used, to discriminate against any applicant for training whether a member of a minority group or not.

Assigning Training Goals

The Department, through the OJT Program Coordinator, will assign training goals for a calendar year based on the contractor's past two year's activities and the contractor's anticipated upcoming year's activity with the Department. At the beginning of each year, all contractors eligible will be contacted by the Department to determine the number of trainees that will be assigned for the upcoming calendar year. At that time, the Contractor shall enter into an agreement with the Department to provide a self-imposed on-the-job training program for the calendar year. This agreement will include a specific number of annual training goals agreed to by both parties. The number of training assignments may range from one (1) to six (6) per

contractor per calendar year. Each January, a summary of the trainees required and the OJT Workforce Development Pilot package will be sent to participating contractors. The number of trainees assigned to each contractor in the summary will increase proportionately not to exceed 6, as shown in the following table. This package will also be provided to contractors as they become newly eligible for the OJT Workforce Development Pilot throughout the remainder of the year. Projects awarded after September 30 will be included in the following year's Program.

The dollar thresholds for training assignments are as follows:

$4.5 – 8 million=	1 trainee
$ 9 – 15 million=	2 trainees
$16 – 23 million=	3 trainees
$24 – 30 million=	4 trainees
$31 – 40 million=	5 trainees
$41 – and above=	6 trainees

Training Classifications

Preference shall be given to providing training in the following skilled work classifications. However, the classifications established are not all-inclusive:

Equipment Operators	Electricians
Laborers	Painters
Carpenters	Iron / Reinforcing Steel Workers
Concrete Finishers	Mechanics
Pipe Layers	Welders

The Department has on file common training classifications and their respective training requirements; that may be used by the contractors. Contractors shall submit new classifications for specific job functions that their employees are performing. The Department will review and recommend for acceptance the new classifications proposed by contractors, if applicable. New classifications shall meet the following requirements:

Proposed training classifications are reasonable and realistic based on the job skill classification needs, and the number of training hours specified in the training classification is consistent with common practices and provides enough time for the trainee to obtain journeyman level status.

Where feasible, 25% percent of apprentices or trainees in each occupation shall be in their first year of apprenticeship or training. The number of trainees shall be distributed among the work classifications on the basis of the contractor's needs and the availability of journeymen in the various classifications within a reasonable area of recruitment.

No employee shall be employed as a trainee in any classification in which they have successfully completed a training course leading to journeyman level status or in which they have been employed as a journeyman.

Records and Reports

The Contractor shall maintain enrollment in the program and submit all required reports documenting company compliance under these contract requirements. These documents and any other information shall be submitted to the OJT Program Coordinator as requested.

Upon the trainee's completion and graduation from the program, the Contractor shall provide each trainee with a certification Certificate showing the type and length of training satisfactorily completed.

Trainee Interviews

In order to determine the continued effectiveness of the OJT Program in Connecticut, the department will periodically conduct personal interviews with current trainees and may survey recent graduates of the program. This enables the OJT Program Coordinator to modify and improve the program as necessary. Trainee interviews are generally conducted at the job site to ensure that the trainees' work and training is consistent with the approved training program.

Trainee Wages

Contractors shall compensate trainees on a graduating pay scale based upon a percentage of the prevailing minimum journeyman wages (Davis-Bacon Act). Minimum pay shall be as follows:

60 percent	of the journeyman wage for the first half of the training period
75 percent	of the journeyman wage for the third quarter of the training period
90 percent	of the journeyman wage for the last quarter of the training period

In no case, will the trainee be paid less than the prevailing rate for general laborer as shown in the contract wage decision (must be approved by the Department of Labor).

Achieving or Failing to Meet Training Goals

The Contractor will be credited for each trainee currently enrolled or who becomes enrolled in the approved training program and providing they receive the required training under the specific training program. Trainees will be allowed to be transferred between projects if required by the Contractor's schedule and workload. The OJT Program Coordinator must be notified of transfers within five (5) days of the transfer or reassignments by e-mail (Phylisha.Coles@ct.gov).

Where a contractor does not or cannot achieve its annual training goal with female or minority trainees, they must produce adequate Good Faith Efforts documentation. Good Faith Efforts are those designed to achieve equal opportunity through positive, aggressive, and continuous result-oriented measures. 23 CFR § 230.409(g) (4). Contractors should request minorities and females from unions when minorities and females are under-represented in the contractor's workforce.

Whenever a contractor requests ConnDOT approval of someone other than a minority or female, the contractor must submit documented evidence of its Good Faith Efforts to fill that position with a minority or female. When a non-minority male is accepted, a contractor must continue to attempt to meet its remaining annual training goals with females and minorities.

Where a contractor has neither attained its goal nor submitted adequate Good Faith Efforts documentation, ConnDOT will issue a letter of non-compliance. Within thirty (30) days of receiving the letter of non-compliance, the contractor must submit a written Corrective Action Plan (CAP) outlining the steps that it will take to remedy the non-compliance. The CAP must be approved by ConnDOT. Failure to comply with the CAP may result in your firm being found non-responsive for future projects.

Measurement and Payment

Optional reimbursement will be made to the contractor for providing the required training under this special provision on ConnDOT Federal-Aid funded projects only.

Contractor will be reimbursed at $0.80 for each hour of training given to an employee in accordance with an approved training or apprenticeship program. This reimbursement will be made even though the Contractor receives additional training program funds from other sources, provided such other source does not specifically prohibit the contractor from receiving other reimbursement.

Reimbursement for training is made annually or upon the trainees completion and not on a monthly basis. No payment shall be made to the Contractor if either the failure to provide the required training, or the failure to hire the trainee as a journeyperson, is caused by the Contractor.

Program reimbursements will be made directly to the prime contractor on an annual basis. To request reimbursement, prime contractors must complete the Voucher for OJT Workforce Development Pilot Hourly Reimbursement for each trainee in the OJT Program. This form is included in the OJT Workforce Development Pilot package and is available on the Department's web site at:

www.ct.gov/dot

The completed form must be submitted to the Office of Contract Compliance for approval. The form is due on the 15th day of January for each trainee currently enrolled and for hours worked on ConnDOT Federal-Aid funded projects only.

SMALL CONTRACTOR AND SMALL CONTRACTOR MINORITY BUSINESS ENTERPRISES (SET-ASIDE)

March, 2001

NOTE: Certain of the requirements and procedures stated in this "Special Provision" are applicable prior to the execution of the Contract.

I. GENERAL

A. The Contractor shall cooperate with the Connecticut Department of Transportation (CONNDOT) in implementing the required contract obligations concerning "Small Contractor" and "Small Contractor Minority Business Enterprise" use on this Contract in accordance with Section 4a-60g of the Connecticut General Statutes as revised. References, throughout this "Special Provision", to "Small Contractors" are also implied references to "Small Contractor Minority Business Enterprises" as both relate to Section IIA of these provisions. The Contractor shall also cooperate with CONNDOT in reviewing the Contractor's activities relating to this provision. This "Special Provision" is in addition to all other equal opportunity employment requirements of this Contract.

B. For the purpose of this "Special Provision", the "Small Contractor(s)" and "Minority Business Enterprise(s)" named to satisfy the set-aside requirement must be certified by the Department of Administrative Services, Business Connections/ Set-Aside Unit [(860) 713-5236 www.das.state.ct.us/busopp.htm] as a "Small Contractor" and "Minority Business Enterprises" as defined by Section 4a-60g Subsections (1) and (3) of the Connecticut General Statutes as revised and is subject to approval by CONNDOT to do the work for which it is nominated pursuant to the criteria stipulated in Section IIC-3.

C. Contractors who allow work which they have designated for "Small Contractor" participation in the pre-award submission required under Section IIC to be performed by other than the approved "Small Contractor" organization and prior to concurrence by CONNDOT, will not be paid for the value of the work performed by organizations other than the "Small Contractor" designated.

D. If the Contractor is unable to achieve the specified contract goals for "Small Contractor" participation, the Contractor shall submit written documentation to CONNDOT's Manager of Construction Operations indicating his/her good faith efforts to satisfy goal requirements. Documentation is to include but not be limited to the following:

1. A detailed statement of the efforts made to select additional subcontract opportunities for work to be performed by each "Small Contractor" in order to increase the likelihood of achieving the stated goal.

2. A detailed statement, including documentation of the efforts made to contact and solicit contracts with each "Small Contractor", including the names, addresses, dates and telephone numbers of each "Small Contractor" contacted, and a description of the information provided to each "Small Contractor" regarding the scope of services and anticipated time schedule of items proposed to be subcontracted and the nature of response from firms contacted.

3. For each "Small Contractor" that placed a subcontract quotation which the Contractor considered not to be acceptable, provide a detailed statement of the reasons for this conclusion.

4. Documents to support contacts made with CONNDOT requesting assistance in satisfying the contract specified or adjusted "Small Contractor" dollar requirements.

5. Document other special efforts undertaken by the Contractor to meet the defined goal.

E. Failure of the Contractor to have at least the specified dollar amount of this contract performed by "Small Contractor" as required in Section IIA of this "Special Provision" will result in the reduction in contract payment to the Contractor by an amount equivalent to that determined by subtracting from the specific dollar amount required in Section IIA, the dollar payments for the work actually performed by each "Small Contractor". The deficiency in "Small Contractor" achievement, will therefore, be deducted from the final contract payment. However, in instances where the Contractor can adequately document or substantiate its good faith efforts made to meet the specified or adjusted dollar amount to the satisfaction of CONNDOT, no reduction in payments will be imposed.

F. All records must be retained for a period of three (3) years following completion of the contract and shall be available at reasonable times and places for inspection by authorized representatives of CONNDOT.

G. Nothing contained herein, is intended to relieve any contractor or subcontractor or material supplier or manufacturer from compliance with all applicable Federal and State legislation or provisions concerning equal employment opportunity, affirmative action, nondiscrimination and related subjects during the term of this Contract.

II. **SPECIFIC REQUIREMENTS**

In order to increase the participation of "Small Contractors", CONNDOT requires the following:

A. Not less than ____0_____ (%) percent of the **final** value of this Contract shall be subcontracted to and performed by, and/or supplied by, manufactured by and paid to "Small Contractors" and/or "Small Contractors Minority Business Enterprises".

If the above percentage is zero (0%) AND an asterisk (*) has been entered in the adjacent brackets [ ], this Contract is 100% solely set-aside for participation by "Small Contractors" and/or "Small Contractors Minority Business Enterprises".

B. The Contractor shall assure that each "Small Contractor" will have an equitable opportunity to compete under this "Special Provision", particularly by arranging solicitations, time for the preparation of Quotes, Scope of Work, and Delivery Schedules so as to facilitate the participation of each "Small Contractor".

C. The Contractor shall provide to CONNDOT's Manager of Contracts within Seven (7) days after the bid opening the following items:

1. An affidavit (Exhibit I) completed by each named "Small Contractor" subcontractor listing a description of the work and indicating the dollar amount of all contract(s) and/or subcontract(s) that have been awarded to him/her for the current State Fiscal Year (July 1 - June 30) does not exceed the Fiscal Year limit of $10,000,000.00.

2. A certification of work to be subcontracted (Exhibit II) signed by both the Contractor and the "Small Contractor" listing the work items and the dollar value of the items that the nominated "Small Contractor" is to perform on the project to achieve the minimum percentage indicated in Section IIA above.

3. A certification of past experience (Exhibit III) indicating the scope of work the nominated "Small Contractor" has performed on all projects, public and private, for the past two (2) years.

4. In instances where a change from the originally approved named "Small Contractor" (see Section IB) is proposed, the Contractor is required to submit, in a reasonable and expeditious manner, a revised submission, comprised of the documentation required in Section IIC, Paragraphs 1, 2 and 3 and Section E together with documentation to substantiate and

justify the change, (i.e., documentation to provide a basis for the change) to CONNDOT's Manager of Construction Operations for its review and approval prior to the implementation of the change. The Contractor must demonstrate that the originally named "Small Contractor" is unable to perform in conformity to specifications, or unwilling to perform, or is in default of its contract, or is overextended on other jobs. The Contractor's ability to negotiate a more advantageous contract with another "Small Contractor" is not a valid basis for change. Documentation shall include a letter of release from the originally named "Small Contractor" indicating the reason(s) for the release.

D. After the Contractor signs the Contract, the Contractor will be required to meet with CONNDOT's Manager of Construction Operations or his/her designee to review the following:

1. What is expected with respect to the "Small Contractor" set aside requirements.

2. Failure to comply with and meet the requirement can and will result in monetary deductions from payment.

3. Each quarter after the start of the "Small Contractor" the Contractor shall submit a report to CONNDOT's Manager of Construction Operations indicating the work done by, and the dollars paid to each "Small Contractor" to date.

4. What is required when a request to sublet to a "Small Contractor" is submitted.

E. The Contractor shall submit to CONNDOT's Manager of Construction Operations all requests for subcontractor approvals on standard forms provided by the Department.

If the request for approval is for a "Small Contractor" subcontractor for the purpose of meeting the contract required "Small Contractor" percentage stipulated in Section IIA, a copy of the legal contract between the Contractor and the "Small Contractor" subcontractor must also be submitted at the same time. Any subsequent amendments or modifications of the contract between the Contractor and the "Small Contractor" subcontractor must also be submitted to CONNDOT's Manager of Construction Operations with an explanation of the change(s). The contract must show items of work to be performed, unit prices and, if a partial item, the work involved by both parties.

In addition, the following documents are to be attached:

(1) A statement explaining any method or arrangement for renting equipment. If rental is from a Contractor, a copy of Rental Agreement must be submitted.

(2) A statement addressing any special arrangements for manpower.

(3) A statement addressing who will purchase material.

F. Contractors subcontracting with a "Small Contractor" to perform work or services as required by this "Special Provision" shall not terminate such firms without advising CONNDOT, in writing, and providing adequate documentation to substantiate the reasons for termination if the designated "Small Contractor" firm has not started or completed the work or the services for which it has been contracted to perform.

G. Material Suppliers or Manufacturers

If the Contractor elects to utilize a "Small Contractor" supplier or manufacturer to satisfy a portion or all of the specified dollar requirements, the Contractor must provide the Department with:

1. An executed Affidavit Small Contractor (Set-Aside) Connecticut Department of Transportation Affidavit Supplier or Manufacturer (sample attached), and

2. Substantiation of payments made to the supplier or manufacturer for materials used on the project.

Brokers and packagers shall not be regarded as material Suppliers or manufacturer.

H. <u>Non-Manufacturing or Non-Supplier "Small Contractor" Credit</u>

Contractors may count towards its "Small Contractor" goals the following expenditures with "Small Contractor" firms that are not manufacturers or suppliers:

1. Reasonable fees or commissions charged for providing a <u>bona fide</u> service such as professional, technical, consultant or managerial services and assistance in the procurement of essential personnel, facilities, equipment, material or supplies necessary for the performance of the contract provided that the fee or commission is determined by the Department of Transportation to be reasonable and consistent with fees customarily allowed for similar services.

2. The fees charged for delivery of materials and supplies required on a job site (but not the cost of the materials and supplies themselves) when the hauler, trucker, or delivery service is not also the manufacturer of or a regular dealer in the materials and supplies, provided that the fee is determined by the Department of Transportation to be reasonable and not excessive as compared with fees customarily allowed for similar services.

3. The fees or commissions charged for providing any bonds or insurance specifically required for the performance of the Contract, provided that the fee or commission is determined by the Department of Transportation to be reasonable and not excessive as compared with fees customarily allowed for similar services.

III. **BROKERING**

For the purpose of this "Special Provision", a "Broker" is one who acts as an agent for others in negotiating contracts, purchases, sales, etc., in return for a fee or commission. Brokering of work by a "Small Contractor" is not allowed and is a contract violation.

IV. **PRE-AWARD WAIVERS:**

If the Contractor's submission of the "Small Contractor" listing, as required by Section IIC indicates that it is unable, by subcontracting to obtain commitments which at least equal the amount required by Section IIA, it may request, in writing, a waiver of up to 50% of the amount required by Section IIA. To obtain such a waiver, the Contractor must submit a completed "Application for Waiver of Small Contractor Minority Business Enterprise Goals" to CONNDOT's Manager of Contracts which must also contain the following documentation:

1. Information described in Section ID.

2. For each "Small Contractor" contacted but unavailable, a statement from each "Small Contractor" confirming its unavailability.

Upon receipt of the submission requesting a waiver, the CONNDOT's Manager of Contracts shall submit the documentation to the Director of the Office of Contract Compliance who shall review it for completeness. After completion of the Director of Contract Compliance's review, she/he should write a narrative of his/her findings of the application for a waiver, which is to include his/her recommendation. The Director of Contract Compliance shall submit the written narrative to the Chairperson of the DBE Screening Committee at least five (5) working days before the scheduled meeting. The Contractor shall be invited to attend the meeting and present his/her position. The DBE Screening Committee shall render a decision on the waiver request within five (5)

working days after the meeting. The DBE Screening Committee's decision shall be final. Waiver applications are available from the CONNDOT Manager of Contracts.

EXHIBIT I Mar. 01

SMALL CONTRACTOR/*MINORITY BUSINESS ENTERPRISE
(* Delete if not Applicable)
SET-ASIDE PROGRAM
(QUALIFICATION AFFIDAVIT)

PROJECT(s) _____
(INCLUDING TOWN & DESCRIPTION)

STATE OF _____CONNECTICUT_____

COUNTY OF_____

I_____,ACTING IN BEHALF
NAME OF PARTY SIGNING AFFIDAVIT
OF_____,DO HEREBY CERTIFY
PERSON FIRM OR ORGANIZATION
AND AFFIRM THAT THE INFORMATION SET FORTH BELOW IS TRUE AND ACCURATE TO THE BEST OF MY KNOWLEDGE. AS OF THIS DATE_____THE LIST OF SMALL CONTRACTOR SET-ASIDE PROGRAM - CONTRACTS AND/OR SUBCONTRACTS AWARDED DURING THE CURRENT FISCAL YEAR (JULY 1 - JUNE 30) 20_____ IS AS FOLLOWS:

Col. 1 TOWN AND PROJECT NUMBER	Col. 2 STATE AGENCY WHICH AWARDED CONTRACT	Col. 3 CONTRACT AMOUNT AWARDED UNDER THIS PROGRAM	Col. 4 AMOUNT OF WORK SUBCONTRACTED FROM OTHER FIRMS UNDER THIS PROGRAM	Col. 5 TOTAL AMOUNT OF ALL WORK UNDER THIS PROGRAM Col. 3 Plus Col. 4
	TOTALS	$	$	$

_____
NAME OF PERSON, FIRM OR ORGANIZATION

(FIRM SEAL)

_____
SIGNATURE & TITLE OF OFFICIAL

SWORN TO AND SUBSCRIBED BEFORE ME BY_____

WHO IS PERSONALLY KNOWN TO ME, THIS_____DAY OF_____, 20_____

_____
(NOTARY PUBLIC)

MY COMMISSION EXPIRES_____SEAL

PLEASE NOTE THAT ALL THE WORK AWARDED OR SUBCONTRACTED TO YOUR FIRM UNDER THE SET-ASIDE PROGRAM IN A FISCAL YEAR (JULY 1-JUNE 30) INCLUDING THIS PROJECT, CANNOT BE MORE THAN $10,000,000.00

Mar.01

EXHIBIT II

DEPARTMENT OF TRANSPORTATION
CONTRACT DIVISION
2800 BERLIN TURNPIKE
NEWINGTON, CT 06111

CERTIFICATION OF WORK TO BE SUBCONTRACTED
NOMINATED SMALL CONTRACTOR/*MINORITY BUSINESS ENTERPRISE

* Delete if not applicable

PLEASE INCLUDE A COPY OF CERTIFICATION LETTER

CONTRACTOR_____

ADDRESS_____

TOWN_____PROJECT NO._____

DESCRIPTION OF PROJECT_____

_____

CONTRACT BID AMOUNT $_____

DATE_____

Listed below is the Nominated Small Contractor/Minority Business Enterprise for the above project and the requested data:

Name, Address & Tel No. of the Nominated Firm	ITEM(s)NUMBER(s) and Description of the Item(s) to be performed by and paid to the Subcontractor	Quantities (indicate if partial)	Prime's Bid Amount For Item	Dollar Amount Subcontracted	Small Business Set-Aside Dollar Requirement

Signed By _____
Small Contractor/*Minority Business Enterprise
(Subcontractor)

Signed By_____
Contractor

Title_____

EXHIBIT III

Mar.01

CERTIFICATION
PAST CONSTRUCTION EXPERIENCE

SMALL CONTRACTOR / * MINORITY BUSINESS ENTERPRISES

* Delete if not applicable

PLEASE LIST ALL CONSTRUCTION PROJECTS YOUR ORGANIZATION HAS WORKED ON IN THE PAST TWO FISCAL YEARS

PROJECT LOCATION NUMBER AND DESCRIPTION APPLICABLE	CONTRACT AMOUNT	IF WORK PERFORMED AS PRIME GIVE OWNERS NAME IF WORK PERFORMED AS SUBCONTRACTOR GIVE CONTRACTORS NAME	START DATE	ACTUAL OR ESTIMATED COMPLETION DATE	NAME AND PHONE OF OWNER OR PRIME CONTRACTOR AS

SIGNED BY: _____

SMALL BUSINESS CONTRACTOR
*MINORITY BUSINESS ENTERPRISES

D.O.T. PROJECT NO. _____

* Delete if not applicable

MARCH, 2001

SMALL CONTRACTOR/SMALL CONTRACTOR MINORITY BUSINESS ENTERPRISE (MBE) (SET-ASIDE) CONNECTICUT DEPARTMENT OF TRANSPORTATION AFFIDAVIT – SUPPLIER OR MANUFACTURER

This affidavit must be completed by the State Contractor's designated Small Contractor/ Small Contractor Minority Business Enterprise (MBE), notarized and attached to the contractor's request to utilize a Small Contractor/Small Contractor Minority Business Enterprise (MBE) supplier or manufacturer as a credit towards its Small Contractor/Small Contractor Minority Business Enterprise (MBE) contract requirement; failure to do so will result in not receiving credit towards the contract Small Contractor/Small Contractor Minority Business Enterprise (MBE) requirement.

State Project No. _____
Federal Aid Project No. _____
Description of Project _____

I, _____, acting in behalf of _____
(Name of person signing Affidavit) (Small Contractor/Small Contractor MBE contractor person,
_____ of which I am the_____ affirm that _____
firm, association or certify and corporation) (Title of Person) (Small
_____is a certified Small Contractor/Small
Contractor/Small Contractor MBE person, firm, association or corporation)
Contractor Minority Business Enterprise, as defined by Section 4a-60g of the Connecticut General Statutes, as revised.

I further certify and affirm that _____
(Small Contractor/Small Contractor MBE person, firm, association or corporation)
will assume the actual and contractual responsibility for the provision of the materials and/or supplies sought by _____. If a manufacturer, I produce goods from raw
(State Contractor)
materials or substantially alter them before resale, or if a supplier, I perform a commercially useful function in the supply process.

I understand that false statements made herein are punishable at Law (Sec. 53a-157, CGS, as revised).

_____
(Name of Small Contractor/Small Contractor MBE person, firm, association or corporation)

_____
(Signature and Title of Official making the Affidavit)

Subscribed and sworn to before me, the _____ day of _____ 200____.

_____
Notary Public (Commissioner of the Superior Court)

My Commission Expires _____

CERTIFICATE OF CORPORATION

I, _____, certify that I am the _____ (Official) of the Corporation named in the foregoing instrument; that I have been duly authorized to affix the seal of the Corporation to such papers as require the seal; that _____, who signed said instrument on behalf of the Corporation, was then _____ of said corporation; that said instrument was duly signed for and in behalf of said Corporation by authority of its governing body and is within the scope of its corporation powers.

_____

(Signature of Person Certifying) (Date)

(Corporate Seal)

ITEM #0020903A – LEAD COMPLIANCE FOR MISCELLANEOUS EXTERIOR TASKS

Description:

Work under this item shall include the special handling measures and work practices required for miscellaneous exterior tasks that impact materials containing or covered by lead paint. Lead paint includes paint found to contain **any** detectable amount of lead by Atomic Absorption Spectrophotometry (AAS) or X-Ray Fluorescence (XRF). Examples of typical miscellaneous exterior tasks includes; work impacting signs, guiderails, minor bridge rehabilitation, catenary structures, canopy structures, spot/localized paint removal, etc.

All activities shall be performed in accordance with the OSHA Lead in Construction Regulations (29 CFR 1926.62), the USEPA RCRA Hazardous Waste Regulations (40 CFR Parts 260 through 274), and the CTDEEP Hazardous Waste Regulations (RCSA 22a-209-1 and 22a-449(c)).

All activities shall be performed by individuals with appropriate levels of OSHA lead awareness and hazard communication training and shall supervised by the Contractors Competent Person on the job site at all times. The Contractors Competent Person is one who is capable of identifying existing and predictable hazards in the surroundings or working conditions which are unsanitary, hazardous or dangerous to employees, and who has authorization to take prompt corrective measures to eliminate them.

Deviations from these Specifications require the written approval of the Engineer.

Materials:

All materials shall be delivered to the job site in the original packages, containers, or bundles bearing the name of the manufacturer, the brand name and product technical description, with MSDS sheets as applicable.

No damaged or deteriorating materials shall be used. If material becomes contaminated with lead, the material shall be decontaminated or disposed of as lead-containing waste material. The cost to decontaminate and dispose of this material shall be at the expense of the Contractor.

The following material requirements are to be met if to be used during the work:

Fire retardant polyethylene sheet shall be in roll size to minimize the frequency of joints, with factory label indicating minimum six (6) mil thickness.

Polyethylene disposable bags shall be minimum six (6) mils thick.

Tape (or equivalent) product capable of sealing joints in adjacent polyethylene sheets and for the attachment of polyethylene sheets to finished or unfinished surfaces must be capable of adhering under both dry and wet conditions.

Cleaning Agents and detergent shall be lead specific, such as TriSodium Phosphate (TSP).

Chemical strippers and chemical neutralizers shall be compatible with the substrate as well as with each other. Such chemical stripper shall contain less than 50% Volatile Organic Compounds (VOCs) by weight in accordance with RCSA 22a-174-40 Table 40-1.

Labels and warning signs shall conform to 29 CFR 1926.62, 40 CFR 260 through 274 and 49 CFR 172 as appropriate.

Air filtration devices and vacuum units shall be equipped with High-Efficiency Particulate Air (HEPA) filters.

Construction Methods:

(1) Pre-Abatement Submittals and Notices

A. Prior to the start of **any** work on a contiguous per site basis that will generate hazardous lead waste above conditionally exempt small quantities (greater than 100 kg/month or greater than 1000 kg at any time), the Contractor shall obtain from the Engineer on a contiguous per site basis a temporary EPA Hazardous Waste Generators ID number, unless otherwise directed by the Engineer.

B. Fifteen (15) working days prior to beginning work that impacts lead paint, the Contractor shall submit the following to the Engineer:

1. Work plan for work impacting lead paint including engineering controls, methods of containment of debris and work practices to be employed, as needed, to minimize employee exposure and prevent the spread of lead contamination outside the Regulated Area.

2. Copies of all employee certificates, dated within the previous twelve (12) months, relating to OSHA lead awareness and hazard communication training and training in the use of lead-safe work practices. SSPC training programs may be accepted as meeting these requirements if it can be demonstrated that such training addressed all required topics.

   This information shall be updated and resubmitted annually, or as information changes, for the duration of the activities impacting lead to verify continued compliance.

3. Name and qualifications of Contractor's OSHA Competent Person under 29 CFR 1926.62.

4. Documentation from the Contractor, typed on company letterhead and signed by the Contractor, certifying that all employees listed therein have received the following:

   a. medical monitoring within the previous twelve (12) months, as required in 29 CFR 1926.62;
   b. biological monitoring within the previous six (6) months, as required in 29 CFR 1926.62;
   c. respirator fit testing within the previous twelve (12) months, as required in 29 CFR 1910.134 (for those who don a tight-fitting face piece respirator)

   This information shall be updated and resubmitted annually, or as information changes, for the duration of the activities impacting lead to verify continued compliance.

5. Names of the proposed non-hazardous construction and demolition (C&D) lead debris bulky waste disposal facility (CTDEEP-permitted Solid Waste landfill).

6. Names of the proposed scrap metal recycling facilities. The Contractor shall submit to the Engineer all documentation necessary to demonstrate the selected facility is able to accept lead-painted scrap metal.

7. Names of the proposed hazardous waste disposal facility (selected from the Department approved list provided herein), and copies of each facilities acceptance criteria and sampling frequency requirements.

8. Copies of the proposed hazardous waste transporters current USDOT Certificate of Registration for Hazardous Materials Transport, and the proposed transporters current Hazardous Waste Transporter Permits for the State of Connecticut and the waste destination State.

9. Negative exposure assessments conducted within the previous 12 months documenting that employee exposure to lead for each task is below the OSHA Action Level of 30 $\mu g/m^3$. If a negative exposure assessment has not been conducted, the Contractor shall submit its air monitoring program for the work tasks as part of the Work Plan. Until a negative exposure assessment is developed for each task impacting lead paint, the Contractor shall ensure that all workers and authorized persons entering the Regulated Area wear protective clothing and respirators in accordance with OSHA 29 CFR 1926.62.

No activity shall commence until all required submittals have been received and found acceptable to the Engineer. Those employees added to the Contractor's original list will be

allowed to perform work only upon submittal of acceptable documentation to, and review by, the Engineer.

Contractor shall provide the Engineer with a minimum of 48 hours notice in advance of scheduling, changing or canceling work activities.

(2) Lead Abatement Provisions

A. General Requirements:

All employees of the Contractor who perform work impacting lead paint shall be properly trained to perform such duties. In addition, the Contractor shall instruct all workers in all aspects of personnel protection, work procedures, emergency evacuation procedures and use of equipment including procedures unique to this project.

Contractor shall provide all labor, materials, tools, equipment, services, testing, and incidentals which are necessary or required to perform the work in accordance with applicable governmental regulations, industry standards and codes, and these Specifications.

Prior to beginning work, the Engineer and Contractor shall perform a visual survey of each work area and review conditions.

As necessary, the Contractor shall:

> Shut down and lock out electrical power, including all receptacles and light fixtures, where feasible. The use or isolation of electrical power will be coordinated with all other ongoing uses of electrical power at the site.

If adequate electrical supply is not available at the site, the Contractor shall supply temporary power. Such temporary power shall be sufficient to provide adequate lighting and power the Contractor's equipment. The Contractor is responsible for proper connection and installation of electrical wiring and shall ensure safe installation of electrical equipment in compliance with applicable electrical codes and OSHA requirements.

If water is not available at the site for the Contractor's use, the Contractor shall supply sufficient water for each shift to operate the wash facility/decontamination shower units in addition to the water needed at the work area.

The Engineer may provide a Project Monitor to monitor compliance of the Contractor and protect the interests of the Department. In such cases, no activity impacting lead paint shall be performed until the Project Monitor is on-site. Where no Project Monitor will be provided, Contractor shall proceed at the direction of the Engineer. Environmental sampling, including ambient air sampling, TCLP waste stream sampling, and dust wipe sampling, will be conducted by the State as it deems necessary throughout the project. Air monitoring to comply with the Contractor's obligations under OSHA remains solely responsibility of the Contractor.

If at any time, procedures for engineering, work practice, administrative controls or other topics are anticipated to deviate from those documented in the submitted and accepted Lead Work Plan, the Contractor shall submit a modification of its existing plan for review and acceptance by the Engineer prior to implementing the change.

If air samples collected outside of the Regulated Area during activities impacting lead paint indicate airborne lead concentrations greater than original background levels or 30 ug/m^3, whichever is larger, or if at any time visible emissions of lead paint extend out from the Regulated Area, an examination of the Regulated Area shall be conducted and the cause of such emissions corrected. Cleanup of surfaces outside the Regulated Area using HEPA vacuum equipment or wet cleaning techniques shall be done prior to resuming work.

Work outside the initial designated area(s) will not be paid for by the Engineer. The Contractor will be responsible for all costs incurred from these activities including repair of any damage.

B. Regulated Area

The Contractor shall establish a Regulated Area through the use of appropriate barrier tape or other means to control unauthorized access into the area where activities impacting lead paint are occurring. Warning signs meeting the requirements of 29 CFR 1926.62 shall be posted at all approaches to Regulated Areas. These signs shall read:

WARNING
LEAD WORK AREA
POISON
NO SMOKING OR EATING

The Contractor shall implement appropriate engineering controls such as poly drop cloths, local exhaust ventilation, wet dust suppression methods, etc. as necessary, and as approved by the Engineer, to prevent the spread of lead contamination beyond the Regulated Area in accordance with the Contractor's approved work plan. Should the previously submitted work plan prove to be insufficient to contain the contamination, the Contractor shall modify its plan and submit it for review by the Engineer.

C. Wash Facilities:

The Contractor shall provide handwash facilities in compliance with 29 CFR 1926.51(f) and 29 CFR 1926.62 <u>regardless of airborne lead exposure</u>.

If employee exposure to airborne lead exceeds the OSHA Permissible Exposure Limit of 50 micrograms per cubic meter (μg/m^3), shower rooms must be provided. The Shower Room shall be of sufficient capacity to accommodate the number of workers. One shower stall shall be provided for each eight (8) workers. Showers shall be equipped with hot and cold or warm

running water. Shower water shall be collected and filtered using best available technology and disposed of in accordance with all Federal, State and local laws, regulations and ordinances.

D. Personal Protection:

The Contractor shall initially determine if any employee performing construction tasks impacting lead paint may be exposed to lead at or above the OSHA Action Level of 30 $\mu g/m^3$. Assessments shall be based on initial air monitoring results as well as other relevant information. The Contractor may rely on historical air monitoring data obtained within the past 12 months under workplace conditions closely resembling the process, type of material, control methods, work practices and environmental conditions used and prevailing in the Contractors current operations to satisfy the exposure assessment requirements. Monitoring shall continue as specified in the OSHA standard until a negative exposure assessment is developed.

Until a negative exposure assessment is developed for each task impacting lead paint, the Contractor shall ensure that all workers and authorized person entering the Regulated Area wear protective clothing and respirators in accordance with OSHA 29 CFR 1926.62. Protective clothing shall include impervious coveralls with elastic wrists and ankles, head covering, gloves and foot coverings. Sufficient quantities shall be provided to last throughout the duration of the project.

Protective clothing provided by the Contractor and used during chemical removal operations shall be impervious to caustic materials. Gloves provided by the Contractor and used during chemical removal shall be of neoprene composition with glove extenders.

Respiratory protective equipment shall be provided and selection shall conform to 42 CFR Part 84, 29 CFR Part 1910.134, and 29 CFR Part 1926.62. A formal respiratory protection program must be implemented in accordance with 29 CFR Part 1926.62 and Part 1910.134.

E. Air Monitoring Requirements

The Contractor shall:

1. Provide air monitoring equipment including sample filter cassettes of the type and quantity required to properly monitor operations and personnel exposure surveillance throughout the duration of the project.

2. Conduct initial exposure monitoring to determine if any employee performing construction tasks impacting lead paint may be exposed to lead at or above the OSHA Action Level of 30 micrograms per cubic meter. Monitoring shall continue as specified in the OSHA standard until a negative exposure assessment is developed.

3. Conduct personnel exposure assessment air sampling, as necessary, to assure that workers are using appropriate respiratory protection in accordance with OSHA Standard 1926.62. Documentation of air sampling results must be recorded at the

work site within twenty-four (24) hours and shall be available for review until the job is complete.

F. Lead Abatement Procedures

The Contractor's Competent Person shall be at the job site at all times during work impacting lead.

Work impacting lead paint shall not begin until authorized by the Engineer, following a pre-work visual inspection by the Project Monitor or Engineer to verify existing conditions.

Any activity impacting lead painted surfaces shall be performed in a manner which minimizes the spread of lead dust contamination and generation of airborne lead.

The Contractor shall conduct exposure assessments for all tasks which impact lead paint in accordance with 29 CFR 1926.62(d) and shall implement appropriate personal protective equipment until negative exposure assessments are developed.

All work impacting the materials identified below shall be conducted within an established Regulated Area with a remote wash facility/decontamination system in accordance with "C. Wash Facilities" and the OSHA Lead in Construction Standard. In accordance with 29 CFR 1926.62, engineering controls and work practices shall be utilized to prevent the spread of lead dust and debris beyond the Regulated Area and limit the generation of airborne lead. All wastes containing lead paint shall be properly contained and secured for storage, transportation and disposal.

The Contractor shall ensure proper entry and exit procedures for workers and authorized persons who enter and leave the Regulated Area. All workers and authorized persons shall leave the Regulated Area and proceed directly to the wash or shower facilities where they will HEPA vacuum gross debris from work suit, remove and dispose of work suit, wash and dry face and hands, and vacuum clothes. Lead chips and dust must not be removed by blowing or shaking of clothing. Wash water shall be collected, filtered, and disposed of in accordance with Federal, State and local water discharge standards. Any permit required for such discharge shall be the responsibility of the Contractor.

No one shall eat, drink, smoke, chew gum or tobacco, or apply cosmetics while in the Regulated Area.

Data from the limited lead testing performed by the Engineer is documented in the reports listed in the "Notice to Contractor – Hazardous Materials Investigations" or is presented herein. Under no circumstances shall this information be the sole means used by the Contractor for determining the extent of lead painted materials. The Contractor shall be responsible for verification of all field conditions affecting performance of the work as described in these Specifications in accordance with OSHA, USEPA, USDOT and CTDEEP standards. Compliance with the applicable requirements is solely the responsibility of the Contractor.

The following details the extent of each phase of operation designated for this project. Phase areas may be combined or divided at the direction of the Engineer. Proceed through the sequencing of the work phases under the direction of the Engineer.

Bridge No. 00507, S.R. 816 over Housatonic River, Newtown/Southbury, Connecticut

- **Lead paint was identified on the painted metal, asphalt and concrete parapet surfaces associated with Bridge No. 00507. XRF readings and AAS results showed the paints to be lead based.**

- **No lead paint was identified on the painted concrete surfaces of the concrete deck on the underside of the bridge of Bridge No. 00507. XRF readings and AAS results identified the paint as not lead based.**

Structural Components such as Girders, Cross Beams, Trusses, Bearings, etc.	**Metal**	**Brown**	**10.7-15.5 mg/cm^2**
Deck (top side) shoulder line	**Asphalt**	**White**	**7.9 mg/cm^2**
Deck (top side) lane line divider	**Asphalt**	**Yellow**	**0.1 mg/cm^2**
Deck (top side) parapet walls	**Concrete**	**Tan/Beige**	**0.10% by weight**
Deck (under side)	**Concrete**	**Grey**	**ND < 0.026% by weight**

- **TCLP waste stream sampling/analysis of the paint associated with the structural steel/metal bridge components characterized the paint waste as <u>RCRA Hazardous waste</u>.**

Paint debris	**340 mg/l**

- **TCLP waste stream sampling/analysis of the painted asphalt located on the topside of the deck characterized the debris as <u>Non-Hazardous C&D bulky waste</u>.**

Asphalt debris	**0.85 mg/l**

- **TCLP waste stream sampling/analysis of the paint located on the concrete parapet walls characterized the paint waste as <u>Non-Hazardous C&D bulky waste</u>.**

Paint debris (parapet walls)	**0.086 mg/l**

- **Since the painted concrete surfaces on the underside of the deck were not identified as lead based, any projected waste paint debris stream is characterized as <u>Non-Hazardous</u> for lead.**

While conducting work to the bridge, where it is necessary to impact the painted metal, concrete parapet and asphalt surfaces, the Contractor shall either:

a. **Remove the paint to be impacted prior to impacting the metal, concrete parapet and asphalt in accordance with OSHA Lead in Construction Standard 29CFR 1926.62, or**
b. **Impact the metal, concrete parapet and asphalt using mechanical means with the paint in place in accordance with OSHA Lead in Construction Standard 29CFR 1926.62.**

The Contractor shall submit a Work Plan to ConnDOT outlining the exact procedures that will be used to perform the work, contain the spread of lead debris and protect the employees performing the required renovation work impacting the lead paint. No work shall be started by the Contractor until the Work Plan is approved by the Engineer.

All work impacting the lead paint materials shall be conducted within an established Regulated Area with a remote wash facility/decontamination system in accordance with "C. Wash Facilities" and the OSHA Lead in Construction Standard. In accordance with 29 CFR 1926.62, engineering controls and work practices shall be utilized to prevent the spread of lead dust and debris beyond the Regulated Area and limit the generation of airborne lead. All wastes containing lead paint shall be properly contained and secured for storage, transportation and disposal.

On Bridge No. 00507, the Engineer has characterized the paint waste stream associated with the structural steel/metal bridge components as <u>RCRA Hazardous waste</u>. If the paint is removed from the metal, the paint shall be handled and disposed of in accordance with USEPA/CTDEEP Hazardous Waste Regulations as described under this Item 0020903A.

On Bridge No. 00507, the Engineer has characterized the paint waste stream associated with the concrete parapet walls as <u>Non-Hazardous</u> C&D bulky waste. If the paint is removed from the concrete it shall be disposed of as non-hazardous construction and demolition (C&D) bulky waste at an approved CTDEEP Solid Waste landfill.

On Bridge No. 00507, the Engineer has characterized the painted asphalt waste stream associated with topside roadway as <u>Non-Hazardous</u> C&D bulky waste and it shall be disposed of as non-hazardous construction and demolition (C&D) bulky waste at an approved CTDEEP Solid Waste landfill.

All steel and metal components generated from the miscellaneous exterior work tasks (painted or not) shall be segregated and recycled as scrap metal. The recycling of scrap metal (regardless of lead paint concentration) is exempt from USEPA RCRA and CTDEEP Hazardous Waste Regulation.

Should lead contamination be discovered outside of the Regulated Area, the Contractor shall immediately stop all work in the Regulated Area, eliminate causes of such contamination and take steps to decontaminate non-work areas.

Special Requirements:

1. Demolition/Renovation:

    a. Demolish/renovate in a manner which minimizes the spread of lead contamination and generation of lead dust.
    b. Implement dust suppression controls, such as misters, local exhaust ventilation, etc. to minimize the generation of airborne lead dust.
    c. Segregate work areas from non-work areas through the use or barrier tape, drop cloths, etc.
    d. Clean up immediately after renovation/demolition has been completed

2. Chemical Removal:

    a. Apply chemical stripper in quantities and for durations specified by manufacturer.
    b. Where necessary, scrape lead paint from surface down to required level of removal (i.e. stabilized surface, bare substrate with no trace of residual pigment, etc.). Use sanding, hand scraping, and dental picks to supplement chemical methods as necessary.

    c. Apply neutralizer compatible with substrate and chemical agent to substrate following removal in accordance with manufacturer's instructions.
    d. Protect adjacent surfaces from damage from chemical removal.
    e. Maintain a portable eyewash station in the work area.
    f. Wear respirators that will protect workers from chemical vapors.
    g. Do not apply caustic agents to aluminum surfaces.

3. Mechanical Paint Removal:

    a. Provide sanders, grinders, rotary wire brushes, or needle gun removers equipped with a HEPA filtered vacuum dust collection system. Cowling on the dust collection system for orbital-type tools must be capable of maintaining a continuous tight seal with the surface being abated. Cowling on the dust collection system for reciprocating-type tools shall promote an effective vacuum flow of loosened dust and debris. Inflexible cowlings may be used on flat surfaces only. Flexible contoured cowlings are required for curved or irregular surfaces.
    b. Provide HEPA vacuums that are high performance designed to provide maximum static lift and maximum vacuum system flow at the actual operating vacuum condition with the shroud in use. The HEPA vacuum shall be equipped with a pivoting vacuum head.
    c. Remove lead paint from surface down to required level of removal (i.e. stabilized surface, bare substrate with no trace of residual pigment, etc.). Use chemical methods, hand scraping, and dental picks to supplement abrasive removal methods as necessary.

d. Protect adjacent surfaces from damage from abrasive removal techniques.
e. "Sandblasting" type removal techniques shall not be allowed.

4. Component Removal/Replacement:

a. Wet down components which are to be removed to reduce the amount of dust generated during the removal process.
b. Remove components utilizing hand tools, and follow appropriate safety procedures during removal. Remove the components by approved methods which will provide the least disturbance to the substrate material. Do not damage adjacent surfaces.
c. Clean up immediately after component removals have been completed. Remove any dust located behind the component removed.

G. Prohibited Removal Methods:

The use of heat guns in excess of 700 degrees Fahrenheit to remove lead paint is prohibited.

The use of sand, steel grit, air, CO_2, baking soda, or any other blasting media to remove lead or lead paint without the use of a HEPA ventilated contained negative pressure enclosure is prohibited.

Power/pressure washing shall not be used to remove lead paint.

Compressed air shall not be utilized to remove lead paint.

Chemical strippers containing Methylene Chloride are prohibited. Any chemical stripping may be prohibited on a project by project basis.

Power tool assisted grinding, sanding, cutting, or wire brushing of lead paint without the use of cowled HEPA vacuum dust collection systems is prohibited.

Lead paint burning, busting of rivets painted with lead paint, welding of materials painted with lead paint, and torch cutting of materials painted with lead paint is prohibited. Where cutting, welding, busting, or torch cutting of materials is required, lead paint in the affected area must be removed first.

Chemical stripping of coatings from bridge components is generally prohibited unless specifically allowed on a project by project basis.

H. Clean-up and Visual Inspection:

The Contractor shall remove and containerize all lead waste material and visible accumulations of debris, paint chips and associated items.

During clean-up the Contractor shall utilize rags and sponges wetted with lead-specific detergent and water as well as HEPA filtered vacuum equipment.

The Engineer will conduct a visual inspection of the work areas in order to document that all surfaces have been maintained as free as practicable of accumulations of lead in accordance with 29 CFR 1926.62(h). If visible accumulations of waste, debris, lead paint chips or dust are found in the work area, the Contractor shall repeat the cleaning, at the Contractor's expense, until the area is in compliance. The visual inspection will detect incomplete work, damage caused by the abatement activity, and inadequate clean up of the work site.

I. Post-Work Regulated Area Deregulation:

Following an acceptable visual inspection, any engineering controls implemented may be removed.

A final visual inspection of the work area shall be conducted by the Competent Person and the Project Monitor or Engineer to ensure that all visible accumulations of suspect materials have been removed and that no equipment or materials associated with the lead paint removal remain. If this final visual inspection is acceptable, the Contractor will reopen the Regulated Area and remove all signage.

The Contractor shall restore all work areas and auxiliary areas utilized during work to conditions equal to or better than original. Any damage caused during the performance of the work activity shall be repaired by the Contractor at no additional expense to the State.

J. Waste Disposal/Recycling:

Non-metallic building debris waste materials tested and found to be non-hazardous Construction and Demolition (C&D) bulky waste shall be disposed of properly at a CTDEEP approved Solid Waste landfill as described under this Item 0020903A.

Metallic debris shall be segregated and recycled as scrap metal at an approved metal recycling facility.

Concrete, brick, etc. coated with <u>any amount of lead paint</u> cannot be crushed, recycled or buried on-site to minimize waste disposal unless tested and found to meet the RSR GA/Residential standards.

Hazardous lead debris shall be disposed of as described under this Item 0020903A.

The Contractor shall comply with the latest requirements of the USEPA RCRA Hazardous Waste Regulations 40 CFR 260-274 and the DEEP Hazardous/Solid Waste Management Standards 22a-449(c).

Hazardous lead debris shall be transported from the Project by a licensed hazardous waste transporter approved by the Department and disposed of at an EPA-permitted and Department-approved hazardous waste landfill within 90 days from the date of generation.

The Contractor must use one or more of the following Department-approved disposal facilities for the disposal of hazardous waste:

Clean Earth of North Jersey, Inc., (CENJ) 115 Jacobus Avenue, South Kearny, NJ 07105 Phone: (973) 344-4004; Fax: (973) 344-8652	Clean Harbors Environmental Services, Inc. 2247 South Highway 71, Kimball, NE 69145 Phone: (308) 235-8212; Fax: (308) 235-4307
Clean Harbors of Braintree, Inc. 1 Hill Avenue, Braintree, MA 02184 Phone: (781) 380-7134; Fax: (781) 380-7193	Cycle Chem (General Chemical Corp.) 217 South First Street, Elizabeth, NJ 07206 Phone: (908) 355-5800; Fax (908) 355-0562
EnviroSafe Corporation Northeast (former Jones Environmental Services (NE), Inc.) 263 Howard Street, Lowell, MA 01852 Phone: (978) 453-7772; Fax: (978) 453-7775	Environmental Quality Detroit, Inc. 1923 Frederick Street, Detroit, MI 48211 Phone: (800) 495-6059; Fax: (313) 923-3375
Republic Environmental Systems 2869 Sandstone Drive, Hatfield, PA 19440 Phone: (215) 822-8995; Fax: (215) 997-1293	Chemical Waste Management of New York 1550 Balmer Rd., Model City, NY 14107 Phone: (800) 843-3604; Fax: (716) 754-0211
Environmental Quality Company: Wayne Disposal Facility 49350 North I-94 Service Drive Belleville, MI 48111 Phone: (800) 592-5489; Fax: (800) 592-5329	Northland Environmental, Inc. (PSC Environmental Systems) 275 Allens Avenue, Providence, RI 02905 Phone: (401) 781-6340; Fax: (401) 781-9710

The apparent low bidder shall submit in writing, within fourteen days after Bid opening, (1) a letter listing the names of the hazardous waste disposal facilities (from the above list) that the bidder, if it is awarded the Contract, will use to receive hazardous material from this Project, and (2) a copy of each facility's acceptance criteria and sampling frequency requirements.

Any other Contractor which the Department may subsequently designate as the apparent low bidder shall make the aforementioned submissions within fourteen (14) days from the date on which the Department notifies the Contractor that it has become the apparent low bidder. If, however, the Department deems it is necessary for such a subsequent-designated Contractor to make said submissions within a shorter period of time, the Contractor shall make those submissions within the time designated by the Department.

Failure to comply with all of the above requirements may result in the rejection of the bid.

No facility may be substituted for the one(s) designated in the Contractor's submittal without the Engineer's prior approval. If the material cannot be accepted by any of the Contractor's designated facilities, the Department will supply the Contractor with the name(s) of other acceptable facilities.

Prior to the generation of any hazardous waste, the Contractor shall notify the Engineer of its selected hazardous waste transporter and disposal facility. The Contractor must submit to the Engineer (1) the transporter's current US DOT Certificate of Registration and (2) the transporter's current Hazardous Waste Transporter Permits for the State of Connecticut, the hazardous waste destination state and any other applicable states. The Engineer will then obtain on a contiguous per site basis a temporary EPA Generators ID number for the site that he will forward to the Contractor. Any changes in transporter or facility shall be immediately forwarded to the Engineer for review.

Handling, storage, transportation and disposal of hazardous waste materials generated as a result of execution of this project shall comply with all Federal, State and Local regulations including the USEPA RCRA Hazardous Waste Regulations (40 CFR Parts 260-271), the CTDEEP Hazardous Waste Regulations (22a-209 and 22a-449(c)), and the USDOT Hazardous Materials Regulations (49 CFR Part 171-180).

All debris shall be contained and collected daily or more frequently as directed by the Engineer, due to debris buildup. Debris shall be removed by HEPA vacuum collection. Such debris and paint chips shall be stored in leak-proof storage containers in the secured storage site, or as directed by the Engineer. The storage containers and storage locations shall be reviewed by the Engineer and shall be located in areas not subject to ponding. Storage containers shall be placed on pallets and closed and covered with tarps at all times except during placement, sampling and disposal of the debris.

Hazardous waste materials are to be properly packed and labeled for transport by the Contractor is accordance with EPA, CTDEEP and USDOT regulations. The disposal of debris characterized as hazardous waste shall be completed within 90 calendar days of the date on which it began to be accumulated in the lined containers. Storage of containers shall be in accordance with current DEEP/EPA procedures.

The Contractor shall label hazardous waste storage containers with a 6-inch square, yellow, weatherproof, Hazardous Waste sticker in accordance with USDOT regulations.

Materials other than direct paint related debris which are incidental to the paint removal work activities (tarps, poly, plywood, PPE, gloves, decontamination materials, etc.) which may be contaminated with lead, shall be stored separately from the direct paint debris, and shall be sampled by the Engineer for waste disposal characterization testing. Such materials characterized as hazardous shall be handled/disposed of as described herein, while materials characterized as non-hazardous shall be disposed of as non-hazardous CTDEEP Solid Waste.

Direct paint related debris materials not previously sampled and characterized for disposal, which may be originally presumed to be hazardous waste, shall also be stored separately and sampled by the Engineer for ultimate waste disposal characterization testing and handled/disposed of based on that testing.

Project construction waste materials unrelated to the paint removal operations shall NOT be combined/stored with paint debris waste and/or incidental paint removal materials as they are not lead contaminated and shall NOT be disposed of as hazardous waste. The Engineer's on-site Inspectors shall conduct inspections to verify materials remain segregated.

The Contractor shall obtain and complete all paperwork necessary to arrange for material disposal, including disposal facility waste profile sheets. It is solely the Contractor's responsibility to co-ordinate the disposal of hazardous materials with its selected treatment/recycling/disposal facility(s). Upon receipt of the final approval from the facility, the Contractor shall arrange for the loading, transport and treatment/recycling/disposal of the materials in accordance with all Federal and State regulations. **No claim will be considered based on the failure of the Contractor's disposal facility(s) to meet the Contractor's production rate or for the Contractor's failure to select sufficient facilities to meet its production rate.**

The Contractor shall process the hazardous waste such that the material conforms with the requirements of the selected treatment/disposal facility, including but not limited to specified size and dimension. Refusal on the part of the treatment/disposal facility to accept said material solely on the basis of non-conformance of the material to the facility's physical requirements is the responsibility of the Contractor and no claim for extra work shall be accepted for reprocessing of said materials to meet these requirements.

All DOT shipping documents, including the Uniform Hazardous Waste Manifests utilized to accompany the transportation of the hazardous waste material shall be prepared by the Contractor and reviewed/signed by an authorized agent representing ConnDOT, as Generator, for each load of hazardous material that is packed to leave the site. The Contractor shall not sign manifests on behalf of the State as Generator. The Contractor shall forward the appropriate original copies of all manifests to the Engineer the same day the material leaves the Project site.

Materials not related to lead paint removal and/or characterized as non-hazardous waste shall NOT be shipped for hazardous waste disposal in accordance with USEPA RCRA hazardous waste minimization requirements.

A load-specific certificate of disposal, signed by the authorized agent representing the waste disposal facility, shall be obtained by the Contractor and promptly delivered to the Engineer for each load.

In addition to all pertinent Federal, State and local laws or regulatory agency polices, the Contractor shall adhere to the following precautions during the transport of hazardous materials off-site:

- All vehicles departing the site are to be properly logged to show the vehicle identification, driver's name, time of departure, destination, and approximate volume, and contents of materials carried. Vehicles shall display the proper USDOT placards for the type and quantity of waste;

- No materials shall leave the site unless a disposal facility willing to accept all of the material being transported has agreed to accept the type and quantity of waste;
- Documentation must be maintained indicating that all applicable laws have been satisfied and that the materials have been successfully transported and received at the disposal facility; and,
- The Contractor shall segregate the waste streams (i.e. concrete, wood, etc.) as directed by the receiving disposal facility.

Any spillage of debris during disposal operations during loading, transport and unloading shall be cleaned up in accordance with EPA 40 CFR 265 Subparts C & D, at the Contractor's expense.

The Contractor is liable for any fines, costs or remediation costs incurred as a result of their failure to be in compliance with this Item and all Federal, State and Local laws.

K. Project Closeout Data:

Provide the Engineer, within thirty (30) days of completion of the project site work, a compliance package; which shall include, but not be limited to, the following:

1. Competent persons (supervisor) job log;
2. OSHA-compliant personnel air sampling data;
3. Completed waste shipment papers for non-hazardous lead construction and demolition (C&D) waste disposal or recycling and scrap metal recycling.
4. Copies of completed Hazardous Waste Manifests (signed by authorized disposal facility representative).

Method of Measurement:

The completed work shall be paid as a lump sum. This item will include all noted services, equipment, facilities, testing and other associated work for up to three (3) ConnDOT project representatives. Services provided to any ConnDOT project representatives in excess of three (3) representatives will be measured for payment in accordance with Article 1.09.04 – "Extra and Cost-Plus Work."

Basis of Payment:

The lump sum price bid for this item shall include: services, materials, equipment, all permits, notifications, submittals, personal air sampling, personal protection equipment, temporary enclosures, incidentals, fees and labor incidental to activities impacting lead removal, treatment and handling of lead contaminated materials, and the transport and disposal of any hazardous and/or non-hazardous lead construction and demolition (C&D) bulky waste.

Final payment will not be made until all project closeout data submittals have been completed and provided to the Engineer. Once the completed package has been received in its entirety and accepted by the Engineer, final payment will be made to the Contractor.

Pay Item	Pay Unit
Lead Compliance for Miscellaneous Exterior Tasks	l.s.

ITEM #0020904A – LEAD COMPLIANCE FOR ABRASIVE BLAST CLEANING

Description:

Work under this item shall include the special handling measures and work practices required for abrasive blast cleaning activities, principally involved in bridge coating removal/painting operations, that impact materials containing or covered by lead paint. Lead paint includes paint found to contain **any** detectable amount of lead by Atomic Absorption Spectrophotometry (AAS) or X-Ray Fluorescence (XRF).

All activities shall be performed in accordance with the OSHA Lead in Construction Regulations (29 CFR 1926.62), the USEPA RCRA Hazardous Waste Regulations (40 CFR Parts 260 through 274), the CTDEEP Hazardous Waste Regulations (RCSA 22a-209-1 and 22a-449(c)), and SSPC Guide 6 – Guide for Containing Debris Generated During Paint Removal Operations.

All activities shall be performed by individuals with appropriate levels of OSHA lead awareness and hazard communication training, supervised at all times by the Contractor's Competent Person, and periodically inspected by personnel working for an industrial hygiene firm (IH firm), retained by the Contractor, under the direct supervision of a Certified Industrial Hygienist (CIH). Periodic inspections shall be conducted at least weekly while work impacting lead is occurring, but shall be as frequent as necessary to maintain Contractor compliance with the OSHA Lead Construction Standards. The Contractor's Competent Person shall be on-site at all times that the work impacting lead is being performed and shall be capable of identifying existing and predictable hazards in the surroundings or working conditions which are unsanitary, hazardous or dangerous to employees, and has authorization to take prompt corrective measures to eliminate them.

Deviations from these Specifications require the written approval of the Engineer.

Materials:

All materials shall be delivered to the job site in the original packages, containers, or bundles bearing the name of the manufacturer, the brand name and product technical description, with MSDS sheets as applicable.

No damaged or deteriorating materials shall be used. If material becomes contaminated with lead, the material shall be decontaminated or disposed of as lead-containing waste material. The cost to decontaminate and dispose of this material shall be at the expense of the Contractor.

The following material requirements are to be met if to be used during the work:

Fire retardant polyethylene sheet shall be in roll size to minimize the frequency of joints, with factory label indicating minimum six (6) mil thickness.

Polyethylene disposable bags shall be minimum six (6) mils thick.

Tape (or equivalent product) capable of sealing joints in adjacent polyethylene sheets and for the attachment of polyethylene sheets to finished or unfinished surfaces must be capable of adhering under both dry and wet conditions.

Cleaning Agents and detergent shall be lead specific, such as TriSodium Phosphate (TSP).

Labels and warning signs shall conform to 29 CFR 1926.62, 40 CFR 260 through 274 and 49 CFR 172 as appropriate.

Air filtration devices and vacuum units shall be equipped with High-Efficiency Particulate Air (HEPA) filters.

Construction Methods:

(1) Pre-Abatement Submittals and Notices

A. Prior to the start of **any** work that will generate hazardous lead waste above conditionally exempt small quantities (greater than 100 kg/month or greater than 1000 kg stored at any time), the Contractor shall obtain from the Engineer on a contiguous per site basis, a temporary EPA Hazardous Waste Generators ID number, in accordance with Item 0603222A Disposal of Lead Debris from Abrasive Blast Cleaning, unless otherwise directed by the Engineer.

B. Fifteen (15) working days prior to beginning work that impacts lead paint, the Contractor shall submit four copies of each of the following to the Engineer:

1. A written site-specific Lead Compliance Plan, prepared and stamped by a Certified Industrial Hygienist (CIH), that covers all workers on the project (Contractor, Subcontractor and ConnDOT representatives). The Lead Compliance Plan shall be prepared in accordance with 29 CFR 1926.62(e), and shall include: descriptions of each activity impacting lead; procedures for engineering, work practice, and administrative controls to be employed; daily on-site job-site inspections by the Competent Person; periodic on-site inspections by IH firm personnel (describe frequency and inspection criteria); hazard communication/training; medical surveillance; biological monitoring; exposure assessment air monitoring; personal protective equipment (PPE); respiratory protection; housekeeping; decontamination; procedures for waste containment, storage, handling and disposal; contents of the job completion close-out report; and all other procedures that may be necessary to comply with 29 CFR 1926.62 and 40 CFR 260 – 274.

2. Copies of all employee certificates, dated within the previous twelve (12) months, relating to OSHA lead awareness and hazard communication training and training in the use of lead-safe work practices. SSPC training programs, such as SSPC C-5

Deleading of Industrial Structures may be accepted as meeting these requirements if it can be demonstrated that such training addressed all required OSHA topics.

This information shall be updated and resubmitted annually, or as information changes, for the duration of lead removal work in order to verify continued compliance.

3. Name and qualifications of Contractor's OSHA Competent Person, as defined under 29 CFR 1926.62, who will be on-site at all times that the work impacting lead paint is being performed.

4. Name and qualifications of IH firm personnel that will be performing the periodic on-site inspections. Such personnel shall work under the direct supervision of the CIH that stamped the Lead Compliance Plan and have training within the previous twelve (12) months for OSHA lead awareness and the use of lead-safe work practices or equivalent. Such personnel shall also have a minimum of two years work experience related to the OSHA Lead in Construction Standard and be capable of recognizing the hazards associated therewith.

5. Documentation from the Contractor, typed on company letterhead and signed by the Contractor, certifying that all employees listed therein have received the following, and are medically fit to perform the work impacting lead:

   a. medical monitoring within the previous twelve (12) months, as required in 29 CFR 1926.62;
   b. biological monitoring within the previous six (6) months, as required in 29 CFR 1926.62;
   c. respirator fit testing within the previous twelve (12) months, as required in 29 CFR 1910.134 (for those who don a tight-fitting face piece respirator)

   This information shall be updated and resubmitted every 6 months, or as information changes, for the duration of lead removal work in order to verify continued compliance.

6. Names of the proposed non-hazardous construction and demolition (C&D) lead debris bulky waste disposal facility (CTDEEP-permitted Solid Waste landfill).

7. Names of the proposed scrap metal recycling facilities. The Contractor shall submit to the Engineer all documentation necessary to demonstrate the selected facility is able to accept lead-painted metal.

8. Negative exposure assessments conducted within the previous 12 months documenting that employee exposure to lead for each task is below the OSHA Action Level of 30 $\mu g/m^3$. If a negative exposure assessment has not been conducted, the Contractor shall submit its air monitoring program for the work tasks as part of the

Lead Compliance Plan. Until a negative exposure assessment is developed for each task impacting lead paint, the Contractor shall ensure that all workers and authorized person entering the Regulated Area wear protective clothing and respirators in accordance with OSHA 29 CFR 1926.62.

No activity shall commence until all required submittals have been received and found acceptable to the Engineer. Those employees added to the Contractor's original list will be allowed to perform work only upon submittal of acceptable documentation to, and review by, the Engineer.

Contractor shall provide the Engineer with a minimum of 48 hours notice in advance of scheduling, changing or canceling work activities.

(2) Lead Abatement Provisions

A. General Requirements:

All employees of the Contractor who perform work impacting lead paint shall be properly trained to perform such duties. In addition, the Contractor shall instruct all workers in all aspects of personnel protection, work procedures, emergency evacuation procedures and use of equipment including procedures unique to this project.

Contractor shall provide all labor, materials, tools, equipment, services, testing, and incidentals which are necessary or required to perform the work in accordance with applicable governmental regulations, industry standards and codes, and these Specifications.

Prior to beginning work, the Engineer and Contractor shall perform a visual survey of each work area and review conditions.

As necessary, the Contractor shall:

Shut down and lock out electrical power, including all receptacles and light fixtures, where feasible. The use or isolation of electrical power will be coordinated with all other ongoing uses of electrical power at the site.

Coordinate all power and fire alarm isolation with the appropriate representatives.

If adequate electrical supply is not available at the site, the Contractor shall supply temporary power. Such temporary power shall be sufficient to provide adequate lighting and power the Contractor’s equipment. The Contractor is responsible for proper connection and installation of electrical wiring and shall ensure safe installation of electrical equipment in compliance with applicable electrical codes and OSHA requirements.

If water is not available at the site for the Contractor's use, the Contractor shall supply sufficient water for each shift to operate the wash facility/decontamination shower units in addition to the water needed at the work area.

The Engineer may provide a Project Monitor to monitor compliance of the Contractor and protect the interests of the Department. In such cases, no activity impacting lead paint shall be performed until the Project Monitor is on-site. Environmental sampling, including ambient air sampling, TCLP waste stream sampling, and dust wipe sampling, will be conducted by the State as it deems necessary throughout the project. Any Project Monitor provided by the Engineer is supplementary to the requirement for the Contractor to have periodic inspections performed at a frequency to ensure/document Contractor compliance with the regulations and the requirements of the Contractor's Lead Compliance Plan. Air monitoring to comply with the Contractor's obligations under OSHA remains solely responsibility of the Contractor.

If at any time, procedures for engineering, work practice, administrative controls or other topics are anticipated to deviate from those documented in the submitted and accepted Lead Compliance Plan, the Contractor shall submit a modification of its existing plan for review and acceptance by the Engineer prior to implementing the change.

If air samples collected outside of the Regulated Area during activities impacting lead paint indicate airborne lead concentrations greater than original background levels or 30 ug/m^3, whichever is larger, or if at any time visible emissions of lead paint extend out from the Regulated Area, an examination of the Regulated Area shall be conducted and the cause of such emissions corrected. Cleanup of surfaces outside the Regulated Area using HEPA vacuum equipment or wet cleaning techniques shall be done prior to resuming work.

Work outside the initial designated area(s) will not be paid for by the Engineer. The Contractor will be responsible for all costs incurred from these activities including repair of any damage.

B. Regulated Area

The Contractor shall establish a Regulated Area through the use of appropriate barrier tape or other means to control unauthorized access into the area where activities impacting lead paint are occurring. Warning signs meeting the requirements of 29 CFR 1926.62 shall be posted at all approaches to Regulated Areas. These signs shall read:

WARNING
LEAD WORK AREA
POISON
NO SMOKING OR EATING

The Contractor shall also implement appropriate engineering controls including a full negative pressure enclosure, in accordance with Item 0603563A – Class I Containment & Collection of Surface Preparation Debris (Site No. 1), and wet dust suppression methods, etc. as necessary, and as approved by the Engineer, to prevent the spread of lead contamination beyond the

Regulated Area in accordance with the Contractor's approved Lead Compliance Plan. Should the previously submitted plan prove to be insufficient to contain the contamination, the Contractor shall modify its plan and submit it for review by the Engineer.

Any air exhausted from the containment enclosure, abrasive-recycling equipment or vacuum equipment shall be passed through a HEPA filtering system. The Contractor is responsible for the design, effectiveness and maintenance of this filtering system. No discharge of debris dust shall be allowed.

C. Wash Facilities:

The Contractor shall provide handwash facilities in compliance with 29 CFR 1926.51(f) and 29 CFR 1926.62 regardless of airborne lead exposure.

If employee exposure to airborne lead exceeds the OSHA Permissible Exposure Limit of 50 micrograms per cubic meter ($\mu g/m^3$), shower rooms must be provided. The Shower Room shall be of sufficient capacity to accommodate the number of workers. One shower stall shall be provided for each eight (8) workers. Showers shall be equipped with hot and cold or warm running water. Shower water shall be collected and filtered using best available technology and disposed of in accordance with all Federal, State and local laws, regulations and ordinances.

D. Personal Protection:

The Contractor shall initially determine if any employee performing construction tasks impacting lead paint may be exposed to lead at or above the OSHA Action Level of 30 $\mu g/m^3$. Assessments shall be based on initial air monitoring results as well as other relevant information. The Contractor may rely on historical air monitoring data obtained within the past 12 months under workplace conditions closely resembling the process, type of material, control methods, work practices and environmental conditions used and prevailing in the Contractors current operations to satisfy the exposure assessment requirements. Monitoring shall continue as specified in the OSHA standard until a negative exposure assessment is developed.

Until a negative exposure assessment is developed for each task impacting lead paint, the Contractor shall ensure that all workers and authorized person entering the Regulated Area wear protective clothing and respirators in accordance with OSHA 29 CFR 1926.62. Protective clothing shall include impervious coveralls with elastic wrists and ankles, head covering, gloves and foot coverings. Sufficient quantities shall be provided to last throughout the duration of the project.

Protective clothing provided by the Contractor and used during chemical removal operations shall be impervious to caustic materials. Gloves provided by the Contractor and used during chemical removal shall be of neoprene composition with glove extenders.

Respiratory protective equipment shall be provided and selection shall conform to 42 CFR Part 84, 29 CFR Part 1910.134, and 29 CFR Part 1926.62. A formal respiratory protection program must be implemented in accordance with 29 CFR Part 1926.62 and Part 1910.134.

E. Air Monitoring Requirements

The Contractor shall:

1. Provide air monitoring equipment including sample filter cassettes of the type and quantity required to properly monitor operations and personnel exposure surveillance throughout the duration of the project.

2. Conduct initial exposure monitoring to determine if any employee performing construction tasks impacting lead paint may be exposed to lead at or above the OSHA Action Level of 30 micrograms per cubic meter. Monitoring shall continue as specified in the OSHA standard until a negative exposure assessment is developed.

3. Conduct personnel exposure assessment air sampling, as necessary, to assure that workers are using appropriate respiratory protection in accordance with OSHA Standard 1926.62 or the approved Lead Compliance Plan. Documentation of air sampling results must be recorded at the work site within twenty-four (24) hours and shall be available for review until the job is complete.

F. Periodic Inspections

The Contractor shall retain the services of IH firm personnel, working under the direct supervision of the CIH that stamped the Lead Compliance Plan, to perform periodic inspections of the job site work practices and engineering controls, on a frequency to ensure/document Contractor compliance with the regulations. Periodic inspections shall be performed at least weekly while work impacting lead is occurring, but shall be at the frequency necessary to maintain Contractor compliance with the OSHA Lead in Construction Standard. Any exceptions to 29 CFR 1926.62 or the accepted Lead Compliance Plan shall be reported to the Contractor and the Engineer prior to the IH firm personnel leaving the site and corrected immediately.

All findings of such periodic inspections shall be documented in writing to the Engineer no later than 10 days following the site visit. At a minimum, the inspection report shall document the following:

1. Description of current work activities
2. Description of engineering controls being implemented
3. Description of PPE being utilized
4. Description of visual review of containment system effectiveness
5. Results of all air sampling received since date of last report
6. Narrative interpreting sample results and making recommendations as necessary
7. Description of waste management practices being utilized

8. Descriptions of exceptions noted and corrective action taken

The report shall include a signature from the IH firm employee that performed the site inspection verifying that the Contractor's work practices are in compliance with 29 CFR 1926.62 and the previously submitted and accepted Lead Compliance Plan. The CIH shall sign verifying their concurrence.

G. Lead Abatement Procedures

The Contractor's Competent Person shall be at the job site at all times during work impacting lead.

Work impacting lead paint shall not begin until authorized by the Engineer, following a pre-work visual inspection by the Project Monitor or Engineer to verify existing conditions.

Any activity impacting lead painted surfaces shall be performed in a manner which minimizes the spread of lead dust contamination and generation of airborne lead.

The Contractor shall conduct exposure assessments for all tasks which impact lead paint in accordance with 29 CFR 1926.62(d) and shall implement appropriate personal protective equipment until negative exposure assessments are developed.

All abrasive blast cleaning work impacting the lead containing/coated materials shall be conducted within an established Regulated Area with a remote wash facility/decontamination system in accordance with "C. Wash Facilities" and the OSHA Lead in Construction Standard. In accordance with 29 CFR 1926.62, engineering controls and work practices shall be utilized to prevent the spread of lead dust and debris beyond the Regulated Area and limit the generation of airborne lead. Such engineering controls shall include the use of a full negative pressure enclosure (NPE) in accordance with SSPC Guide 6 and Item 0603563A. All wastes containing lead paint shall be properly contained and secured for storage, transportation and disposal.

The Contractor shall ensure proper entry and exit procedures for workers and authorized persons who enter and leave the Regulated Area. All workers and authorized persons shall leave the Regulated Area and proceed directly to the wash or shower facilities where they will HEPA vacuum gross debris from work suit, remove and dispose of work suit, wash and dry face and hands, and vacuum clothes. Lead chips and dust must not be removed by blowing or shaking of clothing. Wash water shall be collected, filtered, and disposed of in accordance with Federal, State and local water discharge standards. Any permit required for such discharge shall be the responsibility of the Contractor.

No one shall eat, drink, smoke, chew gum or tobacco, or apply cosmetics while in the Regulated Area.

Data from the limited lead testing performed by the Engineer is documented in the reports listed in the "Notice to Contractor – Hazardous Materials Investigations" or is presented herein. Under no circumstances shall this information be the sole means used by the Contractor for determining the extent of lead painted materials. The Contractor shall be responsible for verification of all field conditions affecting performance of the work as described in these Specifications in accordance with OSHA, USEPA, USDOT and CTDEP standards. Compliance with the applicable requirements is solely the responsibility of the Contractor.

Bridge No. 00507, S.R. 816 over Housatonic River, Newtown/Southbury, Connecticut

- **Lead paint was identified on the painted metal surfaces associated with structural steel/metal components of Bridge No. 00507. XRF readings showed the paint to be lead based.**

Structural Components such as Girders, Cross Beams, Trusses, Bearings, etc.	**Metal**	**Brown**	**10.7-15.5 mg/cm^2**

- **TCLP waste stream sampling/analysis of the paint associated with the structural steel bridge components characterized the paint waste as RCRA Hazardous waste.**

Paint debris	**340 mg/l**

Abrasive blast cleaning techniques which are utilized on surfaces coated with lead paint must be conducted in accordance with the OSHA worker protection and USEPA RCRA/CTDEEP waste disposal standards, and shall be conducted in accordance with Item # 0603923A – Abrasive Blast Cleaning and Field Painting of Structure (Site #1) following SSPC-SP10 "Near White Blast Cleaning" procedures.

On Bridge No. 00507 the Engineer has previously characterized the projected abrasive paint blast debris waste stream associated with the metal components as RCRA Hazardous waste, which shall be handled and disposed of in accordance with USEPA/CTDEEP Hazardous Waste Regulations and 0603222A – Disposal of Lead Debris from Abrasive Blast Cleaning.

Any scrap metal components generated shall be segregated and recycled as scrap metal at the Contractor's previously submitted scrap metal recycling facility. The recycling of scrap metal (regardless of lead paint concentration) is exempt from USEPA RCRA and CTDEEP Hazardous Waste Regulation.

Should lead contamination be discovered outside of the Regulated Area, the Contractor shall immediately stop all work in the Regulated Area, eliminate causes of such contamination and take steps to decontaminate non-work areas.

H. Prohibited Removal Methods:

The use of sand, steel grit, air, CO_2, baking soda, or any other blasting media to remove lead or lead paint without the use of a HEPA ventilated contained negative pressure enclosure is prohibited.

Power/pressure washing shall not be used to remove lead paint.

Compressed air shall not be utilized to remove lead paint.

Power tool assisted grinding, sanding, cutting, or wire brushing of lead paint without the use of cowled HEPA vacuum dust collection systems is prohibited.

Lead paint burning, busting of rivets painted with lead paint, welding of materials painted with lead paint, and torch cutting of materials painted with lead paint is prohibited. Where cutting, welding, busting, or torch cutting of materials is required, lead paint in the affected area must be removed first.

Chemical stripping of coatings from bridge components is prohibited.

I. Clean-up and Visual Inspection:

The Contractor shall remove and containerize all lead waste material and visible accumulations of debris, paint chips and associated items.

During clean-up the Contractor shall utilize HEPA filtered vacuum equipment.

The Engineer will conduct a visual inspection of the work areas in order to document that all surfaces have been maintained as free as practicable of accumulations of lead in accordance with 29 CFR 1926.62(h). If visible accumulations of waste, debris, lead paint chips or dust are found in the work area, the Contractor shall repeat the cleaning, at the Contractor's expense, until the area is in compliance. The visual inspection will detect incomplete work, damage caused by the abatement activity, and inadequate clean up of the work site.

All debris shall be contained and vacuum collected daily or more frequently as directed by the Engineer, due to debris buildup. Such debris, abrasive blast residue, rust and paint chips shall be stored in leakproof storage containers in the secured storage site, or as directed by the Engineer. The storage containers and storage locations shall be reviewed by the Engineer and shall be located in areas not subject to ponding.

All storage containers (roll offs or drums) shall have a protective liner and removable lid. These containers shall not have any indentations or damage that would allow seepage of the contained material.

If 55 gallon barrels are used, staging is required: 55 gallon barrels shall be stored together in two rows of five. The Contractor shall maintain a minimum lane clearance of 36 inches between each (barrel lot of ten).

The Contractor shall maintain a secure storage site, which shall be large enough to handle all debris. The Contractor shall store debris only in the secured storage site. During abrasive blast cleaning operations, all surface preparation debris shall be vacuum collected from the containment enclosure and removed to the abrasive recycling reclaimer unit, and the coating debris shall be conveyed to the secured storage site at the conclusion of the work shift. The Contractor shall account for all coating debris conveyed to the secured storage site and all coating debris transported from the project for disposal.

The secure storage site shall consist of an 8-ft. high fenced-in area with a padlocked entrance. Storage containers shall not be used on the project until and unless they have been reviewed and approved by the Engineer. Storage containers and sites shall be located so as not to cause any traffic hazard. Container storage sites shall be in areas that are properly drained and runoff water shall not be allowed to pool and shall be out of the 100-year flood plain. The containers shall be placed on pallets or other approved material and not directly on the ground.

Storage containers shall be closed and covered with a waterproof tarpaulin at all times except during placement, sampling and disposal of debris.

J. Post-Work Regulated Area Deregulation:

Following an acceptable visual inspection, any engineering controls implemented may be removed.

A final visual inspection of the work area shall be conducted by the Competent Person and the Project Monitor or Engineer to ensure that all visible accumulations of suspect materials have been removed and that no equipment or materials associated with the lead paint removal remain. If this final visual inspection is acceptable, the Contractor will reopen the Regulated Area and remove all signage.

The Contractor shall restore all work areas and auxiliary areas utilized during work to conditions equal to or better than original. Any damage caused during the performance of the work activity shall be repaired by the Contractor at no additional expense to the State.

K. Waste Disposal/Recycling:

Non-metallic building debris waste materials tested and found to be non-hazardous Construction and Demolition (C&D) bulky waste shall be disposed of properly at a CTDEEP approved Solid Waste landfill.

Metallic debris shall be segregated and recycled as scrap metal at an approved metal recycling facility.

Hazardous lead debris shall be disposed of in accordance with Item 0603222A, Disposal of Lead Debris from Abrasive Blast Cleaning.

L. Project Closeout Data:

Provide the Engineer, within thirty (30) days of completion of the project site work, a compliance package; which shall include, but not be limited to, the following:

1. Competent persons (supervisor) job log;
2. Certification that all requirements of the Lead Compliance Plan and OSHA Lead in Construction Standards, including training, medical surveillance, biological monitoring and medical removal protection, have been followed;
3. Copies of each periodic inspection report;
4. Report on regulatory compliance prepared by the CIH based on the periodic inspections performed.
5. OSHA-compliant personnel air sampling data;
6. Completed waste shipment papers for non-hazardous lead construction and demolition (C&D) waste disposal or recycling and scrap metal recycling.

M. Non Compliance:

Failure of the Contractor to implement the requirements of 29 CFR 1926.62, its Lead Compliance Plan, or any other requirement of this item shall, at the sole discretion of the Engineer, result in the suspension of all Contract work until such deficiencies are corrected.

Method of Measurement:

This item will include all noted services, equipment, facilities, testing and other associated work, including up to three (3) ConnDOT project representatives. Services provided to any ConnDOT project representatives in excess of three (3) representatives will be measured for payment in accordance with Article 1.09.04 – "Extra and Cost-Plus Work."

1-Within thirty (30) calendar days of the award of the Contract, the Contractor shall submit to the Engineer for acceptance a breakdown of its lump sum bid price for this item detailing:

(a) The development costs associated with preparing the Lead Compliance Plan in accordance with these Specifications.
(b) The cost per month for the duration of the Project to implement the Lead Compliance Plan and provide the services of the CIH and IH firm.

2-If the lump sum bid price breakdown is unacceptable to the Engineer; substantiation showing that the submitted costs are reasonable shall be required.

3-Upon acceptance of the payment schedule by the Engineer, payments for work performed will be made as follows:

(a) The lump sum development cost will be certified for payment.

(b) The Contractor shall demonstrate to the Engineer monthly that the Lead Compliance Plan has been kept current and is being implemented and the monthly cost will be certified for payment.

(c) Any month where the Lead Compliance Plan is found not to be current or is not being implemented, the monthly payment for the Lead Compliance for Abrasive Blast Cleaning Item shall be deferred to the next monthly payment estimate. If the Lead Compliance Plan is not current or being implemented for more than thirty calendar days, there will be no monthly payment.

(d) Failure of the Contractor to implement the Lead Compliance Plan in accordance with this Specification shall result in the withholding of all Contract payments.

Basis of Payment:

The lump sum price bid for this item shall include: services, materials, equipment, all permits, notifications, submittals, personal air sampling, personal protection equipment, incidentals, fees and labor incidental to activities impacting lead removal, treatment and handling of lead contaminated materials, and the transport and disposal of any non-hazardous lead construction and demolition (C&D) bulky waste.

Final payment will not be made until all project closeout data submittals have been completed and provided to the Engineer. Once the completed package has been received in its entirety and accepted by the Engineer, final payment will be made to the Contractor.

Pay Item	Pay Unit
Lead Compliance for Abrasive Blast Cleaning	l.s.

ITEM #0202479A – REMOVAL OF HMA WEARING SURFACE

Description: Work under this item shall consist of the complete removal and disposal of the existing HMA wearing surface, membrane waterproofing and bond breaker covering the reinforced concrete bridge deck as shown on the plans, as ordered by the Engineer and in accordance with these specifications.

Construction Methods: The Contractor shall remove the HMA wearing surface, membrane waterproofing and bond breaker using means acceptable to the Engineer to completely expose the underlying concrete deck, without damaging the deck, roadway materials, and structures which are to remain intact.

Acceptable mechanical method for removal of HMA surface on a structure can be one of the following:

Micro-milling - Micro-milling equipment shall consist of Cold Plane or Rotomill Grinders using carbide cutting tools in a rotary drum. The equipment shall provide a tool spacing of not more than $^{3}/_{16}$ inch, capable of leaving a smooth, uniform pattern of striations with a maximum forward speed of 45 feet/minute.

Fine Milling – Fine milling equipment shall consist of Cold Plane or Rotomill Grinders using carbide cutting tool in a rotary drum. The equipment shall provide a tool spacing of not more than $^{5}/_{16}$ inch, capable of leaving a smooth, uniform pattern of striations with a maximum forward speed of 45 feet/minute.

Alternate methods may be submitted to the Engineer for review and acceptance. Demonstration of the alternate removal method shall be performed prior to consideration.

All particles and aggregate adhering to the exposed concrete that could, in the Engineer's opinion, cause failure of/or puncture the new membrane shall be removed. The existing HMA wearing surface, membrane waterproofing, and bond breaker that are removed shall be disposed of offsite by the Contractor unless otherwise noted in the contract documents or as directed by the Engineer.

Prior to removal of HMA wearing surface the Contractor shall conduct a survey. A minimum of four (4) representative depth measurements shall be taken per span for a span up to 100 feet in length to predetermine the overlay thickness. An additional measurement shall be taken for each 25 feet in span length. If depth of overlay varies across the structure, it shall be clearly marked to aid in the removal operation. Survey locations shall be filled with bituminous material if milling operation is not scheduled within five (5) days or at the direction of the Engineer.

The existing HMA wearing surface and membrane waterproofing shall be removed in its entirety to the limits shown on the plans. The removal operations shall not begin until the Contractor is prepared to perform the permanent patching and/or repair to the underlying concrete within five

(5) working days. If this in conflict with "Prosecution and Progress", "Maintenance and Protection of Traffic", or other contract requirements, the more stringent specification shall apply.

Protection shall be provided around existing catch basin inlets, bridge scuppers, manholes, utility valve boxes, median barriers, parapets, and other roadway structures. Any damage to such structures as a result of removal operations is the Contractor's responsibility and shall be repaired at the Contractor's expense.

A uniform textured riding surface shall be provided and maintained. The surface shall be free from gouges, longitudinal grooves and ridges, oil film, and other imperfections that are a result of defective equipment, improper use of equipment, poor workmanship, or inadequate survey. Any unsatisfactory surfaces caused by the removal operations are the Contractor's responsibility and shall be corrected at the Contractor's expense and to the satisfaction of the Engineer prior to opening the surface to traffic.

Any raised structures shall be clearly marked by high visibility paint and delineated with traffic control devices, as directed by the Engineer. Installation of traffic control devices will be included under the costs for "Maintenance and Protection of Traffic"; payment for the devices will be under their applicable items.

No vertical faces, transverse or longitudinal, shall be left exposed to traffic. If any vertical face is formed in an area exposed to traffic a temporary paved transition will be established according to the requirements shown on the plans. If the milling machine is used to form a temporary transition, the length of the temporary transition shall conform to, Section 4.06 – Bituminous Concrete, "Transitions for Roadway Surface", the requirements shown on the plans, or as directed by the Engineer. At all permanent limits of removal, a clean vertical face shall be established prior to paving by saw cutting.

The sweeper shall be equipped with a water tank and be capable of removing the millings and loose debris from the surface. Other sweeping equipment may be provided in lieu of the sweeper where acceptable by the Engineer.

Method of Measurement: This work will be measured for payment by the number of square yards of HMA wearing surface removed to expose the underlying concrete deck. No area deductions will be made for minor unmilled areas such as scuppers, joints, and any similar structures.

Basis of Payment: This work will be paid for at the contract unit price per square yard for "Removal of HMA Wearing Surface", complete and accepted, which price shall include the removal of membrane waterproofing and bond breaker, saw cutting, and all equipment, tools and labor.

Pay Item	Pay Unit
Removal of HMA Wearing Surface	s.y.

ITEM #0210100A – ANTI –TRACKING PAD

Description:

Work under this item shall consist of furnishing, installing, maintaining and removing a crushed stone anti-tracking pad on filter fabric and returning to the original condition upon completion at the location and details shown on the plans or ordered by the Engineer.

Materials:

Materials for this work shall conform to the requirements of Article M.01.01, No.3 for crushed stone, and Article M.08.01-26 for geotextile filter fabric.

Construction Methods:

Clear area of anti-tracking pad of all vegetation and excavate to a minimum depth of 4”.
Place geotextile filter fabric over the full width and length of excavated area and cover with No. 3 crushed stone to a depth of no less than 4”.

The anti-tracking pad shall be uniformly graded to produce the entry and exit path to the site for all construction equipment. The pad shall be maintained of sufficient grading and stone surface to capture all soils and sediment from equipment tires prior to such exiting from the site.

Stone shall be replenished or replaced as necessary or as ordered by the Engineer to assure sufficient capture of sediment at the construction site. Any sediment tracked off the site shall be immediately cleaned, swept and removed by the Contractor at no cost to the State.

Method of Measurement:

This work will be measured for payment by the number of square yards of accepted anti-tracking pad completed as shown on the plans or ordered by the Engineer.

Basis of Payment:

This work will be paid for at the contract unit price per square yard for "Anti-Tracking Pad,” which price shall include furnishing, placing, maintaining, removing all anti-tracking pad materials and returning location back to the original condition upon completion, equipment, tools and labor incidental thereto as well as cleaning, sweeping any sediment tracked off site. Clearing and grubbing required to install anti-tracking pad be paid under item "Clearing and Grubbing".

Pay Item	Pay Unit
Anti-Tracking Pad	s.y.

ITEM #0511003A – CLEAN EXISTING SCUPPERS

Description: Work under this item shall consist of removing existing steel gratings covering bridge scuppers, cleaning the scuppers and drainage system, restoring functionality of the original bridge drainage system and resetting grates once work is complete. The work will be as directed by the Engineer, and in accordance with these specifications.

Materials: None.

Construction Methods: Selection of the equipment used for this work shall be based on the condition the drainage system at the time this work is to begin and shall be as approved by the Engineer.

The existing drainage shall be cleaned of all sludge, dirt, sand, gravel and other debris. The intent of this work is to restore the original drainage system of the bridge before replacement the adjacent expansion joints begins.

Scuppers shall have the surrounding bituminous concrete and overlying grates removed down to the original scupper and concrete deck surface. Existing grates shall be removed prior to cleaning. Any damage that is found to the drainage system shall be brought to Engineer's attention immediately. After cleaning, the grates shall be reinstalled as directed by the Engineer.

This work shall be performed on all existing bridge scuppers, at the locations shown on the plans in accordance with the traffic requirements in the special provisions "Maintenance and Protection of Traffic" and "Prosecution and Progress".

Prior to traffic being allowed back on the adjacent roadway, the work for an individual scupper is to be completed, including removal of the overlying grating, cleaning, restoring the original frame and grating and tapering the bituminous wearing surface. The conditions should be acceptable to the Engineer.

Method of Measurement: Cleaning existing scuppers will be measured as units. There will be no measurement for removing bituminous concrete, removing and resetting existing grates.

Basis of Payment: This work will be paid for at the contract unit price each for "Clean Existing Scuppers" complete in place, which price shall include all materials, equipment, tools, and labor incidental thereto. Any work that requires repairs and replacement in kind of damaged or missing components of the existing drainage system will be paid as extra work, as determined by the Engineer.

Pay Item	Pay Unit
Clean Existing Scuppers	ea.

ITEM #0520036A – ASPHALTIC PLUG EXPANSION JOINT SYSTEM

Description: Work under this item shall consist of furnishing and installing an asphaltic plug expansion joint system (APJ) in conformance with ASTM D6297, as shown on the plans, and as specified herein.

Work under this item shall also consist of the removal and disposal of bituminous concrete, membrane waterproofing, existing joint components and sealing elements, cleaning and sealing median barrier joints, parapet joints, and sidewalk joints.

Work under this item excludes the removal of Portland cement concrete headers.

Materials: The APJ component materials shall conform to ASTM D6297 and the following:

Aggregate: The aggregate shall meet the following requirements:

a) Loss on abrasion: The material shall show a loss on abrasion of not more than 25% using AASHTO Method T96.
b) Soundness: The material shall not have a loss of more than 10% at the end of five cycles when tested with a magnesium sulfate solution for soundness using AASHTO Method T 104.
c) Gradation: The aggregate shall meet the requirements of Table A below:
d) Dust: aggregate shall not exceed 0.5% of dust passing the #200 sieve when tested in accordance with AASHTO T-11.

Table A

Square Mesh Sieves	**1" (25.0 mm)**	**¾" (19.0 mm)**	**½" (12.5 mm)**	**⅜" (9.5 mm)**	**No. 4 (4.75 mm)**
% passing	**100**	**90 - 100**	**20 - 55**	**0 - 15**	**0 - 5**

A sample of the aggregate shall be submitted to the Department with a Certified Test Report in accordance with Article 1.06.07 for each 20 tons of loose material or its equivalent number of bags delivered to the job site. The Certified Test report must include a gradation analysis resulting from a physical test performed on the actual material that accompanies the report.

Anti-Tacking Material: This material shall be a fine graded granular material with 100% passing the $^{3}/_{16}$" sieve and no more than 5% passing the #200 when tested in accordance with AASHTO T-27.

Backer Rod: All backer rods shall satisfy the requirements of ASTM D5249, Type 1.

Bridging Plate: The bridging plates shall be steel conforming to the requirements of ASTM A36 and be a minimum ¼" thick and 8" wide. For joint openings in excess of 3" the minimum plate dimensions shall be ⅜" thick by 12" wide. Individual sections of plate shall

not exceed 4' in length. Steel locating pins for securing the plates shall be size 16d minimum, hot-dip galvanized, and spaced no more than 12" apart.

Concrete Leveling Material: Shall be a cementitious-based material that conforms to ASTM C928 Standard Specification for Packaged, Dry, Rapid-Hardening Cementitious Materials for Concrete Repair, for R3 performance requirements in Table 1 and achieve the following:

a. Final set in 45 Minutes
b. 2500 psi compressive strength in 24 hours
c. 5000 psi compressive strength in 7 days

Parapet Sealant: The sealant used in parapet joint openings shall be a single component non-sag silicone sealant that conforms to the requirements of ASTM D5893.

Sidewalk Sealant: The sealant used in sidewalk joint openings shall be a rapid cure, self-leveling, cold applied, two-component silicone sealant. The silicone sealant shall conform to the requirements listed in Table B:

Table B

Properties - As Supplied	**Test Method**	**Requirement**
Extrusion Rate	ASTM C1183	200-600 grams/min
Leveling	ASTM C639	Self-Leveling
Specific Gravity	ASTM D792	1.20 to 1.40
Properties - Mixed	**Test Method**	**Requirement**
Tack Free Time	ASTM C679	60 min. max.
Joint Elongation – Adhesion to concrete	ASTM D5329 [1,2,3]	600% min
Joint Modulus @ 100% elongation	ASTM D5329 [1,2,3]	15 psi max
Cure Evaluation	ASTM D5893	Pass @ 5 hours

1. Specimens cured at 77 ± 3^0F and 50 ± 5% relative humidity for 7 days
2. Specimens size: ½"wide by ½"thick by 2" long
3. Tensile Adhesion test only

The date of manufacture shall be provided with each lot. No sealant shall be used beyond its maximum shelf-life date.

The two–part silicone sealants shown in Table C are known to have met the specified requirements:

Table C

Product	Supplier
Dow Corning 902RCS	Dow Corning Corporation 2200 W Salzburg Road Auburn, Michigan 48611
Wabo SiliconeSeal	BASF/Watson Bowman Acme Corporation 95 Pineview Drive Amherst, New York 14228

Other two-component silicone joint sealants expressly manufactured for use with concrete that conform to the aforementioned ASTM requirements will be considered for use provided they are submitted in advance for approval to the Engineer. Other joint sealants will be considered for use only if a complete product description is submitted, as well as documentation describing at least five installations of the product. These documented installations must demonstrate that the product has performed successfully for at least three years on similar bridge expansion joint applications.

A Materials Certificate and Certified Test Report for the asphaltic binder shall be submitted by the Contractor in accordance with the requirements of Article 1.06.07 certifying that the asphaltic binder satisfies the requirements of the most current version of ASTM D6297.

A Materials Certificate for all other components of the APJ, leveling material, backer rod and sealant used in sealing parapet and sidewalk joint openings, shall be submitted by the Contractor in accordance with the requirements of Article 1.06.07

Construction Methods: The APJ shall be installed at the locations shown on the plans and in stages in accordance with the traffic requirements in the special provisions "Maintenance and Protection of Traffic" and "Prosecution and Progress".

At least 30 days prior to start of the work, the Contractor shall submit to the Engineer for approval a detailed Quality Control Plan for the installation of the APJ. The submittal shall include:

a) A list of all manufactured materials and their properties to be incorporated in the joint system, including, but not limited to the asphaltic binder, anti-tack material, backer rod, sealant, leveling material, as well as the aggregate's source.
b) A detailed step by step installation procedure and a list of the specific equipment to be used for the installation. The Quality Control Plan must fully comply with the specifications and address all anticipated field conditions, including periods of inclement weather.

The APJ shall not be installed when bituminous concrete overlay or joint cutout is wet. The APJ shall only be installed when the bridge superstructure surface temperature is within the limits specified in Table D and when the ambient air temperature is within the range of 45^0F to 95^0F.

The bridge superstructure surface temperature range is determined using the thermal movement range provided on the contract plans for the proposed APJ deck installation location and the selected APJ product.

Table D

Installation Restrictions	
Designed Deck Joint Thermal Movement Range[2]	**Bridge Superstructure Surface Temperature[1]**
0" to 1"	45° F to 95° F
1-1/8"	45° F to 90° F
1-1/4"	45° F to 80° F
1-3/8"	45° F to 70° F
1-1/2"	45° F to 65° F

1. *The superstructure surface temperature shall be determined from the average of three or more surface temperature readings taken at different locations on the interior girder surfaces by the Contractor as directed by the Engineer. Temperature measurements of the superstructure shall be taken by the contractor with a calibrated hand held digital infrared laser-sighted thermometer on the surfaces of an interior steel girder, or interior concrete girder protected from direct sunlight. The infrared thermometer to be supplied by the Contractor for this purpose shall meet certification requirements of EN61326-1, EN61010-1, and EN60825-1 maintained by the European Committee for Electrotechnical Standardization (CENELEC). The thermometer shall have a minimum distance-to-spot ratio of 50:1 and shall have adjustable emissivity control. The thermometer shall have a minimum accuracy value of $\pm$1% of reading or $\pm 2^{o}$F, whichever is greater. The thermometer shall be used in strict accordance with the manufacturer's written directions. An additional infrared thermometer satisfying the same standards to be used in this application shall also be provided to the Engineer for quality assurance purposes.*
2. *Linear interpolation may be used to determine an allowable surface temperature range for thermal movement ranges in between values shown in the table, as approved by the Engineer.*

Prior to installing the APJ, the Contractor shall determine the exact location of the deck joint beneath the bituminous concrete overly.

The APJ shall be installed symmetrically about the deck joint opening to the dimensions shown on the plans or as directed by the Engineer; not to exceed 24 inches measured perpendicular to the deck joint. The proposed saw cut lines shall be marked on the bituminous concrete overlay by the Contractor and approved by the Engineer, prior to saw-cutting. The saw-cuts delineating the edges of the APJ shall extend full depth of the bituminous concrete overlay.

The existing bituminous concrete overlay, waterproofing membrane and/or existing expansion joint material, within the saw cut limits shall be removed and disposed of by the Contractor to create the joint cutout.

Concrete surfaces that will support the bridging plates shall be smooth and form a plane along and across the deck joint. Rough or damaged concrete surfaces shall be repaired with a leveling compound meeting the requirements of this specification. Deteriorated concrete areas within the joint limits shall be repaired as directed by the Engineer: such repairs, when deemed necessary by the Engineer, shall be compensated for under the applicable concrete deck repair items in the Contract. The existing and repaired concrete surfaces shall provide continuous uniform support for the bridging plate and prevent the plate from rocking and deflecting.

Prior to the installation of the backer rod, all horizontal and vertical surfaces of the joint cutout shall be abrasive blast cleaned using an oil-free, compressed air supply. The entire cutout shall then be cleared of all loose blast media, dust, debris and moisture using an oil-free, hot air lance capable of producing an air stream at 3,000ºF with a velocity of 3,000 feet per second.

A single backer rod, with a diameter at least 25% greater than the existing joint opening at the time of installation, shall be installed at an inch below the bridging plate in the existing deck joint opening between the concrete edges.

Asphaltic binder shall be heated to a temperature within the manufacturer's recommended application temperature range which shall be provided in the Quality Control Plan. During application, the temperature of the binder shall be maintained within this range. In no case shall the temperature of the binder go below 350º F nor exceed the manufacturer's recommended maximum heating temperature.

Asphaltic binder shall then be poured into the joint opening until it completely fills the gap above the backer rod. A thin layer of binder shall next be applied to the all horizontal and vertical surfaces of the joint cutout.

Bridging plates shall be abrasive blast-cleaned on-site prior to installation and then placed over the deck joint opening in the joint cutout. The plates shall be centered over the joint opening and secured with locating pins along its centerline. The plates shall be placed end to end, without overlap, such that the gap between plates does not exceed ¼". The plates shall extend to the gutter line and be cut to match the joint's skew angle, where concrete support exists on both sides of the joint. Within APJ installation limits, where concrete support does not exist at both sides of the joint opening (such as where a bridge deck end abuts a bituminous concrete roadway shoulder), bridging plates shall not be installed. Installed bridging plates shall not rock or deflect

in any way. After installation of bridging plates, a thin layer of asphaltic binder shall be applied to all exposed surfaces of the plates.

The remainder of the joint cutout shall then be filled with a mixture of hot asphaltic binder and aggregate prepared in accordance with the submitted Quality Control Plan and the following requirements:

- The aggregate shall be heated in a vented, rotating drum mixer by the use of a hot-compressed air lance to a temperature of between 370° F. to 380° F. This drum mixer shall be dedicated solely for the heating and, if necessary, supplemental cleaning of the aggregate. Venting of the gas and loose dust particles shall be accomplished through ¼" drilled holes spaced no more than 3" on center in any direction along the entire outside surface of the drum
- Once the aggregate has been heated, it shall then be transferred to a secondary drum mixer where it shall be fully coated with asphaltic binder. A minimum of two gallons of binder per 100lbs of stone is required.
- The temperature of the aggregate and binder shall be monitored by the contractor with a calibrated digital infrared thermometer.
- The coated aggregate shall be loosely placed in the joint cutout in lifts not to exceed 2 inches.
- Each lift shall be leveled, compacted and then flooded with hot asphaltic binder to the level of the aggregate to fill all voids in the coated aggregate layer. The surface of each lift shall be flooded until only the tips of the aggregate protrude out of the surface.
- The final lift shall be placed such that no stones shall project above the level of the adjacent overlay surface following compaction of the coated aggregate.
- Following installation of the final lift, sufficient time and material shall be provided to allow all voids in the mixture to fill. This step may be repeated as needed.
- The joint shall then be top-dressed by heating the entire area with a hot-compressed air lance and applying binder. The final joint surface must be smooth with no protruding stones and be absent of voids.
- Once top-dressed, the joint shall have an anti-tack material spread evenly over the entire surface to prevent tracking.

The Contractor shall be responsible for removing all binder material that leaks through the joint and is deposited on any bridge component, including underside of decks, headers, beams, diaphragms, bearings, abutments and piers.

Traffic shall not be permitted over the joint until it has cooled to 130º F when measured with a digital infrared thermometer. Use of water to cool the completed joint is permitted.

<u>Sidewalk, parapet, and/or curb joint openings</u>

Before placement of any sealing materials in parapets, curbs, or sidewalks, the joints shall be thoroughly cleaned of all scale, loose concrete, dirt, dust, or other foreign matter by abrasive blast cleaning. Residual dust and moisture shall then be removed by blasting with oil free compressed air using a hot air lance. Projections of concrete into the joint space shall also be

removed. The backer rod shall be installed in the joint as shown on the plans. The joint shall be clean and dry before the joint sealant is applied. Under no circumstances is the binder material to be used as a substitute for the joint sealant.

Whenever abrasive blast cleaning is performed under this specification, the Contractor shall take adequate measures to ensure that the abrasive blast cleaning will not cause damage to adjacent traffic or other facilities.

The joint sealant shall be prepared and placed in accordance with the manufacturer's instructions and with the equipment prescribed by the manufacturer. Extreme care shall be taken to ensure that the sealant is placed in accordance with the manufacturer’s recommended thickness requirements.

The joint sealant shall be tooled, if required, in accordance with the manufacturer's instructions.

Primer, if required, shall be supplied by the sealant manufacturer and applied in accordance with the manufacturer's instructions.

When the sealing operations are completed, the joints shall be effectively sealed against infiltration of water. Any sealant which does not effectively seal against water shall be removed and replaced at the Contractor's expense.

Any installed joint that exhibits evidence of failure, as determined by the Engineer, such as debonding, cracking, rutting, or shoving of the APJ mixture shall be removed and replaced full-width and full–depth to a length determined by the Engineer at no additional cost to the State.

Method of Measurement: This work will be measured for payment by the number of cubic feet of “Asphaltic Plug Expansion Joint System” installed and accepted within approved horizontal limits. No additional measurement will be made for furnishing and installing backer rod and joint sealant in the parapets, concrete medians, curbs and/or sidewalks.

Basis of Payment: This work will be paid for at the contract unit price per cubic foot for "Asphaltic Plug Expansion Joint System," complete in place, which price shall include the saw-cutting, removal and disposal of bituminous concrete, membrane waterproofing, existing joint components and sealing elements, the furnishing and placement of the leveling compound, cleaning of the joint surfaces, furnishing and installing bridging plates, the furnishing and installing of the asphaltic plug joint mixture, the cost of furnishing and installing joint sealant in the parapets, concrete medians, curbs and sidewalks, and all other materials, equipment including, but not limited to, portable lighting, tools, and labor incidental thereto. No additional payment shall be made for the 12” wide bridging plates that are required for deck joint openings with widths in excess of 3”.

If directed by the Engineer, additional deck repairs will be addressed and paid for under the applicable concrete deck repair items in the Contract.

ITEM #0520038A – PREFORMED SILICONE JOINT SEALING SYSTEM

Description:

Work under this item shall consist of furnishing and installing a preformed silicone joint sealing system as shown on the Contract Drawings and in conformance with these specifications or as directed by the Engineer. The preformed silicone joint sealing system shall seal the deck surface and prevent water from seeping through the joint area. Work under this item shall also include the construction of an elastomeric concrete header appurtenant to the installation of the Preformed Silicone Joint Sealing System as shown in the Contract Drawings.

Material:

1. Preformed Silicone Joint Seal:

   Acceptable Manufacturer: The Manufacturer supplying the preformed silicone rubber seal, adhesive, and primer:

   RJ Watson, Inc
   Bridge and Structural Engineered Systems
   78 John Glen Drive
   Amherst, New York 14228
   Tel: (716) 691-3301 Fax: (716) 691-3305
   Web site: http://www.rjwatson.com

   Models: SF225 and SF400

   Or approved equal

2. Elastomeric Concrete Header:

   Provide a field-mixed bridge joint header elastomeric concrete material. The elastomeric concrete material shall be field-mixed and shall consist of two-part polymer, kiln-dried pregraded aggregate, and bonding agent with the material being supplied as a unit by the Manufacturer.

   A Materials Certificate will be required in accordance with Article 1.06.07 certifying the conformance of the elastomeric concrete for bridge expansion joint headers components to the requirements set forth in this specification.

   Each container of product furnished shall be delivered to the job site in the Manufacturer's original sealed container. Each container shall be labeled to include the name of material, Manufacturer's name and contact information, expiration date, mixing instructions, material safety data sheets and the Manufacturer's lot/batch number. All materials must be stored in

accordance with the Manufacturer's written recommendations and as approved by the Engineer. Materials whose shelf-life has expired shall not be used in the project.

Provide material that complies with the following minimum requirements at either 14 days or at the end of the specified curing time. In addition to the following requirements, provide bridge elastomeric concrete header should be resistant to water absorption, chemical, UV, ozone exposure and capable of withstanding temperature extremes.

Elastomeric Concrete Properties at 24 hr Cured Stage	**Test Method**	**Requirement**
Resilience	ASTM D 695	70%
Compressive Strength, Method B	ASTM C579	Min. 2000 psi
Bond Shear Strength	ASTM C 882	Min. 700 psi
Abrasion Resistance Wear Index	ASTM C 501	Max. 1
Durometer Hardness	ASTM D 2240	Min. 50
Bond Strength to Concrete	ASTM C 882	Min. 450 psi

Construction Methods:

A technical representative of the Preformed Silicone Joint Seal approved by the Manufacturer shall be notified of the scheduled installation a minimum of 2 weeks in advance and be present to provide direction and assistance for the first joint installation and succeeding joint installations until the Contractor becomes proficient in the work and to the satisfaction of the Engineer. The Preformed Silicone Joint Seal shall be completely installed following the recommended procedures by its Manufacturer.

The Preformed Silicone Joint Seal shall be installed at the locations shown on the plans and in conformance with the traffic staging requirements specified in the special provisions "Maintenance and Protection of Traffic" and "Prosecution and Progress".

Tools, equipment, and techniques used to prepare the joints shall be approved by the Engineer and the Manufacturer's technical representative prior to the start of construction.

In constructing the elastomeric concrete header, forms shall be used to keep the fluid concrete from entering the open joint between the concrete deck slabs. The existing pavement shall be saw cut as indicated on the plans.

The elastomeric concrete shall be mixed and placed in accordance with the Manufacturer's printed instructions and as provided herein. The Manufacturer's printed instructions shall be provided by the Contractor to the Engineer not less than one week before the placement is to begin.

The elastomeric concrete header shall be constructed when the temperature is 45º F and rising. Cure time of the elastomeric concrete may be accelerated by the use of methods and techniques as approved by the Manufacturer when deemed necessary by the Contractor or the Engineer.

Prior to placement of the elastomeric concrete the surface of the substrate against which the elastomeric concrete is to be placed shall be coated with a primer as recommended by the Manufacturer. The elastomeric concrete shall be installed within 15 minutes of the mixing and must be thoroughly consolidated and finished within 30 minutes of mixing and before the primer has set. The elastomeric concrete shall be finished flush with the top of the adjacent roadway surface and finished to provide a smooth surface free of voids and tears.

The elastomeric concrete may be heat-cured with the use of external heat sources, as required by the Manufacturer. Curing may require that vulcanizing heat be applied for approximately 2 to 3 hours. Traffic shall not be permitted over the joint until proper cooling of the joint has occurred and the elastomeric concrete has developed adequate strength in accordance with the Manufacturer's recommendations.

The minimum temperature for installing the Preformed Silicone Joint Seal is 40 degrees Fahrenheit and rising ambient air temperature. The joint surface shall be completely dry before installing the Preformed Silicone Joint Seal. The Preformed Silicone Joint Seal shall not be installed immediately after precipitation or if precipitation is forecasted for the day. Joint preparation and installation of the Preformed Silicone Joint Seal must be done during the same day. Traffic will not be allowed to pass over the joint after sandblasting has occurred.

Method of Measurement:

This work will be measured for payment by the number of linear feet of Preformed Silicone Joint Sealing System installed. The measurement will be made at the top surface and along the centerline of the joint measured from gutter line to gutter line.

Basis of Payment:

This work will be paid for at the contract unit price per linear foot for "Preformed Silicone Joint Sealing System", complete in place that shall include the Preformed Silicone Joint Seal, and shall also include the construction of the appurtenant elastomeric concrete header, sawcutting pavement as required, and all materials, equipment, tools, and labor incidental to both constructions. The price for this work shall also include the cost for all services associated with the technical representative from the Manufacturer of the Preformed Silicone Joint Sealing System.

Pay Item	Pay Unit
Preformed Silicone Joint Sealing System	l.f.

ITEM #0522129A – CLEAN AND LUBRICATE EXISTING BEARINGS

Description: This work includes cleaning and lubricating the existing expansion bearing roller assemblies and removing and reinstalling existing bearing dust shields using new bolts, for the purpose of extending the bearing service life.

Materials: Materials required for this item shall conform to the following:

1. Lithium Complex Grease which meets the following:
    - NLGI Grade 2
    - ASTM D4950, Grease Category GC
    - Contains a Molybdenum Disulfide additive
    - Four-Ball Weld, ASTM D2596: 315 kgf

2. Bolts used for reattaching debris plates shall be stainless steel and conform to ASTM F593, Group 1 or 2 (Alloy Types 304 or 316). Washers shall also be stainless steel and shall conform to ASTM A240 (Alloy Types 304 or 316). Size and thread to match existing dust shield bolts or as required due to retapping of threads.

Construction Methods: Prior to blast cleaning and painting operations, the Contractor shall mark the location and orientation of each existing debris plate, and then remove the debris plate bolts and debris plates. At locations where the debris plate is welded to the sole plate, the weld shall be ground off to facilitate removal.

All surfaces of the bearings shall be blast cleaned and painted as indicated on the plans. The areas between rollers shall be pressure cleaned with air to remove any existing debris or debris resulting from blast cleaning operations. All accessible surfaces of the bearing shall be painted with the exception of the rollers. Grease shall be pumped into gaps between adjacent rollers to completely fill the void between the rollers. The underside of the top roller plates, the top of the bottom roller plates, and the faces of the end rollers shall also be coated with grease.

The debris plates shall be blast cleaned and painted prior to reinstallation on the bearing. The existing threaded holes for debris plates shall be cleaned and retapped if required. The debris shields shall be reinstalled in their original location and orientation, using stainless steel bolts and washers with assembly lube in the existing holes. The rear debris plates shall be tack welded into place. Any damaged paint shall be touched up.

The Contractor shall contain and properly disposed of all debris. No debris will be allowed to fall to the area below.

Blast cleaning and painting of the bearings and debris plates, including any touch up painting, shall be included in the item “Abrasive Blast Cleaning and Field Painting of Structure (Site #1)”, found elsewhere in the special provisions.

Method of Measurement: This work will be measured for payment by the number of cleaned and lubricated bearings, completed and accepted.

Basis of Payment: This work will be paid for at the contract unit price each for "Clean and Lubricate Existing Bearings", completed and accepted in place, which price shall include all materials, equipment, hardware, tools, labor and work incidental thereto.

Pay Item	Pay Unit
Clean and Lubricate Existing Bearings	ea.

ITEM #0601307A – LATEX MODIFIED CONCRETE

Description: Work under this item includes furnishing and placing an overlay of latex modified concrete (LMC) over the existing concrete bridge deck. This item shall also include preparation of the existing concrete deck surface to receive the LMC overlay, including but not limited to the partial thickness removal of the concrete deck, scarifying, and cleaning of the existing surface as directed by the Engineer.

Materials: Portland cement (Type I or II), water, fine aggregate, and coarse aggregate shall conform to the requirements of Section M.03.01. Grading of the Coarse Aggregate shall conform to the gradation table of Article M.01.01, and shall utilize a nominal maximum size of No. 8 aggregate, unless otherwise approved by the Engineer.

The latex modifier shall be non-toxic film forming polymeric-emulsion of which 90% of the non-volatiles are styrene-butadiene polymers. It shall be homogenous and uniform in composition and free from chlorides. The latex modifier shall conform to the chemical and physical properties specified in FHWA Report 78-35, Chapter 6.

The latex modifier shall have a shelf life of two (2) years from the date of manufacture, unless otherwise specified by the manufacturer.

The latex modifier to be stored shall be kept in suitable enclosures which will protect it from freezing and from exposure to temperatures in excess of 85 degrees F.

The Contractor shall provide a certified Test Report and Certificate of Compliance, in conformance with the requirements set forth in Article 1.06.07, which verifies the conformance of the latex modifier to the requirements specified in the FHWA Report RD 78-35, Chapter 6, or to Chapter 7, if a Certified Test Report by an approved laboratory is provided which verifies conformance of a prior batch of latex modifier to the Chapter 6 requirements.

The Contractor shall design and submit to the Engineer a LMC mix with test certification from an approved laboratory verifying conformance to the following requirements:

Cement	658 lbs/cy
Latex Modifier	24.5 gal/cy
Fine Aggregate	50 to 60% of total aggregate by weight
Water	18.9 gal/cy
Net Water-Cement Ratio	0.3 to 0.4
Air Content of Plastic Mix	4 to 6.5%
Slump	2 to 8 inches*
7 day Compressive Strength	3,000 psi
28 day Compressive Strength	4,500 psi

*Slump shall be measured 4 to 5 minutes after discharge from mixer onto a flat, non-absorbent surface. The concrete shall be left undisturbed during this waiting period. The measurement should be taken on a still surface isolated from all traffic vibration.

Construction Methods:

The Contractor shall provide the services of a representative of the latex manufacturer. The representative shall be experienced in the use of the LMC and shall be approved by the Engineer. The representative shall provide advice on the mixing, placement, and curing of the LMC overlay. The technical advisor is to be present prior to placing operations to inspect the prepared surface and during the first day of placement operations.

The Contractor shall submit a schedule of equipment and labor forces proposed for the surface preparation, placing, finishing, grooving, and curing operations, which are to be approved by the Engineer prior to any work commencing. The schedule is to include a description of the equipment and methods of operation.

The entire existing bridge deck surface shall be removed to a depth as indicated on the plans. The deck surface removal shall be completed by a power operated, mechanical milling machine or grinder capable of uniformly removing the existing concrete to the depth required. Deck surface removal may be completed in one pass. All surface residual, including water, dust, and concrete shall be removed immediately.

Following cleanup of surface removal operations, the entire bridge deck surface shall be sounded for bad concrete by the Engineer. Areas of unsound concrete shall be removed by hand chipping.

After removal of unsound concrete and prior to placement of the overlay, the entire contact surface shall be blast cleaned, including vertical surfaces on the parapet in contact with the overlay, to one inch above the top surface elevation of the overlay. The deck surface shall be thoroughly cleaned by high pressure water blasting of 7,000 psi minimum. The contact surface shall be clean and free of any laitance, oils, dirt, grease, paint, bituminous matter, rust or any foreign substance prior to placement of the overlay.

All debris from cleaning operations, including water, shall be contained and removed or flushed from the concrete surface. Cleaning water shall be collected, and shall not be allowed to drain to the river below.

Placement of LMC overlay shall be completed within 48 hours of cleaning operations. Thoroughly soak the deck surface for at least 2 hours immediately prior to placing the LMC. After soaking the surface for at least 2 hours, cover it with a layer of white opaque polyethylene film that is at least 4 mils thick. Immediately prior to placing LMC, remove standing water from the surface.

The deck surface shall not be allowed to be dry out after water cleaning has been completed. The entire surface shall be covered with plastic after cleaning operations are completed.

No latex modified concrete shall be placed when the ambient air or concrete deck surface temperature is lower than 45 degrees F. No latex modified concrete shall be placed when the air or concrete deck surface is greater than 80 degrees F or when it is forecast that the temperature will exceed 80 degrees F within 4 hours from the beginning of the proposed placement time, unless the Contractor demonstrates to the Engineer's satisfaction that the evaporation rate is less than 0.15 lbs. per square foot per hour and will not exceed this rate within 4 hours from the beginning of the overlay placement. The nomograph attached to this specification (Attachment A), may be used to estimate the evaporation rate.

The ambient air temperature requirements may require the Contractor to schedule work for night time placement of the latex modified concrete.

The Contractor shall satisfy the Engineer that all necessary mixers, finishing tools, equipment, and manpower are on hand at the site of work, and that experienced finishers will be employed to finish the LMC wearing surface. Placing LMC shall conform to the pertinent requirements of Article 6.01.03-9, 12 and 24. Screeds shall be adjusted to finished grades prior to placing concrete. A preliminary traverse across the deck shall be made with the screed, and witnessed by the Engineer to assure that the minimum overlay depth and finished grades will be achieved.

The LMC shall be brushed onto the wetted, prepared surface just ahead of the screed. Care shall be exercised to insure that all vertical as well as horizontal surfaces receive a thorough, even coating, and that the rate of progress is limited so that brushed material does not become dry before it is covered with concrete as required for the final grade. Aggregate stones that accumulate from the brushing operation shall be removed. They shall not be incorporated in the pour.

The Contractor shall take proper measures to ensure LMC or LMC materials are not permitted to fall into the river below.

The LMC discharged from the mixer shall be uniform in composition and consistency. It shall be placed to approximately ¼" above grade and then screeded with approved finishing equipment. The LMC shall be finished by a burlap drag attached to the finishing operation. Hand finishing with wood floats may be required along the edge of the pour.

Before the LMC surface dries into a film, the surface shall be textured by transverse grooving. Grooves shall conform to the following:

Spacing:	3/4" ± - 1/8"
Width:	1/8" to 3/16"
Depth:	1/8" to 3/16"

The elapsed time between the LMC on the deck and the final finishing shall not exceed ten (10) minutes unless otherwise permitted by the Engineer.

A bulkhead shall be installed in case of a major delay (greater than 1 hour) in the placement operation. During minor delays, the placement shall be protected from drying with several layers of wet burlap.

Adequate precautions shall be taken to protect freshly placed LMC from sudden or unexpected rain. The Engineer may order the removal and replacement of any material damaged by rainfall, at the Contractor's expense.

The concrete and forms necessary to cast several cylinders for 4, 7 and 28-day compressive strength tests shall be furnished by the Contractor from each pour. Forms shall be 4 inches in diameter by 8 inches in height. The necessary personnel for casting these specimens required will be provided by the Department. Concrete cylinders shall be cured in the field under ambient temperature conditions.

The placed LMC shall be cured as soon as possible without marking the finished concrete. The surface shall be promptly covered with wet curing mats, followed by a cover of polyethylene which shall conform to the requirements of Article M.03.01.

All fresh concrete surfaces shall be kept continuously wet for a period of 48 hours, as approved by the Engineer. The wet curing shall be continuously monitored by the Contractor for this 48-hour period. After the 48-hour wet cure, the curing material shall be removed for an additional ambient air cure.

After the LMC overlay has cured, the surface will be inspected by the Engineer for surface profile, texture, cracks and delaminations.

The LMC surface shall not vary more than 1/8" in 10 feet when tested with a 10-foot straightedge. Variations greater than this which, in the opinion of the Engineer, adversely affects the riding qualities of the surface shall be corrected by the Contractor at no additional cost to the State.

The finished grooves of the textured surface shall conform to the spacing, width and depth specified in this specification.

Minor cracks, as determined by the Engineer, shall be sealed using a method and material recommended by the manufacturer of the latex modifier.

In areas of extensive cracking, as determined by the Engineer, the LMC overlay shall be removed and replaced by the Contractor.

Where delaminations of the LMC overlay to the underlying deck have occurred, as determined by the Engineer, the Contractor shall remove and replace the overlay.

All repairs or replacement of the LMC overlay shall be accomplished at no cost to the State.

No traffic shall be permitted on the LMC overlay until a compressive strength of 3,500 psi has been developed, as determined by the compressive strength tests.

No deicing salts are to be applied to the LMC deck surface until 30 days after the cure.

Skin and eye contact of styrene-butadiene latexes should be avoided. Clean-up water from the LMC operation must be collected and disposed of in accordance with federal, state and local codes. Any spills of the styrene-butadiene latex must be immediately reported to CTDEEP.

Method of Measurement: The quantity of latex modified concrete shall be the actual volume in cubic yards, completed and accepted within the neat lines as shown on the plans or as ordered by the Engineer.

Basis of Payment: This work will be paid for at the contract unit price per cubic yard for "Latex Modified Concrete", completed and accepted, which price shall include surface preparation, services of the technical advisor, and all materials, equipment, tools and labor incidental thereto. Should night time placement be required, this item shall also include all items and costs associated with such work, including but not limited to plant openings costs and temporary lighting.

Pay Item	Pay Unit
Latex Modified Concrete	c.y.

Attachment A

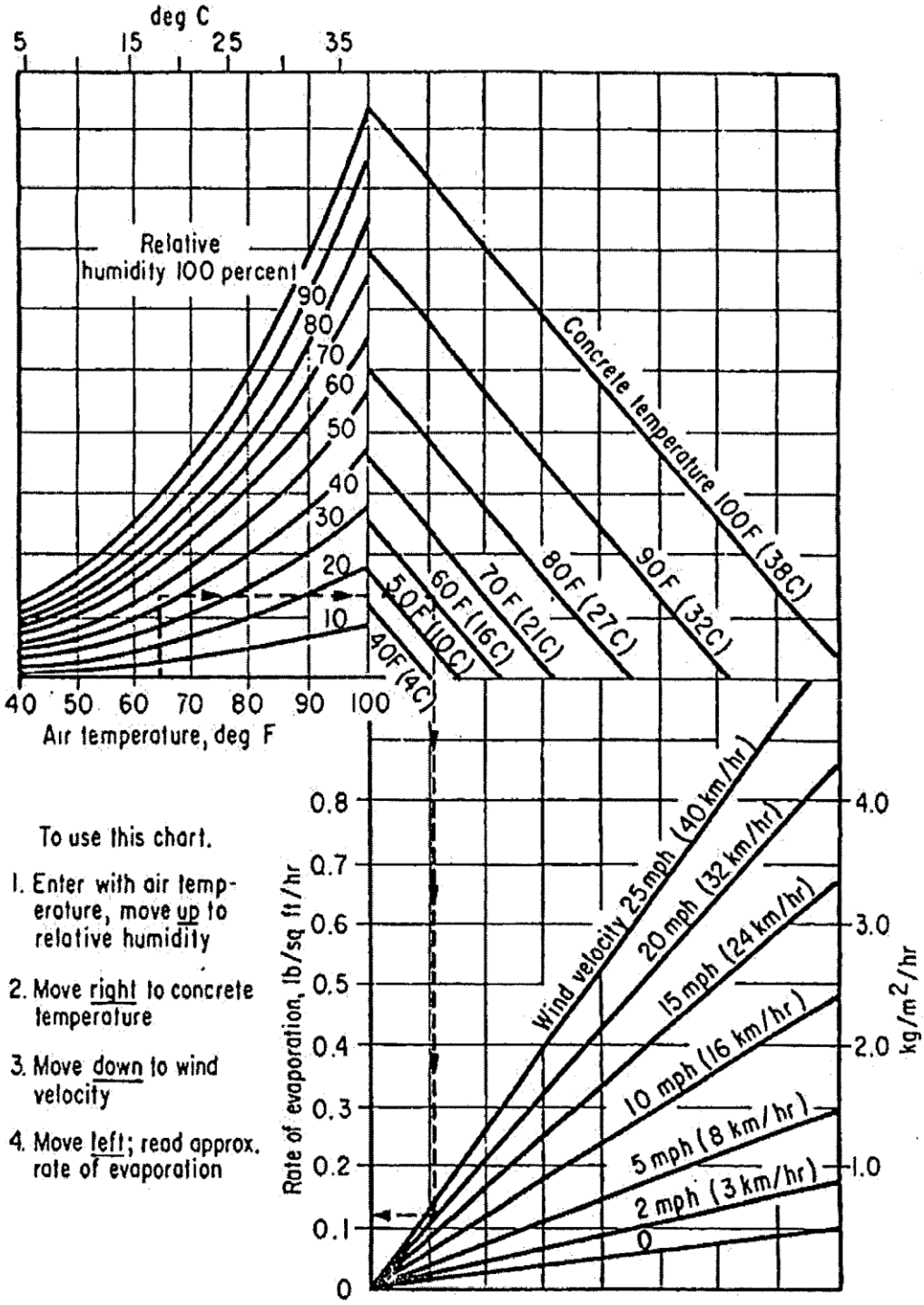

ITEM #0601318A – PARTIAL DEPTH PATCH

Description: Work under this item shall consist of the removal of spalled, delaminated or otherwise deteriorated concrete from existing bridge decks and/or approach slabs by hydro-demolition methods, and replacement with fast setting patching material as shown on the plans, as directed by the Engineer, and hereinafter specified.

Where ordered by the Engineer, work under this item shall also include repairing pop-outs on the underside of the deck caused by the removal of deteriorated concrete.

Work under this item shall also include the furnishing and installation of reinforcing bar wire ties and vertical supports on inadequately supported and/or vibrating reinforcing steel within deck patch areas, as ordered by the Engineer.

Materials: The materials shall conform to the following requirements:

1) Patching Material: The patching material shall be a concrete composed of a quick setting cement, fine aggregate, coarse aggregate and water. This concrete shall harden within 40 minutes, and develop minimum compressive strengths of 1,000 psi within one hour after set and 3,000 psi within three days.

The Contractor shall design and submit a quick setting mix to the engineer for approval. The mix proportions and method of application shall be in accordance with the manufacturer's recommendations. Sources of supply of all the materials shall be clearly indicated.

Fine aggregate shall conform to the requirements of Subarticle M.03.01-2.

The coarse aggregate shall conform to the requirements of Subarticle M.03.01-1. The required grading shall be obtained by using 100 percent of No. 67 size coarse aggregate. Grading of the aggregate shall conform to the gradation table of Article M.01.01.

Water shall conform to the requirements of Subarticle M.03.01-4.

Unless otherwise approved by the Engineer, the quick setting cement shall be one of the following materials:

Cementitous Based Materials:

Emaco T-415
Master Builders, Inc.
23700 Chagrin Blvd.
Cleveland, OH 44122
800-628-7378

Perma-Patch
Dayton Superior Corporation
PO Box 355
Oregon, IL 61061
800-745-3707

Rapid Set DOT Cement
CTS Cement Manufacturing
1023 Dogwood Lane
West Chester, PA 19382
215-429-4956

Speed Crete Green Line
Tamms Industries
730 Casey Ave.
Wilkes-Barre, PA 18702
800-218-2667

Fastcrete
Silpro Corporation
2 New England Way
Ayer, MA 01432
508-772-4444

Gypsum based materials will not be allowed under any circumstances.

Other patching products not currently approved by the Department may also be substituted provided that the Contractor submits to the Department the manufacturer's literature and a sufficient quantity of the proposed patching materials for field testing and evaluation. Further information regarding approval procedures may be obtained by contacting the Department's Research and Materials Testing Laboratory at 280 West Street, Rocky Hill, CT 06067. No substituted patching material shall be used until it has been approved in writing by the Department.

2) Epoxy Resin: The epoxy resin shall be a two component system. The base polymer shall be a thermosetting resin of the epoxy type. The epoxy resin shall be composed of 100% reactive constituents, which are a condensation product of the reaction of epichlorohydrin with bisphenol ether of bisphenol A, containing no more than trace amounts of hydrolyzable chloride. The epoxy resin shall have an epoxide equivalent between 465 and 530.

The reacting system shall consist of a blend of condensation polymers of dimerized and trimerized unsaturated fatty acids and an aliphatic polyamine.

Unless otherwise specified, pigmentation shall be required in the system so that the cured coating shall conform to the Federal Color Standard 595, No. 16357.

a) Physical Requirements of (Mixed) Epoxy Resin System:

A mixture of both components in the proportions recommended by the manufacturer shall conform to the following requirements:

Viscosity - 500 to 800 centipoises at 77°F
Pot life - 7 hours minimum at 75°F
Minimum solids content - 48%

The cured system shall not exhibit amine blushing or sweating.

When testing for abrasion by ASTM Designation D968, the pigmented finish coats shall require a minimum of 50 liters of sand to abrade a one mil thickness of coating.

A 2 ½ mil dry film thickness of the coating tested according to ASTM Designation D522 shall pass a 1/8 inch diameter mandrel test without splitting the film or causing loss of bond.

b) Sampling:

A representative sample of each component sufficient for the test specified shall be taken by a Department representative either from a well-blended bulk lot prior to packaging or by withdrawing 3 fluid ounce samples from no less than 5 percent by random selection of the containers comprising the lot or shipment. Unless the samples of the same component taken from containers show evidence of variability, they may be blended into a single composite sample to represent that component. The entire lot of both components may be rejected if samples submitted for test fail to meet any requirements of this specification.

c) Packaging and Marking:

The two components of the epoxy resin system furnished under these specifications shall be supplied in separate containers, which are non-reactive with the materials contained therein. The size of the container shall be such that the recommended proportions of the final mixture can be obtained by combining one container of one component with one or more whole containers of the other component.

Containers shall be identified as base polymer and reacting system, and shall show the mixing directions and usable temperature range as defined by these specifications. Each container shall be marked with the name of the manufacturer, the lot or batch number, the date of packaging, pigmentation if any, and the quantity contained therein in pounds and gallons.

Printed instructions from the manufacturer for mixing and applying the material shall be included.

Potential hazards shall be so stated on the package in accordance with the Federal Hazardous Products Labeling Act.

d) Control of Materials:

A Materials Certificate will be required in accordance with Article 1.06.07, certifying the conformance of the epoxy resin to the requirements set forth in this specification.

Construction Methods:

1) Inspection of the Structural Slab: Before any existing concrete is removed from the structural slab, the Contractor will provide the Engineer clear access to the bridge deck. During this time, the Engineer will perform an inspection of the structural slab and designate areas where concrete removal will be required. Due to the nature of the operations, the inspection can be performed only after some existing materials, notably overlays and waterproofing systems, have first been removed from the structural slab. It shall be the responsibility of the Contractor to arrange the construction schedule so that the required operations may be performed without causing delay to the work.

No operations will be performed by the Engineer until after the following construction work has been completed:

a) The existing bituminous overlay or concrete wearing course, if present, has been removed.

b) The existing waterproofing system, if present, has been removed.

Note: The removal of this material will be paid for under other applicable items.

It shall be the responsibility of the Contractor to inform the Engineer, in writing, of the date that a structure will be available for inspection operations. Notification shall be given to the Engineer at least seven (7) days prior to the date that the area in question will be in a condition acceptable to the Engineer.

The Contractor is hereby informed that the following time period will be necessary to perform the required inspection operations:

One working day with suitable weather conditions per each six thousand square feet, or portion thereof, of structural slab area.

The Contractor will not be allowed to do any further work to the structural slab, until all necessary inspection operations have been performed, unless given permission by the Engineer.

The Contractor will include any costs related to the allowance for this inspection in the general cost of the work.

2) Hydro-Demolition Water and Equipment: All hydro-demolition equipment should be capable of selectively removing spalled, delaminated or otherwise deteriorated concrete and cleaning the existing reinforcing steel of all rust and corrosion products by use of high-velocity water jets acting under continuous automatic control.

The hydro-demolition equipment shall consist of filtering and pumping units operating in conjunction with a remote-controlled robotics device

All hydro-demolition equipment shall be equipped with an angled and rotating water nozzle to prevent interference of the existing reinforcing steel with the removal of concrete.

The maximum allowable noise level caused by equipment used for the removal of deck concrete shall not exceed ninety (90) decibels on the "A" weighted scale, as measured at the nearest residence or occupied building. The Contractor shall demonstrate, to the satisfaction of the Engineer, that his equipment will meet this requirement before the use of such equipment will be allowed.

The make and model numbers of hydro-demolition equipment shall be submitted for approval by the Engineer. No hydro-demolition work shall be initiated until approval by the Engineer is granted.

The Contractor shall provide structurally adequate shields approved by the Engineer for protection of adjacent traffic lanes in the vicinity of the removal and cleanup operations.

Water used for the hydro-demolition shall be potable.

The Contractor is advised that the withdrawal of more than 50,000 gallons of water per day from a single source other than from a municipal water system shall require a diversion permit issued by the Department of Environmental Protection, Water Resources Unit, in accordance with the Connecticut Water Diversion Policy Act PA 84-402, CGS Sections 22a-365 through 22a-378.

3) Hydro-Demolition Drainage Runoff Control: At least two weeks prior to the planned initiation of hydro-demolition operations, the Contractor shall submit to the Engineer for approval a comprehensive plan for the containment, filtration and disposal of hydro-demolition runoff water and concrete debris.

The plan shall ensure that all concrete debris and particulant matter will be removed from hydro-demolition runoff water prior to its release to the environment.

The plan shall include provision for the concurrent vacuuming of all runoff water at the immediate vicinity of the hydro-demolition operation. Runoff water shall be completely contained and vacuumed into a suitably sized water tight mobile tank for transport to a disposal site sedimentation basin approved by the Engineer.

Hydro-demolition operations shall proceed only with the simultaneous operation of a runoff water vacuum pickup in the immediate area of the hydro-demolition operation. Runoff water shall not be allowed to flow across adjacent travel lanes, across bridge joints nor through any existing bridge drainage system.

The size and location of the disposal site sedimentation basin shall be detailed in the containment, filtration and disposal plan. The sedimentation basin shall be properly sized so that uncontrolled overflow does not occur. At the conclusion of hydro-demolition operations, the

sedimentation basin and all concrete debris shall be removed and the area restored to its original condition.

The plan shall additionally conform to all applicable requirements of Section 1.10 Environmental Compliance of the Standard Specification.

The approval by the Engineer of the runoff containment, filtration and disposal plan shall in no way relieve the Contractor of any responsibility for its safe and effective performance.

4) Calibration and Testing of Hydro-Demolition Equipment: A trial area shall be designated by the Engineer to demonstrate that the equipment, personnel and methods of operation are capable of producing results satisfactory to the Engineer. The trial area shall consist of two patches, each of approximately 20 square feet, one area deteriorated and/or defective concrete and one area of "sound" concrete as determined by the Engineer.

Area of sound concrete is defined as: An area free from chemical defects, delamination, spalling, cracks, etc.

In the "sound area of concrete", the equipment shall be programmed to remove concrete to a depth 1 inch $\pm$ 1/4 inch below the top reinforcing steel mat.

After completion of the above test area, the equipment shall be located over the deteriorated and/or defective concrete and using the same parameters for sound concrete removal, remove all deteriorated and/or defective concrete. If a satisfactory result is obtained, these parameters may be used as a basis for the production removal.

If, after calibrating the hydro-demolition equipment and beginning removal operations in a particular zone or area, insufficient removal of concrete is being obtained in the opinion of the Engineer, the Contractor shall recalibrate the hydro-demolition equipment for that zone or area to the satisfaction of the Engineer.

5) Removal of Deteriorated Concrete: All deteriorated concrete designated for removal under this construction item shall be removed within the limits shown on the plans and where ordered by the Engineer. The lateral limits of each area to be repaired will be delineated by the Engineer and suitably marked. Where several areas to be repaired are very close together, the Engineer may combine these individual patches into a large area. The outlines of each such area shall first be cut to a depth of one-half (1/2) inch with an approved powersaw capable of making straight cuts. In the event that reinforcing steel is encountered within the upper 1/2 inch depth during sawing operations, the depth of saw-cut shall immediately be adjusted to a shallower depth so as not to damage the steel bars. If so directed by the Engineer, saw cutting shall again be carried down to the 1/2 inch depth at other locations of repair provided reinforcing steel is not again encountered. Where over-breakage occurs resulting in a featheredge, the featheredge shall be squared up to a vertical edge in an approved manner. Where sawing is impractical, the area shall be outlined by chisel or other approved means.

All deteriorated concrete shall be removed by hydro-demolition methods except under the following circumstances where pneumatic hammers may be used when approved by the Engineer:

a) The removal of any remaining thin concrete ridges or “shadows” directly beneath reinforcing bars.

b) When necessary to achieve required clearance around lap splices in the repair of deteriorated or damaged reinforcing steel.

c) In areas inaccessible to hydro-demolition.

d) The removal of deteriorated concrete for deck repair areas less than 10% of surface area per span.

The weight of pneumatic hammers when used shall not exceed 30 pounds for concrete removal above the top reinforcing steel nor 15 pounds for concrete removal below the top reinforcing steel.

The depth of concrete removal shall be at least 1inch below the top reinforcing steel mat but shall be such as to include all spalled, delaminated, or otherwise deteriorated concrete. The Engineer will be sole determiner of what constitutes deteriorated concrete, using sounding methods or other evaluation measures at his discretion.

Within one hour following the initiation of a hydro-demolition operation in any patch area, all loose concrete debris should be removed, followed by water flushing of the existing concrete bonding surface to completely remove all traces of concrete debris and cement residue so that rebonding to the surface of the remaining sound concrete will be prevented. If it is not convenient to clean and flush the patch area within this time framework, all steel reinforcing and concrete bonding surfaces shall be cleaned subsequently by high pressure water blasting at a nozzle pressure not less than 3,000 psi with a sufficient volume to completely remove all rebonded debris and laitance.

Where pneumatic hammers are used, the minimum depth of removal shall be no more than 1 inch shallower than any adjacent hydro-demolished deck excavation.

Where the existing reinforcing steel is damaged or corroded, it shall be cut out and replaced with new reinforcing steel of the same size. Any sound reinforcing steel damaged during the concrete removal operations, shall be repaired or replaced by the Contractor at his expense as directed by the Engineer. New steel shall be attached beneath or beside existing steel with a minimum splice length as indicated on the plans, or as directed by the Engineer. The concrete shall be removed to a minimum depth of 1 inch below the new steel.

6) Surface Preparation: Sound reinforcing steel which is in the proper position in the slab shall be left in place and cleaned of all concrete, the smaller fragments to be removed with hand tools in patch areas where pneumatic hammers were used.

Reinforcing bar wire ties and vertical supports shall be installed on inadequately supported and/or vibrating reinforcing steel, as directed by the Engineer.

The concrete surface and reinforcing steel to receive patching material shall be either sandblasted or water blasted, followed by air blasting in order to remove all loose particles and dust. All blasting operations shall be performed using techniques approved by the Engineer, taking care to protect all pedestrians, traffic, and adjacent property. All compressed air sources shall have properly sized and designed oil separators, attached and functional, to allow delivered air at the nozzle to be oil-free. The patch area shall be cleaned of all additional loose or powder-like rust, oil, solvent, grease, dirt, dust, bitumen, loose particles, and foreign matter just prior to patching.

If the patch area was not cleaned and flushed with clean water immediately following hydro-demolition, or if run-off from a nearby hydro-demolition operation was allowed to travel through the previously cleaned and flushed patch surface, all affected concrete and steel reinforcing bonding surfaces shall be water blast cleaned at a nozzle pressure not less than 3,000 psi as directed by the Engineer, to assure that all remaining bond inhibiting laitance is completely removed.

The entire concrete surface to be patched shall be dampened. All free water shall be removed from the patch area.

7) Mixing, Placing, and Finishing: Mixing and placing concrete should not be done unless the ambient temperature is above 35°F. All mixing shall be accomplished by means of a standard drum-type portable mixer. A continuous type mobile mixer may be used if permitted by the Engineer. The Contractor shall calibrate the mobile mixer under supervision of the Engineer. Calibration shall be in accordance with the applicable sections of ASTM method C685. The total mix shall be limited to the quantity that can be mixed and placed in 15 minutes. The concrete mix shall be spread evenly and compacted to a level slightly above the pavement surface. Vibration, spading or rodding shall be used to thoroughly compact concrete and fill the entire patch area. Where practical, internal vibration shall be used in cases where concrete has been removed below the reinforcing steel. Hand tamping shall be used to consolidate concrete in smaller patches, including popouts.

Vibrating plates or vibrating screeds shall be used on the surface of all patches for strike off and consolidation. After the concrete has been spread evenly and compacted to a level slightly above the pavement surface, the vibrating plate or screed shall be drawn over the surface at a uniform speed without stopping, in order to finish the surface smooth and even with adjacent concrete.

The surface shall be float finished.

Finishing operations shall be completed before initial set takes place.

Cured patches, having a hollow sound when chain dragged or tapped (indicating delamination), shall be replaced by the Contractor at his expense until a patch acceptable to the Engineer is in place.

8) Tolerances in Finished Patched Surfaces: The surface profile of the patched area shall not vary more than one-eighth inch in a distance of 10 feet, when a 10 foot long straightedge is placed on the surface at any angle relative to the centerline of the bridge. Humps in the patch that exceed the one-eighth inch tolerance shall be ground down by approved machinery. Sags or depressions in the surface of the patch area that exceed one-eighth inch tolerance shall be repaired by removal of the concrete in the depression over an area determined by the Engineer to a depth of one inch and repaired in the previously described manner.

9) Underside of Bridge Deck Treatment: The Engineer shall examine the underside of the bridge deck for pop-outs caused by the removal of deteriorated concrete. The surface area of pop-outs shall be coated with epoxy resin where ordered by the Engineer. The concrete surface and exposed reinforcing steel, if any, which is to receive the coating material shall be cleaned of all loose or powder-like rust, oil, dust, dirt, loose particles, and other bond inhibiting matter just prior to coating.

The epoxy resin shall be mixed in accordance with the manufacturer's instructions. Also in accordance with the manufacturer’s instructions, two coats of the mixed material shall be applied in uniform coats of approximately 2 to 3 mil dry film thickness each.

If the pop-outs extend beyond the bottom layer of reinforcing steel, the pop-outs shall be repaired as ordered by the Engineer.

10) Test Cylinders: The Contractor shall make and perform compressive strength tests on representative cylinders under the supervision of the Engineer. The dimensions, type of cylinder mold and number of cylinders shall be specified by the Engineer. Traffic shall not be permitted on patched surfaces until the patch material attains a strength of 1800 psi, as determined by breaks of the test cylinders.

A portable compression testing machine shall be provided by the Contractor and available on site for cylinder testing. All testing and equipment shall conform to ASTM C39.

Note: This compression machine must be calibrated in accordance with the provisions of Section 5, ASTM C39.

11) Time Schedule: Work under this item begun on any specific bridge during a construction season shall be completed, at least, to include this item, membrane waterproofing and placing of first course of wearing surface as soon as possible and specifically before the beginning of the construction season’s winter shutdown.

All work shall proceed as required by the "Maintenance and Protection of Traffic" and "Prosecution and Progress" specifications elsewhere within the contract documents. Traffic will not be allowed on any areas where the Contractor has removed deteriorated concrete until a minimum of 1.5 hours after the placing and finishing operations on the areas are complete as required by this specification.

Method of Measurement: This work will be measured for payment by the actual number of cubic feet of patching material used in acceptable concrete deck patches, except where the Engineer determines that the Contractor has unnecessarily removed sound concrete. Where sound concrete has been unnecessarily removed, the replacement concrete will not be measured for payment.

The actual number of cubic feet of patching material will be determined by the actual product yield per bag based upon the Contractor's mix design as determined by the Department's Material Testing Lab.

The Contractor shall provide the Engineer with a statement certifying the number of bags of patching material incorporated into the work.

Basis of Payment: This work will be paid for at the contract unit price per cubic foot of deck concrete repaired for "Partial Depth Patch", complete in place and accepted, which price shall include removal of deteriorated concrete, surface preparation of patch areas, epoxy resin coating of the underside of deck pop-out surfaces, concrete replacement, the furnishing and installation of reinforcing bar wire ties and vertical supports for inadequately supported existing reinforcing steel, all materials, equipment, including the portable compression testing machine required for the testing of the repair material, tools, labor and work incidental thereto.

Pay Item	Pay Unit
Partial Depth Patch	c.f.

ITEM #0602911A – DRILLING HOLES AND GROUTING ANCHOR BOLTS

Description:

Work under this item shall consist of drilling or coring where permitted, furnishing and grouting steel anchor bolts, nuts and washers at the locations shown on the plans, in accordance with the plans, the manufacturer's recommendations, and as directed by the Engineer.

Material:

The materials shall conform to the following requirements:

1. The chemical anchor material shall be a resin compound specially formulated to anchor steel anchor bolts in holes drilled into concrete for the purpose of resisting tension pull-out. The chemical anchor material shall conform to Subarticle M.03.07 of the Supplementary Specifications and be selected from the Department's Qualified Products List.

2. The anchor rods shall conform to Section M.06.02, except that the material shall be as specified on the contract drawings.

3. Nuts shall conform to ASTM A563, Grade DH and shall be galvanized in accordance with ASTM A153.

4. Washers shall conform to ASTM F436, Type 1 and shall be quenched, tempered and galvanized in accordance with ASTM A153.

Construction Methods:

Before fabricating any materials, the Contractor shall submit shop drawings to the Engineer for review in accordance with Article 1.05.02.

These drawings shall include but not be limited to the following:

1. Location and sizes of anchor bolts.
2. Material lists.
3. Material designations.
4. Type of drill.
5. Diameter of bit.
6. Method of cleaning holes.
7. Method of placement of the chemical anchor material

Specifications and recommendations for the aforementioned may be obtained from the manufacturer of the chemical anchor material. The weight of the drill shall not exceed 20 pounds.

The anchor bolts shall be able to develop a pull-out resistance of 90 percent of their nominal yield strength when bonded at the embedment depths provided.

Holes shall be drilled through the steel masonry plates at the locations shown on the plans.

Holes shall be drilled into the concrete at the locations shown on the plans. Core drilling is only allowed at locations indicated on the plans.

The depth and diameter of each hole shall be as shown on the plans. If the diameter of a hole is not shown, the diameter of the hole shall conform to the manufacturer's recommendations for the diameter of the rod or bolt being anchored.

Drilling methods shall not cause spalling, cracking, or other damage to the existing concrete and existing reinforcing bars. Those areas damaged by the Contractor shall be repaired by him in a manner suitable to the Engineer and at no expense to the State.

Prior to placing the chemical anchoring material in the holes, the holes shall be cleaned of all dirt, moisture, concrete dust and other foreign material. The anchor bolts or rods and the chemical anchoring material shall be installed in the drilled holes in accordance with the chemical anchoring material manufacturer's recommendations.

The Contractor, as directed by the Engineer, shall take adequate precautions to prevent any materials from dropping to the area below, which may result in damage to any existing construction or to adjoining property. Should any damage occur to the structure as a result of the Contractor's operations, the Contractor shall make repairs at his own expense. The repair work shall be approved in advance and shall be of a quality acceptable to the Engineer.

Method of Measurement:

This work will be measured for payment by the actual number of each anchor bolt or rod grouted into a drilled hole, completed and accepted.

Basis of Payment:

This work will be paid for at the contract unit price each for "Drilling Holes and Grouting Anchor Bolts," which price shall include drilling through steel masonry plates and into the concrete bridge seat, furnishing and installing the chemical anchoring material and anchor bolts in the holes and all material, equipment, tools, labor and work incidental thereto. The cost of access required to complete this item is included in the general cost of this work.

Pay Item	Pay Unit
Drilling Holes and Grouting Anchor Bolts	ea.

ITEM #0602972A – BOLT AND RIVET REPLACEMENT

Description: Work under this item shall consist of the removal of existing rivets to be replaced with new high strength bolts for existing deteriorated rivets, reduced rivets, and new connections, as indicated on the plans and as directed by the Engineer.

Materials: As required.

Construction Methods: Rivets shall be removed by pneumatic or mechanical tools in a manner that will not damage the underlying, connected material. Flame cutting methods shall not be used without the approval of the Engineer. Upon removal of each rivet, the base metal around the hole shall be examined for surface irregularities and deterioration. All oxidized material shall be removed.

Bolts replacing rivets shall be high strength bolts conforming to Section 6.03 of the Standard Specifications. Where rivet diameters are increased by removal of oxidized materials or removal of corrosion, the tolerance of the resultant hole must be not more than 1/32-inch larger than the mating bolts; under these conditions, provide all high strength bolts in larger diameters as may be required. A hardened washer shall be provided under the turned element of each bolt.

Only one rivet at a time shall be removed for replacement with high strength bolts, unless otherwise authorized by the Engineer. The replacement bolt shall be properly tensioned prior to removal of a subsequent rivet. Bolt tensioning shall be by the "turn-of-nut" method in accordance with the provisions of the AISC "Specifications for Structural Joints" using ASTM A325 or A490 bolts.

Method of Measurement: This item shall be measured for payment by the number of rivets or bolts replaced.

Basis of Payment: This work will be paid for at the contract unit price each for "Bolt and Rivet Replacement", which price shall include all tools and labor incidental to the removal and disposal of the material from the site. Payment for new bolts will be included under this item.

Pay Item	Pay Unit
Bolt and Rivet Replacement	ea.

ITEM #0603222A – DISPOSAL OF LEAD DEBRIS FROM ABRASIVE BLAST CLEANING

Description:

Work under this item shall include the handling, loading, packing, storage, transportation and final off-site disposal of hazardous lead debris which has been generated in conjunction with work conducted under Item 0020904A – Lead Compliance For Abrasive Blast Cleaning.

The Engineer previously analyzed a representative sample of the lead debris prior to generation and found leachable lead above RCRA-hazardous levels. A summation of the analytical results is included here:

Bridge No. 00507	TCLP Results
Paint associated with the structural steel bridge components (i.e. Structural Components such as Girders, Cross Beams, Trusses, Bearings, etc.)	**340 mg/l (RCRA Hazardous)**

The Contractor shall comply with the latest requirements of the USEPA RCRA Hazardous Waste Regulations 40 CFR 260-274 and the DEEP Hazardous Waste Management Standards 22a-449(c).

Hazardous lead debris shall be transported from the Project by a licensed hazardous waste transporter approved by the Department and disposed of at an EPA-permitted and Department-approved hazardous waste landfill within 90 days from the date of generation.

The Contractor must use one or more of the following Department-approved disposal facilities for the disposal of hazardous waste:

Clean Earth of North Jersey, Inc., (CENJ) 115 Jacobus Avenue, South Kearny, NJ 07105 Phone: (973) 344-4004; Fax: (973) 344-8652	Clean Harbors Environmental Services, Inc. 2247 South Highway 71, Kimball, NE 69145 Phone: (308) 235-8212; Fax: (308) 235-4307
Clean Harbors of Braintree, Inc. 1 Hill Avenue, Braintree, MA 02184 Phone: (781) 380-7134; Fax: (781) 380-7193	Cycle Chem (General Chemical Corp.) 217 South First Street, Elizabeth, NJ 07206 Phone: (908) 355-5800; Fax (908) 355-0562
EnviroSafe Corporation Northeast (former Jones Environmental Services (NE), Inc.) 263 Howard Street, Lowell, MA 01852 Phone: (978) 453-7772; Fax: (978) 453-7775	Environmental Quality Detroit, Inc. 1923 Frederick Street, Detroit, MI 48211 Phone: (800) 495-6059; Fax: (313) 923-3375

Republic Environmental Systems 2869 Sandstone Drive, Hatfield, PA 19440 Phone: (215) 822-8995; Fax: (215) 997-1293	Chemical Waste Management of New York 1550 Balmer Rd., Model City, NY 14107 Phone: (800) 843-3604; Fax: (716) 754-0211
Environmental Quality Company: Wayne Disposal Facility 49350 North I-94 Service Drive Belleville, MI 48111 Phone: (800) 592-5489; Fax: (800) 592-5329	Northland Environmental, Inc. (PSC Environmental Systems) 275 Allens Avenue, Providence, RI 02905 Phone: (401) 781-6340; Fax: (401) 781-9710

Construction Methods:

A. Submittals

The apparent low bidder shall submit in writing, within fourteen days after Bid opening, (1) a letter listing the names of the hazardous waste disposal facilities (from the above list) that the bidder, if it is awarded the Contract, will use to receive hazardous material from this Project, (2) a copy of the attached "Disposal Facility Material Acceptance Certification" form from each facility, which shall be signed by an authorized representative of each disposal facility, and (3) a copy of each facility's acceptance criteria and sampling frequency requirements.

Any other Contractor which the Department may subsequently designate as the apparent low bidder shall make the aforementioned submissions within fourteen (14) days from the date on which the Department notifies the Contractor that it has become the apparent low bidder. If, however, the Department deems it is necessary for such a subsequent-designated Contractor to make said submissions within a shorter period of time, the Contractor shall make those submissions within the time designated by the Department.

Failure to comply with all of the above requirements may result in the rejection of the bid.

No facility may be substituted for the one(s) designated in the Contractor's submittal without the Engineer's prior approval. If the material cannot be accepted by any of the Contractor's designated facilities, the Department will supply the Contractor with the name(s) of other acceptable facilities.

Rev. Date 1/14/13

Disposal Facility Materials Acceptance Certification

Project Number _____

Project Location_____

Facility Name_____ Telephone_____

Facility Address_____ Fax_____

_____

_____

The Contractor has supplied the analytical data contained in the report concerning the site investigation performed by the Department. I have personally reviewed this data and intend to accept the following:

Hazardous materials as described in Item # 0603222A Disposal of Lead Debris from Abrasive Blast Cleaning for the subject Project at a cost of $ _____per ton for disposal and an additional $_____ per ton for transportation from the Project to the facility (if applicable).

This intent to accept the material will be subject to and dependent upon the facility's subsequent evaluation of the waste characterization documentation to be provided to the Contractor by the Engineer.

Authorized Facility Representative _____/_____

Printed/Typed Name Title

_____/_____

Signature Date

Note: The facility shall attach the acceptance criteria and facility sampling frequency requirements to this document.

DO NOT ALTER FORM IN ANY WAY. FORM MUST BE COMPLETED IN ENTIRETY.

B. EPA ID Number:

Prior the generation any hazardous waste on a contiguous per site basis, the Contractor shall notify the Engineer of its selected hazardous waste transporter and disposal facility. The Contractor must submit to the Engineer (1) the transporter's current US DOT Certificate of Registration and (2) the transporter's current Hazardous Waste Transporter Permits for the State of Connecticut, the hazardous waste destination state and any other applicable states. The Engineer will then obtain on a contiguous per site basis a temporary EPA Generators ID number for the site that he will forward to the Contractor. Any changes in transporter or facility shall be immediately forwarded to the Engineer for review.

C. General:

Handling, storage, transportation and disposal of hazardous waste materials generated as a result of execution of this project shall comply with all Federal, State and Local regulations including the USEPA RCRA Hazardous Waste Regulations (40 CFR Parts 260-271), the CTDEEP Hazardous Waste Regulations (22a-209 and 22a-449(c)), and the USDOT Hazardous Materials Regulations (49 CFR Part 171-180).

All debris shall be contained and collected daily or more frequently as directed by the Engineer, due to debris buildup. Debris shall be removed by HEPA vacuum collection. Such debris, abrasive blast residue, rust and paint chips shall be stored in leak-proof storage containers in the secured storage site, or as directed by the Engineer. The storage containers and storage locations shall be reviewed by the Engineer and shall be located in areas not subject to ponding.

All storage containers (roll offs or drums) shall have a protective liner and removable lid. These containers shall not have any indentations or damage that would allow seepage of the contained material.

If 55 gallon barrels are used, staging is required: 55 gallon barrels shall be stored together in two rows of five. The Contractor shall maintain a minimum lane clearance of 36 inches between each (barrel lot of ten).

The Contractor shall maintain a secure storage site, which shall be large enough to handle all debris. The Contractor shall store debris only in the secured storage site. All lead debris shall be conveyed to the secured storage site at the conclusion of the work shift. The Contractor shall account for all debris conveyed to the secured storage site and all debris transported from the project for disposal.

The secure storage site shall consist of an 8-ft. high fenced-in area with a padlocked entrance. Storage containers shall not be used on the project until and unless they have been reviewed and approved by the Engineer. Storage containers and sites shall be located so as not to cause any traffic hazard. Container storage sites shall be in areas that are properly drained and runoff water

shall not be allowed to pool and shall be out of the 100-year flood plain. The containers shall be placed on pallets or other approved material and not directly on the ground.

Storage containers shall be closed and covered with a waterproof tarpaulin at all times except during placement, sampling and disposal of debris.

The Engineer previously analyzed a representative sample of the lead debris prior to generation and found leachable lead above RCRA-hazardous levels. A copy of the analytical results can be supplied to the Contractor at the time of waste disposal upon request.

Materials other than direct paint related debris which are incidental to the paint removal work activities (tarps, poly, plywood, PPE, gloves, decontamination materials, etc) which may be contaminated with lead, shall be stored separately from the direct paint debris, and shall be sampled by the Engineer for waste disposal characterization testing. Such materials characterized as hazardous shall be handled/disposed of as described herein, while materials characterized as non-hazardous shall be disposed of as non-hazardous CTDEEP Solid Waste under Item 0020904A.

Project construction waste materials unrelated to the paint removal operations shall NOT be combined/stored with paint debris waste and/or incidental paint removal materials as they are not lead contaminated and shall NOT be disposed of as hazardous waste. The Engineer's on-site Inspectors shall conduct inspections to verify materials remain segregated.

Hazardous waste materials are to be properly packed and labeled for transport by the Contractor is accordance with EPA, CTDEEP and USDOT regulations. The disposal of debris characterized as hazardous waste shall be completed within 90 calendar days of the date on which it began to be accumulated in the lined containers. Storage of containers shall be in accordance with current DEEP/EPA procedures.

The Contractor shall label containers with a 6-inch square, yellow, weatherproof, Hazardous Waste sticker in accordance with USDOT regulations.

The Contractor shall obtain and complete all paperwork necessary to arrange for material disposal, including disposal facility waste profile sheets. It is solely the Contractor's responsibility to co-ordinate the disposal of hazardous materials with its selected treatment/recycling/disposal facility(s). Upon receipt of the final approval from the facility, the Contractor shall arrange for the loading, transport and treatment/recycling/disposal of the materials in accordance with all Federal and State regulations. **No claim will be considered based on the failure of the Contractor's disposal facility(s) to meet the Contractor's production rate or for the Contractor's failure to select sufficient facilities to meet its production rate.**

The Contractor shall process the hazardous waste such that the material conforms with the requirements of the selected treatment/disposal facility, including but not limited to specified size and dimension. Refusal on the part of the treatment/disposal facility to accept said material

solely on the basis of non-conformance of the material to the facility's physical requirements is the responsibility of the Contractor and no claim for extra work shall be accepted for reprocessing of said materials to meet these requirements.

All DOT shipping documents, including the Uniform Hazardous Waste Manifests utilized to accompany the transportation of the hazardous waste material shall be prepared by the Contractor and reviewed/signed by an authorized agent representing ConnDOT, as Generator, for each load of hazardous material that is packed to leave the site. The Contractor shall not sign manifests on behalf of the State as Generator. The Contractor shall forward the appropriate original copies of all manifests to the Engineer the same day the material leaves the Project site.

Materials not related to lead paint removal and/or characterized as non-hazardous waste shall NOT be shipped for hazardous waste disposal in accordance with USEPA RCRA hazardous waste minimization requirements.

A load-specific certificate of disposal, signed by the authorized agent representing the waste disposal facility, shall be obtained by the Contractor and promptly delivered to the Engineer for each load.

D. Material Transportation

Materials determined to be hazardous shall be transported in compliance with the applicable federal/state regulations. Transport vehicles shall have a protective liner and removable lid, shall not have any indentations or damage and must be free from leaks, and discharge openings must be securely closed during transportation.

In addition to all pertinent Federal, State and local laws or regulatory agency polices, the Contractor shall adhere to the following precautions during the transport of hazardous materials off-site:

- All vehicles departing the site are to be properly logged to show the vehicle identification, driver's name, time of departure, destination, and approximate volume, and contents of materials carried. Vehicles shall display the proper USDOT placards for the type and quantity of waste;

- No materials shall leave the site unless a disposal facility willing to accept all of the material being transported has agreed to accept the type and quantity of waste;

- Documentation must be maintained indicating that all applicable laws have been satisfied and that the materials have been successfully transported and received at the disposal facility; and,

- The Contractor shall segregate the waste streams (i.e. concrete, wood, etc.) as directed by the receiving disposal facility.

Any spillage of debris during disposal operations during loading, transport and unloading shall be cleaned up in accordance with EPA 40 CFR 265 Subparts C & D, at the Contractors expense.

The Contractor is liable for any fines, costs or remediation costs incurred as a result of their failure to be in compliance with this Item and all Federal, State and Local laws.

D. Equipment Decontamination:

All equipment shall be provided to the work site free of gross contamination. The Engineer may prohibit from the site any equipment that in his opinion has not been thoroughly decontaminated prior to arrival. Any decontamination of the Contractor's equipment prior to arrival at the site shall be at the expense of the Contractor. The Contractor is prohibited from decontaminating equipment on the Project that has not been thoroughly decontaminated prior to arrival.

The Contractor shall furnish labor, materials, tools and equipment for decontamination of all equipment and supplies that are used to handle Hazardous Materials. Decontamination shall be conducted at an area designated by the Engineer and shall be required prior to equipment and supplies leaving the Project, between stages of the work.

The Contractor shall use dry decontamination procedures. Residuals from dry decontamination activities shall be collected and managed as Hazardous Materials. If the results from dry methods are unsatisfactory to the Engineer, the Contractor shall modify decontamination procedures as required.

The Contractor shall be responsible for the collection and treatment/recycling/disposal of any liquid wastes that may be generated by its decontamination activities in accordance with applicable regulations.

E. Project Closeout Documents:

The Contractor shall provide the Engineer, within 30 days of completion of the work, a compliance package; which shall include, but not be limited to, the following:

1. Copies of completed Hazardous Waste Manifests (signed by authorized disposal facility representative)
2. Completed Waste Shipment Records/Bills of Lading (signed by authorized disposal facility representative)
3. Completed Weigh Bills (indicating each loads net weight).

Method of Measurement:

The work of "DISPOSAL OF LEAD DEBRIS FROM ABRASIVE BLAST CLEANING" shall be measured for payment as the actual net weight in tons delivered to the treatment/disposal facility. Such determinations shall be made by measuring each hauling vehicle on the permanent

scales at the treatment/disposal facility. Total weight shall be the summation of weigh bills issued by the facility specific to this project and waste stream.

The disposal of any lead painted debris, originally anticipated to be hazardous, but determined by characterization sampling not to contain hazardous concentrations of lead will not be measured for payment under this Item. Disposal of these materials will be handled in accordance with the provisions of Item 0020904A.

The collection and treatment/disposal of materials and liquids generated during equipment decontamination activities and cleaning/disposal of personal protective equipment (PPE) shall be considered incidental to work under this Item and will not be measured for separate payment. Materials incidental to the construction, which become contaminated due to the lead debris removal, such as but not limited to, gloves, coveralls, tarps and filters shall be disposed of in accordance with this specification. These incidental materials shall be kept separate from the debris. These materials will not be measured for payment, but will be included in the general cost of the work.

Basis of Payment:

This work shall be paid for at the contract unit price per ton, which shall include the processing, loading, storage (including containers) and transportation of said materials from the temporary storage area to the final to the treatment/disposal facility; the treatment/disposal or recycling of said materials; the preparation of all related paperwork including manifests; fees; and all equipment, materials, tools, labor and work incidental to loading, transporting, treating/recycling and disposal of materials.

No separate payment shall be made under this Item for the on-site processing, transportation and treatment/disposal of materials not found to be hazardous based upon characterization sampling results.

No separate payment shall be made for the disposal of wastes generated in conjunction with equipment decontamination or the disposal of personal protective equipment (PPE). The cost of such disposal shall be considered incidental to the work under this Item.

Final payment will not be approved until completed copies of all Manifest(s) and Bills of Lading signed by an authorized disposal facility representative and all associated weight bills indicating each loads net weight have been provided to the Engineer. Once completed and facility-signed copies of all Manifest(s), Bills of Lading and associated weigh bills have been received in their entirety, the Engineer will review and approve the release of final payment to the Contractor.

Pay Item	Pay Unit
Disposal of Lead Debris from Abrasive Blast Cleaning	Ton

ITEM #0603352A – TEMPORARY SUPPORT ASSEMBLY

Description: Work under this item shall consist of the design, furnishing, fabrication, installation, and removal of temporary support assemblies as indicated on the drawings, as directed by the Engineer and in accordance with these specifications.

Materials: All materials for this work shall be of satisfactory quality for the purposes intended and shall be approved by the Engineer prior to installation. The supports shall be assembled by means of bolts or welding.

The bolts shall conform to ASTM A325 Type 1. The nuts shall conform to ASTM A563, heavy hex, Grade C. The washers shall conform to ASTM F436. All hardware shall be uncoated.

Construction Methods: Each temporary support assembly shall be designed to safely carry HS-20 live loading including impact plus its own weight and the dead load of the structure. The structural integrity of steel stringer(s) shall be maintained during the use of the temporary support assemblies. The Contractor shall be responsible for the design and detailing of the temporary supports. The actual stresses shall not exceed those values indicated in the AASHTO Standard Specifications for Highway Bridges, 17th edition, and all applicable interim specifications.

The Contractor shall submit working drawings and design computations for review in accordance with Article 1.05.02 (a). The working drawings and design computations shall be submitted and approved prior to the fabrication of the structural steel.

The working drawings shall include, but not be limited to, the following:

1. Material designations for all structural components and fasteners.
2. Locations and spacings of supports.
3. Typical details showing member sizes and lengths, the number, size, spacings and locations of fasteners, and the locations of any wedges or shims.

All working drawings and design computations shall be sealed by a Professional Engineer registered in the State of Connecticut, who shall also be available for consultation in interpreting his drawings, and in any resolution of any problems, which may occur during the fabrication, installation and performance of the temporary support assemblies.

Any structural steel to be specifically fabricated for the supports shall be fabricated in accordance with Subarticles 6.03.03-5 and 13. Steel shall be delivered, stored, erected and assembled in accordance with Subarticles 6.03.03-10, 11, 13 and 17. The field assembly of the bolted connections shall conform to Subarticle 6.03.03-19. The surface preparation and welding details, procedures, and testing methods shall conform to the ANSI/AASHTO/AWS D1.5- Bridge Welding Code and Subarticles 6.03.03-6 and 6.03.03-21. Welding to tension flanges of the floorbeams and stringers shall not be permitted. Welding adjacent to the fillets of the girders shall

be avoided. Connections of the temporary support assembly to truss members will not be permitted.

The faying surfaces of the connections shall be free of scale, dirt and other foreign material.

A periodic inspection of the temporary support assemblies shall be maintained by the Contractor as directed by the Engineer.

The Contractor shall install the temporary stringer support system(s) in strict conformance with the approved working drawings. Each installation shall be inspected and approved by the Engineer prior to removal of any stringer to floorbeam connection elements.

The Contractor shall maintain the temporary support assemblies until their removal. Any materials that have become worn or damaged shall be repaired or replaced by the Contractor.

The Contractor may elect to reuse a temporary support assembly at multiple stringer support locations throughout the project with approval from the Engineer, provided the assembly conforms to the above requirements.

The Contractor shall remove and dispose of the temporary support assemblies when they are no longer required. All material shall remain the property of the Contractor.

As directed by the Engineer, the Contractor shall take adequate precaution to prevent damage to any portion of the permanent structure or property below. Damages that may occur shall be repaired as directed by the Engineer. All costs shall be borne by the Contractor.

Method of Measurement: This work will be measured for payment at the contract unit price per each stringer end supported with a temporary support assembly as required to facilitate stringer and/or floorbeam repair. The temporary support of any individual stringer end shall be counted only one time regardless of the number of times it is temporarily supported.

Basis of Payment: The temporary support assembly will be paid for at the contract unit price per each "Temporary Support Assembly".

Payment shall be for designing, furnishing, fabricating, installing, and removing the temporary support assembly, and all materials, equipment, tools, labor and work incidental thereto.

PayItem	PayUnit
Temporary Support Assembly	ea.

ITEM #0603563A – CLASS 1 CONTAINMENT AND COLLECTION OF SURFACE PREPARATION DEBRIS (SITE NO. 1)

Description: Work under this item shall consist of furnishing and erecting SSPC Guide 6 Class 1 containment enclosures with negative air pressure as required to contain and collect debris resulting from the removal of coatings in the preparation of steel surfaces for painting. Also included are the vacuum collection and the storage of debris in suitable containers.

The containment and collection of debris shall be done in strict conformance with current Federal Environmental Protection Agency (EPA) and Connecticut Department of Energy and Environmental Protection (DEEP) regulations.

Materials: Materials and equipment shall be of satisfactory quality to perform the work and shall not be used on the project until and unless they have been reviewed and approved by the Engineer.

Rigid walls for the containment enclosure shall be comprised of plywood panels or corrugated panels of steel, aluminum or reinforced fiberglass. Flexible containment walls constructed of fire retardant tarpaulin material shall be impermeable to air and water.

Fifty Five (55) gallon barrels with resealable lids, or lined storage containers sized for the job shall be leakproof; shall conform to the Code of Federal Regulations Title 49, Chapter 1, Paragraph 173.510A (1), (5), and Paragraph 178.118; and shall not be used on the project until and unless they have been reviewed and approved by the Engineer.

In meeting the requirements of these specifications, the Contractor shall supply portable battery-operated manometers with a pressure range of -1.00 to 10.00 and increments of 0.01 inches of water and a velocity range of 50 to 9990 feet per minute; and one or more portable lightmeters with a scale of 0.0-50.0 foot candles.

Construction Methods: The Contractor shall proceed with one of the following containment methods: A. Containment enclosure with a suspended platform, B. Containment enclosure without a suspended platform.

A. Containment enclosures with a suspended platform:

At least two months prior to any abrasive blast cleaning activities, the Contractor shall submit to the Department (10) complete copies of detailed working drawings and calculations prepared and stamped by a Professional Engineer (Mechanical and Civil) licensed in Connecticut, which drawings shall detail as described below, the proposed methods for such activities. The Contractor shall not commence with containment enclosure erection and abrasive blast cleaning until and unless the working drawings have been reviewed and approved by the Engineer, and shall proceed with such work only within approved containment enclosures.

The working drawings shall include the following:

1. A construction plan and drawings detailing proposed coating removal operations, abrasive debris classification and separation, removal and transport of waste to a secure storage site.

2. A plan and drawings detailing the proposed containment enclosure, including details of the following:

   A. Rigid, solid floor or platform.
   B. Containment walls with rigid and flexible materials.
   C. Rigid supports and bracing for the floor and wall panels, rigid or flexible supports and bracing for flexible walls.
   D. Calculations including localized overstress conditions, member stresses, H.S. load rating and maximum dead and live load imposed on the bridge by the containment enclosure, grit blasting/recycling equipment and HVAC equipment.
   E. Maximum allowable load for the floor/platform.
   F. Wind load and wind stresses imposed on the bridge by the containment enclosure shall be calculated and submitted.
   G. Airflow and air re-circulation within the enclosure including a minimum negative pressure of 0.03 in. of water column (W.C.) relative to external ambient air and calculations. Airflow shall meet the SSPC Guide 6 requirements of 100 ft/min cross draft and 50 ft/min downdraft and the OSHA Ventilation Standards. The maximum cross sectional area for airflow within the enclosure shall be 400 square feet.
   H. Connections to the bridge, i.e., clamps, rollers. (Note: Welding and bolting is not allowed.) Each connection to the bridge shall have a tension load cell attached. A multi-channel digital load indicator shall be connected to all the bridge connection load cells and located in an area accessible to the Engineer. The load indicator shall be capable of storing peak load readings.
   I. Auxiliary stationary source lighting.
   J. Dust collection and filtration equipment, including the equipment data sheets and airflow capacity.
   K. Air intake points including filters, louvers, baffles, etc.
   L. Entrance/Exit compartment completely sealed with airlocks.
   M. Location of equipment and impact on traffic.
   N. Elevation view of the containment enclosure with indications of any encroachments on the surroundings. The bridge vertical clearance shall be maintained throughout the project.

NOTE: The structure loading for containment design shall be in accordance with AASHTO using HS-20 loads. The allowable overstress for all conditions shall not exceed 20%.

B. Containment enclosures without a suspended platform:

At least two months prior to any abrasive blast cleaning activities, the Contractor shall submit to the Department (10) complete copies of detailed working drawings and calculations prepared and

stamped by a Professional Engineer (Mechanical and Civil) licensed in Connecticut, which drawings shall detail as described below, the proposed methods for such activities. The Contractor shall not commence with containment enclosure erection and abrasive blast cleaning until and unless the working drawings have been reviewed and approved by the Engineer, and shall proceed with such work only within approved containment enclosures.

The working drawings shall include the following:

1. A construction plan and drawings detailing proposed coating removal operations, abrasive debris classification and separation, removal and transport of waste to a secure storage site.

2. A plan and drawings detailing the proposed containment enclosure, including details of the following:

A. Containment walls with rigid and flexible materials.
B. Rigid supports and bracing for the floor and wall panels, rigid or flexible supports and bracing for flexible walls.
C. Airflow and air re-circulation within the enclosure including a minimum negative pressure of 0.03 in. of water column (W.C.) relative to external ambient air and calculations. Airflow shall meet the SSPC Guide 6 requirements of 100 ft/min cross draft and 50 ft/min downdraft and the OSHA Ventilation Standards. The maximum cross sectional area for airflow within the enclosure shall be 400 square feet.
D. Connections to the bridge, i.e., clamps, rollers. (Note: Welding and bolting is not allowed.)
E. Auxiliary stationary source lighting.
F. Dust collection and filtration equipment, including the equipment data sheets and airflow capacity.
G. Air intake points including filters, louvers, baffles, etc.
H. Entrance/Exit compartment completely sealed with airlocks.
I. Location of equipment and impact on traffic.
J. Elevation view of the containment enclosure with indications of any encroachments on the surroundings. The bridge vertical clearance shall be maintained throughout the project.

In addition, if the bridge vertical clearance is greater than 30 feet, the wind load and wind stresses imposed on the bridge by the containment enclosure shall be calculated and submitted.

Reference information on enclosures can be obtained from the following sources:

- SSPC Guide 6
- Steel Structures Painting Manual, Volume 1.
- NCHRP Report 265

The containment enclosure shall be sealed across the bridge deck underside between the girders with a rigid material. The floor shall be covered with a waterproof tarpaulin attached and sealed to

the enclosure wall and floor around the entire enclosure perimeter. All edges of tarpaulins shall have a two-foot flap that clamps over the connected edges around the entire perimeter. These flaps shall be completely fastened 12 in. on center for both edges and sealed completely with the tarpaulin manufacturer's recommended tape and caulk.

All equipment placement and work shall be in strict conformance with the contract special provisions "Prosecution and Progress" and "Maintenance and Protection of Traffic". The Contractor shall perform all work in accordance with the requirements of any permits for this project.

During abrasive blast cleaning, if the containment enclosure is allowing debris to escape, the Contractor shall immediately stop such work until the enclosure is repaired. Any debris released from the enclosure shall be cleaned up by the Contractor immediately.

The containment enclosure shall be disassembled if the wind velocity is greater than 40 miles per hour, if it is forecast to be higher or when directed by the Engineer. However, if the wind velocity is below 40 MPH, but high enough to cause the containment enclosure to billow and emit dust, the Contractor shall immediately cease abrasive blast cleaning and, after cleaning up all the debris, disassemble the enclosure.

All debris resulting from surface preparation shall be contained and vacuum collected daily or more frequently as directed by the Engineer, due to debris buildup. Such debris, abrasive blast residue and paint chips removed by hand or power tool cleaning, shall be stored in leakproof storage containers in the secured storage site, or as directed by the Engineer. Debris storage shall be in accordance with Connecticut Hazardous Waste Management Regulations.

If 55 gallon barrels are used, staging is required: 55 gallon barrels shall be stored together in two rows of five. The Contractor shall maintain a minimum lane clearance of 36 inches between each (barrel lot of ten).

The Contractor shall maintain a secure storage site, which shall be large enough to handle all coating debris that is collected and stored on site at any time. The Contractor shall store coating debris only in the secured storage site. During abrasive blast cleaning operations, all surface preparation debris shall be vacuum collected from the containment enclosure and removed to the abrasive recycling reclaimer unit, and the coating debris shall be conveyed to the secured storage site at the conclusion of the work shift. The Contractor shall account for all coating debris conveyed to the secured storage site and all coating debris transported from the project to the hazardous waste treatment/disposal facility. The Contractor is responsible for the proper handling of the surface preparation debris and coating debris. All spillage shall be cleaned up immediately.

The secure storage site shall consist of an 8-ft. high fenced-in area with a padlocked entrance. Storage containers shall not be used on the project until and unless they have been reviewed and approved by the Engineer. Storage containers and sites shall be located so as not to cause any traffic hazard. Container storage sites shall be in areas that are properly drained and runoff water shall not be allowed to pond. The containers shall be placed on pallets or other approved material and not directly on the ground.

Storage containers shall be closed and covered with a waterproof tarpaulin at all times except during placement, sampling, and disposal of the debris.

The Contractor shall furnish the inspector with two (2) new portable battery-operated manometers and light meters, per containment enclosure. Negative pressure verification with the portable manometers shall be done by the Engineer before and during abrasive blast cleaning and during vacuum collection of all surface preparation debris. The supplied instruments will become the property of the State upon job completion.

Light at the steel surface within the enclosure shall be maintained by the Contractor at a minimum of 50 foot-candles as measured by a light meter. Such lighting shall be maintained throughout the surface preparation, painting, and inspection activities.

Equipment noise in excess of 90 decibels as measured at the closest residential, commercial or recreational areas, shall be lowered by the Contractor to a maximum of 90 decibels by the use of mufflers or other equipment approved by the Engineer prior to its use for this purpose.

Any air exhausted from the containment enclosure, abrasive-recycling equipment or vacuum equipment shall be passed through a filtering system. The Contractor is responsible for the design, effectiveness and maintenance of this filtering system. No discharge of debris dust shall be allowed.

The Contractor is liable for any fines, costs, or remediation costs incurred as a result of their failure to be in compliance with this special provision and all Federal, State, and local laws.

Method of Measurement: Work under this item will not be measured for payment, but will be paid for at the contract lump sum price for each site. A site shall consist of an entire bridge structure, unless otherwise noted on the plans.

Basis of Payment: This work will be paid for at the contract lump sum price for "Class 1 Containment and Collection of Surface Preparation Debris (Site No. 1)", at the site designated. The price shall include all materials, equipment, tools, labor and work incidental thereto.

Pay Item	Pay Unit
Class 1 Containment and Collection of Surface Preparation Debris (Site No. 1)	l.s.

ITEM #0603768A – STRUCTURAL STEEL

Description: Work under this item shall consist of furnishing, fabricating, transporting, storing, handling and installing structural steel plates and steel angles for the purpose of repairing deteriorated steel member webs, flanges, gusset plates, stiffeners, and other structural steel of the type and size designated, as shown on the plans, as directed by the Engineer and in accordance with these specifications.

All work shall conform to the requirements of the AASHTO Standard Specifications for Highway Bridges 17th Edition and the ANSI/AASHTO/AWS D1.5 – Bridge Welding Code.

Materials: The materials for this work shall conform to the requirements of AASHTO M270, Grade 50T2.

All bolts shall conform to the requirements of ASTM A325.

Materials for this work shall be stored off the ground before, during, and after fabrication. The plates shall be kept free from dirt, grease and other contaminants and shall be reasonably protected from corrosion.

Construction Methods:

1. Pre-qualification:

(a) Fabricators producing material for Department projects under this item are required to have, as a minimum, an active AISC Certification for Simple Steel Bridges.

(b) Field Welders: All field welders, field welding operators, and field tackers shall possess a valid welder certification card issued by the Department's Division of Materials Testing. If such person has not been engaged in welding operations on a Department project or project acceptable to the Department within a period of six months, or if he cannot produce an approved welding certificate dated within the previous twelve months from a welding agency acceptable to the Engineer, he shall be required to re-qualify through examination. The Engineer may require re-qualification of anyone whose quality of work he questions.

2. Submittals:

(a) Shop Drawings: Shop drawings shall be submitted under this item. The thickness of the new plates, required chamfers, and weld sizes shall all be in accordance with the plans. The height and width dimensions of the new plates will be determined by the Engineer and conveyed to the Contractor after the cleaning operations have been completed at a given location.

(b) Shop Schedule: The Contractor shall submit a detailed shop fabrication schedule to the Engineer for review within 30 days of the notice to proceed. At a minimum the schedule shall include the start date, milestone dates, and completion date.

(c) Welding Procedures: Prior to start of fabrication, all weld procedures shall be submitted to the Engineer for review and approval.

The Contractor shall submit these documents to the Engineer at least 30 calendar days in advance of their proposed use. If the proposed method of installation requires additional members or modifications to the existing members of the structure, such additions and modifications shall be made by the Contractor at no expense to the State.

3. Shop Fabrication: Unless otherwise shown on the plans or indicated in the Special Provisions, structural steel shall be fabricated in accordance with the AASHTO Standard Specifications for Highway Bridges 17th Edition, amended as follows:

(a) Notification: The Contractor shall submit written notification to both the Engineer and the Division Chief of Material Testing not less than 7 calendar days prior to start of fabrication. No material shall be manufactured or worked in the shop before the Engineer has been so notified. The notification shall include the name and location of the fabrication shop where the work will be done so that arrangements can be made for an audit of the facility and the assignment of a Department Quality Assurance inspector.

(b) Welding: Unless otherwise indicated on the plans or specifications, all work shall be performed in accordance with ANSI/AASHTO/AWS D1.5 – Bridge Welding Code.

(c) Inspection: The Contractor shall furnish facilities for the inspection of material and workmanship in the shop by the Engineer. The Engineer and his representative shall be allowed free access to the necessary parts of the premises.

The Engineer will provide Quality Assurance (QA) inspection at the fabrication shop to assure that all applicable Quality Control plans and inspections are adequately adhered to and maintained by the Contractor during all phases of the fabrication. A thorough inspection of a random selection of elements at the fabrication shop may serve as the basis of this assurance.

Prior to shipment to the project, each individual piece of structural steel shall be stamped or marked in a clear and permanent fashion by a representative of the fabricators' Quality Control (QC) Department to indicate complete final inspection by the fabricator and conformance to the project specifications for that piece. The stamp or mark must be dated. A Materials Certificate in accordance with Article 1.06.07 may be used in lieu of individual stamps or markings, for all material in a single shipment. The Materials Certificate must list each piece within the shipment and accompany the shipment to the project site.

Following the final inspection by the fabricator's QC personnel, the Engineer may select pieces of structural steel for re-inspection by the Department's QA inspector. Should non-conforming

pieces be identified, all similar pieces must be re-inspected by the fabricator and repair procedure(s) submitted to the Engineer for approval. Repairs will be made at the Contractor's expense.

The pieces selected for re-inspection and found to be in conformance, or adequately repaired pieces, may be stamped or marked by the QA inspector. Such markings indicate the Engineer takes no exception to the pieces being sent to the project site. Such marking does not indicate acceptance or approval of the material by the Engineer.

Following delivery to the project site, the Engineer will perform a visual inspection of all material to verify shipping documents, fabricator markings, and that there was no damage to the material or coatings during transportation and handling.

The Engineer is not responsible for approving or accepting any fabricated materials prior to final erection and assembly at the project site.

(d) Nondestructive Testing: All nondestructive testing of structural steel and welding shall be performed as designated on the plans and in the project specifications. Such testing shall be performed by personnel approved by the Engineer.

Personnel performing Radiographic, Ultrasonic or Magnetic Particle testing shall be certified as a NDT Level II technician in accordance with the American Society for Non Destructive Testing (ASNT), Recommended Practice SNT-TC-1A.

Nondestructive testing shall be performed in accordance with the procedures and standards set forth in the AASHTO/AWS D1.5, Bridge Welding Code. The Department reserves the right to perform additional testing as determined by the Engineer.

All nondestructive testing shall be witnessed by an authorized representative of the Department. Certified reports of all tests shall be submitted to the Division Chief of Material Testing for examination. Each certified report shall identify the structure, member, and location of weld or welds tested. Each report shall also list the length and location of any defective welds and include information on the corrective action taken and results of all retests of repaired welds.

Should the Engineer require nondestructive testing on welds not designated in the contract, the cost of such inspection shall be borne by the Contractor if the testing indicates that any weld(s) are defective. If the testing indicates the weld(s) to be satisfactory, the actual cost of such inspection will be paid by the Department.

(e) Marking: Each member shall be identified with an erection mark corresponding with the location where the plate will be installed. Identification marks shall be impressed into the member with a low stress stamp in a location in accordance with standard industry practice.

(f) Shipping, Handling and Storage: The Contractor shall make all arrangements necessary to properly load, transport, unload, handle and store all material. The Contractor shall furnish to

the Engineer copies of all shipping statements. The weight of the individual members shall be shown on the statements. All material shall be unloaded promptly upon delivery. The Contractor shall be responsible for any demurrage charges. Damage to any material during transportation, improper storage, faulty erection, or undocumented fabrication errors may be cause for rejection of said material at the project site. All costs associated with any corrective action will be borne by the Contractor.

4. Removal of Deteriorated Steel: Wherever arc gouging, flame cutting, or welding will be used, existing lead paint must first be removed. See the applicable painting special provision for each individual bridge.

Existing deteriorated steel shall be cut out and removed in accordance with the plans and as ordered by the Engineer. Existing welds shall be removed by machining, grinding, chipping, or air carbon-arc gouging and in such a manner that the remaining base metal is not wicked or undercut. A minimum of 1/8" of weld metal shall be left in place if arc gouging is the selected removal method and the remaining weld metal shall be removed by grinding. Welders who perform arc gouging shall be SMAW certified.

5. Installation of Plates: Plates shall be installed as shown on the plans and any match marks shall be followed. The plates shall be carefully handled so they will not be bent or otherwise damaged.

Hammering which will injure or distort new or existing members is not permitted. All surfaces to remain in permanent contact shall be cleaned before the final welding.

The Contractor shall provide the Engineer reasonable access to the deteriorated beam end locations for the purpose of inspection whenever so requested.

Welding: Unless otherwise shown on the plans or indicated by the special provisions, welding of structural steel shall be done in accordance with "ANSI/AASHTO/AWS D1.5 Bridge Welding Code."

The Contractor's welding and inspection procedures for each type of field weld and field tacking must be submitted to the Engineer on the form designated by the Department. All procedures must be approved by the Division Chief of Material Testing prior to any work and must be adhered to at all times.

Quality control is the responsibility of the Contractor. The Contractor must provide an AWS Certified Welding Inspector (CWI) in accordance with AWS D1.5. The CWI must be qualified and certified in accordance with the provisions of AWS QC1, Standard for Qualification and Certification of Welding Inspectors.

The CWI shall make a visual inspection of all welds. The Contractor will perform magnetic particle inspection, ultrasonic testing inspection, or radiographic testing inspection of field welds

if required on the plans. Each test may be witnessed by an authorized representative of the Engineer.

Welds or sections of welds containing imperfections determined to be unacceptable by either the CWI or the Engineer shall be removed and re-welded by the Contractor at his expense. Welds so removed and replaced shall be re-inspected by the CWI. All costs for re-inspection or testing of such welds shall be borne by the Contractor.

Surface Conditions: At the time of assembly, all faying surfaces shall be free of scale, except tight mill scale, and shall be free of dirt or other foreign material. Burrs or other irregularities that prevent solid seating of the adjoining surfaces shall be removed.

Method of Measurement: This work will be measured for payment at the contract unit price per pound of new steel complete and accepted in place.

The weight of the structural steel to be measured for payment under this item shall be computed on the basis of the net finished dimensions of the plates based on measurements taken by the Engineer, deducting for copes and cuts. The weight of weld metal and temporary erection bolts, boxes, crates, and other containers used for shipping, materials used for supporting members during transportation and erection, and weld metal shall not be measured for payment.

Basis of Payment: The structural steel, incorporated in the completed and accepted structure, will be paid for at the contract unit price per pound for "Structural Steel."

Payment shall be for structural steel, complete in place, which price shall include fabricating, furnishing, transporting, storing, erecting and installing the plates, all welding and weld inspection, and all other materials, equipment, tools, labor and work incidental thereto.

PayItem	PayUnit
Structural Steel	lb.

ITEM #0603923A – ABRASIVE BLAST CLEANING AND FIELD PAINTING OF STRUCTURE (SITE #1)

Description: Work under this item shall consist of surface preparation and field painting of the steel components of structures as shown on the plans, as directed by the Engineer and according to these specifications.

All structural steel, except those specific components listed below or on the plans, shall be abrasive blast cleaned and painted with a three-coat system.

Components to be painted are as shown on the plans and may include but not be limited to the following: beams and girders, diaphragms and cross frames, steel bearings, the inside surfaces of box girders, scuppers, drainage pipes and troughs, state-owned utility conduits, structural steel utility supports, non galvanized structure mounted sign supports, steel grid decks, and all other metal components that are an integral part of the bridge system.

Privately-owned utilities, bridge rails, stay-in-place forms, fences, elastomeric bearing pads and bronze components shall be protected from damage by surface preparation and painting operations and are not to be painted.

Tabulated data for the structures, including the Federal Standard 595 Color Number for the top coat, are listed in tables on the plans. The estimated surface area of structural steel to be painted on each structure is given as a guide only, and is not guaranteed to be accurate. Bidders shall examine the listed structures and shall make their own determinations as to the work involved and conditions to be encountered

Submittals: A minimum of 20 calendar days before starting any surface preparation and coating application work, the painting contractor shall submit the following to the Engineer for acceptance:

1. A copy of the firm's written Quality Control Program used to control the quality of surface preparation and coating application including ambient conditions, surface cleanliness and profile, coating mixing, dry film thickness, final film continuity, etc.

2. A copy of the firm's written surface preparation and application procedures. This written program must contain a description of the equipment that will be used for removal of laminar and stratified rust, for surface preparation, including the remediation of soluble salts, and for paint mixing and application, including stripe coating. Coating repair procedures shall be included.

3. A detailed description of the contractor's enforcement procedures and the authority of personnel.

4. Containment plans (paint removal/collection of debris, surface preparation, coating applications with heat, etc.)

5. If the application of heat is proposed for coating application purposes, provide information on the heat containment and procedures that will be used, with data sheets for the equipment. Note: If heat is used for coating operations, the heat and containment must be maintained to provide the required temperatures for the duration of the cure period.

6. Proof of SSPC-QP1 qualifications and QP2 qualifications, as applicable.

7. Proof that the finish coat complies with the color and gloss retention performance criteria of SSPC Paint 36, Level 3, for accelerated weathering.

8. Coating product information, including coating manufacturer, product name, application instructions, technical data, MSDS and color chips.

9. Abrasive product information, including abrasive manufacturer, product name, technical data, and MSDS.

10. Touch-up and repair procedures, including methods and materials.

The Contractor shall not begin any paint removal Work until the Engineer has accepted the submittals. The Contractor shall not construe Engineer acceptance of the submittals to imply approval of any particular method or sequence for conducting the Work, or for addressing health and safety concerns. Acceptance of the programs does not relieve the Contractor from the responsibility to conduct the Work in strict accordance with the requirements of Federal, State, or local regulations, this specification, or to adequately protect the health and safety of all workers involved in the project and any members of the public who may be affected by the project. The Contractor remains solely responsible for the adequacy and completeness of the programs and work practices, and adherence to them.

Materials: The materials for the coating system for this work shall conform to the requirements of Section M07.02 and the following:
The coating system shall be a 3-coat system selected by the Contractor and accepted by the Engineer. The system shall be on the NEPCOAT Qualified Products List A (Inorganic Zinc Rich Primer / Epoxy or Urethane Intermediate / Aliphatic Urethane Finish) or List B (Organic Zinc Rich Primer / Epoxy or Urethane Intermediate / Aliphatic Urethane Finish) for Protective Coatings for New and 100% Bare Existing Steel for Bridges.

All materials for the complete coating system shall be furnished by the same coating material manufacturer with no subcontracted manufacturing allowed. Intermixing of materials within and between coating systems will not be permitted. Thinning of paint shall conform to the manufacturer's written recommendations. All components of the coating system and the mixed paint shall comply with the Emission Standards for Volatile Organic Compounds (VOC) stated

in the Connecticut Department of Energy and Environmental Protection's Administration Regulation for the Abatement of Air Pollution, Section 22a-174-20(s).

The top coat shall comply with the color and gloss retention performance criteria of SSPC Paint 36, Level 3, for accelerated weathering. After 2000 hours of accelerated weathering in accordance with ASTM D4587, the color change (ASTM D 2244) shall be less than 2.0 ΔE^* with a loss of gloss (ASTM D 523) less than 30. With the submittals, the Contractor shall provide the Engineer with proof that the finish coat complies with the above criteria.

The abrasive media for blast cleaning shall be recyclable steel grit.

Control of Materials:

A Materials Certificate will be required for the selected paint system in accordance with Article 1.06.07, confirming the conformance of the paint to the requirements set forth in these specifications.

Note: If any of the above and/or following stipulated contract specifications differ from those of the manufacturer's recommended procedures or ranges, the more restrictive of the requirements shall be adhered to unless directed by the Engineer in writing.

Construction Methods:

Contractor - Subcontractor Qualifications: Contractors and subcontractors doing this work are required to be certified by the SSPC Painting Contractor Certification Program (PCCP) to QP-1 entitled "Standard Procedure for Evaluating Qualifications of Painting Contractors: Field Application to Complex Structures". When the work involves the disturbance of lead-containing paint, the contractor and subcontractor are also required to be certified to SSPC QP-2 "Standard Procedure for Evaluating the Qualifications of Painting Contractors to Remove Hazardous Paint". The certification(s) must be kept current for the duration of the work. If a contractor's or subcontractor's certification expires, the firm will not be allowed to do any work on this item until the certification is reissued. Requests for extension of time for any delay to the completion of the project due to an inactive certification will not be considered and liquidated damages will apply. In addition, if any recoat times are exceeded, the effected areas shall be abrasive blast cleaned to SSPC-SP 10 and coatings reapplied in accordance with these specifications at no additional cost to the State. At the option of the Engineer, if such a delay will adversely impact the successful and timely completion of the project, the Department may require the Contractor to engage another SSPC certified contractor to do the painting work at the prime contractor's expense.

Quality Control Inspections: The Contractor shall perform first line, in process Quality Control (QC) inspections. The Contractor shall implement a Quality Control Program accepted by the Engineer, including written daily reports, that ensures that the work accomplished complies with these specifications. Copies of these reports shall be provided daily to the Engineer. Contractor QC inspections shall include, but not be limited to the following:

- Suitability of protective coverings and containments
- Ambient conditions
- Surface preparation (solvent cleaning, hand/power tool or abrasive blast cleaning, etc.)
- Coating application (mixing, thinning, and wet/dry film thickness)
- Recoat times and cleanliness between coats
- Coating continuity (freedom from runs, sags, overspray, dryspray, pinholes, shadow-through, skips, misses, etc.)
- Final film acceptance

The personnel managing and performing the quality control program shall be NACE Certified Coating Inspector(s) (successfully completed Sessions I, II, III and Peer Review) or shall provide evidence of successful inspection of 3 projects of similar size and scope that have been completed in the last 2 years. References shall include the name, address, and telephone number of a contact person employed by the bridge owner. The personnel performing the quality control tests shall be trained in the use of the quality control instruments. Documentation of training shall be provided. These personnel shall not perform surface preparation and painting.

Test Equipment and Materials: The Contractor shall furnish the following new test equipment and materials for use by the QC Inspector:

1. Two PTC Surface Temperature Thermometers
2. Psychron 566 Psychrometer (Battery Operated) with two sets of batteries or a Bacharach Sling Psychrometer
3. U.S. Weather Bureau Psychrometric Tables
4. Hypodermic Needle Pressure Gage for nozzle pressure tests.
5. SSPC Visual Standards VIS 1, VIS 3, and/or VIS 4, as applicable.
6. Testex Spring Micrometer
7. Testex Press-O-Film Replica Tape, one roll (100 pieces) each of course and extra-coarse per bridge span.
8. Wet film thickness gage
9. PosiTest, Mikrotest or Elcometer Dry Film Thickness Gauge (FM)
10. SSPC Type 2 Dry Film Thickness Gauge per PA2
11. NIST (NBS) Calibration Standards Range: 0 – 39 mils

Quality Assurance Inspections: The Engineer may conduct Quality Assurance (QA) observations of any or all phases of the work. The presence or activity of Engineer inspections in no way relieves the Contractor of the responsibility to provide all necessary daily Quality Control inspections of its own and to comply with all requirements of this Specification.

The Contractor shall facilitate the Engineer's inspections as required, including allowing ample time for the inspections and providing suitable lighting (50 foot candles minimum at the surface as defined later in this specification). The Contractor shall furnish, erect and move scaffolding or other mechanical equipment to permit inspection and close observation of all surfaces to be cleaned and painted. This equipment shall be provided during all phases of the work. The

Contractor shall notify the Engineer in advance of plans to remove staging used in cleaning and painting operations in order to allow for inspection. The QA inspection will be performed with his own equipment when verifying the Contractor's test results in the field.

Safety: All Contractor activities associated with the coating work described and specified herein shall be conducted according to all applicable Federal (OSHA), State of Connecticut safety regulations and SSPC-PA Guide 3 entitled "A Guide to Safety in Paint Application".

Ambient Conditions: Surface preparation and coating application work shall only be done inside a containment enclosure as specified elsewhere in these specifications. No surface preparation or coating work shall be performed when the conditions inside the containment enclosure are as follows:

- When the relative humidity is at or above 90 percent.
- When the substrate is damp or covered by frost or ice.
- When the surface temperature or air temperature are less than 50 degrees Fahrenheit or greater than 100 degrees Fahrenheit.
- When the surface temperatures of the steel or air are less than five (5) degrees Fahrenheit above the dewpoint temperature as determined by a surface temperature thermometer and electric or sling psychrometer.

If the requirements of the coating manufacturer differ from the ranges provided above, comply with the most restrictive requirements unless directed otherwise by the Engineer in writing.

Protective Coverings: The Contractor shall protect property, pedestrians, vehicular, and other traffic upon, underneath, or near the bridge, and all portions of the bridge superstructure and substructure against abrasive blast cleaning damage or disfigurement from splatters, splashes, or spray of paint or paint materials. All coating overspray, drips and spills shall be contained. Maintain the integrity and security of all protective coverings and containment materials throughout the entire project.

Any paint chips, paint removal media (e.g., abrasives), coating or solvent that has escaped the Contractor's containment enclosure shall be cleaned up immediately. For bridges over water, the Contractor shall have on site a sufficient quantity of spill containment boom and pads to contain a spill. The length of containment boom on site shall be at least equal to twice the length of the active work site over the water.

Observed Steel Defects: If significant deficiencies, such as cracks or section losses, are found during cleaning or coating operations, the Contractor shall immediately notify the Engineer as to their extent. Significant deficiencies include the following:

a) Cracks in any part of the superstructure
b) Section loss more than 1/8 of an inch or section loss equal to or greater than 5 percent of flange thickness in the maximum moment areas (i.e. Section loss in the middle one half of a single span structure.)

c) Section loss more than 1/4 of an inch or section loss equal to or greater than 25 percent of the flange thickness in other than the maximum moment areas (ie. Section loss up to quarter points of the middle one half of a single span structure.)

d) Section loss more than 1/8 of an inch or section loss equal to or greater than 15 percent of web thickness in the maximum shear areas (i.e. Section loss within five feet of the bearing center line.)

e) Section loss more than 1/8 of an inch or section loss equal to or greater than 25 percent of web thickness in other than the maximum shear areas (i.e. Section loss found a minimum of five feet beyond the bearing center line.)

Heating Devices: The contractor may use heating devices to obtain and maintain a condition within the containment enclosure that is suitable for surface preparation and painting application. For painting applications the required conditions must be maintained for the duration of the cure period. Heating devices shall be limited to gas or oil-fired indirect air heaters in which the combustion products are discharged separately from the forced airstream to an area outside the containment enclosure. The heating devices must be configured so as not to form condensation on cold surfaces or cause rust-back and must be automatically controlled. Information describing the proposed heating devices and the proposed heating procedures shall be provided a minimum of 20 days in advance for Engineer acceptance.

Lighting Requirements: A minimum illumination level of 20 foot-candles shall be provided throughout the inside of the containment enclosure during surface preparation and coating application work. A minimum illumination level of 50 foot-candles shall be provided at the location of the specific work task and for inspection. All lighting fixtures and related connectors located inside the containment enclosure must be explosion proof and UL listed.

Material Storage: The Contractor shall provide a suitable facility for the storage of paint that complies with all Federal and State laws and regulations.

This facility shall provide protection from the elements and ensure that the paint is not subjected to temperatures outside of the more stringent of (1) the manufacturer's written recommended temperature extremes, or (2) below 40 degrees Fahrenheit or above 100 degrees Fahrenheit. If paint application takes place in conditions that require heating of the containment, then the temperature of the stored paint shall be maintained as at similar temperature. Storage of paint shall be in reasonable proximity to the painting locations. The Engineer shall be provided access to the stored paint anytime for inspection and to witness removal of the materials. The Contractor's facility for the storage of paint shall be subject to the approval of the Engineer.

Equipment: All equipment used in surface preparation and removal of debris, such as hoses, hoppers, recycling and vacuum machines that the Contractor brings to the site, shall be clean and free of any prior debris.

Spray equipment, brushes and rollers used in application of coatings shall be sized sufficiently and be in proper working order to accomplish the work according to the manufacturer's written recommendations.

Compressed Air: All compressed air sources shall have oil and moisture separators, attached and functional, and properly designed and sized. The compressed air sources shall deliver air to the blast nozzle, for blowing down the surfaces, or for conventional spray application that is free of oil and moisture and of sufficient pressure to accomplish the associated work efficiently and effectively. The tanks on the air compressor and moisture separator shall be drained at the end of each workday. The compressed air source shall produce a minimum pressure of 90 psi at the nozzle during abrasive blast cleaning.

The Contractor shall verify that the compressed air is free of moisture and oil contamination in accordance with the requirements of ASTM D4285. The tests shall be conducted at least every four hours for each compressor system in operation. Sufficient freedom from oil and moisture is confirmed if soiling or discoloration is not visible on the paper. If air contamination is evidenced, the Contractor shall change filters, clean traps, add moisture separations or filters, or make other adjustments as necessary to achieve clean, dry, air.

Test Sections: Prior to surface preparation, the Contractor shall prepare a test section(s) on each structure to be painted in a location(s) that the Engineer considers to be representative of the existing surface condition and steel type for the structure as a whole. The test section(s) shall be prepared using the same equipment, materials and procedures as the production operations. The Contractor shall prepare the test section(s) to the specified level according to the appropriate SSPC written specifications and visual standards. The written requirements of the specification prevail in the event of a conflict with the SSPC visual standards. Only after a test section area has been approved shall the Contractor proceed with surface preparation operations. The test section(s) shall cover approximately 10 square feet each. Additional compensation will not be allowed the Contractor for preparation of test sections.

For the production cleaning operations, the specifications and written definitions, the test section(s), and the SSPC visual standards shall be used in that order for determining compliance with the contractual requirements.

Surface Preparation:

1 – Laminar and Stratified Rust: All laminar and stratified rust or corrosion products that have formed on any area of the existing steel surfaces and accessible rust formed along edges of connected plates or shapes of structural steel shall be removed. The tools used to remove these corrosion products shall be identified in the submittals and accepted by the Engineer. If the surface preparation or removal of rust results in nicks or gouges, the work will be suspended. The Contractor shall demonstrate that the necessary adjustments have been made to prevent a reoccurrence of the damage prior to resuming work.

2 – Near White Metal Blast Cleaning (SSPC-SP10): Steel surfaces shall be cleaned by the

specified methods described in the SSPC Steel Structures Painting Manual, Volume 2 - Systems and Specifications, latest edition. The structural steel shall be abrasive blast cleaned according to SSPC-SP 10 "Near White Blast Cleaning". Before and after blast cleaning, all dissolvable foreign matter, such as oil, grease, and dust shall be removed by wiping or scrubbing the surface with rags or brushes wetted with solvent in accordance with the provisions of SSPC-SP 1 "Solvent Cleaning." Clean solvent and clean rags or brushes shall be used for the final wiping.

All foreign materials such as dirt, dust, rust scale, sand, bird droppings, and all materials loosened by abrasive blasting operations shall be completely removed by vacuuming before any painting operations are begun.

The cleaned surface shall be accepted by the Engineer before any painting. If the surface is determined to meet the requirements of SSPC-SP 10, painting operations can commence. The prime coat shall be applied to the steel before the end of the day that preparation was performed and before the formation of any flash rusting or rerusting of the steel. Flash rusting or rerusting of the surface is unacceptable and requires additional blast cleaning prior to painting.

Failure of the Contractor to prepare and clean the surfaces to be painted according to these specifications shall be cause for rejection by the Engineer. All surfaces that are rejected shall be recleaned to the satisfaction of the Engineer according to these specifications, at no additional cost to the State.

<u>3 – Steel Grit Abrasive Mix:</u> The recyclable steel grit abrasive mix shall be maintained and monitored such that the final surface profile is within the range specified elsewhere in these specifications.

Before each reuse, the recyclable steel grit abrasive shall be cleaned of millscale, rust, paint, and other contaminants by an abrasive reclaimer.

On a weekly basis during blast cleaning operations, the Contractor shall verify that the recycled steel grit abrasives meet the requirements of SSPC-AB2. If the abrasive fails the testing, all abrasive blast cleaning operations shall be suspended. The abrasive reclaimer shall be repaired and another abrasive sample will be required for testing after grit recovery and reclassification. For test results within the acceptable limits, abrasive blast cleaning may resume. Test results outside of the acceptable limits will require additional equipment repairs or replacement at no cost to the State. If additional repairs were performed, another sample will be required for testing after grit recovery and reclassification. It the test results continue to remain outside of the acceptable limits, the Contractor shall replace the abrasive reclaimer at no cost to the State.

<u>4 - Surface Profile:</u> The specified height of the steel surface profile is 1-3 mils and shall be uniform. Verification of the profile height will be done with Testex Replica Tape. A surface profile correction factor will be measured according to SSPC-PA 2, Section 2.2.4 with the dry film thickness gauge.

Note: Chemical Stripping will not be permitted.

Painting Operation:

1 - General: All coatings shall be supplied in sealed containers bearing the manufacturers name, product designation, batch number and mixing/thinning instructions. Leaking containers shall not be used. Storage, opening, mixing, thinning and application of coating materials shall be accomplished in strict accordance with the written requirements and procedures published by the respective coating material manufacturer and supplier. In the event of a conflict, the Contractor shall notify the Engineer in writing, and unless directed otherwise in writing, the requirements of this specification shall prevail. The Contractor shall always have at the project site the current copies of all material safety data sheets (MSDS), technical data, recommendations and procedures published by the coating manufacturer for the coating materials.

2 - Paint Mixing and Thinning: Thinning shall be performed only to the extent allowed by the manufacturer's written instructions, and only with the manufacturer's approved thinner. In no case shall thinning be permitted that would cause the coating to exceed the local VOC restrictions. For multiple component paints, only complete kits shall be mixed and used. Partial mixing is not allowed.

The ingredients in the containers of paint shall be thoroughly mixed by mechanical power mixers in the original containers, or as directed by the manufacturer, before use or mixing with other containers of paint. The paint shall be mixed in a manner that will break up all lumps, completely disperse pigment and result in a uniform composition. Paint shall be carefully examined after mixing for uniformity and to verify that no unmixed pigment remains on the bottom of the container. Excessive skinning or partial hardening due to improper or prolonged storage will be cause for rejection of the paint, even though it may have been previously inspected and accepted.

Multiple component coatings shall be discarded after the expiration of the pot life. Single component paint shall not remain in spray pots, painter's buckets, etc. overnight. It shall be stored in a covered container and remixed before use.

The Engineer reserves the right to sample field paint (individual components and/or the mixed material) and have it analyzed. If the paint does not meet the product requirements due to excessive thinning or because of other field problems, the coating shall be removed from that section of the structure and replaced as directed by the Engineer.

3 – Methods of Application: All applicators of the specified coating material shall show proficiency on a test panel, or a portion of the structure as selected by the Engineer, to the satisfaction of the Engineer before commencing full-scale application.

The preferred method for coating application shall be by airless spray equipment. For stripping and for application in areas where complex shapes or tight clearances will not allow spray application, the Contractor shall apply the coating material by appropriately designed and

constructed rollers and brushes.

4 – Recoat Times: The recoat time of the primer, intermediate and top coat shall not deviate from the written recommendation of the manufacturer or the times specified in these specifications, complying with the most restrictive requirements unless directed otherwise by the Engineer in writing. If any individual time is exceeded, the effected areas shall be abrasive blast cleaned to SSPC-SP 10 and coatings reapplied in accordance with these specifications at no additional cost to the State.

5 – Film Continuity: All applied coatings shall exhibit no running, streaking, sagging, wrinkling, holidays, pinholes, top coat color or gloss variation, or other film defects. Failure of the Contractor to apply coatings that are free of film defects shall be cause for rejection by the Engineer. All coatings rejected shall be repaired to the satisfaction of the Engineer, at no additional cost to the State. Before doing any coating repair work, the Contractor shall submit to the Engineer for approval the procedures that will be used to repair the coating.

6 - Technical Advisor: It is mandatory that the Contractor obtain the services of a qualified technical advisor employed by the coating manufacturer. This advisor shall be familiar with the technical properties of the coating products and proper application methods. The technical advisor shall assist the Engineer and the Contractor in establishing correct application methods for the complete coating system. He/she shall be present at the work site before the opening of the material containers and shall remain at the site until the Engineer is satisfied that the Contractor's personnel have mastered the proper handling, mixing and application of the material. The Engineer may call the technical advisor back to the site if there are concerns that the Contractor is not handling, mixing or applying the material correctly.

7 - Containment Plan: For each individual site, the Contractor shall submit a plan of containment to the Engineer for acceptance. The plan, as outlined in other contract item special provisions, shall be submitted twenty days before commencing painting operation. The prime coat is applied within the same containment used for abrasive blast cleaning. After prime coat application, the minimum containment enclosure for the intermediate and top coat shall conform to the requirements of SSPC Guide 6, Class 3A and the following:

- Components of the containment system must be made from flame retardant materials.
- Tarpaulin material shall be clean and impermeable to air and water.
- Joints shall be fully sealed except for entryways.
- Entryways shall use multiple flap overlapping door tarps to minimize dust escape through the entryway.
- All mists or dust shall be filtered with collection equipment.
- For truss bridges a ceiling shall also be included.

8 - Prime Coat Application: All prepared surfaces shall be cleaned by vacuuming to remove dust, remaining debris, and other surface contaminants before coating. Such surfaces shall then be sprayed, brushed or rolled within the specified abrasive blast cleaning containment enclosure with the specified primer material before the end of the day or before any visible rust-back occurs. If rust-back occurs, effected surfaces shall be recleaned to the satisfaction of the Engineer

according to these specifications, at no additional cost to the State.
All plate and shape edges, plate seams, back to back angle seams, pitted steel, and other sharp discontinuities shall be hand-striped with a brush in the longitudinal direction with the primer. Bolted connections shall also have all bolt heads and nuts hand-striped in a circular brush motion with the primer material. Stripe coats shall be applied before or after the full prime coat application. The prime coat material used for hand-striping shall be tinted to distinguish it from material used for full prime coat application.

The zinc rich primer shall be applied to dry surfaces within the more restrictive temperature range (both steel and air) as specified in the manufacturer's written application instructions or between 50 degrees Fahrenheit to 100 degrees Fahrenheit, unless directed otherwise by the Engineer in writing. The dry film thickness shall be according to the manufacturer's written instructions in effect at the time that the product was tested for NEPCOAT. The dry film thickness will be checked for compliance by measuring above the peaks of the substrate profile per the guidelines of SSPC-PA 2.

The dry primer shall be free of all surface and embedded contamination and dry spray.

<u>9 - Intermediate Coat Application:</u> When the primer has cured per the manufacturer's recommendations (not to exceed 30 days), all previously coated surfaces shall receive the intermediate coat. The cured and dry primer coat shall be clean and free of all surface and embedded contamination and dry-spray. If it is not clean and free of all contamination, and dry-spray, the surfaces shall be cleaned by using clean rags or brushes to water wipe, solvent wipe, or detergent wash and rinse. Power washing is not allowed. Temperature ranges (both steel and air) shall be the more restrictive of that specified in the manufacturer's written application instructions or between 50 degrees Fahrenheit to 100 degrees Fahrenheit, unless directed otherwise by the Engineer in writing. The dry film thickness shall be according to the manufacturer's written instructions in effect at the time that the product was tested for NEPCOAT. The intermediate coat shall be of a contrasting color to the prime and topcoat colors. The dry film thickness will be checked for compliance per the guidelines of SSPC-PA 2.

<u>10 - Top Coat Application:</u> When the intermediate coat has cured per the manufacturer's written recommendations (not to exceed 10 days), all previously coated surfaces shall receive the top coat. The cured and dry intermediate coat shall be clean and free of all surface and embedded contamination and dry-spray. If it is not clean and free of all contamination, and dry-spray, the surfaces shall be cleaned by using clean rags or brushes to water wipe, solvent wipe, or detergent wash and rinse. Power washing is not allowed. Temperature ranges (both steel and air) shall be the more restrictive of that specified in the manufacturer's written application instructions or between 50 degrees Fahrenheit to 100 degrees Fahrenheit, unless directed otherwise by the Engineer in writing. The dry film thickness shall be according to the manufacturer's written instructions in effect at the time that the product was tested for NEPCOAT.

<u>11 - Date of Completion:</u> The word "PAINTED", followed by the month and year the painting of each structure is completed along with the manufacturer's abbreviations for each of the three coats, shall be stenciled on the inside of a fascia girder at mid-depth of the girder in three (3) inch

high block letters near each abutment, to be clearly visible from the ground below. In order to ensure uniformity, abbreviations shall be approved by the Engineer prior to application of the stenciled information.

Method of Measurement: This item, being paid for on a lump sum basis for each site, will not be measured for payment.

Basis of Payment: This work will be paid for at the contract lump sum price for "Abrasive Blast Cleaning and Field Painting of Structure (Site #1)", which price shall include all materials, equipment, painting overspray containment enclosure, heating devices, tools, labor, and services of the technical advisor. No direct payment will be made for the cost of storage or hauling the paint and other materials to and from the bridge site, but the cost thereof shall be included in the lump sum price as noted above.

Pay Item	Pay Unit
Abrasive Blast Cleaning and Field Painting of Structure (Site #1)	l.s.

ITEM #0950005A – TURF ESTABLISHMENT

Work under this item shall conform to the requirements of Section 9.50 of the Standard specifications Form 816, supplemented and amended as follows:

9.50.02 Materials: The materials for this work shall conform to the requirements of Section M.13 of the Standard Specification Form 816 supplemented and amended as follows:

M.13.04 – Seed Mixtures: The grass seed mixtures shall conform to the following:

(a) Delete:

Colonial Bentgrass (Agrastis tenuis)
Birdsfoot Trefoil (Lotus corniculatus)
Perennial Ryegrassd (Lolium perenne)

Add the following:

Species	**Proportion by Weight**	**Minimum Purity (percent)**	**Minimum Germination (percent)**
Velvet Bentgrass (Agrostis canina)	5	98	85
Partridge Pea (Chamaecrista fasciculate)	10	80	70
Canada Wildrye (Elymus Canadensis)	20	90	60

9.50.03 Construction Methods: Construction Methods shall be those established as agronomically acceptable and feasible as determined by the Engineer.

1. **Preparation of Seedbed**: Add the following:

Where topsoil is not required, the seedbed shall be free from refuse, stumps, roots, brush, weeds, rocks, and stones over 1-1/4 inches in diameter. If "Out-of-Season" seeding is required, then the seedbed will need to be prepared again prior to final turf establishment.

2. **Seeding Season**: Delete the following:

(b) "Out-of-Season" seedings shall . . . reseeding until the turf stand conforms to 9.50.0-5.

Add the following:

(b) “Out-of-Season” seeding shall be done in accordance with section M.13.04 (b) “temporary” seeding and seeded at the rate of 50 lbs./acre. Turf establishment can only be performed during the seeding season or as approved by a member of the Office of Environmental Planning.

9.50.04 Method of Measurement: This work will be measured for payment by the number of square yards of surface area of accepted established turf as specified or by the number of square yards surface area of seeding actually covered and as specified.

9.50.05 Basis of Payment: This work will be paid for at the contract unit price per square yard for “Turf Establishment,” which price shall include all materials, maintenance, equipment, tools, labor, and work incidental thereto. Partial payment of up to 60% may be made for work completed but not accepted.

Pay Item	Pay Unit
Turf Establishment	s.y.

ITEM #0969062A – CONSTRUCTION FIELD OFFICE, MEDIUM

Description: Under the item included in the bid document, adequate weatherproof office quarters will be provided by the Contractor for the duration of the work, and if required, for a maximum of ninety days thereafter for the exclusive use of ConnDOT forces and others who may be engaged to augment ConnDOT forces with relation to the contract. The office quarters shall be located convenient to the work site and installed in accordance with Article 1.08.02, this office shall be separated from any office occupied by the Contractor. Ownership and liability of the office quarters shall remain with the Contractor.

Materials: Materials shall be in like new condition for the purpose intended and shall be approved by the Engineer.

Office Requirements: The Contractor shall furnish the office quarters and equipment as described below.

	Description:
400 SF	Sq. Ft. of floor space with a minimum ceiling height of 7 ft. and shall be partitioned as shown on building floor plan as provided by the Engineer.
2 EA	Minimum number of exterior entrances.
7 EA	Minimum number of parking spaces.

Office layout: The office shall have a minimum square footage as indicated in the table above, and shall be partitioned as shown on building floor plan as provided by the Engineer. The underside of the office shall be fully skirted to the ground.

Lavatory Facilities: The Contractor shall furnish lavatory and toilet facilities at a location convenient to the office quarters for the use of Department personnel and such assistants as they may engage. He shall also supply lavatory and sanitary supplies as required.

Windows and Entrances: The windows shall be of a type that will open and close conveniently, shall be sufficient in number and size to provide adequate light and ventilation, and shall be fitted with locking devices, blinds and screens. The entrances shall be secure, screened, and fitted with a lock for which four keys shall be furnished. All keys to the construction field office shall be furnished to the Department and will be kept in their possession while State personnel are using the office. Any access to the entrance ways shall meet applicable building codes and be slip resistant, with appropriate handrails.

Lighting: The Contractor shall equip the office interior with electric lighting that provides a minimum illumination level of 100 foot-candles at desk level height, and electric outlets for each desk and drafting table. The Contractor shall also provide exterior lighting that provides a minimum illumination level of 2 foot-candles throughout the parking area and for a minimum distance of 10 ft. on each side of the field office.

The Contractor shall provide the following additional equipment, facilities, and/or services at the Field Office on this project to include at least the following to the satisfaction of the Engineer:

Parking Facility: Adequate parking spaces with adequate illumination on a paved surface, with surface drainage if needed. If paved parking does not exist adjacent to the field office, the Contractor shall provide a parking area of sufficient size to accommodate the number of vehicles indicated in the table above. Construction of the parking area and driveway, if necessary, will consist of a minimum of 6 inches of processed aggregate base graded to drain. The base material will be extended to the office entrance.

Field Office Security: Physical Barrier Devices - This shall consist of physical means to prevent entry, such as: 1) All windows shall be barred or security screens installed; 2) All field office doors shall be equipped with dead bolt locks and regular day operated door locks; and 3) Other devices as directed by the Engineer to suit existing conditions.

Electric Service: The field office shall be equipped with an electric service panel to serve the electrical requirements of the field office, including: lighting, general outlets, computer outlets, calculators etc., and meet the following minimum specifications:

A. 120/240 volt, 1 phase, 3 wire.
B. Ampacity necessary to serve all equipment. Service shall be a minimum 100 amp dedicated to the construction field office.
C. The electrical panel shall include a main circuit breaker and branch circuit breakers of the size and quantity required.
D. Additional 120 volt, single phase, 20 amp, isolated ground dedicated power circuit with dual NEMA 5-20 receptacles will be installed at each computer workstation location.
E. Additional 120 volt, single phase, 20 amp, isolated ground dedicated power circuit with dual NEMA 5-20 receptacles will be installed, for use by the Telephone Company.
F. Additional 120-volt circuits and duplex outlets as required meeting National Electric Code requirements.
G. One exterior (outside) wall mounted GFI receptacle, duplex, isolated ground, 120 volt, straight blade.
H. After work is complete and prior to energizing, the State's ConnDOT electrical inspector, must be contacted at 860-594-2240. (Do Not Call Local Town Officials)
I. Prior to field office removal the ConnDOT Data Communications office must be notified to deactivate the communications equipment.

Heating, Ventilation and Air Conditioning (HVAC): The field office shall be equipped with sufficient heating, air conditioning and ventilation equipment to maintain a temperature range of 68°-80° Fahrenheit within the field office.

The Following Furnishings and Equipment Shall Be Provided In The Applicable Field Office Type:

Qty	Description:
3 EA	Office desks (2.5 ft x 5 ft) with drawers, locks, and matching desk chairs that have

Qty	Description:
	pneumatic seat height adjustment and dual wheel casters on the base.
2 EA	Office Chairs.
1 EA	Fire resistant cabinets (legal size/4 drawer), locking.
1 EA	Drafting type tables (3 ft x 6 ft) and supported by wall brackets and legs; and matching drafters stool that have pneumatic seat height adjustment, seat back and dual wheel casters on the base.
2 EA	Personal computer tables (4 ft x 2.5 ft).
1 EA	Hot and cold water dispensing unit and supply of cups and bottled water shall be supplied by the Contractor for the duration of the project.
2 EA	Electronic office type printing calculators capable of addition, subtraction, multiplication and division with memory and a supply of printing paper.
2 EA	Telephone.
1 EA	Telephone answering machine.
1 EA	Plain paper facsimile (FAX) machine capable of transmitting via telephone credit card. All supplies, paper and maintenance shall be provided by the Contractor.
1 EA	Copier/Scanner - dry, plain paper with automatic feeder and reducing capability. All supplies, paper and maintenance shall be provided by the Contractor.
2 EA	Computer systems as specified below under Computer Hardware and Software. All supplies and maintenance shall be provided by the Contractor.
1 EA	Laser printer as specified below under Computer Hardware and Software. All supplies, paper and maintenance shall be provided by the Contractor.
2 EA	Digital Camera as specified below under Computer Hardware and Software. All supplies and maintenance shall be provided by the Contractor.
1 EA	Wastebaskets - 30 gal., including plastic waste bags.
3 EA	Wastebaskets - 5 gal., including plastic waste bags.
2 EA	Electric pencil sharpeners.
* EA	Fire extinguishers - provide and install type and number to meet applicable State and local codes for size of office indicated, including a fire extinguisher suitable for use on a computer terminal fire.
1 EA	Vertical plan racks for 2 sets of 2 ft x 3 ft plans for each rack.
1 EA	Infrared Thermometer, including certified calibration, case, cleaning wipes.
1 EA	Concrete Curing Box as specified below under Concrete Testing Equipment.
1 EA	Concrete Air Meter as specified below under Concrete Testing Equipment.
1 EA	Concrete Slump Cone as specified below under Concrete Testing Equipment.

The furnishings and equipment required herein shall remain the property of the Contractor. Any supplies required to maintain or operate the above listed equipment or furnishings shall be provided by the Contractor for the duration of the project.

Telephone Service: This shall consist of the installation of two (2) telephone lines: one (1) line for phone/voice service and one (1) line dedicated for the facsimile machine. The Contractor shall pay all charges except for out-of-state toll calls made by State personnel.

Data Communications Facility Wiring: Contractor shall install a Category 5e 468B patch panel in a central wiring location and Cat 5e cable from the patch panel to each PC station, terminating in a (category 5e 468B) wall or surface mount data jack. The central wiring location shall also house either the data circuit with appropriate power requirements or a category 5 cable run to the location of the installed data circuit. The central wiring location will be determined by the ConnDOT Data Center staff in coordination with the designated field office personnel as soon as the facility is in place. The ConnDOT Project Engineer will provide the Contractor with a copy of the current PC specifications, approved printer list and data wiring schematic as soon as possible after the contract is awarded.

Contractor to run a CAT 5e LAN cable a minimum length of 25 feet for each computer to LAN switch area leaving an additional 10 feet of cable length on each side with terminated RJ45 connectors. Each run / jack shall be clearly labeled with an identifying Jack Number.

The installation of a data communication circuit between the field office and the ConnDOT Data Communication Center in Newington will be coordinated between the ConnDOT District staff, ConnDOT Office of Information Systems and the local phone company. The ConnDOT District staff will coordinate the installation of the data communication service with ConnDOT PC Support once the field office phone number is issued. The Contractor shall provide the field office telephone number(s) to the ConnDOT Project Engineer as soon as possible to facilitate data line and computer installations.

Computer Hardware and Software:

The ConnDOT Project Engineer will provide the Contractor with a copy of the current PC specifications, approved printer list and data wiring schematic as soon as possible after the contract is awarded.

Before ordering the computer hardware and software, the Contractor must submit a copy of their proposed PC specifications and the type of printer to the ConnDOT Project Engineer for review by the ConnDOT Data Center. If the specification meets or exceeds the minimum specifications listed below, then the Contractor will be notified that the order may be placed.

Before any equipment is delivered to the Data Center, arrangements must be made a minimum of 24 hours in advance by contacting 860-594-3500. All software, hardware and licenses listed below shall be clearly labeled, specifying the (1) Project No., (2) Contractor Name, (3) Project Engineer's Name and (4) Project Engineer's Phone No., and shall be delivered to the ConnDOT Data Center, 2710 Berlin Turnpike, Newington, CT, where it will be configured and prepared for field installation. Installation will then be coordinated with ConnDOT field personnel and the computer system specified will be stationed in the Department's project field office.

The computer system furnished shall have all software and hardware necessary for the complete installation of the latest versions of the software listed, and therefore supplements the minimum specifications below. The Engineer reserves the right to expand or relax the specification to adapt to the software and hardware limitations and availability, the compatibility with current

agency systems, and to provide the Department with a computer system that can handle the needs of the project. This requirement is to ensure that the rapid changing environment that computer systems have experienced does not leave the needs of the project orphan to what has been specified. There will not be any price adjustment due to the change in the minimum system requirements.

The Contractor shall provide the Engineer with a licensed copy registered in the Department's name of the latest versions of the software listed and maintain customer support services offered by each software producer for the duration of the Contract. The Contractor shall deliver to the Engineer all supporting documentation for the software and hardware including any instructions or manuals. The Contractor shall provide original backup media for the software.

The Contractor shall provide the computer system with all required supplies, maintenance and repairs (including labor and parts) throughout the Contract life.

Once the Contract has been completed, the computer will remain the property of the Contractor. Prior to the return of any computer(s) to the Contractor, field personnel will coordinate with the Data Center personnel for the removal of Department owned equipment, software, data, and associated equipment.

A) <u>Computer – Minimum Specification:</u>

Processor – Intel® Core 2 Duo Processor (2.00 GHz, 800 MHz FSB 2MB L2 Cache)
Memory – 2 GB DIMM DDR2 667MHz.
Monitor – 19.0 inch LCD color monitor.
Graphics – Intel Graphics Media Accelerator 3100. or equivalent.
Hard Drive – 160 GB Ultra ATA hard drive (Western Digital, IBM or Seagate).
Floppy Drive – 3.5 inch 1.44MB diskette drive.
Optical Drive – CD-RW/DVD-RW Combo.
Multimedia Package – Integrated Sound Blaster Compatible AC97 Sound and speakers.
Case – Small Form or Mid Tower, capable of vertical or horizontal orientation.
Integrated Network Adapter – comparable to 3COM PCI 10/100 twisted pair Ethernet.
Keyboard – 104+ Keyboard.
Mouse – Optical 2-button mouse with scroll wheel.
Operating System – Windows XP Professional Service Pack 2; Windows Vista Capable.
Application Software – MS Office 2007 Professional Edition.
Additional Software (Latest Releases, including subscription services for the life of the Contract.–

- Norton Anti-Virus and CD/DVD burning software (ROXIO or NERO),
- Adobe Acrobat Standard

Resource or Driver CD/DVD – CD/DVD with all drivers and resource information so that computer can be restored to original prior to shipment back to the contractor.
Uninterrupted power supply – APC Back-UPS 500VA.

Note A1: All hardware components must be installed before delivery. All software documentation and CD-ROMs/DVD for Microsoft Windows XP Professional, Microsoft

Office 2007 Professional Edition, and other software required software must be provided. Computer Brands are limited to Dell, Gateway and HP brands only. No other brands will be accepted. The ConnDOT Project Engineer will provide the Contractor with a copy of the current PC specifications and approved printer list as soon as possible after the contract is awarded.

Note A2: As of June 30, 2008, Microsoft will no longer distribute Windows XP for retail sale, although the date for specific computer manufacturers may be different. Please consult your manufacturer for details. The Department still requires Windows XP on all PCs. Microsoft has stated that any PCs that are purchased with either Windows Vista Business, or Vista Ultimate are automatically entitled to "downgrade rights", which allow the PC to be rolled back to Windows XP. Please consult the specific manufacturer for details on downgrading new PCs to Microsoft Windows XP after June 30, 2008.

B) Laser Printer – Minimum Specification:

Print speed – 20 ppm.
Resolution – 1,200 x 1,200 dpi.
Paper size – Up to 216 mm x 355 mm (8.5 in x 14 in).
RAM – 16 MB.
Print Drivers – Must support HP PCL6 and HP PCL5e.
Printer cable – 1.8 m (6 ft).

Note B1: Laser printer brands are limited to Hewlett-Packard and Savin brands only. The ConnDOT Project Engineer will provide the Contractor with a copy of the current PC specifications and approved printer list as soon as possible after the contract is awarded.

Note B2: It is acceptable to substitute a multi-function all-in-one printer/copier/scanner/fax machine listed on the approved printer list in place of the required laser printer and fax machine.

C) Digital Camera – Minimum Specification:

Optical – 5 mega pixel, with 3x optical zoom.
Memory – 2 GB.
Features – Date/time stamp feature.
Connectivity – USB cable or memory card reader.
Software – Must be compatible with Windows XP and Vista.
Power – Rechargeable battery and charger.

The Contractor is responsible for service and repairs to all computer hardware. All repairs must be performed with-in 48 hours. If the repairs require more than a 48 hours then a replacement must be provided. All supplies, paper and maintenance for the computers, laptops, printers, copiers, and fax machines shall be provided by the Contractor.

Concrete Testing Equipment: If the Contract includes items that require compressive strength cylinders for concrete, in accordance with the Schedule of Minimum Testing Requirements for

Sampling Materials for Test, the Contractor shall provide the following. All testing equipment will remain the property of the Contractor at the completion of the project.

A) Concrete Cylinder Curing Box – meeting the requirements of Section 6.12 of the Standard Specifications.

B) Air Meter – The air meter provided shall be in good working order and will meet the requirements of AASHTO T 152.

C) Slump Cone Mold – Slump cone, base plate, and tamping rod shall be provided in like-new condition and meet the requirements of AASHTO T119, Standard Test Method for Slump of Hydraulic-Cement Concrete.

Insurance Policy: The Contractor shall provide a separate insurance policy, with no deductible, in the minimum amount of twenty thousand dollars ($20,000.00) in order to insure all State-owned data equipment and supplies used in the office against all losses. The Contractor shall be named insured on that policy, and the Department shall be an additional named insured on the policy. These losses shall include, but not be limited to: theft, fire, and physical damage. The Department will be responsible for all maintenance costs of Department owned computer hardware. In the event of loss, the Contractor shall provide replacement equipment in accordance with current Department equipment specifications, within seven days of notice of the loss. If the Contractor is unable to provide the required replacement equipment within seven days, the Department may provide replacement equipment and deduct the cost of the equipment from monies due or which may become due the Contractor under the contract or under any other contract. The Contractor's financial liability under this paragraph shall be limited to the amount of the insurance coverage required by this paragraph. If the cost of equipment replacement required by this paragraph should exceed the required amount of the insurance coverage, the Department will reimburse the Contractor for replacement costs exceeding the amount of the required coverage.

Maintenance: During the occupancy by the Department, the Contractor shall maintain all facilities and furnishings provided under the above requirements, and shall maintain and keep the office quarters clean through the use of weekly professional cleaning to include, but not limited to, washing & waxing floors, cleaning restrooms, removal of trash, etc. Exterior areas shall be mowed and clean of debris. A trash receptacle (dumpster) with weekly pickup (trash removal) shall be provided. Snow removal, sanding and salting of all parking, walkway, and entrance ways areas shall be accomplished during a storm if on a workday during work hours, immediately after a storm and prior to the start of a workday. If snow removal, salting and sanding are not completed by the specified time, the State will provide the service and all costs incurred will be deducted from the next payment estimate.

Method of Measurement: The furnishing and maintenance of the construction field office will be measured for payment by the number of calendar months that the office is in place and in operation, measured to the nearest month.

There will not be any price adjustment due to any change in the minimum computer system requirements.

Basis of Payment: The furnishing and maintenance of the construction field office will be paid at the listed unit price per month for the item "Construction Field Office, Medium", which price shall include all material, equipment, labor, utility services and work incidental thereto.

The cost of providing the parking area, external illumination, trash removal and snow and ice removal shall be included in the monthly unit price bid for the respective item "Construction Field Office, Medium".

The State will be responsible for payment of data communication user fees and for toll calls by State personnel.

Pay Item	Pay Unit
Construction Field Office, Medium	Month

ITEM #0970006A – TRAFFICPERSON (MUNICIPAL POLICE OFFICER)

ITEM #0970007A – TRAFFICPERSON (UNIFORMED FLAGGER)

9.70.01—Description: Under this item the Contractor shall provide the services of Trafficpersons of the type and number, and for such periods, as the Engineer approves for the control and direction of vehicular traffic and pedestrians. Traffic persons requested solely for the contractor's operational needs will not be approved for payment.

9.70.03—Construction Method: Prior to the start of operations on the project requiring the use of Trafficpersons, a meeting will be held with the Contractor, Trafficperson agency or firm, Engineer, and State Police, if applicable, to review the Trafficperson operations, lines of responsibility, and operating guidelines which will be used on the project. A copy of the municipality's billing rates for Municipal Police Officers and vehicles, if applicable, will be provided to the Engineer prior to start of work.

On a weekly basis, the Contractor shall inform the Engineer of their scheduled operations for the following week and the number of Trafficpersons requested. The Engineer shall review this schedule and approve the type and number of Trafficpersons required. In the event of an unplanned, emergency, or short term operation, the Engineer may approve the temporary use of properly clothed persons for traffic control until such time as an authorized Trafficperson may be obtained. In no case shall this temporary use exceed 8 hours for any particular operation.

If the Contractor changes or cancels any scheduled operations without prior notice of same as required by the agency providing the Trafficpersons, and such that Trafficperson services are no longer required, the Contractor will be responsible for payment at no cost to the Department of any show-up cost for any Trafficperson not used because of the change. Exceptions, as approved by the Engineer, may be granted for adverse weather conditions and unforeseeable causes beyond the control and without the fault or negligence of the Contractor.

Trafficpersons assigned to a work site are to only take direction from the Engineer.

Trafficpersons shall wear a high visibility safety garment that complies with OSHA, MUTCD, ASTM Standards and the safety garment shall have the words "Traffic Control" clearly visible on the front and rear panels (minimum letter size 2 inches (50 millimeters). Worn/faded safety garments that are no longer highly visible shall not be used. The Engineer shall direct the replacement of any worn/faded garment at no cost to the State.

A Trafficperson shall assist in implementing the traffic control specified in the Maintenance and Protection of Traffic contained elsewhere in these specifications or as directed by the Engineer. Any situation requiring a Trafficperson to operate in a manner contrary to the Maintenance and Protection of Traffic specification shall be authorized in writing by the Engineer.

Trafficpersons shall consist of the following types:

1. Uniformed Law Enforcement Personnel: Law enforcement personnel shall wear the high visibility safety garment provided by their law enforcement agency. If no high visibility safety garment is provided, the Contractor shall provide the law enforcement personnel with a garment meeting the requirements stated for the Uniformed Flaggers' garment.

Law Enforcement Personnel may be also be used to conduct motor vehicle enforcement operations in and around work areas as directed and approved by the Engineer.

Municipal Police Officers: Uniformed Municipal Police Officers shall be sworn Municipal Police Officers or Uniformed Constables who perform criminal law enforcement duties from the Municipality in which the project is located. Their services will also include an official Municipal Police vehicle when requested by the Engineer. Uniformed Municipal Police Officers will be used on non-limited access highways. If Uniformed Municipal Police Officers are unavailable, other Trafficpersons may be used when authorized in writing by the Engineer.
Uniformed Municipal Police Officers and requested Municipal Police vehicles will be used at such locations and for such periods as the Engineer deems necessary to control traffic operations and promote increased safety to motorists through the construction sites.

2. Uniformed Flagger: Uniformed Flaggers shall be persons who have successfully completed flagger training by the American Traffic Safety Services Association (ATSSA), National Safety Council (NSC) or other programs approved by the Engineer. A copy of the Flagger's training certificate shall be provided to the Engineer before the Flagger performs any work on the project. Uniformed Flaggers shall conform to Chapter 6E, Flagger Control, in the Manual of Uniformed Traffic Control Devices (MUTCD) and shall wear high-visibility safety apparel, use a STOP/SLOW paddle that is at least 18 inches (450 millimeters) in width with letters at least 6 inches (150 millimeters) high. The paddle shall be mounted on a pole of sufficient length to be 6 feet (1.8 meters) above the ground as measured from the bottom of the sign.

Uniformed Flaggers will only be used on non-limited access highways to control traffic operations when authorized in writing by the Engineer.

9.70.04—Method of Measurement: Services of Trafficpersons will be measured for payment by the actual number of hours for each person rendering services approved by the Engineer. These services shall include, however, only such trafficpersons as are employed within the limits of construction, project right of way of the project or along detours authorized by the Engineer to assist the motoring public through the construction work zone. Services for continued use of a detour or bypass beyond the limitations approved by the Engineer, for movement of construction vehicles and equipment, or at locations where traffic is unnecessarily restricted by the Contractor's method of operation, will not be measured for payment.

Trafficpersons shall not work more than twelve hours in any one 24 hour period. In case such services are required for more than twelve hours, additional Trafficpersons shall be furnished and measured for payment. In cases where the Trafficperson is an employee on the Contractor's

payroll, payment under the item "Trafficperson (Uniformed Flagger)" will be made only for those hours when the Contractor's employee is performing Trafficperson services.

Travel time will not be measured for payment for services provided by Uniformed Municipal Police Officers or Uniformed Flaggers.

Mileage fees associated with Trafficperson services will not be measured for payment.

Safety garments and STOP/SLOW paddles will not be measured for payment.

9.70.05—Basis of Payment: Trafficpersons will be paid in accordance with the schedule described herein.
There will be no direct payment for safety garments or STOP/SLOW paddles. All costs associated with furnishing safety garments and STOP/SLOW paddles shall be considered included in the general cost of the item.

1. Uniformed Law Enforcement Personnel: The sum of money shown on the Estimate and in the itemized proposal as "Estimated Cost" for this work will be considered the bid price even though payment will be made as described below. The estimated cost figure is not to be altered in any manner by the bidder. Should the bidder alter the amount shown, the altered figures will be disregarded and the original price will be used to determine the total amount for the contract.

The Department will pay the Contractor its actual costs for "Trafficperson (Municipal Police Officer)" plus an additional 5% as reimbursement for the Contractor's administrative expense in connection with the services provided.

The invoice must include a breakdown of each officer's actual hours of work and actual rate applied. Mileage fees associated with Trafficperson services are not reimbursable expenses and are not to be included in the billing invoice. The use of a municipal police vehicle authorized by the Engineer will be paid at the actual rate charged by the municipality. Upon receipt of the invoice from the municipality, the Contractor shall forward a copy to the Engineer. The invoice will be reviewed and approved by the Engineer prior to any payments. *Eighty (80%) of the invoice will be paid upon completion of review and approval. The balance (20%) will be paid upon receipt of cancelled check or receipted invoice, as proof of payment.* The rate charged by the municipality for use of a uniformed municipal police officer and/or a municipal police vehicle shall not be greater than the rate it normally charges others for similar services.

2. Uniformed Flagger: Uniformed flaggers will be paid for at the contract unit price per hour for "Trafficperson (Uniformed Flagger)", which price shall include all compensation, insurance benefits and any other cost or liability incidental to the furnishing of the trafficpersons ordered.

Pay Item	Pay Unit
Trafficperson (Municipal Police Officer)	est.
Trafficperson (Uniformed Flagger)	Hr.

ITEM #0971001A – MAINTENANCE AND PROTECTION OF TRAFFIC

Article 9.71.01 – Description is supplemented by the following:

The Contractor shall maintain and protect traffic as described by the following and as limited in the Special Provision "Prosecution and Progress":

S.R. 816 (Glen Road)

The Contractor shall maintain and protect a minimum of one lane of traffic in each direction, each lane on a paved travel path not less than 11 feet in width.

Excepted therefrom will be those periods, during Stage 1 and Stage 2, when the Contractor shall maintain and protect at least an alternating one-way traffic operation, on a paved travel path not less than 11 feet in width. There shall be no more than one alternating one-way traffic operation within the project limits without prior approval of the Engineer.

The Contractor will be allowed to close Glen Road to through traffic and detour traffic as shown on the Detour Plan contained in the contract plans.

The Contractor will be allowed to halt traffic to perform necessary work for truss repair operations, with the approval of the Engineer, for a period not to exceed 10 minutes, between 9:00 a.m. to 3:00 p.m. on all non-Holiday days.

River Road
The Contractor shall maintain and protect a minimum of one lane of traffic in each direction, each lane on a paved travel path not less than 11 feet in width.

STAGE CONSTRUCTION
The Contractor shall maintain and protect traffic on all project roadways as shown on the Staging and Detour Plans contained in the contract plans and as described below.

Stage 1

1. Install temporary alternating traffic signals on Glen Road, closing the northern (westbound) lane.

Stage 2

1. Revise temporary alternating traffic signal on Glen Road, closing the southern (eastbound) lane.

Article 9.71.03 - Construction Method is supplemented as follows:

General

Unpaved travel paths will only be permitted for areas requiring full depth and full width reconstruction, in which case, the Contractor will be allowed to maintain traffic on processed aggregate for a duration not to exceed 10 calendar days. The unpaved section shall be the full width of the road and perpendicular to the travel lanes. Opposing traffic lane dividers shall be used as a centerline.

The Contractor is required to delineate any raised structures within the travel lanes, so that the structures are visible day and night, unless there are specific contract plans and provisions to temporarily lower these structures prior to the completion of work.

The Contractor shall schedule operations so that pavement removal and roadway resurfacing shall be completed full width across a roadway (bridge) section by the end of a workday (work night), or as directed by the Engineer.

When the installation of all intermediate courses of bituminous concrete pavement is completed for the entire roadway, the Contractor shall install the final course of bituminous concrete pavement.

When the Contractor is excavating adjacent to the roadway, the Contractor shall provide a 3-foot shoulder between the work area and travel lanes, with traffic drums spaced every 50 feet. At the end of the workday, if the vertical drop-off exceeds 3 inches, the Contractor shall provide a temporary traversable slope of 4:1 or flatter that is acceptable to the Engineer.

The Contractor, during the course of active construction work on overhead signs and structures, shall close the lanes directly below the work area for the entire length of time overhead work is being undertaken. At no time shall an overhead sign be left partially removed or installed.

If applicable, when an existing sign is removed, it shall be either relocated or replaced by a new sign during the same working day.

The Contractor shall not store any material on-site which would present a safety hazard to motorists or pedestrians (e.g. fixed object or obstruct sight lines).

The field installation of a signing pattern shall constitute interference with existing traffic operations and shall not be allowed, except during the allowable periods.

Construction vehicles entering travel lanes at speeds less than the posted speed are interfering with traffic, and shall not be allowed without a lane closure. The lane closure shall be of sufficient length to allow vehicles to enter or exit the work area at posted speeds, in order to merge with existing traffic.

Traffic Signals

Loop detectors disturbed by the Contractor's operations shall be made operational, in accordance with the special provision for Item No. 1111451A – Loop Detector Saw Cut, or temporary detection shall be provided within 24 hours of the termination of the existing loop detectors.

Existing Signing

The Contractor shall maintain all existing overhead and side-mounted signs throughout the project limits during the duration of the project. The Contractor shall temporarily relocate signs and sign supports as many times as deemed necessary, and install temporary sign supports if necessary and as directed by the Engineer.

Requirements for Winter

The Contractor shall schedule a meeting with representatives from the Department including the offices of Maintenance and Traffic, and the Town/City to determine what interim traffic control measures the Contractor shall accomplish for the winter to provide safety to the motorists and permit adequate snow removal procedures. This meeting shall be held prior to October 31 of each year and will include, but not be limited to, discussion of the status and schedule of the following items: lane and shoulder widths, pavement restoration, traffic signal work, pavement markings, and signing.

Signing Patterns

The Contractor shall erect and maintain all signing patterns in accordance with the traffic control plans contained herein. Proper distances between advance warning signs and proper taper lengths are mandatory.

Pavement Markings -Non-Limited Access Multilane Roadways
Secondary and Local Roadways
During construction, the Contractor shall maintain all pavement markings on paved surfaces on all roadways throughout the limits of the project.

Interim Pavement Markings
The Contractor shall install painted pavement markings, which shall include centerlines, shoulder edge lines, lane lines (broken lines), lane-use arrows, and stop bars, on each intermediate course of bituminous concrete pavement and on any milled surface by the end of the work day/night. If the next course of bituminous concrete pavement will be placed within seven days, shoulder edge lines are not required. The painted pavement markings will be paid under the appropriate items.

If the Contractor will install another course of bituminous concrete pavement within 24 hours, the Contractor may install Temporary Plastic Pavement Marking Tape in place of the painted pavement markings by the end of the work day/night. These temporary pavement markings shall include centerlines, lane lines (broken lines) and stop bars; shoulder edge lines are not required. Centerlines shall consist of two 4 inch wide yellow markings, 2 feet in length, side by side, 4 to 6 inches apart, at 40-foot intervals. No passing zones should be posted with signs in those areas where the final centerlines have not been established on two-way roadways. Stop bars may consist of two 6 inch wide white markings or three 4 inch wide white markings placed side by side. The Contractor shall remove and dispose of the Temporary Plastic Pavement Marking Tape when another course of bituminous concrete pavement is installed. The cost of furnishing, installing and removing the Temporary Plastic Pavement Marking Tape shall be at the Contractor's expense.

If an intermediate course of bituminous concrete pavement will be exposed throughout the winter, then Epoxy Resin Pavement Markings should be installed unless directed otherwise by the Engineer.

Final Pavement Markings

The Contractor should install painted pavement markings on the final course of bituminous concrete pavement by the end of the work day/night. If the painted pavement markings are not installed by the end of the work day/night, then Temporary Plastic Pavement Marking Tape shall be installed as described above and the painted pavement markings shall be installed by the end of the work day/night on Friday of that week.

If Temporary Plastic Pavement Marking Tape is installed, the Contractor shall remove and dispose of these markings when the painted pavement markings are installed. The cost of furnishing, installing and removing the Temporary Plastic Pavement Marking Tape shall be at the Contractor's expense.

The Contractor shall install permanent Epoxy Resin Pavement Markings in accordance with Section 12.10 entitled "Epoxy Resin Pavement Markings, Symbols, and Legends" after such time as determined by the Engineer.

TRAFFIC CONTROL DURING CONSTRUCTION OPERATIONS

The following guidelines shall assist field personnel in determining when and what type of traffic control patterns to use for various situations. These guidelines shall provide for the safe and efficient movement of traffic through work zones and enhance the safety of work forces in the work area.

TRAFFIC CONTROL PATTERNS

Traffic control patterns shall be used when a work operation requires that all or part of any vehicle or work area protrudes onto any part of a travel lane or shoulder. For each situation, the installation of traffic control devices shall be based on the following:

Speed and volume of traffic
Duration of operation
Exposure to hazards

Traffic control patterns shall be uniform, neat and orderly so as to command respect from the motorist.

In the case of a horizontal or vertical sight restriction in advance of the work area, the traffic control pattern shall be extended to provide adequate sight distance for approaching traffic.

If a lane reduction taper is required to shift traffic, the entire length of the taper should be installed on a tangent section of roadway so that the entire taper area can be seen by the motorist.

Any existing signs that are in conflict with the traffic control patterns shall be removed, covered, or turned so that they are not readable by oncoming traffic.

When installing a traffic control pattern, a Buffer Area should be provided and this area shall be free of equipment, workers, materials and parked vehicles.

Typical traffic control plans 19 through 25 may be used for moving operations such as line striping, pot hole patching, mowing, or sweeping when it is necessary for equipment to occupy a travel lane.

Traffic control patterns will not be required when vehicles are on an emergency patrol type activity or when a short duration stop is made and the equipment can be contained within the shoulder. Flashing lights and appropriate trafficperson shall be used when required.

Although each situation must be dealt with individually, conformity with the typical traffic control plans contained herein is required. In a situation not adequately covered by the typical traffic control plans, the Contractor must contact the Engineer for assistance prior to setting up a traffic control pattern.

PLACEMENT OF SIGNS

Signs must be placed in such a position to allow motorists the opportunity to reduce their speed prior to the work area. Signs shall be installed on the same side of the roadway as the work area. On multi-lane divided highways, advance warning signs shall be installed on both sides of the highway. On directional roadways (on-ramps, off-ramps, one-way roads), where the sight distance to signs is restricted, these signs should be installed on both sides of the roadway.

ALLOWABLE ADJUSTMENT OF SIGNS AND DEVICES SHOWN ON THE TRAFFIC CONTROL PLANS

The traffic control plans contained herein show the location and spacing of signs and devices under ideal conditions. Signs and devices should be installed as shown on these plans whenever possible.

The proper application of the traffic control plans and installation of traffic control devices depends on actual field conditions.

Adjustments to the traffic control plans shall be made only at the direction of the Engineer to improve the visibility of the signs and devices and to better control traffic operations. Adjustments to the traffic control plans shall be based on safety of work forces and motorists, abutting property requirements, driveways, side roads, and the vertical and horizontal curvature of the roadway.

The Engineer may require that the traffic control pattern be located significantly in advance of the work area to provide better sight line to the signing and safer traffic operations through the work zone.

Table I indicates the minimum taper length required for a lane closure based on the posted speed limit of the roadway. These taper lengths shall only be used when the recommended taper lengths shown on the traffic control plans cannot be achieved.

TABLE I – MINIMUM TAPER LENGTHS

POSTED SPEED LIMIT MILES PER HOUR	MINIMUM TAPER LENGTH IN FEET FOR A SINGLE LANE CLOSURE
30 OR LESS	180
35	250
40	320
45	540
50	600
55	660
65	780

SECTION 1. WORK ZONE SAFETY MEETINGS

1.a) Prior to the commencement of work, a work zone safety meeting will be conducted with representatives of DOT Construction, Connecticut State Police (Local Barracks), Municipal Police, the Contractor (Project Superintendent) and the Traffic Control Subcontractor (if different than the prime Contractor) to review the traffic operations, lines of responsibility, and operating guidelines which will be used on the project. Other work zone safety meetings during the course of the project should be scheduled as needed.

1.b) A Work Zone Safety Meeting Agenda shall be developed and used at the meeting to outline the anticipated traffic control issues during the construction of this project. Any issues that can't be resolved at these meetings will be brought to the attention of the District Engineer and the Office of Construction. The agenda should include:

- Review Project scope of work and time
- Review Section 1.08, Prosecution and Progress
- Review Section 9.70, Trafficpersons
- Review Section 9.71, Maintenance and Protection of Traffic
- Review Contractor's schedule and method of operations.
- Review areas of special concern: ramps, turning roadways, medians, lane drops, etc.
- Open discussion of work zone questions and issues
- Discussion of review and approval process for changes in contract requirements as they relate to work zone areas

SECTION 2. GENERAL

2.a) If the required minimum number of signs and equipment (i.e. one High Mounted Internally Illuminated Flashing Arrow for each lane closed, two TMAs, Changeable Message Sign, etc.) are not available; the traffic control pattern shall not be installed.

2.b) The Contractor shall have back-up equipment (TMAs, High Mounted Internally Illuminated Flashing Arrow, Changeable Message Sign, construction signs, cones/drums, etc.) available at all times in case of mechanical failures, etc. The only exception to this is in the case of sudden equipment breakdowns in which the pattern may be installed but the Contractor must provide replacement equipment within 24 hours.

2.c) Failure of the Contractor to have the required minimum number of signs, personnel and equipment, which results in the pattern not being installed, shall not be a reason for a time extension or claim for loss time.

2.d) In cases of legitimate differences of opinion between the Contractor and the Inspection staff, the Inspection staff shall err on the side of safety. The matter shall be brought to

the District Office for resolution immediately or, in the case of work after regular business hours, on the next business day.

SECTION 3. INSTALLING AND REMOVING TRAFFIC CONTROL PATTERNS

3.a) Lane Closures shall be installed beginning with the advanced warning signs and proceeding forward toward the work area.

3.b) Lane Closures shall be removed in the reverse order, beginning at the work area, or end of the traffic control pattern, and proceeding back toward the advanced warning signs.

3.c) Stopping traffic may be allowed:

- As per the contract for such activities as blasting, steel erection, etc.
- During paving, milling operations, etc. where, in the middle of the operation, it is necessary to flip the pattern to complete the operation on the other half of the roadway and traffic should not travel across the longitudinal joint or difference in roadway elevation.
- To move slow moving equipment across live traffic lanes into the work area.

3.d) Under certain situations when the safety of the traveling public and/or that of the workers may be compromised due to conditions such as traffic volume, speed, roadside obstructions, or sight line deficiencies, as determined by the Engineer and/or State Police, traffic may be briefly impeded while installing and/or removing the advanced warning signs and the first ten traffic cones/drums only. Appropriate measures shall be taken to safely slow traffic. If required, traffic slowing techniques may be used and shall include the use of Truck Mounted Impact Attenuators (TMAs) as appropriate, for a minimum of one mile in advance of the pattern starting point. Once the advanced warning signs and the first ten traffic cones/drums are installed/removed, the TMAs and sign crew shall continue to install/remove the pattern as described in Section 4c and traffic shall be allowed to resume their normal travel.

3.e) The Contractor must adhere to using the proper signs, placing the signs correctly, and ensuring the proper spacing of signs.

3.f) Additional devices are required on entrance ramps, exit ramps, and intersecting roads to warn and/or move traffic into the proper travelpath prior to merging/exiting with/from the main line traffic. This shall be completed before installing the mainline pattern past the ramp or intersecting roadway.

3.g) Prior to installing a pattern, any conflicting existing signs shall be covered with an opaque material. Once the pattern is removed, the existing signs shall be uncovered.

3.h) On limited access roadways, workers are prohibited from crossing the travel lanes to install and remove signs or other devices on the opposite side of the roadway. Any signs or devices on the opposite side of the roadway shall be installed and removed separately.

SECTION 4. USE OF HIGH MOUNTED INTERNALLY ILLUMINATED FLASHING ARROW

4.a) On limited access roadways, one Flashing Arrow shall be used for each lane that is closed. The Flashing Arrow shall be installed concurrently with the installation of the traffic control pattern and its placement shall be as shown on the traffic control plan. For multiple lane closures, one Flashing Arrow is required for each lane closed. If conditions warrant, additional Flashing Arrows should be employed (i.e.: curves, major ramps, etc.).

4.b) On non-limited access roadways, the use of a Flashing Arrow for lane closures is optional. The roadway geometry, sight line distance, and traffic volume should be considered in the decision to use the Flashing Arrow.

4.c) The Flashing Arrow shall not be used on two lane, two-way roadways for temporary alternating one-way traffic operations.

4.d) The Flashing Arrow board display shall be in the “arrow” mode for lane closure tapers and in the “caution” mode (four corners) for shoulder work, blocking the shoulder, or roadside work near the shoulder. The Flashing Arrow shall be in the “caution” mode when it is positioned in the closed lane.

4.e) The Flashing Arrow shall not be used on a multi-lane roadway to laterally shift all lanes of traffic, because unnecessary lane changing may result.

SECTION 5. USE OF TRUCK MOUNTED IMPACT ATTENUATOR VEHICLES (TMAs)

5.a) For lane closures on limited access roadways, a minimum of two TMAs shall be used to install and remove traffic control patterns. If two TMAs are not available, the pattern shall not be installed.

5.b) On non-limited access roadways, the use of TMAs to install and remove patterns closing a lane(s) is optional. The roadway geometry, sight line distance, and traffic volume should be considered in the decision to utilize the TMAs.

5.c) Generally, to establish the advance and transition signing, one TMA shall be placed on the shoulder and the second TMA shall be approximately 1,000 feet ahead blocking the lane. The flashing arrow board mounted on the TMA should be in the “flashing arrow” mode when taking the lane. The sign truck and workers should be immediately ahead of

the second TMA. In no case shall the TMA be used as the sign truck or a work truck. Once the transition is in place, the TMAs shall travel in the closed lane until all Changeable Message Signs, signs, Flashing Arrows, and cones/drums are installed. The flashing arrow board mounted on the TMA should be in the "caution" mode when traveling in the closed lane.

5.d) A TMA shall be placed prior to the first work area in the pattern. If there are multiple work areas within the same pattern, then additional TMAs shall be positioned at each additional work area as needed. The flashing arrow board mounted on the TMA should be in the "caution" mode when in the closed lane.

5.e) TMAs shall be positioned a sufficient distance prior to the workers or equipment being protected to allow for appropriate vehicle roll-ahead in the event that the TMA is hit, but not so far that an errant vehicle could travel around the TMA and into the work area. For additional placement and use details, refer to the specification entitled "Type 'D' Portable Impact Attenuation System". Some operations, such as paving and concrete repairs, do not allow for placement of the TMA(s) within the specified distances. In these situations, the TMA(s) should be placed at the beginning of the work area and shall be advanced as the paving or concrete operations proceed.

5.f) TMAs should be paid in accordance with how the unit is utilized. When it is used as a TMA and is in the proper location as specified, and then it should be paid at the specified hourly rate for "Type 'D' Portable Impact Attenuation System". When the TMA is used as a Flashing Arrow, it should be paid at the daily rate for "High Mounted Internally Illuminated Flashing Arrow". If a TMA is used to install and remove a pattern and then is used as a Flashing Arrow, the unit should be paid as a "Type 'D' Portable Impact Attenuation System" for the hours used to install and remove the pattern, typically 2 hours (1 hour to install and 1 hour to remove), and is also paid for the day as a "High Mounted Internally Illuminated Flashing Arrow".

SECTION 6. USE OF TRAFFIC DRUMS AND TRAFFIC CONES

6.a) Traffic drums shall be used for taper channelization on limited-access roadways, ramps, and turning roadways and to delineate raised catch basins and other hazards.

6.b) Traffic drums shall be used in place of traffic cones in traffic control patterns that are in effect for more than a 36-hour duration.

6.c) Traffic Cones less than 42 inches in height shall not be used on limited-access roadways or on non-limited access roadways with a posted speed limit of 45 mph and above.

6.d) Typical spacing of traffic drums and/or cones shown on the Traffic Control Plans in the Contract are maximum spacings and may be reduced to meet actual field conditions as required.

SECTION 7. USE OF (REMOTE CONTROLLED) CHANGEABLE MESSAGE SIGNS (CMS)

7.a) For lane closures on limited access roadways, one CMS shall be used in advance of the traffic control pattern. Prior to installing the pattern, the CMS shall be installed and in operation, displaying the appropriate lane closure information (i.e.: Left Lane Closed - Merge Right). The CMS shall be positioned ½ - 1 mile ahead of the lane closure taper. If the nearest Exit ramp is greater than the specified ½ - 1 mile distance, than an additional CMS shall be positioned a sufficient distance ahead of the Exit ramp to alert motorists to the work and therefore offer them an opportunity to take the exit.

7.b) CMS should not be installed within 1000 feet of an existing CMS.

7.c) On non-limited access roadways, the use of CMS for lane closures is optional. The roadway geometry, sight line distance, and traffic volume should be considered in the decision to use the CMS.

7.d) The advance CMS is typically placed off the right shoulder, 5 feet from the edge of pavement. In areas where the CMS cannot be placed beyond the edge of pavement, it may be placed on the paved shoulder with a minimum of five (5) traffic drums placed in a taper in front of it to delineate its position. The advance CMS shall be adequately protected if it is used for a continuous duration of 36 hours or more.

7.e) When the CMS are no longer required, they should be removed from the clear zone and have the display screen cleared and turned 90° away from the roadway.

7.f) The CMS generally should not be used for generic messages (ex: Road Work Ahead, Bump Ahead, Gravel Road, etc.).

7.g) The CMS should be used for specific situations that need to command the motorist's attention which cannot be conveyed with standard construction signs (Examples include: Exit 34 Closed Sat/Sun - Use Exit 35, All Lanes Closed - Use Shoulder, Workers on Road - Slow Down).

7.h) Messages that need to be displayed for long periods of time, such as during stage construction, should be displayed with construction signs. For special signs, please coordinate with the Office of Construction and the Division of Traffic Engineering for the proper layout/dimensions required.

7.i) The messages that are allowed on the CMS are as follows:

Message No.	Frame 1	Frame 2	Message No.	Frame 1	Frame 2
1	LEFT LANE CLOSED	MERGE RIGHT	9	LANES CLOSED AHEAD	REDUCE SPEED
2	2 LEFT LANES CLOSED	MERGE RIGHT	10	LANES CLOSED AHEAD	USE CAUTION
3	LEFT LANE CLOSED	REDUCE SPEED	11	WORKERS ON ROAD	REDUCE SPEED
4	2 LEFT LANES CLOSED	REDUCE SPEED	12	WORKERS ON ROAD	SLOW DOWN
5	RIGHT LANE CLOSED	MERGE LEFT	13	EXIT XX CLOSED	USE EXIT YY
6	2 RIGHT LANES CLOSED	MERGE LEFT	14	EXIT XX CLOSED USE YY	FOLLOW DETOUR
7	RIGHT LANE CLOSED	REDUCE SPEED	15	2 LANES SHIFT AHEAD	USE CAUTION
8	2 RIGHT LANES CLOSED	REDUCE SPEED	16	3 LANES SHIFT AHEAD	USE CAUTION

For any other message(s), approval must be received from the Office of Construction prior to their use. No more than two (2) displays shall be used within any message cycle.

SERIES 16 SIGNS

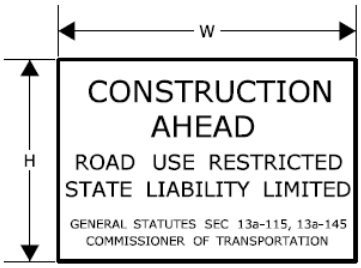

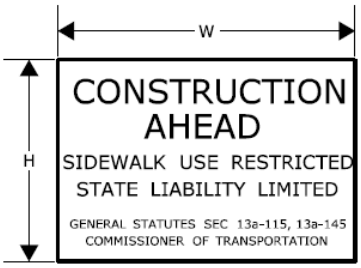

		W H
16-E	80-1605	84" x 60"
16-H	80-1608	60" x 42"
16-M	80-1613	30" x 24"

		W H
16-S	80-1619	48" x 30"

THE 16-S SIGN SHALL BE USED ON ALL PROJECTS THAT REQUIRE SIDEWALK RECONSTRUCTION OR RESTRICT PEDESTRIAN TRAVEL ON AN EXISTING SIDEWALK.

SERIES 16 SIGNS SHALL BE INSTALLED IN ADVANCE OF THE TRAFFIC CONTROL PATTERNS TO ALLOW MOTORISTS THE OPPORTUNITY TO AVOID A WORK ZONE. SERIES 16 SIGNS SHALL BE INSTALLED ON ANY MAJOR INTERSECTING ROADWAYS THAT APPROACH THE WORK ZONE. ON LIMITED-ACCESS HIGHWAYS, THESE SIGNS SHALL BE LOCATED IN ADVANCE OF THE NEAREST UPSTREAM EXIT RAMP AND ON ANY ENTRANCE RAMPS PRIOR TO OR WITHIN THE WORK ZONE LIMITS.

THE LOCATION OF SERIES 16 SIGNS CAN BE FOUND ELSEWHERE IN THE PLANS OR INSTALLED AS DIRECTED BY THE ENGINEER.

SIGNS 16-E AND 16-H SHALL BE POST-MOUNTED.

SIGN 16-E SHALL BE USED ON ALL EXPRESSWAYS.

SIGN 16-H SHALL BE USED ON ALL RAMPS, OTHER STATE ROADWAYS, AND MAJOR TOWN/CITY ROADWAYS.

SIGN 16-M SHALL BE USED ON OTHER TOWN ROADWAYS.

REGULATORY SIGN "ROAD WORK AHEAD, FINES DOUBLED"

THE REGULATORY SIGN "ROAD WORK AHEAD FINES DOUBLED" SHALL BE INSTALLED FOR ALL WORK ZONES THAT OCCUR ON ANY STATE HIGHWAY IN CONNECTICUT WHERE THERE ARE WORKERS ON THE HIGHWAY OR WHEN THERE IS OTHER THAN EXISTING TRAFFIC OPERATIONS.

THE "ROAD WORK AHEAD FINES DOUBLED" REGULATORY SIGN SHALL BE PLACED AFTER THE SERIES 16 SIGN AND IN ADVANCE OF THE "ROAD WORK AHEAD" SIGN.

31-1906

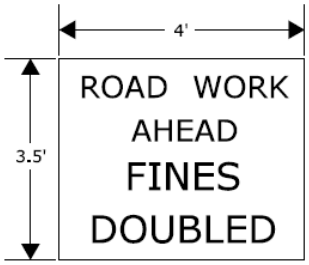

"END ROAD WORK" SIGN

THE LAST SIGN IN THE PATTERN MUST BE THE "END ROAD WORK" SIGN.

80-9612

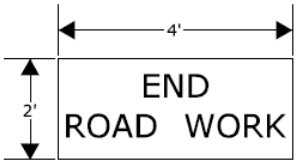

SCALE: NONE

CONSTRUCTION TRAFFIC CONTROL PLAN

REQUIRED SIGNS

CONNECTICUT DEPARTMENT OF TRANSPORTATION
BUREAU OF ENGINEERING & CONSTRUCTION

APPROVED Charles S. Harlow 2012.06.05 11:35:43-04'00'
PRINCIPAL ENGINEER

NOTES FOR TRAFFIC CONTROL PLANS

1. IF A TRAFFIC STOPPAGE OCCURS IN ADVANCE OF SIGN (A), THEN AN ADDITIONAL SIGN (A) SHALL BE INSTALLED IN ADVANCE OF THE STOPPAGE.

2. SIGNS (AA), (A), AND (D) SHOULD BE OMITTED WHEN THESE SIGNS HAVE ALREADY BEEN INSTALLED TO DESIGNATE A LARGER WORK ZONE THAN THE WORK ZONE THAT IS ENCOMPASSED ON THIS PLAN.

3. SEE TABLE 1 FOR ADJUSTMENT OF TAPERS IF NECESSARY.

4. IF THIS PLAN REMAINS IN CONTINUOUS OPERATION FOR MORE THAN 36 HOURS, THEN TRAFFIC DRUMS SHALL BE USED IN PLACE OF TRAFFIC CONES.

5. ANY LEGAL SPEED LIMIT SIGNS WITHIN THE LIMITS OF A ROADWAY / LANE CLOSURE AREA SHALL BE COVERED WITH AN OPAQUE MATERIAL WHILE THE CLOSURE IS IN EFFECT, AND UNCOVERED WHEN THE ROADWAY / LANE CLOSURE IS RE-OPENED TO ALL LANES OF TRAFFIC.

6. IF THIS PLAN REMAINS IN CONTINUOUS OPERATION FOR MORE THAN 36 HOURS, THEN ANY EXISTING CONFLICTING PAVEMENT MARKINGS SHALL BE ERADICATED OR COVERED, AND TEMPORARY PAVEMENT MARKINGS THAT DELINEATE THE PROPER TRAVELPATHS SHALL BE INSTALLED.

7. DISTANCES BETWEEN SIGNS IN THE ADVANCE WARNING AREA MAY BE REDUCED TO 100' ON LOW-SPEED URBAN ROADS (SPEED LIMIT < 40 MPH).

8. IF THIS PLAN IS TO REMAIN IN OPERATION DURING THE HOURS OF DARKNESS, INSTALL BARRICADE WARNING LIGHTS - HIGH INTENSITY ON ALL POST-MOUNTED DIAMOND SIGNS IN THE ADVANCE WARNING AREA.

9. A CHANGEABLE MESSAGE SIGN SHALL BE INSTALLED ONE HALF TO ONE MILE IN ADVANCE OF THE LANE CLOSURE TAPER.

10 SIGN (P) SHALL BE MOUNTED A MINIMUM OF 7 FEET FROM THE PAVEMENT SURFACE TO THE BOTTOM OF THE SIGN.

TABLE 1 - MINIMUM TAPER LENGTHS

POSTED SPEED LIMIT (MILES PER HOUR)	MINIMUM TAPER LENGTH FOR A SINGLE LANE CLOSURE
30 OR LESS	180' (55m)
35	250' (75m)
40	320' (100m)
45	540' (165m)
50	600' (180m)
55	660' (200m)
65	780' (240m)

METRIC CONVERSION CHART (1" = 25mm)

ENGLISH	METRIC	ENGLISH	METRIC	ENGLISH	METRIC
12"	300mm	42"	1050mm	72"	1800mm
18"	450mm	48"	1200mm	78"	1950mm
24"	600mm	54"	1350mm	84"	2100mm
30"	750mm	60"	1500mm	90"	2250mm
36"	900mm	66"	1650mm	96"	2400mm

SCALE: NONE

CONSTRUCTION TRAFFIC CONTROL PLAN

NOTES

CONNECTICUT DEPARTMENT OF TRANSPORTATION
BUREAU OF ENGINEERING & CONSTRUCTION

APPROVED Charles S. Harlow 2012.06.05 15:50:35-04'00'
PRINCIPAL ENGINEER

WORK IN TRAVEL LANE AND SHOULDER
TWO LANE HIGHWAY
ALTERNATING ONE-WAY TRAFFIC OPERATIONS

SIGN FACE
108 SQ. FT (MIN.)

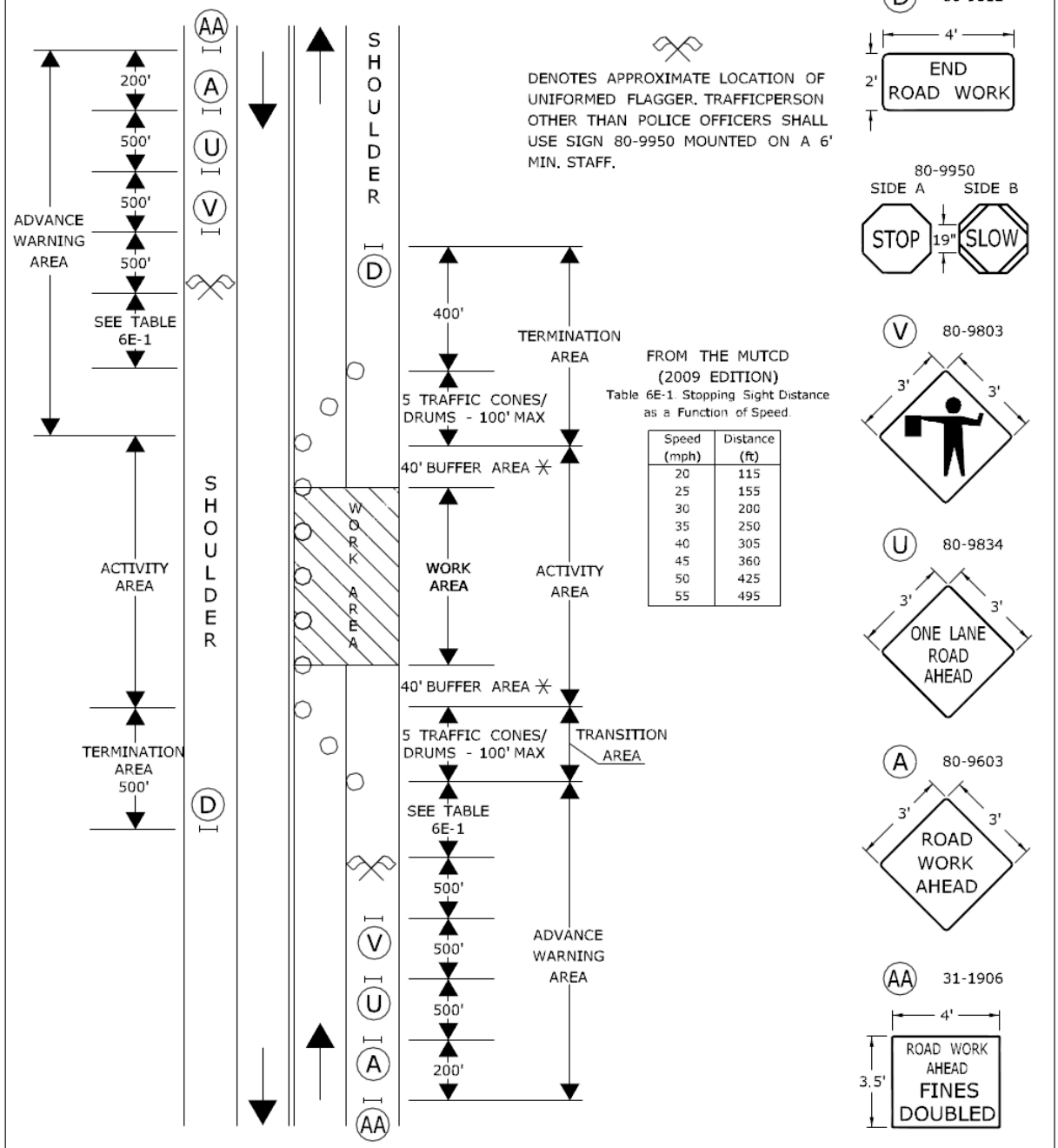

FROM THE MUTCD
(2009 EDITION)
Table 6E-1. Stopping Sight Distance as a Function of Speed.

Speed (mph)	Distance (ft)
20	115
25	155
30	200
35	250
40	305
45	360
50	425
55	495

○ TRAFFIC CONE **OR** TRAFFIC DRUM
✳ OPTIONAL ⊗ TRAFFIC DRUM ⊢⊣ PORTABLE SIGN SUPPORT
⇐ HIGH MOUNTED INTERNALLY ILLUMINATED FLASHING ARROW

SCALE: NONE

CONSTRUCTION TRAFFIC CONTROL PLAN

PLAN 13 - SHEET 1 OF 2

SEE NOTES 1, 2, 4, 6, 7, 8

CONNECTICUT DEPARTMENT OF TRANSPORTATION
BUREAU OF ENGINEERING & CONSTRUCTION

APPROVED Charles S. Harlow 2012.06.05 15:55:23-04'00'
PRINCIPAL ENGINEER

WORK IN TRAVEL LANE AND SHOULDER
TWO LANE HIGHWAY
ALTERNATING ONE-WAY TRAFFIC OPERATIONS

SIGN FACE
108 SQ. FT (MIN.)

HAND SIGNAL METHODS TO BE USED BY UNIFORMED FLAGGERS

THE FOLLOWING METHODS FROM SECTION 6E.07, FLAGGER PROCEDURES, IN THE "MANUAL ON UNIFORM TRAFFIC CONTROL DEVICES," SHALL BE USED BY UNIFORMED FLAGGERS WHEN DIRECTING TRAFFIC THROUGH A WORK AREA. THE STOP/SLOW SIGN PADDLE (SIGN NO. 80-9950) SHOWN ON THE TRAFFIC STANDARD SHEET TR-1220 01 ENTITLED, "SIGNS FOR CONSTRUCTION AND PERMIT OPERATIONS" SHALL BE USED.

A. TO STOP TRAFFIC

TO STOP ROAD USERS, THE FLAGGER SHALL FACE ROAD USERS AND AIM THE STOP PADDLE FACE TOWARD ROAD USERS IN A STATIONARY POSITION WITH THE ARM EXTENDED HORIZONTALLY AWAY FROM THE BODY. THE FREE ARM SHALL BE HELD WITH THE PALM OF THE HAND ABOVE SHOULDER LEVEL TOWARD APPROACHING TRAFFIC.

B. TO DIRECT TRAFFIC TO PROCEED

TO DIRECT STOPPED ROAD USERS TO PROCEED, THE FLAGGER SHALL FACE ROAD USERS WITH THE SLOW PADDLE FACE AIMED TOWARD ROAD USERS IN A STATIONARY POSITION WITH THE ARM EXTENDED HORIZONTALLY AWAY FROM THE BODY. THE FLAGGER SHALL MOTION WITH THE FREE HAND FOR ROAD USERS TO PROCEED.

C. TO ALERT OR SLOW TRAFFIC

TO ALERT OR SLOW TRAFFIC, THE FLAGGER SHALL FACE ROAD USERS WITH THE SLOW PADDLE FACE AIMED TOWARD ROAD USERS IN A STATIONARY POSITION WITH THE ARM EXTENDED HORIZONTALLY AWAY FROM THE BODY. TO FURTHER ALERT OR SLOW TRAFFIC, THE FLAGGER HOLDING THE SLOW PADDLE FACE TOWARD ROAD USERS MAY MOTION UP AND DOWN WITH THE FREE HAND, PALM DOWN.

◯ TRAFFIC CONE **OR** TRAFFIC DRUM
✳ OPTIONAL ⊗ TRAFFIC DRUM ⊢⊣ PORTABLE SIGN SUPPORT
⟵ HIGH MOUNTED INTERNALLY ILLUMINATED FLASHING ARROW

SCALE: NONE

CONSTRUCTION TRAFFIC CONTROL PLAN
PLAN 13 - SHEET 2 OF 2
SEE NOTES 1, 2, 4, 6, 7, 8

CONNECTICUT DEPARTMENT OF TRANSPORTATION
BUREAU OF ENGINEERING & CONSTRUCTION

APPROVED Charles S. Harlow 2012.06.05 15:55:45-04'00'
PRINCIPAL ENGINEER

WORK IN TRAVEL LANE AND SHOULDER
TWO LANE HIGHWAY

SIGN FACE
62 SQ. FT (MIN.)

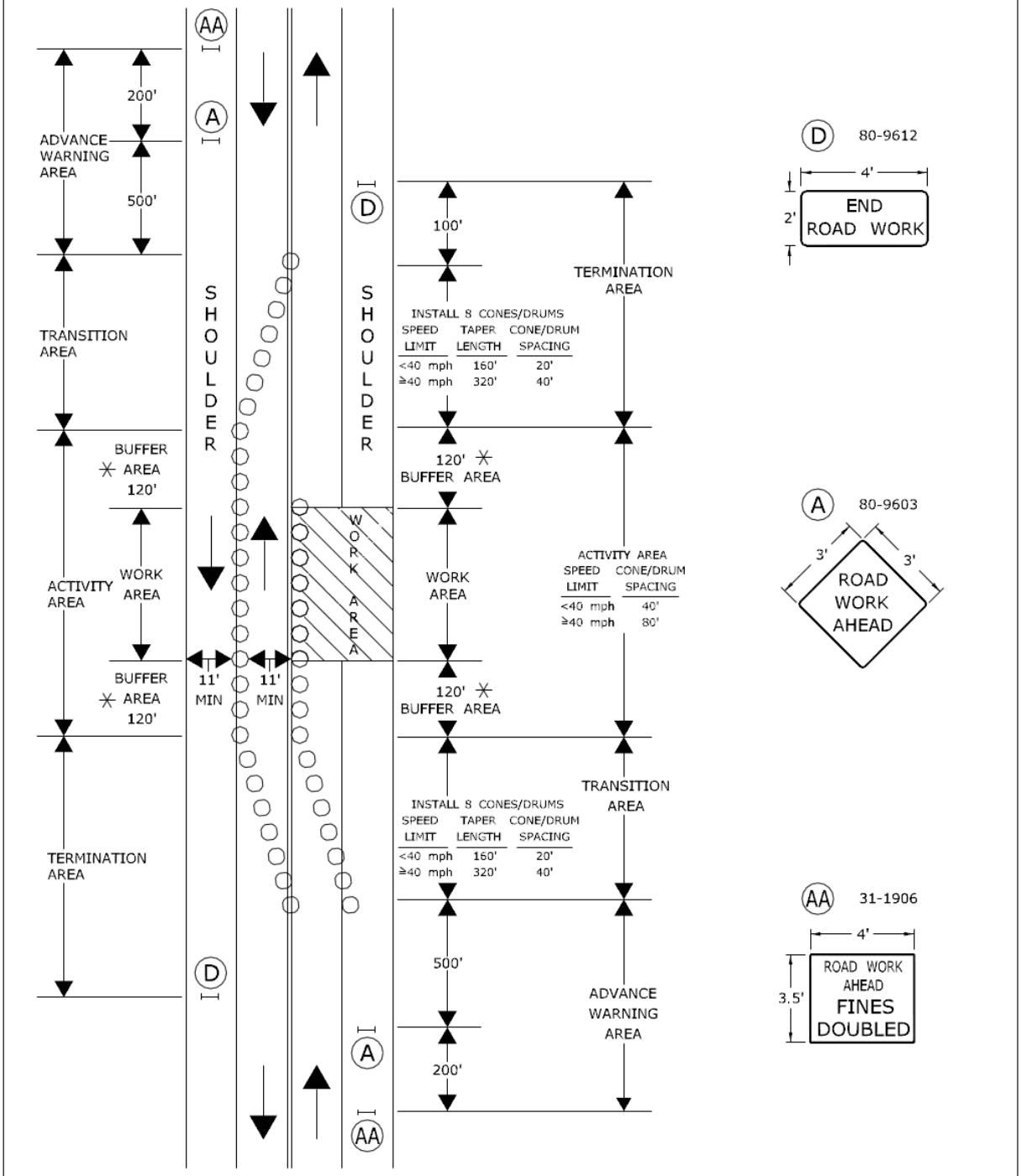

TRAFFIC CONE **OR** TRAFFIC DRUM
OPTIONAL TRAFFIC DRUM PORTABLE SIGN SUPPORT
HIGH MOUNTED INTERNALLY ILLUMINATED FLASHING ARROW

SCALE: NONE

CONSTRUCTION TRAFFIC CONTROL PLAN
PLAN 15
SEE NOTES 1, 2, 4, 6, 7, 8

CONNECTICUT DEPARTMENT OF TRANSPORTATION
BUREAU OF ENGINEERING & CONSTRUCTION

APPROVED Charles S. Harlow 2012.06.05 15:56:29-04'00'
PRINCIPAL ENGINEER

WORK IN TRAVEL LANE AND SHOULDER
TWO LANE HIGHWAY
ALTERNATING ONE-WAY TRAFFIC OPERATIONS
STOP SIGN CONTROL

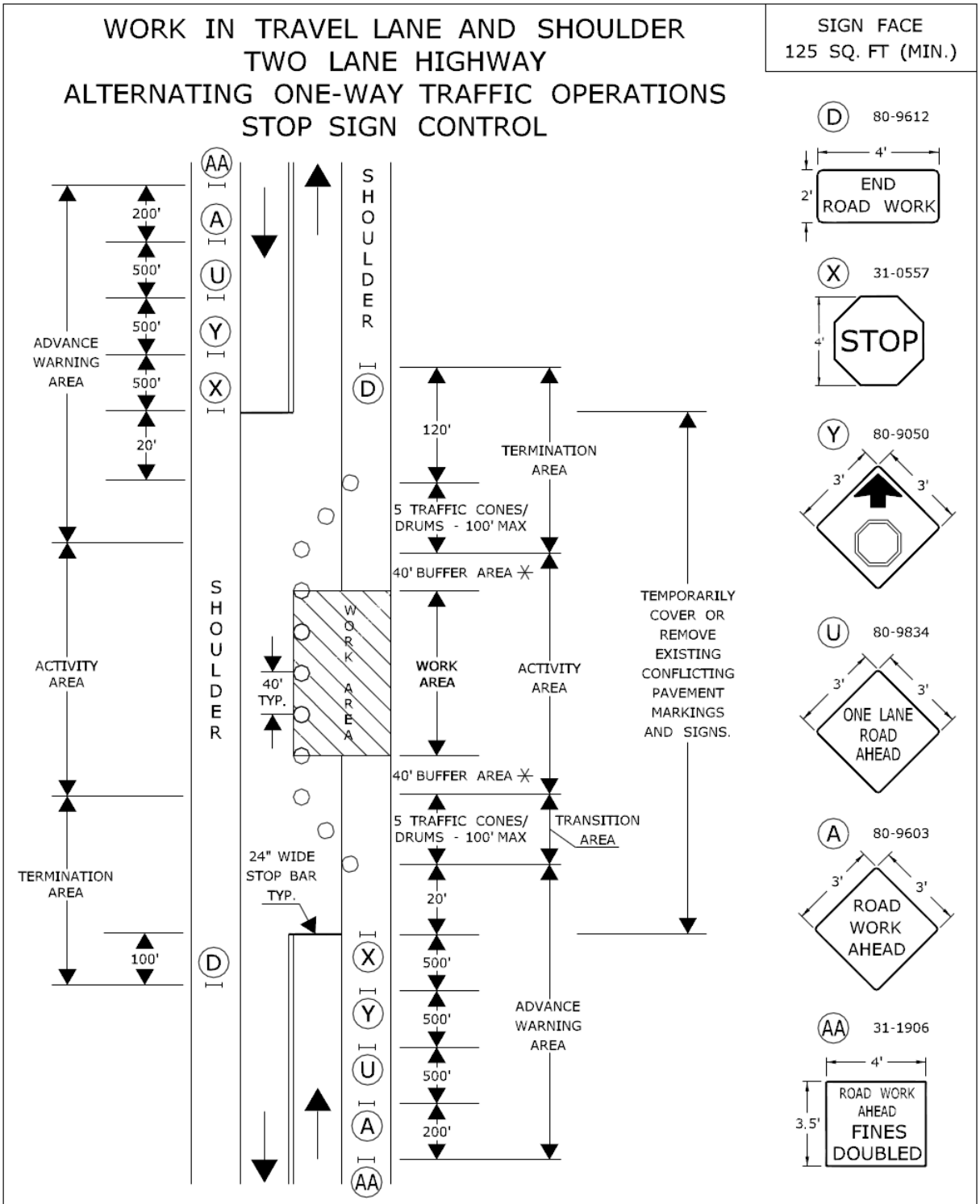

TRAFFIC CONE **OR** TRAFFIC DRUM
OPTIONAL TRAFFIC DRUM PORTABLE SIGN SUPPORT
HIGH MOUNTED INTERNALLY ILLUMINATED FLASHING ARROW

SCALE: NONE

CONSTRUCTION TRAFFIC CONTROL PLAN
PLAN 18
SEE NOTES 1, 2, 4, 7, 8

CONNECTICUT DEPARTMENT OF TRANSPORTATION
BUREAU OF ENGINEERING & CONSTRUCTION

APPROVED Charles S. Harlow 2012.06.05 15:57:37-04'00'
PRINCIPAL ENGINEER

Article 9.71.05 – Basis of Payment is supplemented by the following:

The temporary relocation of signs and supports, and the furnishing, installation and removal of any temporary supports shall be paid for under the item "Maintenance and Protection of Traffic". Temporary overhead sign supports and foundations shall be paid for under the appropriate item(s).

The cost of furnishing, installing, and removing the material for the 4H:1V traversable slope shall be paid for under the item "Maintenance and Protection of Traffic."

ITEM #0975004A – MOBILIZATION AND PROJECT CLOSEOUT

9.75.01 – Description:
This item shall consist of all work necessary for the movement of personnel and furnishing equipment to the project site, and for the establishment of all Contractors' field offices, buildings and other facilities necessary to the performance of the work. In addition, this item shall include the preparation of work plans and submittals necessary to facilitate the commencement of physical construction. These initial submittals are identified elsewhere in the contract and may include project schedules, project management plans, safety plans, quality plans, erosion and sedimentation control plans and similar submittals addressing the general sequencing and management of the project. This item shall also include demobilization of plant and equipment, completion of all punchlist work, and administrative closeout items necessary to satisfy all contract requirements.

This item may not be subcontracted, in whole or part.

9.75.04 – Method of Measurement:
This work will be measured for payment in the manner described hereinafter; however, the determination of the total contract price earned shall not include the amount of mobilization earned during the period covered by the current monthly estimate - but shall include amounts previously earned and certified for payment.

1. When the first payment estimate is made, 25 percent of the lump sum bid price for this item or 2.5 percent of the total original contract price, whichever is less, shall be certified for payment.

2. When the initial project submittals necessary to begin construction are accepted by the Engineer, 50 percent of the lump sum bid price for this item or 5.0 percent of the total original contract price, whichever is less, minus any previous payments, shall be certified for payment.

3. When the initial project submittals are accepted by the Engineer, and 15 percent of the total original contract price is earned, 70 percent of the lump sum price of this item or 7.0 percent of the total original contract price, whichever is less, minus any previous payments, will be certified for payment.

4. When 30 percent of the total original contract price is earned 85 percent of the lump sum price of this item or 8.5 percent of the total original contract price, whichever is less, minus any previous payments, will be certified for payment.

5. When the requirements of Article 1.08.13 have been satisfied 95 percent of the lump sum price of this item, minus any previous payments, will be certified for payment.

6. When the requirements of Article 1.08.14 have been satisfied 100 percent of the lump sum price of this item, minus any previous payments, will be certified for payment.

Nothing herein shall be construed to limit or preclude partial payments otherwise provided for by the contract.

9.75.05 – Basis of Payment:
This work will be paid for at the contract lump sum price for "Mobilization and Project Closeout" which price shall include materials, equipment, tools, transportation, labor and all work incidental thereto.

This item shall not be paid more than one time. If the Contractor is required to mobilize equipment or facilities more than one time, due to reasons solely the responsibility of the Department, any additional efforts will be paid as Extra Work under Section 1.04.05.

Pay Item	Pay Unit
Mobilization and Project Closeout	l.s.

ITEM #0979003A – CONSTRUCTION BARRICADE TYPE III

Article 9.79.01 – Description: The Contractor shall furnish construction barricades to conform to the requirements of NCHRP Report 350 (TL-3) and to the requirements stated in Article 9.71 "Maintenance and Protection of Traffic," as shown on the plans and/or as directed by the Engineer.

Article 9.79.02 – Materials: Prior to using the construction barricades, the Contractor shall submit to the Engineer a copy of the Letter of Acceptance issued by the FHWA to the manufacturer documenting that the devices conform to NCHRP Report 350 (TL-3).

Alternate stripes of white and orange Type III or Type VI reflective sheeting shall be applied to the horizontal members as shown on the plans. Application of the reflective sheeting shall conform to the requirements specified by the reflective sheeting manufacturer. Only one type of sheeting shall be used on a barricade and all barricades furnished shall have the same type of reflective sheeting. Reflective sheeting shall conform to the requirements of Article M.18.09.01.

Construction barricades shall be designed and fabricated so as to prevent them from being blown over or displaced by the wind from passing vehicles. Construction barricades shall be approved by the Engineer before they are used.

Article 9.79.03 – Construction Methods: Ineffective barricades, as determined by the Engineer and in accordance with the ATSSA guidelines contained in "Quality Standards for Work Zone Traffic Control Devices", shall be replaced by the Contractor at no cost to the State.

Barricades that are no longer required shall be removed from the project and shall remain the property of the Contractor.

Article 9.79.04 – Method of Measurement: Construction Barricade Type III will be measured for payment by the number of construction barricades required and used.

Article 9.79.05 – Basis of Payment: "Construction Barricade Type III" required and used will be paid for at the Contract unit price per each. Each barricade will be paid for once, regardless of the number of times it is used.

Pay Item	Pay Unit
Construction Barricade Type III	ea.

ITEM #0980001A – CONSTRUCTION STAKING

9.80.01—Description: The work under this item shall consist of construction layout and reference staking necessary for the proper control and satisfactory completion of all work on the project, except property lines, highway lines, or non-access lines.

9.80.02—Materials: All stakes used for control staking shall be of the same quality as used by the Department for this purpose. For slope limits, pavement edges, gutter lines, etc., where so-called "green" or "working" stakes are commonly used, lesser quality stakes will be acceptable, provided the stakes are suitable for the intended purpose.

9.80.03—Construction Methods: The Department will furnish the Contractor such control points, bench marks, and other data as may be necessary for the construction staking and layout by qualified engineering or surveying personnel as noted elsewhere herein.

The Contractor shall be responsible for the placement and preservation of adequate ties to all control points, necessary for the accurate re-establishment of all base lines, center lines, and all critical grades as shown on the plans.

All stakes, references, and batter boards which may be required for construction operations, signing and traffic control shall be furnished, set and properly referenced by the Contractor. The Contractor shall be solely and completely responsible for the accuracy of the line and grade of all features of the work. Any errors or apparent discrepancies found in previous surveys, plans, specifications or special provisions shall be called to the Engineer's attention immediately for correction or interpretation prior to proceeding with the work.

During roadway construction (or site work), the Contractor shall provide and maintain for the periods needed, as determined by the Engineer, reference stakes at 100 foot intervals outside the slope limits. Further, the Contractor shall provide and maintain reference stakes at 50 foot intervals immediately prior to and during the formation of subgrade and the construction of all subsequent pavement layers. These stakes shall be properly marked as to station, offset and shall be referenced to the proposed grade, even if laser or GPS machine controls are used.

The Contractor shall provide and maintain reference stakes at drainage structures, including reference stakes for the determination of the structure alignments as may be needed for the proper construction of the drainage structure. The reference stakes shall be placed immediately prior to and maintained during the installation of the drainage structure. These stakes shall be properly marked as to station, offset and shall be referenced to the proposed grade.

The Contractor shall furnish copies of data used in setting and referencing stakes and other layout markings used by the Contractor after completion of each operation.

The Contractor shall provide safe facilities for convenient access by Department forces to control points, batter boards, and references.

All staking shall be performed by qualified engineering or surveying personnel who are trained, experienced and skilled in construction layout and staking of the type required under the contract. Prior to start of work, the Contractor shall submit for review and comment the qualifications of personnel responsible for construction staking on the project. On all projects with an original contract value greater than $25 million and bridge rehabilitation and reconstruction projects greater than $10 million, surveying shall be performed under the direct supervision of a Professional Surveyor licensed in the State of Connecticut. The submission shall include a description of the experience and training which the proposed staff possesses and a list of state projects the personnel have worked on previously. All field layout and staking required for the project shall be performed under the direct supervision of a person, or persons, of engineering background experienced in the direction of such work and acceptable to the Engineer. If the personnel responsible for construction staking change during the course of the project, then a revised submittal will be required.

The Department may check the control of the work, as established by the Contractor, at any time as the work progresses. The Contractor will be informed of the results of these checks, but the Department by so doing in no way relieves the Contractor of responsibility for the accuracy of the layout work. The Contractor shall correct or replace, at the Contractor's own expense, any deficient layout and construction work which may be the result of the inaccuracies in the Contractor's staking operations or the failure to report such inaccuracies, or the Contractor's failure to report inaccuracies found in work done by the Department or by others. If, as a result of these inaccuracies, the Department is required to make further studies, redesign, or both, all expenses incurred by the Department due to such inaccuracies will be deducted from any monies due the Contractor.

The Contractor shall furnish all necessary personnel, engineering equipment and supplies, materials, transportation, and work incidental to the accurate and satisfactory completion of this work.

For roadways where the existing pavement markings need to be reestablished:

Prior to any resurfacing or obliteration of existing pavement markings, the Contractor and a representative of the Engineer must establish and document pavement marking control points from the existing markings. These control points shall be used to reestablish the positions of the lanes, the beginnings and endings of tapers, channelization lines for on and off ramps, lane use arrows, stop bars, and any lane transitions in the project area. The Contractor shall use these control points to provide appropriate premarking prior to the installation of the final markings.

The Contractor shall provide and maintain reference stakes and/or markings at 100 foot intervals immediately off the edge of pavement to be used to reestablish the existing pavement markings. The Contractor shall also provide and maintain reference stakes and/or markings at any point where there is a change in pavement markings to reestablish the existing pavement markings.

For non-limited access roadways:

On non-limited access roadways it may be necessary to adjust the final locations of the pavement markings to accommodate pedestrians and bicyclists where feasible. Prior to any resurfacing or obliteration of existing pavement markings, the Contractor, a representative of the Engineer, and a representative of the Division of Traffic Engineering must establish and document pavement marking control points from the existing markings as described above. The control points at that time may be adjusted to provide minimum shoulder widths of 4 to 5 feet wherever possible while maintaining travel lane widths of no less than 11 feet and no more than 12 feet.

9.80.04—Method of Measurement: Construction staking will be at the Contract lump sum for construction staking.

When no price for "Construction Staking" is asked for on the proposal form, the cost of the work described above shall be included in the general cost of the work and no direct payment for "Construction Staking" will be made.

9.80.05—Basis of Payment: Construction staking will be paid for at the Contract lump sum price for "Construction Staking," which price shall include all materials, tools, equipment, labor and work incidental thereto. A schedule of values for payment shall be submitted to the Department for review and comment prior to payment.

Pay Item	Pay Unit
Construction Staking	l.s.

ITEM #1111201A – TEMPORARY DETECTION (SITE NO. 1)

Description:

Provide a Temporary Detection (TD) system at signalized intersections throughout the duration of construction, as noted on the contract plans or directed by the Engineer. TD is intended to provide an efficient traffic-responsive operation which will reduce unused time for motorists travelling through the intersection. A TD system shall consists of all material, such as pedestrian pushbutton, conduit, handholes, cable, messenger, sawcut, loop amplifier, microwave detector, Video Image Detection System (VIDS), Self Powered Vehicle Detector (SPVD), etc. that is needed to achieve an actuated traffic signal operation.

Materials:

Material used for TD is either owned by the Contractor that is good working condition or existing material that will be removed upon completion of the contract. Approval by the Engineer is needed prior to using existing material that will be incorporated into the permanent installation. New material that will become part of the permanent installation is not included or paid for under TD.

Construction Methods:

This item includes furnishing, installation, relocating, realigning, and maintaining the necessary detection systems as to provide vehicle detection during each phase of construction. If not shown on the plan, program the TD modes (pulse or presence) as the existing detectors or as directed by the Engineer. If the TD method (loops [saw cut or preformed], SPVD, microwave, VIDS, or other) is not shown on the contract plan it may be the Contractor's choice. The method chosen for TD must be indicated on the TD Plan submission.

The traffic signal plan-of-record, if not in the controller cabinet will be provided upon request. Ensure the controller phase mode (recall, lock, non-lock) and phase timing are correct for the TD. Adjust these settings as needed or as directed by the Engineer.

At least 30 days prior to implementation of each phase of construction submit a TD proposal to the Engineer for approval. Submit the TD proposal at the same time as the Temporary Signalization plan. Indicate the following information for each intersection approach:

- Phase Mode
- Temporary Detection Method
- Area of Detection
- Detector Mode

Submit the proposed temporary phase timing settings and the TD installation schedule with the TD proposal. See the example below.

Example Proposed Temporary Detection and Timing

Site 1
Warren, Rt. 45 at Rt. 341, Location #149-201

Approach	Phase	Phase Mode	TD Method	Area of Detection	Det Mode
Rt. 45 NB	***2***	***Min Recall***	***VIDS***	***150' from Stop Bar***	***Pulse***
Rt. 45 SB	***2***	***Min Recall***	***SPVD***	***150' from Stop Bar***	***Pulse***
Rt. 341	***4***	***Lock***	***Microwave***	***30' from Stop Bar***	***Pulse***

Temporary Phase Timing Settings:

Phase	Min	Ped	Ped Clr	Ext	Max 1	Max2	Yel	Red
2	***20***	***0***	***0***	***6***	***45***	***60***	***4***	***1***
4	***14***	***7***	***9***	***3***	***27***	***35***	***3***	***1***

Scheduled TD: ***July 4, 2011***

Site 2
Scotland, Rt. 14 at Rt. 97, Location #123-201

Approach	Phase	Phase Mode	TD Method	Area of Detection	Det Mode
Rt. 15 WB Left Turn	***1***	***Non-Lock***	***VIDS***	***5' in front to 10' Behind Stop Bar***	***Presence***
Rt. 14 EB	***2***	***Min Recall***	***Existing Loop***	***150' from Stop Bar***	***Pulse***
Rt. 14 WB	***6***	***Min Recall***	***VIDS***	***150' from Stop Bar***	***Pulse***
Rt. 97	***4***	***Lock***	***Loop, Pre-formed***	***20' from Stop Bar***	***Pulse***

Temporary Phase Timing Settings:

Phase	Min	Ped	Ped Clr	Ext	Max 1	Max2	Yel	Red
1	***5***	***0***	***0***	***2***	***12***	***18***	***3***	***0***
2 & 6	***24***	***0***	***4***	***4***	***26***	***36***	***4***	***1***
4	***14***	***7***	***9***	***3***	***27***	***35***	***3***	***1***

Scheduled TD: ***July 4, 2011***

When at any time during construction the existing vehicle detection becomes damaged, removed, or disconnected, install TD to actuate the affected approaches. Install TD sensors and make operational prior to removing existing detection. TD must be operational throughout all construction phases.

Provide to the Engineer a list of telephone numbers of personnel who will be responsible for the TD. If the TD malfunctions or is damaged, notify the Engineer and place the associated phase on max recall. Respond to TD malfunctions by having a qualified representative at the site within three (3) hours. Restore detection to the condition prior to the malfunction within twenty-four (24) hours.

If the Engineer determines that the nature of a malfunction requires immediate attention and the Contractor does not respond within three (3) hours following the initial contact, then an alternative maintenance service will be called to restore TD. Expenses incurred by the State for alternative service will be deducted from monies due to the Contractor with a minimum deduction of $500.00 for each service call. The alternate maintenance service may be the traffic signal owner or another qualified Contractor.

TD will terminate when the detection is no longer required. This may be either when the temporary signal is taken out of service or when the permanent detectors are in place and fully operational.

Any material and equipment supplied by the Contractor specifically for TD will remain the Contractor's property. Existing material not designated as scrap or salvage will become the property of the Contractor. Return and deliver to the owner all existing equipment used as TD that is removed and designated as salvage.

Method of Measurement:

Temporary Detection is measured as a percentage of the contract Lump Sum price. Fifty percent (50%) shall be paid when Temporary Detection is initially set up, approved, and becomes fully operational. Fifty percent (50%) shall be paid when Temporary Detection terminates and all temporary equipment is removed to the satisfaction of the Engineer.

Basis of Payment:

This work will be paid at the contract Lump Sum price for "Temporary Detection (Site No.)". The price includes furnishing, installing, relocating, realigning, and maintaining the necessary detection systems and all incidental material, labor, tools, and equipment. This price also includes any detector mode setting changes, timing or program modifications to the controller that are associated with TD. All Contractor supplied material that will remain the Contractor's property will be included in the contract Lump Sum price for "Temporary Detection (Site No.)." Any items installed for TD that will become part of the permanent installation will not be paid for under this item but are paid for under the bid item for that work.

Pay Item	Pay Unit
Temporary Detection (Site No.)	l.s.

ITEM #1118051A – TEMPORARY SIGNALIZATION (SITE NO. 1)

Description:

Provide Temporary Signalization (TS) at the intersections shown on the plans or as directed by the Engineer.

1. Existing Signalized Intersection: Keep each traffic signal completely operational at all times during construction through the use of existing signal equipment, temporary signal equipment, new signal equipment, or any combination thereof once TS has started as noted in the section labeled Duration.

2. Unsignalized Intersection: Provide TS during construction activities and remove the temporary condition upon project completion. Furnish, install, maintain, and relocate equipment to provide a complete temporary traffic signal, including but not limited to the necessary support structures, electrical energy, vehicle and pedestrian indications, vehicle and pedestrian detection, pavement markings, and signing.

Materials:

- Pertinent articles of the Standard Specifications
- Supplemental Specifications and Special Provisions contained in this contract

Construction Methods:

Preliminary Inspection

In the presence of the Engineer and a representative from the DOT Electrical Maintenance Office (Town representative for a Town owned signal), inspect and document the existing traffic signal's physical and operational condition prior to Temporary Signalization. Include but do not limit the inspection to the following:

- Controller Assembly (CA)
  - Controller Unit (CU)
  - Detection Equipment
  - Pre-emption Equipment
  - Coordination Equipment
- Vehicle and Pedestrian Signals
- Vehicle and Pedestrian Detectors
- Emergency Vehicle Pre-emption System (EVPS) *
- Interconnect Cable and Splice Enclosures
- Support Structures
- Handholes, Conduit and Cable

It may be necessary to repair or replace equipment that is missing, damaged, or malfunctioning. Develop a checklist of items for replacement or repair after the inspection. If authorized by the Engineer, this work will be considered "Extra Work" under Article 1.09.04.

* At a State owned signal the EVPS equipment is usually owned by the municipality. It is recommended to apprise the municipality of the inspection schedule and results.

TS Plan

At least 30 days prior to implementation of each stage, submit a 1:40 (1:500 metric) scale TS plan for each location to the Engineer for review and comment. Include but do not limit the plan to the following:

- Survey Ties
- Dimensions of Lanes, Shoulders, and Islands
- Slope Limits
- Clearing and Grubbing Limits
- Signal Phasing and Timing
- Location of Signal Appurtenances such as Supports, Signal Heads, Pedestrian Push buttons, Pedestrian Signals
- Location of Signing and Pavement Markings (stop bars, lane lines, etc.)
- Location, method, and mode of Temporary Detection

Review of the TS plan does not relieve the Contractor of ensuring the TS meets the requirements of the MUTCD. A copy of the existing traffic signal plan for State-owned traffic signals is available from the Division of Traffic Engineering upon request. Request existing traffic signal plans for Town-owned traffic signals from the Town. Do not implement the TS plan until all review comments have been addressed.

Earthwork

Perform the necessary clearing and grubbing and the grading of slopes required for the installation, maintenance, and removal of the TS equipment. After TS terminates restore the affected area to the prior condition and to the satisfaction of the Engineer.

Maintenance and Protection of Traffic

Furnish, install, maintain, relocate, and remove signal-related signing (lane-use, signal ahead, NTOR, etc.) and pavement markings as needed. Install, relocate, and/or remove equipment in a manner to cause no hazard to pedestrians, traffic or property. Maintain traffic as specified in the Special Provisions "Prosecution and Progress" and "Maintenance and Protection of Traffic."

Electrical Service and Telephone Service at Existing Signalized Intersections

If the electrical service or the telephone service source must be changed or relocated make all arrangements with the utility company and assume all charges. The party previously responsible for the monthly payment of service shall continue to be responsible during TS.

Electrical Service at Unsignalized Intersections

Assume all charges and make all arrangements with the power company, including service requests, scheduling, and monthly bills in accordance with Section 10.00.12 and Section 10.00.13 of the Standard Specifications,. A metered service is recommended where TS equipment will be removed when no longer needed.

Temporary Signalization

Furnish, install, maintain, relocate, and remove existing, temporary, and proposed traffic signal equipment and all necessary hardware; modify or furnish a new CA; reprogram the CU

phasing and timing; as many times as necessary for each stage/phase of construction to maintain and protect traffic and pedestrian movements as shown on the plans or as directed by the Engineer.

Inspection

When requested by the Engineer, the TS will be subject to a field review by a representative of the Division of Traffic Engineering and/or the Town, which may generate additional comments requiring revisions to the temporary signal.

Detection

Provide vehicle detection on the existing, temporary, and/or new roadway alignment for all intersection approaches that have existing detection, that have detection in the final condition as shown on the signal plan, or as directed by the Engineer. Keep existing pedestrian pushbuttons accessible and operational at all times during TS. Temporary Detection is described and is paid for under Item # 11112XXA - Temporary Detection (Site No. X)

Emergency Vehicle Pre-emption System (EVPS)

Furnish, install, maintain, relocate, and remove the equipment necessary to keep the existing EVPS operational as shown on the plan. Do not disconnect or alter the EVPS without the knowledge and concurrence of the Engineer and the EVPS owner. Schedule all EVPS relocations so that the system is out of service only when the Contractor is actively working. Ensure EVPS is returned to service and is completely operational at the end of the work day. Keep the EVPS owner apprised of all changes to the EVPS.

Coordination

Furnish, install, maintain, relocate, and remove the equipment necessary to keep the intersection coordinated to adjacent signals as shown on the plan. Do not disconnect the interconnect without the approval of the Engineer.

- Closed Loop System: If it is necessary to disconnect the communication cable, notify the Engineer and the Bridgeport Operation Center (BOC) or the Newington Operation Center (NOC) prior to disconnect and also after it is reconnected.
- Time Base System: Program and synchronize all Time Clock/Time Base Coordination (TC/TBC) units as necessary.

Maintenance

Once TS is in effect, assume maintenance responsibilities of the entire installation in accordance with Section 1.07.12 of the Standard Specifications. Notify the Engineer for the project records the date that Temporary Signalization begins. Notify the following parties that maintenance responsibility has been transferred to the Contractor:

Signal Owner

CT DOT Electrical Maintenance Office or
Town Representative

Local Police Department

Provide the Engineer a list of telephone numbers of personnel who will be on-call during TS. Respond to traffic signal malfunctions by having a representative at the site within three hours from the initial contact. Within twenty-four (24) hours have the traffic signal operating according to plan.

If the Engineer determines that the nature of a malfunction requires immediate attention and/or the Contractor does not respond within three (3) hours, then an alternate maintenance service will be called to repair the signal. Expenses incurred by the alternate maintenance service for each call will be deducted from monies due to the Contractor with a minimum deduction of $1,000. The alternate maintenance service may be the owner of the signal or another qualified electrical contractor.

Duration

Temporary Signalization shall commence when any existing signal equipment is disturbed, relocated, or altered based on the inspection checklist in any way for the TS.

For intersections with a State furnished controller, TS terminates when the inspection of the permanent signal is complete and operational and is accepted by the Engineer. For intersections with a Contractor furnished controller, Temporary Signalization terminates at the beginning of the 30 day test period for the permanent signal.

Ownership

Existing equipment, designated as salvage, remains the property of the owner. Salvable equipment will be removed and delivered to the owner upon completion of use. Temporary equipment supplied by the Contractor remains the Contractor's property unless noted otherwise.

Method of Measurement:

Temporary Signalization shall be paid only once per site on a percentage of the contract Lump Sum price. Fifty percent (50%) shall be paid when TS is operational as shown on the plan or to the satisfaction of the Engineer. Fifty percent (50%) shall be paid when TS terminates.

Basis of Payment:

This work shall be paid at the contract Lump Sum price for "Temporary Signalization (Site No.)" for each site. This price includes the preliminary inspection, TS plan for each stage/phase, furnishing, installing, maintaining, relocating and revising traffic signal equipment, controller assembly modifications, controller unit program changes such as phasing and timing, removing existing, temporary, and proposed traffic signal equipment, arrangements with utility companies, towns or cities including the fees necessary for electric and telephone service, clearing and grubbing, grading, area restoration and all necessary hardware, materials, labor, and work incidental thereto.

All material and work for signing and pavement markings is paid for under the appropriate Contract items.

All material and work necessary for vehicle and pedestrian detection for TS is paid for under item 1111201A - Temporary Detection (Site No. 1).

All Contractor supplied items that will remain the Contractor's property shall be included in the contract Lump Sum price for "Temporary Signalization."

Any items installed as part of the permanent installation are not paid for under this item but are paid for under the bid item for that work.

Pay Item	Pay Unit
Temporary Signalization (Site No.)	l.s.

ITEM #1210101A – 4" WHITE EPOXY RESIN PAVEMENT MARKINGS

ITEM #1210102A – 4" YELLOW EPOXY RESIN PAVEMENT MARKINGS

ITEM #1210105A – EPOXY RESIN PAVEMENT MARKINGS, SYMBOLS AND LEGENDS

SECTION 12.10 – EPOXY RESIN PAVEMENT MARKINGS, SYMBOLS AND LEGENDS is amended as follows:

*Delete "**SYMBOLS AND LEGENDS**" from the title of the section.*

SECTION 12.10.03 – Construction Methods is amended as follows:

*Delete the entire sections titled "**3. Performance and Warranty:**" and "**WARRANTY:**" and replace them with the following:*

3. Initial Performance: The retroreflectivity of the markings applied must be measured by the Contractor three (3) to fourteen (14) days after installation. A Certified Test Report (CTR), in accordance with Section 1.06.07, must be submitted to the Engineer no later than ten (10) days after the measurements are taken using the procedures and equipment detailed below:

Test Lots - The following test lots shall be randomly selected by the Engineer to represent the line markings applied:

Table 3.1: Line Test Lots

Length of line	Number of Lots	Length of Test Lot
< 1.0 mi. (1.5 km)	1	1000 ft. (300 m)
≥1.0 mi. (1.5 km)	1 per 1.0 mi. (1.5 km)	1000 ft. (300 m)

Measurement Equipment and Procedure

Portable Retroreflectometer

1. Skip line measurements shall be obtained for every other stripe, taking no more than two readings per stripe with readings no closer than 20 in. (0.5 m) from either end of the marking.
2. Solid line test lots shall be divided into ten sub-lots of 100 ft. (30 m) length and measurements obtained at one randomly select location within each sublot.

3. For symbols and legends, 10 percent of each type shall be measured by obtaining five (5) measurements at random locations on the symbol or legend.
4. The Apparatus and Measurements shall be made in accordance with ASTM E1710 (Standard Test Method for Measurement of Retroreflective Pavement Marking Materials with CEN-Prescribed Geometry Using a Portable Retroreflectometer) and evaluated in accordance with ASTM D7585/D7585M (Standard Practice for Evaluating Retroreflective Pavement Markings Using Portable Hand-Operated Instruments).

Mobile Retroreflectometer

1. Calibration of the instruments shall be in accordance with the manufacturer's instructions.
2. Retroreflectivity shall be measured in a manner proposed by the Contractor and approved by the Engineer. The basis of approval of the test method will be conformance to a recognized standard test method or provisional standard test method.

The measurements shall be obtained when the pavement surface is clean and dry and shall be reported in millicandellas per square foot per foot candle - mcd/ft^2/fc (millicandelas per square meter per lux (mcd/m^2/lux)). Measurements shall be obtained sequentially in the direction of traffic flow.

<u>Additional Contents of Certified Test Report</u>

The CTR shall also list:

- Project and Route number
- Geographical location of the test site(s), including distance from the nearest reference point.
- Manufacturer and model of retroreflectometer used.
- Most recent calibration date for equipment used.
- Grand Average and standard deviation of the retroreflectivity readings for each line, symbol or legend.

<u>Initial Performance:</u>

In order to be accepted, all epoxy resin pavement markings must meet the following minimum retroreflectivity reading requirement:

White Epoxy: minimum retroreflectivity reading of 400 mcd/ft^2/fc (mcd/m^2/lux)
Yellow Epoxy: minimum retroreflectivity reading of 325 mcd/ft^2/fc (mcd/m^2/lux)

At the discretion of the Engineer, the Contractor shall replace, at its expense, such amount of lines, symbols and legends that the grand average reading falls below the minimum value for

retro-reflectivity. The Engineer will determine the areas and lines to be replaced. The cost of replacement shall include all materials, equipment, labor and work incidental thereto.

ITEM #1220013A – CONSTRUCTION SIGNS - BRIGHT FLUORESCENT SHEETING

Article 12.20.01 – Description: The Contractor shall furnish construction signs with bright fluorescent sheeting and their required portable supports or metal sign posts that conform to the requirements of NCHRP Report 350 (TL-3). The construction signs and their required portable supports or metal sign posts shall conform to the signing requirements stated in Article 9.71 "Maintenance and Protection of Traffic", as shown on the plans and/or as directed by the Engineer.

Article 12.20.02 – Materials: Prior to using the construction signs and their portable supports, the Contractor shall submit to the Engineer a copy of the Letter of Acceptance issued by the FHWA to the manufacturer documenting that the devices (both sign and portable support tested together) conform to NCHRP Report 350 (TL-3).

Portable sign supports shall be designed and fabricated so as to prevent signs from being blown over or displaced by the wind from passing vehicles. Portable sign supports shall be approved by the Engineer before they are used. Mounting height of signs on portable sign supports shall be a minimum of 1 foot and a maximum of 2 feet, measured from the pavement to the bottom of the sign.

All sign faces shall be rigid and reflectorized. Sheet aluminum sign blanks shall conform to the requirements of Article M.18.13. Metal sign posts shall conform to the requirements of Article M.18.14. Application of reflective sheeting, legends, symbols, and borders shall conform to the requirements specified by the reflective sheeting manufacturer. Attachments shall be provided so that the signs can be firmly attached to the portable sign supports or metal posts without causing damage to the signs. A Materials Certificate and Certified Test Report conforming to Article 1.06.07 shall be required for the reflective sheeting.

The following types of construction signs shall not be used: mesh, non-rigid, roll-up, corrugated or waffle board types substrates, foam core and composite aluminum sign substrates.

Reflective sheeting shall conform to the following:
The fluorescent orange prismatic retroreflective sheeting shall consist of prismatic lenses formed in a transparent fluorescent orange synthetic resin, sealed, and backed with an aggressive pressure sensitive adhesive protected by a removable liner. The sheeting shall have a smooth surface.

Physical Properties:

A. Photometric - Coefficient of Retroreflection R_A

When the sheeting applied on test panels is measured in accordance with ASTM E 810, it shall have minimum coefficient of retroreflection values as shown in Table I. The rotation angle shall be as designated by the manufacturer for test purposes, the observation angles

shall be 0.2 degrees and 0.5 degrees, the entrance angles (component B_1) shall be -4 degrees and +30 degrees.

TABLE I

Minimum Coefficient of Retroreflection R_A

Candelas per footcandle per square foot

Observation Angle (deg.)	Entrance Angle (deg.)	R_A Orange
0.2	- 4	200
0.2	+ 30	90
0.5	- 4	80
0.5	+ 30	50

The rotation shall be as designated by the manufacturer.

B. Daytime Color

Color shall conform to the requirements of Table II. Daytime color and maximum spectral radiance factor (peak reflectance) of sheeting mounted on test panels shall be determined instrumentally in accordance with ASTM E 991. The values shall be determined on a Hunter Lab Labscan 6000 0/45 Spectrocolorimeter with option CMR 559 (or approved equal 0/45 instrument with circumferential viewing illumination). Computations shall be done in accordance with ASTM E 308 for the 2 degree observer.

TABLE II

Color Specification Limits** (Daytime)

Color	1		2		3		4		Reflectance Limit Y (%)	
	X	Y	X	Y	X	Y	X	Y	MIN	MAX
Orange (new)	.583	.416	.523	.397	.560	.360	.631	.369	28	-
Orange (weathered)	.583	.416	.523	.397	.560	.360	.631	.369	20	45

Maximum Spectral Radiance Factor, new: 110%, min.
weathered: 60%, min.

** The four pairs of chromaticity coordinates determine the acceptable color in terms of the CIE 1931 standard colorimetric system measured with standard illuminant D65.

C. Nighttime Color

Nighttime color of the sheeting applied to test panels shall be determined instrumentally in accordance with ASTM E 811 and calculated in the u', v' coordinate system in accordance with ASTM E 308. Sheeting shall be measured at 0.33 degrees observation

and -4 degree entrance at rotation as determined by the manufacturer for test purposes. Color shall conform to the requirements of Table III.

TABLE III

Color Specification Limits ** (Nighttime)

Color	1		2		3		4	
	u'	v'	u'	v'	u'	v'	u'	v'
Orange (new and weathered)	.400	.540	.475	.529	.448	.522	.372	.534

D. Resistance to Accelerated Weathering

The retroreflective surface of the sheeting shall be weather resistant and show no appreciable cracking, blistering, crazing, or dimensional change after one year's unprotected outdoor exposure in south Florida, south-facing and inclined 45 degrees from the vertical, or after 1500 hours exposure in a xenon arc weatherometer in accordance with ASTM G26, Type B, Method A. Following exposure, panels shall be washed in a 5% HCL solution for 45 seconds, rinsed thoroughly with clean water, blotted with a soft clean cloth and brought to equilibrium at standard conditions. After cleaning, the coefficient of retroreflection shall be not less than 100 when measured as in D.2, below, and the color is expected to conform to the requirements of Tables II and III for weathered sheeting. The sample shall:

1. Show no appreciable evidence of cracking, scaling, pitting, blistering, edge lifting or curling or more than 0.031 inch shrinkage or expansion.

2. Be measured only at angles of 0.2 degrees observation, -4 degrees entrance, and rotation as determined by the manufacturer for test purposes. Where more than one panel of color is measured, the coefficient of retroreflection shall be the average of all determinations.

E. Impact Resistance

The retroreflective sheeting applied according to the manufacturer's recommendations to a test panel of alloy 6061-T6, 0.040 inch by 3 inches by 5 inches and conditioned for 24 hours, shall show no cracking outside the impact area when the face of the panel is subjected to an impact of 100 inch-pounds, using a weight with a 0.625 inch diameter rounded tip dropped from a height necessary to generate an impact of 100 inch-pounds, at test temperatures of both 32° F and 72° F.

F. Resistance to Heat

The retroreflective sheeting, applied to a test panel as in E., above, and conditioned for 24 hours, shall be measured in accordance with Paragraph A. at 0.2 degree observation and -4 degree entrance angles at rotation as determined by the manufacturer for test purposes and

exposed to 170° ± 5° F for 24 hours in an air circulating oven. After heat exposure the sheeting shall retain a minimum of 70% of the original coefficient of retroreflection.

G. Field Performance:

Retroreflective sheeting processed and applied to sign blank materials in accordance with the sheeting manufacturer's recommendations, shall perform effectively for a minimum of 3 years. The retroreflective sheeting will be considered unsatisfactory if it has deteriorated due to natural causes to the extent that: (1) the sign is ineffective for its intended purpose when viewed from a moving vehicle under normal day and night driving conditions; or (2) the coefficient of retroreflection is less than 100 when measured at 0.2 degrees observation and -4 degree entrance. All measurements shall be made after sign cleaning according to the sheeting manufacturer's recommendations.

Article 12.20.03 – Construction Methods: Ineffective signs, as determined by the Engineer and in accordance with the ATSSA guidelines contained in "Quality Standards for Work Zone Traffic Control Devices", shall be replaced by the Contractor at no cost to the State.

Signs and their portable sign supports or metal posts that are no longer required shall be removed from the project and shall remain the property of the Contractor.

Article 12.20.04 – Method of Measurement: Construction Signs - Bright Fluorescent Sheeting will be measured for payment by the number of square feet of sign face. Sign supports will not be measured for payment.

Article 12.20.05 – Basis of Payment: "Construction Signs - Bright Fluorescent Sheeting" required and used on the project will be paid for at the Contact unit price per square foot. This price shall include the furnishing and maintenance of the signs, portable sign supports, metal sign posts and all hardware. Each sign and support or posts will be paid for once, regardless of the number of times it is used.

Pay Item	Pay Unit
Construction Signs – Bright Fluorescent Sheeting	s.f.

PERMITS AND/OR SUPPLEMENTAL TO FORM 816 AND REQUIRED PROVISIONS

The following Permits and/or Supplemental to Form 816 and Required Provisions follow this page and are hereby made part of this Contract.

- **PERMITS AND/OR PERMIT APPLICATIONS**

  No Permits are required for this contract

- **SUPPLEMENTAL SPECIFICATIONS TO STANDARD SPECIFICATIONS FORM 816**

- **Construction Contracts - Required Contract Provisions (State Funded Only Contracts)**

State of Connecticut

Department of Transportation

SUPPLEMENTAL SPECIFICATIONS

TO

THE STANDARD SPECIFICATIONS

FOR

ROADS, BRIDGES AND INCIDENTAL CONSTRUCTION

FORM 816

2004

JANUARY 2014

January 2014

DIVISION I
GENERAL REQUIREMENTS AND COVENANTS

SECTION		SPECIFICATION NUMBER
1.01	Definition of Terms and Permissible Abbreviations	101
1.03	Award and Execution of Contract	103
1.05	Control of the Work	105
1.07	Legal Relations and Responsibilities	107
1.08	Prosecution and Progress	108
1.09	Measurement and Payment	109
1.10	Environmental Compliance	110
1.11	Claims	111
1.20	General Clauses for Facilities Construction	120

DIVISION II
CONSTRUCTION DETAILS

SECTION		SPECIFICATION NUMBER
2.02	Roadway Excavation, Formation of Embankment and Disposal of Surplus Material	202
2.05	Trench Excavation	205
2.12	Subbase	212
3.04	Processed Aggregate Base	304
4.01	Concrete Pavement	401
5.14	Prestressed Concrete Members	514
6.01	Concrete for Structures	601
6.03	Structural Steel	603
6.12	Concrete Cylinder Curing Box	612
6.51	Culverts	651
7.02	Piles	702
8.22	Temporary Precast Concrete Barrier Curb	822
9.01	Bollard	901
9.10	Metal Beam Rail	910
9.18	Three-Cable Guide Railing (I-Beam Post) and Anchorages	918
9.22	Bituminous Concrete Sidewalk Bituminous Concrete Driveway	922
9.44	Topsoil	944
9.49	Furnishing, Planting and Mulching Trees, Shrubs, Vines and Ground Cover Plants	949
9.75	Mobilization	975
10.01	Trenching and Backfilling	1001
10.03	Light Standards	1003
10.09	Cast Iron Junction Box	1009
10.10	Concrete Handhole	1010
10.14	Cable in Duct	1014
10.19	Pre-Assembled Aerial Cable, Aerial Cable (3 No. 2)	1019
10.20	Wood Pole, Temporary Illumination Unit	1020
11.13	Control Cable	1113
12.10	Epoxy Resin Pavement Markings, Symbols and Legends	1210

DIVISION III
MATERIALS SECTION

SECTION		SPECIFICATION NUMBER
M.03	Portland Cement Concrete	M03
M.06	Metals	M06
M.08	Drainage	M08
M.11	Masonry Facing, Cement and Dry Rubble Masonry, Brick, Mortar	M11
M.13	Roadside Development	M13
M.16	Traffic Control Signals	M16
M.17	Elastomeric Materials	M17
M.18	Signing	M18

January 2014

STANDARD SPECIFICATIONS
FOR
ROADS, BRIDGES AND INCIDENTAL CONSTRUCTION
FORM 816

ERRATA

PG.	ARTICLE OR SUBARTICLE	LINE NO.	CORRECTION	REV. DATE
i	Table of Contents	20	Insert "1.11 Claims"	July10
iv	Table of Contents	11	Change "Guild" to "Guide"	Jan05
12	1.01.03	31	Insert "AOEC – Area of Environmental Concern"	Jan05
12	1.01.03	31	Insert "AWG – American Wire Gauge"	Jan05
13	1.01.03	16	Insert "HASP – Health and Safety Plan"	Jan05
13	1.01.03	29	Insert "PCC – Portland Cement Concrete"	Jan05
14	1.01.03	25	Insert "VOC – Volatile Organic Compound"	Jan05
14	1.01.03	26	Insert "WSA – Temporary Waste Stockpile Area"	Jan05
32	1.05.01	38	Change "Connecticut General Statutes" to "CGS"	Jan05
97	1.10.03-2	32	Change "D.E.P." to "DEEP"	Jan14
97	1.10.03-2	39	Change "D.E.P," to "DEEP,"	Jan14
98	1.10.03-2.1	13	Change "D.E.P." to "DEEP"	Jan14
99	1.10.03-2.6	23	Change "D.E.P." to "DEEP"	Jan14
100	1.10.03-2.9	32	Change "D.E.P." to "DEEP"	Jan14
101	1.10.03-2.12	22	Change "D.E.P." to "DEEP"	Jan14
102	1.10.04	26	Change "D.E.P." to "DEEP"	Jan14
105	1.20	29	Change "Workmen and Equipment" to "Personnel and Equipment"	Jan05
105	1.20	31	Delete "Completion of Construction Work and"	Jan05
108	1.20-1.04.01	26	Change "othewise" to "otherwise"	July07
110	1.20-1.05.02-2	17	Change "DEP" to "DEEP"	Jan14
122	1.20-1.06.08	3	Change "Certificate of Compliance" to "C.O.C."	July07
131	1.20-1.08.05	34	Change "Workmen and Equipment" to "Personnel and Equipment"	Jan05
132	1.20-1.08.11	12	Change "Certificate of Compliance" to "C.O.C."	July07
133	1.20-1.08.13	7	Delete "Completion of Construction Work and"	Jan05
133	1.20-1.08.13	9	Change "Certificate of Compliance" to "C.O.C."	July07
133	1.20-1.08.13	15	Change "Certificate of Compliance" to "C.O.C."	July07
133	1.20-1.08.13	20	Change "Certificate of Compliance" to "C.O.C."	July07
164	2.04.03-1	2	Change "6.01.03-10" to "6.01.03-6"	Jan14
196	3.03.02	33	Change "Article M.03.01" to "Section M.03"	Jan14
245	4.06.04	11	Change "**Over weight (mass) Adjustments -**" and replace with indented "Over weight (mass) Adjustments -" as a subsection of "**1. Bituminous Concrete Class ( ).**"	Jan05
256	5.01.02	22	Change "DEP" to "DEEP"	Jan14
259	5.03.03	24	Change "Such requirements of Article 5.02.03 ... equally to this construction." to "All such plans prepared by the Contractor shall be considered working drawings and shall be submitted with engineering calculations to the Engineer for review in accordance with the requirements of Article 1.05.02."	July10

PG.	ARTICLE OR SUBARTICLE	LINE NO.	CORRECTION	REV. DATE
262	5.06.02	26	Change "Article M.03.01" to "Section M.03"	Jan14
262	5.06.02	27	Change "Article M.03.01" to "Section M.03"	Jan14
265	5.07.02	19	Change "Subarticle M.03.01-11" to "Article M.03.09"	Jan14
265	5.07.02	24	Change "M.08.01-26" to "M.08.01-19 Geotextiles"	July13
270	5.08.02	4	Change "M.06.02-12" to "M.06.02-4 Welded Stud Shear Connectors"	July10
271	5.09.02	39	Change "M.06.02-12" to "M.06.02-4 Welded Stud Shear Connectors"	July10
272	5.13.02	22	Change "M.08.01-27" to "M.08.01-20 PVC Pipe or M.08.01-21 PVC Gravity Pipe"	July13
378	6.52.02	2	Change "M.08.01-22" to "M.08.01-11 Reinforced Concrete Culvert End"	July13
378	6.52.02	3	Change "M.08.01-23" to "M.08.01-6 Metal Culvert End"	July13
404	7.05.02	11	Change "Article M.03.01" to "Section M.03"	Jan14
416	7.51.02-(4)	7	Change "M.08.01-26" to "M.08.01-19 Geotextiles"	July13
418	7.55.02	26	Change "M.08.01-26" to "M.08.01-19 Geotextiles"	July13
420	8.11.02	37	Change "Article M.03.01" to "Section M.03"	Jan14
420	8.11.02	38	Change "Article M.03.01" to "Subarticle M.03.08-2"	Jan14
421	8.11.02	1	Change "Article M.03.01" to "Section M.03"	Jan14
426	8.16.02	28	Change "Subarticle M.03.01-8" to "Article M.03.08"	Jan14
428	8.18.02	10	Change "Subarticle M.03.01-11" to "Article M.03.09"	Jan14
429	8.21.02-6	30	Change "M.03.01-11" to "Article M.03.09"	Jan14
430	8.21.03-6	37	Change "M.03.01-11" to "Article M.03.09"	Jan14
434	9.04.02	14	Change "Subarticle M.06.02-1" to "Article 6.03.02"	July10
434	9.04.02	15	Change "M.06.02-9(d) for metal bridge rail (cast post—aluminum)" to "Malleable castings shall conform to the requirements of the specifications for malleable iron castings, ASTM A 47, Grade No. 32510 (22010). Ductile iron castings shall conform to the Specifications for Ductile Iron Castings, ASTM A 536, Grade 60-40-18 (414-276-18) unless otherwise specified. In addition to the specified test coupons, test specimens from parts integral with the castings, such as risers, shall be tested for castings having a weight (mass) of more than 1000 pounds (455 kilograms) to determine that the required quality is obtained in the castings in the finished condition."	July10
445	9.11.02	14	Change "Subarticle M.03.01-12" to "Article M.03.05"	Jan14
452	9.14.02	2	Change "Subarticle M.06.02-8" to "ASTM A 53, Type E or S, Grade A, Schedule 40 Black Finish."	July10
452	9.14.02	4	Change "Subarticle M.06.02-9(d) except that the grade shall be 32510" to "the specifications for malleable iron castings, ASTM A 47, Grade No. 32510 (22010). Ductile iron castings shall conform to the Specifications for Ductile Iron Castings, ASTM A 536, Grade 60-40-18 (414-276-18) unless otherwise specified. In addition to the specified test coupons, test specimens from parts integral with the castings, such as risers, shall be tested for castings having a weight (mass) of more than 1000 pounds (455 kilograms)	

PG.	ARTICLE OR SUBARTICLE	LINE NO.	CORRECTION	REV. DATE
			to determine that the required quality is obtained in the castings in the finished condition."	July10
454	9.16.02	20	Change "Article M.03.01" to "Section M.03"	Jan14
459	9.21.02	9	Change "Article M.03.01" to "Section M.03"	Jan14
459	9.21.02	17	Change "Article M.03.01" to "Section M.03"	Jan14
464	9.24.02-1	19	Change "Article M.03.01" to "Section M.03"	Jan14
475	9.47.02-5	34	Change "Article M.03.01" to "Section M.03"	Jan14
496	9.70.01	37	Change "CDOT" to "ConnDOT"	Jan05
533	10.02.02	6	Change "Article M.03.01" to "Section M.03"	Jan14
544	10.11.02	5	Change "M.08.01-25 or M.08.01-27" to "M.08.01-20 or M.08.01-21"	July13
548	10.17.03	14	Change "6.01.03-21" to "6.01.03-10"	Jan14
552	11.03.03-1	18	Change "M.03.01-12" to "M.03.05"	Jan14
569	11.14.05	19	Change "Span Wire" to "Span Wire (Type)"	July12
576	12.01.02	40	Change "Subarticle M.03.01-12" to "Article M.03.05"	Jan14
577	12.01.03	7	Change "6.03.03-19" to "6.03.03-4 (f) High Strength Bolted Connections"	July10
577	12.01.03	23	Change "Article 6.03.03-15" to "Subarticle 6.03.03-4(c) Bearings"	July10
577	12.01.03	27	Change "Article 6.03.03-19 (c)(3)" to "Subarticle 6.03.03-4 (f) High Strength Bolted Connections Turn-of-Nut Installation Method"	July10
578	12.02.02	23	Change "M.03.01-12" to "M.03.05"	Jan14
580	12.02.03	16	Change "6.01.03-21" to "6.01.03-10"	Jan14
604	18.00.02	7	Change "National Cooperative Highway Research Program (NCHRP)" to "NCHRP"	Jan05
638	M.04.02	37	Change "Asphalt Institute's" to "AI's"	Jan05
708	M.09.02-5	5	Change "Article M.03.01" to "Section M.03"	Jan14
711	M.10.02-1	17	Change "Subarticle M.06.02-1(b)" to "Article M.06.02"	July10
713	M.10.02-7	8	Change "Article M.03.01" to "Section M.03"	Jan14
720	M.10.08-3	2	Change "Subarticle M.06.02-1(b)" to "Article M.06.02"	July10
720	M.10.08-4	10	Change "Article M.03.01" to "Section M.03"	Jan14
726	M.12.03	18	After "M.03.01" add "and M.03.02"	Jan14
749	M.14.01-8	32	Change "Article M.03.01-12" to "Article M.03.05"	Jan14
759	M.15.15-5	24	Change "Article M.03.01" to "Section M.03"	Jan14
759	M.15.15-6	27	Change "Article M.03.01" to "Section M.03"	Jan14
760	M.15.15-16	21	Change "non-fusible" to "fused"	Jan05
829	Pay Items	4	Add "7.02, Dynamic Pile Driving Analysis (PDA) Test, ea. (ea.)"	July13
829	Pay Items	5	Add "7.02, Pre-Augering of Piles, l.f. (m)"	July13
837	Pay Items	24	Change "Span Wire" to "Span Wire (Type)"	July12
845	Index	6	Add page 133 to "Acceptance of Project"	Jan05
846	Index	13	Add page 107 to "Bids: Consideration of"	Jan05
847	Index	28	Add page 132 to "Cleaning Up, Final"	Jan05
849	Index	25	Add page 107 to "Consideration of Bids"	Jan05
849	Index	39	Add page 108 to "Contract: Intent of"	Jan05
850	Index	3	Add page 133 to "Contractor's: Responsibility, Termination of the"	Jan05

PG.	ARTICLE OR SUBARTICLE	LINE NO.	CORRECTION	REV. DATE
850	Index	13	Add page 114 to "Cooperation by Contractor"	Jan05
850	Index	15	Add page 114 to "Coordination of Special Provisions, Plans, Supplemental Specifications and Standard Specifications and Other Contract Requirements"	Jan05
850	Index	40	Add page 128 to "Cutting and Patching:"	Jan05
852	Index	16	Add page 106 to "Examination of Plans, Specifications, Special Provisions and Site of Work"	Jan05
852	Index	38	Insert "Facilities, Temporary…126"	Jan05
853	Index	7	Add page 132 to "Final: Cleaning Up"	Jan05
854	Index	35	Add page 115 to "Inspection"	Jan05
855	Index	11	Add page 108 to "Intent of Contract"	Jan05
855	Index	22	Add page 106 to "Knowledge of Applicable Laws"	Jan05
855	Index	25	Add page 106 to "Laws: Knowledge of Applicable"	Jan05
856	Index	27	Add page 120 to "Materials: Source of Supply and Quality"	Jan05
856	Index	28	Add page 121 to "Materials: Storage of"	Jan05
857	Index	33	Add page 133 to "Operation and Maintenance Manuals:"	Jan05
857	Index	34	Change page 133 to 136 for "Equipment and Systems Maintenance Manual"	Jan05
859	Index	2	Add page 131 to "Personnel and Equipment"	Jan05
860	Index	6	Add page 114 to "Plans: Coordination of Special Provisions, Supplemental Specifications and Standard Specifications and Other Contract Requirements"	Jan05
860	Index	7	Add page 106 to "Plans: Examination of"	Jan05
860	Index	30	Change page 108 to 112 for "Product Data"	Jan05
860	Index	31	Change page 108 to 112 for "Product Samples"	Jan05
860	Index	32	Add page 124 to "Product Selection:"	Jan05
861	Index	12	Add page 126 to "Prosecution of Work"	Jan05
861	Index	38	Change page 115 to 135 for "Record Drawings"	Jan05
863	Index	3	Add page 125 to "Sanitary Provisions"	Jan05
863	Index	18	Insert "Services, Temporary…126"	Jan05
863	Index	23	Add page 111 to "Shop Drawings"	Jan05
864	Index	4	Add page 106 to "Site of Work, Examination of"	Jan05
864	Index	12	Add page 120 to "Source of Supply and Quality"	Jan05
864	Index	19	Add page 114 to "Special Provisions: Coordination of Plans, Supplemental Specifications and Standard Specifications and Other Contract Requirements"	Jan05
864	Index	20	Add page 106 to "Special Provisions: Examination of"	Jan05
864	Index	26	Add page 114 to "Specifications: Coordination of Plans, Special Provisions and Other Contract Requirements"	Jan05
864	Index	27	Add page 106 to "Specifications: Examination of"	Jan05
864	Index	43	Add page 121 to "Storage"	Jan05
865	Index	27	Delete page 108 from "Submittals: Shop Drawings"	Jan05
865	Index	45	Insert "Temporary Utilities, Services, and Facilities…126"	Jan05
866	Index	2	Add page 133 to "Termination of Contractor's Responsibility"	Jan05
866	Index	23	Insert "Training…137"	Jan05
866	Index	45	Add page 133 to "Utility Services"	Jan05
867	Index	8	Insert "Warranties…121"	Jan05
867	Index	24	Add page 126 to "Work: Prosecution of"	Jan05

CONNECTICUT
SUPPLEMENTAL SPECIFICATION
SECTION 1.01
DEFINITIONS OF TERMS AND PERMISSIBLE ABBREVIATIONS

1.01.01 — Definitions:

After the end of the definition for "Plans" *insert the following Subarticle:*

" A. Standard Sheets – Standardized plans containing details approved by the Department and the FHWA, for construction of a given type on any project, included in contracts on an as-needed basis."

After the definition for "Subcontractor" *add the following definition:*

"**SUBSTANTIAL COMPLETION:** The date at which the performance of all work on the Project has been completed except minor or incidental items, final cleanup, work required under a warranty, and repair of unacceptable work, and provided the Engineer has determined that:

A. The Project is safe and convenient for use by the public, and
B. All traffic lanes including all safety appurtenances are in their final configuration, and
C. Failure to complete the work and repairs excepted above does not result in the deterioration of other completed work; and provided further, that the value of work remaining to be performed, repairs, and cleanup is less than one percent (1%) of the estimated final Contract amount, and
D. If applicable a Certificate of Compliance has been issued."

1.01.02 — Abbreviations, Publications, and Standards:

Delete the entire Article and replace with the following:

" **1.01.02—Abbreviations, Publications and Standards:** Whenever one of the following abbreviations is used in the Contract, its meaning shall be interpreted as follows:
AA—Aluminum Association, Inc. (The)
AABC—Associated Air Balance Council
AAMA—American Architectural Manufacturers Association
AAPA—American Association of Port Authorities
AASHTO—American Association of State Highway and Transportation Officials: Wherever reference is made to an AASHTO Standard Method of Test or Standard Specification, it refers by letter and number to the method or specification published by AASHTO in the "Standard Specifications for Transportation Materials and Methods of Sampling and Testing". The edition governing the work shall be in effect on the date the Contract was advertised for solicitation of bids shall govern.

ABMA—American Bearing Manufacturers Association
ACGIH—American Council of Government Industrial Hygienists
ACI—ACI International (American Concrete Institute)
ADAAG—Americans with Disabilities Act (ADA) Accessibility Guidelines for Buildings and Facilities
AF&PA—American Forest & Paper Association
AGA—American Gas Association
AGC—Associated General Contractors of America (The)
AHA—American Hardboard Association
AHAM—Association of Home Appliance Manufacturers
AI—Asphalt Institute
AIA—The American Institute of Architects (The)
AISC—American Institute of Steel Construction
AISI—American Iron and Steel Institute
AITC—American Institute of Timber Construction
A.L.I.—Automotive Lift Institute
ALSC—American Lumber Standard Committee, Incorporated
AMCA—Air Movement and Control Association International, Inc.
ANLA—American Nursery and Landscape Association
ANSI—American National Standards Institute
AOAC—AOAC International
AOSA—Association of Official Seed Analysts
APA—APA-The Engineered Wood Association
API—American Petroleum Institute
AREMA—American Railway Engineering and Maintenance-of-Way Association
ARI—Air-Conditioning & Refrigeration Institute
ARTBA—American Road and Transportation Builders Association
ASA—Acoustical Society of America
ASC—Adhesive and Sealant Council
ASCE—American Society of Civil Engineers
ASHRAE—American Society of Heating, Refrigerating and Air-Conditioning Engineers
ASME—ASME International (The American Society of Mechanical Engineers International)
ASSE—American Society of Sanitary Engineering
ASTM—American Society of Testing and Materials (ASTM International): Wherever reference is made to an ASTM specification, test method, or practice, it refers by letter, number, or both to standards published by ASTM International in the "ASTM Standards Source™ Database". The edition governing the work shall be in effect on the date the Contract was advertised for solicitation of bids shall govern.
ATSSA—American Traffic Safety Services Association
AWI—Architectural Woodwork Institute
AWPA—American Wood-Preservers' Association
AWPI—American Wood Preservers Institute
AWS—American Welding Society: Wherever reference is made to an AWS materials specification, inspection methods, or welding procedures, it refers by section number to standards of the American Welding Society published in the applicable steel, or aluminum welding code. The edition governing the work shall be in effect on the date the Contract was advertised for solicitation of bids shall govern.
AWWA—American Water Works Association

BHMA—Builders Hardware Manufacturers Association
BIA—Brick Industry Association (The)
BOCA—BOCA International, Inc.
CBM—Certified Ballast Manufacturers Association
CCRL—Cement and Concrete Reference Laboratory
CDA—Copper Development Association (The)
CGA—Compressed Gas Association
CISCA—Ceilings and Interior Systems Construction Association
CLFMI—Chain Link Fence Manufacturers Institute
ConnDOT—Connecticut Department of Transportation
CFR—Code of Federal Regulations
CGS—Connecticut General Statutes
CISPI—Cast Iron Soil Pipe Institute
CRI—Carpet and Rug Institute (The)
CRSI—Concrete Reinforcing Steel Institute
CSI—Construction Specifications Institute (The)
CSSB—Cedar Shake & Shingle Bureau
CTI—Cooling Technology Institute
DASMA—Door and Access Systems Manufacturers Association, International
DEEP—Connecticut Department of Energy and Environmental Protection
DHI—Door and Hardware Institute
DOD—Department of Defense Military Specifications and Standards
~~DPUC—Department of Public Utility Control~~ *see PURA*
EIA—Electronic Industries Alliance
EPA—Environmental Protection Agency
FAA—Federal Aviation Administration
FCC—Federal Communications Commission
FCICA—Floor Covering Installation Contractors Association
FHWA—Federal Highway Administration
FMG—FM Global
FRA—Federal Railway Administration
FS—Wherever reference is made to FS in the contract, it refers by number, letter, or both, to the latest standard or tentative standard of the Federal Specification Unit, General Services Administration, Federal Supply Service, as to materials, specifications, or methods of testing, whichever the case may be.
FTA—Federal Transit Administration
HPVA—Hardwood Plywood & Veneer Association
GA—Gypsum Association
GANA—Glass Association of North America
GSA—General Services Administration
HI—Hydraulics Institute
HPVA—Hardwood Plywood & Veneer Association
ICC—International Code Council
ICC-ES—ICC Evaluation Service, Inc.
ICEA—Insulated Cable Engineers Association, Inc.
IEC—International Electrotechnical Commission
IEEE—Institute of Electrical and Electronics Engineers, Inc. (The)
IES—Illuminating Engineers Society
IESNA—Illuminating Engineering Society of North America

IGCC—Insulating Glass Certification Council
IGMA—Insulating Glass Manufacturers Alliance
IMSA—International Municipal Signal Association
IRI—HSB Industrial Risk Insurers
ISO—International Organization for Standardization
ITE—Institute of Traffic Engineers
KCMA—Kitchen Cabinet Manufacturers Association
LMA—Laminating Materials Association
LPI—Lightning Protection Institute
MBMA—Metal Building Manufacturers Association
MILSPEC—Military Specification and Standards
MMA—Monorail Manufacturers Association
MSHA—Mine Safety and Health Administration
MSS—Manufacturers Standardization Society of The Valve and Fittings the Valve Industry, Inc.
MUTCD—Manual on Uniform Traffic Control Devices
NAAMM—National Association of Architectural Metal Manufacturers
NADCA—National Air Duct Cleaners Association
NAIMA—North American Insulation Manufacturers Association (The)
NBFU—National Board of Fire Underwriters
NCHRP—National Cooperative Highway Research Program
NCMA—National Concrete Masonry Association
NCPI—National Clay Pipe Institute
NEBB—Natural Environmental Balancing Bureau
NEC—National Electrical Code
NECA—National Electrical Contractors Association
NEMA—National Electrical Manufacturers Association
NEPCOAT—North East Protective Coatings Committee
NESC—National Electrical Safety Code
NETA—InterNational Testing Association
NFPA—National Fire Protection Association
NFRC—National Fenestration Rating Council
NHLA—National Hardwood Lumber Association
NICET—National Institute for Certification in Engineering Technologies
NIOSH—National Institute of Occupational Safety and Health
NIST—National Institute of Standards and Technology
NLGA—National Lumber Grades Authority
NOAA—National Oceanic and Atmospheric Administration
NRCA—National Roofing Contractors Association
NSF—NSF International
NTMA—National Terrazzo and Mosaic Association, Inc.
OEO—Office of Equal Opportunity
OSHA—Occupational Safety and Health Administration
PCA—Portland Cement Association
PCI—Precast/Prestressed Concrete Institute
PDI—Plumbing & Drainage Institute
PTI—Post-Tensioning Institute
PURA—Public Utilities Regulatory Authority
RMA—Rubber Manufacturers Association

SAE—SAE International
SDI—Steel Deck Institute *or*
.....—Steel Door Institute
SFPA—Southern Forest Products Association
SJI—Steel Joist Institute
SMACNA—Sheet Metal and Air Conditioning Contractors National Association
SPIB—Southern Pine Inspection Bureau (The)
SPRI—Single Ply Roofing Institute
SSPC—Where reference is made to SSPC in the Contract, it refers by number, letter, or both, to the latest standard or tentative standard specification of The Society for Protective Coatings, Formerly the Steel Structures Painting Council, as to materials specifications, methods of testing, systems, procedures, inspection or other specification pertaining to any or all phases of cleaning or painting, whichever may apply.
SWRI—Sealant, Waterproofing, & Restoration Institute
TCA—Tile Council of America, Inc.
TIA—Telecommunications Industry Association
TIA/EIA—Telecommunications Industry Association/Electronics Industries Alliance
TPI—Truss Plate Institute, Inc.
TRB—Transportation Research Board
UFAS—Uniform Federal Accessibility Standards
UL—Underwriters Laboratories Inc.
USDA—United States Department of Agriculture
USGBC—U.S. Green Building Council
WCLIB—West Coast Lumber Inspection Bureau
WCSC—Window Covering Safety Council
WDMA—Window & Door Manufacturers Association
WWPA—Western Wood Products Association"

1.01.03 — Abbreviations and Terms:

Add the following abbreviations:

"**cu.dm** - Cubic Decimeter
cu.m - Cubic Meters
dm^3 - Cubic Decimeter
m^2 - Square Meter
m^3 - Cubic Meters
sq.m - Square Meter
Vert. M - Vertical Meter
vert.m - Vertical Meter"

CONNECTICUT
SUPPLEMENTAL SPECIFICATION
SECTION 1.03
AWARD AND EXECUTION OF THE CONTRACT

Replace Article 1.03.07 in its entirety with the following:

"1.03.07—Insurance:

Coverage shall be on a primary basis.

The Contractor shall carry and maintain at all times during the term of the Contract the insurance coverages required by this Article and any additional coverages(s) or higher minimum insurance coverage amount(s) required by the Special Provisions of the Contract.

If the Project includes work on or adjacent to railroad property additional insurance may be required as specified by the railroad. Please refer to the Special Provisions for any additional insurance requirements by the railroad.

1. **Worker's Compensation Insurance:** With respect to all operations the Contractor performs and all those performed for it by subcontractors, the Contractor shall carry, and require each subcontractor to carry, Workers' Compensation insurance as required by the laws of the State of Connecticut.

Employer's Liability insurance shall be provided in amounts not less than $100,000 per accident for bodily injury by accident; $100,000 policy limit by disease and $100,000 per employee for bodily injury by disease. Each Workers' Compensation policy shall contain the U.S. Longshoreman's and Harbor Workers' Act endorsement when work is to be performed over or adjacent to navigable water.

2. **Commercial General Liability Insurance:** With respect to the operations the Contractor performs and also those performed for it by subcontractors, the Contractor shall carry, and require each subcontractor to carry, Commercial General Liability insurance, including Contractual Liability, Products and Completed Operations, Broad Form Property Damage and Independent Contractors.

Products and completed operations insurance for ongoing and completed operations shall be maintained for a period of one (1) year after the acceptance of the project by the Department in accordance with Article 1.08.14. See chart below for applicable minimum coverage amounts.

Contract Amount ($)	Minimum Single Occurrence Amount ($)	Minimum Annual Aggregate Amount ($)
0-2,000,000	1,000,000	2,000,000
>2,000,001-10,000,000	2,000,000	4,000,000
>10,000,000	4,000,000	8,000,000

In Facilities construction projects, if underground work is to be undertaken, each policy shall have coverage for and exclusions removed for "Explosion, Collapse and Underground" ("XCU").

3. **Automobile Liability Insurance:** The Contractor shall obtain automobile liability insurance covering the operation of all motor vehicles, including those hired or borrowed, that are used in connection with the Project for all damages arising out of: (1) bodily injury to or death of all persons and/or (2) injury to or destruction of property; in any one accident or occurrence. This policy shall not be subject to an annual aggregate limitation. See chart above for applicable minimum coverage amounts.

4. **Owner's and Contractor's Protective Liability Insurance for and in the Name of the State:** With respect to the Contractor's Project operations and also those of its subcontractors, the Contractor shall carry, for and on behalf of the State for each accident or occurrence resulting in damages from (1) bodily injury to or death of persons and/or (2) injury to or destruction of property. See chart below for applicable minimum coverage amounts.

Contract Amount ($)	Minimum Single Occurrence Amount ($)	Minimum Annual Aggregate Amount ($)
0 - 20 Million	1,000,000	1,000,000
20 Million - 50 Million	2,000,000	2,000,000
> 50 Million	4,000,000	4,000,000

5. **Railroad Protective Liability Insurance:** When the Contract involves work within fifty (50) feet of the railroad right-of-way or State-owned rail property, with respect to Project operations and also those of its subcontractors, the Contractor shall carry, and require each subcontractor to carry, Railroad Protective Liability Insurance providing coverage of at least $2,000,000 for each accident or occurrence resulting in damages from (1) bodily injury to or death of all persons and/or (2) injury to or destruction of property, and subject to that limit per accident or occurrence, an aggregate coverage of at least $6,000,000 for all damages during the policy period, and with all entities falling within any of the following listed categories named as insured parties: (i) the owner of the railroad right-of-way, (ii) the owner of any railcar licensed or permitted to travel within that affected portion of railroad right-of-way, and (iii) the operator of any railcar licensed or permitted to travel within that affected portion of the railroad right-of-way, and with the State, if not falling within any of the above-listed categories, also named as an insured party.

6. **Blasting:** When explosives are to be used in the Project, the Commercial General Liability insurance policy shall include XCU coverage, in the same limits as the per occurrence policy limits.

7. **Protection and Indemnity Insurance for Marine Construction Operations in Navigable Waters:**

If a vessel of any kind will be involved in Project work, the Contractor shall obtain the following additional insurance coverage:

A. Protection and Indemnity Coverage of at least $300,000 per vessel or equal to at least the value of hull and machinery, whichever is greater.

B. If there is any limitation or exclusion with regard to crew and employees under the protection and indemnity form, the Contractor must obtain and keep in effect throughout the Project a workers' compensation policy, including coverage for operations under admiralty jurisdiction, with a limit of liability of at least $300,000 per accident or a limit equal to at least the value of the hull and machinery, whichever is greater, or for any amount otherwise required by statute.

8. **Builder's Risk Insurance:** For Facilities construction projects, the Contractor shall maintain comprehensive replacement cost builder's risk (completed value) insurance providing coverage for the entire work at the Project site, including all fixtures, machinery and equipment, any heating, cooling and constituting a permanent part of the building and shall cover portions of work located away from the site, but intended for use at the site. If it is determined that all or a portion of the project is located within an area designated as a Special Flood Hazard Area, the Contractor shall maintain flood insurance (no less than $10,000,000 sublimit). The State of Connecticut shall be named as Loss Payee. Equipment breakdown coverage may be sub limited to 50% of the project cost.

9. **Architects and Engineer's Professional Liability Insurance for Structural Engineer:** If required, limits will be specified in Article 1.03.07 of the Special Provisions of the Contract or Article 1.05.02.

10. **Umbrella Liability Insurance:** The Contractor may satisfy the minimum limits required for Commercial General Liability and Automobile Liability Insurance using Umbrella Liability Insurance. In the event that the Contractor obtains Umbrella Liability Insurance to meet the minimum coverage requirements for Commercial General Liability or Automobile Liability Insurance coverage, the Umbrella Liability Insurance policy shall have an annual aggregate at a limit not less than twice the single occurrence and must specifically endorse the State of Connecticut as an additional insured. Specifically for Bridge Projects with a low bid equal to or higher than $80,000,000, the Umbrella Liability Insurance policy must have a minimum limit of at least $25,000,000.

11. **Certificate of Insurance:** Before the Contract is executed, the Contractor must provide to the Department a certificate of insurance acceptable to the Commissioner and executed by an insurance company or companies satisfactory to the State of Connecticut for the insurance coverage(s) required by this Article and the Special

Provisions of the Contract. The Contractor shall maintain the required insurance coverage during the entire term of the Contract. The certificate of insurance must clearly include the name of the insured and identify the project for which it is being issued.

12. **Copies of Policies:** The Contractor shall provide, within five (5) business days, a copy or copies of all applicable insurance policies when requested by the State. In providing said policies, the Municipality may redact provisions of the policy that are proprietary. This provision shall survive the expiration or termination of the Contract.

13. **Sovereign Immunity:** The Contractor may not assert the defense of sovereign immunity in the adjustment of claims or in the defense of any claim or suit brought against the Contractor or the State, unless the State, in writing, requests that the Contractor do so or consents to its doing.

14. **Contractor Assumes Costs:** The Contractor shall assume and pay all costs and billings for premiums, deductibles, self-insured retentions and audit charges earned and payable under the required insurance.

15. **State Named as Additional Insured:** The State must be named as an additional insured party for the Commercial General Liability and Automobile Liability insurance policies required by this Article and the Special Provisions to the Contract, and any Umbrella Liability Insurance, as applicable, obtained in accordance with this Article. Each policy shall waive right of recovery (waiver of subrogation) against the State of Connecticut.

16. **Termination or Change of Insurance:**

A. The Contractor shall notify the Department of any cancelation of insurance carrier or change to the required insurance coverage by submitting a new insurance certificate to the Department immediately following said cancelation or change in required coverage.

B. It is the responsibility of the Contractor to maintain evidence of a current insurance coverage with the Department for the duration of contract. It is the responsibility of the Contractor to file with the Department all renewals and new certificates of insurance issued due to changes in policy terms or changes in insurance carriers prior to the expiration dates on the forms already on file with the Department.

17. **Duration of Coverage**. The Contractor shall keep all the required insurance in continuous effect until the date that the Department designates for the termination of the Contractor's responsibility, as defined by Article 1.08.14.

18. **Compensation:** There shall be no direct compensation allowed the Contractor on account of any premium or other charge necessary to obtain and keep in effect any insurance or bonds in connection with the Project, but the cost thereof shall be considered included in the general cost of the Project work."

CONNECTICUT
SUPPLEMENTAL SPECIFICATION
SECTION 1.05
CONTROL OF THE WORK

Article 1.05.08–Vacant:

Replace with the following:

"1.05.08—SCHEDULES AND REPORTS:

When a project coordinator is not required by the Contract the following shall apply:

Baseline Bar Chart Construction Schedule: Within 20 calendar days after contract award the Contractor shall develop a comprehensive bar chart as a baseline schedule for the project. The bar chart schedule shall be submitted to the Engineer for approval and shall be based on the following guidelines:

1. The bar chart schedule shall contain a list of activities that represents the major activities of the project. At a minimum, this list should include a breakdown by individual structure or stage, including major components of each. The bar chart schedule shall contain sufficient detail to describe the progression of the work in a comprehensive manner. As a guide, 10 to 15 bar chart activities should be provided for each $1 million of contract value. The following list is provided as an example only and is not meant to be all-inclusive or all-applicable:

General Activities Applicable to all projects

Project Constraints
- -Winter shutdowns
- -Environmental permits/application time of year restrictions
- -Milestones
- -Third Party approvals
- -Long lead time items (procurement and fabrication of major elements)
- -Adjacent Projects or work by others

Award
Notice to Proceed
Signing (Construction, temporary, permanent by location)
Mobilization
Permits as required
Field Office
Utility Relocations
Submittals/shop drawings/working drawings/product data
Construction of Waste Stock pile area
Clearing and Grubbing
Earthwork (Borrow, earth ex, rock ex etc.)
Traffic control items (including illumination and signalization)
Pavement markings
Roadway Construction (Breakdown into components)
Drainage (Breakdown into components)

Culverts
Plantings (including turf establishment)
Semi-final inspection
Final Cleanup

As required the following may supplement the activities listed above for the specific project types indicated:

a. For bridges and other structures, include major components such as abutments, wingwalls, piers, decks and retaining walls; further breakdown by footings, wall sections, parapets etc.

Temporary Earth Retention Systems
Cofferdam and Dewatering
Structure Excavation
Piles/test piles
Temporary Structures
Removal of Superstructure
Bearing Pads
Structural Steel (Breakdown by fabrication, delivery, installation, painting etc.)
Bridge deck

b. Multiple location projects such as traffic signal, incident management, lighting, planting and guiderail projects will be broken down first by location and then by operation. Other major activities of these types of projects should include, but are not limited to:

Installation of anchors
Driving posts
Foundations
Trenching and Backfilling
Installation of Span poles/mast arms
Installation of luminaries
Installation of cameras
Installation of VMS
Hanging heads
Sawcut loops
Energizing equipment

c. Facility Projects – Facilities construction shall reflect the same breakdown of the project as the schedule of values:

Division 2 – Existing Conditions
Division 3 – Concrete
Division 4 – Masonry
Division 5 – Metals
Division 6 – Wood, Plastic, and Composites
Division 7 – Thermal and Moisture Protection
Division 8 – Openings

Division 9 – Finishes
Division 10 – Specialties
Division 11 – Equipment
Division 12 - Furnishings
Division 13 – Special Construction
Division 14 – Conveying Equipment
Division 21 – Fire Suppression
Division 22 – Plumbing
Division 23 – Heating, Ventilating, and Air Conditioning
Division 26 – Electrical
Division 27 – Communications
Division 28 – Electronic Safety and Security
Division 31 – Earthwork
Division 32 – Exterior Improvements
Division 33 - Utilities

2. If the Engineer determines that additional detail is necessary, the Contractor shall provide it.
3. Each activity shall have a separate schedule bar. The schedule timeline shall be broken into weekly time periods with a vertical line to identify the first working day of each week.
4. The bar chart schedule shall show relationships among activities. The critical path for the Project shall be clearly defined on the schedule. The schedule shall show milestones for major elements of work, and shall be prepared on a sheet, or series of sheets of sufficient width to show data for the entire construction period.
5. If scheduling software is used to create the bar chart schedule, related reports such as a predecessor and successor report, a sort by total float, and a sort by early start shall also be submitted.

6. Project activities shall be scheduled to demonstrate that the construction completion date for the Project will occur prior to expiration of the Contract time. In addition, the schedule shall demonstrate conformance with any other dates stipulated in the Contract.
7. The Contractor is responsible to inform its subcontractor(s) and supplier(s) of the project schedule and any relevant updates.
8. There will be no direct payment for furnishing schedules, the cost thereof shall be considered as included in the general cost of the work.
9. For projects without a Mobilization item, 5% of the contract value will be withheld until such time as the Baseline Schedule is approved.

Monthly Updates: No later than the 10th day of each month, unless directed otherwise by the Engineer, the Contractor shall deliver to the Engineer three copies of the schedule to show the work actually accomplished during the preceding month, the actual time spent on each activity, and the estimated time needed to complete any activity which has been started but not completed. Each time bar shall indicate, in 10% increments, the estimated percentage of that activity which remains to be completed. As the Project progresses, the Contractor shall place a contrasting mark in each bar to indicate the actual percentage of the activity that has been completed.

The monthly update shall include revisions of the schedule necessitated by revisions to the Project directed by the Engineer (including, but not limited to extra work), during the month preceding the update. Similarly, any changes of the schedule required due to changes in the Contractor's planning or progress shall also be included. The Engineer reserves the right to reject any such revisions. If the schedule revisions extend the contract completion date, due to extra or added work or delays beyond the control of the Contractor, the Contractor shall submit a request in writing for an extension of time in accordance with Article 1.08.08. This request shall be supported by an analysis of the schedules submitted previously.

Any schedule revisions shall be identified and explained in a cover letter accompanying the monthly update. The letter shall also describe in general terms the progress of the Project since the last schedule update and shall identify any items of special interest.

If the Contractor fails to provide monthly schedule updates, the Engineer has the right to hold 10% of the monthly estimated payment, or $5,000, whichever is less, until such time as an update has been provided in accordance with this provision.

Biweekly Schedules: Each week, the Contractor shall submit to the Engineer a two week look-ahead schedule. This short-term schedule may be handwritten but shall clearly indicate all work planned for the following two week period.

Recovery Schedules: If the updated schedule indicates that the Project has fallen behind schedule, the Contractor shall either submit a time extension request in accordance with 1.08.08 or immediately institute steps acceptable to the Engineer to improve its progress of the Project. In such a case, the Contractor shall submit a recovery plan, as may be deemed necessary by the Engineer, to demonstrate the manner in which an acceptable rate of progress will be regained."

Article 1.05.12–Payrolls:

Replace the first paragraph with the following:

"For each week of the Project from the first week during which an employee of the Contractor does Project work to which prevailing wage requirements apply, until the last week on which such an employee does such work, the Contractor shall furnish to the Engineer certified copies of payrolls showing (a) the names of the employees who worked on the Project and whose work is subject to prevailing wage requirements, (b) the specific days and hours and numbers of hours that each such employee worked on the Project, and (c) the amount of money paid to each such employee for Project work. Each such payroll shall include the statement(s) of compliance with prevailing wage laws required by the State of Connecticut and, if applicable, by the Federal government. Said payrolls must contain all information required by Connecticut General Statutes Section 31-53 (as it may be revised). For contracts subject to Federal prevailing wage requirements, each payroll shall also contain the information required by the Davis Bacon and Related Acts (DBR). All of the payroll requirements in this Article shall also apply to the work of any subcontractor or other party that performs work on the Project site, and the Contractor shall be responsible for ensuring that each such party meets said requirements."

Article 1.05.15–Markings for Underground Facilities:

Replace the beginning of the first sentence with the following:

"In conformance with Sections 16-345 through 16-359 of the Regulations of the PURA state statutes, the Contractor is responsible for notifying 'Call Before You Dig' ..."

After **Article 1.05.16–Dimensions and Measurements**, *add the following article:*

"1.05.17 - WELDING

The Contractor shall ensure that all welding of materials permanently incorporated into the work, and welding of materials used temporarily during construction of the work is performed in accordance with the following codes:

- American Welding Society (AWS) Structural Welding Code – Steel – ANSI/AWS D1.1: Miscellaneous steel items that are statically loaded including but not limited to columns, and floor beams in buildings, railings, sign supports, cofferdams, tubular items, and modifications to existing statically loaded structures.
- AWS Structural Welding Code – Aluminum – AWS D1.2/D1.2M: Any aluminum structure or member including but not limited to brackets, light standards, and poles.
- AWS Structural Welding Code – Sheet Steel – AWS D1.3/D1.3M: Sheet steel and cold-formed members 0.18 in.(4.6 mm) or less in thickness used as, but not limited, to decking and stay-in-place forms.
- AWS Structural Welding Code – Reinforcing Steel – AWS D1.4/D1.4M: Steel material used in the reinforcement of cast-in-place or pre-cast Portland cement concrete elements including but not limited to bridge decks, catch basin components, walls, beams, deck units, and girders.
- AASHTO/AWS – Bridge Welding Code, AASHTO/AWS D1.5/D1.5M: Steel highway bridges and other dynamically loaded steel structures. Also includes sign supports, and any other fracture critical structure.

The edition governing the work shall be in effect on the date the Contract was advertised for solicitation of bids.

The Contractor is responsible to provide a Certified Welding Inspector in accordance with the above noted codes. The cost for this service is included in the general cost of the work.

All welders shall be certified by the Engineer in accordance with Section 6.03."

CONNECTICUT
SUPPLEMENTAL SPECIFICATION
SECTION 1.07
LEGAL RELATIONS AND RESPONSIBILITIES

Article 1.07.05 – Load Restrictions

Delete the entire article and replace with the following:

"**Article 1.07.05 – Load Restrictions**

(a) Vehicle Weights: This subarticle will apply to travel both on existing pavements and pavements under construction. The Contractor shall comply with all legal load restrictions as to vehicle size, the gross weight of vehicles, and the axle weight of vehicles while hauling materials. Throughout the duration of the contract, the Contractor shall take precautions to ensure existing and newly installed roadway structures and appurtenances are not damaged by construction vehicles or operations.

Unless otherwise noted in contract specifications or plans, on and off road equipment of the Contractor, either loaded or unloaded, will not be allowed to travel across any bridge or on any highway when such a vehicle exceeds the statutory limit or posted limit of such bridge or highway. Should such movement of equipment become necessary the Contractor shall apply for a permit from the Department for such travel, as provided in the Connecticut General Statutes (CGS). The movement of any such vehicles within the project limits or detour routes shall be submitted to the Engineer for project record. Such permit or submittal will not excuse the Contractor from liability for damage to the highway caused by its equipment.

The Contractor is subject to fines, assessments and other penalties that may be levied as a result of violations by its employees or agents of the legal restrictions as to vehicle size and weight.

(b) Storage of Construction Materials/Equipment on Structures: Storage is determined to be non-operating equipment or material. The Contractor shall not exceed the statutory limit or posted limit for either an existing or new structure when storing materials and/or construction equipment. When a structure is not posted, then the maximum weight of equipment or materials stored in each 12 foot wide travel lane of any given span shall be limited to 750 pounds per linear foot combined with a 20,000 pound concentrated load located anywhere within the subject lane. If anticipated storage of equipment or material exceeds the above provision, then the Contractor shall submit his proposal of storage supported by calculations stamped by a Professional Engineer registered in the State of Connecticut, the the Engineer for approval 14 days prior to the storage operation. Operations related to structural steel demolition or erection shall follow the guidelines under Section 6.03. All other submittals shall include a detailed description of the material/equipment to be stored, the quantity of storage if it is stockpiled materials, the storage location, gross weight with supporting calculations if applicable, anticipated duration of storage and any environmental safety, or traffic protection that may be required. Storage location on the structure shall be clearly defined in the field. If structures are in a state of staged construction or demolition, additional structural analysis may be required prior to authorization of storage."

Article 1.07.18 – Use of State Property

After Subarticle **(h)** *add the following sentence:*

"Gore areas are not available for disposal of surplus material."

CONNECTICUT
SUPPLEMENTAL SPECIFICATION
SECTION 1.08
PROSECUTION AND PROGRESS

Article 1.08.01 – Transfer of Work or Contract:

Replace the last paragraph with the following paragraphs:

" The Contractor shall not sublet, sell, transfer, assign, or otherwise dispose of the Contract or any portion thereof, or of the work provided for therein, or of its right, title, or interest therein, to any individual or entity without the written consent of the Commissioner. No payment will be made for such work until written consent is provided by the Commissioner.

The Contractor shall pay the subcontractor for work performed within thirty (30) days after the Contractor receives payment for the work performed by the subcontractor. Withholding retainage by the Contractor, subcontractor or lower tier subcontractors is not allowed.

Payment for work that has been performed by a subcontractor does not eliminate the Contractor's responsibilities for all the work as defined in Article 1.07.12, "Contractor's Responsibility for Work."

Payment for work that has been performed by a subcontractor also does not release the subcontractor from its responsibility for maintenance and other periods of subcontractor responsibility specified for the subcontractor's items of work. Failure of a subcontractor to meet its maintenance, warranty or defective work responsibilities may result in administrative action on future Department contracts.

For any dispute regarding prompt payment, the alternate dispute resolution provisions of this article shall apply.

The above requirements are also applicable to all sub-tier subcontractors and the above provisions shall be made a part of all subcontract agreements.

Failure of the Contractor to comply with the provisions of this section may result in a finding that the Contractor is nonresponsible as a bidder for a Department contract."

Article 1.08.07 – Determination of Contract Time:

Replace the fifth paragraph with the following:

" The total elapsed time in calendar days, computed as described above, from the commencement date specified in the Engineer's "Notice to Proceed" to the "Substantial Completion" date specified in the Engineer's "Notice of Substantial Completion" shall be considered as the time used in the performance of the Contract work."

Article 1.08.09 – Failure to Complete Work on Time:

Replace the second paragraph with the following:

" If the last day of the initial Contract time or the initial Contract date determined for

Substantial Completion is before December 1 in the given year, liquidated damages as specified in the Contract shall be assessed against the Contractor per calendar day (including any days during a winter shutdown period) from that day until the date on which the Project is substantially completed."

1.08.12—Final Inspection:

Replace the first paragraph with the following:

" If the Engineer determines that the work may be substantially complete, a Semi Final Inspection will be held as soon as practical. After the Semi Final Inspection is held and the Engineer determines that the requirements for Substantial Completion have been satisfied the Engineer will prepare a "Notice of Substantial Completion".
When the Contractor has completed all work listed in the "Notice of Substantial Completion" the Contractor shall prepare a written notice requesting a Final Inspection and a "Certificate of Acceptance of Work". The Engineer will hold an Inspection of the Project as soon as practical after the Engineer determines that the Project may be completed. If the Engineer deems the Project complete, said inspection shall constitute the Final Inspection, and the Engineer will notify the Contractor in writing that the Final Inspection has been performed."

1.08.13 – Acceptance of Work and Termination of the Contractor's Responsibility:

Replace the only paragraph with the following:

" The Contractor's responsibility for non-administrative Project work will be considered terminated when the final inspection has been held, any required additional work and final cleaning-up have been completed, all final operation and maintenance manuals have been submitted, and all of the Contractor's equipment and construction signs have been removed from the Project site. When these requirements have been met to the satisfaction of the Engineer, the Commissioner will accept the work by certifying in writing to the Contractor that the non-administrative Project work has been completed."

CONNECTICUT
SUPPLEMENTAL SPECIFICATION
SECTION 1.09
MEASUREMENT AND PAYMENT

Article 1.09.04 – Extra and Cost-Plus Work

Delete existing subarticle (e) and replace with the following:

"**(e) Administrative Expense:** When extra work on a cost-plus basis is performed by an authorized subcontractor, the Department will pay the Contractor an additional 7.5% for that work; such payment will be in addition to the percentage payments described in (a), (b), (c) and (d) above, as a reimbursement for the Contractor's administrative expense in connection with such work. Approval of such additional payments will be given only after the Contractor provides to the Engineer receipted invoices for all relevant costs."

Change letter designation (g) *for subarticle* **Miscellaneous** *back to original* "**(f)**".

Delete entire subarticle "**(f) Bonding Costs:**" *that was added in the July 2008 Supplemental Specifications.*

Article 1.09.06 – Partial Payments:

In the first paragraph under **A. Monthly and Semi-monthly Estimates:**, *delete the second, third and fourth sentences and replace the remainder of subarticle (1) with the following:*

"Retainage will not be held.

Exceptions may be made as follows:

(a) When not in conflict with the interests of the State, the Contractor may request, and the Engineer may make, semi-monthly estimates for payment.
(b) If, in the judgment of the Assistant District Engineer, the Project is not proceeding in accordance with the Contract the Engineer may decline to make a payment estimate.
(c) If the total value of the Project work complete since the last estimate amounts to less than $2,500 the Engineer also may decline to make a payment estimate."

Replace the first paragraph of subarticle **B. Payment for Stored Materials:** *with the following:*

"**B. Payment for Stored Materials:** Non-perishable materials that are required for Project construction and that the Contractor has produced or purchased specifically for incorporation into the Project, but which have not yet been so incorporated, may be

included in a payment estimate if

(i) the materials meet all applicable Contract specifications,

(ii) the materials have been delivered to the Project site or to another location approved by the Engineer, and

(iii) the Contractor has submitted to the Engineer, as evidence of the Contractor's purchase of the materials, either a copy of a receipted bill for same or a Certificate of Title to the materials, in the form approved by the Department, duly-executed by the Contractor and Vendor.

The Engineer will decide at what fair and appropriate fraction of the applicable Contract price such materials may be included in a payment estimate."

Article 1.09.07 – Final Payment:

Replace the entire article with the following:

"**1.09.07 – Final Payment:** When the Commissioner has accepted the Project in accordance with Article 1.08.14, the Engineer will prepare a final payment estimate."

CONNECTICUT
SUPPLEMENTAL SPECIFICATION
SECTION 1.10
ENVIRONMENTAL COMPLIANCE

Add the following Article:

1.10.08 – VEHICLE EMISSIONS

All motor vehicles and/or construction equipment (both on-highway and non-road) shall comply with all pertinent State and Federal regulations relative to exhaust emission controls and safety.

The Contractor shall establish staging zones for vehicles that are waiting to load or unload at the contract area. Such zones shall be located where the emissions from the vehicles will have minimum impact on abutters and the general public.

Idling of delivery trucks, dump trucks, and other equipment shall not be permitted in excess of 3 minutes during periods of non-activity except as allowed by the Regulations of Connecticut State Agencies Section 22a-174-18(b)(3)(c):

No mobile source engine shall be allowed "to operate for more than three (3) consecutive minutes when the mobile source is not in motion, except as follows:

(i) When a mobile source is forced to remain motionless because of traffic conditions or mechanical difficulties over which the operator has no control,

(ii) When it is necessary to operate defrosting, heating or cooling equipment to ensure the safety or health of the driver or passengers,

(iii) When it is necessary to operate auxiliary equipment that is located in or on the mobile source to accomplish the intended use of the mobile source,

(iv) To bring the mobile source to the manufacturer's recommended operating temperature,

(v) When the outdoor temperature is below twenty degrees Fahrenheit (20 degrees F) [negative seven degrees Celsius (-7 degrees C)],

(vi) When the mobile source is undergoing maintenance that requires such mobile source be operated for more than three (3) consecutive minutes, or

(vii) When a mobile source is in queue to be inspected by U.S. military personnel prior to gaining access to a U.S. military installation."

All work shall be conducted to ensure that no harmful effects are caused to adjacent sensitive receptors. Sensitive receptors include but are not limited to hospitals, schools, daycare facilities, elderly housing and convalescent facilities. Engine exhaust shall be located away from fresh air intakes, air conditioners, and windows.

A Vehicle Emissions Mitigation plan will be required for areas where extensive work will be performed within (less than 50 feet (15 meters)) to sensitive receptors. No work will proceed until a sequence of construction and a Vehicle Emissions Mitigation plan is submitted in writing to the Engineer for review and all comments are addressed in a manner acceptable to the Engineer. The mitigation plan must address the control of vehicle emissions from all vehicles and construction equipment.

Any costs associated with this "Vehicle Emissions" article shall be included in the general cost of the Contract. In addition, there shall be no time granted to the contractor for compliance with this notice. The contractor's compliance with this notice and any associated regulations shall not be grounds for claims as outlined in Section 1.11 – "Claims".

CONNECTICUT
SUPPLEMENTAL SPECIFICATION
SECTION 1.11
CLAIMS

Add the following Section:

SECTION 1.11
CLAIMS

1.11.01 – General
1.11.02 – Notice of Claim
1.11.03 – Record Keeping
1.11.04 – Claim Compensation
1.11.05 – Required Claim Documentation
1.11.06 – Auditing of Claims

1.11.01 – General: When filing a formal claim under Section 4-61 (referred to as "Section 4-61" below) of the C.G.S. (as revised), either as a lawsuit in the Superior Court or as a demand for arbitration, the Contractor must follow the procedures and comply with the requirements set forth in this Section of the Specifications. This Section does not, unless so specified, govern informal claims for additional compensation which the Contractor may bring before the Department. The Contractor should understand, however, that the Department may need, before the Department can resolve such a claim, the same kinds of documentation and other substantiation that it requires under this Section. It is the intent of the Department to compensate the Contractor for actual increased costs caused by or arising from acts or omissions on the part of the Department that violate legal or contractual duties owed to the Contractor by the Department.

1.11.02 – Notice of Claim: Whenever the Contractor intends to file a formal claim against the Department under Section 4-61, seeking compensation for additional costs, the Contractor shall notify the Commissioner in writing (in strict compliance with Section 4-61) of the details of said claim. Such written notice shall contain all pertinent information described in Article 1.11.05 below.

Once formal notice of a claim under C.G.S. Section 4-61 (b) (as revised) has been given to the Commissioner, the claimant may not change the claim in any way, in either concept or monetary amount, (1) without filing a new notice of claim and demand for arbitration to reflect any such change and (2) without the minimum period of six months after filing of the new demand commencing again and running before any hearing on the merits of the claim may be held. The only exception to this limitation will be for damages that continue to accrue after submission of the notice, in ways described and anticipated in the notice.

1.11.03 – Record Keeping: The Contractor shall keep daily records of all costs incurred in connection with its construction-related activities on behalf of the Department. These daily records shall identify each aspect of the Project affected by

matters related to any claim for additional compensation that the Contractor has filed, intends to file, or has reason to believe that it may file against the Department; the specific Project locations where Project work has been so affected; the number of people working on the affected aspects of the Project at the pertinent time(s); and the types and number of pieces of equipment on the Project site at the pertinent time(s). If possible, any potential or anticipated effect on the Project's progress or schedule which may result in a claim by the Contractor should also be noted contemporaneously with the cause of the effect, or as soon thereafter as possible.

1.11.04 – Claim Compensation: The payment of any claim, or any portion thereof, that is deemed valid by the Engineer shall be made in accordance with the following provisions of this Article:

(a) Compensable Items: The liability of the Department for claims will be limited to the following specifically-identified items of cost, insofar as they have not otherwise been paid for by the Department, and insofar as they were caused solely by the actions or omissions of the Department or its agents (except that with regard to payment for extra work, the Department will pay to the Contractor the mark-ups provided for in Article 1.04.05.):

(1) Additional Project-site labor expenses.
(2) Additional costs for materials.
(3) Additional, unabsorbed Project-site overhead (**e.g.**, for mobilization and demobilization).
(4) Additional costs for active equipment.
(5) For each day of Project delay or suspension caused solely by actions or omissions of the Department, either
   (i) an additional ten percent (10%) of the total amount of the costs identified in Subarticles (1) through (4) above; except that if the delay or suspension period prevented the Contractor from incurring enough Project costs under Subarticles (1) through (4) during that period to require a payment by the Department that would be greater than the payment described in subparagraph (ii) below, then the payment for affected home office overhead and profit shall instead be made in the following *per diem* amount:
   (ii) six percent (6%) of the original total Contract amount divided by the original number of days of Contract time.

Payment under either (i) or (ii) hereof shall be deemed to be complete and mutually-satisfactory compensation for any unabsorbed home office overhead and any profit related to the period of delay or suspension.

(6) Additional equipment costs. Only actual equipment costs shall be used in the calculation of any compensation to be made in response to claims for additional Project compensation. Actual equipment costs shall be based upon records kept in the normal course of business and in accordance with generally-accepted accounting principles. Under no circumstances shall Blue Book or other guide or rental rates be used for this purpose (unless the Contractor had to rent the equipment from an unrelated party, in which case the actual rental charges paid by the Contractor, so long as they are reasonable, shall be used). Idle equipment, for instance, shall be paid for based only on its actual cost to the Contractor.

(7) Subcontractor costs limited to, and determined in accordance with, Subarticles (1), (2), (3), (4), and (5) above and applicable statutory and case law. Such subcontractor costs may be paid for by the Department only (a) in the context of an informal claims settlement or (b) if the Contractor has itself paid or legally-assumed, present unconditional liability for those subcontractor costs.

(b) Non-Compensable Items: The Department will have no liability for the following specifically-identified non-compensable items:

(1) Profit, in excess of that provided for herein.
(2) Loss of anticipated profit.
(3) Loss of bidding opportunities.
(4) Reduction of bidding capacity.
(5) Home office overhead in excess of that provided for in Article 1.11.04(a)(5) hereof.
(6) Attorneys fees, claims preparation expenses, or other costs of claims proceedings or resolution.
(7) Any other consequential or indirect expenses or costs, such as tort damages, or any other form of expense or damages not provided for in these Specifications or elsewhere in the Contract.

1.11.05 – Required Claim Documentation: All claims shall be submitted in writing to the Commissioner, and shall be sufficient in detail to enable the Engineer to ascertain the basis and the amount of each claim, and to investigate and evaluate each claim in detail. As a minimum, the Contractor must provide the following information for each and every claim and sub-claim asserted:

(a) A detailed factual statement of the claim, with all dates, locations and items of work pertinent to the claim.
(b) A statement of whether each requested additional amount of compensation or extension of time is based on provisions of the Contract or on an alleged breach of the Contract. Each supporting or breached Contract provision and a statement of the reasons why each such provision supports the claim, must be specifically identified or explained.
(c) Excerpts from manuals or other texts which are standard in the industry, if available, that support the Contractor's claim.
(d) The details of the circumstances that gave rise to the claim.
(e) The date(s) on which any and all events resulting in the claim occurred, and the date(s) on which conditions resulting in the claim first became evident to the Contractor.
(f) Specific identification of any pertinent document, and detailed description of the substance of any material oral communication, relating to the substance of such claim.
(g) If an extension of time is sought, the specific dates and number of days for which it is sought, and the basis or bases for the extension sought. A critical path method, bar chart, or other type of graphical schedule that supports the extension must be submitted.
(h) When submitting any claim over $50,000, the Contractor shall certify in writing, under oath and in accordance with the formalities required by the contract, as to the following:
    (1) That supporting data is accurate and complete to the Contractors best

knowledge and belief;

(2) That the amount of the dispute and the dispute itself accurately reflects what the Contractor in good faith believes to be the Departments liability;

(3) The certification shall be executed by:

a. If the Contractor is an individual, the certification shall be executed by that individual.

b. If the Contractor is not an individual, the certification shall be executed by a senior company official in charge at the Contractor's plant or location involved or an officer or general partner of the Contractor having overall responsibility for the conduct of the Contractors affairs.

1.11.06 – Auditing of Claims: All claims filed against the Department shall be subject to audit by the Department or its agents at any time following the filing of such claim. The Contractor and its subcontractors and suppliers shall cooperate fully with the Department's auditors. Failure of the Contractor, its subcontractors, or its suppliers to maintain and retain sufficient records to allow the Department or its agents to fully evaluate the claim shall constitute a waiver of any portion of such claim that cannot be verified by specific, adequate, contemporaneous records, and shall bar recovery on any claim or any portion of a claim for which such verification is not produced. Without limiting the foregoing requirements, and as a minimum, the Contractor shall make available to the Department and its agents the following documents in connection with any claim that the Contractor submits:

(1) Daily time sheets and foreman's daily reports.
(2) Union agreements, if any.
(3) Insurance, welfare, and benefits records.
(4) Payroll register.
(5) Earnings records.
(6) Payroll tax returns.
(7) Records of property tax payments.
(8) Material invoices, purchase orders, and all material and supply acquisition contracts.
(9) Materials cost distribution worksheets.
(10) Equipment records (list of company equipment, rates, etc.).
(11) Vendor rental agreements
(12) Subcontractor invoices to the Contractor, and the Contractor's certificates of payments to subcontractors.
(13) Subcontractor payment certificates.
(14) Canceled checks (payroll and vendors).
(15) Job cost reports.
(16) Job payroll ledger.
(17) General ledger, general journal (if used), and all subsidiary ledgers and journals, together with all supporting documentation pertinent to entries made in these ledgers and journals.
(18) Cash disbursements journals.
(19) Financial statements for all years reflecting the operations on the Project.
(20) Income tax returns for all years reflecting the operations on the Project.
(21) Depreciation records on all company equipment, whether such records are maintained by the company involved, its accountant, or others.

(22) If a source other than depreciation records is used to develop costs for the Contractor's internal purposes in establishing the actual cost of owning and operating equipment, all such other source documents.
(23) All documents which reflect the Contractor's actual profit and overhead during the years that the Project was being performed, and for each of the five years prior to the commencement of the Project.
(24) All documents related to the preparation of the Contractor's bid, including the final calculations on which the bid was based.
(25) All documents which relate to the claim or to any sub-claim, together with all documents that support the amount of damages as to each claim or sub-claim.
(26) Worksheets used to prepare the claim, which indicate the cost components of each item of the claim, including but not limited to the pertinent costs of labor, benefits and insurance, materials, equipment, and subcontractors' damages, as well as all documents which establish the relevant time periods, individuals involved, and the Project hours and the rates for the individuals.
(27) The name, function, and pertinent activity of each Contractor's or subcontractor's official, or employee involved in or knowledgeable about events that give rise to, or facts that relate to, the claim.
(28) The amount(s) of additional compensation sought and a break-down of the amount(s) into the categories specified as payable under Article 1.11.04 above.
(29) The name, function, and pertinent activity of each Department official, employee or agent involved in or knowledgeable about events that give rise to, or facts that relate to, the claim.

CONNECTICUT
SUPPLEMENTAL SPECIFICATION
SECTION 1.20
GENERAL CLAUSES FOR FACILITIES CONSTRUCTION

1.20-1.00 – General:

Delete the last sentence of the first paragraph and replace with the following:

"Facilities Construction is defined as the type of construction that requires the issuance of a Certificate of Compliance (C.O.C.) by the State Building Inspector or his authorized representative at the completion of a project, and includes site work considered ancillary to this type of construction."

Add the following article:

1.20-1.01.01—Definitions:

OWNER: Where used herein, it is synonymous with Department or State.

1.20-1.02.04 – Examination of Plans, Specifications, Special Provisions and Site of Work:

Delete the first sentence of the first paragraph and replace with the following:

"CSI-formatted specifications are organized into Divisions and Sections based on the CSI's "MasterFormat" numbering system."

1.20-1.02.13 – Knowledge of Applicable Laws:

Delete Items 1 through 9 in their entirety and replace with the following:

1. "The 2003 International Building Code with the State Building Code, including latest Connecticut Supplement and Amendments.
2. The 2003 International Plumbing Code.
3. The 2003 International Mechanical Code.
4. The 2003 International Existing Building Code.
5. The 2009 International Energy Conservation Code.
6. The 2005 NFPA 70 National Electrical Code.
7. The 2003 ICC/ANSI A117.1.

8. The Fire Safety Code, including latest Connecticut Supplement and Amendments.
9. The 2003 International Fire Code.
10. The 2003 NFPA 1 Uniform Fire Code.
11. The 2003 NFPA 101 Life Safety Code."

Add the following as the new last paragraph:

"All work to be performed by the Contractor shall comply with the "Americans with Disabilities Act Accessibility Guidelines."

1.20-1.03.01 – Consideration of Bids:

Delete the entire article and replace with the following:

"The apparent low bidder shall submit to the Manager of Contracts a Schedule of Values within 14 days after bid opening. Any other Contractor that the Department may subsequently designate as the apparent lowest bidder shall make the aforesaid submission within 14 days from the date on which the Department notifies said Contractor that it has become the apparent lowest bidder. If, however, the Department deems it necessary for such a subsequently designated Contractor to make said submission within a shorter period of time, the Contractor shall make the submission within the time designated by the Department.

The total in the Schedule of Values shall equal the bid dollar amount for the Major Lump Sum Item (MLSI).

The Schedule of Values shall be divided into "Line Items" listed separately for each CSI Section of the Special Provisions. An additional line item for "Mobilization" may be incorporated into the Schedule of Values; however, this item may not exceed 10% of the value of the MLSI. The "Mobilization" line item will also include costs associated with "General Conditions" and "Insurance/Bonding." Where requested by the Department, the Contractor shall break down the line items further into more specific line items.

In the event that this Contract is terminated or a portion of this Contract is deleted for any reason or in any way allowable by law under this Contract after the apparent low bidder has been awarded the Contract, the Schedule of Values will <u>not</u> be used for estimating payment due the Contractor for work completed prior to such termination of the Contract or deletion of work thereunder. In the case of Contract termination, payment shall be made in accordance with Article 1.05.14."

1.20-1.05.02--Shop Drawings, Product Data, Product Samples and Quality Assurance Submittals

Delete the last sentence of the first paragraph and replace with the following:

"All facsimiles or other electronic documents from the Contractor shall be followed by an official transmittal."

Delete the third paragraph and replace with the following:

"The Contractor shall number each submittal consecutively: When resubmitting a "Revise and Resubmit" or "Rejected" submittal, the Contractor shall label the transmittal with the original submittal number followed by a letter to designate the additional submission. All submittals shall be numbered conforming to the following examples:"

In column B of line 001, line 001a, and line 001b of the table in subsection 1, replace "07511" with "075110."

Add the following to the end of the first paragraph of subsection 2:

"The Department reserves the right to return partial submittals unreviewed to the Contractor."

Revise the third paragraph of subsection 2 to read:

"The Contractor shall allow at least 60 calendar days for review of any submittal requiring approval by FAA, FTA, any railroad, DEP, U.S. Coast Guard, Army Corps of Engineers, or any other outside agency."

Delete the third and fourth paragraphs of subsection 3 and replace with the following:

"The Designer will not review submittals and the Engineer will not process payment estimates until the initial submittal schedule has been provided. Any delays in construction due to the Contractor's failure to provide a submittal schedule shall be the responsibility of the Contractor.

The Contractor must update its submittal schedule at least once a month, and distribute and post each updated schedule in the manner described above. The Engineer reserves the right not to process payment estimates without a recently updated submittal schedule on file."

Replace the first sentence of the first paragraph of subsection 4 with the following:

"Shop Drawings consist of fabrication and installation drawings, roughing-in and setting drawings, schedules, patterns, templates and similar drawings, and wiring diagrams showing field-installed wiring, including power, signal, and control wiring."

Replace the second paragraph of subsection 4 with the following:

"Shop drawings shall include the following information: Contract number, Project description, number and title of the drawing, date of drawing, revision number, name of Contractor and subcontractor submitting drawings, dimensions, identification of products, shopwork manufacturing instructions, design calculations, statement of compliance with Contractual standards, notation of dimensions established by field measurement, relationship to adjoining construction clearly indicated, seal and signature of a professional engineer if specified, and any other information required by individual Contract provisions."

Replace the first sentence of the first paragraph of subsection 5 with the following:

"Product data consist of printed information such as manufacturer's product specifications, manufacturer's installation instructions, manufacturer's catalog cuts, standard color charts, wiring diagrams showing factory-installed wiring, printed performance curves, operational range diagrams, and mill reports."

Replace the first sentence of the first paragraph of subsection 7 with the following:

"Quality assurance submittals consist of qualification data, design data, certifications, manufacturer's instructions, manufacturer's field reports, test reports, Material Safety Data Sheets (MSDSs), and other quality assurance information required by individual Contract provisions."

1.20-1.05.04—Coordination of Special Provisions, Plans, Supplemental Specifications and Standard Specifications and Other Contract Requirements:

Delete the first and second paragraphs and replace with the following:

"Industry Standards: Each entity engaged in construction of the Contract shall be familiar with industry standards applicable to that entity's construction activities. If printed standards have been established by organizations referenced in Article 1.01.02 or in the Contract, the Contractor shall obtain copies of said standards directly from the publication source.

Unless the Special Provisions include more stringent requirements, applicable construction industry standards have the same force and effect as if bound or copied directly into the Special Provisions to the extent referenced. Such standards are made a part of the Contract by reference."

Add the following article:

1.20-1.05.08—Schedules and Reports:

Daily Construction Reports: The Contractor shall assist the Engineer in the preparation of a daily construction report, by ensuring that each of the Contractor's employees and subcontractors working on the Project site on a given day signs the Engineer's sign-in sheet for that day; and by keeping and providing to the Engineer its own daily list of employees and subcontractors who worked on the Project site on that day.

Add the following article:

1.20-1.05.23—Requests for Information (RFIs):

The Contractor shall forward all RFIs to the Engineer in writing (facsimile or other electronic document) for review. The Engineer will forward the RFI to the Designer for review. Upon receipt of an RFI, the Designer will attempt to determine if additional information is required from the Contractor to respond to the RFI, and request said information from the Engineer.

All other RFIs will be responded to within 10 calendar days of receipt by the Designer.

1.20-1.05.24--Project Meetings:

Delete the third paragraph under subsection 1.

Delete the second paragraph under subsection 2 and replace with the following:

"The meeting participants shall review progress of other construction activities and preparations for the particular activity under consideration, including requirements of Contract documents, related requests for interpretations, related construction orders, purchases, deliveries, submittals, review of mockups, possible conflicts, compatibility problems, time schedules, weather limitations, manufacturer's written recommendations, warranty requirements, compatibility of materials, acceptability of substrates, temporary facilities and controls, space and access limitations, regulations of authorities having jurisdiction, testing and inspecting requirements, installation procedures coordination with other work, required performance results, protection of adjacent work, and protection of construction and personnel."

Delete the second, third and fourth paragraph under subsection 3 and replace with the following:

"The Contractor shall provide the Engineer with a detailed agenda for the proposed

meeting, specifying what topics will be covered. In addition to representatives of the Engineer, each subcontractor, supplier or other entity concerned with current progress or involved in planning, coordination or performance of future activities shall attend these meetings. All participants at the meeting shall be familiar with the Project and authorized to conclude matters relating to the Project.

At each progress meeting, the participants shall (1) review items of significance that could affect progress; (2) discuss topics appropriate to the current status of the Project; (3) review progress since the last meeting; (4) determine whether each activity is on time, ahead of schedule, or behind schedule, in relation to the Contractor's Construction Schedule; (5) determine how to expedite any Project work that may be behind schedule; (6) discuss whether or not schedule revisions are required to ensure that current and subsequent activities will be completed within the Contract time; and (7) review the present and future needs of each entity represented at the meeting, including such items as interface requirements, time, sequences, deliveries, off-site fabrication problems, access, site utilization, temporary facilities and controls, hours of work, hazards and risks, housekeeping, quality and work standards, status of correction of deficient items, field observations, requests for interpretations, status of proposal requests, pending changes, status of construction orders, and documentation of information for payment requests. The Engineer will distribute copies of minutes of the meeting to the Designer and the Contractor. The Contractor shall distribute copies to parties who were or should have been at the meeting."

*Delete article **1.20-1.05.25—Schedules and Reports** in its entirety*

1.20-1.06.08 - Warranties:

Delete the eighth and ninth paragraph and replace with the following:

"The Contractor shall:

(a) Bind warranties in heavy-duty, commercial-quality, durable 3-ring vinyl-covered loose-leaf binders, thick enough to accommodate the contents, and sized to receive 8 1/2-inch x 11-inch paper (216-millimeter x 279-millimeter) paper.

(b) Identify the binder's contents on the binder's front and spine with the typed or printed title "WARRANTIES," the Project title or name, and the name of the Contractor.

(c) Provide a heavy paper divider with a tab for each separate warranty.

(d) Mark the tab to identify the related product or installation.

(e) Provide a typed description of the product or installation, including the name of the product, and the name, address and telephone number of the Contractor or pertinent subcontractor.

(f) Furnish to the Department a written warranty for all Project work accompanied by a cover letter with the following contents:

[Addressed to:]

Commissioner of Transportation
Department of Transportation
P.O. Box 317546
Newington, Connecticut 06131-7546

Project Title and Number

[We] hereby warrant all materials and workmanship for all work performed under this Contract for a period of one (1) year from [date of issuance of C.O.C.] against failures of workmanship and materials in accordance with the Contract. Furthermore, as a condition of this warranty, [we] agree to have in place all insurance coverage identified in the Contract for the performance of any warranty work.

[Signature:] [Name of authorized signatory]
[Title]

(g) Submit to the Engineer, upon completion of installation of materials or assemblies that are required to have either a flame-rating or a fire-endurance hourly rating, a detailed letter certifying that the required rating has been attained.

Upon determination by the Engineer that Project work covered by a warranty has failed, the Contractor shall replace or rebuild the work to an acceptable condition complying with Contract requirements. The Contractor is responsible for the cost of replacing or rebuilding defective construction or components and those which may have needed to be damaged or removed in order to cure the defective work including costs of material, equipment, labor, and material disposal, regardless of whether or not the State has benefited from use of the work through a portion of its anticipated useful service life. The Contractor shall respond to the Project Site when Project work covered by a warranty has failed within 3 calendar days, unless in the Engineer's opinion said failure is deemed to be an emergency, in which case the Contractor shall respond to the Project Site as directed by the Engineer."

1.20-1.08.03—Prosecution of Work:

Under subsection '3. Cutting and Patching,' delete the heading 'B. Protection of Structural Elements' and replace with the following:

"**B. Protection:**"

Move the existing first and second paragraphs to under the following subparagraph:

"1. Structural Elements:"

Add the following after the first paragraph under B:

"2. Operational Elements: The Contractor shall not cut and patch operating elements and related components in a manner that results in their reducing their capacity to perform as intended or that results in increased maintenance or decreased operational life or safety.

3. Miscellaneous Elements: The Contractor shall not cut and patch miscellaneous elements or related components in a manner that could change their load-carrying capacity, that results reducing their capacity to perform as intended, or that results in increased maintenance or decreased operational life or safety."

Add the following after subsection 3:

"4. Selective Demolition:

A. Definitions:

Remove: The Contractor shall detach materials from existing construction and legally dispose or recycle them off-site, unless indicated to be removed and salvaged or removed and reinstalled. Except for materials indicated to be reused, salvaged,

reinstalled, or otherwise indicated to remain Engineer's property, demolished materials shall become Contractor's property and shall be removed from the Project Site.

Remove and Salvage: The Contractor shall detach materials from existing construction and deliver them to Engineer. The Engineer reserves the right to identify other materials for salvage during the course of demolition.

Remove and Reinstall: The Contractor shall detach materials from existing construction, prepare them for reuse, and reinstall them where indicated.

Existing to Remain: Existing materials of construction that are not to be removed and that are not otherwise indicated to be removed, removed and salvaged, or removed and reinstalled.

B. Approval Process:

The Contractor shall submit pre-demolition photographs to the Engineer prior to the commencement of Project work to show existing conditions of adjoining construction and site improvements, including finish surfaces, that might be misconstrued as damage caused by selective demolition operations.

Well in advance of performing any selective demolition on the Project, the Contractor shall submit to the Engineer a proposal describing the procedures that the Contractor intends to use for same.

The Contractor shall include the following information, as applicable, in its proposal: (1) detailed sequence of selective demolition and removal work with starting and ending dates for each activity while ensuring that the Engineer's on-site operations are not disrupted; (2) interruption of utility services; (3) coordination for shutoff, capping, and continuation of utility services; (4) use of elevators and stairs; (5) locations of temporary partitions and means of egress; (6) coordination of Engineer's continuing occupancy of

portions of existing building and of Engineer's partial occupancy of completed Project work; and (7) means of protection for items to remain and items in path of waste removal from building.

The Contractor shall comply with (1) governing EPA notification regulations before beginning selective demolition; (2) hauling and disposal regulations of authorities having jurisdiction; (3) ANSI A10.6; and (4) NFPA 241.

The Engineer will conduct a Pre-Demolition Meeting at the Project site in accordance with Article 1.20-1.05.24. Said meeting will review the methods and procedures related to selective demolition including, but not limited to, the following: (1) an inspection and discussion of the condition of construction to be selectively demolished; (2) a review of the structural load limitations of the existing structure; (3) a review and finalization of the

selective demolition schedule and a verification of the availability of materials, demolition personnel, equipment, and facilities needed to make progress and avoid delays; (4) a review of requirements of Project work performed by other trades that rely on substrates exposed by selective demolition operations; and (5) a review of areas where existing construction is to remain and requires protection.

C. Repair Materials:

The Contractor shall comply with Article 1.20-1.08.03 subsection 3E for repair materials and shall comply with material and installation requirements specified in other Contract provisions.

D. Examination:

The Contractor shall (1) verify that utilities have been disconnected and capped; (2) survey existing conditions and correlate with requirements indicated to determine extent of selective demolition required; (3) inventory and record the condition of items to be removed and reinstalled and items to be removed and salvaged; (4) investigate and measure the nature and extent of unanticipated mechanical, electrical, or structural elements that conflict with intended function or design and submit a written report to

Engineer; and (5) perform surveys as the Project work progresses to detect hazards resulting from selective demolition activities.

E. Utility Services:

The Contractor shall (1) maintain existing utility services indicated to remain and protect them against damage during selective demolition operations; (2) not interrupt existing utilities serving occupied or operating facilities unless authorized in writing by the Engineer; (3) provide temporary services during interruptions to existing utilities, as acceptable to Engineer; (4) provide at least 3 calendar days notice to the Engineer if shutdown of service is required during changeover; and (5) locate, identify, disconnect,

and seal or cap off indicated utilities serving areas to be selectively demolished. The Contractor shall arrange to shut off indicated utilities with utility companies. If utility services are required to be removed, relocated, or abandoned, before proceeding with selective demolition the Contractor shall provide temporary utilities that bypass area of selective demolition and that maintain continuity of service to other parts of building. The Contractor shall cut off pipe or conduit in walls or partitions
to be removed and shall cap, valve, or plug and seal remaining portion of pipe or conduit after bypassing.

The Contractor shall refer to other Contract provisions for shutting off, disconnecting, removing, and sealing or capping utilities. The Contractor shall not start selective demolition work until utility disconnecting and sealing have been completed and verified by the Engineer in writing.

F. Preparation:

The Contractor shall conduct selective demolition and debris-removal operations to ensure minimum interference with adjacent occupied and used facilities on the Project site. The Contractor shall not disrupt the Owner's operations without the Engineer's permission. The Contractor shall protect existing site improvements, appurtenances, and landscaping to remain.

The Contractor shall provide temporary barricades and other protection required to prevent injury to people and damage to adjacent buildings and facilities to remain. The Contractor shall provide temporary weather protection, during interval between selective demolition of existing construction on exterior surfaces and new construction, to prevent water leakage and damage to structure and interior areas. The Contractor shall protect walls, ceilings, floors, and other existing finish work that are to remain or that are exposed during selective demolition operations. The Contractor shall cover and protect furniture, furnishings, and equipment that have not been removed.

The Contractor shall provide temporary enclosures for protection of existing building

and construction, in progress and completed, from exposure, foul weather, other construction operations, and similar activities. The Contractor shall provide temporary weathertight enclosure for building exterior. Where heating is needed and permanent enclosure is not complete, the Contractor shall provide insulated temporary enclosures and shall coordinate enclosure with ventilating and material drying or curing requirements to avoid dangerous conditions and effects.

The Contractor shall erect and maintain dustproof partitions and temporary enclosures to limit dust and dirt migration and to separate areas from fumes and noise.

The Contractor shall provide and maintain interior and exterior shoring, bracing, or structural support to preserve stability and prevent movement, settlement, or collapse of construction to remain, and to prevent unexpected or uncontrolled movement or collapse of construction being demolished. The Contractor shall strengthen or add new supports when required during progress of selective demolition.

G. Pollution Controls:

The Contractor shall comply with governing regulations pertaining to environmental protection.

The Contractor shall not use water when it may create a hazardous or objectionable condition such as ice, flooding, or pollution.

The Contractor shall remove and transport debris in a manner that will prevent spillage on adjacent surfaces and areas. The Contractor shall remove debris from elevated portions of building by chute, hoist, or other device that will convey debris to grade level in a controlled descent.

The Contractor shall clean adjacent structures and improvements of dust, dirt, and debris caused by selective demolition operations. The Contractor shall return adjacent areas to condition existing before selective demolition operations began.

H. Performance:

The Contractor shall not use explosives for demolition purposes.

The Contractor shall demolish and remove existing construction only to the extent required by new construction and as indicated. The Contractor shall (1) proceed with selective demolition systematically; (2) neatly cut openings and holes plumb, square, and true to dimensions required; (3) use cutting methods least likely to damage

remaining or adjoining construction; (4) use hand tools or small power tools designed for sawing or grinding, not hammering and chopping, to minimize disturbance of adjacent surfaces; (5) temporarily cover openings to remain; (6) cut or drill from the

exposed or finished side into concealed surfaces to avoid marring existing finished surfaces; (7) not use cutting torches until work area is cleared of flammable materials; (8) verify condition and contents of concealed spaces such as duct and pipe interiors before starting flame-cutting operations; (9) maintain fire watch and portable fire-suppression devices during flame-cutting operations; (10) maintain adequate ventilation when using cutting torches; (11) remove decayed, vermin-infested, or otherwise dangerous or unsuitable materials and promptly dispose of off-site; (12) remove structural framing members and lower to ground by method suitable to avoid free fall and to prevent ground impact or dust generation; (13) locate selective demolition equipment and remove debris and materials so as not to impose excessive loads on supporting walls, floors, or framing; and (14) dispose of demolished items and materials promptly.

The Contractor shall comply with the Engineer's requirements for using and protecting walkways, building entries, and other building facilities during selective demolition operations.

The Contractor shall demolish and remove foundations and other below grade structures completely unless otherwise indicated on the plans. The Contractor shall fill below grade areas and voids resulting from demolition of structures with granular fill materials. Prior to placement of fill materials, the Contractor shall ensure that the areas to be filled are free of standing water, frost, frozen material, trash, and debris. After fill placement and compaction, grade surface to meet adjacent contours and provide flow

to surface drainage structures. Backfilling and grading related to demolition is included in the Major Lump Sum Item (MLSI) for the Project. There will be no separate payment for this backfilling and grading.

The Contractor shall (1) demolish concrete in sections; (2) cut concrete at junctures with construction to remain to the depth shown on the Contract plans and at regular intervals using power-driven saw; and (3) remove concrete between saw cuts.

The Contractor shall (1) demolish masonry in small sections; (2) cut masonry at junctures with construction to remain using power-driven saw; and (3) remove masonry between saw cuts.

The Contractor shall (1) saw-cut perimeter of concrete slabs-on-grade to be demolished as shown on the Contract plans; and (2) break up and remove concrete slabs-on-grade.

The Contractor shall (1) remove floor coverings and adhesive according to recommendations in RFCI-WP and its Addendum; and (2) remove residual adhesive and prepare substrate for new floor coverings by one of the methods recommended by RFCI.

The Contractor shall (1) only remove existing roofing in one day to the extent that it can

be covered by new roofing; and (2) refer to other Contract provisions for new roofing requirements.

The Contractor shall remove air conditioning equipment without releasing refrigerants.

I. Reuse of Building Elements:

The Contractor shall not demolish building elements beyond what is indicated on the plans without the Engineer's approval.

J. Removed and Salvaged Materials:

Unless otherwise directed by the Engineer, the Contractor shall (1) store materials in a secure area until delivery to the owner; (2) transport materials to the owner's storage area off-site; and (3) protect materials from damage during transport and storage.

K. Removed and Reinstalled Materials:

Unless otherwise directed by the Engineer, the Contractor shall (1) clean and repair materials to functional condition adequate for intended reuse; (2) paint equipment to match the color of new equipment; (3) protect materials from damage during transport and storage; and (4) reinstall items in locations indicated complying with installation requirements for new materials and equipment and providing connections, supports, and miscellaneous materials necessary to make item functional for use indicated.

L. Existing Materials to Remain:

The Contractor shall protect construction indicated to remain against damage and soiling during selective demolition.

The Contractor shall drain piping and cap or plug piping with the same or a compatible piping material for piping to be abandoned in place.

The Contractor shall cap or plug ducts with the same or a compatible ductwork material for ducts to be abandoned in place.

The Contractor shall cut and remove concealed conduits and wiring to be abandoned in place 2-inches (50-mm) below the surface of the adjacent construction, cap the conduit end, and patch the surface to match the existing finish. The Contractor shall cut existing conduits installed in concrete slabs to be abandoned in place flush with the top of the slab and fill conduit end with a minimum of 4-inches (100-mm) of concrete.

M. Patching and Repairing:

The Contractor shall comply with Article 1.20-1.08.03 subsection 3H for patching and

repairing damage to adjacent construction caused by selective demolition operations.

N. Disposal of Demolished Materials:

The Contractor shall (1) not allow demolished materials to accumulate or be sold on the Project Site; (2) not burn demolished materials on the Project Site; and (3) promptly and legally dispose or recycle demolished materials off the Project Site."

1.20-1.08.05--Personnel and Equipment:

Replace "FM with "FMG" in subsection (a)

Add the following article:

"1.20-1.08.12--Semi-Final and Final Inspections:

1. Semi-Final Inspection: Before requesting the Semi-Final Inspection, the Contractor shall show 100% completion for all Project work claimed as complete. The Contractor shall submit final test/adjust/balance records including the final air and water balance report. For all incomplete Project work, the Contractor shall prepare its own "Punch List" of the incomplete items and reasons the work is not complete. The Contractor shall submit final test/adjust/balance records including the final air and water balance report.

On receipt of a Contractor request for inspection, the Engineer will proceed with inspection or notify the Contractor of unfulfilled requirements. The Engineer will prepare a "Punch List" of unfilled, substandard, or incomplete items. During this inspection, the Contractor shall have all technicians necessary to demonstrate the complete operation of all systems on-site. Examples of such systems include, but are not limited to, the following: boiler, HVAC, fire alarm, and building automation. The Engineer will advise the Contractor of the construction that must be completed or corrected before the issuance of the C.O.C. Results of the completed inspection will form the basis of requirements for the Final Inspection. The Engineer reserves the right to issue the C.O.C. after the Semi-Final Inspection if there are no Building Code or Fire Code compliance issues or any major "Punch List" items.

2. Final Inspection: Before requesting Final Inspection for issuance of the C.O.C., the Contractor shall: (1) submit specific warranties, maintenance service agreements, final certifications and similar documents; (2) submit Record Drawings, Record Specifications, operations and maintenance manuals, final project photographs, property surveys, and similar final record information; (3) deliver spare parts; (4) make final changeover of permanent locks and deliver the keys to the Engineer; (5) complete start-up testing of systems; (6) train the owner's operation and maintenance personnel; (7) discontinue or change over and remove temporary facilities from the Project Site, along with construction tools, mock-ups, and similar elements; (8) complete final

cleaning requirements, including touch-up painting; (9) touch-up and otherwise repair and restore marred exposed finishes to eliminate visual defects; (10) submit a certified copy of the Engineer's "Punch List" of items to be completed or corrected, stating that each item has been completed or otherwise resolved for acceptance, and the list has been endorsed and dated by the Engineer; (11) submit final meter readings for utilities, a measured record of stored fuel, and similar data as of the date of Final Inspection, or when the Engineer took possession of and responsibility for corresponding elements of the Project work; and (12) install permanent electrical service. The Contractor shall

install permanent electrical service prior to Semi-Final Inspection if requested by the Engineer, or if necessary for the Engineer or Contractor to perform testing of building and other related systems and equipment to certify acceptance and completion of Project work. The Contractor shall submit all outstanding items or unacceptable submissions from the Semi-Final Inspection, or other outstanding items required for submittal, prior to the Final Inspection.

On receipt of a Contractor request for inspection, the Engineer will proceed with inspection and notify the Contractor of unfulfilled requirements."

1.20 – 1.08.13 – Termination of the Contractor's Responsibility:

Add subsection 3 as follows:

"**3. Insurance Coverage:** The Contractor shall have in place all insurance coverage identified in Article 1.03.07 for the performance of any warranty work."

1.20-1.08.14--Acceptance of Project:

Add the following to subsection 2 under the heading "Equipment and Systems Maintenance Manual:"

"(j) Copies of maintenance agreements with service agent name and telephone number."

Add the following paragraph in subsection 3 after the second paragraph:

"The Contractor shall provide a syllabus prior to the training to ensure that the appropriate owner's operation and maintenance personnel are in attendance."

Delete the last paragraph and replace with the following:

The Contractor shall submit to the Engineer for approval, a qualified commercial videographer to videotape the training sessions. The videographer shall be a firm or an individual of established reputation that has been regularly engaged as a professional videographer for not less than 3 years.

The Contractor shall video record each training session and provide said video in DVD format to the Engineer for the owner's future use."

Add the following section:

"1.20-1.09.06—Partial Payments:

With each payment request under the MLSI, the Contractor shall submit AIA Form G702 (Application and Certificate of Payment) and Form G703 (Continuation Sheet). The Contractor is not required to obtain the Architect's signature on Form G702. Once approved by the Engineer, the Forms G702 and G703 become the basis of payment under the MLSI."

Add the following section:

"1.20-9.75.04—Method of Measurement:

Mobilization as defined in Article 1.20-1.03.01 will be paid in the manner described hereinafter; however, the determination of the total contract price earned shall not include the amount of mobilization earned during the period covered by the current monthly estimate – but shall include amounts previously earned and certified for payment:

1. When the first payment estimate is made, 25 percent of the "Mobilization" line item will be certified for payment.

2. When the Baseline Schedule, as specified under Section 1.05.08, is accepted, 50 percent of the "Mobilization" line item, minus any previous payments, will be certified for payment.

3. When 10 percent of the total original contract price is earned and the Baseline Schedule, as specified under Section 1.05.08, is accepted, 75 percent of the "Mobilization" line item, minus any previous payments, will be certified for payment.

4. When 30 percent of the total original contract price is earned and the Baseline Schedule, as specified under Section 1.05.08, is accepted, 100 percent of the "Mobilization" line item, minus any previous payments, will be certified for payment."

CONNECTICUT
SUPPLEMENTAL SPECIFICATION
SECTION 2.02
ROADWAY EXCAVATION, FORMATION OF EMBANKMENT AND DISPOSAL OF SURPLUS MATERIAL

2.02.01 – Description:

In the first sentence, insert ", swales" *between* "channels" *and* "and other miscellaneous construction to the ..."

2.02.04 – Method of Measurement:

In the second to last Paragraph, replace the last sentence with the following:

"Bituminous parking areas are considered as bituminous concrete pavement."

CONNECTICUT
SUPPLEMENTAL SPECIFICATION
SECTION 2.05
TRENCH EXCAVATION

2.05.01--Description:

In Paragraph 2, delete the only sentence and replace with the following:

2) The removal of stormwater drainage structures, stormwater pipes and appurtenances beyond the limits of the roadway and structure excavation.

In Sub article 2, Rock in Trench, delete the only sentence and replace with the following:

(2) Rock, insofar as it applies to trench excavation, shall be defined as rock in definite ledge formation, boulders, or portions of boulders, cement masonry structures, concrete structures, reinforced concrete pipe, Portland cement concrete pavement or base, of 1/2 cubic yard (0.5 cubic meters) or more in volume, removed as indicated or directed from within the payment lines for trench excavation.

2.05.05 -Basis of Payment

In Paragraph 13, delete the entire sentence "There will be no direct payment for the plugging of existing pipes....." and replace with the following:

" There will be no direct Payment for the plugging of existing pipes, removal and disposal of metal or plastic pipes or for the breaking up of floors in drainage structures being abandoned. The cost shall be included in the contract unit prices of the drainage and excavation items."

CONNECTICUT
SUPPLEMENTAL SPECIFICATION
SECTION 2.12
SUBBASE

2.12.02 – Materials:

Delete the second sentence:

"Grading 'B' shall be used."

CONNECTICUT
SUPPLEMENTAL SPECIFICATION
SECTION 3.04
PROCESSED AGGREGATE BASE

Delete the entire Section and replace with the following:

3.04.01--Description: The base shall consist of a foundation constructed on the prepared subbase or subgrade in accordance with these specifications and in conformity with the lines, grades, compacted thickness and typical cross-section as shown on the plans.

3.04.02--Materials: All materials for this work shall conform to the requirements of Article M.05.01.

3.04.03--Construction Methods: Only one type of coarse aggregate shall be used on a project unless otherwise permitted by the Engineer.

Prior to placing the processed aggregate base, the prepared subbase or subgrade shall be maintained true to line and grade, for a minimum distance of 200 feet (60 meters) in advance of the work. None of the aggregate courses shall be placed more than 500 feet (150 meters) ahead of the compaction and binding operation on that particular course.

The processed aggregate base shall be spread uniformly by a method approved by the Engineer. The thickness of each course shall not be more than 4 inches (100 millimeters) after compaction, unless otherwise ordered.

After the aggregate is spread, it shall be thoroughly compacted and bound by use of equipment specifically manufactured for that purpose. Rollers shall deliver a ground pressure of not less than 300 pounds per lineal inch (52.5 newtons/millimeter) of contact width and shall have a weight (mass) not less than 10 tons (9100 kilograms). Vibratory units shall have a static weight (mass) of not less than 4 tons (3650 kilograms). Water may be used during the compaction and binding operation and shall be applied from an approved watering device. The compacting and binding operation shall begin at the outside edges, overlapping the shoulders for a distance of not less than 6 inches (150 millimeters) and progress towards the middle, parallel with the centerline of the pavement. The work shall cover the entire surface of the course with uniform overlapping of each preceding track or pass. Areas of super-elevation and special cross slope shall be compacted by beginning at the lowest edge and proceeding towards the higher edge, unless otherwise directed by the Engineer. The compacting and binding operation shall be continued until the voids in the aggregates have been reduced to provide a firm and uniform surface satisfactory to the Engineer. The amount of compactive effort shall in no case shall be less than four (4) complete passes of the compacting and binding operations. All aggregate shall be completely compacted and bound at the end of each day's work or when traffic is to be permitted to operate on the

road. The dry density of each layer of processed aggregate base after compaction shall not be less than 95 percent of the dry density for that material when tested in accordance with AASHTO T180, Method D.

Should the subbase or subgrade material become churned up or mixed with the processed aggregate base at any time, the Contractor shall, without additional compensation remove the mixture. The Contractor shall add new subbase material, if required, and reshape and recompact the subbase in accordance with the requirements of Article 2.12.03. New aggregate material shall be added, compacted and bound, as hereinbefore specified, to match the surrounding surface.

Any surface irregularities which develop during, or after work on each course, shall be corrected by loosening material already in place and removing or adding aggregate as required. The entire area, including the surrounding surface, shall be re-compacted and rebound until it is brought to a firm and uniform surface satisfactory to the Engineer.

3.04.04--Method of Measurement: Processed Aggregate Base will be measured horizontally in-place after final grading and compaction. Materials placed beyond the horizontal limits indicated on the plans will not be measured for payment.

The total thickness shall be as indicated on the plans, or as ordered by the Engineer and within a tolerance of minus three-fourths of an inch (-$^3/_4$") to plus one-half inch (+ $^1/_2$") (-19 millimeters to +13 millimeters).

Measurements to determine the thickness will be taken by the Engineer at intervals of 500 feet (150 meters) or less, along lanes, and shall be considered representative of the lane. For the purpose of these measurements, a shoulder will be considered a lane.

If a thickness measurement is taken and found deficient, the Engineer will take such additional measurements as he considers necessary to determine the longitudinal limits of the deficiency. Areas not within allowable tolerances shall be corrected, as ordered by the Engineer, without additional compensation to the Contractor.

3.04.05--Basis of Payment: This work will be paid for at the contract unit price per cubic yard for "Processed Aggregate Base", complete in place, which price shall include all materials, tools, equipment and work incidental thereto.

Pay Item	Pay Unit
Processed Aggregate Base	c.y. (cu. m)

CONNECTICUT
SUPPLEMENTAL SPECIFICATION
SECTION 4.01
CONCRETE PAVEMENT

Article 4.01.03-A. Composition:

Change the beginning of the first sentence as follows:

"The composition of the concrete shall be in accordance with the requirements of Section M.03 - Portland Cement Concrete, as well as the applicable ..."

Add the following new paragraph before the last paragraph:

"The temperature of the concrete at the time of placement shall not be less than 60° F (15.5° C) or greater than 90° F (32° C). For pumped concrete, the temperature shall be determined at the placement end of the pump line. The temperature of the concrete shall be determined in accordance with ASTM C1064."

Article 4.01.03-E. Hauling Units:
1. Truck mixers and truck agitators:

Change the end of the only sentence as follows:

"... the requirements of Subarticle 6.01.03-3, 'Transportation and Delivery of Concrete.'"

Article 4.01.03-F. Placing Concrete:

6. Joints:
(e) Load Transfer Devices:

Change the only sentence as follows:

"Load transfer devices shall conform to the requirements of Article M.03.08."

7. Curing:

(a) Liquid Membrane-Forming Cure:

Change the first sentence as follows:

"The liquid curing compound shall conform to Subarticle M.03.04-3."

(b) Moist Curing:

Change the end of the first sentence as follows:

"... moist mats of the size and quality specified in Subarticle M.03.04-2."

(c) Cover Sheet Curing:

Change the end of the first sentence as follows:

"... paper or polyethylene cover sheets conforming to Subarticle M.03.04-4."

CONNECTICUT
SUPPLEMENTAL SPECIFICATION
SECTION 5.14
PRESTRESSED CONCRETE MEMBERS

Article 5.14.03 – Construction Methods:

2. Prestressing:

Change the outline level of "**Final Stressing of Straight Strands:**" *and* "**Final Stressing of Draped Strands:**" *and their subsections as follows:*

" **A. Final Stressing of Straight Strands:**
- **(1) Single-strand tensioning:**
- **(2) Multiple-strand tensioning:**

B. Final Stressing of Draped Strands:
- **(1) Partial stressing and subsequent strains:**
- **(2) Final stressing in draped position:**"

5. Finishing: Deck Units:

Change the first sentence as follows:

"Deck units in structures that will have a bituminous concrete wearing surface shall be given a float finish on the top surface as specified in Subarticle 6.01.03-10."

9. Joining Deck Units:

Change the end of the last sentence of the first paragraph as follows:

"... shall be filled with non-shrink grout conforming to the requirements of Article M.03.05."

12. Inspection:

Change the beginning of the first sentence as follows:

"The provisions of Subarticle 6.03.03-3 (Shop Fabrication), (a) Notification shall apply to the steel items, ..."

16: Methods and Equipment:

Change the last sentence as follows:

"The results of this investigation, including computations, shall be submitted to the Engineer."

CONNECTICUT
SUPPLEMENTAL SPECIFICATION
SECTION 6.01
CONCRETE FOR STRUCTURES

Delete the entire Section and replace it with the following:

SECTION 6.01
CONCRETE FOR STRUCTURES

6.01.01—Description
6.01.02—Materials
6.01.03—Construction Methods
6.01.04—Method of Measurement
6.01.05—Basis of Payment

6.01.01—Description: This item shall include concrete for use in bridges and culverts, walls, catch basins, drop inlets and other incidental construction as required. The concrete shall be composed of Portland cement, pozzolans, fine and coarse aggregate, admixtures and water, prepared and constructed in accordance with these specifications, at the locations and of the form dimensions and class shown on the plans, or as directed by the Engineer.

The use of concrete from dry batch or central mixed plants is permitted for all concrete mixtures.

6.01.02—Materials: The materials for this work shall conform to the requirements of Section M.03.

6.01.03—Construction Methods:

1. Falsework and Forms: Falsework is considered to be any temporary structure which supports structural elements of concrete, steel, masonry or other material during the construction or erection. Forms are considered to be the enclosures or panels which contain the fluid concrete and withstand the forces due to its placement and consolidation. Forms may in turn be supported on falsework.

This work shall consist of the construction and removal of falsework and forms that are designed by the Contractor in the execution of the work, and whose failure to perform properly could adversely affect the character of the Contract work or endanger the safety of adjacent facilities, property, or the public. Falsework and forms shall be mortar tight and of sufficient rigidity and strength to safely support all loads imposed and to produce in the finished structure the lines and grades indicated in the Contract documents. Forms shall also impart the required surface texture and rustication and shall not detract from the uniformity of color of the formed surfaces. Forms shall be of wood, steel or other material approved by the Engineer.

(a) **Design:** The design of falsework and formwork shall conform to the *AASHTO Guide Design Specifications for Bridge Temporary Works,* or to other established and generally accepted design codes such as ACI Standard *ACI 347 Recommended Practice for Concrete Formwork* or specific form or falsework manufacturer specifications. When other than new or undamaged materials are used, appropriate reductions in allowable stresses, and decreases in resistance factors or imposed loads shall be used for design.

(b) **Loads:** The design of the falsework and forms shall be based on load factors specified in the *AASHTO LRFD Bridge Design Specifications* and all applicable load combinations shall be investigated. The design load for falsework shall consist of the sum of appropriate dead and live vertical loads and any horizontal loads.

As a minimum, dead loads shall include the weight (mass) of the falsework and all construction material to be supported. The combined unit weight (density) of concrete, reinforcing and pre-stressing steel and forms that is supported shall be assumed to be not less than:

1. Normal-weight (normal-density) concrete: 0.16 kip/ft3 (2560 kg/m3)
2. Lightweight (low-density) concrete: 0.13 kip/ft3 (2080 kg/m3)

Live loads shall consist of the actual weight (mass) of any equipment to be supported, applied as concentrated loads at the points of contact and a uniform load of not less than 0.02 kip/ft^2 (0.001 MPa) applied over the area supported, plus 0.075 kip/ft (1.10 N/mm) applied at the outside edge of deck overhangs.

The horizontal load used for the design of the falsework bracing system shall be the sum of the horizontal loads due to equipment; construction sequence including unbalanced hydrostatic forces from fluid concrete and traffic control devices; stream flow, when applicable; and an allowance for wind. However, in no case shall the horizontal load to be resisted in any direction be less than two percent (2%) of the total dead load.

For post-tensioned structures, the falsework shall also be designed to support any increase in or redistribution of loads caused by tensioning of the structure. Loads imposed by falsework onto existing, new, or partially completed structures shall not exceed those permitted in 6.01.03-12, "Application of Loads."

(c) **Working Drawings:** The working drawings for falsework and formwork shall be prepared in accordance with Article 1.05.02 whenever the falsework or formwork exceeds 14.0 feet (4300 mm) in height or whenever vehicular, marine, or pedestrian traffic may travel under or adjacent to the falsework or formwork. Working drawings shall include the sequence, method and rate of placement of the concrete.

Manufacturer catalog cuts or written installation procedures shall be provided for any clips, braces, hangers or other manufactured parts used with the formwork or falsework.

(d) **Construction:** Forms and falsework shall be built true to lines and grades, shall be strong, stable, firm, mortar-tight and adequately braced or tied, or both. They shall be designed and constructed to withstand all loads and pressures including those imposed by plastic concrete, taking full account of the stresses due to the rate of placement, effect of vibration and conditions brought about by construction methods. Forms and falsework shall be constructed to compensate for variations in camber of supporting members and allow for deflections.

Falsework and formwork shall be chamfered at all sharp corners, unless otherwise ordered or permitted, and shall be given a slight bevel or draft in the case of projections to ensure satisfactory removal. Materials for falsework and formwork and their supports, ties and bracing, shall be of the type, quality and strength to achieve the structural requirements. Form material in contact with concrete shall provide the finished concrete surface smoothness as specified in 6.01.03-10, "Finishing Concrete Surfaces," and have a uniform appearance.

Falsework and formwork shall be treated with form oil or other release agent approved by the Engineer before the reinforcing steel is placed, or self-releasing forms approved by the Engineer may be used. Release agents which will adhere to or discolor the concrete shall not be used.

Falsework and formwork for concrete surfaces exposed to view shall produce a smooth surface of uniform texture, free of voids, indentations, protrusions and bulges. Panels lining falsework and formwork shall be arranged so that the joint lines form a symmetrical pattern conforming to the general lines of the structure. The same type of form-lining material shall be used throughout each element of a structure. Falsework and formwork shall be sufficiently rigid so that the undulation of the concrete surface shall not exceed 1/4 inch (6 mm) when checked with a 4 foot (1200 mm) straightedge or template.

For non-exposed surfaces the falsework and formwork shall be sufficiently rigid so that the undulation of the concrete surface shall not exceed 1/2 inch (13 mm) when checked with a 4 foot (1200 mm) straightedge or template.

Metal ties and anchors to hold the falsework and formwork in alignment and location shall be so constructed that the metal work can be removed to a depth of at least 2 inches (50 mm) from the concrete surface without damage to the concrete. All cavities resulting from the removal of metal ties shall be filled after removal of forms with cement mortar of the same proportions used in the body of the work or other materials approved by the Engineer, and the surface finished smooth and even, and if exposed in the finished work, shall conform to the texture and color of adjacent surfaces. With permission of the Engineer, the Contractor need not remove from the underneath side of bridge decks portions of metal devices used to support reinforcing steel providing such devices are of material, or are adequately coated with material, that will not rust or corrode. When coated reinforcing steel is required, all metal ties, anchorages, or spreaders that remain in the concrete shall be of corrosion-resistant material or coated with a dielectric material.

Forms shall be clean and clear of all debris. For narrow walls and columns where the bottom of the form is inaccessible, an access opening will be allowed in the form and falsework for cleaning out extraneous material.

(e) **Date of Completion:** The year in which the superstructure is completed in its entirety shall be cast in at least two (2) places as shown on the plans unless otherwise ordered by the Engineer. The date shall be placed in diagonally opposite ends of the bridge parapets or as designated by the Engineer. The reverse molds for the date shall be furnished by the Contractor.

(f) **Bridge Decks:** After erection of beams and prior to placing falsework and forms, the Contractor shall take elevations along the top of the beam at the points shown on the plans or as directed by the Engineer. The Contractor shall calculate the haunch depths and provide them to the Engineer a minimum of seven (7) days prior to installing the falsework and forms. The Contractor shall also provide calculations for the setting of the overhang brackets based on the final beam deflection. These calculations shall be based on the final proposed deck grade and parapet elevations.

Falsework or formwork for deck forms on girder bridges shall be supported directly on the girders so that there will be no appreciable differential settlement during placing of the concrete. Girders shall be either braced and tied to resist any forces that would cause rotation or torsion in the girders caused by the placing of concrete for diaphragms or decks, or shown to be adequate for those effects. Unless specifically permitted, welding of falsework support brackets or braces to structural steel members or reinforcing steel shall not be allowed.

(g) **Stay-In-Place Metal Forms for Bridge Decks:** These forms may be used if shown in the Contract or approved by the Engineer. Prior to the use of such forms and before fabricating any material, the Contractor shall submit working drawings to the Engineer for review in accordance with Article 1.05.02, Working Drawings. These drawings shall include the proposed method of form construction, erection plans including placement plans, attachment details, weld procedure(s), material lists, material designation, gage of all materials, and the details of corrugation. Also, copies of the form design computations shall be submitted with the working drawings. Any changes necessary to accommodate stay-in-place forms, if approved, shall be at no cost to the Department.

The metal forms shall be designed on the basis of the dead load of the form, reinforcement and the plastic concrete, including the additional weight (mass) of concrete [considered to be equivalent to the weight (mass) imposed by an additional concrete thickness equal to three percent (3%) of the proposed deck thickness, but not to exceed 0.3 inches (8 mm)] due to the deflection of the metal forms, plus 50 pounds per square foot (2.40 kilopascals) for construction loads. The allowable stress in the corrugated form and the accessories shall not be greater than 0.725 times the yield strength of the furnished material and the allowable stress shall not exceed 36,000 psi (250 megapascals). The span for design and deflection shall be the clear distance between edges of the beams or girders less 2 inches (50 mm) and shall be measured parallel to the form flutes. The maximum deflection under the weight (mass) of plastic concrete, reinforcement, and forms shall not exceed 1/180 of the form span or 0.5 inches (13 mm), whichever is less. In no case shall the loading

used to estimate this deflection be less than 120 pounds per square foot (586 kilograms per square meter). The permissible form camber shall be based on the actual dead load condition. Camber shall not be used to compensate for deflection in excess of the foregoing limits. The form support angles shall be designed as a cantilever with horizontal leg not more than 3 inches (75 mm).

No stay-in-place metal forms shall be placed over or be directly supported by the top flanges of beams or girders. The form supporting steel angles may be supported by or attached to the top flanges.

Stay-in-place metal forms shall not be used in bays where longitudinal slab construction joints are located, under cantilevered slabs such as the overhang outside of fascia members, and bridges over a salt-laden body of water with a clearance of less than 15 feet (4.5 m) above mean high water level.

Welding to the top flanges of steel beams and girders is not permitted in the areas where the top flanges are in tension, or as indicated on the plans. Alternate installation procedures shall be submitted addressing this condition.

Drilling of holes in pre-stressed concrete beams or the use of power-actuated tools on the pre-stressed concrete beams for fastening of the form supports to the pre-stressed concrete beams will not be permitted. Welding of the reinforcing steel to the pre-stressed units is not permitted.

All edges of openings cut for drains, pipes, and similar appurtenances shall be independently supported around the entire periphery of the opening.

All fabricated stay-in-place metal forms shall be unloaded, stored at the Project site at least 4 inches (100 mm) above the ground on platforms, skids or other suitable supports and shall be protected against corrosion and damage and handled in such a manner as to preclude damage to the forms. Damaged material shall be replaced at no additional cost to the State.

Any exposed form or form support metal where the galvanized coating has been damaged, shall be thoroughly cleaned, wire brushed, then coated with two (2) coats of Zinc Dust – Zinc Oxide primer, FS No. TT-P-641d, Type II or another product acceptable to the Engineer.

The forms shall be installed from the topside in accordance with the manufacturer's recommended installation procedures. The form supports shall ensure that the forms retain their correct dimensions and positions during use at all times. Form supports shall provide vertical adjustment to maintain design slab thickness at the crest of corrugation, to compensate for variations in camber of beams and girders and to allow for deflections. Stay-in-place metal forms shall have a minimum depth of the form valley equal to 2 inches (50 mm). The forms shall have closed tapered ends. Lightweight filler material shall be used in the form valleys.

All field cutting shall be done with a steel cutting saw or shears including the cutting of supports, closures and cutouts Flame cutting of forms is not permitted.

All welding shall be performed by Department certified welders in accordance with the "Welding" Subarticle in Section 6.03. Welding of forms to supports is not permitted.

The steel form supports shall be placed in direct contact with the flange of stringer or floor beam flanges and attached by bolts, clips, welding where permitted, or other approved means. Form sheets shall not be permitted to rest directly on the top of the stringer or floor beam flanges. The forms shall be securely fastened to form supports with self-drilling fasteners and shall have a minimum bearing length of 1 inch (25 mm) at each end. In the areas where the form sheets lap, the form sheets shall be securely fastened to one another by fasteners at a maximum spacing of 18 inches (450 mm). The ends of the form sheets shall be securely attached to the support angles with fasteners at a maximum spacing of 18 inches (450 mm), or two (2) corrugation widths, whichever is less.

The depth of the concrete slab shall be as shown on the plans and the corrugated forms shall be placed so that the top of the corrugation will coincide with the bottom of the deck slab. No part of the forms or their supports shall protrude into the slab. All reinforcement in the bottom reinforcement mat shall have a minimum concrete cover of 1 inch (25 mm) unless noted otherwise on the plans.

The completed stay-in-place metal form system shall be sufficiently tight to prevent leakage of mortar. Where forms or their installation are unsatisfactory in the opinion of the Engineer, either before or during placement of the concrete, the Contractor shall correct the defects before proceeding with the work.

(h) **Construction Joints:** Construction joints other than those shown on the plans will not be permitted without prior approval of the Engineer. In joining fresh concrete to concrete that has already set, the work already in place shall have all loose and foreign material removed, and the surface roughened and thoroughly drenched with water.

All reinforcing steel shall extend continuously through joints. Where unplanned construction joints may be needed, they shall be constructed as directed by the Engineer.

(i) **Expansion and Contraction Joints:** Expansion and contraction joints shall be constructed at the locations and in accordance with the details specified in the Contract documents. The forming of joint openings shall be dimensioned in accordance with the joint manufacturer's design requirements. Joints include open joints, filled joints, joints sealed with sealants, joints reinforced with steel armor plates or shapes, paraffin coated joints, and joints with combinations of these features.

For mechanical joint systems, the concrete shall be placed in such a manner that does not interfere with the movement of the joint.

Open joints shall be placed at locations designated on the plans and shall be formed by the insertion and subsequent removal of templates of wood, metal or other suitable material. The templates shall be so constructed that their removal may be readily accomplished without damage to the work.

Filled joints shall be made with joint filler, the materials for which shall conform to the requirements of the plans and of these specifications.

(j) **Pipes, Conduits and Utility Installations:** The Contractor shall coordinate the installation of pipes, conduits and utilities as shown on the plans and in conformance with the Contract documents or as directed by the Engineer. The openings accommodating such pipe, conduit and utility installations shall be incorporated into the formwork by the Contractor.

(k) **Anchorages:** Anchor bolts and systems shall be set to the requirements of the plans and Contract documents. Anchor bolts and systems shall be clean and free of dirt, moisture or other foreign materials at the time of installation. The anchor bolts and systems shall be installed prior to placing concrete.

With the Engineer's approval, the Contractor may install anchorages after placement and setting of the concrete or in formed holes. The anchorages shall be installed into drilled or formed holes having a diameter and a depth suitable to receive the bolts in accordance with the grout manufacturer's requirements. Such holes shall be located to avoid damage to the existing reinforcement. All holes shall be perpendicular to the plane surface. The Contractor shall take every precaution necessary to prevent damage to the concrete due to freezing of water or grout in anchor bolt holes.

(l) **Ornament or Reverse Moulds:** Ornamental work, when so noted on the plans, shall be formed by the use of reverse moulds. These moulds shall be produced by a qualified manufacturer approved by the Engineer. They shall be built in accordance with the general dimensions and appearance shown on the plans. The Contractor shall submit all detailed drawings, models, or carvings for review by the Engineer before the moulds are made.

The Contractor shall be responsible for their condition at all times, and shall be required to remove and replace any damaged or defective moulds at no additional cost to the State.

The surfaces of the moulds shall be given a coating of form release agent to prevent the adherence of concrete. Any material which will adhere to or discolor the concrete shall not be used.

Form Liners, if required, shall be installed per the Contract Special Provisions.

(m) **Removal of Falsework and Forms:** The Contractor shall consider the location and character of the structure, the weather, the materials used in the mix, and other conditions influencing the early strength of the concrete when removing forms and falsework. Methods of removal likely to cause damage to the concrete surface shall not be used.

Supports shall be removed in such a manner as to permit the structure to uniformly and gradually take the stresses due to its own weight. For structures of two (2) or more spans, the sequence of falsework release shall be as specified in the Contract documents or as approved by the Engineer.

Removal shall be controlled by field-cured cylinder tests. The removal shall not begin until the concrete has achieved seventy-five percent (75%) of the design compressive strength. To facilitate finishing, side forms carrying no load may be removed after twenty-four (24) hours with the permission of the Engineer, but the curing process must be continued for seven (7) days.

When the results of field-cured cylinder tests are unavailable, the following periods, exclusive of days when the temperature drops below 40°F (5°C), may govern the removal of forms:

Form Removal Requirements	
Structure Element	Minimum Time Period
Arch Centers, centering under beams, pier caps, and unsupported elements	14 days
Slabs on grade, Abutments and Walls	24 hours
Columns	2 days
Bridge Decks	28 days

The Contractor may submit alternate methods to determine the in-place strength of the concrete for removal of forms and falsework, for review and approval by the Engineer.

2. Protection from Environmental Conditions: The concrete shall be protected from damage due to weather or other environmental conditions during placing and curing periods. In-place concrete that has been damaged by weather conditions shall be either repaired to an acceptable condition or removed and replaced as determined by the Engineer.

(a) Rain Protection: The placement of concrete shall not commence or continue unless adequate protection satisfactory to the Engineer is provided by the Contractor.

(b) Hot Weather Protection: When the ambient air temperature is above 90°F (32°C), the forms, which will come in contact with the mix shall be cooled to below 90°F (32°C) for a minimum of one (1) hour prior to and one (1) hour after completion of the concrete placement by means of a water spray or other methods satisfactory to the Engineer.

(c) Cold Weather Protection: When there is a probability of ambient air temperature below 40°F (5°C) during placement and curing, a Cold-Weather Concreting Plan shall be submitted to the Engineer for review and comment. The Plan shall detail the methods and equipment, including temperature measuring devices, that will be used to ensure that the required concrete and air temperatures are maintained.

1. Placement: The forms, reinforcing steel, steel beam flanges, and other surfaces which will come in contact with the mix shall be heated to a minimum of 40°F (5°C), by methods satisfactory to the Engineer, for a minimum of one (1) hour prior to, and maintained throughout, concrete placement.

2. Curing: For the first six (6) days, considered the initial cure period, the concrete shall be maintained at a temperature of not less than 45°F (7°C) and the air temperature surrounding the structure shall be maintained at a temperature of not less than 60°F (16°C). When the concrete mix includes pozzolans or slag, the initial cure period shall be increased to ten (10) days. After the initial cure period, the air surrounding the structure shall be maintained above 40° F (5°C) for an additional eight (8) days. If external heating is employed, the heat shall be applied and withdrawn gradually and uniformly so that no part of the concrete surface is heated to more than 90°F (32°C) or caused to change temperature by more than 20°F (11°C) in eight (8) hours. The Engineer may reduce or increase the amount of time that the structure must be protected or heated based on an indication of in-place concrete strength acceptable to the Engineer.

(d) **Additional Requirements for Bridge Decks:** Prior to the application of curing materials, all the concrete placed on bridge decks shall be protected from damage due to rapid evaporation by methods acceptable to the Engineer. During periods of low humidity (less than 60% relative humidity), sustained winds of 25 mph (40 kph) or more, or ambient air temperatures greater than 80°F (25°C) the Contractor shall provide written details of additional measures to be taken during placement and curing.

Protection may include increasing the humidity of the surrounding air with fog sprayers and employing wind-breaks or sun-shades. Additional actions may include reduction of the temperature of the concrete prior to placement, scheduling placement during cooler times of days or nights, or a combination of these actions.

(e) **Concrete Exposed to Salt Water:** No Construction joints shall be formed between the levels of extreme low water and extreme high water or the upper limit of wave action as determined by the Engineer.

3. Transportation and Delivery of Concrete: All material delivered to the Project shall be supplied by a producer qualified in accordance with Section M.03. The producer shall have sufficient plant capacity and trucks to ensure continuous delivery at the rate required to prevent the formation of cold joints.

(a) **Material Documentation:** All vendors producing concrete must have their weigh scales and mixing plant automated to provide a detailed ticket. Delivery tickets must include the following information:

1. State of Connecticut printed on ticket
2. Name of producer, identification of plant
3. Date and time of day
4. Type of material
5. Cubic yards (cubic meters) of material loaded into truck
6. Project number, purchase order number, name of Contractor (if Contractor other than producer)
7. Truck number for specific identification of truck
8. Individual aggregate, cement, water weights (masses) and any admixtures shall be printed on plant tickets
9. Water/cement ratio, and
10. Additional water allowance in gallons (liters) based on water/cement ratio for mix

A State inspector may be present to monitor batching and weighing operations.

The Contractor shall notify the Engineer immediately if, during the production day, there is a malfunction of the recording system in the automated plant or weigh scales.

Manually written tickets containing all required information may be allowed for up to one (1) hour after malfunction provided they are signed by an authorized representative of the producer.

(b) **Transportation of Mixture:** Trucks delivering concrete shall be qualified in accordance with Section M.03.

If the concrete mix arrives at the Project with a slump lower than allowed by specification, water may be considered as a means to temper concrete to bring the slump back to within specification. This tempering may only be done prior to discharge with the permission of the Engineer. The quantity of water in gallons (liters) added to the concrete cannot exceed the allowance shown on the delivery ticket.

The concrete shall be completely discharged into the forms within one and one-half (1-1/2) hours from the batch time stamped on the delivery ticket. This time may be extended if the measured temperature of the concrete is below 90°F (32°C). This time may also be reduced if the temperature of the concrete is over 90°F (32°C).

Rejected concrete shall be disposed of by the Contractor at no cost to the State.

The addition of chemical admixtures or air entrainment admixtures at the Project site, to increase the workability or to alter the time of set, will only be permitted if prior approval has been granted by the Engineer. The addition of air entrainment admixtures at the Project site will only be permitted by the producer's quality control staff. The Contractor is responsible for follow-up quality control testing to verify compliance with the Specifications.

4. Acceptance Testing and Test Specimens: The Contractor shall furnish the facilities and concrete required for sampling, transport to the testing location in the field, performing field testing and for casting sample cylinders for compressive-strength determinations. The Department will furnish personnel for sampling and casting Acceptance specimens and the number of specimens required will be determined by the Engineer. The equipment for the Department's testing is provided for elsewhere in the Contract.

(a) **Temperature, Air Content and Slump**: Field testing in accordance with AASHTO T-23, "Making and Curing Concrete Test Specimens in the Field" will be performed at the point of placement and at a frequency determined by the Engineer.

English Units

Standard Mix Class	Air Content	Slump	Concrete Temperature
A (3300 psi)	6.0 +/- 1.5%	4" +/- 1"	60°-90°F
C (3300 psi)			
F (4400 psi)			
Modified Standards[1]	6.0 +/- 1.5% [2]	4" +/- 1" [2]	
Special Provision Mix[3]	As specified	As specified	

[1] Modifications to Standard Mixes, including mixes placed by pumping, shall be reviewed by the Engineer prior to use. These include but are not limited to the use of chemical admixtures such as high range water reducing (HRWR) admixtures and the use of coarse aggregate sizes for that class not specified in M.03.

[2] If the only modification is the addition of HRWR, the maximum allowable slump shall be 7 inches.

[3] All concrete mixes with a mix design strength not shown in the table must be approved by the Engineer on a case-by-case basis. Limits on the plastic properties and strength requirements of these mixes are listed in the Specifications.

Metric Units

Standard Mix Class	Air Content	Slump	Concrete Temperature
A (23MPa)	6.0 +/- 1.5%	100 mm +/- 25mm	15.5°-32°C
C (23 MPa)			
F (30 MPa)			
Modified Standards[1]	6.0 +/- 1.5% [2]	100mm +/- 25mm [2]	
Special Provision Mix[3]	As specified	As specified	

[1] Modifications to Standard Mixes, including mixes placed by pumping, shall be reviewed by the Engineer prior to use. These include but are not limited to the use of chemical admixtures such as high range water reducing (HRWR) admixtures and the use of coarse aggregate sizes for that class not specified in M.03.

[2] If the only modification is the addition of HRWR, the maximum allowable slump shall be 175 mm.

[3] All concrete mixes with a mix design strength not shown in the table must be approved by the Engineer on a case-by-case basis. Limits on the plastic properties and strength requirements of these mixes are listed in the Specifications.

(b) **Acceptance Testing and Compressive Strength Specimens:** Concrete samples are to be taken at the point of placement into the forms or molds. Representatives of the Engineer will sample the mix.

The Contractor shall provide and maintain facilities on the Project site, acceptable to the Engineer, for sampling, transporting the initial sample, casting, safe storage and initial curing of the concrete test specimens as required by AASHTO T-23. This shall include but not be limited to a sampling receptacle, a means of transport of the initial concrete sample from the location of the concrete placement to the testing location, a level and

protected area of adequate size to perform testing, and a specimen storage container capable of maintaining the temperature and moisture requirements for initial curing of Acceptance specimens. The distance from the location of concrete placement to the location of testing and initial curing shall be 100 feet (30 m) or less, unless otherwise approved by the Engineer.

The specimen storage container described in this section is in addition to the concrete cylinder curing box provided for elsewhere in the Contract documents.

After initial curing, the test specimens will be transported by Department personnel and stored in the concrete cylinder curing box until they can be transported to the Division of Materials Testing for strength evaluation.

(c) **Sampling Procedure for Pumping**: It is the responsibility of the Contractor to provide concrete that meets required specifications at the point of placement.

Samples of concrete shall be taken at the discharge end of the pump at the point of placement with the exception of underwater concrete. The Contractor may submit an alternate location to provide a sample from the discharge end of the pump with verification showing that the characteristics of the mix will not be altered from that which would have been attained at the point of placement. The Engineer will review the documentation and other extenuating circumstances when evaluating the request.

In the case of underwater concrete the Contractor shall submit the proposed sampling location with the submittals required in 6.01.03-6(f).

(d) **Additional field testing:** Additional field testing such as density and yield measurements may be required at the time of placement as determined by the Engineer.

5. Progression Cylinders and Compressive Strength Specimens: Progression Cylinders outlined in this section are field cured compressive strength specimens taken for information related to when a structure or segment of a structure can be loaded or put into service, adequacy of curing and protection of concrete in the structure, or when formwork or shoring may be removed from the structure. The information produced from strength results of Progression Cylinders will not be considered for acceptance of the concrete.

The personnel, equipment, and molds for sampling, casting, curing and testing of Progression Cylinders shall be furnished by the Contractor at no expense to the Department.

Sampling, casting, and field curing of the specimens shall be performed in accordance with AASHTO T23 by an ACI Concrete Field Testing Technician Grade 1 or higher and will be witnessed by a representative of the Department.

The sample shall be taken at the point of placement into the forms or molds from one (1) or more of the same truck loads that an Acceptance sample is taken from.

A minimum of two (2) cylinder results will be used to determine in-place strength.

Compression testing shall be performed in accordance with AASHTO T-22 by personnel approved by the Engineer.

A Certified Test Report in accordance with Article 1.06.07 shall be provided to the Engineer reporting the Progression Cylinder test results. A copy of the results of the compressive strength testing shall be provided to the Engineer at least twenty-four (24) hours prior to any Project activity that the results may control.

6. Handling and Placing Concrete: Concrete shall be handled, placed, and consolidated by methods acceptable to the Engineer that will not segregate the mix and shall result in a dense homogeneous concrete. The methods used shall not cause displacement of reinforcing steel or other materials to be embedded in the concrete. Concrete shall not be placed until the forms and all materials have been inspected by the Engineer. All mortar from previous placements, debris, and foreign material shall be removed from the forms and steel prior to commencing placement. The forms and subgrade shall be thoroughly moistened with water immediately before concrete is placed. All water that has ponded within the forms shall also be removed. Temporary form spreader devices shall not be left in place.

All laitance or unsound material shall be removed before placing substructure concrete onto the surface of any concrete placed underwater.

Placement of concrete for each section of the structure shall be performed continuously between construction or expansion joints as shown on the plans. The delivery rate, placing sequence and methods shall be such that fresh concrete is always placed and consolidated against previously placed concrete before initial set has occurred. The temperature of the concrete mixture during placement shall be maintained between 60°F (16°C) and 90°F (32°C). During and after placement of concrete, care shall be taken not to damage the concrete or break the bond with reinforcing steel. Platforms for workers and equipment shall not be supported directly on any reinforcing steel. Forces that may damage the concrete shall not be applied to the forms or reinforcing steel.

(a) Sequence of Placement: The sequence of placement shall be in accordance with the Contract documents or as permitted by the Engineer.

Concrete for integral horizontal members, such as caps, slabs, or footings shall not be placed until the concrete for the columns, substructure, culvert walls and similar vertical members has achieved sufficient strength as stated in 6.01.03-1(m).

The concrete in arches shall be placed in such a manner as to load the formwork uniformly and symmetrically.

The base slab or footings of cast-in-place box culverts shall reach sufficient strength before the remainder of the culvert is constructed.

(b) Placement Methods: The Contractor shall notify the Engineer at least twenty-four (24) hours in advance of intention to place concrete.

Vibrators shall not be used to shift the fresh concrete horizontally. Vibrators shall be adequate to consolidate the concrete and integrate it with the previous lift.

The rate of concrete placement must not produce loadings that exceed those considered in the design of the forms.

The use of chutes and pipes for conveying concrete into the forms must be reviewed by the Engineer. Chutes shall be clean, lined with smooth watertight material and, when steep slopes are involved, shall be equipped with baffles or reverses. When the discharge must be intermittent, a hopper or other device for regulating the discharge shall be provided.

Aluminum shall not be permanently incorporated into the concrete unless otherwise specified.

When placing operations involve dropping the concrete more than 5 feet (1500 mm), the Contractor shall take action to prevent segregation of the mix and spattering of mortar on steel and forms above the elevation of the lift being placed. This restriction shall not apply to cast-in-place pilings.

When using stay-in-place forms, concrete shall not be dropped more than 3 feet (1000 mm) above the top of the forms, and the concrete shall be discharged directly over the beams or girders.

(c) **Pumping:** The Contractor shall use equipment specifically manufactured to pump concrete mixes and that meets the needs of the specific concrete placement.

(d) **Consolidation:** Unless otherwise specified, all concrete, except concrete placed under water, shall be sufficiently consolidated by mechanical vibration immediately after placement.

The Contractor shall provide a sufficient number of commercially available mechanical immersion type vibrators to properly consolidate the concrete immediately after it is placed in the forms unless external form vibrators are used. The Contractor shall have an adequate number of operable vibrators available in case of breakdown.

External form vibrators may be used if submitted prior to concrete placement and reviewed by the Engineer.

Vibration shall not be applied directly to the reinforcement or hardened concrete. Special care shall be taken in placing and consolidating concrete around ornamental moulds, form liners and other embedded items. The vibrator shall not touch these items at any time.

(e) **Additional Requirements for Bridge Decks:** At least fifteen (15) days before the erection of the screed rails, the Contractor shall submit screed erection plans, grades and sequence of concrete placement and proposed rate of placing concrete for review by the Engineer. These plans shall include details of equipment to be

used in the placement and finishing of the concrete, including the number and type of personnel who will be engaged in placing the concrete. The screed equipment shall be a commercially available vibratory system. The use of wooden screeds is prohibited.

When setting screed rails for mechanical finishing, the Contractor shall take into consideration and make proper allowances for the deflection of the bridge superstructure due to all operations.

Screed and runway supports shall not be located on any stay-in-place metal form sheets, form supports or reinforcing steel. The Contractor shall operate the mechanical screed at least twenty-four (24) hours prior to actual placement of the concrete to verify deck survey and equipment operations to the satisfaction of the Engineer.

Concrete shall be deposited in a uniform manner across the entire width being placed, and only two (2) passes of the transverse screed will be permitted over a given deck area, unless otherwise allowed by the Engineer.

If the Contractor proposes to place concrete outside of daylight hours, an adequate lighting system must be provided.

Concrete shall be deposited in accordance with the placement sequence as noted on the plans. If no sequence is indicated, the Contractor shall provide a placement sequence to the Engineer for review. The placement sequence shall proceed in such a manner that the total deflection or settlement of supporting members, and final finishing of the surface will occur before initial set of the concrete takes place.

At construction joints, concrete shall not be placed against the previously placed concrete for at least twelve (12) hours unless otherwise allowed by the Engineer.

(f) Underwater Placement: Concrete may only be placed under water within a cofferdam unless otherwise specified in the documents or otherwise allowed by the Engineer. Placement shall begin following inspection and acceptance of the depth and character of the foundation material by the Engineer.

Underwater concrete mixes are considered non-standard designs and shall be submitted to the Engineer for approval. Typically a minimum of ten percent (10%) additional cement than comparable non-underwater mixes will be required.

Underwater concrete shall be placed continuously with the surface of the concrete kept as horizontal as practical. To ensure thorough bonding, each succeeding layer shall be placed before the preceding layer has taken initial set. For large concrete placements, more than one (1) tremie or pump shall be used to ensure compliance with this requirement.

Mass concrete placement requirements, outlined in 6.01.03-6(g), do not apply to underwater concrete.

To prevent segregation, underwater concrete shall be placed in a compact mass, in its final position, by means of a tremie, concrete pump, or other approved method and shall not be disturbed. Still water shall be maintained at the point of deposit. Cofferdams shall be vented during the placement and curing of the concrete to equalize the hydrostatic pressure and thus prevent flow of water through the concrete.

If a tremie is used, the method of depositing the concrete shall be detailed in a working drawing submitted to the Engineer for review. The tube shall have watertight couplings and shall permit the free movement of the discharge end over the area of the work.

(g) **Mass concrete placement:** Mass concrete placement shall be defined as any placement, excluding underwater concrete placement, in which the concrete being cast has dimensions of 5 feet (1500 mm) or greater in each of three (3) different directions. For placements with a circular cross-section, a mass concrete placement shall be defined as any placement that has a diameter of 6 feet (1800 mm) or greater and a height of 5 feet (1500 mm) or greater. For all mass concrete placements, the mix temperature shall not exceed 85°F (30°C) as measured at point of discharge into the forms.

Any special concrete mix design proposed by the Contractor to meet the above temperature requirements shall be submitted to the Engineer for review.

7. Finishing Plastic Concrete: Unless otherwise specified in the Contract documents, after concrete has been consolidated and prior to final curing, all surfaces of concrete that are not placed against forms shall be struck-off to the planned elevation or slope. The surface shall be finished by floating with an acceptable tool. While the concrete is still in a workable state, all construction and expansion joints shall be tooled with an edger. Joint filler shall be left exposed. For requirements on float finish, refer to 6.01.03-10, "Finishing Concrete Surfaces."

After completion of the placing and finishing operation and for at least twelve (12) hours after the concrete has set, the Contractor shall not operate any equipment in the immediate vicinity of the freshly placed concrete if, in the opinion of the Engineer, it could cause excessive vibration, movement or deflection of the forms.

The addition of water to the surface of the concrete to assist in finishing operations will not be permitted.

(a) **Bridge Decks:** After the concrete has been consolidated and brought to the proper elevation by the screed machine, it shall be finished by use of a suitable float. The Contractor shall not disturb the fresh concrete after it has been finished. All finishing work, including the application of the fog spray and placement of the curing mats, shall be performed from work bridges supported above the deck surface. A work bridge shall be made available to the Engineer for inspection of the concrete work.

Surfaces that are to be covered with a waterproofing membrane shall be finished to a smooth surface, free of mortar ridges and other projections and in accordance with the membrane manufacturer's recommendations.

Unless otherwise noted in the Contract, the concrete wearing surfaces shall be given a skid-resistant texture by dragging, brooming, tining, or by a combination of these methods These methods shall be done after floating and at such time and in such manner that the desired texture will be achieved while minimizing displacement of the larger aggregate particles.

1. Dragging: The surface shall be finished by dragging a seamless strip of damp burlap over the surface. The burlap to be dragged shall consist of sufficient layers and have sufficient length in contact with the concrete to slightly groove the surface. The burlap shall be drawn longitudinally along the surface in a slow manner so as to leave an even texture. The burlap shall be kept damp, clean, and free of particles of hardened concrete. The Contractor may propose an alternate material for the Engineer's consideration.

2. Tining: Tining shall be in a transverse direction using a wire broom, comb, or float having a single row of tines or fins. The tining grooves shall be between 1/16 inch (1.5 mm) and 3/16 inch (5 mm) wide and between 1/8 inch (3 mm) and 3/16 inch (5 mm) deep, spaced 1/2 inch (12.5 mm) to 3/4 inch (20 mm) on centers. Tining shall be discontinued 12 inches (300 mm) from the curb line on bridge decks. The area adjacent to the curbs shall be given a light broom finish longitudinally. As an alternative, tining may be achieved using a machine designed specifically for tining or grooving concrete pavements.

The transverse grooving shall be performed when the grooves can be formed to a maximum depth of 3/16 inch (5 mm) with relative ease and without the walls of the grooves closing in on each other. The tining shall be aligned so as to prevent overlapping of grooves in any two (2) successive transverse passes. The Contractor shall measure the depth of the grooves in the presence of the Engineer with an appropriate device to ensure compliance.

(b) Surface Testing and Correction: The completed surface shall be constructed in accordance with grades and cross slopes shown on the plans. The entire surface shall be checked by the Contractor in the presence of the Engineer, with an acceptable 10 foot (3 meter) straightedge.

1. The surface shall not vary more than +/- 1/8 inch (3 mm) in 10 feet (3 m) for decks which will not be covered with an overlay.

2. The surface shall not vary more than +/- 1/4 inch (6 mm) in 10 feet (3 m) for decks which will be covered with an overlay.

Variances greater than these, which, in the opinion of the Engineer, may adversely affect the riding qualities of the surface shall be corrected, and this shall be done at the expense of the Contractor. The Contractor shall submit a corrective procedure to the Engineer for review and approval. The procedure shall correct such irregularities by methods such as, but not limited to, concrete planing or grooving.

8. Bearing Surfaces: Concrete surfaces under metallic masonry plates and elastomeric bearings shall have a float finish. After the concrete has set, the area which will be in contact with the masonry plate shall be ground as necessary to provide full and even bearing. The finished surface shall not vary from a straightedge laid on the surface in any direction within the limits of the masonry plate by more than 0.0625 inches (1.5 mm). Surfaces which fail to conform shall be ground or filled until acceptable to the Engineer.

9. Curing Concrete: All newly placed concrete shall be cured so as to prevent loss of water by use of the methods specified. The Engineer may request that the Contractor furnish a curing plan.

The duration of the initial and final curing period in total shall continue uninterrupted for a minimum of seven (7) days.

(a) Curing Methods:

1. Forms-In-Place Method: Formed surfaces of concrete may be cured by retaining the forms in place without loosening. During periods of hot weather, water shall be applied to the forms until the Engineer determines that it is no longer required.

2. Water Method: Exposed concrete surfaces shall be kept continuously wet by ponding, spraying, or covering with materials that are kept continuously and thoroughly wet. Such materials may consist of cotton mats, multiple layers of burlap, or other approved materials that do not discolor or otherwise damage the concrete.

3. Waterproof Cover Method: This method shall consist of covering exposed surfaces with a waterproof sheet material to prevent moisture loss from the concrete. The concrete shall be wet at the time the cover is installed. The sheets shall be of the widest practicable width and adjacent sheets shall overlap a minimum of 6.0 inches (150 mm) to form a waterproof cover of the entire concrete surface and shall be adequately secured. Broken or damaged sheets shall be immediately repaired and the concrete shall be remoistened.

(b) Additional Requirements for Bridge Decks:

1. Curing Plan: The Contractor shall submit to the Engineer, at least fourteen (14) days prior to the placement of concrete for the bridge deck, a detailed curing plan that describes the following:

   A. the initial and final curing durations,
   B. equipment and materials to be used for curing concrete and monitoring concrete temperature, and
   C. proposed primary and secondary water and heat sources

2. Initial Curing Period: A water fog spray shall be used by the Contractor from the time of initial placement until the final curing period begins. The amount of fog spray shall be strictly controlled so that accumulations of standing or flowing water on the surface of the concrete shall not occur.

   Should atmospheric conditions render the use of fog spray impractical, the Contractor shall request approval from the Engineer to use a curing compound that meets the requirements of Section M.03 in lieu of a fog spray. The application shall be in accordance with the manufacturer's recommendation and be compatible with the membrane waterproofing.

3. Final Curing: After completion of finishing and as soon as any bleed water has dissipated and the concrete reaches sufficient strength to avoid marring, the Final curing period shall begin and the entire concrete surface shall be covered with water-retaining materials such as cotton mats, multiple layers of burlap, or other materials approved by the Engineer. Materials used shall be kept saturated by means of an acceptable sprinkler or wetting system.

   The Contractor may cover the wet water-retaining material with a suitable polyethylene film to minimize evaporation during the curing period. The use of the polyethylene film does not relieve the Contractor from maintaining saturation of the curing materials.

4. Temperature Monitoring: The internal temperature of the concrete shall be monitored with a calibrated continuous recording thermometer for a minimum of seven (7) days. The air temperature at the concrete surface or the air temperature between the concrete surface and its protective covering shall be monitored with a minimum of one (1) recording thermometer.

   The number and placement of the thermometers will be determined by the Engineer. A minimum of two (2) thermometers per concrete placement shall be provided by the Contractor.

   The following types of thermometers shall be used to monitor curing temperatures:

   A. Continuously Recording Thermometer: The thermometer shall be capable of continuously recording temperatures within a range of -4 °F to 122 °F (-20°C to 50°C) for a minimum of twenty-four (24) hours.

   B. Maximum–Minimum Recording Thermometer: For all placements, the thermometer shall be capable of recording maximum and minimum temperatures in a range of -4 °F to 122 °F (-20°C to 50°C).

10. Finishing Concrete Surfaces: Any minor repairs due to fins, bulges, offsets and irregular projections shall be performed immediately following the removal of forms. For areas of newly placed concrete that are honeycombed or segregated the Contractor shall provide a written corrective procedure for review by the Engineer prior to the work being performed. Construction and expansion joints in the completed work shall be left

carefully tooled and free of mortar and concrete. The joint filler shall be left exposed for its full length with clean and true edges.

The cavities produced by form ties and all other holes, broken corners or edges, and other defects shall be cleaned, saturated with water, pointed and trued with a mortar conforming to M.11.04. Cement similar in color to the exposed surface being repaired shall be added to the mortar. Mortar used in pointing shall be used within one (1) hour of mixing. The concrete shall be finished as defined below if required and the cure continued as previously specified in "Curing Concrete."

Finishing work shall not interrupt the curing period unless permitted by the Engineer. The curing period may be extended to provide the minimum total number of days required.

Concrete surface finishes shall be classified as follows:

(a) **Float Finish:** This finish shall be achieved by placing an excess of material in the form and removing or striking off of such excess forcing the coarse aggregate below the mortar surface. Concave surfaces in which water will be retained will not be allowed. After the concrete has been struck off, the surface shall be thoroughly worked and floated. Before this last finish has set, the surface shall be lightly stripped with a fine brush to remove the surface cement film, leaving a fine-grained, smooth, but sanded texture. Curing, as specified elsewhere, shall follow. Any surfaces that will support appurtenances such as light standards, railing, or fences shall be finished in accordance with 6.01.03-8, "Bearing Surfaces."

(b) **Rubbed Finish:** The initial rubbing shall only be allowed within three (3) days after placement. The entire surface shall be thoroughly wet with a brush and rubbed with a No. 16 Carborundum Stone or an abrasive of equal quality, bringing the surface to a paste. The rubbing shall be continued sufficiently to remove all form marks and projections, producing a smooth, dense surface without pits or irregularities. The paste formed by the rubbing may be finished by stripping with a clean brush, or it may be spread uniformly over the surface and allowed to re-set. If all or portions of the rubbed surface are unacceptable to the Engineer or a rubbed finish is not provided within three (3) days after removal of forms, the Contractor will be directed to provide a grout clean down finish.

(c) **Grout Clean-Down Finish:** As soon as all cavities have been filled as required elsewhere and the cement mortar has set sufficiently, grout clean-down shall be performed. All burrs, unevenness, laitance, including that in air holes, and any other material which will adversely affect the bond of the grout to the concrete, shall be removed by acceptable methods. This cleaning shall be done from the top or uppermost part of the surface to be finished to the bottom.

    A mixture of a fine aggregate and Portland cement shall be thoroughly blended while dry. The proportions shall be such that when mixed with the proper amount of water, the color will match that of the concrete to be finished. Water shall be added to this mixture in an amount which will bring the grout to a workable thick paint-like consistency.

The surface to be treated shall be thoroughly wetted with a sufficient amount of water to prevent the absorption of water from the grout. Grout shall then be applied to the wetted surface before setting of the grout occurs. Grout which has set shall not be re-tempered and shall be disposed of by the Contractor at no cost to the State.

The grout shall be uniformly applied over the entire surface, completely filling all air bubbles and holes. Immediately after applying the grout, the surface shall be floated with a suitable float, scouring the surface vigorously. While the grout is still plastic, all excess grout shall be removed.

After the final rubbing is completed and the surface has dried, it shall be rubbed to remove loose powder and shall be left free from all unsound patches, paste, powder, and objectionable marks. Wetting, application and removal of excess grout shall be completed in one (1) work shift.

All finished surfaces shall be cured for a minimum of twenty-four (24) hours. Horizontal surfaces shall have a float finish and vertical exposed surfaces shall have a rubbed finish. A grout clean down finish may be substituted for a rubbed finish as noted in this section or as directed by the Engineer

11. Mortar, Grout, Epoxy and Joint Seal

(a) Mortar and Grout: This work consists of the making and placing of mortar and grout. At least forty-eight (48) hours prior to the planned use, a copy of the installation instructions and MSDS sheet(s) shall be provided to the Engineer for review and concurrence of their applicability and for verification of proper hole sizes in concrete structures. Such uses include mortar for filling under masonry plates, mortar used to fill voids and repair surface defects, grout used to fill sleeves for anchor bolts, and mortar and grout for other such uses where required or approved.

Concrete areas to be in contact with the mortar or grout shall be cleaned of all loose or foreign material that would in any way prevent bond, and the concrete surfaces shall be flushed with water and allowed to dry until no free-standing water is present.

The mortar or grout shall completely fill and shall be tightly packed into recesses and holes, on surfaces, under structural members, and at other locations specified. After placing, all surfaces of mortar or grout shall be cured as previously specified in 6.01.03-9(a)-2 "Curing Concrete – Water Method," for a period of not less than three (3) days.

(b) Epoxy: The epoxy shall be prepared and placed in accordance with the manufacturer's directions and with the equipment prescribed by the manufacturer. Instructions furnished by the supplier for the safe storage, mixing, handling and

application of the epoxy shall be followed. Contents of damaged or previously opened containers shall not be used.

(c) Joint Seal: This work consists of sealing joints where shown on the plans or as otherwise directed by the Engineer.

Before placement of the sealing material, the joints shall be thoroughly cleaned of all scale, loose concrete, dirt, dust or other foreign matter. Projections of concrete into the joint space shall be removed. The joint shall be clean and dry before the sealing compound is applied.

The joint sealant shall be prepared and placed in accordance with the manufacturer's directions and with the equipment prescribed by the manufacturer. The sealing compound shall be flush with, or not more than 1/8 inch (3 mm) above the adjacent surface of concrete, cutting off all excess compounds after the application. The joints shall be sealed in a neat and workmanlike manner and when the work is completed, the joints shall effectively seal against infiltration of moisture and water.

The Contractor shall arrange for, and have present at the commencement of the joint-sealing operation, a technically competent manufacturer's representative knowledgeable in the methods of installation of the sealant. The Contractor shall also arrange to have the representative present at such other times as the Engineer may request.

(d) **Closed Cell Elastomer:** The closed cell elastomer shall be of the thickness, size and type specified and installed as shown on the plans and shall be in accordance with Section M.03.

12. Application of Loads: Loads shall not be applied to concrete structures until the concrete has attained sufficient strength and, when applicable, sufficient pre-stressing and post tensioning has been completed, so that damage will not occur. The means to determine when the concrete has attained sufficient strength shall be the use of Progression cylinders as defined elsewhere in this specification, or other means approved in advance by the Engineer.

(a) **Earth Loads:** The placement of backfill shall not begin until the concrete is cured and has reached at least eighty percent (80%) of its specified strength unless otherwise permitted by the Engineer. The sequence of placing backfill around structures shall minimize overturning or sliding forces and flexural stresses in the concrete.

(b) **Construction Loads:** Light materials and equipment may be hand carried onto bridge decks only after the concrete has been in place at least twenty-four (24) hours providing curing is not interfered with and the surface texture is not damaged.

Prior to the concrete achieving its specified compressive strength, any other live or dead loads imposed on existing, new, or partially completed portions of structures, shall not exceed the reduced load carrying capacity of the structure, or portion of structure. The Contractor may be required to submit calculations to the Engineer

that verify these requirements are being met. The compressive strength of concrete ($f'c$) to be used in computing the load-carrying capacity shall be the smaller of the actual field compressive strength at the time of loading or the specified design strength of the concrete. The means to determine the actual field compressive strength shall be approved by the Engineer.

For post-tensioned structures, no live or dead loads shall be allowed on any span until the steel for that span has been tensioned.

(c) **Loading of Completed Elements:** Precast concrete or steel girders shall not be placed on substructure elements until the substructure concrete has attained eighty-five percent (85%) of its specified strength.

No load shall be allowed on mortar or grout that has been in place less than seventy-two (72) hours.

(d) **Traffic Loads:** The concrete deck will not be opened to traffic until at least fourteen (14) days after the last placement of deck concrete and until such concrete has attained its specified strength.

13. Dispute Resolution: The basis of any dispute resolution is side-by-side and quality control testing by the Contractor or the Contractor's representative. The Contractor and Engineer should perform independent testing on the material to reasonably establish the true characteristics of the material at the time of delivery. Absent of Contractor QC testing, the Engineer's test results will apply to the quantity of concrete represented by the sample, not to exceed 75 cubic yards (60 cubic meters).

(a) **Air Content:** Contractor QC Testing must be performed by personnel qualified by The American Concrete Institute as an ACI Concrete Field Testing Technician Grade 1 or higher and performed in accordance with AASHTO T-23. If the Contractor's test results vary from those of the Engineer, the Contractor shall immediately notify the Engineer of the difference and work cooperatively to determine the reasonable cause and recognize the valid test. Should there be agreement, the result of the valid test will be used for acceptance and adjustment purposes for that lot of material. Should there not be an agreement as to the valid test, an additional set of tests should be performed. Results of all valid tests on the same lot may be averaged and used for acceptance and adjustment purposes. Should the Contractor wish to perform additional QC testing on subsequent material, the lot sizes may be adjusted to the amount of material included in that specific delivery. Any such QC testing must be witnessed and agreed to by the Engineer.

(b) **Compressive Strength:** Contractor QC testing for compressive strength must be performed in accordance with AASHTO T-22 by personnel approved by the Engineer. Samples used to dispute the Engineer's test results must be made simultaneously and from the same batch of concrete. Should the Contractor wish to pursue a dispute resolution with regard to compressive strength, the Contractor shall submit in writing to the Engineer all test results, control charts, or other documentation that may be useful in determining if the specific lot(s) of material met the Contract specifications. The Engineer will consider the submittal and may average specific test results on the disputed lot(s) for acceptance and adjustment purposes. Destructive testing of any kind on the placed concrete structure will not be allowed.

6.01.04—Method of Measurement: This work will be measured for payment as follows:

1. Concrete: The quantity of concrete will be the actual volume in cubic yards (cubic meters) of the specified class or classes, with the exception of underwater concrete, completed and accepted within the neat lines as shown on the plans or as ordered by the Engineer.

When concrete is placed against bedrock, a maximum of 6 additional inches (150 additional millimeters) beyond the neat lines can be measured for payment.

No deduction will be made for panels, form liners, reinforcing bars, structural steel shapes or for pile heads. There will be no deduction made for the volume occupied by culvert and drainage pipes, scuppers, weep holes, public utility structures or any other opening, unless the surface area of any such single opening is 9 square feet (1 square meter) or more.

In the case of culverts or drainage pipes, the computation of the surface area will be based on the nominal diameter of the pipe, disregarding the thickness of the shell.

Miscellaneous materials necessary for completion of the work such as felt, mortar, grout, epoxy, joint seal, paraffin coating and closed cell elastomer will not be measured for payment.

Incidental work such as forming for anchor bolts, utilities, keyways, and sampling and testing will not be measured for payment.

2. Underwater Concrete: When underwater concrete is used, it will be measured by the volume in cubic yards (cubic meters) within the actual horizontal limits of the cofferdam and between the elevations established by the Engineer.

3. Joint Filler: This material will be measured by the area in square feet (square meters) of the joint filler, of the type and thickness specified, actually installed and accepted.

6.01.05—Basis of Payment: Payment for this work will be made as follows:

1. Concrete: Progress payments may be allowed for completed major labor elements of work such as forming, placing and curing. Prior to placement, the Contractor shall submit a proposed schedule of values for review and approval by the Engineer.

Payment for any lot of concrete allowed to remain in place will be adjusted when the field and laboratory testing of the material is completed. The quantity of concrete in each lot will be a maximum of 75 cubic yards (60 cubic meters). Payment for each lot of concrete will be adjusted based on the results of the Acceptance testing performed by the Engineer.

The following pay factors apply for Standard and Modified Standard Mix classes with regard to entrained air content:

Air Pay Factors

Measured air (%)		Pay factor (%)
4.5 to 7.5		1.00 (100)
4.3 and 4.4	7.6 and 7.7	0.98 (98)
4.1 and 4.2	7.8 and 7.9	0.96 (96)
3.9 and 4.0	8.0 and 8.1	0.94 (94)
3.7 and 3.8	8.2 and 8.3	0.92 (92)
3.5 and 3.6	8.4 and 8.5	0.90 (90)
Concrete lots with less than 3.5% or greater than 8.5% entrained air will be rejected.		

The following pay factors apply for Standard and Modified Standard Mix classes with regard to compressive strength:

Strength Pay Factors

Compressive Strength (%)	Pay factor (%)
95 or greater	1.00 (100)
90 to 94.9	0.95 (95)
85 to 89.9	0.90 (90)
Concrete lots with less than 85% specified strength will be rejected.	

The payment adjustment value for entrained air and 28-day strength for any lot of concrete that is allowed to remain in-place is determined using the formulas below. An index price of $400.00 per c.y. (cu.m) shall be used to calculate each adjustment. The total adjustment value will be the sum of each individual adjustment value and will be deducted from the payment for the appropriate item.

English Units:	Metric Units:
Adjustment (air) = (1 - air pay factor) x $400/c.y. x lot size (c.y.)	Adjustment (air) = (1 - air pay factor) x $400/cu.m x lot size (cu.m)
Adjustment (strength) = (1 - strength pay factor) x $400/c.y. x lot size (c.y.)	Adjustment (strength) = (1 - strength pay factor) x $400/cu.m x lot size (cu.m)
Total Adjustment = Adjustment (air) + Adjustment (strength)	

The Contractor shall request permission from the Engineer to remove and replace a lot(s) of concrete to avoid a negatively adjusted payment. Any replacement material will be sampled, tested and evaluated in accordance with this specification.

No direct payment will be made for any labor, equipment or materials used during the sampling and testing of the concrete for Progression or Acceptance. The cost shall be considered as included in the general cost of the work or as stated elsewhere in the Contract. The work of transporting the concrete test specimens, after initial curing, for Acceptance testing will be performed by the Department without expense to the Contractor.

This material will be paid for at the Contract unit price per cubic yard (cubic meter) less any adjustments, for the specified class or classes, complete in place, which price shall include all materials, equipment, tools, labor and work incidental thereto, including heating, all admixtures, joint sealer, roofing felt and closed cell elastomer, and any miscellaneous materials such as metal flashing and metal used in expansion joints and bearings.

2. Underwater Concrete: When this class of concrete is used, it will be paid for at the Contract unit price per cubic yard (cubic meter) for "Underwater Concrete," complete in place, which price shall include all materials, equipment, tools, labor and work incidental thereto.

3. Joint Filler: Expansion joint filler will be paid for at the Contract unit price per square foot (square meter) for "Joint Filler for Bridges" of the type and thickness specified, complete in place, which price shall include all materials, equipment, tools, labor and work incidental thereto.

Pay Item	Pay Unit
Concrete (Class A, C, F)	c.y. (cu.m)
Underwater Concrete	c.y. (cu.m)
Joint Filler for Bridges (Thickness and Type)	s.f. (s.m.)

CONNECTICUT
SUPPLEMENTAL SPECIFICATION
SECTION 6.03
STRUCTURAL STEEL

Delete the entire section and replace it with the following:

SECTION 6.03
STRUCTURAL STEEL

Description: Work under this item shall consist of furnishing, fabricating, transporting, storing, handling and erecting of structural steel of the type and size designated, as shown on the plans, as directed by the Engineer and in accordance with these specifications.

All work except as stated in the following paragraph shall conform to the requirements of the AASHTO LRFD Bridge Construction Specifications and the ANSI/AASHTO/AWS D1.5 – Bridge Welding Code.

All work subject to railroad loading shall conform to AREMA and the ANSI/AASHTO/AWS D1.5 – Bridge Welding Code.

Materials: The materials for this work shall conform to the requirements of Section M.06.

Materials for this work shall be stored off the ground before, during, and after fabrication. It shall be kept free from dirt, grease and other contaminants and shall be reasonably protected from corrosion. In addition, weathering steel shall be stored as to allow free drainage and promote the development of the oxide coating and a uniform appearance.

Construction Methods:

1. Pre-qualification:

(a) Fabricators producing material for Department projects under this item are required to have as a minimum, an active AISC Certification for Simple Steel Bridges. For fabrication of material for use on bridges other than un-spliced rolled beam bridges, AISC Major Steel Bridge Certification is required. If so noted on the plans, additional AISC endorsement for fabrication of fracture critical members is also required.

(b) Field Welders: Prior to working on material for Department projects under this specification, all field welders, field welding operators, and field tackers must posses a valid welder certification card issued by the Department's Division of Materials Testing. If such person has not been engaged in welding operations on a Department project or

project acceptable to the Department within a period of six months, or if he cannot produce an approved welding certificate dated within the previous twelve months from a welding agency acceptable to the Engineer, he shall be required to re-qualify through examination. The Engineer may require re-qualification of anyone whose quality of work he questions.

2. Submittals:

(a) Shop Drawings: Prior to any fabrication, the Contractor shall submit shop drawings in accordance with Article 1.05.02-3 to the Engineer for review and approval. Shop drawings shall include a cambering procedure and diagram. In the case of trusses, the Contractor is responsible for calculation of the camber (lengthening and shortening) of all truss members.

(b) Shop Schedule: The Contractor shall submit a detailed shop fabrication schedule to the Engineer for review within 30 days of the notice to proceed unless otherwise agreed to by the Engineer. At a minimum the schedule shall include the start date, milestone dates, and completion date. Any significant changes shall be brought to the attention of the Engineer immediately.

(c) Welding Procedures: Prior to start of fabrication, all weld procedures shall be submitted to the Engineer for review and approval.

(d) Working Drawings for Falsework and Erection of Structural Steel: Prior to erecting any steel fabricated under this specification, the Contractor shall submit drawings and supporting calculations, including erection stresses, in accordance with Article1.05.02-2 to the Engineer. The design of temporary supports and falsework shall conform to the *AASHTO Specifications,* the *AASHTO Guide Design Specifications for Bridge Temporary Works* or any other standard acceptable to the Engineer. Falsework shall be of sufficient rigidity and strength to safely support all loads imposed and to produce in the finished structure the lines and grades indicated in the contract documents. The submittal shall include at a minimum:

- Title block with contract number, project identification number (PIN), town, and structure number and name.
- Plan of the work area showing support structures, roads, railroad tracks, Federal and State regulated areas as depicted on the plans, utilities or any other information relative to erection.
- A detailed narrative describing the erection sequence for main members and secondary members (cross frames, diaphragms, lateral bracing, portals, etc.), noting use of holding cranes or temporary supports, falsework, or bents.
- Delivery location of each girder.
- Location of each crane for each pick.
- Capacity chart for each crane and boom length used in the work.
- The capacity of the crane and of all lifting and connecting devices shall be adequate for the total pick load including spreaders and other materials. In the area of railroads and navigable waterways, the capacity shall be as required by Amtrak, Metro North, U.S. Coast Guard or other regulatory authorities. No picks shall be

allowed over vehicular or pedestrian traffic unless otherwise noted on the plans or permitted by the Engineer.

- Pick point location(s) on each member.
- Lifting weight of each member (including clamps, spreader beams, etc.)
- Lift and setting radius for each pick (or maximum lift radius).
- Description of lifting devices or other connecting equipment.
- Girder tie-down details or other method of stabilizing erected girders.
- Bolting requirements, including the minimum number of bolts and erection pins required to stabilize members during the erection sequence.
- Blocking details for stabilizing members supported on expansion bearings and on bearings that do not limit movement in the transverse direction.
- The method and location for temporary supports for field spliced or curved girders, including shoring, false work, holding cranes, guys, etc. The Engineer will review, but not approve details of temporary supports. The design, erection, and stability of these supports shall be the sole responsibility of the Contractor.
- Offsets necessary to adjust expansion bearings during erection to provide for temperature variance and dead load rotation.

The following notes shall be placed on the Erection Drawings:

- Cranes shall be operated in accordance with the Connecticut Department of Public Safety regulations.
- The Contractor shall be responsible for verifying the weight of each lift and for insuring the stability of each member during all phases of erection.
- Members shall be subject to only light drifting to align holes. Any drifting that results in distortion of the member or damage to the holes will be cause for rejection of the member.
- Field reaming of holes shall not be performed unless required by the Contract Drawing or approved by the Engineer.

The Contractor shall submit these documents to the Engineer at least 60 calendar days in advance of their proposed use. If the proposed method of erection requires additional members or modifications to the existing members of the structure, such additions and modifications shall be made by the Contractor at no expense to the State.

3. Shop Fabrication: Unless otherwise shown on the plans or indicated in the Special Provisions, Structural Steel shall be fabricated in accordance with the AASHTO LRFD Bridge Construction Specifications, amended as follows:

(a) Notification: The Contractor shall submit written notification to both the Engineer and the Director of Research and Materials Testing not less than 30 calendar days prior to start of fabrication. No material shall be manufactured or worked in the shop before the Engineer has been so notified. The notification shall include the name and location of the fabrication shop where the work will be done so that arrangements can be made for an audit of the facility and the assignment of a Department Quality Assurance inspector.

(b) Camber: All members shall be cambered prior to heat curving and painting. Rolled beams shall be heat cambered by methods approved by the Engineer. Plate girders shall be cambered by cutting the web to the prescribed shape with allowances for shrinkage due to cutting, welding, and heat curving. The fabricator is responsible to determine what allowances should be made. Rolled, plate-rolled, or fabricated sections shall be cambered to the total amount shown on the plans and within the camber deviation tolerances permitted for welded beams and girders, as indicated in the ANSI/AASHTO/AWS D1.5 Bridge Welding Code. The Contractor must submit to the Engineer for approval, a plan for corrective action if the actual camber is not within tolerance.

(c) Welding: Unless otherwise indicated on the plans or specifications, all work shall be performed in accordance with ANSI/AASHTO/AWS D1.5 – Bridge Welding Code.

(d) Preassembly of Field Connections: Field connections of main members of continuous beams, plate girders, bents, towers, rigid frames, trusses and arches shall be preassembled prior to erection as necessary to verify the geometry of the completed structure or unit and to verify or prepare field splices. The Contractor shall propose an appropriate method of preassembly for review and comment by the Engineer. The method and details of preassembly shall be consistent with the erection procedures shown on the working drawings and camber diagrams. As a minimum, the preassembly procedure shall consist of assembling three contiguous panels accurately adjusted for line and camber. Successive assemblies shall consist of at least one section or panel of the previous assembly plus two or more sections or panels added at the advancing end. In the case of structures longer than 150 feet (45 meters), each assembly shall not be less than 150 feet (45 meters) long regardless of the length of individual continuous panels or section. All falsework, tools, machinery and appliances, including drift pins and bolts necessary for the expeditious handling of the work shall be provided by the Contractor at no cost to the State.

(e) Inspection: The Contractor shall furnish facilities for the inspection of material and workmanship in the shop by the Engineer. The Engineer and his representative shall be allowed free access to the necessary parts of the premises.

The Engineer will provide Quality Assurance (QA) inspection at the fabrication shop to assure that all applicable Quality Control plans and inspections are adequately adhered to and maintained by the Contractor during all phases of the fabrication. A thorough inspection of a random selection of elements at the fabrication shop may serve as the basis of this assurance.

Prior to shipment to the project, each individual piece of structural steel shall be stamped or marked in a clear and permanent fashion by a representative of the fabricators' Quality Control (QC) Department to indicate complete final inspection by the fabricator and conformance to the project specifications for that piece. The stamp or mark must be dated. A Materials Certificate in accordance with Article 1.06.07 may be used in lieu of individual stamps or markings, for all material in a single shipment. The Materials Certificate must list each piece within the shipment and accompany the shipment to the project site.

Following the final inspection by the fabricator's QC personnel, the Engineer may select pieces of structural steel for re-inspection by the Department's QA inspector. Should non-conforming pieces be identified, all similar pieces must be re-inspected by the fabricator and repair procedure(s) submitted to the Engineer for approval. Repairs will be made at the Contractor's expense.

The pieces selected for re-inspection and found to be in conformance, or adequately repaired pieces, may be stamped or marked by the QA inspector. Such markings indicate the Engineer takes no exception to the pieces being sent to the project site. Such marking does not indicate acceptance or approval of the material by the Engineer.

Following delivery to the project site, the Engineer will perform a visual inspection of all material to verify shipping documents, fabricator markings, and that there was no damage to the material or coatings during transportation and handling.

The Engineer is not responsible for approving or accepting any fabricated materials prior to final erection and assembly at the project site.

(f) Nondestructive Testing: All nondestructive testing of structural steel and welding shall be performed as designated on the plans and in the project specifications. Such testing shall be performed by personnel approved by the Engineer.

Personnel performing Radiographic, Ultrasonic or Magnetic Particle testing shall be certified as a NDT Level II technician in accordance with the American Society for Non Destructive Testing (ASNT), Recommended Practice SNT-TC-1A.

Nondestructive testing shall be performed in accordance with the procedures and standards set forth in the AASHTO/AWS D1.5, Bridge Welding Code. The Department reserves the right to perform additional testing as determined by the Engineer.

All nondestructive testing shall be witnessed by an authorized representative of the Department. Certified reports of all tests shall be submitted to the Materials Testing Division for examination. Each certified report shall identify the structure, member, and location of weld or welds tested. Each report shall also list the length and location of any defective welds and include information on the corrective action taken and results of all retests of repaired welds.

Should the Engineer require nondestructive testing on welds not designated in the contract, the cost of such inspection shall be borne by the Contractor if the testing indicates that any weld is defective. If the testing indicates the weld to be satisfactory, the actual cost of such inspection will be paid by the Department.

(g) Marking: Each member shall be identified with an erection mark corresponding with the member identification mark on the approved shop drawings. Identification marks shall be impressed into the member with a low stress stamp in a location in accordance with standard industry practice.

(h) Shipping, Handling, Storage and Receiving: The Contractor shall make all arrangements necessary to properly load, transport, unload, handle and store all material. The Contractor shall furnish to the Engineer copies of all shipping statements. The weight (mass) of the individual members shall be shown on the statements. Members having a weight (mass) of more than 3 tons (2700 kilograms) shall have the weight (mass) marked thereon. All material shall be unloaded promptly upon delivery. The Contractor shall be responsible for any demurrage charges. Damage to any material during transportation, improper storage, faulty erection, or undocumented fabrication errors may be cause for rejection of said material at the project site. Top lateral bracing should be installed in tub girders prior to shipping and erection of the field pieces. All costs associated with any corrective action will be borne by the Contractor.

4. Field Erection: A meeting shall be held on site prior to any erection of structural steel. The Contractor shall name the person responsible for the steel erection work and provide copies of all crane operator licenses. Proposed equipment, rigging, timetable and methods shall be proposed at this meeting.

(a) Falsework: Any temporary work shall be constructed in conformance with the working drawings. The Contractor shall verify that the quality of materials and work employed are consistent with their design.

All girders shall be stabilized with falsework, temporary braces, or holding cranes until a sufficient number of adjacent girders are erected with all diaphragms and cross frames connected to provide necessary lateral support as shown in the erecting diagrams.

Adjustment shall be provided in the falsework and other temporary supports so that the temporary elevation of the structural steel provided by the falsework is consistent with the deflections that will occur as the structure is completed. The elevation of falsework shall be such as to support the girders at the cambered no-load elevation. Unloading of temporary supports should be performed such that all temporary supports at each cross section are unloaded uniformly. Unless specifically permitted by the Engineer, welding of falsework support brackets to structural steel is not allowed.

Unless erected by the cantilever method, truss spans shall be erected on blocking. The blocking shall be left in place until the tension chord splices are fully bolted and all other truss connections pinned and bolted and the proper geometric shape is achieved.

(b) Anchorages: Anchor bolts and similar materials which are to be placed during the erection of the structural steel shall be carefully and accurately set to the requirements of Article 6.01.03.

(c) Bearings: Bearing plates shall have a full and uniform bearing upon the substructure masonry. Bearing plates shall be placed upon bearing areas which are finished according to the requirements of Article 6.01.03.

Prefabricated pads conforming to the requirements of Article M-12.01 shall be installed unless specifically noted otherwise on the contract plans.

Each piece shall be the same size as the bearing plate it is to support and the holes to accommodate the anchor bolts shall be clearly and accurately punched before setting the pad in place.

In placing expansion bearings, due consideration shall be given to the temperature at the time of erection and stage construction requirements. The nuts of anchor bolts at expansion bearings shall be adjusted to permit the free movement of the span.

(d) Field Assembly: Members and components shall be accurately assembled as shown on the plans and any match marks shall be followed. The material shall be carefully handled so that no components will be bent, broken or otherwise damaged.

Hammering which will injure or distort the members is not permitted. Bearing surfaces and surfaces to be in permanent contact shall be cleaned before the members are assembled.

Cylindrical erection pins shall be 1/32 inch (0.8 mm) larger than the nominal diameter of the holes.

Splices and field connections of main stress carrying members shall be made with a minimum of 50% of the holes filled and tightened with high strength bolts before the lifting system is released. The bolts shall be installed uniformly throughout the connection. Lateral stability must be maintained until the deck is placed.

The Contractor shall ensure that girders are stable throughout the erection process. The stage of completeness of the bolted connections shall be considered when evaluating the strength and stability of the steel during erection. For Closed Box and Tub Girders the Contractor shall ensure that the cross- section shape of each box is maintained during erection. Top lateral bracing should be installed in tub girders prior to shipping and erection of the field pieces.

(e) Welded Connections:

Unless otherwise shown on the plans or indicated by the special provisions, welding of structural steel shall be done in accordance with "ANSI/AASHTO/AWS D1.5 Bridge Welding Code."

The Contractor's welding and inspection procedures for each type of field weld and field tacking must be submitted to the Engineer on the form designated by the Department. All procedures must be approved by the Materials Testing Division prior to any work and must be adhered to at all times.

Quality control is the responsibility of the Contractor. The Contractor must provide an AWS Certified Welding Inspector (CWI) in accordance with AWS D1.5. The CWI must be qualified and certified in accordance with the provisions of AWS QC1, *Standard for Qualification and Certification of Welding Inspectors.*

The CWI shall make visual inspection of all welds. The Contractor will perform magnetic particle inspection, ultrasonic testing inspection, or radiographic testing inspection of field welds when required on the plans or special provisions. Each test may be witnessed by an authorized representative of the Engineer.

Welds or sections of welds containing imperfections determined to be unacceptable by either the CWI or the Engineer shall be removed and re-welded by the Contractor at their expense. Welds so removed and replaced shall be re-inspected by the CWI. All costs for re-inspection or testing of such welds shall be borne by the Contractor.

(f) High Strength Bolted Connections:

The assembly of structural connections using ASTM A 325/ A 325M or ASTM A 490/A 490M high-strength bolts shall be installed so as to develop the minimum required bolt tension specified in Table A. The Manufacturer's certified test report; including the rotational capacity test results **must** accompany the fastener assemblies. Fastener Assemblies delivered without the certified reports will be rejected.

Bolts, nuts and washers from each rotational-capacity lot shall be shipped in the same container. If there is only one production lot number for each size of nut and washer, the nuts and washers may be shipped in separate containers. Each container shall be permanently marked with the rotational-capacity lot number such that identification will be possible at any stage prior to installation. Assemblies of bolts, nuts and washers shall be installed from the same rotational-capacity lot. Pins, small parts and packages of bolts, washers, and nuts shall be shipped in boxes, crates, kegs, or barrels. A list and description of the contained materials shall be plainly marked on the outside of each shipping container.

Bolted Parts: All material within the grip of the bolt shall be steel; there shall be no compressible material, such as gaskets or insulation, within the grip. Bolted steel shall fit solidly together after the bolts are tensioned. The length of the bolts shall be such that the end of the bolt will be flush with or outside of the face of the nut when properly installed.

Surface Conditions: At the time of assembly, all connection surfaces, including surfaces adjacent to the bolt head and nut, shall be free of scale, except tight mill scale, and shall be free of dirt or other foreign material. Burrs that would prevent solid seating of the connected parts in the snug tight condition shall be removed.

Paint is permitted on the faying surface, including slip critical connections, only when shown on the plans. The faying surfaces of slip-critical connections shall meet the requirements of the following paragraphs, as applicable:

- Connections specified to have un-coated faying surfaces: any paint, including any inadvertent over spray, shall be excluded from areas closer than one bolt diameter, but not less than 1.0 in. (25 mm), from the edge of any hole and all areas within the bolt pattern.

- Connections specified to have painted faying surfaces: shall be blast cleaned and coated in accordance with Section 6.04, and shall not be assembled until the coating system has been properly cured.

- Connections specified to have galvanized faying surfaces: shall be hot-dip galvanized in accordance with ASTM A 123/A 123M, and shall subsequently be roughened by means of hand wire brushing. Power wire brushing is not permitted.

Installation: At the pre-erection meeting, the Contractor shall inform the Engineer of their planned method of tensioning high strength bolts. Acceptable methods are: Turn-of-Nut, Calibrated Wrench or Direct Tension Indicator.

Fastener Assemblies:

A "fastener assembly" is defined as a bolt, a nut, and a washer. Only complete fastener assemblies of appropriately assigned lot numbers shall be installed.

Fastener assemblies shall be stored in an area protected from dirt and moisture. Only as many fastener assemblies as are anticipated to be installed and tensioned during a work shift shall be taken from protected storage. Fastener assemblies not used shall be returned to protected storage at the end of the shift. Prior to installation, fastener assemblies shall not be cleaned of lubricant. Fastener assemblies which accumulate rust or dirt resulting from site conditions shall be cleaned, relubricated and tested for rotational-capacity prior to installation. All galvanized nuts shall be lubricated with a lubricant containing a visible dye. Plain bolts must be oily to the touch when delivered and installed. Lubricant shall be removed prior to painting.

All bolts shall have a hardened washer under the turned element (nut or bolt head). All hardened washers shall conform to the requirements of ASTM F 436/F 436M.

Where necessary, washers may be clipped on one side to a point not closer than 7/8 of the bolt diameter from the center of the washer. Circular and beveled washers, when used adjacent to direct tension indicator washers shall not be clipped. Direct tension indicator washers shall not be clipped.

Bolt Tension Measuring Device: The Contractor shall provide a calibrated bolt tension measuring device (a Skidmore-Wilhelm calibrator (Skidmore) or other acceptable bolt tension indicating device) at all times when, and at all locations where high-strength fasteners are being installed and tensioned. The tension measuring device (Skidmore) shall be calibrated by an approved testing agency at least annually. The Skidmore shall be used to perform the rotational-capacity test of the fastener assemblies. The Skidmore will also be used to substantiate (1) the suitability of the fastener assembly to satisfy the requirements of Table A, including lubrication as required, (2) calibration of the installation wrenches, if applicable, and (3) the understanding and proper use by the contractor of the selected method of tensioning to be used.

Complete fastener assemblies shall be installed in properly aligned holes and then tensioned by the Turn-of-Nut, Calibrated Wrench or Direct Tension Indicator method to the minimum tension specified in Table A. Tensioning may be done by turning the bolt while the nut is prevented from rotating when it is impractical to turn the nut. Impact wrenches, if

used, shall be of adequate capacity and sufficiently supplied with air to perform the required tensioning of each bolt in approximately 10 seconds.

Bolts shall be installed in all holes of the connection and the connection brought to a snug condition. Snug is defined as having all the plies of the connection in firm contact. Snugging shall progress systematically from the most rigid part of the connection to the free edges. The bolts of the connection shall then be tightened in a similar manner as necessary until the connection is properly tensioned.

Nuts shall be located, whenever practical, on the side of the connection which will not be visible from the traveled way.

Unless otherwise approved by the Engineer fastener assemblies shall be brought to full tension immediately following snugging.

Fully tensioned fastener assemblies shall not be reused. Retightening previously tensioned bolts which may have been loosened by the tensioning of adjacent bolts shall not be considered as reuse.

Rotational-Capacity Tests: In addition to the certified test reports, on site Rotational-capacity tests may be required by the Engineer. This test shall be performed by the Contractor at the location where the fasteners are installed and tensioned. When performed in the field, the procedure shall conform to the requirements of ASTM A 325/ A 325M Appendix A-1.

Turn-of-Nut Installation Method:

At the start of the work, the Contractor shall demonstrate that the procedure used by the bolting crew to develop a snug condition and to control the turns from a snug condition develops the tension required in Table A. To verify their procedure, the Contractor shall test a representative sample of not less than three complete fastener assemblies of each diameter, length and grade to be used in the work. This shall be performed at the start of work using a Skidmore. Periodic retesting shall be performed when ordered by the Engineer.

After snugging the connection, the applicable amount of rotation specified in Table B shall be achieved. During the tensioning operation there shall be no rotation of the part not turned by the wrench. Tensioning shall progress systematically from the most rigid part of the connection to its free edges.

Calibrated Wrench Installation Method:

Calibrated wrench method may be used only when the installation wrenches are properly calibrated daily, or as determined by the Engineer. Standard torques determined from tables or from formulas which are assumed to relate torque to tension **shall not** be acceptable.

The Contractor shall demonstrate to the Engineer periodically that all equipment and wrenches are providing a torque which has been calibrated to produce the minimum tension specified in Table A. The installation procedures shall be verified periodically, as determined by the Engineer, for each bolt diameter, length and grade using the fastener assemblies that are being installed in the work. This verification testing shall be accomplished in a Skidmore by tensioning three complete fastener assemblies of each diameter, length and grade from those being installed with a hardened washer under the element turned.

When significant difference is noted in the surface condition of the bolts, threads, nuts or washers, as determined by the Engineer, wrenches shall be recalibrated. The Contractor shall verify during the installation of the assembled steel work that the wrench adjustment selected by the calibration does not produce a nut or bolt head rotation from snug greater than that permitted in Table B. If manual torque wrenches are used, nuts shall be turned in the tensioning direction when torque is measured.

When calibrated wrenches are used to install and tension bolts in a connection, bolts shall be installed with hardened washers under the element turned to tension the bolts. Once the connection has been snugged, the bolts shall be tensioned using the calibrated wrench. Tensioning shall progress systematically from the most rigid part of the connection to its free edges. A calibrated torque wrench shall be used to "touch up" previously tensioned bolts which may have been relaxed as a result of the subsequent tensioning of adjacent bolts until all bolts are tensioned to the prescribed amount.

Direct Tension Indicator Installation Method:

When Direct Tension Indicators (DTIs) meeting the requirements of Section M.06 are used with high-strength bolts to indicate bolt tension, they shall be subjected to the verification testing described below and installed in accordance with the method specified below. Unless otherwise approved by the Engineer, the DTIs shall be installed under the head of the bolt and the nut turned to tension the bolt. The Manufacturer's recommendations shall be followed for the proper orientation of the DTI and additional washers, if any, required for the correct use of the DTI. Installation of a DTI under the turned element may be permitted if a washer is used to separate the turned element from the DTI.

Verification: Verification testing shall be performed in a Skidmore. A special flat insert shall be used in place of the normal bolt head holding insert. Three verification tests shall be required for each combination of fastener assembly rotational-capacity lot, DTI lot, and DTI position relative to the turned element (bolt head or nut) to be used on the project. The fastener assembly shall be installed in the tension-measuring device with the DTI located in the same position as in the work. The element intended to be stationary (bolt or nut) shall be restrained from rotation.

The verification tests shall be conducted in two stages. The bolt nut and DTI assembly shall be installed in a manner so that at least three and preferably not more than five threads are located between the bearing face of the nut and the bolt head. The bolt shall be tensioned first to the load equal to that listed in Table C

under Verification Tension for the grade and diameter of the bolt. If an impact wrench is used, the tension developed using the impact wrench shall be no more than two-thirds of the required tension. Subsequently, a manual wrench shall be used to attain the required tension. The number of refusals of the 0.005-in. (0.125-mm) tapered feeler gage in the spaces between the protrusions shall be recorded. The number of refusals for uncoated DTIs under the stationary or turned element, or coated DTIs under the stationary element, shall not exceed the number listed under Maximum Verification Refusals in Table C for the grade and diameter of bolt used. The maximum number of verification refusals for coated DTIs (galvanized, painted, or epoxy-coated), when used under the turned element, shall be no more than the number of spaces on the DTI less one. The DTI lot shall be rejected if the number of refusals exceeds the values in the table or, for coated DTIs if the gage is refused in all spaces.

After the number of refusals is recorded at the verification load, the bolt shall be further tensioned until the 0.005-in (0.125-mm) feeler gage is refused at all the spaces and a visible gap exists in at least one space. The load at this condition shall be recorded and the bolt removed from the tension-measuring device. The nut shall be able to be run down by hand for the complete thread length of the bolt excluding thread run-out. If the nut cannot be run down for this thread length, the DTI lot shall be rejected unless the load recorded is less than 95 percent of the average load measured in the rotational capacity test of the fastener lot as specified previously in "Rotational-Capacity Tests."

If the bolt is too short to be tested in the calibration device, the DTI lot shall be verified on a long bolt in a calibrator to determine the number of refusals at the verification tension listed in Table C. The number of refusals shall not exceed the values listed under maximum verification refusals in Table C. Another DTI from the same lot shall then be verified with the short bolt in a convenient hole in the work. The bolt shall be tensioned until the 0.005-in. (0.125-mm) feeler gage is refused in all spaces and a visible gap exists in at least one space. The bolt shall then be removed from the tension-measuring device and the nut shall be able to be run down by hand for the complete thread length of the bolt excluding thread run-out. The DTI lot shall be rejected if the nut cannot be run down this thread length.

Installation: Installation of fastener assemblies using DTIs shall be performed in two stages. The stationary element shall be held against rotation during each stage of the installation. The connection shall be first snugged with bolts installed in all holes of the connection and tensioned sufficiently to bring all the plies of the connection into firm contact. The number of spaces in which a 0.005-in. (0.125-mm) feeler gage is refused in the DTI after snugging shall not exceed those listed under maximum verification refusals in Table C. If the number exceeds the values in the table, the fastener assembly shall be removed and another DTI installed and snugged.

For uncoated DTIs used under a stationary or turned element and for coated DTIs used under a stationary element, the bolts shall be further tensioned until the number of refusals of the 0.005-in. (0.125-mm) feeler gage shall be equal or greater than the number listed under Minimum Installation Refusals in Table C. If the bolt is

tensioned so that no visible gap in any space remains, the bolt and DTI shall be removed and replaced by a new properly tensioned bolt and DTI.

When coated DTIs (galvanized, painted or epoxy coated) are used under a turned element, the 0.005-in (0.125-mm) feeler gage shall be refused in all spaces.

Inspection:

The Contractor shall provide all the material, equipment, tools and labor necessary for the inspection of the bolted connections. Access to the bolted parts and fastener assemblies, both before and after the fasteners are installed and tensioned, shall be provided.

The Contractor is responsible for Quality Control (QC). The Contractor shall review this specification with its project personnel prior to performing the work. The Contractor shall verify the proper markings, surface conditions and storage of fastener assemblies. The Contractor shall inspect the faying surfaces of connections for compliance with the plans and specifications. The Contractor shall provide to the Engineer a copy of their written QC report for each shift of the calibration or verification testing specified. This report shall confirm that the selected procedure is properly used and that the fastener assemblies installed meet the tensions specified in Table A. The Contractor shall monitor the installation of fasteners in the work to assure that the selected procedure, as demonstrated in the initial testing to provide the specified tension, is routinely and properly applied.

The Contractor, in the presence of the Engineer, shall inspect the tensioned bolts using an inspection torque wrench, as defined below. If direct tension indicator devices are used, the appropriate feeler gauge will be used. Inspection tests shall be performed within 24 hours of bolt tensioning to prevent possible loss of lubrication or corrosion influence on tensioning torque.

The inspection torque wrench shall be calibrated as follows. Three bolts of the same grade, size, and condition as those under inspection shall be placed individually in a device calibrated to measure bolt tension. This calibration operation shall be done at least once each inspection day. There shall be a washer under the part turned in torquing each bolt. In the calibrated device, each bolt shall be tightened by any convenient means to the specified tension. The inspection wrench shall then be applied to the tensioned bolt to determine the torque required to turn the nut or head five degrees in the tightening direction. The average of the torque required for all three bolts shall be defined as the job-inspection torque.

Twenty-five percent, but a minimum of two, of the tensioned bolts shall be selected by the Engineer for inspection in each connection. (The Engineer may reduce the number of bolts tested at a connection to 10% based on the Contractor's past performance and splice location.) The job-inspection torque shall then be applied to each selected assembly with the inspection torque wrench turned in the tightening direction. If all inspected bolt heads or nuts do not turn, the bolts in the connection shall be considered to be properly tensioned. If the torque turns one or more bolt heads or nuts, the job-inspection torque shall then be applied to **all** bolts in the connection or to the satisfaction of the Engineer. Any bolt whose head or nut turns shall be re-tensioned and re-inspected. The Contractor

may, however, re-tension all the bolts in the connection with the inspection torque wrench and resubmit it for inspection, so long as the bolts are not over-tensioned or damaged by this action.

(g) Field Corrections and Misfits: Reaming of bolt holes during erection shall be permitted only with approval of the Engineer. No excessive forces shall be applied to any member to provide for proper alignment of the bolt holes.

The correction of minor misfits involving minor amounts of reaming, cutting, grinding and chipping shall be considered a legitimate part of the erection. However, any error in the shop fabrication or deformation resulting from handling and transportation may be cause for rejection. The Contractor shall be responsible for all misfits, errors and damage and shall make the necessary corrections and replacements.

TABLE A (Metric)
Minimum Bolt Tension in Kilonewtons*

Bolt Size	ASTM A 325M	ASTM A 490M
M16	91	114
M20	142	179
M22	176	221
M24	205	257
M27	267	334
M30	326	408
M36	475	595

*Equal to 70% of specified minimum tensile strength of bolts (as specified in ASTM Specifications for tests of full-size A 325M and A 490M bolts with metric coarse threads series ANSI B1.13M, loaded in axial tension) rounded to the nearest kilonewton.

Table A (English)
Minimum Bolt Tension in kips*

Bolt Size (Inches)	ASTM A 325	ASTM A 490
5/8	19	24
¾	28	35
7/8	39	49
1	51	64
11/8	56	80
1¼	71	102
13/8	85	121
1½	103	148

*Equal to 70% of specified minimum tensile strength of bolts (as specified in ASTM Specifications for tests of full-size A 325 and A 490 bolts with UNC threads, loaded in axial tension) rounded to the nearest kip.

TABLE B (English and Metric)
Nut Rotation from the Snug Condition
Geometry[a,b,c] of Outer Faces of Bolted Parts

Bolt Length (measured from underside of head to end of bolt)	Both Faces Normal to Bolt Axis	One Face Normal to Bolt Axis and Other Face Sloped Not More Than 1:20, Bevel Washer Not Used	Both Faces Sloped Not More Than 1:20 From Normal to Bolt Axis, Bevel Washer Not Used
Up to and including 4 diameters	1/3 turn	1/2 turn	2/3 turn
Over 4 diameters but not exceeding 8 diameters	1/2 turn	2/3 turn	5/6 turn
Over 8 diameters but not exceeding 12 diameters	2/3 turn	5/6 turn	1 turn

(a) Nut rotation, as used in Table B, shall be taken as relative to the bolt, regardless of the element (nut or bolt) being turned. For bolts installed by 1/2 turn and less, the tolerance should be plus or minus 30 degrees; for bolts installed by 2/3 turn and more, the tolerance should be plus or minus 45 degrees.

To determine the nut rotation for installation and inspection of the fasteners, the nut and the end of the bolt or the head of the bolt and the adjacent steel shall be match marked.

(b) The values, given in Table B, shall be applicable only to connections in which all material within grip of the bolt is steel.

(c) No research work has been performed by the Research Council Riveted and Bolted Structural Joints to establish the turn-of-nut procedure when bolt lengths exceed 12 diameters. For situations in which the bolt length, measured from the underside of the head to the end of the bolt, exceeds 12 diameters, the required rotation shall be determined by actual tests in a suitable tension device simulating the actual conditions.

TABLE C (Metric)

Bolt Dia. (in.)	Verification Tension		Maximum Verification Refusals		DTI Spaces		Minimum Installation Refusals	
	A325	A490	Type 8.8	Type 10.9	Type 8.8	Type 10.9	Type 8.8	Type 10.9
M16	96	120	1	1	4	4	2	2
M20	149	188	2	2	5	6	3	3
M22	185	232	2	2	5	6	3	3
M24	215	270	2	2	5	6	3	3
M27	280	351	2	3	6	7	3	4
M30	342	428	3	3	7	8	4	4
M36	499	625	3	4	8	9	4	5

TABLE C (English)

Bolt Dia. (in.)	Verification Tension		Maximum Verification Refusals		DTI Spaces		Minimum Installation Refusals	
	A325	A490	325	490	325	490	325	490
5/8	20	25	1	2	4	5	2	3
¾	29	37	2	2	5	6	3	3
7/8	41	51	2	2	5	6	3	3
1	54	67	2	3	6	7	3	4
1 1/8	59	84	2	3	6	7	3	4
1¼	75	107	3	3	7	8	4	4
1 3/8	89	127	3	3	7	8	4	4
1½	108	155	3	4	8	9	4	5

Method of Measurement: Payment under this item will be at the contract lump sum price per each complete bridge structure or shall be based on the net weight (mass) of metal in the fabricated structure, whichever method appears on the proposal form.

When payment is based on a lump sum basis, the work, including anchor bolts, steel bearings and plates will not be measured for payment. Bearing plates welded to the girder are included in the price of the structural steel and bearing plates bonded to the bearings are included in the price of the bearing.

When payment is based on the net weight (mass) of metal in the fabricated structure, it shall be computed as described below.

The weight (mass) of the metal works to be paid for under the item of structural steel shall be computed on the basis of the net finished dimensions of the parts as shown on the shop drawings, deducting for copes, cuts, clips and all open holes, except bolt holes, and on the following basis:

1. The weights (masses) of rolled shapes shall be computed on the basis of their nominal weights (masses) per foot (meter), as shown in the shop drawings or listed in handbooks.

The weight (mass) of plates shall be computed on the basis of the nominal weight (mass) for their width and thickness as shown on the shop drawings.

2. The weight (mass) of temporary erection bolts, shop and field paint, galvanization, boxes, crates and other containers used for shipping, and materials used for supporting members during transportation and erection, shall not be included.

3. The weight (mass) of all high strength bolts, nuts, and washers shall be included on the basis of the following weights (masses):

Weight per 100				
Nominal diameter of H.S. bolt (inch)	**Bolthead, nut, 1 washer and stickthrough (lbs)**		**Nominal diameter of H.S. bolt (mm)**	**Bolthead, nut, 1 washer and stickthrough (kg)**
1/2	22		16	17
5/8	33		20	26
3/4	55		22	39
7/8	84		24	50
1	120		27	60
1 1/8	169		30	73
1 1/4	216		36	122

4. The weight (mass) of weld metal shall be computed on the basis of the theoretical volume from plan dimensions of the welds.

Size of fillet in Inches	(mm)	Weight of weld in pounds per foot	(kg per meter)
3/16	(5)	0.08	(0.119)
¼	(6)	0.14	(0.208)
5/16	(8)	0.22	(0.327)
3/8	(9.5)	0.30	(0.446)
½	(13)	0.55	(0.818)
5/8	(16)	0.80	(1.190)
¾	(19)	1.10	(1.636)
7/8	(22)	1.50	(2.231)
1	(25)	2.00	(2.974)

5. The weight (mass) of steel shims, filler plates and anchor bolts shall be measured for payment.

When the pay item "Materials for Structural Steel (Site No.)" is included in the Contract, payment for furnishing of the raw steel material for the plates and shape material only, excluding any markup, based on the net weight (mass) required, and the payment will be made under the estimated item "Materials for Structural Steel (Site No.)". The overruns or wastage shall not exceed ten per cent for straight girders and fifteen per cent for curved girders. All other work specified in this section for the bridge will be deemed paid for under the lump sum price. In the absence of the pay item "Materials for Structural Steel (Site No.)", the cost of the raw material is included in the Lump Sum payment for this item, "Structural Steel (Site No.)".

Basis of Payment: The structural steel, incorporated in the completed and accepted structure, will be paid for at the contract lump sum price for "Structural Steel (Site No.)," or at the contract unit price per hundred weight (kilogram) for "Structural Steel," whichever is indicated in the contract documents.

Payment for either method shall be for structural steel, complete in place, which price shall include quality control, furnishing, fabricating, transporting, storing, erecting, welding, surface preparation and all materials including fastener assemblies, steel bearing assemblies and anchor bolts, equipment, tools and labor incidental thereto.

When the pay item "Materials for Structural Steel (Site No.)" is included in the Contract, payment for furnishing of the raw steel material for the plates and shape material only,

excluding any markup, based on the net weight (mass) required, and the payment will be made under the estimated item "Materials for Structural Steel (Site No.)". All remaining work including, but not limited to, preparation of shop drawings, fabricating, transporting, storage and handling, erecting, surface preparation and all materials, equipment, tools and labor incidental thereto, will be paid for under "Structural Steel (Site No.)".

In the absence of the pay item "Materials for Structural Steel (Site No.)", the cost of the raw material is included in the Lump Sum payment for this item, "Structural Steel (Site No.)". All remaining work including, but not limited to, preparation of shop drawings, fabricating, transporting, storage and handling, erecting, surface preparation and all materials, equipment, tools and labor incidental thereto, will be paid for under "Structural Steel (Site No.)".

No direct payment will be made for setting anchor bolts, preparing bearing areas, furnishing and placing materials under bearings. No direct payment will be made for non destructive testing as shown on the plans.

Pay Item	Pay Unit
Structural Steel (Site No.)	l.s. (l.s.)
Structural Steel	cwt. (kg)

CONNECTICUT
SUPPLEMENTAL SPECIFICATION
SECTION 6.12
CONCRETE CYLINDER CURING BOX

Delete the entire section and replace with it the following:

6.12.01 –Description: This item shall consist of furnishing a box for curing concrete test cylinders. The box shall be commercially available and manufactured specifically for curing concrete test cylinders. The box will remain the property of the Contractor at the conclusion of the project. The box shall be delivered to a location on the project as directed by the Engineer.

6.12.02 – Materials: A catalog cut listing detailed specifications of the box and operating instructions from the manufacturer must be submitted to the Engineer. The box and its components shall be constructed of non-corroding materials and shall be capable of storing a minimum of 18 test cylinders, 6" X 12" (152 mm X 305 mm) stored vertically with the lid closed. The lid must be watertight when closed and hinged in the back with security latches on the front that can be padlocked. The box must be capable of holding water to a maximum level of one inch above test cylinders placed in the box vertically. A drain hole must be provided in a wall of the box to allow manual drainage of the water that exceeds this level. A drain hole must also be provided at the bottom of the box so that it can be manually emptied. The temperature of the water must be controlled by heating and cooling device capable of maintaining the temperature of the water within a range of 60 to 80° F, +/- 2 °F (15.5 to 26.7 °C, +/- 1 °C) within an outside ambient air temperature range of -10 to 120 ° F (-23.3 to 49 °C). The heating and cooling device must be positioned to allow free circulation of air and water around the cylinders and be rated at 120 volts and 15 amps. A rack must be provided within the box to support the cylinders above the pool of temperature controlled water. The device must be thermostatically controlled with a digital readout that is capable of displaying the high/low water temperature within the box since the last reading was taken.

6.12.03 - Construction Methods: The Contractor shall maintain the curing box in working order and shall provide all necessary electrical service and water so that the curing box can be used properly during the entire course of the project. Any curing box that is not operating properly, as determined by the Engineer, shall be replaced within 24 hours by the Contractor at no expense to the State. The Engineer reserves the right to prohibit placement of fresh concrete on the project until a curing box acceptable to the Engineer is operational on the project site.

6.12.04 - Method of Measurement: The furnishing of the concrete test cylinder curing box will be measured for payment by the number of boxes delivered by the Contractor and accepted by the Engineer.

6.12.05 – Basis of Payment: This item will be paid for at the contract unit price each for "Concrete Cylinder Curing Box" ordered and accepted on the project, which price shall include all submittals, material, tools, equipment, and labor incidental thereto. The price shall also include all maintenance and operating costs related to the curing box for the duration of the project.

CONNECTICUT
SUPPLEMENTAL SPECIFICATION
SECTION 6.51
CULVERTS

6.51.02 – Materials:

Delete the 2nd paragraph, "Pipes of the type indicated ... of Article M.02.01." and insert the following paragraph:

"Pipes of the type indicated on the plans and joint sealant shall conform to the requirements of Article M.08.01. Bedding material shall conform to the requirements of Article M.08.03. Granular fill shall conform to the requirements of Article M.02.01."

6.51.03 – Construction Methods:

In the 8th paragraph replace "gravel fill" with "granular fill".

Delete the 13th paragraph, "Bituminous fiber and ... as the pipe."

6.51.04 – Methods of Measurement:

In the 7th paragraph, replace "Gravel Fill" with "Granular Fill".

6.51.05 – Basis of Payment:

In the 8th paragraph, replace "Gravel Fill" with "Granular Fill".

CONNECTICUT
SUPPLEMENTAL SPECIFICATION
SECTION 7.02
PILES

Delete the entire section and replace it with the following:

SECTION 7.02
PILES

7.02.01—Description
7.02.02—Materials
7.02.03—Construction Methods
7.02.04—Method of Measurement
7.02.05—Basis of Payment

7.02.01—Description: This item shall consist of furnishing and driving foundation piles of the type and dimensions designated. Piles shall conform to and be installed in accordance with these specifications, and at the location, and to the elevation, penetration and/or capacity shown on the plans, or as directed by the Engineer. If specified in the plans or directed by the Engineer, piles shall be tipped, shaped, reinforced or otherwise pointed and strengthened
Test piles shall be piles of the type specified, driven in advance of placing orders for the piles, for the purpose of determining length or bearing capacity of piles. The Contractor shall furnish the piles in accordance with an itemized order list which will be furnished by the Engineer, showing the number and length of all piles. When test piles are specified, the pile lengths shown on the plans are for estimating purposes only. The actual lengths to be furnished for production piles will be determined by the Engineer after the test piles have been driven.

7.02.02—Materials: Piles of the type indicated on the plans shall conform to the requirements of Articles M.09.02 and M.14.01.

7.02.03—Construction Methods

1. Pile Types:
(a) Timber Piles: The method of storing and handling timber piles shall be such as to avoid damage to the piles. Special care shall be taken to avoid breaking the surface of treated piles. Cant dogs, hooks, or pike-poles shall not be used. Cuts or breaks in the surface of treated piling shall be given three brush coats of hot creosote oil of approved quality, and hot creosote oil shall be poured into all bolt holes.

(b) Steel Piles: The methods of storing and handling steel piles shall be such as to prevent damage to the piles and to protect them from corrosion.

(c) Cast-In-Place Concrete Piles: Cast-in-place concrete piles shall be constructed by driving steel shells and filling them with concrete. Shells shall be continuously or incrementally tapered, or cylindrical, or a combination of continuously or incrementally

tapered lower sections, which are extended with cylindrical upper sections, unless otherwise provided in the plans or special provisions. The tapered portion of piles shall have a minimum tip diameter of 8 inches (200 millimeters) and shall change in diameter not less than 1 inch in every 12 feet (7 millimeters/meter). Cylindrical piles and the cylindrical extension portions of tapered piles shall have a minimum diameter of 12 inches (300 millimeters). Shells for cast-in-place concrete piles shall be formed by joining sections of the same manufacture, unless otherwise permitted by the Engineer. Composite shell piles, which are piles composed of different thicknesses or of different manufacture, shall not be used unless shown on the plans or approved by the Engineer. Prefabricated driving points or other type tip enclosures shall be subject to the approval of the Engineer.

The Contractor shall furnish shells of a type and gage which can be driven without distortion. Shells which fail, fracture or otherwise distort during driving or after driving shall be withdrawn or replaced at the Contractor's expense. The metal of shells which are to be driven without a mandrel shall be of sufficient thickness to withstand the driving without failure, fracture or distortion, but in no case shall the thickness be less than No. 7 gage. Shells driven with a mandrel shall have a thickness not less than No. 18 gage. Piles having a shell thickness less than No. 9 gage shall be reinforced as shown on the plans.

Composite shell piles formed by extending lower sections of No. 7 or heavier gage, with upper sections of lighter than No. 7 gage, shall be driven with an internal mandrel in such a manner so as to insure shell alignment and maximum hammer energy transmission throughout the pile shell length. All details concerning compatibility of shell and mandrel construction shall be subject to the approval of the Engineer.

After driving has been completed, the shell shall be inspected and approved before any concrete is placed. The Contractor shall provide suitable lights and other equipment necessary to inspect each shell throughout its length.

All seams, joints and splices in shells shall develop the full strength of the shell and shall be watertight. Damaged shells that are unacceptable to the Engineer shall be filled with sand and a replacement shell or shells shall be driven adjacent thereto.

Reinforcement shall be placed in accordance with the requirements of the plans or special provisions.

No concrete shall be placed in a pile until all driving within a radius of 15 feet (4.5 meters) from the pile has been completed, or until all the shells for any one bent have been completely driven. If this is not practical, all driving within the above limits shall be discontinued until the concrete in the last pile cast has set at least 7 days.

Concrete shall be placed continuously in each pile, care being used to fill every part of the shell, and to work concrete around the reinforcement without displacing it. No concrete shall be placed in shells containing an accumulation of water or any foreign material.

Extensions, or "build-ups" on concrete piles, shall be avoided; but when necessary, they shall be made as specified in Subarticle 7.02.03-7.

(d) Prestressed Concrete Piles (Pretensioned): The piles shall be manufactured in accordance with the provision of Article 5.14.03, except as follows:

(1) Forms: The forms for the piles shall be of substantial construction and shall produce a uniformly smooth surface on all formed sides. A minimum concrete cover of 2 inches (50 millimeters) shall be maintained for prestressing elements by the use of spreaders or by bundling in areas adjacent to openings or inserts. Ties shall also have a minimum cover of 2 inches (50 millimeters) at these locations. Side forms carrying no load may be removed after 24 hours with the permission of the Engineer or after the concrete has reached the minimum transfer strength as required by Subarticle M.09.02-6.

(2) Finishing: The topside surface of the piles shall be given a uniformly smooth steel trowel finish to match the surface of the formed sides. The prestressing elements shall be cut flush or recessed 1/8 inch (3 millimeters) to the top of the pile. Projecting fins and surface imperfections shall be removed in a workmanlike manner. Exposed jet pipe connections, inserts or other devices shall be removed or recessed to a depth as directed, and the hole or opening patched with non-shrink grout in a workmanlike manner. The patching material shall have a degree of finish comparable to the adjacent surfaces. Additional finishing of piles, if required, shall be as shown on the plans or as otherwise directed.

(3) Handling and Storage: Care shall be taken during storage, transporting, hoisting and handling of the prestressed piles to prevent cracking or damage. Damaged piles shall be replaced by the Contractor at his expense. Lifting and support points shall be marked on the piles as required.

(4) Pile Extensions: Pile extensions shall normally be fabricated for this purpose in accordance with the specifications. However, sound sections of pile cutoffs or sound portions of rejected piles may be used, subject to the approval of the Engineer. Short pile extensions may, with the permission of the Engineer, be cast-in-place monolithically with the footing or cap.

2. Pile Driving Equipment:

(a) Hammers: Piles shall be driven with approved air, steam, diesel, or hydraulic hammers or a combination of acceptable hammer and water jet. The plant and equipment furnished for air/steam hammers shall have sufficient capacity to maintain at the hammer, under working conditions, the volume and pressure specified by the manufacturer. The plant and equipment shall be equipped with accurate pressure gauges which are easily accessible to the Engineer. The valve mechanism and other parts of the hammer shall be properly maintained so that the length of stroke for a single-acting hammer and the number of blows per minute for a double-acting hammer will be obtained. The power plant for hydraulic hammers shall have sufficient capacity to maintain at the hammer, under working conditions, the volume and pressure specified by the manufacturer. The power plant and equipment shall be equipped with accurate pressure gauges which are easily accessible to the Engineer.

The size of hammer shall be adapted to the type and size of piles and the driving conditions. Unless otherwise specified, the minimum rated striking energy per blow for

hammers used shall be 7,000-foot pounds (9,500 joules) for driving timber piles; 15,000-foot pounds (20,000 joules) for driving steel piles and for driving shells for cast-in-place concrete piles; and 19,000-foot pounds (25,000 joules) for driving precast concrete piles and for driving prestressed concrete piles. The hammer model used for the driving of test piles shall be used for the driving of service or production piles, unless a change is authorized by the Engineer in writing. Hammers delivering an energy which the Engineer considers detrimental to the piles shall not be used.

Non-impact hammers, such as vibratory hammers, or driving aids such as jets, followers, pre-augered and prebored holes shall not be used unless either specifically permitted in writing by the Engineer or stated in the contract documents.

(b) Pile Hammer Approval: All pile driving equipment furnished by the Contractor shall be subject to the approval of the Engineer. All pile driving equipment shall be sized in such a way that the piles can be driven with reasonable effort to the ordered lengths without damage. Approval of pile driving equipment by the Engineer will be based on wave equation analysis and/or other judgments. In no case shall the driving equipment be used without written approval of the Engineer. Prerequisite to such approval, the Contractor shall submit to the Engineer the necessary pile driving equipment information and wave equation analysis at least 30 days prior to driving piles. The wave equation analysis shall be signed, sealed and dated by a Connecticut licensed Professional Engineer.

The criteria that the Engineer will use to evaluate the driving equipment consists of both the required number of hammer blows per foot (per 0.25 meters) as well as the pile stresses at the required ultimate pile capacity. The required number of hammer blows indicated by the wave equation at the ultimate pile capacity shall be between 36 and 180 blows per foot (29 and 147 blows per 0.25 meters) for the driving equipment to be acceptable. In addition, for the driving equipment to be acceptable the pile stresses which are indicated by the wave equation to be generated by the driving equipment shall not exceed the maximum driving stresses allowed by the governing design code stated in the contract documents.

During pile driving operations, the Contractor shall use the approved system. No variations in the driving system will be permitted without the Engineer's written approval. Any change in the driving system will only be considered after the Contractor has submitted the necessary information for a revised wave equation analysis.

If the Engineer determines the Contractor's hammer is unable to transfer sufficient energy to the pile, the hammer shall be removed from service until repaired to the satisfaction of the Engineer.

(c) Drive System Components and Accessories:

(1) Hammer Cushion: Impact pile driving equipment designed to be used with a hammer cushion shall be equipped with a suitable thickness of hammer cushion material to prevent damage to the hammer or pile and to insure uniform driving behavior. Hammer cushions shall be made of durable manufactured materials, provided in accordance with the hammer manufacturer's guidelines. Wood, wire rope, and asbestos hammer cushions are specifically disallowed and shall not be

used. A striker plate as recommended by the hammer manufacturer shall be placed on the hammer cushion to insure uniform compression of the cushion material. The hammer cushion shall be removed from the helmet and inspected prior to beginning pile driving at each structure or after each 100 hours of pile driving, whichever is less. The Contractor shall replace any hammer cushion whose thickness is less than 75% of the original thickness.

(2) Helmet: Piles driven with impact hammers require an adequate helmet or drive head to distribute the hammer blow to the pile head. The helmet shall be axially aligned with the hammer and the pile. The helmet shall be guided by the leads and not be free-swinging. The helmet shall fit around the pile head in such a manner as to prevent transfer of torsional forces during driving, while maintaining proper alignment of hammer and pile. For steel and timber piling, the pile heads shall be cut squarely and a helmet, as recommended by the hammer manufacturer, shall be provided to hold the axis of the pile in line with the axis of the hammer. For precast concrete and prestressed concrete piles, the pile head shall be plane and perpendicular to the longitudinal axis of the pile to prevent eccentric impacts from the helmet. For special types of piles, appropriate helmets, mandrels or other devices shall be provided in accordance with the manufacturer's recommendations so that the piles may be driven without damage.

(3) Pile Cushion: The heads of concrete piles shall be protected by a pile cushion. Pile cushions shall be made of plywood, hardwood, or composite plywood and hardwood materials. The minimum pile cushion thickness placed on the pile head prior to driving shall be at least 4 inches (100 millimeters). A new pile cushion shall be provided for each pile. In addition the pile cushion shall be replaced if, during the driving of any pile, the cushion is compressed more than one-half the original thickness or it begins to burn. The pile cushion dimensions shall match the cross sectional area of the pile top. The use of manufactured pile cushion materials in lieu of a wood pile cushion shall be evaluated on a case by case basis.

(4) Leads: Piles shall be supported in line and position with leads while being driven. Pile driver leads shall be constructed in a manner that affords freedom of movement of the hammer while maintaining alignment of the hammer and the pile to insure concentric impact for each blow. Leads may be either fixed or swinging type. Swinging leads, when used, shall be fitted with a pile gate at the bottom of the leads and, in the case of batter piles, a horizontal brace may be required between the crane and the leads. The pile section being driven shall not extend above the leads. The leads shall be adequately embedded in the ground or the pile constrained in a structural frame such as a template to maintain alignment. The leads shall be of sufficient length to make the use of a follower unnecessary, and shall be so designed as to permit proper alignment of batter piles.

(5) Followers: Followers shall only be used when approved in writing by the Engineer, or when specifically stated in the contract documents. In cases where a follower is permitted, the first pile in each bent and every tenth pile driven thereafter shall be driven full length without a follower, to determine that adequate pile penetration is being attained to develop the ultimate pile capacity. The follower and pile shall be held and maintained in equal and proper alignment during driving. The follower shall be of such material and dimensions to permit the piles to be driven to the penetration depth

determined necessary from the driving of the full length piles. The final position and alignment of the first two piles installed with followers in each substructure unit shall be verified to be within the required location tolerances before additional piles are installed.

(6) Jets: Jetting shall only be permitted if approved in writing by the Engineer or when specifically stated in the contract documents. When jetting is not required in the contract documents, but approved after the Contractor's request, the Contractor shall determine the number of jets and the volume and pressure of water at the jet nozzles necessary to freely erode the material adjacent to the pile without affecting the lateral stability of the in place pile. When jetting is specifically required in the contract documents, the plant shall have sufficient capacity to deliver at all times at least 100 psi (700 kilopascals) pressure at two 3/4-inch (19 millimeter) jet nozzles. In either case, unless otherwise indicated by the Engineer, jet pipes shall be removed when the pile toe is a minimum of 5 feet (1.5 meters) above prescribed toe elevation and the pile shall be driven to the required ultimate pile capacity with an impact hammer. Also, the Contractor shall control, treat if necessary, and dispose of all jet water in a manner satisfactory to the Engineer and in accordance with the provisions of Article 1.10.

(7) Pre-Augering: When stated in the contract documents, the Contractor shall pre-auger holes at pile locations to the depths shown on the plans. Pre-augered holes shall be of a size smaller than the diameter or diagonal of the pile cross section; however, large enough to allow penetration of the pile to the specified depth. If subsurface obstructions, such as boulders or rock layers, are encountered, the hole diameter may be increased to the least dimension which is adequate for pile installation. Any void space remaining around the pile after completion of driving shall be filled with sand or other approved material. The use of spuds shall not be permitted in lieu of pre-augering. Augering, wet-rotary drilling, or other methods of pre-augering shall be used only when approved by the Engineer. When permitted, such procedures shall be carried out in a manner which will not impair the capacity of the piles already in place or the safety of existing adjacent structures. If the Engineer determines that pre-augering has disturbed the capacities of previously installed piles, those piles that have been disturbed shall be restored to conditions meeting the requirements of this specification by redriving or by other methods acceptable to the Engineer. Redriving or other remedial measures shall be instituted after the pre-augering operations in the area have been completed.

3. Pile Capacity

(a) Ultimate Pile Capacity: Piles shall be driven by the Contractor to the penetration depth shown on the plans or to a greater depth if necessary to obtain the ultimate pile capacity. The ultimate pile capacity shall be as defined in the contract documents.

Jetting or other methods shall not be used to facilitate pile penetration unless specifically permitted in the contract documents or in writing by the Engineer. The ultimate pile capacity of jetted piles shall be based on driving resistances recorded during impact driving after the jet pipes have been removed. Jetted piles not attaining the ultimate pile capacity at the ordered length shall be spliced, as

required, at the Contractor's cost, and driven with an impact hammer until the ultimate pile capacity is achieved.

The ultimate pile capacity of piles driven with followers shall only be considered acceptable when the follower driven piles attain the same pile toe elevation or top of bedrock elevation as required for the full length piles driven without followers that attained the required ultimate pile capacity.

(b) Wave Equation: The ultimate pile capacity shall be determined by the Engineer. Piles shall be driven with the approved driving equipment to the ordered length or other lengths necessary to obtain the required ultimate pile capacity. Jetting or other methods to facilitate pile penetration shall not be used unless specifically permitted either in the contract documents or approved by the Engineer after a revised driving resistance is established from the wave equation analysis. Adequate pile penetration shall be considered to be obtained when the specified wave equation resistance criteria is achieved within 5 feet (1.5 meters) of the pile toe elevation, based on ordered length. Piles not achieving the specified resistance within these limits shall be driven to penetrations established by the Engineer.

(c) Static Load Tests: Compression load tests shall be performed by procedures set forth in ASTM D-1143 using the quick load test method, except that the test shall be taken to plunging failure or the capacity of the loading system. Testing equipment and measuring systems shall conform to ASTM D-1143, except that the loading system shall be capable of applying 150% of the ultimate pile capacity as stated in the contract documents, and that a load cell and spherical bearing plate shall be used. The apparatus shall be constructed to allow the various increments of the load to be placed gradually, without causing vibration to the test pile. The Contractor shall submit to the Engineer for approval working drawings of the loading apparatus in accordance with Article 1.05.02. When the approved method requires the use of tension (reaction) piles, the tension piles, when feasible, shall be of the same type and diameter as the production piles, and shall be driven in the location of permanent piles except that timber or tapered piles installed in permanent locations shall not be used as tension piles.

The top elevation of the test pile shall be determined immediately after driving and again just before load testing to check for heave. Any pile which heaves more than 1/4 inch (6 millimeters) shall be redriven or jacked to the original elevation prior to testing. Unless otherwise specified in the contract, a minimum 3-day waiting period shall be observed between the driving of any anchor piles or the load test pile and the commencement of the load test.

On completion of the load testing, any test or anchor piling not a part of the finished structure shall be removed or cut off at least 1 foot (300 millimeters) below either the bottom of footing or the finished ground elevation, if not located within the footing area.

(d) Dynamic Pile Driving Analysis (PDA) Test: Dynamic measurements following procedures set forth in ASTM D-4945 will be taken during the driving of piles designated as dynamic monitoring test piles. The Contractor shall employ a qualified specialty Consultant, which has successfully completed no less than ten

dynamic pile driving tests, to perform the testing and report preparation for all Dynamic Pile Driving Analysis (PDA) Tests to be performed.

At least thirty days prior to driving the test piles the Contractor shall submit to the Engineer for review and approval the qualified specialty consultant, as well as the complete installation, and testing procedures. The submittal shall include all necessary pile driving equipment and support facilities to drive the piles to capacities and depths shown on the plans within allowable stress limits. As part of the submittal the Contractor's Consultant shall perform a wave equation analyses, and a summary report confirming that the pile driving system proposed by the Contractor can meet the capacity, driving resistance and allowable stress limits.

All equipment necessary for the dynamic monitoring of the piles such as gages, cables, etc., shall be furnished by the Contractor's Consultant. The equipment shall conform to the requirements of ASTM D-4945, Standard Test Method for High Strain Dynamic Testing of Piles, and be capable of testing the pile to one and one-half times the ultimate pile capacity. An experienced engineer, who has successfully completed no less than ten dynamic pile driving tests, shall operate the Pile Driving Analyzer in the field. The Contractor shall furnish a shelter within 100 feet (30 meters) of test location(s) to protect the dynamic test equipment from the elements. The shelter shall be a minimum floor size of 400 square feet (40 square meters), with a minimum ceiling height of 7 feet (2 meters), and an inside temperature maintained between 50° and 85°F (10° and 29°C).

The Contractor shall provide power to the test pile locations for the duration of the dynamic testing. The power supply shall consist of a power source providing 115-Volt alternating current with a frequency of 60 Hz and a minimum of 2 kilowatts. If field generators are used as the power source, provide functioning meters to monitor power voltage and frequency. Direct current welders or non-constant power sources are unacceptable.

Prior to lifting the pile to be dynamically tested, the Contractor shall provide as a minimum 3 feet (1 meter) of clear access to 180 degree opposite faces of the pile for pile preparation. The Contractor or its Consultant shall then drill and prepare holes in the pile for gage attachment.

The Contractor or its Consultant shall attach the gages to the pile before driving the piles. Pile driving shall be performed using routine pile installation procedures. When the level of the gages is within 1 foot (300 millimeters) of the ground surface, or obstruction, driving shall be halted to remove the gages from the pile. If additional driving is required, the pile shall be spliced and gages shall be reattached to the head of the next pile segment.

With the dynamic testing equipment attached, the Contractor shall drive the pile to the design penetration depth or to a depth determined by the Engineer. The Engineer will use the ultimate pile capacity estimates at the time of driving and/or restriking from dynamic test methods to determine the required pile penetration depth for the ultimate pile capacity. The stresses in the piles will be monitored during driving with the dynamic test equipment to ensure that the actual driving stresses do not exceed the maximum allowed values. If necessary, the Contractor

shall reduce the driving energy transmitted to the pile by using additional cushions or reducing the energy output of the hammer in order to maintain driving stresses below the maximum values. If non-axial driving is indicated by dynamic test equipment measurements, the Contractor shall immediately realign the driving system.

After the initial drive of the pile, the Contractor shall wait 24 hours, or the time specified in the contract documents, and restrike the dynamic monitoring test pile with the dynamic testing instruments attached. A cold hammer shall not be used for the restrike. The hammer shall be warmed up before restrike begins by applying at least 20 blows to another pile. The maximum amount of penetration required during restrike shall be 6 inches (150 millimeters), or 50 hammer blows, whichever occurs first.

The Contractor's Consultant shall provide preliminary estimates of pile capacity of the test pile to the Engineer within 24 hours of the restrike of each tested pile. The Contractor's Consultant shall also prepare and submit a written report within 5 calendar days of the completion of the testing. This report shall contain a discussion of the pile capacity obtained from the dynamic testing. CAPWAP analyses of the dynamic testing data shall be performed on data obtained at the end of initial driving and the beginning of restrike. The Engineer may request additional analyses at selected pile penetration depths. The report shall also discuss hammer and driving system performance, driving stress levels, and pile integrity. The report is to be prepared, signed, sealed and dated by a Connecticut licensed Professional Engineer. No production piles can be driven until the report has been submitted and approved by the Engineer.

4. Test Piles and Order Lists: Test piles shall be driven at the locations shown on the plans and to the penetration depths specified by the Engineer. Test piles shall be driven to a driving resistance established by the Engineer at the estimated pile toe elevation. The Contractor shall excavate the ground at each test pile to the elevation of the bottom of the footing before the pile is driven. All test piles shall be driven with impact hammers unless specifically stated otherwise in the plans. In general, the specified length of test piles will be greater than the estimated length of production piles in order to provide for variation in soil conditions. The driving equipment used for driving test piles shall be identical to the equipment proposed for driving the production piling. Approval of driving equipment shall conform to the requirements of these Specifications.

Test piles that do not attain the specified driving resistance at a depth of 6 inches (150 millimeters) above the estimated pile tip elevation, or are specified as a dynamic monitoring pile, shall be redriven after being allowed to set up. The minimum time period before restrike shall be 24 hours, or as specified in the contract documents. A cold hammer shall not be used for the restrike. The hammer used shall be warmed up by applying at least 20 blows to another pile.

Unless otherwise specified in the contract documents, the Contractor shall not order piling to be used in the permanent structure until test pile data has been reviewed and pile order lengths are authorized by the Engineer. The Engineer will provide the pile order list after completion of the test pile(s) and dynamic pile driving analysis (PDA) tests and/or pile loading tests specified in the contract documents.

When no test piles are specified for a substructure, the estimated pile lengths in the contract documents are taken as the pile order length.

The lengths given in the order list will be based on the lengths which are assumed after cutoff to remain in the completed structure. The Contractor shall, without added compensation, increase the lengths to provide for fresh heading and for such additional length as may be necessary to suit the Contractor's method of operation.

5. Pile Preparation and Driving: The heads of all piles shall be plane and perpendicular to the longitudinal axis of the pile before the helmet is attached. Approval of a pile hammer relative to driving stress damage shall not relieve the Contractor of responsibility for piles damaged because of misalignment of the leads, failure of cushion materials, failure of splices, malfunctioning of the pile hammer, or other improper construction methods. Piles damaged for such reasons shall be rejected and replaced at the Contractor's expense when the Engineer determines that the damage impairs the strength of the pile.

If it becomes necessary and is authorized by the Engineer to resort to jetting, spudding or pre-holing — and further, if no contract bid price is asked for in the proposal for jetting, spudding, or pre-holing — such work will be paid for as "extra work" in accordance with Articles 1.04.05 and 1.09.04.

The use of a hammer with a greater mass, or the use of piles manufactured or designed with pile tips of a nature to provide for better penetration such as but not limited to composite shells, tapered sections or H-pile sections, shall not be considered as extra work. Authorized point reinforcement for piles shall be a separate item.

Piles for exposed pile bents shall be driven with pile driver leads and templates. They shall be of rigid design and construction and shall maintain the required position and alignment of the piles within the tolerances hereinafter specified. Templates shall be anchored or spudded into position, shall be capable of guiding all piles required for the bent and shall remain in place until all the piles in the bent are driven.

(a) Location and Alignment Tolerance: Piles shall be driven with a variation of not more than 1/4 inch per foot (20 millimeters/meter) from the vertical or from the batter line indicated, except that piles for trestle bents shall be so driven that the cap may be placed in its proper location without inducing excessive stresses in the piles. Upon completion of driving and released from leads, exposed piles such as in bents shall not have a variation of more than 2 inches (50 millimeters) at the cut-off elevation from the position shown on the plans. Unless otherwise permitted in writing by the Engineer, failure to meet this tolerance shall be cause for rejection. Other foundation piles shall not be out of the position shown on the plans more than 6 inches (150 millimeters) after driving. The Engineer may require that driving be stopped in order to check the pile alignment. Pulling laterally on piles to correct misalignment, or splicing a properly aligned section on a misaligned section shall not be permitted.

If the location and/or alignment tolerances specified are exceeded, the extent of overloading shall be evaluated by the Engineer. If in the judgment of the Engineer, corrective measures are necessary, suitable measures shall be designed and constructed by the Contractor.

(b) Heaved Piles: Level readings to measure pile heave after driving shall be made by the Contractor at the start of pile driving operations and shall continue until the Engineer determines that such checking is no longer required. Level readings shall be taken immediately after the pile has been driven and again after piles within a radius of 15 feet (4.5 meters) have been driven. If pile heave is observed, the Contractor shall take accurate level readings referenced to a fixed datum on all piles immediately after installation and periodically thereafter as adjacent piles are driven to determine the pile heave range. All piles that have been heaved more than ¼ inch (6 millimeters) shall be redriven at the Contractor's cost, to the required resistance or penetration. Concrete shall not be placed in pile casings until pile driving has progressed beyond a radius of 15 feet (4.5 meters) from the pile to be concreted. If pile heave is detected for pipe or shell piles which have been filled with concrete, the piles shall be redriven to original position after the concrete has obtained sufficient strength and a proper hammer-pile cushion system, satisfactory to the Engineer, is used.

(c) Installation Sequence: The order of placing individual piles in pile groups shall be either starting from the center of the group and proceeding outwards in both directions or starting at the outside row and proceeding progressively across the group.

6. Unsatisfactory Piles: The method used in driving piles shall not subject the piles to excessive or undue abuse producing crushing and spalling of concrete, injurious splitting, splintering, and brooming of the wood, or deformation of the steel. Misaligned piles shall not be forced into proper position. Any pile damaged during driving by reason of internal defects, or by improper driving, or driven out of its proper location, or driven below the designated cutoff elevation, shall be corrected by the Contractor by a method approved by the Engineer.

Piles which have been bent during installation shall be considered unsatisfactory unless the ultimate capacity is proven by load tests performed at the Contractor's expense. If such tests indicate inadequate capacity, corrective measures as determined by the Engineer shall be taken, such as use of bent piles at reduced capacity, installation of additional piles, strengthening of bent piles, or replacement of bent piles.

A concrete pile will be considered defective if a visible crack, or cracks, appears around the entire periphery of the pile, or if any defect is observed which, as determined by the Engineer, affects the strength or life of the pile.

7. Splicing Piles and Extensions: Full length piles shall be used when practicable; but if splices cannot be avoided, piles or shells for cast-in-place piles may be spliced in accordance with the requirements of the plans. Piles shall not be spliced except with the approval of the Engineer. Splices in excess of two per pile for timber, steel and cast-in-place concrete piles will not be permitted except with special permission of the Engineer. Only one splice per pile will be permitted in precast concrete or prestressed concrete piles. In the absence of splice details in the plans, piles or shells for cast-in-place concrete piles shall be spliced in accordance with the pile or shell manufacturer's recommendations, subject to the approval of the Engineer. Working Drawings for prefabricated splicing devices and their method of installation shall be submitted to the Engineer for review. All seams, joints and splices shall develop the full strength of the pile.

8. Point Reinforcement: When directed by the Engineer, the contractor shall point-reinforce piles. Such point-reinforcement shall be in accordance with the plans or as directed.

9. Cutoff Lengths: The pile head of all permanent piles and pile casings shall be cutoff at the elevation shown on the plans or as ordered by the Engineer. All cutoff lengths shall become the property of the Contractor, and shall be removed by the Contractor from the site of the work.

10. Painting Steel Piles and Steel Pile Shells: When steel piles or steel pile shells extend above the ground surface or water surface, they shall be painted as specified elsewhere in the contract documents or as ordered by the Engineer. This protection shall extend from an elevation 2 feet (600 millimeters) below the ground or water surface to the top of the exposed steel.

11. Welding on Piles: When required or permitted, all welding on piles shall be done in accordance with the requirements of the current AWS Structural Welding Code.

7.02.04—Method of Measurement

1. Steel Piles-Timber Piles-Precast Concrete Piles: The length of (type) piles which will be the basis for the pay computation to be included under the item of furnishing (type) piles, shall be number of linear feet (meters) of (type) piles authorized by the Engineer or actually furnished by the Contractor, whichever is the lesser amount.

Length of pile cutoffs previously paid for under authorized lengths of piles and subsequently incorporated into the work will not be measured for payment.

The work, materials, tools, equipment and labor incidental to the disposal of pile cutoffs will not be measured for payment.

The amounts to be included under the item for driving (type) piles will be the number of linear feet (meters) of piles actually driven and accepted in the completed structure.

2. Cast-in-Place Concrete Piles: The amount to be included under the item of cast-in-place concrete piles shall be the number of linear feet (meters) of piles actually driven and accepted in place in the completed structure.

Cut-off materials from shells shall remain the property of the Contractor. They will be paid for in accordance with the unit cost applying in the Contractor's bill or bills for such shells, except that no payment will be made of material cut off from shells furnished by the Contractor in excess of the ordered length. The unit of measurement will be the unit applying in the Contractor's bill or bills for such shells. Material cut off from shells furnished by the Contractor in lengths in excess of those ordered by the Engineer will not be measured for payment hereunder. The work, materials, tools, equipment and labor incidental to the disposal of cutoffs will not be measured for payment.
Reinforcement, if required in cast-in-place concrete piles, will not be measured for payment.

3. Prestressed Concrete Piles (Pretensioned): The length of the prestressed concrete piles, which will be the basis for the pay computation, shall be the number of linear feet (meters) of piles authorized by the Engineer or actually furnished by the Contractor, whichever is the lesser amount. The length of any specified pile tip protruding from the concrete will be included in the length measured for payment.

Also included in the length measured for payment will be the length of precast pile extensions ordered by the Engineer. Not to be included, however, is the length of pile extension furnished in excess of the ordered length. The length of projection dowels shall not be included in the length measured for payment.

Extensions to prestressed concrete piles which are poured monolithically with the footing or pier cap will be paid for at the Contract unit prices for the several items involved, which prices shall be full compensation for all materials, tools, equipment and labor necessary to the completion of the work.

Cut-offs shall not be used for pile extension. The work, material, tools equipment and labor incidental to the disposal of cutoffs will not be measured for payment.

The amounts to be included under the item for driving prestressed concrete piles shall be the number of linear feet (meters) of piles actually driven and accepted in the completed structure.

4. Test Piles: The amounts to be included under the respective items for test piles, of the type and length specified, shall be the number of test piles actually driven and accepted. Lengths of test piles ordered by the Engineer in excess of the length or lengths specified in the contract will be measured for payment by the actual number of linear feet (meters) ordered, furnished and accepted by the Engineer. Driving of such pile extensions will be measured for payment by the actual length driven and left in place.

Authorized splices performed on test piles will be measured for payment by the number of authorized splices actually completed and accepted. Splicing of test piles shall not be considered as authorized splices when such splicing is done to complete piles to the test pile length specified in the contract.

5. Static Load Tests: The amount to be included under the item of static loading tests shall be the actual number of static load tests completed and accepted.

6. Dynamic Pile Driving Analysis (PDA) Test: The amount to be included under this item shall be the actual number of piles which are driven and restruck with dynamic monitoring equipment attached, completed and accepted

.

7. Splices: The amount to be included under the items for splicing timber, steel, cast-in-place concrete, precast concrete and prestressed concrete piles (pretensioned) shall be the number of authorized pile splices actually completed and accepted.
The splicing of timber and steel piles, steel shells for cast-in-place concrete piles, precast concrete piles and prestressed concrete piles (pretensioned) shall not be considered as authorized splices when such splicing is performed to complete piles to the order lengths, as defined in Subarticle 7.02.03-7, or when the furnished lengths of such piles are less than the order lengths approved by the Engineer.

8. Point Reinforcement for Piles: The amount to be included under the item of "Point Reinforcement for Piles" for the type of piles specified shall be the number of authorized reinforced points actually completed and accepted.

9. Pre-Augering of Piles: The amount to be included under the item "Pre-Augering of Piles" shall be the number of linear feet (meters) of pre-augering completed and accepted by the Engineer.

7.02.05--Basis of Payment: This work will be paid for as follows:

1. Steel Piles: Payment for furnishing steel piles of the lengths authorized will be at the Contract unit price per pound (kilogram) for "Furnishing Steel Piles," which price shall include furnishing, delivery, storage and handling, and all materials, equipment, tools and labor incidental thereto. The weight (mass) of steel pile caps will be included with and paid for under this item.

Payment for driving steel piles will be at the contract unit price per linear foot (meter) for "Driving Steel Piles," complete in place, which price shall include all materials, equipment, tools and labor incidental thereto.

2. Timber Piles: Payment for furnishing timber piles or treated timber piles, up to a length 10 feet (3 meters) greater than that specified on the plans or in the proposal form, will be at the Contract unit price per foot (meter) for "Furnishing Timber Piles (' Length)" and "Furnishing Treated Timber Piles (' Length)," respectively, which price shall include furnishing, delivery, peeling, storage and handling, and all materials, equipment, tools and labor incidental thereto.

In case the length of any piles finally ordered is more than 10 feet (3 meters), but less than 20 feet (6 meters), greater than the length specified on the plans or proposal form, payment for furnishing such piles shall be at a price per linear foot (meter) equal to the original contract price, plus 20 percent thereof.

In case the length of any piles finally ordered is 20 feet (6 meters) or more greater than the length specified on the plans or proposal form, payment for furnishing such piles shall be at a price per linear foot (meter) equal to the original contract price plus 40 percent thereof.

Payment for driving timber piles or treated timber piles will be at the contract unit price per linear foot (meter) for "Driving Timber Piles" and "Driving Treated Timber Piles," respectively, complete in place and regardless of length, which price shall include all materials, equipment, tools and labor incidental thereto.

3. Cast-in-Place Concrete Piles: Payment for cast-in-place concrete piles will be at the contract unit price per linear foot (meter) for "Cast-in-Place Concrete Piles," complete in place, including all materials, equipment, tools and labor incidental thereto.

Cut-off materials from shells shall remain the property of the Contractor. They will be paid for in accordance with the unit cost applying in the Contractor's bill or bills for such shells, except that no payment will be made for material cut off from shells furnished by the Contractor in excess of the ordered length.

4. Prestressed Concrete Piles: Payment for furnishing prestressed concrete piles, of the lengths required, will be at the contract unit price per linear foot (meter) for "Furnishing Prestressed Concrete Piles" of the type and size as shown on the plans, which price shall include furnishing, delivery, storage and handling, and all materials, equipment, tools and labor incidental thereto.

Payment for driving prestressed concrete piles will be at the contract unit price per linear foot (meter) for "Driving Prestressed Concrete Piles," complete in place, which price shall include all material, equipment, tools and labor incidental thereto. Also included shall be all work involved in cutting piles to the direct cut-off elevation.

5. Test Piles: Test piles will be paid for at the contract unit price each for "Test Pile," of the type and length specified, which price shall constitute the complete compensation for furnishing and driving test piles and shall include all materials, equipment, tools and labor incidental thereto. Authorized splices to test piles will be paid for at 200 percent of the contract unit price bid for Splicing Timber Piles, Splicing Steel Piles, Splicing Cast-in-Place Piles or Splicing Prestressed Concrete Piles, whichever type of test pile the splice has been performed on; and such payment shall be for all costs including materials, equipment, tools and labor incidental thereto.

Extension to test piles in excess of the specified length will be paid for on the following basis, which shall include all equipment, tools, splices, labor and work incidental thereto.

(a) Timber Test Piles: Extensions will be paid for at 125 percent of the contract unit price per linear foot (meter) for "Furnishing Timber Piles," of the shortest length specified in the proposal, and at 125 percent of the contract unit price per linear foot (meter) for "Driving Timber Piles."

(b) Steel Test Piles: Extensions will be paid for at 125 percent of the contract unit price per pound (kilogram) for "Furnishing Steel Piles" and at 125 percent of the contract unit price per linear foot (meter) for "Driving Steel Piles."

(c) Cast-in-Place Concrete Test Piles: Extensions will be paid for at 125 percent of the contract unit price per linear foot (meter) for "Cast-in-Place Concrete Piles." Cut-off materials from shells will be paid for as provided in Subarticle 7.02.05-3.

(d) Prestressed Concrete Test Piles: Extensions will be paid for at 125 percent of the contract unit price per linear foot (meter) for "Furnishing Prestressed Concrete Piles," and at 125 percent of the contract unit price per linear foot (meter) for "Driving Prestressed Concrete Piles."

6. Static Load Tests: Loading tests will be paid for at the contract unit price each for "Pile Loading Test," which price shall include all expenses incidental to loading the pile or group of piles and removing the load, platform, etc., upon completion of the test.

7. Dynamic Pile Driving Analysis (PDA) Test: Dynamic monitoring will be paid for at the contract unit price each for "Dynamic Pile Driving Analysis (PDA) Test" which price shall include complete compensation for each pile tested using a pile driving analyzer during driving and restrike, including all materials, equipment, tools and labor incidental thereto, as well as providing preliminary and summary report(s).

8. Splices: Authorized splices in timber, steel, cast-in-place piles, precast concrete and prestressed concrete piles will be paid for at the contract unit price each for "Splicing Timber Piles," "Splicing Steel Piles," "Splicing Cast-in-Place Concrete Piles," "Splicing Precast Concrete Piles," "Splicing Prestressed Concrete Piles," respectively, which price shall include all materials, except as otherwise noted, and all equipment, tools and labor incidental thereto. In the absence of such prices, authorized splices will be paid for as extra work.

9. Trimming and Cutting: There shall be no direct compensation for cutting off timber, steel, precast concrete or prestressed concrete piles and shells for cast-in-place concrete piles as ordered; but the cost thereof shall be considered as included in the cost of the pile items.

10. Point Reinforcement for Piles: Authorized points for pointing and reinforcing piles will be paid for at the contract unit price each for "Point Reinforcement for Timber Piles," or "Point Reinforcement for Steel Piles," respectively, whichever applies, which price shall include all materials, equipment, tools and labor incidental thereto. In the absence of such prices, authorized points will be paid for as extra work.

11. Pre-Augering of Piles: Payment for "Pre-Augering of Piles" will be at the contract unit price per linear foot (meter) for "Pre-Augering of Piles," which price shall include which price shall include all materials, and all equipment, tools and labor incidental thereto.

12. Underground Obstructions: If the required pile penetration is not reached due to the presence of underground obstructions which are not the result of the Contractor's operations but are due to the presence of earlier construction at the site, then the cost of removing these obstructions and back-filling the area will be paid for as extra work unless otherwise specified in the contract documents.

13. Painting: There will be no additional payment for painting steel piles and steel pile shells, but the cost thereof shall be considered as included in the cost of furnishing and driving the piles.

14. Disposal of Pile Cutoffs: All costs incidental to the disposal of cutoff material will be included in the price of furnishing of the type of pile specified.

Pay Item	Pay Unit
Furnishing (Type) Piles (Lengths)	lb. (kg)
Driving (Type) Piles	l.f. (m)
Test Pile (Type-Length)	ea. (ea.)
Splicing (Type) Piles	ea. (ea.)
Point Reinforcement for (Type) Piles	ea. (ea.)
Pile Loading Test	ea. (ea.)
Dynamic Pile Driving Analysis (PDA) Test	ea. (ea.)
Pre-Augering of Piles	l.f. (m)

CONNECTICUT
SUPPLEMENTAL SPECIFICATION
SECTION 8.22
TEMPORARY PRECAST CONCRETE BARRIER CURB

Article 8.22.04 – Method of Measurement:

Add the following sentence to the end of the second paragraph:

"Relocation of Temporary Precast Concrete Barrier Curb for access to the work area or for the convenience of the Contractor shall be considered incidental to Maintenance and Protection of Traffic and will not be measured for payment."

CONNECTICUT
SUPPLEMENTAL SPECIFICATION
SECTION 9.10
METAL BEAM RAIL

Article 9.10.02 – Materials:

Change the only sentence in Subarticle 1 as follows:

"Chemical anchoring material shall meet the requirements of Article M.03.07."

Article 9.10.04 – Method of Measurement

Subarticle 1 – Metal Beam Rail (Type)

Delete the only sentence and replace with the following:

"The length of metal beam rail measured for payment will be the number of linear feet (meters) of accepted rail of the type or designation installed, including radius rail other than Curved Guide Rail Treatment, measured along the top of rail between centers of end posts in each continuous section."

CONNECTICUT
SUPPLEMENTAL SPECIFICATION
SECTION 9.18
THREE CABLE GUIDE RAILING
(I-BEAM POSTS) AND ANCHORAGES

9.18.03 – Construction Methods:

In the 10th paragraph, replace "MIL" with "MILSPEC."

CONNECTICUT
SUPPLEMENTAL SPECIFICATION
SECTION 9.22
BITUMINOUS CONCRETE SIDEWALK
BITUMINOUS CONCRETE DRIVEWAY

9.22.03 – Construction Methods:

Replace the first paragraph with the following:

"**1. Excavation:** Excavation, including saw cutting, removal of any existing sidewalk, or driveway, shall be made to the required depth below the finished grade, as shown on the plans or as directed by the Engineer. All soft and yielding material shall be removed and replaced with suitable material."

9.22.05 – Basis of Payment:

Replace the only paragraph with the following:

"This work will be paid for at the contract unit price per square yard (square meter) for "Bituminous Concrete Sidewalk" or "Bituminous Concrete Driveway," as the case may be, complete in place, which price shall include all saw cutting, excavation as specified above, backfill, disposal of surplus material, gravel or reclaimed miscellaneous aggregate base, and all equipment, tools, labor and materials incidental thereto."

CONNECTICUT
SUPPLEMENTAL SPECIFICATION
SECTION 9.44
TOPSOIL

Add the following paragraph to the beginning of article 9.44.03 – Construction Methods:

"The Contractor shall notify the Engineer of the location of the topsoil at least 15 calendar days prior to delivery. The topsoil and its source shall be inspected and approved by the Engineer before the material is delivered to the project. Any material delivered to the project, which does not meet specifications or which has become mixed with undue amounts of subsoil during any operation at the source or during placing and spreading, will be rejected and shall be replaced by the Contractor with acceptable material."

CONNECTICUT
SUPPLEMENTAL SPECIFICATION
SECTION 9.49
FURNISHING, PLANTING and MULCHING
TREES, SHRUBS, VINES and GROUND COVER PLANTS

9.49.03 – Construction Methods:

Replace subsection "5. Pits" *with the following:*

"**5. Pits:** The pit diameters shall be twice the diameter of the root-spread or container diameters, and shall be 2- inches (50 millimeters) less than the height of the rootball measured from the bottom of the ball to the root collar. (i. e. A 12-inch (300 millimeters) measurement between the root collar and the bottom of the rootball will require a 10-inch (250 millimeters) deep pit). Any excavation in excess of that required shall be replaced with planting soil and compacted to the satisfaction of the Engineer."

Add the following sentence to subsection "6. Obstructions Below Ground:"

"If removal of obstructions results in a deeper hole than needed for planting, backfill material shall be added and compacted to the satisfaction of the Engineer."

Replace subsection "7. Preparation of Backfill" *with the following:*

"**7. Backfill:** Backfill shall conform to M.13.01-1 Planting Soil."

Replace subsection "8. Setting Plants" *with the following:*

"**8. Setting Plants:** All plants shall be plumb and at a level that is 2-inches (50 millimeters) higher than the surrounding ground. Backfill material for all plants shall be thoroughly and properly settled by firming or tamping. Thorough watering shall accompany backfilling. Saucers capable of holding water shall be formed at individual plants (exclusive of plant beds) by placing ridges of planting soil around each, or as directed by the Engineer.

a. Balled and Burlapped plants: Plants shall be handled in such manner so that the soil will not be loosened from the roots inside of the ball. Carefully place the plant into the prepared pits and backfill with planting soil to one - half the depth of the pit, thoroughly tamp to the satisfaction of the Engineer around the ball. Fill the remaining area of the pit with water. Once water has completely drained, loosen the burlap and peel down the top one third. If wire baskets are used, cut and bend down the top third of the basket. Roots that have been wrapped around the ball within the burlap shall be straightened and the remainder of the pit filled with planting soil tamped to ensure that no air pockets remain.

b. Container Grown Plants: Carefully remove the plant from the container over the prepared pits. Gently loosen the soil and straighten all roots as naturally as possible. Place into the bottom of the pit. Backfill with planting soil to one - half the depth of the pit. Thoroughly tamp to the satisfaction of the Engineer. Fill remaining area of the pit with water. Once water has completely drained fill the remainder of the pit with planting soil tamped to ensure that no air pockets remain.

c. Bare-roots Plants: Carefully spread roots as naturally as possible and place into the bottom of the pit. All broken or frayed roots shall be cleanly cut off. Backfill with planting soil to one - half the depth of the pit. Thoroughly tamp to the satisfaction of the Engineer. Fill remaining area of the pit with water. Once water has completely drained fill the remainder of the pit with planting soil tamped to ensure that no air pockets remain."

Replace subsection "10. Watering" *with the following:*

"**10. Watering:** All plants shall be watered upon setting and as many times thereafter as conditions warrant.

The following is a guide for minimum requirements:

Trees:
- 2 ½" Caliper and less – Fifteen (15) gallons each.
- 3" to 5" Caliper – Twenty (20) gallon each.
- 5 ½" Caliper and above – Twenty-five (25) gallon each.

Shrubs:
- 24" and less – Six (6) gallon each.
- More than 24"- Ten (10) gallon each.

Vines, Perennials, and Ornamental Grasses – Three (3) gallons each.
Groundcovers and Bulbs – Two (2) gallons per square foot.

Water shall be applied at a controlled rate and in such a manner to ensure that the water reaches the root zone (saucer) of the plant or plant bed and does not run off to adjacent areas. Watering shall be applied in a manner that does not dislodge plants, erode soil or mulch, or cause damage to saucer.

The Contractor may use slow-release, drip irrigation bags for watering in accordance with manufacturer's instructions. The use of these portable/temporary irrigation bags will require the approval of the Engineer.

Overhead hydro-seeder spray nozzles shall not be used as watering devices."

Replace subsection "17. Establishment Period" *with the following:*

"**17. One-Year Establishment Period:** All plant material shall be subject to a One-Year Establishment Period. During this time, the Contractor shall use currently accepted horticultural practices to keep all plant material installed in a healthy, vigorous growing condition at the date of final acceptance. The date of final acceptance shall be one full

calendar year following the satisfactory completion of the planting activities as confirmed by the Engineer.

An inspection will be held one year from the date of installation with the Contractor, Engineer, and Landscape Designer to determine the acceptability of the plant establishment. An inventory of losses and rejected materials will be made and corrective and necessary clean up measures will be determined at the plant inspection."

CONNECTICUT
SUPPLEMENTAL SPECIFICATION
SECTION 9.75
MOBILIZATION

9.75.04 – Method of Measurement:

Delete the entire section and replace with the following:

"This work will be measured for payment in the manner described hereinafter; however, the determination of the total contract price earned shall not include the amount of mobilization earned during the period covered by the current monthly estimate- but shall include amounts previously earned and certified for payment:

1. When the first payment estimate is made, 25 percent of the lump sum bid price for this item or 2.5 percent of the total original contract price, whichever is less, shall be certified for payment.

2. When the Baseline Schedule, as specified under Section 1.05.08, is accepted, 50 percent of the lump sum bid price or 5 percent of the total original contract price, whichever is less, minus any previous payments, will be certified for payment.

3. When 10 percent of the total original contract price is earned and the Baseline Schedule, as specified under Section 1.05.08, is accepted, 75 percent of the lump sum price of this item or 7.5 percent of the total original contract price, whichever is less, minus any previous payments, will be certified for payment.

4. When 30 percent of the total original contract price is earned and the Baseline Schedule, as specified under Section 1.05.08, is accepted, 100 percent of the lump sum price of this item or 10 percent of the total original contract price, whichever is less, minus any previous payments, will be certified for payment.

Upon completion of all work on the project, payment of any amount bid for mobilization in excess of 10 percent of the original contract amount will be paid.

Nothing herein shall be construed to limit or preclude partial payments otherwise provided for by the contract."

CONNECTICUT
SUPPLEMENTAL SPECIFICATION
SECTION 10.01
TRENCHING AND BACKFILLING

Article 10.01.01- Description:

In the only sentence of the first paragraph after "...satisfactory..." *add the following:* "clean-up and".

In the only sentence of the second paragraph after "...reconstruction of..." *add the following:* "bituminous, concrete and granite curbing,".

Article 10.01.05- Basis of Payment:

In the only sentence of the second paragraph after "...mulching..." *add the following:* "clean-up and". *After* "...installing..." *add the word* "curbing,".

At the end of the third paragraph, add the following: "In the absence of a "Rock in Trench Excavation" item, the work will be compensated as extra work."

In the only sentence of the sixth paragraph, after "...unit price for 'Concrete Sidewalk'..." *add the following:* "or as extra work, if no unit price has been established."

CONNECTICUT
SUPPLEMENTAL SPECIFICATION
SECTION 10.10
CONCRETE HANDHOLE

Article 10.10.02 – Materials:

Replace "M.03.01" *with* "M.03" *for both Class A and Class C Concrete.*

Article 10.10.05 – Basis of Payment

In the first sentence, remove the words "ground wire".

At the end of the paragraph add the following sentence:

"The ground wire (bonding wire) is included in the Contract unit price under Section 10.08 – Electrical Conduit."

Add the word "Cover" *to the end of the pay item* "Cast Iron Handhole"

CONNECTICUT
SUPPLEMENTAL SPECIFICATION
SECTION 11.13
CONTROL CABLE

11.13.03 – Construction Methods:

In the 1st paragraph of subsection 2 replace "MIL" with "MILSPEC."

CONNECTICUT
SUPPLEMENTAL SPECIFICATION
SECTION 12.10
EPOXY RESIN PAVEMENT MARKINGS, SYMBOLS AND LEGENDS

12.10.03 (2) – Procedures:

Insert the following after the sixth paragraph:

"The epoxy shall be uniformly applied to the surface to be marked to ensure a wet film thickness of the applied epoxy, without glass beads, of 20 mils +/- 1 mil (500 um +/- 25 um)."

CONNECTICUT
SUPPLEMENTAL SPECIFICATION
SECTION M.03
PORTLAND CEMENT CONCRETE

Delete the entire Section and replace it with the following:

SECTION M.03
PORTLAND CEMENT CONCRETE

M.03.01 - Component Materials
M.03.02 - Mix Design Requirements
M.03.03 - Producer Equipment and Production Requirements
M.03.04 - Curing Materials
M.03.05 - Non Shrink, Non Staining Grout
M.03.06 - Expansive Cement for Anchoring
M.03.07 - Chemical Anchors
M.03.08 - Joint Materials
M.03.09 - Protective Compound/Sealers
M.03.10 - Formwork

M.03.01 – Component Materials

1. Coarse Aggregate: Coarse aggregate shall be broken stone, gravel, or reclaimed concrete aggregate defined as mortar-coated rock, consisting of clean durable fragments of uniform quality throughout. It shall be free from soft, disintegrated pieces, mud, dirt, organic or other injurious material and shall not contain more than 1 percent of dust by mass, as determined by AASHTO T-11. Coarse aggregate of a size retained on a 1-inch (25 mm) square opening sieve shall not contain more than 8% of flat or elongated pieces, whose longest dimension exceeds 5 times their maximum thickness. Heating or cooling of coarse aggregates may be required to meet concrete mix temperature requirements at time of placement.

(a) **Soundness:** When tested with magnesium sulfate solution for soundness, using AASHTO Method T 104, coarse aggregate shall not have a loss of more than 10% at the end of 5 cycles.

(b) **Loss on Abrasion:** When tested by means of the Los Angeles Machine, using AASHTO Method T 96, coarse aggregate shall not have a loss of more than 40%.

(c) **Gradation:** Grading and stone sizes of the coarse aggregate shall conform to Article M.01.01 as determined by AASHTO T-27. All coarse aggregate proportions shall be approved in advance by the Transportation Division Chief (TDC) as part of the Mix Design requirements.

(d) **Storage:** Aggregate stockpiles shall be located on smooth, hard, sloped/well-drained areas. Each source and gradation shall have an individual stockpile or bin. Aggregates shall be handled from stockpiles or other sources to the batching plant in such manner as to minimize segregation of the material. Aggregates that have become segregated, or mixed with earth or foreign material, shall not be used.

(e) **Reclaimed Concrete Aggregate:** In addition to the above requirements (a-d), when reclaimed concrete aggregate is proposed, it shall be tested for chloride in AASHTO T-260 "Sampling and Testing for Chloride Ion in Concrete and Concrete Raw Materials." Aggregate shall not be used if the chloride content as determined from this test exceeds 0.5 pound/cubic yard (297 g/cubic meter). Regardless of chloride content, reclaimed concrete aggregate shall not be used in concrete mixes used for pre-stressed concrete construction.

2. Fine Aggregate: Fine aggregate shall be natural or manufactured sand consisting of clean, hard, durable, uncoated particles of quartz or other rock, free from lumps of clay, soft or flaky material, mica, loam, organic or other injurious material. In no case shall fine aggregate containing lumps of frozen material be used. Heating or cooling of fine aggregates may be required to meet concrete mix temperature requirements at time of placement.

For continued shipments of fine aggregate from a given source, the fineness modulus of any sample shall not vary more than 0.20 from the base fineness modulus. The base fineness modulus for a source shall be established by the Engineer and may be revised based on current testing results.

(a) **Fine Material:** Fine aggregate shall contain not more than 3% of material finer than a #200 sieve (75µm), as determined by AASHTO T 11.

(b) **Organic Impurities:** Fine aggregate subjected to the colorimetric test shall not produce a color darker than Gardner Color Standard No. 11, using AASHTO T 21. If the fine aggregate fails to meet this requirement, the provisions of AASHTO M 6, Section 7.2.3, may apply.

(c) **Gradation:** Fine aggregate gradation shall be within the ranges listed in Table M.03.01-1 for any source. All fine aggregate proportions shall be approved in advance by the TDC as part of the Mix Design requirements.

(d) **Soundness:** When tested with magnesium sulfate solution for soundness, using AASHTO T 104, fine aggregate shall not have a loss of more than 10% at the end of 5 cycles. Fine aggregate that fails to meet this requirement, but meets all other requirements, may be allowed for use on a restricted basis with the approval of the Engineer on a case-by-case basis. Typically concrete forming any surface subject to polishing or erosion from running water will not be allowed to contain such material.

(e) **Storage:** Aggregate stockpiles shall be located on smooth, hard, sloped/well-drained areas. Each source and gradation shall have an individual stockpile or bin. Aggregates shall be handled from stockpiles or other sources to the batching plant in such manner as to minimize segregation of the material. Aggregates that have become segregated, or mixed with earth or foreign material, shall not be used.

Table M.03.01-1 TOTAL % PASSING BY WEIGHT

Sieve Size	3/8" (9.5mm)	No. 4 (4.75mm)	No. 8 (2.36mm)	No. 16 (1.18mm)	No. 30 (600µm)	No. 50 (300µm)	No. 100 (150µm)
Percent Passing	100	95-100	80-100	50-85	25-60	10-30	2-10

3. Cement:

(a) **Portland:** Types I, II, and III Portland cement shall conform to the requirements of AASHTO M 85. Type I and Type III Portland cement shall be used only when required or expressly permitted by the Project specification or the Engineer. The use of Type I or III will require that these mixtures be submitted as Non-standard Mix Designs. All cement shall be provided by a mill participating in the Departments' Cement Certification program. The requirements of the Certification Program are detailed in the Department's Quality Assurance Program for Materials.

(b) **Pre-Blended Cements**: Binary or Ternary cements consisting of Portland Cement and supplemental cementitious materials may be used provided that all the requirements of Subarticles M.03.01- 3(a) and -3(c) are met.

(c) **Replacement Materials:** Unless already approved as a Standard Mix Design, any Contractor proposed Mix Designs with partial replacement of Portland Cement (PC) with fly ash or ground granulated blast furnace slag (GGBFS), shall be submitted in writing to the Engineer for approval prior to the start of work, on a project-by-project basis. The type of material, source, and the percentage of the PC replaced shall be clearly indicated. Upon request, a Certified Test Report for the cement replacement material shall be provided to the Engineer for use during the Mix Design review.

1. Fly Ash: Fly ash to be used as a partial replacement for Portland cement shall meet the requirements of AASHTO M 295, either Class C or Class F, including the uniformity requirements of Table 2A. Loss on Ignition for either class of fly ash shall not exceed 4.0%. Fly ash may be used to replace up to a maximum of 20% of the required Portland cement. The fly ash shall be substituted on a weight (mass) basis, with a minimum of 1 pound (45 kg) of fly ash for 1 pound (45 kg) of Portland cement. Different classes of fly ash or the same class from different sources shall not be permitted on any single project without the written approval of the Engineer.
2. Ground Granulated Blast Furnace Slag (GGBFS): GGBFS used as a partial replacement for Portland cement shall conform to the requirements of AASHTO M 302/ASTM C989, Grade 100 or 120. As determined by the Engineer, GGBFS may be used to replace a maximum of 30% of the required Portland cement. The Engineer may restrict or prohibit the use of GGBFS if ambient temperatures anticipated during the placement and initial curing of the concrete are low. The GGBFS shall be substituted on a weight (mass) basis, with a minimum of 1 pound (45 kg) of slag for 1 pound (45 kg) of Portland cement. Different sources of GGBFS shall not be permitted on any single project without the written approval of the Engineer.

4. Water: All water used in the mixing of concrete shall be clear in appearance and free from oil, salt, acids, alkalis, sugar, and organic matter. Surface water may be used if not taken from shallow or muddy sources; classified as Class C or Class D on the Department of Energy and Environmental Protection (DEEP) Water Quality Classification mapping; and accommodations have been made to prevent contaminants from entering the supply to the satisfaction of the Engineer. The Engineer may request that water from any surface or ground source be tested in accordance with AASHTO T26 and AASHTO D512 if the appearance or scent of the water is suspect. To be acceptable, the pH of the water must not be less than 6.0 or greater than 8.0 and Chloride Ion Concentration of the water must not exceed 250ppm (250 mg/L). Potable water taken directly from a municipal or regional water supply may be used for mixing concrete without testing. Heating or cooling of water may be required to meet mix temperature requirements at time of placement.

5. Admixtures: All admixtures shall perform their function without injurious effects upon the concrete. If requested by the TDC, the Contractor shall present a certified statement from a recognized laboratory attesting to this requirement. A "recognized" laboratory is any cement and concrete laboratory approved and inspected regularly by the Cement and Concrete Reference Laboratory (CCRL). The statement shall contain results of compression tests of cylinder specimens made with concrete utilizing the admixture(s) in proportions equal to those proposed by the Contractor. The results of at least 5 standard 6-inch x 12-inch (150 mm x 300 mm) cylinders of each mix design shall be listed with the results of at least 5 like-sized cylinders not utilizing the admixture(s). Specimens must be made and cured in the laboratory in accordance with AASHTO T 126 and will be tested in accordance with AASHTO T 22.

(a) **Air-Entraining Admixtures:** In the event that air entrained concrete is required, an admixture conforming to the requirements of AASHTO M 154 may be used. Tests for 7 and 28-day compressive and flexural strengths and resistance to freezing and thawing are required, but tests for bleeding, bond strength and volume change will not be required.

(b) **Other Chemical Admixtures:** In the event that concrete properties are specified that require the use of additional admixtures, or the Contractor proposes the use of additional admixtures to facilitate placement, the admixtures shall conform to the requirements of AASHTO M194M/M, including the 1 year performance data.

M.03.02 – Mix Design Requirements

1. Standard ConnDOT Mix Designs: Standard Mix Designs shall be designed in accordance with applicable sections of ACI 211 and ACI 318. The mixtures shall consist of Portland cement, fine aggregate, coarse aggregate, admixtures[1], and water proportioned in accordance with Table M.03.02-1. The mixtures shall also be designed to obtain the physical properties of plastic concrete as specified in Article 6.01.03.

Table M.03.02-1

TYPE	28-day Minimum Compressive Strength psi (megapascals)	Water / Cement; or Water / Cement plus other approved Cementitious Material, by weight (mass), Maximum	Minimum Cement[2] Required lbs/cy (kg/cm)	Maximum Aggregate Size Required Section M.01.01
Class "A"	3300 (23)	0.53	615 (365)	No. 4
Class "C"	3300 (23)	0.53	658 (390)	No. 6
Class "F"	4400 (30)	0.44	658 (390)	No. 6
Pavement	3500 (24)	0.49	615 (365)	No. 4
Slope Paving	2200 (15)	0.69	455 (270)	No. 3

[1] Approved admixtures may be used in proportions recommended by the manufacturer.

[2] Portland Cement may be partially replaced within a Standard Mix Design by other approved cementitious material meeting the requirements of Article M.03.01-3(b) if permitted by the Engineer.

Mix designs shall indicate the dosage of admixtures anticipated to provide plastic properties required in the Project specification. Properties of standard classes of concrete in the plastic state are listed in Article 6.01.03

Standard Mix Designs are required to be designed and submitted by the concrete producers, and are approved by the Department on a standing basis. Submittal or re-approval of these Standard Mix Designs on an annual basis is not required. Previously approved producer-designed Standard Mixes that have a record of satisfactory performance may be utilized on Department projects unless there is a change in the gravimetric properties or the sources of any materials. Revisions to the Standard Mix Designs, which include changes in component sources, can be submitted at any time to the TDC, but must be approved prior to use on Department projects.

2. Non-Standard ConnDOT Mix Designs: Any proposed Mix Designs that do not comply with Table M.03.02-1 are required to be submitted 15 days prior to use on a project-by-project basis and be approved by the TDC prior to use. The use of an approved admixture with an otherwise approved Standard Mix Design is not considered non-standard.

All Non-standard Mix Designs used for load-bearing structures shall contain a minimum of 658 lbs/cubic yard (390 kg/cubic meter) of cementitious materials.

Concrete used in applications such as flowable fill or controlled low-strength material may be designed with less than 658 lbs/cubic yard (390 kg/cubic meter) of cementitious materials.

M.03.03 - Producer Equipment and Production Requirements

1. General Requirements: The source of the concrete must be approved by the Engineer prior to use on Department projects. Specifically the location and capacity of the central mix or dry batch plant, and complement of truck mixers/haulers, shall be adequate for continuous placement of concrete on a typical Department project. Approval may be revoked at any time in accordance with Section 1.06.01.

(a) Inspection: The production facility supplying hydraulic cement concrete shall have a current Certification of Ready Mixed Concrete Production Facilities from the National Ready Mixed Concrete Association (NRMCA), or equivalent certification approved by the Engineer.

(b) In addition to the requirements of approved third party certification, the facility shall produce batch tickets that conform to Subarticle 6.01.03-3(a).

(c) Quality Control: The Contractor is responsible for all aspects of Quality Control (QC). As determined by the Engineer, should material delivered to a project not meet specification, the Contractor may be required to submit to the Engineer a corrective procedure for approval within 3 calendar days. The procedure shall address any minor adjustments or corrections made to the equipment or procedures at the facility.

(d) Suspension: As determined by the Engineer, repeated or frequent delivery of deficient material to a Department project may be grounds for suspension of that source of material. A detailed QC plan that describes all QC policies and procedures for that facility may be required to formally address quality issues. This plan must be approved by the Engineer and fully implemented, prior to reinstatement of that facility.

2. Hand Mixed Concrete: Hand mixing shall be permitted only with the permission of the Engineer. Hand mixed batches shall not exceed 1/2 cubic yard (0.5 cubic meter) in volume. Hand mixing will not be permitted for concrete to be placed under water.

M.03.04 - Curing Materials

1. Water: Any water source deemed acceptable by the Engineer for mixing concrete may be used to provide water for curing purposes. Surface water may be used if classified as Class C or Class D on the Department of Energy and Environmental Protection (DEEP) Water Quality Classification mapping and accommodations have been made to prevent contaminants from entering the supply to the satisfaction of the Engineer.

In general, water shall not be taken from shallow or muddy sources. In cases where sources of supply are relatively shallow, the intake pipe shall be enclosed to exclude silt, mud, grass, etc.; and the water in the enclosure shall be maintained at a depth of not less than 2 feet (610 mm) under the intake pipe.

2. Mats: Mats for curing concrete shall be capable of maintaining moisture uniformly on the surface of the concrete. The mats shall not contain any materials such as dyes, sugar, etc., that may be injurious to the concrete.

The length or width of the mats shall be sufficient to cover all concrete surfaces being cured. Should more than one mat be required, sufficient overlap shall be provided by the Contractor as determined by the Engineer.

3. Liquid Membrane-Forming Compound: Liquid membrane-forming compound shall conform to the requirements of AASHTO M 148 Type 2, Class B, or shall be a water-soluble linseed oil-based compound conforming to the requirements of AASHTO M 148, Type 2.

4. White Polyethylene Sheeting (Film): White polyethylene sheeting (film) shall conform to the requirements of AASHTO M 171.

M.03.05 - Non Shrink, Non Staining Grout

1. Bagged (pre-mixed): Bagged (pre-mixed) formulations of non-shrink grout shall meet the requirements of ASTM C 1107. The grout shall be mixed with potable water for use. The grout shall be mixed to a flowable consistency as determined by ASTM C 230. All bagged material shall be clearly marked with the manufacturer's name, date of production, batch number, and written instructions for proper mixing, placement and curing of the product.

2. Bulk: The Contractor may formulate and design a grout mix for use on the Project in lieu of using a pre-bagged product. The Contractor shall obtain prior written approval of the Engineer for any such proposed Mix Design. Any such Mix Design shall include the proportions of hydraulic cement, potable water, fine aggregates, expansive agent, and any other necessary additive or admixture. This material shall meet all of the same chemical and physical requirements as shall the pre-bagged grout, in accordance with ASTM C 1107.

M.03.06 – Expansive Cement for Anchoring

The premixed anchoring cement shall be non-metallic, concrete gray in color and prepackaged. The mix shall consist of hydraulic cement, fine aggregate, expansive admixtures and water conforming to the following requirements:

1. The anchoring cement shall have a minimum 24 hour compressive strength of 2,600 psi (18 megapascals) when tested in accordance with ASTM C 109.
2. The water content of the anchoring cement shall be as recommended by the manufacturer. Water shall conform to the requirements of Subarticle M.03.01-4.

The Contractor shall provide a Certified Test Report and Materials Certificate for the premixed anchoring cement in conformance with Article 1.06.07. The Contractor shall also provide, when requested by the Engineer, samples of the premixed anchoring cement for testing and approval.

M.03.07 – Chemical Anchors

Chemical anchor material must be listed on the Departments' Qualified Products List and approved by the Engineer for the specified use.

The chemical anchor material shall be epoxy or polyester polymer resin. It shall not contain any metals or other products that promote corrosion of steel. The Contractor shall supply the Engineer with a Certified Test Report and Materials Certificate for the chemical anchor material in conformance with Article 1.06.07. When requested by the Engineer, the Contractor shall also provide samples of the chemical anchor material.

M.03.08 – Joint Materials

1. **Transverse Joints for Concrete Pavement:** Transverse joints shall consist of corrosion resistant load transfer devices, poured joint seal and in addition, in the case of expansion joints, expansion joint filler all conforming to the following requirements:
   - **(a)** The corrosion resistant load transfer device shall be coated steel or sleeved steel or be made of corrosion resistant material. The dimensions of any devices used shall be as shown on the plans, exclusive of any coating or sleeving. Core material of coated or sleeved metallic devices shall be steel meeting the requirements of AASHTO M 255M/M 255 Grade 520, or steel having equal or better properties and approved by the Engineer. Nonmetallic devices shall meet the various strength requirements applicable to metallic devices as well as all other requirements stated herein.
   - **(b)** All coated load transfer devices shall conform to the requirements of AASHTO M 254. Uncoated or sleeved load transfer devices shall meet the applicable physical requirements of AASHTO M 254. The use of field applied bond breakers will not be permitted.

(c) The basis of acceptance for corrosion resistant load transfer devices shall be the submission by the Contractor of a minimum of 2 samples accompanied by Certified Test Reports conforming to the requirements of Article 1.06.07 demonstrating that the load transfer device conforms to the requirements of AASHTO M 254 for the type of device supplied. The Engineer reserves the right to reject any load transfer device which he deems unsatisfactory for use.

2. **Joint Filler for Concrete Curbing:** Expansion joint filler shall be either preformed expansion joint filler or wood joint filler as indicated on the plans and shall conform to the following requirements:
   (a) Preformed expansion joint filler shall be the bituminous cellular type and shall conform to the requirements of AASHTO M 213.
   (b) Boards for wood joint filler shall have 2 planed sides and shall be redwood, cypress or white pine. Redwood and cypress boards shall be of sound heartwood. White pine boards shall be of sound sapwood. Occasional small, sound knots and medium surface checks will be permitted provided the board is free of any defects that will impair its usefulness for the purpose intended. The joint filler may be composed of more than one length of board in the length of the joint, but no board of a length less than 6 feet (1.9 meters) shall be used; and the separate boards shall be held securely to form a straight joint. Boards composed of pieces that are jointed and glued shall be considered as one board.
   (c) Dimensions shall be as specified or shown on the plans; and tolerances of plus 1/16-inch (1.6 millimeters) thickness, plus 1/8-inch (3.2 millimeters) depth and plus 1/4-inch (6.4 millimeters) length will be permitted.
   (d) All wood joint filler boards shall be given a preservative treatment by brushing with creosote oil conforming to AASHTO M 133. After treatment, the boards shall be stacked in piles, each layer separated from the next by spacers at least 1/4 inch (6.4 millimeters) thick; and the boards shall not be used until 24 hours after treatment. Prior to concreting, all exposed surfaces of the wood filler shall be given a light brush coating of form oil.
   (e) Testing of board expansion joint filler shall be in accordance with pertinent sections of AASHTO T 42.
3. **Longitudinal Joint Devices:** The metal used in the fabrication of longitudinal joint devices shall conform to ASTM requirements for each type of metal used. The dimensions shall be as shown on the plans.
4. **Expansion Joint Fillers for Bridges and Bridge Bearings:**
   (a) Preformed expansion joint filler for bridges shall conform to the requirements of AASHTO M 153, Type I or Type II.
   (b) Pre-molded expansion joint filler for bridge bearings shall conform to the requirements of AASHTO M 33.
5. **Joint Sealants:**
   (a) **Joint Sealer for Pavement:** The joint sealer for pavement shall be a rubber compound of the hot-poured type and shall conform to the requirements of AASHTO M 324 Type II unless otherwise noted on the plans or in the special provisions.
   (b) **Joint Sealer for Structures:** Structure joint sealers shall be one of the following type sealants:
      1. Where "Joint Seal" is specified on the plans, it shall conform to the Federal Specifications SS-S-200-E (Self-leveling type), TT-S-0227E (COM-NBS) Type II-Class A (Non-sag type), or 1 component polyurethane-base elastomeric sealants conforming to FS TT-S-00230C Type II-Class A or an approved equal.

         A Certified Test Report will be required in accordance with Article 1.06.07, certifying the conformance of the sealant to the requirements set forth in the Federal Specification. Should the consignee noted on a Certified Test Report be other than the Prime Contractor, a Materials Certificate shall be required to identify the shipment.

2. Where "Silicone Joint Sealant" is specified on the plans, it shall be one of the following or an approved equal:
   - Sealant, manufactured by the Dow Corning Corporation, Midland, Michigan Dow Corning 888 Silicone Joint Sealant or
   - Dow Corning 888-SL Self-Leveling Silicone Joint 48686-0994

6. **Closed Cell Elastomer:** The closed cell elastomer shall conform to the requirements of ASTM D1056, Grade RE-41 B2. The elastomer shall have a pressure-sensitive adhesive backing on one side.

   The Contractor shall deliver the closed cell elastomer to the job site a minimum of 30 days prior to installation. Prior to the delivery of the closed cell elastomer, the Contractor shall notify the Engineer of the date of shipment and the expected date of delivery. Upon delivery of the closed cell elastomer to the job site, the Contractor shall immediately notify the Engineer.

   Each separate length, roll or container shall be clearly tagged or marked with the manufacturer's name, trademark and lot number. A lot is defined as that amount of closed cell elastomer manufactured at one time from one batch of elastomer. A batch is defined as that amount of elastomer prepared and compounded at one time. The Contractor shall furnish a Certified Test Report in accordance with Article 1.06.07, confirming the conformance of the closed cell elastomer to the requirements set forth in these specifications. Should the co-signee noted on a Certified Test Report be other than the Prime Contractor, a Materials Certificate shall be required to identify shipment.

   The Contractor shall furnish a 1 foot (305 millimeter) length of closed cell elastomer in each lot for purposes of inspection and testing by the Engineer. The Engineer will cut a 1 foot (305 millimeter) sample from each lot and inspect the sample for conformance to size, and perform physical tests on the sample as deemed necessary.

   The Engineer shall reject any lot or portion of a lot that does not conform to the requirements stated herein. A rejected lot or portion of a lot may be resubmitted provided the Contractor has removed or corrected, in a manner acceptable to the Engineer, all non-conforming material.

M.03.09 – Protective Compound/Sealers

The brand and type of material must be listed on the Department's Qualified Products List and approved by the Engineer for the specified use.

M.03.10 – Formwork

1. **Stay-in-place Forms:** Material for stay-in-place metal forms shall be made of zinc-coated (galvanized) steel sheet conforming to ASTM Specification A653 (Structural Steel (SS) Grade 33 through 80). The minimum thickness shall be 20 gage (810 micrometers). Coating weight shall conform to ASTM A924, Class G235, and shall otherwise meet all requirements relevant to steel stay-in-place metal forms and the placing of concrete as specified herein and as noted in the Contract documents.

   Form supports shall either be fabricated and conform to the same material requirements as the forms, or be fabricated from structural steel conforming to the requirements of ASTM A36 and shall be hot-dip galvanized in accordance with ASTM A123.

   Lightweight filler material for forms shall be as recommended by the form manufacturer.

2. **Temporary Forms and Falsework:** Forms and Falsework shall be of wood, steel or other material approved by the Engineer. This approval does not relieve the Contractor from employing adequately sized materials of sufficient rigidity to prevent objectionable distortion of the formed concrete surfaces caused by pressure of the plastic concrete and other loads incidental to the construction operations.

CONNECTICUT
SUPPLEMENTAL SPECIFICATION
SECTION M.06
METALS

Article M.06.01 – Reinforcing Steel:

Subarticle 1. Bar Reinforcement:

Delete the third paragraph and replace it with:

"Epoxy coated bar reinforcement shall conform to the requirements of ASTM A 615/A 615M, Grade 60 (420) and shall be epoxy coated to the requirements of ASTM A 775/A 775M. All field repairs of the epoxy coating shall conform to the requirements of ASTM D 3963/D 3963M."

Article M.06.02—Structural Steel and Other Structural Materials:

Delete the entire article and replace it with the following:

"Article M.06.02—Structural Steel: The materials for this work shall conform to the following requirements:

1. **Structural Steel:**
   Structural steel for bridges shall conform to the designation shown on the plans. Unless otherwise indicated in the plans or specifications, structural steel for non-bridge related members or components shall conform to ASTM A709/A709M, Grade 36 (250).

   All surfaces of steel plates and shapes used in the fabrication of bridge girders shall be blast cleaned and visually inspected by the Contractor prior to any fabrication or preparation for fabrication. Blast cleaning shall conform to the requirements of SSPC-SP-6-Commercial Blast.

   All steel plates and shapes used in the fabrication of bridge girders shall be substantially free from pitting and gouges, regardless of the cause. Substantially free is defined as:
   - The measured surface area of all pits and gouges regardless of depth represent less than 1% of the surface area of theplate or shape.
   - No pit or gouge greater than 1/32 (0.08mm) inch deep.
   - No pit or gouge closer than six inches (15.25 cm) from another.

Any repair of plates or shapes will be performed in accordance with ASTM A6/A 6M.

2. **Anchor Bolts:**
Unless otherwise designated on the plans, anchor bolts, including suitable nuts and washers, shall conform to the following requirements:

Anchor bolt assemblies shall conform to the requirements of ASTM F1554, Grade 36 (250). All components of the bolt assembly shall be galvanized in conformance with ASTM A 153/A 153M.

Certified Test Reports and Material Samples: The Contractor shall submit notarized copies of Certified Test Reports in conformance with Article 1.06.07. Prior to incorporation into the work, the Contractor shall submit samples of the anchor bolt assemblies to the Engineer for testing in accordance with the latest edition of the "Schedule of Minimum Requirements for Acceptance Testing". One sample shall be submitted for each diameter, material designation, grade or coating of anchor bolt assembly.

3. **High Strength Bolts:** High strength bolts, including suitable nuts and hardened washers, shall conform to the following requirements:

   a) High strength bolts shall conform to ASTM A325 or ASTM A490 as shown on the plans. High-strength bolts used with coated steel shall be mechanically galvanized, unless otherwise specified. High-strength bolts used with uncoated weathering grades of steel shall be Type 3.

   Nuts for ASTM A325 bolts shall conform to ASTM A563, grades DH, DH3, C, C3 and D. Where galvanized high-strength bolts are used, the nuts shall be galvanized, heat treated grade DH or DH3. Where Type 3 high-strength bolts are used, the nuts shall be grade C3 or DH3.

   Nuts for ASTM A490 bolts shall conform to the requirements of ASTM A563, grades DH and DH3. Where Type 3 high-strength bolts are used, the nuts shall be grade DH3.

   All galvanized nuts shall be lubricated with a lubricant containing a visible dye of any color that contrasts with the color of the galvanizing. Black bolts must be oily to the touch when delivered and installed.

   Circular flat and square or rectangular beveled, hardened steel washers shall conform to ASTM F436. Unless otherwise specified, galvanized washers shall be furnished when galvanized high-strength bolts are specified, and washers with atmospheric corrosion resistance and weathering characteristics shall be furnished when Type 3 high-strength bolts are specified.

   Compressible-washer-type direct tension indicator washers, used in conjunction with high strength bolts, shall conform to ASTM F959. Where galvanized high-strength bolts are used, the washers shall be galvanized in accordance with ASTM B695, Class 50. Where Type 3 high-strength bolts are used, the washers shall be galvanized in accordance with ASTM B695, Class 50 and coated with epoxy.

b) **Identifying Marks:** ASTM A325 for bolts and the specifications referenced therein for nuts require that bolts and nuts manufactured to the specification be identified by specific markings on the top of the bolt head and on one face of the nut. Head markings must identify the grade by the symbol "A325", the manufacturer and the type, if Type 2 or 3. Nut markings must identify the grade, the manufacturer and if Type 3, the type. Markings on direct tension indicators must identify the manufacturer and Type "325". Other washer markings must identify the manufacturer and if Type 3, the type.

ASTM A490 for bolts and the specifications reference therein for nuts require that bolts and nuts manufactured to the specifications be identified by specific markings on the top of the bolt head and on one face of the nut. Head markings must identify the grade by the symbol "A490", the manufacturer and the type, if Type 2 or 3. Nut markings must identify the grade, the manufacturer and if Type 3, the type. Markings on direct tension indicators must identify the manufacturer and Type "490". Other washer markings must identify the manufacturer and if Type 3, the type.

c) **Dimensions:** Bolt and nuts dimensions shall conform to the requirements for Heavy Hexagon Structural Bolts and for Heavy Semi-Finished Hexagon Nuts given in ANSI Standard B18.2.1 and B18.2.2, respectively.

d) **Galvanized Bolts:** Galvanized bolts shall conform to ASTM A325, Type 1. The bolts shall be hot-dip galvanized in accordance with ASTM A153, Class C or mechanically galvanized in accordance with ASTM B695, Class 50. Bolts, nuts, and washers of any assembly shall be galvanized by the same process. The nuts shall be overtapped to the minimum amount required for the fastener assembly, and shall be lubricated with a lubricant containing a visible dye so a visual check can be made for the lubricant at the time of field installation. Galvanized bolts shall be tension tested after galvanizing. ASTM A 490 bolts shall not be galvanized.

e) **Test Requirements:** The maximum hardness of A325 bolts 1" or less in diameter shall be 33 HRC.

Plain, ungalvanized nuts shall have a minimum hardness of 89 HRB.

Proof load tests, in accordance with the requirements of ASTM F606 Method 1, shall be required for the bolts. Wedge tests of full-size bolts are required in accordance with Section 8.3 of ASTM A325. Galvanized bolts shall be wedge tested after galvanizing. Proof load tests of ASTM A563 are required for nuts. Proof load tests for nuts used with galvanized bolts shall be performed after galvanizing, overtapping and lubricating.

Rotational-capacity tests are required and shall be performed on all plain or galvanized (after galvanizing) bolt, nut and washer assemblies by the manufacturer or distributor prior to shipping and by the Contractor at the job site.

The thickness of galvanizing on bolts, nuts and washers shall be measured. On bolts, it shall be measured on the wrench flats or on top of the bolt head, and on nuts it shall be measured on the wrench flats.

f) **Certified Test Reports and Materials Certificates:** The Contractor shall submit notarized copies of Certified Test Reports and Materials Certificates in conformance with Article 1.06.07 for fastener assemblies. In addition the Certified Test Reports and Materials Certificates shall include the following:

a. Mill test reports shall indicate the place where the material was melted and manufactured.

b. Test reports for proof load tests, wedge tests, and rotational-capacity tests shall indicate where the tests were performed, date of tests, location of where the components were manufactured and lot numbers.

c. The test report for galvanized components shall indicate the thickness of the galvanizing.

g) **Material Samples:** Prior to incorporation into the work, the Contractor shall submit samples of the bolt assemblies to the Engineer for testing in accordance with the latest edition of the "Schedule of Minimum Requirements for Acceptance Testing". Samples shall be submitted for each diameter, length, material designation, grade, coating and manufacturer of bolt assembly.

4. Welded Stud Shear Connectors:

a) **Materials:** Stud shear connectors shall conform to the requirements of ASTM A 108, cold-drawn bar, Grades 1015, 1018 or 1020, either semi- or fully-killed. If flux-retaining caps are used, the steel for the caps shall be of a low carbon grade suitable for welding and shall comply with ASTM A 109.

Stud shear connectors shall be of a design suitable for electrically end-welding to steel with automatically timed stud welding equipment. The studs shall be of the sizes and dimensions noted on the plans. Flux for welding shall be furnished with each stud, either attached to the end of the stud or combined with the arc shield for automatic application in the welding operation. Each stud shall be furnished with a disposable ferrule of sufficient strength to remain intact during the welding operation and not crumble or break; it shall not be detrimental to the weld or create excessive slag.

Tensile properties, as determined by tests of bar stock after drawing or of finished studs, shall conform to the following requirements in which the yield strength is as determined by the 0.2% offset method:

Tensile strength (min.)	60,000 psi (415 megapascals)
Yield strength (min.)	50,000 psi (345 megapascals)
Elongation (min.)	20% in 2 inches (50 millimeters)
Reduction of area (min.)	50%

b) **Test Methods:** Tensile properties shall be determined in accordance with the applicable sections of ASTM A 370. Tensile tests of finished studs shall be made on studs welded to test plates using a test fixture similar to that shown in Figure 7.2 of the current AASHTO/AWS D1.5 – Bridge Welding Code. If fracture occurs outside of the middle half of the gage length, the test shall be repeated.

c) **Finish:** Finished studs shall be of uniform quality and condition, free from injurious laps, fins, seams, cracks, twists, bends or other injurious defects. Finish shall be as produced by cold-drawing, cold-rolling or machining.

d) **Certified Test Reports and Materials Certificates:** The Contractor shall submit a certified copy of the in-plant quality control test report in conformance with Article 1.06.07. The Contractor shall submit a Materials Certificate in conformance with Article 1.06.07 for the welded studs.

e) **Sample Materials for Testing:** Prior to incorporation into the work, the Contractor shall submit samples of the stud shear connectors to the Engineer for testing in accordance with the latest edition of the "Schedule of Minimum Requirements for Acceptance Testing". One sample shall be submitted for each diameter and length of welded stud."

CONNECTICUT
SUPPLEMENTAL SPECIFICATION
SECTION M.08
DRAINAGE

Delete the entire Section and replace with the following:

SECTION M.08
DRAINAGE

M.08.01 – Pipe
General
Iron/Steel
1. **Cast Iron Pipe**
2. **Coated Corrugated Metal Pipe and Coated Corrugated Metal Pipe Elbows**
3. **Perforated or Plain Coated Metal Pipe for Underdrains or Outlets**
4. **Coated Corrugated Metal Pipe Arches**
5. **Corrugated Structural Plates and Bolts**
6. **Metal Culvert Ends**

Concrete
7. **Reinforced Concrete Pipe**
8. **Reinforced Concrete Elliptical Pipe**
9. **Perforated Reinforced Concrete Pipe for Underdrains and Outlets**
10. **Slotted Drain Pipe**
11. **Reinforced Concrete Culvert Ends**

Aluminum
12. **Corrugated Aluminum Pipe**
13. **Corrugated Aluminum Pipe for Underdrains and Outlets**
14. **Corrugated Aluminum Pipe Arches**

Sealers/Gaskets
15. **Cold-Applied Bituminous Sealer**
16. **Preformed Plastic Gaskets**
17. **Flexible, Watertight, Rubber-Type Gaskets**

Plastic
18. **Corrugated Polyethylene Pipe**
19. **Geotextiles**
20. **Polyvinyl Chloride Plastic Pipe**
21. **Polyvinyl Chloride Gravity Pipe**

M.08.02 – Catch Basins, Manholes, and Drop Inlets
M.08.03 – Aggregates
1. **Bedding Material**
2. **Aggregates for Underdrains**

M.08.01 – Pipe

General

The Contractor shall submit manufacturer's material certifications for all metal and plastic pipes other than PVC, metal pipe-arches, metal fittings and metal coupling bands in accordance with Section 1.06.07.

IRON/STEEL

1. **Cast Iron Pipe:** This material shall conform to the requirements of AASHTO M 64 for Extra-Heavy Cast Iron Culvert Pipe.

2. **Coated Corrugated Metal Pipe and Coated Corrugated Metal Pipe Elbows:** This material shall conform to the following:

Pipe fabricated from zinc-coated steel sheet and aluminum-coated (Type 2) steel sheet must conform to AASHTO M 36, Type 1 or IR.

Pipe fabricated from metallic-coated and polymer-precoated steel sheet must conform to AASHTO M 245, Type 1.

Unless otherwise indicated on the plans, the corrugation size and sheet thickness shall conform to the following:

Nominal Inside Diameter (inches)	Corrugations	Minimum Specified Sheet Thickness (inches)	
6	1 1/2" X 1/4"	.052	
8, 10	1 1/2" X 1/4"	.064	
12, 15, 18 & 21	2 2/3" X 1/2"	.064	
24, 30 , 36	2 2/3" X 1/2"	.079	
42, 48	2 2/3" X 1/2"	.109	
54, 60	3" X 1" or 5" X 1"	.064	
66, 72	3" X 1" or 5" X 1"	.079	
78, 84, 90, & 96	3" X 1" or 5" X 1"	.109	
		Steel	Aluminum
18, 24, 30	Helical Rib ¾" X ¾ " X 7 ½"	.064	.060
36	Helical Rib ¾" X ¾ " X 7 ½"	.064	.075
42, 48 & 54	Helical Rib ¾" X ¾ " X 7 ½"	.079	.105
60, 66, 72, 78, 84	Helical Rib ¾" X ¾ " X 7 ½"	.109	.135

Aluminum pipe sheet thickness may be .004 inch less than specified above for 1 1/2-inch x 1/4-inch, 2 2/3-inch x 1/2-inch and 3-inch x 1-inch or 5-inch x 1-inch corrugations. Helical Rib shall be as specified above.

Zinc coated steel pipe, fittings, and coupling bands shall be coated with bituminous material as specified in AASHTO M 190 Type C. Pipe, fittings and coupling bands fabricated from aluminum coated steel sheet (Type 2) does not require coating of bituminous material or paved invert.

Metallic-coated and polymer-precoated steel pipe, fittings, and coupling bands shall be coated as specified in AASHTO M 246, Type B. The thicker polymeric coating shall be on the inside of the pipe.

Only one type of coating will be allowed for any continuously connected run of pipe.

If elongation of the pipe is required, it shall be done by the manufacturer.

3. Perforated or Plain Coated Metal Pipe for Underdrains or Outlets: This material shall conform to the requirements of AASHTO M 36, Type III or AASHTO M 245, Type III.

(a) Perforations: The minimum diameter of perforations after asphalt coating shall be 1/4 inch.

(b) Coating: All requirements of M.08.01-2 shall apply except that the minimum thickness of the bituminous coating on zinc coated steel pipe, fittings, and coupling bands pipe shall be 0.03 inches instead of 0.05 inches.

4. Coated Corrugated Metal Pipe-Arches: This material shall conform to the requirements of AASHTO M 36, Type II, Type IIR or AASHTO M 245, Type II. All coating requirements of M.08.01-1 shall apply.

Unless otherwise indicated on the plans, the corrugation size and sheet thickness shall conform to the following:

Pipe-Arch Equivalent Diameter (Inches)	Corrugations	Minimum Sheet Thickness (Inches)
15, 18, 21	2 2/3" X 1/2"	.064
24, 30	2 2/3" X 1/2"	.079
36, 42, 48	2 2/3" X 1/2"	.109
54, 60	2 2/3" X 1/2"	.138
60, 66, 72	3" X 1" or 5" X 1"	.079
78, 84, 90, 96	3" X 1" or 5" X 1"	.109
18, 21, 24	Helical Rib ¾" X ¾ " X 7 ½"	.064
30, 36	Helical Rib ¾" X ¾ " X 7 ½"	.079
42, 48, 54, 60	Helical Rib ¾" X ¾ " X 7 ½"	.109

5. Corrugated Structural Plates and Bolts: These plates and bolts are for use in the construction of metal pipe of the large diameter and for metal plate arches or pipe arches to be assembled in the field, and they shall conform to the requirements of AASHTO M 167 for corrugated metal pipe.

The dimensions of plates and details of fabrication shall conform to the requirements of the manufacturer. Where the plans call for a heavier gage for the bottom of the pipe than for the remainder of the pipe circumference, the lower fourth of the circumference shall be the minimum width of the heavier gage material.

The coating shall conform to the requirements of AASHTO M 243.

6. Metal Culvert End: The materials used in this work shall meet the pertinent requirements of Articles M.08.01-2 and M.08.01-4.

Bolts and fittings shall conform to the requirements of ASTM A 307 and shall be galvanized to conform to the requirements of ASTM A 153.

The units shall be coated as specified in Articles M.08.01-2, M.08.01-4 or M.08.01-5.

Fabrication: These units shall be formed from a rectangular sheet of metal by cutting and bending to form the desired shape. Two or more sheets may be fastened together by riveting or bolting so as to form a rectangular sheet of the required width. Skirt extensions and a top plate, as needed to complete the unit, shall be separately formed. Skirt extensions shall be riveted or bolted to the skirt.

All edges, which will be exposed above the surface of the ground, shall be reinforced before forming the unit by either of the following means:

(1) The edge shall be bent to form a semicircular roll with an exterior diameter of 1 inch, as shown in the detail drawing on the plans.

(2) A split tube of 1 inch outside diameter and not lighter than 14 gage, shall be slipped over a row of rivets spaced not more than 6 inches apart, as shown in the detail drawing on the plans.

One corrugation, matching the corrugations of the pipe or pipe-arch to which the unit is to be attached, shall be formed in the unit to insure secure and accurate alignment.

Attachment: The unit may be shop-riveted to a length of the appropriate pipe or pipe-arch, or may be field attached to the pipe or pipe arch by either of the other attachment systems shown on the plans, or by other means acceptable to the Engineer. If the unit is shop-riveted to a length of pipe or pipe-arch, this length shall be sufficient to permit proper use of standard coupling bands.

CONCRETE

7. Reinforced Concrete Pipe: Unless otherwise specified, this material shall conform to the requirements of AASHTO M 170, Class IV, as supplemented and modified by the following:

(a) **Reinforcement:** In circular pipe, only circular reinforcement will be allowed.

(b) **Laps and Welds:** The reinforcement shall be lapped not less than 2 inches and welded with an electric welding machine.

(c) **Quality Assurance Testing:** Circular and elliptical reinforced concrete pipe shall be tested by the three-edge bearing method prescribed in AASHTO T 280, except as follows:

1) Modified or special design pipe shall be tested to the 0.01-inch load and the ultimate load requirements as per AASHTO M 170 and M 207.

2) At the discretion of the Engineer, pipe of standard design, as specified in AASHTO M 170 and M 207, may be tested to the 0.01-inch requirement plus 10% additional load in lieu of ultimate load testing. Test pipe attaining a 0.01-inch crack will not be acceptable for use on Department projects.

3) Cores for absorption and determination of steel reinforcement shall be taken on a random basis as determined by the Engineer. The cores shall be at least 6 inches in diameter.

(d) **Inspection:** The pipe plant, materials, processes of manufacture and the finished pipe shall be subject to inspection and approval by the Department. The pipe manufacturer's records related to component materials, production and shipment of pipe for Department use shall be made available to the Department on request. The equipment and labor necessary for inspection, sampling and testing as required by the Department shall be furnished by the pipe manufacturer. Test equipment shall be calibrated at least once each 12 months, or as directed by the Engineer. The plant cement and aggregate scales shall be inspected and sealed by the approved agency at least once every twelve months.

(e) **Preliminary Tests and Tests for Extended Deliveries:** As directed by the Engineer, the Department shall select for test from the stock of any manufacturer proposing to supply pipe to the Department, 2 of each size pipe up through 30-inch diameter and 1 of each size greater than 30-inch diameter. These sample pipes shall be tested under Department supervision by the three-edge bearing method. For pipe that fails, it shall be necessary for the manufacturer to either physically isolate the rejected pipe at his plant or to provide some means to clearly indicate the unacceptability of the pipe. Either method shall be performed to the satisfaction of the Engineer. When production is resumed on any size, wall thickness or class previously rejected, preliminary tests shall be required. If 95% of all pipe tested at a particular plant from the first of the calendar year to September 30 meet specifications, including both preliminary and extended tests, it will not be necessary to perform the Fall three-edge bearing tests at this plant.

Use of compression tests on representative cylinders or cores to determine the compressive strength of the concrete incorporated into the pipe products will be at the discretion of the Engineer.

(f) **Shipping:** Pipe shall not be shipped until it is at least 7 days old unless earlier shipment is authorized by the Engineer on the basis of tests.

(g) **Certification:** Pipe will be accepted by the Department on the basis of manufacturer's certification. The manufacturer shall certify each shipment of pipe on Department Form MAT-073(PC-1), "Certification of Precast Concrete Products." Two (2) copies of this certification shall be furnished with the shipment to the Engineer at the project site.

8. Reinforced Concrete Elliptical Pipe: This material shall conform to the requirements of AASHTO M 207, Class HE IV and supplemented as follows:

(a) Manufacturing and testing shall conform to Article M.08.01-7.

9. Perforated Reinforced Concrete Pipe for Underdrains and Outlets: This material shall conform to the requirements of Article M.08.01-7 and shall be slotted in accordance with AASHTO M 175, Type 2, or as shown on the plans. Pipe for outlets shall not be perforated.

10. Slotted Drain Pipe: The pipe shall be asphalt coated and conform to Subarticle M.08.01-2. Concrete shall conform to Article M.03.01, Class "A" or pavement type. Concrete shall be cured in conformance with M.03.01. The inlet aperture shall be longitudinal on top of the pipe and may be continuous or intermittent. The opening in the pipe wall may be fabricated in the form of continuous bar risers and spacers or of intermittent cut-out segments with structural members supporting a continuous grating as indicated in the plans. End caps shall be as provided by the manufacturer.

Elastomeric polymer sealer shall meet the physical requirements of ASTM D 3406 and be accepted on manufacturer's certification.

The pipe shall be helically corrugated with a continuous welded or lock seam. Pipe ends shall have 2 rolled annular corrugations on each end for jointing.

Bar Riser and Spacer Type: Riser assemblies shall be fabricated from structural steel, in accordance with the dimensions on the plans. The riser assemblies shall be hot dipped galvanized according to ASTM A123. The assemblies shall be welded to the corrugated pipe on each side of the riser at the location of the solid web spacers. The riser shall terminate 1 inch from the ends of each pipe length to allow clearance for single bolt coupling bands. The ends of the riser shall be closed with a suitable welded plate where solid web spacers do not come to the ends of the riser.

The maximum deviation from straight in both the vertical and horizontal plane of the riser assembly shall not exceed 3/4 inch in a 20-foot length.

Continuous Grating Type: The cut-out pipe segments shall provide a 2-inch wide slot of maximum length between the lock seams. The slot shall be left intact 1 inch on each side of the lock seam and this material shall be utilized to fasten the reinforcing bar in place.

A bent epoxy coated reinforcing bar shall cross the slotted opening on 6-inch centers.

The reinforcing bar shall be an ASTM A 615, No. 13, deformed bar epoxy coated with 7 mils of fusion bonded epoxy powder conforming to AASHTO M 284.

Grating shall be furnished unless noted in the contract documents. Grating and all bearing bars, cross bars, and bent connecting bars shall be welding quality, mild carbon steel conforming to ASTM A 569 and to the dimensions shown on the plans.

Tie down bolts shall be J-Type bolts, plated, ASTM A 307 steel supplied with self-locking nuts.

Concrete forms shall be of cellular foam plastic base, fabricated as an integral part of the pipe and reinforcing bar assembly. The form shall be capped with a thick wood or plastic cap resting on top of the foam plastic and reinforcing bar.

The maximum deviation from straight in both the vertical and horizontal plane of the completed assembly shall not exceed 3/4 inch in a 20-foot length. All grating and hardware shall be galvanized in conformance with Article M.06.03. Expansion joint filler shall conform to M.03.

11. Reinforced Concrete Culvert End: The barrel shall conform to the requirements of AASHTO M 170, Class II, except that the three-edge bearing tests will not be required. The flare shall be of the same thickness and materials as the barrel and shall have steel reinforcement equaling or exceeding the amount shown on the table for the pertinent size.

Tongues and grooves shall be compatible with tongues and grooves of pipe meeting AASHTO M 170, Class IV.

Air entrainment shall be added to these units so as to maintain 5 to 8% entrained air.

ALUMINUM

12. Corrugated Aluminum Pipe: This material shall conform to the requirements of AASHTO M 196 Type I or Type IR. Sheet thickness shall conform to the requirements of M.08.01-2.

13. Corrugated Aluminum Pipe for Underdrains and Outlets: This material shall conform to the requirements of AASHTO M 196, Type III or Type IIIR. Sheet thickness shall conform to the requirements of M.08.01-2. Pipe for outlets shall not be perforated.

14. Corrugated Aluminum Pipe Arches: These pipe arches shall conform to the requirements of AASHTO M 196, Type II or Type IIR. Sheet thickness shall conform to the requirements of M.08.01-4.

SEALERS/GASKETS

15. Cold-Applied Bituminous Sealer: This material, for use in sealing of joints in concrete pipes, shall be free of asbestos and shall meet the following requirements:

It shall be of such consistency that it may be spread on the joints with a trowel when

the temperature of the air is between -20° F and 100° F. The bituminous material shall adhere to the concrete pipe so as to make a watertight seal and shall not flow, crack or become brittle when exposed to the atmosphere.

Unless otherwise specified, sampling shall be done in accordance with AASHTO T 40.

The bituminous sealer shall be delivered to the project in suitable containers for handling and shall be sealed or otherwise protected from contamination. The container shall show the brand name, net mass or volume, and the requirements for application.

16. Preformed Plastic Gaskets: This material for use in sealing of joints in concrete pipe shall conform to the requirements of ASTM C 1478.

17. Flexible, Watertight, Rubber-Type Gaskets: This material for use in sealing concrete pipe joints shall conform to the requirements of ASTM C 443.

PLASTIC

18. Corrugated Polyethylene Pipe: Corrugated Polyethylene Pipe, either corrugated interior surface (Type C) or smooth interior surface (Type S) without perforations or with perforations (Type CP or SP), shall conform to AASHTO M 252 or M 294. Type D pipe shall have a smooth interior surface braced circumferentially or spirally with projections or ribs joined to a smooth outer wall. Both surfaces shall be fused to, or be continuous with, the internal supports. Type D shall conform to AASHTO M 294.

19. Geotextiles: The geotextile shall be non-rotting, acid and alkali resistant, and have sufficient strength and permeability for the purpose intended including handling and backfilling operations. Fibers shall be low water absorbent. The fiber network must be dimensionally stable and resistant to delamination. The geotextile shall be free of any chemical treatment or coating that will reduce its permeability. The geotextile shall also be free of any flaws or defects which will alter its physical properties. Torn or punctured geotextiles shall not be used. For each specific use, only geotextiles that are already on the Connecticut Department of Transportation's Approved Products List for the geotextile type will be used. The Engineer reserves the right to reject any geotextile he deems unsatisfactory for a specific use. The brand name shall be labeled on the geotextile or the geotextile container. Geotextiles that are susceptible to damage from sunlight or heat shall be so identified by suitable warning information on the packaging material.

Geotextiles susceptible to sunlight damage shall not be used in any installations where exposure to light will exceed 30 days, unless specifically authorized in writing by the Engineer.

20. Polyvinyl Chloride Plastic Pipe: The pipe shall conform to the requirements of ASTM D 1785. Couplings and elbows shall conform to the requirements of ASTM D 2466 or D 2467.

21. Polyvinyl Chloride Gravity Pipe: This pipe shall conform to one of the following specifications: ASTM F789, ASTM F 679, or ASTM F 794.

M.08.02—Catch Basins, Manholes, and Drop Inlets: The materials to be used in the construction shall conform to the following:

1. **Brick for Catch Basins, Manholes or Drop Inlets:** Brick for catch basins, manholes or drop inlets shall conform to the requirements of ASTM C 32, except that the depth shall be 2 1/4 inches, the width 3 5/8 inches, and the length 8 inches, and except that the maximum water-absorption by 5-hour boiling shall not exceed the following limits:

Average of 5 bricks	15%
Individual brick	18%

2. **Concrete Building Brick for Catch Basins, Manholes, or Drop Inlets:** Concrete building brick for catch basins, manholes, or drop inlets shall conform to the requirements of ASTM C 55, Grade S II.

3. **Masonry Concrete Units for Catch Basins, Manholes, or Drop Inlets:** Masonry concrete units for catch basins, manholes, or drop inlets shall conform to the requirements of ASTM C 139.

4. **Precast Units for Drainage Structures:** Precast units for drainage structures may be used except where particular conditions require building or casting structures in place.

Fabrication plants shall have a quality control plan approved by the Division Chief of Materials Testing that is demonstrated to the satisfaction of the Engineer. The facility, the quality of materials, the process of fabrication, and the finished precast units shall be subject to inspection by the Engineer.

Precast manholes shall conform to the requirements of AASHTO M 199 (ASTM C 478).

Circular precast catch basins and drop inlets shall conform to AASHTO M 199 (ASTM C 478) as supplemented below. Rectangular precast catch basins and drop inlets shall conform to ASTM C 913 as supplemented below:

All materials used for concrete shall conform to the requirements of Section M.03.

The provisions of Subarticle 4.01.03 (A) shall apply except that the concrete shall contain 5.0%-8.0% entrained air. Water-absorption of individual cores taken from precast units shall be not more than 7%.

Reinforcement shall conform to the requirements of Article M.06.01.

Suitable provision shall be made in casting the units for convenient handling of the completed casting, and additional reinforcement steel shall be provided to allow for such handling in the casting yard and during transportation and placement. Each completed unit shall be identified with the name of manufacturer and date of the concrete pour from which it was cast, either by casting this information into an exposed face of the unit or by suitable stencil. For each day's production of precast units, the

fabricator shall mold, cure, and test standard cylinders, or cylinders compacted in a similar manner to the parent precast units, for the purpose of determining the compressive strength of the concrete incorporated into the precast units. Concrete used in molding the cylinders shall be representative of the concrete incorporated into the precast units during the production period. Cylinders shall be molded in accordance with AASHTO T 23, cured by the same method as the units they represent, and tested as prescribed in AASHTO T 22.

The fabricator shall determine the air content of the concrete used in the day's production of precast units by performing tests as prescribed in AASHTO T 152.

The equipment and personnel necessary to perform the required testing shall be furnished by the fabricator and approved by the Engineer. All testing equipment shall be calibrated at least once each 12 months or as directed by the Engineer. The fabricator shall maintain records relative to the production, testing, and shipment of precast units supplied to the Department. Said records shall be available to a representative of the Department upon his request.

The Department may accept precast concrete units on the basis of fabricator's certification. The fabricator shall certify each shipment of precast concrete units on Department Form MAT 314 (PC-1), "Certification of Precast Concrete Products." Two (2) copies of this certification shall be furnished with the shipment to the Engineer at the Project site.

Precast units that are cracked, show evidence of honeycomb, or have over 10% of their surface area patched may be subject to rejection, even though meeting other requirements.

5. Metal for Drainage Structures: Metal for catch basins, drop inlet and manhole frames, extensions, covers, and gratings shall be cast iron, cast steel, structural steel or malleable iron conforming to the requirements of the plans. Covers and gratings shall bear uniformly on their supports.

Extensions shall be designed so that the existing manhole cover or catch basin grate, when set in place, will have substantially the same bearing, fit, and load carrying capacity as in the existing frame. The extension shall be designed to fit into the original frame, resting specifically on the flange and rim area. The extension shall accept the existing cover or grate so that the cover or grate is seated firmly without movement.

Ladder rungs for manholes shall conform to AASHTO M 199 (ASTM C 478).

Cast iron shall conform to the requirements of AASHTO M 105, Class 25 for the frames and Class 30 for grates.

Cast steel shall conform to the requirements of ASTM A 27, Grade optional, and shall be thoroughly annealed.

Structural Steel shall conform to the requirements of ASTM A 36, or A 283, Grade B or better, as to quality and details of fabrication, except that in the chemical composition of the steel, the 2/10 of 1% of copper may be omitted.

Malleable iron shall conform to the requirements of ASTM A 47, Grade 22010.

The materials and method of manufacture for drop inlets shall conform to the requirements as stated on the plans or as ordered.

M.08.03—Aggregates

1. Bedding Material: Material for pipe bedding shall be sand or sandy soil, all of which passes a 3/8-inch sieve and not more than 10% passes a No. 200 sieve.

When ground water is encountered, the Engineer may allow No. 6 stone conforming to Article M.01.01 to be used instead of sand or sandy soil.

2. Aggregates for Underdrains: Materials for filling the trench shall consist of well-graded, clean, non-plastic sands or well-graded, clean, durable broken stone or screened gravel. Unless otherwise noted, the type of material to be used shall be sand.

Sand: This material shall meet the requirements of Article M.03.01-2

Broken Stone or Screened Gravel: This material shall conform to the gradation requirements for Size No. 8 under Article M.01.01.

CONNECTICUT
SUPPLEMENTAL SPECIFICATION
SECTION M.11
MASONRY FACING
CEMENT AND DRY RUBBLE MASONRY
BRICK
MORTAR

Article M.11.01 – Masonry Facing:

Subarticle 1. : Masonry Facing Stone

Delete the third sentence:

"Preferably, the stone shall be from a quarry the product of which is known to be of satisfactory quality."

Delete **"Subarticle 2. : Vacant:"**

Article M.11.04—Mortar:

Delete the entire article and replace it with the following:

M.11.04—Mortar: Mortar shall be either Pre-blended or Pre-packaged material conforming to:

ASTM C1714 - Standard Specification for Pre-blended Dry Mortar Mix for Unit Masonry;

ASTM C387 - Standard Specification for Packaged, Dry, Combined Materials for Concrete and High Strength Mortar;

or be composed of one part Portland cement and two parts, by volume, of surface dry fine aggregate blended on site.

Hydrated lime, in an amount not to exceed 4 pounds (1.8 kilograms) of lime to each bag of cement, may be added when the material is blended on site at the option of the Engineer. Cement and hydrated lime shall conform to the following requirements:

(a) **Portland cement, Types I, II or IS, and water** shall conform to the requirements of Article M.03.

(b) **Hydrated lime** shall conform to the requirements of ASTM C 6.

When mortar is mixed on the project site, **fine aggregate** shall conform to Grading A or B as indicated in the table below, and to the requirements of Section M.03. For laying stone, precast units, or for shotcrete, fine aggregate shall conform to Grading A. For pointing stone or the precast units and for laying brick or sealing pipe joints, the fine aggregate shall conform to Grading B.

Table of Gradation, Fine Aggregate for Mortar

Square Mesh Sieves	Grading	
	A	B
	Percentage Passing by weight (mass)	
Pass 3/8 inch (9.5 millimeters)	100	
Pass #4 (4.75 millimeters)	95-100	
Pass #8 (2.36 millimeters)	80-100	100
Pass #16 (1.18 millimeters)	50-85	
Pass #30 (600 microns)	25-60	
Pass #50 (300 microns)	10-30	10-40
Pass #100 (150 microns)	2-10	0-10

CONNECTICUT
SUPPLEMENTAL SPECIFICATION
SECTION M.13
ROADSIDE DEVELOPMENT

Delete "**Article M.13.01 – Topsoil:**" *and replace it with the following:*

"**Article M.13.01 – Topsoil:** The term topsoil used herein shall mean a soil meeting the soil textural classes established by the USDA Classification System based upon the proportion of sand, silt, and clay size particles after passing a No. 10 (2 millimeter) sieve and subjected to a particle size analysis. The topsoil shall contain 5% to 20% organic matter as determined by loss on ignition of oven-dried samples dried at 221° F (105° C). The pH range of the topsoil shall be 5.5 to 7.0.

The following textural classes shall be acceptable:

Loamy sand, including coarse, loamy fine, and loamy very fine sand, with not more than 80% sand
Sandy loam, including coarse, fine and very fine sandy loam
Loam
Clay loam, with not more than 30% clay
Silt loam, with not more than 60% silt
Sandy clay loam, with not more than 30% clay
All textural classes of topsoil with greater than 80% sand content will be rejected.

The topsoil furnished by the Contractor shall be a natural, workable soil that is screened and free of subsoil, refuse, stumps, roots, brush, weeds, rocks and stones over 1 1/4 inches (30 millimeters) in diameter, and any other foreign matter that would be detrimental to the proper development of plant growth.

The Contractor shall notify the Engineer of the location of the topsoil at least 15 calendar days prior to delivery. The topsoil and its source shall be inspected and approved by the Engineer before the material is delivered to the project. Any material delivered to the project, which does not meet specifications or which has become mixed with undue amounts of subsoil during any operation at the source or during placing and spreading, will be rejected and shall be replaced by the Contractor with acceptable material.

When topsoil is not furnished by the Contractor, it shall be material that is stripped in accordance with Section 2.02 or is furnished by the State, and will be tested as determined by the Engineer.

1. Planting Soil: Soil Material to be used for plant backfill shall be one of the following textural classes:

Loamy sand, with not more than 80% sand
Sandy loam
Loam
Clay loam, with not more than 30% clay
Silt loam, with not more than 60% silt
Sandy clay loam, with not more than 30% clay

Planting soil shall be premixed, consisting of approximately 50 % topsoil, 25 % compost or peat, and 25% native soil. Planting soil shall be loose, friable, and free from refuse, stumps, roots, brush, weeds, rocks and stones 2 inches (50 millimeters) in diameter. In addition, the material shall be free from any material that will prevent proper development and plant growth.

(a) For ericaceous plants and broad-leaved evergreens requiring an acid soil, planting soil shall have a true pH of 4.5 to 5.5. If it has not, it shall be amended by the Contractor at his own expense to the proper pH range by mixing with sulphur.

(b) Planting soil for general planting of nonacid-loving plants shall have a true pH value of 5.6 to 6.5. If it has not, it shall be amended by the Contractor at his own expense to the proper pH range by mixing with dolomitic limestone.

The amount of either sulphur or limestone required to adjust the planting soil to the proper pH range (above) shall be determined by the Engineer based on agronomic tests. The limestone shall conform to the requirements of Article M.13.02. The sulphur shall be commercial or flour sulphur, unadulterated, and shall be delivered in containers with the name of the manufacturer, material, analysis, and net weight (mass) appearing on each container.

The Engineer reserves the right to draw such samples and to perform such tests as he deems necessary to ensure that these specifications are met."

Article M.13.03 – Fertilizer:

In the last sentence of the first paragraph change "AOAC International." *to* "AOAC."

Article M.13.06 – Compost:

In the third to last sentence, replace "DEP" *with* "DEEP".

CONNECTICUT
SUPPLEMENTAL SPECIFICATION
SECTION M.16
TRAFFIC CONTROL SIGNALS

Article M.16.04 – Poles:

1. Steel Poles:

(i) Wire Entrance Fitting:

In the second sentence, delete "required to accept the cables".

Article M.16.06 – Traffic Signals:

9. Painting:

In the first sentence, replace "MIL" *with* "MILSPEC".

Subsection **Third Coat:**

Replace the first two sentences with the following:

"Dark Green Enamel: Shall be Dark Green exterior baked enamel and shall comply with FS A-A 2962. The color shall be No. 14056, FS No. 595."

and in the third sentence replace "MIL" *with* "MILSPEC".

Article M.16.08 – Pedestrian Push Button

In the last sentence of the second paragraph, change "Americans With Disabilities Act (ADA)" *to* "ADA".

Subarticle **Painting**
Subsection **Third Coat:**

Delete the entire paragraph and replace it with the following:

"**Third Coat:** Dark Green Enamel, shall be DARK GREEN exterior-baking enamel and shall comply with Federal Specifications A-A 2962. The color shall be No. 14056, Federal Standard No. 595."

Article M.16.10 – Flasher Cabinet:
1. Cabinet:

In subsection (f), change "Underwriter's Laboratory" *to* "UL".

M.16.15 – Messenger and Span Wire:

Delete the entire article and replace it with the following:

"M.16.15 – Messenger and Span Wire: The materials for this work shall conform to the following requirements:

1. Messenger wire shall be made of double-galvanized 7-strand utilities-grade steel wire cable, not less than 3/16 inch (4.8 millimeters) in diameter, with at least a 2,400-pound (10.7-killinewton) breaking strength.
2. Span wire:
   (a) "Span wire" shall be made of double-galvanized 7-strand utilities-grade steel wire cable, not less than 3/8 inch (9.5 millimeters) in diameter, with at least an 11,200-pound (50-kilonewton) breaking strength.
   (b) "Span wire (high strength)" shall be made of double-galvanized 7-strand extra-high-strength-grade steel wire cable, not less than 7/16 inch (11.1 millimeters) in diameter, with at least a 20,800-pound (94-kilonewton) breaking strength.
3. All hardware accessories shown on the plans to be used in span wire or messenger mounting shall be made of high-strength, double-galvanized, first-quality materials."

CONNECTICUT
SUPPLEMENTAL SPECIFICATION
SECTION M.17
ELASTOMERIC MATERIALS

M.17.01 – Elastomeric Bearing Pads:

2. Laminae:

In the last sentence of Subsection (a), replace "AAA 6061-T6" *with* "AA 6061-T6".

4. Adhesive for Bonding:

In the 2nd paragraph of Subsection (b), replace "MS MIL" *with* "MILSPEC".

CONNECTICUT
SUPPLEMENTAL SPECIFICATION
SECTION M.18
SIGNING

M.18.10 – Demountable Copy:

In the chart under subsection 3H, replace "MS MIL" with "MILSPEC."

Construction Contracts - Required Contract Provisions
(State Funded Only Contracts)

Index

1. Title VI of the Civil Rights Act of 1964 / Nondiscrimination Requirements

2. Contractor Work Force Utilization / Specific Equal Employment Opportunity

3. Contract Wage Rates

4. Americans with Disabilities Act of 1990

5. Connecticut Statutory Labor Requirements

    a. Construction, Alteration or Repair of Public Works Projects; Wage Rates
    b. Debarment List - Limitation on Awarding Contracts
    c. Construction Safety and Health Course
    d. Awarding of Contracts to Occupational Safety and Health Law Violators Prohibited
    e. Residents Preference in Work on Other Public Facilities (Not Applicable to Federal Aid Contracts)

6. Tax Liability - Contractor's Exempt Purchase Certificate (CERT – 141)

7. Executive Orders (State of CT)

8. Non Discrimination Requirement (pursuant to section 4a-60 and 4a-60a of the Connecticut General Statutes, as revised)

9. Whistleblower Provision

10. Connecticut Freedom of Information Act

    a. Disclosure of Records
    b. Confidential Information

11. Service of Process

12. Substitution of Securities for Retainages on State Contracts and Subcontracts

13. Health Insurance Portability and Accountability Act of 1996 (HIPAA)

14. Forum and Choice of Law

15. Summary of State Ethics Laws

16. Audit and Inspection of Plants, Places of Business and Records

17. Campaign Contribution Restriction

18. Tangible Personal Property

19. Bid Rigging and/or Fraud – Notice to Contractor

20. Consulting Agreement Affidavit

Index of Exhibits

EXHIBIT A – Title VI Contractor Assurances (page 13)
EXHIBIT B – Contractor Work Force Utilization / Equal Employment Opportunity (page 14)
EXHIBIT C – Health Insurance Portability and Accountability Act of 1996 (HIPAA) (page 17)
EXHIBIT D - Campaign Contribution Restriction (page 25)
EXHIBIT E - State Wage Rates (Attached at the end)

1. Title VI of the Civil Rights Act of 1964 / Nondiscrimination Requirements

The Contractor shall comply with Title VI of the Civil Rights Act of 1964 as amended (42 U.S.C. 2000 et seq.), all requirements imposed by the regulations of the United States Department of Transportation (49 CFR Part 21) issued in implementation thereof, and the Title VI Contractor Assurances attached hereto at Exhibit A, all of which are hereby made a part of this Contract.

2. Contractor Work Force Utilization / Equal Employment Opportunity

(a) The Contractor shall comply with the Contractor Work Force Utilization / Equal Employment Opportunity requirements attached at Exhibit B and hereby made part of this Contract, whenever a contractor or subcontractor at any tier performs construction work in excess of $10,000. These goals shall be included in each contract and subcontract. Goal achievement is calculated for each trade using the hours worked under each trade.

(b) Companies with contracts, agreements or purchase orders valued at $10,000 or more will develop and implement an Affirmative Action Plan utilizing the ConnDOT Affirmative Action Plan Guideline. This Plan shall be designed to further the provision of equal employment opportunity to all persons without regard to their race, color, religion, sex or national origin, and to promote the full realization of equal employment opportunity through a positive continuation program. Plans shall be updated as required by ConnDOT.

3. Contract Wage Rates

The Contractor shall comply with:

The State wage rate requirements indicated in Exhibit E hereof are hereby made part of this Contract.

Prevailing Wages for Work on State Highways; Annual Adjustments. With respect to contracts for work on state highways and bridges on state highways, the Contractor shall comply with the provisions of Section 31-54 and 31-55a of the Connecticut General Statutes, as revised.

As required by section 1.05.12 (Payrolls) of the State of Connecticut, Department of Transportation's Standard Specification for Roads, Bridges and Incidental Construction (FORM 816), as may be revised, every Contractor or subcontractor performing project work on a federal aid project is required to post the relevant prevailing wage rates as determined by the United States Secretary of Labor. The wage rate determinations shall be posted in prominent and easily accessible places at the work site.

4. Americans with Disabilities Act of 1990

This provision applies to those Contractors who are or will be responsible for compliance with the terms of the Americans with Disabilities Act of 1990, (42 U.S.C. 12101 et seq.), (Act), during the term of the Contract. The Contractor represents that it is familiar with the terms of this Act and that it is in compliance with the Act. Failure of the Contractor to satisfy this standard as the same applies to performance under this Contract, either now or during the term of the Contract as it may be amended, will render the Contract voidable at the option of the State upon notice to the contractor. The Contractor warrants that it will hold the State harmless and indemnify the State from any liability which may be imposed upon the State as a result of any failure of the Contractor to be in compliance with this Act, as the same applies to performance under this Contract.

5. Connecticut Statutory Labor Requirements

(a) Construction, Alteration or Repair of Public Works Projects; Wage Rates. The Contractor shall comply with Section 31-53 of the Connecticut General Statutes, as revised. The wages paid on an hourly basis to any person performing the work of any mechanic, laborer or worker on the work herein contracted to be done and the amount of payment or contribution paid or payable on behalf of each such person to any employee welfare fund, as defined in subsection (i) of section 31-53 of the Connecticut General Statutes, shall be at a rate equal to the rate customary or prevailing for the same work in the same trade or occupation in the town in which such public works project is being constructed. Any contractor who is not obligated by agreement to make payment or contribution on behalf of such persons to any such employee welfare fund shall pay to each mechanic, laborer or worker as part of such person's wages the amount of payment or contribution for such person's classification on each pay day.

(b) Debarment List. Limitation on Awarding Contracts. The Contractor shall comply with Section 3l-53a of the Connecticut General Statutes, as revised.

(c) Construction Safety and Health Course. The Contractor shall comply with section 31-53b of the Connecticut General Statutes, as revised. The contractor shall furnish proof to the Labor Commissioner with the weekly certified payroll form for the first week each employee begins work on such project that any person performing the work of a mechanic, laborer or worker pursuant to the classifications of labor under section 31-53 of the Connecticut General Statutes, as revised, on such public works project, pursuant to such contract, has completed a course of at least ten hours in duration in construction safety and health approved by the federal Occupational Safety and Health Administration or, has completed a new miner training program approved by the Federal Mine Safety and Health Administration in accordance with 30 CFR 48 or, in the case of telecommunications employees, has completed at least ten hours of training in accordance with 29 CFR 1910.268.

Any employee required to complete a construction safety and health course as required that has not completed the course, shall have a maximum of fourteen (14) days to complete the course. If the employee has not been brought into compliance, they shall be removed from the project until such time as they have completed the required training.

Any costs associated with this notice shall be included in the general cost of the contract. In addition, there shall be no time granted to the contractor for compliance with this notice. The contractor's compliance with this notice and any associated regulations shall not be grounds for claims as outlined in Section 1.11 – "Claims".

(d) Awarding of Contracts to Occupational Safety and Health Law Violators Prohibited. The Contract is subject to Section 31-57b of the Connecticut General Statutes, as revised.

(e) Residents Preference in Work on Other Public Facilities. NOT APPLICABLE TO FEDERAL AID CONTRACTS. Pursuant to Section 31-52a of the Connecticut General Statutes, as revised, in the employment of mechanics, laborers or workmen to perform the work specified herein, preference shall be given to residents of the state who are, and continuously for at least six months prior to the date hereof have been, residents of this state, and if no such person is available, then to residents of other states

6. Tax Liability - Contractor's Exempt Purchase Certificate (CERT – 141)

The Contractor shall comply with Chapter 219 of the Connecticut General Statutes pertaining to tangible personal property or services rendered that is/are subject to sales tax. The Contractor is responsible for determining its tax liability. If the Contractor purchases materials or supplies pursuant to the Connecticut Department of Revenue Services' "Contractor's Exempt Purchase Certificate (CERT-141)," as may be revised, the Contractor acknowledges and agrees that title to such materials and supplies installed or placed in the project will vest in the State simultaneously with passage of title from the retailers or vendors thereof, and the Contractor will have no property rights in the materials and supplies purchased.

Forms and instructions are available anytime by:

Internet: Visit the DRS website at www.ct.gov/DRS to download and print Connecticut tax forms; or Telephone: Call 1-800-382-9463 (Connecticut calls outside the Greater Hartford calling area only) and select Option 2 or call 860-297-4753 (from anywhere).

7. Executive Orders

This Contract is subject to the provisions of Executive Order No. Three of Governor Thomas J. Meskill, promulgated June 16, 1971, concerning labor employment practices, Executive Order No. Seventeen of Governor Thomas J. Meskill, promulgated February 15, 1973, concerning the listing of employment openings and Executive Order No. Sixteen of Governor John G. Rowland promulgated August 4, 1999, concerning violence in the workplace, all of which are incorporated into and are made a part of the Contract as if they had been fully set forth in it. The Contract may also be subject to the applicable parts of Executive Order No. 7C of Governor M. Jodi Rell, promulgated July 13, 2006, concerning contracting reforms and Executive Order No. 14 of Governor M. Jodi Rell, promulgated April 17, 2006, concerning procurement of cleaning products and services, in accordance with their respective terms and conditions. If Executive Orders 7C and 14 are applicable, they are deemed to be incorporated into and are made a part of the Contract as if they had been fully set forth in it. At the Contractor's request, the Department shall provide a copy of these orders to the Contractor.

8. Non Discrimination Requirement (pursuant to section 4a-60 and 4a-60a of the Connecticut General Statutes, as revised): References to "minority business enterprises" in this Section are not applicable to Federal-aid projects/contracts. Federal-aid projects/contracts are instead subject to the Federal Disadvantaged Business Enterprise Program.

(a) For purposes of this Section, the following terms are defined as follows:

i. "Commission" means the Commission on Human Rights and Opportunities;
ii. "Contract" and "contract" include any extension or modification of the Contract or contract;
iii. "Contractor" and "contractor" include any successors or assigns of the Contractor or contractor;
iv. "gender identity or expression" means a person's gender-related identity, appearance or behavior, whether or not that gender-related identity, appearance or behavior is different from that traditionally associated with the person's physiology or assigned sex at birth, which gender-related identity can be shown by providing evidence including, but not limited to, medical history, care or treatment of the gender-related identity, consistent and uniform assertion of the gender-related identity or any other evidence that the gender-related identity is sincerely held, part of a person's core identity or not being asserted for an improper purpose.

v. “good faith" means that degree of diligence which a reasonable person would exercise in the performance of legal duties and obligations;

vi. "good faith efforts" shall include, but not be limited to, those reasonable initial efforts necessary to comply with statutory or regulatory requirements and additional or substituted efforts when it is determined that such initial efforts will not be sufficient to comply with such requirements;

vii. "marital status" means being single, married as recognized by the state of Connecticut, widowed, separated or divorced;

viii. "mental disability" means one or more mental disorders, as defined in the most recent edition of the American Psychiatric Association's "Diagnostic and Statistical Manual of Mental Disorders", or a record of or regarding a person as having one or more such disorders;

ix. "minority business enterprise" means any small contractor or supplier of materials fifty-one percent or more of the capital stock, if any, or assets of which is owned by a person or persons: (1) who are active in the daily affairs of the enterprise, (2) who have the power to direct the management and policies of the enterprise, and (3) who are members of a minority, as such term is defined in subsection (a) of Connecticut General Statutes § 32-9n; and

x. “public works contract" means any agreement between any individual, firm or corporation and the State or any political subdivision of the State other than a municipality for construction, rehabilitation, conversion, extension, demolition or repair of a public building, highway or other changes or improvements in real property, or which is financed in whole or in part by the State, including, but not limited to, matching expenditures, grants, loans, insurance or guarantees.

For purposes of this Section, the terms "Contract" and “contract” do not include a contract where each contractor is (1) a political subdivision of the state, including, but not limited to, a municipality, (2) a quasi-public agency, as defined in Conn. Gen. Stat. Section 1-120, (3) any other state, including but not limited to any federally recognized Indian tribal governments, as defined in Conn. Gen. Stat. Section 1-267, (4) the federal government, (5) a foreign government, or (6) an agency of a subdivision, agency, state or government described in the immediately preceding enumerated items (1), (2), (3), (4) or (5).

(b) (1) The Contractor agrees and warrants that in the performance of the Contract such Contractor will not discriminate or permit discrimination against any person or group of persons on the grounds of race, color, religious creed, age, marital status, national origin, ancestry, sex, gender identity or expression, mental retardation, mental disability or physical disability, including, but not limited to, blindness, unless it is shown by such Contractor that such disability prevents performance of the work involved, in any manner prohibited by the laws of the United States or of the State of Connecticut; and the Contractor further agrees to take affirmative action to insure that applicants with job-related qualifications are employed and that employees are treated when employed without regard to their race, color, religious creed, age, marital status, national origin, ancestry, sex, gender identity or expression, mental retardation, mental disability or physical disability, including, but not limited to, blindness, unless it is shown by the Contractor that such disability prevents performance of the work involved; (2) the Contractor agrees, in all solicitations or advertisements for employees placed by or on behalf of the Contractor, to state that it is an "affirmative action-equal opportunity employer" in accordance with regulations adopted by the Commission; (3) the Contractor agrees to provide each labor union or representative of workers with which the Contractor has a collective bargaining Agreement or other contract or understanding and each vendor with which the Contractor has a contract or

understanding, a notice to be provided by the Commission, advising the labor union or workers' representative of the Contractor's commitments under this section and to post copies of the notice in conspicuous places available to employees and applicants for employment; (4) the Contractor agrees to comply with each provision of this Section and Connecticut General Statutes §§ 46a-68e and 46a-68f and with each regulation or relevant order issued by said Commission pursuant to Connecticut General Statutes §§ 46a-56, 46a-68e and 46a-68f; and (5) the Contractor agrees to provide the Commission on Human Rights and Opportunities with such information requested by the Commission, and permit access to pertinent books, records and accounts, concerning the employment practices and procedures of the Contractor as relate to the provisions of this Section and Connecticut General Statutes § 46a-56. If the contract is a public works contract, the Contractor agrees and warrants that he will make good faith efforts to employ minority business enterprises as subcontractors and suppliers of materials on such public works projects.

(c) Determination of the Contractor's good faith efforts shall include, but shall not be limited to, the following factors: The Contractor's employment and subcontracting policies, patterns and practices; affirmative advertising, recruitment and training; technical assistance activities and such other reasonable activities or efforts as the Commission may prescribe that are designed to ensure the participation of minority business enterprises in public works projects.

(d) The Contractor shall develop and maintain adequate documentation, in a manner prescribed by the Commission, of its good faith efforts.

(e) The Contractor shall include the provisions of subsection (b) of this Section in every subcontract or purchase order entered into in order to fulfill any obligation of a contract with the State and such provisions shall be binding on a subcontractor, vendor or manufacturer unless exempted by regulations or orders of the Commission. The Contractor shall take such action with respect to any such subcontract or purchase order as the Commission may direct as a means of enforcing such provisions including sanctions for noncompliance in accordance with Connecticut General Statutes §46a-56; provided if such Contractor becomes involved in, or is threatened with, litigation with a subcontractor or vendor as a result of such direction by the Commission, the Contractor may request the State of Connecticut to enter into any such litigation or negotiation prior thereto to protect the interests of the State and the State may so enter.

(f) The Contractor agrees to comply with the regulations referred to in this Section as they exist on the date of this Contract and as they may be adopted or amended from time to time during the term of this Contract and any amendments thereto.

(g) (1) The Contractor agrees and warrants that in the performance of the Contract such Contractor will not discriminate or permit discrimination against any person or group of persons on the grounds of sexual orientation, in any manner prohibited by the laws of the United States or the State of Connecticut, and that employees are treated when employed without regard to their sexual orientation; (2) the Contractor agrees to provide each labor union or representative of workers with which such Contractor has a collective bargaining Agreement or other contract or understanding and each vendor with which such Contractor has a contract or understanding, a notice to be provided by the Commission on Human Rights and Opportunities advising the labor union or workers' representative of the Contractor's commitments under this section, and to post copies of the notice in conspicuous places available to employees and applicants for employment; (3) the Contractor agrees to comply with each provision of this section and with each regulation or relevant order issued by said Commission pursuant to Connecticut General Statutes § 46a-56;

and (4) the Contractor agrees to provide the Commission on Human Rights and Opportunities with such information requested by the Commission, and permit access to pertinent books, records and accounts, concerning the employment practices and procedures of the Contractor which relate to the provisions of this Section and Connecticut General Statutes § 46a-56.

(h) The Contractor shall include the provisions of the foregoing paragraph in every subcontract or purchase order entered into in order to fulfill any obligation of a contract with the State and such provisions shall be binding on a subcontractor, vendor or manufacturer unless exempted by regulations or orders of the Commission. The Contractor shall take such action with respect to any such subcontract or purchase order as the Commission may direct as a means of enforcing such provisions including sanctions for noncompliance in accordance with Connecticut General Statutes § 46a-56; provided, if such Contractor becomes involved in, or is threatened with, litigation with a subcontractor or vendor as a result of such direction by the Commission, the Contractor may request the State of Connecticut to enter into any such litigation or negotiation prior thereto to protect the interests of the State and the State may so enter."

The Nondiscrimination Certifications can be found at the Office of Policy and Management website.

http://www.ct.gov/opm/cwp/view.asp?a=2982&Q=390928

9. Whistleblower Provision

The following clause is applicable if the Contract has a value of Five Million Dollars ($5,000,000) or more.

Whistleblowing. This Contract may be subject to the provisions of Section 4-61dd of the Connecticut General Statutes. In accordance with this statute, if an officer, employee or appointing authority of the Contractor takes or threatens to take any personnel action against any employee of the Contractor in retaliation for such employee's disclosure of information to any employee of the contracting state or quasi-public agency or the Auditors of Public Accounts or the Attorney General under the provisions of subsection (a) of such statute, the Contractor shall be liable for a civil penalty of not more than five thousand dollars for each offense, up to a maximum of twenty per cent of the value of this Contract. Each violation shall be a separate and distinct offense and in the case of a continuing violation, each calendar day's continuance of the violation shall be deemed to be a separate and distinct offense. The State may request that the Attorney General bring a civil action in the Superior Court for the Judicial District of Hartford to seek imposition and recovery of such civil penalty. In accordance with subsection (f) of such statute, each large state contractor, as defined in the statute, shall post a notice of the provisions of the statute relating to large state contractors in a conspicuous place which is readily available for viewing by the employees of the Contractor.

10. Connecticut Freedom of Information Act

(a) Disclosure of Records. This Contract may be subject to the provisions of section 1-218 of the Connecticut General Statutes. In accordance with this statute, each contract in excess of two million five hundred thousand dollars between a public agency and a person for the performance of a governmental function shall (a) provide that the public agency is entitled to receive a copy of records and files related to the performance of the governmental function, and (b) indicate that such records and files are subject to FOIA and may be disclosed by the public agency pursuant to FOIA. No request to inspect or copy such records or files shall be valid unless the request is made to the public agency in accordance with FOIA. Any complaint by a person who is denied the right to inspect or copy such records or files shall be brought to the Freedom of Information Commission in accordance with the provisions of sections 1-205 and 1-206 of the Connecticut General Statutes.

(b) Confidential Information. The State will afford due regard to the Contractor's request for the protection of proprietary or confidential information which the State receives from the Contractor. However, all materials associated with the Contract are subject to the terms of the FOIA and all corresponding rules, regulations and interpretations. In making such a request, the Contractor may not merely state generally that the materials are proprietary or confidential in nature and not, therefore, subject to release to third parties. Those particular sentences, paragraphs, pages or sections that the Contractor believes are exempt from disclosure under the FOIA must be specifically identified as such. Convincing explanation and rationale sufficient to justify each exemption consistent with the FOIA must accompany the request. The rationale and explanation must be stated in terms of the prospective harm to the competitive position of the Contractor that would result if the identified material were to be released and the reasons why the materials are legally exempt from release pursuant to the FOIA. To the extent that any other provision or part of the Contract conflicts or is in any way inconsistent with this section, this section controls and shall apply and the conflicting provision or part shall not be given effect. If the Contractor indicates that certain documentation is submitted in confidence, by specifically and clearly marking the documentation as "CONFIDENTIAL," DOT will first review the Contractor's claim for consistency with the FOIA (that is, review that the documentation is actually a trade secret or commercial or financial information and not required by statute), and if determined to be consistent, will endeavor to keep such information confidential to the extent permitted by law. See, *e.g.*, Conn. Gen. Stat. §1-210(b)(5)(A-B). The State, however, has no obligation to initiate, prosecute or defend any legal proceeding or to seek a protective order or other similar relief to prevent disclosure of any information that is sought pursuant to a FOIA request. Should the State withhold such documentation from a Freedom of Information requester and a complaint be brought to the Freedom of Information Commission, the Contractor shall have the burden of cooperating with DOT in defense of that action and in terms of establishing the availability of any FOIA exemption in any proceeding where it is an issue. In no event shall the State have any liability for the disclosure of any documents or information in its possession which the State believes are required to be disclosed pursuant to the FOIA or other law.

11. Service of Process

The Contractor, if not a resident of the State of Connecticut, or, in the case of a partnership, the partners, if not residents, hereby appoints the Secretary of State of the State of Connecticut, and his successors in office, as agent for service of process for any action arising out of or as a result of this Contract; such appointment to be in effect throughout the life of this Contract and six (6) years thereafter.

12. Substitution of Securities for Retainages on State Contracts and Subcontracts

This Contract is subject to the provisions of Section 3-ll2a of the General Statutes of the State of Connecticut, as revised.

13. Health Insurance Portability and Accountability Act of 1996 (HIPAA)

The Contractor shall comply, if applicable, with the Health Insurance Portability and Accountability Act of 1996 and, pursuant thereto, the provisions attached at Exhibit C, and hereby made part of this Contract.

14. Forum and Choice of Law

Forum and Choice of Law. The parties deem the Contract to have been made in the City of Hartford, State of Connecticut. Both parties agree that it is fair and reasonable for the validity and construction of the Contract to be, and it shall be, governed by the laws and court decisions of the State of Connecticut, without giving effect to its principles of conflicts of laws. To the extent that any immunities provided by Federal law or the laws of the State of Connecticut do not bar an action against the State, and to the extent that these courts are courts of competent jurisdiction, for the purpose of venue, the complaint shall be made returnable to the Judicial District of Hartford only or shall be brought in the United States District Court for the District of Connecticut only, and shall not be transferred to any other court, provided, however, that nothing here constitutes a waiver or compromise of the sovereign immunity of the State of Connecticut. The Contractor waives any objection which it may now have or will have to the laying of venue of any Claims in any forum and further irrevocably submits to such jurisdiction in any suit, action or proceeding.

15. Summary of State Ethics Laws

Pursuant to the requirements of section 1-101qq of the Connecticut General Statutes, the summary of State ethics laws developed by the State Ethics Commission pursuant to section 1-81b of the Connecticut General Statutes is incorporated by reference into and made a part of the Contract as if the summary had been fully set forth in the Contract.

16. Audit and Inspection of Plants, Places of Business and Records

(a) The State and its agents, including, but not limited to, the Connecticut Auditors of Public Accounts, Attorney General and State's Attorney and their respective agents, may, at reasonable hours, inspect and examine all of the parts of the Contractor's and Contractor Parties' plants and places of business which, in any way, are related to, or involved in, the performance of this Contract. For the purposes of this Section, "Contractor Parties" means the Contractor's members, directors, officers, shareholders, partners, managers, principal officers, representatives, agents, servants, consultants, employees or any one of them or any other person or entity with whom the Contractor is in privity of oral or written contract and the Contractor intends for such other person or entity to Perform under the Contract in any capacity.

(b) The Contractor shall maintain, and shall require each of the Contractor Parties to maintain, accurate and complete Records. The Contractor shall make all of its and the Contractor Parties' Records available at all reasonable hours for audit and inspection by the State and its agents.

(c) The State shall make all requests for any audit or inspection in writing and shall provide the Contractor with at least twenty-four (24) hours' notice prior to the requested audit and inspection date. If the State suspects fraud or other abuse, or in the event of an emergency, the State is not obligated to provide any prior notice.

(d) The Contractor shall keep and preserve or cause to be kept and preserved all of its and Contractor Parties' Records until three (3) years after the latter of (i) final payment under this Agreement, or (ii) the expiration or earlier termination of this Agreement, as the same may be modified for any reason. The State may request an audit or inspection at any time during this period. If any Claim or audit is started before the expiration of this period, the Contractor shall retain or cause to be retained all Records until all Claims or audit findings have been resolved.

(e) The Contractor shall cooperate fully with the State and its agents in connection with an audit or inspection. Following any audit or inspection, the State may conduct and the Contractor shall cooperate with an exit conference.

(f) The Contractor shall incorporate this entire Section verbatim into any contract or other agreement that it enters into with any Contractor Party.

17.Campaign Contribution Restriction

For all State contracts, defined in Conn. Gen. Stat. §9-612(g)(1) as having a value in a calendar year of $50,000 or more, or a combination or series of such agreements or contracts having a value of $100,000 or more, the authorized signatory to this Agreement expressly acknowledges receipt of the State Elections Enforcement Commission's notice advising state contractors of state campaign contribution and solicitation prohibitions, and will inform its principals of the contents of the notice, as set forth in "Notice to Executive Branch State Contractors and Prospective State Contractors of Campaign Contribution and Solicitation Limitations," attached as Exhibit D.

18. Tangible Personal Property

(a) The Contractor on its behalf and on behalf of its Affiliates, as defined below, shall comply with the provisions of Conn. Gen. Stat. §12-411b, as follows:

(1) For the term of the Contract, the Contractor and its Affiliates shall collect and remit to the State of Connecticut, Department of Revenue Services, any Connecticut use tax due under the provisions of Chapter 219 of the Connecticut General Statutes for items of tangible personal property sold by the Contractor or by any of its Affiliates in the same manner as if the Contractor and such Affiliates were engaged in the business of selling tangible personal property for use in Connecticut and had sufficient nexus under the provisions of Chapter 219 to be required to collect Connecticut use tax;
(2) A customer's payment of a use tax to the Contractor or its Affiliates relieves the customer of liability for the use tax;
(3) The Contractor and its Affiliates shall remit all use taxes they collect from customers on or before the due date specified in the Contract, which may not be later than the last day of the month next succeeding the end of a calendar quarter or other tax collection period during which the tax was collected;
(4) The Contractor and its Affiliates are not liable for use tax billed by them but not paid to them by a customer; and
(5) Any Contractor or Affiliate who fails to remit use taxes collected on behalf of its customers by the due date specified in the Contract shall be subject to the interest and penalties provided for persons required to collect sales tax under chapter 219 of the general statutes.

(b) For purposes of this section of the Contract, the word "Affiliate" means any person, as defined in section 12-1 of the general statutes, that controls, is controlled by, or is under common control with another person. A person controls another person if the person owns, directly or indirectly, more than ten per cent of the voting securities of the other person. The word "voting security" means a security that confers upon the holder the right to vote for the election of members of the board of directors or similar governing body of the business, or that is convertible into, or entitles the holder to receive, upon its exercise, a security that confers such a right to vote. "Voting security" includes a general partnership interest.

(c) The Contractor represents and warrants that each of its Affiliates has vested in the Contractor plenary authority to so bind the Affiliates in any agreement with the State of Connecticut. The Contractor on its own behalf and on behalf of its Affiliates shall also provide, no later than 30 days after receiving a request by the State's contracting authority, such information as the State may require to ensure, in the State's sole determination, compliance with the provisions of Chapter 219 of the Connecticut General Statutes, including, but not limited to, §12-411b.

19. Bid Rigging and/or Fraud – Notice to Contractor

The Connecticut Department of Transportation is cooperating with the U.S. Department of Transportation and the Justice Department in their investigation into highway construction contract bid rigging and/or fraud.

A toll-free "HOT LINE" telephone number 800-424-9071 has been established to receive information from contractors, subcontractors, manufacturers, suppliers or anyone with knowledge of bid rigging and/or fraud, either past or current. The "HOT LINE" telephone number will be available during normal working hours (8:00 am – 5:00 pm EST). Information will be treated confidentially and anonymity respected.

20. Consulting Agreement Affidavit

The Contractor shall comply with Connecticut General Statutes Section 4a-81(a) and 4a-81(b), as revised. Pursuant to Public Act 11-229, after the initial submission of the form, if there is a change in the information contained in the form, a contractor shall submit the updated form, as applicable, either (i) not later than thirty (30) days after the effective date of such change or (ii) prior to execution of any new contract, whichever is earlier.

The Affidavit/Form may be submitted in written format or electronic format through the Department of Administrative Services (DAS) website.

EXHIBIT A

TITLE VI CONTRACTOR ASSURANCES

During the performance of this Contract, the contractor, for itself, its assignees and successors in interest (hereinafter referred to as the "Contractor") agrees as follows:

1. **Compliance with Regulations:** The Contractor shall comply with the regulations relative to nondiscrimination in federally assisted programs of the United States Department of Transportation (hereinafter, "USDOT"), Title 49, Code of Federal Regulations, Part 21, as they may be amended from time to time (hereinafter referred to as the "Regulations"), which are herein incorporated by reference and made a part of this contract.

2. **Nondiscrimination:** The Contractor, with regard to the work performed by it during the Contract, shall not discriminate on the grounds of race, color, national origin, sex, age, or disability in the selection and retention of subcontractors, including procurements of materials and leases of equipment. The Contractor shall not participate either directly or indirectly in the discrimination prohibited by Subsection 5 of the Regulations, including employment practices when the Contract covers a program set forth in Appendix B of the Regulations.

3. **Solicitations for Subcontracts, Including Procurements of Materials and Equipment:**
In all solicitations either by competitive bidding or negotiation made by the Contractor for work to be performed under a subcontract, including procurements of materials or leases of equipment, each potential subcontractor or supplier shall be notified by the Contractor of the Contractor's obligations under this contract and the Regulations relative to nondiscrimination on the grounds of race, color, national origin, sex, age, or disability.

4. **Information and Reports:** The Contractor shall provide all information and reports required by the Regulations or directives issued pursuant thereto and shall permit access to its books, records, accounts, other sources of information, and its facilities as may be determined by the Connecticut Department of Transportation (ConnDOT) or the Funding Agency (FHWA, FTA and FAA) to be pertinent to ascertain compliance with such Regulations, orders, and instructions. Where any information required of a Contractor is in the exclusive possession of another who fails or refuses to furnish this information, the Contractor shall so certify to ConnDOT or the Funding Agency, as appropriate, and shall set forth what efforts it has made to obtain the information.

5. **Sanctions for Noncompliance:** In the event of the Contractor's noncompliance with the nondiscrimination provisions of this Contract, the ConnDOT shall impose such sanctions as it or the Funding Agency may determine to be appropriate, including, but not limited to:

A. Withholding contract payments until the Contractor is in-compliance; and/or
B. Cancellation, termination, or suspension of the Contract, in whole or in part.

6. **Incorporation of Provisions:** The Contractor shall include the provisions of paragraphs 1 through 5 in every subcontract, including procurements of materials and leases of equipment, unless exempt by the Regulations or directives issued pursuant thereto. The Contractor shall take such action with respect to any subcontract or procurement as the ConnDOT or the Funding Agency may -direct as a means of enforcing such provisions including sanctions for noncompliance. Provided, however, that in the event a Contractor becomes involved in, or is threatened with, litigation with a subcontractor or supplier as a result of such direction, the Contractor may request the ConnDOT to enter into such litigation to protect the interests of the Funding Agency, and, in addition, the Contractor may request the United States to enter into such litigation to protect the interests of the United States

EXHIBIT B

CONTRACTOR WORKFORCE UTILIZATION / EQUAL EMPLOYMENT OPPORTUNITY

1. **Project Workforce Utilization Goals:**
   These goals are applicable to all the Contractor's construction work (whether or not it is Federal or Federally assisted or funded) performed in the covered area. If the contractor performs construction work in a geographical area located outside of the covered area, it shall apply the goals established for the geographical area where the work is actually performed.

   Whenever the Contractor, or any Subcontractor at any tier, subcontracts a portion of the work involving any construction trade, it shall physically include in each subcontract in excess of $10,000 the provisions of these specifications which contain the applicable goals for minority and female participation.

   The goals for minority and female utilization are expressed in percentage terms for the contractor's aggregate work-force in each trade on all construction work in the covered area, are referenced in the Appendix A below.

STATE FUNDED PROJECTS (only)
APPENDIX A
(Labor Market Goals)

LABOR MARKET AREA GOAL				***Minority*** **Female**
Bridgeport				**14%** **6.9%**
Ansonia	Beacon Falls	Bridgeport	Derby	
Easton	Fairfield	Milford	Monroe	
Oxford	Seymour	Shelton	Stratford	
Trumbull				
Danbury				**4%** **6.9%**
Bethel	Bridgewater	Brookfield	Danbury	
Kent	New Fairfield	New Milford	Newtown	
Redding	Ridgefield	Roxbury	Sherman	
Washington				
Danielson				**2%** **6.9%**
Brooklyn	Eastford	Hampton	Killingly	
Pomfret	Putnam	Scotland	Sterling	
Thompson	Voluntown	Union	Woodstock	
Hartford				**15%** **6.9%**
Andover	Ashford	Avon	Barkhamsted	

Belin	Bloomfield	Bolton	Bristol
Burlington	Canton	Chaplin	Colchester
Columbia	Coventry	Cromwell	Durham
East Granby	East Haddam	East Hampton	East Hartford
East Windsor	Ellington	Enfield	Farmington
Glastonbury	Granby	Haddam	Hartford
Harwinton	Hebron	Lebanon	Manchester
Mansfield	Marlborough	Middlefield	Middletown
Newington	Plainville	Plymouth	Portland
Rocky Hill	Simsbury	Somers	South Windsor
Southington	Stafford	Suffield	Tolland
Vernon	West Hartford	Wethersfield	Willington
Winchester	Windham	Windsor	Windsor Locks

Lower River 6.9%	**2%**

Chester	Deep River	Essex	Old Lyme
Westbrook			

New Haven 6.9%	**14%**

Bethany	Branford	Cheshire	Clinton
East Haven	Guilford	Hamden	Killingworth
Madison	Meriden	New Haven	North Branford
North Haven	Orange	Wallingford	West Haven
Woodbridge			

New London 6.9%	**8%**

Bozrah	Canterbury	East Lyme	Franklin
Griswold	Groton	Ledyard	Lisbon
Montville	New London	North Stonington	Norwich
Old Lyme	Old Saybrook	Plainfield	Preston
Salem	Sprague	Stonington	Waterford
Hopkinton	RI – Westerly Rhode Island		

Stamford 6.9%	**17%**

Darien	Greenwich	New Canaan	Norwalk
Stamford	Weston	Westport	Wilton

Torrington 6.9%	**2%**

Canaan	Colebrook	Cornwall	Goshen
Hartland	Kent	Litchfield	Morris
Norfolk	North Canaan	Salisbury	Sharon
Torrington	Warren		

Waterbury 6.9%			**10%**
Bethlehem	Middlebury	Naugatuck	Prospect
Southbury	Thomaston	Waterbury	Watertown
Wolcott	Woodbury		

EXHIBIT C

Health Insurance Portability and Accountability Act of 1996 ("HIPAA").

(a) If the Contactor is a Business Associate under the requirements of the Health Insurance Portability and Accountability Act of 1996 ("HIPAA"), the Contractor must comply with all terms and conditions of this Section of the Contract. If the Contractor is not a Business Associate under HIPAA, this Section of the Contract does not apply to the Contractor for this Contract.

(b) The Contractor is required to safeguard the use, publication and disclosure of information on all applicants for, and all clients who receive, services under the Contract in accordance with all applicable federal and state law regarding confidentiality, which includes but is not limited to HIPAA, more specifically with the Privacy and Security Rules at 45 C.F.R. Part 160 and Part 164, subparts A, C, and E; and

(c) The State of Connecticut Agency named on page 1 of this Contract (hereinafter the "Department") is a "covered entity" as that term is defined in 45 C.F.R. § 160.103; and

(d) The Contractor, on behalf of the Department, performs functions that involve the use or disclosure of "individually identifiable health information," as that term is defined in 45 C.F.R. § 160.103; and

(e) The Contractor is a "business associate" of the Department, as that term is defined in 45 C.F.R. § 160.103; and

(f) The Contractor and the Department agree to the following in order to secure compliance with the HIPAA, the requirements of Subtitle D of the Health Information Technology for Economic and Clinical Health Act (hereinafter the HITECH Act), (Pub. L. 111-5, sections 13400 to 13423), and more specifically with the Privacy and Security Rules at 45 C.F.R. Part 160 and Part 164, subparts A, C, and E.

(g) Definitions

(1) "Breach shall have the same meaning as the term is defined in section 13400 of the HITECH Act (42 U.S.C. §17921(1))

(2) "Business Associate" shall mean the Contractor.

(3) "Covered Entity" shall mean the Department of the State of Connecticut named on page 1 of this Contract.

(4) "Designated Record Set" shall have the same meaning as the term "designated record set" in 45 C.F.R. § 164.501.

(5) "Electronic Health Record" shall have the same meaning as the term is defined in section 13400 of the HITECH Act (42 U.S.C. §17921(5))

(6) "Individual" shall have the same meaning as the term "individual"' in 45 C.F.R. § 160.103 and shall include a person who qualifies as a personal representative as defined in 45 C.F.R. § 164.502(g).

(7) "Privacy Rule" shall mean the Standards for Privacy of Individually Identifiable Health Information at 45 C.F.R. part 160 and parts 164, subparts A and E.

(8) "Protected Health Information" or "PHI" shall have the same meaning as the term "protected health information" in 45 C.F.R. § 160.103, limited to information created or received by the Business Associate from or on behalf of the Covered Entity.

(9) "Required by Law"' shall have the same meaning as the term "required by law" in 45 C.F.R. § 164.103.

(10) "Secretary" shall mean the Secretary of the Department of Health and Human Services or his designee.

(11) "More stringent" shall have the same meaning as the term "more stringent" in 45 C.F.R. § 160.202.

(12) "This Section of the Contract" refers to the HIPAA Provisions stated herein, in their entirety.

(13) "Security Incident" shall have the same meaning as the term "security incident" in 45 C.F.R.§ 164.304.

(14) "Security Rule" shall mean the Security Standards for the Protection of Electronic Protected Health Information at 45 C.F.R. part 160 and parts 164, subpart A and C.

(15) "Unsecured protected health information" shall have the same meaning as the term as defined in section 13402(h)(1)(A) of HITECH. Act. (42 U.S.C. §17932(h)(1)(A)).

(h) Obligations and Activities of Business Associates.

(1) Business Associate agrees not to use or disclose PHI other than as permitted or required by this Section of the Contract or as Required by Law.

(2) Business Associate agrees to use appropriate safeguards to prevent use or disclosure of PHI other than as provided for in this Section of the Contract.

(3) Business Associate agrees to use administrative, physical and technical safeguards that reasonably and appropriately protect the confidentiality, integrity, and availability of electronic protected health information that it creates, receives, maintains, or transmits on behalf of the Covered Entity.

(4) Business Associate agrees to mitigate, to the extent practicable, any harmful effect that is known to the Business Associate of a use or disclosure of PHI by Business Associate in violation of this Section of the Contract.

(5) Business Associate agrees to report to Covered Entity any use or disclosure of PHI not provided for by this Section of the Contract or any security incident of which it becomes aware.

(6) Business Associate agrees to insure that any agent, including a subcontractor, to whom it provides PHI received from, or created or received by Business Associate, on behalf of the Covered Entity, agrees to the same restrictions and conditions that apply through this Section of the Contract to Business Associate with respect to such information.

(7) Business Associate agrees to provide access, at the request of the Covered Entity, and in the time and manner agreed to by the parties, to PHI in a Designated Record Set, to Covered Entity or, as directed by Covered Entity, to an Individual in order to meet the requirements under 45 C.F.R. § 164.524.

(8) Business Associate agrees to make any amendments to PHI in a Designated Record Set that the Covered Entity directs or agrees to pursuant to 45 C.F.R. § 164.526 at the request of the Covered Entity, and in the time and manner agreed to by the parties.

(9) Business Associate agrees to make internal practices, books, and records, including policies and procedures and PHI, relating to the use and disclosure of PHI received from, or created or received by, Business Associate on behalf of Covered Entity, available to Covered Entity or to the Secretary in a time and manner agreed to by the parties or designated by the Secretary, for purposes of the Secretary determining Covered Entity's compliance with the Privacy Rule.

(10) Business Associate agrees to document such disclosures of PHI and information related to such disclosures as would be required for Covered Entity to respond to a request by an Individual for an accounting of disclosures of PHI in accordance with 45 C.F.R. § 164.528 and section 13405 of the HITECH Act (42 U.S.C. § 17935) and any regulations promulgated thereunder.

(11) Business Associate agrees to provide to Covered Entity, in a time and manner agreed to by the parties, information collected in accordance with clause h. (10) of this Section of the Contract, to permit Covered Entity to respond to a request by an Individual for an accounting of disclosures of PHI in accordance with 45 C.F.R. § 164.528 and section 13405 of the HITECH Act (42 U.S.C. § 17935) and any regulations promulgated thereunder. Business Associate agrees at the Covered Entity's direction to provide an accounting of disclosures of PHI directly to an individual in accordance with 45 C.F.R. § 164.528 and section 13405 of the HITECH Act (42 U.S.C. § 17935) and any regulations promulgated thereunder.

(12) Business Associate agrees to comply with any state or federal law that is more stringent than the Privacy Rule.

(13) Business Associate agrees to comply with the requirements of the HITECH Act relating to privacy and security that are applicable to the Covered Entity and with the requirements of 45 C.F.R. sections 164.504(e), 164.308, 164.310, 164.312, and 164.316.

(14) In the event that an individual requests that the Business Associate (a) restrict disclosures of PHI; (b) provide an accounting of disclosures of the individual's PHI; or (c) provide a copy of the individual's PHI in an electronic health record, the Business Associate agrees to notify the covered entity, in writing, within two business days of the request.

(15) Business Associate agrees that it shall not, directly or indirectly, receive any remuneration in exchange for PHI of an individual without (1) the written approval of the covered entity, unless receipt of remuneration in exchange for PHI is expressly authorized by this Contract and (2) the valid authorization of the individual, except for the purposes provided under section 13405(d)(2) of the HITECH Act,(42 U.S.C. § 17935(d)(2)) and in any accompanying regulations

(16) Obligations in the Event of a Breach

A. The Business Associate agrees that, following the discovery of a breach of unsecured protected health information, it shall notify the Covered Entity of such breach in accordance with the requirements of section 13402 of HITECH (42 U.S.C. 17932(b) and the provisions of this Section of the Contract.
B. Such notification shall be provided by the Business Associate to the Covered Entity without unreasonable delay, and in no case later than 30 days after the breach is discovered by the Business Associate, except as otherwise instructed in writing by a law enforcement official pursuant to section 13402 (g) of HITECH (42 U.S.C. 17932(g)) . A breach is considered discovered as of the first day on which it is, or reasonably should have been, known to the Business Associate. The notification shall include the identification and last known address, phone number and email address of each individual (or the next of kin of the individual if the individual is deceased) whose unsecured protected health information has been, or is reasonably believed by the Business Associate to have been, accessed, acquired, or disclosed during such breach.
C. The Business Associate agrees to include in the notification to the Covered Entity at least the following information:
    1. A brief description of what happened, including the date of the breach and the date of the discovery of the breach, if known.

    2. A description of the types of unsecured protected health information that were involved in the breach (such as full name, Social Security number, date of birth, home address, account number, or disability code).

    3. The steps the Business Associate recommends that individuals take to protect themselves from potential harm resulting from the breach.

    4. A detailed description of what the Business Associate is doing to investigate the breach, to mitigate losses, and to protect against any further breaches.

    5. Whether a law enforcement official has advised either verbally or in writing the Business Associate that he or she has determined that notification or notice to

individuals or the posting required under section 13402 of the HITECH Act would impede a criminal investigation or cause damage to national security and; if so, include contact information for said official.

D. Business Associate agrees to provide appropriate staffing and have established procedures to ensure that individuals informed by the Covered Entity of a breach by the Business Associate have the opportunity to ask questions and contact the Business Associate for additional information regarding the breach. Such procedures shall include a toll-free telephone number, an e-mail address, a posting on its Web site and a postal address. Business Associate agrees to include in the notification of a breach by the Business Associate to the Covered Entity, a written description of the procedures that have been established to meet these requirements. Costs of such contact procedures will be borne by the Contractor.

E. Business Associate agrees that, in the event of a breach, it has the burden to demonstrate that it has complied with all notifications requirements set forth above, including evidence demonstrating the necessity of a delay in notification to the Covered Entity.

(i) Permitted Uses and Disclosure by Business Associate.

(1) General Use and Disclosure Provisions Except as otherwise limited in this Section of the Contract, Business Associate may use or disclose PHI to perform functions, activities, or services for, or on behalf of, Covered Entity as specified in this Contract, provided that such use or disclosure would not violate the Privacy Rule if done by Covered Entity or the minimum necessary policies and procedures of the Covered Entity.

(2) Specific Use and Disclosure Provisions

(A) Except as otherwise limited in this Section of the Contract, Business Associate may use PHI for the proper management and administration of Business Associate or to carry out the legal responsibilities of Business Associate.

(B) Except as otherwise limited in this Section of the Contract, Business Associate may disclose PHI for the proper management and administration of Business Associate, provided that disclosures are Required by Law, or Business Associate obtains reasonable assurances from the person to whom the information is disclosed that it will remain confidential and used or further disclosed only as Required by Law or for the purpose for which it was disclosed to the person, and the person notifies Business Associate of any instances of which it is aware in which the confidentiality of the information has been breached.

(C) Except as otherwise limited in this Section of the Contract, Business Associate may use PHI to provide Data Aggregation services to Covered Entity as permitted by 45 C.F.R. § 164.504(e)(2)(i)(B).

(j) Obligations of Covered Entity.

(1) Covered Entity shall notify Business Associate of any limitations in its notice of privacy practices of Covered Entity, in accordance with 45 C.F.R. § 164.520, or to the extent that such limitation may affect Business Associate's use or disclosure of PHI.

(2) Covered Entity shall notify Business Associate of any changes in, or revocation of, permission by Individual to use or disclose PHI, to the extent that such changes may affect Business Associate's use or disclosure of PHI.

(3) Covered Entity shall notify Business Associate of any restriction to the use or disclosure of PHI that Covered Entity has agreed to in accordance with 45 C.F.R. § 164.522, to the extent that such restriction may affect Business Associate's use or disclosure of PHI.

(k) Permissible Requests by Covered Entity. Covered Entity shall not request Business Associate to use or disclose PHI in any manner that would not be permissible under the Privacy Rule if done by the Covered Entity, except that Business Associate may use and disclose PHI for data aggregation, and management and administrative activities of Business Associate, as permitted under this Section of the Contract.

(l) Term and Termination.

(1) Term. The Term of this Section of the Contract shall be effective as of the date the Contract is effective and shall terminate when the information collected in accordance with clause h. (10) of this Section of the Contract is provided to the Covered Entity and all of the PHI provided by Covered Entity to Business Associate, or created or received by Business Associate on behalf of Covered Entity, is destroyed or returned to Covered Entity, or, if it is infeasible to return or destroy PHI, protections are extended to such information, in accordance with the termination provisions in this Section.

(2) Termination for Cause Upon Covered Entity's knowledge of a material breach by Business Associate, Covered Entity shall either:

(A) Provide an opportunity for Business Associate to cure the breach or end the violation and terminate the Contract if Business Associate does not cure the breach or end the violation within the time specified by the Covered Entity; or

(B) Immediately terminate the Contract if Business Associate has breached a material term of this Section of the Contract and cure is not possible; or

(C) If neither termination nor cure is feasible, Covered Entity shall report the violation to the Secretary.

(3) Effect of Termination

(A) Except as provided in (l)(2) of this Section of the Contract, upon termination of this Contract, for any reason, Business Associate shall return or destroy all PHI received from Covered Entity, or created or received by Business Associate on behalf of Covered Entity. Business Associate shall also provide the information collected in accordance with clause h. (10) of this Section of the Contract to the Covered Entity

within ten business days of the notice of termination. This provision shall apply to PHI that is in the possession of subcontractors or agents of Business Associate. Business Associate shall retain no copies of the PHI.

(B) In the event that Business Associate determines that returning or destroying the PHI is infeasible, Business Associate shall provide to Covered Entity notification of the conditions that make return or destruction infeasible. Upon documentation by Business Associate that return or destruction of PHI is infeasible, Business Associate shall extend the protections of this Section of the Contract to such PHI and limit further uses and disclosures of PHI to those purposes that make return or destruction infeasible, for as long as Business Associate maintains such PHI. Infeasibility of the return or destruction of PHI includes, but is not limited to, requirements under state or federal law that the Business Associate maintains or preserves the PHI or copies thereof.

(m) Miscellaneous Provisions.

(1) Regulatory References. A reference in this Section of the Contract to a section in the Privacy Rule means the section as in effect or as amended.

(2) Amendment. The Parties agree to take such action as in necessary to amend this Section of the Contract from time to time as is necessary for Covered Entity to comply with requirements of the Privacy Rule and the Health Insurance Portability and Accountability Act of 1996, Pub. L. No. 104-191.

(3) Survival. The respective rights and obligations of Business Associate shall survive the termination of this Contract.

(4) Effect on Contract. Except as specifically required to implement the purposes of this Section of the Contract, all other terms of the Contract shall remain in force and effect.

(5) Construction. This Section of the Contract shall be construed as broadly as necessary to implement and comply with the Privacy Standard. Any ambiguity in this Section of the Contract shall be resolved in favor of a meaning that complies, and is consistent with, the Privacy Standard.

(6) Disclaimer. Covered Entity makes no warranty or representation that compliance with this Section of the Contract will be adequate or satisfactory for Business Associate's own purposes. Covered Entity shall not be liable to Business Associate for any claim, civil or criminal penalty, loss or damage related to or arising from the unauthorized use or disclosure of PHI by Business Associate or any of its officers, directors, employees, contractors or agents, or any third party to whom Business Associate has disclosed PHI contrary to the provisions of this Contract or applicable law. Business Associate is solely responsible for all decisions made, and actions taken, by Business Associate regarding the safeguarding, use and disclosure of PHI within its possession, custody or control.

(7) Indemnification. The Business Associate shall indemnify and hold the Covered Entity harmless from and against any and all claims, liabilities, judgments, fines, assessments, penalties, awards and any statutory damages that may be imposed or assessed pursuant to HIPAA, as amended or the

HITECH Act, including, without limitation, attorney's fees, expert witness fees, costs of investigation, litigation or dispute resolution, and costs awarded thereunder, relating to or arising out of any violation by the Business Associate and its agents, including subcontractors, of any obligation of Business Associate and its agents, including subcontractors, under this section of the contract, under HIPAA, the HITECH Act, the Privacy Rule and the Security Rule.

Notice to Executive Branch State Contractors and Prospective State Contractors of Campaign Contribution and Solicitation Limitations

This notice is provided under the authority of Connecticut General Statutes §9-612(g)(2), as amended by P.A. 10-1, and is for the purpose of informing state contractors and prospective state contractors of the following law (italicized words are defined on the reverse side of this page).

CAMPAIGN CONTRIBUTION AND SOLICITATION LIMITATIONS

No *state contractor, prospective state contractor, principal of a state contractor or principal of a prospective state contractor*, with regard to a *state contract* or *state contract solicitation* with or from a state agency in the executive branch or a quasi-public agency or a holder, or principal of a holder of a valid prequalification certificate, shall make a contribution to (i) an exploratory committee or candidate committee established by a candidate for nomination or election to the office of Governor, Lieutenant Governor, Attorney General, State Comptroller, Secretary of the State or State Treasurer, (ii) a political committee authorized to make contributions or expenditures to or for the benefit of such candidates, or (iii) a party committee (which includes town committees).

In addition, no holder or principal of a holder of a valid prequalification certificate, shall make a contribution to (i) an exploratory committee or candidate committee established by a candidate for nomination or election to the office of State senator or State representative, (ii) a political committee authorized to make contributions or expenditures to or for the benefit of such candidates, or (iii) a party committee.

On and after January 1, 2011, no state contractor, prospective state contractor, principal of a state contractor or principal of a prospective state contractor, with regard to a state contract or state contract solicitation with or from a state agency in the executive branch or a quasi-public agency or a holder, or principal of a holder of a valid prequalification certificate, shall **knowingly** *solicit* contributions from the state contractor's or prospective state contractor's employees or from a *subcontractor* or *principals of the subcontractor* on behalf of (i) an exploratory committee or candidate committee established by a candidate for nomination or election to the office of Governor, Lieutenant Governor, Attorney General, State Comptroller, Secretary of the State or State Treasurer, (ii) a political committee authorized to make contributions or expenditures to or for the benefit of such candidates, or (iii) a party committee.

DUTY TO INFORM

State contractors and prospective state contractors are required to inform their principals of the above prohibitions, as applicable, and the possible penalties and other consequences of any violation thereof.

PENALTIES FOR VIOLATIONS

Contributions or solicitations of contributions made in violation of the above prohibitions may result in the following civil and criminal penalties:

Civil penalties—Up to $2,000 or twice the amount of the prohibited contribution, whichever is greater, against a principal or a contractor. Any state contractor or prospective state contractor which fails to make reasonable efforts to comply with the provisions requiring notice to its principals of these prohibitions and the possible consequences of their violations may also be subject to civil penalties of up to $2,000 or twice the amount of the prohibited contributions made by their principals.

Criminal penalties—Any knowing and willful violation of the prohibition is a Class D felony, which may subject the violator to imprisonment of not more than 5 years, or not more than $5,000 in fines, or both.

CONTRACT CONSEQUENCES

In the case of a state contractor, contributions made or solicited in violation of the above prohibitions may resulting the contract being voided.

In the case of a prospective state contractor, contributions made or solicited in violation of the above prohibitions shall result in the contract described in the state contract solicitation not being awarded to the prospective state contractor, unless the State Elections Enforcement Commission determines that mitigating circumstances exist concerning such violation.

The State shall not award any other state contract to anyone found in violation of the above prohibitions for a period of one year after the election for which such contribution is made or solicited, unless the State Elections Enforcement Commission determines that mitigating circumstances exist concerning such violation.
Additional information may be found on the website of the State Elections Enforcement Commission, www.ct.gov/seec. Click on the link to “Lobbyist/Contractor Limitations.”

DEFINITIONS

"State contractor" means a person, business entity or nonprofit organization that enters into a state contract. Such person, business entity or nonprofit organization shall be deemed to be a state contractor until December thirty-first of the year in which such contract terminates. "State contractor" does not include a municipality or any other political subdivision of the state, including any entities or associations duly created by the municipality or political subdivision exclusively amongst themselves to further any purpose authorized by statute or charter, or an employee in the executive or legislative branch of state government or a quasi-public agency, whether in the classified or unclassified service and full or part-time, and only in such person's capacity as a state or quasi-public agency employee.

"Prospective state contractor" means a person, business entity or nonprofit organization that (i) submits a response to a state contract solicitation by the state, a state agency or a quasi-public agency, or a proposal in response to a request for proposals by the state, a state agency or a quasi-public agency, until the contract has been entered into, or (ii) holds a valid prequalification certificate issued by the Commissioner of Administrative Services under section 4a-100. "Prospective state contractor" does not include a municipality or any other political subdivision of the state, including any entities or associations duly created by the municipality or political subdivision exclusively amongst themselves to further any purpose authorized by statute or charter, or an employee in the executive or legislative branch of state government or a quasi-public agency, whether in the classified or unclassified service and full or part-time, and only in such person's capacity as a state or quasi-public agency employee.

"Principal of a state contractor or prospective state contractor" means (i) any individual who is a member of the board of directors of, or has an ownership interest of five per cent or more in, a state contractor or prospective state contractor, which is a business entity, except for an individual who is a member of the board of directors of a nonprofit organization**,** (ii) an individual who is employed by a state contractor or prospective state contractor, which is a business entity, as president, treasurer or executive vice president, (iii) an individual who is the chief executive officer of a state contractor or prospective state contractor, which is not a business entity, or if a state contractor or prospective state contractor has no such officer, then the officer who duly possesses comparable powers and duties, (iv) an officer or an employee of any state contractor or prospective state contractor who has *managerial or discretionary responsibilities with respect to a state contract,* (v) the spouse or a *dependent child* who is eighteen years of age or older of an individual described in this subparagraph, or (vi) a political committee established or controlled by an individual described in this subparagraph or the business entity or nonprofit organization that is the state contractor or prospective state contractor.

"State contract" means an agreement or contract with the state or any state agency or any quasi-public agency, let through a procurement process or otherwise, having a value of fifty thousand dollars or more, or a combination or series of such agreements or contracts having a value of one hundred thousand dollars or more in a calendar year, for (i) the rendition of services, (ii) the furnishing of any goods, material, supplies, equipment or any items of any kind, (iii) the construction, alteration or repair of any public building or public work, (iv) the acquisition, sale or lease of any land or building, (v) a licensing arrangement, or (vi) a grant, loan or loan guarantee. "State contract" does not include any agreement or contract with the state, any state agency or any quasi-public agency that is exclusively federally funded, an education loan, a loan to an individual for other than commercial purposes or any agreement or contract between the state or any state agency and the United States Department of the Navy or the United States Department of Defense.

"State contract solicitation" means a request by a state agency or quasi-public agency, in whatever form issued, including, but not limited to, an invitation to bid, request for proposals, request for information or request for quotes, inviting bids, quotes or other types of submittals, through a competitive procurement process or another process authorized by law waiving competitive procurement.

"Managerial or discretionary responsibilities with respect to a state contract" means having direct, extensive and substantive responsibilities with respect to the negotiation of the state contract and not peripheral, clerical or ministerial responsibilities.

"Dependent child" means a child residing in an individual's household who may legally be claimed as a dependent on the federal income tax of such individual.

"Solicit" means (A) requesting that a contribution be made, (B) participating in any fund-raising activities for a candidate committee, exploratory committee, political committee or party committee, including, but not limited to, forwarding tickets to potential contributors, receiving contributions for transmission to any such committee or bundling contributions, (C) serving as chairperson, treasurer or deputy treasurer of any such committee, or (D) establishing a political committee for the sole purpose of soliciting or receiving contributions for any committee. Solicit does not include: (i) making a contribution that is otherwise permitted by Chapter 155 of the Connecticut General Statutes; (ii) informing any person of a position taken by a candidate for public office or a public official, (iii) notifying the person of any activities of, or contact information for, any candidate for public office; or (iv) serving as a member in any party committee or as an officer of such committee that is not otherwise prohibited in this section.

"Subcontractor" means any person, business entity or nonprofit organization that contracts to perform part or all of the obligations of a state contractor's state contract. Such person, business entity or nonprofit organization shall be deemed to be a subcontractor until December thirty first of the year in which the subcontract terminates. "Subcontractor" does not include (i) a municipality or any other political subdivision of the state, including any entities or associations duly created by the municipality or political subdivision exclusively amongst themselves to further any purpose authorized by statute or charter, or (ii) an employee in the executive or legislative branch of state government or a quasi-public agency, whether in the classified or unclassified service and full or part-time, and only in such person's capacity as a state or quasi-public agency employee.

"Principal of a subcontractor" means (i) any individual who is a member of the board of directors of, or has an ownership interest of five per cent or more in, a subcontractor, which is a business entity, except for an individual who is a member of the board of directors of a nonprofit organization, (ii) an individual who is employed by a subcontractor, which is a business entity, as president, treasurer or executive vice president, (iii) an individual who is the chief executive officer of a subcontractor, which is not a business entity, or if a subcontractor has no such officer, then the officer who duly possesses comparable powers and duties, (iv) an officer or an employee of any subcontractor who has managerial or discretionary responsibilities with respect to a subcontract with a state contractor, (v) the spouse or a dependent child who is eighteen years of age or older of an individual described in this subparagraph, or (vi) a political committee established or controlled by an individual described in this subparagraph or the business entity or nonprofit organization that is the subcontractor.

EXHIBIT E

(state wages will be inserted here)

Project: Rehabilitation Of SR 816 Over Housatonic River Bridge Number 00507

Minimum Rates and Classifications
for Heavy/Highway Construction

ID#: **H** 19480

Connecticut Department of Labor
Wage and Workplace Standards Division

By virtue of the authority vested in the Labor Commissioner under provisions of Section 31-53 of the General Statutes of Connecticut, as amended, the following are declared to be the prevailing rates and welfare payments and will apply only where the contract is advertised for bid within 20 days of the date on which the rates are established. Any contractor or subcontractor not obligated by agreement to pay to the welfare and pension fund shall pay this amount to each employee as part of his/her hourly wages.

Project Number:

Project Town: Newtown

FAP Number:

State Number: 96-193

Project: Rehabilitation Of SR 816 Over Housatonic River Bridge Number 00507

CLASSIFICATION	Hourly Rate	Benefits
01) Asbestos/Toxic Waste Removal Laborers: Asbestos removal and encapsulation (except its removal from mechanical systems which are not to be scrapped), toxic waste removers, blasters. **See Laborers Group 5 and 7**		
1) Boilermaker	33.79	34% + 8.96
1a) Bricklayer, Cement Masons, Cement Finishers, Plasterers, Stone Masons	32.50	27.06
2) Carpenters, Piledrivermen	31.00	22.50

As of: Thursday, July 10, 2014

Project: Rehabilitation Of SR 816 Over Housatonic River Bridge Number 00507

2a) Diver Tenders	31.00	22.50
3) Divers	39.46	22.50
4) Painters: (Bridge Construction) Brush, Roller, Blasting (Sand, Water, etc.), Spray	45.10	18.55
4a) Painters: Brush and Roller	31.02	18.55
4b) Painters: Spray Only	34.02	18.55
4c) Painters: Steel Only	33.02	18.55
4d) Painters: Blast and Spray	34.02	18.55

As of: Thursday, July 10, 2014

Project: Rehabilitation Of SR 816 Over Housatonic River Bridge Number 00507

4e) Painters: Tanks, Tower and Swing	33.02	18.55
5) Electrician (Trade License required: E-1,2 L-5,6 C-5,6 T-1,2 L-1,2 V-1,2,7,8,9)	37.27	23.37 + 3% of gross wage
6) Ironworkers: Ornamental, Reinforcing, Structural, and Precast Concrete Erection	34.47	29.74
7) Plumbers (Trade License required: (P-1,2,6,7,8,9 J-1,2,3,4 SP-1,2) and Pipefitters (Including HVAC Work) (Trade License required: S-1,2,3,4,5,6,7,8 B-1,2,3,4 D-1,2,3,4 G-1, G-2, G-8, G-9)	39.31	26.27
----LABORERS---- -		
8) Group 1: Laborer (Unskilled), Common or General, acetylene burner, concrete specialist	27.05	17.80
9) Group 2: Chain saw operators, fence and guard rail erectors, pneumatic tool operators, powdermen, air tool operator	27.30	17.80

As of: Thursday, July 10, 2014

Project: Rehabilitation Of SR 816 Over Housatonic River Bridge Number 00507

10) Group 3: Pipelayers	27.55	17.80
11) Group 4: Jackhammer/Pavement breaker (handheld); mason tenders (cement/concrete), catch basin builders, asphalt rakers, air track operators, block pavers and curb setters	27.55	17.80
12) Group 5: Toxic waste removal (non-mechanical systems)	29.05	17.80
13) Group 6: Blasters	28.80	17.80
Group 7: Asbestos Removal, non-mechanical systems (does not include leaded joint pipe)	28.05	17.80
Group 8: Traffic control signalmen	16.00	17.80

----LABORERS (TUNNEL CONSTRUCTION, FREE AIR). Shield Drive and Liner Plate Tunnels in Free Air.----

As of: Thursday, July 10, 2014

Project: Rehabilitation Of SR 816 Over Housatonic River Bridge Number 00507

13a) Miners, Motormen, Mucking Machine Operators, Nozzle Men, Grout Men, Shaft & Tunnel Steel & Rodmen, Shield & Erector, Arm Operator, Cable Tenders	31.28	17.80 + a
13b) Brakemen, Trackmen	30.37	17.80 + a
----CLEANING, CONCRETE AND CAULKING TUNNEL----		
14) Concrete Workers, Form Movers, and Strippers	30.37	17.80 + a
15) Form Erectors	30.68	17.80 + a
----ROCK SHAFT LINING, CONCRETE, LINING OF SAME AND TUNNEL IN FREE AIR:----		
16) Brakemen, Trackmen, Tunnel Laborers, Shaft Laborers	30.37	17.80 + a

Project: Rehabilitation Of SR 816 Over Housatonic River Bridge Number 00507

17) Laborers Topside, Cage Tenders, Bellman	30.26	17.80 + a
18) Miners	31.28	17.80 + a
----TUNNELS, CAISSON AND CYLINDER WORK IN COMPRESSED AIR: ----		
18a) Blaster	37.41	17.80 + a
19) Brakemen, Trackmen, Groutman, Laborers, Outside Lock Tender, Gauge Tenders	37.22	17.80 + a
20) Change House Attendants, Powder Watchmen, Top on Iron Bolts	35.35	17.80 + a
21) Mucking Machine Operator	37.97	17.80 + a

As of: Thursday, July 10, 2014

Project: Rehabilitation Of SR 816 Over Housatonic River Bridge Number 00507

----TRUCK DRIVERS----(*see note below)

Two axle trucks	28.33	19.14 + a
Three axle trucks; two axle ready mix	28.43	19.14 + a
Three axle ready mix	28.48	19.14 + a
Four axle trucks, heavy duty trailer (up to 40 tons)	28.53	19.14 + a
Four axle ready-mix	28.58	19.14 + a
Heavy duty trailer (40 tons and over)	28.78	19.14 + a

As of: Thursday, July 10, 2014

Project: Rehabilitation Of SR 816 Over Housatonic River Bridge Number 00507

Specialized earth moving equipment other than conventional type on-the road trucks and semi-trailer (including Euclids)	28.58	19.14 + a

----POWER EQUIPMENT OPERATORS----

Group 1: Crane handling or erecting structural steel or stone, hoisting engineer (2 drums or over), front end loader (7 cubic yards or over), Work Boat 26 ft. & Over. (Trade License Required)	36.80	22.30 + a
Group 2: Cranes (100 ton rate capacity and over); Excavator over 2 cubic yards; Piledriver ($3.00 premium when operator controls hammer); Bauer Drill/Caisson. (Trade License Required)	36.48	22.30 + a
Group 3: Excavator/Backhoe under 2 cubic yards; Cranes (under 100 ton rated capacity), Gradall; Master Mechanic; Hoisting Engineer (all types of equipment where a drum and cable are used to hoist or drag material regardless of motive power of operation), Rubber Tire Excavator (Drott-1085 or similar);Grader Operator; Bulldozer Fine Grade (slopes, shaping, laser or GPS, etc.). (Trade License Required)	35.74	22.30 + a
Group 4: Trenching Machines; Lighter Derrick; Concrete Finishing Machine; CMI Machine or Similar; Koehring Loader (Skooper)	35.35	22.30 + a
Group 5: Specialty Railroad Equipment; Asphalt Paver; Asphalt Spreader; Asphalt Reclaiming Machine; Line Grinder; Concrete Pumps; Drills with Self Contained Power Units; Boring Machine; Post Hole Digger; Auger; Pounder; Well Digger; Milling Machine (over 24" Mandrell)	34.76	22.30 + a

As of: Thursday, July 10, 2014

Project: Rehabilitation Of SR 816 Over Housatonic River Bridge Number 00507

Group 5 continued: Side Boom; Combination Hoe and Loader; Directional Driller.	34.76	22.30 + a
Group 6: Front End Loader (3 up to 7 cubic yards); Bulldozer (rough grade dozer).	34.45	22.30 + a
Group 7: Asphalt Roller; Concrete Saws and Cutters (ride on types); Vermeer Concrete Cutter; Stump Grinder; Scraper; Snooper; Skidder; Milling Machine (24" and Under Mandrel).	34.11	22.30 + a
Group 8: Mechanic, Grease Truck Operator, Hydroblaster, Barrier Mover, Power Stone Spreader; Welder; Work Boat under 26 ft.; Transfer Machine.	33.71	22.30 + a
Group 9: Front End Loader (under 3 cubic yards), Skid Steer Loader regardless of attachments (Bobcat or Similar); Fork Lift, Power Chipper; Landscape Equipment (including hydroseeder).	33.28	22.30 + a
Group 10: Vibratory Hammer, Ice Machine, Diesel and Air Hammer, etc.	31.24	22.30 + a
Group 11: Conveyor, Earth Roller; Power Pavement Breaker (whiphammer), Robot Demolition Equipment.	31.24	22.30 + a

As of: Thursday, July 10, 2014

Project: Rehabilitation Of SR 816 Over Housatonic River Bridge Number 00507

Group 12: Wellpoint Operator.	31.18	22.30 + a
Group 13: Compressor Battery Operator.	30.60	22.30 + a
Group 14: Elevator Operator; Tow Motor Operator (Solid Tire No Rough Terrain).	29.46	22.30 + a
Group 15: Generator Operator; Compressor Operator; Pump Operator; Welding Machine Operator; Heater Operator.	29.05	22.30 + a
Group 16: Maintenance Engineer/Oiler	28.40	22.30 + a
Group 17: Portable asphalt plant operator; portable crusher plant operator; portable concrete plant operator.	32.71	22.30 + a
Group 18: Power Safety Boat; Vacuum Truck; Zim Mixer; Sweeper; (minimum for any job requiring CDL license).	30.29	22.30 + a

As of: Thursday, July 10, 2014

Project: Rehabilitation Of SR 816 Over Housatonic River Bridge Number 00507

**NOTE: SEE BELOW

----LINE CONSTRUCTION----(Railroad Construction and Maintenance)----

20) Lineman, Cable Splicer, Technician	44.30	6.5%+17.70
21) Heavy Equipment Operator	39.87	6.5%+15.83
22) Equipment Operator, Tractor Trailer Driver, Material Men	37.66	6.5%+15.40
23) Driver Groundmen	24.37	6.5%+10.04
23a) Truck Driver	33.23	6.5%+14.28

As of: Thursday, July 10, 2014

Project: Rehabilitation Of SR 816 Over Housatonic River Bridge Number 00507

----LINE CONSTRUCTION----

24) Driver Groundmen	30.92	6.5% + 9.70
25) Groundmen	22.67	6.5% + 6.20
26) Heavy Equipment Operators	37.10	6.5% + 10.70
27) Linemen, Cable Splicers, Dynamite Men	41.22	6.5% + 12.20
28) Material Men, Tractor Trailer Drivers, Equipment Operators	35.04	6.5% + 10.45

As of: Thursday, July 10, 2014

Project: Rehabilitation Of SR 816 Over Housatonic River Bridge Number 00507

Welders: Rate for craft to which welding is incidental.

**Note: Hazardous waste removal work receives additional $1.25 per hour for truck drivers.*

***Note: Hazardous waste premium $3.00 per hour over classified rate*

ALL Cranes: When crane operator is operating equipment that requires a fully licensed crane operator to operate he receives an extra $1.00 premium in addition to the hourly wage rate and benefit contributions:

1) Crane handling or erecting structural steel or stone; hoisting engineer (2 drums or over)

2) Cranes (100 ton rate capacity and over) Bauer Drill/Caisson

3) Cranes (under 100 ton rated capacity)

Crane with 150 ft. boom (including jib) - $1.50 extra
Crane with 200 ft. boom (including jib) - $2.50 extra
Crane with 250 ft. boom (including jib) - $5.00 extra
Crane with 300 ft. boom (including jib) - $7.00 extra
Crane with 400 ft. boom (including jib) - $10.00 extra

All classifications that indicate a percentage of the fringe benefits must be calculated at the percentage rate times the "base hourly rate".

Apprentices duly registered under the Commissioner of Labor's regulations on "Work Training Standards for Apprenticeship and Training Programs" Section 31-51-d-1 to 12, are allowed to be paid the appropriate percentage of the prevailing journeymen hourly base and the full fringe benefit rate, providing the work site ratio shall not be less than one full-time journeyperson instructing and supervising the work of each apprentice in a specific trade.

~~Connecticut General Statute Section 31-55a: Annual Adjustments to wage rates by contractors doing state work ~~

The Prevailing wage rates applicable to this project are subject to annual adjustments each July 1st for the duration of the project.

Each contractor shall pay the annual adjusted prevailing wage rate that is in effect each July 1st, as posted by the Department of Labor.

It is the contractor's responsibility to obtain the annual adjusted prevailing wage rate increases directly from the Department of Labor's website.

The annual adjustments will be posted on the Department of Labor's Web page: www.ct.gov/dol.

The Department of Labor will continue to issue the initial prevailing wage rate schedule to the Contracting Agency for the project.

All subsequent annual adjustments will be posted on our Web Site for contractor access.

Contracting Agencies are under no obligation pursuant to State labor law to pay any increase due to the annual adjustment provision.

As of: Thursday, July 10, 2014

Project: Rehabilitation Of SR 816 Over Housatonic River Bridge Number 00507

Effective October 1, 2005 - Public Act 05-50: any person performing the work of any mechanic, laborer, or worker shall be paid prevailing wage

All Person who perform work ON SITE must be paid prevailing wage for the appropriate mechanic, laborer, or worker classification.

All certified payrolls must list the hours worked and wages paid to All Persons who perform work ON SITE regardless of their ownership i.e.: (Owners, Corporate Officers, LLC Members, Independent Contractors, et. al)

Reporting and payment of wages is required regardless of any contractual relationship alleged to exist between the contractor and such person.

~~Unlisted classifications needed for work not included within the scope of the classifications listed may be added after award only as provided in the labor standards contract clause (29 CFR 5.5 (a) (1) (ii)).

Please direct any questions which you may have pertaining to classification of work and payment of prevailing wages to the Wage and Workplace Standards Division, telephone (860)263-6790.

As of: Thursday, July 10, 2014

Minimum Rates and Classifications for Heavy/Highway Construction

ID#: **H** 19481

Connecticut Department of Labor
Wage and Workplace Standards Division

By virtue of the authority vested in the Labor Commissioner under provisions of Section 31-53 of the General Statutes of Connecticut, as amended, the following are declared to be the prevailing rates and welfare payments and will apply only where the contract is advertised for bid within 20 days of the date on which the rates are established. Any contractor or subcontractor not obligated by agreement to pay to the welfare and pension fund shall pay this amount to each employee as part of his/her hourly wages.

Project Number:

Project Town: Southbury

FAP Number:

State Number: 96-193

Project: Rehabilitation Of SR 816 Over Housatonic River Bridge Number 00507

CLASSIFICATION	Hourly Rate	Benefits
01) Asbestos/Toxic Waste Removal Laborers: Asbestos removal and encapsulation (except its removal from mechanical systems which are not to be scrapped), toxic waste removers, blasters. **See Laborers Group 5 and 7**		
1) Boilermaker	33.79	34% + 8.96
1a) Bricklayer, Cement Masons, Cement Finishers, Plasterers, Stone Masons	32.50	27.06
2) Carpenters, Piledrivermen	31.00	22.50

As of: Thursday, July 10, 2014

Project: Rehabilitation Of SR 816 Over Housatonic River Bridge Number 00507

2a) Diver Tenders	31.00	22.50
3) Divers	39.46	22.50
4) Painters: (Bridge Construction) Brush, Roller, Blasting (Sand, Water, etc.), Spray	45.10	18.55
4a) Painters: Brush and Roller	31.02	18.55
4b) Painters: Spray Only	34.02	18.55
4c) Painters: Steel Only	33.02	18.55
4d) Painters: Blast and Spray	34.02	18.55

As of: Thursday, July 10, 2014

Project: Rehabilitation Of SR 816 Over Housatonic River Bridge Number 00507

4e) Painters: Tanks, Tower and Swing	33.02	18.55
5) Electrician (Trade License required: E-1,2 L-5,6 C-5,6 T-1,2 L-1,2 V-1,2,7,8,9)	37.27	23.37 + 3% of gross wage
6) Ironworkers: Ornamental, Reinforcing, Structural, and Precast Concrete Erection	34.47	29.74
7) Plumbers (Trade License required: (P-1,2,6,7,8,9 J-1,2,3,4 SP-1,2) and Pipefitters (Including HVAC Work) (Trade License required: S-1,2,3,4,5,6,7,8 B-1,2,3,4 D-1,2,3,4 G-1, G-2, G-8, G-9)	39.31	26.27
----LABORERS---- -		
8) Group 1: Laborer (Unskilled), Common or General, acetylene burner, concrete specialist	27.05	17.80
9) Group 2: Chain saw operators, fence and guard rail erectors, pneumatic tool operators, powdermen, air tool operator	27.30	17.80

As of: Thursday, July 10, 2014

Project: Rehabilitation Of SR 816 Over Housatonic River Bridge Number 00507

10) Group 3: Pipelayers	27.55	17.80
11) Group 4: Jackhammer/Pavement breaker (handheld); mason tenders (cement/concrete), catch basin builders, asphalt rakers, air track operators, block pavers and curb setters	27.55	17.80
12) Group 5: Toxic waste removal (non-mechanical systems)	29.05	17.80
13) Group 6: Blasters	28.80	17.80
Group 7: Asbestos Removal, non-mechanical systems (does not include leaded joint pipe)	28.05	17.80
Group 8: Traffic control signalmen	16.00	17.80

----LABORERS (TUNNEL CONSTRUCTION, FREE AIR). Shield Drive and Liner Plate Tunnels in Free Air.----

As of: Thursday, July 10, 2014

Project: Rehabilitation Of SR 816 Over Housatonic River Bridge Number 00507

13a) Miners, Motormen, Mucking Machine Operators, Nozzle Men, Grout Men, Shaft & Tunnel Steel & Rodmen, Shield & Erector, Arm Operator, Cable Tenders	31.28	17.80 + a
13b) Brakemen, Trackmen	30.37	17.80 + a
----CLEANING, CONCRETE AND CAULKING TUNNEL----		
14) Concrete Workers, Form Movers, and Strippers	30.37	17.80 + a
15) Form Erectors	30.68	17.80 + a
----ROCK SHAFT LINING, CONCRETE, LINING OF SAME AND TUNNEL IN FREE AIR:----		
16) Brakemen, Trackmen, Tunnel Laborers, Shaft Laborers	30.37	17.80 + a

Project: Rehabilitation Of SR 816 Over Housatonic River Bridge Number 00507

17) Laborers Topside, Cage Tenders, Bellman	30.26	17.80 + a
18) Miners	31.28	17.80 + a
----TUNNELS, CAISSON AND CYLINDER WORK IN COMPRESSED AIR: ----		
18a) Blaster	37.41	17.80 + a
19) Brakemen, Trackmen, Groutman, Laborers, Outside Lock Tender, Gauge Tenders	37.22	17.80 + a
20) Change House Attendants, Powder Watchmen, Top on Iron Bolts	35.35	17.80 + a
21) Mucking Machine Operator	37.97	17.80 + a

As of: Thursday, July 10, 2014

Project: Rehabilitation Of SR 816 Over Housatonic River Bridge Number 00507

----TRUCK DRIVERS----(*see note below)

Two axle trucks	28.33	19.14 + a
Three axle trucks; two axle ready mix	28.43	19.14 + a
Three axle ready mix	28.48	19.14 + a
Four axle trucks, heavy duty trailer (up to 40 tons)	28.53	19.14 + a
Four axle ready-mix	28.58	19.14 + a
Heavy duty trailer (40 tons and over)	28.78	19.14 + a

As of: Thursday, July 10, 2014

Project: Rehabilitation Of SR 816 Over Housatonic River Bridge Number 00507

Specialized earth moving equipment other than conventional type on-the road trucks and semi-trailer (including Euclids)	28.58	19.14 + a

----POWER EQUIPMENT OPERATORS----

Group 1: Crane handling or erecting structural steel or stone, hoisting engineer (2 drums or over), front end loader (7 cubic yards or over), Work Boat 26 ft. & Over. (Trade License Required)	36.80	22.30 + a
Group 2: Cranes (100 ton rate capacity and over); Excavator over 2 cubic yards; Piledriver ($3.00 premium when operator controls hammer); Bauer Drill/Caisson. (Trade License Required)	36.48	22.30 + a
Group 3: Excavator/Backhoe under 2 cubic yards; Cranes (under 100 ton rated capacity), Gradall; Master Mechanic; Hoisting Engineer (all types of equipment where a drum and cable are used to hoist or drag material regardless of motive power of operation), Rubber Tire Excavator (Drott-1085 or similar);Grader Operator; Bulldozer Fine Grade (slopes, shaping, laser or GPS, etc.). (Trade License Required)	35.74	22.30 + a
Group 4: Trenching Machines; Lighter Derrick; Concrete Finishing Machine; CMI Machine or Similar; Koehring Loader (Skooper)	35.35	22.30 + a
Group 5: Specialty Railroad Equipment; Asphalt Paver; Asphalt Spreader; Asphalt Reclaiming Machine; Line Grinder; Concrete Pumps; Drills with Self Contained Power Units; Boring Machine; Post Hole Digger; Auger; Pounder; Well Digger; Milling Machine (over 24" Mandrell)	34.76	22.30 + a

As of: Thursday, July 10, 2014

Project: Rehabilitation Of SR 816 Over Housatonic River Bridge Number 00507

Group 5 continued: Side Boom; Combination Hoe and Loader; Directional Driller.	34.76	22.30 + a
Group 6: Front End Loader (3 up to 7 cubic yards); Bulldozer (rough grade dozer).	34.45	22.30 + a
Group 7: Asphalt Roller; Concrete Saws and Cutters (ride on types); Vermeer Concrete Cutter; Stump Grinder; Scraper; Snooper; Skidder; Milling Machine (24" and Under Mandrel).	34.11	22.30 + a
Group 8: Mechanic, Grease Truck Operator, Hydroblaster, Barrier Mover, Power Stone Spreader; Welder; Work Boat under 26 ft.; Transfer Machine.	33.71	22.30 + a
Group 9: Front End Loader (under 3 cubic yards), Skid Steer Loader regardless of attachments (Bobcat or Similar); Fork Lift, Power Chipper; Landscape Equipment (including hydroseeder).	33.28	22.30 + a
Group 10: Vibratory Hammer, Ice Machine, Diesel and Air Hammer, etc.	31.24	22.30 + a
Group 11: Conveyor, Earth Roller; Power Pavement Breaker (whiphammer), Robot Demolition Equipment.	31.24	22.30 + a

As of: Thursday, July 10, 2014

Project: Rehabilitation Of SR 816 Over Housatonic River Bridge Number 00507

Group 12: Wellpoint Operator.	31.18	22.30 + a
Group 13: Compressor Battery Operator.	30.60	22.30 + a
Group 14: Elevator Operator; Tow Motor Operator (Solid Tire No Rough Terrain).	29.46	22.30 + a
Group 15: Generator Operator; Compressor Operator; Pump Operator; Welding Machine Operator; Heater Operator.	29.05	22.30 + a
Group 16: Maintenance Engineer/Oiler	28.40	22.30 + a
Group 17: Portable asphalt plant operator; portable crusher plant operator; portable concrete plant operator.	32.71	22.30 + a
Group 18: Power Safety Boat; Vacuum Truck; Zim Mixer; Sweeper; (minimum for any job requiring CDL license).	30.29	22.30 + a

As of: Thursday, July 10, 2014

Project: Rehabilitation Of SR 816 Over Housatonic River Bridge Number 00507

**NOTE: SEE BELOW

----LINE CONSTRUCTION----(Railroad Construction and Maintenance)----

20) Lineman, Cable Splicer, Technician	44.30	6.5%+17.70
21) Heavy Equipment Operator	39.87	6.5%+15.83
22) Equipment Operator, Tractor Trailer Driver, Material Men	37.66	6.5%+15.40
23) Driver Groundmen	24.37	6.5%+10.04
23a) Truck Driver	33.23	6.5%+14.28

As of: Thursday, July 10, 2014

Project: Rehabilitation Of SR 816 Over Housatonic River Bridge Number 00507

----LINE CONSTRUCTION----

24) Driver Groundmen	30.92	6.5% + 9.70
25) Groundmen	22.67	6.5% + 6.20
26) Heavy Equipment Operators	37.10	6.5% + 10.70
27) Linemen, Cable Splicers, Dynamite Men	41.22	6.5% + 12.20
28) Material Men, Tractor Trailer Drivers, Equipment Operators	35.04	6.5% + 10.45

As of: Thursday, July 10, 2014

Project: Rehabilitation Of SR 816 Over Housatonic River Bridge Number 00507

Welders: Rate for craft to which welding is incidental.

**Note: Hazardous waste removal work receives additional $1.25 per hour for truck drivers.*

***Note: Hazardous waste premium $3.00 per hour over classified rate*

ALL Cranes: When crane operator is operating equipment that requires a fully licensed crane operator to operate he receives an extra $1.00 premium in addition to the hourly wage rate and benefit contributions:

1) Crane handling or erecting structural steel or stone; hoisting engineer (2 drums or over)

2) Cranes (100 ton rate capacity and over) Bauer Drill/Caisson

3) Cranes (under 100 ton rated capacity)

Crane with 150 ft. boom (including jib) - $1.50 extra
Crane with 200 ft. boom (including jib) - $2.50 extra
Crane with 250 ft. boom (including jib) - $5.00 extra
Crane with 300 ft. boom (including jib) - $7.00 extra
Crane with 400 ft. boom (including jib) - $10.00 extra

All classifications that indicate a percentage of the fringe benefits must be calculated at the percentage rate times the "base hourly rate".

Apprentices duly registered under the Commissioner of Labor's regulations on "Work Training Standards for Apprenticeship and Training Programs" Section 31-51-d-1 to 12, are allowed to be paid the appropriate percentage of the prevailing journeymen hourly base and the full fringe benefit rate, providing the work site ratio shall not be less than one full-time journeyperson instructing and supervising the work of each apprentice in a specific trade.

~~Connecticut General Statute Section 31-55a: Annual Adjustments to wage rates by contractors doing state work ~~

The Prevailing wage rates applicable to this project are subject to annual adjustments each July 1st for the duration of the project.

Each contractor shall pay the annual adjusted prevailing wage rate that is in effect each July 1st, as posted by the Department of Labor.

It is the contractor's responsibility to obtain the annual adjusted prevailing wage rate increases directly from the Department of Labor's website.

The annual adjustments will be posted on the Department of Labor's Web page: www.ct.gov/dol.

The Department of Labor will continue to issue the initial prevailing wage rate schedule to the Contracting Agency for the project.

All subsequent annual adjustments will be posted on our Web Site for contractor access.

Contracting Agencies are under no obligation pursuant to State labor law to pay any increase due to the annual adjustment provision.

As of: Thursday, July 10, 2014

Project: Rehabilitation Of SR 816 Over Housatonic River Bridge Number 00507

Effective October 1, 2005 - Public Act 05-50: any person performing the work of any mechanic, laborer, or worker shall be paid prevailing wage

All Person who perform work ON SITE must be paid prevailing wage for the appropriate mechanic, laborer, or worker classification.

All certified payrolls must list the hours worked and wages paid to All Persons who perform work ON SITE regardless of their ownership i.e.: (Owners, Corporate Officers, LLC Members, Independent Contractors, et. al)

Reporting and payment of wages is required regardless of any contractual relationship alleged to exist between the contractor and such person.

~~Unlisted classifications needed for work not included within the scope of the classifications listed may be added after award only as provided in the labor standards contract clause (29 CFR 5.5 (a) (1) (ii)).

Please direct any questions which you may have pertaining to classification of work and payment of prevailing wages to the Wage and Workplace Standards Division, telephone (860)263-6790.

As of: Thursday, July 10, 2014

Connecticut Department of Labor
Wage and Workplace Standards Division
FOOTNOTES

Please Note: If the "Benefits" listed on the schedule for the following occupations includes a letter(s) (+ a or + a+b for instance), refer to the information below.

Benefits to be paid at the appropriate prevailing wage rate for the listed occupation.

If the "Benefits" section for the occupation lists only a dollar amount, disregard the information below.

Bricklayers, Cement Masons, Cement Finishers, Concrete Finishers, Stone Masons
(Building Construction) and
(Residential- Hartford, Middlesex, New Haven, New London and Tolland Counties)

a. Paid Holiday: Employees shall receive 4 hours for Christmas Eve holiday provided the employee works the regularly scheduled day before and after the holiday. Employers may schedule work on Christmas Eve and employees shall receive pay for actual hours worked in addition to holiday pay.

Elevator Constructors: Mechanics

a. Paid Holidays: New Year's Day, Memorial Day, Independence Day, Labor Day, Veterans' Day, Thanksgiving Day, Christmas Day, plus the Friday after Thanksgiving.

b. Vacation: Employer contributes 8% of basic hourly rate for 5 years or more of service or 6% of basic hourly rate for 6 months to 5 years of service as vacation pay credit.

Glaziers

a. Paid Holidays: Labor Day and Christmas Day.

Power Equipment Operators
(Heavy and Highway Construction & Building Construction)

a. Paid Holidays: New Year's Day, Good Friday, Memorial day, Independence Day, Labor Day, Thanksgiving Day and Christmas Day, provided the employee works 3 days during the week in which the holiday falls, if scheduled, and if scheduled, the working day before and the working day after the holiday. Holidays falling on Saturday may be observed on Saturday, or if the employer so elects, on the preceding Friday.

Ironworkers

a. Paid Holiday: Labor Day provided employee has been on the payroll for the 5 consecutive work days prior to Labor Day.

Laborers (Tunnel Construction)

a. Paid Holidays: New Year's Day, Memorial Day, Independence Day, Labor Day, Thanksgiving Day and Christmas Day. No employee shall be eligible for holiday pay when he fails, without cause, to work the regular work day preceding the holiday or the regular work day following the holiday.

Roofers

a. Paid Holidays: July 4th, Labor Day, and Christmas Day provided the employee is employed 15 days prior to the holiday.

Sprinkler Fitters

a. Paid Holidays: Memorial Day, July 4th, Labor Day, Thanksgiving Day and Christmas Day, provided the employee has been in the employment of a contractor 20 working days prior to any such paid holiday.

Truck Drivers

(Heavy and Highway Construction & Building Construction)

a. Paid Holidays: New Year's Day, Memorial Day, Independence Day, Labor Day, Thanksgiving Day, Christmas day, and Good Friday, provided the employee has at least 31 calendar days of service and works the last scheduled day before and the first scheduled day after the holiday, unless excused.

Information Bulletin
Occupational Classifications

The Connecticut Department of Labor has the responsibility to properly determine "job classification" on prevailing wage projects covered under C.G.S. Section 31-53.

Note: This information is intended to provide a sample of some occupational classifications for guidance purposes only. It is not an all-inclusive list of each occupation's duties. This list is being provided only to highlight some areas where a contractor may be unclear regarding the proper classification.

Below are additional clarifications of specific job duties performed for certain classifications:

- **ASBESTOS WORKERS**

  Applies all insulating materials, protective coverings, coatings and finishes to all types of mechanical systems.

- **ASBESTOS INSULATOR**

  Handle, install apply, fabricate, distribute, prepare, alter, repair, dismantle, heat and frost insulation, including penetration and fire stopping work on all penetration fire stop systems.

- **BOILERMAKERS**

  Erects hydro plants, incomplete vessels, steel stacks, storage tanks for water, fuel, etc. Builds incomplete boilers, repairs heat exchanges and steam generators.

- **BRICKLAYERS, CEMENT MASONS, CEMENT FINISHERS, MARBLE MASONS, PLASTERERS, STONE MASONS, PLASTERERS. STONE MASONS, TERRAZZO WORKERS, TILE SETTERS**

  Lays building materials such as brick, structural tile and concrete cinder, glass, gypsum, terra cotta block. Cuts, tools and sets marble, sets stone, finishes concrete, applies decorative steel, aluminum and plastic tile, applies cements, sand, pigment and marble chips to floors, stairways, etc.

- **CARPENTERS, MILLWRIGHTS. PILEDRIVERMEN. LATHERS. RESILEINT FLOOR LAYERS, DOCK BUILDERS, DIKERS, DIVER TENDERS**

  Constructs, erects, installs and repairs structures and fixtures of wood, plywood and wallboard. Installs, assembles, dismantles, moves industrial machinery. Drives piling into ground to provide foundations for structures such as buildings and bridges, retaining walls for earth embankments, such as cofferdams. Fastens wooden, metal or rockboard lath to walls, ceilings and partitions of buildings, acoustical tile layer, concrete form builder. Applies firestopping materials on fire resistive joint systems only. Installation of curtain/window walls only where attached to wood or metal studs. Installation of insulated material of all types whether blown, nailed or attached in other ways to walls, ceilings and floors of buildings. Assembly and installation of modular furniture/furniture systems. Free-standing furniture is not covered. This includes free standing: student chairs, study top desks, book box desks, computer furniture, dictionary stand, atlas stand, wood shelving, two-position information access station, file cabinets, storage cabinets, tables, etc.

- **CLEANING LABORER**

  The clean up of any construction debris and the general cleaning, including sweeping, wash down, mopping, wiping of the construction facility, washing, polishing, dusting, etc., prior to the issuance of a certificate of occupancy falls under the *Labor classification.*

- **DELIVERY PERSONNEL**

  If delivery of supplies/building materials is to one common point and stockpiled there, prevailing wages are not required. If the delivery personnel are involved in the distribution of the material to multiple locations within the construction site then they would have to be paid prevailing wages for the type of work performed: laborer, equipment operator, electrician, ironworker, plumber, etc.

  An example of this would be where delivery of drywall is made to a building and the delivery personnel distribute the drywall from one "stockpile" location to further sub-locations on each floor. Distribution of material around a construction site is the job of a laborer/tradesman and not a delivery personnel.

- **ELECTRICIANS**

  Install, erect, maintenance, alteration or repair of any wire, cable, conduit, etc., which generates, transforms, transmits or uses electrical energy for light, heat, power or other purposes, including the Installation or maintenance of telecommunication, LAN wiring or computer equipment, and low voltage wiring. ***License required per Connecticut General Statutes: E-1,2 L-5,6 C-5,6 T-1,2 L-1,2 V-1,2,7,8,9.**

- **ELEVATOR CONSTRUCTORS**

  Install, erect, maintenance and repair of all types of elevators, escalators, dumb waiters and moving walks. ***License required by Connecticut General Statutes: R-1,2,5,6.**

- **FORK LIFT OPERATOR**

  Laborers Group 4) Mason Tenders - operates forklift solely to assist a mason to a maximum height of nine (9) feet only.

  Power Equipment Operator Group 9 - operates forklift to assist any trade, and to assist a mason to a height over nine (9) feet.

- **GLAZIERS**

  Glazing wood and metal sash, doors, partitions, and 2 story aluminum storefronts. Installs glass windows, skylights, store fronts and display cases or surfaces such as building fronts, interior walls, ceilings and table tops and metal store fronts. Installation of aluminum window walls and curtain walls is the "joint" work of glaziers and ironworkers which requires either a blended rate or equal composite workforce.

- **IRONWORKERS**

  Erection, installation and placement of structural steel, precast concrete, miscellaneous iron, ornamental iron, metal curtain wall, rigging and reinforcing steel. Handling, sorting, and installation of reinforcing steel (rebar). Metal bridge rail (traffic), metal bridge handrail, and decorative security fence installation. Installation of aluminum window walls and curtain walls is the "joint" work of glaziers and ironworkers which requires either a blended rate or equal composite workforce. Insulated metal and insulated composite panels are still installed by the Ironworker.

- **INSULATOR**

  Installing fire stopping systems/materials for "Penetration Firestop Systems": transit to cables, electrical conduits, insulated pipes, sprinkler pipe penetrations, ductwork behind radiation, electrical cable trays, fire rated pipe penetrations, natural polypropylene, HVAC ducts, plumbing bare metal, telephone and communication wires, and boiler room ceilings. Past practice using the applicable licensed trades, Plumber, Sheet Metal, Sprinkler Fitter, and Electrician, is not inconsistent with the Insulator classification and would be permitted.

- **LABORERS**

  Acetylene burners, asphalt rakers, chain saw operators, concrete and power buggy operator, concrete saw operator, fence and guard rail erector (except metal bridge rail (traffic), metal bridge handrail, and decorative security fence installation.), hand operated concrete vibrator operator, mason tenders, pipelayers (installation of storm drainage or sewage lines on the street only), pneumatic drill operator, pneumatic gas and electric drill operator, powermen and wagon drill operator, air track operator, block paver, curb setters, blasters, concrete spreaders.

- **PAINTERS**

  Maintenance, preparation, cleaning, blasting (water and sand, etc.), painting or application of any protective coatings of every description on all bridges and appurtenances of highways, roadways, and railroads. Painting, decorating, hardwood finishing, paper hanging, sign writing, scenic art work and drywall hhg for any and all types of building and residential work.

- **LEAD PAINT REMOVAL**

  Painter's Rate
  1. Removal of lead paint from bridges.
  2. Removal of lead paint as preparation of any surface to be repainted.
  3. Where removal is on a Demolition project prior to reconstruction.

  Laborer's Rate
  1. Removal of lead paint from any surface NOT to be repainted.
  2. Where removal is on a *TOTAL* Demolition project only.

- **PLUMBERS AND PIPEFITTERS**

  Installation, repair, replacement, alteration or maintenance of all plumbing, heating, cooling and piping. ***License required per Connecticut General Statutes: P-1,2,6,7,8,9 J-1,2,3,4 SP-1,2 S-1,2,3,4,5,6,7,8 B-1,2,3,4 D-1,2,3,4.***

- **POWER EQUIPMENT OPERATORS**

  Operates several types of power construction equipment such as compressors, pumps, hoists, derricks, cranes, shovels, tractors, scrapers or motor graders, etc. Repairs and maintains equipment. ***License required, crane operators only, per Connecticut General Statutes.**

- **ROOFERS**

  Covers roofs with composition shingles or sheets, wood shingles, slate or asphalt and gravel to waterproof roofs, including preparation of surface. (tear-off and/or removal of any type of roofing and/or clean-up of any and all areas where a roof is to be relaid)

- **SHEETMETAL WORKERS**

  Fabricate, assembles, installs and repairs sheetmetal products and equipment in such areas as ventilation, air-conditioning, warm air heating, restaurant equipment, architectural sheet metal work, sheetmetal roofing, and aluminum gutters. Fabrication, handling, assembling, erecting, altering, repairing, etc. of coated metal material panels and composite metal material panels when used on building exteriors and interiors as soffits, facia, louvers, partitions, wall panel siding, canopies, cornice, column covers, awnings, beam covers, cladding, sun shades, lighting troughs, spires, ornamental roofing, metal ceilings, mansards, copings, ornamental and ventilation hoods, vertical and horizontal siding panels, trim, etc. The sheet metal classification also applies to the vast variety of coated metal material panels and composite metal material panels that have evolved over the years as an alternative to conventional ferrous and non-ferrous metals like steel, iron, tin, copper, brass, bronze, aluminum, etc. Insulated metal and insulated composite panels are still installed by the Iron Worker. Fabrication, handling, assembling, erecting, altering, repairing, etc. of architectural metal roof, standing seam roof, composite metal roof, metal and composite bathroom/toilet partitions, aluminum gutters, metal and composite lockers and shelving, kitchen equipment, and walk-in coolers.

- **SPRINKLER FITTERS**

  Installation, alteration, maintenance and repair of fire protection sprinkler systems. ***License required per Connecticut General Statutes: F-1,2,3,4.**

- **TILE MARBLE AND TERRAZZO FINISHERS**

  Assists and tends the tile setter, marble mason and terrazzo worker in the performance of their duties.

- **TRUCK DRIVERS**

Definitions:

1) "Site of the work" (29 Code of Federal Regulations (CFR) 5.2(l)(b) is the physical place or places where the building or work called for in the contract will remain and any other site where a significant portion of the building or work is constructed, provided that such site is established specifically for the performance of the contact or project;

(a) Except as provided in paragraph (l) (3) of this section, job headquarters, tool yards, batch plants, borrow pits, etc. are part of the "site of the work"; provided they are dedicated exclusively, or nearly so, to the performance of the contract or project, and provided they are adjacent to "the site of work" as defined in paragraph (e)(1) of this section;

(b) Not included in the "site of the work" are permanent home offices, branch plant establishments, fabrication plants, tool yards etc, of a contractor or subcontractor whose location and continuance in operation are determined wholly without regard to a particular State or political subdivision contract or uncertain and indefinite periods of time involved of a few seconds or minutes duration and where the failure to count such time is due to consideration justified by industrial realities (29 CFR 785.47)

2) "Engaged to wait" is waiting time that belongs to and is controlled by the employer which is an integral part of the job and is therefore compensable as hours worked. (29 CFR 785.15)

3) "Waiting to be engaged" is waiting time that an employee can use effectively for their own purpose and is not compensable as hours worked. (29 CFR 785.16)

4) "De Minimus" is a rule that recognizes that unsubstantial or insignificant periods of time which cannot as a practical administrative matter be precisely recorded for payroll purposes, may be disregarded. This rule applies only where there are uncertain and indefinite periods of time involved of a short duration and where the failure to count such time is due to consideration justified by worksite realities. For example, with respect to truck drivers on prevailing wage sites, this is typically less than 15 minutes at a time.

Coverage of Truck Drivers on State or Political subdivision Prevailing Wage Projects

Truck drivers <u>are covered</u> for payroll purposes under the following conditions:

- Truck Drivers for time spent working on the site of the work.

- Truck Drivers for time spent loading and/or unloading materials and supplies on the site of the work, if such time is not de minimus

- Truck drivers transporting materials or supplies between a facility that is deemed part of the site of the work and the actual construction site.

- Truck drivers transporting portions of the building or work between a site established specifically for the performance of the contract or project where a significant portion of such building or work is constructed and the physical places where the building or work outlined in the contract will remain.

For example: Truck drivers delivering asphalt are covered under prevailing wage while" engaged to wait" on the site and when directly involved in the paving operation, provided the total time is not "de minimus"

Truck Drivers <u>are not</u> covered in the following instances:

- Material delivery truck drivers while off "the site of the work"

- Truck Drivers traveling between a prevailing wage job and a commercial supply facility while they are off the "site of the work"

- Truck drivers whose time spent on the "site of the work" is de minimus, such as under 15 minutes at a time, merely to drop off materials or supplies, including asphalt.

These guidelines are similar to U.S. Labor Department policies. The application of these guidelines may be subject to review based on factual considerations on a case by case basis.

For example:

- Material men and deliverymen are not covered under prevailing wage as long as they are not directly involved in the construction process. If, they unload the material, they would then be covered by prevailing wage for the classification they are performing work in: laborer, equipment operator, etc.
- Hauling material off site is not covered provided they are not dumping it at a location outlined above.
- Driving a truck on site and moving equipment or materials on site would be considered covered work, as this is part of the construction process.

Any questions regarding the proper classification should be directed to:
Public Contract Compliance Unit
Wage and Workplace Standards Division
Connecticut Department of Labor
200 Folly Brook Blvd, Wethersfield, CT 06109
(860) 263-6543

Statute 31-55a

Last Updated: June 02, 2008

- Special Notice -

To All State and Political Subdivisions,Their Agents, and Contractors

Connecticut General Statute 31-55a - Annual adjustments to wage rates by contractors doing state work.

Each contractor that is awarded a contract on or after October 1, 2002, for (1) the construction of a state highway or bridge that falls under the provisions of section 31-54 of the general statutes, or (2) the construction, remodeling, refinishing, refurbishing, rehabilitation, alteration or repair of any public works project that falls under the provisions of section 31-53 of the general statutes shall contact the Labor Commissioner on or before July first of each year, for the duration of such contract, to ascertain the prevailing rate of wages on an hourly basis and the amount of payment or contributions paid or payable on behalf of each mechanic, laborer or worker employed upon the work contracted to be done, and shall make any necessary adjustments to such prevailing rate of wages and such payment or contributions paid or payable on behalf of each such employee, effective each July first.

- The prevailing wage rates applicable to any contract or subcontract awarded on or after October 1, 2002 are subject to annual adjustments each July 1st for the duration of any project which was originally advertised for bids on or after October 1, 2002.
- Each contractor affected by the above requirement shall pay the annual adjusted prevailing wage rate that is in effect each July 1st, as posted by the Department of Labor.
- It is the ***contractor's*** responsibility to obtain the annual adjusted prevailing wage rate increases directly from the Department of Labor's Web Site. The annual adjustments will be posted on the Department of Labor Web page: www.ctdol.state.ct.us. For those without internet access, please contact the division listed below.
- The Department of Labor will continue to issue the initial prevailing wage rate schedule to the Contracting Agency for the project. All subsequent annual adjustments will be posted on our Web Site for contractor access.

Any questions should be directed to the Contract Compliance Unit, Wage and Workplace

Standards Division, Connecticut Department of Labor, 200 Folly Brook Blvd., Wethersfield, CT 06109 at (860)263-6790.

Workplace Laws

Published by the Connecticut Department of Labor, Project Management Office

November 29, 2006

Notice

To All Mason Contractors and Interested Parties Regarding Construction Pursuant to Section 31-53 of the Connecticut General Statutes (Prevailing Wage)

The Connecticut Labor Department Wage and Workplace Standards Division is empowered to enforce the prevailing wage rates on projects covered by the above referenced statute.

Over the past few years the Division has withheld enforcement of the rate in effect for workers who operate a forklift on a prevailing wage rate project due to a potential jurisdictional dispute.

The rate listed in the schedules and in our Occupational Bulletin (see enclosed) has been as follows:

Forklift Operator:

- **Laborers (Group 4) Mason Tenders -** operates forklift solely to assist a mason to a maximum height of nine feet only.

- **Power Equipment Operator (Group 9) -** operates forklift to assist any trade and to assist a mason to a height over nine feet.

The U.S. Labor Department conducted a survey of rates in Connecticut but it has not been published and the rate in effect remains as outlined in the above Occupational Bulletin.

Since this is a classification matter and not one of jurisdiction, effective January 1, 2007 the Connecticut Labor Department will enforce the rate on each schedule in accordance with our statutory authority.

Your cooperation in filing appropriate and accurate certified payrolls is appreciated.

Informational Bulletin

THE 10-HOUR OSHA CONSTRUCTION SAFETY AND HEALTH COURSE

(applicable to public building contracts entered into *on or after July 1, 2007,* where the total cost of all work to be performed is at least $100,000)

(1) This requirement was created by Public Act No. 06-175, which is codified in Section 31-53b of the Connecticut General Statutes (pertaining to the prevailing wage statutes);

(2) The course is required for public building construction contracts (projects funded in whole or in part by the state or any political subdivision of the state) entered into on or after July 1, 2007;

(3) It is required of private employees (not state or municipal employees) and apprentices who perform manual labor for a general contractor or subcontractor on a public building project where the total cost of all work to be performed is at least $100,000;

(4) The ten-hour construction course pertains to the ten-hour Outreach Course conducted in accordance with federal OSHA Training Institute standards, and, for telecommunications workers, a ten-hour training course conducted in accordance with federal OSHA standard, 29 CFR 1910.268;

(5) The internet website for the federal OSHA Training Institute is http://www.osha.gov/fso/ote/training/edcenters/fact_sheet.html;

(6) The statutory language leaves it to the contractor and its employees to determine who pays for the cost of the ten-hour Outreach Course;

(7) Within 30 days of receiving a contract award, a general contractor must furnish proof to the Labor Commissioner that all employees and apprentices performing manual labor on the project will have completed such a course;

(8) Proof of completion may be demonstrated through either: (a) the presentation of a *bona fide* student course completion card issued by the federal OSHA Training Institute; *or* (2) the presentation of documentation provided to an employee by a trainer certified by the Institute pending the actual issuance of the completion card;

(9) Any card with an issuance date more than 5 years prior to the commencement date of the construction project shall not constitute proof of compliance;

(10) Each employer shall affix a copy of the construction safety course completion card to the certified payroll submitted to the contracting agency in accordance with Conn. Gen. Stat. § 31-53(f) on which such employee's name first appears;

(11) Any employee found to be in non-compliance shall be subject to removal from the worksite if such employee does not provide satisfactory proof of course completion to the Labor Commissioner by the fifteenth day after the date the employee is determined to be in noncompliance;

(12) Any such employee who is determined to be in noncompliance may continue to work on a public building construction project for a maximum of fourteen consecutive calendar days while bringing his or her status into compliance;

(13) The Labor Commissioner may make complaint to the prosecuting authorities regarding any employer or agent of the employer, or officer or agent of the corporation who files a false certified payroll with respect to the status of an employee who is performing manual labor on a public building construction project;

(14) The statute provides the minimum standards required for the completion of a safety course by manual laborers on public construction contracts; any contractor can exceed these minimum requirements; and

(15) Regulations clarifying the statute are currently in the regulatory process, and shall be posted on the CTDOL website as soon as they are adopted in final form.

(16) Any questions regarding this statute may be directed to the Wage and Workplace Standards Division of the Connecticut Labor Department via the internet website of http://www.ctdol.state.ct.us/wgwkstnd/wgemenu.htm; or by telephone at (860)263-6790.

THE ABOVE INFORMATION IS PROVIDED EXCLUSIVELY AS AN EDUCATIONAL RESOURCE, AND IS NOT INTENDED AS A SUBSTITUTE FOR LEGAL INTERPRETATIONS WHICH MAY ULTMATELY ARISE CONCERNIG THE CONSTRUCTION OF THE STATUTE OR THE REGULATIONS.

Sec. 31-53b. **Construction safety and health course**. **Proof of completion required for employees on public building projects. Enforcement. Regulations**. (a) Each contract entered into on or after July 1, 2007, for the construction, remodeling, refinishing, refurbishing, rehabilitation, alteration or repair of any public building project by the state or any of its agents, or by an political subdivision of the state or any of its agents, where the total cost of all work to be performed by all contractors and subcontractors in connection with the contract is at least one hundred thousand dollars, shall contain a provision requiring that, not later than thirty days after the date such contract is awarded, each contractor furnish proof to the Labor Commissioner that all employees performing manual labor on or in such public building, pursuant to such contract, have completed a course of at least ten hours in duration in construction safety and health approved by the federal Occupational Safety and Health Administration or, in the case of telecommunications employees, have completed at least ten hours of training in accordance with 29 CFR 1910.268.

(b) Any employee required to complete a construction safety and health course required under subsection (a) of this section who has not completed the course shall be subject to removal from the worksite if the employee does not provide documentation of having completed such course by the fifteenth day after the date the employee is found to be in noncompliance. The Labor Commissioner or said commissioner's designee shall enforce this section.

(c) Not later than January 1, 2007, the Labor Commissioner shall adopt regulations, in accordance with the provisions of chapter 54, to implement the provisions of subsections (a) and (b) of this section. Such regulations shall require that the ten-hour construction safety and health courses required under subsection (a) of this section be conducted in accordance with federal Occupational Safety and Health Administration Training Institute standards, or in accordance with 29 CFR 1910.268, as appropriate. The Labor Commissioner shall accept as sufficient proof of compliance with the provisions of subsection (a) or (b) of this section a student course completion card issued by the federal Occupational Safety and Health Administration Training Institute, or such other proof of compliance said commissioner deems appropriate, dated no earlier than five years before the commencement date of such public works project.

(d) For the purposes of this section, "public building" means a structure, paid for in whole or in part with state funds, within a roof and within exterior walls or fire walls, designed for the housing, shelter, enclosure and support or employment of people, animals or property of any kind, including, but not limited to, sewage treatment plants and water treatment plants, "Public building" does not include site work, roads or bridges, rail lines, parking lots or underground water, sewer or drainage systems including pump houses or other utility systems.

CONNECTICUT DEPARTMENT OF LABOR
WAGE AND WORKPLACE STANDARDS DIVISION

CONTRACTORS WAGE CERTIFICATION FORM

I,_____of _____
Officer, Owner, Authorized Rep. Company Name

do hereby certify that the _____
Company Name

_____
Street

_____
City

and all of its subcontractors will pay all workers on the

_____
Project Name and Number

_____
Street and City

the wages as listed in the schedule of prevailing rates required for such project (a copy of which is attached hereto).

_____
Signed

Subscribed and sworn to before me this _____ day of _____,

_____
Notary Public

☞ Return to:

Connecticut Department of Labor
Wage & Workplace Standards Division
200 Folly Brook Blvd.
Wethersfield, CT 06109