#03- CIVIL
INDEX OF DRAWINGS

CIVIL DRAWINGS	
DRAWING NUMBER	SHEET TITLE
C-001	CIVIL DRAWING INDEX
C-002	CIVIL SYMBOLS, NOTES, & ABBREVIATIONS
C-100	EXISTING CONDITIONS
C-101	PAY LIMITS PLAN
C-102	INVASIVE SPECIES LOCATION PLAN
C-103	SITE DEMOLITION PLAN
C-104	SITE PREPARATION PLAN
C-105	EROSION AND SEDIMENT CONTROL PLAN
C-200	OVERALL LAYOUT & UTILITIES PLAN
C-201	MATERIALS & UTILITIES PLAN
C-202	MATERIALS & UTILITIES PLAN
C-203	MATERIALS & UTILITIES PLAN
C-204	MATERIALS & UTILITIES PLAN
C-205	UTILITY PROFILES
C-206	LAYOUT PLAN
C-207	LAYOUT PLAN
C-208	LAYOUT PLAN
C-209	LAYOUT PLAN
C-210	STRIPING PLAN
C-211	DRIVEWAY SIGHTLINE PLAN
C-300	OVERALL GRADING & DRAINAGE PLAN
C-301	GRADING & DRAINAGE PLAN
C-302	GRADING & DRAINAGE PLAN
C-303	GRADING & DRAINAGE PLAN
C-304	GRADING & DRAINAGE PLAN
C-305	RINGROAD PLAN AND PROFILE
C-310	WALL GRADING PLAN
C-311	WALL GRADING ENLARGEMENTS
C-312	SITE RETAINING WALL DETAILS
C-313	SITE RETAINING WALL ELEVATIONS
C-501	MISCELLANEOUS SITE DETAILS
C-502	MISCELLANEOUS SITE DETAILS
C-503	MISCELLANEOUS SITE DETAILS
C-504	MISCELLANEOUS SITE DETAILS
C-505	SANITARY DETAILS
C-506	WATERLINE DETAILS
C-507	PS-1 DETAILS AND NOTES
C-601	BORING LOGS
C-602	BORING LOGS
C-603	BORING LOGS
C-604	BORING LOGS
C-605	BORING LOGS
C-606	BORING LOGS
C-607	BORING LOGS
C-608	BORING LOGS
C-609	BORING LOGS
C-610	BORING LOGS

DESIGNED BY:

WENDEL ENGINEERING
140 JOHN JAMES AUDUBON PKWY., SUITE 201
AMHERST, NEW YORK 14228

STATE OF CONNECTICUT
DAVID C. DUCHSCHERER
No. 11937
REGISTERED PROFESSIONAL ENGINEER

David Duchscherer
2014.06.11 17:02:43-04'00'

REV.	DATE	DESCRIPTION	SHEET NO.
		REVISIONS	

FILENAME:

THE INFORMATION, INCLUDING ESTIMATED QUANTITIES OF WORK, SHOWN ON THESE SHEETS IS BASED ON LIMITED INVESTIGATIONS BY THE STATE AND IS IN NO WAY WARRANTED TO INDICATE THE CONDITIONS OF ACTUAL QUANTITIES OF WORK WHICH WILL BE REQUIRED.

DESIGNER/DRAFTER: CML
CHECKED BY: DLK/SMR
SCALE: AS NOTED

STATE OF CONNECTICUT
DEPARTMENT OF TRANSPORTATION

ARCHITECT: WENDEL
ENGINEERS: ReSTL DESIGNERS, CLOUGH HARBOUR ASSOC., AI ENGINEERS, WENDEL
APPROVED BY: DCD
DATE: 6/11/14

DESIGNED BY:

WENDEL
140 JOHN JAMES AUDUBON PKWY., SUITE 201
AMHERST, NEW YORK 14228

STATE OF CONNECTICUT
DAVID C. DUCHSCHERER
No. 11937
REGISTERED PROFESSIONAL ENGINEER

PROJECT TITLE:
WATERBURY BUS MAINTENANCE FACILITY REPLACEMENT

ADDRESS:
FROST BRIDGE ROAD
WATERTOWN, CONNECTICUT 06787

DRAWING TITLE:
CIVIL DRAWING INDEX

PROJECT NO. **0431-0006**
DRAWING NO. **C-001**
SHEET NO. 03.001

Connecticut Department of Transportation
QA/QC Format Check

LEGEND	EXISTING	PROPOSED
PROPERTY LINE		
CONTRACT PAY LIMIT LINE		
MATCH LINE		
100-YR FLOOD BOUNDARY (ZONE A4)		
500-YR FLOOD BOUNDARY (ZONE B)		
STORM WATER RETENTION POND		
FIELD LOCATED WETLAND		
BUILDING		
ASPHALT PAVEMENT		
CONCRETE PAVEMENT		
EDGE OF PAVEMENT BACK OF CURB	BCLC	
SIGN		
CHAIN LINK FENCE	CHAIN LINK X X	
ORNAMENTAL FENCE		
GUIDE RAIL	MBR	
FLAGPOLE		
DECIDUOUS TREE		
EVERGREEN TREE		
CONTOUR (1' INTERVAL)	(000)	000
SPOT ELEVATION	(888.88) x	+ 888.88
TOP/BOTTOM OF CURB	TC/BC (000.00)	TC/BC 000.00
TOP/BOTTOM OF WALL	TW/BW (000.00)	TW/BW 000.00
MATCH EXISTING		M.E.
DETAIL REFERENCE		1 / L2
SITE PREPARATION NOTE		4
SITE IMPROVEMENT NOTE		5
UTILITY NOTE		5
GRADING/DRAINAGE NOTE		5
STORM SEWER LINE	ST	ST
STORM SEWER END SECTION		
CATCH BASIN/DRAIN INLET		
SANITARY SEWER MANHOLE		D
CLEANOUT		
SANITARY SEWER GRAVITY MAIN		SA
SANITARY SEWER FORCE MAIN		PS
SANITARY SEWER MANHOLE		S
SANITARY SEWER GRINDER PUMP		
WATER LINE		W
VALVE		
HYDRANT ASSEMBLY		
GAS LINE		G
DIESEL FUEL LINE		FUEL
UNDERGROUND ELEC./TEL.		UE
UTILITY POLE W/ LIGHT FIXTURE	CL&P #	
UTILITY POLE ASPHALT PAVEMENT REMOVAL	CL&P	
CONCRETE CURB REMOVAL		
TREE TO BE REMOVED		
TEST BORING	HA-17	

GENERAL NOTES

1. SURVEY SUPPLIED BY CTDOT, DATED APRIL, 2013.
2. CONTRACTOR TO LOCATE AND/OR VERIFY LOCATION OF UTILITIES IN THE FIELD BEFORE BEGINNING WORK. PRIOR TO REMOVAL AND EXCAVATION WORK, CONTRACTOR TO NOTIFY UTILITY COMPANIES REGARDING DISCONNECT OF SERVICES AND MARKING EXACT LOCATION OF BURIED UTILITIES.
3. PRIOR TO START OF CONSTRUCTION, CONTRACTOR TO NOTIFY OWNER'S REPRESENTATIVE OF DISCREPANCIES FOUND BETWEEN INFORMATION SHOWN ON PLANS AND ACTUAL FIELD CONDITIONS.
4. PAVEMENT NOT NOTED TO BE REMOVED, BUT DAMAGED DURING CONSTRUCTION, SHALL BE REPAIRED OR REPLACED, FLUSH WITH EXISTING GRADE AT CONTRACTOR'S EXPENSE.
5. ITEMS NOT NOTED TO BE REMOVED AND/OR DEMOLISHED ARE TO REMAIN AND TO BE PROTECTED AS NECESSARY. IN PARTICULAR, CONTRACTOR SHALL TAKE EXTRA MEASURES NOT TO INJURE EXISTING TREES.
6. ITEMS NOTED TO BE RELOCATED SHALL BE CAREFULLY REMOVED WITHOUT BEING DAMAGED; SALVAGE AND STOCKPILE ON-SITE OR PER OWNER'S DIRECTION.
7. SAW-CUT PAVEMENT AND CURBING AT LIMITS OF REMOVAL.
8. DIMENSIONS ARE FROM FACE OF BUILDING, CURB OR EDGE OF PAVEMENT UNLESS NOTED OTHERWISE.
9. PRIOR TO MAJOR CLEARING OPERATIONS, SITE SHALL BE CLEARED ONLY AS REQUIRED TO ALLOW STAKING OF BUILDING AND PARKING LOTS. AT COMPLETION OF STAKEOUT, OWNER'S REPRESENTATIVE SHALL REVIEW AND DETERMINE IF ADDITIONAL TREES SHALL BE RETAINED OR REMOVED. TREES TO REMAIN, WILL BE TAGGED BY THE OWNER'S REPRESENTATIVE.
10. NEW PLANT MATERIAL SHALL CONFORM TO THE CURRENT ISSUE OF THE AMERICAN STANDARD FOR NURSERY STOCK PUBLISHED BY THE AMERICAN ASSOCIATION OF NURSERYMEN.
11. ALL DAMAGED AND/OR DISTURBED AREAS REMAINING, AFTER CONSTRUCTION IS COMPLETED SHALL RECEIVE MIN. 4" TOPSOIL, BE FINE GRADED, FERTILIZED, SEEDED AND MULCHED. TOPSOIL TO BE FLUSH WITH PAVEMENT AND/OR TOP OF CURB AND SHALL BE "FEATHERED" INTO ADJACENT LAWN AREAS TO CREATE A SMOOTH TRANSITION BETWEEN NEWLY SEEDED AREAS AND EXISTING LAWN.
12. NEW LIGHT STANDARDS ARE TO BE SET BACK 4' FROM EDGE OF PAVEMENT OR BACK OF CURB, UNLESS NOTED OTHERWISE.
13. THE CONTRACTOR SHALL EXPOSE EXISTING UTILITIES AHEAD OF THE PIPE LAYING OPERATION, SO THAT, IF MINOR ADJUSTMENTS MUST BE MADE IN ELEVATION AND/OR ALIGNMENT DUE TO INTERFERENCE FROM THESE UTILITIES, SAID CHANGES CAN BE MADE IN ADVANCE OF THE WORK.
14. PIPE CROSSING UNDER PAVED AREAS ARE TO BE BACKFILLED TO SUBGRADE WITH COMPACTED, SELECT GRANULAR MATERIAL TO FIVE (5) FEET OUTSIDE THE PAVEMENT EDGE.
15. CONSTRUCTION STAGING AND STORAGE AREAS TO BE COORDINATED WITH OWNER'S REPRESENTATIVE.
16. CONTRACTOR SHALL VISIT SITE PRIOR TO BID TO CONFIRM THE EXISTING SITE CONDITIONS AND SCOPE OF WORK.
17. CONTRACTOR SHALL OBTAIN AND PAY ASSOCIATED FEES FOR PERMITS REQUIRED FOR CONSTRUCTION. (OBTAIN WORK PERMIT FROM CONNDOT FOR CONNECTION OF STORM DRAINAGE AND CURB CUT WORK AND PERFORM WORK PER CONNDOT STANDARDS AND REQUIREMENTS.)
18. AFTER REMOVAL OF FOOTERS, STRUCTURES, ETC., BACKFILL AS FOLLOWS:

A. IN LAWN AREAS: BACKFILL HOLE WITH ORDINARY FILL, COMPACT IN 8" LIFTS TO PROPOSED SUBGRADE, AND PLACE TOPSOIL, MIN. 4" DEPTH, FLUSH WITH EXISTING GRADE, FINE GRADE, FERTILIZE, SEED AND MULCH.

B. IN PAVEMENT AREAS: BACKFILL HOLE WITH CRUSHER-RUN STONE, COMPACT IN 8" LIFTS TO PROPOSED SUBGRADE.

20. CONTRACTOR SHALL STAKE OUT ALL PROPOSED PATHS FOR REVIEW AND ACCEPTANCE BY THE OWNER'S REPRESENTATIVE PRIOR TO BEGINNING CONSTRUCTION.
21. PROPOSED PATHS SHALL BE CONSTRUCTED W/MAX. 2% CROSS-SLOPE IN CONCERT WITH ADJACENT DRAINAGE PATTERNS.

REV.	DATE	DESCRIPTION	SHEET NO.
		REVISIONS	

FILENAME:

THE INFORMATION, INCLUDING ESTIMATED QUANTITIES OF WORK, SHOWN ON THESE SHEETS IS BASED ON LIMITED INVESTIGATIONS BY THE STATE AND IS IN NO WAY WARRANTED TO INDICATE THE CONDITIONS OF ACTUAL QUANTITIES OF WORK WHICH WILL BE REQUIRED.

DESIGNER/DRAFTER: CML

CHECKED BY: DLK/SMR

SCALE: AS NOTED

STATE OF CONNECTICUT
DEPARTMENT OF TRANSPORTATION

ARCHITECT: WENDEL

ENGINEERS: ReSTL DESIGNERS, CLOUGH HARBOUR ASSOC., AI ENGINEERS, WENDEL

APPROVED BY: DCD

DATE: 6/11/14

DESIGNED BY:

WENDEL
140 JOHN JAMES AUDUBON PKWY.,
SUITE 201
AMHERST, NEW YORK
14228

STATE OF CONNECTICUT — DAVID C. DUCHENEAU — No. 11937 — REGISTERED PROFESSIONAL ENGINEER

PROJECT TITLE:

WATERBURY BUS MAINTENANCE FACILITY REPLACEMENT

ADDRESS: **FROST BRIDGE ROAD WATERTOWN, CONNECTICUT 06787**

DRAWING TITLE:

CIVIL SYMBOLS, NOTES, & ABBREVIATIONS

PROJECT NO. **0431-0006**

DRAWING NO. **C-002**

SHEET NO. 03.002

NOTES:

1.) SURVEY BY CONNDOT DISTRICT 4.

2.) FIELD BOOKS: DATA COLLECTION AND "WATERTOWN 153."

3.) 400 FOOT GRID BASED ON CONNECTICUT COORDINATE SYSTEM N. A. D. 1927.

4.) VERTICAL DATUM BASED ON NGVD 1929.

5.) PROPERTY LINES WERE TAKEN FROM THE TOWN OF WATERTOWN TAX ASSESSORS MAPS, NOT ALL HAVE BEEN FIELD LOCATED AND SHOULD BE CONSIDERED APPROXIMATE.

6.) MAP ENTITLED, "O FROST BRIDGE ROAD, WATERTOWN, CONNECTICUT, EXISTING BOUNDARY MAP," AS REVISED 8-24-06, BY NAFIS & YOUNG ENGINEERS, INC.

7.) CONNDOT B.R.C. FILE #431-006-001

8.) APPROXIMATE 100 YEAR FLOOD LINE TAKEN FROM FEMA MAP #090055006B, DATED JULY 5, 1982.

9.) CHANNEL ENCROACHMENT MAP "NA-TM-WA-0191, SH. 2 OF 11."

10.) WETLAND MAPPING FIELD LOCATED 9-25-2008.

STATE OF CONNECTICUT
DEPARTMENT OF TRANSPORTATION
GREATER WATERBURY BUS MAINTENANCE AND STORAGE FACILITY
IN THE TOWN OF
WATERTOWN
PROJECT NO. 431-0006

SCALE: 1"=40'

APRIL 2013

SURVEYED BY: R. NEUHAUSSER

PLOTTED BY: L. CHRISTIANA

CHECKED BY: D. WIEGERT

FILE: D4_SV_0431_0006_BUSFACILITY_GRN.dgn

CONN. ROUTE 8 – JAMES H. DARCY MEMORIAL HIGHWAY

500-YR FLOOD BOUNDARY (ZONE B)

B.M. 1
NW CORNER OF CONC HEADWALL
Elev. 305.54
NGVD 1929

STATE OF CONN.

FROST BRIDGE ROAD

WATERTOWN
THOMASTON

APPROX. TOWN LINE

APPROX. STREET LINE

100-YR FLOOD BOUNDARY (ZONE A4)

NAUGATUCK RIVER

S.R. 848 – WATERBURY ROAD

ROW MAP #153-14, SH. 5 OF 5

SPUR-1362

Conc Pads

STONE RET WALL

CHAIN LINK FENCE

MISC. TREES & BRUSH

CONSTRUCTION DEBRIS

ROW OF 10" HEMLOCKS

WOOD DEBRIS

MON. WELL

STATE OF CONN.
431-006-001

CP-20
12"PINE
WOOD POST
REBAR
FD. BCLC
RTE 8 SB OFF RAMP
ECHO LAKE ROAD TO RTE 8
N=284,771.07
E=514,419.83
NOT TO SCALE

CP-1
RT 8 SB ON RAMP
RT 262
"c"CB
TO RT 262 THOMASTON
REBAR
FD. BCLC
WOOD POST
WOOD POST
N=284,881.78
E=514,830.53
NOT TO SCALE

GENERAL NOTES

1. REFER TO THE FINAL GEOTECHNICAL DESIGN EVALUATION FOR INFORMATIONAL PURPOSES ONLY. BORING LOGS ARE PROVIDED ON SHEETS C-601 THROUGH C-610.
2. BORINGS HA-6, HA-9 AND HA-10 ARE NOT INCLUDED AND NOT SHOWN ON THIS PLAN.
3. TOPOGRAPHIC AND BOUNDARY SURVEY PROVIDED BY CONNDOT. SOME TEXT AND SYMBOL LOCATIONS WERE MOVED TO ALLOW BASEMAPPING TO FIT ON THIS DRAWING. ADDITIONAL INFORMATION ADDED TO THIS DRAWING IS IDENTIFIED UNDER SURVEY NOTES.
4. WETLAND LOCATIONS FLAGGED AND SURVEYED IN 2008 WERE REVIEWED IN JUNE OF 2013 BY FITZGERALD AND HALLIDAY, INC. IT WAS DETERMINED THAT THESE LOCATIONS REMAIN ACCURATE.

SURVEY NOTES

1. APPROXIMATE LIMITS OF 100-YR FLOOD BOUNDARY (ZONE A4) AND LIMITS OF 500-YR FLOOD BOUNDARY (ZONE B) ARE SHOWN AS DIGITIZED FROM FEMA FIRMETTES GENERATED FROM FLOOD INSURANCE RATE MAPS FOR THE TOWN OF WATERTOWN, CT, LITCHFIELD COUNTY, COMMUNITY PANEL NUMBERS 090058-002-B AND 090058-003-B WITH AN EFFECTIVE DATE OF NOVEMBER 5, 1980. THIS IS AN UPDATE TO SURVEY NOTE 8 ABOVE. WITHIN THE GENERAL LIMITS OF THE SITE, THE BFE (100-YR BASE FLOOD ELEVATION) IS APPROXIMATELY 302.0 (NGVD 29) AND THE 500-YR FLOOD ELEVATION IS APPROXIMATELY 310.0 (NGVD 29).
2. LINEWORK REPRESENTS THE PROPOSED CURBLINE OF ADJACENT DEVELOPMENT WHICH HAS BEEN APPROVED BY THE TOWN OF WATERTOWN AND IS CURRENTLY UNDER CONSTRUCTION. LINEWORK WAS SCALED/DIGITIZED FROM PRINTS OF THE APPROVED SITE PLANS PROVIDED BY THE TOWN OF WATERTOWN.

1 EXISTING CONDITIONS
SCALE: 1" = 40'

0 20 40 80

REV.	DATE	DESCRIPTION	SHEET NO.
		REVISIONS	

FILENAME:

THE INFORMATION, INCLUDING ESTIMATED QUANTITIES OF WORK, SHOWN ON THESE SHEETS IS BASED ON LIMITED INVESTIGATIONS BY THE STATE AND IS IN NO WAY WARRANTED TO INDICATE THE CONDITIONS OF ACTUAL QUANTITIES OF WORK WHICH WILL BE REQUIRED.

DESIGNER/DRAFTER: TJZ

CHECKED BY: DLK/SMR

SCALE: AS NOTED

STATE OF CONNECTICUT
DEPARTMENT OF TRANSPORTATION

ARCHITECT: WENDEL

ENGINEERS: ReSTL DESIGNERS, CLOUGH HARBOUR ASSOC., AI ENGINEERS, WENDEL

APPROVED BY: DCD

DATE: 6/11/14

DESIGNED BY:

WENDEL
140 JOHN JAMES AUDUBON PKWY., SUITE 201
AMHERST, NEW YORK 14228

STATE OF CONNECTICUT
DAVID G. DUDZINSKI
No. 11937
REGISTERED PROFESSIONAL ENGINEER

PROJECT TITLE:

WATERBURY BUS MAINTENANCE FACILITY REPLACEMENT

ADDRESS: **FROST BRIDGE ROAD WATERTOWN, CONNECTICUT 06787**

DRAWING TITLE:

EXISTING CONDITIONS

PROJECT NO. **0431-0006**

DRAWING NO. **C-100**

SHEET NO. 03.003

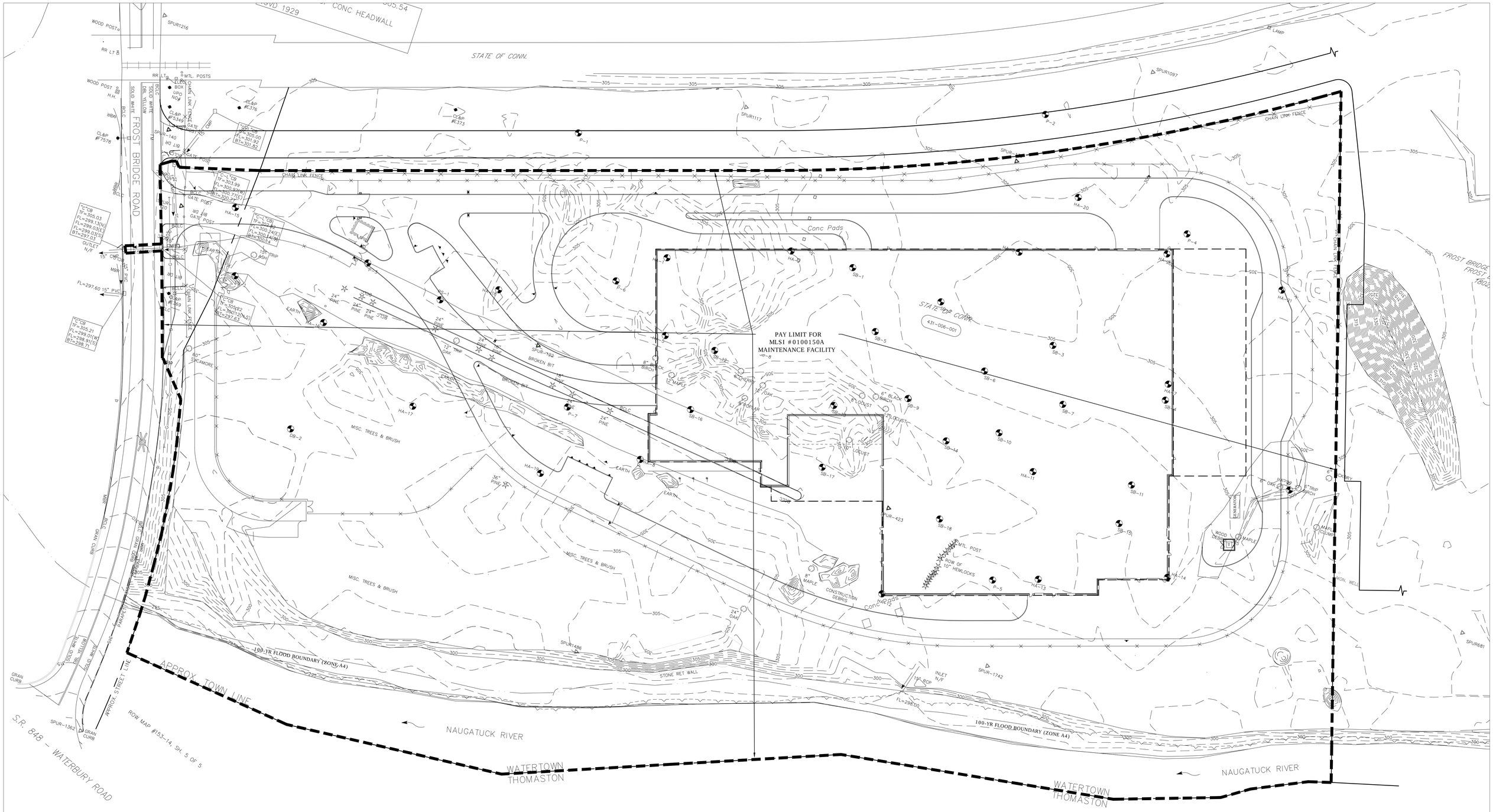

NOTES:

1. ALL WORK OUTSIDE OF THE MLSI #0100150A PAY LIMITS SHOWN ON THIS PLAN AND THE MLSI #0100151A PAY LIMITS SHOWN ON OPS-101 SHALL BE UNIT PRICE BASED.
2. SOME WORK WITHIN THE MLSI PAY LIMITS WILL BE UNIT PRICE BASED. REFER TO PROJECT SPECIFICATIONS.

1 PAY LIMITS PLAN
SCALE: 1" = 40'

0 20 40 80

REV.	DATE	DESCRIPTION	SHEET NO.
		REVISIONS	

FILENAME:

THE INFORMATION, INCLUDING ESTIMATED QUANTITIES OF WORK, SHOWN ON THESE SHEETS IS BASED ON LIMITED INVESTIGATIONS BY THE STATE AND IS IN NO WAY WARRANTED TO INDICATE THE CONDITIONS OF ACTUAL QUANTITIES OF WORK WHICH WILL BE REQUIRED.

DESIGNER/DRAFTER: TJZ

CHECKED BY: DLK/SMR

SCALE: AS NOTED

STATE OF CONNECTICUT
DEPARTMENT OF TRANSPORTATION

ARCHITECT: WENDEL

ENGINEERS: ReSTL DESIGNERS, CLOUGH HARBOUR ASSOC., AI ENGINEERS, WENDEL

APPROVED BY: DCD

DATE: 6/11/14

DESIGNED BY:
WENDEL
140 JOHN JAMES AUDUBON PKWY., SUITE 201
AMHERST, NEW YORK 14228

STATE OF CONNECTICUT
DAVID G. DUDZINSKI
No. 11937
REGISTERED PROFESSIONAL ENGINEER

PROJECT TITLE:
WATERBURY BUS MAINTENANCE FACILITY REPLACEMENT

ADDRESS:
FROST BRIDGE ROAD
WATERTOWN, CONNECTICUT 06787

DRAWING TITLE:
PAY LIMITS PLAN

PROJECT NO. **0431-0006**

DRAWING NO. **C-101**

SHEET NO. 03.004

APPROXIMATE LIMITS OF INVASIVE SPECIES TREATMENT

APPROXIMATE LIMITS OF INVASIVE SPECIES TREATMENT

APPROXIMATE LIMITS OF INVASIVE SPECIES TREATMENT

FROST BRIDGE ROAD

STATE OF CONN.

STATE OF CONN.

431-006-001

WATERTOWN
THOMASTON

NAUGATUK RIVER

WATERTOWN
THOMASTON

NAUGATUK RIVER

S.R. 848 – WATERBURY ROAD

ROW MAP #153-14, SH. 5 OF 5

APPROX. STREET LINE

APPROX. TOWN LINE

100-YR FLOOD BOUNDARY (ZONE AX)

100-YR FLOOD BOUNDARY (ZONE A4)

SYMBOL LEGEND

- BL — BLACK LOCUST
- MR — MULTIFLORE ROSE
- JK — JAPANESE KNOTWOOD
- OB — ORIENTAL BITTERSWEET
- M — MUGWORT
- SK — SPOTTED KNAPWEED
- AREAS OF LIMITED INVASIVE SPECIES
- APPROXIMATE LIMITS OF INVASIVE SPECIES
- APPROXIMATE LIMITS OF DISTURBANCE

NOTES:

1. INVASIVE SPECIES DOMINATE MUCH OF THE PROJECT SITE WITH THE EXCEPTION OF THE AREAS OF LIMITED INVASIVE SPECIES SHOWN (HATCHING).
2. INVASIVE SPECIES REMOVAL MUST BE ACCOMPLISHED PRIOR TO TREE CLEARING AND SITE DEMOLITION.
3. TREATMENT AREA IS NOT TO EXTEND INTO WETLAND AREA.

1 INVASIVE SPECIES LOCATION PLAN
SCALE: 1" = 40'
0 20 40 80

REV.	DATE	DESCRIPTION	SHEET NO.
		REVISIONS	

FILENAME:

THE INFORMATION, INCLUDING ESTIMATED QUANTITIES OF WORK, SHOWN ON THESE SHEETS IS BASED ON LIMITED INVESTIGATIONS BY THE STATE AND IS IN NO WAY WARRANTED TO INDICATE THE CONDITIONS OF ACTUAL QUANTITIES OF WORK WHICH WILL BE REQUIRED.

DESIGNER/DRAFTER: TAR
CHECKED BY: DLK/SMR
SCALE: AS NOTED

STATE OF CONNECTICUT
DEPARTMENT OF TRANSPORTATION

ARCHITECT: WENDEL
ENGINEERS: ReSTL DESIGNERS, CLOUGH HARBOUR ASSOC., AI ENGINEERS, WENDEL
APPROVED BY: DCD
DATE: 6/11/14

DESIGNED BY:
WENDEL
140 JOHN JAMES AUDUBON PKWY.,
SUITE 201
AMHERST, NEW YORK 14228

STATE OF CONNECTICUT
DAVID G. DUDRICK
No. 11937
REGISTERED PROFESSIONAL ENGINEER

PROJECT TITLE:
WATERBURY BUS MAINTENANCE FACILITY REPLACEMENT

ADDRESS:
FROST BRIDGE ROAD
WATERTOWN, CONNECTICUT 06787

DRAWING TITLE:
INVASIVE SPECIES LOCATION PLAN

PROJECT NO. **0431-0006**
DRAWING NO. **C-102**
SHEET NO. 03.005

SITE DEMOLITION NOTES

1. SAWCUT AND REMOVE ASPHALT PAVEMENT AND BASE COURSE IN ITS ENTIRETY.
2. REMOVE ASPHALT CURB.
3. REMOVE TREES AND STUMPS.
4. REMOVE PILES OF DEBRIS.
5. REMOVE CONCRETE PADS.
6. RELOCATE POLE, BY OTHERS.
7. REMOVE EXISTING 15"Ø CMP STORM SEWER PIPE (146 LF ± TOTAL) AND DRAINAGE STRUCTURES (2). SAWCUT EXISTING FROST BRIDGE ROAD PAVEMENT.
8. REMOVE EXISTING CHAIN LINK FENCE, FENCE POSTS AND POST FOUNDATIONS.
9. THE CONTRACTOR SHALL UTILIZE ALL PRACTICAL MEASURES TO PROTECT THE EXISTING TREE THROUGHOUT THE DURATION OF CONSTRUCTION. WORK MAY INCLUDE, BUT NOT LIMITED TO, ERECTING TEMPORARY TREE PROTECTION FENCE, PRUNING, ROOT PRUNING, MULCHING AND FERTILIZING. MEASURES UTILIZED SHALL BE IN ACCORDANCE WITH ANSI A300 - BEST MANAGEMENT CONSTRUCTION PRACTICES FOR MANAGING TREES DURING CONSTRUCTION. CONTRACTOR SHALL EMPLOY THE SERVICES OF AN ARBORIST LICENSED BY THE STATE OF CONNECTICUT TO DIRECT AND OVERSEE TREE PROTECTION MEASURES.
10. LIMITS OF TREE CLEARING. ALL TREES OUTSIDE OF THESE LIMITS ARE TO REMAIN. DO NOT CLEAR TREES WITHIN LIMITS OF WETLAND.

LEGEND:

- TREE REMOVAL
- CURB REMOVAL
- ASPHALT PAVING REMOVAL
- DEBRIS REMOVAL
- STORM PIPE AND STRUCTURE REMOVAL

1 SITE DEMOLITION PLAN

SCALE: 1"=40'

0 20 40 80

REV.	DATE	DESCRIPTION	SHEET NO.

REVISIONS

FILENAME:

THE INFORMATION, INCLUDING ESTIMATED QUANTITIES OF WORK, SHOWN ON THESE SHEETS IS BASED ON LIMITED INVESTIGATIONS BY THE STATE AND IS IN NO WAY WARRANTED TO INDICATE THE CONDITIONS OF ACTUAL QUANTITIES OF WORK WHICH WILL BE REQUIRED.

DESIGNER/DRAFTER: CML

CHECKED BY: DLK/SMR

SCALE: AS NOTED

STATE OF CONNECTICUT
DEPARTMENT OF TRANSPORTATION

ARCHITECT: WENDEL

APPROVED BY: DCD

ENGINEERS: ReSTL DESIGNERS, CLOUGH HARBOUR ASSOC., AI ENGINEERS, WENDEL

DATE: 6/11/14

DESIGNED BY:
WENDEL
140 JOHN JAMES
AUDUBON PKWY.,
SUITE 201
AMHERST, NEW YORK
14228

STATE OF CONNECTICUT — DAVID C. DUCHSCHERER — No. 11937 — REGISTERED PROFESSIONAL ENGINEER

PROJECT TITLE: **WATERBURY BUS MAINTENANCE FACILITY REPLACEMENT**

ADDRESS: **FROST BRIDGE ROAD, WATERTOWN, CONNECTICUT 06787**

DRAWING TITLE: **SITE DEMOLITION PLAN**

PROJECT NO. **0431-0006**

DRAWING NO. **C-103**

SHEET NO. 03.006

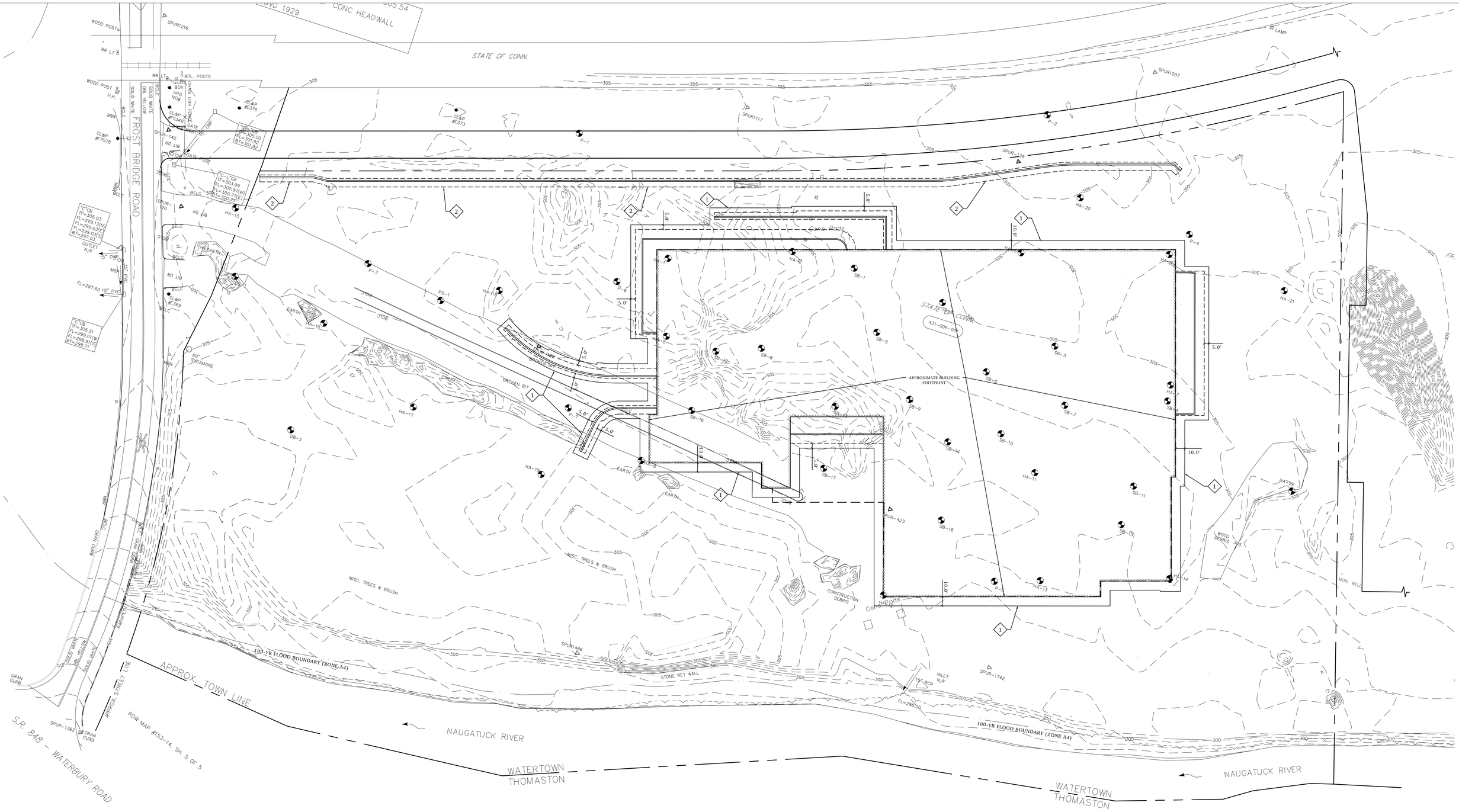

NOTES:

1. CONTRACTOR TO PROVIDE A TEMPORARY 6' CHAIN LINK FENCE AROUND THE ENTIRE SITE DURING THE CONSTRUCTION WORK.

SITE PREPARATION NOTES

THE FOLLOWING NOTES ARE BASED ON RECOMMENDATIONS MADE IN THE PROJECT GEOTECHNICAL EVALUATION:

1. FOOTPRINT OF BUILDING PLUS 10-FT BEYOND IS TO BE EXCAVATED TO EL. 295.5 AND BACKFILLED WITH COMPACTED GRANULAR FILL (BANK OR CRUSHED GRAVEL - M.02.01 GRADING A) IN CONTROLLED LIFTS UP TO THE UNDERSIDE OF THE SLAB/FOOTING. STEM RETAINING WALLS (CONNECTED TO BUILDING FOUNDATION) FOUNDATIONS PLUS 5-FT BEYOND EDGE OF FOOTING ARE TO BE EXCAVATED TO EL. 295.5 AND BACKFILLED WITH COMPACTED GRANULAR FILL (BANK OR CRUSHED GRAVEL - M.02.01 GRADING A) IN CONTROLLED LIFTS UP TO THE UNDERSIDE OF THE FOOTING. SUITABLE SOILS MAY BE ENCOUNTERED AT SHALLOWER OR DEEPER DEPTHS.
2. WEST SITE RETAINING WALL FOOTPRINT IS TO BE EXCAVATED TO A MINIMUM OF 1-FT BELOW BOTTOM OF FOOTING ELEVATION (REFER TO WEST SITE RETAINING WALL PROFILES ON SHEET C-313). PREPARE PAD FOR RETAINING WALL FOOTING CONSISTING OF A MINIMUM 1-FT (12-INCHES) COMPACTED GRANULAR FILL (BANK OR CRUSHED GRAVEL - M.02.01 GRADING A) EXTENDING TO BOTTOM OF FOOTING.

1 SITE PREPARATION PLAN

SCALE: 1"=40'

0 20 40 80

REV.	DATE	DESCRIPTION	SHEET NO.
		REVISIONS	

FILENAME:

THE INFORMATION, INCLUDING ESTIMATED QUANTITIES OF WORK, SHOWN ON THESE SHEETS IS BASED ON LIMITED INVESTIGATIONS BY THE STATE AND IS IN NO WAY WARRANTED TO INDICATE THE CONDITIONS OF ACTUAL QUANTITIES OF WORK WHICH WILL BE REQUIRED.

DESIGNER/DRAFTER: CML

CHECKED BY: DLK/SMR

SCALE: AS NOTED

STATE OF CONNECTICUT
DEPARTMENT OF TRANSPORTATION

ARCHITECT: WENDEL

ENGINEERS: ReSTL DESIGNERS, CLOUGH HARBOUR ASSOC., AI ENGINEERS, WENDEL

APPROVED BY: DCD

DATE: 6/11/14

DESIGNED BY:

WENDEL
140 JOHN JAMES AUDUBON PKWY.,
SUITE 201
AMHERST, NEW YORK
14228

STATE OF CONNECTICUT
DAVID C. DUDLEY
No. 11937
REGISTERED PROFESSIONAL ENGINEER

PROJECT TITLE:

WATERBURY BUS MAINTENANCE FACILITY REPLACEMENT

ADDRESS: **FROST BRIDGE ROAD WATERTOWN, CONNECTICUT 06787**

DRAWING TITLE: **SITE PREPARATION PLAN**

PROJECT NO. **0431-0006**

DRAWING NO. **C-104**

SHEET NO. 03.007

EROSION & SEDIMENT CONTROL NOTES

1. THE CONTRACTOR SHALL IMPLEMENT BEST MANAGEMENT PRACTICES (BMP'S) THROUGHOUT ALL PHASES OF CONSTRUCTION. ADDITIONAL BMP'S SHALL BE IMPLEMENTED AS REQUIRED BY SITE CONDITIONS AND AS DIRECTED BY THE INSPECTOR.
2. BMP'S AND OTHER REQUIRED CONTROLS SHALL CONFORM TO FEDERAL, STATE OR LOCAL REQUIREMENTS OR MANUAL OF PRACTICE, AS APPLICABLE. CONTRACTOR SHALL IMPLEMENT ADDITIONAL CONTROLS AS DIRECTED BY PERMITTING AGENCY OR OWNER.
3. THE CONTRACTOR SHALL MINIMIZE CLEARING TO THE MAXIMUM EXTENT PRACTICAL.
4. THE GENERAL CONTRACTOR SHALL DENOTE ON PLAN THE TEMPORARY PARKING AND STORAGE AREA WHICH SHALL ALSO BE USED AS THE EQUIPMENT MAINTENANCE AND CLEANING AREA, EMPLOYEE PARKING AREA, AND AREA FOR LOCATING PORTABLE FACILITIES, OFFICE TRAILERS, AND TOILET FACILITIES.
5. ALL WASH WATER (CONCRETE TRUCKS, VEHICLE CLEANING, EQUIPMENT CLEANING, ETC.) SHALL BE DETAINED AND PROPERLY DISPOSED OF.
6. SUFFICIENT OIL AND GREASE ABSORBING MATERIALS AND FLOTATION BOOMS SHALL BE MAINTAINED ON SITE OR READILY AVAILABLE TO CONTAIN AND CLEAN-UP FUEL OR CHEMICAL SPILLS AND LEAKS.
7. DUST ON THE SITE SHALL BE CONTROLLED. THE USE OF MOTOR OILS AND OTHER PETROLEUM BASED OR TOXIC LIQUIDS FOR DUST SUPPRESSION OPERATIONS IS PROHIBITED.
8. RUBBISH, TRASH, GARBAGE, LITTER OR OTHER SUCH MATERIALS SHALL BE DEPOSITED INTO SEALED CONTAINERS. MATERIALS SHALL BE PREVENTED FROM LEAVING THE PREMISES THROUGH THE ACTION OF WIND OR STORM WATER DISCHARGE INTO DRAINAGE DITCHES OR WATERS OF THE STATE.
9. IF THE ACTION OF VEHICLES TRAVELING OVER THE GRAVEL CONSTRUCTION ENTRANCES IS NOT SUFFICIENT TO REMOVE THE MAJORITY OF DIRT OR MUD, THEN THE TIRES MUST BE WASHED BEFORE THE VEHICLES ENTER A PUBLIC ROAD. IF WASHING IS USED, PROVISIONS MUST BE MADE TO INTERCEPT THE WASH WATER AND TRAP THE SEDIMENT BEFORE IT IS CARRIED OFF THE SITE. ONLY USE INGRESS/EGRESS LOCATIONS AS PROVIDED.
10. ALL MATERIALS SPILLED, DROPPED, WASHED OR TRACKED FROM VEHICLES ONTO ROADWAYS OR INTO STORM DRAINS MUST BE REMOVED IMMEDIATELY.
11. CONTRACTORS OR SUBCONTRACTORS WILL BE RESPONSIBLE FOR REMOVING ACCUMULATED SEDIMENT IN SEDIMENT TRAPS/BASINS AS WELL AS ANY SEDIMENT THAT MAY HAVE COLLECTED IN THE ONSITE OR OFFSITE STORM SEWER DRAINAGE SYSTEMS.
12. ON-SITE AND OFF-SITE SOIL STOCKPILE AND BORROW AREAS SHALL BE PROTECTED FROM EROSION AND SEDIMENTATION THROUGH IMPLEMENTATION OF BEST MANAGEMENT PRACTICES. STOCKPILE AND BORROW AREA LOCATIONS SHALL BE NOTED ON THE SITE MAP AND PERMITTED IN ACCORDANCE WITH GENERAL PERMIT REQUIREMENTS.
13. SLOPES SHALL BE LEFT IN A ROUGHENED CONDITION DURING THE GRADING PHASE TO REDUCE RUNOFF VELOCITIES AND EROSION.
14. DUE TO THE GRADE CHANGES DURING THE DEVELOPMENT OF THE PROJECT, THE CONTRACTOR SHALL BE RESPONSIBLE FOR ADJUSTING THE EROSION AND SEDIMENT CONTROL MEASURES (SILT FENCES, ETC.) TO PREVENT EROSION AND POLLUTANT DISCHARGE.
15. ALL GRADED OR DISTURBED AREAS INCLUDING SLOPES SHALL BE PROTECTED DURING CLEARING AND CONSTRUCTION IN ACCORDANCE WITH THE APPROVED EROSION AND SEDIMENT CONTROL PLAN UNTIL THEY ARE PERMANENTLY STABILIZED.
16. ALL SEDIMENT CONTROL PRACTICES AND MEASURES SHALL BE CONSTRUCTED, APPLIED AND MAINTAINED IN ACCORDANCE WITH THE APPROVED EROSION AND SEDIMENT CONTROL PLAN.
17. TOPSOIL REQUIRED FOR THE ESTABLISHMENT OF VEGETATION SHALL BE STOCKPILED IN AMOUNT NECESSARY TO COMPLETE FINISHED GRADING OF ALL EXPOSED AREAS. EXCESS TOPSOIL TO REMAIN ON SITE.
18. TOPSOIL SHALL BE FREE OF INVASIVE SPECIES AND STABILIZED IF NOT REWORKED IN 7 DAYS. IF INVASIVE SPECIES ARE PRESENT THE STOCKPILE MUST BE TREATED PRIOR TO RE-USE.
19. AREAS TO BE FILLED SHALL BE CLEARED, GRUBBED, AND STRIPPED OF TOPSOIL PRIOR TO PLACEMENT OF FILL.
20. ALL FILLS SHALL BE COMPACTED AS REQUIRED TO REDUCE EROSION, SLIPPAGE, SETTLEMENT, SUBSIDENCE OR OTHER RELATED PROBLEMS.
21. LOCATION OF PROPOSED GEOTEXTILE SILT FENCE AS LABELED ON PLAN TO CORRESPOND WITH LIMITS OF CLEARING AND GRADING.
22. ALL WATER PUMPED FORM EXCAVATIONS (DEWATERING) MUST PASS THROUGH A SEDIMENT TRAPPING DEVICE BEFORE BEING DISCHARGED FROM THE SITE. THESE DEVICES INCLUDE, BUT ARE NOT LIMITED TO, SEDIMENT BAGS, PORTABLE SEDIMENT TANKS AND SEDIMENT TRAPS.
23. CONTAMINATED WATER CANNOT BE DISCHARGED FROM THE SITE.

EROSION & SEDIMENTATION CONTROL PROVISIONS

UNLESS SPECIFICALLY OUTLINED IN THE CONTRACT PLANS AND/OR SWPCP, THE CONTRACTOR IS NOT ALLOWED TO DISTURB MORE THAN TWO (2) ACRES (0.8094 HA) OF ERODIBLE MATERIAL PER DISCHARGE POINT AT ANY ONE TIME REGARDLESS OF PHASING.

IF THE CONTRACTOR ELECTS TO DISTURB MORE THAN TWO (2) ACRES (0.8094 HA) OF ERODIBLE MATERIAL PER DISCHARGE POINT AT ANY ONE TIME REGARDLESS OF PHASING, THE CONTRACTOR MUST PROVIDE A SEQUENCED STAGING PLAN OUTLINING THE PROPOSED DISTURBED ACTIVITIES. IN ALL CASES, THE CONTRACTOR MUST MEET THE FOLLOWING CONDITIONS:

• IF THE AREA OF DISTURBANCE IS MAINTAINED LESS THAN TWO (2) ACRES (0.8094 HA) PER DISCHARGE POINT, THE CONTRACTOR MAY DISTURB ADDITIONAL AREAS IF AND ONLY IF THE PREVIOUSLY DISTURBED AREAS ARE TEMPORARILY OR PERMANENTLY STABILIZED USING ACCEPTABLE MEASURES SUCH AS THE STANDARD CONTROLS WHICH ARE PROVIDED IN THE SWPCP OR AS SHOWN ON THE CONTRACT PLANS.

• IF THE CONSTRUCTION ACTIVITIES CREATE AN AREA OF DISTURBANCE TO BE AT LEAST TWO (2) ACRES (0.8094HA) PER DISCHARGE POINT BUT NO MORE THAN FIVE (5) ACRES (2.0235 HA) PER DISCHARGE POINT, THE CONTRACTOR MUST SUBMIT TO THE ENGINEER A REVISED SWPCP FOR REVIEW AND APPROVAL. THE SWPCP MUST INCLUDE THE LOCATION OF THE TEMPORARY SEDIMENTATION TRAP PER DISCHARGE POINT WITH A CAPACITY TO CONTAIN 134 CUBIC YARDS PER ACRE (102.5 M3 PER 0.4047 HA) OF MATERIAL. THE CONTRACTOR SHALL DESIGN AND CONSTRUCT THE TEMPORARY SEDIMENTATION TRAP IN ACCORDANCE WITH THE 2002 CONNECTICUT GUIDELINES FOR SOIL AND SEDIMENT CONTROL. THE CONTRACTOR SHALL PROVIDE AN INSPECTION AND MAINTENANCE PLAN FOR THE TEMPORARY SEDIMENTATION TRAP AS PART OF THE AMENDED SWPCP.

• IF THE AREA OF DISTURBANCE HAS A POTENTIAL TO REACH MORE THAN FIVE (5) ACRES (2.0235 HA) PER DISCHARGE POINT, THE CONTRACTOR MUST SUBMIT TO THE ENGINEER A REVISED SWPCP FOR REVIEW AND APPROVAL. THE SWPCP MUST INCLUDE LOCATIONS OF THE ENGINEERED SEDIMENTATION BASIN PER DISCHARGE POINT WITH A CAPACITY TO CONTAIN 134 CUBIC YARDS PER ACRE (102.5 M3 PER 0.4047 HA) OF MATERIAL. THE CONTRACTOR SHALL DESIGN AND CONSTRUCT THE ENGINEERED SEDIMENTATION BASIN IN ACCORDANCE WITH THE 2004 CONNECTICUT STORMWATER QUALITY MANUAL. THE CONTRACTOR SHALL PROVIDE AN INSPECTION AND MAINTENANCE PLAN FOR THE ENGINEERED SEDIMENTATION BASIN AS PART OF THE AMENDED SWPCP.

THE PERMITTEE SHALL AMEND THE SWPCP WHENEVER THERE IS A CHANGE IN CONTACTORS OR SUBCONTRACTORS AT THE SITE, OR A CHANGE IN DESIGN, CONSTRUCTION, OPERATION, OR MAINTENANCE AT THE SITE WHICH HAS THE POTENTIAL FOR THE DISCHARGE OF POLLUTANTS. IN ALL CASES AS DESCRIBED ABOVE, THE AMENDED SWPCP SHALL ADHERE TO AND COMPLY WITH SECTION 1.10 - ENVIRONMENTAL COMPLIANCE, OF THE STANDARD SPECIFICATIONS FOR ROADS, BRIDGES AND INCIDENTAL CONSTRUCTION FORM 816 AND ANY SUPPLEMENTS THERETO. NO ADDITIONAL PAYMENT WILL BE MADE FOR ANY PERMIT AMENDMENT, MODIFICATION, OR REVISION WHICH ALTERS THE CONTRACT PLANS OR SWPCP. CHANGES OR VARIATIONS TO THE CONTRACT PLANS AND/OR SWPCP BY THE CONTRACTOR SHALL NOT RESULT IN ANY ADDITIONAL COST.

GENERAL PHASING OF EROSION & SEDIMENTATION CONTROL MEASURES

THE CONSTRUCTION OF TEMPORARY SEDIMENT BASINS, IF REQUIRED, MUST BE COMPLETED BY THE CONTRACTOR BEFORE ANY OTHER WORK BEGINS AT THE SITE. EXTREME CAUTION MUST BE TAKEN TO LIMIT THE EXTENT OF DISTURBED AREAS. WORK SHALL BE CONDUCTED BY THE CONTRACTORIN THE FOLLOWING ORDER:

1. INSTALL ANTI-TRACKING PAD.
2. INSTALL PERIMETER CONTROLS (GEOTEXTILE SILT FENCE).
3. INSTALL EROSION AND SEDIMENT CONTROLS AT ALL EXISTING CATCH BASINS AND DRAINAGE STRUCTURES, EACH STOCKPILE AND STORAGE AREA AND IN OTHER AREAS AS INDICATED ON THE PLANS OR AS DIRECTED BY THE ENGINEER.
4. CONSTRUCT TEMPORARY SEDIMENTATION TRAPS AND/OR BASINS, IF REQUIRED.
5. DURING GRUBBING OPERATIONS, INSTALL CHECK DAMS AT ANY EVIDENT CONCENTRATED FLOW DISCHARGE POINTS.
6. STABILIZE ALL DISTURBED AREAS.
7. CONSTRUCT BUILDING FOUNDATIONS, RETAINING WALLS AND ROADWAYS PER CONTRACT PLANS.
8. INSTALL SITE UTILITIES INCLUDING STORMWATER MANAGEMENT PRACTICES.
9. INSTALL CURBS, SIDEWALKS, ASPHALT AND CONCRETE PAVEMENT.
10. RESTORE DISTURBED AREAS AND REMOVE TEMPORARY EROSION AND SEDIMENTATION CONTROL DEVICES.

SYMBOL LEGEND

- LOD = LIMITS OF DISTURBANCE
- HB = HAY BALE INLET PROTECTION
- SS = SILT SACK INLET PROTECTION
- ATP = ANTI-TRACKING PAD
- GSF = GEOTEXTILE SILT FENCE
- CW = CONCRETE WASHOUT
- = APPROXIMATE SOILS CLASSIFICATION LINE

1 EROSION AND SEDIMENT CONTROL PLAN

SCALE: 1"=40'

0 20 40 80

REV.	DATE	DESCRIPTION	SHEET NO.
		REVISIONS	

FILENAME:

THE INFORMATION, INCLUDING ESTIMATED QUANTITIES OF WORK, SHOWN ON THESE SHEETS IS BASED ON LIMITED INVESTIGATIONS BY THE STATE AND IS IN NO WAY WARRANTED TO INDICATE THE CONDITIONS OF ACTUAL QUANTITIES OF WORK WHICH WILL BE REQUIRED.

DESIGNER/DRAFTER: TJZ

CHECKED BY: DLK/SMR

SCALE: AS NOTED

STATE OF CONNECTICUT
DEPARTMENT OF TRANSPORTATION

ARCHITECT: WENDEL

ENGINEERS: ReSTL DESIGNERS, CLOUGH HARBOUR ASSOC., AI ENGINEERS, WENDEL

APPROVED BY: DCD

DATE: 6/11/14

DESIGNED BY:
WENDEL
140 JOHN JAMES AUDUBON PKWY.,
SUITE 201
AMHERST, NEW YORK
14228

STATE OF CONNECTICUT — DAVID C. DUDLEY — No. 11937 — REGISTERED PROFESSIONAL ENGINEER

PROJECT TITLE:
WATERBURY BUS MAINTENANCE FACILITY REPLACEMENT

ADDRESS:
FROST BRIDGE ROAD
WATERTOWN, CONNECTICUT 06787

DRAWING TITLE:
EROSION AND SEDIMENT CONTROL PLAN

PROJECT NO. **0431-0006**

DRAWING NO. **C-105**

SHEET NO. 03.008

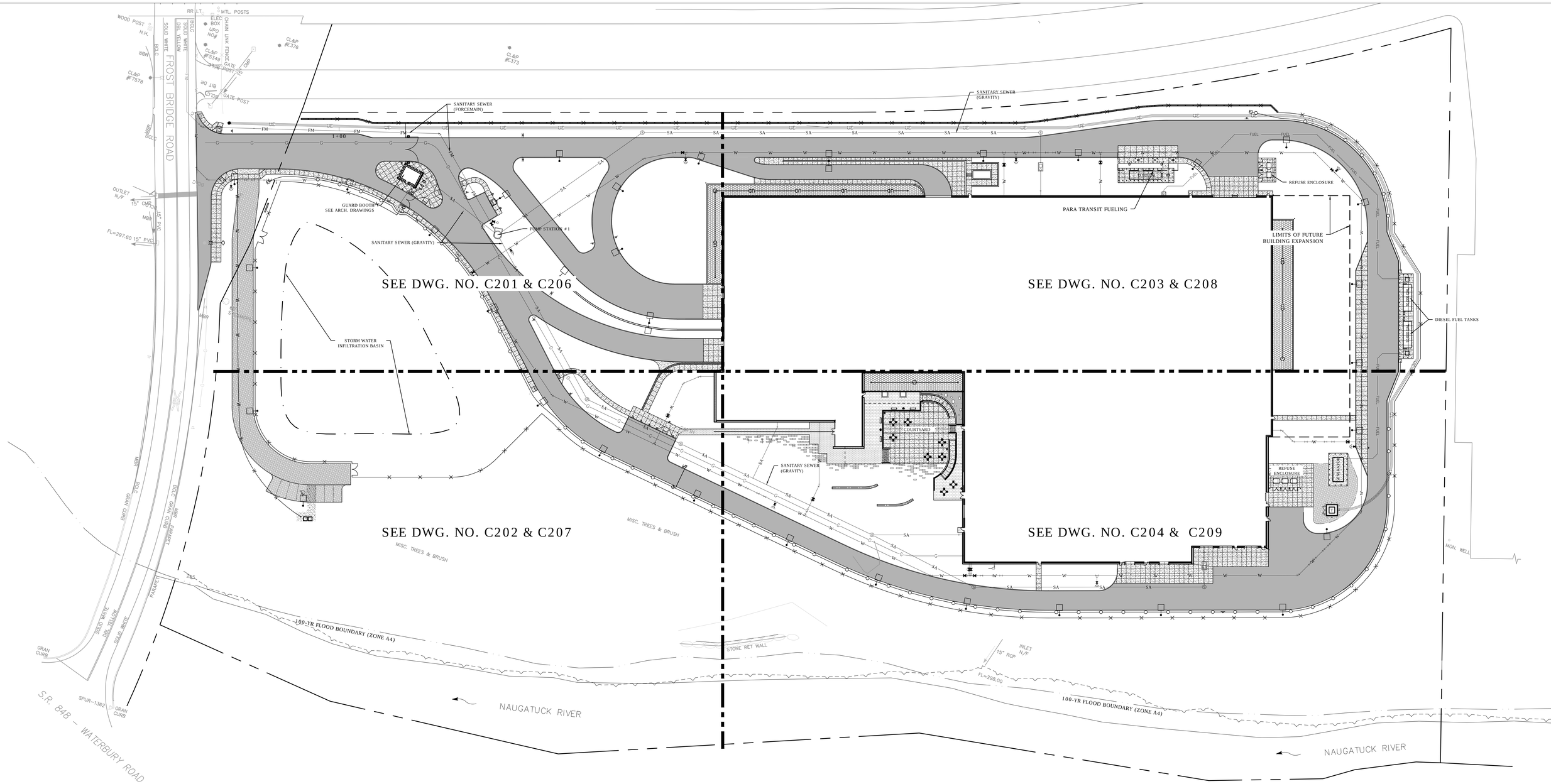

1 OVERALL LAYOUT AND UTILITY PLAN
SCALE: 1" = 40'

0 20 40 80

REV.	DATE	DESCRIPTION	SHEET NO.
		REVISIONS	

FILENAME:

THE INFORMATION, INCLUDING ESTIMATED QUANTITIES OF WORK, SHOWN ON THESE SHEETS IS BASED ON LIMITED INVESTIGATIONS BY THE STATE AND IS IN NO WAY WARRANTED TO INDICATE THE CONDITIONS OF ACTUAL QUANTITIES OF WORK WHICH WILL BE REQUIRED.

DESIGNER/DRAFTER: CML

CHECKED BY: DLK/SMR

SCALE: AS NOTED

STATE OF CONNECTICUT
DEPARTMENT OF TRANSPORTATION

ARCHITECT: WENDEL

APPROVED BY: DCD

ENGINEERS: ReSTL DESIGNERS, CLOUGH HARBOUR ASSOC., AI ENGINEERS, WENDEL

DATE: 6/11/14

DESIGNED BY:
WENDEL
140 JOHN JAMES AUDUBON PKWY., SUITE 201
AMHERST, NEW YORK 14228

STATE OF CONNECTICUT
DAVID C. DUCHSCHERER
No. 11937
REGISTERED PROFESSIONAL ENGINEER

PROJECT TITLE:
WATERBURY BUS MAINTENANCE FACILITY REPLACEMENT

ADDRESS:
FROST BRIDGE ROAD
WATERTOWN, CONNECTICUT 06787

DRAWING TITLE:
OVERALL LAYOUT & UTILITIES PLAN

PROJECT NO. **0431-0006**

DRAWING NO. **C-200**

SHEET NO. 03.009

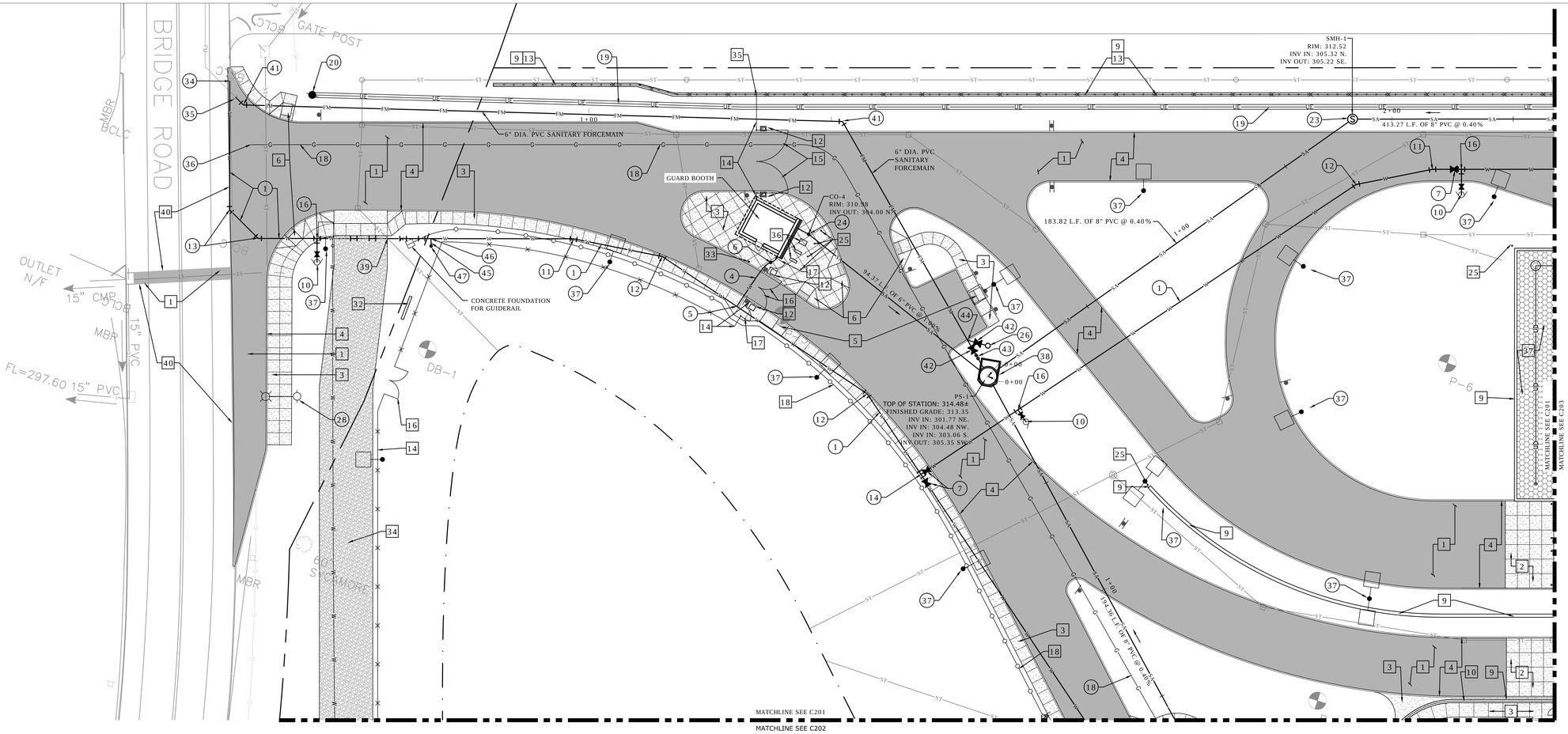

SITE IMPROVEMENT NOTES

(NOT ALL NOTES APPLY TO THIS SHEET)

1. HEAVY DUTY ASPHALT PAVEMENT; RE: 1, C-501.
2. HEAVY DUTY CONCRETE PAVEMENT; RE: 2, C-501.
3. CONCRETE SIDEWALK; RE: 3, C-501.
4. 6" CONCRETE CURBING; RE: HW-811_01.
5. PARALLEL SIDEWALK RAMP - TYPE 1; RE: HW-921_02.
6. DIAGONAL PARALLEL SIDEWALK RAMP - TYPE 4b; RE: HW-921_02.
7. LARGE SCALE NARROW MODULAR PAVER, TYPE A; RE: 6, C-501.
8. LARGE SCALE NARROW MODULAR PAVER, TYPE B; RE: 6, C-501 AND DETAIL 16 , C-501 FOR PAVERS IN LAWN AREA.
9. SITE RETAINING WALL; SEE SHEETS C-310 THRU C-312.
10. 42" TALL GUARDRAIL; RE: 4, C-502.
11. 24" CONCRETE SEAT WALL; RE: 9, C-501.
12. SWING GATE OPERATOR & FOUNDATION; RE: 11, C-501.
13. 4' HT. CHAIN LINK FENCE; RE: HW-913_01.
14. 8' HT. CHAIN LINK FENCE; RE: HW-913_01.
15. 26' WIDE 8' HT. DOUBLE LEAF SWING GATE; RE: 6, C-503.
16. 12' WIDE 8' HT. DOUBLE LEAF SWING GATE; RE: 6, C-503.
17. 4' WIDE 8' HT. SINGLE LEAF SWING GATE; RE: 7, C-503.
18. MERRITT PARKWAY GUIDERAIL; RE: HW-910_12b & HW-911_05.
19. CONCRETE STAIRS W/ CHEEK WALL, GUARDRAIL & HANDRAIL; RE: 1, C-502.
20. CONCRETE RAMP WITH CHEEK WALL, GUARDRAIL& HANDRAIL; RE: 2, C-502.
21. BARRIER GATE OPERATOR & FOUNDATION; RE: 12, C-501.
22. 30' FLAG POLE W/ INTERNAL HALYARD; RE: 8, C-501.
23. 35' FLAG POLE W/ INTERNAL HALYARD; RE: 8, C-501.
24. REFUSE ENCLOSURES & CONCRETE PAD; RE: 5, C-503.
25. STEEL BOLLARD; RE: 7, C-501.
26. GRAVEL MULCH; 15, C-501.
27. GRANITE BOULDERS 24-48"
28. BENCH; RE: 1, C-504.
29. TABLE & CHAIRS; RE: 2, C-504.
30. LITTER RECEPTACLE & SAND PAN; RE: 3, C-504.
31. LITTER RECEPTACLE; RE: 4, C-504.
32. FACILITY SIGNAGE; BY OTHERS.
33. GOOSE NECK PEDESTAL; RE: 2, E-708.
34. STONE ACCESS ROAD; 14, C-501.
35. END OF 8' TALL FENCE SHALL CONNECT TO 4' TALL FENCE. CONTRACTOR SHALL COORDINATE END POSTS.
36. TRANSFOMER AND MECHANICAL UNITS FOR GAURD BOOTH; REFER TO ELECTRIC AND MECHANICAL PLANS FOR DETAILS.
37. STONE PAVEMENT WITH UNDERDRAIN; RE:13, C-501.
38. CONCRETE STAIRS WITHOUT CHEEKWALLS; RE: 1, C-502 AND HANDRAIL ON SOUTH SIDE OF STAIR, GUARDRAIL WITH HANDRAIL ON NORTH SIDE OF STAIR; RE: 3, C-502
39. CONCRETE RAMP; RE: 2, C-502 AND HANDRAILS; RE: 3, C-502.
40. TACK COAT EDGE OF EXISTING PAVEMENT SAW CUT AND MATCH EXISTING PAVEMENT SECTION.

SITE UTILITY NOTES

(NOT ALL NOTES APPLY TO THIS SHEET)

1. 12"Ø D.I. WATERLINE
2. 10"Ø D.I. WATERLINE
3. 4"Ø D.I. WATERLINE
4. 3/4"Ø TYPE "K" COPPER WATER SERVICE LINE; RE: 10, C-506.
5. 3/4" WATER CORPORATION STOP; RE: 10, C-506.
6. 3/4" WATER CURB STOP AND BOX; RE: 10, C-506.
7. 12"Ø GATE VALVE; RE 3, C-506.
8. 10"Ø POST INDICATING VALVE ASSEMBLY; RE: 11, C-506. BURIAL DEPTH 4'6" - 5'6", L=90°, M.J. CONNECTIONS.
9. 4"Ø GATE VALVE; RE: 3, C-506.
10. FIRE HYDRANT ASSEMBLY (INCLUDES 6"Ø HYDRANT VALVE); RE: 4, C-506.
11. 11-1/4° BEND - 12"Ø
12. 22-1/2° BEND - 12"Ø
13. 45° BEND - 12"Ø
14. 12"x12" TEE
15. 12"X10" TEE
16. 12"X6" TEE
17. 12"X4" TEE
18. GAS SERVICE LINE TO RUN FROM NEW GAS MAIN IN FROST BRIDGE ROAD TO THE BUS MAINTENANCE FACILITY AS SHOWN. CONTRACTOR IS RESPONSIBLE FOR TRENCHING, BEDDING AND BACKFILL RE: 14, C504. YANKEE GAS WILL PROVIDE GAS SERVICE PIPE, LAY THE PIPE IN THE TRENCH AND MAKE REQUIRED CONNECTIONS AT THE MAIN AND AT THE BUILDING.
19. UNDERGROUND ELECTRIC AND TELECOMMUNICATIONS CONDUIT BANK. REFER TO ELECTRICAL DRAWINGS FOR CONDUIT BANK AND TRENCHING DETAIL.
20. NEW SERVICE POLE (BY UTILITY PROVIDER)
21. COALESCING OIL/WATER SEPARATOR DESIGN FLOW = 60 GPM; RE: 10, C505. CONTRACTOR TO PROVIDE RISERS, GRADE RINGS, SLABS, ETC., AS REQUIRED TO MEET FINISHED GRADE.
22. COALESCING OIL/WATER SEPARATOR DESIGN FLOW = 200 GPM; RE: 11, C-505. CONTRACTOR TO PROVIDE RISERS, GRADE RINGS, SLABS, ETC., AS REQUIRED TO MEET FINISHED GRADE.
23. SANITARY SEWER MANHOLE; RE: 1, C-505.
24. 6"Ø SANITARY CLEANOUT IN PAVEMENT; RE: 8, C-505.
25. 6"Ø SANITARY CLEANOUT IN LAWN; RE: 9, C-505
26. 6" PIG LAUNCHER ASSEMBLY; RE: 5, C-505.
27. 45° BEND - 10"Ø
28. RELOCATE POLE, BY OTHERS.
29. 2" DIESEL FUEL LINE. REFER TO DRAWING D202 FOR FUELING SYSTEM LAYOUT AND DIVISION 11 SPECIFICATIONS FOR PIPE MATERIAL.
30. DIESEL FUEL STORAGE TANKS. REFER TO DRAWING D-202 FOR FUELING SYSTEM LAYOUT. REFER TO STRUCTURAL DRAWINGS FOR CONCRETE PAD DESIGN.
31. GASOLINE STORAGE TANK. REFER TO DRAWING D-203 FOR FUELING SYSTEM LAYOUT. REFER TO STRUCTURAL DRAWINGS FOR CONCRETE PAD DESIGN.
32. TRANSFORMER. REFER TO ELECTRICAL DRAWINGS FOR DETAILED DESIGN. REFER TO STRUCTURAL DRAWINGS FOR CONCRETE PAD DESIGN.
33. GENERATOR. REFER TO ELECTRICAL DRAWINGS FOR DETAILED DESIGN. REFER TO STRUCTURAL DRAWINGS FOR CONCRETE PAD DESIGN. PAD TO EXTEND 4'-6" PAST EDGE OF GENERATOR ON ALL SIDES. PROVIDE 3'-0" MINIMUM CLEAR BETWEEN BOLLARDS AND GENERATOR.
34. CONNECT 12"Ø SITE WATER SYSTEM TO NEW TOWN WATER MAIN. TOWN WATERMAIN EXTENSION N.I.C. THE CONTRACTOR IS REQUIRED TO COORDINATE SCHEDULE AND UTILITY CONNECTIONS WITH THE CONTRACTOR INSTALLING THOSE UTILITIES BEFORE TESTING AND TIE IN WILL BE PERMITTED.
35. CONNECT 6"Ø SITE FORCEMAIN TO NEW TOWN SANITARY FORCEMAIN. TOWN SANITARY FORCEMAIN EXTENSION N.I.C. THE CONTRACTOR IS REQUIRED TO COORDINATE SCHEDULE AND UTILITY CONNECTIONS WITH THE CONTRACTOR INSTALLING THOSE UTILITIES BEFORE TESTING AND TIE IN WILL BE PERMITTED.
36. APPROXIMATE LOCATION OF SERVICE CONNECTION TO NEW GAS MAIN. GAS MAIN TO BE SUPPLIED AND INSTALLED BY YANKEE GAS.
37. LIGHT POLES. REFER TO ELECTRICAL DRAWINGS FOR FIXTURES, POLES AND POLE BASES.
38. SANITARY PUMP STATION PS-1; RE: C-507.
39. DEFLECT WATERLINE UNDER UTILITY; RE: 8, C-506
40. 22-1/2° BEND - 10"Ø
41. 45° BEND - 6"Ø
42. 6"Ø GATE VALVE; RE: 3, C-506.
43. PUMP STATION PRIMING LOCK LOOP; RE: C-507.
44. 6"X6"X6" WYE
45. 1"Ø TYPE "K" COPPER WATER SERVICE LINE; RE: 10, C-506.
46. 1" WATER CORPORATION STOP; RE: 10, C-506.
47. 1" WATER CURB STOP AND BOX; RE: 10, C-506.
48. 2"Ø TYPE "K" COPPER WATER SERVICE LINE FROM BUILDING. REFER TO PLUMPING PLANS.
49. 2" WATER CURB STOP AND BOX; RE: 10, C-506.
50. AUTOFLUSHER UNIT WITH 6"Ø PVC DRAIN LINE TO ADJACENT DRAINAGE STRUCTURE.

GENERAL UTILITY NOTES:

A. DIGITAL FILES WILL BE PROVIDED TO THE CONTRACTOR FOR THE PURPOSES OF LAYOUT.

B. DIGITAL FILES MAY TAKE THE FORM OF A GEO-REFERENCED AUTOCAD FILE AND/OR AN ASCI COORDINATE POINT FILE.

C. SEE SHEET C205 FOR SANITARY SEWER PROFILES

D. REFER TO PLUMBING DRAWINGS FOR CONTINUATION OF SANITARY SEWER, DOMESTIC WATER, FIRE PROTECTION, FUEL AND GAS PIPING INTO THE BUILDING.

1 MATERIALS & UTILITY PLAN
SCALE: 1"=20'
0 10 20 40

REV.	DATE	DESCRIPTION	SHEET NO.
		REVISIONS	

FILENAME:

THE INFORMATION, INCLUDING ESTIMATED QUANTITIES OF WORK, SHOWN ON THESE SHEETS IS BASED ON LIMITED INVESTIGATIONS BY THE STATE AND IS IN NO WAY WARRANTED TO INDICATE THE CONDITIONS OF ACTUAL QUANTITIES OF WORK WHICH WILL BE REQUIRED.

DESIGNER/DRAFTER: CML
CHECKED BY: DLK/SMR
SCALE: AS NOTED

STATE OF CONNECTICUT
DEPARTMENT OF TRANSPORTATION

ARCHITECT: WENDEL
APPROVED BY: DCD
ENGINEERS: ReSTL DESIGNERS, CLOUGH HARBOUR ASSOC., AI ENGINEERS, WENDEL
DATE: 6/11/14

DESIGNED BY:
WENDEL
140 JOHN JAMES AUDUBON PKWY., SUITE 201
AMHERST, NEW YORK 14228

STATE OF CONNECTICUT
DAVID C. DUDLEY
No. 11937
REGISTERED PROFESSIONAL ENGINEER

PROJECT TITLE:
WATERBURY BUS MAINTENANCE FACILITY REPLACEMENT

ADDRESS:
FROST BRIDGE ROAD
WATERTOWN, CONNECTICUT 06787

DRAWING TITLE:
MATERIALS & UTILITIES PLAN

PROJECT NO. **0431-0006**
DRAWING NO. **C-201**
SHEET NO. 03.010

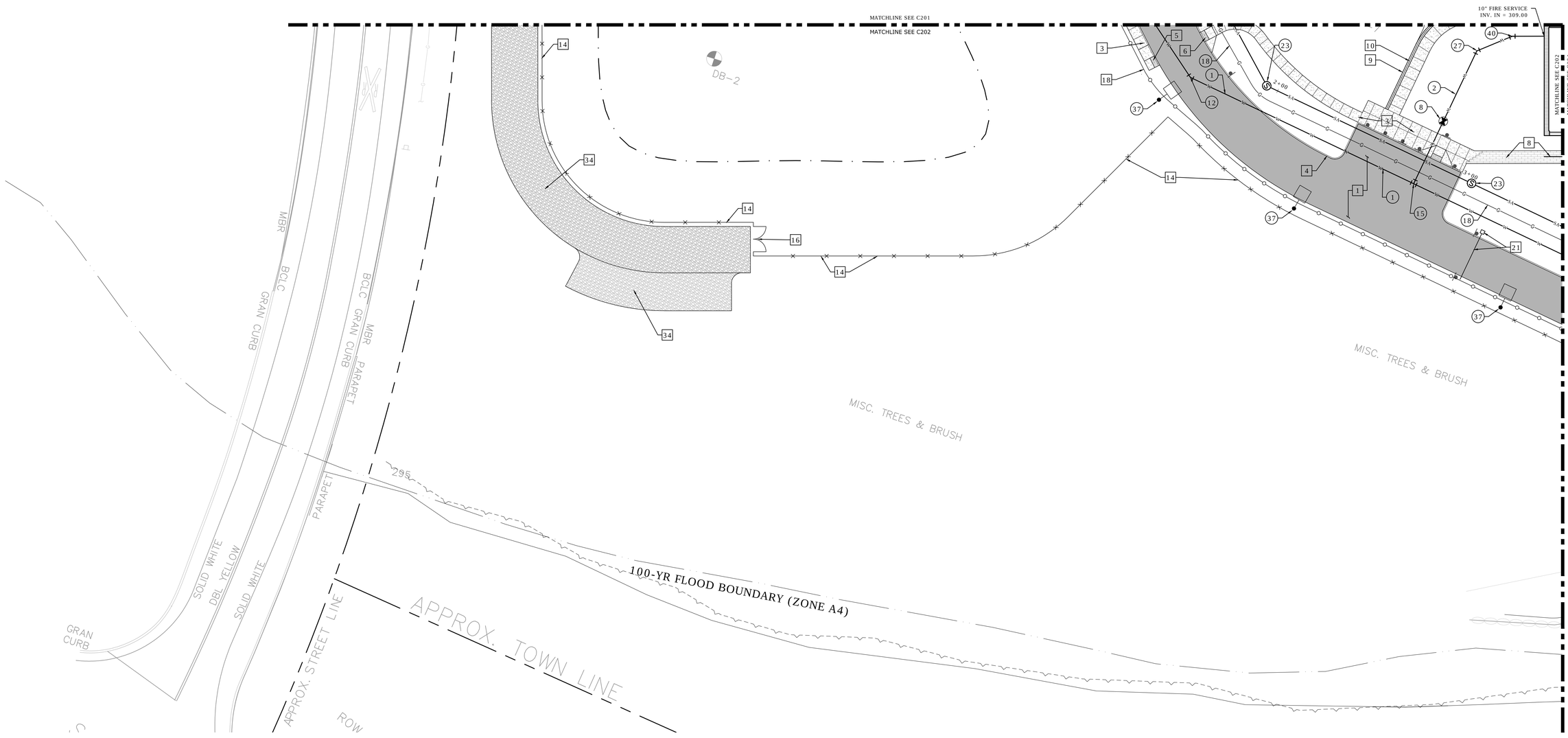

SITE IMPROVEMENT NOTES (NOT ALL NOTES APPLY TO THIS SHEET)

1. HEAVY DUTY ASPHALT PAVEMENT; RE: 1, C-501.
2. HEAVY DUTY CONCRETE PAVEMENT; RE: 2, C-501.
3. CONCRETE SIDEWALK; RE: 3, C-501.
4. 6" CONCRETE CURBING; RE: HW-811_01.
5. PARALLEL SIDEWALK RAMP - TYPE 1; RE: HW-921_02.
6. DIAGONAL PARALLEL SIDEWALK RAMP - TYPE 4b; RE: HW-921_02.
7. LARGE SCALE NARROW MODULAR PAVER, TYPE A; RE: 6, C-501.
8. LARGE SCALE NARROW MODULAR PAVER, TYPE B; RE: 6, C-501 AND DETAIL 16 , C-501 FOR PAVERS IN LAWN AREA.
9. SITE RETAINING WALL; SEE SHEETS C-310 THRU C-312.
10. 42" TALL GUARDRAIL; RE: 4, C-502.
11. 24" CONCRETE SEAT WALL; RE: 9, C-501.
12. SWING GATE OPERATOR & FOUNDATION; RE: 11, C-501.
13. 4' HT. CHAIN LINK FENCE; RE: HW-913_01.
14. 8' HT. CHAIN LINK FENCE; RE: HW-913_01.
15. 26' WIDE 8' HT. DOUBLE LEAF SWING GATE; RE: 6, C-503.
16. 12' WIDE 8' HT. DOUBLE LEAF SWING GATE; RE: 6, C-503.
17. 4' WIDE 8' HT. SINGLE LEAF SWING GATE; RE: 7, C-503.
18. MERRITT PARKWAY GUIDERAIL; RE: HW-910_12b & HW-911_05.
19. CONCRETE STAIRS W/ CHEEK WALL, GUARDRAIL & HANDRAIL; RE: 1, C-502.
20. CONCRETE RAMP WITH CHEEK WALL, GUARDRAIL& HANDRAIL; RE: 2, C-502.
21. BARRIER GATE OPERATOR & FOUNDATION; RE: 12, C-501.
22. 30' FLAG POLE W/ INTERNAL HALYARD; RE: 8, C-501.
23. 35' FLAG POLE W/ INTERNAL HALYARD; RE: 8, C-501.
24. REFUSE ENCLOSURES & CONCRETE PAD; RE: 5, C-503.
25. STEEL BOLLARD; RE: 7, C-501.
26. GRAVEL MULCH; 15, C-501.
27. GRANITE BOULDERS 24-48"
28. BENCH; RE: 1, C-504.
29. TABLE & CHAIRS; RE: 2, C-504.
30. LITTER RECEPTACLE & SAND PAN; RE: 3, C-504.
31. LITTER RECEPTACLE; RE: 4, C-504.
32. FACILITY SIGNAGE; BY OTHERS.
33. GOOSE NECK PEDESTAL; RE: 2, E-708.
34. STONE ACCESS ROAD; 14, C-501.
35. END OF 8' TALL FENCE SHALL CONNECT TO 4' TALL FENCE. CONTRACTOR SHALL COORDINATE END POSTS.
36. TRANSFOMER AND MECHANICAL UNITS FOR GAURD BOOTH; REFER TO ELECTRIC AND MECHANICAL PLANS FOR DETAILS.
37. STONE PAVEMENT WITH UNDERDRAIN; RE:13, C-501.
38. CONCRETE STAIRS WITHOUT CHEEKWALLS; RE: 1, C-502 AND HANDRAIL ON SOUTH SIDE OF STAIR, GUARDRAIL WITH HANDRAIL ON NORTH SIDE OF STAIR; RE: 3, C-502
39. CONCRETE RAMP; RE: 2, C-502 AND HANDRAILS; RE: 3, C-502.
40. TACK COAT EDGE OF EXISTING PAVEMENT SAW CUT AND MATCH EXISTING PAVEMENT SECTION.

SITE UTILITY NOTES (NOT ALL NOTES APPLY TO THIS SHEET)

1. 12"Ø D.I. WATERLINE
2. 10"Ø D.I. WATERLINE
3. 4"Ø D.I. WATERLINE
4. 3/4"Ø TYPE "K" COPPER WATER SERVICE LINE; RE: 10, C-506.
5. 3/4" WATER CORPORATION STOP; RE: 10, C-506.
6. 3/4" WATER CURB STOP AND BOX; RE: 10, C-506.
7. 12"Ø GATE VALVE; RE 3, C-506.
8. 10"Ø POST INDICATING VALVE ASSEMBLY; RE: 11, C-506. BURIAL DEPTH 4'6" - 5'6", L=90°, M.J. CONNECTIONS.
9. 4"Ø GATE VALVE; RE: 3, C-506.
10. FIRE HYDRANT ASSEMBLY (INCLUDES 6"Ø HYDRANT VALVE); RE: 4, C-506.
11. 11-1/4° BEND - 12"Ø
12. 22-1/2° BEND - 12"Ø
13. 45° BEND - 12"Ø
14. 12"x12" TEE
15. 12"X10" TEE
16. 12"X6" TEE
17. 12"X4" TEE
18. GAS SERVICE LINE TO RUN FROM NEW GAS MAIN IN FROST BRIDGE ROAD TO THE BUS MAINTENANCE FACILITY AS SHOWN. CONTRACTOR IS RESPONSIBLE FOR TRENCHING, BEDDING AND BACKFILL RE: 14, C504. YANKEE GAS WILL PROVIDE GAS SERVICE PIPE, LAY THE PIPE IN THE TRENCH AND MAKE REQUIRED CONNECTIONS AT THE MAIN AND AT THE BUILDING.
19. UNDERGROUND ELECTRIC AND TELECOMMUNICATIONS CONDUIT BANK. REFER TO ELECTRICAL DRAWINGS FOR CONDUIT BANK AND TRENCHING DETAIL.
20. NEW SERVICE POLE (BY UTILITY PROVIDER)
21. COALESCING OIL/WATER SEPARATOR DESIGN FLOW = 60 GPM; RE: 10, C505. CONTRACTOR TO PROVIDE RISERS, GRADE RINGS, SLABS, ETC., AS REQUIRED TO MEET FINISHED GRADE.
22. COALESCING OIL/WATER SEPARATOR DESIGN FLOW = 200 GPM; RE: 11, C-505. CONTRACTOR TO PROVIDE RISERS, GRADE RINGS, SLABS, ETC., AS REQUIRED TO MEET FINISHED GRADE.
23. SANITARY SEWER MANHOLE; RE: 1, C-505.
24. 6"Ø SANITARY CLEANOUT IN PAVEMENT; RE: 8, C-505.
25. 6"Ø SANITARY CLEANOUT IN LAWN; RE: 9, C-505
26. 6" PIG LAUNCHER ASSEMBLY; RE: 5, C-505.
27. 45° BEND - 10"Ø
28. RELOCATE POLE, BY OTHERS.
29. 2" DIESEL FUEL LINE. REFER TO DRAWING D202 FOR FUELING SYSTEM LAYOUT AND DIVISION 11 SPECIFICATIONS FOR PIPE MATERIAL.
30. DIESEL FUEL STORAGE TANKS. REFER TO DRAWING D-202 FOR FUELING SYSTEM LAYOUT. REFER TO STRUCTURAL DRAWINGS FOR CONCRETE PAD DESIGN.
31. GASOLINE STORAGE TANK. REFER TO DRAWING D-203 FOR FUELING SYSTEM LAYOUT. REFER TO STRUCTURAL DRAWINGS FOR CONCRETE PAD DESIGN.
32. TRANSFORMER. REFER TO ELECTRICAL DRAWINGS FOR DETAILED DESIGN. REFER TO STRUCTURAL DRAWINGS FOR CONCRETE PAD DESIGN.
33. GENERATOR. REFER TO ELECTRICAL DRAWINGS FOR DETAILED DESIGN. REFER TO STRUCTURAL DRAWINGS FOR CONCRETE PAD DESIGN. PAD TO EXTEND 4'-6" PAST EDGE OF GENERATOR ON ALL SIDES. PROVIDE 3'-0" MINIMUM CLEAR BETWEEN BOLLARDS AND GENERATOR.
34. CONNECT 12"Ø SITE WATER SYSTEM TO NEW TOWN WATER MAIN. TOWN WATERMAIN EXTENSION N.I.C. THE CONTRACTOR IS REQUIRED TO COORDINATE SCHEDULE AND UTILITY CONNECTIONS WITH THE CONTRACTOR INSTALLING THOSE UTILITIES BEFORE TESTING AND TIE IN WILL BE PERMITTED.
35. CONNECT 6"Ø SITE FORCEMAIN TO NEW TOWN SANITARY FORCEMAIN. TOWN SANITARY FORCEMAIN EXTENSION N.I.C. THE CONTRACTOR IS REQUIRED TO COORDINATE SCHEDULE AND UTILITY CONNECTIONS WITH THE CONTRACTOR INSTALLING THOSE UTILITIES BEFORE TESTING AND TIE IN WILL BE PERMITTED.
36. APPROXIMATE LOCATION OF SERVICE CONNECTION TO NEW GAS MAIN. GAS MAIN TO BE SUPPLIED AND INSTALLED BY YANKEE GAS.
37. LIGHT POLES. REFER TO ELECTRICAL DRAWINGS FOR FIXTURES, POLES AND POLE BASES.
38. SANITARY PUMP STATION PS-1; RE: C-507.
39. DEFLECT WATERLINE UNDER UTILITY; RE: 8, C-506
40. 22-1/2° BEND - 10"Ø
41. 45° BEND - 6"Ø
42. 6"Ø GATE VALVE; RE: 3, C-506.
43. PUMP STATION PRIMING LOCK LOOP; RE: C-507.
44. 6"X6"X6" WYE
45. 1"Ø TYPE "K" COPPER WATER SERVICE LINE; RE: 10, C-506.
46. 1" WATER CORPORATION STOP; RE: 10, C-506.
47. 1" WATER CURB STOP AND BOX; RE: 10, C-506.
48. 2"Ø TYPE "K" COPPER WATER SERVICE LINE FROM BUILDING. REFER TO PLUMPING PLANS.
49. 2" WATER CURB STOP AND BOX; RE: 10, C-506.
50. AUTOFLUSHER UNIT WITH 6"Ø PVC DRAIN LINE TO ADJACENT DRAINAGE STRUCTURE.

GENERAL UTILITY NOTES:

A. DIGITAL FILES WILL BE PROVIDED TO THE CONTRACTOR FOR THE PURPOSES OF LAYOUT.

B. DIGITAL FILES MAY TAKE THE FORM OF A GEO-REFERENCED AUTOCAD FILE AND/OR AN ASCI COORDINATE POINT FILE.

C. SEE SHEET C205 FOR SANITARY SEWER PROFILES

D. REFER TO PLUMBING DRAWINGS FOR CONTINUATION OF SANITARY SEWER, DOMESTIC WATER, FIRE PROTECTION, FUEL AND GAS PIPING INTO THE BUILDING.

1 MATERIALS & UTILITY PLAN

SCALE: 1"=20'

0 10 20 40

REV.	DATE	DESCRIPTION	SHEET NO.
		REVISIONS	

FILENAME:

THE INFORMATION, INCLUDING ESTIMATED QUANTITIES OF WORK, SHOWN ON THESE SHEETS IS BASED ON LIMITED INVESTIGATIONS BY THE STATE AND IS IN NO WAY WARRANTED TO INDICATE THE CONDITIONS OF ACTUAL QUANTITIES OF WORK WHICH WILL BE REQUIRED.

DESIGNER/DRAFTER: CML

CHECKED BY: DLK/SMR

SCALE: AS NOTED

STATE OF CONNECTICUT
DEPARTMENT OF TRANSPORTATION

ARCHITECT: WENDEL

ENGINEERS: ReSTL DESIGNERS, CLOUGH HARBOUR ASSOC., AI ENGINEERS, WENDEL

APPROVED BY: DCD

DATE: 6/11/14

DESIGNED BY:

WENDEL
140 JOHN JAMES AUDUBON PKWY., SUITE 201
AMHERST, NEW YORK 14228

STATE OF CONNECTICUT
DAVID C. DUCHENEAU
No. 11937
REGISTERED PROFESSIONAL ENGINEER

PROJECT TITLE:

WATERBURY BUS MAINTENANCE FACILITY REPLACEMENT

ADDRESS: FROST BRIDGE ROAD
WATERTOWN, CONNECTICUT 06787

DRAWING TITLE:

MATERIALS & UTILITIES PLAN

PROJECT NO. 0431-0006

DRAWING NO. C-202

SHEET NO. 03.011

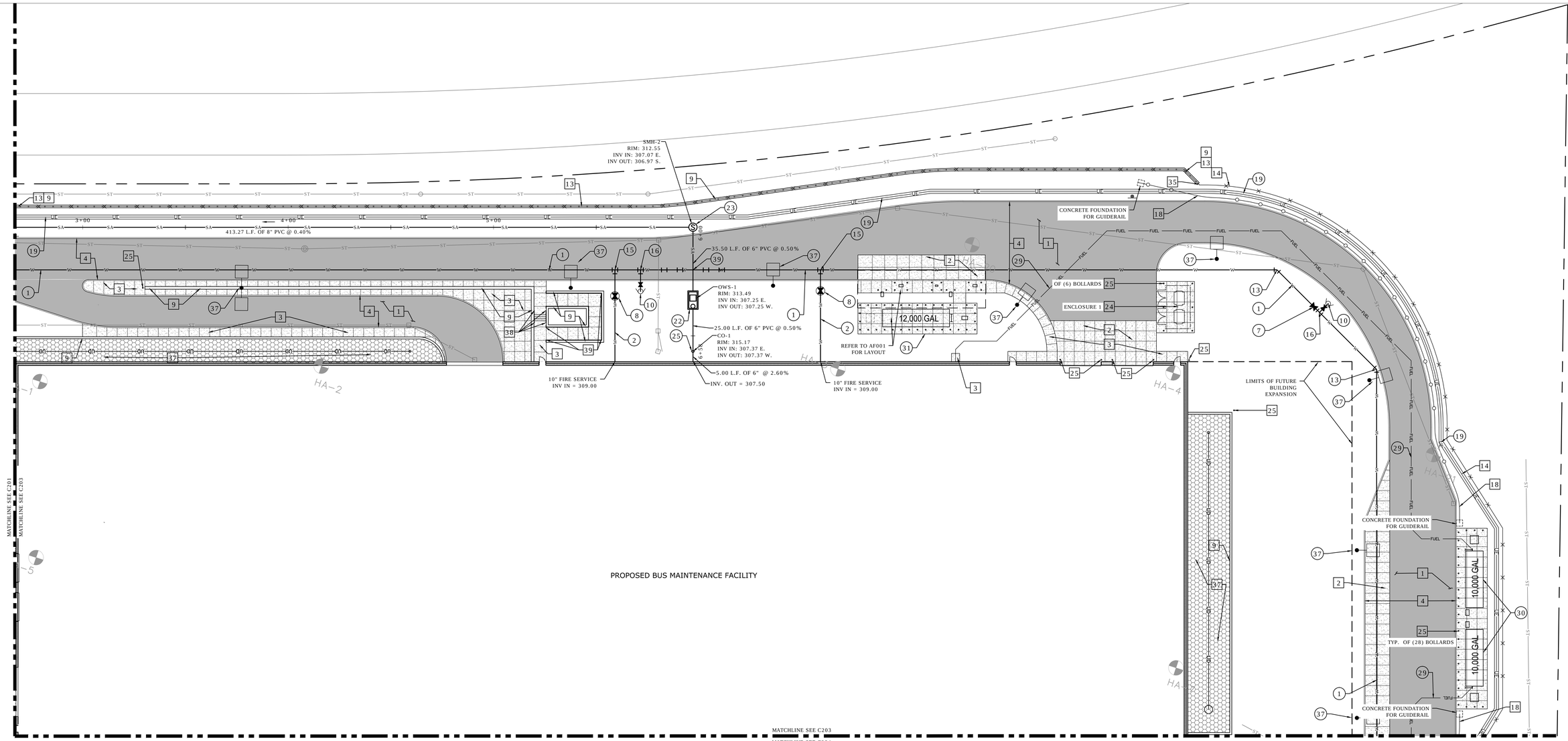

SITE IMPROVEMENT NOTES

(NOT ALL NOTES APPLY TO THIS SHEET)

1. HEAVY DUTY ASPHALT PAVEMENT; RE: 1, C-501.
2. HEAVY DUTY CONCRETE PAVEMENT; RE: 2, C-501.
3. CONCRETE SIDEWALK; RE: 3, C-501.
4. 6" CONCRETE CURBING; RE: HW-811_01.
5. PARALLEL SIDEWALK RAMP - TYPE 1; RE: HW-921_02.
6. DIAGONAL PARALLEL SIDEWALK RAMP - TYPE 4b; RE: HW-921_02.
7. LARGE SCALE NARROW MODULAR PAVER, TYPE A; RE: 6, C-501.
8. LARGE SCALE NARROW MODULAR PAVER, TYPE B; RE: 6, C-501 AND DETAIL 16 , C-501 FOR PAVERS IN LAWN AREA.
9. SITE RETAINING WALL; SEE SHEETS C-310 THRU C-312.
10. 42" TALL GUARDRAIL; RE: 4, C-502.
11. 24" CONCRETE SEAT WALL; RE: 9, C-501.
12. SWING GATE OPERATOR & FOUNDATION; RE: 11, C-501.
13. 4' HT. CHAIN LINK FENCE; RE: HW-913_01.
14. 8' HT. CHAIN LINK FENCE; RE: HW-913_01.
15. 26' WIDE 8' HT. DOUBLE LEAF SWING GATE; RE: 6, C-503.
16. 12' WIDE 8' HT. DOUBLE LEAF SWING GATE; RE: 6, C-503.
17. 4' WIDE 8' HT. SINGLE LEAF SWING GATE; RE: 7, C-503.
18. MERRITT PARKWAY GUIDERAIL; RE: HW-910_12b & HW-911_05.
19. CONCRETE STAIRS W/ CHEEK WALL, GUARDRAIL & HANDRAIL; RE: 1, C-502.
20. CONCRETE RAMP WITH CHEEK WALL, GUARDRAIL& HANDRAIL; RE: 2, C-502.
21. BARRIER GATE OPERATOR & FOUNDATION; RE: 12, C-501.
22. 30' FLAG POLE W/ INTERNAL HALYARD; RE: 8, C-501.
23. 35' FLAG POLE W/ INTERNAL HALYARD; RE: 8, C-501.
24. REFUSE ENCLOSURES & CONCRETE PAD; RE: 5, C-503.
25. STEEL BOLLARD; RE: 7, C-501.
26. GRAVEL MULCH; 15, C-501.
27. GRANITE BOULDERS 24-48"
28. BENCH; RE: 1, C-504.
29. TABLE & CHAIRS; RE: 2, C-504.
30. LITTER RECEPTACLE & SAND PAN; RE: 3, C-504.
31. LITTER RECEPTACLE; RE: 4, C-504.
32. FACILITY SIGNAGE; BY OTHERS.
33. GOOSE NECK PEDESTAL; RE: 2, E-708.
34. STONE ACCESS ROAD; 14, C-501.
35. END OF 8' TALL FENCE SHALL CONNECT TO 4' TALL FENCE. CONTRACTOR SHALL COORDINATE END POSTS.
36. TRANSFOMER AND MECHANICAL UNITS FOR GAURD BOOTH; REFER TO ELECTRIC AND MECHANICAL PLANS FOR DETAILS.
37. STONE PAVEMENT WITH UNDERDRAIN; RE:13, C-501.
38. CONCRETE STAIRS WITHOUT CHEEKWALLS; RE: 1, C-502 AND HANDRAIL ON SOUTH SIDE OF STAIR, GUARDRAIL WITH HANDRAIL ON NORTH SIDE OF STAIR; RE: 3, C-502
39. CONCRETE RAMP; RE: 2, C-502 AND HANDRAILS; RE: 3, C-502.
40. TACK COAT EDGE OF EXISTING PAVEMENT SAW CUT AND MATCH EXISTING PAVEMENT SECTION.

SITE UTILITY NOTES

(NOT ALL NOTES APPLY TO THIS SHEET)

1. 12"Ø D.I. WATERLINE
2. 10"Ø D.I. WATERLINE
3. 4"Ø D.I. WATERLINE
4. 3/4"Ø TYPE "K" COPPER WATER SERVICE LINE; RE: 10, C-506.
5. 3/4" WATER CORPORATION STOP; RE: 10, C-506.
6. 3/4" WATER CURB STOP AND BOX; RE: 10, C-506.
7. 12"Ø GATE VALVE; RE 3, C-506.
8. 10"Ø POST INDICATING VALVE ASSEMBLY; RE: 11, C-506. BURIAL DEPTH 4'6" - 5'6", L=90", M.J. CONNECTIONS.
9. 4"Ø GATE VALVE; RE: 3, C-506.
10. FIRE HYDRANT ASSEMBLY (INCLUDES 6"Ø HYDRANT VALVE); RE: 4, C-506.
11. 11-1/4° BEND - 12"Ø
12. 22-1/2° BEND - 12"Ø
13. 45° BEND - 12"Ø
14. 12"x12" TEE
15. 12"X10" TEE
16. 12"X6" TEE
17. 12"X4" TEE
18. GAS SERVICE LINE TO RUN FROM NEW GAS MAIN IN FROST BRIDGE ROAD TO THE BUS MAINTENANCE FACILITY AS SHOWN. CONTRACTOR IS RESPONSIBLE FOR TRENCHING, BEDDING AND BACKFILL RE: 14, C504. YANKEE GAS WILL PROVIDE GAS SERVICE PIPE, LAY THE PIPE IN THE TRENCH AND MAKE REQUIRED CONNECTIONS AT THE MAIN AND AT THE BUILDING.
19. UNDERGROUND ELECTRIC AND TELECOMMUNICATIONS CONDUIT BANK. REFER TO ELECTRICAL DRAWINGS FOR CONDUIT BANK AND TRENCHING DETAIL.
20. NEW SERVICE POLE (BY UTILITY PROVIDER)
21. COALESCING OIL/WATER SEPARATOR DESIGN FLOW = 60 GPM; RE: 10, C505. CONTRACTOR TO PROVIDE RISERS, GRADE RINGS, SLABS, ETC., AS REQUIRED TO MEET FINISHED GRADE.
22. COALESCING OIL/WATER SEPARATOR DESIGN FLOW = 200 GPM; RE: 11, C-505. CONTRACTOR TO PROVIDE RISERS, GRADE RINGS, SLABS, ETC., AS REQUIRED TO MEET FINISHED GRADE.
23. SANITARY SEWER MANHOLE; RE: 1, C-505.
24. 6"Ø SANITARY CLEANOUT IN PAVEMENT; RE: 8, C-505.
25. 6"Ø SANITARY CLEANOUT IN LAWN; RE: 9, C-505
26. 6" PIG LAUNCHER ASSEMBLY; RE: 5, C-505.
27. 45° BEND - 10"Ø
28. RELOCATE POLE, BY OTHERS.
29. 2" DIESEL FUEL LINE. REFER TO DRAWING D202 FOR FUELING SYSTEM LAYOUT AND DIVISION 11 SPECIFICATIONS FOR PIPE MATERIAL.
30. DIESEL FUEL STORAGE TANKS. REFER TO DRAWING D-202 FOR FUELING SYSTEM LAYOUT. REFER TO STRUCTURAL DRAWINGS FOR CONCRETE PAD DESIGN.
31. GASOLINE STORAGE TANK. REFER TO DRAWING D-203 FOR FUELING SYSTEM LAYOUT. REFER TO STRUCTURAL DRAWINGS FOR CONCRETE PAD DESIGN.
32. TRANSFORMER. REFER TO ELECTRICAL DRAWINGS FOR DETAILED DESIGN. REFER TO STRUCTURAL DRAWINGS FOR CONCRETE PAD DESIGN.
33. GENERATOR. REFER TO ELECTRICAL DRAWINGS FOR DETAILED DESIGN. REFER TO STRUCTURAL DRAWINGS FOR CONCRETE PAD DESIGN. PAD TO EXTEND 4'-6" PAST EDGE OF GENERATOR ON ALL SIDES. PROVIDE 3'-0" MINIMUM CLEAR BETWEEN BOLLARDS AND GENERATOR.
34. CONNECT 12"Ø SITE WATER SYSTEM TO NEW TOWN WATER MAIN. TOWN WATERMAIN EXTENSION N.I.C. THE CONTRACTOR IS REQUIRED TO COORDINATE SCHEDULE AND UTILITY CONNECTIONS WITH THE CONTRACTOR INSTALLING THOSE UTILITIES BEFORE TESTING AND TIE IN WILL BE PERMITTED.
35. CONNECT 6"Ø SITE FORCEMAIN TO NEW TOWN SANITARY FORCEMAIN. TOWN SANITARY FORCEMAIN EXTENSION N.I.C. THE CONTRACTOR IS REQUIRED TO COORDINATE SCHEDULE AND UTILITY CONNECTIONS WITH THE CONTRACTOR INSTALLING THOSE UTILITIES BEFORE TESTING AND TIE IN WILL BE PERMITTED.
36. APPROXIMATE LOCATION OF SERVICE CONNECTION TO NEW GAS MAIN. GAS MAIN TO BE SUPPLIED AND INSTALLED BY YANKEE GAS.
37. LIGHT POLES. REFER TO ELECTRICAL DRAWINGS FOR FIXTURES, POLES AND POLE BASES.
38. SANITARY PUMP STATION PS-1; RE: C-507.
39. DEFLECT WATERLINE UNDER UTILITY; RE: 8, C-506
40. 22-1/2° BEND - 10"Ø
41. 45° BEND - 6"Ø
42. 6"Ø GATE VALVE; RE: 3, C-506.
43. PUMP STATION PRIMING LOCK LOOP; RE: C-507.
44. 6"X6"X6" WYE
45. 1"Ø TYPE "K" COPPER WATER SERVICE LINE; RE: 10, C-506.
46. 1" WATER CORPORATION STOP; RE: 10, C-506.
47. 1" WATER CURB STOP AND BOX; RE: 10, C-506.
48. 2"Ø TYPE "K" COPPER WATER SERVICE LINE FROM BUILDING. REFER TO PLUMPING PLANS.
49. 2" WATER CURB STOP AND BOX; RE: 10, C-506.
50. AUTOFLUSHER UNIT WITH 6"Ø PVC DRAIN LINE TO ADJACENT DRAINAGE STRUCTURE.

GENERAL UTILITY NOTES:

A. DIGITAL FILES WILL BE PROVIDED TO THE CONTRACTOR FOR THE PURPOSES OF LAYOUT.

B. DIGITAL FILES MAY TAKE THE FORM OF A GEO-REFERENCED AUTOCAD FILE AND/OR AN ASCI COORDINATE POINT FILE.

C. SEE SHEET C205 FOR SANITARY SEWER PROFILES

D. REFER TO PLUMBING DRAWINGS FOR CONTINUATION OF SANITARY SEWER, DOMESTIC WATER, FIRE PROTECTION, FUEL AND GAS PIPING INTO THE BUILDING.

1 MATERIALS & UTILITY PLAN
SCALE: 1"=20'

0 10 20 40

REV.	DATE	DESCRIPTION	SHEET NO.
		REVISIONS	

FILENAME:

THE INFORMATION, INCLUDING ESTIMATED QUANTITIES OF WORK, SHOWN ON THESE SHEETS IS BASED ON LIMITED INVESTIGATIONS BY THE STATE AND IS IN NO WAY WARRANTED TO INDICATE THE CONDITIONS OF ACTUAL QUANTITIES OF WORK WHICH WILL BE REQUIRED.

DESIGNER/DRAFTER: CML
CHECKED BY: DLK/SMR
SCALE: AS NOTED

STATE OF CONNECTICUT
DEPARTMENT OF TRANSPORTATION

ARCHITECT: WENDEL
ENGINEERS: ReSTL DESIGNERS, CLOUGH HARBOUR ASSOC., AI ENGINEERS, WENDEL
APPROVED BY: DCD
DATE: 6/11/14

DESIGNED BY:
WENDEL
140 JOHN JAMES AUDUBON PKWY., SUITE 201
AMHERST, NEW YORK 14228

STATE OF CONNECTICUT · DAVID C. DUCHESNEAU · No. 11937 · REGISTERED PROFESSIONAL ENGINEER

PROJECT TITLE:
WATERBURY BUS MAINTENANCE FACILITY REPLACEMENT

ADDRESS: FROST BRIDGE ROAD WATERTOWN, CONNECTICUT 06787

DRAWING TITLE:
MATERIALS & UTILITIES PLAN

PROJECT NO. 0431-0006
DRAWING NO. C-203
SHEET NO. 03.012

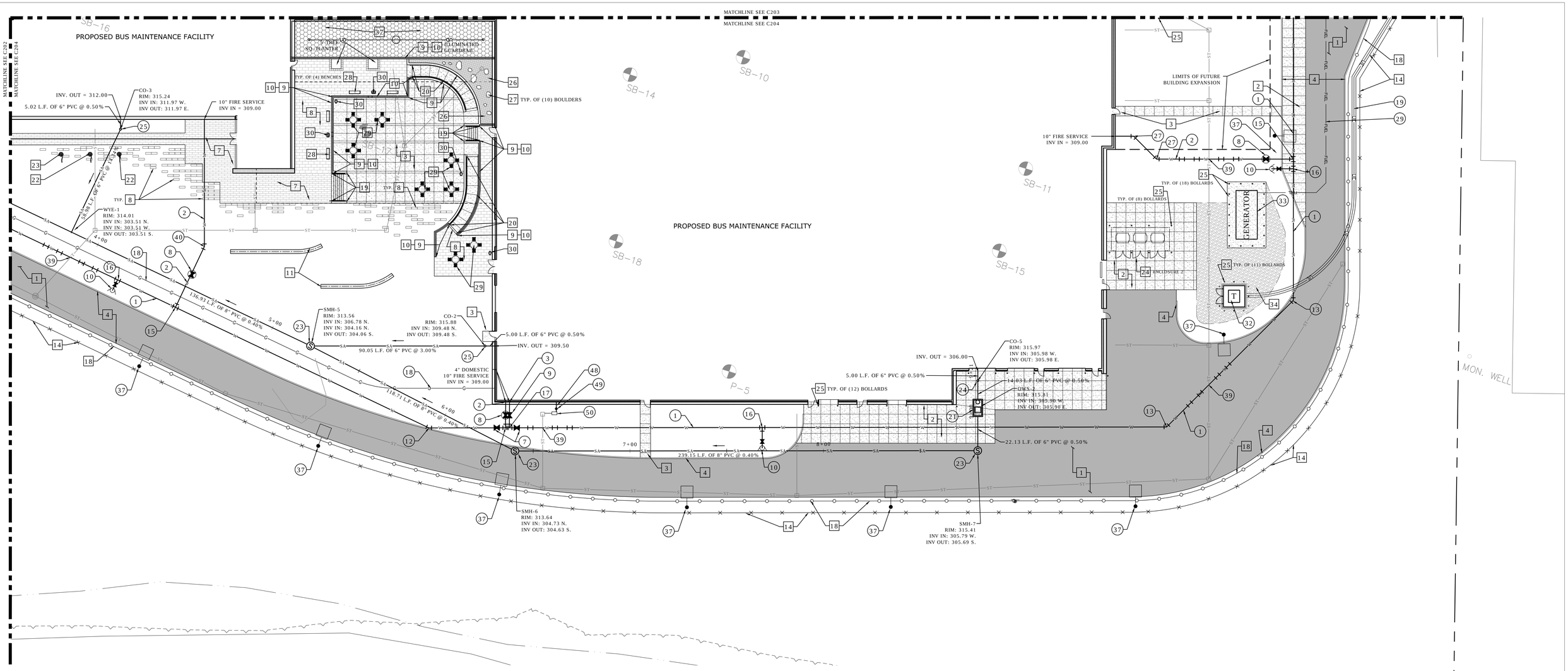

SITE IMPROVEMENT NOTES

(NOT ALL NOTES APPLY TO THIS SHEET)

1. HEAVY DUTY ASPHALT PAVEMENT; RE: 1, C-501.
2. HEAVY DUTY CONCRETE PAVEMENT; RE: 2, C-501.
3. CONCRETE SIDEWALK; RE: 3, C-501.
4. 6" CONCRETE CURBING; RE: HW-811_01.
5. PARALLEL SIDEWALK RAMP - TYPE 1; RE: HW-921_02.
6. DIAGONAL PARALLEL SIDEWALK RAMP - TYPE 4b; RE: HW-921_02.
7. LARGE SCALE NARROW MODULAR PAVER, TYPE A; RE: 6, C-501.
8. LARGE SCALE NARROW MODULAR PAVER, TYPE B; RE: 6, C-501 AND DETAIL 16 , C-501 FOR PAVERS IN LAWN AREA.
9. SITE RETAINING WALL; SEE SHEETS C-310 THRU C-312.
10. 42" TALL GUARDRAIL; RE: 4, C-502.
11. 24" CONCRETE SEAT WALL; RE: 9, C-501.
12. SWING GATE OPERATOR & FOUNDATION; RE: 11, C-501.
13. 4' HT. CHAIN LINK FENCE; RE: HW-913_01.
14. 8' HT. CHAIN LINK FENCE; RE: HW-913_01.
15. 26' WIDE 8' HT. DOUBLE LEAF SWING GATE; RE: 6, C-503.
16. 12' WIDE 8' HT. DOUBLE LEAF SWING GATE; RE: 6, C-503.
17. 4' WIDE 8' HT. SINGLE LEAF SWING GATE; RE: 7, C-503.
18. MERRITT PARKWAY GUIDERAIL; RE: HW-910_12b & HW-911_05.
19. CONCRETE STAIRS W/ CHEEK WALL, GUARDRAIL & HANDRAIL; RE: 1, C-502.
20. CONCRETE RAMP WITH CHEEK WALL, GUARDRAIL& HANDRAIL; RE: 2, C-502.
21. BARRIER GATE OPERATOR & FOUNDATION; RE: 12, C-501.
22. 30' FLAG POLE W/ INTERNAL HALYARD; RE: 8, C-501.
23. 35' FLAG POLE W/ INTERNAL HALYARD; RE: 8, C-501.
24. REFUSE ENCLOSURES & CONCRETE PAD; RE: 5, C-503.
25. STEEL BOLLARD; RE: 7, C-501.
26. GRAVEL MULCH; 15, C-501.
27. GRANITE BOULDERS 24-48"
28. BENCH; RE: 1, C-504.
29. TABLE & CHAIRS; RE: 2, C-504.
30. LITTER RECEPTACLE & SAND PAN; RE: 3, C-504.
31. LITTER RECEPTACLE; RE: 4, C-504.
32. FACILITY SIGNAGE; BY OTHERS.
33. GOOSE NECK PEDESTAL; RE: 2, E-708.
34. STONE ACCESS ROAD; 14, C-501.
35. END OF 8' TALL FENCE SHALL CONNECT TO 4' TALL FENCE. CONTRACTOR SHALL COORDINATE END POSTS.
36. TRANSFOMER AND MECHANICAL UNITS FOR GAURD BOOTH; REFER TO ELECTRIC AND MECHANICAL PLANS FOR DETAILS.
37. STONE PAVEMENT WITH UNDERDRAIN; RE:13, C-501.
38. CONCRETE STAIRS WITHOUT CHEEKWALLS; RE: 1, C-502 AND HANDRAIL ON SOUTH SIDE OF STAIR, GUARDRAIL WITH HANDRAIL ON NORTH SIDE OF STAIR; RE: 3, C-502
39. CONCRETE RAMP; RE: 2, C-502 AND HANDRAILS; RE: 3, C-502.
40. TACK COAT EDGE OF EXISTING PAVEMENT SAW CUT AND MATCH EXISTING PAVEMENT SECTION.

SITE UTILITY NOTES

(NOT ALL NOTES APPLY TO THIS SHEET)

1. 12"Ø D.I. WATERLINE
2. 10"Ø D.I. WATERLINE
3. 4"Ø D.I. WATERLINE
4. 3/4"Ø TYPE "K" COPPER WATER SERVICE LINE; RE: 10, C-506.
5. 3/4" WATER CORPORATION STOP; RE: 10, C-506.
6. 3/4" WATER CURB STOP AND BOX; RE: 10, C-506.
7. 12"Ø GATE VALVE; RE 3, C-506.
8. 10"Ø POST INDICATING VALVE ASSEMBLY; RE: 11, C-506. BURIAL DEPTH 4'6" - 5'6", L=90°, M.J. CONNECTIONS.
9. 4"Ø GATE VALVE; RE: 3, C-506.
10. FIRE HYDRANT ASSEMBLY (INCLUDES 6"Ø HYDRANT VALVE); RE: 4, C-506.
11. 11-1/4º BEND - 12"Ø
12. 22-1/2º BEND - 12"Ø
13. 45º BEND - 12"Ø
14. 12"x12" TEE
15. 12"X10" TEE
16. 12"X6" TEE
17. 12"X4" TEE
18. GAS SERVICE LINE TO RUN FROM NEW GAS MAIN IN FROST BRIDGE ROAD TO THE BUS MAINTENANCE FACILITY AS SHOWN. CONTRACTOR IS RESPONSIBLE FOR TRENCHING, BEDDING AND BACKFILL RE: 14, C504. YANKEE GAS WILL PROVIDE GAS SERVICE PIPE, LAY THE PIPE IN THE TRENCH AND MAKE REQUIRED CONNECTIONS AT THE MAIN AND AT THE BUILDING.
19. UNDERGROUND ELECTRIC AND TELECOMMUNICATIONS CONDUIT BANK. REFER TO ELECTRICAL DRAWINGS FOR CONDUIT BANK AND TRENCHING DETAIL.
20. NEW SERVICE POLE (BY UTILITY PROVIDER)
21. COALESCING OIL/WATER SEPARATOR DESIGN FLOW = 60 GPM; RE: 10, C505. CONTRACTOR TO PROVIDE RISERS, GRADE RINGS, SLABS, ETC., AS REQUIRED TO MEET FINISHED GRADE.
22. COALESCING OIL/WATER SEPARATOR DESIGN FLOW = 200 GPM; RE: 11, C-505. CONTRACTOR TO PROVIDE RISERS, GRADE RINGS, SLABS, ETC., AS REQUIRED TO MEET FINISHED GRADE.
23. SANITARY SEWER MANHOLE; RE: 1, C-505.
24. 6"Ø SANITARY CLEANOUT IN PAVEMENT; RE: 8, C-505.
25. 6"Ø SANITARY CLEANOUT IN LAWN; RE: 9, C-505
26. 6" PIG LAUNCHER ASSEMBLY; RE: 5, C-505.
27. 45º BEND - 10"Ø
28. RELOCATE POLE, BY OTHERS.
29. 2" DIESEL FUEL LINE. REFER TO DRAWING D202 FOR FUELING SYSTEM LAYOUT AND DIVISION 11 SPECIFICATIONS FOR PIPE MATERIAL.
30. DIESEL FUEL STORAGE TANKS. REFER TO DRAWING D-202 FOR FUELING SYSTEM LAYOUT. REFER TO STRUCTURAL DRAWINGS FOR CONCRETE PAD DESIGN.
31. GASOLINE STORAGE TANK. REFER TO DRAWING D-203 FOR FUELING SYSTEM LAYOUT. REFER TO STRUCTURAL DRAWINGS FOR CONCRETE PAD DESIGN.
32. TRANSFORMER. REFER TO ELECTRICAL DRAWINGS FOR DETAILED DESIGN. REFER TO STRUCTURAL DRAWINGS FOR CONCRETE PAD DESIGN.
33. GENERATOR. REFER TO ELECTRICAL DRAWINGS FOR DETAILED DESIGN, REFER TO STRUCTURAL DRAWINGS FOR CONCRETE PAD DESIGN. PAD TO EXTEND 4'-6" PAST EDGE OF GENERATOR ON ALL SIDES. PROVIDE 3'-0" MINIMUM CLEAR BETWEEN BOLLARDS AND GENERATOR.
34. CONNECT 12"Ø SITE WATER SYSTEM TO NEW TOWN WATER MAIN. TOWN WATERMAIN EXTENSION N.I.C. THE CONTRACTOR IS REQUIRED TO COORDINATE SCHEDULE AND UTILITY CONNECTIONS WITH THE CONTRACTOR INSTALLING THOSE UTILITIES BEFORE TESTING AND TIE IN WILL BE PERMITTED.
35. CONNECT 6"Ø SITE FORCEMAIN TO NEW TOWN SANITARY FORCEMAIN. TOWN SANITARY FORCEMAIN EXTENSION N.I.C. THE CONTRACTOR IS REQUIRED TO COORDINATE SCHEDULE AND UTILITY CONNECTIONS WITH THE CONTRACTOR INSTALLING THOSE UTILITIES BEFORE TESTING AND TIE IN WILL BE PERMITTED.
36. APPROXIMATE LOCATION OF SERVICE CONNECTION TO NEW GAS MAIN. GAS MAIN TO BE SUPPLIED AND INSTALLED BY YANKEE GAS.
37. LIGHT POLES. REFER TO ELECTRICAL DRAWINGS FOR FIXTURES, POLES AND POLE BASES.
38. SANITARY PUMP STATION PS-1; RE: C-507.
39. DEFLECT WATERLINE UNDER UTILITY; RE: 8, C-506
40. 22-1/2º BEND - 10"Ø
41. 45º BEND - 6"Ø
42. 6"Ø GATE VALVE; RE: 3, C-506.
43. PUMP STATION PRIMING LOCK LOOP; RE: C-507.
44. 6"X6"X6" WYE
45. 1"Ø TYPE "K" COPPER WATER SERVICE LINE; RE: 10, C-506.
46. 1" WATER CORPORATION STOP; RE: 10, C-506.
47. 1" WATER CURB STOP AND BOX; RE: 10, C-506.
48. 2"Ø TYPE "K" COPPER WATER SERVICE LINE FROM BUILDING. REFER TO PLUMPING PLANS.
49. 2" WATER CURB STOP AND BOX; RE: 10, C-506.
50. AUTOFLUSHER UNIT WITH 6"Ø PVC DRAIN LINE TO ADJACENT DRAINAGE STRUCTURE.

GENERAL UTILITY NOTES:

A. DIGITAL FILES WILL BE PROVIDED TO THE CONTRACTOR FOR THE PURPOSES OF LAYOUT.

B. DIGITAL FILES MAY TAKE THE FORM OF A GEO-REFERENCED AUTOCAD FILE AND/OR AN ASCI COORDINATE POINT FILE.

C. SEE SHEET C205 FOR SANITARY SEWER PROFILES

D. REFER TO PLUMBING DRAWINGS FOR CONTINUATION OF SANITARY SEWER, DOMESTIC WATER, FIRE PROTECTION, FUEL AND GAS PIPING INTO THE BUILDING.

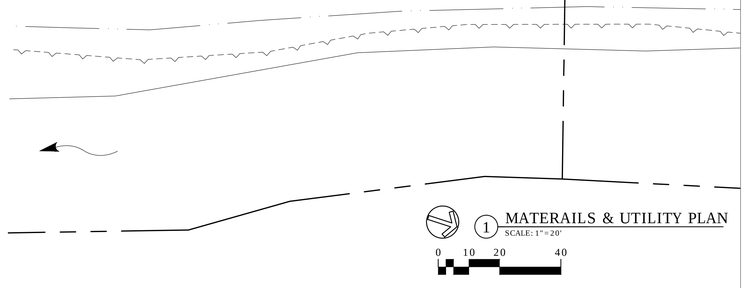

1 MATERAILS & UTILITY PLAN
SCALE: 1"=20'
0 10 20 40

REV.	DATE	DESCRIPTION	SHEET NO.
		REVISIONS	

FILENAME:

THE INFORMATION, INCLUDING ESTIMATED QUANTITIES OF WORK, SHOWN ON THESE SHEETS IS BASED ON LIMITED INVESTIGATIONS BY THE STATE AND IS IN NO WAY WARRANTED TO INDICATE THE CONDITIONS OF ACTUAL QUANTITIES OF WORK WHICH WILL BE REQUIRED.

DESIGNER/DRAFTER: CML
CHECKED BY: DLK/SMR
SCALE: AS NOTED

STATE OF CONNECTICUT
DEPARTMENT OF TRANSPORTATION

ARCHITECT: WENDEL
APPROVED BY: DCD
ENGINEERS: ReSTL DESIGNERS, CLOUGH HARBOUR ASSOC., AI ENGINEERS, WENDEL
DATE: 6/11/14

DESIGNED BY:
WENDEL
140 JOHN JAMES AUDUBON PKWY., SUITE 201
AMHERST, NEW YORK 14228

STATE OF CONNECTICUT
DAVID C. DUGHI
No. 11937
REGISTERED PROFESSIONAL ENGINEER

PROJECT TITLE:
WATERBURY BUS MAINTENANCE FACILITY REPLACEMENT

ADDRESS:
FROST BRIDGE ROAD
WATERTOWN, CONNECTICUT 06787

DRAWING TITLE:
MATERIALS & UTILITIES PLAN

PROJECT NO. **0431-0006**
DRAWING NO. **C-204**
SHEET NO. 03.013

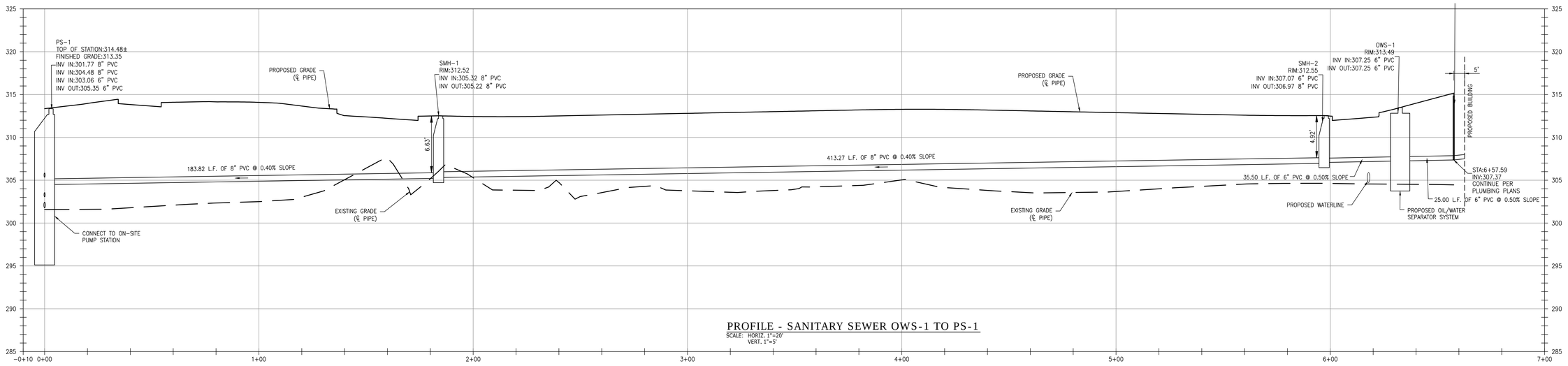

PROFILE - SANITARY SEWER OWS-1 TO PS-1

SCALE: HORIZ. 1"=20'
VERT. 1"=5'

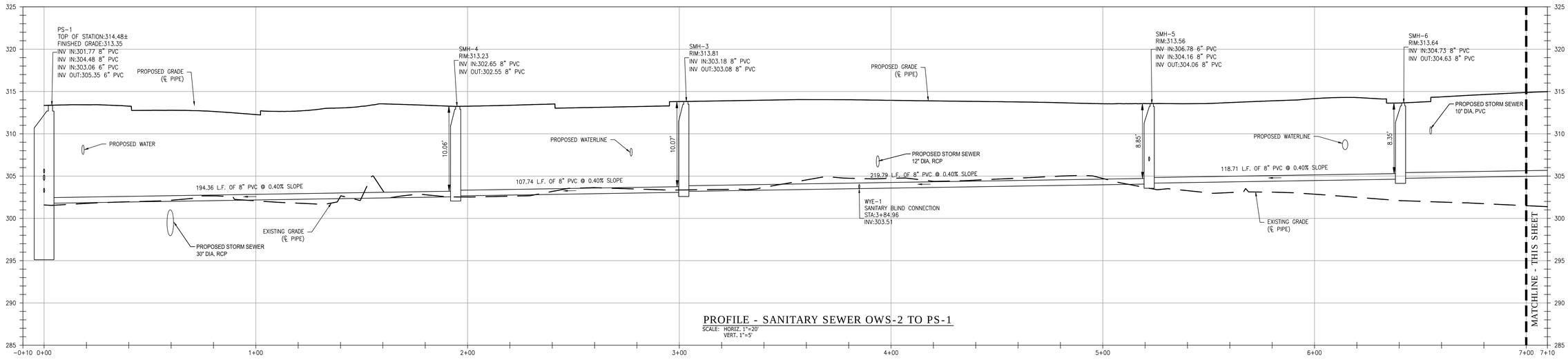

PROFILE - SANITARY SEWER OWS-2 TO PS-1

SCALE: HORIZ. 1"=20'
VERT. 1"=5'

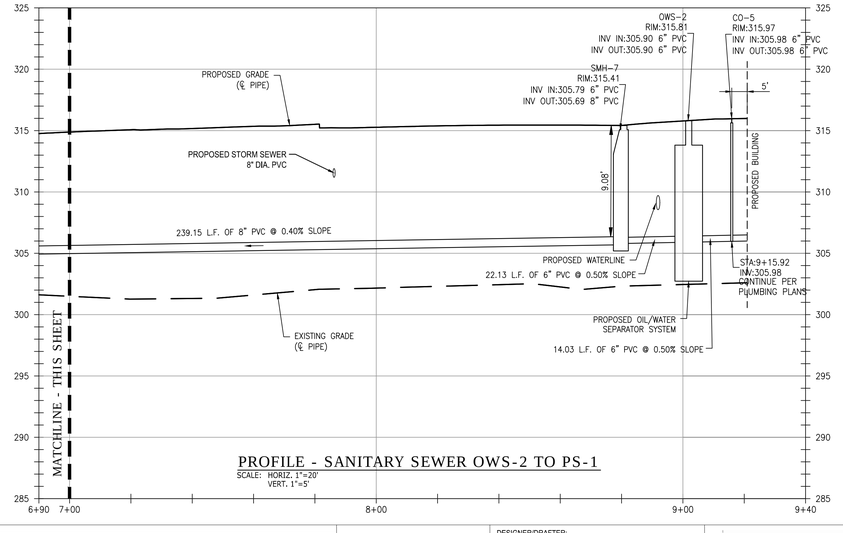

PROFILE - SANITARY SEWER OWS-2 TO PS-1

SCALE: HORIZ. 1"=20'
VERT. 1"=5'

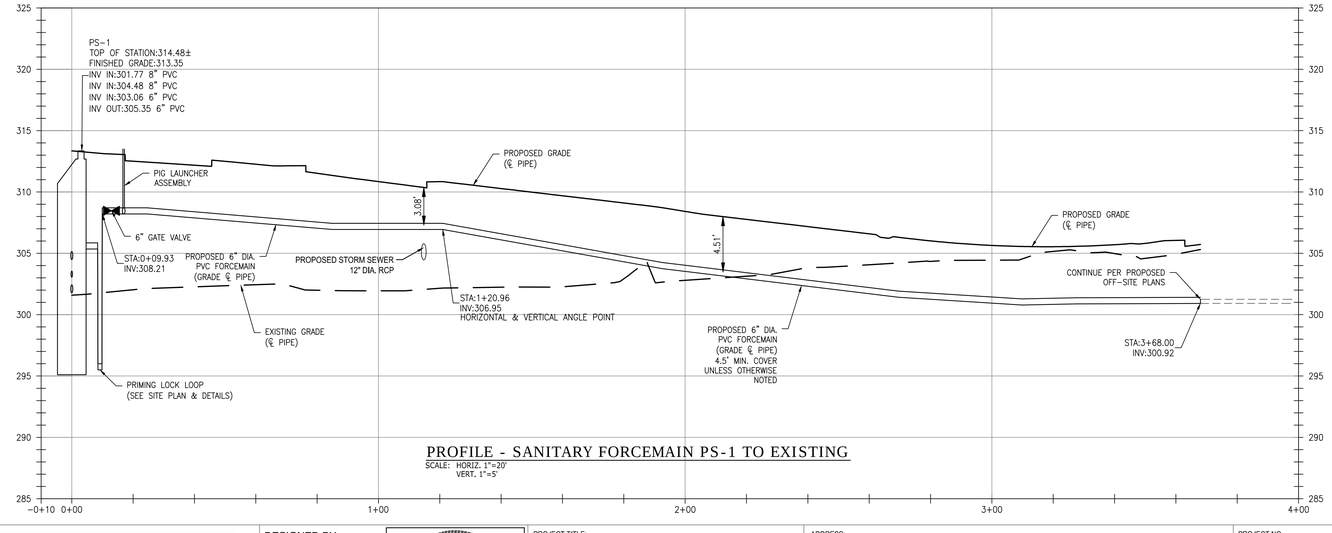

PROFILE - SANITARY FORCEMAIN PS-1 TO EXISTING

SCALE: HORIZ. 1"=20'
VERT. 1"=5'

REV.	DATE	DESCRIPTION	SHEET NO.
		REVISIONS	

FILENAME:

THE INFORMATION, INCLUDING ESTIMATED QUANTITIES OF WORK, SHOWN ON THESE SHEETS IS BASED ON LIMITED INVESTIGATIONS BY THE STATE AND IS IN NO WAY WARRANTED TO INDICATE THE CONDITIONS OF ACTUAL QUANTITIES OF WORK WHICH WILL BE REQUIRED.

DESIGNER/DRAFTER: CML
CHECKED BY: DLK/SMR
SCALE: AS NOTED

STATE OF CONNECTICUT
DEPARTMENT OF TRANSPORTATION

ARCHITECT: WENDEL
ENGINEERS: ReSTL DESIGNERS, CLOUGH HARBOUR ASSOC., AI ENGINEERS, WENDEL
APPROVED BY: DCD
DATE: 6/11/14

DESIGNED BY:
WENDEL
140 JOHN JAMES AUDUBON PKWY., SUITE 201
AMHERST, NEW YORK 14228

STATE OF CONNECTICUT
DAVID G. DUDLEY
No. 11937
REGISTERED PROFESSIONAL ENGINEER

PROJECT TITLE:
WATERBURY BUS MAINTENANCE FACILITY REPLACEMENT

ADDRESS:
FROST BRIDGE ROAD
WATERTOWN, CONNECTICUT 06787

DRAWING TITLE:
UTILITY PROFILES

PROJECT NO. **0431-0006**
DRAWING NO. **C-205**
SHEET NO. 03.014

NOTE:

DIGITAL FILES WILL BE PROVIDED TO THE CONTRACTOR FOR THE PURPOSES OF LAYOUT. DIGITAL FILES MAY TAKE THE FORM OF A GEOREFERENCED AUTOCAD FILE AND/OR AN ASCI COORDINATE POINT FILE.

DESCRIPTION LEGEND

EP - EDGE OF PAVEMENT
PC - BEGINNING POINT OF CURVATURE
POC - POINT ON CURVATURE
PT - POINT OF TANGENT
COR - CENTER OF RADIUS
BLDG. POINT - BUILDING POINT

1 LAYOUT PLAN

SCALE: 1"=20'

0 10 20 40

Point Table

Point #	Raw Description	Northing	Easting
1	EP	285114.2863	515346.4590
2	EP - PC	285111.5814	515298.7336
3	EP - POC	285111.3532	515296.8186
5	EP - PT	285110.8811	515294.9487
6	EP - PC	285090.3925	515231.3370
7	EP - POC	285092.2300	515208.4958
8	EP - PT	285109.6558	515193.6149
9	EP - PC	285146.7211	515181.5407
10	EP - POC	285282.3327	515176.1098
11	EP - PT	285400.7981	515242.3360
12	EP - PC	285469.2448	515310.6792
13	EP - POC	285512.2239	515341.4136
14	EP - PT	285562.8060	515356.6865
15	EP - PC	285824.0856	515390.6834
16	EP - POC	285937.8802	515392.7336
17	EP - PT	286049.3162	515369.5944
18	EP - PC	286278.5209	515294.6260
19	EP - POC	286342.4983	515239.9003
20	EP - PT	286349.0404	515155.9646
21	EP	286315.7222	515053.6839
22	EP	286317.8459	515021.4617
23	EP	286282.3017	514912.3486
24	EP - PC	286261.6006	514887.5406
25	EP - POC	286205.0849	514818.0709
26	EP - PT	286121.1491	514811.5289
27	EP - PC	286009.2032	514847.9959
28	EP - POC	285994.7775	514853.2588
29	EP - PT	285980.7540	514859.5152
30	EP - PC	285889.6817	514904.0194
31	EP - POC	285878.2080	514909.1382
32	EP - PT	285866.4051	514913.4443
33	EP	285230.5161	515120.5889
34	EP	285215.0831	515121.4094
35	EP - PC	285084.0235	515164.1029
36	EP - POC	285067.7938	515164.7650

Point Table

Point #	Raw Description	Northing	Easting
37	EP - PT	285053.5979	515156.8708
38	EP - PT	285250.4634	515139.3323
39	EP - PC	285274.2780	515131.5745
40	EP - POC	285292.7093	515131.5251
41	EP - PT	285307.6909	515142.2614
42	EP - PC	285317.4432	515154.6780
43	EP - POC	285318.0237	515166.7138
44	EP - PT	285306.6077	515170.5701
45	EP - POC	285279.8576	515163.2346
46	EP - PT	285252.4796	515158.7819
47	EP - POC	285243.6140	515149.8716
48	EP - PC	285329.7435	515134.9071
49	EP - POC	285328.8579	515124.0670
50	EP - PC	285338.4845	515118.8373
51	EP - POC	285362.7798	515123.9265
52	EP - PT	285385.0731	515134.8429
53	EP - PC	285460.5284	515184.2560
54	EP - POC	285522.9012	515207.4316
55	EP - PT	285589.1658	515201.3925
56	EP	285633.8988	515186.8205
57	EP	285622.7483	515152.5909
58	EP - PC	285575.2108	515168.0765
59	EP - POC	285524.7564	515163.7674
60	EP - PC	285492.6809	515124.5834
61	EP - POC	285496.5466	515074.9850
62	EP - PT	285534.3515	515042.6471
63	EP - PC	285547.9542	515038.2159
64	EP - POC	285551.7455	515037.3009
65	EP - PT	285555.6329	515036.9866
66	EP - PC	285616.3145	515036.8295
67	EP - POC	285626.4218	515036.0124
68	EP - PT	285636.2791	515033.6332
69	EP - PC	285772.8510	514989.1441
70	EP - POC	285785.8233	514990.1553
71	EP - PT	285794.2826	515000.0418

Point Table

Point #	Raw Description	Northing	Easting
72	EP - PC	285820.3499	514991.5431
73	EP - POC	285804.4293	514972.9350
74	EP - PT	285780.0112	514971.0317
75	EP - PC	285631.6330	515019.3709
76	EP - POC	285624.4037	515021.1432
77	EP - PC	285616.9914	515021.8226
78	EP - POC	285614.1840	515019.2148
79	EP - PT	285616.2297	515015.9748
80	EP - PC	286031.2856	514880.7677
81	EP - POC	286057.9943	514882.8503
82	EP - PT	286075.4065	514903.2101
83	EP	286076.9538	514907.9600
84	EP	286122.9097	514892.9896
85	EP - PC	286110.8042	514855.8143
86	EP - POC	286110.4881	514840.6562
87	EP - PT	286119.2119	514833.1944
88	EP - PC	286127.3439	514830.5453
89	EP - POC	286196.0186	514835.8979
90	EP - PT	286240.7941	514888.2431
91	EP	286245.6807	514903.2437
92	EP	286243.5630	514935.4832
93	EP	286300.2804	515109.5951
94	EP	286320.9822	515134.4028
95	EP - PC	286324.0794	515143.9105
96	EP - POC	286321.1044	515182.0656
97	EP - PT	286292.0197	515206.9400
98	EP - PC	286290.2902	515207.5032
99	EP - POC	286278.8445	515206.6099
100	EP - PT	286271.3829	515197.8848
101	EP	286267.4192	515185.7125
102	EP	286233.1224	515196.8807
103	EP	286102.6569	515301.6622
104	EP - PC	286105.1389	515309.2506
105	EP - POC	286103.9677	515324.5130
106	EP - PT	286092.3474	515334.4771

Point Table

Point #	Raw Description	Northing	Easting
107	EP - PC	286043.0987	515350.5853
108	EP - POC	285936.0156	515372.8207
109	EP - PT	285826.6662	515370.8506
110	EP - PC	285628.5002	515345.0658
111	EP - POC	285625.1832	515343.1574
112	EP - PT	285624.1871	515339.4625
113	EP	285626.6699	515320.1112
114	EP	285573.1546	515313.1579
115	EP - PC	285571.1546	515328.5283
116	EP - POC	285569.2408	515331.8495
117	EP - PC	285565.5376	515332.8395
118	EP - POC	285522.6485	515319.7950
119	EP - PT	285486.2012	515293.6945
120	EP - PC	285444.1957	515251.7525
121	EP - POC	285443.4278	515245.6641
122	EP - PT	285449.1382	515243.4171
123	EP - POC	285530.3588	515254.5025
124	EP - PT	285611.2237	515241.0662
125	EP	285647.6967	515229.1894
126	EP	285640.2703	515206.3673
127	EP - PC	285603.7926	515218.2456
128	EP - POC	285478.7559	515225.9523
129	EP - PC	285368.0166	515173.9720
130	EP - POC	285366.9301	515171.9302
131	EP - PT	285367.6190	515169.7223
132	EP - PC	285378.5353	515156.7140
133	EP - POC	285368.4541	515147.7368
134	EP - PT	285358.9169	515138.1836
135	EP - PC	285346.5520	515149.8237
136	EP - POC	285344.3870	515150.6373
137	EP - PT	285342.2865	515149.6690
138	EP - POC	285335.8720	515142.4096
139	EP - PC	285382.4602	515109.2250
140	EP - POC	285378.0262	515099.5387
141	EP - PT	285382.1634	515092.0361

Point Table

Point #	Raw Description	Northing	Easting
142	EP - PC	285460.7011	515066.6392
143	EP - POC	285470.8255	515069.0327
144	EP - PT	285473.3443	515079.1267
145	EP - POC	285469.4858	515104.9597
146	EP - PC	285473.6662	515130.7837
147	EP - POC	285477.9935	515142.1289
148	EP - PC	285483.9015	515152.7370
149	EP - POC	285480.4188	515163.1808
150	EP - PT	285469.9297	515166.4896
151	BLDG. POINT	285594.2820	515065.1932
152	BLDG. POINT	285658.8830	515291.2159
153	BLDG. POINT	285949.6377	515351.5091
154	BLDG. POINT	286246.5443	515238.0830
155	BLDG. POINT	286137.3602	514888.2823
156	BLDG. POINT	285292.3659	515138.6897
157	BLDG. POINT	285289.2855	515156.2973
158	BLDG. POINT	285271.7807	515136.1881
159	BLDG. POINT	285269.0737	515151.6615
160	SW - RAMP	285097.2174	515213.1932
161	SW - RAMP	285099.0495	515209.6374
162	SW - RAMP	285109.2622	515199.5276
163	SW - RAMP	285130.1803	515192.7134
164	SW	285272.1748	515179.5082
165	SW	285277.7499	515184.2811
166	SW	285282.2583	515185.3553
167	SW - RAMP	285288.6650	515183.4101
168	SW - RAMP	285294.3174	515185.0295
169	SW - RAMP	285298.9967	515186.4825
170	SW - RAMP	285304.7100	515188.3195
171	SW - RAMP	285462.9744	515312.1906
172	SW - RAMP	285467.2203	515316.4300
173	SW - RAMP	285470.7585	515319.9629
174	SW - RAMP	285492.5085	515290.8068
175	SW - RAMP	285496.1109	515294.2730
176	SW - POC	285506.1416	515288.1771

Point Table

Point #	Raw Description	Northing	Easting
177	SW - PC	285514.7195	515290.5231
178	SW - POC'	285540.1935	515304.6352
179	SW - PT	285568.3634	515312.0203
180	SW - RAMP	285611.6345	515311.6006
181	SW - RAMP	285616.5928	515312.2456
182	SW	285629.6266	515308.4047
183	WALL	285796.5033	515318.2584
184	WALL	285840.3622	515300.7630
185	WALL	285846.4880	515320.9048
186	WALL	285879.9222	515303.7637
187	SW	285900.5704	515297.7396
188	GENERATOR	286275.1509	515124.4677
189	GENERATOR	286285.7299	515156.9553
190	TRANSFORMER	286298.5984	515175.7325
191	TRANSFORMER	286300.5594	515181.7546
192	SW	285980.5444	514925.1676
193	SW	286042.2072	514884.0466
194	WALL	285822.5652	514953.6682
195	WALL	285643.7079	515011.9320
196	WALL	285462.1048	515199.2887
197	WALL	285583.1684	515302.3597
198	WALL	285587.3919	515269.9006
199	WALL	285609.8531	515244.5955
200	WALL	285648.6120	515231.9744
201	WALL	285153.8129	515124.1905
202	WALL	285210.1670	515105.8328
203	WALL	285225.6000	515105.0122
204	WALL - PC	285861.3461	514897.9142
205	WALL - POC	285872.0780	514893.9989
206	WALL - PT	285882.5106	514889.3445
207	WALL - PC	285973.5829	514844.8403
208	WALL - POC	285988.6475	514838.1195
209	WALL - PT	286004.1442	514832.4658
210	WALL	286106.6628	514799.0698
211	WALL	286115.6994	514803.6655

Point Table

Point #	Raw Description	Northing	Easting
212	ACCESS ROAD	285135.9889	515210.5447
213	ACCESS ROAD	285145.6401	515259.6044
214	ACCESS ROAD	285198.9801	515423.3466
215	ACCESS ROAD	285274.6137	515461.8118
216	ACCESS ROAD	285313.5975	515449.1125
217	ACCESS ROAD	285320.4117	515470.0306
218	ACCESS ROAD	285313.4030	515477.5724
219	ACCESS ROAD	285317.4296	515489.9331
220	ACCESS ROAD	285291.7574	515498.2959
221	ACCESS ROAD	285283.2000	515501.0836
222	ACCESS ROAD	285238.8266	515503.2716
223	ACCESS ROAD	285241.0877	515490.3238
224	ACCESS ROAD	285237.3040	515484.5957
225	ACCESS ROAD	285178.0620	515430.1608
226	ACCESS ROAD	285124.3104	515265.1550
227	ACCESS ROAD	285114.6592	515216.0953
228	FENCE	285153.9536	515192.8822
229	FENCE	285279.3449	515188.7618
230	FENCE	285486.1327	515338.1692
231	FENCE	285319.2839	515461.9843
232	FENCE	285314.3281	515446.7711
233	FENCE	285150.3056	515267.4693
234	FENCE	286323.7265	515052.4280
235	FENCE	286334.9157	514999.5926
236	FENCE	286308.9267	514919.8138
237	FENCE	286269.1599	514885.4034
300	EP-PT	284720.3114	514784.3852
301	EP-POC	284730.4537	514789.7643
302	EP-PT	284733.8217	514800.7397
303	EP	284729.6273	514844.8916
304	EP	284754.5150	514847.2539
305	EP	284754.7274	514845.0152
306	EP	284767.3408	514846.2121
307	EP	284769.0176	514828.5415
308	EP	284756.4043	514827.3446

Point Table

Point #	Raw Description	Northing	Easting
309	EP	284767.3551	514828.3838
310	EP	284768.7722	514813.4508
311	EP	284744.8827	514811.1839
312	EP-PT	284745.7687	514801.8774
313	EP-POC	284751.1478	514791.7351
314	EP-PT	284762.1232	514788.3671
315	PUMP STATION	284749.0831	514835.6903
316	FENCE	284728.5047	514809.0825
317	FENCE	284723.8757	514857.8634
318	FENCE	284772.6565	514862.4924
319	FENCE	284777.2856	514813.7116

REV.	DATE	DESCRIPTION	SHEET NO.

REVISIONS

FILENAME:

THE INFORMATION, INCLUDING ESTIMATED QUANTITIES OF WORK, SHOWN ON THESE SHEETS IS BASED ON LIMITED INVESTIGATIONS BY THE STATE AND IS IN NO WAY WARRANTED TO INDICATE THE CONDITIONS OF ACTUAL QUANTITIES OF WORK WHICH WILL BE REQUIRED.

DESIGNER/DRAFTER: CML

CHECKED BY: DLK/SMR

SCALE: AS NOTED

STATE OF CONNECTICUT
DEPARTMENT OF TRANSPORTATION

ARCHITECT: WENDEL

APPROVED BY: DCD

ENGINEERS: ReSTL DESIGNERS, CLOUGH HARBOUR ASSOC., AI ENGINEERS, WENDEL

DATE: 6/11/14

DESIGNED BY:
WENDEL
140 JOHN JAMES
AUDUBON PKWY.,
SUITE 201
AMHERST, NEW YORK
14228

STATE OF CONNECTICUT DAVID C. DUCHSCHERER No. 11937 REGISTERED PROFESSIONAL ENGINEER

PROJECT TITLE:
WATERBURY BUS MAINTENANCE FACILITY REPLACEMENT

ADDRESS:
FROST BRIDGE ROAD
WATERTOWN, CONNECTICUT 06787

DRAWING TITLE:
LAYOUT PLAN

PROJECT NO. **0431-0006**

DRAWING NO. **C-206**

SHEET NO. 03.015

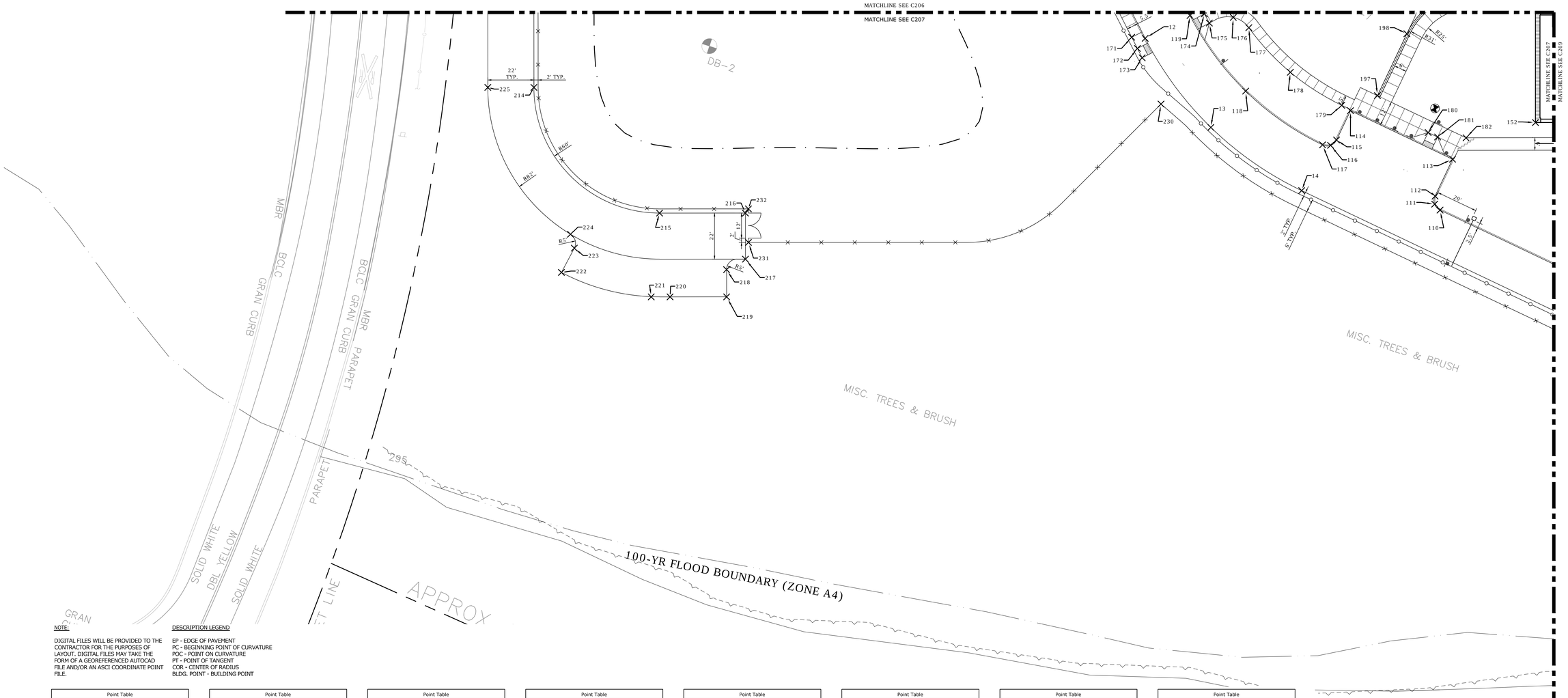

NOTE:

DIGITAL FILES WILL BE PROVIDED TO THE CONTRACTOR FOR THE PURPOSES OF LAYOUT. DIGITAL FILES MAY TAKE THE FORM OF A GEOREFERENCED AUTOCAD FILE AND/OR AN ASCI COORDINATE POINT FILE.

DESCRIPTION LEGEND

EP - EDGE OF PAVEMENT
PC - BEGINNING POINT OF CURVATURE
POC - POINT ON CURVATURE
PT - POINT OF TANGENT
COR - CENTER OF RADIUS
BLDG. POINT - BUILDING POINT

Point Table			
Point #	Raw Description	Northing	Easting
1	EP	285114.2863	515346.4590
2	EP - PC	285111.5814	515298.7336
3	EP - POC	285111.3532	515296.8186
4	EP - PT	285110.8811	515294.9487
5	EP - PT	285090.3925	515231.3370
6	EP - PC	285092.2300	515208.4958
7	EP - POC	285109.6558	515193.6149
8	EP - PC	285146.7211	515181.5407
9	EP - POC	285282.3327	515176.1098
10	EP - PT	285400.7981	515242.3360
11	EP - PC	285469.2448	515310.6792
12	EP - POC	285512.2239	515341.4136
13	EP - PT	285562.8060	515356.6865
14	EP - PC	285824.0856	515390.6834
15	EP - POC	285937.8802	515392.7336
16	EP - PT	286049.3162	515369.5944
17	EP - PC	286278.5209	515294.6260
18	EP - POC	286342.4983	515239.9003
19	EP - PT	286349.0404	515155.9646
20	EP	286315.7222	515053.6839
21	EP	286317.8459	515021.4617
22	EP	286282.3017	514912.3486
23	EP - PC	286261.6006	514887.5406
24	EP - POC	286205.0849	514818.0709
25	EP - PT	286121.1491	514811.5289
26	EP - PC	286009.2032	514847.9959
27	EP - POC	285994.7775	514853.2588
28	EP - PT	285980.7540	514859.5152
29	EP - PC	285889.6817	514904.0194
30	EP - POC	285878.2080	514909.1382
31	EP - PT	285866.4051	514913.4443
32	EP	285230.5161	515120.5889
33	EP	285215.0831	515121.4094
34	EP - PC	285084.0235	515164.1029
35	EP - POC	285067.7938	515164.7650

Point Table			
Point #	Raw Description	Northing	Easting
37	EP - PT	285053.5979	515156.8708
38	EP - PT	285250.4634	515139.3323
39	EP - PC	285274.2780	515131.5745
40	EP - POC	285292.7093	515131.5251
41	EP - PT	285307.6909	515142.2614
42	EP - PC	285317.4432	515154.6780
43	EP - POC	285318.0237	515166.7138
44	EP - PT	285306.6077	515170.5701
45	EP - POC	285279.8576	515163.2346
46	EP - PT	285252.4796	515158.7819
47	EP - POC	285243.6140	515149.8716
48	EP - PC	285329.7435	515134.9071
49	EP - POC	285328.8579	515124.0670
50	EP - PC	285338.4845	515118.8373
51	EP - POC	285362.7798	515123.9265
52	EP - PT	285385.0731	515134.8429
53	EP - PC	285460.5284	515184.2560
54	EP - POC	285522.9012	515207.4316
55	EP - PT	285589.1658	515201.3925
56	EP	285633.8988	515186.8205
57	EP	285622.7483	515152.5909
58	EP - PC	285575.2108	515168.0765
59	EP - POC	285524.7564	515163.7674
60	EP - PC	285492.6809	515124.5834
61	EP - POC	285496.5466	515074.9850
62	EP - PT	285534.3515	515042.6471
63	EP - PC	285547.9542	515038.2159
64	EP - POC	285551.7455	515037.3009
65	EP - PT	285555.6329	515036.9866
66	EP - PC	285616.3145	515036.8295
67	EP - POC	285626.4218	515036.0124
68	EP - PT	285636.2791	515033.6332
69	EP - PC	285772.8510	514989.1441
70	EP - POC	285785.8233	514990.1553
71	EP - PT	285794.2826	515000.0418

Point Table			
Point #	Raw Description	Northing	Easting
72	EP - PC	285820.3499	514991.5431
73	EP - POC	285804.4293	514972.9350
74	EP - PT	285780.0112	514971.0317
75	EP - PC	285631.6330	515019.3709
76	EP - POC	285624.4037	515021.1432
77	EP - PC	285616.9914	515021.8226
78	EP - POC	285614.1840	515019.2148
79	EP - PT	285616.2297	515015.9748
80	EP - PC	286031.2856	514880.7677
81	EP - POC	286057.9943	514882.8503
82	EP - PT	286075.4065	514903.2101
83	EP	286076.9538	514907.9600
84	EP	286122.9097	514892.9896
85	EP - PC	286110.8042	514855.8143
86	EP - POC	286110.4881	514840.6562
87	EP - PT	286119.2119	514833.1944
88	EP - PC	286127.3439	514830.5453
89	EP - POC	286196.0186	514835.8979
90	EP - PT	286240.7941	514888.2431
91	EP	286245.6807	514903.2437
92	EP	286243.5630	514935.4832
93	EP	286300.2804	515109.5951
94	EP	286320.9822	515134.4028
95	EP - PC	286324.0794	515143.9105
96	EP - POC	286321.1044	515182.0656
97	EP - PT	286292.0197	515206.9400
98	EP - PC	286290.2902	515207.5032
99	EP - POC	286278.8445	515206.6099
100	EP - PT	286271.3829	515197.8848
101	EP	286267.4192	515185.7125
102	EP	286233.1224	515196.8807
103	EP	286102.6569	515301.6622
104	EP - PC	286105.1389	515309.2506
105	EP - POC	286103.9677	515324.5130
106	EP - PT	286092.3474	515334.4771

Point Table			
Point #	Raw Description	Northing	Easting
107	EP - PC	286043.0987	515350.5853
108	EP - POC	285936.0156	515372.8207
109	EP - PT	285826.6662	515370.8506
110	EP - PC	285628.5002	515345.0658
111	EP - POC	285625.1832	515343.1574
112	EP - PT	285624.1871	515339.4625
113	EP	285626.6699	515320.1112
114	EP	285573.1546	515313.1579
115	EP - PC	285571.1546	515328.5283
116	EP - POC	285569.2408	515331.8495
117	EP - PC	285565.5376	515332.8395
118	EP - POC	285522.6485	515319.7950
119	EP - PT	285486.2012	515293.6945
120	EP - PC	285444.1957	515251.7525
121	EP - POC	285443.4278	515245.6641
122	EP - PT	285449.1382	515243.4171
123	EP - POC	285530.3588	515254.5025
124	EP - PT	285611.2237	515241.0662
125	EP	285647.6967	515229.1894
126	EP	285640.2703	515206.3673
127	EP - PC	285603.7926	515218.2456
128	EP - POC	285478.7559	515225.9523
129	EP - PC	285368.0166	515173.9720
130	EP - POC	285366.9301	515171.9302
131	EP - PT	285367.6190	515169.7223
132	EP - PC	285378.5353	515156.7140
133	EP - POC	285368.4541	515147.7368
134	EP - PT	285358.9169	515138.1836
135	EP - PC	285346.5520	515149.8237
136	EP - POC	285344.3870	515150.6373
137	EP - PT	285342.2865	515149.6690
138	EP - POC	285335.8720	515142.4096
139	EP - PC	285382.4602	515109.2250
140	EP - POC	285378.0262	515099.5387
141	EP - PT	285382.1634	515092.0361

Point Table			
Point #	Raw Description	Northing	Easting
142	EP - PC	285460.7011	515066.6392
143	EP - POC	285470.8255	515069.0327
144	EP - PT	285473.3443	515079.1267
145	EP - POC	285469.4858	515104.9597
146	EP - PC	285473.6662	515130.7837
147	EP - POC	285477.9935	515142.1289
148	EP - PC	285483.9015	515152.7370
149	EP - POC	285480.4188	515163.1808
150	EP - PT	285469.9297	515166.4896
151	BLDG. POINT	285594.2820	515065.1932
152	BLDG. POINT	285658.8830	515291.2159
153	BLDG. POINT	285949.6377	515351.5091
154	BLDG. POINT	286246.5443	515238.0830
155	BLDG. POINT	286137.3602	514888.2823
156	BLDG. POINT	285292.3659	515138.6897
157	BLDG. POINT	285289.2855	515156.2973
158	BLDG. POINT	285271.7807	515136.1881
159	BLDG. POINT	285269.0737	515151.6615
160	SW - RAMP	285097.2174	515213.1932
161	SW - RAMP	285099.0495	515209.6374
162	SW - RAMP	285109.2622	515199.5276
163	SW - RAMP	285130.1803	515192.7134
164	SW	285272.1748	515179.5082
165	SW	285277.7499	515184.2811
166	SW	285282.2583	515185.3553
167	SW - RAMP	285288.6650	515183.4101
168	SW - RAMP	285294.3174	515185.0295
169	SW - RAMP	285298.9967	515186.4825
170	SW - RAMP	285304.7100	515188.3195
171	SW - RAMP	285462.9144	515312.1906
172	SW - RAMP	285467.2203	515316.4300
173	SW - RAMP	285470.7585	515319.9629
174	SW - RAMP	285492.5085	515290.8068
175	SW - RAMP	285496.1109	515294.2730
176	SW - POC	285506.1416	515288.1771

Point Table			
Point #	Raw Description	Northing	Easting
177	SW - PC	285514.7195	515290.5231
178	SW - POC'	285540.1935	515304.6352
179	SW - PT	285568.3634	515312.0203
180	SW - RAMP	285611.6345	515311.6006
181	SW - RAMP	285616.5928	515312.2456
182	SW	285629.6266	515308.4047
183	WALL	285796.5033	515318.2584
184	WALL	285840.3622	515300.7630
185	WALL	285846.4880	515320.9048
186	WALL	285879.9222	515303.7637
187	SW	285900.5704	515297.7396
188	GENERATOR	286275.1509	515124.4677
189	GENERATOR	286285.7299	515156.9553
190	TRANSFORMER	286298.5984	515175.7325
191	TRANSFORMER	286300.5594	515181.7546
192	SW	285980.5444	514925.1676
193	SW	286042.2072	514884.0466
194	WALL	285822.5652	514953.6682
195	WALL	285643.7079	515011.9320
196	WALL	285462.1048	515199.2887
197	WALL	285583.1684	515302.3597
198	WALL	285587.3919	515269.9006
199	WALL	285609.8531	515244.5955
200	WALL	285648.6120	515231.9744
201	WALL	285153.8129	515124.1905
202	WALL	285210.1670	515183.4101
203	WALL	285225.6000	515105.0122
204	WALL - PC	285861.3461	514897.9142
205	WALL - POC	285872.0780	514893.9989
206	WALL - PT	285882.5106	514889.3445
207	WALL - PC	285973.5829	514844.8403
208	WALL - POC	285988.6475	514838.1195
209	WALL - PT	286004.1442	514832.4658
210	WALL	286106.6628	514799.0698
211	WALL	286115.6994	514803.6655

Point Table			
Point #	Raw Description	Northing	Easting
212	ACCESS ROAD	285135.9889	515210.5447
213	ACCESS ROAD	285145.6401	515259.6044
214	ACCESS ROAD	285198.9801	515423.3466
215	ACCESS ROAD	285274.6137	515461.8118
216	ACCESS ROAD	285313.5975	515449.1125
217	ACCESS ROAD	285320.4117	515470.0306
218	ACCESS ROAD	285313.4030	515477.5724
219	ACCESS ROAD	285317.4296	515489.9331
220	ACCESS ROAD	285291.7574	515498.2959
221	ACCESS ROAD	285283.2000	515501.0836
222	ACCESS ROAD	285238.8266	515503.2716
223	ACCESS ROAD	285241.0877	515490.3238
224	ACCESS ROAD	285237.3040	515484.5957
225	ACCESS ROAD	285178.0620	515430.1608
226	ACCESS ROAD	285124.3104	515281.1546
227	ACCESS ROAD	285114.6592	515216.0953
228	FENCE	285153.9536	515192.8822
229	FENCE	285279.3449	515188.7618
230	FENCE	285486.1327	515338.1692
231	FENCE	285319.2839	515461.9843
232	FENCE	285314.3281	515446.7711
233	FENCE	285150.3056	515267.4693
234	FENCE	286323.7265	515052.4280
235	FENCE	286334.9157	514999.5926
236	FENCE	286308.9267	514919.8138
237	FENCE	286269.1599	514885.4034
300	EP-PT	284720.3114	514784.3852
301	EP-POC	284730.4537	514789.7643
302	EP-PT	284733.8217	514800.7397
303	EP	284729.6273	514844.8916
304	EP	284754.5150	514847.2539
305	EP	284754.7274	514845.0152
306	EP	284767.3408	514846.2121
307	EP	284769.0176	514828.5415
308	EP	284756.4043	514827.3446

Point Table			
Point #	Raw Description	Northing	Easting
309	EP	284767.3551	514828.3838
310	EP	284768.7722	514813.4508
311	EP	284744.8827	514811.1839
312	EP-PT	284745.7687	514801.8774
313	EP-POC	284751.1478	514791.7351
314	EP-PT	284762.1232	514788.3671
315	PUMP STATION	284749.0831	514835.6903
316	FENCE	284728.5047	514809.0825
317	FENCE	284723.8757	514857.8634
318	FENCE	284772.6565	514862.4924
319	FENCE	284777.2856	514813.7116

1 LAYOUT PLAN
SCALE: 1" = 20'

0 10 20 40

REV.	DATE	DESCRIPTION	SHEET NO.
		REVISIONS	

FILENAME:

THE INFORMATION, INCLUDING ESTIMATED QUANTITIES OF WORK, SHOWN ON THESE SHEETS IS BASED ON LIMITED INVESTIGATIONS BY THE STATE AND IS IN NO WAY WARRANTED TO INDICATE THE CONDITIONS OF ACTUAL QUANTITIES OF WORK WHICH WILL BE REQUIRED.

DESIGNER/DRAFTER: CML
CHECKED BY: DLK/SMR
SCALE: AS NOTED

STATE OF CONNECTICUT
DEPARTMENT OF TRANSPORTATION

ARCHITECT: WENDEL
APPROVED BY: DCD
ENGINEERS: ReSTL DESIGNERS, CLOUGH HARBOUR ASSOC., AI ENGINEERS, WENDEL
DATE: 6/11/14

DESIGNED BY:
WENDEL
140 JOHN JAMES AUDUBON PKWY., SUITE 201
AMHERST, NEW YORK 14228

STATE OF CONNECTICUT
DAVID G. DUCHSCHERER
No. 11937
REGISTERED PROFESSIONAL ENGINEER

PROJECT TITLE:
WATERBURY BUS MAINTENANCE FACILITY REPLACEMENT

ADDRESS:
FROST BRIDGE ROAD
WATERTOWN, CONNECTICUT 06787

DRAWING TITLE:
LAYOUT PLAN

PROJECT NO. **0431-0006**
DRAWING NO. **C-207**
SHEET NO. 03.016

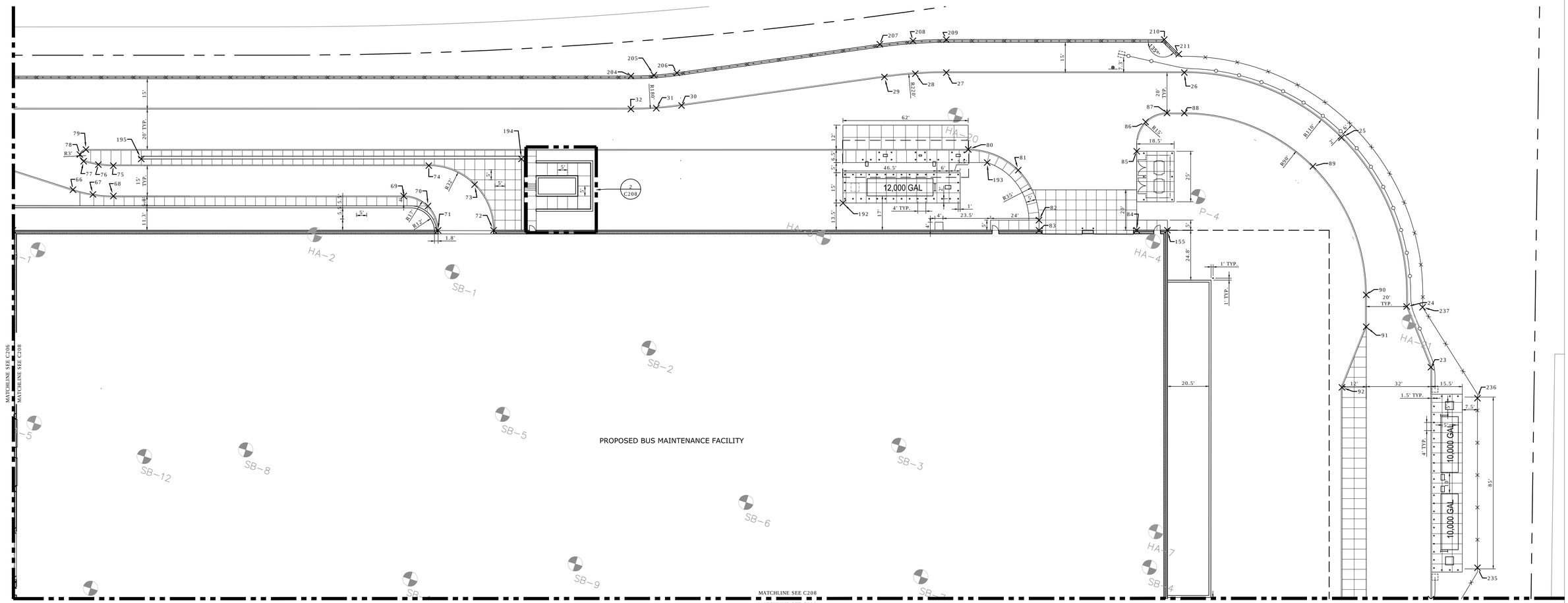

1 LAYOUT PLAN
SCALE: 1" = 20'

0 10 20 40

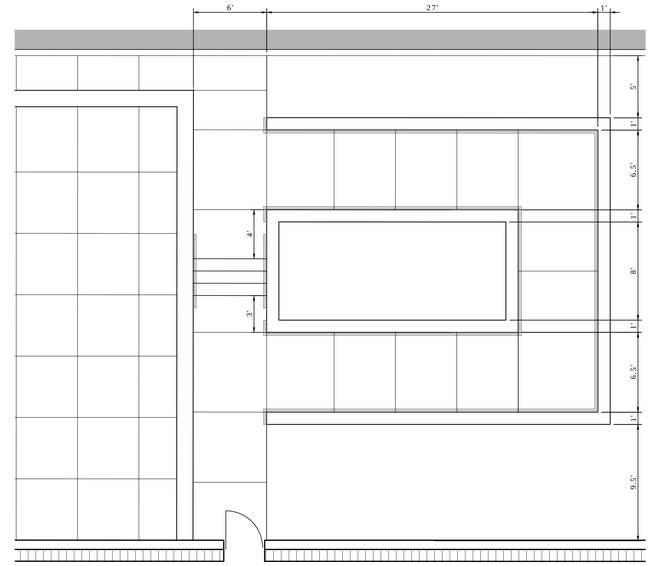

2 ENLARGEMENT
SCALE: 1" = 5'-0"

NOTE:

DIGITAL FILES WILL BE PROVIDED TO THE CONTRACTOR FOR THE PURPOSES OF LAYOUT. DIGITAL FILES MAY TAKE THE FORM OF A GEOREFERENCED AUTOCAD FILE AND/OR AN ASCI COORDINATE POINT FILE.

DESCRIPTION LEGEND

EP - EDGE OF PAVEMENT
PC - BEGINNING POINT OF CURVATURE
POC - POINT ON CURVATURE
PT - POINT OF TANGENT
COR - CENTER OF RADIUS
BLDG. POINT - BUILDING POINT

Point Table

Point #	Raw Description	Northing	Easting
1	EP	285114.2863	515346.4590
2	EP - PC	285111.5814	515298.7336
3	EP - POC	285111.3532	515296.8186
5	EP - PT	285110.8811	515294.9487
6	EP - PC	285090.3925	515231.3370
7	EP - POC	285092.2300	515208.4958
8	EP - PT	285109.6558	515193.6149
9	EP - PC	285146.7211	515181.5407
10	EP - POC	285282.3327	515176.1098
11	EP - PT	285400.7981	515242.3360
12	EP - PC	285469.2448	515310.6792
13	EP - POC	285512.2239	515341.4136
14	EP - PT	285562.8060	515356.6865
15	EP - PC	285824.0856	515390.6834
16	EP - POC	285937.8802	515392.7336
17	EP - PT	286049.3162	515369.5944
18	EP - PC	286278.5209	515294.6260
19	EP - POC	286342.4983	515239.9003
20	EP - PT	286349.0404	515155.9646
21	EP	286315.7222	515053.6839
22	EP	286317.8459	515021.4617
23	EP	286282.3017	514912.3486
24	EP - PC	286261.6006	514887.5406
25	EP - POC	286205.0849	514818.0709
26	EP - PT	286121.1491	514811.5289
27	EP - PC	286009.2032	514847.9959
28	EP - POC	285994.7775	514853.2588
29	EP - PT	285980.7540	514859.5152
30	EP - PC	285889.6817	514904.0194
31	EP - POC	285878.2080	514909.1382
32	EP - PT	285866.4051	514913.4443
33	EP	285230.5161	515230.5889
34	EP	285215.0831	515121.4094
35	EP - PC	285084.0235	515164.1029
36	EP - POC	285067.7938	515164.7650

Point Table

Point #	Raw Description	Northing	Easting
37	EP - PT	285053.5979	515156.8708
38	EP - PT	285250.4634	515139.3323
39	EP - PC	285274.2780	515131.5745
40	EP - POC	285292.7093	515131.5251
41	EP - PT	285307.6909	515142.2614
42	EP - PC	285317.4432	515154.6780
43	EP - POC	285318.0237	515166.7138
44	EP - PT	285306.6077	515170.5701
45	EP - POC	285279.8576	515163.2346
46	EP - PT	285252.4796	515158.7819
47	EP - POC	285243.6140	515149.8716
48	EP - PC	285329.7435	515134.9071
49	EP - POC	285328.8579	515124.0670
50	EP - PC	285338.4845	515118.8373
51	EP - POC	285362.7798	515123.9265
52	EP - PT	285385.0731	515134.8429
53	EP - PC	285460.5284	515184.2560
54	EP - POC	285522.9012	515207.4316
55	EP - PT	285589.1658	515201.3925
56	EP	285633.8988	515186.8205
57	EP	285622.7483	515152.5909
58	EP - PC	285575.2108	515168.0765
59	EP - POC	285524.7564	515163.7674
60	EP - PC	285492.6809	515124.5834
61	EP - POC	285496.5466	515074.9850
62	EP - PT	285534.3515	515042.6471
63	EP - PC	285547.9542	515038.2159
64	EP - POC	285551.7455	515037.3009
65	EP - PT	285555.6329	515036.9866
66	EP - PC	285616.3145	515036.8295
67	EP - POC	285626.4218	515036.0124
68	EP - PT	285636.2791	515033.6332
69	EP - PC	285772.8510	514989.1441
70	EP - POC	285785.8233	514990.1553
71	EP - PT	285794.2826	515000.0418

Point Table

Point #	Raw Description	Northing	Easting
72	EP - PC	285820.3499	514991.5431
73	EP - POC	285804.4293	514972.9350
74	EP - PT	285780.0112	514971.0317
75	EP - PC	285631.6330	515019.3709
76	EP - POC	285624.4037	515021.1432
77	EP - PC	285616.9914	515021.8226
78	EP - POC	285614.1840	515019.2148
79	EP - PT	285616.2297	515015.9748
80	EP - PC	286031.2856	514880.7677
81	EP - POC	286057.9943	514882.8503
82	EP - PT	286075.4065	514903.2101
83	EP	286076.9538	514907.9600
84	EP	286122.9097	514892.9896
85	EP - PC	286110.8042	514855.8143
86	EP - POC	286110.4881	514840.6562
87	EP - PT	286119.2119	514833.1944
88	EP - PC	286127.3439	514830.5453
89	EP - POC	286196.0186	514835.8979
90	EP - PT	286240.7941	514888.2431
91	EP	286245.6807	514903.2437
92	EP	286243.5630	514935.4832
93	EP	286300.2804	515109.5951
94	EP	286320.9822	515134.4028
95	EP - PC	286324.0794	515143.9105
96	EP - POC	286321.1044	515182.0656
97	EP - PT	286292.0197	515206.9400
98	EP - PC	286290.2902	515207.5032
99	EP - POC	286278.8445	515206.6099
100	EP - PT	286271.3829	515197.8848
101	EP	286267.4192	515185.7125
102	EP	286233.1224	515196.8807
103	EP	286102.6569	515301.6622
104	EP - PC	286105.1389	515309.2506
105	EP - POC	286103.9677	515324.5130
106	EP - PT	286092.3474	515334.4771

Point Table

Point #	Raw Description	Northing	Easting
107	EP - PC	286043.0987	515350.5853
108	EP - POC	285936.0156	515372.8207
109	EP - PT	285826.6662	515370.8506
110	EP - PC	285628.5002	515345.0658
111	EP - POC	285625.1832	515343.1574
112	EP - PT	285624.1871	515339.4625
113	EP	285626.6699	515320.1112
114	EP	285573.1546	515313.1579
115	EP - PC	285571.1546	515328.5283
116	EP - POC	285569.2408	515331.8495
117	EP - PC	285565.5376	515332.8395
118	EP - POC	285522.6485	515319.7950
119	EP - PT	285486.2012	515293.6945
120	EP - PC	285444.1957	515251.7525
121	EP - POC	285443.4278	515245.6641
122	EP - PT	285449.1382	515243.4171
123	EP - POC	285530.3588	515254.5025
124	EP - PT	285611.2237	515241.0662
125	EP	285647.6967	515229.1894
126	EP	285640.2703	515206.3673
127	EP - PC	285603.7926	515218.2456
128	EP - POC	285478.7559	515225.9523
129	EP - PC	285368.0166	515173.9720
130	EP - POC	285366.9301	515171.9302
131	EP - PT	285367.6190	515169.7223
132	EP - PC	285378.5353	515156.7140
133	EP - POC	285368.4541	515147.7368
134	EP - PT	285358.9169	515138.1836
135	EP - PC	285346.5520	515149.8237
136	EP - POC	285344.3870	515150.6373
137	EP - PT	285342.2865	515149.6690
138	EP - POC	285335.8720	515142.4096
139	EP - PC	285382.4602	515109.2250
140	EP - POC	285378.0262	515099.5387
141	EP - PT	285382.1634	515092.0361

Point Table

Point #	Raw Description	Northing	Easting
142	EP - PC	285460.7011	515066.6392
143	EP - POC	285470.8255	515069.0327
144	EP - PT	285473.3443	515079.1267
145	EP - PC	285469.4858	515104.9597
146	EP - PC	285473.6662	515130.7837
147	EP - POC	285477.9935	515142.1289
148	EP - PC	285483.9015	515152.7370
149	EP - POC	285480.4188	515163.1808
150	EP - PT	285469.9297	515166.4896
151	BLDG. POINT	285594.2820	515065.1932
152	BLDG. POINT	285658.8830	515291.2159
153	BLDG. POINT	285949.6377	515351.5091
154	BLDG. POINT	286246.5443	515238.0830
155	BLDG. POINT	286137.3602	514888.2823
156	BLDG. POINT	285292.3659	515138.6897
157	BLDG. POINT	285289.2855	515156.2973
158	BLDG. POINT	285271.7807	515136.1881
159	BLDG. POINT	285269.0737	515151.6615
160	SW - RAMP	285097.2174	515213.1932
161	SW - RAMP	285099.0495	515209.6374
162	SW - RAMP	285109.2622	515199.5276
163	SW - RAMP	285130.1803	515192.7134
164	SW	285272.1748	515179.5082
165	SW	285277.7499	515184.2811
166	SW	285282.2583	515185.3553
167	SW - RAMP	285288.6650	515183.4101
168	SW - RAMP	285294.3174	515185.0295
169	SW - RAMP	285298.9967	515186.4825
170	SW - RAMP	285304.7100	515188.3195
171	SW - RAMP	285462.9744	515312.1906
172	SW - RAMP	285467.2203	515316.4300
173	SW - RAMP	285470.7585	515319.9629
174	SW - RAMP	285492.5085	515290.8068
175	SW - RAMP	285496.1109	515294.2730
176	SW - POC	285506.1416	515288.1771

Point Table

Point #	Raw Description	Northing	Easting
177	SW - PC	285514.7195	515290.5231
178	SW - POC'	285540.1935	515304.6352
179	SW - PT	285568.3634	515312.0203
180	SW - RAMP	285611.6345	515311.6006
181	SW - RAMP	285616.5928	515312.2456
182	SW	285629.6266	515308.4047
183	WALL	285796.5033	515318.2584
184	WALL	285840.3622	515300.7630
185	WALL	285846.4880	515320.9048
186	WALL	285879.9222	515303.7637
187	SW	285900.5704	515297.7396
188	GENERATOR	286275.1509	515124.4677
189	GENERATOR	286285.7299	515156.9553
190	TRANSFORMER	286298.5984	515175.7325
191	TRANSFORMER	286300.5594	515181.7546
192	SW	285980.5444	514925.1676
193	SW	286042.2072	514884.0466
194	WALL	285822.5652	514953.6682
195	WALL	285643.7079	515011.9320
196	WALL	285462.1048	515199.2887
197	WALL	285583.1684	515302.3597
198	WALL	285587.3919	515269.9006
199	WALL	285609.8531	515244.5955
200	WALL	285648.6120	515231.9744
201	WALL	285153.8129	515124.1905
202	WALL	285210.1670	515105.8328
203	WALL	285225.6000	515105.0122
204	WALL - PC	285861.3461	514897.9142
205	WALL - POC	285872.0780	514893.9989
206	WALL - PT	285882.5106	514889.3445
207	WALL - PC	285973.5829	514844.8403
208	WALL - POC	285988.6475	514838.1195
209	WALL - PT	286004.1442	514832.4658
210	WALL	286106.6628	514799.0698
211	WALL	286115.6994	514803.6655

Point Table

Point #	Raw Description	Northing	Easting
212	ACCESS ROAD	285135.9889	515210.5447
213	ACCESS ROAD	285145.6401	515259.6044
214	ACCESS ROAD	285198.9801	515423.3466
215	ACCESS ROAD	285274.6137	515461.8118
216	ACCESS ROAD	285313.5975	515449.1125
217	ACCESS ROAD	285320.4117	515470.0306
218	ACCESS ROAD	285313.4030	515477.5724
219	ACCESS ROAD	285317.4296	515489.9331
220	ACCESS ROAD	285291.7574	515498.2959
221	ACCESS ROAD	285283.2000	515501.0836
222	ACCESS ROAD	285238.8266	515503.2716
223	ACCESS ROAD	285241.0877	515490.3238
224	ACCESS ROAD	285237.3040	515484.5957
225	ACCESS ROAD	285178.0620	515430.1608
226	ACCESS ROAD	285124.3104	515265.1550
227	ACCESS ROAD	285114.6592	515216.0953
228	FENCE	285153.9536	515192.8822
229	FENCE	285279.3449	515188.7618
230	FENCE	285486.1327	515338.1692
231	FENCE	285319.2839	515461.9843
232	FENCE	285314.3281	515446.7711
233	FENCE	285150.3056	515267.4693
234	FENCE	286323.7265	515052.4280
235	FENCE	286334.9157	514999.5926
236	FENCE	286308.9267	514919.8138
237	FENCE	286269.1599	514885.4034
300	EP-PT	284720.3114	514784.3852
301	EP-POC	284730.4537	514789.7643
302	EP-PT	284733.8217	514800.7397
303	EP	284729.6273	514844.8916
304	EP	284754.5150	514847.2539
305	EP	284754.7274	514845.0152
306	EP	284767.3408	514846.2121
307	EP	284769.0176	514828.5415
308	EP	284756.4043	514827.3446

Point Table

Point #	Raw Description	Northing	Easting
309	EP	284767.3551	514828.3838
310	EP	284768.7722	514813.4508
311	EP	284744.8827	514811.1839
312	EP-PT	284745.7687	514801.8774
313	EP-POC	284751.1478	514791.7351
314	EP-PT	284762.1232	514788.3671
315	PUMP STATION	284749.0831	514835.6903
316	FENCE	284728.5047	514809.0825
317	FENCE	284723.8757	514857.8634
318	FENCE	284772.6565	514862.4924
319	FENCE	284777.2856	514813.7116

REV.	DATE	DESCRIPTION	SHEET NO.
		REVISIONS	

FILENAME:

THE INFORMATION, INCLUDING ESTIMATED QUANTITIES OF WORK, SHOWN ON THESE SHEETS IS BASED ON LIMITED INVESTIGATIONS BY THE STATE AND IS IN NO WAY WARRANTED TO INDICATE THE CONDITIONS OF ACTUAL QUANTITIES OF WORK WHICH WILL BE REQUIRED.

DESIGNER/DRAFTER: CML
CHECKED BY: DLK/SMR
SCALE: AS NOTED

STATE OF CONNECTICUT
DEPARTMENT OF TRANSPORTATION

ARCHITECT: WENDEL
APPROVED BY: DCD
ENGINEERS: ReSTL DESIGNERS, CLOUGH HARBOUR ASSOC., AI ENGINEERS, WENDEL
DATE: 6/11/14

DESIGNED BY:
WENDEL
140 JOHN JAMES AUDUBON PKWY., SUITE 201
AMHERST, NEW YORK 14228

STATE OF CONNECTICUT
DAVID C. DUDKIEWICZ
No. 11937
REGISTERED PROFESSIONAL ENGINEER

PROJECT TITLE:
WATERBURY BUS MAINTENANCE FACILITY REPLACEMENT

ADDRESS:
FROST BRIDGE ROAD
WATERTOWN, CONNECTICUT 06787

DRAWING TITLE:
LAYOUT PLAN

PROJECT NO. **0431-0006**
DRAWING NO. **C-208**
SHEET NO. **03.017**

NOTE:

DIGITAL FILES WILL BE PROVIDED TO THE CONTRACTOR FOR THE PURPOSES OF LAYOUT. DIGITAL FILES MAY TAKE THE FORM OF A GEOREFERENCED AUTOCAD FILE AND/OR AN ASCI COORDINATE POINT FILE.

DESCRIPTION LEGEND

EP - EDGE OF PAVEMENT
PC - BEGINNING POINT OF CURVATURE
POC - POINT ON CURVATURE
PT - POINT OF TANGENT
COR - CENTER OF RADIUS
BLDG. POINT - BUILDING POINT

Point Table

Point #	Raw Description	Northing	Easting
1	EP	285114.2863	515346.4590
2	EP - PC	285111.5814	515298.7336
3	EP - POC	285111.3532	515296.8186
5	EP - PT	285110.8811	515294.9487
6	EP - PC	285090.3925	515231.3370
7	EP - POC	285092.2300	515208.4958
8	EP - PT	285109.6558	515193.6149
9	EP - PC	285146.7211	515181.5407
10	EP - POC	285282.3327	515176.1098
11	EP - PT	285400.7981	515242.3360
12	EP - PC	285469.2448	515310.6792
13	EP - POC	285512.2239	515341.4136
14	EP - PT	285562.8060	515356.6865
15	EP - PC	285824.0856	515390.6834
16	EP - POC	285937.8802	515392.7336
17	EP - PT	286049.3162	515369.5944
18	EP - PC	286278.5209	515294.6260
19	EP - POC	286342.4983	515239.9003
20	EP - PT	286349.0404	515155.9646
21	EP	286315.7222	515053.6839
22	EP	286317.8459	515021.4617
23	EP	286282.3017	514912.3486
24	EP - PC	286261.6006	514887.5406
25	EP - POC	286205.0849	514818.0709
26	EP - PT	286121.1491	514811.5289
27	EP - PC	286009.2032	514847.9959
28	EP - POC	285994.7775	514853.2588
29	EP - PT	285980.7540	514859.5152
30	EP - PC	285889.6817	514904.0194
31	EP - POC	285878.2080	514909.1382
32	EP - PT	285866.4051	514913.4443
33	EP	285230.5161	515120.5889
34	EP	285215.0831	515121.4094
35	EP - PC	285084.0235	515164.1029
36	EP - POC	285067.7938	515164.7650

Point Table

Point #	Raw Description	Northing	Easting
37	EP - PT	285053.5979	515156.8708
38	EP - PT	285250.4634	515139.3323
39	EP - PC	285274.2780	515131.5745
40	EP - POC	285292.7093	515131.5251
41	EP - PT	285307.6909	515142.2614
42	EP - PC	285317.4432	515154.6780
43	EP - POC	285318.0237	515166.7138
44	EP - PT	285306.6077	515170.5701
45	EP - POC	285279.8576	515163.2346
46	EP - PT	285252.4796	515158.7819
47	EP - POC	285243.6140	515149.8716
48	EP - PC	285329.7435	515134.9071
49	EP - POC	285328.8579	515124.0670
50	EP - PC	285338.4845	515118.8373
51	EP - POC	285362.7798	515123.9265
52	EP - PT	285385.0731	515134.8429
53	EP - PC	285460.5284	515184.2560
54	EP - POC	285522.9012	515207.4316
55	EP - PT	285589.1658	515201.3925
56	EP	285633.8988	515186.8205
57	EP	285622.7483	515152.5909
58	EP - PC	285575.2108	515168.0765
59	EP - POC	285524.7564	515163.7674
60	EP - PC	285492.6809	515124.5834
61	EP - POC	285496.5466	515074.9850
62	EP - PT	285534.3515	515042.6471
63	EP - PC	285547.9542	515038.2159
64	EP - POC	285551.7455	515037.3009
65	EP - PT	285555.6329	515036.9866
66	EP - PC	285616.3145	515036.8295
67	EP - POC	285626.4218	515036.0124
68	EP - PT	285636.2791	515033.6332
69	EP - PC	285772.8510	514989.1441
70	EP - POC	285785.8233	514990.1553
71	EP - PT	285794.2826	515000.0418

Point Table

Point #	Raw Description	Northing	Easting
72	EP - PC	285820.3499	514991.5431
73	EP - POC	285804.4293	514972.9350
74	EP - PT	285780.0112	514971.0317
75	EP - PC	285631.6330	515019.3709
76	EP - POC	285624.4037	515021.1432
77	EP - PC	285616.9914	515021.8226
78	EP - POC	285614.1840	515019.2148
79	EP - PT	285616.2297	515015.9748
80	EP - PC	286031.2856	514880.7677
81	EP - POC	286057.9943	514882.8503
82	EP - PT	286075.4065	514903.2101
83	EP	286076.9538	514907.9600
84	EP	286122.9097	514892.9896
85	EP - PC	286110.8042	514855.8143
86	EP - POC	286110.4881	514840.6562
87	EP - PT	286119.2119	514833.1944
88	EP - PC	286127.3439	514830.5453
89	EP - POC	286196.0186	514835.8979
90	EP - PT	286240.7941	514888.2431
91	EP	286245.6807	514903.2437
92	EP	286243.5630	514935.4832
93	EP	286300.2804	515109.5951
94	EP	286320.9822	515134.4028
95	EP - PC	286324.0794	515143.9105
96	EP - POC	286321.1044	515182.0656
97	EP - PT	286292.0197	515206.9400
98	EP - PC	286290.2902	515207.5032
99	EP - POC	286278.8445	515206.6099
100	EP - PT	286271.3829	515197.8848
101	EP	286267.4192	515185.7125
102	EP	286233.1224	515196.8807
103	EP	286102.6569	515301.6622
104	EP - PC	286105.1389	515309.2506
105	EP - POC	286103.9677	515324.5130
106	EP - PT	286092.3474	515334.4771

Point Table

Point #	Raw Description	Northing	Easting
107	EP - PC	286043.0987	515350.5853
108	EP - POC	285936.0156	515372.8207
109	EP - PT	285826.6662	515370.8506
110	EP - PC	285628.5002	515345.0658
111	EP - POC	285625.1832	515343.1574
112	EP - PT	285624.1871	515339.4625
113	EP	285626.6699	515320.1112
114	EP	285573.1546	515313.1579
115	EP - PC	285571.1546	515328.5283
116	EP - POC	285569.2408	515331.8495
117	EP - PC	285565.5376	515332.8395
118	EP - POC	285522.6485	515319.7950
119	EP - PT	285486.2012	515293.6945
120	EP - PC	285444.1957	515251.7525
121	EP - POC	285443.4278	515245.6641
122	EP - PT	285449.1382	515243.4171
123	EP - POC	285530.3588	515254.5025
124	EP - PT	285611.2237	515241.0662
125	EP	285647.6967	515229.1894
126	EP	285640.2703	515206.3673
127	EP - PC	285603.7926	515218.2456
128	EP - POC	285478.7559	515225.9523
129	EP - PC	285368.0166	515173.9720
130	EP - POC	285366.9301	515171.9302
131	EP - PT	285367.6190	515169.7223
132	EP - PC	285378.5353	515156.7140
133	EP - POC	285368.4541	515147.7368
134	EP - PT	285358.9169	515138.1836
135	EP - PC	285346.5520	515149.8237
136	EP - POC	285344.3870	515150.6373
137	EP - PT	285342.2865	515149.6690
138	EP - POC	285335.8720	515142.4096
139	EP - PC	285382.4602	515109.2250
140	EP - POC	285378.0262	515099.5387
141	EP - PT	285382.1634	515092.0361

Point Table

Point #	Raw Description	Northing	Easting
142	EP - PC	285460.7011	515066.6392
143	EP - POC	285470.8255	515069.0327
144	EP - PT	285473.3443	515079.1267
145	EP - POC	285469.4858	515104.9597
146	EP - PC	285473.6662	515130.7837
147	EP - POC	285477.9935	515142.1289
148	EP - PC	285483.9015	515152.7370
149	EP - POC	285480.4188	515163.1808
150	EP - PT	285469.9297	515166.4896
151	BLDG. POINT	285594.2820	515065.1932
152	BLDG. POINT	285658.8830	515291.2159
153	BLDG. POINT	285949.6377	515351.5091
154	BLDG. POINT	286246.5443	515238.0830
155	BLDG. POINT	286137.3602	514888.2823
156	BLDG. POINT	285292.3659	515138.6897
157	BLDG. POINT	285289.2855	515156.2973
158	BLDG. POINT	285271.7807	515136.1881
159	BLDG. POINT	285269.0737	515151.6615
160	SW - RAMP	285097.2174	515213.1932
161	SW - RAMP	285099.0495	515209.6374
162	SW - RAMP	285109.2622	515199.5276
163	SW - RAMP	285130.1803	515192.7134
164	SW	285272.1748	515179.5082
165	SW	285277.7499	515184.2811
166	SW	285282.2583	515185.3553
167	SW - RAMP	285288.6650	515183.4101
168	SW - RAMP	285294.3174	515185.0295
169	SW - RAMP	285298.9967	515186.4825
170	SW - RAMP	285304.7100	515188.3195
171	SW - RAMP	285462.9744	515312.1906
172	SW - RAMP	285467.2203	515316.4300
173	SW - RAMP	285470.7585	515319.9629
174	SW - RAMP	285492.5085	515290.8068
175	SW - RAMP	285496.1109	515294.2730
176	SW - POC	285506.1416	515288.1771

Point Table

Point #	Raw Description	Northing	Easting
177	SW - PC	285514.7195	515290.5231
178	SW - POC'	285540.1935	515304.6352
179	SW - PT	285568.3634	515312.0203
180	SW - RAMP	285611.6345	515311.6006
181	SW - RAMP	285616.5928	515312.2456
182	SW	285629.6266	515308.4047
183	WALL	285796.5033	515318.2584
184	WALL	285840.3622	515300.7630
185	WALL	285846.4880	515320.9048
186	WALL	285879.9222	515303.7637
187	SW	285900.5704	515297.7396
188	GENERATOR	286275.1509	515124.4677
189	GENERATOR	286285.7299	515156.9553
190	TRANSFORMER	286298.5984	515175.7325
191	TRANSFORMER	286300.5594	515181.7546
192	SW	285980.5444	514925.1676
193	SW	286042.2072	514884.0466
194	WALL	285822.5652	514953.6682
195	WALL	285643.7079	515011.9320
196	WALL	285462.1048	515199.2887
197	WALL	285583.1684	515302.3597
198	WALL	285587.3919	515269.9006
199	WALL	285609.8531	515244.5955
200	WALL	285648.6120	515231.9744
201	WALL	285153.8129	515124.1905
202	WALL	285210.1670	515105.8328
203	WALL	285225.6000	515105.0122
204	WALL - PC	285861.3461	514897.9142
205	WALL - POC	285872.0780	514893.9989
206	WALL - PT	285882.5106	514889.3445
207	WALL - PC	285973.5829	514844.8403
208	WALL - POC	285988.6475	514838.1195
209	WALL - PT	286004.1442	514832.4658
210	WALL	286106.6628	514799.0698
211	WALL	286115.6994	514803.6655

Point Table

Point #	Raw Description	Northing	Easting
212	ACCESS ROAD	285135.9889	515210.5447
213	ACCESS ROAD	285145.6401	515259.6044
214	ACCESS ROAD	285198.9801	515423.3466
215	ACCESS ROAD	285274.6137	515461.8118
216	ACCESS ROAD	285313.5975	515449.1125
217	ACCESS ROAD	285320.4117	515470.0306
218	ACCESS ROAD	285313.4030	515477.5724
219	ACCESS ROAD	285317.4296	515489.9331
220	ACCESS ROAD	285291.7574	515498.2959
221	ACCESS ROAD	285283.2000	515501.0836
222	ACCESS ROAD	285238.8266	515503.2716
223	ACCESS ROAD	285241.0877	515490.3238
224	ACCESS ROAD	285237.3040	515484.5957
225	ACCESS ROAD	285178.0620	515430.1608
226	ACCESS ROAD	285124.3104	515265.1550
227	ACCESS ROAD	285114.6592	515216.0953
228	FENCE	285153.9536	515192.8822
229	FENCE	285279.3449	515188.7618
230	FENCE	285486.1327	515338.1692
231	FENCE	285319.2839	515461.9843
232	FENCE	285314.3281	515446.7711
233	FENCE	285150.3056	515267.4693
234	FENCE	286323.7265	515052.4280
235	FENCE	286334.9157	514999.5926
236	FENCE	286308.9267	514919.8138
237	FENCE	286269.1599	514885.4034
300	EP-PT	284720.3114	514784.3852
301	EP-POC	284730.4537	514789.7643
302	EP-PT	284733.8217	514800.7397
303	EP	284729.6273	514844.8916
304	EP	284754.5150	514847.2539
305	EP	284754.7274	514845.0152
306	EP	284767.3408	514846.2121
307	EP	284769.0176	514828.5415
308	EP	284756.4043	514827.3446

Point Table

Point #	Raw Description	Northing	Easting
309	EP	284767.3551	514828.3838
310	EP	284768.7722	514813.4508
311	EP	284744.8827	514811.1839
312	EP-PT	284745.7687	514801.8774
313	EP-POC	284751.1478	514791.7351
314	EP-PT	284762.1232	514788.3671
315	PUMP STATION	284749.0831	514835.6903
316	FENCE	284728.5047	514809.0825
317	FENCE	284723.8757	514857.8634
318	FENCE	284772.6565	514862.4924
319	FENCE	284777.2856	514813.7116

1 LAYOUT PLAN
SCALE: 1"=20'

0 10 20 40

REV.	DATE	DESCRIPTION	SHEET NO.

REVISIONS

FILENAME:

THE INFORMATION, INCLUDING ESTIMATED QUANTITIES OF WORK, SHOWN ON THESE SHEETS IS BASED ON LIMITED INVESTIGATIONS BY THE STATE AND IS IN NO WAY WARRANTED TO INDICATE THE CONDITIONS OF ACTUAL QUANTITIES OF WORK WHICH WILL BE REQUIRED.

DESIGNER/DRAFTER: CML
CHECKED BY: DLK/SMR
SCALE: AS NOTED

STATE OF CONNECTICUT
DEPARTMENT OF TRANSPORTATION

ARCHITECT: WENDEL
APPROVED BY: DCD
ENGINEERS: ReSTL DESIGNERS, CLOUGH HARBOUR ASSOC., AI ENGINEERS, WENDEL
DATE: 6/11/14

DESIGNED BY:
WENDEL
140 JOHN JAMES
AUDUBON PKWY.,
SUITE 201
AMHERST, NEW YORK
14228

STATE OF CONNECTICUT DAVID C. DUCHSCHERER No. 11937 REGISTERED PROFESSIONAL ENGINEER

PROJECT TITLE:
WATERBURY BUS MAINTENANCE FACILITY REPLACEMENT

ADDRESS:
FROST BRIDGE ROAD
WATERTOWN, CONNECTICUT 06787

DRAWING TITLE:
LAYOUT PLAN

PROJECT NO. **0431-0006**
DRAWING NO. **C-209**
SHEET NO. 03.018

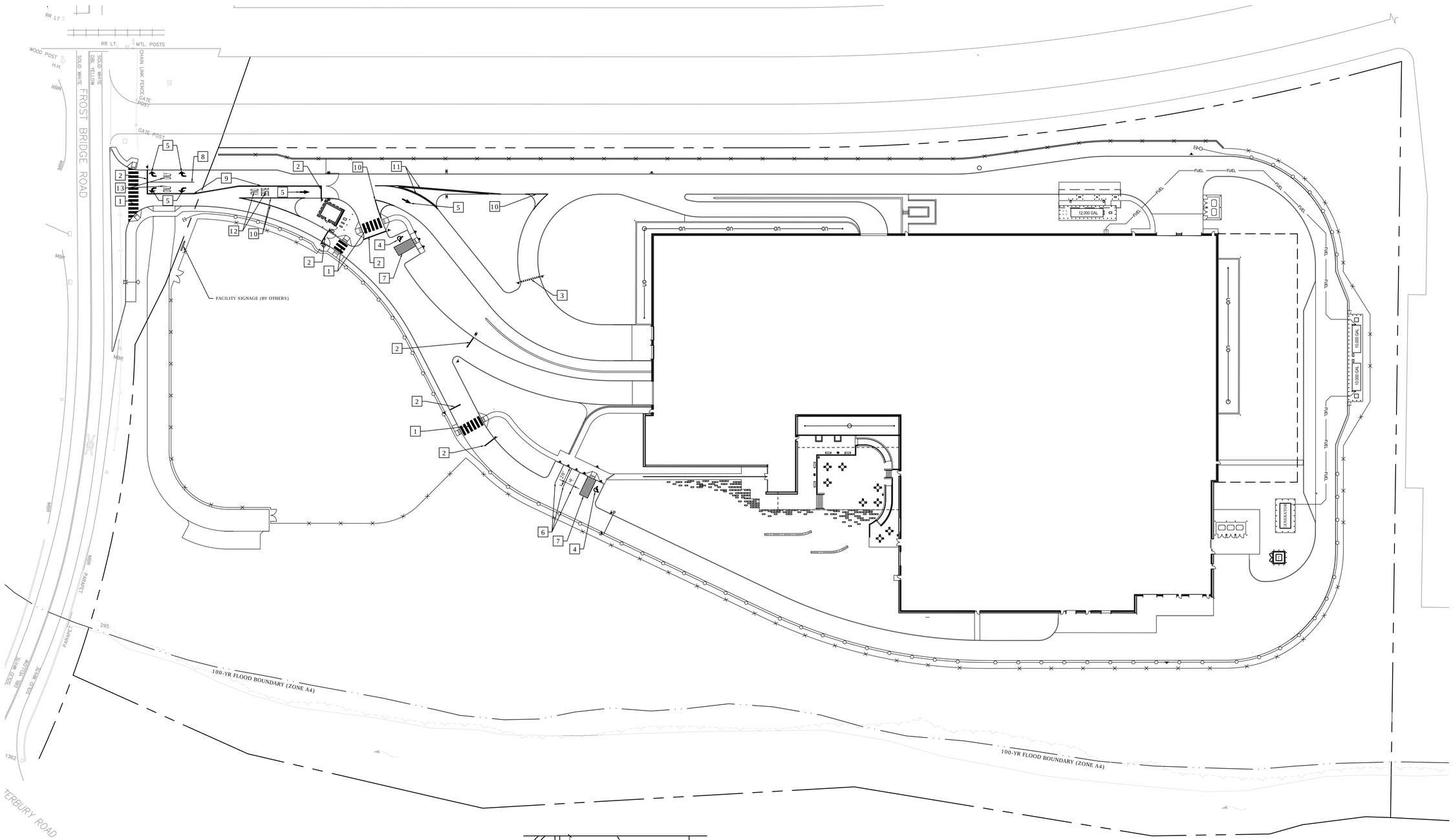

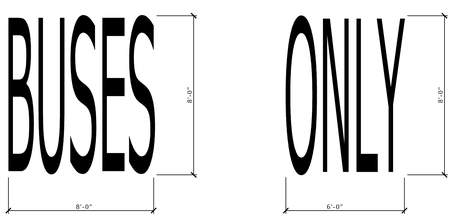

1 BUSES ONLY PAVEMENT MARKING
SCALE: NTS

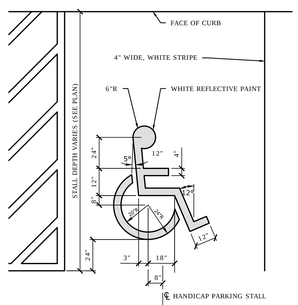

2 HANDICAP PARKING SPACE SYMBOL
SCALE: NTS

PAVEMENT MARKINGS IMPROVEMENT NOTES

1. PEDESTRIAN CROSSWALK, WHITE; RE: TR-1210-03.
2. 12" WIDE STOP BAR, WHITE; RE: TR-1210-03
3. 12"x18" YIELD TRIANGLES, WHITE.
4. HANDICAP PARKING SPACE SYMBOL, BLUE; RE: 2, C-210.
5. DIRECTIONAL PAVEMENT ARROWS, WHITE; RE: TR-1210-03.
6. STANDARD PARKING STALL, WHITE; RE: TR-1210-03.
7. PARKING STALL FOR HANDICAP, BLUE; RE: TR-1210-3.
8. 4" WIDE, SINGLE CHANNELIZING LINE, WHITE; RE: TR-1210-03.
9. 4" WIDE, DOUBLE CENTERLINE, YELLOW; RE: TR-1210-03.
10. 8" WIDE, SINGLE CHANNELIZING LINE, WHITE; RE: TR-1210-02.
11. 8" WIDE, DOUBLE CHANNELIZING LINE, YELLOW RE: TR-1210-03.
12. "BUSES ONLY" PAVEMENT TEXT, WHITE; RE: 1, C-210.
13. "ONLY" PAVEMENT TEXT, WHITE; RE: 1, C-210.

1 STRIPING PLAN
SCALE: 1" = 40'

0 20 40 80

REV.	DATE	DESCRIPTION	SHEET NO.
		REVISIONS	

FILENAME:

THE INFORMATION, INCLUDING ESTIMATED QUANTITIES OF WORK, SHOWN ON THESE SHEETS IS BASED ON LIMITED INVESTIGATIONS BY THE STATE AND IS IN NO WAY WARRANTED TO INDICATE THE CONDITIONS OF ACTUAL QUANTITIES OF WORK WHICH WILL BE REQUIRED.

DESIGNER/DRAFTER: CML
CHECKED BY: DLK/SMR
SCALE: AS NOTED

STATE OF CONNECTICUT
DEPARTMENT OF TRANSPORTATION

ARCHITECT: WENDEL
ENGINEERS: RoSTL DESIGNERS, CLOUGH HARBOUR ASSOC., AI ENGINEERS, WENDEL
APPROVED BY: DCD
DATE: 6/11/14

DESIGNED BY:
WENDEL
140 JOHN JAMES AUDUBON PKWY., SUITE 201
AMHERST, NEW YORK 14228

STATE OF CONNECTICUT
DAVID G. DUCHENEAU
No. 11937
REGISTERED PROFESSIONAL ENGINEER

PROJECT TITLE:
WATERBURY BUS MAINTENANCE FACILITY REPLACEMENT

ADDRESS: **FROST BRIDGE ROAD WATERTOWN, CONNECTICUT 06787**

DRAWING TITLE: **STRIPING PLAN**

PROJECT NO. **0431-0006**
DRAWING NO. **C-210**
SHEET NO. **03.019**

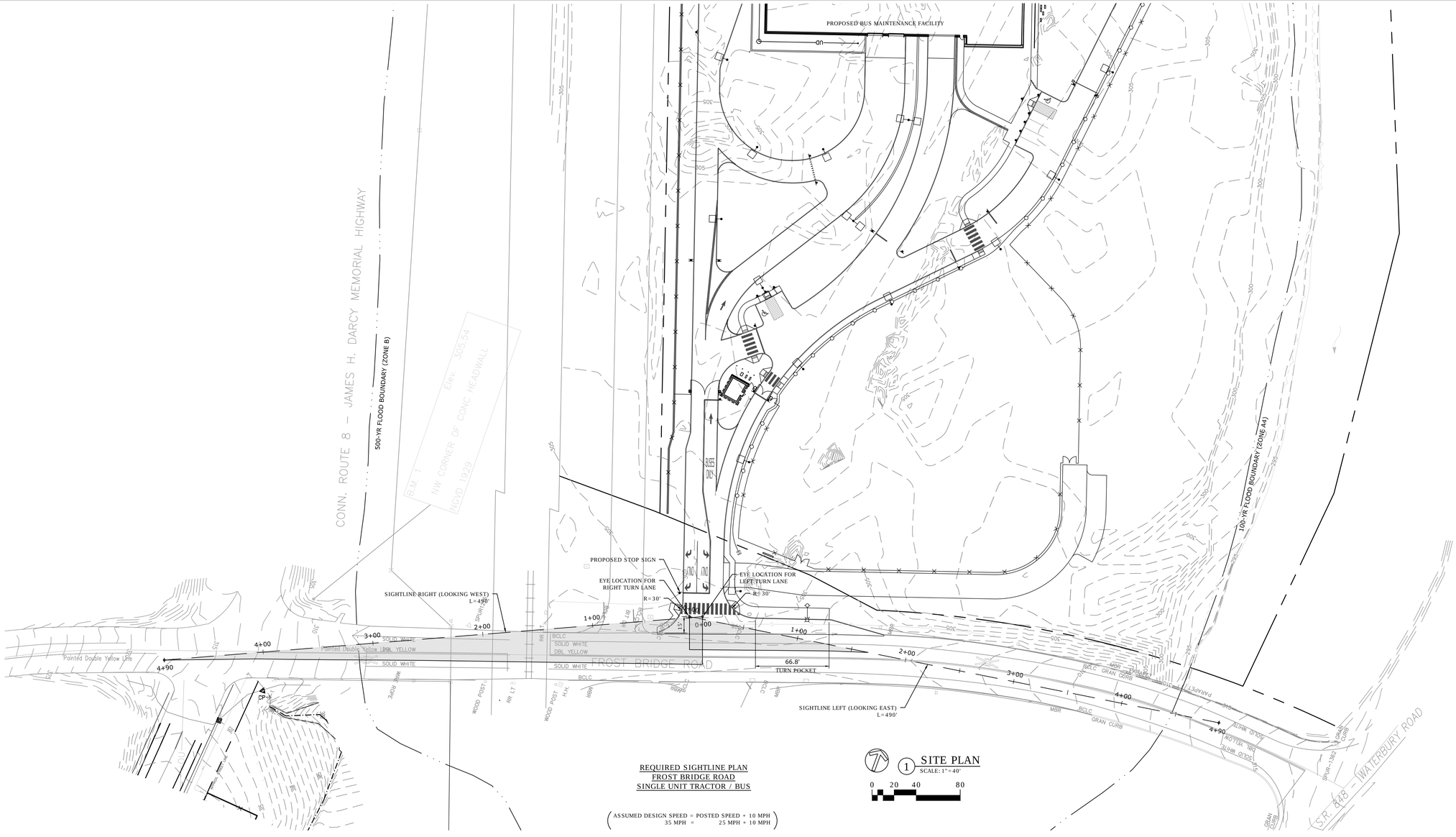

REQUIRED SIGHTLINE PLAN
FROST BRIDGE ROAD
SINGLE UNIT TRACTOR / BUS

(ASSUMED DESIGN SPEED = POSTED SPEED + 10 MPH
35 MPH = 25 MPH + 10 MPH)

1 SITE PLAN
SCALE: 1"=40'
0 20 40 80

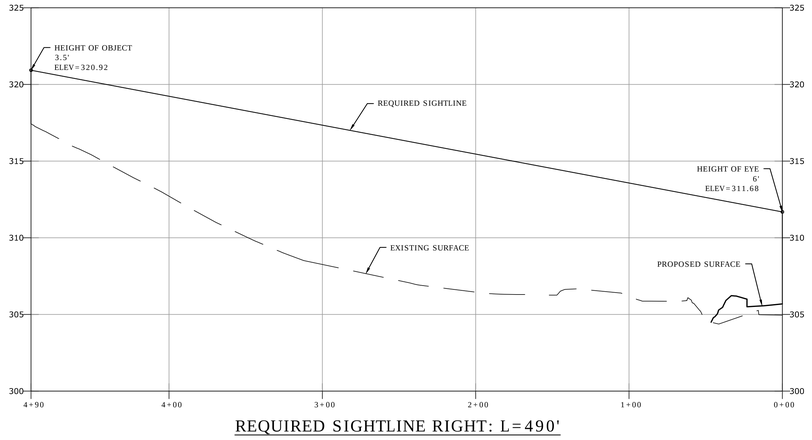

NOTE:

INTERSECTION SITE DISTANCE FOR A SINGLE UNIT TRACTOR/BUS WAS FOUND TO BE ACCEPTABLE.

INTERSECTION SITE DISTANCE FOR A PASSENGER VEHICLE WAS ALSO CHECKED IN ACCORDANCE WITH CHAPTER 11-2.0 OF THE CONNECTICUT DEPARTMENT OF TRANSPORTATION DESIGN MANUAL AND FOUND TO BE ACCEPTABLE.

0 20 40 80

HORIZONTAL SCALE: 1"=40'
VERTICAL SCALE: 1"=4'

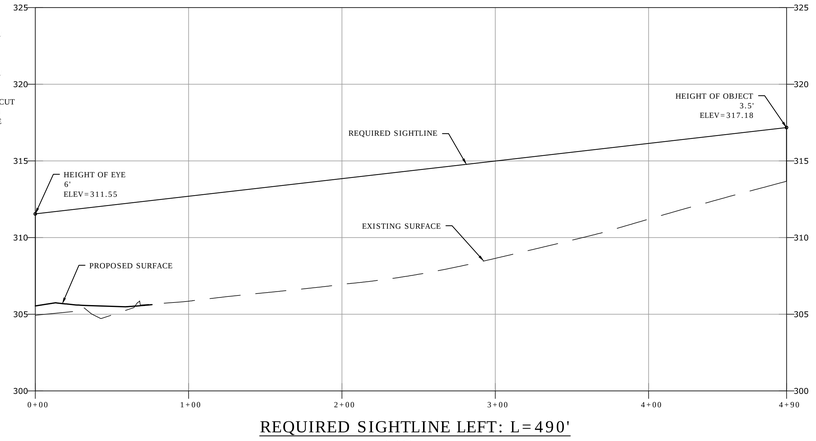

REQUIRED SIGHTLINE RIGHT: L=490'
PROFILE
FIELD MEASURED SITELINE = 800'

REQUIRED SIGHTLINE LEFT: L=490'
PROFILE
FIELD MEASURED SITELINE = 550'

REV.	DATE	DESCRIPTION	SHEET NO.
		REVISIONS	

FILENAME:

THE INFORMATION, INCLUDING ESTIMATED QUANTITIES OF WORK, SHOWN ON THESE SHEETS IS BASED ON LIMITED INVESTIGATIONS BY THE STATE AND IS IN NO WAY WARRANTED TO INDICATE THE CONDITIONS OF ACTUAL QUANTITIES OF WORK WHICH WILL BE REQUIRED.

DESIGNER/DRAFTER: CML
CHECKED BY: DLK/SMR
SCALE: AS NOTED

STATE OF CONNECTICUT
DEPARTMENT OF TRANSPORTATION

ARCHITECT: WENDEL
APPROVED BY: DCD
ENGINEERS: ReSTL DESIGNERS, CLOUGH HARBOUR ASSOC., AI ENGINEERS, WENDEL
DATE: 6/11/14

DESIGNED BY:
WENDEL
140 JOHN JAMES AUDUBON PKWY., SUITE 201
AMHERST, NEW YORK 14228

STATE OF CONNECTICUT
DAVID G. DUGDALE
No. 11937
REGISTERED PROFESSIONAL ENGINEER

PROJECT TITLE:
WATERBURY BUS MAINTENANCE FACILITY REPLACEMENT

ADDRESS:
FROST BRIDGE ROAD
WATERTOWN, CONNECTICUT 06787

DRAWING TITLE:
DRIVEWAY SIGHTLINE PLAN

PROJECT NO. **0431-0006**
DRAWING NO. **C-211**
SHEET NO. **03.020**

C. PERIMETER SILTFENCE IS TO BE PROPERLY MAINTAINED THROUGHOUT CONSTRUCTION.

D. MATCH EXISTING PAVEMENT FLUSH. CONTRACTOR TO NOTIFY ENGINEER IF THIS DOES NOT PROVIDE POSITIVE DRAINAGE.

GENERAL NOTES

1. ALL GRADED OR DISTURBED AREAS INCLUDING SLOPES SHALL BE PROTECTED DURING CLEARING AND CONSTRUCTION.
2. ALL EROSION AND SEDIMENT CONTROL PRACTICES AND MEASURES SHALL BE CONSTRUCTED, APPLIED AND MAINTAINED. REFER TO DRAWING C105-EROSION AND SEDIMENT CONTROL PLAN FOR EROSION AND SEDIMENT CONTROL INFORMATION. ALL NOTES AND REQUIREMENTS OF DRAWING C105 ARE APPLICABLE TO THIS DRAWING.
3. AREAS TO BE FILLED SHALL BE CLEARED, GRUBBED, AND STRIPPED OF TOPSOIL PRIOR TO PLACEMENT OF FILL.
4. ALL FILLS SHALL BE COMPACTED AS REQUIRED BY SPECIFICATIONS AND GEOTECHNICAL REPORT TO REDUCE EROSION, SLIPPAGE, SETTLEMENT, SUBSIDENCE OR OTHER RELATED PROBLEMS. FILL INTENDED TO SUPPORT BUILDINGS, STRUCTURES AND CONDUITS, ETC. SHALL BE COMPACTED IN ACCORDANCE WITH PLANS, SPECIFICATIONS, GEOTECHNICAL REPORT, LOCAL REQUIREMENTS OR CODES. IN THE CASE OF DISCREPANCY, THE MOST STRINGENT SHALL APPLY.
5. FILL MATERIAL SHALL BE FREE OF FROZEN PARTICLES, BRUSH, ROOTS, SOD, OR OTHER FOREIGN OR OTHER OBJECTIONABLE MATERIALS THAT WOULD INTERFERE WITH OR PREVENT CONSTRUCTION OF SATISFACTORY FILLS. SOFT, MUCKY OR HIGHLY COMPRESSIBLE MATERIALS SHALL NOT BE INCORPORATED IN FILLS.
6. FILL SHALL NOT BE PLACED ON SATURATED OR FROZEN SURFACES.
7. ALL GRADED AREAS SHALL BE PERMANENTLY STABILIZED IMMEDIATELY FOLLOWING FINISHED GRADING.
8. SWALES TO BE SEEDED AND MULCHED IMMEDIATELY FOLLOWING CONSTRUCTION OR IMPROVEMENT.
9. UTILITIES SHOWN ARE APPROXIMATE. CONTRACTOR IS TO FIELD VERIFY AND NOTIFY ENGINEER OF DISCREPANCIES.
10. CONTRACTOR SHALL BE RESPONSIBLE FOR VERIFYING RIM ELEVATIONS IN RELATION TO PROPOSED GRADE PRIOR TO INSTALLATION AND NOTIFYING DESIGN ENGINEER OF ANY DISCREPANCIES.
11. CONTRACTOR SHALL PLACE AND COMPACT MATERIAL OVER INSTALLED STORM SEWER NECESSARY TO MAINTAIN A MINIMUM OF 2-FEET OF COVER. MINIMUM COVER MUST BE MAINTAINED AT ALL TIMES DURING CONSTRUCTION.
12. ALL UTILITY LINES UNDER PAVEMENT AND DRIVEWAYS AND WITHIN FIVE (5) FEET OF THE BACK OF CURB MUST BE BACK FILLED WITH MECHANICALLY TAMPED AGGREGATE BASE IN MAXIMUM 6" LIFTS.
13. CONTRACTOR TO CONNECT FOUNDATION DRAINS TO STORM SEWER SYSTEM AT APPROPRIATE LOCATIONS.
14. UNLESS OTHERWISE NOTED, ALL PROPOSED STORM SEWER PIPES ARE TO BE R.C.P.
15. PERIMETER ROAD TO HAVE 2.0% CROSS-SLOPE (GENERALLY) FROM INSIDE EDGE TO OUTSIDE EDGE.

CONN. ROUTE 8 – JAMES H. DARCY MEMORIAL HIGHWAY

500-YR FLOOD BOUNDARY (ZONE B)

B.M. 1
NW CORNER OF CONC HEADWALL
Elev. 305.54
NGVD 1929

FROST BRIDGE ROAD

STORM SYSTEM #3 (SYS3) TO INFILTRATION BASIN

RETAINING WALL

STORM SYSTEM #1 (SYS1) TO INFILTRATION BASIN

OUTFALL PO-1

ACCESS TO INFILTRATION BASIN FOREBAY AND OUTLET

INFILTRATION BASIN

SEE DWG. NO. C301

SEE DWG. NO. C303

PROPOSED BUS MAINTENANCE FACILITY

SEE DWG. NO. C302

STORM SYSTEM #2 (SYS2)TO INFILTRATION BASIN

SEE DWG. NO. C304

OUTFALL PO-2

OUTFALL PO-3

100-YR FLOOD BOUNDARY (ZONE A4)

ABANDONED IN PLACE

NAUGATUCK RIVER

S.R. 848 – WATERBURY ROAD

1 OVERALL GRADING AND DRAINAGE PLAN
SCALE: 1" = 40'

0 20 40 80

REV.	DATE	DESCRIPTION	SHEET NO.
REVISIONS			

FILENAME:

THE INFORMATION, INCLUDING ESTIMATED QUANTITIES OF WORK, SHOWN ON THESE SHEETS IS BASED ON LIMITED INVESTIGATIONS BY THE STATE AND IS IN NO WAY WARRANTED TO INDICATE THE CONDITIONS OF ACTUAL QUANTITIES OF WORK WHICH WILL BE REQUIRED.

DESIGNER/DRAFTER: TJZ

CHECKED BY: DLK/SMR

SCALE: AS NOTED

STATE OF CONNECTICUT
DEPARTMENT OF TRANSPORTATION

ARCHITECT: WENDEL

ENGINEERS: ReSTL DESIGNERS, CLOUGH HARBOUR ASSOC., AI ENGINEERS, WENDEL

APPROVED BY: DCD

DATE: 6/11/14

DESIGNED BY:
WENDEL
140 JOHN JAMES AUDUBON PKWY.,
SUITE 201
AMHERST, NEW YORK
14228

STATE OF CONNECTICUT
DAVID C. CLOUGH
No. 11937
REGISTERED PROFESSIONAL ENGINEER

PROJECT TITLE:
WATERBURY BUS MAINTENANCE FACILITY REPLACEMENT

ADDRESS:
FROST BRIDGE ROAD
WATERTOWN, CONNECTICUT 06787

DRAWING TITLE:
OVERALL GRADING & DRAINAGE PLAN

PROJECT NO.
0431-0006

DRAWING NO.
C-300

SHEET NO.
03.021

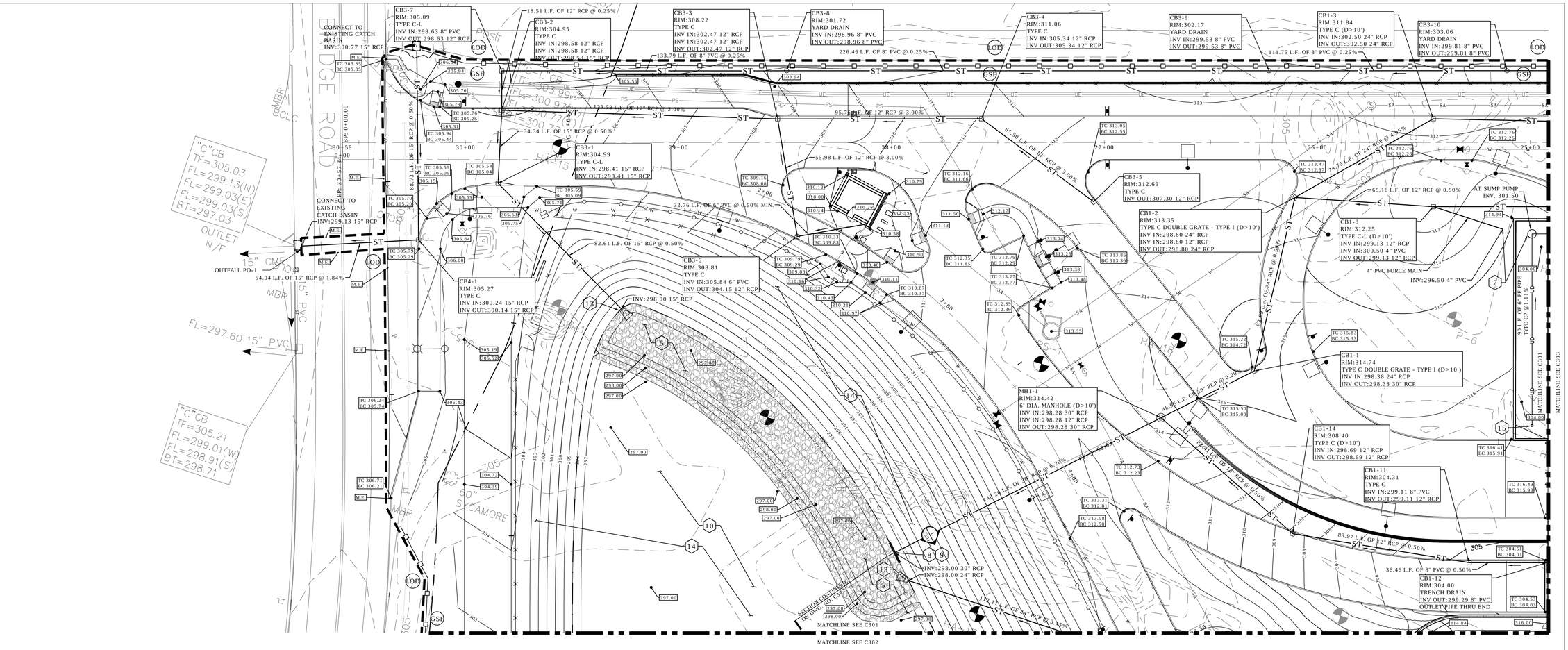

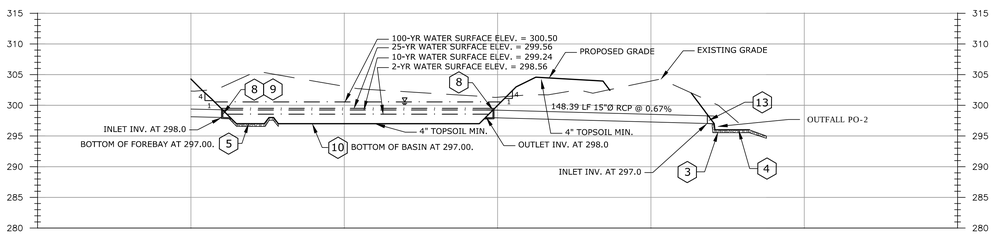

1 SECTION 1: THROUGH INFILTRATION BASIN
SCALE: HORIZ. 1"=40'
VERT. 1"=5'

SITE GRADING & DRAINAGE NOTES

(NOT ALL NOTES APPLY TO THIS SHEET)

1. MODIFIED RIP-RAP APRON, TYPE B: La=10', W1=3', W2=7', d=12"; RE: 10, C504.
2. MODIFIED RIP-RAP APRON/LEVEL SPREADER, TYPE B: La=10', W1=W2=7', d=12"; RE: 10, C504 .
3. MODIFIED RIP-RAP APRON, TYPE C: La (min)=10', W1=W2=11', d=12". EXTEND LENGTH TO EDGE OF WETLANDS, La=+/-35'; RE: 11, C504.
4. RIP RAP CHANNEL: 4' WIDE BOTTOM WITH 3:1 SIDESLOPES, S=3.0%
5. FOREBAY WITH MODIFIED RIP-RAP, d=12", SPILLWAY TO MAIN INFILTRATION BASIN TO BE 1' HIGH, 3' WIDE AT TOP WITH 3:1 SIDESLOPES.
6. GRASSED SWALE @ 0.5% SLOPE WITH 3:1 MAX SIDESLOPES.
7. REFER TO PLUMBING DRAWINGS FOR CONTINUATION INTO THE BUILDING.
8. STANDARD END WALL; RE: CTDOT STD. DWG. HW-506_01
9. FLAP GATE MOUNTED TO STANDARD END WALL; RE: 5, C504.
10. INFILTRATION BASIN.
11. EMERGENCY SPILLWAY: CREST ELEVATION APPROXIMATELY 303.00. SPILLWAY TO ULTIMATELY BE A PAVED DRIVEWAY TO RIVER ACCESS PARKING.
12. SLOPE TOE PROTECTION; RE:9, C504.
13. CONCRETE END SECTION; RE: CTDOT STD. DWG. HW-652_01.
14. CONSERVATION SEED MIX ON SIDESLOPES AND BOTTOM OF INFILTRATIONBASIN. REFER TO DRAWINGS L401-L405.
15. YARD DRAIN; RE:3, C504. RIM AND TOP OF STONE IN AREA WAY TO GRADED EVENLY AT 304.00. UNDERDRAIN: RE 13, C501.

GENERAL NOTES:

A. ALL NEW DRAINAGE INLETS IN LAWN OR LANDSCAPED AREAS TO BE PROTECTED WITH GEOTEXTILE INLET PROTECTION.

B. ALL NEW DRAINAGE INLETS IN PAVED AREAS TO BE PROTECTED WITH GEOTEXTILE SACKS BELOW THE GRATES.

C. PERIMETER SILTFENCE IS TO BE PROPERLY MAINTAINED THROUGHOUT CONSTRUCTION.

D. MATCH EXISTING PAVEMENT FLUSH. CONTRACTOR TO NOTIFY ENGINEER IF THIS DOES NOT PROVIDE POSITIVE DRAINAGE.

1 GRADING AND DRAINAGE PLAN
SCALE: 1"=20'
0 10 20 40

SYMBOL LEGEND

LOD = LIMITS OF DISTURBANCE
GSF = GEOTEXTILE SILT FENCE

REV.	DATE	DESCRIPTION	SHEET NO.
		REVISIONS	

FILENAME:

THE INFORMATION, INCLUDING ESTIMATED QUANTITIES OF WORK, SHOWN ON THESE SHEETS IS BASED ON LIMITED INVESTIGATIONS BY THE STATE AND IS IN NO WAY WARRANTED TO INDICATE THE CONDITIONS OF ACTUAL QUANTITIES OF WORK WHICH WILL BE REQUIRED.

DESIGNER/DRAFTER: TJZ
CHECKED BY: DLK/SMR
SCALE: AS NOTED

STATE OF CONNECTICUT
DEPARTMENT OF TRANSPORTATION

ARCHITECT: WENDEL
ENGINEERS: ReSTL DESIGNERS, CLOUGH HARBOUR ASSOC., AI ENGINEERS, WENDEL
APPROVED BY: DCD
DATE: 6/11/14

DESIGNED BY:
WENDEL
140 JOHN JAMES AUDUBON PKWY., SUITE 201
AMHERST, NEW YORK 14228

STATE OF CONNECTICUT
DAVID C. DUDLEY
No. 11937
REGISTERED PROFESSIONAL ENGINEER

PROJECT TITLE:
WATERBURY BUS MAINTENANCE FACILITY REPLACEMENT

ADDRESS:
FROST BRIDGE ROAD
WATERTOWN, CONNECTICUT 06787

DRAWING TITLE:
GRADING & DRAINAGE PLAN

PROJECT NO. **0431-0006**
DRAWING NO. **C-301**
SHEET NO. 03.022

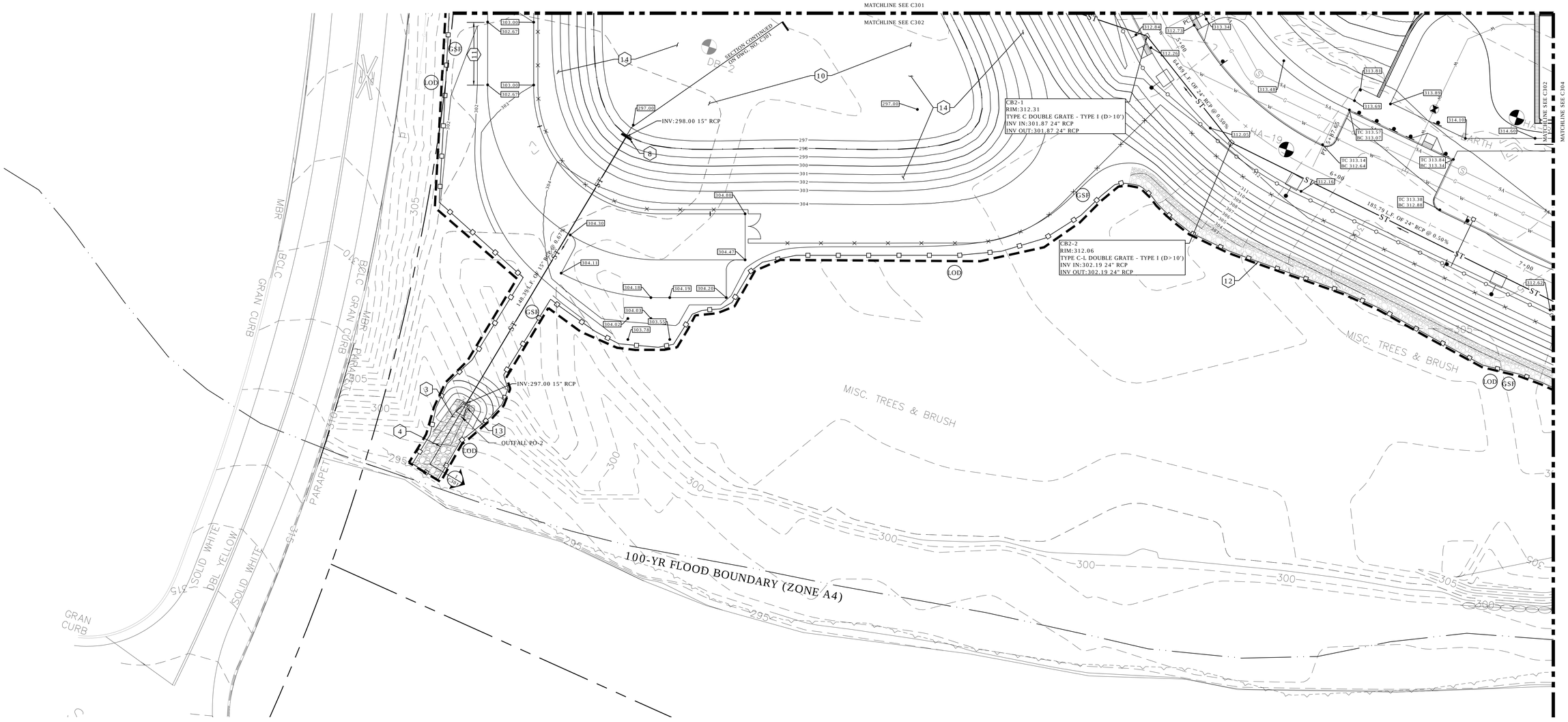

SITE GRADING & DRAINAGE NOTES

(NOT ALL NOTES APPLY TO THIS SHEET)

1. MODIFIED RIP-RAP APRON, TYPE B: La=10', W1=3', W2=7', d=12"; RE: 10, C504.
2. MODIFIED RIP-RAP APRON/LEVEL SPREADER, TYPE B: La=10', W1=W2=7', d=12"; RE: 10, C504 .
3. MODIFIED RIP-RAP APRON, TYPE C: La (min)=10', W1=W2=11', d=12". EXTEND LENGTH TO EDGE OF WETLANDS, La=+/-35'; RE: 11, C504.
4. RIP RAP CHANNEL: 4' WIDE BOTTOM WITH 3:1 SIDESLOPES, S=3.0%
5. FOREBAY WITH MODIFIED RIP-RAP, d=12". SPILLWAY TO MAIN INFILTRATION BASIN TO BE 1' HIGH, 3' WIDE AT TOP WITH 3:1 SIDESLOPES.
6. GRASSED SWALE @ 0.5% SLOPE WITH 3:1 MAX SIDESLOPES.
7. REFER TO PLUMBING DRAWINGS FOR CONTINUATION INTO THE BUILDING.
8. STANDARD END WALL; RE: CTDOT STD. DWG. HW-506_01
9. FLAP GATE MOUNTED TO STANDARD END WALL; RE: 5, C504.
10. INFILTRATION BASIN.
11. EMERGENCY SPILLWAY: CREST ELEVATION APPROXIMATELY 303.00. SPILLWAY TO ULTIMATELY BE A PAVED DRIVEWAY TO RIVER ACCESS PARKING.
12. SLOPE TOE PROTECTION; RE:9, C504.
13. CONCRETE END SECTION; RE: CTDOT STD. DWG. HW-652_01.
14. CONSERVATION SEED MIX ON SIDESLOPES AND BOTTOM OF INFILTRATIONBASIN. REFER TO DRAWINGS L401-L405.
15. YARD DRAIN; RE:3, C504. RIM AND TOP OF STONE IN AREA WAY TO GRADED EVENLY AT 304.00. UNDERDRAIN: RE 13, C501.

GENERAL NOTES:

A. ALL NEW DRAINAGE INLETS IN LAWN OR LANDSCAPED AREAS TO BE PROTECTED WITH GEOTEXTILE INLET PROTECTION.

B. ALL NEW DRAINAGE INLETS IN PAVED AREAS TO BE PROTECTED WITH GEOTEXTILE SACKS BELOW THE GRATES.

C. PERIMETER SILTFENCE IS TO BE PROPERLY MAINTAINED THROUGHOUT CONSTRUCTION.

D. MATCH EXISTING PAVEMENT FLUSH. CONTRACTOR TO NOTIFY ENGINEER IF THIS DOES NOT PROVIDE POSITIVE DRAINAGE.

1 GRADING AND DRAINAGE PLAN

SCALE: 1"=20'

0 10 20 40

SYMBOL LEGEND

LOD = LIMITS OF DISTURBANCE

GSF = GEOTEXTILE SILT FENCE

REV.	DATE	DESCRIPTION	SHEET NO.
		REVISIONS	

FILENAME:

THE INFORMATION, INCLUDING ESTIMATED QUANTITIES OF WORK, SHOWN ON THESE SHEETS IS BASED ON LIMITED INVESTIGATIONS BY THE STATE AND IS IN NO WAY WARRANTED TO INDICATE THE CONDITIONS OF ACTUAL QUANTITIES OF WORK WHICH WILL BE REQUIRED.

DESIGNER/DRAFTER: TJZ

CHECKED BY: DLK/SMR

SCALE: AS NOTED

STATE OF CONNECTICUT
DEPARTMENT OF TRANSPORTATION

ARCHITECT: WENDEL

ENGINEERS: ReSTL DESIGNERS, CLOUGH HARBOUR ASSOC., AI ENGINEERS, WENDEL

APPROVED BY: DCD

DATE: 6/11/14

DESIGNED BY:

WENDEL
140 JOHN JAMES AUDUBON PKWY.,
SUITE 201
AMHERST, NEW YORK 14228

STATE OF CONNECTICUT
DAVID C. DUDLEY
No. 11937
REGISTERED PROFESSIONAL ENGINEER

PROJECT TITLE:

WATERBURY BUS MAINTENANCE FACILITY REPLACEMENT

ADDRESS: **FROST BRIDGE ROAD WATERTOWN, CONNECTICUT 06787**

DRAWING TITLE: **GRADING & DRAINAGE PLAN**

PROJECT NO. **0431-0006**

DRAWING NO. **C-302**

SHEET NO. 03.023

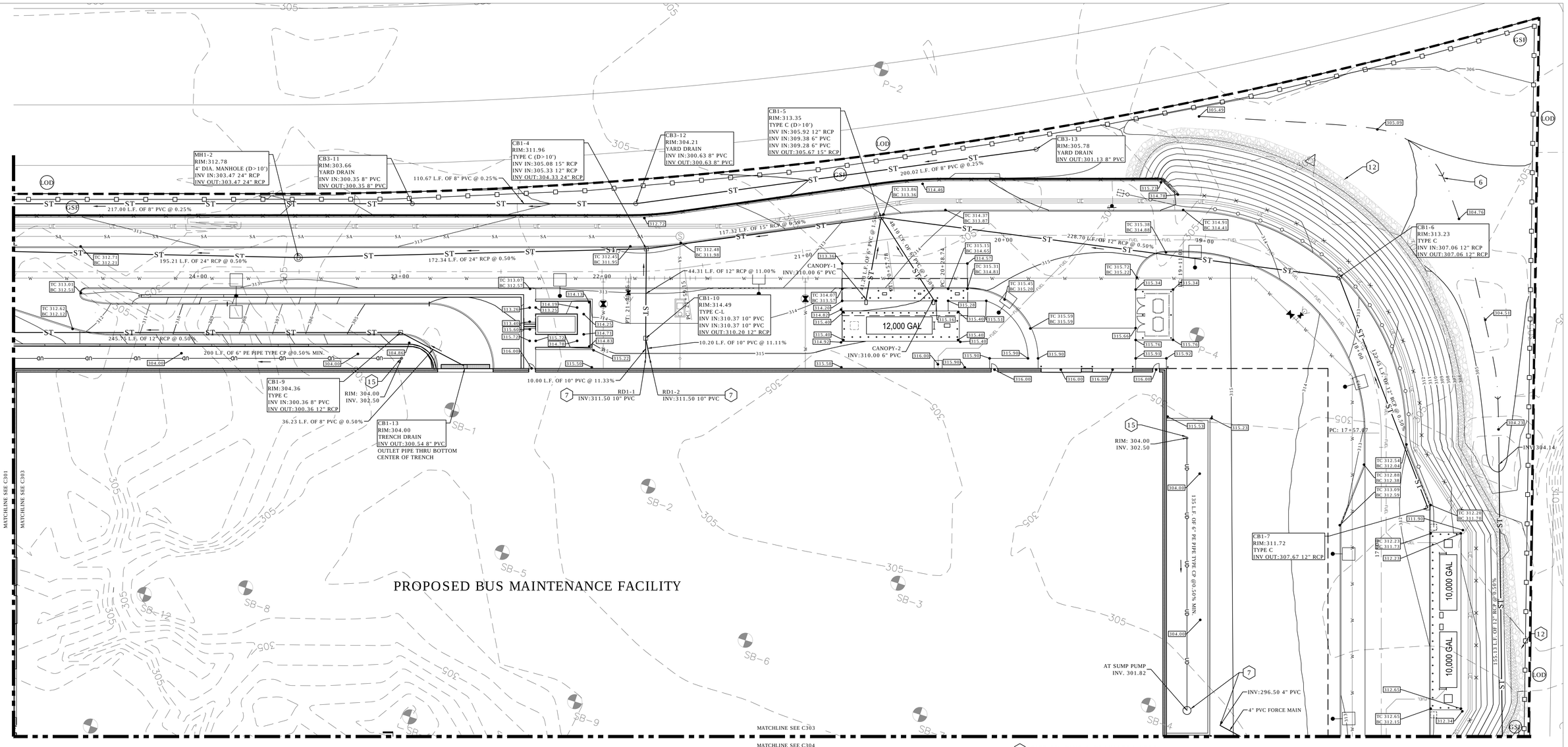

SITE GRADING & DRAINAGE NOTES

(NOT ALL NOTES APPLY TO THIS SHEET)

1. MODIFIED RIP-RAP APRON, TYPE B: La=10', W1=3', W2=7', d=12"; RE: 10, C504.
2. MODIFIED RIP-RAP APRON/LEVEL SPREADER, TYPE B: La=10', W1=W2=7', d=12"; RE: 10, C504 .
3. MODIFIED RIP-RAP APRON, TYPE C: La (min)=10', W1=W2=11', d=12". EXTEND LENGTH TO EDGE OF WETLANDS, La=+/-35'; RE: 11, C504.
4. RIP RAP CHANNEL: 4' WIDE BOTTOM WITH 3:1 SIDESLOPES, S=3.0%
5. FOREBAY WITH MODIFIED RIP-RAP, d=12". SPILLWAY TO MAIN INFILTRATION BASIN TO BE 1' HIGH, 3' WIDE AT TOP WITH 3:1 SIDESLOPES.
6. GRASSED SWALE @ 0.5% SLOPE WITH 3:1 MAX SIDESLOPES.
7. REFER TO PLUMBING DRAWINGS FOR CONTINUATION INTO THE BUILDING.
8. STANDARD END WALL; RE: CTDOT STD. DWG. HW-506_01
9. FLAP GATE MOUNTED TO STANDARD END WALL; RE: 5, C504.
10. INFILTRATION BASIN.
11. EMERGENCY SPILLWAY: CREST ELEVATION APPROXIMATELY 303.00. SPILLWAY TO ULTIMATELY BE A PAVED DRIVEWAY TO RIVER ACCESS PARKING.
12. SLOPE TOE PROTECTION; RE:9, C504.
13. CONCRETE END SECTION; RE: CTDOT STD. DWG. HW-652_01.
14. CONSERVATION SEED MIX ON SIDESLOPES AND BOTTOM OF INFILTRATIONBASIN. REFER TO DRAWINGS L401-L405.
15. YARD DRAIN; RE:3, C504. RIM AND TOP OF STONE IN AREA WAY TO GRADED EVENLY AT 304.00. UNDERDRAIN: RE 13, C501.

GENERAL NOTES:

A. ALL NEW DRAINAGE INLETS IN LAWN OR LANDSCAPED AREAS TO BE PROTECTED WITH GEOTEXTILE INLET PROTECTION.

B. ALL NEW DRAINAGE INLETS IN PAVED AREAS TO BE PROTECTED WITH GEOTEXTILE SACKS BELOW THE GRATES.

C. PERIMETER SILTFENCE IS TO BE PROPERLY MAINTAINED THROUGHOUT CONSTRUCTION.

D. MATCH EXISTING PAVEMENT FLUSH. CONTRACTOR TO NOTIFY ENGINEER IF THIS DOES NOT PROVIDE POSITIVE DRAINAGE.

1 GRADING AND DRAINAGE PLAN

SCALE: 1"=20'

0 10 20 40

SYMBOL LEGEND

LOD = LIMITS OF DISTURBANCE

GSF = GEOTEXTILE SILT FENCE

REV.	DATE	DESCRIPTION	SHEET NO.
		REVISIONS	

FILENAME:

THE INFORMATION, INCLUDING ESTIMATED QUANTITIES OF WORK, SHOWN ON THESE SHEETS IS BASED ON LIMITED INVESTIGATIONS BY THE STATE AND IS IN NO WAY WARRANTED TO INDICATE THE CONDITIONS OF ACTUAL QUANTITIES OF WORK WHICH WILL BE REQUIRED.

DESIGNER/DRAFTER: TJZ

CHECKED BY: DLK/SMR

SCALE: AS NOTED

STATE OF CONNECTICUT
DEPARTMENT OF TRANSPORTATION

ARCHITECT: WENDEL

ENGINEERS: ReSTL DESIGNERS, CLOUGH HARBOUR ASSOC., AI ENGINEERS, WENDEL

APPROVED BY: DCD

DATE: 6/11/14

DESIGNED BY:

WENDEL
140 JOHN JAMES AUDUBON PKWY., SUITE 201
AMHERST, NEW YORK 14228

STATE OF CONNECTICUT
DAVID C. DUDLEY
No. 11937
REGISTERED PROFESSIONAL ENGINEER

PROJECT TITLE:

WATERBURY BUS MAINTENANCE FACILITY REPLACEMENT

ADDRESS: **FROST BRIDGE ROAD WATERTOWN, CONNECTICUT 06787**

DRAWING TITLE: **GRADING & DRAINAGE PLAN**

PROJECT NO. **0431-0006**

DRAWING NO. **C-303**

SHEET NO. 03.024

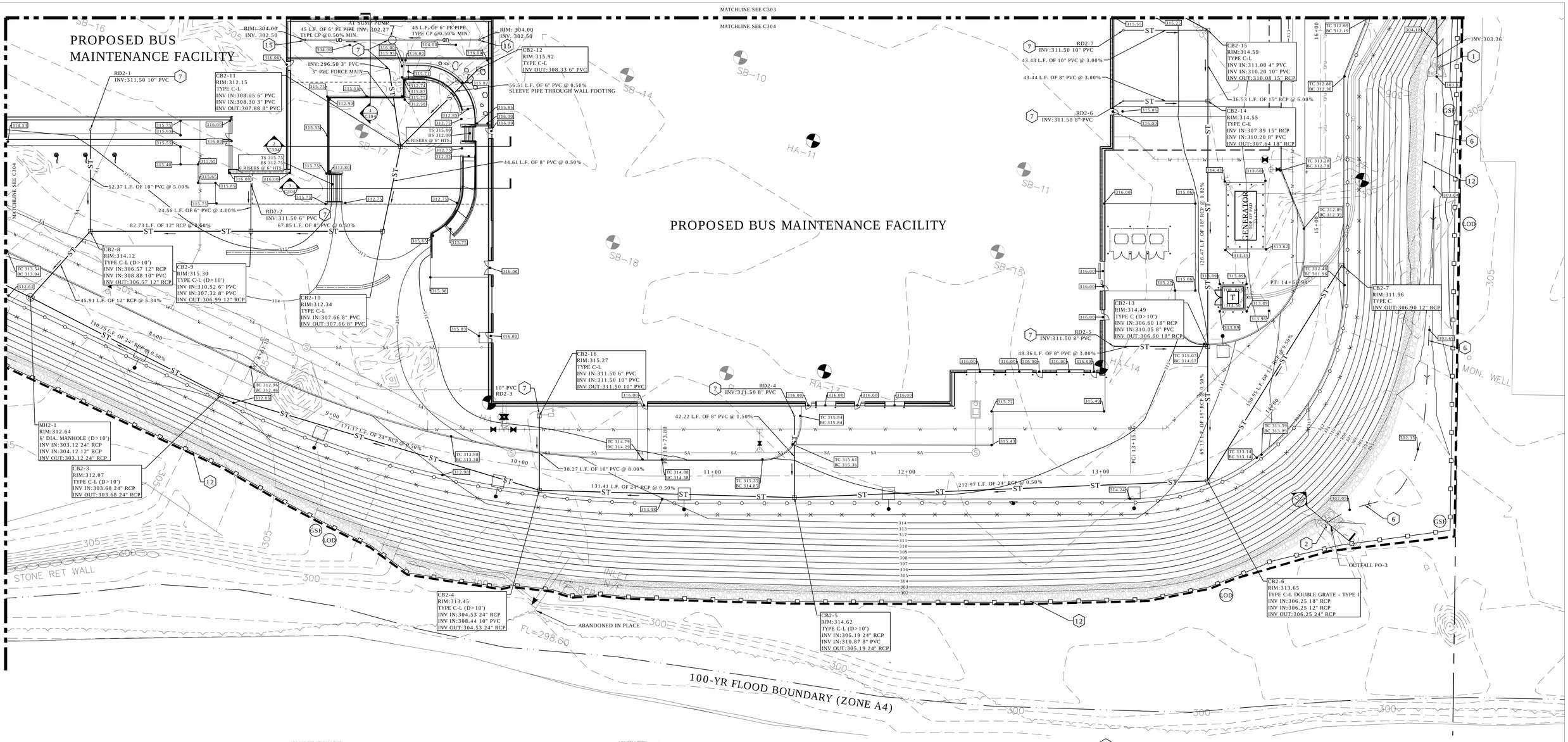

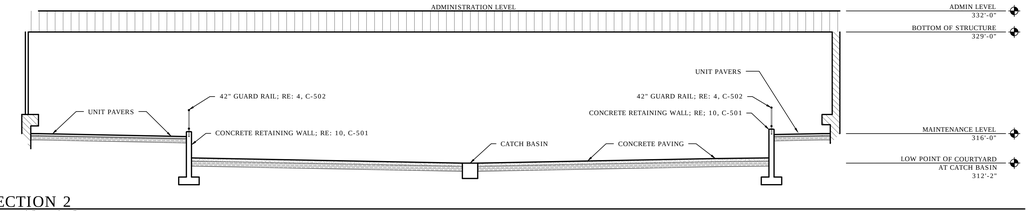

2 SECTION 2
SCALE: 1/8" = 1'-0"

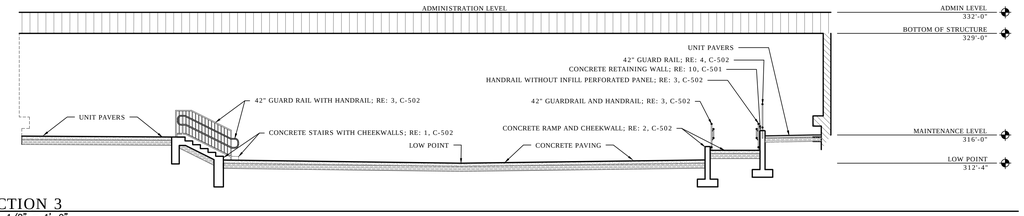

3 SECTION 3
SCALE: 1/8" = 1'-0"

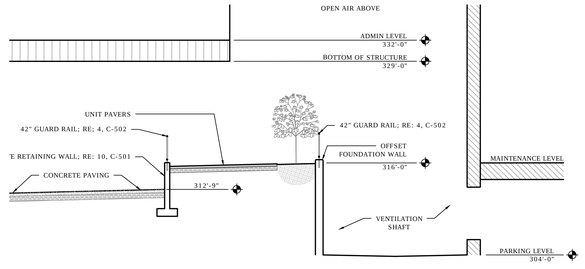

4 SECTION 4
SCALE: 1/8" = 1'-0"

SITE GRADING & DRAINAGE NOTES

(NOT ALL NOTES APPLY TO THIS SHEET)

1. MODIFIED RIP-RAP APRON, TYPE B: La=10', W1=3', W2=7', d=12"; RE: 10, C504.
2. MODIFIED RIP-RAP APRON/LEVEL SPREADER, TYPE B: La=10', W1=W2=7', d=12"; RE: 10, C504 .
3. MODIFIED RIP-RAP APRON, TYPE C: La (min)=10', W1=W2=11', d=12". EXTEND LENGTH TO EDGE OF WETLANDS, La=+/-35'; RE: 11, C504.
4. RIP RAP CHANNEL: 4' WIDE BOTTOM WITH 3:1 SIDESLOPES, S=3.0%
5. FOREBAY WITH MODIFIED RIP-RAP, d=12". SPILLWAY TO MAIN INFILTRATION BASIN TO BE 1' HIGH, 3' WIDE AT TOP WITH 3:1 SIDESLOPES.
6. GRASSED SWALE @ 0.5% SLOPE WITH 3:1 MAX SIDESLOPES.
7. REFER TO PLUMBING DRAWINGS FOR CONTINUATION INTO THE BUILDING.
8. STANDARD END WALL; RE: CTDOT STD. DWG. HW-506_01
9. FLAP GATE MOUNTED TO STANDARD END WALL; RE: 5, C504.
10. INFILTRATION BASIN.
11. EMERGENCY SPILLWAY: CREST ELEVATION APPROXIMATELY 303.00. SPILLWAY TO ULTIMATELY BE A PAVED DRIVEWAY TO RIVER ACCESS PARKING.
12. SLOPE TOE PROTECTION; RE:9, C504.
13. CONCRETE END SECTION; RE: CTDOT STD. DWG. HW-652_01.
14. CONSERVATION SEED MIX ON SIDESLOPES AND BOTTOM OF INFILTRATIONBASIN. REFER TO DRAWINGS L401-L405.
15. YARD DRAIN; RE:3, C504. RIM AND TOP OF STONE IN AREA WAY TO GRADED EVENLY AT 304.00. UNDERDRAIN: RE 13, C501.

1 GRADING AND DRAINAGE PLAN
SCALE: 1"=20'

0 10 20 40

SYMBOL LEGEND

LOD = LIMITS OF DISTURBANCE

GSF = GEOTEXTILE SILT FERCE

GENERAL NOTES:

A. ALL NEW DRAINAGE INLETS IN LAWN OR LANDSCAPED AREAS TO BE PROTECTED WITH GEOTEXTILE INLET PROTECTION.

B. ALL NEW DRAINAGE INLETS IN PAVED AREAS TO BE PROTECTED WITH GEOTEXTILE SACKS BELOW THE GRATES.

C. PERIMETER SILTFENCE IS TO BE PROPERLY MAINTAINED THROUGHOUT CONSTRUCTION.

D. MATCH EXISTING PAVEMENT FLUSH. CONTRACTOR TO NOTIFY ENGINEER IF THIS DOES NOT PROVIDE POSITIVE DRAINAGE.

REV.	DATE	DESCRIPTION	SHEET NO.
		REVISIONS	

FILENAME:

THE INFORMATION, INCLUDING ESTIMATED QUANTITIES OF WORK, SHOWN ON THESE SHEETS IS BASED ON LIMITED INVESTIGATIONS BY THE STATE AND IS IN NO WAY WARRANTED TO INDICATE THE CONDITIONS OF ACTUAL QUANTITIES OF WORK WHICH WILL BE REQUIRED.

DESIGNER/DRAFTER: TJZ

CHECKED BY: DLK/SMR

SCALE: AS NOTED

STATE OF CONNECTICUT
DEPARTMENT OF TRANSPORTATION

ARCHITECT: WENDEL

ENGINEERS: ReSTL DESIGNERS, CLOUGH HARBOUR ASSOC., AI ENGINEERS, WENDEL

APPROVED BY: DCD

DATE: 6/11/14

DESIGNED BY:
WENDEL
140 JOHN JAMES AUDUBON PKWY., SUITE 201
AMHERST, NEW YORK 14228

DAVID C. DUCHENEAU — No. 11937 — REGISTERED PROFESSIONAL ENGINEER

PROJECT TITLE:
WATERBURY BUS MAINTENANCE FACILITY REPLACEMENT

ADDRESS: FROST BRIDGE ROAD, WATERTOWN, CONNECTICUT 06787

DRAWING TITLE: **GRADING & DRAINAGE PLAN**

PROJECT NO. **0431-0006**

DRAWING NO. **C-304**

SHEET NO. 03.025

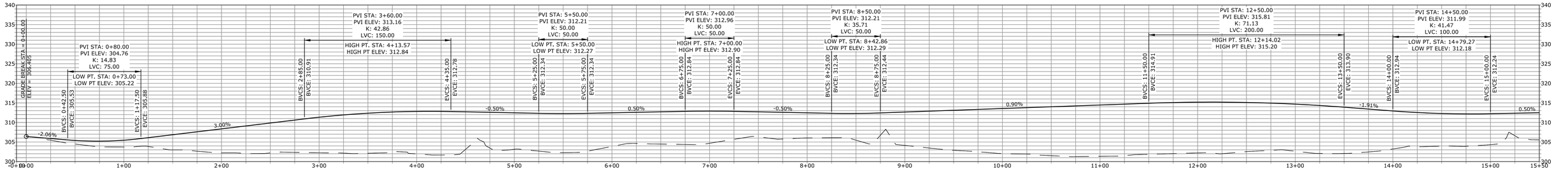

PROFILE - RINGROAD - STA. 0+00 TO 15+50

SCALE: HORIZ. 1"=40'
VERT. 1"=5'

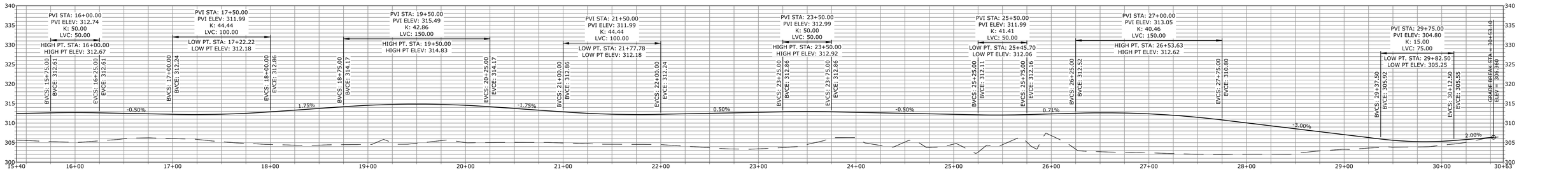

PROFILE - RINGROAD - STA. 15+50 TO 30+53.10

SCALE: HORIZ. 1"=40'
VERT. 1"=5'

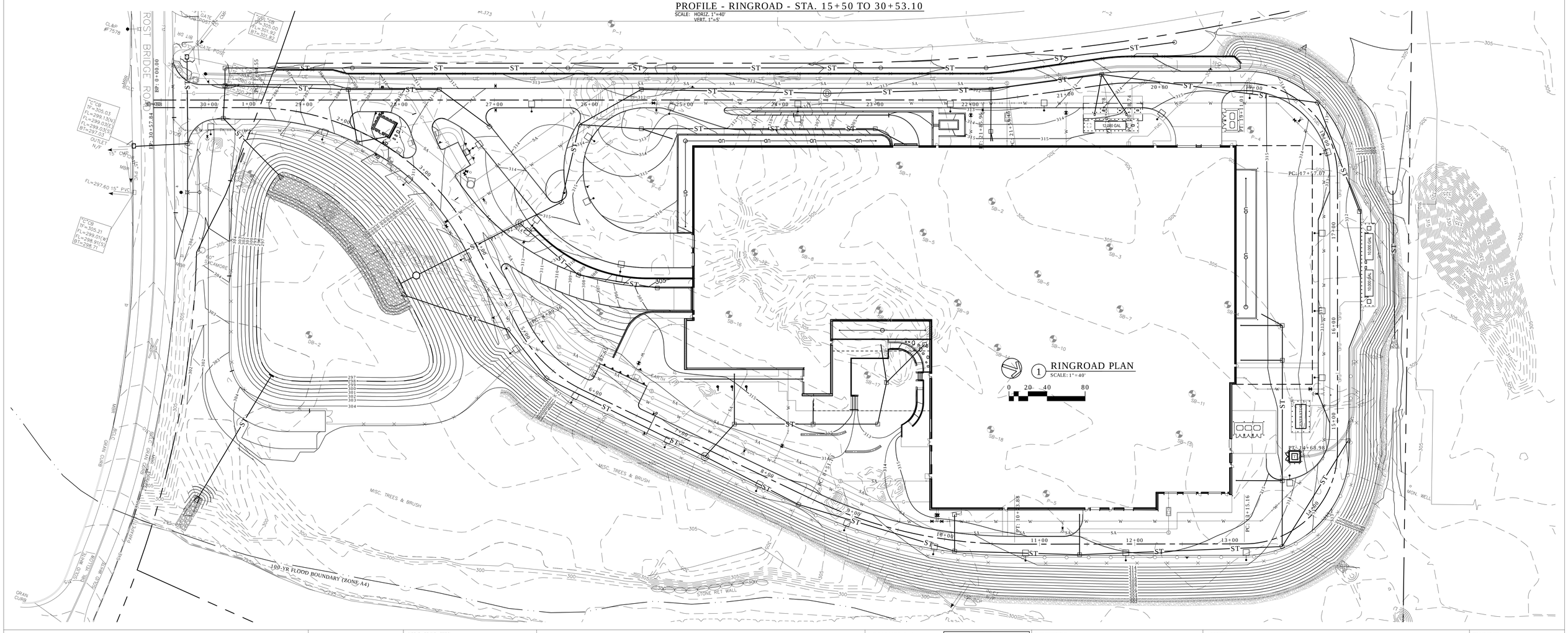

REV.	DATE	DESCRIPTION	SHEET NO.
		REVISIONS	

FILENAME:

THE INFORMATION, INCLUDING ESTIMATED QUANTITIES OF WORK, SHOWN ON THESE SHEETS IS BASED ON LIMITED INVESTIGATIONS BY THE STATE AND IS IN NO WAY WARRANTED TO INDICATE THE CONDITIONS OF ACTUAL QUANTITIES OF WORK WHICH WILL BE REQUIRED.

DESIGNER/DRAFTER: TJZ

CHECKED BY: DLK/SMR

SCALE: AS NOTED

STATE OF CONNECTICUT
DEPARTMENT OF TRANSPORTATION

ARCHITECT: WENDEL

ENGINEERS: ReSTL DESIGNERS, CLOUGH HARBOUR ASSOC., AI ENGINEERS, WENDEL

APPROVED BY: DCD

DATE: 6/11/14

DESIGNED BY:
WENDEL
140 JOHN JAMES AUDUBON PKWY.,
SUITE 201
AMHERST, NEW YORK 14228

STATE OF CONNECTICUT — DAVID C. DUCHENEAU — No. 11937 — REGISTERED PROFESSIONAL ENGINEER

PROJECT TITLE:
WATERBURY BUS MAINTENANCE FACILITY REPLACEMENT

ADDRESS:
FROST BRIDGE ROAD
WATERTOWN, CONNECTICUT 06787

DRAWING TITLE:
RINGROAD PLAN AND PROFILE

PROJECT NO.
0431-0006

DRAWING NO.
C-305

SHEET NO.
03.026

STATE OF CONN.

WEST SITE RETAINING WALL
SEE C313 FOR SCHEDULE AND DETAILS

STEM RETAINING WALL #A
SEE C313 FOR SCHEDULE AND DETAILS

RETAINING WALL
SEE STRUCTURAL DRAWINGS

STEM RETAINING WALL #B
SEE C313 FOR SCHEDULE AND DETAILS

STEM RETAINING WALL #C
SEE C313 FOR SCHEDULE AND DETAILS

STAIR ENLARGEMENT C311

SEE COURTYARD ENLARGEMENT C311

RETAINING WALL
SEE STRUCTURAL DRAWINGS

12,000 GAL

10,000 GAL

10,000 GAL

MISC. TREES & BRUSH

MISC. TREES & BRUSH

100-YR FLOOD BOUNDARY (ZONE A4)

STONE RET WALL

NOTES:

1. TOP OF WALL (TW) REFERS TO THE PHYSICAL TOP OF WALL AS DEPICTED BY THE SPOT ELEVATIONS ON C310.
2. BOTTOM OF WALL (BW) REFERS TO FINISH GRADE SPOT ELEVATIONS AT THE BOTTOM OF WALL AS DEPICTED BY THE SPOT ELEVATIONS ON C310.
3. REFER TO SHEET C312 FOR SCHEDULES DEFINING DEPTHS TO BOTTOM OF FOOTINGS, THICKNESS OF STEM WALLS AND FOOTER DIMENSIONS.

1 SITE PLAN
SCALE: 1" = 30'
0 15 30 60

REV.	DATE	DESCRIPTION	SHEET NO.
REVISIONS			

FILENAME:

THE INFORMATION, INCLUDING ESTIMATED QUANTITIES OF WORK, SHOWN ON THESE SHEETS IS BASED ON LIMITED INVESTIGATIONS BY THE STATE AND IS IN NO WAY WARRANTED TO INDICATE THE CONDITIONS OF ACTUAL QUANTITIES OF WORK WHICH WILL BE REQUIRED.

DESIGNER/DRAFTER: CML

CHECKED BY: DLK

SCALE: AS NOTED

STATE OF CONNECTICUT
DEPARTMENT OF TRANSPORTATION

ARCHITECT: WENDEL

ENGINEERS: ReSTL DESIGNERS, CLOUGH HARBOUR ASSOC., AI ENGINEERS, WENDEL

APPROVED BY: DCD

DATE: 6/11/14

DESIGNED BY:

WENDEL
140 JOHN JAMES AUDUBON PKWY.,
SUITE 201
AMHERST, NEW YORK
14228

STATE OF CONNECTICUT
DAVID C. DUCHENEAU
No. 11937
REGISTERED PROFESSIONAL ENGINEER

PROJECT TITLE:

WATERBURY BUS MAINTENANCE FACILITY REPLACEMENT

ADDRESS:

FROST BRIDGE ROAD
WATERTOWN, CONNECTICUT 06787

DRAWING TITLE:

WALL GRADING PLAN

PROJECT NO. **0431-0006**

DRAWING NO. **C-310**

SHEET NO. 03.027

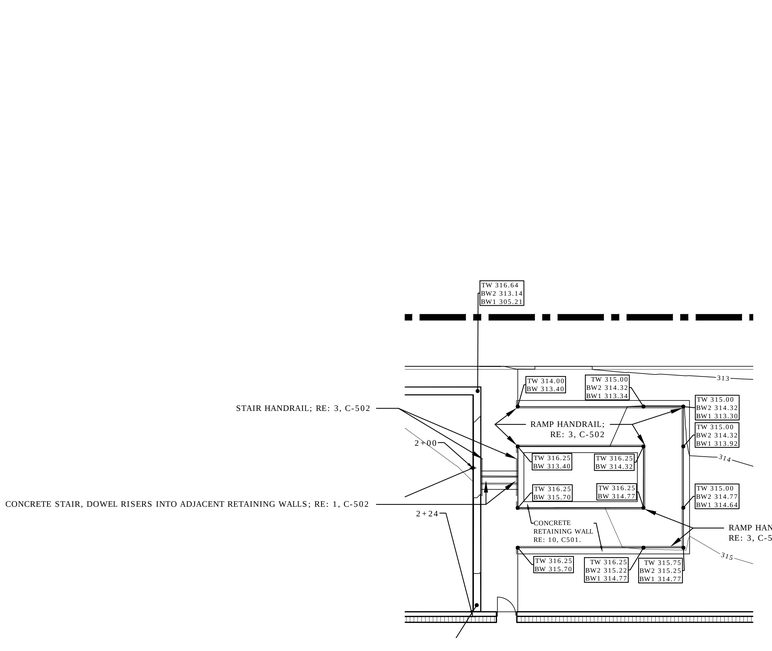

1 STAIR ENLARGEMENT
SCALE: 1"=10'

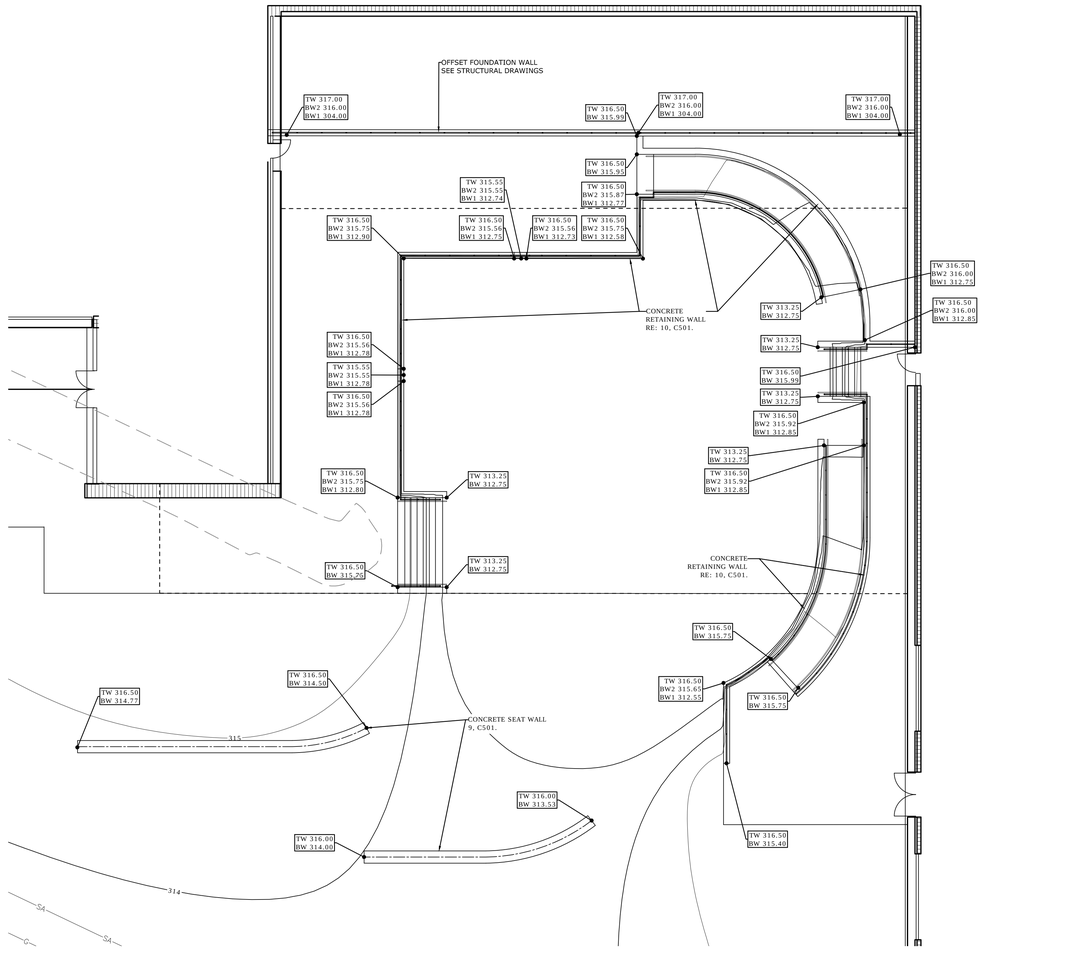

2 COURTYARD ENLARGEMENT
SCALE: 1"=10'

NOTES:

1. TOP OF WALL (TW) REFERS TO THE PHYSICAL TOP OF WALL AS DEPICTED BY THE SPOT ELEVATIONS ON C310.
2. BOTTOM OF WALL (BW) REFERS TO FINISH GRADE SPOT ELEVATIONS AT THE BOTTOM OF WALL AS DEPICTED BY THE SPOT ELEVATIONS ON C310.
3. REFER TO SHEET C312 FOR SCHEDULES DEFINING DEPTHS TO BOTTOM OF FOOTINGS, THICKNESS OF STEM WALLS AND FOOTER DIMENSIONS.

REV.	DATE	DESCRIPTION	SHEET NO.
		REVISIONS	

FILENAME:

THE INFORMATION, INCLUDING ESTIMATED QUANTITIES OF WORK, SHOWN ON THESE SHEETS IS BASED ON LIMITED INVESTIGATIONS BY THE STATE AND IS IN NO WAY WARRANTED TO INDICATE THE CONDITIONS OF ACTUAL QUANTITIES OF WORK WHICH WILL BE REQUIRED.

DESIGNER/DRAFTER: CML
CHECKED BY: DLK
SCALE: AS NOTED

STATE OF CONNECTICUT
DEPARTMENT OF TRANSPORTATION

ARCHITECT: WENDEL
ENGINEERS: ReSTL DESIGNERS, CLOUGH HARBOUR ASSOC., AI ENGINEERS, WENDEL
APPROVED BY: DCD
DATE: 6/11/14

DESIGNED BY:
WENDEL
140 JOHN JAMES AUDUBON PKWY., SUITE 201
AMHERST, NEW YORK 14228

STATE OF CONNECTICUT
DAVID G. DUDLEY
No. 11937
REGISTERED PROFESSIONAL ENGINEER

PROJECT TITLE:
WATERBURY BUS MAINTENANCE FACILITY REPLACEMENT

ADDRESS:
FROST BRIDGE ROAD
WATERTOWN, CONNECTICUT 06787

DRAWING TITLE:
WALL GRADING ENLARGEMENTS

PROJECT NO. **0431-0006**
DRAWING NO. **C-311**
SHEET NO. 03.028

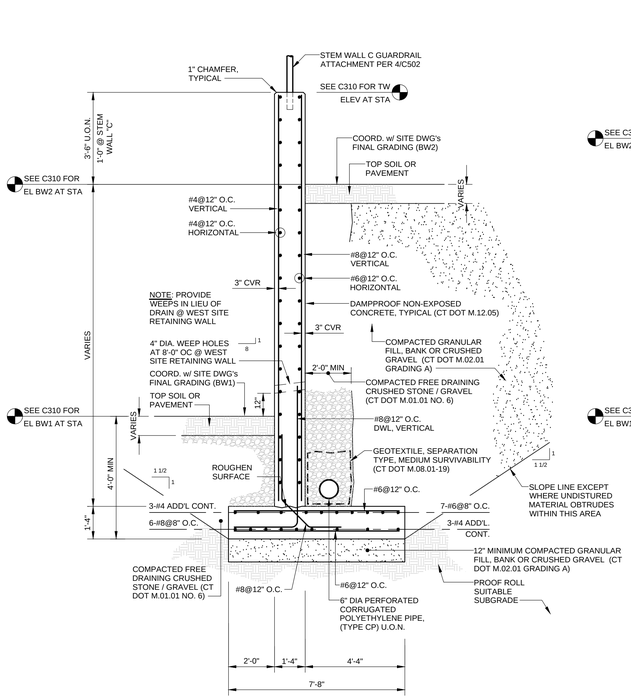

1 RETAINING WALL SECTION TYPE 101
SCALE: 3/8"=1'-0"

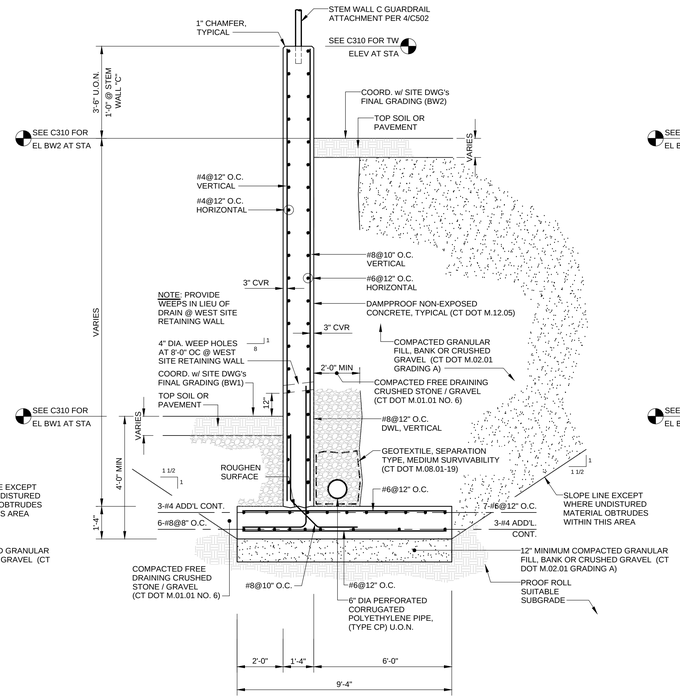

2 RETAINING WALL SECTION TYPE 102
SCALE: 3/8"=1'-0"

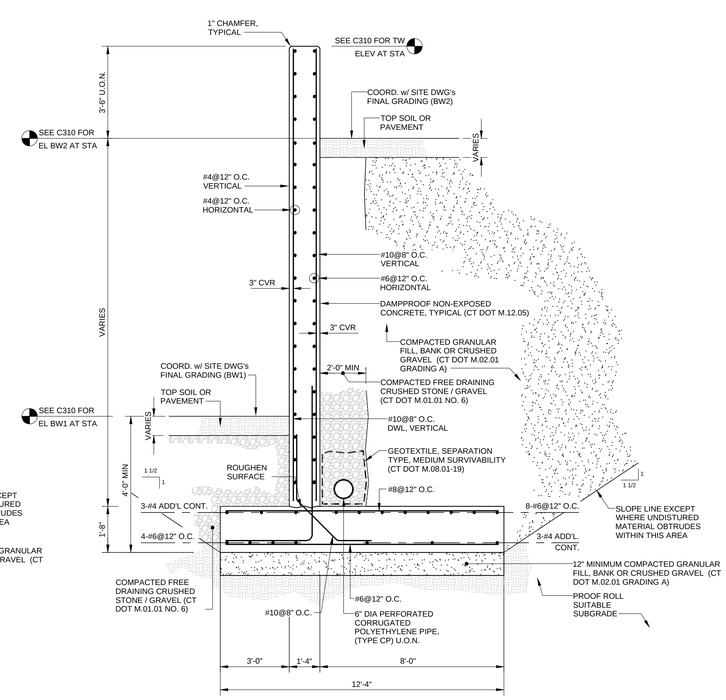

3 RETAINING WALL SECTION TYPE 103
SCALE: 3/8"=1'-0"

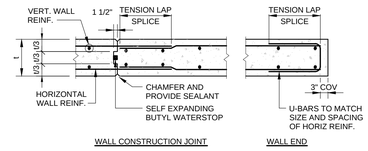

4 TYPICAL FOUNDATION WALL CONSTRUCTION
SCALE: 1/2"=1'-0"

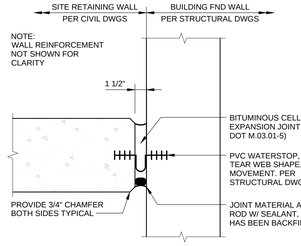

5 EXPANSION JOINT DETAIL
SCALE: 3/4"=1'-0"

TENSION				
BAR SIZE	DEV. LENGTH (IN)	CLASS B SPLICE LENGTH	TOP BAR DEV. LENGTH (IN)	TOP BAR SPLICE LENGTH (IN)
3	14	18	18	24
4	19	24	24	32
5	23	30	30	39
6	28	36	36	47
7	42	55	55	71
8	55	72	72	94
9	62	81	81	106
10	69	90	90	117
11	76	98	98	128

NOTES:
1. REINFORCING BARS ARE CLASSIFIED AS TOP BARS WHEN MORE THAN 12" OF CONCRETE IS CAST BENEATH RESPECTIVE REINFORCING BAR.
2. "SIDE LAP" ALL LAP SPLICES TO PROVIDE MAXIMUM MOMENT CAPACITY

6 REINFORCING BAR SPLICE LENGTHS
SCALE: NONE

RETAINING WALL NOTES:

1. SOIL LOADS PER GEOTECHNICAL REPORT (BY HALEY AND ALDRICH, INC. 05/2013)

STATIC EARTH:	35 PSF PER FOOT DEPTH
SEISMIC:	7x HEIGHT OF WALL (PSF) ACTING AS INVERTED TRIANGLE
SURCHARGE:	HS20 VEHICLE LOADING
IMPACT:	10,000 LBS POINT LOAD AT BUMPER HEIGHT

2. SEE C310 FOR LOCATIONS OF RETAINING WALLS ON SITE PLAN.
3. SEE C313 FOR RETAINING WALL ELEVATIONS.
4. PROVIDE WEEPS AT WEST SITE RETAINING WALL, SUBDRAINAGE AT ALL OTHER SITE RETAINING WALLS
5. ALL SITE RETAINING WALLS TO BE CONSTRUCTED OF CLASS F CONCRETE AND SHALL BE AIR ENTRAINED, CONTAINING AN AIR CONTENT OF 6%, +/- 1 1/2% (CT DOT M.03.01).
6. ALL SITE RETAINING WALL REINFORCEMENT SHALL BE UNCOATED DEFORMED STEEL (CT DOT M.06.01).

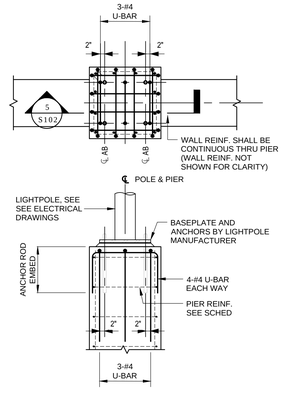

8 ADD'L PIER REINFORCING SECTION
SCALE: 1/2"=1'-0"

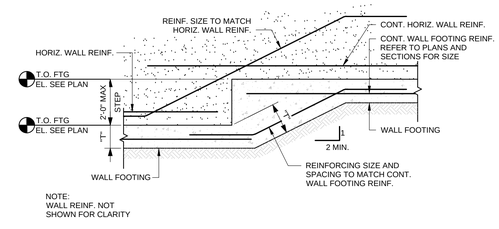

7 TYP STEPPED WALL FTG DETAIL
SCALE: 1/2"=1'-0"

ALL PIERS ARE CENTERED ON COLUMNS UNLESS OTHERWISE NOTED
W = PEDESTAL WIDTH, SHALL BE SAME DIRECTION AS COLUMN U.O.N.
L = PEDESTAL LENGTH, SHALL BE THE SAME DIRECTION AS COLUMN DEPTH U.O.N.

CONCRETE PIER SCHEDULE

MARK	SIZE		VERT. REINF.	TIES	REMARKS
	W	L			
P-01	2.0'	2.0'	8-#6	#4@12"O.C.	SEE DET 8/C312 FOR ADD'L REINF.

REV.	DATE	DESCRIPTION	SHEET NO.
		REVISIONS	

FILENAME:

THE INFORMATION, INCLUDING ESTIMATED QUANTITIES OF WORK, SHOWN ON THESE SHEETS IS BASED ON LIMITED INVESTIGATIONS BY THE STATE AND IS IN NO WAY WARRANTED TO INDICATE THE CONDITIONS OF ACTUAL QUANTITIES OF WORK WHICH WILL BE REQUIRED.

DESIGNER/DRAFTER: DJP
CHECKED BY: CG
SCALE: AS NOTED

STATE OF CONNECTICUT
DEPARTMENT OF TRANSPORTATION

ARCHITECT: WENDEL
APPROVED BY: DCD
ENGINEERS: ReSTL DESIGNERS, CLOUGH HARBOUR ASSOC., AI ENGINEERS, WENDEL
DATE: 6/11/14

DESIGNED BY:
WENDEL
140 JOHN JAMES AUDUBON PKWY., SUITE 201
AMHERST, NEW YORK 14228

STATE OF CONNECTICUT — DAVID G. DUDZIEWICZ — No. 11937 — REGISTERED PROFESSIONAL ENGINEER

PROJECT TITLE: WATERBURY BUS MAINTENANCE FACILITY REPLACEMENT

ADDRESS: FROST BRIDGE ROAD, WATERTOWN, CONNECTICUT 06787

DRAWING TITLE: SITE RETAINING WALL DETAILS

PROJECT NO. 0431-0006
DRAWING NO. C-312
SHEET NO. 03.029

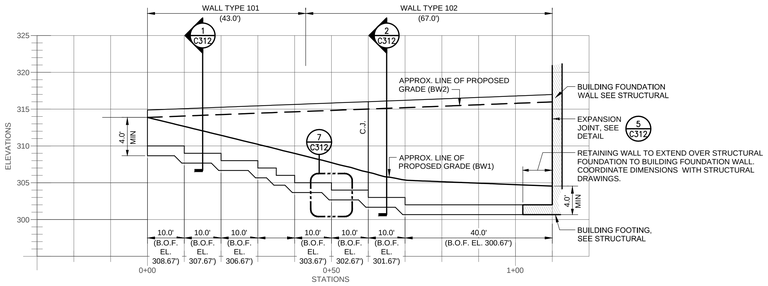

1 STEM RETAINING WALL "C" PROFILE
SCALE: 1"=10'-0" VERTICAL, 1"=20'-0" HORIZONTAL

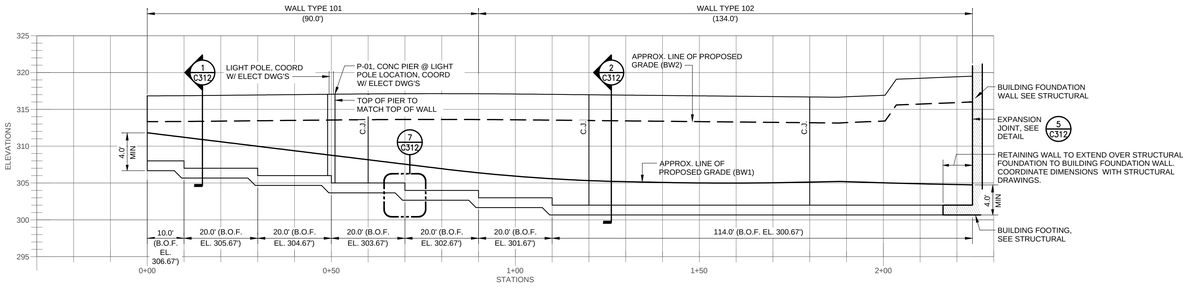

2 STEM RETAINING WALL "A" PROFILE
SCALE: 1"=10'-0" VERTICAL, 1"=20'-0" HORIZONTAL

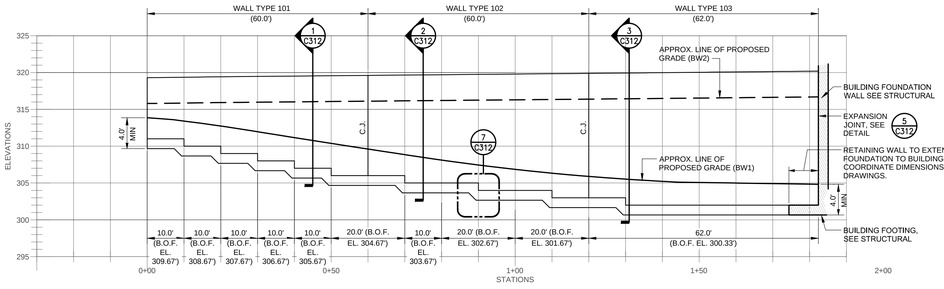

3 STEM RETAINING WALL "B" PROFILE
SCALE: 1"=10'-0" VERTICAL, 1"=20'-0" HORIZONTAL

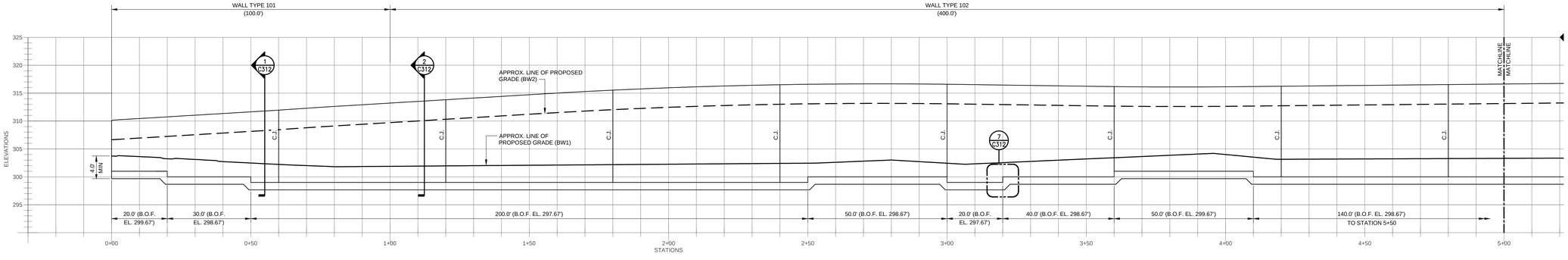

4 WEST SITE RETAINING WALL PROFILE (SOUTH)
SCALE: 1"=10'-0" VERTICAL, 1"=20'-0" HORIZONTAL

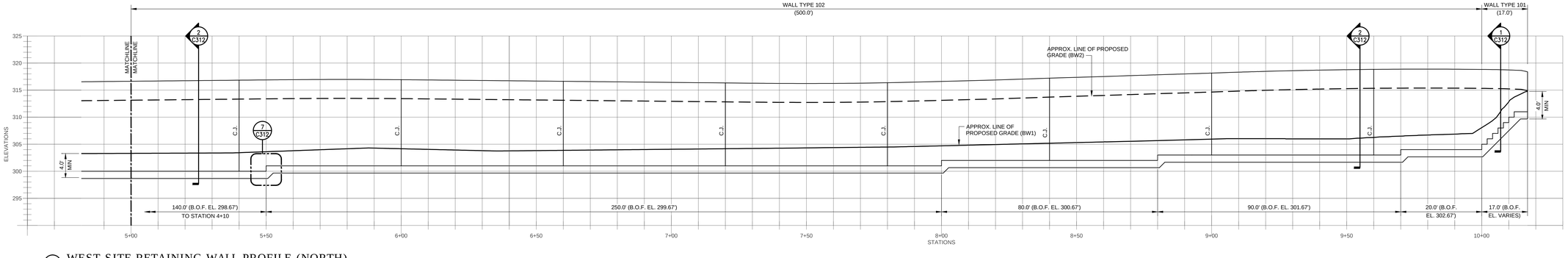

5 WEST SITE RETAINING WALL PROFILE (NORTH)
SCALE: 1"=10'-0" VERTICAL, 1"=20'-0" HORIZONTAL

REV.	DATE	DESCRIPTION	SHEET NO.
		REVISIONS	

FILENAME:

THE INFORMATION, INCLUDING ESTIMATED QUANTITIES OF WORK, SHOWN ON THESE SHEETS IS BASED ON LIMITED INVESTIGATIONS BY THE STATE AND IS IN NO WAY WARRANTED TO INDICATE THE CONDITIONS OF ACTUAL QUANTITIES OF WORK WHICH WILL BE REQUIRED.

DESIGNER/DRAFTER: DJP
CHECKED BY: CG
SCALE: AS NOTED

STATE OF CONNECTICUT
DEPARTMENT OF TRANSPORTATION

ARCHITECT: WENDEL
APPROVED BY: DCD
ENGINEERS: ReSTL DESIGNERS, CLOUGH HARBOUR ASSOC., AI ENGINEERS, WENDEL
DATE: 6/11/14

DESIGNED BY:
WENDEL
140 JOHN JAMES AUDUBON PKWY., SUITE 201
AMHERST, NEW YORK 14228

STATE OF CONNECTICUT · DAVID C. DUDKIEWICZ · No. 11937 · REGISTERED PROFESSIONAL ENGINEER

PROJECT TITLE:
WATERBURY BUS MAINTENANCE FACILITY REPLACEMENT

ADDRESS:
FROST BRIDGE ROAD
WATERTOWN, CONNECTICUT 06787

DRAWING TITLE:
SITE RETAINING WALL ELEVATIONS

PROJECT NO. **0431-0006**
DRAWING NO. **C-313**
SHEET NO. 03.030

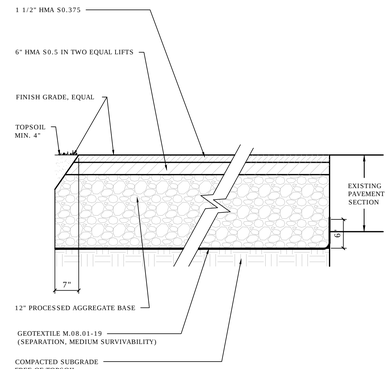

NOTE:
1. DIMENSIONS GIVEN ON PLAN ARE TAKEN FROM EDGE OF ASPHALT TOP COURSE.

1 BITUMINOUS CONC. PAVEMENT - HEAVY DUTY
SCALE: NTS

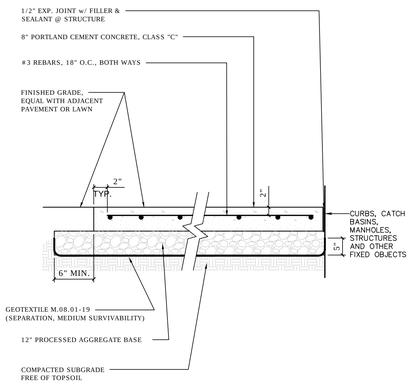

2 CONCRETE PAVEMENT - HEAVY DUTY
SCALE: NTS

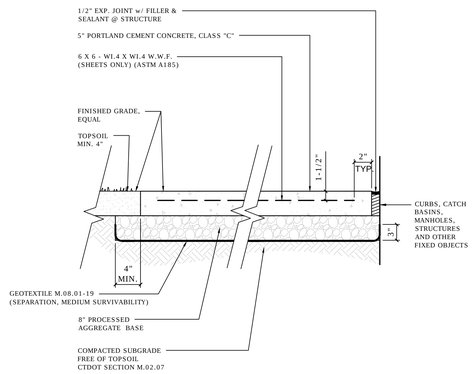

NOTES:
1. 2% MAXIMUM CROSS SLOPE.
2. 5% MAXIMUM LONGITUDINAL SLOPE.

3 CONCRETE SIDEWALK
SCALE: NTS

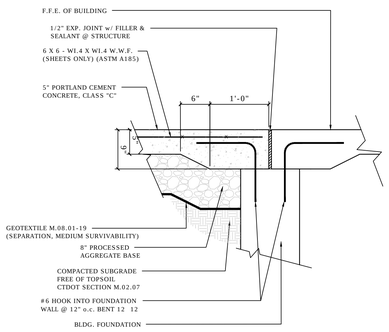

NOTES:
1. 2% MAXIMUM CROSS SLOPE.
2. 5% MAXIMUM LONGITUDINAL SLOPE.
3. THIS CONDITION OCCURS ONLY AT ENTRANCES TO BUILDING.

4 CONC. SIDEWALK @ BLDG. FOUNDATION JT.
SCALE: NTS

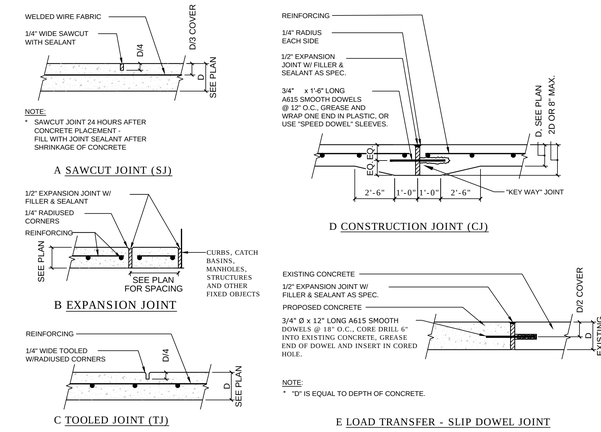

5 TYPICAL CONCRETE JOINTS
SCALE: NTS

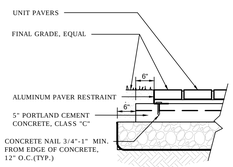

EDGE TRANSITION

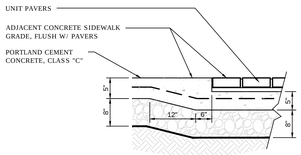

CONCRETE SIDEWALK TRANSITION

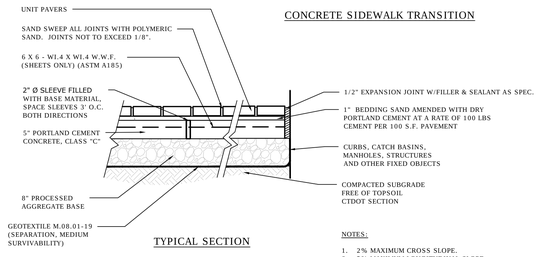

TYPICAL SECTION

NOTES:
1. 2% MAXIMUM CROSS SLOPE.
2. 5% MAXIMUM LONGITUDINAL SLOPE.

6 UNIT PAVERS OVER CONCRETE BASE
SCALE: NTS

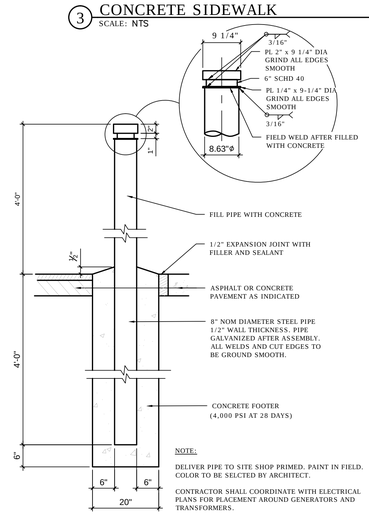

NOTE:
DELIVER PIPE TO SITE SHOP PRIMED. PAINT IN FIELD. COLOR TO BE SELCTED BY ARCHITECT.

CONTRACTOR SHALL COORDINATE WITH ELECTRICAL PLANS FOR PLACEMENT AROUND GENERATORS AND TRANSFORMERS.

CONTRACTOR SHALL COORDINATE WITH STRUCTURAL PLANS FOR PLACEMENT AROUND BUILDING.

7 BOLLARD
SCALE: NTS

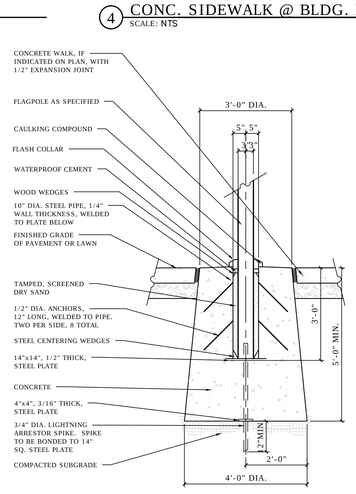

8 FLAGPOLE FOOTER
SCALE: NTS

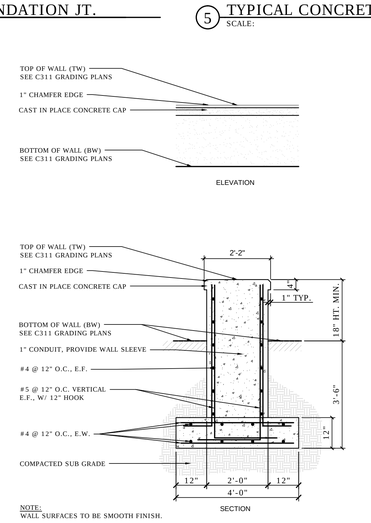

9 CONCRETE SEAT WALL
SCALE: NTS

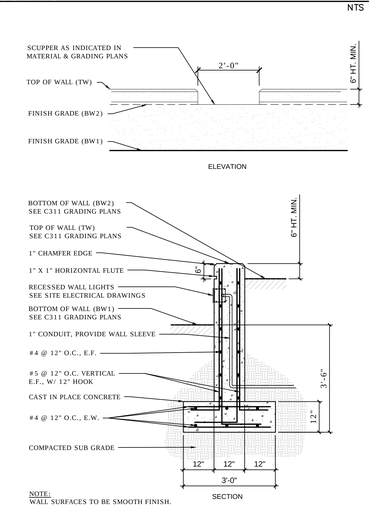

10 CONCRETE RETAINING WALL
SCALE: 1/2" = 1'

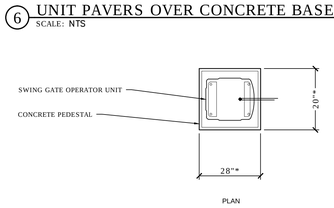

NOTES:
1. SWING GATE OPERATOR UNIT SHALL BE: VIKING F-1, CLASS IV BY VIKING ACCESS SYSTEMS; MODEL CSW200ULHP BY LIFTMASTER; OR MODEL SWG-111 BY LINEAR LLC.
2. INSTALL PER MANUFACTURER'S RECOMMENDATIONS.
3. VERIFY PEDESTAL DIMENSION WITH MANFACTURER

11 SWING GATE OPENER & FOUNDATION
SCALE: 1/2" = 1'

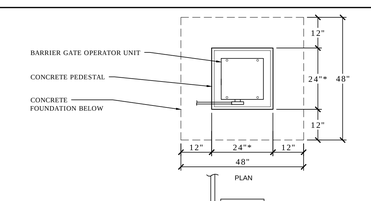

NOTES:
1. BARRIER GATE OPERATOR UNIT WITH 20-FOOT ARM SHALL BE: MODEL 1620 BY DOORKING, INC.; OR MODEL BG790 BY LIFTMASTER.
2. INSTALL PER MANUFACTURER'S RECOMMENDATIONS.
3. VERIFY PEDESTAL DIMENSIONS WITH MANUFACTURER

12 BARRIER GATE OPERATOR & FOUNDATION
SCALE: 1/2" = 1'

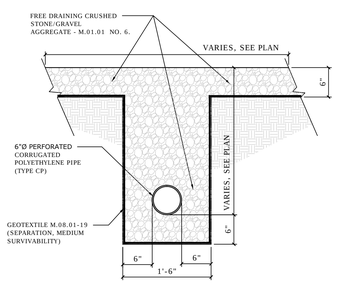

13 STONE PAVEMENT WITH UNDERDRAIN
SCALE: NTS

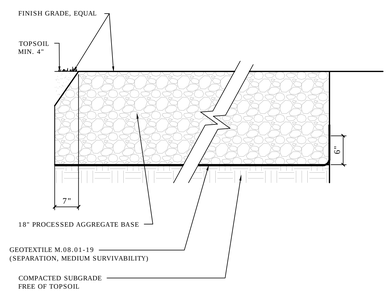

NOTE:
1. DIMENSIONS GIVEN ON PLAN ARE TAKEN FROM EDGE OF AGGREGATE.

14 STONE ACCESS ROAD
SCALE: NTS

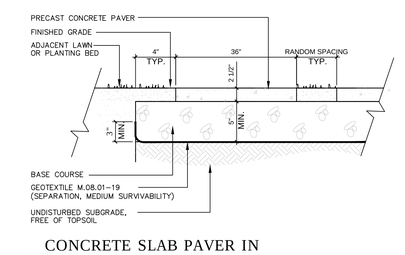

16 CONCRETE SLAB PAVER IN STONE AGGREGATE
SCALE: NTS

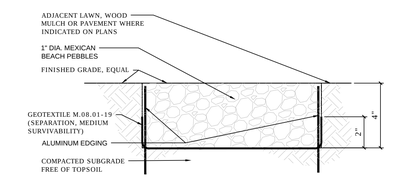

15 GRAVEL MULCH
SCALE: NTS

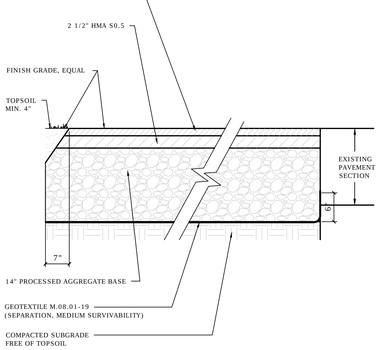

NOTE:
1. DIMENSIONS GIVEN ON PLAN ARE TAKEN FROM EDGE OF ASPHALT TOP COURSE.

17 BITUMINOUS CONC. PAVEMENT - STANDARD DUTY
SCALE: NTS

REV.	DATE	DESCRIPTION	SHEET NO.
		REVISIONS	

FILENAME:

THE INFORMATION, INCLUDING ESTIMATED QUANTITIES OF WORK, SHOWN ON THESE SHEETS IS BASED ON LIMITED INVESTIGATIONS BY THE STATE AND IS IN NO WAY WARRANTED TO INDICATE THE CONDITIONS OF ACTUAL QUANTITIES OF WORK WHICH WILL BE REQUIRED.

DESIGNER/DRAFTER: CML
CHECKED BY: DLK
SCALE: AS NOTED

STATE OF CONNECTICUT
DEPARTMENT OF TRANSPORTATION

ARCHITECT: WENDEL
ENGINEERS: ReSTL DESIGNERS, CLOUGH HARBOUR ASSOC., AI ENGINEERS, WENDEL
APPROVED BY: DCD
DATE: 6/11/14

DESIGNED BY:
WENDEL
140 JOHN JAMES AUDUBON PKWY., SUITE 201
AMHERST, NEW YORK 14228

STATE OF CONNECTICUT DAVID C. DUGHESKERN No. 11937 REGISTERED PROFESSIONAL ENGINEER

PROJECT TITLE:
WATERBURY BUS MAINTENANCE FACILITY REPLACEMENT

ADDRESS:
FROST BRIDGE ROAD WATERTOWN, CONNECTICUT 06787

DRAWING TITLE:
MISCELLANEOUS SITE DETAILS

PROJECT NO. **0431-0006**
DRAWING NO. **C-501**
SHEET NO. 03.031

NOTES:
1. PROVIDE HEAVY BROOM FINISH ON CONCRETE TREAD SURFACES, PARALLEL TO NOSING.
2. CHEEKWALL SURFACES TO BE SMOOTH FINISH NUMBER OF RISERS & TREADS VARIES.
3. SEE CIVIL LAYOUT AND GRADING PLANS FOR NUMBER AND DIMENSIONS.

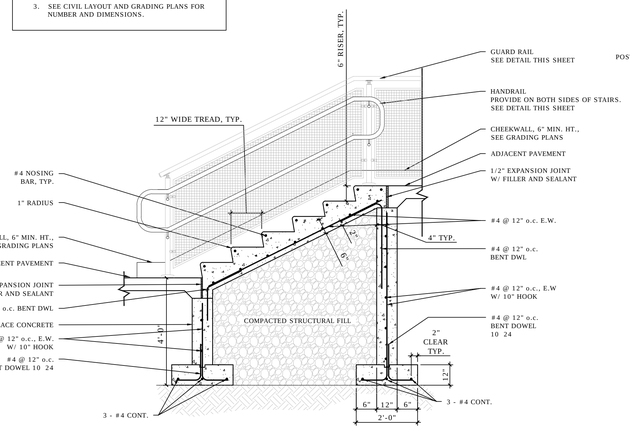

NOTE:
CHEEKWALL SURFACES TO BE SMOOTH FINISH.

STAIRS -SECTION

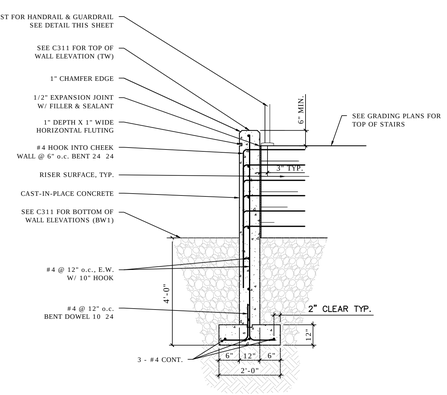

CHEEKWALL -SECTION

1 CONCRETE STAIRS WITH CHEEKWALL & RAILING
SCALE: NTS

NOTES:
1. PROVIDE HEAVY BROOM FINISH ON CONCRETE RAMP SURFACE, PERPENDICULAR TO SLOPE.
2. CHEEKWALL SURFACES TO BE SMOOTH FINISH
3. LENGTH & RISE OF RAMPS VARY. SEE CIVIL LAYOUT & GRADING PLANS.

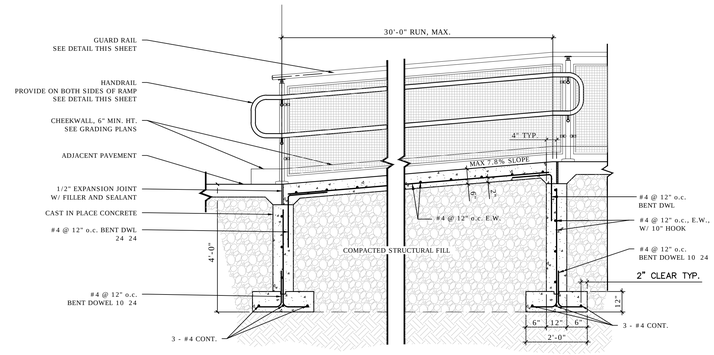

RAMP -SECTION

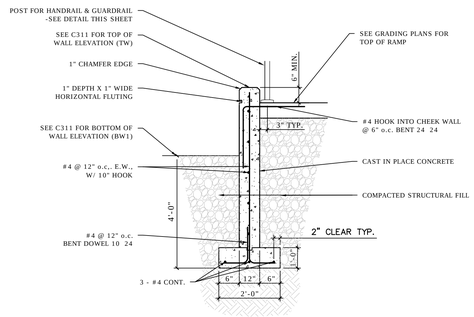

CHEEKWALL -SECTION

NOTE:
CHEEKWALL SURFACES TO BE SMOOTH FINISH.

2 CONCRETE RAMP WITH CHEEK WALL & RAILING
SCALE: NTS

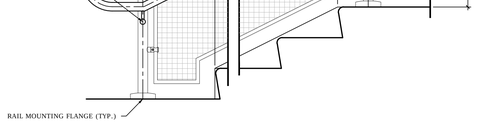

STAIR CONDITION

RAMP CONDITON

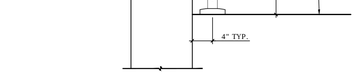

TYPICAL STAIR & RAMP RAIL SECTION

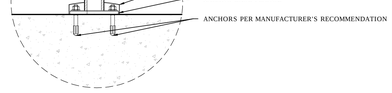

POST MOUNTING FLANGE

NOTES:
1. GUARDRAIL & HANDRAIL SYSTEM
   MODEL: ZARIA PERFORATED PANEL DESIGN
   MANUFACTURER: EFFICIENT-TEC INTERNATIONAL LLC.
   MATERIAL: STAINLESS STEEL ALLOY 316, BRUSHED SATIN FINISH
   OR
   MODEL: INOX GUARDRAIL WITH SS TOPRAIL AND PERFORATED PANEL DESIGN
   MANUFACTURER: HDI RAILING SYSTEMS.
   MATERIAL: STAINLESS STEEL ALLOY 316, BRUSHED SATIN FINISH
   OR
   MODEL: SILHOUETTE RAILING SYSTEM AND PERFORATED PANEL DESIGN
   MANUFACTURER: FORMS+SURFACES.
   MATERIAL: STAINLESS STEEL ALLOY 316, BRUSHED SATIN FINISH
2. A HANDRAIL IS REQUIRED ON BOTH SIDES OF STAIRS.
3. POSTS SHALL BE 48" ON CENTER.
4. HANDRAIL ASSEMBLIES AND GUARDS SHALL BE ABLE TO RESIST A SINGLE CONCENTRATED LOAD OF 200 POUNDS APPLIED IN ANY DIRECTION AT ANY POINT ALONG THE TOP, AND HAVE ATTACHMENT DEVICES AND SUPPORTING STRUCTURE TO TRANSFER THIS LOADING TO APPROPRIATE STRUCTURAL ELEMENTS.
5. INFILL PANELS OF GUARDRAIL SYSTEM SHALL WITHSTAND A HORIZONTAL APPLIED LOAD OF 50 POUNDS ON AN AREA EQUAL TO 1 SQUARE FOOT INCLUDING OPENINGS AND SPACE BETWEEN RAILS.
6. PROVIDE 1.90" OD STANDARD WEIGHT SCHEDULE 80 PIPE FOR POSTS AND 1.67" OD SCHEDULE 40 FOR RAILS.
7. PROVIDE CONTINUOUS RAILINGS BETWEEN SEGMENTS OF STAIRS AND RAMPS.
8. GUARDRAIL IS REQUIRED WHERE THERE IS A 30" VERTICAL DROP TO AN ADJACENT GRADE. SEE LAYOUT AND MATERIAL PLANS FOR LIMITS OF GUARD RAILS AND HAND RAILS.
9. CONTRACTOR SHALL SUBMIT SHOP DRAWINGS FOR ALL POSTS AND HANDRAIL ELEMENTS INCLUDING A LAYOUT FOR REVIEW.
10. SUBMITTALS REQUIRED: PRODUCT DATA, COMPLETE SHOP DRAWINGS, SAMPLES OF TYPICAL RAILING INTERCONNECTION.

3 HANDRAIL
SCALE: NTS

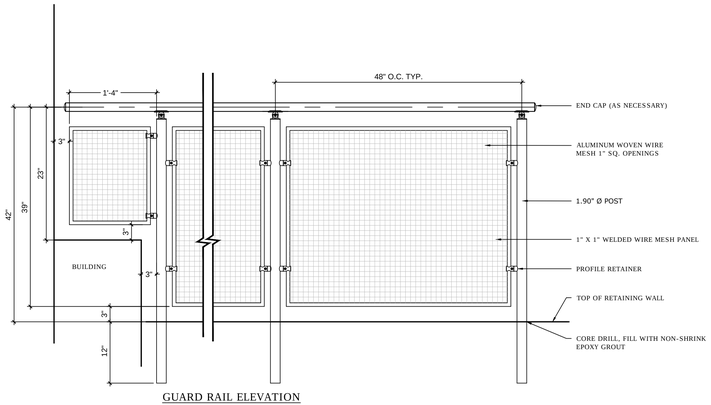

GUARD RAIL ELEVATION

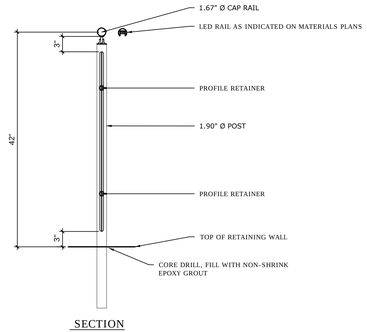

SECTION

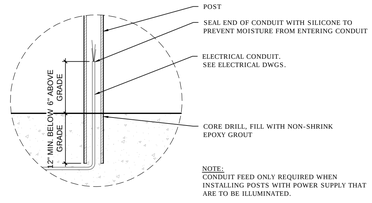

NOTE:
CONDUIT FEED ONLY REQUIRED WHEN INSTALLING POSTS WITH POWER SUPPLY THAT ARE TO BE ILLUMINATED.

POST MOUNTING FLANGE

NOTES:
1. GUARDRAIL & HANDRAIL SYSTEM
   MODEL: ZARIA PERFORATED PANEL DESIGN
   MANUFACTURER: EFFICIENT-TEC INTERNATIONAL LLC.
   MATERIAL: STAINLESS STEEL ALLOY 316, BRUSHED SATIN FINISH
   OR
   MODEL: INOX GUARDRAIL WITH SS TOPRAIL AND PERFORATED PANEL DESIGN
   MANUFACTURER: HDI RAILING SYSTEMS.
   MATERIAL: STAINLESS STEEL ALLOY 316, BRUSHED SATIN FINISH
   OR
   MODEL: SILHOUETTE RAILING SYSTEM AND PERFORATED PANEL DESIGN
   MANUFACTURER: FORMS+SURFACES.
   MATERIAL: STAINLESS STEEL ALLOY 316, BRUSHED SATIN FINISH
2. A HANDRAIL IS REQUIRED ON BOTH SIDES OF STAIRS.
3. POSTS SHALL BE 48" ON CENTER.
4. HANDRAIL ASSEMBLIES AND GUARDS SHALL BE ABLE TO RESIST A SINGLE CONCENTRATED LOAD OF 200 POUNDS APPLIED IN ANY DIRECTION AT ANY POINT ALONG THE TOP, AND HAVE ATTACHMENT DEVICES AND SUPPORTING STRUCTURE TO TRANSFER THIS LOADING TO APPROPRIATE STRUCTURAL ELEMENTS.
5. INFILL PANELS OF GUARDRAIL SYSTEM SHALL WITHSTAND A HORIZONTAL APPLIED LOAD OF 50 POUNDS ON AN AREA EQUAL TO 1 SQUARE FOOT INCLUDING OPENINGS AND SPACE BETWEEN RAILS.
6. PROVIDE 1.90" OD STANDARD WEIGHT SCHEDULE 80 PIPE FOR POSTS AND 1.67" OD SCHEDULE 40 FOR RAILS.
7. PROVIDE CONTINUOUS RAILINGS BETWEEN SEGMENTS OF STAIRS AND RAMPS.
8. GUARDRAIL IS REQUIRED WHERE THERE IS A 30" VERTICAL DROP TO AN ADJACENT GRADE. SEE LAYOUT AND MATERIAL PLANS FOR LIMITS OF GUARD RAILS AND HAND RAILS.
9. CONTRACTOR SHALL SUBMIT SHOP DRAWINGS FOR ALL POSTS AND HANDRAIL ELEMENTS INCLUDING A LAYOUT FOR REVIEW.
10. SUBMITTALS REQUIRED: PRODUCT DATA, COMPLETE SHOP DRAWINGS, SAMPLES OF TYPICAL RAILING INTERCONNECTION.

4 GUARDRAIL - LIGHTED & NON LIGHTED
SCALE: NTS

REV.	DATE	DESCRIPTION	SHEET NO.
		REVISIONS	

FILENAME:

THE INFORMATION, INCLUDING ESTIMATED QUANTITIES OF WORK, SHOWN ON THESE SHEETS IS BASED ON LIMITED INVESTIGATIONS BY THE STATE AND IS IN NO WAY WARRANTED TO INDICATE THE CONDITIONS OF ACTUAL QUANTITIES OF WORK WHICH WILL BE REQUIRED.

DESIGNER/DRAFTER: CML
CHECKED BY: DLK
SCALE: AS NOTED

STATE OF CONNECTICUT
DEPARTMENT OF TRANSPORTATION

ARCHITECT: WENDEL
APPROVED BY: DCD
ENGINEERS: ReSTL DESIGNERS, CLOUGH HARBOUR ASSOC., AI ENGINEERS, WENDEL
DATE: 6/11/14

DESIGNED BY:
WENDEL
140 JOHN JAMES AUDUBON PKWY., SUITE 201
AMHERST, NEW YORK 14228

STATE OF CONNECTICUT — DAVID C. DUGHI — No. 11937 — REGISTERED PROFESSIONAL ENGINEER

PROJECT TITLE:
WATERBURY BUS MAINTENANCE FACILITY REPLACEMENT

ADDRESS:
FROST BRIDGE ROAD
WATERTOWN, CONNECTICUT 06787

DRAWING TITLE:
MISCELLANEOUS SITE DETAILS

PROJECT NO. **0431-0006**
DRAWING NO. **C-502**
SHEET NO. 03.032

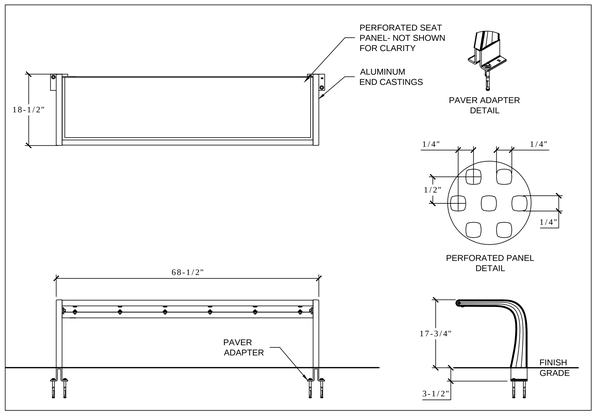

1 BENCH
SCALE: 3/4" = 1'-0"

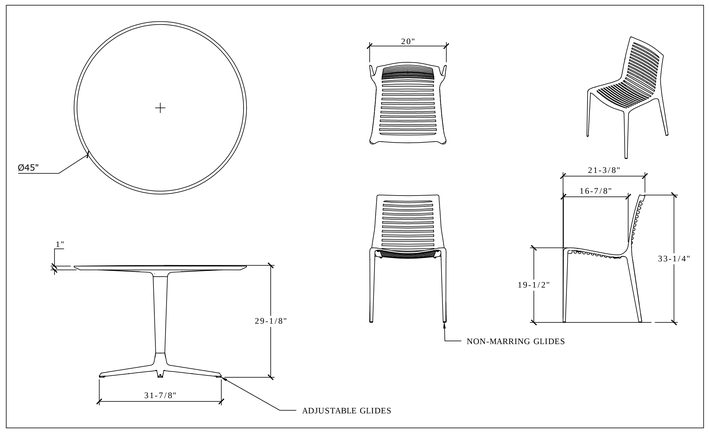

2 TABLE & CHAIRS
SCALE: 3/4" = 1'-0"

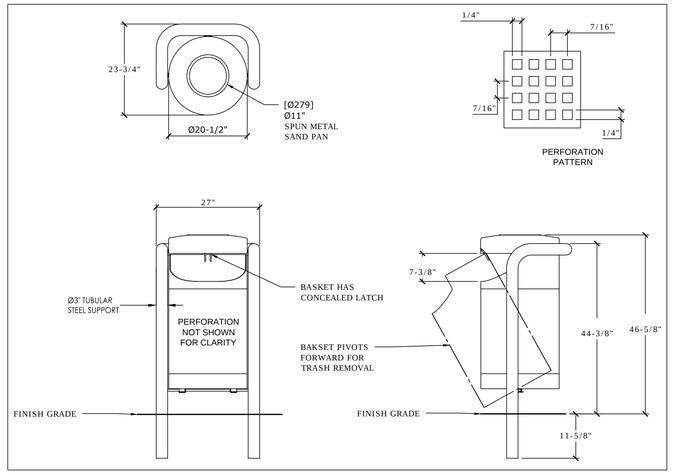

3 LITTER RECEPTACLE & SAND PAN
SCALE: 3/4" = 1'-0"

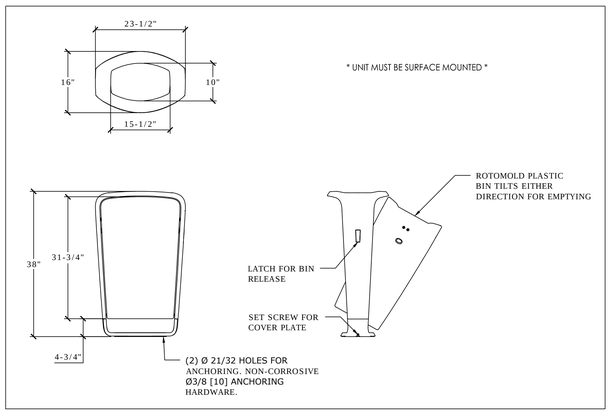

4 LITTER RECEPTACLE
SCALE: 3/4" = 1'-0"

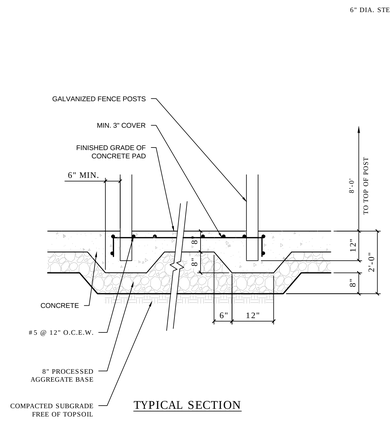

TYPICAL SECTION

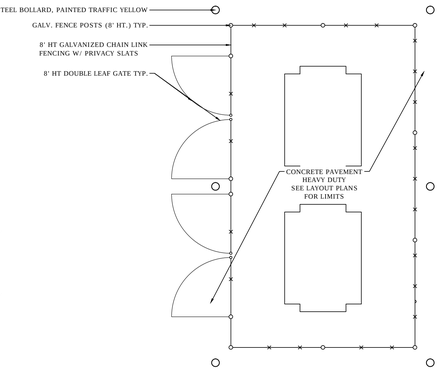

ENCLOSURE 1

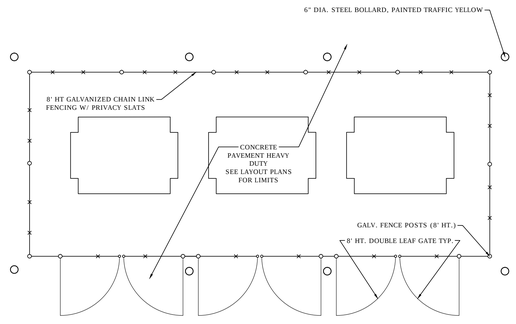

ENCLOSURE 2

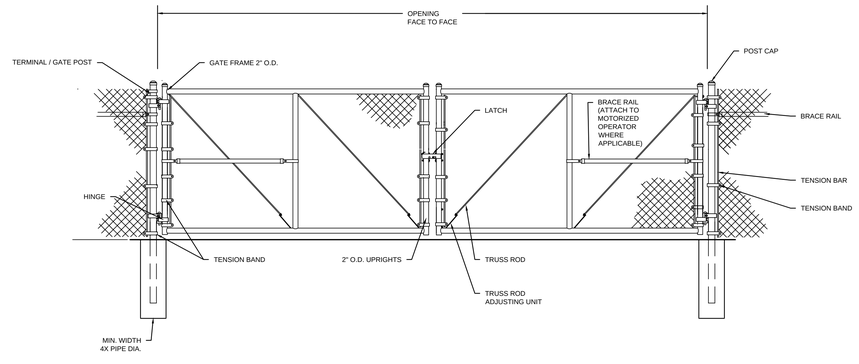

5 REFUSE ENCLOSURES & CONCRETE PAD
SCALE: NTS

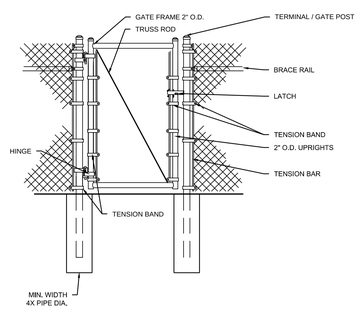

6 DOUBLE LEAF SWING GATE
SCALE: NTS

7 SINGLE LEAF SWING GATE
SCALE: NTS

REV.	DATE	DESCRIPTION	SHEET NO.
		REVISIONS	

FILENAME:

THE INFORMATION, INCLUDING ESTIMATED QUANTITIES OF WORK, SHOWN ON THESE SHEETS IS BASED ON LIMITED INVESTIGATIONS BY THE STATE AND IS IN NO WAY WARRANTED TO INDICATE THE CONDITIONS OF ACTUAL QUANTITIES OF WORK WHICH WILL BE REQUIRED.

DESIGNER/DRAFTER: CML
CHECKED BY: DLK
SCALE: AS NOTED

STATE OF CONNECTICUT
DEPARTMENT OF TRANSPORTATION

ARCHITECT: WENDEL
APPROVED BY: DCD
ENGINEERS: ReSTL DESIGNERS, CLOUGH HARBOUR ASSOC., AI ENGINEERS, WENDEL
DATE: 6/11/14

DESIGNED BY:
WENDEL
140 JOHN JAMES AUDUBON PKWY.,
SUITE 201
AMHERST, NEW YORK
14228

STATE OF CONNECTICUT · DAVID C. DUGHI · No. 11937 · REGISTERED PROFESSIONAL ENGINEER

PROJECT TITLE:
WATERBURY BUS MAINTENANCE FACILITY REPLACEMENT

ADDRESS:
FROST BRIDGE ROAD
WATERTOWN, CONNECTICUT 06787

DRAWING TITLE:
MISCELLANEOUS SITE DETAILS

PROJECT NO. **0431-0006**
DRAWING NO. **C-503**
SHEET NO. 03.033

1 PIPE BEDDING & BACKFILL STORM SEWER
SCALE: NTS

HAY BALE AT CATCH BASIN

GEOTEXTILE FENCE AT CATCH BASIN

2 INLET PROTECTION IN NON-PAVED AREA
SCALE: NTS

3 YARD DRAIN
SCALE: NTS

NOTES:

1. REFER TO CB1-12 ON SHEET C301 AND CB-1-13 ON SHEET C303.

4 TRENCH DRAIN
SCALE: NTS

Dimensions in inches

Diameter	A	B	C	D	E	F	N	S
6	7	11	13	11	3/4	7	four	5/8
8	9 1/4	11	13	11	1 1/8	9 1/4	four	5/8
10	11 1/4	13 1/2	15 1/5	13 1/2	1 1/8	11 1/4	four	5/8
12	13 1/4	15 7/8	18	15 3/4	1 1/8	13 1/4	four	5/8
15	16 1/4	19	21	18 3/4	1 1/8	16 1/4	four	5/8
18	19 1/4	22 1/8	24 1/4	22 1/8	1 1/4	19 1/4	four	3/4
20	22 1/4	25 1/8	27 1/4	25 1/8	1 1/4	22 1/4	four	3/4
21	22 1/4	25 1/8	27 1/4	25 1/8	1 1/4	22 1/4	four	3/4
24	25 1/4	28 1/4	30 1/4	28 1/4	1 1/4	25 1/4	six	3/4
27	28 1/4	31 1/4	33 1/4	31 1/4	1 1/4	28 1/4	six	7/8
30	31 1/4	34 1/4	36 1/2	34 1/4	1 1/4	31 1/4	six	7/8
36	37 1/2	41 1/2	43 1/2	41 1/2	1 3/8	37 1/2	six	7/8
42	43 1/2	47 1/2	49 1/2	47 1/2	1 3/8	43 1/2	six	7/8
48	49 1/2	54	56 1/2	54	1 1/2	49 1/2	six	1

5 FLAP GATE
SCALE: NTS

GEOTEXTILE FENCE SYSTEM

NOTES:

1. GEOTEXTILE FENCE SHOULD BE PLACED SO THE FENCE LEANS TOWARD THE SOURCE OF SEDIMENT.
2. MAXIMUM SPACING FOR WOODEN STAKES OR STEEL POSTS IS 10.0'.
3. WOOD STAKES SHALL HAVE A MINIMUM CROSS-SECTION SIZE OF 1.5" X 1.5" AND A MINIMUM LENGTH OF 4 FT. STEEL POSTS SHALL BE AT LEAST 0.5 LB. PER FT WITH A MINIMUM LENGTH OF 4-FT.
4. WOODEN STAKES OR STEEL POSTS SHALL BE DRIVEN TO A MINIMUM OF 1 FT. INTO THE GROUND.
5. 6" OF GEOTEXTILE SHALL BE BURIED BY BACKFILLING OR TRENCHING AND AT LEAST 2.5 FT IN HEIGHT OF GEOTEXTILE SHALL BE EXPOSED.
6. FABRIC SHALL BE JOINED ONLY AT A SUPPORT POST WITH A MINIMUM OF 6" OVERLAP AND SECURELY SEALED.
7. UPON RE-RESTABLISHMENT OF GROUND COVER IN DISTURBED AREAS AND WHEN DIRECTED BY THE ENGINEER, OR UPON FINAL INSPECTION, FENCE AND ANY SEDIMENT SHALL BE REMOVED. AT NO TIME WILL THE FENCE REMAIN IN PLACE AFTER PROJECT COMPLETION.
8. GEOTEXTILE FENCE SHALL NOT BE USED IN A WATER COURSE.
9. ONLY GEOTEXTILE FROM THE DEPARTMENTS APPROVED PRODUCT LIST SHALL BE USED.
10. BACKFILLING OF GEOTEXTILE SHALL ONLY BE USED WHEN GROUND IS FROZEN OR WHERE OTHER OBSTRUCTIONS ARE ENCOUNTERED THAT PROHIBIT TRENCHING, I.E. STUMPS OR ROCKS.
11. CLEAN OUT ACCUMULATED SEDIMENT WHEN ONE-HALF (1/2) OF THE ORIGINAL HEIGHT OF THE GEOTEXTILE FENCE, AS INSTALLED, BECOMES FILLED WITH SEDIMENT OR AS DIRECTED BY THE ENGINEER.

6 GEOTEXTILE FENCE SYSTEM
SCALE: NTS

CONSTRUCTION SPECIFICATIONS

1. STONE SIZE - USE 2" STONE, OR RECLAIMED OR RECYCLED CONCRETE EQUIVALENT.
2. LENGTH - NOT LESS THAN 50 FEET (EXCEPT ON A SINGLE RESIDENCE LOT WHERE A 30 FOOT MINIMUM LENGTH WOULD APPLY).
3. THICKNESS - NOT LESS THAN SIX (6) INCHES.
4. WIDTH - TWELVE (12) FOOT MINIMUM, BUT NOT LESS THAN THE FULL WIDTH AT POINTS WHERE INGRESS OR EGRESS OCCURS. TWENTY-FOUR (24) FOOT IF SINGLE ENTRANCE TO SITE.
5. FILTER CLOTH - WILL BE PLACED OVER THE ENTIRE AREA PRIOR TO PLACING OF STONE.
6. SURFACE WATER - ALL SURFACE WATER FLOWING OR DIVERTED TOWARD CONSTRUCTION ENTRANCES SHALL BE PIPED ACROSS THE ENTRANCE. IF PIPING IS IMPRACTICAL, A MOUNTABLE BERM WITH 5:1 SLOPES WILL BE PERMITTED.
7. MAINTENANCE - THE ENTRANCE SHALL BE MAINTAINED IN A CONDITION WHICH WILL PREVENT TRACKING OR FLOWING OF SEDIMENT ONTO PUBLIC RIGHTS-OF-WAY, ALL SEDIMENT SPILLED, DROPPED, WASHED OR TRACTED ONTO PUBLIC RIGHTS-OF-WAY MUST BE REMOVED IMMEDIATELY.
8. WHEN WASHING IS REQUIRED, IT SHALL BE DONE ON A AREA STABILIZED WITH STONE AND WHICH DRAINS INTO AN APPROVED SEDIMENT TRAPPING DEVICE.
9. PERIODIC INSPECTION AND NEEDED MAINTENANCE SHALL BE PROVIDED AFTER EACH RAIN.

7 ANTI-TRACKING PAD DETAIL
SCALE: NTS

NOTES:
1. ACTUAL LAYOUT DETERMINED IN THE FIELD.
2. THE CONCRETE WASHOUT SIGN (SEE FIG. 4-15) SHALL BE INSTALLED WITHIN 33' OF THE TEMPORARY CONCRETE WASHOUT FACILITY.

8 CONCRETE WASHOUT DETAIL
SCALE: NTS

9 SLOPE TOE PROTECTION
SCALE: NTS

10 TYPE A AND B RIPRAP APRON
SCALE: NTS

11 TYPE C RIPRAP APRON
SCALE: NTS

12 LEVEL SPREADER AT TOE OF SLOPE PROTECTION
SCALE: NTS

HAY BALE SYSTEM

NOTES:

1. HAY BALES SHALL NOT BE USED IN A WATERCOURSE.
2. HAY BALES SHALL BE ENTRENCHED 4" AND TIGHTLY BUTTED TOGETHER. REMOVE HEAVY BRUSH AND FILL ALL VOIDS WITH LOOSE HAY.
3. WOOD STAKES SHALL HAVE A MINIMUM CROSS-SECTION SIZE OF AT LEAST 1" x 1" AND A MINIMUM LENGTH OF 4'.
4. CLEAN OUT ACCUMULATED SEDIMENT WHEN ONE-HALF (1/2) OF THE ORIGINAL HEIGHT OF THE HAY BALE FENCE, AS INSTALLED, BECOMES FILLED WITH SEDIMENT OR AS DIRECTED BY THE ENGINEER.
5. NOT TO BE USED IN THE VICINITY OF URBAN AND RESIDENTIAL AREAS.

13 HAY BALE SYSTEM
SCALE: NTS

NOTES:

1. A MINIMUM VERTICAL CLEARANCE OF 1-FT SHALL BE MAINTAINED BETWEEN THE GAS FACILITIES AND ANY OTHER UNDERGROUND FACILITY.
2. A MINIMUM HORIZONTAL CLEARANCE OF 4-FT SHALL BE MAINTAINED BETWEEN THE GAS FACILITIES AND ANY OTHER UNDERGROUND FACILITIES AND/OR ABOVEGROUND FACILITIES.

14 GAS SERVICE TRENCH DETAIL
SCALE: NTS

REV.	DATE	DESCRIPTION	SHEET NO.
		REVISIONS	

FILENAME:

THE INFORMATION, INCLUDING ESTIMATED QUANTITIES OF WORK, SHOWN ON THESE SHEETS IS BASED ON LIMITED INVESTIGATIONS BY THE STATE AND IS IN NO WAY WARRANTED TO INDICATE THE CONDITIONS OF ACTUAL QUANTITIES OF WORK WHICH WILL BE REQUIRED.

DESIGNER/DRAFTER: CML
CHECKED BY: DLK
SCALE: AS NOTED

STATE OF CONNECTICUT
DEPARTMENT OF TRANSPORTATION

ARCHITECT: WENDEL
APPROVED BY: DCD
ENGINEERS: ReSTL DESIGNERS, CLOUGH HARBOUR ASSOC., AI ENGINEERS, WENDEL
DATE: 6/11/14

DESIGNED BY:
WENDEL
140 JOHN JAMES AUDUBON PKWY., SUITE 201
AMHERST, NEW YORK 14228

STATE OF CONNECTICUT DAVID C. DUCHSCHERER No. 11937 REGISTERED PROFESSIONAL ENGINEER

PROJECT TITLE: WATERBURY BUS MAINTENANCE FACILITY REPLACEMENT

ADDRESS: FROST BRIDGE ROAD WATERTOWN, CONNECTICUT 06787

DRAWING TITLE: MISCELLANEOUS SITE DETAILS

PROJECT NO. 0431-0006
DRAWING NO. C-504
SHEET NO. 03.034

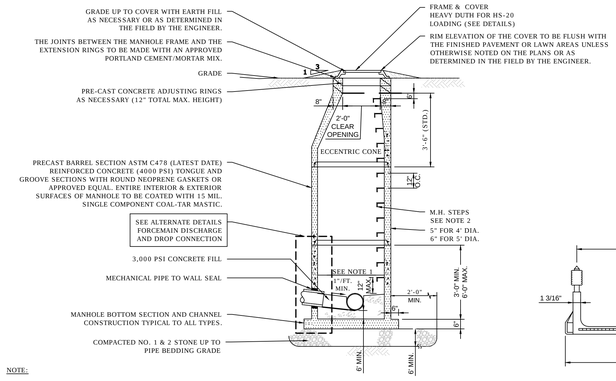

NOTE:

1. 4'-0" DIA. BOTTOM SECTION TYPICAL FOR ALL PIPE SIZES UNDER 18" DIA. UNLESS OTHERWISE NOTED.
2. 5'-0" DIA. BOTTOM SECTION TYPICAL FOR PIPE SIZES 18" DIA. AND OVER UNLESS OTHERWISE NOTED.
3. FIRST MANHOLE STEP SHALL BE 6" FROM THE TOP OF CONE. M.H. STEPS TO BE ON STRAIGHT WALL. NO PIPE ON STRAIGHT WALL IF POSSIBLE. STRAIGHT WALL TO BE AWAY FROM ROAD.
4. AFTER THE BARREL SECTIONS ARE ASSEMBLED, ANY EXCESS JOINT COMPOUND SHALL BE TROWELED OFF THE OUTSIDE AND INSIDE FACE. THE INSIDE FACE OF THE JOINT SHALL THEN BE TROWELED WITH APPROVED PATCHING MATERIAL.
5. SEE MAHOLE BASE DETAIL FOR PLAN
6. SEWER PIPE SHALL NOT BE CLOSER THAN 6' VERTICALLY TO MANHOLE JOINT SURFACES FOR BASE AND BARREL SECTIONS.

1 SECTION A-A STANDARD PRECAST BASE MANHOLE
SCALE: NTS

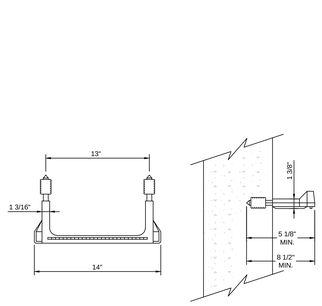

NOTE:

STEPS TO BE COPOLYMER POLYPROPYLENE PLASTIC WITH ~8"Ø GRADE 60 STEEL REINFORCEMENT.

2 MANHOLE STEP DETAIL
SCALE: NTS

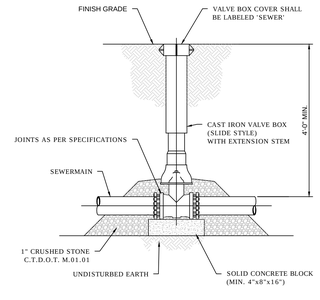

NOTES:

1. VALVE SHALL NOT SUPPORT VALVE BOX.
2. BACKFILL AROUND VALVE TO TOP OF PIPE WITH 1" CRUSHED STONE, D.O.T. M.01.01.

3 TYPICAL SEWER VALVE SETTING DETAIL
SCALE: NTS

4 NOT USED
SCALE: NTS

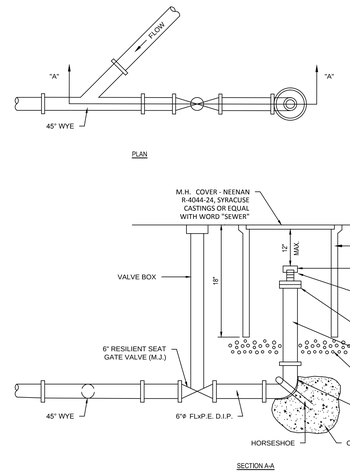

5 PIG LAUNCHER ASSEMBLY DETAIL
SCALE: NTS

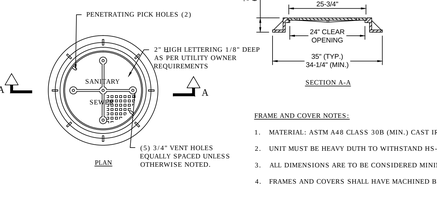

FRAME AND COVER NOTES:

1. MATERIAL: ASTM A48 CLASS 30B (MIN.) CAST IRON
2. UNIT MUST BE HEAVY DUTH TO WITHSTAND HS-20 WHEEL LOADING.
3. ALL DIMENSIONS ARE TO BE CONSIDERED MINIMUM.
4. FRAMES AND COVERS SHALL HAVE MACHINED BEARING SURFACES.

6 MANHOLE FRAME & COVER DETAIL
SCALE: NTS

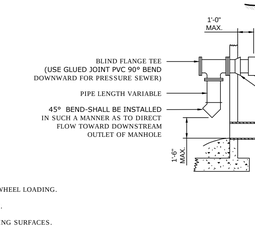

FORCEMAIN DISCHARGE
6 MANHOLE CONNECTION DETAIL
SCALE: NTS

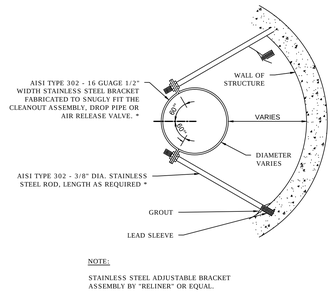

NOTE:

STAINLESS STEEL ADJUSTABLE BRACKET ASSEMBLY BY "RELINER" OR EQUAL.

7 STAINLESS STEEL BRACKET DETAIL
SCALE: NTS

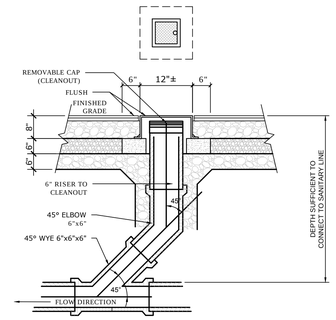

8 GRAVITY SEWER CLEANOUT IN PAVEMENT
SCALE: NTS

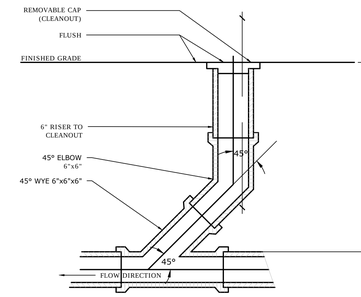

9 GRAVITY SEWER CLEANOUT IN LAWN
SCALE: NTS

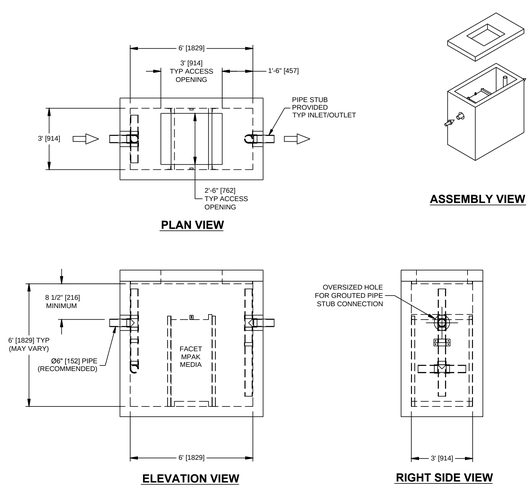

10 OIL/WATER SEPARATOR #1
SCALE: NTS

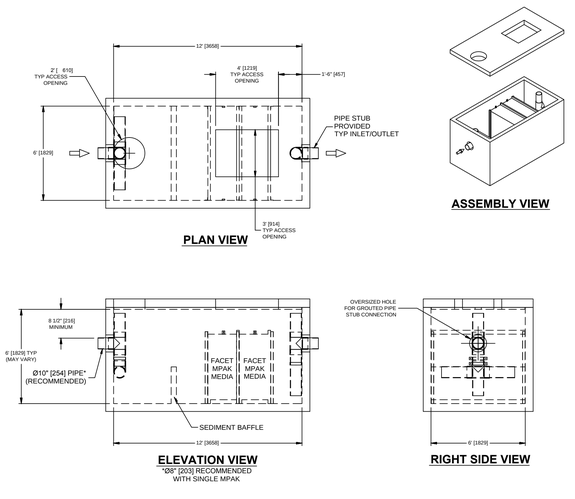

11 OIL/WATER SEPARATOR #2
SCALE: NTS

REV.	DATE	DESCRIPTION	SHEET NO.
		REVISIONS	

FILENAME:

THE INFORMATION, INCLUDING ESTIMATED QUANTITIES OF WORK, SHOWN ON THESE SHEETS IS BASED ON LIMITED INVESTIGATIONS BY THE STATE AND IS IN NO WAY WARRANTED TO INDICATE THE CONDITIONS OF ACTUAL QUANTITIES OF WORK WHICH WILL BE REQUIRED.

DESIGNER/DRAFTER: CML
CHECKED BY: DLK
SCALE: AS NOTED

STATE OF CONNECTICUT
DEPARTMENT OF TRANSPORTATION

ARCHITECT: WENDEL
APPROVED BY: DCD
ENGINEERS: ReSTL DESIGNERS, CLOUGH HARBOUR ASSOC., AI ENGINEERS, WENDEL
DATE: 6/11/14

DESIGNED BY:
WENDEL
140 JOHN JAMES AUDUBON PKWY., SUITE 201
AMHERST, NEW YORK 14228

STATE OF CONNECTICUT DAVID C. DUDKIEWICZ No. 11937 REGISTERED PROFESSIONAL ENGINEER

PROJECT TITLE:
WATERBURY BUS MAINTENANCE FACILITY REPLACEMENT

ADDRESS:
FROST BRIDGE ROAD WATERTOWN, CONNECTICUT 06787

DRAWING TITLE:
SANITARY DETAILS

PROJECT NO. **0431-0006**
DRAWING NO. **C-505**
SHEET NO. 03.035

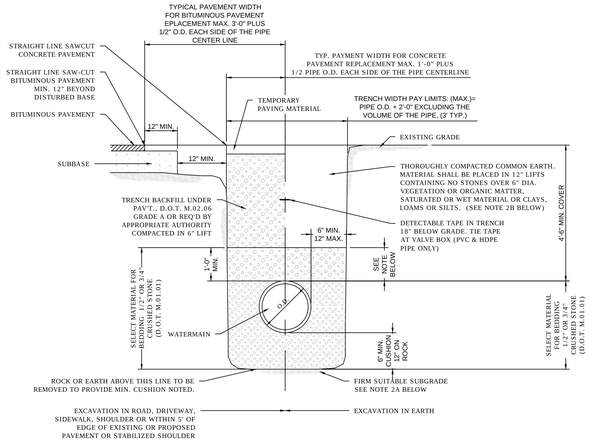

NOTE 1:

REPLACE PAVEMENT IN THICKNESS AND KIND, OR AS REQUIRED BY APPROPRIATE AUTHORITY

A. MINIMUM STANDARD FOR BITUMINOUS CONCRETE PAVEMENT

1 1/2" HMA SO.375
6" HMA SO.5 IN TWO EQUAL LIFTS
12" ø PROCESSED AGGREGATE BASE COURSE (OR SAME AS EXISTING)

NOTE 2: BEDDING / BACKFILL FOR PRESSURE PIPE

A. ADDITIONAL STONE BEDDING MAY BE REQUIRED IF SUBGRADE MATERIAL IS NOT SUITABLE.

B. FULL DEPTH SELECT MATERIAL FOR BACKFILL WILL BE REQUIRED WHEN ANY PART OF THE TRENCH EXCAVATION IS IN OR WITHIN FIVE FEET OF THE EDGE OF, ROAD, DRIVEWAY, SIDEWALK OR ROAD SHOULDER.

C. IN AREAS OF ROCK EXCAVATION OR WHERE EXCAVATED MATERIAL IS NOT ACCEPTABLE TO THE ENGINEER, SELECT MATERIAL FOR BEDDING (NO. 1 STONE) SHALL BE USED FROM THE SPRINGLINE OF THE PIPE TO A DEPTH OF AT LEAST 1 FT. OVER TOP OF THE PIPE AS DETERMINED IN THE FIELD BY THE ENGINEER.

D. ALL SELECT MATERIAL TO BE COMPACTED IN 6" LIFTS, AS PER ASTM-2774.

1 TYPICAL WATERLINE / SANITARY SEWER/ FORCEMAIN TRENCH DETRAIL
SCALE: NTS

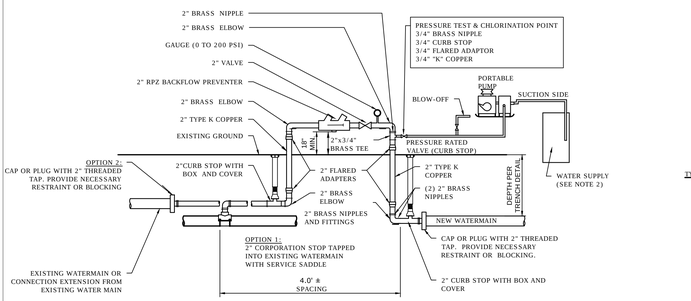

NOTES:

1. BACTERIOLOGICAL WATER SAMPLES SHALL BE TAKEN WITHIN 20 FEET OF THE BEGINNING AND END STATIONS OF EACH SECTION OF WATERMAIN AND AT MAXIMUM 1200 FT. SPACING.
2. FOR PRESSURE TESTING PROVIDE CLEAN WATER SUPPLY. FOR DISINFECTION PROVIDE CHLORINATED WATER SUPPLY.
3. WATER METERS ARE REQUIRED FOR MEASUREMENT OF LEAKAGE LOSS.

6 PRESSURE TESTING AND DISINFECTION APPARATUS SCHEMATIC
SCALE: NTS

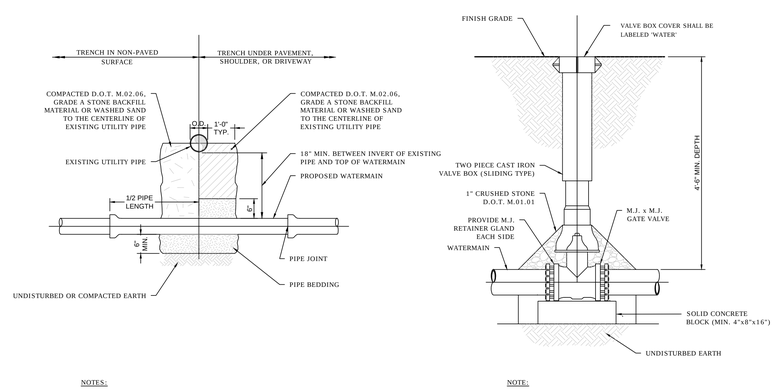

NOTES:

1. ALL EXISTING UTILITIES MUST BE SUPPORTED DURING CONSTRUCTION OF THE NEW WATERMAIN. (NO DIRECT PAYMENT)
2. WHEN CROSSING A SEWER LINE WITH A NEW WATERMAIN, ONE FULL PIPE LENGTH (18 FT. MIN.) SHALL BE USED AT THE POINT OF CROSSING. THE WATERMAIN SHALL BE PLACED SO THAT BOTH JOINT ENDS ARE AS FAR AS POSSIBLE FROM THE EXISTING SEWERLINE.
3. MAINTAIN 10'-0" MIN. HORIZONTAL AND 18" MIN. VERTICAL SEPARATION BETWEEN WATERLINES AND SEWERLINES.

2 TYPICAL PIPE CROSSING DETAIL
SCALE: NTS

NOTE:

1. VALVE SHALL NOT SUPPORT VALVE BOX.

3 TYPICAL GATE VALVE SETTING DETAIL
SCALE: NTS

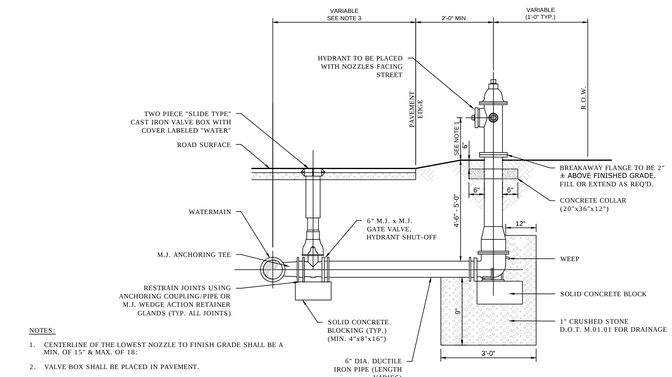

NOTES:

1. CENTERLINE OF THE LOWEST NOZZLE TO FINISH GRADE SHALL BE A MIN. OF 15" & MAX. OF 18".
2. VALVE BOX SHALL BE PLACED IN PAVEMENT.
3. HYDRANT TO BE FURNISHED WITH PENTAGON OPERATING UNIT
   a. 4-1/2" STEAMER CONNECTION
   b. 2-1/2" STANDARD OPENINGS
   c. ALL CONNECTIONS TO BE NATIONAL STANDARD FIRE HOSE COUPLING SCREW THREADS AND GREASED AFTER INSTALLATION.
   d. ALL HYDRANTS OPEN LEFT.
4. ALL HYDRANTS OPEN LEFT.

4 TYPICAL HYDRANT SETTING DETAIL
SCALE: NTS

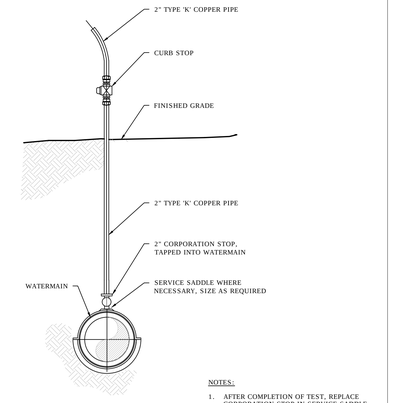

NOTES:

1. AFTER COMPLETION OF TEST, REPLACE CORPORATION STOP IN SERVICE SADDLE WITH A THREADED BRASS PLUG.
2. FIRE HYDRANTS ARE NOT ACCEPTABLE SAMPLING POINTS.

TEMPORARY BLOW-OFF SAMPLING POINT DETAIL
SCALE: NTS

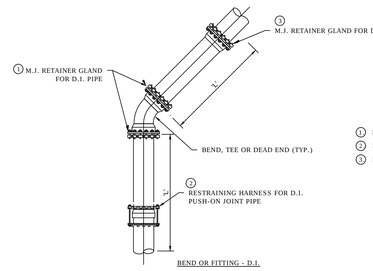

1 MECHANICAL JOINT RETAINER GLANDS
2 PUSH-ON JOINT RESTRAINT USING MECHANICAL JOINT RETAINER GLANDS AND LACING
3 PUSH-ON JOINT RETAINER GLANDS

NOTES:

1. DIMENSION 'L' REPRESENTS THE LENGTH OF RESTRAINED PIPE REQUIRED IN FEET EACH SIDE OF THE PIPE FITTING.
2. NO UNRESTRAINED JOINTS ALLOWED WITHIN 5 FEET ON EITHER SIDE OF A TEE FITTING.

RESTRAINED JOINT SCHEDULE - DESIGN PRESSURE _ PSI

PIPE SIZE	PIPE TYPE	11-1/4° ELBOW	22-1/2° ELBOW	45° ELBOW	TEE BRANCH, 90° BEND, OR DEAD END
		'L'	'L'	'L'	'L'
4"	PVC	10	15	25	60
6"	PVC	10	20	40	85
ALL	D.I.P	40	40	40	40

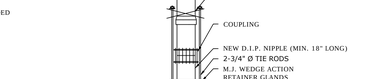

7 TYPICAL CONNECTION TO EXISTING WATERMAIN DETAILS
SCALE: NTS

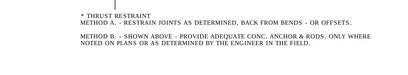

* THRUST RESTRAINT
METHOD A. - RESTRAIN JOINTS AS DETERMINED, BACK FROM BENDS - OR OFFSETS.

METHOD B. - SHOWN ABOVE - PROVIDE ADEQUATE CONC. ANCHOR & RODS. ONLY WHERE NOTED ON PLANS OR AS DETERMINED BY THE ENGINEER IN THE FIELD.

8 TYPICAL VERTICAL OFFSET
SCALE: NTS

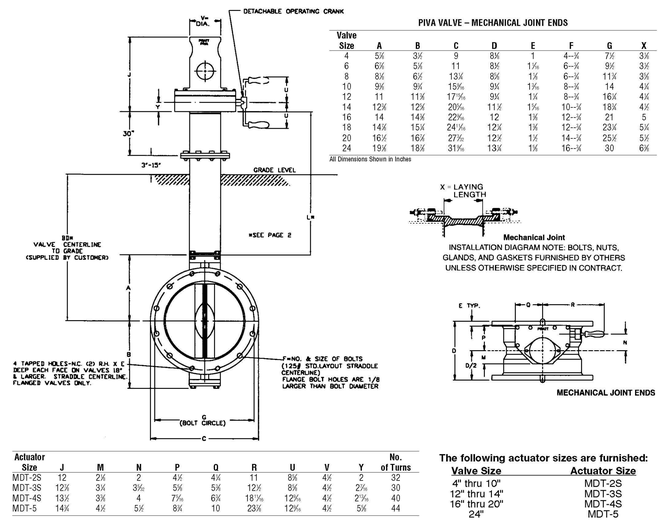

PIVA VALVE – MECHANICAL JOINT ENDS

Valve Size	A	B	C	D	E	F	G	X
4	5¼	3¼	9	8¼	1	4–¾	7½	3¼
6	6¼	5¼	11	8¼	1¼	6–¾	9½	3¼
8	8¼	6¼	13¾	8¼	1¼	6–¾	11¼	3¼
10	9¼	9¼	15⅝	9¼	1¼	8–¾	14	4¼
12	11	11¼	17⅞	9¼	1¼	8–¾	16¼	4¼
14	12¼	12¼	20⅛	11¼	1¼	10–¾	18¼	4¼
16	14	14¼	22⅜	12	1¼	12–¾	21	5
18	14¼	15¼	24⅛	12¼	1¼	12–¾	23¼	5¼
20	16¼	16¼	27⅛	12¼	1¼	14–¾	25½	5½
24	19¼	18¼	31⅝	13¼	1¼	16–¾	30	6¼

All Dimensions Shown in Inches

Mechanical Joint
INSTALLATION DIAGRAM NOTE: BOLTS, NUTS, GLANDS, AND GASKETS FURNISHED BY OTHERS UNLESS OTHERWISE SPECIFIED IN CONTRACT.

MECHANICAL JOINT ENDS

Actuator Size	J	M	N	P	Q	R	U	V	Y	No. of Turns
MDT-2S	12	2¼	2	4½	4¼	11	8¼	4¼	2	32
MDT-3S	12¼	3¼	3½	5⅜	5¼	12¼	8¼	4¼	2¼	30
MDT-4S	13¼	3¼	4	7¼	6¼	18⅛	12¼	4¼	2¼	40
MDT-5	14¼	4¼	5¼	8¼	10	23⅜	12⅜	4¼	5¼	44

The following actuator sizes are furnished:

Valve Size	Actuator Size
4" thru 10"	MDT-2S
12" thru 14"	MDT-3S
16" thru 20"	MDT-4S
24"	MDT-5

11 POST INDICATOR VALVE ASSEMBLY
SCALE: NTS

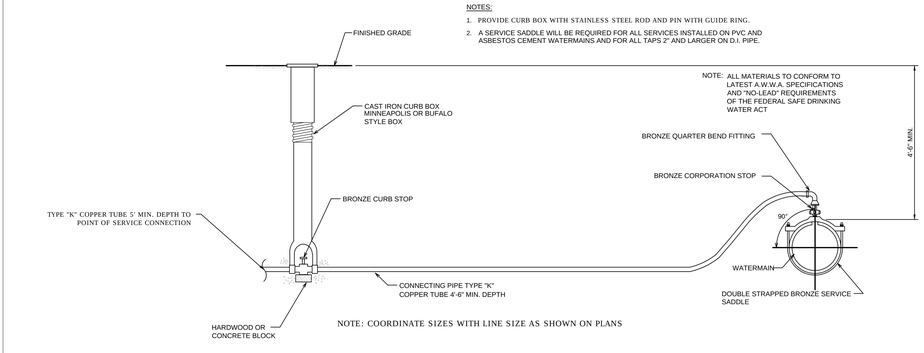

NOTES:

1. PROVIDE CURB BOX WITH STAINLESS STEEL ROD AND PIN WITH GUIDE RING.
2. A SERVICE SADDLE WILL BE REQUIRED FOR ALL SERVICES INSTALLED ON PVC AND ASBESTOS CEMENT WATERMAINS AND FOR ALL TAPS 2" AND LARGER ON D.I. PIPE.

NOTE: COORDINATE SIZES WITH LINE SIZE AS SHOWN ON PLANS

10 TYPICAL WATER LINE SERVICE INSTALLATION
SCALE: NTS

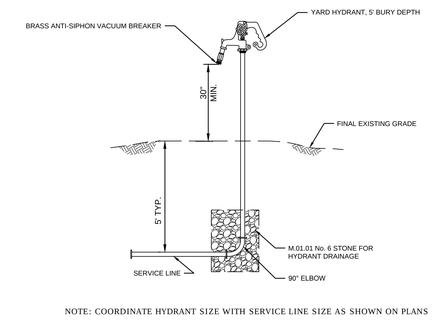

NOTE: COORDINATE HYDRANT SIZE WITH SERVICE LINE SIZE AS SHOWN ON PLANS

12 YARD HYDRANT DETAIL
SCALE: NTS

REV.	DATE	DESCRIPTION	SHEET NO.
		REVISIONS	

FILENAME:

THE INFORMATION, INCLUDING ESTIMATED QUANTITIES OF WORK, SHOWN ON THESE SHEETS IS BASED ON LIMITED INVESTIGATIONS BY THE STATE AND IS IN NO WAY WARRANTED TO INDICATE THE CONDITIONS OF ACTUAL QUANTITIES OF WORK WHICH WILL BE REQUIRED.

DESIGNER/DRAFTER: CML
CHECKED BY: DLK
SCALE: AS NOTED

STATE OF CONNECTICUT
DEPARTMENT OF TRANSPORTATION

ARCHITECT: WENDEL
APPROVED BY: DCD
ENGINEERS: ReSTL DESIGNERS, CLOUGH HARBOUR ASSOC., AI ENGINEERS, WENDEL
DATE: 6/11/14

DESIGNED BY:
WENDEL
140 JOHN JAMES AUDUBON PKWY., SUITE 201
AMHERST, NEW YORK 14228

STATE OF CONNECTICUT — DAVID C. DUCHENEAUX — No. 11937 — REGISTERED PROFESSIONAL ENGINEER

PROJECT TITLE:
WATERBURY BUS MAINTENANCE FACILITY REPLACEMENT

ADDRESS: **FROST BRIDGE ROAD WATERTOWN, CONNECTICUT 06787**

DRAWING TITLE:
WATERLINE DETAILS

PROJECT NO. **0431-0006**
DRAWING NO. **C-506**
SHEET NO. 03.036

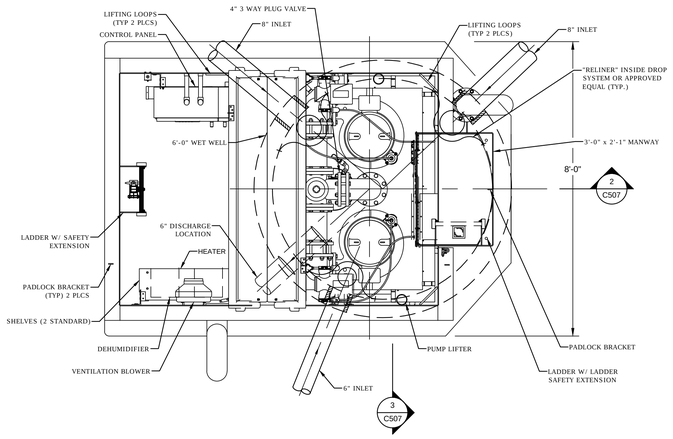

1 PLAN: PUMP STATION #1

SCALE: NTS

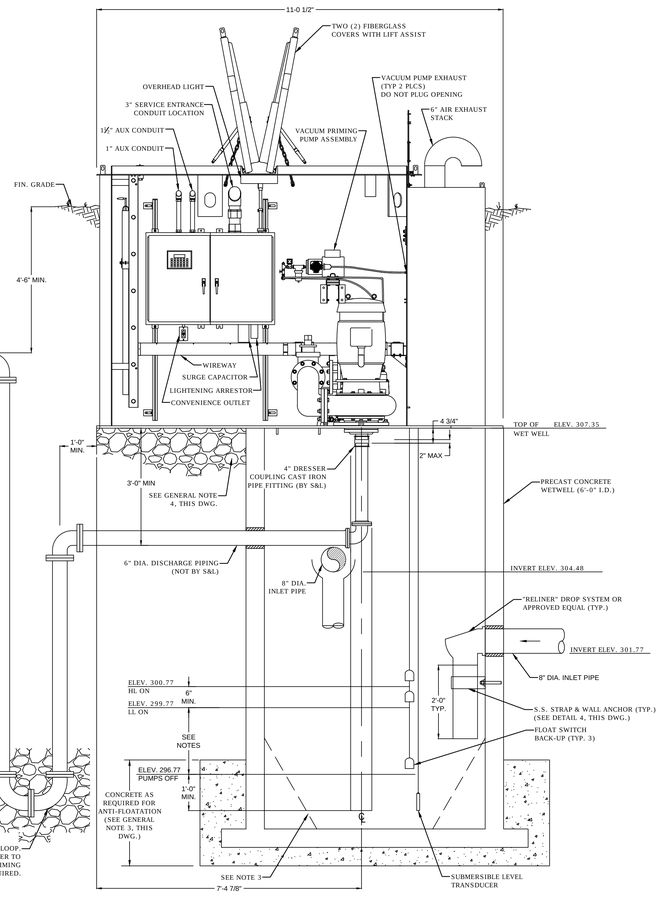

2 ELEVATION: PUMP STATION #1

SCALE: NTS

PUMP STATION CHART

MANUFACTURER/MODEL - BASIS OF DESIGN	SMITH & LOVELESS	
TYPE	RECESSED WET WELL MOUNTED RECTANGULAR PUMP STATION	
PUMP HP / VOLT / PHASE	5 HP / 480V / 3PH	
PUMP (RPM)	1170	
PUMP CAPACITY & MIN. HEAD	245 GPM	29 FT.
EXISTING GRADE ELEV.	301.59	
FINISHED GRADE ELEV.	313.35	
WET WELL		
INSIDE DIA. (FT)	6'-0"	
6" FORCEMAIN DISCHARGE INV. ELEV.	305.35	
8" GRAVITY SWR. INLET INV. ELEV. - NW	304.48	
6" GRAVITY SWR. INLET INV. ELEV. - S	303.06	
8" GRAVITY SWR. INLET INV. ELEV. - NE	301.77	
ALARM ELEV.	300.77	
LAG PUMP START ELEV. (HL ON)	299.77	
PUMP START ELEV. (LL ON)	299.27	
PUMP STOP ELEV.	298.07	
LOW LEVEL ALARM ELEV.	297.67	
6" SUCTION PIPE INV. ELEV.	297.07	
BOTTOM OF WET WELL ELEV.	296.57	
END POINT DISCHARGE ELEV.	315.00	
LENGTH OF FORCEMAIN	1,100 L.F.	

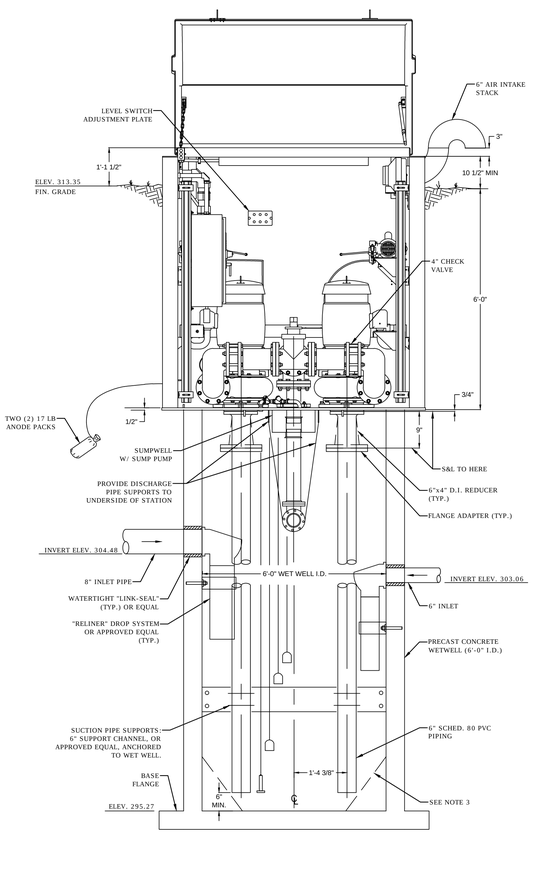

3 ELEVATION: PUMP STATION #1

SCALE: NTS

GENERAL NOTES:

1. ALL INTERIOR WET WELL SUCTION PIPING TO BE SCHEDULE 80 PVC.
2. ALL INTERIOR JOINTS TO BE DUCTILE IRON CLASS 350.
3. CONTRACTOR TO SUPPLY ANTI-FLOTATION CALCULATIONS AS PER SPECIFICATION SECTION 333213.13B.2.
4. SUBGRADE UNDER STATION BASE PLATE SHALL BE COMPACTED AND PROVIDE UNIFORM SUPPORT UNDER ENTIRE BASE PLATE.
5. THE CONTRACTOR IS REQUIRED TO COORDINATE SCHEDULE AND UTILITY CONNECTIONS WITH CONTRACTOR INSTALLING THESE UTILITIES BEFORE TESTING AND TIE IN WILL BE PERMITTED.

NOTES:

1. IF END OF DISCHARGE LINE IS BELOW CENTERLINE OF PUMP IMPELLER, A PRIMING LOCK LOOP MAY BE REQUIRED. THE BOTTOM OF THE LOOP MUST BE INSTALLED BELOW THE "PUMPS OFF" ELEVATION. PUMP MANUFACTURER TO CONFIRM IF PRIMING LOCK LOOP IS REQUIRED.
2. FOR PVC SUCTION PIPE LENGTHS OF 15 FT. OR LONGER, AN INTERMEDIATE SUPPORT AT ONE-HALF THE DEPTH IS REQUIRED.
3. PROVIDE 60° SLOPE IN WET WELL, AS REQUIRED.
4. DISCHARGE PIPING ARRANGEMENTS BELOW THE BASE PLATE WILL VARY AND MAY NOT BE SHOWN ACCORDING TO CUSTOMER'S SPECIFICATIONS.
5. VOLUME IN GALLONS BETWEEN LL ON AND LL OFF SHOULD EQUAL PUMPING RATE IN GPM.
6. TRANSDUCER INCLUDED AS PART OF THE PRIMARY CONTROL SYSTEM. FLOAT SWITCHES WILL SERVE AS THE BACK-UP SYSTEM IF PRIMARY LEVEL CONTROL SYSTEM FAILS.
7. INTERIOR HEAD CLEARANCE 6'-7" MIN.

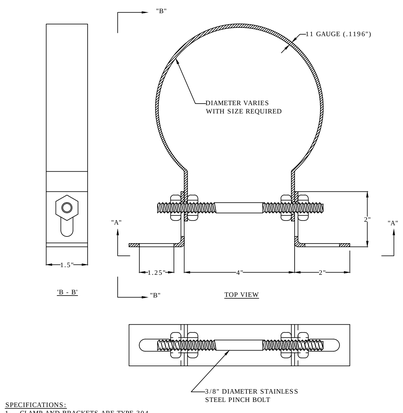

SPECIFICATIONS:
1. CLAMP AND BRACKETS ARE TYPE 304 STAINLESS STEEL, 11 GAUGE (.1196").
2. 3/8" Ø PINCH BOLT AND NUTS ARE TYPE 18-8 STAINLESS STEEL.

4 PIPE TO WALL ANCHOR DETAIL FOR "RELINER" DROP SYSTEM OR EQUAL

SCALE: NTS

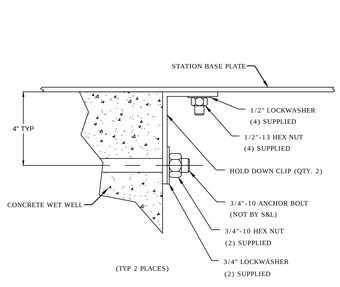

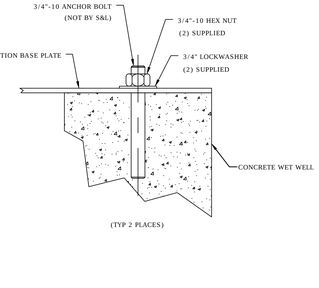

5 CONCRETE ANCHOR DETAIL

SCALE: NTS

REV.	DATE	DESCRIPTION	SHEET NO.
		REVISIONS	

FILENAME:

THE INFORMATION, INCLUDING ESTIMATED QUANTITIES OF WORK, SHOWN ON THESE SHEETS IS BASED ON LIMITED INVESTIGATIONS BY THE STATE AND IS IN NO WAY WARRANTED TO INDICATE THE CONDITIONS OF ACTUAL QUANTITIES OF WORK WHICH WILL BE REQUIRED.

DESIGNER/DRAFTER: SNW
CHECKED BY: RDK
SCALE: AS NOTED

STATE OF CONNECTICUT
DEPARTMENT OF TRANSPORTATION

ARCHITECT: WENDEL
APPROVED BY: DCD
ENGINEERS: ReSTL DESIGNERS, CLOUGH HARBOUR ASSOC., AI ENGINEERS, WENDEL
DATE: 6/11/14

DESIGNED BY:
WENDEL
140 JOHN JAMES AUDUBON PKWY., SUITE 201
AMHERST, NEW YORK 14228

STATE OF CONNECTICUT — DAVID A. DUCHENEAUX — No. 11937 — REGISTERED PROFESSIONAL ENGINEER

PROJECT TITLE:
WATERBURY BUS MAINTENANCE FACILITY REPLACEMENT

ADDRESS:
FROST BRIDGE ROAD WATERTOWN, CONNECTICUT 06787

DRAWING TITLE:
PS-1 DETAILS AND NOTES

PROJECT NO. **0431-0006**
DRAWING NO. **C-507**
SHEET NO. 03.037

Connecticut DOT Boring Report

Driller: F. Harrington		Hole No.: HA-1	
Inspector: S. Brousseau	Town: Waterbury, Connecticut	Stat./Offset: N/A	
Engineer: Haley & Aldrich, Inc.	Project No.: 39192-000	Northing: 285609.06	
Start Date: March 22, 2013	Route No.: Frost Bridge Road	Easting: 515070.48	
Finish Date: March 22, 2013	Bridge No.: N/A	Surface Elevation: 303.40	
Project Description: Waterbury Bus Maintenance Facility Replacement			
Casing Size (in.)/Type: 4 1/4 / HSA	Sampler Type/Size: S / 1 3/8	Core Barrel Type: n/a	
Hammer Wt.: - Fall: -	Hammer Wt. (lb): 140 Fall: 30 in.		
Groundwater Observations: @9 ± after - hours			

Depth (ft)	Sample Type/No.	Blows on Sampler per 6 in.	Pen. (ft)	Rec. (in.)	RQD %	Generalized Strata Description	Material Description and Notes	Elevation (ft)
0	S-1	2 3 5 5	2	17		TOPSOIL/ ALLUVIUM	Loose brown sandy SILT with roots, no odor, dry	303
5	S-2	14 26 27 30	2	13		GLACIOFLUVIAL DEPOSITS	Very dense brown sandy GRAVEL, trace silt, no odor, dry	298
10	S-3	60 35 43 38	2	11			Very dense brown sandy GRAVEL, little silt, no odor, dry	293
15	S-4	18 23 27 25	2	13			Dense brown gravelly SAND, trace silt, no odor, wet	288
	S-5	14 12 16 15	2	17		GLACIOFLUVIAL DEPOSITS	Medium dense brown SAND, little silt and gravel, no odor, wet	

Sample Type: S = Split Spoon C = Core UP = Undisturbed Piston V = Vane Shear Test
Proportions Used: Trace = 1 - 10%, Little = 10 - 20%, Some = 20 - 35%, And = 35 - 50%

Total Penetration in Earth: 32.0 ft Rock: 0 ft	NOTES:	Sheet 1 of 2
No. of Soil Samples: 8 No. of Core Runs: 0		SM-001-M REV. 1/02

Connecticut DOT Boring Report

Driller: F. Harrington		Hole No.: HA-1	
Inspector: S. Brousseau	Town: Waterbury, Connecticut	Stat./Offset: N/A	
Engineer: Haley & Aldrich, Inc.	Project No.: 39192-000	Northing: 285609.06	
Start Date: March 22, 2013	Route No.: Frost Bridge Road	Easting: 515070.48	
Finish Date: March 22, 2013	Bridge No.: N/A	Surface Elevation: 303.40	
Project Description: Waterbury Bus Maintenance Facility Replacement			
Casing Size (in.)/Type: 4 1/4 / HSA	Sampler Type/Size: S / 1 3/8	Core Barrel Type: n/a	
Hammer Wt.: - Fall: -	Hammer Wt. (lb): 140 Fall: 30 in.		
Groundwater Observations: @9 ± after - hours			

Depth (ft)	Sample Type/No.	Blows on Sampler per 6 in.	Pen. (ft)	Rec. (in.)	RQD %	Generalized Strata Description	Material Description and Notes	Elevation (ft)
20	S-6	19 15 21 17	2	24		GLACIOFLUVIAL DEPOSITS (cont'd)	Dense brown medium to fine SAND, little gravel, trace coarse sand and silt, no odor, wet	283
25	S-7	14 17 12 9	2	11			Medium dense brown sandy GRAVEL, trace silt, no odor, wet	278
30	S-8	8 8 7 8	2	9			Similar to S7	273
35							Note: Borehole backfilled with drill cuttings upon completion END OF BORING 32 ft	268

Sample Type: S = Split Spoon C = Core UP = Undisturbed Piston V = Vane Shear Test
Proportions Used: Trace = 1 - 10%, Little = 10 - 20%, Some = 20 - 35%, And = 35 - 50%

Total Penetration in Earth: 32.0 ft Rock: 0 ft	NOTES:	Sheet 2 of 2
No. of Soil Samples: 8 No. of Core Runs: 0		SM-001-M REV. 1/02

Connecticut DOT Boring Report

Driller: J. Nitsch		Hole No.: HA-2	
Inspector: S. Brousseau	Town: Waterbury, Connecticut	Stat./Offset: N/A	
Engineer: Haley & Aldrich, Inc.	Project No.: 39192-000	Northing: 285737.11	
Start Date: March 22, 2013	Route No.: Frost Bridge Road	Easting: 515021.14	
Finish Date: March 22, 2013	Bridge No.: N/A	Surface Elevation: 304.5	
Project Description: Waterbury Bus Maintenance Facility Replacement			
Casing Size (in.)/Type: 4 1/4 / HSA	Sampler Type/Size: S / 1 3/8	Core Barrel Type: n/a	
Hammer Wt.: - Fall: -	Hammer Wt. (lb): 140 Fall: 30 in.		
Groundwater Observations: @6 ± after - hours			

Depth (ft)	Sample Type/No.	Blows on Sampler per 6 in.	Pen. (ft)	Rec. (in.)	RQD %	Generalized Strata Description	Material Description and Notes	Elevation (ft)
0	S-1	1 2 3 5	2	11		FILL	Loose brown medium to fine SAND, little silt, trace coarse sand with few organics, no odor, dry	304
2	S-2	2 2 6 8	2	13			Loose brown silty fine SAND, trace coarse to medium sand and gravel, no odor, dry	302
5	S-3	17 17 27 26	2	12		GLACIOFLUVIAL DEPOSITS	Dense brown sandy GRAVEL, trace silt, no odor, wet at 6 ft.	299
7	S-4	15 39 49 42	2	15			Very dense brown sandy GRAVEL, little silt, no odor, wet	297
10	S-5	18 19 27 30	2	12			Similar to S4, except dense	294
15	S-6	7 13 17 19	2	22			Medium dense brown sandy GRAVEL, trace silt, no odor, wet	289

Sample Type: S = Split Spoon C = Core UP = Undisturbed Piston V = Vane Shear Test
Proportions Used: Trace = 1 - 10%, Little = 10 - 20%, Some = 20 - 35%, And = 35 - 50%

Total Penetration in Earth: 30.8 ft Rock: 0 ft	NOTES:	Sheet 1 of 2
No. of Soil Samples: 9 No. of Core Runs: 0		SM-001-M REV. 1/02

Connecticut DOT Boring Report

Driller: J. Nitsch		Hole No.: HA-2	
Inspector: S. Brousseau	Town: Waterbury, Connecticut	Stat./Offset: N/A	
Engineer: Haley & Aldrich, Inc.	Project No.: 39192-000	Northing: 285737.11	
Start Date: March 22, 2013	Route No.: Frost Bridge Road	Easting: 515021.14	
Finish Date: March 22, 2013	Bridge No.: N/A	Surface Elevation: 304.5	
Project Description: Waterbury Bus Maintenance Facility Replacement			
Casing Size (in.)/Type: 4 1/4 / HSA	Sampler Type/Size: S / 1 3/8	Core Barrel Type: n/a	
Hammer Wt.: - Fall: -	Hammer Wt. (lb): 140 Fall: 30 in.		
Groundwater Observations: @6 ± after - hours			

Depth (ft)	Sample Type/No.	Blows on Sampler per 6 in.	Pen. (ft)	Rec. (in.)	RQD %	Generalized Strata Description	Material Description and Notes	Elevation (ft)
20	S-7	7 8 17 18	2	14		GLACIOFLUVIAL DEPOSITS (cont'd)	Similar to S6	284
25	S-8	7 10 13 14	2	12			Medium dense brown gravelly SAND, little silt, no odor, wet	279
30	S-9	34 50/3"	0.8	6			Very dense sandy GRAVEL, trace silt, no odor, wet Note: Borehole backfilled with drill cuttings upon completion END OF BORING 30.8 ft	274
40								265

Sample Type: S = Split Spoon C = Core UP = Undisturbed Piston V = Vane Shear Test
Proportions Used: Trace = 1 - 10%, Little = 10 - 20%, Some = 20 - 35%, And = 35 - 50%

Total Penetration in Earth: 30.8 ft Rock: 0 ft	NOTES:	Sheet 2 of 2
No. of Soil Samples: 9 No. of Core Runs: 0		SM-001-M REV. 1/02

Connecticut DOT Boring Report

Driller: J. Nitsch		Hole No.: HA-3	
Inspector: S. Brousseau	Town: Waterbury, Connecticut	Stat./Offset: N/A	
Engineer: Haley & Aldrich, Inc.	Project No.: 39192-000	Northing: 285976.57	
Start Date: March 18, 2013	Route No.: Frost Bridge Road	Easting: 514944.35	
Finish Date: March 18, 2013	Bridge No.: N/A	Surface Elevation: 305.92	
Project Description: Waterbury Bus Maintenance Facility Replacement			
Casing Size (in.)/Type: 4 1/4 / HSA	Sampler Type/Size: S / 1 3/8	Core Barrel Type: n/a	
Hammer Wt.: - Fall: -	Hammer Wt. (lb): 140 Fall: 30 in.		
Groundwater Observations: @7 ± after - hours			

Depth (ft)	Sample Type/No.	Blows on Sampler per 6 in.	Pen. (ft)	Rec. (in.)	RQD %	Generalized Strata Description	Material Description and Notes	Elevation (ft)
0	S-1	13 17 16 13	2	14		FILL	Dense brown gravelly SAND, trace silt, no odor, dry	305
2	S-2	8 8 8 9	2	14		ALLUVIUM	Medium dense brown to dark brown silty fine SAND, few organics, no odor, dry	303
5	S-3	6 8 15 16	2	4		ALLUVIUM	Medium dense brown gravelly SAND, little silt, few organics, no odor, dry	301
7	S-4	29 44 30 30	2	20		GLACIOFLUVIAL DEPOSITS	Very dense brown gravelly SAND, little silt, no odor, wet	298
10	S-5	19 19 22 30	2	14			Dense brown gravelly SAND, little silt, no odor, wet	296
15	S-6	20 22 23 25	2	17			Dense brown sandy GRAVEL, trace silt, no odor, wet	291
						GLACIOFLUVIAL DEPOSITS		

Sample Type: S = Split Spoon C = Core UP = Undisturbed Piston V = Vane Shear Test
Proportions Used: Trace = 1 - 10%, Little = 10 - 20%, Some = 20 - 35%, And = 35 - 50%

Total Penetration in Earth: 32.0 ft Rock: 0 ft	NOTES:	Sheet 1 of 2
No. of Soil Samples: 9 No. of Core Runs: 0		SM-001-M REV. 1/02

Connecticut DOT Boring Report

Driller: J. Nitsch		Hole No.: HA-3	
Inspector: S. Brousseau	Town: Waterbury, Connecticut	Stat./Offset: N/A	
Engineer: Haley & Aldrich, Inc.	Project No.: 39192-000	Northing: 285976.57	
Start Date: March 18, 2013	Route No.: Frost Bridge Road	Easting: 514944.35	
Finish Date: March 18, 2013	Bridge No.: N/A	Surface Elevation: 305.92	
Project Description: Waterbury Bus Maintenance Facility Replacement			
Casing Size (in.)/Type: 4 1/4 / HSA	Sampler Type/Size: S / 1 3/8	Core Barrel Type: n/a	
Hammer Wt.: - Fall: -	Hammer Wt. (lb): 140 Fall: 30 in.		
Groundwater Observations: @7 ± after - hours			

Depth (ft)	Sample Type/No.	Blows on Sampler per 6 in.	Pen. (ft)	Rec. (in.)	RQD %	Generalized Strata Description	Material Description and Notes	Elevation (ft)
20	S-7	3 6 8 8	2	16		GLACIOFLUVIAL DEPOSITS (cont'd)	Medium dense brown medium to fine SAND, little gravel, trace silt, no odor, wet	285
25	S-8	5 10 17 20	2	22			Medium dense brown mediumto fine SAND, trace gravel and silt, no odor, wet	281
30	S-9	19 46 33 23	2	12			Very dense brown medium to fine SAND, little gravel, trace silt, no odor, wet	276
35							Note: Borehole backfilled with drill cuttings upon completion END OF BORING 32 ft	271
40								266

Sample Type: S = Split Spoon C = Core UP = Undisturbed Piston V = Vane Shear Test
Proportions Used: Trace = 1 - 10%, Little = 10 - 20%, Some = 20 - 35%, And = 35 - 50%

Total Penetration in Earth: 32.0 ft Rock: 0 ft	NOTES:	Sheet 2 of 2
No. of Soil Samples: 9 No. of Core Runs: 0		SM-001-M REV. 1/02

Connecticut DOT Boring Report

Driller: F. Harrington		Hole No.: HA-4	
Inspector: S. Brousseau	Town: Waterbury, Connecticut	Stat./Offset: N/A	
Engineer: Haley & Aldrich, Inc.	Project No.: 39192-000	Northing: 286132.28	
Start Date: March 18, 2013	Route No.: Frost Bridge Road	Easting: 514895.75	
Finish Date: March 18, 2013	Bridge No.: N/A	Surface Elevation: 304.8	
Project Description: Waterbury Bus Maintenance Facility Replacement			
Casing Size (in.)/Type: 4 1/4 / HSA	Sampler Type/Size: S / 1 3/8	Core Barrel Type: n/a	
Hammer Wt.: - Fall: -	Hammer Wt. (lb): 140 Fall: 30 in.		
Groundwater Observations: @6 ± after - hours			

Depth (ft)	Sample Type/No.	Blows on Sampler per 6 in.	Pen. (ft)	Rec. (in.)	RQD %	Generalized Strata Description	Material Description and Notes	Elevation (ft)
0	S-1	12 12 11 10	2	18		FILL	Medium dense gravelly SAND, little silt, no odor, dry	304
2	S-2	7 6 6 8	2	16		ALLUVIUM	Medium dense brown silty fine SAND, no odor, dry	302
5	S-3	10 8 7 7	2	20			Medium dense brown medium to fine SAND, little silt, no odor, dry	299
7	S-4	20 38 37 36	2	14		GLACIOFLUVIAL DEPOSITS	Very dense brown gravelly SAND, little silt, no odor, wet	297
10	S-5	13 18 14 5	2	20			Dense brown sandy GRAVEL, little silt, no odor, wet	294
15	S-6	16 18 21 20	2	12			Dense brown gravelly SAND, little silt, no odor, wet	289
						GLACIOFLUVIAL DEPOSITS		

Sample Type: S = Split Spoon C = Core UP = Undisturbed Piston V = Vane Shear Test
Proportions Used: Trace = 1 - 10%, Little = 10 - 20%, Some = 20 - 35%, And = 35 - 50%

Total Penetration in Earth: 32.0 ft Rock: 0 ft	NOTES:	Sheet 1 of 2
No. of Soil Samples: 9 No. of Core Runs: 0		SM-001-M REV. 1/02

Connecticut DOT Boring Report

Driller: F. Harrington		Hole No.: HA-4	
Inspector: S. Brousseau	Town: Waterbury, Connecticut	Stat./Offset: N/A	
Engineer: Haley & Aldrich, Inc.	Project No.: 39192-000	Northing: 286132.28	
Start Date: March 18, 2013	Route No.: Frost Bridge Road	Easting: 514895.75	
Finish Date: March 18, 2013	Bridge No.: N/A	Surface Elevation: 304.8	
Project Description: Waterbury Bus Maintenance Facility Replacement			
Casing Size (in.)/Type: 4 1/4 / HSA	Sampler Type/Size: S / 1 3/8	Core Barrel Type: n/a	
Hammer Wt.: - Fall: -	Hammer Wt. (lb): 140 Fall: 30 in.		
Groundwater Observations: @6 ± after - hours			

Depth (ft)	Sample Type/No.	Blows on Sampler per 6 in.	Pen. (ft)	Rec. (in.)	RQD %	Generalized Strata Description	Material Description and Notes	Elevation (ft)
20	S-7	7 7 8 9	2	10		GLACIOFLUVIAL DEPOSITS (cont'd)	Medium dense brown SAND, little gravel, trace silt, no odor, wet	284
25	S-8	4 4 4 5	2	15			Note: Washed out 4 ft running sand at 25.0 ft prior to sampling Loose brown medium to fine SAND, trace coarse sand and silt, no odor, wet	279
30	S-9	14 18 29 27	2	14			Note: Washed out 2 ft running sand at 30.0 ft prior to sampling Dense brown sandy GRAVEL, trace silt, no odor, wet Note: Borehole backfilled with drill cuttings upon completion END OF BORING 32 ft	274
40								265

Sample Type: S = Split Spoon C = Core UP = Undisturbed Piston V = Vane Shear Test
Proportions Used: Trace = 1 - 10%, Little = 10 - 20%, Some = 20 - 35%, And = 35 - 50%

Total Penetration in Earth: 32.0 ft Rock: 0 ft	NOTES:	Sheet 2 of 2
No. of Soil Samples: 9 No. of Core Runs: 0		SM-001-M REV. 1/02

REV.	DATE	DESCRIPTION	SHEET NO.
		REVISIONS	

FILENAME:

THE INFORMATION, INCLUDING ESTIMATED QUANTITIES OF WORK, SHOWN ON THESE SHEETS IS BASED ON LIMITED INVESTIGATIONS BY THE STATE AND IS IN NO WAY WARRANTED TO INDICATE THE CONDITIONS OF ACTUAL QUANTITIES OF WORK WHICH WILL BE REQUIRED.

DESIGNER/DRAFTER: TAR

CHECKED BY: TJZ

SCALE: AS NOTED

STATE OF CONNECTICUT
DEPARTMENT OF TRANSPORTATION

ARCHITECT: WENDEL

ENGINEERS: ReSTL DESIGNERS, CLOUGH HARBOUR ASSOC., AI ENGINEERS, WENDEL

APPROVED BY: DCD

DATE: 6/11/14

DESIGNED BY:
WENDEL
140 JOHN JAMES AUDUBON PKWY., SUITE 201
AMHERST, NEW YORK 14228

STATE OF CONNECTICUT · DAVID G. DUDZIENSKI · No. 11937 · REGISTERED PROFESSIONAL ENGINEER

PROJECT TITLE:
WATERBURY BUS MAINTENANCE FACILITY REPLACEMENT

ADDRESS:
FROST BRIDGE ROAD
WATERTOWN, CONNECTICUT 06787

DRAWING TITLE:
BORING LOGS

PROJECT NO. **0431-0006**

DRAWING NO. **C-601**

SHEET NO. 03.038

Driller:	J. Nitsch	**Connecticut DOT Boring Report**		Hole No.:	HA-5
Inspector:	S. Brousseau	Town:	Waterbury, Connecticut	Stat./Offset:	N/A
Engineer:	Haley & Aldrich, Inc.	Project No.:	39192-000	Northing:	285633.82
Start Date:	March 18, 2013	Route No.:	Frost Bridge Road	Easting:	515152.6
Finish Date:	March 18, 2013	Bridge No.:	N/A	Surface Elevation:	302.83
Project Description:	Waterbury Bus Maintenance Facility Replacement				
Casing Size (in.)/Type:	4 1/4 / HSA	Sampler Type/Size:	S / 1 3/8	Core Barrel Type:	n/a
Hammer Wt.:	- Fall: -	Hammer Wt. (lb):	140 Fall: 30 in.		
Groundwater Observations:	@7 ± after - hours				

Depth (ft)	Sample Type/No.	Blows on Sampler per 6 in.	Pen. (ft)	Rec. (in.)	RQD %	Generalized Strata Description	Material Description and Notes	Elevation (ft)
0	S-1	12 10 15 13	2	14		FILL	Medium dense brown gravelly SAND, little silt, no odor, dry	302
1								301
2	S-2	12 8 6 4	2	18		ALLUVIUM	Medium dense dark brown silty fine SAND, few organics, organic odor, moist	300
3								299
4						ALLUVIUM		298
5	S-3	2 1 1 1	2	3			Very loose brown silty fine SAND, few organics, no odor, moist	297
6								296
7	S-4	13 50/3"	0.8	9		GLACIOFLUVIAL DEPOSITS	Similar to S3 Very dense gray-brown gravelly SAND, little silt, no odor, wet	295
8								294
9								293
10	S-5	18 47 30 40	2	14			Very dense brown sandy GRAVEL, little silt, no odor, wet	292
11								291
12							Note: HSA refusal at 12.0 ft. Offset 6 ft northeast with HSA refusal at 8.0 ft. Offset 4 ft south of original location	290
13								289
14								288
15	S-6	10 20 44 34	2	14			Very dense brown gravelly SAND, little silt, no odor, wet	287
16								286
17								285
18								284
19								283
20								

Sample Type: S = Split Spoon C = Core UP = Undisturbed Piston V = Vane Shear Test
Proportions Used: Trace = 1 - 10%, Little = 10 - 20%, Some = 20 - 35%, And = 35 - 50%

Total Penetration in		NOTES:	Sheet
Earth: 32.0 ft	Rock: 0 ft		1 of 2
No. of Soil Samples: 9	No. of Core Runs: 0		SM-001-M REV. 1/02

Driller:	J. Nitsch	**Connecticut DOT Boring Report**		Hole No.:	HA-5
Inspector:	S. Brousseau	Town:	Waterbury, Connecticut	Stat./Offset:	N/A
Engineer:	Haley & Aldrich, Inc.	Project No.:	39192-000	Northing:	285633.82
Start Date:	March 18, 2013	Route No.:	Frost Bridge Road	Easting:	515152.6
Finish Date:	March 18, 2013	Bridge No.:	N/A	Surface Elevation:	302.83
Project Description:	Waterbury Bus Maintenance Facility Replacement				
Casing Size (in.)/Type:	4 1/4 / HSA	Sampler Type/Size:	S / 1 3/8	Core Barrel Type:	n/a
Hammer Wt.:	- Fall: -	Hammer Wt. (lb):	140 Fall: 30 in.		
Groundwater Observations:	@7 ± after - hours				

Depth (ft)	Sample Type/No.	Blows on Sampler per 6 in.	Pen. (ft)	Rec. (in.)	RQD %	Generalized Strata Description	Material Description and Notes	Elevation (ft)
20	S-7	9 10 10 13	2	12		GLACIOFLUVIAL DEPOSITS *(cont'd)*	Medium dense brown gravelly SAND, trace silt, no odor, wet	282
21								281
22								280
23								279
24								278
25	S-8	5 10 9 17	2	18			Medium dense brown medium to fine SAND, trace silt, no odor, wet	277
26								276
27								275
28								274
29								273
30	S-9	6 9 12 13	2	14			Similar to S8	272
31								271
32								270
33							END OF BORING 32 ft	269
34								268
35								267
36								266
37								265
38								264
39								263
40								

Sample Type: S = Split Spoon C = Core UP = Undisturbed Piston V = Vane Shear Test
Proportions Used: Trace = 1 - 10%, Little = 10 - 20%, Some = 20 - 35%, And = 35 - 50%

Total Penetration in		NOTES:	Sheet
Earth: 32.0 ft	Rock: 0 ft		2 of 2
No. of Soil Samples: 9	No. of Core Runs: 0		SM-001-M REV. 1/02

Driller:	J. Nitsch	**Connecticut DOT Boring Report**		Hole No.:	HA-7
Inspector:	S. Brousseau	Town:	Waterbury, Connecticut	Stat./Offset:	N/A
Engineer:	Haley & Aldrich, Inc.	Project No.:	39192-000	Northing:	286178.01
Start Date:	March 18, 2013	Route No.:	Frost Bridge Road	Easting:	515032
Finish Date:	March 18, 2013	Bridge No.:	N/A	Surface Elevation:	304.0
Project Description:	Waterbury Bus Maintenance Facility Replacement				
Casing Size (in.)/Type:	4 1/4 / HSA	Sampler Type/Size:	S / 1 3/8	Core Barrel Type:	n/a
Hammer Wt.:	- Fall: -	Hammer Wt. (lb):	140 Fall: 30 in.		
Groundwater Observations:	@7 ± after - hours				

Depth (ft)	Sample Type/No.	Blows on Sampler per 6 in.	Pen. (ft)	Rec. (in.)	RQD %	Generalized Strata Description	Material Description and Notes	Elevation (ft)
0	S-1	12 18 15 13	2	14		FILL	Dense brown gravelly SAND, little silt, no odor, dry	304
1								303
2	S-2	12 8 6 4	2	18		ALLUVIUM	Medium dense dark brown silty fine SAND, few organics, organic odor, moist	302
3								301
4						ALLUVIUM		300
5	S-3	2 1 1 1	2	3			Very loose brown silty fine SAND, few organics, no odor, dry	299
6								298
7	S-4	13 50/3"	0.8	9		GLACIOFLUVIAL DEPOSITS	Same as S3 Very dense gray-brown sandy GRAVEL, trace silt, no odor, wet	297
8								296
9								295
10	S-5	18 47 30 40	2	14			Very dense brown sandy GRAVEL, little silt, no odor, wet	294
11								293
12								292
13								291
14								290
15	S-6	10 20 44 34	2	14			Very dense brown gravelly SAND, little silt, no odor, wet	289
16								288
17								287
18								286
19								285
20								284

Sample Type: S = Split Spoon C = Core UP = Undisturbed Piston V = Vane Shear Test
Proportions Used: Trace = 1 - 10%, Little = 10 - 20%, Some = 20 - 35%, And = 35 - 50%

Total Penetration in		NOTES:	Sheet
Earth: 32.0 ft	Rock: 0 ft		1 of 2
No. of Soil Samples: 9	No. of Core Runs: 0		SM-001-M REV. 1/02

Driller:	J. Nitsch	**Connecticut DOT Boring Report**		Hole No.:	HA-7
Inspector:	S. Brousseau	Town:	Waterbury, Connecticut	Stat./Offset:	N/A
Engineer:	Haley & Aldrich, Inc.	Project No.:	39192-000	Northing:	286178.01
Start Date:	March 18, 2013	Route No.:	Frost Bridge Road	Easting:	515032
Finish Date:	March 18, 2013	Bridge No.:	N/A	Surface Elevation:	304.0
Project Description:	Waterbury Bus Maintenance Facility Replacement				
Casing Size (in.)/Type:	4 1/4 / HSA	Sampler Type/Size:	S / 1 3/8	Core Barrel Type:	n/a
Hammer Wt.:	- Fall: -	Hammer Wt. (lb):	140 Fall: 30 in.		
Groundwater Observations:	@7 ± after - hours				

Depth (ft)	Sample Type/No.	Blows on Sampler per 6 in.	Pen. (ft)	Rec. (in.)	RQD %	Generalized Strata Description	Material Description and Notes	Elevation (ft)
20	S-7	9 10 10 13	2	12		GLACIOFLUVIAL DEPOSITS *(cont'd)*	Medium dense brown gravelly SAND, trace silt, no odor, wet	284
21								283
22								282
23								281
24								280
25	S-8	5 10 9 17	2	18			Medium dense brown medium to fine SAND, trace silt, no odor, wet	279
26								278
27								277
28								276
29								275
30	S-9	6 9 12 13	2	14			Similar to S8	274
31								273
32							Note: Borehole backfilled with drill cuttings upon completion	272
33								271
34							END OF BORING 32 ft	270
35								269
36								268
37								267
38								266
39								265
40								264

Sample Type: S = Split Spoon C = Core UP = Undisturbed Piston V = Vane Shear Test
Proportions Used: Trace = 1 - 10%, Little = 10 - 20%, Some = 20 - 35%, And = 35 - 50%

Total Penetration in		NOTES:	Sheet
Earth: 32.0 ft	Rock: 0 ft		2 of 2
No. of Soil Samples: 9	No. of Core Runs: 0		SM-001-M REV. 1/02

Driller:	F. Harrington	**Connecticut DOT Boring Report**		Hole No.:	HA-8
Inspector:	S. Brousseau	Town:	Waterbury, Connecticut	Stat./Offset:	N/A
Engineer:	Haley & Aldrich, Inc.	Project No.:	39192-000	Northing:	285649.86
Start Date:	March 20, 2013	Route No.:	Frost Bridge Road	Easting:	515291.27
Finish Date:	March 20, 2013	Bridge No.:	N/A	Surface Elevation:	302.50
Project Description:	Waterbury Bus Maintenance Facility Replacement				
Casing Size (in.)/Type:	4 1/4 / HSA	Sampler Type/Size:	S / 1 3/8	Core Barrel Type:	n/a
Hammer Wt.:	- Fall: -	Hammer Wt. (lb):	140 Fall: 30 in.		
Groundwater Observations:	@5 ± after - hours				

Depth (ft)	Sample Type/No.	Blows on Sampler per 6 in.	Pen. (ft)	Rec. (in.)	RQD %	Generalized Strata Description	Material Description and Notes	Elevation (ft)
0	S-1	6 7 5 9	2	12		FILL	Medium dense brown medium to fine SAND, little gravel and silt with few organics, no odor, dry	302
1						ALLUVIUM		301
2	S-2	7 7 7 8	2	15			Medium dense dark brown fine sandy SILT with few organics, no odor, dry Medium dense brown silty fine SAND with few organic, no odor, dry	300
3								299
4								298
5	S-3	2 2 2 2	2	4			Very loose dark brown silty fine SAND, few organics, organic odor, wet	297
6								296
7	S-4	2 3 13 35	2	12			Similar to S3	295
8						GLACIOFLUVIAL DEPOSITS	Medium dense gray brown sandy GRAVEL, little silt, organic odor, wet	294
9								293
10	S-5	6 7 7 9	2	15		GLACIOFLUVIAL DEPOSITS	Medium dense brown coarse to fine SAND, some medium to fine gravel, trace silt, no odor, wet	292
11								291
12								290
13								289
14								288
15	S-6	3 3 4 4	2	17			Loose brown coarse to fine SAND, some medium to fine gravel, no odor, wet	287
16								286
17								285
18								284
19								283
20								

Sample Type: S = Split Spoon C = Core UP = Undisturbed Piston V = Vane Shear Test
Proportions Used: Trace = 1 - 10%, Little = 10 - 20%, Some = 20 - 35%, And = 35 - 50%

Total Penetration in		NOTES:	Sheet
Earth: 32.0 ft	Rock: 0 ft		1 of 2
No. of Soil Samples: 9	No. of Core Runs: 0		SM-001-M REV. 1/02

Driller:	F. Harrington	**Connecticut DOT Boring Report**		Hole No.:	HA-8
Inspector:	S. Brousseau	Town:	Waterbury, Connecticut	Stat./Offset:	N/A
Engineer:	Haley & Aldrich, Inc.	Project No.:	39192-000	Northing:	285649.86
Start Date:	March 20, 2013	Route No.:	Frost Bridge Road	Easting:	515291.27
Finish Date:	March 20, 2013	Bridge No.:	N/A	Surface Elevation:	302.50
Project Description:	Waterbury Bus Maintenance Facility Replacement				
Casing Size (in.)/Type:	4 1/4 / HSA	Sampler Type/Size:	S / 1 3/8	Core Barrel Type:	n/a
Hammer Wt.:	- Fall: -	Hammer Wt. (lb):	140 Fall: 30 in.		
Groundwater Observations:	@5 ± after - hours				

Depth (ft)	Sample Type/No.	Blows on Sampler per 6 in.	Pen. (ft)	Rec. (in.)	RQD %	Generalized Strata Description	Material Description and Notes	Elevation (ft)
20	S-7	4 5 5 8	2	22		GLACIOFLUVIAL DEPOSITS *(cont'd)*	Loose brown SAND, trace silt, no odor, wet	282
21								281
22								280
23								279
24								278
25	S-8	6 7 10 14	2	18			Medium dense brown medium to fine SAND, trace silt, no odor, wet	277
26								276
27								275
28								274
29								273
30	S-9	30 48 61 60	2	14			Very dense brown gravelly SAND, trace silt, no odor, wet	272
31								271
32							Note: Borehole backfilled with drill cuttings upon completion	270
33								269
34							END OF BORING 32 ft	268
35								267
36								266
37								265
38								264
39								263
40								

Sample Type: S = Split Spoon C = Core UP = Undisturbed Piston V = Vane Shear Test
Proportions Used: Trace = 1 - 10%, Little = 10 - 20%, Some = 20 - 35%, And = 35 - 50%

Total Penetration in		NOTES:	Sheet
Earth: 32.0 ft	Rock: 0 ft		2 of 2
No. of Soil Samples: 9	No. of Core Runs: 0		SM-001-M REV. 1/02

Driller:	J. Nitsch	**Connecticut DOT Boring Report**		Hole No.:	HA-11
Inspector:	S. Brousseau	Town:	Waterbury, Connecticut	Stat./Offset:	N/A
Engineer:	Haley & Aldrich, Inc.	Project No.:	39192-000	Northing:	286066.18
Start Date:	March 20, 2013	Route No.:	Frost Bridge Road	Easting:	515169.82
Finish Date:	March 22, 2013	Bridge No.:	N/A	Surface Elevation:	303.3
Project Description:	Waterbury Bus Maintenance Facility Replacement				
Casing Size (in.)/Type:	4 1/4 / HSA	Sampler Type/Size:	S / 1 3/8	Core Barrel Type:	n/a
Hammer Wt.:	- Fall: -	Hammer Wt. (lb):	140 Fall: 30 in.		
Groundwater Observations:	@7 ± after - hours				

Depth (ft)	Sample Type/No.	Blows on Sampler per 6 in.	Pen. (ft)	Rec. (in.)	RQD %	Generalized Strata Description	Material Description and Notes	Elevation (ft)
0	S-1	7 21 14 12	2	15		FILL	Dense brown SAND, little gravel and silt, no odor, dry	303
1								302
2	S-2	9 6 5 5	2	20		ALLUVIUM	Medium dense brown silty fine SAND with few organics, no odor, dry	301
3								300
4						ALLUVIUM		299
5	S-3	2 2 2 2	2	16			Very loose dark brown silty fine SAND with few organics, no odor, dry	298
6								297
7	S-4	6 22 50/5"	2	10		GLACIOFLUVIAL DEPOSITS	Very dense brown gravelly SAND, trace silt, slight organic odor, wet	296
8								295
9							Similar to S4	294
10	S-5	36 44 20 20	2	12		GLACIOFLUVIAL DEPOSITS	Verd dense brown silty fine SAND, no odor, wet	293
11							Note: Remove HSA after sampling S4 (7-8.4 ft.) and begin driving HW 4.0 casing	292
12								291
13								290
14	S-6	4 4 4 4	2	13			Loose brown fine SAND, little silt, no odor, wet	289
15								288
16								287
17								286
18								285
19	S-7	4 3 3 3	2	10			Similar to S6	284
20								

Sample Type: S = Split Spoon C = Core UP = Undisturbed Piston V = Vane Shear Test
Proportions Used: Trace = 1 - 10%, Little = 10 - 20%, Some = 20 - 35%, And = 35 - 50%

Total Penetration in		NOTES:	Sheet
Earth: 98.1 ft	Rock: 0 ft		1 of 5
No. of Soil Samples: 22	No. of Core Runs: 0		SM-001-M REV. 1/02

Driller:	J. Nitsch	**Connecticut DOT Boring Report**		Hole No.:	HA-11
Inspector:	S. Brousseau	Town:	Waterbury, Connecticut	Stat./Offset:	N/A
Engineer:	Haley & Aldrich, Inc.	Project No.:	39192-000	Northing:	286066.18
Start Date:	March 20, 2013	Route No.:	Frost Bridge Road	Easting:	515169.82
Finish Date:	March 22, 2013	Bridge No.:	N/A	Surface Elevation:	303.3
Project Description:	Waterbury Bus Maintenance Facility Replacement				
Casing Size (in.)/Type:	4 1/4 / HSA	Sampler Type/Size:	S / 1 3/8	Core Barrel Type:	n/a
Hammer Wt.:	- Fall: -	Hammer Wt. (lb):	140 Fall: 30 in.		
Groundwater Observations:	@7 ± after - hours				

Depth (ft)	Sample Type/No.	Blows on Sampler per 6 in.	Pen. (ft)	Rec. (in.)	RQD %	Generalized Strata Description	Material Description and Notes	Elevation (ft)
20						GLACIOFLUVIAL DEPOSITS *(cont'd)*		283
21								282
22								281
23								280
24	S-8	7 7 6 9	2	13			Medium dense fine SAND, little silt, no odor, wet	279
25								278
26								277
27								276
28								275
29	S-9	4 4 4 5	2	12			Loose brown fine sandy SILT, no odor, wet	274
30								273
31								272
32								271
33								270
34	S-10	4 3 3 4	2	12			Loose brown silty fine SAND, no odor, wet	269
35								268
36								267
37								266
38								265
39	S-11	4 5 6 8	2	9			Medium dense brown medium to fine SAND, little silt, no odor, wet	264
40								

Sample Type: S = Split Spoon C = Core UP = Undisturbed Piston V = Vane Shear Test
Proportions Used: Trace = 1 - 10%, Little = 10 - 20%, Some = 20 - 35%, And = 35 - 50%

Total Penetration in		NOTES:	Sheet
Earth: 98.1 ft	Rock: 0 ft		2 of 5
No. of Soil Samples: 22	No. of Core Runs: 0		SM-001-M REV. 1/02

REV.	DATE	DESCRIPTION	SHEET NO.
		REVISIONS	

FILENAME:

THE INFORMATION, INCLUDING ESTIMATED QUANTITIES OF WORK, SHOWN ON THESE SHEETS IS BASED ON LIMITED INVESTIGATIONS BY THE STATE AND IS IN NO WAY WARRANTED TO INDICATE THE CONDITIONS OF ACTUAL QUANTITIES OF WORK WHICH WILL BE REQUIRED.

DESIGNER/DRAFTER: **TAR**

CHECKED BY: **TJZ**

SCALE: **AS NOTED**

STATE OF CONNECTICUT
DEPARTMENT OF TRANSPORTATION

ARCHITECT: **WENDEL**

ENGINEERS: **ReSTL DESIGNERS, CLOUGH HARBOUR ASSOC., AI ENGINEERS, WENDEL**

APPROVED BY: **DCD**

DATE: **6/11/14**

DESIGNED BY:
WENDEL
140 JOHN JAMES AUDUBON PKWY., SUITE 201
AMHERST, NEW YORK 14228

STATE OF CONNECTICUT — DAVID G. DUDZINSKI — No. 11937 — REGISTERED PROFESSIONAL ENGINEER

PROJECT TITLE:
WATERBURY BUS MAINTENANCE FACILITY REPLACEMENT

ADDRESS:
FROST BRIDGE ROAD
WATERTOWN, CONNECTICUT 06787

DRAWING TITLE:
BORING LOGS

PROJECT NO.
0431-0006

DRAWING NO.
C-602

SHEET NO.
03.039

Connecticut DOT Boring Report

Driller: J. Nitsch	Town: Waterbury, Connecticut	Hole No.: HA-11	Stat./Offset: N/A
Inspector: S. Brousseau	Project No.: 39192-000	Northing: 286066.18	
Engineer: Haley & Aldrich, Inc.	Route No.: Frost Bridge Road	Easting: 515169.82	
Start Date: March 20, 2013	Bridge No.: N/A	Surface Elevation: 303.3	
Finish Date: March 22, 2013			
Project Description: Waterbury Bus Maintenance Facility Replacement			
Casing Size (in.)/Type: 4 1/4 / HSA	Sampler Type/Size: S / 1 3/8	Core Barrel Type: n/a	
Hammer Wt.: - Fall: -	Hammer Wt. (lb): 140 Fall: 30 in.		
Groundwater Observations: @7 ± after - hours			

Depth (ft)	Sample Type/No.	Blows on Sampler per 6 in.	Pen. (ft)	Rec. (in.)	RQD %	Generalized Strata Description	Material Description and Notes	Elevation (ft)
40						GLACIOFLUVIAL DEPOSITS *(cont'd)*		263
41								262
42								261
43						GLACIOFLUVIAL DEPOSITS		260
44	S-12	5 6 7 8	2	5			Medium dense brown medium to fine SAND, trace fine gravel and silt, no odor, wet	259
45								258
46								257
47								256
48								255
49	S-13	14 14 12 11	2	8			Medium dense brown gravelly SAND, trace silt, no odor, wet	254
50								253
51								252
52								251
53								250
54	S-14	8 10 10 12	2	2			Probable wash (coarse sand to fine gravel) with gravel fragment lodge in spoon tip.	249
55								248
56								247
57								246
58								245
59	S-15	14 12 15 11	2	4			Medium dense brown gravelly SAND, trace silt, no odor, wet	244
60								243

Sample Type: S = Split Spoon C = Core UP = Undisturbed Piston V = Vane Shear Test
Proportions Used: Trace = 1 - 10%, Little = 10 - 20%, Some = 20 - 35%, And = 35 - 50%

Total Penetration in Earth: 98.1 ft Rock: 0 ft No. of Soil Samples: 22 No. of Core Runs: 0	NOTES:	Sheet 3 of 5 SM-001-M REV. 1/02

Connecticut DOT Boring Report

Driller: J. Nitsch	Town: Waterbury, Connecticut	Hole No.: HA-11	Stat./Offset: N/A
Inspector: S. Brousseau	Project No.: 39192-000	Northing: 286066.18	
Engineer: Haley & Aldrich, Inc.	Route No.: Frost Bridge Road	Easting: 515169.82	
Start Date: March 20, 2013	Bridge No.: N/A	Surface Elevation: 303.3	
Finish Date: March 22, 2013			
Project Description: Waterbury Bus Maintenance Facility Replacement			
Casing Size (in.)/Type: 4 1/4 / HSA	Sampler Type/Size: S / 1 3/8	Core Barrel Type: n/a	
Hammer Wt.: - Fall: -	Hammer Wt. (lb): 140 Fall: 30 in.		
Groundwater Observations: @7 ± after - hours			

Depth (ft)	Sample Type/No.	Blows on Sampler per 6 in.	Pen. (ft)	Rec. (in.)	RQD %	Generalized Strata Description	Material Description and Notes	Elevation (ft)
60						GLACIOFLUVIAL DEPOSITS *(cont'd)*		243
61								242
62								241
63								240
64	S-16	20 17 18 20	2	9			Dense brown gravelly SAND, trace silt, no odor, wet	239
65								238
66								237
67								236
68								235
69	S-17	73 22 19 20	2	2			Dense brown SAND, little gravel, trace silt, no odor, wet (probably wash)	234
70								233
71								232
72								231
73						GLACIAL TILL DEPOSITS		230
74	S-18	44 100/5"	0.9	6			Very dense brown silty medium to fine SAND, little gravel, (rock fragment in spoon tip), no odor, wet Note: Rollerbit to 76.0 ft. and core through boulder to 77.0 ft. Rollerbit ahead to 78.0 ft. and drive/wash casing to 79.0 ft. Drill action indicates few cobbles and boulders from 75.0 to 79.0 ft.	229
75								228
76								227
77								226
78								225
79	S-19	49 100/5"	0.9	4			Very dense brown gravelly SAND, little silt, no odor, wet	224
80								223

Sample Type: S = Split Spoon C = Core UP = Undisturbed Piston V = Vane Shear Test
Proportions Used: Trace = 1 - 10%, Little = 10 - 20%, Some = 20 - 35%, And = 35 - 50%

Total Penetration in Earth: 98.1 ft Rock: 0 ft No. of Soil Samples: 22 No. of Core Runs: 0	NOTES:	Sheet 4 of 5 SM-001-M REV. 1/02

Connecticut DOT Boring Report

Driller: J. Nitsch	Town: Waterbury, Connecticut	Hole No.: HA-11	Stat./Offset: N/A
Inspector: S. Brousseau	Project No.: 39192-000	Northing: 286066.18	
Engineer: Haley & Aldrich, Inc.	Route No.: Frost Bridge Road	Easting: 515169.82	
Start Date: March 20, 2013	Bridge No.: N/A	Surface Elevation: 303.3	
Finish Date: March 22, 2013			
Project Description: Waterbury Bus Maintenance Facility Replacement			
Casing Size (in.)/Type: 4 1/4 / HSA	Sampler Type/Size: S / 1 3/8	Core Barrel Type: n/a	
Hammer Wt.: - Fall: -	Hammer Wt. (lb): 140 Fall: 30 in.		
Groundwater Observations: @7 ± after - hours			

Depth (ft)	Sample Type/No.	Blows on Sampler per 6 in.	Pen. (ft)	Rec. (in.)	RQD %	Generalized Strata Description	Material Description and Notes	Elevation (ft)
80						GLACIAL TILL DEPOSITS *(cont'd)*	Note: Rollerbit ahead to 83.0 ft.. Drill action indicates few cobbles and boulders. Drive/wash to 84.0 ft.	223
81								222
82								221
83								220
84	S-20	48 48 50/1"	1.1	7			Very dense silty medium to fine SAND, little gravel, no odor, wet (probable weathered boulder) Note: HW casing refusal at 88.5 ft. Rollerbit to 89.0 ft. Drill action indicates few cobbles and boulders from 84.0 to 89.0 ft.	219
85								218
86								217
87								216
88								215
89	S-21	150/4"	0.3	4			Very dense gray silty medium to fine SAND, little gravel, no odor, dry (probable weathered boulder) Note: Rollerbit to 98.0 ft. Drill action indicates few cobbles and boulders	214
90								213
91								212
92								211
93								210
94								209
95								208
96								207
97								206
98	S-22	100/1"	0.1	1			Probable boulder fragment. Note: Borehole backfilled with drill cuttings upon completion END OF BORING 98.1 ft	205
99								204
100								203

Sample Type: S = Split Spoon C = Core UP = Undisturbed Piston V = Vane Shear Test
Proportions Used: Trace = 1 - 10%, Little = 10 - 20%, Some = 20 - 35%, And = 35 - 50%

Total Penetration in Earth: 98.1 ft Rock: 0 ft No. of Soil Samples: 22 No. of Core Runs: 0	NOTES:	Sheet 5 of 5 SM-001-M REV. 1/02

Connecticut DOT Boring Report

Driller: F. Harrington	Town: Waterbury, Connecticut	Hole No.: HA-12	Stat./Offset: N/A
Inspector: S. Brousseau	Project No.: 39192-000	Northing: 285949.31	
Engineer: Haley & Aldrich, Inc.	Route No.: Frost Bridge Road	Easting: 515349.7	
Start Date: March 20, 2013	Bridge No.: N/A	Surface Elevation: 302.9	
Finish Date: March 20, 2013			
Project Description: Waterbury Bus Maintenance Facility Replacement			
Casing Size (in.)/Type: 4 1/4 / HSA	Sampler Type/Size: S / 1 3/8	Core Barrel Type: n/a	
Hammer Wt.: - Fall: -	Hammer Wt. (lb): 140 Fall: 30 in.		
Groundwater Observations: @5 ± after - hours			

Depth (ft)	Sample Type/No.	Blows on Sampler per 6 in.	Pen. (ft)	Rec. (in.)	RQD %	Generalized Strata Description	Material Description and Notes	Elevation (ft)
0	S-1	5 6 8 8	2	15		FILL	Medium dense brown medium to fine SAND, trace gravel and silt with few fragments of asphalt, no odor, dry	302
1								301
2	S-2	5 7 7 6	2	20		ALLUVIUM	Medium dense medium to fine SAND, little silt, no odor, dry	300
3								299
4								298
5	S-3	27 38 63 69	2	12		GLACIOFLUVIAL DEPOSITS	Very dense brown sandy GRAVEL, trace silt, no odor, wet	297
6								296
7								295
8								294
9								293
10	S-4	46 100/5"	1	4			Very dense brown sandy GRAVEL, little silt, no odor, wet	292
11								291
12								290
13								289
14								288
15	S-5	21 28 23 49	2	15			Very dense brown gravelly SAND, trace silt, no odor, wet	287
16								286
17								285
18								284
19								283
20								282

Sample Type: S = Split Spoon C = Core UP = Undisturbed Piston V = Vane Shear Test
Proportions Used: Trace = 1 - 10%, Little = 10 - 20%, Some = 20 - 35%, And = 35 - 50%

Total Penetration in Earth: 32.0 ft Rock: 0 ft No. of Soil Samples: 8 No. of Core Runs: 0	NOTES:	Sheet 1 of 2 SM-001-M REV. 1/02

Connecticut DOT Boring Report

Driller: F. Harrington	Town: Waterbury, Connecticut	Hole No.: HA-12	Stat./Offset: N/A
Inspector: S. Brousseau	Project No.: 39192-000	Northing: 285949.31	
Engineer: Haley & Aldrich, Inc.	Route No.: Frost Bridge Road	Easting: 515349.7	
Start Date: March 20, 2013	Bridge No.: N/A	Surface Elevation: 302.9	
Finish Date: March 20, 2013			
Project Description: Waterbury Bus Maintenance Facility Replacement			
Casing Size (in.)/Type: 4 1/4 / HSA	Sampler Type/Size: S / 1 3/8	Core Barrel Type: n/a	
Hammer Wt.: - Fall: -	Hammer Wt. (lb): 140 Fall: 30 in.		
Groundwater Observations: @5 ± after - hours			

Depth (ft)	Sample Type/No.	Blows on Sampler per 6 in.	Pen. (ft)	Rec. (in.)	RQD %	Generalized Strata Description	Material Description and Notes	Elevation (ft)
20	S-6	21 27 24 28	2	14		GLACIOFLUVIAL DEPOSITS *(cont'd)*	Very dense brown gravelly SAND, little silt, no odor, wet	282
21								281
22								280
23								279
24								278
25	S-7	17 24 29 38	2	18			Very dense brown sandy GRAVEL, trace silt, no odor, wet	277
26								276
27								275
28								274
29								273
30	S-8	25 34 43 39	2	18			Very dense brown sandy SAND, little silt, no odor, wet	272
31								271
32							Note: Borehole backfilled with drill cuttings upon completion END OF BORING 32 ft	270
33								269
34								268
35								267
36								266
37								265
38								264
39								263
40								262

Sample Type: S = Split Spoon C = Core UP = Undisturbed Piston V = Vane Shear Test
Proportions Used: Trace = 1 - 10%, Little = 10 - 20%, Some = 20 - 35%, And = 35 - 50%

Total Penetration in Earth: 32.0 ft Rock: 0 ft No. of Soil Samples: 8 No. of Core Runs: 0	NOTES:	Sheet 2 of 2 SM-001-M REV. 1/02

Connecticut DOT Boring Report

Driller: J. Nitsch	Town: Waterbury, Connecticut	Hole No.: HA-13	Stat./Offset: N/A
Inspector: S. Brousseau	Project No.: 39192-000	Northing: 286108.44	
Engineer: Haley & Aldrich, Inc.	Route No.: Frost Bridge Road	Easting: 515280.97	
Start Date: March 18, 2013	Bridge No.: N/A	Surface Elevation: 302.71	
Finish Date: March 18, 2013			
Project Description: Waterbury Bus Maintenance Facility Replacement			
Casing Size (in.)/Type: 4 1/4 / HSA	Sampler Type/Size: S / 1 3/8	Core Barrel Type: n/a	
Hammer Wt.: - Fall: -	Hammer Wt. (lb): 140 Fall: 30 in.		
Groundwater Observations: @5 ± after - hours			

Depth (ft)	Sample Type/No.	Blows on Sampler per 6 in.	Pen. (ft)	Rec. (in.)	RQD %	Generalized Strata Description	Material Description and Notes	Elevation (ft)
0	S-1	4 5 4 4	2	12		ALLUVIUM	Loose dark brown silty fine SAND, few organics, no odor, dry	302
1								301
2	S-2	5 5 5 6	2	14			Loose brown fine SAND, little silt, few organics, no odor, dry	300
3								299
4								298
5	S-3	10 25 25 22	2	10		GLACIOFLUVIAL DEPOSITS	Dense brown sandy GRAVEL, little silt, no odor, wet	297
6								296
7	S-4	44 50/5"	0.8	10			Similar to S3, except very dense	295
8								294
9								293
10	S-5	7 6 5 7	2	13		GLACIOFLUVIAL DEPOSITS	Medium dense brown medium to fine SAND, little silt, trace coarse sand and fine gravel, no odor, wet	292
11								291
12								290
13								289
14								288
15	S-6	5 4 4 3	2	12			Loose brown medium to fine SAND, little silt, no odor, wet	287
16								286
17								285
18								284
19								283
20								282

Sample Type: S = Split Spoon C = Core UP = Undisturbed Piston V = Vane Shear Test
Proportions Used: Trace = 1 - 10%, Little = 10 - 20%, Some = 20 - 35%, And = 35 - 50%

Total Penetration in Earth: 32.0 ft Rock: 0 ft No. of Soil Samples: 9 No. of Core Runs: 0	NOTES:	Sheet 1 of 2 SM-001-M REV. 1/02

Connecticut DOT Boring Report

Driller: J. Nitsch	Town: Waterbury, Connecticut	Hole No.: HA-13	Stat./Offset: N/A
Inspector: S. Brousseau	Project No.: 39192-000	Northing: 286108.44	
Engineer: Haley & Aldrich, Inc.	Route No.: Frost Bridge Road	Easting: 515280.97	
Start Date: March 18, 2013	Bridge No.: N/A	Surface Elevation: 302.71	
Finish Date: March 18, 2013			
Project Description: Waterbury Bus Maintenance Facility Replacement			
Casing Size (in.)/Type: 4 1/4 / HSA	Sampler Type/Size: S / 1 3/8	Core Barrel Type: n/a	
Hammer Wt.: - Fall: -	Hammer Wt. (lb): 140 Fall: 30 in.		
Groundwater Observations: @5 ± after - hours			

Depth (ft)	Sample Type/No.	Blows on Sampler per 6 in.	Pen. (ft)	Rec. (in.)	RQD %	Generalized Strata Description	Material Description and Notes	Elevation (ft)
20	S-7	7 5 4 6	2	16		GLACIOFLUVIAL DEPOSITS *(cont'd)*	Similar to S6	282
21								281
22								280
23								279
24								278
25	S-8	30 17 18 17	2	20			Dense brown medium to fine SAND, little silt, trace gravel, no odor, wet	277
26								276
27								275
28								274
29								273
30	S-9	7 12 12 14	2	14			Medium dense gravelly SAND, trace silt, no odor, wet	272
31								271
32							Note: Borehole backfilled with drill cuttings upon completion END OF BORING 32 ft	270
33								269
34								268
35								267
36								266
37								265
38								264
39								263
40								262

Sample Type: S = Split Spoon C = Core UP = Undisturbed Piston V = Vane Shear Test
Proportions Used: Trace = 1 - 10%, Little = 10 - 20%, Some = 20 - 35%, And = 35 - 50%

Total Penetration in Earth: 32.0 ft Rock: 0 ft No. of Soil Samples: 9 No. of Core Runs: 0	NOTES:	Sheet 2 of 2 SM-001-M REV. 1/02

Connecticut DOT Boring Report

Driller: F. Harrington	Town: Waterbury, Connecticut	Hole No.: HA-14	Stat./Offset: N/A
Inspector: S. Brousseau	Project No.: 39192-000	Northing: 286243.38	
Engineer: Haley & Aldrich, Inc.	Route No.: Frost Bridge Road	Easting: 515234.83	
Start Date: March 18, 2013	Bridge No.: N/A	Surface Elevation: 302.6	
Finish Date: March 18, 2013			
Project Description: Waterbury Bus Maintenance Facility Replacement			
Casing Size (in.)/Type: 4 1/4 / HSA	Sampler Type/Size: S / 1 3/8	Core Barrel Type: n/a	
Hammer Wt.: - Fall: -	Hammer Wt. (lb): 140 Fall: 30 in.		
Groundwater Observations: @5 ± after - hours			

Depth (ft)	Sample Type/No.	Blows on Sampler per 6 in.	Pen. (ft)	Rec. (in.)	RQD %	Generalized Strata Description	Material Description and Notes	Elevation (ft)
0	S-1	7 14 9 8	2	15		TOPSOIL FILL	Medium dense brown gravelly SAND, little silt, no odor, dry	302
1						ALLUVIUM	Medium dense dark brown silty fine SAND, few organics, no odor, dry	301
2	S-2	11 8 10 15	2	14		ALLUVIUM	Medium dense brown medium to fine SAND, little silt, no odor, dry	300
3								299
4								298
5	S-3	58 49 52 44	2	12		GLACIOFLUVIAL DEPOSITS	Very dense brown sandy GRAVEL, little silt, no odor, wet	297
6								296
7	S-4	27 41 58 46	2	14			Similar to S3	295
8								294
9								293
10	S-5	3 6 4 4	2	13		GLACIOFLUVIAL DEPOSITS	Loose brown medium to fine SAND, little silt, no odor, wet	292
11								291
12								290
13								289
14								288
15	S-6	4 5 5 4	2	3			Similar to S5	287
16								286
17								285
18								284
19								283
20								282

Sample Type: S = Split Spoon C = Core UP = Undisturbed Piston V = Vane Shear Test
Proportions Used: Trace = 1 - 10%, Little = 10 - 20%, Some = 20 - 35%, And = 35 - 50%

Total Penetration in Earth: 32.0 ft Rock: 0 ft No. of Soil Samples: 9 No. of Core Runs: 0	NOTES:	Sheet 1 of 2 SM-001-M REV. 1/02

REV.	DATE	DESCRIPTION	SHEET NO.
		REVISIONS	

FILENAME:

THE INFORMATION, INCLUDING ESTIMATED QUANTITIES OF WORK, SHOWN ON THESE SHEETS IS BASED ON LIMITED INVESTIGATIONS BY THE STATE AND IS IN NO WAY WARRANTED TO INDICATE THE CONDITIONS OF ACTUAL QUANTITIES OF WORK WHICH WILL BE REQUIRED.

DESIGNER/DRAFTER: TAR

CHECKED BY: TJZ

SCALE: AS NOTED

STATE OF CONNECTICUT
DEPARTMENT OF TRANSPORTATION

ARCHITECT: WENDEL

ENGINEERS: ReSTL DESIGNERS, CLOUGH HARBOUR ASSOC., AI ENGINEERS, WENDEL

APPROVED BY: DCD

DATE: 6/11/14

DESIGNED BY:
WENDEL
140 JOHN JAMES AUDUBON PKWY., SUITE 201
AMHERST, NEW YORK 14228

STATE OF CONNECTICUT — DAVID G. DOUGHERTY — No. 11937 — REGISTERED PROFESSIONAL ENGINEER

PROJECT TITLE:
WATERBURY BUS MAINTENANCE FACILITY REPLACEMENT

ADDRESS:
FROST BRIDGE ROAD
WATERTOWN, CONNECTICUT 06787

DRAWING TITLE:
BORING LOGS

PROJECT NO.
0431-0006

DRAWING NO.
C-603

SHEET NO.
03.040

Connecticut DOT Boring Report — HA-14

Driller: F. Harrington			Hole No.: HA-14
Inspector: S. Brousseau	Town: Waterbury, Connecticut		Stat./Offset: N/A
Engineer: Haley & Aldrich, Inc.	Project No.: 39192-000		Northing: 286243.38
Start Date: March 18, 2013	Route No.: Frost Bridge Road		Easting: 515234.83
Finish Date: March 18, 2013	Bridge No.: N/A		Surface Elevation: 302.6
Project Description: Waterbury Bus Maintenance Facility Replacement			
Casing Size (in.)/Type: 4 1/4 / HSA	Sampler Type/Size: S / 1 3/8		Core Barrel Type: n/a
Hammer Wt.: - Fall: -	Hammer Wt. (lb): 140	Fall: 30 in.	
Groundwater Observations: @5 ± after - hours			

Depth (ft)	Sample Type/No.	Blows on Sampler per 6 in.	Pen. (ft)	Rec. (in.)	RQD %	Generalized Strata Description	Material Description and Notes
20	S-7	4 5 6 6	2	18		GLACIOFLUVIAL DEPOSITS *(con't)*	Medium dense brown medium to fine SAND, little silt, no odor, wet
25	S-8	6 7 10 11	2	24			Medium dense brown medium to fine SAND, trace silt, no odor, wet
30	S-9	5 5 7 7	2	10			Medium dense medium to fine SAND, trace silt and fine gravel, no odor, wet
32							Note: Borehole backfilled with drill cuttings upon completion END OF BORING 32 ft

Depth (ft): 20 21 22 23 24 25 26 27 28 29 30 31 32 33 34 35 36 37 38 39 40
Elevation (ft): 282 281 280 279 278 277 276 275 274 273 272 271 270 269 268 267 266 265 264 263

Sample Type: S = Split Spoon C = Core UP = Undisturbed Piston V = Vane Shear Test
Proportions Used: Trace = 1 - 10%, Little = 10 - 20%, Some = 20 - 35%, And = 35 - 50%

Total Penetration in Earth: 32.0 ft Rock: 0 ft | No. of Soil Samples: 9 | No. of Core Runs: 0 | NOTES: | Sheet 2 of 2 | SM-001-M REV. 1/02

Connecticut DOT Boring Report — HA-15

Driller: F. Harrington			Hole No.: HA-15
Inspector: S. Brousseau	Town: Waterbury, Connecticut		Stat./Offset: N/A
Engineer: Haley & Aldrich, Inc.	Project No.: 39192-000		Northing: 285139.28
Start Date: March 20, 2013	Route No.: Frost Bridge Road		Easting: 515165.11
Finish Date: March 20, 2013	Bridge No.: N/A		Surface Elevation: 303.7
Project Description: Waterbury Bus Maintenance Facility Replacement			
Casing Size (in.)/Type: 4 1/4 / HSA	Sampler Type/Size: S / 1 3/8		Core Barrel Type: n/a
Hammer Wt.: - Fall: -	Hammer Wt. (lb): 140	Fall: 30 in.	
Groundwater Observations: @7 ± after - hours			

Depth (ft)	Sample Type/No.	Blows on Sampler per 6 in.	Pen. (ft)	Rec. (in.)	RQD %	Generalized Strata Description	Material Description and Notes
0						BITUMONOUS CONCRETE	
1	S-1	17 35 29 15	2	14		FILL	Very dense brown gravelly SAND, little silt, no odor, dry
3	S-2	5 7 7 8	2	20		ALLUVIUM	Medium dense dark brown fine sandy SILT with few organics, no odor, dry
5	S-3	2 2 4 7	2	0		ALLUVIUM	No recovery
7	S-4	56 62 64 57	2	14		GLACIOFLUVIAL DEPOSITS	Very dense brown coarse to fine SAND, trace silt, trace gravel, no odor, wet
10	S-5	27 36 29 33	2	8			Very dense brown gravelly SAND, little silt, no odor, moist
12							Note: Borehole backfilled with drill cuttings upon completion END OF BORING 12 ft

Depth (ft): 0 1 2 3 4 5 6 7 8 9 10 11 12 13 14 15 16 17 18 19 20
Elevation (ft): 303 302 301 300 299 298 297 296 295 294 293 292 291 290 289 288 287 286 285 284

Sample Type: S = Split Spoon C = Core UP = Undisturbed Piston V = Vane Shear Test
Proportions Used: Trace = 1 - 10%, Little = 10 - 20%, Some = 20 - 35%, And = 35 - 50%

Total Penetration in Earth: 12.0 ft Rock: 0 ft | No. of Soil Samples: 5 | No. of Core Runs: 0 | NOTES: | Sheet 1 of 1 | SM-001-M REV. 1/02

Connecticut DOT Boring Report — HA-16 (Sheet 1 of 2)

Driller: F. Harrington			Hole No.: HA-16
Inspector: P. Dunaj	Town: Waterbury, Connecticut		Stat./Offset: N/A
Engineer: Haley & Aldrich, Inc.	Project No.: 39192-000		Northing: 285270.83
Start Date: March 21, 2013	Route No.: Frost Bridge Road		Easting: 515255.79
Finish Date: March 21, 2013	Bridge No.: N/A		Surface Elevation: 301.56
Project Description: Waterbury Bus Maintenance Facility Replacement			
Casing Size (in.)/Type: 4 1/4 / HSA	Sampler Type/Size: S / 1 3/8		Core Barrel Type: n/a
Hammer Wt.: - Fall: -	Hammer Wt. (lb): 140	Fall: 30 in.	
Groundwater Observations: @6 ± after - hours			

Depth (ft)	Sample Type/No.	Blows on Sampler per 6 in.	Pen. (ft)	Rec. (in.)	RQD %	Generalized Strata Description	Material Description and Notes
0	S-1	3 27 33 19	2	8		FILL	Very dense to orange-brown medium to fine SAND, trace coarse sand 1 in. root mat layer at surface, no odor, moist
2	S-2	9 11 6 5	2	1		ALLUVIUM	Medium dense brown medium to fine SAND, no odor, dry
5	S-3	31 12 27 55	2	16		GLACIOFLUVIAL DEPOSITS	Dense orange-brown and gray-brown gravelly SAND, trace silt, stratified with dark black silty fine SAND LAYER (2 in. thick) from 5.0-5.2 ft., no odor, dry Dense orange-brown coarse to fine SAND, little gravel, trace silt, no odor, wet
7	S-4	62 50/3"	2	4			Very dense SAND and GRAVEL fragments, no odor, wet
10	S-5	41 83 89 45	2	7			Very dense light brown sandy GRAVEL, trace silt, no odor, wet
12	S-6	23 39 62 33	2	5			Very dense light brown medium to fine SAND, little gravel, trace coarse sand, no odor, wet
14	S-7	33 38 34 26	2	8			Very dense light brown medium to fine sandy GRAVEL, trace silt, no odor, wet
17						GLACIOFLUVIAL DEPOSITS	
19	S-8	11 12 12 18	2	9			Medium dense light brown medium to fine SAND, trace gravel, trace silt, no odor, wet

Depth (ft): 0 1 2 3 4 5 6 7 8 9 10 11 12 13 14 15 16 17 18 19 20
Elevation (ft): 301 300 299 298 297 296 295 294 293 292 291 290 289 288 287 286 285 284 283 282

Sample Type: S = Split Spoon C = Core UP = Undisturbed Piston V = Vane Shear Test
Proportions Used: Trace = 1 - 10%, Little = 10 - 20%, Some = 20 - 35%, And = 35 - 50%

Total Penetration in Earth: 21.0 ft Rock: 0 ft | No. of Soil Samples: 8 | No. of Core Runs: 0 | NOTES: | Sheet 1 of 2 | SM-001-M REV. 1/02

Connecticut DOT Boring Report — HA-16 (Sheet 2 of 2)

Driller: F. Harrington			Hole No.: HA-16
Inspector: P. Dunaj	Town: Waterbury, Connecticut		Stat./Offset: N/A
Engineer: Haley & Aldrich, Inc.	Project No.: 39192-000		Northing: 285270.83
Start Date: March 21, 2013	Route No.: Frost Bridge Road		Easting: 515255.79
Finish Date: March 21, 2013	Bridge No.: N/A		Surface Elevation: 301.56
Project Description: Waterbury Bus Maintenance Facility Replacement			
Casing Size (in.)/Type: 4 1/4 / HSA	Sampler Type/Size: S / 1 3/8		Core Barrel Type: n/a
Hammer Wt.: - Fall: -	Hammer Wt. (lb): 140	Fall: 30 in.	
Groundwater Observations: @6 ± after - hours			

Depth (ft)	Sample Type/No.	Blows on Sampler per 6 in.	Pen. (ft)	Rec. (in.)	RQD %	Generalized Strata Description	Material Description and Notes
20						GLACIOFLUVIAL DEPOSITS *(con't)*	
21							END OF BORING 21 ft

Depth (ft): 20 21 22 23 24 25 26 27 28 29 30 31 32 33 34 35 36 37 38 39 40
Elevation (ft): 281 280 279 278 277 276 275 274 273 272 271 270 269 268 267 266 265 264 263 262

Sample Type: S = Split Spoon C = Core UP = Undisturbed Piston V = Vane Shear Test
Proportions Used: Trace = 1 - 10%, Little = 10 - 20%, Some = 20 - 35%, And = 35 - 50%

Total Penetration in Earth: 21.0 ft Rock: 0 ft | No. of Soil Samples: 8 | No. of Core Runs: 0 | NOTES: | Sheet 2 of 2 | SM-001-M REV. 1/02

Connecticut DOT Boring Report — HA-17 (Sheet 1 of 2)

Driller: F. Harrington			Hole No.: HA-17
Inspector: P. Dunaj	Town: Waterbury, Connecticut		Stat./Offset: N/A
Engineer: Haley & Aldrich, Inc.	Project No.: 39192-000		Northing: 285393.09
Start Date: March 21, 2013	Route No.: Frost Bridge Road		Easting: 515313.06
Finish Date: March 25, 2013	Bridge No.: N/A		Surface Elevation: 302.75
Project Description: Waterbury Bus Maintenance Facility Replacement			
Casing Size (in.)/Type: 4 1/4 / HSA	Sampler Type/Size: S / 1 3/8		Core Barrel Type: n/a
Hammer Wt.: - Fall: -	Hammer Wt. (lb): 140	Fall: 30 in.	
Groundwater Observations: @6 ± after - hours			

Depth (ft)	Sample Type/No.	Blows on Sampler per 6 in.	Pen. (ft)	Rec. (in.)	RQD %	Generalized Strata Description	Material Description and Notes
0	S-1	2 2 2 3	2	22		ALLUVIUM	Very loose brown medium to fine SAND, no odor, dry
2	S-2	4 4 5 5	2				Same as S1, except loose with dark black silty fine SAND layer (3 in. thick) at 3.8 in.
5	S-3	4 7 11 17	2	9			Medium dense brown gravelly SAND, trace silt, no odor, wet
7	S-4	58 25 27 27	2	9		GLACIOFLUVIAL DEPOSITS	Very dense brown gravelly SAND, little silt, no odor, wet
10	S-5	15 15 12 11	2	7			Medium dense grayish-brown gravelly SAND, little silt, no odor, wet
12	S-6	5 4 4 3	2	0		GLACIOFLUVIAL DEPOSITS	No recovery
14	S-7	3 5 4 5	2	7			Loose brown coarse to fine SAND, trace fine gravel, trace silt, no odor, wet
18	S-8	4 6 4 6	2	4			Loose brown medium to fine SAND, trace silt, no odor, wet

Depth (ft): 0 1 2 3 4 5 6 7 8 9 10 11 12 13 14 15 16 17 18 19 20
Elevation (ft): 302 301 300 299 298 297 296 295 294 293 292 291 290 289 288 287 286 285 284 283

Sample Type: S = Split Spoon C = Core UP = Undisturbed Piston V = Vane Shear Test
Proportions Used: Trace = 1 - 10%, Little = 10 - 20%, Some = 20 - 35%, And = 35 - 50%

Total Penetration in Earth: 20 ft Rock: 0 ft | No. of Soil Samples: 8 | No. of Core Runs: 0 | NOTES: | Sheet 1 of 2 | SM-001-M REV. 1/02

Connecticut DOT Boring Report — HA-17 (Sheet 2 of 2)

Driller: F. Harrington			Hole No.: HA-17
Inspector: P. Dunaj	Town: Waterbury, Connecticut		Stat./Offset: N/A
Engineer: Haley & Aldrich, Inc.	Project No.: 39192-000		Northing: 285393.09
Start Date: March 21, 2013	Route No.: Frost Bridge Road		Easting: 515313.06
Finish Date: March 25, 2013	Bridge No.: N/A		Surface Elevation: 302.75
Project Description: Waterbury Bus Maintenance Facility Replacement			
Casing Size (in.)/Type: 4 1/4 / HSA	Sampler Type/Size: S / 1 3/8		Core Barrel Type: n/a
Hammer Wt.: - Fall: -	Hammer Wt. (lb): 140	Fall: 30 in.	
Groundwater Observations: @6 ± after - hours			

Depth (ft)	Sample Type/No.	Blows on Sampler per 6 in.	Pen. (ft)	Rec. (in.)	RQD %	Generalized Strata Description	Material Description and Notes
20							Note: Borehole backfilled with drill cuttings upon completion END OF BORING 20 ft

Depth (ft): 20 21 22 23 24 25 26 27 28 29 30 31 32 33 34 35 36 37 38 39 40
Elevation (ft): 282 281 280 279 278 277 276 275 274 273 272 271 270 269 268 267 266 265 264 263

Sample Type: S = Split Spoon C = Core UP = Undisturbed Piston V = Vane Shear Test
Proportions Used: Trace = 1 - 10%, Little = 10 - 20%, Some = 20 - 35%, And = 35 - 50%

Total Penetration in Earth: 20 ft Rock: 0 ft | No. of Soil Samples: 8 | No. of Core Runs: 0 | NOTES: | Sheet 2 of 2 | SM-001-M REV. 1/02

Connecticut DOT Boring Report — HA-18

Driller: F. Harrington			Hole No.: HA-18
Inspector: S. Brousseau	Town: Waterbury, Connecticut		Stat./Offset: N/A
Engineer: Haley & Aldrich, Inc.	Project No.: 39192-000		Northing: 285443.5
Start Date: March 21, 2013	Route No.: Frost Bridge Road		Easting: 515161.65
Finish Date: March 21, 2013	Bridge No.: N/A		Surface Elevation: 301.8
Project Description: Waterbury Bus Maintenance Facility Replacement			
Casing Size (in.)/Type: 4 1/4 / HSA	Sampler Type/Size: S / 1 3/8		Core Barrel Type: n/a
Hammer Wt.: - Fall: -	Hammer Wt. (lb): 140	Fall: 30 in.	
Groundwater Observations: @6 ± after - hours			

Depth (ft)	Sample Type/No.	Blows on Sampler per 6 in.	Pen. (ft)	Rec. (in.)	RQD %	Generalized Strata Description	Material Description and Notes
0	S-1	2 2 9 13	2	15		ALLUVIUM	Medium dense brown silty fine SAND, with few organic, no odor, dry Medium dense brown sandy GRAVEL, little silt, no odor, dry
2	S-2	12 20 28 31	2	12		GLACIOFLUVIAL DEPOSITS	Dense brown sandy GRAVEL, trace silt, no odor, dry
5	S-3	24 37 40 39	2	18			Very dense brown sandy GRAVEL, trace silt, no odor, (wet at 5.0 ft.)
7	S-4	14 20 15 15	2	5			Dense brown sandy GRAVEL, trace silt, no odor, wet
9						GLACIOFLUVIAL DEPOSITS	
10	S-5	24 7 7 9	2	24			Medium dense brown medium to fine SAND, trace silt, no odor, wet
12							Note: Borehole backfilled with drill cuttings upon completion END OF BORING 12 ft

Depth (ft): 0 1 2 3 4 5 6 7 8 9 10 11 12 13 14 15 16 17 18 19 20
Elevation (ft): 301 300 299 298 297 296 295 294 293 292 291 290 289 288 287 286 285 284 283 282

Sample Type: S = Split Spoon C = Core UP = Undisturbed Piston V = Vane Shear Test
Proportions Used: Trace = 1 - 10%, Little = 10 - 20%, Some = 20 - 35%, And = 35 - 50%

Total Penetration in Earth: 12.0 ft Rock: 0 ft | No. of Soil Samples: 5 | No. of Core Runs: 0 | NOTES: | Sheet 1 of 1 | SM-001-M REV. 1/02

Connecticut DOT Boring Report — HA-19

Driller: F. Harrington			Hole No.: HA-19
Inspector: S. Brousseau	Town: Waterbury, Connecticut		Stat./Offset: N/A
Engineer: Haley & Aldrich, Inc.	Project No.: 39192-000		Northing: 285549.9
Start Date: March 21, 2013	Route No.: Frost Bridge Road		Easting: 515339.89
Finish Date: March 21, 2013	Bridge No.: N/A		Surface Elevation: 303.20
Project Description: Waterbury Bus Maintenance Facility Replacement			
Casing Size (in.)/Type: 4 1/4 / HSA	Sampler Type/Size: S / 1 3/8		Core Barrel Type: n/a
Hammer Wt.: - Fall: -	Hammer Wt. (lb): 140	Fall: 30 in.	
Groundwater Observations: @6 ± after - hours			

Depth (ft)	Sample Type/No.	Blows on Sampler per 6 in.	Pen. (ft)	Rec. (in.)	RQD %	Generalized Strata Description	Material Description and Notes
0	S-1	2 2 3 10	2	19		ALLUVIUM	Loose brown medium to fine SAND, little silt with few organics, no odor, dry Loose brown medium to fine SAND, trace silt, no odor, dry
2	S-2	2 2 2 2	2	7		ALLUVIUM	Very loose brown medium to fine SAND, little silt, no odor, dry
5	S-3	2 2 2 2	2	18			Very loose brown silty fine SAND with trace fibers, no odor, wet (wet at 6.0 ft.)
7	S-4	7 7 11 16	2	10		GLACIOFLUVIAL DEPOSITS	Medium dense brown sandy GRAVEL, little silt, no odor, wet
10	S-5	19 15 7 79	2	13			Similar to S4
12							Note: Borehole backfilled with drill cuttings upon completion END OF BORING 12 ft

Depth (ft): 0 1 2 3 4 5 6 7 8 9 10 11 12 13 14 15 16 17 18 19 20
Elevation (ft): 303 302 301 300 299 298 297 296 295 294 293 292 291 290 289 288 287 286 285 284

Sample Type: S = Split Spoon C = Core UP = Undisturbed Piston V = Vane Shear Test
Proportions Used: Trace = 1 - 10%, Little = 10 - 20%, Some = 20 - 35%, And = 35 - 50%

Total Penetration in Earth: 12.0 ft Rock: 0 ft | No. of Soil Samples: 5 | No. of Core Runs: 0 | NOTES: | Sheet 1 of 1 | SM-001-M REV. 1/02

REV.	DATE	DESCRIPTION	SHEET NO.

REVISIONS

FILENAME:

THE INFORMATION, INCLUDING ESTIMATED QUANTITIES OF WORK, SHOWN ON THESE SHEETS IS BASED ON LIMITED INVESTIGATIONS BY THE STATE AND IS IN NO WAY WARRANTED TO INDICATE THE CONDITIONS OF ACTUAL QUANTITIES OF WORK WHICH WILL BE REQUIRED.

DESIGNER/DRAFTER: TAR
CHECKED BY: TJZ
SCALE: AS NOTED

STATE OF CONNECTICUT
DEPARTMENT OF TRANSPORTATION

ARCHITECT: WENDEL
ENGINEERS: ReSTL DESIGNERS, CLOUGH HARBOUR ASSOC., AI ENGINEERS, WENDEL
APPROVED BY: DCD
DATE: 6/11/14

DESIGNED BY:
WENDEL
140 JOHN JAMES AUDUBON PKWY., SUITE 201
AMHERST, NEW YORK 14228

STATE OF CONNECTICUT — DAVID C. DUCHSCHERER — No. 11937 — REGISTERED PROFESSIONAL ENGINEER

PROJECT TITLE: **WATERBURY BUS MAINTENANCE FACILITY REPLACEMENT**

ADDRESS: **FROST BRIDGE ROAD, WATERTOWN, CONNECTICUT 06787**

DRAWING TITLE: **BORING LOGS**

PROJECT NO. **0431-0006**
DRAWING NO. **C-604**
SHEET NO. 03.041

Driller:	F. Harrington	**Connecticut DOT Boring Report**		Hole No.:	HA-20
Inspector:	S. Brousseau	Town:	Waterbury, Connecticut	Stat./Offset:	N/A
Engineer:	Haley & Aldrich, Inc.	Project No.:	39192-000	Northing:	286020.01
Start Date:	March 18, 2013	Route No.:	Frost Bridge Road	Easting:	514866.56
Finish Date:	March 18, 2013	Bridge No.:	N/A	Surface Elevation:	304.5
Project Description:	Waterbury Bus Maintenance Facility Replacement				
Casing Size (in.)/Type:	4 1/4 / HSA	Sampler Type/Size:	S / 1 3/8	Core Barrel Type:	n/a
Hammer Wt.:	--	Fall: --	Hammer Wt. (lb): 140	Fall: 30 in.	
Groundwater Observations:	@7 ± after - hours				

Depth (ft)	Sample Type/No.	Blows on Sampler per 6 in.	Pen. (ft)	Rec. (in.)	RQD %	Generalized Strata Description	Material Description and Notes	Elevation (ft)
0	S-1	4 5 5 8	2	13		FILL	Loose dense brown gravelly SAND, trace silt, no odor, dry	304
2	S-2	6 8 10 8	2	17		ALLUVIUM	Similar to S1 Medium dense dark brown silty fine SAND, few organics, no odor, dry	302
4						ALLUVIUM**		300
5	S-3	1 5 7 10	2	20			Medium dense brown silty fine SAND, no odor, moist	299
7	S-4	17 21 25 27	2	12		GLACIOFLUVIAL DEPOSITS	Similar to S3 Dense brown gravelly SAND, little silt, no odor, wet	297
10	S-5	15 17 14 21	2	15			Similar to S4 (below 7.5 ft)	294
12							Note: Borehole backfilled with drill cuttings upon completion END OF BORING 12 ft	292
20								285

Sample Type: S = Split Spoon C = Core UP = Undisturbed Piston V = Vane Shear Test
Proportions Used: Trace = 1 - 10%, Little = 10 - 20%, Some = 20 - 35%, And = 35 - 50%

Total Penetration in		NOTES:	Sheet
Earth: 12.0 ft	Rock: 0 ft		1 of 1
No. of Soil Samples: 5	No. of Core Runs: 0		SM-001-M REV. 1/02

Driller:	F. Harrington	**Connecticut DOT Boring Report**		Hole No.:	HA-21
Inspector:	S. Brousseau	Town:	Waterbury, Connecticut	Stat./Offset:	N/A
Engineer:	Haley & Aldrich, Inc.	Project No.:	39192-000	Northing:	286265.11
Start Date:	March 18, 2013	Route No.:	Frost Bridge Road	Easting:	514894.37
Finish Date:	March 18, 2013	Bridge No.:	N/A	Surface Elevation:	305.5
Project Description:	Waterbury Bus Maintenance Facility Replacement				
Casing Size (in.)/Type:	4 1/4 / HSA	Sampler Type/Size:	S / 1 3/8	Core Barrel Type:	n/a
Hammer Wt.:	--	Fall: --	Hammer Wt. (lb): 140	Fall: 30 in.	
Groundwater Observations:	@5 ± after - hours				

Depth (ft)	Sample Type/No.	Blows on Sampler per 6 in.	Pen. (ft)	Rec. (in.)	RQD %	Generalized Strata Description	Material Description and Notes	Elevation (ft)
0	S-1	4 5 7 7	2	10		FILL	Medium dense brown gravelly SAND, little silt, few organics and asphalt fragments, no odor, dry	305
2	S-2	9 10 10 10	2	13		ALLUVIUM	Similar to S1 Medium dense dark brown silty fine SAND, organic odor, dry	303
5	S-3	22 6 5 18	2	14			Medium dense brown coarse to fine SAND, trace silt, no odor, wet	300
7	S-4	39 109110/3"	1.3	12		GLACIOFLUVIAL DEPOSITS	Very dense brown sandy GRAVEL, little silt, no odor, wet	298
10	S-5	19 22 29 25	2	12			Similar to S4	295
12							Note: Borehole backfilled with drill cuttings upon completion END OF BORING 12 ft	293
20								286

Sample Type: S = Split Spoon C = Core UP = Undisturbed Piston V = Vane Shear Test
Proportions Used: Trace = 1 - 10%, Little = 10 - 20%, Some = 20 - 35%, And = 35 - 50%

Total Penetration in		NOTES:	Sheet
Earth: 12.0 ft	Rock: 0 ft		1 of 1
No. of Soil Samples: 5	No. of Core Runs: 0		SM-001-M REV. 1/02

Driller:	F. Harrington	**Connecticut DOT Boring Report**		Hole No.:	HA-22
Inspector:	S. Brousseau	Town:	Waterbury, Connecticut	Stat./Offset:	N/A
Engineer:	Haley & Aldrich, Inc.	Project No.:	39192-000	Northing:	286341.42
Start Date:	March 18, 2013	Route No.:	Frost Bridge Road	Easting:	515101.46
Finish Date:	March 18, 2013	Bridge No.:	N/A	Surface Elevation:	306.11
Project Description:	Waterbury Bus Maintenance Facility Replacement				
Casing Size (in.)/Type:	4 1/4 / HSA	Sampler Type/Size:	S / 1 3/8	Core Barrel Type:	n/a
Hammer Wt.:	--	Fall: --	Hammer Wt. (lb): 140	Fall: 30 in.	
Groundwater Observations:	@7 ± after - hours				

Depth (ft)	Sample Type/No.	Blows on Sampler per 6 in.	Pen. (ft)	Rec. (in.)	RQD %	Generalized Strata Description	Material Description and Notes	Elevation (ft)
0	S-1	6 9 10 10	2	13		TOPSOIL FILL	Medium dense brown SAND, little silt and gravel, few organics, no odor, dry	306 305
2	S-2	13 12 8 7	2	20		ALLUVIUM	Similar to S1 Medium dense dark brown silty fine SAND, few organics, organic odor, dry	304
5	S-3	4 4 5 4	2	0			No recovery	301
7	S-4	18 22 27 33	1.3	10		GLACIOFLUVIAL DEPOSITS	Dense brown medium to fine SAND, little silt, trace fine gravel, few organics, no odor, wet	299
10	S-5	21 39 81 36	2	8			Very dense brown GRAVEL, little sand and silt, no odor, wet	296
12							Note: Borehole backfilled with drill cuttings upon completion END OF BORING 12 ft	294
20								287

Sample Type: S = Split Spoon C = Core UP = Undisturbed Piston V = Vane Shear Test
Proportions Used: Trace = 1 - 10%, Little = 10 - 20%, Some = 20 - 35%, And = 35 - 50%

Total Penetration in		NOTES:	Sheet
Earth: 12.0 ft	Rock: 0 ft		1 of 1
No. of Soil Samples: 5	No. of Core Runs: 0		SM-001-M REV. 1/02

Driller:	J. Nitch	**Connecticut DOT Boring Report**		Hole No.:	PS1
Inspector:	S. Brousseau	Town:	Watertown, Connecticut	Stat./Offset:	N/A
Engineer:	Haley & Aldrich, Inc.	Project No.:	39192-200	Northing:	285385.42
Start Date:	December 19, 2013	Route No.:	Frost Bride Road	Easting:	515192.06
Finish Date:	December 19, 2013	Bridge No.:	N/A	Surface Elevation:	301.83
Project Description:	Waterbury Bus Maintenance Facility Replacement				
Casing Size (in.)/Type:	HSA 4.25"	Sampler Type/Size:	S / 1 3/8	Core Barrel Type:	--
Hammer Wt.:	140lb Fall: 30	Hammer Wt. (lb):	-- lb Fall: --		
Groundwater Observations:	@7.0 ± after 0 hours				

Depth (ft)	Sample Type/No.	Blows on Sampler per 6 in.	Pen. (ft)	Rec. (in.)	RQD %	Generalized Strata Description	Material Description and Notes	Elevation (ft)
0	S-1	6 7 5 4	2	13		FILL	Medium dense brown SAND, little silt, trace fine gravel	301
1						ALLUVIUM	Medium dense dark brown fine sandy SILT, few organics, organic odor, dry	300
2	S-2	4 5 4 3	2	18			Loose dark brown fine sandy SILT, with few organics and occasional sand layer, organic odor, dry	299
5	S-3	3 2 2 3	2	0			No recovery	296
7	S-4	19 85 29 15	2	6		GLACIOFLUVIAL DEPOSITS	Very dense brown sandy GRAVEL, little silt, wet	294
10	S-5	7 12 12 9	2	10			Medium dense brown sandy GRAVEL, trace silt, wet	291
15	S-6	3 3 4 4	2	8			Loose brown medium to fine SAND, trace silt, wet	286
20								281

Sample Type: S = Split Spoon C = Core UP = Undisturbed Piston V = Vane Shear Test
Proportions Used: Trace = 1 - 10%, Little = 10 - 20%, Some = 20 - 35%, And = 35 - 50%

Total Penetration in		NOTES:	Sheet
Earth: 37.0 ft	Rock: -- ft		1 of 2
No. of Soil Samples: 10	No. of Core Runs: --		SM-001-M REV. 1/02

Driller:	J. Nitch	**Connecticut DOT Boring Report**		Hole No.:	PS1
Inspector:	S. Brousseau	Town:	Watertown, Connecticut	Stat./Offset:	N/A
Engineer:	Haley & Aldrich, Inc.	Project No.:	39192-200	Northing:	285385.42
Start Date:	December 19, 2013	Route No.:	Frost Bride Road	Easting:	515192.06
Finish Date:	December 19, 2013	Bridge No.:	N/A	Surface Elevation:	301.83
Project Description:	Waterbury Bus Maintenance Facility Replacement				
Casing Size (in.)/Type:	HSA 4.25"	Sampler Type/Size:	S / 1 3/8	Core Barrel Type:	--
Hammer Wt.:	140lb Fall: 30	Hammer Wt. (lb):	-- lb Fall: --		
Groundwater Observations:	@7.0 ± after 0 hours				

Depth (ft)	Sample Type/No.	Blows on Sampler per 6 in.	Pen. (ft)	Rec. (in.)	RQD %	Generalized Strata Description	Material Description and Notes	Elevation (ft)
20	S-7	3 4 5 6	2	12		GLACIOFLUVIAL DEPOSITS *(cont'd)*	Similar to S6, except with very few organic fibers	281
25	S-8	4 5 8 11	2	12			Medium dense brown SAND, little gravel, trace silt, with very few organics, wet	276
30	S-9	3 4 6 7	2	5			Loose brown medium to fine SAND, trace silt, wet	271
35	S-10	5 7 8 14	2	4			Medium dense medium to fine SAND, trace silt, wet	266
37							Note: Borehole backfilled with drill cuttings upon completion END OF BORING 37 ft	264
40								262

Sample Type: S = Split Spoon C = Core UP = Undisturbed Piston V = Vane Shear Test
Proportions Used: Trace = 1 - 10%, Little = 10 - 20%, Some = 20 - 35%, And = 35 - 50%

Total Penetration in		NOTES:	Sheet
Earth: 37.0 ft	Rock: -- ft		2 of 2
No. of Soil Samples: 10	No. of Core Runs: --		SM-001-M REV. 1/02

Driller:	J. Nitch	**Connecticut DOT Boring Report**		Hole No.:	PS2
Inspector:	S. Brousseau	Town:	Watertown, Connecticut	Stat./Offset:	
Engineer:	Haley & Aldrich, Inc.	Project No.:	39192-200	Northing:	284732.57
Start Date:	December 19, 2013	Route No.:	Frost Bride Road	Easting:	514843.01
Finish Date:	December 19, 2013	Bridge No.:	N/A	Surface Elevation:	319.38
Project Description:	Waterbury Bus Maintenance Facility Replacement				
Casing Size (in.)/Type:	HSA 4.25"	Sampler Type/Size:	S / 1 3/8	Core Barrel Type:	--
Hammer Wt.:	140lb Fall: 30	Hammer Wt. (lb):	-- lb Fall: --		
Groundwater Observations:	@18.5 ± after 0 hours				

Depth (ft)	Sample Type/No.	Blows on Sampler per 6 in.	Pen. (ft)	Rec. (in.)	RQD %	Generalized Strata Description	Material Description and Notes	Elevation (ft)
0	S-1	2 19 85 17	2	7		TOPSOIL FILL	TOPSOIL Very dense dark brown silty SAND, with few asphalt particles and few roots and organics	319
2	S-2	4 7 15 12	2	3			Medium dense brown SAND, trace find gravel and silt, gravel lodged in spoon tip	317
5	S-3	7 11 13 33	2	10			Medium dense dark brown to brown silty SAND, little gravel	314
7	S-4	52 63 100/4"	1.3	4			Very dense brown gravelly SAND, little silt, probable boulder/cobble fragment lodged in spoon tip Note: Drill action indicates cobbles and boulders from 1 to 10 ft.	312
10	S-5	9 15 17 19	2	14		GLACIOFLUVIAL DEPOSITS	Dense brown medium to fine SAND, little silt	309
12	S-6	33 74 51 52	2	10			Very dense brown medium to fine SAND, little silt and gravel, moist	307
15	S-7	11 8 9 9	2	18			Medium dense light brown fine SAND, little silt, moist	304
20								299

Sample Type: S = Split Spoon C = Core UP = Undisturbed Piston V = Vane Shear Test
Proportions Used: Trace = 1 - 10%, Little = 10 - 20%, Some = 20 - 35%, And = 35 - 50%

Total Penetration in		NOTES:	Sheet
Earth: 27.0 ft	Rock: -- ft		1 of 2
No. of Soil Samples: 9	No. of Core Runs: --		SM-001-M REV. 1/02

Driller:	J. Nitch	**Connecticut DOT Boring Report**		Hole No.:	PS2
Inspector:	S. Brousseau	Town:	Watertown, Connecticut	Stat./Offset:	
Engineer:	Haley & Aldrich, Inc.	Project No.:	39192-200	Northing:	284732.57
Start Date:	December 19, 2013	Route No.:	Frost Bride Road	Easting:	514843.01
Finish Date:	December 19, 2013	Bridge No.:	N/A	Surface Elevation:	319.38
Project Description:	Waterbury Bus Maintenance Facility Replacement				
Casing Size (in.)/Type:	HSA 4.25"	Sampler Type/Size:	S / 1 3/8	Core Barrel Type:	--
Hammer Wt.:	140lb Fall: 30	Hammer Wt. (lb):	-- lb Fall: --		
Groundwater Observations:	@18.5 ± after 0 hours				

Depth (ft)	Sample Type/No.	Blows on Sampler per 6 in.	Pen. (ft)	Rec. (in.)	RQD %	Generalized Strata Description	Material Description and Notes	Elevation (ft)
20	S-8	7 13 13 17	2	15		GLACIOFLUVIAL DEPOSITS *(cont'd)*	Medium brown medium to fine SAND, trace silt, wet	299
25	S-9	27 37 28 24	2	14			Similar to S8, except very dense	294
27							Note: Borehole backfilled with drill cuttings upon completion END OF BORING 27 ft	292
40								280

Sample Type: S = Split Spoon C = Core UP = Undisturbed Piston V = Vane Shear Test
Proportions Used: Trace = 1 - 10%, Little = 10 - 20%, Some = 20 - 35%, And = 35 - 50%

Total Penetration in		NOTES:	Sheet
Earth: 27.0 ft	Rock: -- ft		2 of 2
No. of Soil Samples: 9	No. of Core Runs: --		SM-001-M REV. 1/02

REV.	DATE	DESCRIPTION	SHEET NO.
		REVISIONS	

FILENAME:

THE INFORMATION, INCLUDING ESTIMATED QUANTITIES OF WORK, SHOWN ON THESE SHEETS IS BASED ON LIMITED INVESTIGATIONS BY THE STATE AND IS IN NO WAY WARRANTED TO INDICATE THE CONDITIONS OF ACTUAL QUANTITIES OF WORK WHICH WILL BE REQUIRED.

DESIGNER/DRAFTER: TAR

CHECKED BY: TJZ

SCALE: AS NOTED

STATE OF CONNECTICUT
DEPARTMENT OF TRANSPORTATION

ARCHITECT: WENDEL

ENGINEERS: ReSTL DESIGNERS, CLOUGH HARBOUR ASSOC., AI ENGINEERS, WENDEL

APPROVED BY: DCD

DATE: 6/11/14

DESIGNED BY:
WENDEL
140 JOHN JAMES AUDUBON PKWY.,
SUITE 201
AMHERST, NEW YORK
14228

STATE OF CONNECTICUT · DAVID G. DUDGEON · No. 11937 · REGISTERED PROFESSIONAL ENGINEER

PROJECT TITLE:
WATERBURY BUS MAINTENANCE FACILITY REPLACEMENT

ADDRESS:
FROST BRIDGE ROAD
WATERTOWN, CONNECTICUT 06787

DRAWING TITLE:
BORING LOGS

PROJECT NO.
0431-0006

DRAWING NO.
C-605

SHEET NO.
03.042

Hole No. SB-1 — Sheet 1 Of 1

DRILLER: **Richard Posa**		Hole No. **SB-1**
INSPECTOR: **I. Okonkwo**	TOWN: **Waterbury, Connecticut**	Line **N/A**; Station **N/A**; Offset **N/A**
SOILS ENGINEER: **Earth Design Associates Inc.**	PROJECT NAME: **Waterbury Bus Maintenance Garage**; PROJECT NUMBER: **1002-0003GT**	N. Coordinate; E. Coordinate

Boring Contractor: **General Borings Inc.** Client: **Wendel Dushscherer Design, P.C.**

		Casing BW	NW	HW	FJ	Auger Solid	Hollow	Mud	Sampler	Core Barrel B (st)	B (dt)	NX (st)	NX (dt)
Surface Elevation (f): **303.25**	Utilized				X				X				
Date Started: **11-26-01**	Type	BW	NW	HW	FJ	Solid	Hollow		SS	B (st)	B (dt)	NX (st)	NX (dt)
Date Finished: **11-27-01**	Size I.D. (in)	2 1/2	3	4	4				1 3/8	1 3/8			
Groundwater Observations: @ **9.5** f after **24** hours	Hammer (lbs)	300	300	300	300			Bit	140	Type		Diamond	
@ ___ f after ___ hours	Fall (in)	30	30	30	24				30	of Bit		Carbide	

Depth	Casing blows per foot	Sample Depth in Feet From - To	No.	Pen. F	Rec. F	Type	Blows per 6 inches or RQD	Strata Change: Depth, Elev.	Field Identification of Soil, Remarks
0		0.0-2.0	S1	2.0	1.0	SS1	5 5 7 6	303.3	SAND, fine to Coarse, little fine gravel, trace silt, medium dense, dark brown, FILL
		5.0-5.8	S2	0.8	0.5	SS2	100/3	8.0 / 295.3	SAND, fine to coarse, trace fine to coarse gravel V. dense, brown, FILL
7.5									
	44	10.0-12.0	S3	2.0	0.8	SS3	15 16 16 21		SAND, fine to coarse, little gravel, trace silt, Dense, brown
	46, 39, 41								
15	38	15.0-17.0	S4	2.0	0.7	SS4	12 12 21 24		SAND, fine to coarse, little gravel, trace silt, Dense, brown
	44, 46, 53, 67								
	74	20.0-22.0	S5	2.0	0.5	SS5	26 21 19 22		SAND, fine to coarse, little fine to coarse gravel, little silt, Dense, brown,
22.5	68, 73, 87, 94								
	112	25.0-27.0	S6	2.0	0.3	SS6	18 22 19 25	28.0 / 275.3	SAND, fine to coarse, little fine to coarse gravel little silt, Dense, brown,
	73, 29, 101, 111								
30	109	30.0-32.0	S7	2.0	0.5	SS7	27 41 39 42		SAND, fine to coarse, little fine to coarse gravel, little silt, V. dense, brown
	88, 89, 96, 99								
	99	35.0-37.0	S8	2.0	0.8	SS8	36 39 41 47	37.0 / 266.3	SAND, fine to coarse, little fine to coarse gravel, little silt, V. dense, brown
37.5									End of Boring =37.0

Casing: Size / From / To. Feet of Earth: **37.0 f**; Rock: **0.0 f**. No. of Samples: **8**. NOTES: **Installed 2" well at 18'**

SAMPLE TYPE CODING: D=Driven C=Core A=Auger UP=Undisturbed Piston V=Vane Test
PROPORTIONS USED: Trace = 1 - 10%, Little = 10 - 20%, SOME = 20 - 35%, And = 35 - 50%
Hole No. SB-1 Sheet 1 Of 1

Hole No. SB-2 — Sheet 1 Of 1

DRILLER: **Richard Posa**		Hole No. **SB-2**
INSPECTOR: **I. Okonkwo**	TOWN: **Waterbury, Connecticut**	Line **N/A**; Station **N/A**; Offset **N/A**
SOILS ENGINEER: **Earth Design Assocaites Inc.**	PROJECT NAME: **Waterbury Bus Maintenance Garage**; PROJECT NUMBER: **1002-0003GT**	N. Coordinate; E. Coordinate

Boring Contractor: **General Borings Inc.** Client: **Wendel Dushscherer Design, P.C.**

		Casing BW	NW	HW	FJ	Auger Solid	Hollow	Mud	Sampler	Core Barrel B (st)	B (dt)	NX (st)	NX (dt)
Surface Elevation (f): **305.17**	Utilized						X		X				
Date Started: **11-21-01**	Type	BW	NW	HW	FJ	Solid	Hollow		SS	B (st)	B (dt)	NX (st)	NX (dt)
Date Finished: **11-21-01**	Size I.D. (in)	2 1/2	3	4	4				1 3/8	1 3/8			
Groundwater Observations: @ **9.0** f after **0** hours	Hammer (lbs)	300	300	300	300			Bit	140	Type		Diamond	
@ ___ f after ___ hours	Fall (in)	30	30	30	24				30	of Bit		Carbide	

Depth	Casing blows per foot	Sample Depth in Feet From - To	No.	Pen. F	Rec. F	Type	Blows per 6 inches or RQD	Strata Change: Depth, Elev.	Field Identification of Soil, Remarks
0		0.0-2.0	S1	2.0	0.3	SS1	12 13 15 17	305.2	Fine SAND, trace gravel, root fibers, medium, brown, FILL
		2.0-4.0	S2	2.0	1.5	SS2	12 13 13 13		Fine SAND, little silt, medium, black, FILL
		5.0-7.0	S3	2.0	2.0	SS3	2 3 2 3	7.0 / 298.2	SAND, some silt, trace clay, Loose, brown, FILL
7.5									
		10.0-12.0	S4	2.0	1.7	SS4	9 14 17 18	15.0	SAND, Fine to coarse, some silt, trace gravel, Dense, brown, wet at 9'
15		15.0-15.3	S5	0.3	0.0	SS5	100/3	290.2	Large cobble in the tip
		20.0-22.0	S6	2.0	0.5	SS6	23 28 31 29		SAND fine to coarse and GRAVEL, trace silt, V. dense, brown
22.5									
		25.0-27.0	S7	2.0	1.0	SS7	24 37 39 48		SAND, fine to coarse, some gravel, little silt, V. dense, brown, wet
30		30.0-32.0	S8	2.0	0.5	SS8	41 33 47 58	32.0 / 273.2	SAND, fine to coarse, some gravel, little silt, V. dense, brown, wet
									End of boring = 32' 2" well set at 18'
37.5									

Casing: Size / From / To. Feet of Earth: **32.0 f**; Rock: **0.0 f**. No. of Samples: **8**. NOTES:

SAMPLE TYPE CODING: D=Driven C=Core A=Auger UP=Undisturbed Piston V=Vane Test
PROPORTIONS USED: Trace = 1 - 10%, Little = 10 - 20%, SOME = 20 - 35%, And = 35 - 50%
Hole No. SB-2 Sheet 1 Of 1

Hole No. SB-3 — Sheet 1 Of 1

DRILLER: **Richard Posa**		Hole No. **SB-3**
INSPECTOR: **I. Okonkwo**	TOWN: **Waterbury, Connecticut**	Line **N/A**; Station **N/A**; Offset **N/A**
SOILS ENGINEER: **Earth Design Associates Inc.**	PROJECT NAME: **Waterbury Bus Maintenance Garage**; PROJECT NUMBER: **1002-0003GT**	N. Coordinate; E. Coordinate

Boring Contractor: **General Borings Inc.** Client: **Wendel Dushscherer Design, P.C.**

		Casing BW	NW	HW	FJ	Auger Solid	Hollow	Mud	Sampler	Core Barrel B (st)	B (dt)	NX (st)	NX (dt)
Surface Elevation (f): **305.30**	Utilized						X		X				
Date Started: **11-21-01**	Type	BW	NW	HW	FJ	Solid	Hollow		SS	B (st)	B (dt)	NX (st)	NX (dt)
Date Finished: **11-21-01**	Size I.D. (in)	2 1/2	3	4	4				1 3/8	1 3/8			
Groundwater Observations: @ ___ f after ___ hours	Hammer (lbs)	300	300	300	300			Bit	140	Type		Diamond	
@ ___ f after ___ hours	Fall (in)	30	30	30	24				30	of Bit		Carbide	

Depth	Casing blows per foot	Sample Depth in Feet From - To	No.	Pen. F	Rec. F	Type	Blows per 6 inches or RQD	Strata Change: Depth, Elev.	Field Identification of Soil, Remarks
0		0.0-2.0	S1	2.0	1.7	SS1	3 3 4 6	305.3	SAND, fine to coarse, trace gravel, trace silt, loose, brown, FILL
		2.0-4.0	S2	2.0	1.5	SS2	4 4 4 4		Fine SAND, little silt, trace gravel, roots, loose, brown, FILL
		5.0-7.0	S3	2.0	2.0	SS3	3 4 4 6	7.0 / 298.3 / 9.0 / 296.3	Fine SAND, little silt, trace gravel, roots, loose, brown, FILL
7.5									
		10.0-12.0	S4	2.0	0.8	SS4	17 19 20 24		SAND, fine to coarse and GRAVEL, trace silt, dense, brown
15		15.0-17.0	S5	2.0	1.0	SS5	29 31 34 38		SAND, fine to coarse, trace gravel V. dense, gray and brown
		20.0-22.0	S6	2.0	0.3	SS6	24 31 36 31		SAND, fine to coarse, V. dense, gray and brown
22.5									
		25.0-27.0	S7	2.0	1.3	SS7	17 16 14 14		SAND, fine to coarse, trace gravel, medium, gray and brown
30		30.0-32.0	S8	2.0	1.7	SS8	14 15 13 13	32.0 / 273.3	Fine SAND, trace gravel, trace silt, medium, brown, moist to wet
									End of boring at 32'
37.5									

Casing: Size / From / To. Feet of Earth: **32.0 f**; Rock: **0.0 f**. No. of Samples: **8**. NOTES:

SAMPLE TYPE CODING: D=Driven C=Core A=Auger UP=Undisturbed Piston V=Vane Test
PROPORTIONS USED: Trace = 1 - 10%, Little = 10 - 20%, SOME = 20 - 35%, And = 35 - 50%
Hole No. SB-3 Sheet 1 Of 1

Hole No. SB-4 — Sheet 1 Of 2

DRILLER: **Richard Posa**		Hole No. **SB-4**
INSPECTOR: **I. Okonkwo**	TOWN: **Waterbury, Connecticut**	Line **N/A**; Station **N/A**; Offset **N/A**
SOILS ENGINEER: **Earth Design Associates Inc.**	PROJECT NAME: **Waterbury Bus Maintenance Garage**; PROJECT NUMBER: **1002-0003GT**	N. Coordinate; E. Coordinate

Boring Contractor: **General Borings Inc.** Client: **Wendel Dushscherer Design, P.C.**

		Casing BW	NW	HW	FJ	Auger Solid	Hollow	Mud	Sampler	Core Barrel B (st)	B (dt)	NX (st)	NX (dt)
Surface Elevation (f): **304.25**	Utilized				X				X				
Date Started: **11-19-01**	Type	BW	NW	HW	FJ	Solid	Hollow		SS	B (st)	B (dt)	NX (st)	NX (dt)
Date Finished: **11-19-01**	Size I.D. (in)	2 1/2	3	4	4				1 3/8	1 3/8			
Groundwater Observations: @ **9.0** f after **0** hours	Hammer (lbs)	300	300	300	300			Bit	140	Type		Diamond	
@ ___ f after ___ hours	Fall (in)	30	30	30	24				30	of Bit		Carbide	

Depth	Casing blows per foot	Sample Depth in Feet From - To	No.	Pen. F	Rec. F	Type	Blows per 6 inches or RQD	Strata Change: Depth, Elev.	Field Identification of Soil, Remarks
0								304.3 / 1.0	ASPHALT = 3", ROAD BASE = 5"
		1.0-3.0	S1	2.0	1.5	SS1	7 6 4 3	303.3	Fine SAND, trace to some silt, trace gravel, loose, gray to black, moist, FILL
		3.0-5.0	S2	2.0	2.0	SS2	3 3 2 2	5.0	
		5.0-7.0	S3	2.0	1.0	SS3	4 10 29 33	299.3	Fine SAND, trace gravel, trace silt, V. loose, gray moist, FILL
7.5									
		10.0-11.3	S4	1.3	0.8	SS4	28 34 100/3		SAND, fine to coarse, and gravel, some cobbles, dense, brown, v. moist
	72, 86, 200								
15	41	14.5-17.0	S5	2.5	2.0	C1	1		SAND, fine to coarse, gravel, cobble, V. dense, V. moist
	149, 188								
	103	17.0-17.2	S6	0.2	0.0	SS5	100/2	19.0 / 285.3	Run #1, cored rock from 14.5'-17', recovered 24" boulder Bouncing on large cobble, Roller bit ahead of large cobbles
	140, 136								
	87	20.0-22.0	S7	2.0	1.3	SS6	12 11 12 10		
22.5	60, 49, 54, 61								
	78	25.0-27.0	S8	2.0	0.3	SS7	9 11 13 15		Coarse SAND, little fine to coarse gravel, trace silt, medium, brown
	34, 51, 58, 66								
30	69	30.0-32.0	S9	2.0	0.0	SS8	11 14 16 19		Coarse SAND, little fine to coarse gravel, trace silt, medium, brown
	41, 48, 56, 65								
	74	35.0-37.0	S10	2.0	0.5	SS9	12 14 17 17		Large cobble piece in spoon tip
37.5	39, 41, 44, 57								SAND, fine to coarse, little gravel, trace silt, dense, brown gray
	68	40.0-42.0	S11	2.0	0.5	SS10	16 18 13 17		Coarse SAND, little fine sand, trace gravel, trace silt,
	86, 86, 89								

Casing: Size / From / To. Feet of Earth / Rock. No. of Samples: **12**. NOTES:

SAMPLE TYPE CODING: D=Driven C=Core A=Auger UP=Undisturbed Piston V=Vane Test
PROPORTIONS USED: Trace = 1 - 10%, Little = 10 - 20%, SOME = 20 - 35%, And = 35 - 50%
Hole No. SB-4 Sheet 1 Of 2

Hole No. SB-4 — Sheet 2 Of 2

DRILLER: **Richard Posa**		Hole No. **SB-4**
INSPECTOR: **I. Okonkwo**	TOWN: **Waterbury, Connecticut**	Line **N/A**; Station **N/A**; Offset **N/A**
SOILS ENGINEER: **Earth Design Associates Inc.**	PROJECT NAME: **Waterbury Bus Maintenance Garage**; PROJECT NUMBER: **1002-0003GT**	N. Coordinate; E. Coordinate

Boring Contractor: **General Borings Inc.** Client: **Wendel Dushscherer Design, P.C.**

		Casing BW	NW	HW	FJ	Auger Solid	Hollow	Mud	Sampler	Core Barrel B (st)	B (dt)	NX (st)	NX (dt)
Surface Elevation (f): **304.25**	Utilized				X				X				
Date Started: **11-19-01**	Type	BW	NW	HW	FJ	Solid	Hollow		SS	B (st)	B (dt)	NX (st)	NX (dt)
Date Finished: **11-19-01**	Size I.D. (in)	2 1/2	3	4	4				1 3/8	1 3/8			
Groundwater Observations: @ **9.0** f after **0** hours	Hammer (lbs)	300	300	300	300			Bit	140	Type		Diamond	
@ ___ f after ___ hours	Fall (in)	30	30	30	24				30	of Bit		Carbide	

Depth	Casing blows per foot	Sample Depth in Feet From - To	No.	Pen. F	Rec. F	Type	Blows per 6 inches or RQD	Strata Change: Depth, Elev.	Field Identification of Soil, Remarks
45	60								dense, brown
	82	45.0-47.0	S12	2.0	0.5	SS11	16 17 15 14		Fine SAND, little coarse sand, little silt, little gravel, dense, brown
	75, 78, 73, 73								
	82	50.0-52.0	S13	2.0	0.0	SS12	14 9 9 11	52.0	No recovery
52.5								252.3	End of boring at 52'
60									
67.5									
75									
82.5									

Casing: Size / From / To. Feet of Earth / Rock. No. of Samples: **12**. NOTES:

SAMPLE TYPE CODING: D=Driven C=Core A=Auger UP=Undisturbed Piston V=Vane Test
PROPORTIONS USED: Trace = 1 - 10%, Little = 10 - 20%, SOME = 20 - 35%, And = 35 - 50%
Hole No. SB-4 Sheet 2 Of 2

Hole No. SB-5 — Sheet 1 Of 1

DRILLER: **Richard Posa**		Hole No. **SB-5**
INSPECTOR: **I. Okonkwo**	TOWN: **Waterbury, Connecticut**	Line **N/A**; Station **N/A**; Offset **N/A**
SOILS ENGINEER: **Earth Design Associates Inc.**	PROJECT NAME: **Waterbury Bus Maintenance Garage**; PROJECT NUMBER: **1002-0003GT**	N. Coordinate; E. Coordinate

Boring Contractor: **General Borings Inc.** Client: **Wendel Dushscherer Design, P.C.**

		Casing BW	NW	HW	FJ	Auger Solid	Hollow	Mud	Sampler	Core Barrel B (st)	B (dt)	NX (st)	NX (dt)
Surface Elevation (f): **303.00**	Utilized						X		X				
Date Started: **11-21-01**	Type	BW	NW	HW	FJ	Solid	Hollow		SS	B (st)	B (dt)	NX (st)	NX (dt)
Date Finished: **11-26-01**	Size I.D. (in)	2 1/2	3	4	4				1 3/8	1 3/8			
Groundwater Observations: @ **9.0** f after **0** hours	Hammer (lbs)	300	300	300	300			Bit	140	Type		Diamond	
@ ___ f after ___ hours	Fall (in)	30	30	30	24				30	of Bit		Carbide	

Depth	Casing blows per foot	Sample Depth in Feet From - To	No.	Pen. F	Rec. F	Type	Blows per 6 inches or RQD	Strata Change: Depth, Elev.	Field Identification of Soil, Remarks
0		0.0-2.0	S1	2.0	1.0	SS1	4 5 5 7	303.0	SAND, some silt, trace root fibers, medium, dark brown, moist, FILL
		2.0-4.0	S2	2.0	0.0	SS2	4 7 12 16	5.0	No recovery, broken cobble in tip
		5.0-6.3	S3	1.3	0.3	SS3	18 24 100/3	298.0 / 8.0 / 295.0	SAND, fine to coarse, some gravel, dense, brown, moist,
7.5									
		10.0-12.0	S4	2.0	0.4	SS4	16 23 25 29		SAND, fine to coarse, some gravel, dense, brown, moist,
15		15.0-17.0	S5	2.0	0.1	SS5	21 23 19 22		SAND, fine to coarse, some gravel, trace silt, dense, brown
		20.0-22.0	S6	2.0	0.6	SS6	24 47 31 29		SAND, fine to coarse, some gravel, trace silt, V. dense, brown
22.5									
		25.0-27.0	S7	2.0	0.2	SS7	29 31 34 23		SAND, fine to coarse, some gravel, trace silt, V. dense, brown
30		30.0-32.0	S8	2.0	0.3	SS8	26 33 29 29	32.5 / 270.5	SAND, fine to coarse, some gravel, trace silt, V. dense, brown
									End of boring at 32.5'
37.5									

Casing: Size / From / To. Feet of Earth: **32.0 f**; Rock: **0.0 f**. No. of Samples: **8**. NOTES:

SAMPLE TYPE CODING: D=Driven C=Core A=Auger UP=Undisturbed Piston V=Vane Test
PROPORTIONS USED: Trace = 1 - 10%, Little = 10 - 20%, SOME = 20 - 35%, And = 35 - 50%
Hole No. SB-5 Sheet 1 Of 1

Hole No. SB-6 — Sheet 1 Of 1

DRILLER: **Edward Pelkey**		Hole No. **SB-6**
INSPECTOR: **I. Okonkwo**	TOWN: **Waterbury, Connecticut**	Line **N/A**; Station **N/A**; Offset **N/A**
SOILS ENGINEER: **Earth Design Associates Inc.**	PROJECT NAME: **Waterbury Bus Maintenance Garage**; PROJECT NUMBER: **1002-0003GT**	N. Coordinate; E. Coordinate

Boring Contractor: **General Borings Inc.** Client: **Wendel Dushscherer Design, P.C.**

		Casing BW	NW	HW	FJ	Auger Solid	Hollow	Mud	Sampler	Core Barrel B (st)	B (dt)	NX (st)	NX (dt)
Surface Elevation (f): **303.90**	Utilized						X		X				
Date Started: **11-21-01**	Type	BW	NW	HW	FJ	Solid	Hollow		SS	B (st)	B (dt)	NX (st)	NX (dt)
Date Finished: **11-21-01**	Size I.D. (in)	2 1/2	3	4	4				1 3/8	1 3/8			
Groundwater Observations: @ **9.0** f after **0** hours	Hammer (lbs)	300	300	300	300			Bit	140	Type		Diamond	
@ ___ f after ___ hours	Fall (in)	30	30	30	24				30	of Bit		Carbide	

Depth	Casing blows per foot	Sample Depth in Feet From - To	No.	Pen. F	Rec. F	Type	Blows per 6 inches or RQD	Strata Change: Depth, Elev.	Field Identification of Soil, Remarks
0		0.0-2.0	S1	2.0	1.5	SS1	7 18 10 12	303.9	SAND, fine to coarse, trace gravel, medium, brown, FILL
		2.0-4.0	S2	2.0	0.9	SS2	5 6 7 7	4.5	Fine SAND, trace silt, medium, dark brown, FILL
		5.0-7.0	S3	2.0	1.5	SS3	6 4 4 15	299.4	SAND, fine to coarse, some silt, trace gravel, loose, brown, FILL
7.5									
		10.0-12.0	S4	2.0	1.3	SS4	51 40 25 18	14.0 / 289.9	Coarse SAND, some gravel, V. dense, brown
15		15.0-17.0	S5	2.0	1.0	SS5	11 16 14 19		SAND, fine to coarse, little gravel, trace silt, trace small cobbles, dense
		20.0-20.4	S6	0.4	0.3	SS6	100/5		SAND, fine to coarse, trace cobbles, V. dense, brown
22.5									
		25.0-27.0	S7	2.0	0.5	SS7	19 25 29 32		Coarse SAND and GRAVEL, V. dense, brown
30		30.0-32.0	S8	2.0	0.8	SS8	24 30 32 36	32.0 / 271.9	Coarse SAND and GRAVEL, V. dense, brown
									End of boring at 32'
37.5									

Casing: Size / From / To. Feet of Earth: **32.0 f**; Rock: **0.0 f**. No. of Samples: **8**. NOTES:

SAMPLE TYPE CODING: D=Driven C=Core A=Auger UP=Undisturbed Piston V=Vane Test
PROPORTIONS USED: Trace = 1 - 10%, Little = 10 - 20%, SOME = 20 - 35%, And = 35 - 50%
Hole No. SB-6 Sheet 1 Of 1

Hole No. SB-7 — Sheet 1 Of 1

DRILLER: **Richard Posa**		Hole No. **SB-7**
INSPECTOR: **Mary Hossieni**	TOWN: **Waterbury, Connecticut**	Line **N/A**; Station **N/A**; Offset **N/A**
SOILS ENGINEER: **Earth Design Associates Inc.**	PROJECT NAME: **Waterbury Bus Maintenance Garage**; PROJECT NUMBER: **1002-0003GT**	N. Coordinate; E. Coordinate

Boring Contractor: **General Borings Inc.** Client: **Wendel Dushscherer Design, P.C.**

		Casing BW	NW	HW	FJ	Auger Solid	Hollow	Mud	Sampler	Core Barrel B (st)	B (dt)	NX (st)	NX (dt)
Surface Elevation (f): **304.16**	Utilized						X		X				
Date Started: **11-20-01**	Type	BW	NW	HW	FJ	Solid	Hollow		SS	B (st)	B (dt)	NX (st)	NX (dt)
Date Finished: **11-20-01**	Size I.D. (in)	2 1/2	3	4	4				1 3/8	1 3/8			
Groundwater Observations: @ **9.5** f after **0** hours	Hammer (lbs)	300	300	300	300			Bit	140	Type		Diamond	
@ ___ f after ___ hours	Fall (in)	30	30	30	24				30	of Bit		Carbide	

Depth	Casing blows per foot	Sample Depth in Feet From - To	No.	Pen. F	Rec. F	Type	Blows per 6 inches or RQD	Strata Change: Depth, Elev.	Field Identification of Soil, Remarks
0		0.0-2.0	S1	2.0	1.5	SS1	2 3 3 5	304.2	SAND, fine to coarse, little fine gravel, loose, brown, FILL
		2.0-4.0	S2	2.0	0.7	SS2	3 4 4 4		SAND, fine to coarse, loose, brown, FILL
		4.0-6.0	S3	2.0	0.8	SS3	21 37 60 78	7.0 / 297.2	SAND, coarse to fine, little meduim to fine gravel, trace coarse gravel, V. dense, brown
7.5									
		10.0-12.0	S4	2.0	1.3	SS4	67 71 53 61		SAND, coarse to fine, some medium to fine gravel, V. dense, brown
15		15.0-17.0	S5	2.0	0.5	SS5	29 32 36 42	19.0 / 285.2	Coarse SAND, and medium to fine gravel, trace coarse gravel, V. dense, brown
		20.0-22.0	S6	2.0	0.1	SS6	12 14 15 19	23.0 / 281.2	GRAVEL,coarse, medium dense
22.5									
		25.0-27.0	S7	2.0	0.8	SS7	15 18 15 13		SAND, coarse to fine, some fine gravel, little medium gravel, dense, brown
30		30.0-32.0	S8	2.0	0.8	SS8	12 17 19 16	32.0 / 272.2	SAND, coarse to fine, some fine gravel, little medium gravel, dense, brown
									End of boring at 32'
37.5									

Casing: Size / From / To. Feet of Earth: **32.0 f**; Rock: **0.0 f**. No. of Samples: **8**. NOTES:

SAMPLE TYPE CODING: D=Driven C=Core A=Auger UP=Undisturbed Piston V=Vane Test
PROPORTIONS USED: Trace = 1 - 10%, Little = 10 - 20%, SOME = 20 - 35%, And = 35 - 50%
Hole No. SB-7 Sheet 1 Of 1

REV.	DATE	DESCRIPTION	SHEET NO.

REVISIONS

FILENAME:

THE INFORMATION, INCLUDING ESTIMATED QUANTITIES OF WORK, SHOWN ON THESE SHEETS IS BASED ON LIMITED INVESTIGATIONS BY THE STATE AND IS IN NO WAY WARRANTED TO INDICATE THE CONDITIONS OF ACTUAL QUANTITIES OF WORK WHICH WILL BE REQUIRED.

DESIGNER/DRAFTER: **TAR**
CHECKED BY: **TJZ**
SCALE: **AS NOTED**

STATE OF CONNECTICUT
DEPARTMENT OF TRANSPORTATION

ARCHITECT: **WENDEL**
APPROVED BY: **DCD**
ENGINEERS: **ReSTL DESIGNERS, CLOUGH HARBOUR ASSOC., AI ENGINEERS, WENDEL**
DATE: **6/11/14**

DESIGNED BY:
WENDEL
140 JOHN JAMES
AUDUBON PKWY.,
SUITE 201
AMHERST, NEW YORK
14228

STATE OF CONNECTICUT — DAVID C. DUCHSCHERER — No. 11937 — REGISTERED PROFESSIONAL ENGINEER

PROJECT TITLE: **WATERBURY BUS MAINTENANCE FACILITY REPLACEMENT**

ADDRESS: **FROST BRIDGE ROAD WATERTOWN, CONNECTICUT 06787**

DRAWING TITLE: **BORING LOGS**

PROJECT NO. **0431-0006**
DRAWING NO. **C-606**
SHEET NO. **03.043**

DRILLER: Richard Posa | INSPECTOR: I. Okonkwo | SOILS ENGINEER: Earth Design Associates Inc.
TOWN: Waterbury, Connecticut | PROJECT NAME: Waterbury Bus Maintenance Garage | PROJECT NUMBER: 1002-0003GT
Hole No. SB-8 | Line N/A | Station N/A | Offset N/A | N. Coordinate | E. Coordinate
Boring Contractor: General Borings Inc. | Client: Wendel Dushscherer Design, P.C.

Surface Elevation (f): 303.79 | Date Started: 11-26-01 | Date Finished: 11-26-01
Groundwater Observations: @ 10.0 f after 0 hours | @ f after hours
Casing: Utilized X; Type SS; Size I.D. (in) 2 1/2; Hammer (lbs) 300; Fall (in) 30
Auger: Utilized X; Type HW; BW 3; NW 4; FJ 4; Solid; Hollow
Mud: Bit 140; of Bit 30
Sampler: X; Type SS; Size I.D. (in) 2 1/2; Hammer (lbs) 300; Fall (in) 30
Core Barrel: B (st) 1 3/8; B (dt) 1 3/8; NX (st); NX (dt); Type Diamond; of Bit Carbide

DEPTH	Casing blows per foot	SAMPLE DEPTH IN FEET FROM - TO	NO.	PEN. F	REC. F	Type	Blows per 6 inches or RQD	STRATA CHANGE: DEPTH, ELEV.	FIELD IDENTIFICATION OF SOIL, REMARKS (INCL. COLOR, LOSS OF WASH WATER, ETC.)
0		0.0-2.0	S1	2.0	1.5	SS1	1 5 10 10	303.8	Fine SAND, medium, brown, FILL
		2.0-4.0	S2	2.0	0.8	SS2	9 7 6 6	4.0	Fine SAND, trace silt, medium, brown, FILL
		4.0-6.0	S3	2.0	1.3	SS3	19 50 49 52	299.8	GRAVEL, fine to coarse, and SAND, fine to coarse, trace cobbles, V. dense, brown
7.5									
		10.0-12.0	S4	2.0	0.8	SS4	37 49 48 55		GRAVEL, fine to coarse, and SAND, fine to coarse, trace cobbles, V. dense, brown
15		15.0-17.0	S5	2.0	1.0	SS5	29 39 56 70	19.0	GRAVEL, fine to coarse, and SAND, fine to coarse, trace cobbles, V. dense, brown
		20.0-22.0	S6	2.0	1.3	SS6	22 22 30 36	284.8	Fine SAND, little gravel, little cobbles, dense, brown, wet
22.5									
		25.0-27.0	S7	2.0	1.0	SS7	27 24 29 38		Fine SAND, little gravel, little cobbles, dense, brown, wet
30		30.0-32.0	S8	2.0	1.5	SS8	29 22 36 30	32.0	Fine SAND, little gravel, little cobbles, dense, brown, wet
								271.8	End of boring at 32'
37.5									

Casing: Size | From | To
Feet of: Earth 32.0 f | Rock 0.0 f | No. of Samples 8
NOTES:

SAMPLE TYPE CODING: D=Driven C=Core A=Auger UP=Undisturbed Piston V=Vane Test
PROPORTIONS USED: Trace = 1 - 10%, Little = 10 - 20%, SOME = 20 - 35%, And = 35 - 50%
Hole No. SB-8 | Sheet 1 Of 1

DRILLER: Edward Pelkey | INSPECTOR: I. Okonkwo | SOILS ENGINEER: Earth Design Associates Inc.
TOWN: Waterbury, Connecticut | PROJECT NAME: Waterbury Bus Maintenance Garage | PROJECT NUMBER: 1002-0003GT
Hole No. SB-9 | Line N/A | Station N/A | Offset N/A | N. Coordinate | E. Coordinate
Boring Contractor: General Borings Inc. | Client: Wendel Dushscherer Design, P.C.

Surface Elevation (f): 302.43 | Date Started: 11-21-01 | Date Finished: 11-21-01
Groundwater Observations: @ 10.0 f after 0 hours | @ f after hours
Casing: Utilized; Type SS; Size I.D. (in) 2 1/2; Hammer (lbs) 300; Fall (in) 30
Auger: Utilized X; Type HW; BW 3; NW 4; FJ 4; Solid; Hollow
Mud: Bit 140; of Bit 30
Sampler: X; Type SS; Size I.D. (in) 2 1/2; Hammer (lbs) 300; Fall (in) 30
Core Barrel: B (st) 1 3/8; B (dt) 1 3/8; NX (st); NX (dt); Type Diamond; of Bit Carbide

DEPTH	Casing blows per foot	SAMPLE DEPTH IN FEET FROM - TO	NO.	PEN. F	REC. F	Type	Blows per 6 inches or RQD	STRATA CHANGE: DEPTH, ELEV.	FIELD IDENTIFICATION OF SOIL, REMARKS (INCL. COLOR, LOSS OF WASH WATER, ETC.)
0		0.0-2.0	S1	2.0	1.3	SS1	4 4 7 8	302.4	Fine SAND, little silt, medium, brown, FILL
		2.0-4.0	S2	2.0	1.1	SS2	6 5 7 9	4.0	Fine SAND, medium, brown, FILL
		5.0-5.9	S3	0.9	0.3	SS3	32 100/5	298.4	Coarse SAND, some gravel, trace cobbles, V. dense, brown
7.5									
		10.0-12.0	S4	2.0	1.3	SS4	23 21 19 18		Coarse SAND, some gravel, trace cobbles, V. dense, brown
15		15.0-17.0	S5	2.0	0.8	SS5	17 19 17 13		Coarse SAND, some gravel, trace cobbles, V. dense, brown
		20.0-22.0	S6	2.0	1.2	SS6	18 26 30 32		SAND, fine to coarse, trace gravel, trace cobbles, V. dense, brown
22.5									
		25.0-27.0	S7	2.0	1.5	SS7	12 14 15 10		SAND, coarse, trace gravel, trace fine sand, medium, brown, wet
30		30.0-32.0	S8	2.0	1.3	SS8	9 10 11 11	32.0	SAND, fine to coarse, trace gravel, medium, brown, wet
								270.4	End of boring at 32'
37.5									

Casing: Size | From | To
Feet of: Earth 32.0 f | Rock 0.0 f | No. of Samples 8
NOTES:

SAMPLE TYPE CODING: D=Driven C=Core A=Auger UP=Undisturbed Piston V=Vane Test
PROPORTIONS USED: Trace = 1 - 10%, Little = 10 - 20%, SOME = 20 - 35%, And = 35 - 50%
Hole No. SB-9 | Sheet 1 Of 1

DRILLER: Erik Delpriore | INSPECTOR: I. Okonkwo | SOILS ENGINEER: Earth Design Associates Inc.
TOWN: Waterbury, Connecticut | PROJECT NAME: Waterbury Bus Maintenance Garage | PROJECT NUMBER: 1002-0003GT
Hole No. SB-10 | Line N/A | Station N/A | Offset N/A | N. Coordinate | E. Coordinate
Boring Contractor: General Borings Inc. | Client: Wendel Dushscherer Design, P.C.

Surface Elevation (f): 303.50 | Date Started: 11-25-01 | Date Finished: 11-28-01
Groundwater Observations: @ 9.0 f after 0 hours | @ f after hours
Casing: Utilized; Type SS; Size I.D. (in) 2 1/2; Hammer (lbs) 300; Fall (in) 30
Auger: Utilized X; Type HW; BW 3; NW 4; FJ 4; Solid; Hollow
Mud: Bit 140; of Bit 30
Sampler: X; Type SS; Size I.D. (in) 2 1/2; Hammer (lbs) 300; Fall (in) 30
Core Barrel: B (st) 1 3/8; B (dt) 1 3/8; NX (st); NX (dt); Type Diamond; of Bit Carbide

DEPTH	Casing blows per foot	SAMPLE DEPTH IN FEET FROM - TO	NO.	PEN. F	REC. F	Type	Blows per 6 inches or RQD	STRATA CHANGE: DEPTH, ELEV.	FIELD IDENTIFICATION OF SOIL, REMARKS (INCL. COLOR, LOSS OF WASH WATER, ETC.)
0		0.0-2.0	S1	2.0	1.5	SS1	8 7 8 9	303.5	Fine SAND, some silt trace coarse sand, medium, tan brown
		5.0-7.0	S2	2.0	1.3	SS2	21 28 35 57	298.5	SAND, fine to coarse, and GRAVEL, fine to coarse, trace cobbles and boulders, V. dense, brown
7.5								5.0	
		10.0-12.0	S3	2.0	1.5	SS3	3 7 10 10	8.0	Fine SAND, little silt, trace coarse sand, trace cobbles, medium, tan
								295.5	Fine SAND, little silt, trace coarse sand, trace cobbles, medium, tan
15		15.0-17.0	S4	2.0	1.5	SS4	6 11 9 17		
		20.0-22.0	S5	2.0	1.5	SS5	3 7 8 10		SAND, fine to coarse, trace silt, medium, tan
22.5									
		25.0-27.0	S6	2.0	2.0	SS6	8 6 9 14		SAND, fine to coarse, trace fine gravel , trace silt, medium, tan
30		30.0-32.0	S7	2.0	2.0	SS7	6 10 17 35		Fine SAND, trace coarse sand, medium, tan
		35.0-37.0	S8	2.0	2.0	SS8	14 18 21 19	37.0	Fine SAND, trace coarse sand, dense, tan
37.5								266.5	End of boring at 37'

Casing: Size | From | To
Feet of: Earth 37.0 f | Rock 0.0 f | No. of Samples 8
NOTES:

SAMPLE TYPE CODING: D=Driven C=Core A=Auger UP=Undisturbed Piston V=Vane Test
PROPORTIONS USED: Trace = 1 - 10%, Little = 10 - 20%, SOME = 20 - 35%, And = 35 - 50%
Hole No. SB-10 | Sheet 1 Of 1

DRILLER: Edward Pelkey | INSPECTOR: I. Okonkwo | SOILS ENGINEER: Earth Design Associates Inc.
TOWN: Waterbury, Connecticut | PROJECT NAME: Waterbury Bus Maintenance Garage | PROJECT NUMBER: 1002-0003GT
Hole No. SB-11 | Line N/A | Station N/A | Offset N/A | N. Coordinate | E. Coordinate
Boring Contractor: General Borings Inc. | Client: Wendel Dushscherer Design, P.C.

Surface Elevation (f): 302.90 | Date Started: 11-20-01 | Date Finished: 11-20-01
Groundwater Observations: @ 8.0 f after 0 hours | @ f after hours
Casing: Utilized; Type SS; Size I.D. (in) 2 1/2; Hammer (lbs) 300; Fall (in) 30
Auger: Utilized X; Type HW; BW 3; NW 4; FJ 4; Solid; Hollow
Mud: Bit 140; of Bit 30
Sampler: X; Type SS; Size I.D. (in) 2 1/2; Hammer (lbs) 300; Fall (in) 30
Core Barrel: B (st) 1 3/8; B (dt) 1 3/8; NX (st); NX (dt); Type Diamond; of Bit Carbide

DEPTH	Casing blows per foot	SAMPLE DEPTH IN FEET FROM - TO	NO.	PEN. F	REC. F	Type	Blows per 6 inches or RQD	STRATA CHANGE: DEPTH, ELEV.	FIELD IDENTIFICATION OF SOIL, REMARKS (INCL. COLOR, LOSS OF WASH WATER, ETC.)
0	3	0.0-2.0	S1	2.0	1.0	SS1	6 14 9 7	302.9	Fine SAND, trace gravel, medium, brown, FILL
	12	2.0-4.0	S2	2.0	1.5	SS2	5 5 6 9		SAND, some silt, trace orsgnic matter, medium, dark brown, FILL
	13							5.0	
	10	4.0-6.0	S3	2.0	0.8	SS3	20 25 56 60	297.9	
	10								
7.5	47								GRAVEL, coarse, some sand, V. dense, gray to brown, moist
	69								
	100								
	120								
	99	10.0-12.0	S4	2.0	1.0	SS4	48 60 75 40		GRAVEL, coarse, some sand, V. dense, gray to brown, moist
	45								
	60							13.0	
	65							289.9	
15	40								
	43	15.0-17.0	S5	2.0	0.4	SS5	10 8 11 11		Fine SAND, trace silt, trace gravel, medium, brown
	56								
	75								
	109								
	99								
	77	20.0-22.0	S6	2.0	1.0	SS6	10 11 13 11		SAND, some gravel, trace to some silt, medium, gray, moist
	53								
22.5	68								
	90								
	95								
	100	25.0-27.0	S7	2.0	1.5	SS7	9 10 13 13		SAND, some gravel, trace to some silt, medium, gray, moist
	45								
	60								
	63								
	72								
30	80	30.0-32.0	S8	2.0	1.5	SS8	7 8 9 13		SAND, some gravel, trace to some silt, medium, gray, moist
								32.0	
								270.9	End of boring at 32'
37.5									

Casing: Size | From | To
Feet of: Earth 32.0 f | Rock 0.0 f | No. of Samples 8
NOTES:

SAMPLE TYPE CODING: D=Driven C=Core A=Auger UP=Undisturbed Piston V=Vane Test
PROPORTIONS USED: Trace = 1 - 10%, Little = 10 - 20%, SOME = 20 - 35%, And = 35 - 50%
Hole No. SB-11 | Sheet 1 Of 1

DRILLER: Erik Delpriore | INSPECTOR: I.Okonkwo | SOILS ENGINEER: Earth Design Associates Inc.
TOWN: Waterbury, Connecticut | PROJECT NAME: Waterbury Bus Maintenance Garage | PROJECT NUMBER: 1002-0003GT
Hole No. SB-12 | Line N/A | Station N/A | Offset N/A | N. Coordinate | E. Coordinate
Boring Contractor: General Borings Inc. | Client: Wendel Dushscherer Design, P.C.

Surface Elevation (f): 302.40 | Date Started: 11-28-01 | Date Finished: 11-28-01
Groundwater Observations: @ f after hours | @ f after hours
Casing: Utilized; Type SS; Size I.D. (in) 2 1/2; Hammer (lbs) 300; Fall (in) 30
Auger: Utilized X; Type HW; BW 3; NW 4; FJ 4; Solid; Hollow
Mud: Bit 140; of Bit 30
Sampler: X; Type SS; Size I.D. (in) 2 1/2; Hammer (lbs) 300; Fall (in) 30
Core Barrel: B (st) 1 3/8; B (dt) 1 3/8; NX (st); NX (dt); Type Diamond; of Bit Carbide

DEPTH	Casing blows per foot	SAMPLE DEPTH IN FEET FROM - TO	NO.	PEN. F	REC. F	Type	Blows per 6 inches or RQD	STRATA CHANGE: DEPTH, ELEV.	FIELD IDENTIFICATION OF SOIL, REMARKS (INCL. COLOR, LOSS OF WASH WATER, ETC.)
0	2	0.0-2.0	S1	2.0	1.2	SS1	1 2 3 3	302.4	Fine SAND, some silt, trace roots, trace fine to medium gravel, loose, black brown, FILL
	7	2.0-4.0	S2	2.0	1.3	SS2	4 4 5 7	5.0	
	14								
	25								
	29	5.0-7.0	S3	2.0	1.0	SS3	17 45 74 100	297.4	Fine SAND, trace fine gravel, trace silt, loose, dark brown, FILL
	53								
7.5	79								
	121							9.0	
	134							293.4	
	92	10.0-11.3	S4	1.3	0.3	SS4	45 72 100/3		Fine SAND, trace fine gravel, trace silt, cobbles, boulders, V. dense, brown, FILL
	110								
	85								
	94								
	113								
15	130	15.0-17.0	S5	2.0	1.5	SS5	17 26 34 29		SAND, fine to coarse, and GRAVEL, fine to coarse, trace silt, V. dense, brown
	75								
	79								
	82								
	124								
	114	20.0-22.0	S6	2.0	1.2	SS6	17 26 34 29		SAND, fine to coarse, and GRAVEL, fine to medium, trace coarse gravel, V. dense, brown
	102								
22.5	117							23.0	
	131							279.4	
	125								
	160	25.0-27.0	S7	2.0	1.5	SS7	18 26 31 40		SAND, fine to coarse, and GRAVEL, fine to medium, trace coarse gravel, V. dense, brown
	104								
	107								
	142								
30	125								
	171	30.0-31.0	S8	1.0	0.8	SS8	35 100/6		SAND, fine to coarse, some gravel, fine to medium, trace, cobbles, V. dense, brown
	132								
	102							33.0	
	97							269.4	
	154								
	119	35.0-36.3	S9	1.3	1.0	SS9	24 49 100/4	36.3	SAND, fine to coarse, some gravel, fine to coarse, trace cobbles, V. dense, brown
								266.1	GRAVEL, fine to coarse
37.5									End of boring at

Casing: Size | From | To
Feet of: Earth 36.3 f | Rock 0.0 f | No. of Samples 9
NOTES:

SAMPLE TYPE CODING: D=Driven C=Core A=Auger UP=Undisturbed Piston V=Vane Test
PROPORTIONS USED: Trace = 1 - 10%, Little = 10 - 20%, SOME = 20 - 35%, And = 35 - 50%
Hole No. SB-12 | Sheet 1 Of 2

DRILLER: Erik Delpriore | INSPECTOR: I.Okonkwo | SOILS ENGINEER: Earth Design Associates Inc.
TOWN: Waterbury, Connecticut | PROJECT NAME: Waterbury Bus Maintenance Garage | PROJECT NUMBER: 1002-0003GT
Hole No. SB-12 | Line N/A | Station N/A | Offset N/A | N. Coordinate | E. Coordinate
Boring Contractor: General Borings Inc. | Client: Wendel Dushscherer Design, P.C.

Surface Elevation (f): 302.40 | Date Started: 11-28-01 | Date Finished: 11-28-01
Groundwater Observations: @ f after hours | @ f after hours
Casing: Utilized; Type SS; Size I.D. (in) 2 1/2; Hammer (lbs) 300; Fall (in) 30
Auger: Utilized X; Type HW; BW 3; NW 4; FJ 4; Solid; Hollow
Mud: Bit 140; of Bit 30
Sampler: X; Type SS; Size I.D. (in) 2 1/2; Hammer (lbs) 300; Fall (in) 30
Core Barrel: B (st) 1 3/8; B (dt) 1 3/8; NX (st); NX (dt); Type Diamond; of Bit Carbide

DEPTH	Casing blows per foot	SAMPLE DEPTH IN FEET FROM - TO	NO.	PEN. F	REC. F	Type	Blows per 6 inches or RQD	STRATA CHANGE: DEPTH, ELEV.	FIELD IDENTIFICATION OF SOIL, REMARKS (INCL. COLOR, LOSS OF WASH WATER, ETC.)
45									36.3'
52.5									
60									
67.5									
75									
82.5									

Casing: Size | From | To
Feet of: Earth 36.3 f | Rock 0.0 f | No. of Samples 9
NOTES:

SAMPLE TYPE CODING: D=Driven C=Core A=Auger UP=Undisturbed Piston V=Vane Test
PROPORTIONS USED: Trace = 1 - 10%, Little = 10 - 20%, SOME = 20 - 35%, And = 35 - 50%
Hole No. SB-12 | Sheet 2 Of 2

DRILLER: Richard Posa | INSPECTOR: I. Okonkwo | SOILS ENGINEER: Earth Design Associates Inc.
TOWN: Waterbury, Connecticut | PROJECT NAME: Waterbury Bus Maintenance Garage | PROJECT NUMBER: 1002-0003GT
Hole No. SB-13 | Line N/A | Station N/A | Offset N/A | N. Coordinate | E. Coordinate
Boring Contractor: General Borings Inc. | Client: Wendel Dushscherer Design, P.C.

Surface Elevation (f): 302.60 | Date Started: 11-27-01 | Date Finished: 11-27-01
Groundwater Observations: @ 12.0 f after 0 hours | @ f after hours
Casing: Utilized; Type SS; Size I.D. (in) 2 1/2; Hammer (lbs) 300; Fall (in) 30
Auger: Utilized X; Type HW; BW 3; NW 4; FJ 4; Solid; Hollow
Mud: Bit 140; of Bit 30
Sampler: X; Type SS; Size I.D. (in) 2 1/2; Hammer (lbs) 300; Fall (in) 30
Core Barrel: B (st) 1 3/8; B (dt) 1 3/8; NX (st); NX (dt); Type Diamond; of Bit Carbide

DEPTH	Casing blows per foot	SAMPLE DEPTH IN FEET FROM - TO	NO.	PEN. F	REC. F	Type	Blows per 6 inches or RQD	STRATA CHANGE: DEPTH, ELEV.	FIELD IDENTIFICATION OF SOIL, REMARKS (INCL. COLOR, LOSS OF WASH WATER, ETC.)
0		0.0-2.0	S1	2.0	1.0	SS1	3 3 4	302.6	SAND, fine to coarse, trace gravel, trace silt, loose, brown, FILL
		2.0-4.0	S2	2.0	1.5	SS2	3 4 4 5		Fine SAND, trace gravel ,trace silt, loose, dark gray, Fill
		4.0-6.0	S3	2.0	1.5	SS3	3 3 4 4		Fine SAND, trace gravel, trace root fibers, loose, dark brown, FILL
7.5		6.0-8.0	S4	2.0	1.0	SS4	3 4 4 23	9.0	Top 6" = Fine SAND, trace gravel, trace root fibers, loose, dark brown, FILL
		10.0-10.2	S5	0.2	0.0	SS5	100/2	293.6	Bottom 6" = SAND, fine to coarse and GRAVEL, trace silt
	76								No recovery, bouncing on cobble
	89								SAND, fine to coarse, little fine to coarse
15	78								gravel, trace silt, medium, brown
	72	15.0-17.0	S6	2.0	0.5	SS6	7 8 9 13		Large cobble piece in the tip of the spoon, dense
	76								No recovery
	48								SAND, fine to coarse, trace gravel, medium, brown
	45								
	39								
	46	20.0-22.0	S7	2.0	0.2	SS7	12 15 19 21		SAND, fine to coarse, little fine to coarse gravel, trace silt, medium, brown
22.5	20								
	22								
	27								
	23								
	21	25.0-27.0	S8	2.0	0.0	SS8	7 9 12 10		Fine SAND, trace coarse sand, medium, tan
	26								
	26							28.0	
	24							274.6	
	28								
30	31	30.0-32.0	S9	2.0	0.8	SS9	6 7 8 8		Fine SAND, trace coarse sand, dense, tan
	24								
	28								
	30								
	33								
	37	35.0-37.0	S10	2.0	0.3	SS10	8 13 16 19		End of boring at 37'
37.5	42								
	41								
	45								
	52								
	59	40.0-42.0	S11	2.0	1.0	SS11	12 15 16 12		
	36								
	41								
	41								

Casing: Size | From | To
Feet of: Earth 47.0 f | Rock 0.0 f | No. of Samples 12
NOTES:

SAMPLE TYPE CODING: D=Driven C=Core A=Auger UP=Undisturbed Piston V=Vane Test
PROPORTIONS USED: Trace = 1 - 10%, Little = 10 - 20%, SOME = 20 - 35%, And = 35 - 50%
Hole No. SB-13 | Sheet 1 Of 2

DRILLER: Richard Posa | INSPECTOR: I. Okonkwo | SOILS ENGINEER: Earth Design Associates Inc.
TOWN: Waterbury, Connecticut | PROJECT NAME: Waterbury Bus Maintenance Garage | PROJECT NUMBER: 1002-0003GT
Hole No. SB-13 | Line N/A | Station N/A | Offset N/A | N. Coordinate | E. Coordinate
Boring Contractor: General Borings Inc. | Client: Wendel Dushscherer Design, P.C.

Surface Elevation (f): 302.60 | Date Started: 11-27-01 | Date Finished: 11-27-01
Groundwater Observations: @ 12.0 f after 0 hours | @ f after hours
Casing: Utilized; Type SS; Size I.D. (in) 2 1/2; Hammer (lbs) 300; Fall (in) 30
Auger: Utilized X; Type HW; BW 3; NW 4; FJ 4; Solid; Hollow
Mud: Bit 140; of Bit 30
Sampler: X; Type SS; Size I.D. (in) 2 1/2; Hammer (lbs) 300; Fall (in) 30
Core Barrel: B (st) 1 3/8; B (dt) 1 3/8; NX (st); NX (dt); Type Diamond; of Bit Carbide

DEPTH	Casing blows per foot	SAMPLE DEPTH IN FEET FROM - TO	NO.	PEN. F	REC. F	Type	Blows per 6 inches or RQD	STRATA CHANGE: DEPTH, ELEV.	FIELD IDENTIFICATION OF SOIL, REMARKS (INCL. COLOR, LOSS OF WASH WATER, ETC.)
45	45								
	53	45.0-47.0	S12	2.0	0.3	SS12	14 15 16 19	47.0	Fine SAND, trace gravel, dense, brown
								255.6	End of boring at 47'
52.5									
60									
67.5									
75									
82.5									

Casing: Size | From | To
Feet of: Earth 47.0 f | Rock 0.0 f | No. of Samples 12
NOTES:

SAMPLE TYPE CODING: D=Driven C=Core A=Auger UP=Undisturbed Piston V=Vane Test
PROPORTIONS USED: Trace = 1 - 10%, Little = 10 - 20%, SOME = 20 - 35%, And = 35 - 50%
Hole No. SB-13 | Sheet 2 Of 2

REV.	DATE	DESCRIPTION	SHEET NO.
		REVISIONS	

FILENAME:

THE INFORMATION, INCLUDING ESTIMATED QUANTITIES OF WORK, SHOWN ON THESE SHEETS IS BASED ON LIMITED INVESTIGATIONS BY THE STATE AND IS IN NO WAY WARRANTED TO INDICATE THE CONDITIONS OF ACTUAL QUANTITIES OF WORK WHICH WILL BE REQUIRED.

DESIGNER/DRAFTER: TAR
CHECKED BY: TJZ
SCALE: AS NOTED

STATE OF CONNECTICUT
DEPARTMENT OF TRANSPORTATION

ARCHITECT: WENDEL
APPROVED BY: DCD
ENGINEERS: ReSTL DESIGNERS, CLOUGH HARBOUR ASSOC., AI ENGINEERS, WENDEL
DATE: 6/11/14

DESIGNED BY:
WENDEL
140 JOHN JAMES AUDUBON PKWY., SUITE 201
AMHERST, NEW YORK 14228

STATE OF CONNECTICUT — DAVID C. DUSCHERER — No. 11937 — REGISTERED PROFESSIONAL ENGINEER

PROJECT TITLE:
WATERBURY BUS MAINTENANCE FACILITY REPLACEMENT

ADDRESS:
FROST BRIDGE ROAD
WATERTOWN, CONNECTICUT 06787

DRAWING TITLE:
BORING LOGS

PROJECT NO. **0431-0006**
DRAWING NO. **C-607**
SHEET NO. **03.044**

DRILLER: Erik Delprlore | INSPECTOR: I. Okonkwo | SOILS ENGINEER: Earth Design Associates Inc.
TOWN: Waterbury, Connecticut | PROJECT NAME: Waterbury Bus Maintenance Garage | PROJECT NUMBER: 1002-0003GT
Hole No. SB-14 | Line N/A | Station N/A | Offset N/A | N. Coordinate | E. Coordinate
Boring Contractor: General Borings Inc. | Client: Wendel Dushscherer Design, P.C.

Surface Elevation (f): 302.50 | Date Started: 11-28-01 | Date Finished: 11-28-01 | Groundwater Observations | @ 9.0 f after 0 hours | @ f after hours

Casing	Auger	Mud	Sampler	Core Barrel
Utilized			X	
Type: BW NW HW FJ Solid Hollow			SS	B (st) B (dt) NX (st) NX (dt)
Size I.D. (in): 2 1/2 3 4 4			1 3/8	1 3/8
Hammer (lbs): 300 300 300 300			140	Type: Diamond
Fall (in): 30 30 30 24			30	of Bit: Carbide

DEPTH	Casing blows per foot	SAMPLE: DEPTH IN FEET FROM - TO	NO.	PEN. F	REC. F	Type	Blows per 6 inches or RQD	STRATA CHANGE: DEPTH, ELEV.	FIELD IDENTIFICATION OF SOIL, REMARKS (INCL. COLOR, LOSS OF WASH WATER, ETC.)
0		0.0-2.0	S1	2.0	1.5	SS1	5 8 9 9	302.5	Fine SAND, some silt, medium, dark brown, FILL
								4.0	
		5.0-7.0	S2	2.0	1.2	SS2	19 25 39 60	298.5	SAND, fine to coarse, and GRAVEL, fine to coarse, trace silt, V. dense, brown
7.5								8.0	
		10.0-12.0	S3	2.0	1.7	SS3	5 5 9 11	294.5	Fine SAND, little silt, trace fine gravel, medium, brown
15		15.0-17.0	S4	2.0	2.0	SS4	10 9 11		Fine SAND, little silt, medium, brown
		20.0-22.0	S5	2.0	1.7	SS5	4 9 8 13		Fine SAND, little coarse sand, trace silt, medium, brown
22.5									
		25.0-27.0	S6	2.0	1.7	SS6	10 8 15 27		Fine SAND, trace coarse sand, trace silt, medium, brown gray
30		30.0-32.0	S7	2.0	1.7	SS7	10 11 15 34	32.0	Fine SAND, little coarse sand, trace
								270.5	fine gravel, medium, brown gray
37.5									End of boring at 32'

Casing: Size | From | To — Feet of: Earth 32.0 f, Rock 0.0 f — No. of Samples 7 — NOTES:

SAMPLE TYPE CODING: D=Driven C=Core A=Auger UP=Undisturbed Piston V=Vane Test
PROPORTIONS USED: Trace = 1 - 10%, Little = 10 - 20%, SOME = 20 - 35%, And = 35 - 50%
Hole No. SB-14 | Sheet 1 Of 1

DRILLER: Edward Pelkey | INSPECTOR: Mary Hossient | SOILS ENGINEER: Earth Design Associates Inc.
TOWN: Waterbury, Connecticut | PROJECT NAME: Waterbury Bus Maintenance Garage | PROJECT NUMBER: 1002-0003GT
Hole No. SB-15 | Line N/A | Station N/A | Offset N/A | N. Coordinate | E. Coordinate
Boring Contractor: General Borings Inc. | Client: Wendel Dushscherer Design, P.C.

Surface Elevation (f): 302.95 | Date Started: 11-20-01 | Date Finished: 11-20-01 | Groundwater Observations | @ 9.5 f after 0 hours | @ f after hours

Casing	Auger	Mud	Sampler	Core Barrel
Utilized			X	
Type: BW NW HW FJ Solid Hollow			SS	B (st) B (dt) NX (st) NX (dt)
Size I.D. (in): 2 1/2 3 4 4			1 3/8	1 3/8
Hammer (lbs): 300 300 300 300			140	Type: Diamond
Fall (in): 30 30 30 24			30	of Bit: Carbide

DEPTH	Casing blows per foot	SAMPLE: DEPTH IN FEET FROM - TO	NO.	PEN. F	REC. F	Type	Blows per 6 inches or RQD	STRATA CHANGE: DEPTH, ELEV.	FIELD IDENTIFICATION OF SOIL, REMARKS (INCL. COLOR, LOSS OF WASH WATER, ETC.)
0		0.0-2.0	S1	2.0	1.0	SS1	17 20 21 14	303.0	Fine SAND, little gravel, trace silt, dense, brown, FILL
	6								SAND, trace silt, medium, brown, FILL
	16	2.0-4.0	S2	2.0	1.5	SS2	14 15 15 16		
	16								
	15	4.0-6.0	S3	2.0	1.7	SS3	9 7 7 12	6.0	Fine SAND, trace silt, medium, brown, FILL
7.5	10	6.0-8.0	S4	2.0	1.5	SS4	48 52 75 69	297.0	GRAVEL, medium to coarse, and coarse SAND, little, cobbles, V. dense, brown
	14								
	55								
	71								
	90	10.0-10.4	S5	0.4	0.4	SS5	100/5		
	98								
	46							13.0	
	52							290.0	
15	19								GRAVEL, medium to coarse, and coarse SAND, little, cobbles, V. dense, brown
	20	15.0-17.0	S6	2.0	1.0	SS6	4 5 6 8		
	21								
	20								
	30								
	19								
	18	20.0-22.0	S7	2.0	1.2	SS7	3 4 4 5		Fine SAND, trace silt, medium, brown
	35								
22.5	45								Fine SAND, little silt, loose, brown
	62								
	61								
	70	25.0-27.0	S8	2.0	0.8	SS8	7 5 8 9		Fine SAND, little silt, medium, brown
	45								
	50								
	52								
	49								
30	60	30.0-32.0	S9	2.0	1.5	SS9	10 16 17 20	32.0	Fine SAND, dense, brown
								271.0	End of boring at 32'
37.5									

Casing: Size | From | To — Feet of: Earth 32.0 f, Rock 0.0 f — No. of Samples 9 — NOTES:

SAMPLE TYPE CODING: D=Driven C=Core A=Auger UP=Undisturbed Piston V=Vane Test
PROPORTIONS USED: Trace = 1 - 10%, Little = 10 - 20%, SOME = 20 - 35%, And = 35 - 50%
Hole No. SB-15 | Sheet 1 Of 1

DRILLER: Edward Pelkey | INSPECTOR: I. Okonkwo | SOILS ENGINEER: Earth Design Associates Inc.
TOWN: Waterbury, Connecticut | PROJECT NAME: Waterbury Bus Maintenance Garage | PROJECT NUMBER: 1002-0003GT
Hole No. SB-16 | Line N/A | Station N/A | Offset N/A | N. Coordinate | E. Coordinate
Boring Contractor: General Borings Inc. | Client: Wendel Dushscherer Design, P.C.

Surface Elevation (f): 302.10 | Date Started: 11-26-01 | Date Finished: 11-27-01 | Groundwater Observations | @ 9.0 f after 0 hours | @ f after hours

Casing	Auger	Mud	Sampler	Core Barrel
Utilized			X	
Type: BW NW HW FJ Solid Hollow			SS	B (st) B (dt) NX (st) NX (dt)
Size I.D. (in): 2 1/2 3 4 4			1 3/8	1 3/8
Hammer (lbs): 300 300 300 300			140	Type: Diamond
Fall (in): 30 30 30 24			30	of Bit: Carbide

DEPTH	Casing blows per foot	SAMPLE: DEPTH IN FEET FROM - TO	NO.	PEN. F	REC. F	Type	Blows per 6 inches or RQD	STRATA CHANGE: DEPTH, ELEV.	FIELD IDENTIFICATION OF SOIL, REMARKS (INCL. COLOR, LOSS OF WASH WATER, ETC.)
0		0.0-2.0	S1	2.0	1.5	SS1	6 14 15 15	302.1	Fine SAND, trace gravel, trace asphalt, medium, brown, FILL
	10								SAND, some silt, trace gravel, medium,
	50	2.0-4.0	S2	2.0	0.3	SS2	11 13 15 16		dark brown, FILL
	66								Fine SAND, trace
	59								gravel, trace
	90	5.0-5.2	S3	0.2	0.1	SS3	100/2		cobbles, V. dense,
	200							7.0	brown, FILL
7.5	125							295.1	Fine SAND, trace
	179								gravel, trace
	153								cobbles, V. dense,
	167	10.0-12.0	S4	2.0	1.2	SS4	69 54 45 49		brown, FILL
	80								GRAVEL, fine to
	95								coarse, trace sand,
	35							14.0	fine to coarse, trace
15	46							288.1	cobbles, V. dense,
	49	15.0-17.0	S5	2.0	1.7	SS5	20 29 32 26		brown
	40								SAND, fine to coarse,
	35								little gravel, V.
	33								dense, brown
	46								SAND, fine to coarse,
	51	20.0-22.0	S6	2.0	0.7	SS6	11 10 13 15		trace gravel, medium,
22.5	29								brown
	33								
	30								
	40								SAND, fine to coarse,
	39	25.0-27.0	S7	2.0	0.6	SS7	8 11 11 15		trace gravel, medium,
	25								brown
	35								
	30								SAND, fine to coarse,
30	33								trace gravel, medium,
	41	30.0-32.0	S8	2.0	0.7	SS8	8 9 9 10		brown
	29								
	40								SAND, fine to coarse,
	33								trace gravel, medium,
	29								brown
	32	35.0-37.0	S9	2.0	0.8	SS9	7 8 9 9		
								37.0	SAND, fine to coarse,
37.5								265.1	trace gravel, medium,
									brown
									End of boring at 37'

Casing: Size | From | To — Feet of: Earth 37.0 f, Rock 0.0 f — No. of Samples 9 — NOTES:

SAMPLE TYPE CODING: D=Driven C=Core A=Auger UP=Undisturbed Piston V=Vane Test
PROPORTIONS USED: Trace = 1 - 10%, Little = 10 - 20%, SOME = 20 - 35%, And = 35 - 50%
Hole No. SB-16 | Sheet 1 Of 1

DRILLER: Edward Pelkey | INSPECTOR: IOO | SOILS ENGINEER: Earth Design Associates Inc.
TOWN: Waterbury, Connecticut | PROJECT NAME: Waterbury Bus Maintenance Garage | PROJECT NUMBER: 1002-0003GT
Hole No. SB-17 | Line N/A | Station N/A | Offset N/A | N. Coordinate | E. Coordinate
Boring Contractor: General Borings Inc. | Client: Wendel Dushscherer Design, P.C.

Surface Elevation (f): 302.90 | Date Started: 11-27-01 | Date Finished: 11-27-01 | Groundwater Observations | @ f after hours | @ f after hours

Casing	Auger	Mud	Sampler	Core Barrel
Utilized			X	
Type: BW NW HW FJ Solid Hollow			SS	B (st) B (dt) NX (st) NX (dt)
Size I.D. (in): 2 1/2 3 4 4			1 3/8	1 3/8
Hammer (lbs): 300 300 300 300			140	Type: Diamond
Fall (in): 30 30 30 24			30	of Bit: Carbide

DEPTH	Casing blows per foot	SAMPLE: DEPTH IN FEET FROM - TO	NO.	PEN. F	REC. F	Type	Blows per 6 inches or RQD	STRATA CHANGE: DEPTH, ELEV.	FIELD IDENTIFICATION OF SOIL, REMARKS (INCL. COLOR, LOSS OF WASH WATER, ETC.)
0		0.0-2.0	S1	2.0	0.8	SS1	9 12 12 15	302.9	SAND, fine to coarse, little gravel, medium, brown, FILL
	10								SAND, fine to coarse,
	30	2.0-4.0	S2	2.0	1.0	SS2	13 18 22 20		some gravel, dense,
	41								brown, FILL
	63								Drill small boulders,
	40	5.0-5.1	S3	0.1	0.0	SS3	100/1	7.0	cobbles, gravel, V.
	260								dense
7.5	231							295.9	SAND, fine to coarse
	200								and GRAVEL, dense,
	190								brown
	145	10.0-12.0	S4	2.0	1.3	SS4	22 25 20 19		
	107								
	46								
	32								
	30								
15	35	15.0-17.0	S5	2.0	0.8	SS5	21 29 23 30		SAND, fine to coarse and GRAVEL, V. dense, brown
	35								
	28								
	30							19.0	
	30							283.9	
	40	20.0-22.0	S6	2.0	0.7	SS6	13 15 15 28		SAND, fine to coarse, dense, brown
	78								
22.5	20								
	23								
	25								
	28	25.0-27.0	S7	2.0	0.5	SS7	8 11 21 16		Fine SAND, dense, brown
	20								
	25								
	38								
	43								
30	54	30.0-32.0	S8	2.0	1.0	SS8	7 11 11 13		SAND, fine to coarse, trace fine gravel, medium, brown
	25								
	29								
	30								
	48								
	52	35.0-37.0	S9	2.0	1.2	SS9	8 9 10 15		SAND, fine to coarse, trace fine gravel, medium, brown
	58								
37.5	60								
	53								
	60								
	68	40.0-42.0	S10	2.0	0.5	SS10	13 14 22 44		SAND, fine to coarse, some gravel, dense, brown
	125								
	260							43.0	
	319							259.9	

Casing: Size | From | To — Feet of: Earth 52.0 f, Rock 0.0 f — No. of Samples 12 — NOTES:

SAMPLE TYPE CODING: D=Driven C=Core A=Auger UP=Undisturbed Piston V=Vane Test
PROPORTIONS USED: Trace = 1 - 10%, Little = 10 - 20%, SOME = 20 - 35%, And = 35 - 50%
Hole No. SB-17 | Sheet 1 Of 2

DRILLER: Edward Pelkey | INSPECTOR: IOO | SOILS ENGINEER: Earth Design Associates Inc.
TOWN: Waterbury, Connecticut | PROJECT NAME: Waterbury Bus Maintenance Garage | PROJECT NUMBER: 1002-0003GT
Hole No. SB-17 | Line N/A | Station N/A | Offset N/A | N. Coordinate | E. Coordinate
Boring Contractor: General Borings Inc. | Client: Wendel Dushscherer Design, P.C.

Surface Elevation (f): 302.90 | Date Started: 11-27-01 | Date Finished: 11-27-01 | Groundwater Observations | @ f after hours | @ f after hours

Casing	Auger	Mud	Sampler	Core Barrel
Utilized			X	
Type: BW NW HW FJ Solid Hollow			SS	B (st) B (dt) NX (st) NX (dt)
Size I.D. (in): 2 1/2 3 4 4			1 3/8	1 3/8
Hammer (lbs): 300 300 300 300			140	Type: Diamond
Fall (in): 30 30 30 24			30	of Bit: Carbide

DEPTH	Casing blows per foot	SAMPLE: DEPTH IN FEET FROM - TO	NO.	PEN. F	REC. F	Type	Blows per 6 inches or RQD	STRATA CHANGE: DEPTH, ELEV.	FIELD IDENTIFICATION OF SOIL, REMARKS (INCL. COLOR, LOSS OF WASH WATER, ETC.)
45	40	45.0-47.0	S13	2.0	0.8	SS13	8 15 15 15		Coarse SAND, trace
	42							47.0	fine gravel, dense,
	220							-47.0	brown
	229								End of boring at 47'
	185								
	212								
	193								
	266								
	291	50.0-52.0	S12	2.0	1.2	SS12	53 68 69 91		
52.5								52.0	
								250.9	
									End of boring at 52'
60									
67.5									
75									
82.5									

Casing: Size | From | To — Feet of: Earth 52.0 f, Rock 0.0 f — No. of Samples 12 — NOTES:

SAMPLE TYPE CODING: D=Driven C=Core A=Auger UP=Undisturbed Piston V=Vane Test
PROPORTIONS USED: Trace = 1 - 10%, Little = 10 - 20%, SOME = 20 - 35%, And = 35 - 50%
Hole No. SB-17 | Sheet 2 Of 2

DRILLER: Erik Delprlore | INSPECTOR: IOO | SOILS ENGINEER: Earth Design Associates Inc.
TOWN: Waterbury, Connecticut | PROJECT NAME: Waterbury Bus Maintenance Garage | PROJECT NUMBER: 1002-0003GT
Hole No. SB-18 | Line N/A | Station N/A | Offset N/A | N. Coordinate | E. Coordinate
Boring Contractor: General Borings Inc. | Client: Wendel Dushscherer Design, P.C.

Surface Elevation (f): 302.00 | Date Started: 11-28-01 | Date Finished: 11-28-01 | Groundwater Observations | @ 8.0 f after 0 hours | @ f after hours

Casing	Auger	Mud	Sampler	Core Barrel
Utilized			X	
Type: BW NW HW FJ Solid Hollow			SS	B (st) B (dt) NX (st) NX (dt)
Size I.D. (in): 2 1/2 3 4 4			1 3/8	1 3/8
Hammer (lbs): 300 300 300 300			140	Type: Diamond
Fall (in): 30 30 30 24			30	of Bit: Carbide

DEPTH	Casing blows per foot	SAMPLE: DEPTH IN FEET FROM - TO	NO.	PEN. F	REC. F	Type	Blows per 6 inches or RQD	STRATA CHANGE: DEPTH, ELEV.	FIELD IDENTIFICATION OF SOIL, REMARKS (INCL. COLOR, LOSS OF WASH WATER, ETC.)
0								1.0	
		1.0-3.0	S1	2.0	1.7	SS1	17 10 13 10	301.0	Fine SAND, some silt, little fine to medium gravel, medium, brown
	23								black, FILL
	19	3.0-5.0	S2	2.0	1.3	SS2	9 7 5 5		SAND, fine to coarse, little silt, trace
	17								fine gravel, medium,
	21	5.0-7.0	S3	2.0	0.0	SS3	1 1 2 2		brown, FILL
	3								No recovery
7.5	7							8.0	
	11							294.0	
	52								
	78	10.0-12.0	S4	2.0	1.3	SS4	45 51 79 23		SAND, fine to coarse, and GRAVEL, fine to
	231								coarse, V. dense,
	215								brown
	150								
	87								SAND, fine to coarse,
15	92	15.0-17.0	S5	2.0	1.2	SS5	24 49 32 31		some fine to coarse
	74								gravel, V. dense,
	83								brown
	89								
	103								
	124	20.0-22.0	S6	2.0	1.3	SS6	30 41 67 41		SAND, fine to coarse
	63								and GRAVEL, fine to
22.5	74								coarse, V. dense,
	77								brown
	81								
	95	25.0-27.0	S7	2.0	1.5	SS7	22 55 73 27		SAND, fine to coarse, little fine to coarse
	86								gravel, V. dense,
	89							28.0	brown tan
	113							274.0	
30	142								SAND, fine to coarse, some fine to medium
	125	30.0-32.0	S8	2.0	1.5	SS8	13 12 14 11		gravel, trace coarse
	71								gravel, medium, brown
	52								gray
	35								SAND, fine to coarse,
	31								some fine to medium
	29	35.0-37.0	S9	2.0	1.5	SS9	15 14 21 17		gravel, trace coarse
								37.0	gravel, medium, brown
37.5								265.0	gray
									End of boring at 37'

Casing: Size | From | To — Feet of: Earth 37.0 f, Rock 0.0 f — No. of Samples 9 — NOTES:

SAMPLE TYPE CODING: D=Driven C=Core A=Auger UP=Undisturbed Piston V=Vane Test
PROPORTIONS USED: Trace = 1 - 10%, Little = 10 - 20%, SOME = 20 - 35%, And = 35 - 50%
Hole No. SB-18 | Sheet 1 Of 1

DRILLER: Richard Posa | INSPECTOR: IOO | SOILS ENGINEER: Earth Design Associates Inc.
TOWN: Waterbury, Connecticut | PROJECT NAME: Waterbury Bus Maintenance Garage | PROJECT NUMBER: 1002-0003GT
Hole No. SB-19 | Line N/A | Station N/A | Offset N/A | N. Coordinate | E. Coordinate
Boring Contractor: General Borings Inc. | Client: Wendel Dushscherer Design, P.C.

Surface Elevation (f): | Date Started: 11-27-01 | Date Finished: 11-29-01 | Groundwater Observations | @ 13.5 f after 0 hours | @ f after hours

Casing	Auger	Mud	Sampler	Core Barrel
Utilized			X	
Type: BW NW HW FJ Solid Hollow			SS	B (st) B (dt) NX (st) NX (dt)
Size I.D. (in): 2 1/2 3 4 4			1 3/8	1 3/8
Hammer (lbs): 300 300 300 300			140	Type: Diamond
Fall (in): 30 30 30 24			30	of Bit: Carbide

DEPTH	Casing blows per foot	SAMPLE: DEPTH IN FEET FROM - TO	NO.	PEN. F	REC. F	Type	Blows per 6 inches or RQD	STRATA CHANGE: DEPTH, ELEV.	FIELD IDENTIFICATION OF SOIL, REMARKS (INCL. COLOR, LOSS OF WASH WATER, ETC.)
0		0.0-2.0	S1	2.0	2.0	SS1	2 3 3 3	0.0	Fine SAND, trace gravel, trace silt, trace root fibers, loose, dark gray, FILL
		2.0-4.0	S2	2.0	2.0	SS2	3 3 4 3		Fine SAND, trace gravel, trace silt, trace root fibers, loose, dark gray, FILL
		4.0-6.0	S3	2.0	1.5	SS3	3 3 3 3		
		6.0-8.0	S4	2.0	1.7	SS4	3 3 3 4	8.0	
7.5		8.0-10.0	S5	2.0	1.5	SS5	3 4 19 33	-8.0	Fine SAND, trace gravel, trace silt, trace root fibers, loose, dark gray, FILL
		10.0-12.0	S6	2.0	0.0	SS6	36 29 27 31		Fine SAND, trace gravel, trace silt, trace root fibers, loose, dark gray, FILL
	58								
	71								
15	69								
	33	15.0-17.0	S7	2.0	0.8	SS7	6 8 8 10		Fine SAND, trace gravel, trace silt, loose, dark gray brown, FILL
	21								
	24								
	25								
	28								
	28	20.0-22.0	S8	2.0	0.0	SS8	12 15 18 21		SAND, fine to coarse, some gravel, medium, gray brown
	26								
22.5	30							23.0	
	31							-23.0	No recovery
	34								SAND, fine to coarse, little fine to coarse gravel, medium, gray brown
	42	25.0-27.0	S9	2.0	0.0	SS9	7 9 12 10		
	19								
	20								
	23								No recovery, large cobble piece in tip
30	23								
	24	30.0-32.0	S10	2.0	0.6	SS10	6 7 8 8		No recovery
	20								Fine, SAND, trace gravel, medium, brown
	22								
	23								
	26	35.0-37.0	S11	2.0	0.5	SS11	13 16 18 21		Coarse SAND, trace gravel, dense, brown
	25								
37.5	31								
	36								
	34								
	33	40.0-42.0	S12	2.0	1.3	SS12	9 14 17 19		Coarse SAND, trace fine gravel, dense, brown
	35								
	32								
	37								

Casing: Size | From | To — Feet of: Earth 47.0 f, Rock 0.0 f — No. of Samples 13 — NOTES:

SAMPLE TYPE CODING: D=Driven C=Core A=Auger UP=Undisturbed Piston V=Vane Test
PROPORTIONS USED: Trace = 1 - 10%, Little = 10 - 20%, SOME = 20 - 35%, And = 35 - 50%
Hole No. SB-19 | Sheet 1 Of 2

DRILLER: Richard Posa | INSPECTOR: IOO | SOILS ENGINEER: Earth Design Associates Inc.
TOWN: Waterbury, Connecticut | PROJECT NAME: Waterbury Bus Maintenance Garage | PROJECT NUMBER: 1002-0003GT
Hole No. SB-19 | Line N/A | Station N/A | Offset N/A | N. Coordinate | E. Coordinate
Boring Contractor: General Borings Inc. | Client: Wendel Dushscherer Design, P.C.

Surface Elevation (f): | Date Started: 11-27-01 | Date Finished: 11-29-01 | Groundwater Observations | @ 13.5 f after 0 hours | @ f after hours

Casing	Auger	Mud	Sampler	Core Barrel
Utilized			X	
Type: BW NW HW FJ Solid Hollow			SS	B (st) B (dt) NX (st) NX (dt)
Size I.D. (in): 2 1/2 3 4 4			1 3/8	1 3/8
Hammer (lbs): 300 300 300 300			140	Type: Diamond
Fall (in): 30 30 30 24			30	of Bit: Carbide

DEPTH	Casing blows per foot	SAMPLE: DEPTH IN FEET FROM - TO	NO.	PEN. F	REC. F	Type	Blows per 6 inches or RQD	STRATA CHANGE: DEPTH, ELEV.	FIELD IDENTIFICATION OF SOIL, REMARKS (INCL. COLOR, LOSS OF WASH WATER, ETC.)
45	40								
	42	45.0-47.0	S13	2.0	0.8	SS13	8 15 15 15	47.0	Coarse SAND, trace fine gravel, dense, brown
								-47.0	End of boring at 47'
52.5									
60									
67.5									
75									
82.5									

Casing: Size | From | To — Feet of: Earth 47.0 f, Rock 0.0 f — No. of Samples 13 — NOTES:

SAMPLE TYPE CODING: D=Driven C=Core A=Auger UP=Undisturbed Piston V=Vane Test
PROPORTIONS USED: Trace = 1 - 10%, Little = 10 - 20%, SOME = 20 - 35%, And = 35 - 50%
Hole No. SB-19 | Sheet 2 Of 2

REVISIONS

REV.	DATE	DESCRIPTION	SHEET NO.

FILENAME:

THE INFORMATION, INCLUDING ESTIMATED QUANTITIES OF WORK, SHOWN ON THESE SHEETS IS BASED ON LIMITED INVESTIGATIONS BY THE STATE AND IS IN NO WAY WARRANTED TO INDICATE THE CONDITIONS OF ACTUAL QUANTITIES OF WORK WHICH WILL BE REQUIRED.

DESIGNER/DRAFTER: TAR
CHECKED BY: TJZ
SCALE: AS NOTED

STATE OF CONNECTICUT
DEPARTMENT OF TRANSPORTATION

ARCHITECT: WENDEL
APPROVED BY: DCD
ENGINEERS: ReSTL DESIGNERS, CLOUGH HARBOUR ASSOC., AI ENGINEERS, WENDEL
DATE: 6/11/14

DESIGNED BY:
WENDEL
140 JOHN JAMES AUDUBON PKWY.,
SUITE 201
AMHERST, NEW YORK 14228

STATE OF CONNECTICUT · DAVID G. DUSHSCHERER · No. 11937 · REGISTERED PROFESSIONAL ENGINEER

PROJECT TITLE:
WATERBURY BUS MAINTENANCE FACILITY REPLACEMENT

ADDRESS:
FROST BRIDGE ROAD
WATERTOWN, CONNECTICUT 06787

DRAWING TITLE:
BORING LOGS

PROJECT NO. **0431-0006**
DRAWING NO. **C-608**
SHEET NO. **03.045**

DRILLER: Erik Delpriore | INSPECTOR: I. Okonkwo | SOILS ENGINEER: Earth Design Associates Inc.
Hole No. DB-1 | Line N/A | Station N/A | Offset N/A
TOWN: Waterbury, Connecticut
PROJECT NAME: Waterbury Bus Maintenance Garage | PROJECT NUMBER: 1002-0003GT
N. Coordinate | E. Coordinate
Boring Contractor: General Borings Inc. | Client: Wendel Dushscherer Design, P.C.

Surface Elevation (f): 303.28 | Date Started: 11-30-01 | Date Finished: 11-30-01
Groundwater Observations: @ 10.0 f after 0 hours | @ f after hours

	Casing	Auger	Mud	Sampler	Core Barrel
Type	BW NW HW FJ	Solid Hollow		SS	B (st) B (dt) NX (st) NX (dt)
Size I.D. (in)	2 1/2 3 4 4			1 3/8	1 3/8
Hammer (lbs)	300 300 300 300		Bit	140	Type Diamond
Fall (in)	30 30 30 24			30	of Bit Carbide

DEPTH	Casing blows per foot	SAMPLE DEPTH IN FEET FROM - TO	NO.	PEN. F	REC. F	Type	Blows per 6 inches or RQD	STRATA CHANGE: DEPTH, ELEV.	FIELD IDENTIFICATION OF SOIL, REMARKS (INCL. COLOR, LOSS OF WASH WATER, ETC.)
0		0.0-2.0	S1	2.0	1.5	SS1	10 15 10 10	303.3	Fine SAND, some silt, trace fine gravel, medium, black brown, FILL
		2.0-4.0	S2	2.0	1.3	SS2	8 7 8 13		SAND, fine to coarse, some fine gravel, trace silt, medium,
		5.0-7.0	S3	2.0	2.0	SS3	1 3 4 4	8.0	brown, FILL
7.5								295.3	Fine SAND and SILT, trace coarse sand, loose, brown, FILL
		10.0-12.0	S4	2.0	1.0	SS4	15 25 31 27		SAND, fine to coarse and GRAVEL, fine to coarse, V. dense, brown
15		15.0-17.0	S5	2.0	1.0	SS5	19 24 35 38		Fine SAND, and GRAVEL, fine to coarse, V. dense, brown
								20.0	
		20.0-22.0	S6	2.0	1.3	SS6	18 31 33 29	283.3	SAND, fine to coarse, some fine to coarse gravel, V. dense, brown
22.5									
		25.0-27.0	S7	2.0	1.7	SS7	5 7 11 19		SAND, fine to coarse, trace fine gravel, medium, brown
30		30.0-32.0	S8	2.0	1.7	SS8	4 8 13 21		SAND, fine to coarse, trace fine gravel,
								32.0	medium, brown
								271.3	End of boring at 32'
37.5									

Casing: Size | From | To
Feet of: Earth 32.0 f | Rock 0.0 f | No. of Samples 8
NOTES: Installed well at 20'

SAMPLE TYPE CODING: D=Driven C=Core A=Auger UP=Undisturbed Piston V=Vane Test
PROPORTIONS USED: Trace = 1 - 10%, Little = 10 - 20%, SOME = 20 - 35%, And = 35 - 50%
Hole No. DB-1 | Sheet 1 Of 1

DRILLER: Richard Posa | INSPECTOR: I. Okonkwo | SOILS ENGINEER: Earth Design Associates Inc.
Hole No. DB-2 | Line N/A | Station N/A | Offset N/A
TOWN: Waterbury, Connecticut
PROJECT NAME: Waterbury Bus Maintenance Garage | PROJECT NUMBER: 1002-0003GT
N. Coordinate | E. Coordinate
Boring Contractor: General Borings Inc. | Client: Wendel Dushscherer Design, P.C.

Surface Elevation (f): 301.49 | Date Started: 11-30-01 | Date Finished: 11-30-01
Groundwater Observations: @ 8.0 f after 0 hours | @ f after hours

	Casing	Auger	Mud	Sampler	Core Barrel
Type	BW NW HW FJ	Solid Hollow		SS	B (st) B (dt) NX (st) NX (dt)
Size I.D. (in)	2 1/2 3 4 4			1 3/8	1 3/8
Hammer (lbs)	300 300 300 300		Bit	140	Type Diamond
Fall (in)	30 30 30 24			30	of Bit Carbide

DEPTH	Casing blows per foot	SAMPLE DEPTH IN FEET FROM - TO	NO.	PEN. F	REC. F	Type	Blows per 6 inches or RQD	STRATA CHANGE: DEPTH, ELEV.	FIELD IDENTIFICATION OF SOIL, REMARKS (INCL. COLOR, LOSS OF WASH WATER, ETC.)
0		0.0-2.0	S1	2.0	1.7	SS1	3 4 6 6	301.5	Fine SAND, trace gravel ,trace roots, medium, dark brown, FILL
		2.0-4.0	S2	2.0	1.5	SS2	4 5 5 5		Fine SAND, trace fine gravel ,trace silt, loose, brown, FILL
		5.0-7.0	S3	2.0	0.8	SS3	4 4 5 6	9.0	Fine SAND, trace silt, trace root fibers, loose, dark
7.5								292.5	brown, FILL
		10.0-12.0	S4	2.0	0.2	SS4	12 15 15 17	13.0	Fine SAND, trace silt, dense, gray brown
15		15.0-17.0	S5	2.0	0.8	SS5	16 18 22 47	288.5	SAND, fine to coarse, some fine to coarse gravel, trace silt, dense, brown
		20.0-22.0	S6	2.0	0.8	SS6	14 17 18 19		SAND, fine to coarse, some, fine to coarse gravel, trace silt,
22.5								23.0	dense, brown
		25.0-27.0	S7	2.0	1.3	SS7	12 14 16 16	278.5	Fine SAND, dense, brown
30		30.0-32.0	S8	2.0	0.5	SS8	10 14 15 17		Fine SAND, dense, brown
		35.0-37.0	S9	2.0	0.5	SS9	11 13 16 19	37.0	Fine SAND, dense, brown
37.5								264.5	End of boring at 37'

Casing: Size | From | To
Feet of: Earth 37.0 f | Rock 0.0 f | No. of Samples 9
NOTES:

SAMPLE TYPE CODING: D=Driven C=Core A=Auger UP=Undisturbed Piston V=Vane Test
PROPORTIONS USED: Trace = 1 - 10%, Little = 10 - 20%, SOME = 20 - 35%, And = 35 - 50%
Hole No. DB-2 | Sheet 1 Of 1

DRILLER: Erik Delpriore | INSPECTOR: IOO | SOILS ENGINEER: Earth Design Associates Inc.
Hole No. P-1 | Line N/A | Station N/A | Offset N/A
TOWN: Waterbury, Connecticut
PROJECT NAME: Waterbury Bus Maintenance Garage | PROJECT NUMBER: 1002-0003GT
N. Coordinate | E. Coordinate
Boring Contractor: General Borings Inc. | Client: Wendel Dushscherer Design, P.C.

Surface Elevation (f): 304.82 | Date Started: 11-30-01 | Date Finished: 11-30-01
Groundwater Observations: @ 10.5 f after 0 hours | @ f after hours

	Casing	Auger	Mud	Sampler	Core Barrel
Type	BW NW HW FJ	Solid Hollow		SS	B (st) B (dt) NX (st) NX (dt)
Size I.D. (in)	2 1/2 3 4 4			1 3/8	1 3/8
Hammer (lbs)	300 300 300 300		Bit	140	Type Diamond
Fall (in)	30 30 30 24			30	of Bit Carbide

DEPTH	Casing blows per foot	SAMPLE DEPTH IN FEET FROM - TO	NO.	PEN. F	REC. F	Type	Blows per 6 inches or RQD	STRATA CHANGE: DEPTH, ELEV.	FIELD IDENTIFICATION OF SOIL, REMARKS (INCL. COLOR, LOSS OF WASH WATER, ETC.)
0		0.0-2.0	S1	2.0	1.2	SS1	6 11 15 19	304.8	SAND, fine to coarse, and GRAVEL, fine to coarse, medium, brown
		2.0-4.0	S2	2.0	1.5	SS2	15 17 16 35		SAND, fine to coarse, and GRAVEL, fine to coarse, dense, brown
		5.0-7.0	S3	2.0	1.3	SS3	24 35 53 81	7.0	SAND, fine to coarse,
7.5								297.8	and GRAVEL, fine to coarse, V. dense, brown
		10.0-12.0	S4	2.0	0.8	SS4	11 10 29 45	12.0	SAND, fine to coarse, and GRAVEL, fine to coarse, V. dense, brown
15								292.8	End of boring at 12'
22.5									
30									
37.5									

Casing: Size | From | To
Feet of: Earth 12.0 f | Rock 0.0 f | No. of Samples 4
NOTES:

SAMPLE TYPE CODING: D=Driven C=Core A=Auger UP=Undisturbed Piston V=Vane Test
PROPORTIONS USED: Trace = 1 - 10%, Little = 10 - 20%, SOME = 20 - 35%, And = 35 - 50%
Hole No. P-1 | Sheet 1 Of 1

DRILLER: Erik Delpriore | INSPECTOR: I.Okonkwo | SOILS ENGINEER: Earth Design Associates Inc.
Hole No. P-2 | Line N/A | Station N/A | Offset N/A
TOWN: Waterbury, Connecticut
PROJECT NAME: Waterbury Bus Maintenance Garage | PROJECT NUMBER: 1002-0003GT
N. Coordinate | E. Coordinate
Boring Contractor: General Borings Inc. | Client: Wendel Dushscherer Design, P.C.

Surface Elevation (f): 304.65 | Date Started: 11-30-01 | Date Finished: 11-30-01
Groundwater Observations: @ 10.5 f after 0 hours | @ f after hours

	Casing	Auger	Mud	Sampler	Core Barrel
Type	BW NW HW FJ	Solid Hollow		SS	B (st) B (dt) NX (st) NX (dt)
Size I.D. (in)	2 1/2 3 4 4			1 3/8	1 3/8
Hammer (lbs)	300 300 300 300		Bit	140	Type Diamond
Fall (in)	30 30 30 24			30	of Bit Carbide

DEPTH	Casing blows per foot	SAMPLE DEPTH IN FEET FROM - TO	NO.	PEN. F	REC. F	Type	Blows per 6 inches or RQD	STRATA CHANGE: DEPTH, ELEV.	FIELD IDENTIFICATION OF SOIL, REMARKS (INCL. COLOR, LOSS OF WASH WATER, ETC.)
0		0.0-2.0	S1	2.0	1.5	SS1	10 7 6 11	304.7	SAND, fine to coarse, some silt, trace fine to coarse gravel, medium, brown black
		2.0-4.0	S2	2.0	1.5	SS2	13 15 11 29		SAND, fine to coarse, and GRAVEL, fine to coarse, medium, brown
		5.0-5.8	S3	0.8	0.3	SS3	52 100/3	5.0	tan
7.5								299.7	SAND, fine to coarse, and GRAVEL, fine to coarse, V. dense, brown
		10.0-12.0	S4	2.0	1.6	SS4	12 16 19 34	12.0	SAND, fine to coarse and GRAVEL, fine to coarse, trace silt, V. dense, brown
15								292.7	End of boring at 12'
22.5									
30									
37.5									

Casing: Size | From | To
Feet of: Earth 12.0 f | Rock 0.0 f | No. of Samples 4
NOTES:

SAMPLE TYPE CODING: D=Driven C=Core A=Auger UP=Undisturbed Piston V=Vane Test
PROPORTIONS USED: Trace = 1 - 10%, Little = 10 - 20%, SOME = 20 - 35%, And = 35 - 50%
Hole No. P-2 | Sheet 1 Of 1

DRILLER: Richard Posa | INSPECTOR: I.Okonkwo | SOILS ENGINEER: Earth Design Associates Inc.
Hole No. P-3 | Line N/A | Station N/A | Offset N/A
TOWN: Waterbury, Connecticut
PROJECT NAME: Waterbury Bus Maintenance Garage | PROJECT NUMBER: 1002-0003GT
N. Coordinate | E. Coordinate
Boring Contractor: General Borings Inc. | Client: Wendel Dushscherer Design, P.C.

Surface Elevation (f): 302.55 | Date Started: 11-29-01 | Date Finished: 11-29-01
Groundwater Observations: @ 7.0 f after 0 hours | @ f after hours

	Casing	Auger	Mud	Sampler	Core Barrel
Type	BW NW HW FJ	Solid Hollow		SS	B (st) B (dt) NX (st) NX (dt)
Size I.D. (in)	2 1/2 3 4 4			1 3/8	1 3/8
Hammer (lbs)	300 300 300 300		Bit	140	Type Diamond
Fall (in)	30 30 30 24			30	of Bit Carbide

DEPTH	Casing blows per foot	SAMPLE DEPTH IN FEET FROM - TO	NO.	PEN. F	REC. F	Type	Blows per 6 inches or RQD	STRATA CHANGE: DEPTH, ELEV.	FIELD IDENTIFICATION OF SOIL, REMARKS (INCL. COLOR, LOSS OF WASH WATER, ETC.)
0		0.0-2.0	S1	2.0	1.5	SS1	6 5 3 4	302.6	Fine SAND, little silt, loose, black brown, FILL
		2.0-4.0	S2	2.0	0.3	SS2	3 3 3 5	5.0	Fine SAND, little silt, loose, black brown, FILL
		5.0-7.0	S3	2.0	0.3	SS3	14 18 19 22	297.6	SAND, fine to coarse, some fine to coarse gravel, little silt,
7.5								10.0	dense, brown
		10.0-12.0	S4	2.0	0.3	SS4	24 28 26 30	292.6	SAND, fine to coarse and GRAVEL, little silt, V. dense, brown
15								12.0	End of boring at 12'
								290.6	
22.5									
30									
37.5									

Casing: Size | From | To
Feet of: Earth 12.0 f | Rock 0.0 f | No. of Samples 4
NOTES:

SAMPLE TYPE CODING: D=Driven C=Core A=Auger UP=Undisturbed Piston V=Vane Test
PROPORTIONS USED: Trace = 1 - 10%, Little = 10 - 20%, SOME = 20 - 35%, And = 35 - 50%
Hole No. P-3 | Sheet 1 Of 1

DRILLER: Richard Posa | INSPECTOR: IOO | SOILS ENGINEER: Earth Design Associates Inc.
Hole No. P-4 | Line N/A | Station N/A | Offset N/A
TOWN: Waterbury, Connecticut
PROJECT NAME: Waterbury Bus Maintenance Garage | PROJECT NUMBER: 1002-0003GT
N. Coordinate | E. Coordinate
Boring Contractor: General Borings Inc. | Client: Wendel Dushscherer Design, P.C.

Surface Elevation (f): 304.40 | Date Started: 11-29-01 | Date Finished: 11-29-01
Groundwater Observations: @ 9.0 f after 0 hours | @ f after hours

	Casing	Auger	Mud	Sampler	Core Barrel
Type	BW NW HW FJ	Solid Hollow		SS	B (st) B (dt) NX (st) NX (dt)
Size I.D. (in)	2 1/2 3 4 4			1 3/8	1 3/8
Hammer (lbs)	300 300 300 300		Bit	140	Type Diamond
Fall (in)	30 30 30 24			30	of Bit Carbide

DEPTH	Casing blows per foot	SAMPLE DEPTH IN FEET FROM - TO	NO.	PEN. F	REC. F	Type	Blows per 6 inches or RQD	STRATA CHANGE: DEPTH, ELEV.	FIELD IDENTIFICATION OF SOIL, REMARKS (INCL. COLOR, LOSS OF WASH WATER, ETC.)
0		0.0-2.0	S1	2.0	1.0	SS1	3 4 5 6	304.4	Coarse SAND, little, fine to medium gravel, loose, brown, FILL
		2.0-4.0	S2	2.0	1.3	SS2	3 3 5 4	5.0	Fine SAND, little silt, loose, black brown, FILL
		5.0-7.0	S3	2.0	0.7	SS3	3 2 14 27	299.4	Fine SAND, little silt, trace fine gravel, medium, brown
7.5								10.0	SAND, fine to coarse and GRAVEL, little silt, dense, brown
		10.0-12.0	S4	2.0	0.4	SS4	16 19 19 27	294.4	End of boring at 12'
15								12.0	
								292.4	
22.5									
30									
37.5									

Casing: Size | From | To
Feet of: Earth 12.0 f | Rock 0.0 f | No. of Samples 4
NOTES:

SAMPLE TYPE CODING: D=Driven C=Core A=Auger UP=Undisturbed Piston V=Vane Test
PROPORTIONS USED: Trace = 1 - 10%, Little = 10 - 20%, SOME = 20 - 35%, And = 35 - 50%
Hole No. P-4 | Sheet 1 Of 1

DRILLER: Erik Delpriore | INSPECTOR: IOO | SOILS ENGINEER: Earth Design Associates Inc.
Hole No. P-5 | Line N/A | Station N/A | Offset N/A
TOWN: Waterbury, Connecticut
PROJECT NAME: Waterbury Bus Maintenance Garage | PROJECT NUMBER: 1002-0003GT
N. Coordinate | E. Coordinate
Boring Contractor: General Borings Inc. | Client: Wendel Dushscherer Design, P.C.

Surface Elevation (f): 302.35 | Date Started: 11-28-01 | Date Finished: 11-28-01
Groundwater Observations: @ 6.0 f after 0 hours | @ f after hours

	Casing	Auger	Mud	Sampler	Core Barrel
Type	BW NW HW FJ	Solid Hollow		SS	B (st) B (dt) NX (st) NX (dt)
Size I.D. (in)	2 1/2 3 4 4			1 3/8	1 3/8
Hammer (lbs)	300 300 300 300		Bit	140	Type Diamond
Fall (in)	30 30 30 24			30	of Bit Carbide

DEPTH	Casing blows per foot	SAMPLE DEPTH IN FEET FROM - TO	NO.	PEN. F	REC. F	Type	Blows per 6 inches or RQD	STRATA CHANGE: DEPTH, ELEV.	FIELD IDENTIFICATION OF SOIL, REMARKS (INCL. COLOR, LOSS OF WASH WATER, ETC.)
0		0.0-2.0	S1	2.0	1.5	SS1	5 6 7 9	302.4	Fine SAND, some silt, little, fine to coarse gravel, medium, black brown, FILL
		2.0-4.0	S2	2.0	1.0	SS2	7 8 11 13	4.5	Fine SAND, some silt, little, fine to coarse gravel, medium, black brown, FILL
		5.0-7.0	S3	2.0	1.0	SS3	19 35 41 35	297.9	SAND, fine to coarse and GRAVEL, fine to coarse, V. dense, brown orange
7.5								12.0	SAND, fine to coarse and GRAVEL, fine to coarse, V. dense, brown orange
		10.0-12.0	S4	2.0	1.3	SS4	15 35 40 50	290.4	End of boring at 12'
15									
22.5									
30									
37.5									

Casing: Size | From | To
Feet of: Earth 12.0 f | Rock 0.0 f | No. of Samples 4
NOTES:

SAMPLE TYPE CODING: D=Driven C=Core A=Auger UP=Undisturbed Piston V=Vane Test
PROPORTIONS USED: Trace = 1 - 10%, Little = 10 - 20%, SOME = 20 - 35%, And = 35 - 50%
Hole No. P-5 | Sheet 1 Of 1

DRILLER: Richard Posa | INSPECTOR: I.Okonkwo | SOILS ENGINEER: Earth Design Associates Inc.
Hole No. P-6 | Line N/A | Station N/A | Offset N/A
TOWN: Waterbury, Connecticut
PROJECT NAME: Waterbury Bus Maintenance Garage | PROJECT NUMBER: 1002-0003GT
N. Coordinate | E. Coordinate
Boring Contractor: General Borings Inc. | Client: Wendel Dushscherer Design, P.C.

Surface Elevation (f): 303.26 | Date Started: 11-29-01 | Date Finished: 11-29-01
Groundwater Observations: @ 9.0 f after 0 hours | @ f after hours

	Casing	Auger	Mud	Sampler	Core Barrel
Type	BW NW HW FJ	Solid Hollow		SS	B (st) B (dt) NX (st) NX (dt)
Size I.D. (in)	2 1/2 3 4 4			1 3/8	1 3/8
Hammer (lbs)	300 300 300 300		Bit	140	Type Diamond
Fall (in)	30 30 30 24			30	of Bit Carbide

DEPTH	Casing blows per foot	SAMPLE DEPTH IN FEET FROM - TO	NO.	PEN. F	REC. F	Type	Blows per 6 inches or RQD	STRATA CHANGE: DEPTH, ELEV.	FIELD IDENTIFICATION OF SOIL, REMARKS (INCL. COLOR, LOSS OF WASH WATER, ETC.)
0		0.0-2.0	S1	2.0	0.6	SS1	4 5 7 15	303.3	Fine SAND, trace gravel, trace silt, trace roots, medium, dark brown, FILL
		2.0-3.3	S2	1.3	0.8	SS2	29 37 100/3	2.0	SAND, fine to coarse and GRAVEL, trace silt, V. dense, brown
		5.0-6.3	S3	1.3	0.3	SS3	28 34 100/3	301.3	SAND, fine to coarse and GRAVEL, trace silt, V. dense, brown
7.5								10.0	Fine SAND, little fine to coarse gravel, trace silt, V. dense, brown
		10.0-12.0	S4	2.0	0.8	SS4	19 33 29 38	293.3	End of boring at 12'
15								12.0	
								291.3	
22.5									
30									
37.5									

Casing: Size | From | To
Feet of: Earth 12.0 f | Rock 0.0 f | No. of Samples 4
NOTES:

SAMPLE TYPE CODING: D=Driven C=Core A=Auger UP=Undisturbed Piston V=Vane Test
PROPORTIONS USED: Trace = 1 - 10%, Little = 10 - 20%, SOME = 20 - 35%, And = 35 - 50%
Hole No. P-6 | Sheet 1 Of 1

REV.	DATE	DESCRIPTION	SHEET NO.
		REVISIONS	

FILENAME:

THE INFORMATION, INCLUDING ESTIMATED QUANTITIES OF WORK, SHOWN ON THESE SHEETS IS BASED ON LIMITED INVESTIGATIONS BY THE STATE AND IS IN NO WAY WARRANTED TO INDICATE THE CONDITIONS OF ACTUAL QUANTITIES OF WORK WHICH WILL BE REQUIRED.

DESIGNER/DRAFTER: TAR
CHECKED BY: TJZ
SCALE: AS NOTED

STATE OF CONNECTICUT
DEPARTMENT OF TRANSPORTATION

ARCHITECT: WENDEL
APPROVED BY: DCD
ENGINEERS: ReSTL DESIGNERS, CLOUGH HARBOUR ASSOC., AI ENGINEERS, WENDEL
DATE: 6/11/14

DESIGNED BY:
WENDEL
140 JOHN JAMES AUDUBON PKWY.,
SUITE 201
AMHERST, NEW YORK
14228

STATE OF CONNECTICUT — DAVID C. DUSCHERER — No. 11937 — REGISTERED PROFESSIONAL ENGINEER

PROJECT TITLE:
WATERBURY BUS MAINTENANCE FACILITY REPLACEMENT

ADDRESS:
FROST BRIDGE ROAD
WATERTOWN, CONNECTICUT 06787

DRAWING TITLE:
BORING LOGS

PROJECT NO. **0431-0006**
DRAWING NO. **C-609**
SHEET NO. **03.046**

DRILLER **Erik Delpriore**		Hole No. **P-7**
INSPECTOR **I. Okonkwo**		Line **N/A**
	TOWN: **Waterbury, Connecticut**	Station **N/A**
SOILS ENGINEER	PROJECT NAME: **Waterbury Bus Maintenance Garage**	Offset **N/A**
Earth Design Associates Inc.	PROJECT NUMBER: **1002-0003GT**	N. Coordinate
		E. Coordinate

Boring Contractor: **General Borings Inc.** Client: **Wendel Dushscherer Design, P.C.**

Surface Elevation (f): **301.90**		Casing				Auger		Mud	Sampler		Core Barrel				
Date Started: **11-28-01**	Utilized						X		X						
Date Finished: **11-28-01**	Type	BW	NW	HW	FJ	Solid	Hollow		SS		B (st)	B (dt)	NX (st)	NX (dt)	
Groundwater Observations	Size I.D. (in)	2 1/2	3	4	4				1 3/8		1 3/8				
@ **8.0** f after **0** hours	Hammer (lbs)	300	300	300	300			Bit	140		Type		Diamond		
@ f after hours	Fall (in)	30	30	30	24				30		of Bit		Carbide		

DEPTH	Casing blows per foot	SAMPLE DEPTH IN FEET FROM - TO	NO.	PEN. F	REC. F	Type	Blows per 6 inches or RQD	STRATA CHANGE: DEPTH, ELEV.	FIELD IDENTIFICATION OF SOIL, REMARKS (INCL. COLOR, LOSS OF WASH WATER, ETC.)
0								301.9	4" BLACKTOP, 8" GRAVEL, COBBLES
		1.0-3.0	S1	2.0	1.5	SS1	6 6 5 7	1.0	Fine SAND and SILT, medium, dark brown, FILL
		3.0-5.0	S2	2.0	1.3	SS2	8 11 10 12	300.9	Fine SAND, some silt, trace fine gravel, medium, dark brown, FILL
		5.0-7.0	S3	2.0	1.2	SS3	14 25 37 80	5.0	SAND, fine to coarse and GRAVEL, fine to medium, trace coarse gravel, V. dense, brown
7.5								296.9	SAND, fine to coarse, and GRAVEL, fine to coarse, V. dense, brown
		10.0-12.0	S4	2.0	1.5	SS4	14 21 39 53		End of boring at 12'
								12.0	
								289.9	
15									
22.5									
30									
37.5									

Casing Size	From	To	Feet of Earth	Feet of Rock
			12.0 f	**0.0 f**
			No. of Samples	
			4	

NOTES: _____

SAMPLE TYPE CODING: D=Driven C=Core A=Auger UP=Undisturbed Piston V=Vane Test

PROPORTIONS USED: Trace = 1 - 10%, Little = 10 - 20%, SOME = 20 - 35%, And = 35 - 50%

Hole No. **P-7**

Sheet **1** Of **1**

REV.	DATE	DESCRIPTION	SHEET NO.
		REVISIONS	

FILENAME:

THE INFORMATION, INCLUDING ESTIMATED QUANTITIES OF WORK, SHOWN ON THESE SHEETS IS BASED ON LIMITED INVESTIGATIONS BY THE STATE AND IS IN NO WAY WARRANTED TO INDICATE THE CONDITIONS OF ACTUAL QUANTITIES OF WORK WHICH WILL BE REQUIRED.

DESIGNER/DRAFTER: **TAR**

CHECKED BY: **TJZ**

SCALE: **AS NOTED**

STATE OF CONNECTICUT
DEPARTMENT OF TRANSPORTATION

ARCHITECT: **WENDEL**

ENGINEERS: **ReSTL DESIGNERS, CLOUGH HARBOUR ASSOC., AI ENGINEERS, WENDEL**

APPROVED BY: **DCD**

DATE: **6/11/14**

DESIGNED BY:
WENDEL
140 JOHN JAMES AUDUBON PKWY.,
SUITE 201
AMHERST, NEW YORK
14228

STATE OF CONNECTICUT — DAVID C. DUSCHERER — No. 11937 — REGISTERED PROFESSIONAL ENGINEER

PROJECT TITLE:
WATERBURY BUS MAINTENANCE FACILITY REPLACEMENT

ADDRESS:
FROST BRIDGE ROAD
WATERTOWN, CONNECTICUT 06787

DRAWING TITLE:
BORING LOGS

PROJECT NO. **0431-0006**

DRAWING NO. **C-610**

SHEET NO. 03.047