F H W A REGION	STATE	TOWN	FED. AID PROJ. NO.	PROJ. NO.	YEAR	SHEET NUMBER
1	CONN.	VARIOUS	CT-05-0109	301-0145	2013	01.03.001

01.03 – CATENARY DETAILS 1

DRAWING INDEX

SHEET NO.	DRAWING NO.	TITLE
01.03.001	G-1-3	INDEX SHEET 1
01.03.002	G-8	GENERAL NOTES
01.03.003	G-9	LEGEND
01.03.004	G-10	ABBREVIATIONS
01.03.005	G-13	SIGNS
01.03.006	G-14	SIGNS
01.03.007	G-36	INDEX TO B.O.M. REFERENCES
01.03.008	G-SB-1	SOIL BORING LOG - SHEET 1
01.03.009	G-SB-2	SOIL BORING LOG - SHEET 2
01.03.010	G-SB-3	SOIL BORING LOG - SHEET 3
01.03.011	G-SB-4	SOIL BORING LOG - SHEET 4
01.03.012	G-SB-5	PLAN-BORING LOGS - SHEET 1
01.03.013	G-SB-6	PLAN-BORING LOGS - SHEET 2
01.03.014	G-SB-7	PLAN-BORING LOGS - SHEET 3
01.03.015	G-SB-8	PLAN-BORING LOGS - SHEET 4
01.03.016	G-SB-9	CONTROL POINT TIE PLANS
01.03.017	G-SB-10	BORING LOGS - SHEET 1
01.03.018	G-SB-11	BORING LOGS - SHEET 2
01.03.019	C-1	TYPICAL TENSION LENGTH
01.03.020	C-2	UNINSULATED OVERLAP, TANGENT TRACK
01.03.021	C-3	UNINSULATED OVERLAP, CURVED TRACK
01.03.022	C-4	UNINSULATED OVERLAP, SUPPORT AND
		REGISTRATION CROSS SECTION
01.03.023	C-5	INSULATED OVERLAP, TANGENT TRACK
01.03.024	C-6	INSULATED OVERLAP, CURVED TRACK
01.03.025	C-7	INSULATED OVERLAP, SUPPORT AND
		REGISTRATION CROSS SECTION
01.03.026	C-8	CROSSOVER ARRANGEMENT
01.03.027	C-9	MID-POINT ARRANGEMENT
01.03.028	C-10	PULL-OFF ARRANGEMENT
01.03.029	D-1	CATENARY CONDUCTOR DATA, STRUCTURE SPACING
		RISE AND FALL & ERECTION TENSION CHARTS
01.03.030	D-2	CATENARY LOADING, BLOW-OFF & PERMISSABLE
		MIDSPAN STATIC OFFSET CHARTS
01.03.031	D-3	CATENARY HANGER LENGTHS
01.03.032	D-4	FIXED TERMINATION SIMPLE CATENARY CONDUCTOR
		DATA, RISE AND FALL & ERECTION TENSION CHARTS
01.03.033	D-11	ANCILLARY CONDUCTORS, CONDUCTOR DATA,
		AND ERECTION TENSION CHARTS
01.03.034	D-12	PANTOGRAPH CLEARANCE AND SECURITY GAUGE
01.03.035	D-13	SAMPLE HANGER LENGTH FORM
01.03.036	D-18	MISCELLANEOUS ASSEMBLIES - SHEET 1
01.03.037	E-1	MESSENGER SUPPORT ASSEMBLIES
01.03.038	E-2	TAIL WIRE SUPPORT ASSEMBLIES
01.03.039	E-3	CONTACT WIRE REGISTRATION ASSEMBLIES
01.03.040	E-4	PULL-OFF ASSEMBLIES
01.03.041	E-5	HANGERS, KNUCKLES & CROSS CONTACT
		ASSEMBLIES
01.03.042	E-6	DEAD END ASSEMBLIES
01.03.043	E-7	CROSS SPAN ASSEMBLIES
01.03.044	E-8	FEEDER AND JUMPER ASSEMBLIES
01.03.045	E-9	BALANCE WEIGHT ASSEMBLIES - SHEET 1

SHEET NO.	DRAWING NO.	TITLE
01.03.046	E-9-1	BALANCE WEIGHT ASSEMBLIES - SHEET 2
01.03.047	E-10	CATENARY ANCHOR ASSEMBLIES
01.03.048	E-11	SECTION INSULATOR ASSEMBLIES
01.03.049	E-12	GUY ASSEMBLY
01.03.050	E-13	GROUNDING ASSEMBLIES
01.03.051	E-14	MISCELLANEOUS ASSEMBLIES - SHEET 1
01.03.052	E-15	MISCELLANEOUS ASSEMBLIES - SHEET 2
01.03.053	E-16	MISCELLANEOUS ASSEMBLIES - SHEET 3
01.03.054	E-17	MISCELLANEOUS ASSEMBLIES - SHEET 4
01.03.055	E-19	GENERAL ARRANGEMENT FOR BRIDGE
		ATTACHMENTS
01.03.056	E-53	MOD CONTROL PANEL AC & DC SCHEMATICS (TYP.)
01.03.057	E-60	AERIAL CABLE SUPPORT ARRANGEMENT
01.03.058	E-91	MOTOR OPERATED SWITCH CONTROL
		SCHEMATICS (TYP.)
01.03.059	E-93	SNOW MELTER UNIT SUBSTATION
		CONTROL SCHEMATIC
01.03.060	E-102	500 KVA SNOW MELTER CABINET OUTLINE &
		PLAN VIEWS (TYP.)
01.03.061	E-103	DISCONNECT SWITCH AND FEEDING ARRANGEMENT
01.03.062	E-129	CL&P - INSULATOR DETAILS
01.03.063	E-130	CL&P - INSULATOR AND GROUNDWIRE
01.03.064	E-131	U.I. COMPANY - INSULATOR DETAILS
01.03.065	E-132	U.I. COMPANY - INSULATOR AND GROUNDWIRE
01.03.066	E-140	SECTIONALIZING DIAGRAM - C-1A
01.03.067	E-141	SECTIONALIZING DIAGRAM - C-2
01.03.068	E-142	SECTIONALIZING DIAGRAM (EXISTING)
01.03.069	E-143	SECTIONALIZING DIAGRAM (FINAL)
01.03.070	E-155	EXISTING CONTROL HOUSE DETAILS - CP 257
01.03.071	E-156	CONTROL HOUSE MODIFICATIONS - CP 257
01.03.072	E-157	EXISTING INTERCONNECTION DIAGRAM -
		RTU SUPERVISORY & CONTROL PANEL (CP 257)
01.03.073	E-159	SCADA RTU AND LCP - 1/0 POINT SCHEDULE - CP 257
01.03.074	E-160	SNOW MELTER UNIT SUBSTATION CATENARY TAP
01.03.075	E-161	SINGLE LINE DIAGRAM - CP 257
01.03.076	E-162	SITE PLAN AND CABLE AND CONDUIT ARRANGEMENT
		(CP 257)
01.03.077	E-163	CONDUIT AND CABLE SCHEDULE - CP 257
01.03.078	E-165	SINGLE LINE DIAGRAM - BRIDGEPORT AB-814
01.03.079	E-166	EXISTING CONTROL HOUSE - BRIDGEPORT AB-814
01.03.080	E-167	CONTROL HOUSE DETAILS (MODIFIED) -
		BRIDGEPORT AB-814
01.03.081	E-168	CONTROL PANEL WIRING DIAGRAM
		UNIT NO. 2 FRONT - BRIDGEPORT AB-814
01.03.082	E-170	RTU INTERCONNECTION DIAGRAM (EX) -
		BRIDGEPORT AB-814
01.03.083	E-171	RTU INTERCONNECTION DIAGRAM (MODIFIED)
		BRIDGEPORT AB-814
01.03.084	E-173	SITE PLAN - BRIDGEPORT AB-814
01.03.085	E-174	CONDUIT AND CABLE SCH. - BRIDGEPORT AB-814
01.03.086	E-177	SITE PLAN - CP 241
01.03.087	E-178	CONDUIT AND CABLE SCHEDULE - CP 241

SHEET NO.	DRAWING NO.	TITLE
01.03.088	F-6	DROP TUBE PLACEMENT
01.03.089	F-7	TYPICAL SEQUENCE FOR CROSS OVER
		OVER TRACK CATENARY REPLACEMENT
01.03.090	F-12	LIMITS OF REPOINTING
01.03.091	F-24	TYPICAL GROUND WIRE PROFILE
01.03.092	F-25	TYPICAL GROUND WIRE AND INNER DUCT SUPPORTS
01.03.093	F-32	CABLE MESSENGER ATTACHMENT TO
		PULL-OFF POLES
01.03.094	F-33	GROUND WIRE PROFILE - SHEET 1 - NORTH SIDE
01.03.095	F-34	GROUND WIRE PROFILE - SHEET 1 - SOUTH SIDE
01.03.096	F-35	GROUND WIRE PROFILE - SHEET 1 - NORTH SIDE
		STRUCTURE 788 TO STRUCTURE 831
01.03.097	F-36	GROUND WIRE PROFILE - SHEET 1 - SOUTH SIDE
		STRUCTURE 788 TO STRUCTURE 862
01.03.098	L-14	WIRING PLAN - STR. 529 TO STR. 532
01.03.099	L-15	WIRING PLAN - STR. 532 TO STR. 547
01.03.100	L-16	WIRING PLAN - STR. 547 TO STR. 560
01.03.101	L-17	WIRING PLAN - STR. 560 TO STR. 575
01.03.102	L-18	WIRING PLAN - STR. 575 TO STR. 585
01.03.103	L-19	WIRING PLAN - STR. 585 TO STR. 599
01.03.104	L-20	WIRING PLAN - STR. 599 TO STR. 613
01.03.105	L-21	WIRING PLAN - STR. 613 TO STR. 628
01.03.106	L-22	WIRING PLAN - STR. 628 TO STR. 641A
01.03.107	L-40	WIRING PLAN - STR. 788 TO STR. 799
01.03.108	L-41-1	WIRING PLAN - STR. 799 TO STR. 812 - SHEET 1
01.03.109	L-41-2	WIRING PLAN - STR. 799 TO STR. 812 - SHEET 2
01.03.110	L-42	WIRING PLAN - STR. 812 TO STR. 823X
01.03.111	L-43	WIRING PLAN - STR. 823X TO STR. 835
01.03.112	L-44	WIRING PLAN - STR. 835 TO STR. 849
01.03.113	L-45	WIRING PLAN - STR. 849 TO STR. BR-2C
01.03.114	L-46	WIRING PLAN - STR. BR-1E TO STR. 863
01.03.115	L-47	WIRING PLAN - STR. 863 TO STR. 876

THE INFORMATION, INCLUDING ESTIMATED QUANTITIES OF WORK SHOWN ON THESE SHEETS IS BASED ON LIMITED INVESTIGATIONS BY THE STATE AND IS IN NO WAY WARRANTED TO INDICATE THE TRUE CONDITIONS OR ACTUAL QUANTITIES OR DISTRIBUTION OF QUANTITIES OF WORK WHICH WILL BE REQUIRED.

URS CORPORATION AES
500 ENTERPRISE DRIVE
ROCKY HILL, CT 06067
1-(860)-529-8882

NO.	DATE	DESCRIPTION

REVISIONS

STATE OF CONNECTICUT
DEPARTMENT OF TRANSPORTATION

SECTION C-1a & C-2 NEW HAVEN LINE

CATENARY REPLACEMENT BETWEEN WALK BRIDGE AND STRUCTURE 636, PECK BRIDGE AND STRUCTURE 863

VOLUME 1 SUBSET 3
DRAWING INDEX
CATENARY DETAILS 1

ENGINEER: URS CORPORATION AES
DESIGNER: RW | DRAFTER: AMK | CHECKER: AJM
APPROVED: T. HOLLAND | DATE: 09/13/13
STRUCTURE NO. | BRIDGE LOG NO. | STRUCTURE SHEET NO. G-1-3

F H W A REGION	STATE	TOWN	FED. AID PROJ. NO.	PROJ. NO.	YEAR	SHEET NUMBER
1	CONN.	VARIOUS	CT-05-0109	301-0145	2013	01.03.002

GENERAL NOTES

1. ALL WORK SHALL BE PERFORMED IN STRICT ACCORDANCE WITH THE REQUIREMENTS OF RELATED SECTIONS OF CDOT FORM 816, NATIONAL ELECTRICAL CODE (LATEST EDITION), NATIONAL ELECTRICAL SAFETY CODE (LATEST EDITION) AND AMERICAN RAILWAY ENGINEERING AND MAINTENANCE OF WAY ASSOCIATIONS (AREMA) AND AISC. FOR ORDER OF PRECEDENCE FOR THE CONTRACT DOCUMENTS REFER TO FORM 816 SECT. 1.05.04.

2. THE CONTRACTOR SHALL FIELD VERIFY AND LOCATE ALL OVERHEAD AND UNDERGROUND PUBLIC AND RAILROAD UTILITIES. PRIOR TO COMMENCEMENT OF THE WORK, THE ENGINEER, RAILROAD, AND THE UTILITY MUST BE NOTIFIED. REFER TO CDOT FORM 816 SECT. 1.05.06. ANY DAMAGE TO THE EXISTING UTILITIES SHALL BE REPAIRED BY THE CONTRACTOR AT HIS OWN COST.

3. THE CONTRACTOR SHALL VERIFY THE ACTUAL LOCATIONS OF EXISTING UTILITIES AND DUCT BANKS PRIOR TO COMMENCEMENT OF WORK.

4. THE CONTRACTOR SHALL PROTECT, PRESERVE, INCORPORATE, TEMPORARILY RELOCATE AND, IF NECESSARY, SUPPORT ALL EXISTING UTILITIES, AND ITEMS TO REMAIN. THE CONTRACTOR SHALL REPAIR OR REPLACED ANY ITEM DAMAGED DURING THE COURSE OF WORK AT NO ADDITIONAL COST, TO THE SATISFACTION OF THE ENGINEER.

5. THE CONTRACTOR SHALL PROTECT FROM DAMAGE ALL MONUMENTS, SURVEY POINTS AND BENCH MARKS NOT DESIGNATED FOR REMOVAL AND SHALL ESTABLISH OFFSET POINTS AS REQUIRED.

6. DUE TO THE NATURE OF PROJECTS RELATING TO THE REPLACEMENT OF EXISTING CATENARY SYSTEMS, REQUIRED MODIFICATIONS AND RELOCATIONS OF EXISTING FACILITIES CAN NOT ALWAYS BE ACCURATELY DETERMINED PRIOR TO THE COMMENCEMENT OF WORK. THE CONTRACTOR IS ADVISED THAT SIGNAL CABINETS, SIGNAL CABLES, CABLE TRAYS, LADDERS, PLATFORMS, GUYS, AND/OR OTHER IMPEDIMENTS AT EXISTING STRUCTURES MAY HAVE TO BE REMOVED AND/OR RELOCATED TO COMPLETE THE REQUIRED PROJECT TASKS. THESE REMOVALS/RELOCATIONS SHALL BE PERFORMED BY THE CONTRACTOR AT NO ADDITIONAL COST TO THE STATE. THE CONTRACTOR MUST RECEIVE APPROVAL FROM ENGINEER PRIOR TO THE RELOCATION / REMOVALS.

7. APPROVAL, BY THE ENGINEER, OF SHOP DRAWINGS AND PROCEDURES FOR CONSTRUCTION AND TESTING SHALL NOT ABSOLVE THE CONTRACTOR FROM ANY LIABILITY.

8. ALONG TRACK STATIONING OF POLE FOUNDATIONS AND DOWN GUY ANCHOR FOUNDATIONS SHALL BE VERIFIED BY THE CONTRACTOR PRIOR TO COMMENCING WORK. ANY CONFLICTS SHOULD BE REFERRED TO THE ENGINEER FOR RESOLUTION.

9. POLE OFFSET DIMENSION IS GIVEN FROM CENTERLINE OF TRACK TO FACE OF CATENARY SUPPORT STRUCTURE AT HIGH RAIL LEVEL, AND MUST BE VERIFIED BY THE CONTRACTOR PRIOR TO FABRICATION OF ANY AFFECTED STRUCTURES OR ASSEMBLIES.

10. HANGER LENGTH WILL BE SUPPLIED TO THE CONTRACTOR IN ACCORDANCE WITH HIS SUPPLIED FIELD DIMENSIONS. ANY ADDITIONAL ADJUSTMENTS WILL BE THE CONTRACTOR'S RESPONSIBILITY.

11. ALLOWABLE CONTACT WIRE GRADIENT IN TEMPORARY SITUATIONS SHALL BE NOT GREATER THAN 1 IN 3 TIMES THE LINE SPEED IN MPH.

12. THE CONTRACTOR SHALL CONSULT THE ENGINEER FOR RESOLVING ANY CONFLICT IN MAINTAINING WIRE HEIGHTS AT A PARTICULAR LOCATION.

13. CONTACT WIRE STAGGERS RELATE TO THE PROJECTED CENTERLINE OF TRACK, NORMAL TO RAIL AND ALL VERTICAL DIMENSIONS RELATE TO THE HIGHEST RAIL LEVEL (H.R.L.) OF THE HIGHEST ELECTRIFIED TRACK.

14. A MINIMUM OF 1-1/2 INCHES MECHANICAL CLEARANCE SHALL BE MAINTAINED BETWEEN A MOVING PANTOGRAPH AND ANY CATENARY SUPPORT AND REGISTRATION ASSEMBLIES.

15. REFERENCED ASSEMBLY NUMBERS SHOWN IN THE CONTRACT DRAWINGS ARE RAILROAD'S TYPICAL STANDARD ARRANGEMENTS AND SHALL BE BROKEN DOWN INTO ITEMS FOR MATERIAL ORDERING PURPOSES. THE COMPONENTS SHALL CONFORM TO THE DRAWINGS PROVIDED IN THIS PACKAGE AND MUST BE INTERCHANGEABLE WITH EXISTING RAILROAD PARTS.

16. THE CONTRACTOR SHALL UNDERTAKE ADEQUATE MEASURES TO PROTECT AERIAL CABLES AND TRANSMISSION LINE WIRES AND CONDUCTORS FROM ANY DAMAGE WHILE ERECTING NEW POLES OR DRILLING CAISSONS. SHOULD ANY CABLE OR CONDUCTOR BE DAMAGED DURING THE CONTRACTORS TRACK OUTAGE TIME, IT WILL BECOME NECESSARY TO TERMINATE THE TRACK OUTAGE TO PERFORM THE REQUIRED REPAIR AND TESTING.

17. IT SHALL BE THE CONTRACTOR'S RESPONSIBILITY TO SEE THAT HE HAS THE LATEST APPROVED SET OF DRAWINGS AND SPECIFICATIONS BEFORE STARTING ANY PART OF THE WORK.

18. IT IS THE RESPONSIBILITY OF THE CONTRACTOR TO CHECK THE DIMENSIONS OF EXISTING STRUCTURE TO ENSURE PROPER FIT BEFORE PROCEEDING WITH THE FABRICATION OF STRUCTURAL STEEL.

19. NO EXPLOSIVES OF ANY NATURE OR DANGEROUS MATERIALS OF ANY KIND SHALL BE USED DURING THE CONSTRUCTION OF THE PROJECT WITHOUT THE APPROVAL OF THE ENGINEER.

20. ALL EXISTING CATENARY STRUCTURE STATIONING IS BASED ON N.Y.N.H. & H.R.R. ELECTRIFICATION CATENARY STRUCTURE CROSS SECTIONS.

21. GUY ANCHORS SHALL BE INSTALLED IN LINE WITH THE CONDUCTORS BEING TERMINATED UNLESS OTHERWISE NOTIFIED.

22. TEMPORARY SUPPORT SHALL BE PROVIDED TO THE CATENARY STRUCTURES WHEN LOADING CONDITIONS DIFFER TO THOSE SHOWN ON THE CONTRACT PLANS ARE ANTICIPATED. THE TEMPORARY SUPPORT IS SUBJECT TO APPROVAL BY THE ENGINEER.

23. NEW PULL-OFF POLES SHALL BE RAKED 1/8 INCH PER FOOT OF HEIGHT AWAY FROM THE TRACK.

24. TRACK WORK HAS BEEN PERFORMED AFTER THE SURVEY WAS MADE ON WHICH WIRE HEIGHTS, VERSINE AND SUPERELEVATION WERE ESTABLISHED AND SHOWN ON THE ERECTION DIAGRAMS AND CATENARY LAYOUTS PLANS. THE TRACK WORK MAY HAVE RESULTED IN CHANGES THAT WILL AFFECT THE DESIGN CRITERIA. THE CONTRACTOR SHALL VERIFY THE TOP OF RAIL TO BOTTOM OF TRUSS DIMENSIONS AT EACH BRIDGE OR CATENARY STRUCTURE FOR EACH TRACK AND VERIFY THE VERSINES FOR EACH SPAN ON ALL THE CURVES (TAKEN ON ONE INSIDE TRACK ONLY). ADVISE THE ENGINEER OF ANY DISCREPANCIES FROM THE PLANS 8 (EIGHT) WEEKS PRIOR TO THE START OF ANY CATENARY WORK, SO THE DESIGN MAY BE ADJUSTED ACCORDINGLY. FAILURE TO PROVIDE THESE DISCREPANCIES WILL RESULT IN CORRECTIVE WORK BY THE CONTRACTOR AT NO ADDITIONAL COST TO THE STATE. SURVEY WILL REQUIRE THE PRESENCE OF A MNRR FLAGMAN AND A CLASS "A" MAN. SHOULD ANY TRACK WORK BE PERFORMED BY THE RAILROAD AFTER THE CONTRACTOR'S INITIAL SURVEY, THAT TRACK IS TO BE RE-SURVEYED BY THE CONTRACTOR.

25. STATIONING OF STRUCTURES IS ON BASE LINE WHICH IS LOCATED ON CENTER BETWEEN TRACK 1 AND 2.

26. A 3 FT. MINIMUM CLEARANCE IS REQUIRED BETWEEN LIVE CONDUCTORS AND CLIMBABLE STRUCTURES. THE CONTRACTOR SHALL MAINTAIN THIS MINIMUM CLEARANCE FOR ALL TEMPORARY WORK. WHEN ADJUSTMENTS ARE REQUIRED TO MOVE OR RELOCATE LIVE CONDUCTORS, THE WORK SHALL BE DONE AT NO ADDITIONAL COST TO THE STATE.

27. THE CONTRACTOR IS ADVISED THAT CONSTRUCTION ACTIVITIES WILL OCCUR IN THE VICINITY OF NORTH EAST UTILITY (N.E.U.) AND UNITED ILLUMINATING CO. (UI) HIGH VOLTAGE LINES. OUTAGES ARE REQUIRED WHEN THE CONTRACTOR IS WORKING WITHIN A MINIMUM OF 20' OF (N.E.U. OR UI) HIGH VOLTAGE LINES. THE CONTRACTOR SHALL BE RESPONSIBLE FOR COORDINATING NECESSARY OUTAGES, A MINIMUM OF 6 MONTHS IN ADVANCE OF THE REQUIRED OUTAGE, THROUGH THE (N.E.U. OR UI) CONSTRUCTION REPRESENTATIVE IN WRITING, WITH A COPY OF THE REQUEST TO THE ENGINEER. NO UTILITY OUTAGES WILL BE AVAILABLE BETWEEN MEMORIAL DAY THRU LABOR DAY. (N.E.U. OR UI) OUTAGES MAY BE REQUIRED FOR THE FOLLOWING ACTIVITES: INSTALLATION OF STRUCTURAL STEEL, STEEL (MISCELLANEOUS) STRUCTURAL STEEL REPAIRS, AERIAL GROUND WIRE & WORK ON RAILROAD FEEDER AND SIGNAL WIRES, AS WELL AS REMOVAL OF AERIAL GROUND AND/OR ALONG TRACK JUMPER WIRE.

28. THE CONTRACTOR IS ADVISED THAT THEY ARE RESPONSIBLE FOR PERFORMING TWO SURVEYS ON THE (N.E.U. OR UI) FEEDERS. THE FIRST SURVEY WILL ESTABLISH EXISTING CONDITIONS PRIOR TO PREPARING STEEL SHOP DRAWINGS. THE SECOND SURVEY WILL DOCUMENT AS-BUILT CONDITIONS.

29. CONTRACTOR SHALL PROVIDE SHOP DRAWINGS FOR ALL TYPICAL EQUIPMENT DRAWINGS BASED ON EQUIPMENT BEING PROVIDED.

30. CONTRACTOR SHALL DEVELOP AN INSTALLATION PLAN FOR THE SNOW MELTER CABINET AND SUBMIT TO ENGINEER FOR APPROVAL PRIOR TO INSTALLATION. INSTALLATION PLAN SHALL BE BASED ON FIELD CONDITIONS AND INCLUDE CONDUIT SIZE, TYPE AND DEPTH.

THE INFORMATION, INCLUDING ESTIMATED QUANTITIES OF WORK SHOWN ON THESE SHEETS IS BASED ON LIMITED INVESTIGATIONS BY THE STATE AND IS IN NO WAY WARRANTED TO INDICATE THE TRUE CONDITIONS OR ACTUAL QUANTITIES OR DISTRIBUTION OF QUANTITIES OF WORK WHICH WILL BE REQUIRED.

URS CORPORATION AES
500 ENTERPRISE DRIVE
ROCKY HILL, CT 06067
1-(860)-529-8882

NO.	DATE	DESCRIPTION

REVISIONS

STATE OF CONNECTICUT
JEFFREY R. HOLLAND
No. 22347
LICENSED
PROFESSIONAL ENGINEER

URS CORPORATION AES
500 ENTERPRISE DRIVE
ROCKY HILL, CT 06067

STATE OF CONNECTICUT
DEPARTMENT OF TRANSPORTATION

SECTION C-1a & C-2 NEW HAVEN LINE

CATENARY REPLACEMENT BETWEEN WALK BRIDGE AND STRUCTURE 636, PECK BRIDGE AND STRUCTURE 863

GENERAL NOTES

ENGINEER: URS CORPORATION AES
DESIGNER: RW | DRAFTER: AMK | CHECKER: AJM
APPROVED: T. HOLLAND | DATE: 09/13/13
STRUCTURE NO. | BRIDGE LOG NO. | STRUCTURE SHEET NO. G-8

F H W A REGION	STATE	TOWN	FED. AID PROJ. NO.	PROJ. NO.	YEAR	SHEET NUMBER
1	CONN.	VARIOUS	CT-05-0109	301-0145	2013	01.03.003

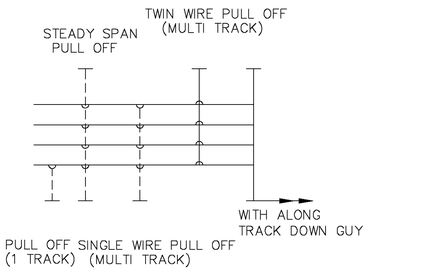

BACK GUY

ALONG TRACK DOWN GUY

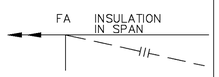

FIXED ANCHOR WITH ALONG TRACK DOWN GUY

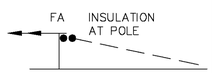

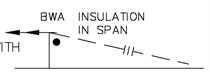

BALANCE WEIGHT ANCHOR WITH ALONG TRACK DOWN GUY

RIDING CONTACT WIRE (WITH CONTACT WIRE DIRECTION OF PULL AND STAGGER IN INCHES)

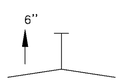

NON-RIDING CONTACT WIRE (WITH CONTACT WIRE DIRECTION OF PULL AND STAGGER IN INCHES)

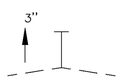

KNUCKLE (JOINING CATENARIES)

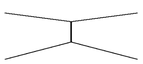

CROSS OVER

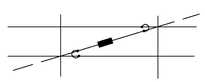

IN SPAN INSULATION

FULL FEEDING

POTENTIAL EQUALIZING JUMPER

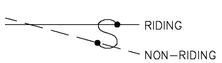

HIGH RAIL LEVEL

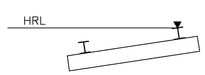

PULL OFF STRUCTURES

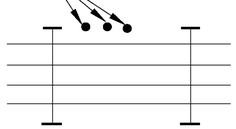

TRACK CENTERLINE

PERPENDICULAR TO

MILE POST

AIR GAP (SECTIONING DIAGRAM) — AG

SECTION INSULATOR (SECTIONING DIAGRAM) — K

SECTION INSULATOR (HIGH SPEED)

SECTION INSULATOR (LOW SPEED)

OVERBRIDGE

UNDERGRADE BRIDGE

WIRE RUN NUMBER — 4

TROLLEY AIR BREAK

SUPERELEVATION — 1

FIXED ANCHOR LENGTH DISTANCE IN FEET FROM TERMINATION TO TERMINATION — 2300 NXX

VERSINE (MID ORDINATE) AND CURVE DIRECTION — 6"

HEIGHT RELATIVE TO HIGH RAIL LEVEL — +1'-6"

IN SPAN FEEDING JUMPER

UNINSULATED OVERLAPS OUTER & INNER TRACKS (TANGENT TRACK)

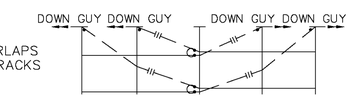

INSULATED OVERLAPS OUTER & INNER TRACKS (TANGENT TRACK)

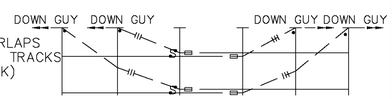

TWIN CANTILEVER

SINGLE CANTILEVER

SECTION NOT ELECTRIFIED

SUBSTATION FEED

UNINSULATED OVERLAP

INDICATING LIGHT (R = RED, G = GREEN, A = AMBER, B = BLUE, W = WHITE, Y = YELLOW) — R

PART NUMBER — 260

ITEM NUMBER — 6

AUTO-TRANSFORMER — RAIL

POTHEAD

NORMALLY OPEN CONTACTS

NORMALLY CLOSED CONTACTS

BATTERY

PHASE BREAK

GROUND CONNECTION/GROUNDING

FUSE

FUSE DISCONNECT

DUPLEX RECEPTACLE

DENOTES TERMINAL FOR EXTERNAL CONNECTION

LOCAL ALARM RELAY — LOR

RESISTOR — R

RED LIGHT — R

GREEN LIGHT — G

AUXILIARY TRANSFORMER

LIGHTNING OR SURGE ARRESTER WITH GROUND CONNECTION — LA

MANUAL PUSHBUTTON SWITCH – NORMALLY OPEN

MANUAL PUSHBUTTON SWITCH – NORMALLY CLOSED

VOLTMETER — V

DRAW-OUT DEVICE

MOLDED CASE CIRCUIT BREAKER

TEST SWITCH — TS

AMMETER — A

CONTROL SWITCH INTERLOCK SUPERVISORY — CS S

CONTROL SWITCH INTERLOCK (LOCAL) — CS L

CONTROL SWITCH INTERLOCK CLOSING — CS C

SUPERVISORY CONTROL SWITCH INTERLOCK CLOSING — SUPV C

RELAY COIL

MOD CONTROL BOX — 55

POLE MOUNTED AUXILIARY TRANSFORMER

NO CONNECTION

ELECTRIC CONNECTION

MANUALLY OPERATED DISCONNECT SWITCH

MOTOR OPERATED DISCONNECT SWITCH — M

GROUNDING SWITCH

THE INFORMATION, INCLUDING ESTIMATED QUANTITIES OF WORK SHOWN ON THESE SHEETS IS BASED ON LIMITED INVESTIGATIONS BY THE STATE AND IS IN NO WAY WARRANTED TO INDICATE THE TRUE CONDITIONS OR ACTUAL QUANTITIES OR DISTRIBUTION OF QUANTITIES OF WORK WHICH WILL BE REQUIRED.

URS CORPORATION AES
500 ENTERPRISE DRIVE
ROCKY HILL, CT 06067
1-(860)-529-8882

NO.	DATE	DESCRIPTION

REVISIONS

URS CORPORATION AES
500 ENTERPRISE DRIVE
ROCKY HILL, CT 06067

STATE OF CONNECTICUT
DEPARTMENT OF TRANSPORTATION

SECTION C-1a & C-2 NEW HAVEN LINE

CATENARY REPLACEMENT BETWEEN WALK BRIDGE AND STRUCTURE 636, PECK BRIDGE AND STRUCTURE 863

LEGEND

ENGINEER: URS CORPORATION AES
DESIGNER: RW | DRAFTER: AMK | CHECKER: AJM
APPROVED: T. HOLLAND | DATE: 09/13/13
STRUCTURE NO. | BRIDGE LOG NO. | STRUCTURE SHEET NO. G-9

PROJECT CONTROL DATE: 09/13/13 DISK FILENAME: G-9.dwg 100% DESIGN

F H W A REGION	STATE	TOWN	FED. AID PROJ. NO.	PROJ. NO.	YEAR	SHEET NUMBER
1	CONN.	VARIOUS	CT-05-0109	301-0145	2013	01.03.004

A	AMPERE
ABAN	ABANDONED
ABUT	ABUTMENT
AC	ALTERNATING CURRENT
ACI	AMERICAN CONCRETE INSTITUTE
ACT	ACTUAL
ADJ	ADJACENT
AFF	ABOVE FINISHED FLOOR
AH	AHEAD
AISC	AMERICAN INSTITUTE OF STEEL CONSTRUCTION
APPROX	APPROXIMATE
AREA	AMERICAN RAILWAY ENGINEERING ASSOCIATION
ASSY	ASSEMBLY
ASTM	AMERICAN SOCIETY OF TESTING & MATERIALS
A-T, A.T.	AUTO - TENSIONED
ATM	ALONG TRACK MOVEMENT
ATS	AUTOMATIC TRANSFER SWITCH
AUX	AUXILIARY
AVE	AVENUE
AWG	AMERICAN WIRE GAUGE
AWS	AMERICAN WELDING SOCIETY
&	AND
BAT	BATTERY
B/B	BACK TO BACK
BCH	BATTERY CHARGER
BH	BATTERY HOUSE
BK	BACK
BKR	BREAKER
BLDG	BUILDING
BLVD	BOULEVARD
BM	BILL OF MATERIAL
BO	BLOW-OFF
BR	BRIDGE
BRKT	BRACKET
BRZ	BRONZE
B-SPAN	BODY SPAN
BT	BUS TIE
BTM	BOTTOM
BWA	BALANCE WEIGHT ANCHOR
BZ	BRONZE
C	CONDUIT
CA	CABLE
CAB	CABINET
CAP	CAPACITOR
CAT	CATENARY
CB	CIRCUIT BREAKER
CDOT	CONNECTICUT DEPARTMENT OF TRANSPORTATION
CF	CUBIC FEET
CFM	CUBIC FEET PER MINUTE
CFT	CENTIFEET
CHAM	CHAMFER
CHGR	CHARGER
CKT	CIRCUIT
℄	CENTERLINE
CLF	CHAIN LINK FENCE
CL&P	CONNECTICUT LIGHT AND POWER
CLR	CLEARANCE OR CLEAR
CO	CONDUIT ONLY, COMPANY
COMM	COMMUNICATION
COMP	COMPOSITE
CONC	CONCRETE
COND	CONDUIT/CONDUCTOR
CONST	CONSTRUCTION OR CONSTRUCT
CONT	CONTINUATION, CONTINUOUS, CONTROL
CONTR	CONTRACTOR
CR	CONDUIT RISER
CS	CURVE-SPIRAL
CT	CURRENT TRANSFORMER
CTR	CENTER
Cu.	COPPER
CU YD	CUBIC YARD
CW	CONTACT WIRE

DC	DIRECT CURRENT
DE	DEAD END
DEG, °	DEGREE
DEPT	DEPARTMENT
DET	DETAIL
DGA	DOWN GUY ANCHOR
DIA, ø	DIAMETER (ALSO SHOWN ø)
DIAG	DIAGRAM
DIFF	DIFFERENCE
DIM	DIMENSION
DISC	DISCONNECT
DIST	DISTANCE
DIST	DISTRIBUTION
DP	DISTRIBUTION PANEL
DWG	DRAWING
E	EXPONENT (10_x), EAST
EA	EACH
Ea	SUPERELEVATION IN INCHES
E/O	EAST OF
EB	EAST BOUND
EHS	EXTRA HIGH STRENGTH
ELEC	ELECTRIC, ELECTRICAL
EL, ELEV	ELEVATION
EMH	ELECTRICAL MANHOLE
ENCL	ENCLOSURE
EPB	EMERGENCY PUSH BUTTON
EQ	EQUAL
EQN	EQUATION
EQUIP	EQUIPMENT
ETC	ET CETERA
EX.,EXIST	EXISTING
F	FAHRENHEIT
F#	FEEDER #
FA	FIXED ANCHOR
FS	FAR SIDE
FBO	FURNISHED BY OTHERS
FDN	FOUNDATION
FDR	FEEDER
FIN	FINISH
FL	FLOOR
FLX	FLEXIBLE
F.O.S.	FACTOR OF SAFETY
FPM	FEET PER MINUTE
FREQ	FREQUENCY
FRYD	FREIGHT YARD
FT, '	FEET
F.T./F-T	FIXED TERMINATION
FTA	FIXED TERMINATION ANCHOR
FU	FUSE
GALV	GALVANIZED
G/L	GROUND LINE
GND	GROUND
GRD	GROUND
GRS	GALVANIZED RIGID STEEL
GS	GALVANIZED STEEL
GW	GUY WIRE
GW	GROUND WIRE
HEX	HEXAGONAL
HH	HAND HOLE
HORIZ	HORIZONTAL
HRL	HIGH RAIL LEVEL
HT	HEIGHT
HTR	HEATER
HS	HIGH STRENGTH STEEL
HV	HIGH VOLTAGE
HVAC	HEATING VENTILATING & AIR CONDITIONING
Hz	HERTZ
H.D.	HARD DRAWN

IB	IMPEDANCE BONDS
IC	INTERRUPTING CURRENT
ICS	INDICATING CONTROL SWITCH
ID	INSIDE DIAMETER
IEEE	INSTITUTE OF ELECTRICAL AND ELECTRONIC ENGINEERS
IFC	INTERFACE CABINET
IHRL	INDIVIDUAL HIGH RAIL LEVEL
IL	INTERLOCK
IN, "	INCH
INCL	INCLUDE, INCLUDING
INDIC	INDICATION
INDV	INDIVIDUAL
INSR	INSULATOR
INSUL	INSULATION
INTLK	INTERLOCK
I.R.	IN-RUNNING (RIDING CONTACT WIRE)
I/S	IN-SPAN
J	JUMPER
JCT	JUNCTION
K	KIP OR KIPS
KCMIL	THOUSAND CIRCULAR MILES
K-FT	KIP-FOOT
KV	KILOVOLT
KVA	KILOVOLT AMPERE
KSF	KIPS PER SQUARE FOOT
KSI	KIPS PER SQUARE INCH
KW	KILOWATT
KWH	KILOWATT HOUR
L	LEFT/SPAN LENGTH
LA	LIGHTNING ARRESTOR
LBA	LOCAL BELL ALARM
LB,LBS	POUND,POUNDS
LB/FT	POUNDS PER FOOT
LC	LOCAL CONTROL DEVICE AT EQUIPMENT
LCP	LOCAL CONTROL PANEL
LF	LINEAR FEET
LG	LONG OR LENGTH
L.H.	LEFT HAND
LOC	LOCATION
LOCL	LOCAL
L.O.	LOCK OUT
LOR	LOCKOUT RELAY
LP	LOW-POINT
LS	LUMP SUM
LT	LIGHT
LTG	LIGHTING
LTNG	LIGHTNING
LV	LOW VOLTAGE
M	MOMENTS
MAG	MAGNETIC
MAX	MAXIMUM
MANUF	MANUFACTURER
MCB	MOLDED CASE BREAKER
MECH	MECHANICAL
MESS	MESSENGER
MH	MANHOLE
MJ	MAIN JUMPER
MIN	MINIMUM
MISC	MISCELLANEOUS
M-N	METRO-NORTH
MOD	MOTOR OPERATED DISCONNECT
MOS	MANUALLY OPERATED SWITCH
MP	MILE POST
MPA	MID-POINT ANCHOR

MPH	MILES PER HOUR
MR	MULTI-RATIO
MS	MIDSPAN
MSO	MIDSPAN OFFSET (STATIC)
MTD	MOUNTED
MTG	MOUNTING
MTR	METERING
MTS	MANUAL TRANSFER SWITCH
MV	MILLIVOLTS
MW, M/W	MESSENGER WIRE
M/L	MAIN LINE
N	NORTH, AC SYSTEM NEUTRAL
NA	NOT APPLICABLE
NC, N.C.	NORMALLY CLOSED, NEW CANAAN FEED
NCF	NEW CANAAN FEEDER
NEC	NATIONAL ELECTRICAL CODE
NEG (-)	NEGATIVE
NESC	NATIONAL ELECTRICAL SAFETY CODE
NF	NEAR FACE
N.H.	NEW HAVEN
NIC, N.I.C.	NOT IN CONTRACT
NO, N.O.	NORMALLY OPEN
No., #	NUMBER
NOM	NOMINAL
NORM	NORMAL
NR	NOT REGISTERED
NS	NOT SUPPORTED
N/S	NOT SUPPORTED
NSR	NOT SUPPORTED AND NOT REGISTERED
NTS	NOT TO SCALE
NS	NEAR SIDE
NY	NORTH YARD
O/BR	OVER BRIDGE
OC	ON CENTER
OCS	OVERHEAD CATENARY SYSTEM
OD	OUTSIDE DIAMETER
OH	OVERHEAD
O/H	OVERHEAD
OHL	OVERHEAD LINE
O/L	OVERLAP
OOR	OUT OF RUNNING
OPR	OPERATE
Ø	PHASE
PAN	PANTOGRAPH
PB	PULL BOX
PG	PHASE GAP
PH OR ø	PHASE
PL	PLATE
PLAT	PLATFORM
PNL	PANEL
PO	PULL-OFF
POS	POSITION
POS (+)	POSITIVE
PS	POINT OF SWITCH
LB, LBS	POUND, POUNDS
LB/FT	POUNDS PER FOOT
PRI	PRIMARY
PROP	PROPOSED
PSF	POUNDS PER SQUARE FOOT
PSI	POUNDS PER SQUARE INCH
PT	POTENTIAL TRANSFORMER
PTD	PAINTED
PU	PICK-UP
PVC	POLYVINYL CHLORIDE
PWR	POWER
PVMT	PAVEMENT
PH	PHASE

QTY	QUANTITY
R	RADIUS, RIGHT
RCPT	RECEPTACLE
RD	ROAD
RE	RUNNING EDGE OF RAIL
REF	REFERENCE
REM	REMOTE
RET W	RETAINING WALL
REV	REVISE
REQD	REQUIRED
R.H.	RIGHT HAND
RL	RAIL LEVEL
RLY	RELAY
RM	ROOM
ROW	RIGHT-OF-WAY
RR	RAIL ROAD
R/R	RAIL ROAD
RTU	REMOTE TERMINAL UNIT
S	SHEAR, STAGGER
SC	SUPERVISORY CONTROL
SCADA	SUPERVISORY CONTROL AND DATA ACQUISITION
SCITC	SUPERVISORY CONTROL INTERFACE TERMINAL CABINET
SE	STAGGER EFFECT
SEC	SECOND
SECD	SECONDARY
SECT	SECTION
SED	STRUCTURE ERECTION DIAGRAM
SERV.	SERVICE
SI	SECTION INSULATOR
SIG	SIGNAL
SL	STREET LIGHT
SMT	SNOW MELTING TRANSFORMER
SMU	SNOW MELTER UNIT
SOP	SETTING OUT POINT
SP	SPARE
SPEC	SPECIFICATION
SPS	SMALL PART STEELWORK
SPST	SINGLE POLE SINGLE THROW
SQ. IN.	SQUARE INCH
SQ. FT.	SQUARE FEET
SS	SANITARY SEWER
S.S.	STAINLESS STEEL
ST	SPIRAL-TANGENT, STORM SEWER LINE, STREET
STA	STATION, STATIONING
STAM	STAMFORD
STD	STANDARD
STM	SINGLE TRACK MILE
STR	STRUCTURE
STRUCT	STRUCTURE
SUB	SUBSTATION
SUPV	SUPERVISORY
SUSP	SUSPENDED
SW	SWITCH
SWA	SINGLE WIRE ANCHOR
SWH	SWITCH HEATER
SWGR	SWITCHGEAR
SWS	SWITCHING STATION
SY	SOUTH YARD
SYE	SOUTH YARD EAST
SYN	SYNCHRONIZE, SYNTHETIC
SYS	SYSTEM

T	TRIP
T#	TRACK #
TBD	TO BE DETERMINED
TBR	TO BE REMOVED
TECH	TECHNICAL
TEL	TELEPHONE
TELE.	TELEPHONE
TEMP	TEMPERATURE, TEMPORARY
TERM	TERMINATION
T/F	TOP OF FOUNDATION
T/G	TOP OF GROUND LINE
TH.	THICK
THERM	THERMOSTAT
THRU	THROUGH
TL	TENSION LENGTH
T/LR	TOP OF LOW RAIL
TO	TURNOUT
T.O.P.	TOES OF POINTS
TP	TRACTION POWER
TPS	TRACTION POWER SUBSTATION
TR	TRANSFORMER
TRANSF	TRANSFORMER
TRANSM	TRANSMISSION
T/R	TOP OF RAIL
TRK	TRACK
T/W	TROLLEY WIRE
TYP, TYP.	TYPICAL
U/BR	UNDER BRIDGE
UG	UNDERGRADE, UNDERGROUND
U/G	UNDERGROUND
U/S	UNDERSIDE
U/SIDE	UNDERSIDE
UNINS	UNINSULATED
UTIL	UTILITY
V	VOLT, VERTICAL
VA	VOLT AMPS
VEN	VENTILATION
VERT	VERTICAL
Vw	WIND VELOCITY
W	WITH, WEST
W/	WITH
WB	WEST BOUND
WF	WIDE FLANGE
WG	WATER GAUGE
WT	WEIGHT
W/O	WITHOUT
XFMR	TRANSFORMER
X-ING	CROSSING
X/O	CROSSOVER
X-SECT	CROSS SECTION
YD	YARD

THE INFORMATION, INCLUDING ESTIMATED QUANTITIES OF WORK SHOWN ON THESE SHEETS IS BASED ON LIMITED INVESTIGATIONS BY THE STATE AND IS IN NO WAY WARRANTED TO INDICATE THE TRUE CONDITIONS OR ACTUAL QUANTITIES OR DISTRIBUTION OF QUANTITIES OF WORK WHICH WILL BE REQUIRED.

URS CORPORATION AES
500 ENTERPRISE DRIVE
ROCKY HILL, CT 06067
1-(860)-529-8882

NO.	DATE	DESCRIPTION

REVISIONS

URS CORPORATION AES
500 ENTERPRISE DRIVE
ROCKY HILL, CT 06067

STATE OF CONNECTICUT
DEPARTMENT OF TRANSPORTATION

SECTION C-1a & C-2 NEW HAVEN LINE

CATENARY REPLACEMENT BETWEEN WALK BRIDGE AND STRUCTURE 636, PECK BRIDGE AND STRUCTURE 863

ABBREVIATIONS

ENGINEER: URS CORPORATION AES
DESIGNER: RW | DRAFTER: AMK | CHECKER: AJM
APPROVED: T. HOLLAND | DATE: 09/13/13
STRUCTURE NO. | BRIDGE LOG NO. | STRUCTURE SHEET NO. G-10

F H W A REGION	STATE	TOWN	FED. AID PROJ. NO.	PROJ. NO.	YEAR	SHEET NUMBER
1	CONN.	VARIOUS	CT-05-0109	301-0145	2013	01.03.005

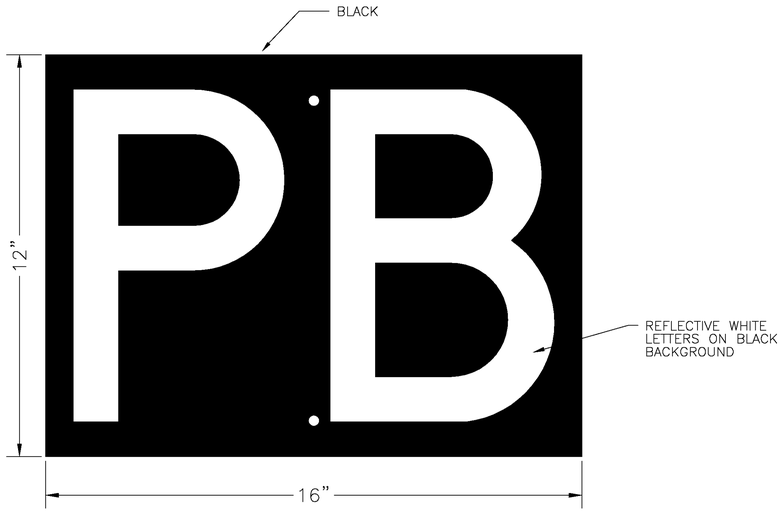

PHASE BREAK NOTICE

NOTES:

1. PHASE BREAK NOTICE SIGNS SHALL CONFORM TO FORM 816, SECTION 12.08 – SIGN FACE SHEET ALUMINUM, TYPE 1. ALL SIGNS SHALL BE MADE OF ⅛ INCH ALUMINUM PLATE AS SPECIFIED IN FORM 816, SECTION M.18.13.
2. FOUR SIGNS TO BE LOCATED ON THE EAST SIDE OF STRUCTURE 816 (ONE OVER EACH TRACK) AND FOUR SIGNS TO BE LOCATED ON THE WEST SIDE OF STRUCTURE 812A (ONE OVER EACH TRACK).
3. SIGNS TO BE FIELD DRILLED AND BOLTED AT UNIFORM HEIGHTS ACROSS THE TRUSS.
4. CONTRACTOR TO SUPPLY ONE SAMPLE SIGN FOR THE ENGINEER'S APPROVAL.

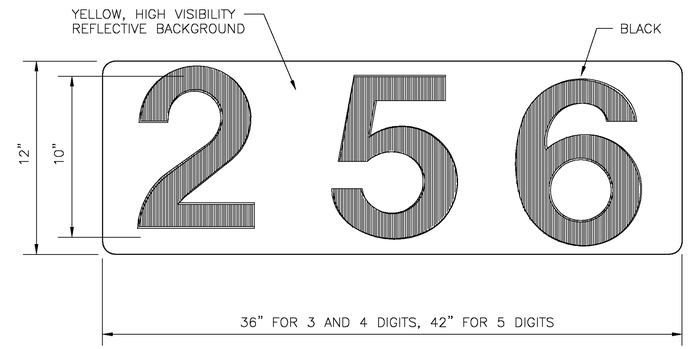

TYPE 'A'

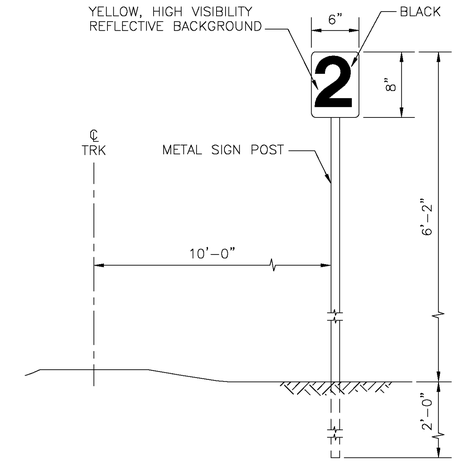

TYPE 'B'
CAR MARKER SIGN

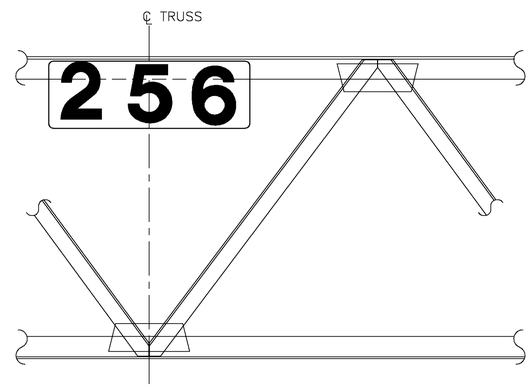

LOCATION OF TYPE 'A' SIGN
(LOCATE AS CLOSE TO CENTER OF TRUSS AS PRACTICAL)

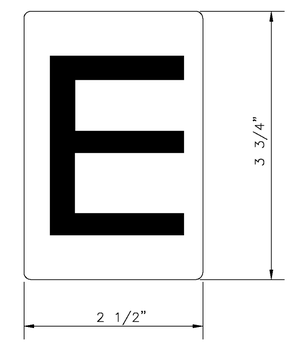

ACTUAL SIZE OF BLACK LETTERS AND NUMBERS ON YELLOW "SCOTCHLITE" BACKGROUND

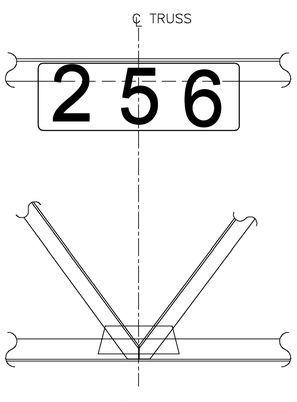

LOCATION OF TYPE 'A' SIGN
(LOCATE AS CLOSE TO CENTER OF TRUSS AS PRACTICAL)

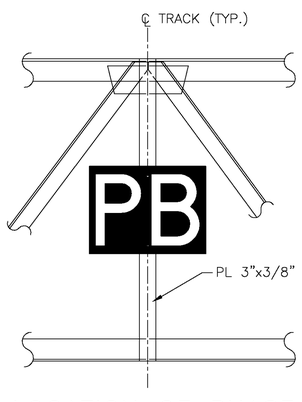

LOCATION OF PHASE BREAK NOTICE SIGN
(LOCATE AS CLOSE TO CENTER OF TRACKS AS PRACTICAL)

NOTES:

POSITIONING OF SIGNS:

1. TYPE 'A': ONE SIGN ON EAST AND WEST SIDE OF TRUSS. SIGN TO BE INSTALLED CLEAR OF DROP TUBE SUPPORTS AND RIVET HEADS.
2. TYPE 'B': THERE SHALL BE 3 SIGNS (1, 2, 3) BEYOND THE ENDS OF EACH PLATFORM.
3. TYPE 'D': ONE SIGN ON EAST AND WEST SIDE OF POLE, EACH SIDE OF TRACK AT 6'-0" ABOVE NEAREST RAIL LEVEL.
4. FOR GENERAL NOTES, SEE DRAWING G-8.

SCALE: NONE

THE INFORMATION, INCLUDING ESTIMATED QUANTITIES OF WORK SHOWN ON THESE SHEETS IS BASED ON LIMITED INVESTIGATIONS BY THE STATE AND IS IN NO WAY WARRANTED TO INDICATE THE TRUE CONDITIONS OR ACTUAL QUANTITIES OR DISTRIBUTION OF QUANTITIES OF WORK WHICH WILL BE REQUIRED.

URS CORPORATION AES
500 ENTERPRISE DRIVE
ROCKY HILL, CT 06067
1-(860)-529-8882

NO.	DATE	DESCRIPTION

REVISIONS

URS CORPORATION AES
500 ENTERPRISE DRIVE
ROCKY HILL, CT 06067

STATE OF CONNECTICUT
DEPARTMENT OF TRANSPORTATION

SECTION C-1a & C-2 NEW HAVEN LINE

CATENARY REPLACEMENT BETWEEN WALK BRIDGE AND STRUCTURE 636, PECK BRIDGE AND STRUCTURE 863

SIGNS

ENGINEER: URS CORPORATION AES
DESIGNER: RW | DRAFTER: AMK | CHECKER: AJM
APPROVED: T. HOLLAND | DATE: 09/13/13
STRUCTURE NO. | BRIDGE LOG NO. | STRUCTURE SHEET NO. G-13

PROJECT CONTROL DATE: 09/13/13 DISK FILENAME: G-13.dwg 100% DESIGN

F H W A REGION	STATE	TOWN	FED. AID PROJ. NO.	PROJ. NO.	YEAR	SHEET NUMBER
1	CONN.	VARIOUS	CT-05-0109	301-0145	2013	01.03.006

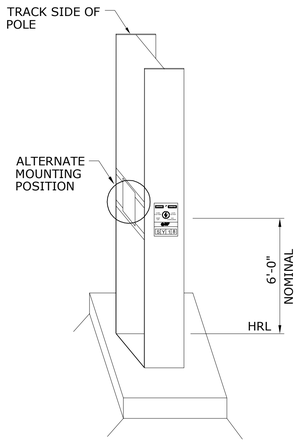

TYPICAL MOUNTING OF SIGN TYPE D

(TYPICAL SIGN MOUNTING LOCATION IS BOTH SIDES OF ALL POLES)

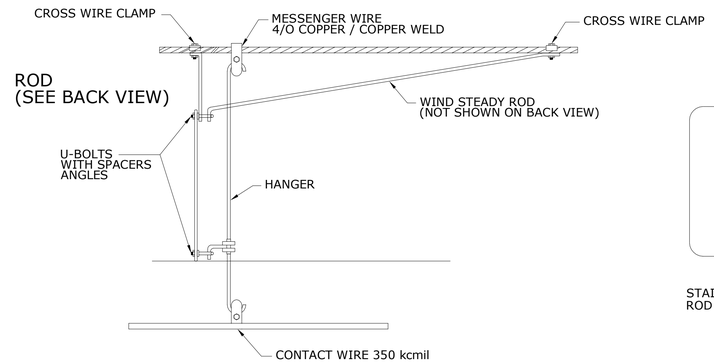

SIDE VIEW

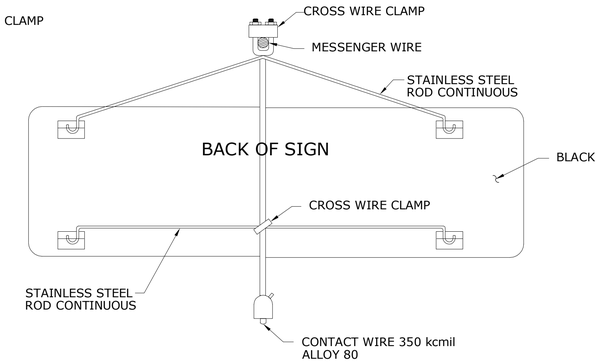

BACK VIEW

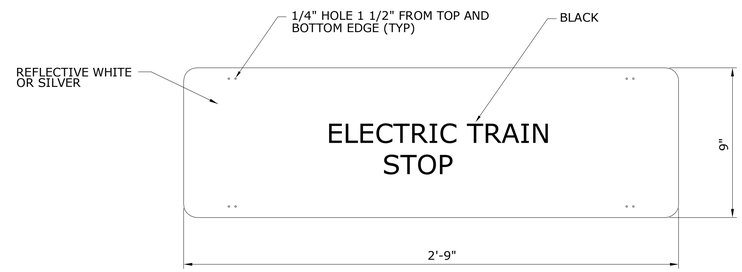

FRONT VIEW

ASSEMBLY ETS

(TYPICAL LOCATION, END OF ELECTRIFICATION)

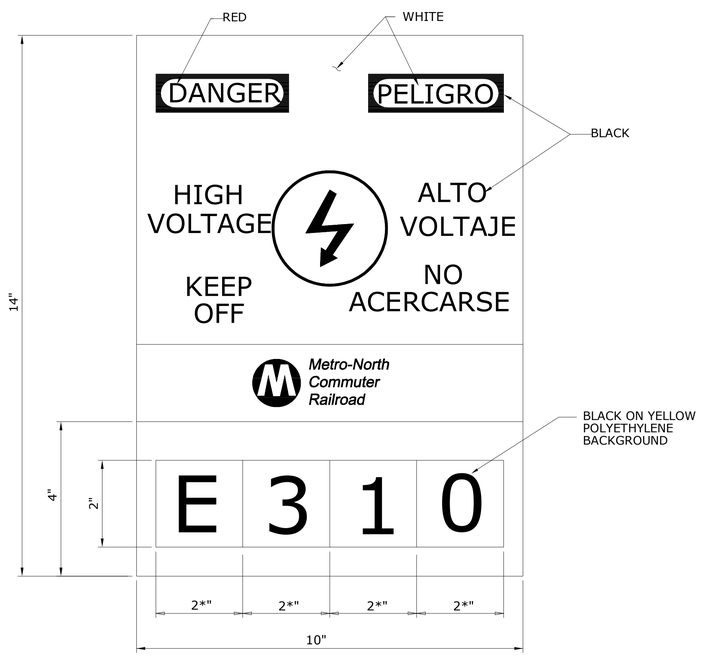

TYPE D

NOTES:

1. WARNING SIGN SHALL BE 0.125" THICK RIGID ALUMINUM OR .25" THICK LEXAN BACKING PLATE. ALL SHARP EDGES SHALL BE ROUNDED.
2. SIGNS SHALL BE ATTACHED USING ATTACHMENTS AND HARDWARE AS SHOWN.
3. LETTERS SHALL BE ON FRONT OF SIGN ONLY.

THE INFORMATION, INCLUDING ESTIMATED QUANTITIES OF WORK SHOWN ON THESE SHEETS IS BASED ON LIMITED INVESTIGATIONS BY THE STATE AND IS IN NO WAY WARRANTED TO INDICATE THE TRUE CONDITIONS OR ACTUAL QUANTITIES OR DISTRIBUTION OF QUANTITIES OF WORK WHICH WILL BE REQUIRED.

URS CORPORATION AES
500 ENTERPRISE DRIVE
ROCKY HILL, CT 06067
1-(860)-529-8882

NO.	DATE	DESCRIPTION

REVISIONS

URS CORPORATION AES
500 ENTERPRISE DRIVE
ROCKY HILL, CT 06067

STATE OF CONNECTICUT
DEPARTMENT OF TRANSPORTATION

SECTION C-1a & C-2 NEW HAVEN LINE

CATENARY REPLACEMENT BETWEEN WALK BRIDGE AND STRUCTURE 636, PECK BRIDGE AND STRUCTURE 863

SIGNAGE

ENGINEER: URS CORPORATION AES

DESIGNER: RW | DRAFTER: AMK | CHECKER: AJM

APPROVED: T. HOLLAND | DATE: 09/13/13

STRUCTURE NO. | BRIDGE LOG NO. | STRUCTURE SHEET NO. G-14

PROJECT CONTROL DATE: 09/13/13 DISK FILENAME: G-14.DWG 100% DESIGN

F H W A REGION	STATE	TOWN	FED. AID PROJ. NO.	PROJ. NO.	YEAR	SHEET NUMBER
1	CONN.	VARIOUS	CT-05-0109	301-0145	2013	01.03.007

ITEM	REF. DRAWING
10B	E-17
14A	E-60
ABA	E-10
ABAS	S-11
ACC	E-17
AHA	E-5
AHB	E-10
AIS	S-21
BK	E-60, S-21
BP	S-25
BR	S-25
BRPO	E-16
BWA	E-9
CA	S-9, S-10
CAN	D-18
CBA	E-5
CC	E-4
CDEA	E-6, E-14
CDS	S-11
CIA	E-16
CKA	E-5
CSA	E-7
CSD	S-11, S-15, S-16
CTS	E-17
CWS	E-17
DBA	S-15
DEA	E-14
DS	E-103, E-172
DSVI	E-103
DT	S-13, S-17, S-18
DTS	S-14
FDEA	E-6
FOUNDATION TYPE 'X'	S-36 TO S-41
FWS	E-17

ITEM	REF. DRAWING
G	E-12
GA	S-31, S-32, S-33
GBA	S-20
GC	S-20
GRA	S-33
GRD	E-13
GTSB	S-12
GW	E-13
GWS	E-17
HA	E-17
HS	E-11
JS	S-11
JWS	S-9
JDD	S-9
LHA	E-17
MCDS	S-19
MCIA	E-6, E-16
MDEA	E-6, E-14
MIA	E-9, E-14, E-16
MKA	E-5, E-17
MPA	E-10
MPAS	S-15
MS	E-1, E-19
MWS	E-17
P	S-4, S-6
PCE	E-6
PE	S-9, S-10
PF	S-7
PE-CD	S-6
PO	E-4, E-7
PEP	S-6
RA	E-3, E-15
RHA	E-5

ITEM	REF. DRAWING
SA	E-3
SBA	S-14, S-16, S-20
SHA	E-5
SIA	E-7
SPS	E-17
T	S-1, S-2
THB	E-10
TMDEA	E-10
TS	E-2
TSA	E-9
TSG	E-9
TYPE "X" JUMPER	E-8
VHA	E-5

THE INFORMATION, INCLUDING ESTIMATED QUANTITIES OF WORK SHOWN ON THESE SHEETS IS BASED ON LIMITED INVESTIGATIONS BY THE STATE AND IS IN NO WAY WARRANTED TO INDICATE THE TRUE CONDITIONS OR ACTUAL QUANTITIES OR DISTRIBUTION OF QUANTITIES OF WORK WHICH WILL BE REQUIRED.

URS CORPORATION AES
500 ENTERPRISE DRIVE
ROCKY HILL, CT 06067
1-(860)-529-8882

NO.	DATE	DESCRIPTION

REVISIONS

URS CORPORATION AES
500 ENTERPRISE DRIVE
ROCKY HILL, CT 06067

STATE OF CONNECTICUT
DEPARTMENT OF TRANSPORTATION

SECTION C-1a & C-2 NEW HAVEN LINE

CATENARY REPLACEMENT BETWEEN WALK BRIDGE AND STRUCTURE 636, PECK BRIDGE AND STRUCTURE 863

INDEX TO B.O.M. REFERENCES

ENGINEER: URS CORPORATION AES
DESIGNER: RW | DRAFTER: AMK | CHECKER: AJM
APPROVED: T. HOLLAND | DATE: 09/13/13
STRUCTURE NO. | BRIDGE LOG NO. | STRUCTURE SHEET NO. G-36

F H W A REGION	STATE	TOWN	FED. AID PROJ. NO.	PROJ. NO.	YEAR	SHEET NUMBER
1	CONN.	VARIOUS	CT-05-0109	301-0145	2013	01.03.008

SOILTESTING, INC.
140 OXFORD RD.
OXFORD, CT 06478
CT (203) 888-4531
NY (914) 946-4850

CLIENT: Raytheon Infrastructure Inc.
SHEET 1 OF 1
HOLE NO. C-1
PROJECT NO. G112-5930-00
PROJECT NAME: New Haven Railroad Line (CT DOT)
BORING LOCATIONS: 110' East of CAT #568; 30' North of Tracks; 9' Below top Rail
OFFSET
FOREMAN - DRILLER: LD/dj
INSPECTOR: RM-GEI
LOCATION: Between Stamford & Housatonic River

	CASING	SAMPLER	CORE BAR
TYPE	H S A	SS	NWD4
SIZE I.D.	3 3/4"	1 3/8"	2 1/8"
HAMMER WT.		140#	BIT
HAMMER FALL		30"	dia.

DATE START 8-2-00
DATE FINISH 8-2-00
SURFACE ELEV.
GROUND WATER ELEV.

GROUND WATER OBSERVATIONS
AT 5' FT AFTER 0 HOURS
AT __FT AFTER __HOURS

DEPTH	CASING BLOWS PER FOOT	SAMPLE NO	Type	PEN	REC	DEPTH @ BOT	BLOWS PER 6 IN ON SAMPLER (FORCE ON TUBE) 0-6	6-12	12-18	CORING TIME PER FT (MIN)	DENSITY OR CONSIST / MOIST	STRATA CHANGE DEPTH / ELEV	FIELD IDENTIFICATION OF SOIL REMARKS INCL. COLOR, LOSS OF WASH WATER, SEAMS IN ROCK, ETC.
		1	ss	24"	12"	2'0"	15	6			dry		Brn F-SAND,sm F-C gravel,lit silt
							6	1			compact		
		2	ss	24"	12"	4'0"	2	1			dry		Brn VF-SAND & SILT,tr F-gravel
							2	1			v-loose		
5		3	ss	24"	12"	6'0"	2	1			wet		Orng/brn F-M SAND & F-C GRAVEL,sm silt
							2	12			v-loose		
		4	ss	24"	12"	8'0"	35	27			wet		Orng F-M SAND & F-C GRAVEL,sm silt, lit F-sand
							12	6			dense		
10													
		5	ss	24"	16"	12'0"	4	6			wet		Gry VF-SAND & SILT,tr clay
							7	6			compact		
15													
		6	ss	24"	12"	17'0"	6	12			wet		Gry F-C SAND,sm F-C gravel,lit silt
							25	27			dense		
20													
		7	ss	24"	12"	22'0"	11	12			wet		Gry F-C SAND & F-C GRAVEL,sm silt
							14	5			compact		
25		8	ss	15"	20"	26'3"	10	45			wet		Gry F-C SAND & F-C GRAVEL,tr silt
							50/3				v-dense		
30													
		9	ss	24"	18"	32'0"	10	14			wet		SAME
							25	50			dense		
35													
		10	ss	24"	12"	37'0"	14	12			wet		Gry F-C SAND & F-C GRAVEL,tr silt
							11	10			compact		
		11	ss	24"	12"	42'0"	18	15			wet		Gry F-C SAND & F-C GRAVEL,tr silt
							13	16			compact	42'0"	E.O.B.

GROUND SURFACE TO _____FT. USED _____CASING THEN _____ CASING TO _____FT. HOLE NO C-1
A = AUGER UP = UNDISTURBED PISTON T = THINWALL V = VANE TEST
WOR = WEIGHT OF RODS WOH = WEIGHT OF HAMMER & RODS C = COARSE
SS = SPLIT TUBE SAMPLER H.S.A. = HOLLOW STEM AUGER M = MEDIUM
PORPORTIONS USED: TRACE = 0 - 10% LITTLE = 10 - 20% SOME = 20 - 35% AND =35 - 50% F = FINE

SOILTESTING, INC.
140 OXFORD RD.
OXFORD, CT 06478
CT (203) 888-4531
NY (914) 946-4850

CLIENT: Raytheon Infrastructure Inc.
SHEET 1 OF 1
HOLE NO. C-2
PROJECT NO. G112-5930-00
PROJECT NAME: New Haven Railroad Line (CT DOT)
BORING LOCATIONS: 150' East of CAT #571; 26'6" North of Track 5; 0'6" Below top Rail
OFFSET
FOREMAN - DRILLER: LD/jg
INSPECTOR: RM-GEI
LOCATION: Between Stamford & Housatonic River

	CASING	SAMPLER	CORE BAR
TYPE	FW	SS	NWD4
SIZE I.D.	3"	1 3/8"	2 1/8"
HAMMER WT.	300#	140#	BIT
HAMMER FALL	24"	30"	dia.

DATE START 8-1-00
DATE FINISH 8-1-00
SURFACE ELEV.
GROUND WATER ELEV.

GROUND WATER OBSERVATIONS
AT 19' FT AFTER 0 HOURS
AT __FT AFTER __HOURS

DEPTH	CASING BLOWS PER FOOT	SAMPLE NO	Type	PEN	REC	DEPTH @ BOT	BLOWS PER 6 IN ON SAMPLER (FORCE ON TUBE) 0-6	6-12	12-18	CORING TIME PER FT (MIN)	DENSITY OR CONSIST / MOIST	STRATA CHANGE DEPTH / ELEV	FIELD IDENTIFICATION OF SOIL REMARKS INCL. COLOR, LOSS OF WASH WATER, SEAMS IN ROCK, ETC.
		1	ss	24"	14"	2'0"	3	8			dry	6"	TOPSOIL
							5	4			compact		
		2	ss	24"	12"	4'0"	4	11			dry		Brn F-M SAND,lit silt,tr F-gravel,tr roots
							6	13			compact	3'0"	Drk-brn F-C SAND,sm F-C gravel,cinders, tr silt
5		3	ss	24"	14"	6'0"	13	12			dry		Brn F-C SAND,sm F-C gravel,tr silt, boulders
							18	19			compact		
		4	ss	24"	16"	8'0"	43	28			dry		Brn F-C SAND,sm F-C gravel,tr silt
							26	50			v-dense		
		5	ss	24"	12'	10'0"	27	26			dry		Brn F-C SAND & F-C GRAVEL,tr silt, boulders
10							17	22			dense		
		6	ss	24"	12"	12'0"	9	20			dry		SAME
							24	46			dense		
		7	ss	24"	16"	14'0"	29	22			dry		Brn/lt-brn F-C SAND,sm F-C gravel,tr silt, boulders
							23	26			dense		
15		8	ss	24"	14"	16'0"	11	20			moist		Brn F-C SAND & F-C GRAVEL,tr silt, boulders
							21	21			dense		
20		9	ss	14"	12"	21'2"	13	15			wet		Brn F-C SAND,sm F-C gravel,lit weathered rock, tr silt
							50/2				v-dense	22'0"	REFUSAL
		1	c	60"	15"	27'0"				3.5			BOULDERS and/or FRACTURED BEDROCK
										2.5			
25										1.5			
										1.5			
										1.5			
30												30'0"	Advanced casing to 30'
		10	ss	1"	0"	30'1"	50/1				wet		
		2	c	60"	55'	35'0"				4.5			BEDROCK
										5			
										4			
										4.5			
35										5		35'0"	E.O.B.
													E.O.B. 35'0"

GROUND SURFACE TO _____FT. USED _____CASING THEN _____ CASING TO _____FT. HOLE NO C-2
A = AUGER UP = UNDISTURBED PISTON T = THINWALL V = VANE TEST
WOR = WEIGHT OF RODS WOH = WEIGHT OF HAMMER & RODS C = COARSE
SS = SPLIT TUBE SAMPLER H.S.A. = HOLLOW STEM AUGER M = MEDIUM
PORPORTIONS USED: TRACE = 0 - 10% LITTLE = 10 - 20% SOME = 20 - 35% AND =35 - 50% F = FINE

THE INFORMATION, INCLUDING ESTIMATED QUANTITIES OF WORK SHOWN ON THESE SHEETS IS BASED ON LIMITED INVESTIGATIONS BY THE STATE AND IS IN NO WAY WARRANTED TO INDICATE THE TRUE CONDITIONS OR ACTUAL QUANTITIES OR DISTRIBUTION OF QUANTITIES OF WORK WHICH WILL BE REQUIRED.

URS CORPORATION AES
500 ENTERPRISE DRIVE
ROCKY HILL, CT 06067
1-(860)-529-8882

NO.	DATE	DESCRIPTION

REVISIONS

URS CORPORATION AES
500 ENTERPRISE DRIVE
ROCKY HILL, CT 06067

STATE OF CONNECTICUT
DEPARTMENT OF TRANSPORTATION

SECTION C-1a & C-2 NEW HAVEN LINE

CATENARY REPLACEMENT BETWEEN WALK BRIDGE AND STRUCTURE 636, PECK BRIDGE AND STRUCTURE 863

BORING LOGS -SHEET 1

ENGINEER: URS CORPORATION AES
DESIGNER: RW | DRAFTER: AMK | CHECKER: AJM
APPROVED: T. HOLLAND | DATE: 09/13/13
STRUCTURE NO. | BRIDGE LOG NO. | STRUCTURE SHEET NO. G-SB-1

PROJECT CONTROL DATE: 09/13/13 DISK FILENAME: G-SB-1.dwg 100% DESIGN

F H W A REGION	STATE	TOWN	FED. AID PROJ. NO.	PROJ. NO.	YEAR	SHEET NUMBER
1	CONN.	VARIOUS	CT-05-0109	301-0145	2013	01.03.009

SOILTESTING, INC.
140 OXFORD RD.
OXFORD, CT 06478
CT (203) 888-4531
NY (914) 946-4850

FOREMAN - DRILLER: PD/wc
INSPECTOR: Russ
GROUND WATER OBSERVATIONS
AT 8' FT AFTER 0 HOURS
AT __ FT AFTER __ HOURS

CLIENT: Raytheon Infrastructure Inc.
PROJECT NO. G112-5930-00
PROJECT NAME: New Haven Railroad Line (CT DOT)
LOCATION: Between Stamford & Housatonic River

	CASING	SAMPLER	CORE BAR
TYPE	H S A	SS	NWD4
SIZE I.D.	3 3/4"	1 3/8"	2 1/8"
HAMMER WT.		140#	BIT
HAMMER FALL		30"	dia.

SHEET 1 OF 1
HOLE NO. C-3
BORING LOCATIONS: 150' East of CAT #588
40' North of Tracks
11' Below top rail
OFFSET
DATE START 7-19-00
DATE FINISH 7-19-00
SURFACE ELEV.
GROUND WATER ELEV.

DEPTH	CASING BLOWS PER FOOT	SAMPLE NO	Type	PEN	REC	DEPTH @ BOT	BLOWS PER 6 IN ON SAMPLER (FORCE ON TUBE) 0-6	6-12	12-18	CORING TIME PER FT (MIN)	DENSITY OR CONSIST / MOIST	STRATA CHANGE DEPTH / ELEV	FIELD IDENTIFICATION OF SOIL REMARKS INCL. COLOR, LOSS OF WASH WATER, SEAMS IN ROCK, ETC.
		1	ss	24"	12"	2'0"	7	6			dry	3"	CRUSHED STONE
							4	5			loose		Drk-brn F-M SAND,sm silt,tr F-gravel
		2	ss	24"	12"	4'0"	7	4			dry		Lt-brn/gry F-SAND & SILT,tr organic silt
							3	3			loose		
5		3	ss	24"	22"	6'0"	3	4			moist		Lt-brn F-M SAND & SILT,sm F-C gravel
							5	5			loose		
		4	ss	24"	18"	8'0"	6	14			wet		SAME
							18	22			dense		
		5	ss	10"	6"	8'10"	36	100/4			wet		SAME
10												10'0"	
		6	ss	22"	18"	11'10"	25	45			wet		Drk-brn F-M SAND,sm silt,sm C-sand,sm
							67	100/4			v-dense		F-C gravel,cobbles & boulders
15		7	ss	1"	0"	15'1"	100/1				wet		SAME
											v-dense		
												18'0"	
20		8	ss	9"	2"	20'9"	46	100/3			wet		DECOMPOSED/FRACTURED ROCK
											v-dense		
25		9	ss	24"	24"	25'3"	100/3				wet		DECOMPOSED/FRACTURED ROCK
												25'6"	AUGER REFUSAL
		1	c	60"	48"	30'6"				2			BEDROCK
										2			
										2			
										2			
30										2		30'6"	E.O.B.
35													E.O.B. 30'6"

GROUND SURFACE TO _____FT. USED _____CASING THEN _____ CASING TO _____FT. **HOLE NO C-3**
A = AUGER UP = UNDISTURBED PISTON T = THINWALL V = VANE TEST
WOR = WEIGHT OF RODS WOH = WEIGHT OF HAMMER & RODS C = COARSE
SS = SPLIT TUBE SAMPLER H.S.A. = HOLLOW STEM AUGER M = MEDIUM
PORPORTIONS USED: TRACE = 0 - 10% LITTLE = 10 - 20% SOME = 20 - 35% AND =35 - 50% F = FINE

SOILTESTING, INC.
140 OXFORD RD.
OXFORD, CT 06478
CT (203) 888-4531
NY (914) 946-4850

FOREMAN - DRILLER: PD/dj
INSPECTOR: Russ
GROUND WATER OBSERVATIONS
AT 6' FT AFTER 0 HOURS
AT __ FT AFTER __ HOURS

CLIENT: Raytheon Infrastructure Inc.
PROJECT NO. G112-5930-00
PROJECT NAME: New Haven Railroad Line (CT DOT)
LOCATION: Between Stamford & Housatonic River

	CASING	SAMPLER	CORE BAR
TYPE	H S A	SS	
SIZE I.D.	4 1/4"	1 3/8"	
HAMMER WT.		140#	BIT
HAMMER FALL		30"	

SHEET 1 OF 1
HOLE NO. C-4
BORING LOCATIONS: 150' east of CAT #606
20' north of Track #3
2' Below top rail
OFFSET
DATE START 7-18-00
DATE FINISH 7-18-00
SURFACE ELEV.
GROUND WATER ELEV.

DEPTH	CASING BLOWS PER FOOT	SAMPLE NO	Type	PEN	REC	DEPTH @ BOT	BLOWS PER 6 IN ON SAMPLER (FORCE ON TUBE) 0-6	6-12	12-18	CORING TIME PER FT (MIN)	DENSITY OR CONSIST / MOIST	STRATA CHANGE DEPTH / ELEV	FIELD IDENTIFICATION OF SOIL REMARKS INCL. COLOR, LOSS OF WASH WATER, SEAMS IN ROCK, ETC.
		1	ss	24"	12"	2'0"	2	6			dry/moist		Blk F-M SAND,sm F-C gravel,lit silt
							10	5			compact		
		2	ss	8"	4"	2'8"	50	50/2			moist		Brn F-M SAND & C-GRAVEL,tr silt
5		3	ss	24"	18"	6'0"	10	3			v-dense		
							2	2			wet	5'0"	
		4	ss	24"	18"	8'0"	1	1			medium		ORGANIC SILT & ORGANICS (peat)
							1	1			wet		SAME
											v-soft		
10												9'0"	
		6	ss	24"	12"	12'0"	1	2			wet		Gry VF-F SAND & SILT,lit F-sand
							1	3			v-loose		
15													
		7	ss	24"	14"	17'0"	5	5			wet		Brn VF-SAND & SILT
							6	5			compact		
												18'0"	
20													BOULDERS & COBBLES @ 18'
		8	ss	24"	16"	22'0"	12	20			wet		Brn F-SAND & F-GRAVEL,sm silt
							32	33			v-dense		
25													
		9	ss	24"	12"	27'0"	16	63			wet		Brn F-SAND & F-C GRAVEL,sm silt
							70	49			v-dense		
30													
		10	ss	24"	12"	32'0"	12	16			wet		SAME
							27	39			dense		
												34'0"	
35		11	ss	4"	2"	35'9"	100/4				wet		DECOMPOSED ROCK
											v-dense		
													DECOMPOSED ROCK
		12	ss	1"	0"	40'1"	100/1				wet	40'1"	REFUSAL E.O.B.

GROUND SURFACE TO _____FT. USED _____CASING THEN _____ CASING TO _____FT. **HOLE NO C-4**
A = AUGER UP = UNDISTURBED PISTON T = THINWALL V = VANE TEST
WOR = WEIGHT OF RODS WOH = WEIGHT OF HAMMER & RODS C = COARSE
SS = SPLIT TUBE SAMPLER H.S.A. = HOLLOW STEM AUGER M = MEDIUM
PORPORTIONS USED: TRACE = 0 - 10% LITTLE = 10 - 20% SOME = 20 - 35% AND =35 - 50% F = FINE

THE INFORMATION, INCLUDING ESTIMATED QUANTITIES OF WORK SHOWN ON THESE SHEETS IS BASED ON LIMITED INVESTIGATIONS BY THE STATE AND IS IN NO WAY WARRANTED TO INDICATE THE TRUE CONDITIONS OR ACTUAL QUANTITIES OR DISTRIBUTION OF QUANTITIES OF WORK WHICH WILL BE REQUIRED.

URS CORPORATION AES
500 ENTERPRISE DRIVE
ROCKY HILL, CT 06067
1-(860)-529-8882

NO.	DATE	DESCRIPTION

REVISIONS

URS CORPORATION AES
500 ENTERPRISE DRIVE
ROCKY HILL, CT 06067

STATE OF CONNECTICUT
DEPARTMENT OF TRANSPORTATION

SECTION C-1a & C-2 NEW HAVEN LINE

CATENARY REPLACEMENT BETWEEN WALK BRIDGE AND STRUCTURE 636, PECK BRIDGE AND STRUCTURE 863

BORING LOGS -SHEET 2

ENGINEER: URS CORPORATION AES
DESIGNER: RW | DRAFTER: AMK | CHECKER: AJM
APPROVED: T. HOLLAND | DATE: 09/13/13
STRUCTURE NO. | BRIDGE LOG NO. | STRUCTURE SHEET NO. G-SB-2

PROJECT CONTROL DATE: 09/13/13 DISK FILENAME: G-SB-2.dwg 100% DESIGN

F H W A REGION	STATE	TOWN	FED. AID PROJ. NO.	PROJ. NO.	YEAR	SHEET NUMBER
1	CONN.	VARIOUS	CT-05-0109	301-0145	2013	01.03.010

SOILTESTING, INC.
140 OXFORD RD.
OXFORD, CT 06478
CT (203) 888-4531
NY (914) 946-4850

CLIENT: **Raytheon Infrastructure Inc.**

SHEET 1 OF 1
HOLE NO. C-5

PROJECT NO. **G112-5930-00**

PROJECT NAME **New Haven Railroad Line (CT DOT)**

LOCATION **Between Stamford & Housatonic River**

(FOR)EMAN - DRILLER: **PD/wc**

INSPECTOR: **Russ**

BORING LOCATIONS
150' East of CAT #622
20' North of Tracks
2' Above rail
OFFSET

	CASING	SAMPLER	CORE BAR
TYPE	H S A	SS	NWD4
SIZE I.D.	3 3/4"	1 3/8"	2 1/8"
HAMMER WT.		140#	BIT
HAMMER FALL		30"	dia.

GROUND WATER OBSERVATIONS
AT 29' FT AFTER 0 HOURS
AT __ FT AFTER __ HOURS

DATE START 7-19-00
DATE FINISH 7-19-00
SURFACE ELEV.
GROUND WATER ELEV.

DEPTH	CASING BLOWS PER FOOT	SAMPLE NO	Type	PEN	REC	DEPTH @ BOT	BLOWS PER 6 IN ON SAMPLER (FORCE ON TUBE) 0 - 6	6 - 12	12 - 18	CORING TIME PER FT (MIN)	DENSITY OR CONSIST / MOIST	STRATA CHANGE DEPTH / ELEV	FIELD IDENTIFICATION OF SOIL REMARKS INCL. COLOR, LOSS OF WASH WATER, SEAMS IN ROCK, ETC.
		1	ss	24"	12"	2'0"	3	3			dry	4"	TOPSOIL
							2	4			loose	2'0"	Drk-brn/blk F-M SAND,tr blk cinders
		2	ss	24"	12"	4'0"	11	16			dry		Lt-brn F-M SAND,sm silt,F-C gravel
							23	20			dense		
5		3	ss	24"	12"	6'0"	20	26			dry		SAME
							17	19			dense		
		4	ss	24"	12"	8'0"	21	26			dry		Lt-brn F-M SAND,sm F-C gravel,sm silt,
							35	50			v-dense		C-sand
		5	ss	24"	12"	10'0"	29	31			dry		SAME
10							49	52			v-dense		
		6	ss	24"	20"	12'0"	42	58			dry		Lt-brn F-C SAND,sm silt,tr F-C gravel
							68	96			v-dense		
		7	ss	4"	4"	12'4"	100/4				dry		SAME
											v-dense		
15		8	ss	10"	10"	14'10"	56	100/4			dry		Lt-brn F-M SAND,sm silt,lit F-gravel
											v-dense		
20		9	ss	10"	10"	20'10"	63	100/4			dry		Lt-brn F-M SAND & SILT,sm cobbles &
											v-dense		boulders,tr F-C gravel
25													
		10	ss	24"	16"	27'0"	38	54			dry		Gry F-M SAND,sm F-gravel,sm silt,
							39	31			v-dense		cobbles,tr C-sand
30													
		11	ss	24"	15"	32'0"	14	24			wet		DECOMPOSED ROCK & ROCK FRAGS
							27	28			v-dense		
35													
		12	ss	24"	18"	37'0"	11	12			wet		SAME
							14	21			compact		
		13	ss	24"	20"	42'0"	9	10			wet		
							25	51			dense	42'0"	SAME E.O.B.

GROUND SURFACE TO ____ FT. USED ____ CASING THEN ____ CASING TO ____ FT. **HOLE NO C-5**
A = AUGER UP = UNDISTURBED PISTON T = THINWALL V = VANE TEST
WOR = WEIGHT OF RODS WOH = WEIGHT OF HAMMER & RODS C = COARSE
SS = SPLIT TUBE SAMPLER H.S.A. = HOLLOW STEM AUGER M = MEDIUM
PORPORTIONS USED: TRACE = 0 - 10% LITTLE = 10 - 20% SOME = 20 - 35% AND =35 - 50% F = FINE

THE INFORMATION, INCLUDING ESTIMATED QUANTITIES OF WORK SHOWN ON THESE SHEETS IS BASED ON LIMITED INVESTIGATIONS BY THE STATE AND IS IN NO WAY WARRANTED TO INDICATE THE TRUE CONDITIONS OR ACTUAL QUANTITIES OR DISTRIBUTION OF QUANTITIES OF WORK WHICH WILL BE REQUIRED.

URS
URS CORPORATION AES
500 ENTERPRISE DRIVE
ROCKY HILL, CT 06067
1-(860)-529-8882

NO.	DATE	DESCRIPTION
		REVISIONS

URS CORPORATION AES
500 ENTERPRISE DRIVE
ROCKY HILL, CT 06067

STATE OF CONNECTICUT
DEPARTMENT OF TRANSPORTATION

SECTION C-1a & C-2 NEW HAVEN LINE

CATENARY REPLACEMENT BETWEEN WALK BRIDGE AND STRUCTURE 636, PECK BRIDGE AND STRUCTURE 863

BORING LOGS -SHEET 3

ENGINEER: URS CORPORATION AES
DESIGNER: RW DRAFTER: AMK CHECKER: AJM
APPROVED: T. HOLLAND DATE: 09/13/13
STRUCTURE NO. BRIDGE LOG NO. STRUCTURE SHEET NO. G-SB-3

PROJECT CONTROL DATE: 09/13/13 DISK FILENAME: G-SB-3.dwg 100% DESIGN

F H W A REGION	STATE	TOWN	FED. AID PROJ. NO.	PROJ. NO.	YEAR	SHEET NUMBER
1	CONN.	VARIOUS	CT-05-0109	301-0145	2013	01.03.011

SOILTESTING, INC.

140 OXFORD RD.
OXFORD, CT 06478
CT (203) 888-4531
NY (914) 946-4850

CLIENT: Raytheon Infrastructure Inc.
SHEET 1 OF 1
HOLE NO. C-12

PROJECT NO. G112-5930-00
PROJECT NAME: New Haven Railroad Line (CT DOT)
LOCATION: Between Stamford & Housatonic River

BORING LOCATIONS: 150' East of CAT #822; 25' South of Track #6; 3'6" Below top rail
OFFSET
DATE START 7-17-00
DATE FINISH 7-17-00
SURFACE ELEV.
GROUND WATER ELEV.

FOREMAN - DRILLER: PD/dj
INSPECTOR: Russ

GROUND WATER OBSERVATIONS
AT 10' FT AFTER 0 HOURS
AT __ FT AFTER __ HOURS

	CASING	SAMPLER	CORE BAR
TYPE	FW	SS	
SIZE I.D.	3"	1 3/8"	
HAMMER WT.	300#	140#	BIT
HAMMER FALL	24"	30"	

DEPTH	CASING BLOWS PER FOOT	SAMPLE NO	Type	PEN	REC	DEPTH @ BOT	BLOWS PER 6 IN ON SAMPLER (FORCE ON TUBE) 0 - 6	6 - 12	12 - 18	CORING TIME PER FT (MIN)	DENSITY OR CONSIST / MOIST	STRATA CHANGE DEPTH / ELEV	FIELD IDENTIFICATION OF SOIL REMARKS INCL. COLOR, LOSS OF WASH WATER, SEAMS IN ROCK, ETC.
	1												
	2	1	ss	24"	12"	3'0"	1	2			moist		Brn/blk F-M SAND,sm F-M gravel,tr silt
	2						1	2			v-loose		
	3												
5	2											5'6"	
	3	2	ss	24"	12"	7'0"	2	2			dry		Lt-brn F-SAND,tr organics
	4						1	2			v-loose		
	5												
	12												
10	16												
	20	3	ss	24"	12"	12'0"	10	10			wet		Lt-brn F-M SAND,tr silt
	20						10	10			compact		
	25												
	27												
15	24												
	20	4	ss	24"	20"	17'0"	11	10			wet		Lt-brn F-M SAND,lit F-C gravel,tr silt
	22						10	13			compact		
	40												
	37												
20	35												
	45	5	ss	24"	12"	22'0"	16	11			wet		Lt-brn F-M SAND & SILT,lit F-C gravel
	43						12	11			compact		
	45												
	47												
25	48												
	22	6	ss	24"	12"	27'0"	9	11			wet		Gry VF-F SAND & SILT
	51						9	13			compact		
	42												
	45												
30	43												
	40	7	ss	24"	12"	32'0'	6	7			wet		Gry VF-SAND & SILT
	32						8	9			compact		
	60												
	45												
35	56												
	38	8	ss	24"	12'	37'0"	5	6			wet		SAME
	49						3	3			loose		
	47												
	60	9	ss	24"	14"	42'0"	9	6			wet		Gry F-M SAND,sm silt,lit F-M gravel
40	100						3	7			loose	42'0"	E.O.B.

GROUND SURFACE TO ______ FT. USED ____________ CASING THEN ______ CASING TO ______ FT. **HOLE NO C-12**
A = AUGER UP = UNDISTURBED PISTON T = THINWALL V = VANE TEST
WOR = WEIGHT OF RODS WOH = WEIGHT OF HAMMER & RODS C = COARSE
SS = SPLIT TUBE SAMPLER H.S.A. = HOLLOW STEM AUGER M = MEDIUM
PORPORTIONS USED: TRACE = 0 - 10% LITTLE = 10 - 20% SOME = 20 - 35% AND =35 - 50% F = FINE

SOILTESTING, INC.

140 OXFORD RD.
OXFORD, CT 06478
CT (203) 888-4531
NY (914) 946-4850

CLIENT: Raytheon Infrastructure Inc.
SHEET 1 OF 1
HOLE NO. C-13

PROJECT NO. G112-5930-00
PROJECT NAME: New Haven Railroad Line (CT DOT)
LOCATION: Between Stamford & Housatonic River

BORING LOCATIONS: 150' East of CAT #859; 31' South of Tracks; 10' Below top rail
OFFSET
DATE START 7-28-00
DATE FINISH 7-28-00
SURFACE ELEV.
GROUND WATER ELEV.

FOREMAN - DRILLER: LD/dj
INSPECTOR: RM-GEI

GROUND WATER OBSERVATIONS
AT 7' FT AFTER 0 HOURS
AT __ FT AFTER __ HOURS

	CASING	SAMPLER	CORE BAR
TYPE	FW	SS	NWD4
SIZE I.D.	3"	1 3/8"	2 1/8"
HAMMER WT.	300#	140#	BIT
HAMMER FALL	24"	30"	dia.

DEPTH	CASING BLOWS PER FOOT	SAMPLE NO	Type	PEN	REC	DEPTH @ BOT	BLOWS PER 6 IN ON SAMPLER (FORCE ON TUBE) 0 - 6	6 - 12	12 - 18	CORING TIME PER FT (MIN)	DENSITY OR CONSIST / MOIST	STRATA CHANGE DEPTH / ELEV	FIELD IDENTIFICATION OF SOIL REMARKS INCL. COLOR, LOSS OF WASH WATER, SEAMS IN ROCK, ETC.
	4	1	ss	24"	6"	2'0"	5	6			dry		Blk F-M SAND,lit silt,tr F-gravel
	8						6	6			compact		
	14	2	ss	24"	6"	4'0"	8	10			dry		Brn F-M SAND & M-GRAVEL,tr silt
	25						12	16			compact		
5	25	3	ss	24"	12"	6'0"	24	16			moist		Brn F-M SAND,lit silt
	5						12	8			compact		
	12	4	ss	24"	12"	8'0"	16	18			wet		Brn F-M SAND,lit silt,tr F-gravel
	16						19	22			dense		
	6	5	ss	24"	12"	10'0"	8	10			wet		Lt-brn F-M SAND,tr silt
10	7						10	10			compact		
	9	6	ss	24"	14'	12'0"	12	10			wet		SAME
	12						10	10			compact		
	16	7	ss	24"	0"	14'0"	8	9			wet		
	17						10	11					
15	19	8	ss	24"	12"	16'0"	11	8			wet		Lt-brn F-C SAND,sm F-M gravel,tr silt
	19						7	7			compact		
	24												
	25												Lt-brn F-C SAND,tr silt
	32												
20	34												
	22	9	ss	24"	18'	22'0"	11	11			wet		Brn VF-F SAND,lit silt
	24						11	11			compact		
	28												
	32												
25	36												
	20	10	ss	24"	18"	27'0"	6	9			wet		Brn VF-F SAND,lit silt
	20						11	10			compact		
	27												
	27												
30	30												
	18	11	ss	24"	18"	32'0"	6	6			wet		SAME
	24						5	6			compact		
	28												
	28												
35	33												
	19	12	ss	24"	18'	37'0"	5	8			wet		Brn VF-F SAND,lit silt
	25						7	13			compact		
	42												
	43	13	ss	24"	18"	42'0"	8	11			wet		
40	45						11	16			compact	42'0"	SAME E.O.B.

GROUND SURFACE TO ______ FT. USED ____________ CASING THEN ______ CASING TO ______ FT. **HOLE NO C-13**
A = AUGER UP = UNDISTURBED PISTON T = THINWALL V = VANE TEST
WOR = WEIGHT OF RODS WOH = WEIGHT OF HAMMER & RODS C = COARSE
SS = SPLIT TUBE SAMPLER H.S.A. = HOLLOW STEM AUGER M = MEDIUM
PORPORTIONS USED: TRACE = 0 - 10% LITTLE = 10 - 20% SOME = 20 - 35% AND =35 - 50% F = FINE

URS CORPORATION AES
500 ENTERPRISE DRIVE
ROCKY HILL, CT 06067

THE INFORMATION, INCLUDING ESTIMATED QUANTITIES OF WORK SHOWN ON THESE SHEETS IS BASED ON LIMITED INVESTIGATIONS BY THE STATE AND IS IN NO WAY WARRANTED TO INDICATE THE TRUE CONDITIONS OR ACTUAL QUANTITIES OR DISTRIBUTION OF QUANTITIES OF WORK WHICH WILL BE REQUIRED.

URS URS CORPORATION AES
500 ENTERPRISE DRIVE
ROCKY HILL, CT 06067
1-(860)-529-8882

NO.	DATE	DESCRIPTION
		REVISIONS

STATE OF CONNECTICUT
DEPARTMENT OF TRANSPORTATION

SECTION C-1a & C-2 NEW HAVEN LINE

CATENARY REPLACEMENT BETWEEN WALK BRIDGE AND STRUCTURE 636, PECK BRIDGE AND STRUCTURE 863

BORING LOGS -SHEET 4

ENGINEER: URS CORPORATION AES
DESIGNER: RW DRAFTER: AMK CHECKER: AJM
APPROVED: T. HOLLAND DATE: 09/13/13
STRUCTURE NO. BRIDGE LOG NO. STRUCTURE SHEET NO. G-SB-4

PROJECT CONTROL DATE: 09/13/13 DISK FILENAME: G-SB-4.dwg 100% DESIGN

F.H.W.A. REGION	STATE	TOWN	FED. AID PROJ. NO.	PROJ. NO.	YEAR	SHEET NUMBER
1	CONN.	VARIOUS	CT-05-0109	301-0145	2013	01.03.012

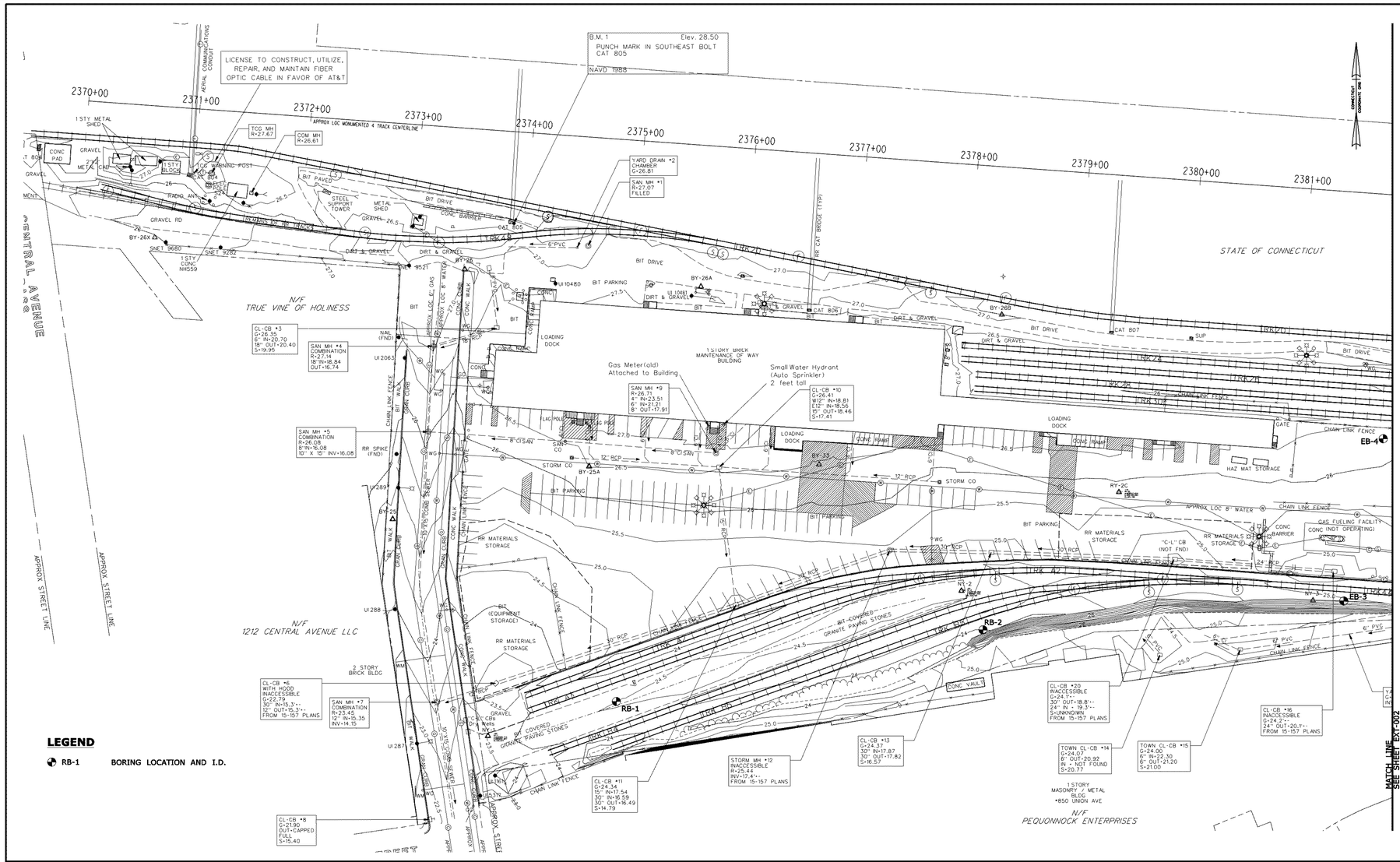

REV.	DATE	REVISION DESCRIPTION	SHEET NO.
-	-	-	-
-	-	-	-
-	-	-	-
-	-	-	-
-	-	-	-
-	-	-	-

THE INFORMATION, INCLUDING ESTIMATED QUANTITIES OF WORK, SHOWN ON THESE SHEETS IS BASED ON LIMITED INVESTIGATIONS BY THE STATE AND IS IN NO WAY WARRANTED TO INDICATE THE CONDITIONS OF ACTUAL QUANTITIES OF WORK WHICH WILL BE REQUIRED.

Plotted: 8/25/2009

DESIGNER/DRAFTER: CDOT
CHECKED BY: CDOT
SCALE IN FEET 0 40 80
SCALE 1"=40'

STATE OF CONNECTICUT
DEPARTMENT OF TRANSPORTATION

Filename: ...\FD.MSH.EXT.300.130.C001.dgn

SIGNATURE/BLOCK:
APPROVED BY:
DATE: 9-2-2009

PROJECT TITLE: EAST BRIDGEPORT RAIL YARD IMPROVEMENTS

TOWN: BRIDGEPORT

DRAWING TITLE: EXISTING CONDITIONS PLANS

PROJECT NO. 300-130
DRAWING NO. EXT-001
SHEET NO. 9

FOR INFORMATION ONLY

URS CORPORATION AES
500 ENTERPRISE DRIVE
ROCKY HILL, CT 06067

STATE OF CONNECTICUT
DEPARTMENT OF TRANSPORTATION

SECTION C-1a & C-2 NEW HAVEN LINE

CATENARY REPLACEMENT BETWEEN WALK BRIDGE AND STRUCTURE 636, PECK BRIDGE AND STRUCTURE 863

PLAN – BORING LOGS – SHEET 1

THE INFORMATION, INCLUDING ESTIMATED QUANTITIES OF WORK SHOWN ON THESE SHEETS IS BASED ON LIMITED INVESTIGATIONS BY THE STATE AND IS IN NO WAY WARRANTED TO INDICATE THE TRUE CONDITIONS OR ACTUAL QUANTITIES OR DISTRIBUTION OF QUANTITIES OF WORK WHICH WILL BE REQUIRED.

URS CORPORATION AES
500 ENTERPRISE DRIVE
ROCKY HILL, CT 06067
1-(860)-529-8882

NO.	DATE	DESCRIPTION

REVISIONS

ENGINEER: URS CORPORATION AES
DESIGNER: RW | DRAFTER: AMK | CHECKER: AJM
APPROVED: T. HOLLAND | DATE: 09/13/13
STRUCTURE NO. | BRIDGE LOG NO. | STRUCTURE SHEET NO. G-SB-5

PROJECT CONTROL DATE: 09/13/13 DSK FILENAME: G-SB-5(1).dwg 100% DESIGN

F.H.W.A. REGION	STATE	TOWN	FED. AID PROJ. NO.	PROJ. NO.	YEAR	SHEET NUMBER
1	CONN.	VARIOUS	CT-05-0109	301-0145	2013	01.03.013

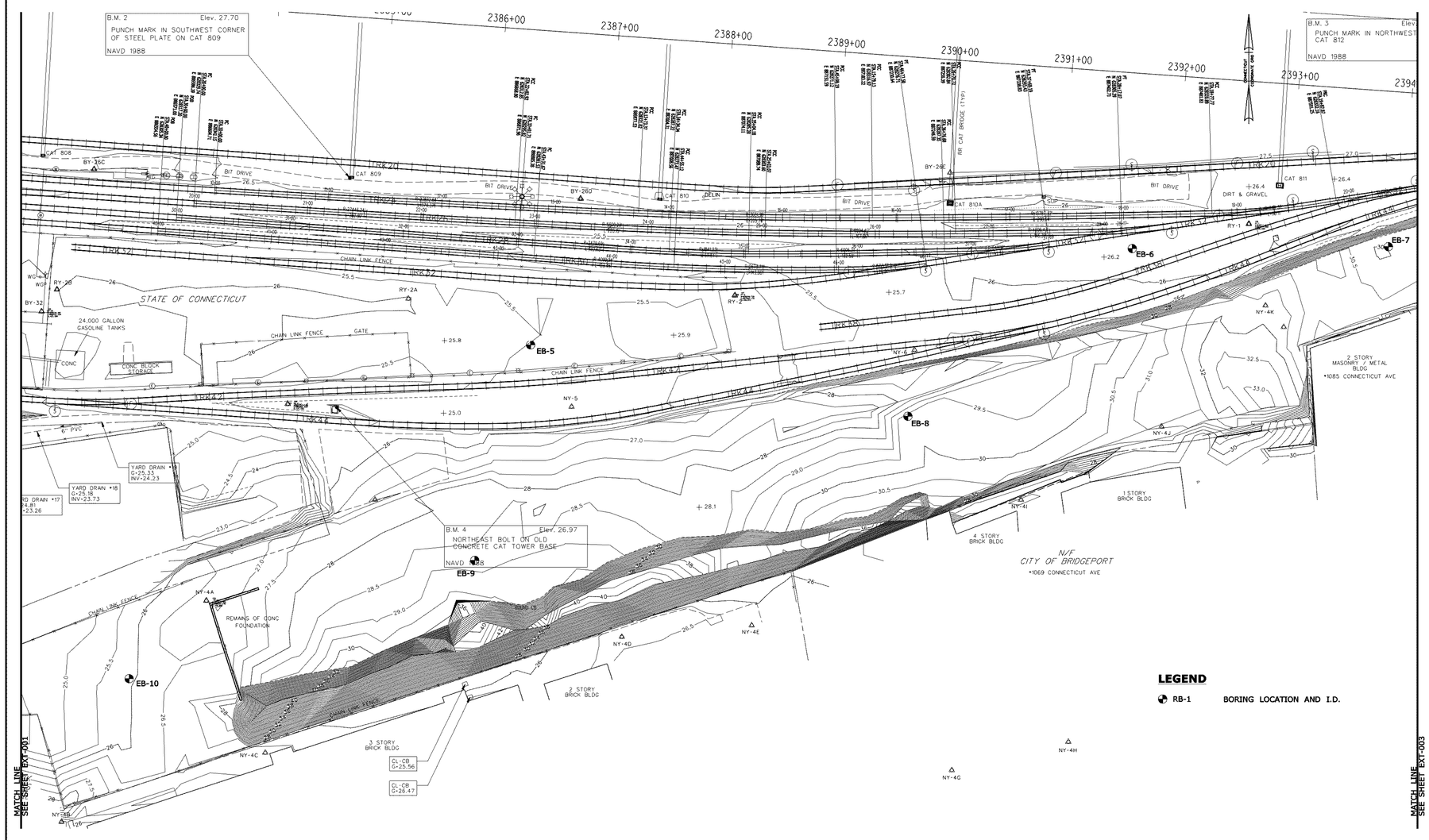

LEGEND

RB-1 BORING LOCATION AND I.D.

FOR INFORMATION ONLY

URS CORPORATION AES
500 ENTERPRISE DRIVE
ROCKY HILL, CT 06067

REV.	DATE	REVISION DESCRIPTION	SHEET NO.
-	-	-	-
-	-	-	-
-	-	-	-
-	-	-	-
-	-	-	-
-	-	-	-

THE INFORMATION, INCLUDING ESTIMATED QUANTITIES OF WORK, SHOWN ON THESE SHEETS IS BASED ON LIMITED INVESTIGATIONS BY THE STATE AND IS IN NO WAY WARRANTED TO INDICATE THE CONDITIONS OF ACTUAL QUANTITIES OF WORK WHICH WILL BE REQUIRED.

Plotted: 8/25/2009

DESIGNER/DRAFTER: CDOT
CHECKED BY: CDOT
SCALE IN FEET
0 40 80
SCALE 1"=40'

STATE OF CONNECTICUT
DEPARTMENT OF TRANSPORTATION

Filename: ...\FD..MSH..EXT..300.130.C002.dgn

SIGNATURE/ BLOCK:
APPROVED BY:
DATE: 9-2-2009

PROJECT TITLE: EAST BRIDGEPORT RAIL YARD IMPROVEMENTS

TOWN: BRIDGEPORT
DRAWING TITLE: EXISTING CONDITIONS PLAN

PROJECT NO. 300-130
DRAWING NO. EXT-002
SHEET NO. 10

THE INFORMATION, INCLUDING ESTIMATED QUANTITIES OF WORK SHOWN ON THESE SHEETS IS BASED ON LIMITED INVESTIGATIONS BY THE STATE AND IS IN NO WAY WARRANTED TO INDICATE THE TRUE CONDITIONS OR ACTUAL QUANTITIES OR DISTRIBUTION OF QUANTITIES OF WORK WHICH WILL BE REQUIRED.

URS CORPORATION AES
500 ENTERPRISE DRIVE
ROCKY HILL, CT 06067
1-(860)-529-8882

NO.	DATE	DESCRIPTION

REVISIONS

STATE OF CONNECTICUT
DEPARTMENT OF TRANSPORTATION

SECTION C-1a & C-2 NEW HAVEN LINE

CATENARY REPLACEMENT BETWEEN WALK BRIDGE AND STRUCTURE 636, PECK BRIDGE AND STRUCTURE 863

PLAN – BORING LOGS – SHEET 2

ENGINEER: URS CORPORATION AES
DESIGNER: RW | DRAFTER: AMK | CHECKER: AJM
APPROVED: T. HOLLAND | DATE: 09/13/13
STRUCTURE NO. | BRIDGE LOG NO. | STRUCTURE SHEET NO. G-SB-6

URS CORPORATION AES
500 ENTERPRISE DRIVE
ROCKY HILL, CT 06067

PROJECT CONTROL DATE: 09/13/13 DISK FILENAME: G-SB-6(2).dwg 100% DESIGN

F.H.W.A. REGION	STATE	TOWN	FED. AID PROJ. NO.	PROJ. NO.	YEAR	SHEET NUMBER
1	CONN.	VARIOUS	CT-05-0109	301-0145	2013	01.03.014

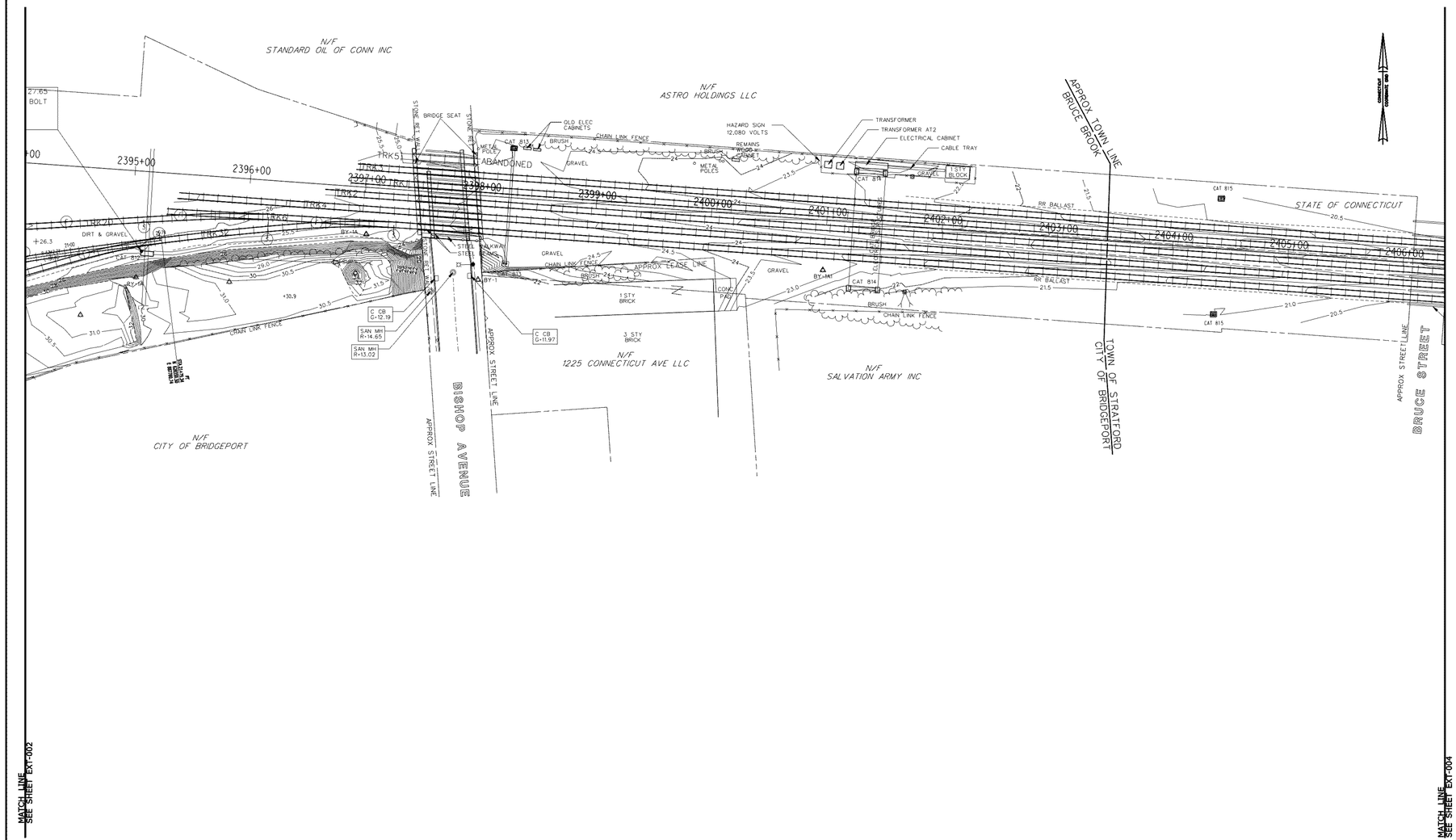

REV.	DATE	REVISION DESCRIPTION	SHEET NO.
-	-	-	-
-	-	-	-
-	-	-	-
-	-	-	-
-	-	-	-
-	-	-	-

THE INFORMATION, INCLUDING ESTIMATED QUANTITIES OF WORK, SHOWN ON THESE SHEETS IS BASED ON LIMITED INVESTIGATIONS BY THE STATE AND IS IN NO WAY WARRANTED TO INDICATE THE CONDITIONS OF ACTUAL QUANTITIES OF WORK WHICH WILL BE REQUIRED.

Plotted: 8/25/2009

DESIGNER/DRAFTER: CDOT
CHECKED BY: CDOT
SCALE IN FEET 0 40 80
SCALE 1"=40'

STATE OF CONNECTICUT
DEPARTMENT OF TRANSPORTATION

Filename: ...\FD..MSH..EXT..300..130..C003.dgn

SIGNATURE/ BLOCK:
APPROVED BY:
DATE: 9-2-2009

PROJECT TITLE: EAST BRIDGEPORT RAIL YARD IMPROVEMENTS

TOWN: BRIDGEPORT
DRAWING TITLE: EXISTING CONDITIONS PLAN

PROJECT NO. 300-130
DRAWING NO. EXT-003
SHEET NO. 11

FOR INFORMATION ONLY

URS CORPORATION AES
500 ENTERPRISE DRIVE
ROCKY HILL, CT 06067

STATE OF CONNECTICUT
DEPARTMENT OF TRANSPORTATION

SECTION C-1a & C-2 NEW HAVEN LINE

CATENARY REPLACEMENT BETWEEN WALK BRIDGE AND STRUCTURE 636, PECK BRIDGE AND STRUCTURE 863

PLAN – BORING LOGS – SHEET 3

THE INFORMATION, INCLUDING ESTIMATED QUANTITIES OF WORK SHOWN ON THESE SHEETS IS BASED ON LIMITED INVESTIGATIONS BY THE STATE AND IS IN NO WAY WARRANTED TO INDICATE THE TRUE CONDITIONS OR ACTUAL QUANTITIES OR DISTRIBUTION OF QUANTITIES OF WORK WHICH WILL BE REQUIRED.

URS CORPORATION AES
500 ENTERPRISE DRIVE
ROCKY HILL, CT 06067
1-(860)-529-8882

NO.	DATE	DESCRIPTION

REVISIONS

ENGINEER: URS CORPORATION AES
DESIGNER: RW | DRAFTER: AMK | CHECKER: AJM
APPROVED: T. HOLLAND | DATE: 09/13/13
STRUCTURE NO. | BRIDGE LOG NO. | STRUCTURE SHEET NO. G-SB-7

PROJECT CONTROL DATE: 09/13/13 DISK FILENAME: G-SB-7(3).dwg 100% DESIGN

F.H.W.A. REGION	STATE	TOWN	FED. AID PROJ. NO.	PROJ. NO.	YEAR	SHEET NUMBER
1	CONN.	VARIOUS	CT-05-0109	301-0145	2013	01.03.015

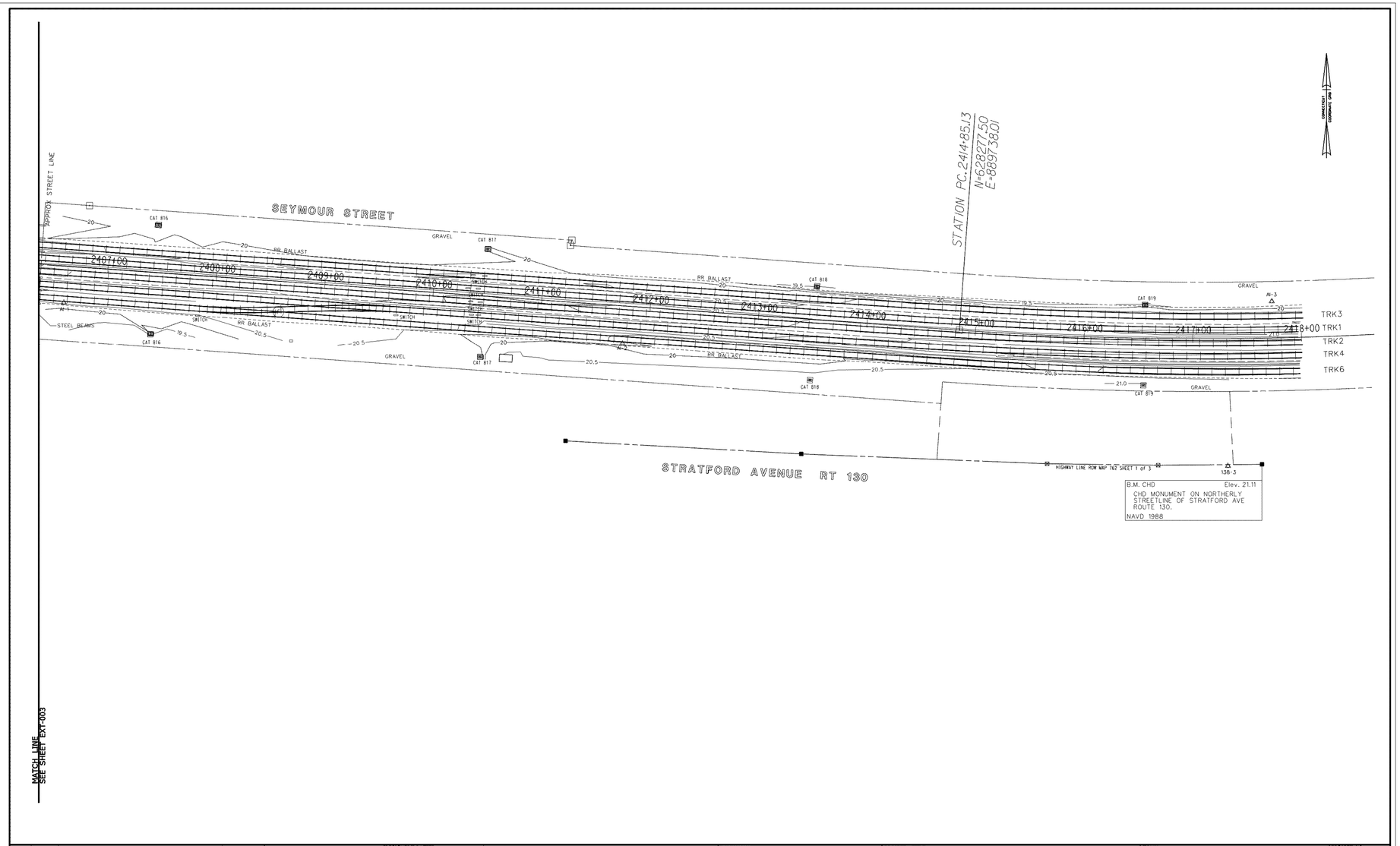

FOR INFORMATION ONLY

REV.	DATE	REVISION DESCRIPTION	SHEET NO.
-	-	-	-
-	-	-	-
-	-	-	-
-	-	-	-
-	-	-	-
-	-	-	-

THE INFORMATION, INCLUDING ESTIMATED QUANTITIES OF WORK, SHOWN ON THESE SHEETS IS BASED ON LIMITED INVESTIGATIONS BY THE STATE AND IS IN NO WAY WARRANTED TO INDICATE THE CONDITIONS OF ACTUAL QUANTITIES OF WORK WHICH WILL BE REQUIRED.

Plotted: 8/25/2009

DESIGNER/DRAFTER: CDOT
CHECKED BY: CDOT
SCALE IN FEET 0 40 80
SCALE 1"=40'

STATE OF CONNECTICUT
DEPARTMENT OF TRANSPORTATION

Filename: ...\FD_MSH_EXT_300_130_C004.dgn

SIGNATURE/ BLOCK:
APPROVED BY: DATE: 9-2-2009

PROJECT TITLE: EAST BRIDGEPORT RAIL YARD IMPROVEMENTS

TOWN: BRIDGEPORT
DRAWING TITLE: EXISTING CONDITIONS PLAN

PROJECT NO. 300-130
DRAWING NO. EXT-004
SHEET NO. 12

THE INFORMATION, INCLUDING ESTIMATED QUANTITIES OF WORK SHOWN ON THESE SHEETS IS BASED ON LIMITED INVESTIGATIONS BY THE STATE AND IS IN NO WAY WARRANTED TO INDICATE THE TRUE CONDITIONS OR ACTUAL QUANTITIES OR DISTRIBUTION OF QUANTITIES OF WORK WHICH WILL BE REQUIRED.

URS
URS CORPORATION AES
500 ENTERPRISE DRIVE
ROCKY HILL, CT 06067
1-(860)-529-8882

NO.	DATE	DESCRIPTION

REVISIONS

URS CORPORATION AES
500 ENTERPRISE DRIVE
ROCKY HILL, CT 06067

STATE OF CONNECTICUT
DEPARTMENT OF TRANSPORTATION

SECTION C-1a & C-2 NEW HAVEN LINE

CATENARY REPLACEMENT BETWEEN WALK BRIDGE AND STRUCTURE 636, PECK BRIDGE AND STRUCTURE 863

PLAN – BORING LOGS – SHEET 4

ENGINEER: URS CORPORATION AES
DESIGNER: RW | DRAFTER: AMK | CHECKER: AJM
APPROVED: T. HOLLAND | DATE: 09/13/13
STRUCTURE NO. | BRIDGE LOG NO. | STRUCTURE SHEET NO. G-SB-8

PROJECT CONTROL DATE: 09/13/13 DISK FILENAME: G-SB-8(4).dwg 100% DESIGN

F.H.W.A. REGION	STATE	TOWN	FED. AID PROJ. NO.	PROJ. NO.	YEAR	SHEET NUMBER
1	CONN.	VARIOUS	CT-05-0109	301-0145	2013	01.03.016

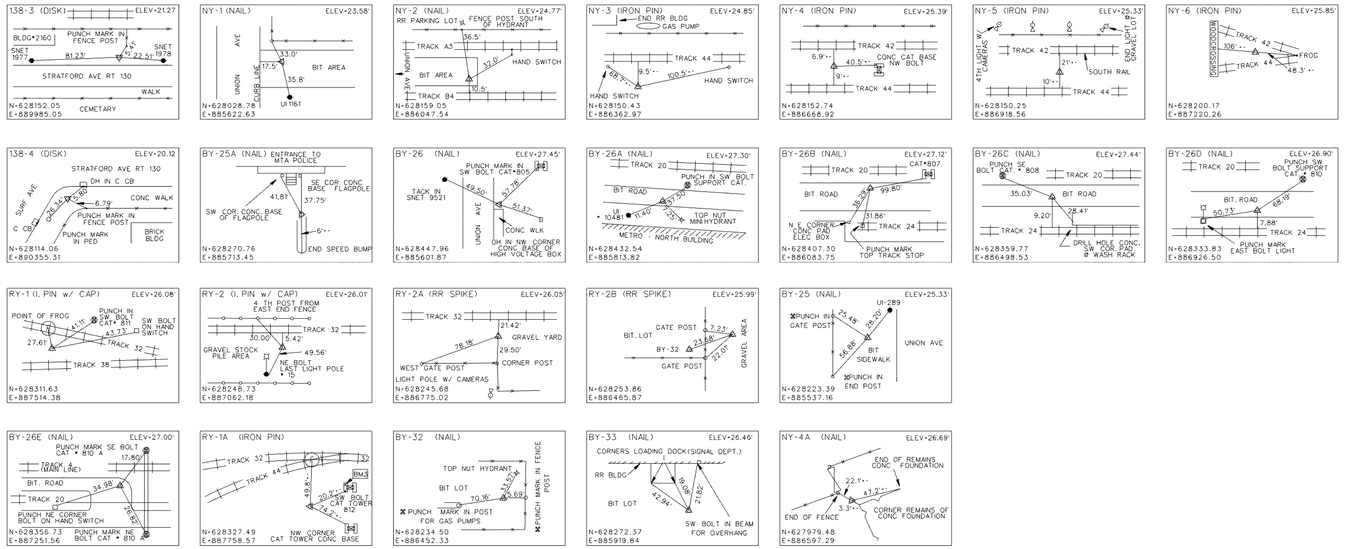

FOR INFORMATION ONLY

REV.	DATE	REVISION DESCRIPTION	SHEET NO.
-	-	-	-
-	-	-	-
-	-	-	-
-	-	-	-
-	-	-	-
-	-	-	-

THE INFORMATION, INCLUDING ESTIMATED QUANTITIES OF WORK, SHOWN ON THESE SHEETS IS BASED ON LIMITED INVESTIGATIONS BY THE STATE AND IS IN NO WAY WARRANTED TO INDICATE THE CONDITIONS OF ACTUAL QUANTITIES OF WORK WHICH WILL BE REQUIRED.

Plotted: 8/25/2009

DESIGNER/DRAFTER: CDOT
CHECKED BY: CDOT
NTS

STATE OF CONNECTICUT
DEPARTMENT OF TRANSPORTATION

Filename: ...\FD.MSH.TIE.300.130.C001.dgn

SIGNATURE/BLOCK:
APPROVED BY:
DATE: 9-2-2009

PROJECT TITLE: EAST BRIDGEPORT RAIL YARD IMPROVEMENTS

TOWN: BRIDGEPORT
DRAWING TITLE: CONTROL POINT TIE PLANS

PROJECT NO. 300-130
DRAWING NO. TIE-001
SHEET NO. 13

THE INFORMATION, INCLUDING ESTIMATED QUANTITIES OF WORK SHOWN ON THESE SHEETS IS BASED ON LIMITED INVESTIGATIONS BY THE STATE AND IS IN NO WAY WARRANTED TO INDICATE THE TRUE CONDITIONS OR ACTUAL QUANTITIES OR DISTRIBUTION OF QUANTITIES OF WORK WHICH WILL BE REQUIRED.

URS
URS CORPORATION AES
500 ENTERPRISE DRIVE
ROCKY HILL, CT 06067
1-(860)-529-8882

NO.	DATE	DESCRIPTION

REVISIONS

URS CORPORATION AES
500 ENTERPRISE DRIVE
ROCKY HILL, CT 06067

STATE OF CONNECTICUT
DEPARTMENT OF TRANSPORTATION

SECTION C-1a & C-2 NEW HAVEN LINE

CATENARY REPLACEMENT BETWEEN WALK BRIDGE AND STRUCTURE 636, PECK BRIDGE AND STRUCTURE 863

CONTROL POINT TIE PLANS

ENGINEER: URS CORPORATION AES
DESIGNER: RW | DRAFTER: AMK | CHECKER: AJM
APPROVED: T. HOLLAND | DATE: 09/13/13
STRUCTURE NO. | BRIDGE LOG NO. | STRUCTURE SHEET NO. G-SB-9

PROJECT CONTROL DATE: 09/13/13 DISK FILENAME: G-SB-9(5).dwg 100% DESIGN

FHWA REGION	STATE	TOWN	FED. AID PROJ. NO.	PROJ. NO.	YEAR	SHEET NUMBER
1	CONN.	VARIOUS	CT-05-0109	301-0145	2013	01.03.017

SOIL TEST BORING REPORT — EB-1

APPLIED EARTH TECHNOLOGIES
571 Bee Street, Meriden, CT 06450

SHEET 1 OF 1

DRILLER	James Lloret
SUPERVISOR	R. Beniwal
SOILS ENGINEER	Applied Earth Technologies
BORING CONTRACTOR	Associates Boring Company, Inc.
DESIGN ENGINEER	DMJM Harris
TOWN:	Bridgeport, Connecticut.
PROJECT NAME:	East Bridgeport Railyard Layout
PROJECT NUMBER:	300-130
LOCATION:	Western End of Tacks
Surface Elevation:	24.42 feet
Date Started:	11/28/07
Date Finished:	11/28/07
Hole No.	EB-1
Line & Station	
Offset	
N. Coordinate	628059.69
E. Coordinate	885737.83

Groundwater Observations: AT 9.0' AFTER Zero HRS; AT AFTER HRS

	Auger	Casing	Sampler	Core Bar
Type	Hollow		S . S.	NQ
Size I. D.	3.50 in		1 - 3/8"	
Hammer			140 lbs.	Bit
Fall			30"	NX

Coring time in minutes per foot	Depth in feet from - to	No.	Pen. inch	Rec. inch	Type	Blows 0-6	6-12	12-18	18-24
	1.0 - 3.0	1	24	10	SS	13	18	13	8
	3.0 - 5.0	2	24	14	SS	9	15	24	30
	5.0 - 7.0	3	24	11	SS	17	26	31	28
	7.0 - 9.0	4	24	11	SS	22	33	32	60
	10.0 - 12.0	5	24	10	SS	31	30	21	14
2	12.0 - 17.0	1	60	60	C				
3									
3									
3									
3									

Strata change: depth, elev. in feet	Field identification of soil, remarks (incl. color, loss of wash water, etc.)
1.3 / 23.1	1" Asphalt over 6" cobbles over 9" black fine coarse GRAVEL and fine coarse sand, trace silt, base.
7.0	Brown fine coarse SAND, trace fine gravel, trace to little silt.
17.4 / 12.0	Gray brown fine coarse SAND, some fine medium gravel, little silt.
12.4 / 17.0	Cored 12 to 17 ft, recovery 60", RQD=43% Gray fine medium grained SCHIST and granofels.
7.4	End of Boring at 17 ft, Water at 4.5 ft after coring.

From Ground Surface to 12.0 feet, 3.5 in hallow stem auger was used.

Footage in Earth 12 Footage in Rock 5 No. of Samples 5 Hole No. EB-1

SAMPLE TYPE CODING: SS = DRIVEN C = CORE A = AUGER UP = UNDISTURBED PISTON
PROPORTIONS USED: TRACE = 1-10% LITTLE = 10-20% SOME = 20-35% AND = 35-50%

A-1

SOIL TEST BORING REPORT — EB-2

APPLIED EARTH TECHNOLOGIES
571 Bee Street, Meriden, CT 06450

SHEET 1 OF 1

DRILLER	James Lloret
SUPERVISOR	R. Beniwal
SOILS ENGINEER	Applied Earth Technologies
BORING CONTRACTOR	Associates Boring Company, Inc.
DESIGN ENGINEER	DMJM Harris
TOWN:	Bridgeport, Connecticut.
PROJECT NAME:	East Bridgeport Railyard Layout
PROJECT NUMBER:	300-130
LOCATION:	Near Western End of Tacks
Surface Elevation:	24.25 feet
Date Started:	02/20/08
Date Finished:	02/20/08
Hole No.	EB-2
Line & Station	
Offset	
N. Coordinate	628161.01
E. Coordinate	886066.85

Groundwater Observations: AT 3.0' AFTER Zero HRS; AT AFTER HRS

	Auger	Casing	Sampler	Core Bar
Type	Hollow		S . S.	NQ
Size I. D.	3.50 in		1 - 3/8"	
Hammer			140 lbs.	Bit
Fall			30"	NX

Coring time in minutes per foot	Depth in feet from - to	No.	Pen. inch	Rec. inch	Type	Blows 0-6	6-12	12-18	18-24
	1.0 - 3.0	1	24	6	SS	8	11	6	3
	3.0 - 5.0	2	24	5	SS	3	2	1	1
	5.0 - 7.0	3	24	6	SS	W	1	1	2
	7.0 - 9.0	4	24	10	SS	2	3	13	42
	10.0 - 12.0	5	24	12	SS	23	32	29	28
	15.0-16.0	6	12	6	SS	25	50/6"		
1	16.0-21.0	1	60	12	C				
1									
1									
1									
1									
1	21.0-26.0	2	60	44	C				
1									
1									
2									
2									

Strata change: depth, elev. in feet	Field identification of soil, remarks (incl. color, loss of wash water, etc.)
	4" Stone
4.0	Brown fine coarse SAND, some silt, trace fine coarse gravel, fill.
20.3 / 8.0	Gray organic SILT and fine sand, roots.
16.3 / 16.0	Brown gray fine coarse SAND, and fine coarse gravel, trace to little silt, occasional layers of gray brown fine coarse sand, little to some silt.
8.3 / 26.0	Cored 16 to 21 ft, recovery 12", RQD=0% Weathered,gray fine medium grained SCHIST. Cored 21 to 26 ft, recovery 44", RQD=53% Gray fine medium grained SCHIST and granofels.
-1.8	End of Boring at 26 ft, water at 3.0 ft after coring.

From Ground Surface to 16.0 feet, 3.5 in hallow stem auger was used.

Footage in Earth 16 Footage in Rock 10 No. of Samples 6 Hole No. EB-2

SAMPLE TYPE CODING: SS = DRIVEN C = CORE A = AUGER UP = UNDISTURBED PISTON
PROPORTIONS USED: TRACE = 1-10% LITTLE = 10-20% SOME = 20-35% AND = 35-50%

A-2

SOIL TEST BORING REPORT — EB-3

APPLIED EARTH TECHNOLOGIES
571 Bee Street, Meriden, CT 06450

SHEET 1 OF 1

DRILLER	James Lloret
SUPERVISOR	R. Beniwal
SOILS ENGINEER	Applied Earth Technologies
BORING CONTRACTOR	Associates Boring Company, Inc.
DESIGN ENGINEER	DMJM Harris
TOWN:	Bridgeport, Connecticut.
PROJECT NAME:	East Bridgeport Railyard Layout
PROJECT NUMBER:	300-130
LOCATION:	Near Western End of Tacks
Surface Elevation:	24.77 feet
Date Started:	02/21/08
Date Finished:	02/21/08
Hole No.	EB-3
Line & Station	
Offset	
N. Coordinate	628152.93
E. Coordinate	886390.62

Groundwater Observations: AT 4.0' AFTER Zero HRS; AT AFTER HRS

	Auger	Casing	Sampler	Core Bar
Type	Hollow		S . S.	NQ
Size I. D.	3.50 in		1 - 3/8"	
Hammer			140 lbs.	Bit
Fall			30"	NX

Coring time in minutes per foot	Depth in feet from - to	No.	Pen. inch	Rec. inch	Type	Blows 0-6	6-12	12-18	18-24
	1.0 - 3.0	1	24	0	SS	5	3	1	1
	3.0 - 5.0	2	24	3	SS	W	1	1	1
	5.0 - 7.0	3	24	5	SS	1	5	7	13
	7.0 - 9.0	4	24	9	SS	13	16	22	24
	10.0-11.5	5	18	15	SS	34	37	53	
1	13.0-18.0	1	60	28	C				
2									
2									
2									
1									

Strata change: depth, elev. in feet	Field identification of soil, remarks (incl. color, loss of wash water, etc.)
4.0	Black brown fine coarse SAND, some silt, trace fine gravel, ashes, cinders, fill.
20.8 / 6.5	Black fine coarse SAND, some silt, little organic, roots (Fuel oil smell).
18.3 / 13.0	Gray brown fine coarse SAND, some silt (Fuel oil smell), trace fine medium gravel.
11.8 / 18.0	Cored 13 to 18 ft, recovery 28", RQD=15% Weathered,gray fine medium grained SCHIST and granofels.
6.8	End of Boring at 18.0 ft, water at 3.0 ft after coring.

From Ground Surface to 13.0 feet, 3.5 in hallow stem auger was used.

Footage in Earth 13 Footage in Rock 5 No. of Samples 5 Hole No. EB-3

SAMPLE TYPE CODING: SS = DRIVEN C = CORE A = AUGER UP = UNDISTURBED PISTON
PROPORTIONS USED: TRACE = 1-10% LITTLE = 10-20% SOME = 20-35% AND = 35-50%

A-3

REV.	DATE	REVISION DESCRIPTION	SHEET NO.
-	-	-	-
-	-	-	-
-	-	-	-
-	-	-	-
-	-	-	-
-	-	-	-

THE INFORMATION, INCLUDING ESTIMATED QUANTITIES OF WORK, SHOWN ON THESE SHEETS IS BASED ON LIMITED INVESTIGATIONS BY THE STATE AND IS IN NO WAY WARRANTED TO INDICATE THE CONDITIONS OF ACTUAL QUANTITIES OF WORK WHICH WILL BE REQUIRED.

Plotted: 8/26/2009

DESIGNER/DRAFTER: **APP. EARTH**
CHECKED BY: **DMJM HARRIS**
NOT TO SCALE

STATE OF CONNECTICUT DEPARTMENT OF TRANSPORTATION

Filename: ...\FD_MST_BOR_300_130_C001.dgn

SIGNATURE/ BLOCK:
APPROVED BY: - DATE: 9-2-2009

PROJECT TITLE: **EAST BRIDGEPORT RAIL YARD IMPROVEMENTS**

TOWN: **BRIDGEPORT**
DRAWING TITLE: **BORING LOGS**

PROJECT NO. **300-130**
DRAWING NO. **BOR-001**
SHEET NO. **14**

FOR INFORMATION ONLY

URS CORPORATION AES
500 ENTERPRISE DRIVE
ROCKY HILL, CT 06067

THE INFORMATION, INCLUDING ESTIMATED QUANTITIES OF WORK SHOWN ON THESE SHEETS IS BASED ON LIMITED INVESTIGATIONS BY THE STATE AND IS IN NO WAY WARRANTED TO INDICATE THE TRUE CONDITIONS OR ACTUAL QUANTITIES OR DISTRIBUTION OF QUANTITIES OF WORK WHICH WILL BE REQUIRED.

URS *URS CORPORATION AES*
500 ENTERPRISE DRIVE
ROCKY HILL, CT 06067
1-(860)-529-8882

NO.	DATE	DESCRIPTION
		REVISIONS

STATE OF CONNECTICUT
DEPARTMENT OF TRANSPORTATION

SECTION C-1a & C-2 NEW HAVEN LINE

CATENARY REPLACEMENT BETWEEN WALK BRIDGE AND STRUCTURE 636, PECK BRIDGE AND STRUCTURE 863

BORING LOGS – SHEET 1

ENGINEER: URS CORPORATION AES
DESIGNER: RW DRAFTER: AMK CHECKER: AJM
APPROVED: T. HOLLAND DATE: 09/13/13
STRUCTURE NO. BRIDGE LOG NO. STRUCTURE SHEET NO. G-SB-10

PROJECT CONTROL DATE: 09/13/13 DISK FILENAME: G-SB-10(6).dwg 100% DESIGN

F.H.W.A. REGION	STATE	TOWN	FED. AID PROJ. NO.	PROJ. NO.	YEAR	SHEET NUMBER
1	CONN.	VARIOUS	CT-05-0109	301-0145	2013	01.03.018

SOIL TEST BORING REPORT
APPLIED EARTH TECHNOLOGIES
571 Bee Street, Meriden, CT 06450

SHEET 1 OF 1

DRILLER: James Lloret / R. Benivaal
SUPERVISOR: Applied Earth Technologies
SOILS ENGINEER
BORING CONTRACTOR: Associates Boring Company, Inc.
DESIGN ENGINEER: DMJM Harris
TOWN: Bridgeport, Connecticut.
PROJECT NAME: East Bridgeport Railyard Layout
PROJECT NUMBER: 300-130
LOCATION: Near Existing Building
Surface Elevation: 26.44 feet
Date Started: 02/21/08
Date Finished: 02/21/08

	Type	Size I.D.	Hammer Fall
Auger	Hollow	3.50 in	140 lbs.
Casing			30"
Sampler	S.S.	1 - 3/8"	
Core Bar	NQ		Bit / NX

Hole No. EB-4
Line & Station
Offset
N. Coordinate 628292.55
E. Coordinate 886423.99

Groundwater Observations

AT 5.0'	AFTER	Zero	HRS	
AT	AFTER		HRS	

DEPTH	Coring time in minutes per foot	DEPTH IN FEET FROM - TO	SAMPLE NO.	PEN. INCH	REC. INCH	TYPE	BLOWS PER 6 INCHES ON SAMPLER 0-6	6-12	12-18	18-24	STRATA CHANGE: DEPTH, ELEV. IN FEET	FIELD IDENTIFICATION OF SOIL, REMARKS (INCL. COLOR, LOSS OF WASH WATER, ETC.)
											1.0	4" Asphalt over 8" gravel.
		1.0 - 3.0	1	24	6	SS	16	21	20	25	25.4	Gray brown fine coarse SAND, little silt, little fine gravel (Fuel oil smell).
		3.0 - 5.0	2	24	3	SS	13	9	6	6		
5		5.0 - 6.3	3	24	4	SS	2	4	50/3"		6.5	
	2	6.5-11.5	1	60	59	C					19.9	Cored 6.5-11.5 ft, recovery 59", RQD=46%
	5											
	5											Gray fine medium grained SCHIST and granofels.
10	5											
	5											
											11.5	
											14.9	End of Boring at 11.5 ft, water at 4.0 ft after coring.
15												
20												
25												
30												
35												
40												

From Ground Surface to 6.5.0 feet, 3.5 in hallow stem auger was used.

Footing in Earth: 6.5 Footing in Rock: 5 No. of Samples: 3 Hole No. EB-4
SAMPLE TYPE CODING: SS = DRIVEN C = CORE A = AUGER UP = UNDISTURBED PISTON
PROPORTIONS USED: TRACE = 1-10% LITTLE = 10-20% SOME = 20-35% AND = 35-50%

A-4

SOIL TEST BORING REPORT
APPLIED EARTH TECHNOLOGIES
571 Bee Street, Meriden, CT 06450

SHEET 1 OF 1

DRILLER: James Lloret / R. Benivaal
SUPERVISOR: Applied Earth Technologies
SOILS ENGINEER
BORING CONTRACTOR: Associates Boring Company, Inc.
DESIGN ENGINEER: DMJM Harris
TOWN: Bridgeport, Connecticut.
PROJECT NAME: East Bridgeport Railyard Layout
PROJECT NUMBER: 300-130
LOCATION: Midsection of Tacks
Surface Elevation: 25.64 feet
Date Started: 11/28/07
Date Finished: 11/28/07

	Type	Size I.D.	Hammer Fall
Auger	Hollow	3.50 in	140 lbs.
Casing			30"
Sampler	S.S.	1 - 3/8"	
Core Bar	NQ		Bit / NX

Hole No. EB-5
Line & Station
Offset
N. Coordinate 628204.68
E. Coordinate 885883.47

Groundwater Observations

AT 5.0'	AFTER	Zero	HRS	
AT	AFTER		HRS	

DEPTH	Coring time in minutes per foot	DEPTH IN FEET FROM - TO	SAMPLE NO.	PEN. INCH	REC. INCH	TYPE	BLOWS PER 6 INCHES ON SAMPLER 0-6	6-12	12-18	18-24	STRATA CHANGE: DEPTH, ELEV. IN FEET	FIELD IDENTIFICATION OF SOIL, REMARKS (INCL. COLOR, LOSS OF WASH WATER, ETC.)
												4" Process gravel.
		1.0 - 3.0	1	24	6	SS	8	12	10	25	3.0	Black brown fine coarse SAND, ashes, cinders, miscellaneous fill.
		3.0 - 5.0	2	24	12	SS	21	22	48	68	22.6	
5		5.0 - 7.0	3	24	14	SS	26	43	48	53		Gray brown fine coarse SAND, little to and fine medium gravel, little silt, occasional layers of red brown fine sand and cobbles, till.
10												
		10.0 - 12.0	4	24	10	SS	12	12	16	24		
15												
		15.0 - 16.2	5	14	5	SS	10	44	50/2"		16.5	
	3	16.5 - 21.5	1	60	60	C					9.1	Cored 16.5 to 21.5 ft, recovery 60", RQD= 52%, gray fine medium grained SCHIST and granofels.
	3											
	2											
20	2											
	2										21.5	
											4.1	End of Boring at 21.5 ft, Water at 4.5 ft after coring.
25												
30												
35												
40												

From Ground Surface to 16.5 feet, 3.5 in hallow stem auger was used.

Footing in Earth: 16.5 Footing in Rock: 5 No. of Samples: 5 Hole No. EB-5
SAMPLE TYPE CODING: SS = DRIVEN C = CORE A = AUGER UP = UNDISTURBED PISTON
PROPORTIONS USED: TRACE = 1-10% LITTLE = 10-20% SOME = 20-35% AND = 35-50%

A-5

SOIL TEST BORING REPORT
APPLIED EARTH TECHNOLOGIES
571 Bee Street, Meriden, CT 06450

SHEET 1 OF 1

DRILLER: James Lloret / R. Benivaal
SUPERVISOR: Applied Earth Technologies
SOILS ENGINEER
BORING CONTRACTOR: Associates Boring Company, Inc.
DESIGN ENGINEER: DMJM Harris
TOWN: Bridgeport, Connecticut.
PROJECT NAME: East Bridgeport Railyard Layout
PROJECT NUMBER: 300-130
LOCATION: Midsection of Tacks
Surface Elevation: 25.77 feet
Date Started: 02/20/08
Date Finished: 02/20/08

	Type	Size I.D.	Hammer Fall
Auger	Hollow	3.50 in	140 lbs.
Casing			30"
Sampler	S.S.	1 - 3/8"	
Core Bar	NQ		Bit / NX

Hole No. EB-6
Line & Station
Offset
N. Coordinate 628289.88
E. Coordinate 887411.77

Groundwater Observations

AT 3.0'	AFTER	Zero	HRS	
AT	AFTER		HRS	

DEPTH	Coring time in minutes per foot	DEPTH IN FEET FROM - TO	SAMPLE NO.	PEN. INCH	REC. INCH	TYPE	BLOWS PER 6 INCHES ON SAMPLER 0-6	6-12	12-18	18-24	STRATA CHANGE: DEPTH, ELEV. IN FEET	FIELD IDENTIFICATION OF SOIL, REMARKS (INCL. COLOR, LOSS OF WASH WATER, ETC.)
												8" Stone.
		1.0 - 3.0	1	24	3	SS	15	33	33	28	1.5	Black brown fine coarse SAND, ashes, cinders, miscellaneous fill.
5		3.0 - 5.0	2	24	10	SS	23	48	36	45		Gray brown fine coarse SAND, little to some fine medium gravel, little silt, till.
		5.0 - 7.0	3	24	12	SS	8	31	30	30		
											9.0	
10	3	9.0-14.0	1	60	60	C					16.6	Cored 9.0-14.0 ft, recovery 60", RQD=45% Gray fine medium grained SCHIST and granofels.
	4											
	3											
	3											
	2										14.0	
15											11.8	End of Boring at 14 ft, Water at 2.0 ft after coring.
20												
25												
30												
35												
40												

From Ground Surface to 9.0 feet, 3.5 in hallow stem auger was used.

Footing in Earth: 9 Footing in Rock: 5 No. of Samples: 3 Hole No. EB-6
SAMPLE TYPE CODING: SS = DRIVEN C = CORE A = AUGER UP = UNDISTURBED PISTON
PROPORTIONS USED: TRACE = 1-10% LITTLE = 10-20% SOME = 20-35% AND = 35-50%

A-6

FOR INFORMATION ONLY

REV.	DATE	REVISION DESCRIPTION	SHEET NO.
-	-	-	-
-	-	-	-
-	-	-	-
-	-	-	-
-	-	-	-
-	-	-	-
-	-	-	-

THE INFORMATION, INCLUDING ESTIMATED QUANTITIES OF WORK, SHOWN ON THESE SHEETS IS BASED ON LIMITED INVESTIGATIONS BY THE STATE AND IS IN NO WAY WARRANTED TO INDICATE THE CONDITIONS OF ACTUAL QUANTITIES OF WORK WHICH WILL BE REQUIRED.

Plotted: 8/26/2009

DESIGNER/DRAFTER: APP. EARTH
CHECKED BY: DMJM HARRIS
NOT TO SCALE

STATE OF CONNECTICUT
DEPARTMENT OF TRANSPORTATION

Filename: ...\FD..HST..BOR..300.130..C002.dgn

SIGNATURE/BLOCK:
APPROVED BY:
DATE: 9-2-2009

PROJECT TITLE: EAST BRIDGEPORT RAIL YARD IMPROVEMENTS

TOWN: BRIDGEPORT
DRAWING TITLE: BORING LOGS

PROJECT NO. 300-130
DRAWING NO. BOR-002
SHEET NO. 15

THE INFORMATION, INCLUDING ESTIMATED QUANTITIES OF WORK SHOWN ON THESE SHEETS IS BASED ON LIMITED INVESTIGATIONS BY THE STATE AND IS IN NO WAY WARRANTED TO INDICATE THE TRUE CONDITIONS OR ACTUAL QUANTITIES OR DISTRIBUTION OF QUANTITIES OF WORK WHICH WILL BE REQUIRED.

URS CORPORATION AES
500 ENTERPRISE DRIVE
ROCKY HILL, CT 06067
1-(860)-529-8882

NO.	DATE	DESCRIPTION

REVISIONS

STATE OF CONNECTICUT
DEPARTMENT OF TRANSPORTATION

SECTION C-1a & C-2 NEW HAVEN LINE

CATENARY REPLACEMENT BETWEEN WALK BRIDGE AND STRUCTURE 636, PECK BRIDGE AND STRUCTURE 863

PLAN – BORING LOGS – SHEET 2

ENGINEER: URS CORPORATION AES
DESIGNER: RW | DRAFTER: AMK | CHECKER: AJM
APPROVED: T. HOLLAND | DATE: 09/13/13
STRUCTURE NO. | BRIDGE LOG NO. | STRUCTURE SHEET NO. G-SB-11

URS CORPORATION AES
500 ENTERPRISE DRIVE
ROCKY HILL, CT 06067

PROJECT CONTROL DATE: 09/13/13 DISK FILENAME: G-SB-11(7).dwg 100% DESIGN

F.H.W.A. REGION	STATE	TOWN	FED. AID PROJ. NO.	PROJ. NO.	YEAR	SHEET NUMBER
1	CONN.	VARIOUS	CT-05-0109	301-0145	2013	01.03.019

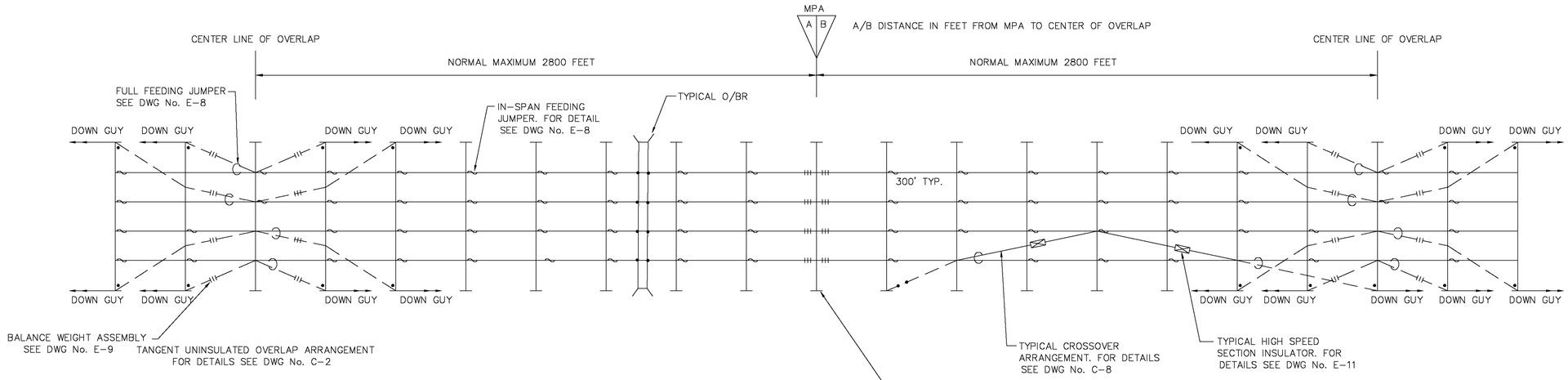

TANGENT TRACK

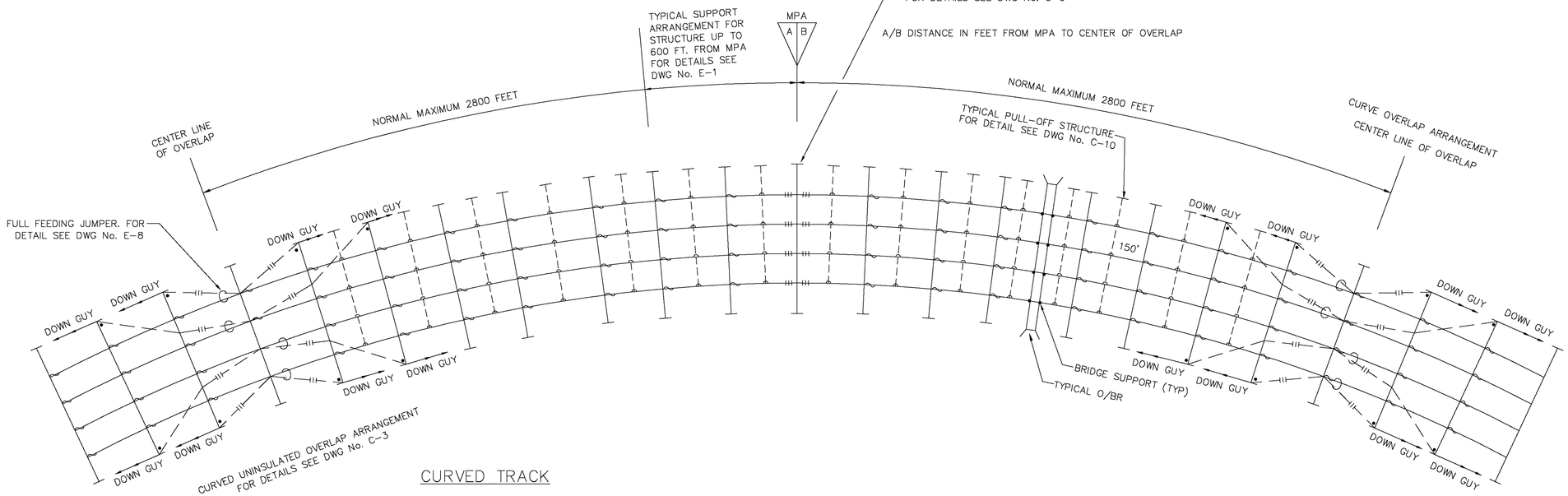

CURVED TRACK

N.T.S.

NOTES:

1. PULL-OFF STRUCTURE SHALL BE USED WHEN MAXIMUM MID SPAN OFFSET BETWEEN TWO REGISTRATION SUPPORTING STRUCTURE IS EXCEEDED.

THE INFORMATION, INCLUDING ESTIMATED QUANTITIES OF WORK SHOWN ON THESE SHEETS IS BASED ON LIMITED INVESTIGATIONS BY THE STATE AND IS IN NO WAY WARRANTED TO INDICATE THE TRUE CONDITIONS OR ACTUAL QUANTITIES OR DISTRIBUTION OF QUANTITIES OF WORK WHICH WILL BE REQUIRED.

URS CORPORATION AES
500 ENTERPRISE DRIVE
ROCKY HILL, CT 06067
1-(860)-529-8882

THE Burns GROUP
ENGINEERING AND CONSTRUCTION

Burns Engineering, Inc.
Metro-Plex II
8201 Corporate Drive, Suite 800
Landover, MD 20785-2230
phone 703-760-9076 fax 301-577-0088

URS CORPORATION AES
500 ENTERPRISE DRIVE
ROCKY HILL, CT 06067

NO.	DATE	DESCRIPTION

REVISIONS

STATE OF CONNECTICUT
DEPARTMENT OF TRANSPORTATION

SECTION C-1a & C-2 NEW HAVEN LINE

CATENARY REPLACEMENT BETWEEN WALK BRIDGE AND STRUCTURE 636, PECK BRIDGE AND STRUCTURE 863

TYPICAL TENSION LENGTH

ENGINEER: BURNS ENGINEERING
DESIGNER: MS DRAFTER: HJ CHECKER: JCD
APPROVED: SDB DATE: 09/13/13
STRUCTURE NO. BRIDGE LOG NO. STRUCTURE SHEET NO. C-1

PROJECT CONTROL DATE: 09/13/13 DISK FILENAME: C-1.dwg 100% DESIGN

F H W A REGION	STATE	TOWN	FED. AID PROJ. NO.	PROJ. NO.	YEAR	SHEET NUMBER
1	CONN.	VARIOUS	CT-05-0109	301-0145	2013	01.03.020

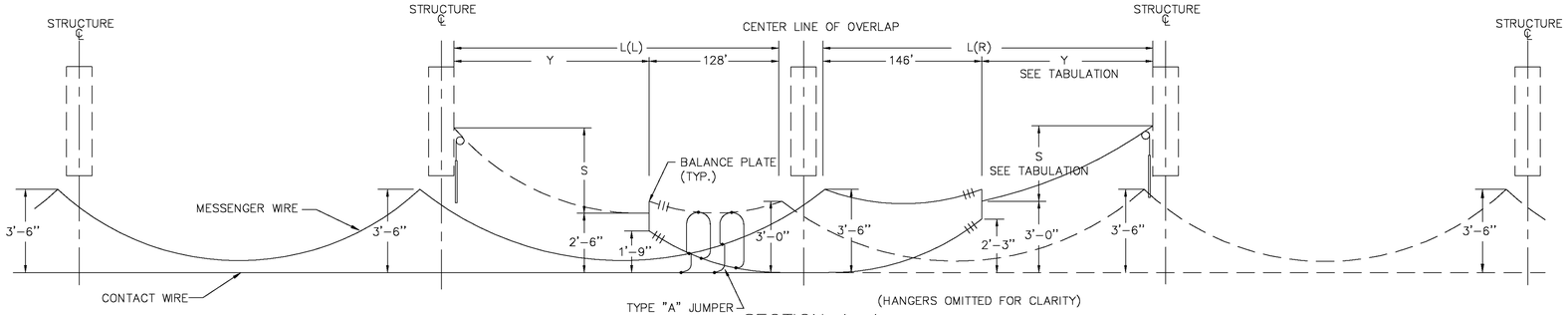

SECTION A–A

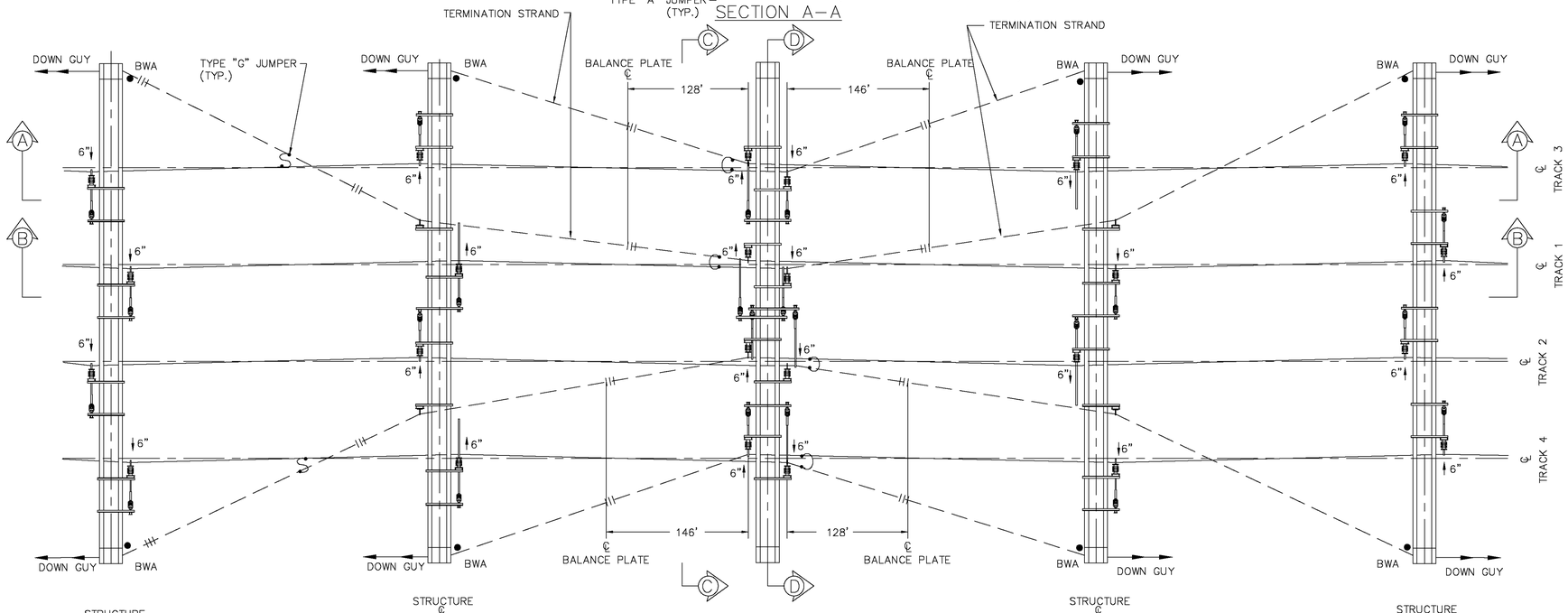

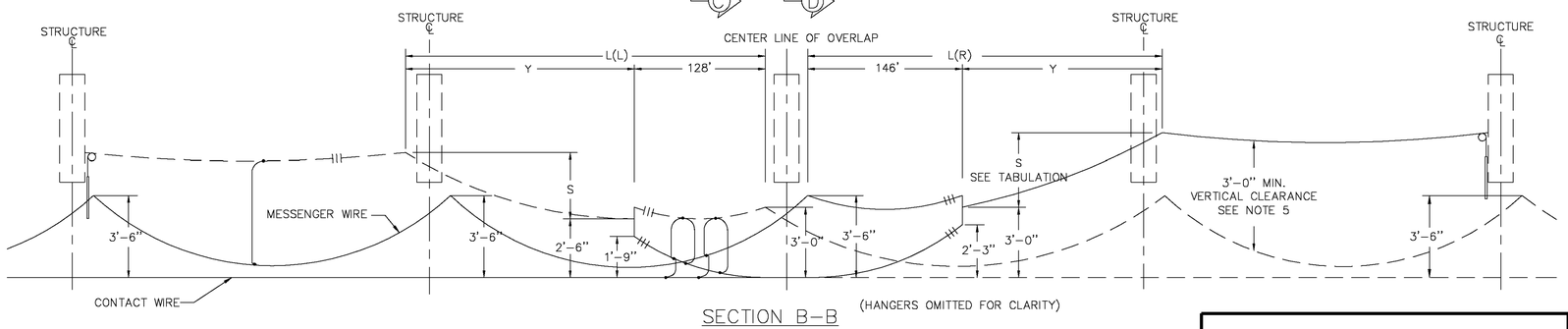

SECTION B–B

OUT OF RUNNING SPAN					
3'-0" SYSTEM HEIGHT			3'-6" SYSTEM HEIGHT		
L(L)	Y	S	L(R)	Y	S
160'	32'	0'-7"			
170'	42'	0'-9"			
180'	52'	0'-11 1/2"	180'	34'	0'-8 1/2"
190'	62'	1'-2"	190'	44'	0'-11"
200'	72'	1'-4 1/2"	200'	54'	1'-1 1/2"
210'	82'	1'-7"	210'	64'	1'-4 1/2"
220'	92'	1'-10"	220'	74'	1'-7"
230'	102'	2'-0 1/2"	230'	84'	1'-10"
240'	112'	2'-3 1/2"	240'	94'	2'-1"
250'	122'	2'-6"	250'	104'	2'-4"
260'	132'	2'-9"	260'	114'	2'-7"
270'	142'	3'-0"	270'	124'	2'-10"
280'	152'	3'-3 1/2"	280'	134'	3'-1 1/2"
290'	162'	3'-6 1/2"	290'	144'	3'-4 1/2"
300'	172'	3'-9 1/2"	300'	154'	3'-8"

NOTES

1. DIMENSIONS SHOWN ARE TYPICAL ONLY.
2. 3" VERTICAL SEPARATION MUST BE MAINTAINED WHERE MESSENGERS CROSS EACH OTHER.
3. FOR SECTION "C–C" AND "D–D" SEE DRAWING C–4.
4. FOR ACTUAL OVERLAP ARRANGEMENT SEE LAYOUT AND SED.
5. INSPAN INSULATION AND POTENTIAL JUMPERS SHALL BE INSTALLED WHERE THE 3'-0" VERTICAL CLEARANCE BETWEEN THE OOR WIRE AND IN–RUNNING CATENARY CAN NOT BE ACHIEVED.

THE INFORMATION, INCLUDING ESTIMATED QUANTITIES OF WORK SHOWN ON THESE SHEETS IS BASED ON LIMITED INVESTIGATIONS BY THE STATE AND IS IN NO WAY WARRANTED TO INDICATE THE TRUE CONDITIONS OR ACTUAL QUANTITIES OR DISTRIBUTION OF QUANTITIES OF WORK WHICH WILL BE REQUIRED.

URS CORPORATION AES
500 ENTERPRISE DRIVE
ROCKY HILL, CT 06067
1-(860)-529-8882

THE Burns GROUP
ENGINEERING AND CONSTRUCTION
Burns Engineering, Inc.
Metro-Plex II
8201 Corporate Drive, Suite 800
Landover, MD 20785-2230
phone 703-760-9076 fax 301-577-0088

NO.	DATE	DESCRIPTION

REVISIONS

STATE OF CONNECTICUT
DEPARTMENT OF TRANSPORTATION

SECTION C–1a & C–2 NEW HAVEN LINE

CATENARY REPLACEMENT BETWEEN WALK BRIDGE AND STRUCTURE 636, PECK BRIDGE AND STRUCTURE 863

AUTO–TENSIONED SIMPLE CATENARY – UNINSULATED OVERLAP, TANGENT TRACK

ENGINEER: BURNS ENGINEERING
DESIGNER: MS DRAFTER: HJ CHECKER: JCD
APPROVED: SDB DATE: 09/13/13
STRUCTURE NO. BRIDGE LOG NO. STRUCTURE SHEET NO. C–2

PROJECT CONTROL DATE: 09/13/13 DISK FILENAME: C–2.dwg 100% DESIGN

F.H.W.A. REGION	STATE	TOWN	FED. AID PROJ. NO.	PROJ. NO.	YEAR	SHEET NUMBER
1	CONN.	VARIOUS	CT-05-0109	301-0145	2013	01.03.021

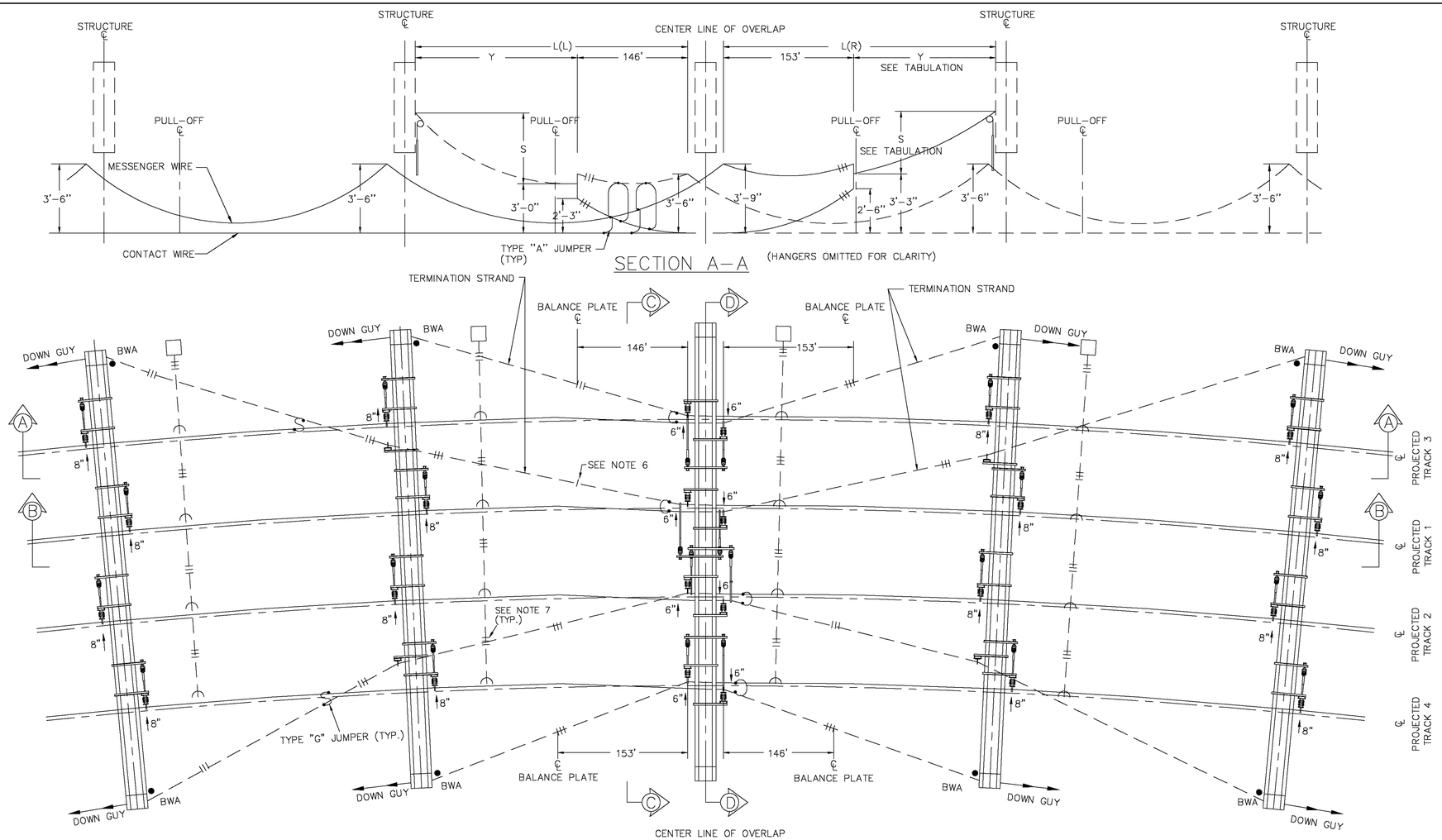

OUT OF RUNNING SPAN

3'-6" SYSTEM HEIGHT			3'-9" SYSTEM HEIGHT		
L(L)	Y	S	L(R)	Y	S
180'	34'	0'-8 1/2"	180'	27'	0'-5"
190'	44'	0'-11"	190'	37'	0'-7"
200'	54'	1'-1 1/2"	200'	47'	0'-9"
210'	64'	1'-4 1/2"	210'	57'	1'-0"
220'	74'	1'-7"	220'	67'	1'-3"
230'	84'	1'-10"	230'	77'	1'-6"
240'	94'	2'-1"	240'	87'	1'-9"
250'	104'	2'-4"	250'	97'	2'-0"
260'	114'	2'-7"	260'	107'	2'-3"
270'	124'	2'-10"	270'	117'	2'-6"
280'	134'	3'-1 1/2"	280'	127'	2'-9"
290'	144'	3'-4 1/2"	290'	137'	3'-0"
300'	154'	3'-8"	300'	147'	3'-4"

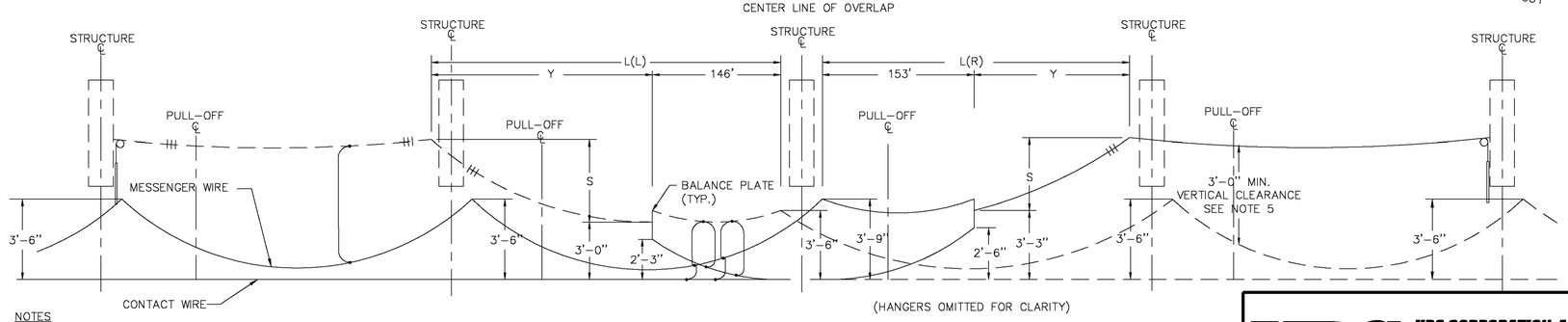

NOTES

1. DIMENSIONS SHOWN ARE TYPICAL ONLY.
2. 3" VERTICAL SEPARATION MUST BE MAINTAINED WHERE MESSENGERS CROSS EACH OTHER.
3. FOR SECTION "C-C" AND "D-D" SEE DRAWING C-4.
4. FOR ACTUAL OVERLAP ARRANGEMENT SEE LAYOUT AND SED.
5. INSPAN INSULATION AND POTENTIAL JUMPERS SHALL BE INSTALLED WHERE THE 3'-0" VERTICAL CLEARANCE BETWEEN THE OOR WIRE AND IN-RUNNING CATENARY CAN NOT BE ACHIEVED.
6. REPLACE BALANCE PLATE TERMINATION INSULATORS WITH LINKS.
7. WHEN THE INSULATORS ARE TOO CLOSE ON TOP OF THE PULL-OFF WIRE, REPLACE BALANCE PLATE TERMINATION INSULATORS WITH LINKS, AND ADD MIA ASSEMBLY AS REQUIRED.

THE INFORMATION, INCLUDING ESTIMATED QUANTITIES OF WORK SHOWN ON THESE SHEETS IS BASED ON LIMITED INVESTIGATIONS BY THE STATE AND IS IN NO WAY WARRANTED TO INDICATE THE TRUE CONDITIONS OR ACTUAL QUANTITIES OR DISTRIBUTION OF QUANTITIES OF WORK WHICH WILL BE REQUIRED.

URS CORPORATION AES
500 ENTERPRISE DRIVE
ROCKY HILL, CT 06067
1-(860)-529-8882

THE Burns GROUP
ENGINEERING AND CONSTRUCTION
Burns Engineering, Inc.
Metro-Plex II
8201 Corporate Drive, Suite 800
Landover, MD 20785-2230
phone 703-760-9076 fax 301-577-0088

NO.	DATE	DESCRIPTION

REVISIONS

STATE OF CONNECTICUT
DEPARTMENT OF TRANSPORTATION

SECTION C-1a & C-2 NEW HAVEN LINE

CATENARY REPLACEMENT BETWEEN WALK BRIDGE AND STRUCTURE 636, PECK BRIDGE AND STRUCTURE 863

AUTO-TENSIONED SIMPLE CATENARY – UNINSULATED OVERLAP, CURVED TRACK

ENGINEER: BURNS ENGINEERING
DESIGNER: MS DRAFTER: HJ CHECKER: JCD
APPROVED: SDB DATE: 09/13/13
STRUCTURE NO. BRIDGE LOG NO. STRUCTURE SHEET NO. C-3

PROJECT CONTROL DATE: 09/13/13 DISK FILENAME: C-3.dwg 100% DESIGN

F.H.W.A. REGION	STATE	TOWN	FED. AID PROJ. NO.	PROJ. NO.	YEAR	SHEET NUMBER
1	CONN.	VARIOUS	CT-05-0109	301-0145	2013	01.03.022

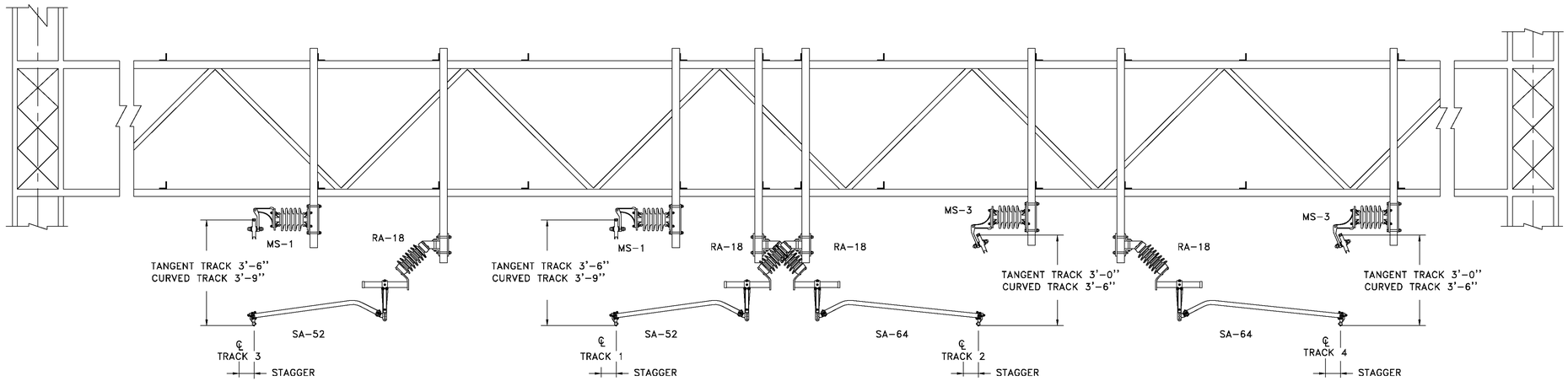

SECTION D-D

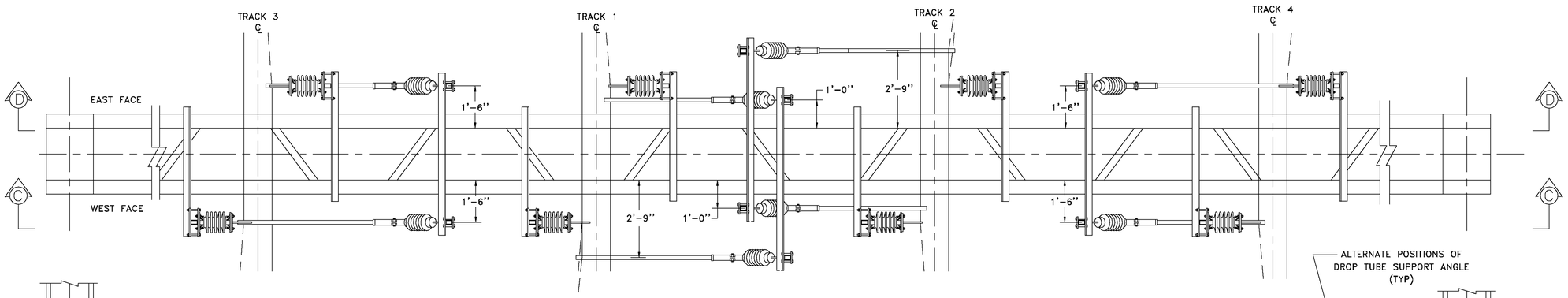

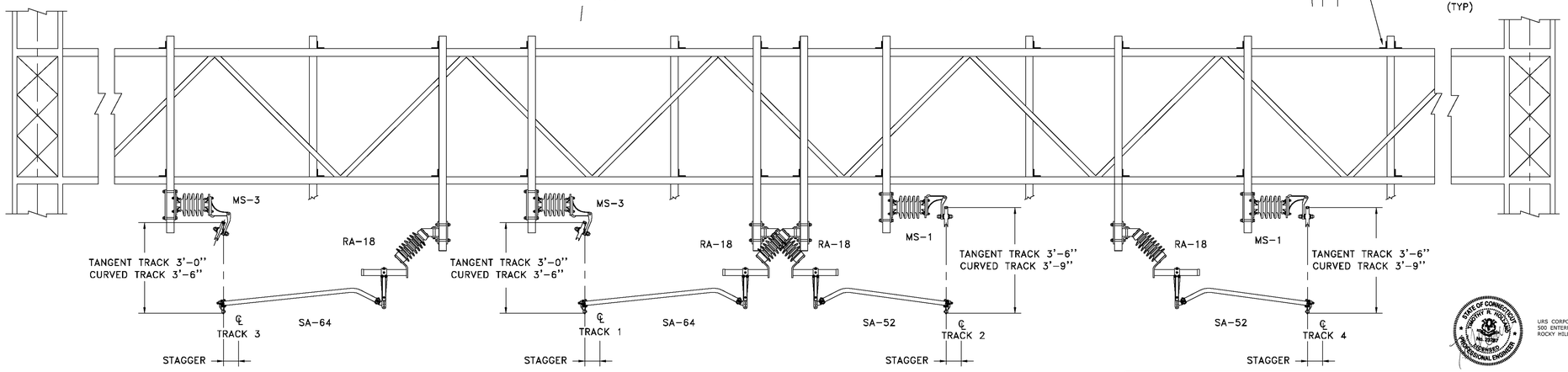

SECTION C-C

NTS

THE INFORMATION, INCLUDING ESTIMATED QUANTITIES OF WORK SHOWN ON THESE SHEETS IS BASED ON LIMITED INVESTIGATIONS BY THE STATE AND IS IN NO WAY WARRANTED TO INDICATE THE TRUE CONDITIONS OR ACTUAL QUANTITIES OR DISTRIBUTION OF QUANTITIES OF WORK WHICH WILL BE REQUIRED.

STATE OF CONNECTICUT
DEPARTMENT OF TRANSPORTATION

SECTION C-1a & C-2 NEW HAVEN LINE

CATENARY REPLACEMENT BETWEEN WALK BRIDGE AND STRUCTURE 636, PECK BRIDGE AND STRUCTURE 863

AUTO-TENSIONED SIMPLE CATENARY – UNINSULATED OVERLAP, SUPPORT AND REGISTRATION CROSS SECTION

STATE OF CONNECTICUT "JOHN" A. HOLLAS No. 15797 LICENSED PROFESSIONAL ENGINEER

URS CORPORATION AES
500 ENTERPRISE DRIVE
ROCKY HILL, CT 06067

URS
URS CORPORATION AES
500 ENTERPRISE DRIVE
ROCKY HILL, CT 06067
1-(860)-529-8882

THE Burns GROUP
ENGINEERING AND CONSTRUCTION

Burns Engineering, Inc.
Metro Plaz II
8201 Corporate Drive, Suite 800
Landover, MD 20785-2230
phone 703-760-9076 fax 301-577-2088

NO.	DATE	DESCRIPTION

REVISIONS

ENGINEER: BURNS ENGINEERING
DESIGNER: MS DRAFTER: HJ CHECKER: JCD
APPROVED: SDB DATE: 09/13/13
STRUCTURE NO. BRIDGE LOG NO. STRUCTURE SHEET NO. C-4

PROJECT CONTROL DATE: 09/13/13 DISK FILENAME: C-4.dwg 100% DESIGN

F.H.W.A. REGION	STATE	TOWN	FED. AID PROJ. NO.	PROJ. NO.	YEAR	SHEET NUMBER
1	CONN.	VARIOUS	CT-05-0109	301-0145	2013	01.03.023

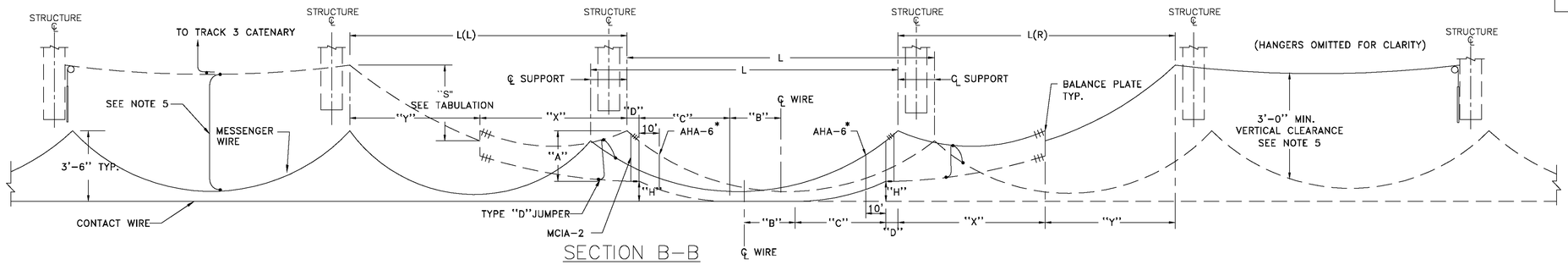

SECTION B-B

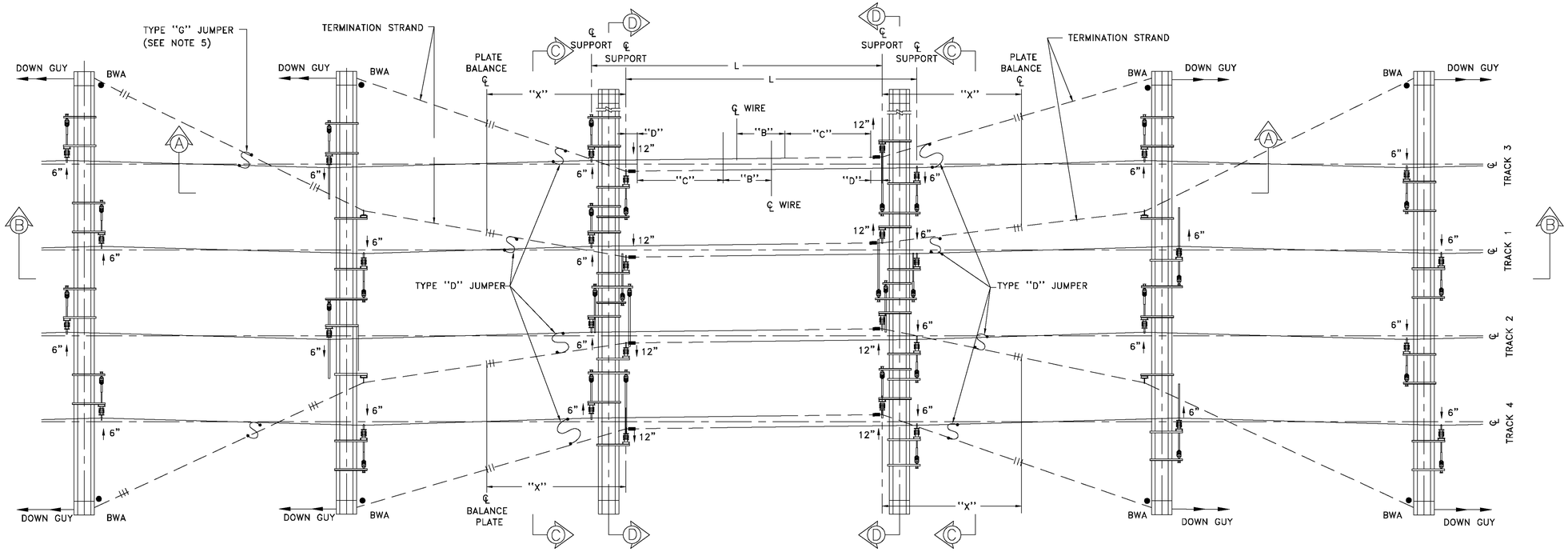

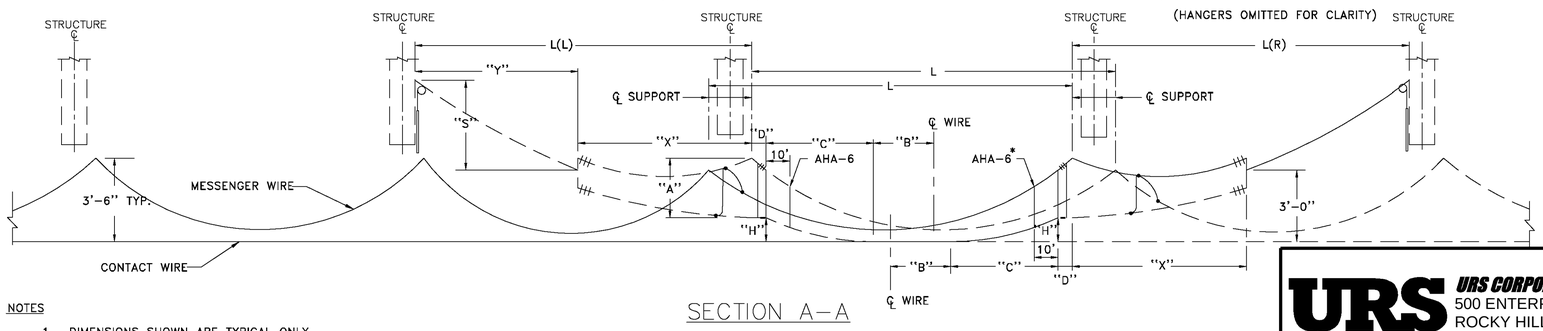

SECTION A-A

INSULATED O/L SPAN					
L	B	C	D	H	ASSY.
160*	5'	69'	6'	9"	AHA-6
165*	7.5'	69'	6'	9"	AHA-6
170*	5'	74'	6'	9"	AHA-6
175*	7.5'	74'	6'	9"	AHA-6
180*	10'	74'	6'	9"	AHA-6
185	12.5'	74'	6'	9"	AHA-6
190	5'	84'	6'	9"	
195	7.5	84'	6'	9"	
200	10'	84'	6'	9"	
205	12.5'	84'	6'	9"	
210	15'	84'	6'	9"	
215	17.5'	84'	6'	9"	
220	20'	84'	6'	9"	
225	9.5'	97'	6'	12"	
230	12'	97'	6'	12"	
235	14.5'	97'	6'	12"	
240	17'	97'	6'	12"	

* INSTALL ASSEMBLY AHA-6.

OUT OF RUNNING SPAN				
L(L) OR L(R)	A = 2'-9" X = 119'		A = 2'-6" X = 108'	
	Y	S	Y	S
140			32'	0'-6"
150	31'	0'-6"	42'	0'-8"
160	41'	0'-8 1/2"	52'	0-10"
170	51'	0-10 1/2"	62'	1'-0"
180	61'	1'-1"	72'	1'-2 1/2"
190	71'	1'-3 1/2"	82'	1'-5"
200	81'	1'-6"	92'	1'-7"
210	91'	1'-8 1/2"	102'	1'-9 1/2"
220	101'	1'-11"	112'	2'-0"
225	106'	2'-0 1/2"	117'	2'-1 1/2"
230	111'	2'-2"	122'	2'-2 1/2"
240	121'	2'-4 1/2"	132'	2'-5 1/2"
250	131'	2'-7"	142'	2'-8"
260	141'	2'-10"	152'	2'-11"
270	151'	3'-1"	162'	3'-2"
280	161'	3'-4"	172'	3'-5"
290	171'	3'-7"	182'	3'-8"
300	181'	3'-10 1/2"	192'	3'-11"

NOTES

1. DIMENSIONS SHOWN ARE TYPICAL ONLY.
2. 3" VERTICAL SEPARATION MUST BE MAINTAINED WHERE MESSENGERS CROSS EACH OTHER.
3. FOR SECTION "C-C" AND "D-D" SEE DRAWING C-7.
4. FOR ACTUAL OVERLAP ARRANGEMENT SEE LAYOUT AND SED.
5. INSPAN INSULATION AND POTENTIAL JUMPERS SHALL BE INSTALLED WHERE THE 3'-0" VERTICAL CLEARANCE BETWEEN THE OOR WIRE AND IN-RUNNING CATENARY CAN NOT BE ACHIEVED.
6. OOR CONTACT WIRE REGISTRATION ARM SHOULD ALWAYS BE IN TENSION.

THE INFORMATION, INCLUDING ESTIMATED QUANTITIES OF WORK SHOWN ON THESE SHEETS IS BASED ON LIMITED INVESTIGATIONS BY THE STATE AND IS IN NO WAY WARRANTED TO INDICATE THE TRUE CONDITIONS OR ACTUAL QUANTITIES OR DISTRIBUTION OF QUANTITIES OF WORK WHICH WILL BE REQUIRED.

URS CORPORATION AES
500 ENTERPRISE DRIVE
ROCKY HILL, CT 06067
1-(860)-529-8882

THE Burns GROUP
ENGINEERING AND CONSTRUCTION
Burns Engineering, Inc.
Metro Plex II
8000 Corporate Drive, Suite 800
Landover, MD 20785-2230
phone 703-760-9076 fax 301-577-2088

STATE OF CONNECTICUT
DEPARTMENT OF TRANSPORTATION

SECTION C-1a & C-2 NEW HAVEN LINE

CATENARY REPLACEMENT BETWEEN WALK BRIDGE AND STRUCTURE 636, PECK BRIDGE AND STRUCTURE 863

AUTO-TENSIONED SIMPLE CATENARY - INSULATED OVERLAP, TANGENT TRACK

NO.	DATE	DESCRIPTION

REVISIONS

ENGINEER: BURNS ENGINEERING
DESIGNER: MS DRAFTER: HJ CHECKER: JCD
APPROVED: SDB DATE: 09/13/13
STRUCTURE NO. BRIDGE LOG NO. STRUCTURE SHEET NO. C-5

PROJECT CONTROL DATE: 09/13/13 DISK FILENAME: C-5.dwg 100% DESIGN

F H W A REGION	STATE	TOWN	FED. AID PROJ. NO.	PROJ. NO.	YEAR	SHEET NUMBER
1	CONN.	VARIOUS	CT-05-0109	301-0145	2013	01.03.024

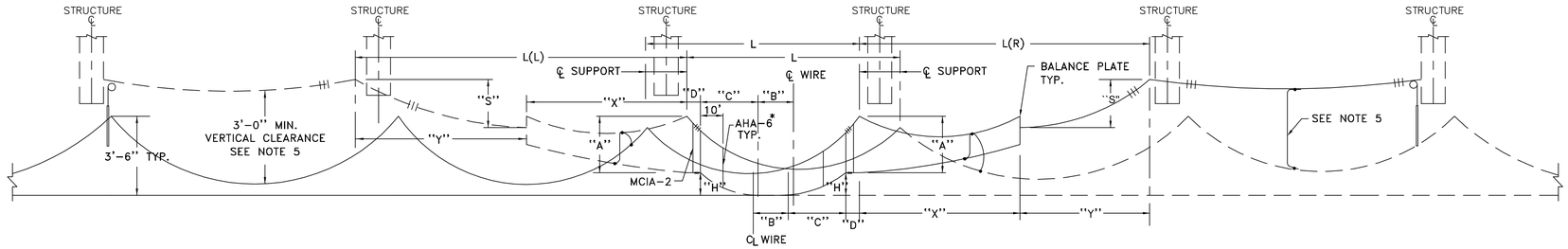

SECTION B-B

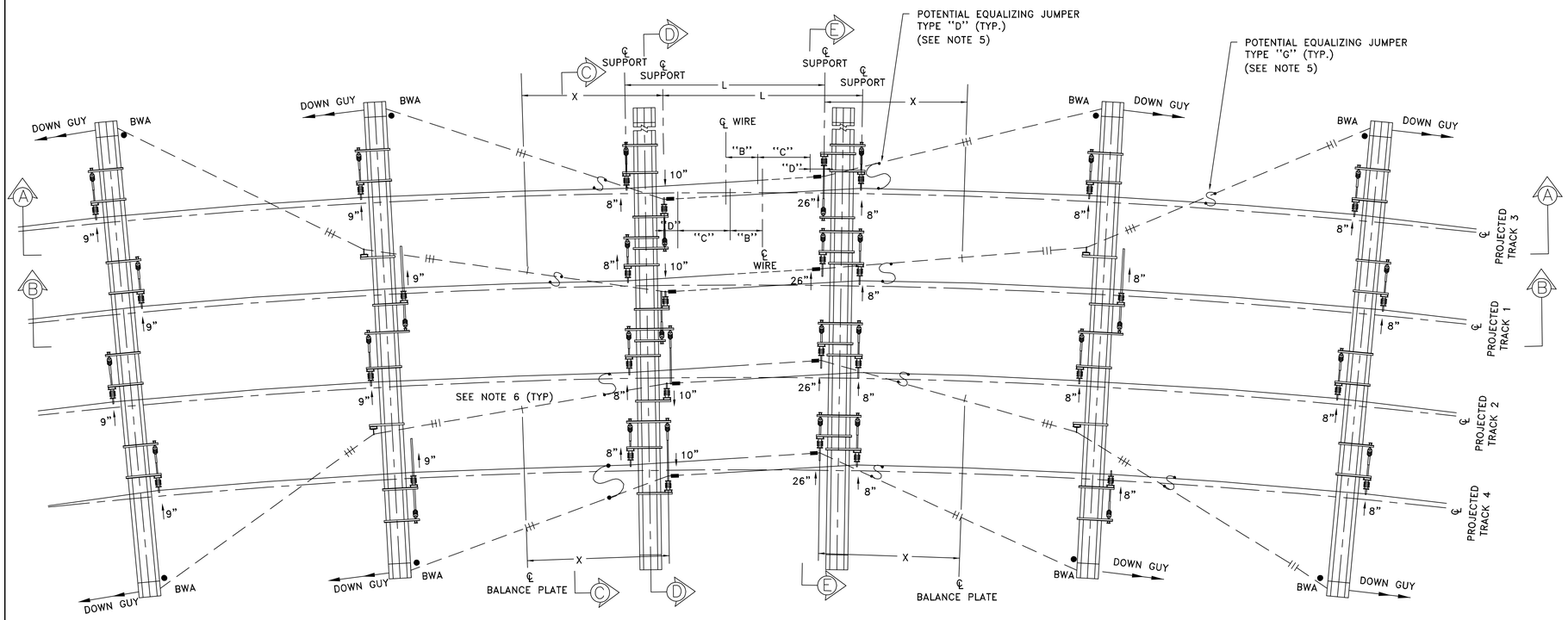

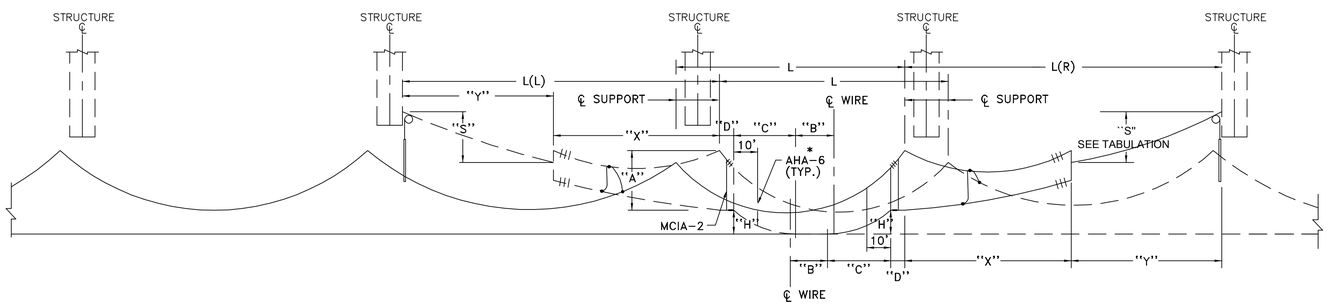

SECTION A-A

NOTES

1. DIMENSIONS SHOWN ARE TYPICAL ONLY.
2. 3" VERTICAL SEPARATION MUST BE MAINTAINED WHERE MESSENGERS CROSS EACH OTHER.
3. FOR SECTION "C-C", "D-D" AND "E-E", SEE DRAWING C-7.
4. FOR ACTUAL OVERLAP ARRANGEMENT SEE LAYOUT AND SED.
5. INSPAN INSULATION AND POTENTIAL JUMPERS SHALL BE INSTALLED WHERE THE 3'-0" VERTICAL CLEARANCE BETWEEN THE OOR WIRE AND IN-RUNNING CATENARY CAN NOT BE ACHIEVED.
6. REPLACE BALANCE PLATE TERMINATION INSULATORS WITH LINKS.
7. OOR CONTACT WIRE REGISTRATION ARM SHOULD ALWAYS BE IN TENSION.
8. USE ADDITIONAL CATENARY SUPPORT TO REDUCE THE LOADING, AS REQUIRED.

INSULATED O/L SPAN

L	B	C	D	H	ASSY.
160*	5'	69'	6'	9"	AHA-6
165*	7.5'	69'	6'	9"	AHA-6
170*	5'	74'	6'	9"	AHA-6
175*	7.5'	74'	6'	9"	AHA-6
180*	10'	74'	6'	9"	AHA-6
185	12.5'	74'	6'	9"	AHA-6
190	5'	84'	6'	9"	
195	7.5	84'	6'	9"	
200	10'	84'	6'	9"	
205	12.5'	84'	6'	9"	
210	15'	84'	6'	9"	
215	17.5'	84'	6'	9"	
220	20'	84'	6'	9"	
225	9.5'	97'	6'	12"	
230	12'	97'	6'	12"	
235	14.5'	97'	6'	12"	
240	17'	97'	6'	12"	

* INSTALL ASSEMBLY AHA-6.

OUT OF RUNNING SPAN

L(L) OR L(R)	A = 2'-9" X = 119'		A = 3'-0" X = 128'	
	Y	S	Y	S
150	31'	0'-6"		
160	41'	0'-8 1/2"	32'	0-7"
170	51'	0-10 1/2"	42'	0'-9"
180	61'	1'-1"	52'	0'-11 1/2"
190	71'	1'-3 1/2"	62'	1'-2"
200	81'	1'-6"	72'	1'-4 1/2"
210	91'	1'-8 1/2"	82'	1'-7"
220	101'	1'-11"	92'	1'-9 1/2"
225	106'	2'-0 1/2"	97'	1'-11"
230	111'	2'-2"	102'	2'-0 1/2"
240	121'	2'-4 1/2"	112'	2'-3"
250	131'	2'-7"	122'	2'-6"
260	141'	2'-10"	132'	2'-9"
270	151'	3'-1"	142'	3'-0"
280	161'	3'-4"	152'	3'-3 1/2"
290	171'	3'-7"	162'	3'-6 1/2"
300	181'	3'-10 1/2"	172'	3'-9 1/2"

THE INFORMATION, INCLUDING ESTIMATED QUANTITIES OF WORK SHOWN ON THESE SHEETS IS BASED ON LIMITED INVESTIGATIONS BY THE STATE AND IS IN NO WAY WARRANTED TO INDICATE THE TRUE CONDITIONS OR ACTUAL QUANTITIES OR DISTRIBUTION OF QUANTITIES OF WORK WHICH WILL BE REQUIRED.

URS CORPORATION AES
500 ENTERPRISE DRIVE
ROCKY HILL, CT 06067
1-(860)-529-8882

THE Burns GROUP
ENGINEERING AND CONSTRUCTION
Burns Engineering, Inc.
Metro-Plex II
8201 Corporate Drive, Suite 800
Landover, MD 20785-2230
phone 703-760-9076 fax 301-577-2088

URS CORPORATION AES
500 ENTERPRISE DRIVE
ROCKY HILL, CT 06067

STATE OF CONNECTICUT
DEPARTMENT OF TRANSPORTATION

SECTION C-1a & C-2 NEW HAVEN LINE

CATENARY REPLACEMENT BETWEEN WALK BRIDGE AND STRUCTURE 636, PECK BRIDGE AND STRUCTURE 863

AUTO-TENSIONED SIMPLE CATENARY - INSULATED OVERLAP, CURVED TRACK

NO.	DATE	DESCRIPTION

REVISIONS

ENGINEER: BURNS ENGINEERING
DESIGNER: MS DRAFTER: HJ CHECKER: JCD
APPROVED: SDB DATE: 09/13/13
STRUCTURE NO. BRIDGE LOG NO. STRUCTURE SHEET NO. C-6

PROJECT CONTROL DATE: 09/13/13 DISK FILENAME: C-6.dwg 100% DESIGN

F H W A REGION	STATE	TOWN	FED. AID PROJ. NO.	PROJ. NO.	YEAR	SHEET NUMBER
1	CONN.	VARIOUS	CT-05-0109	301-0145	2013	01.03.025

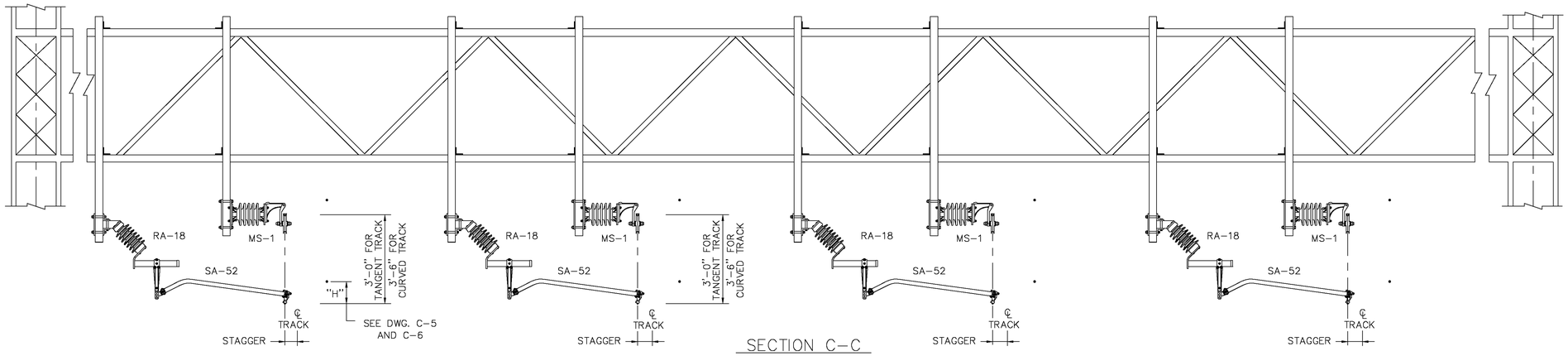

SECTION C-C

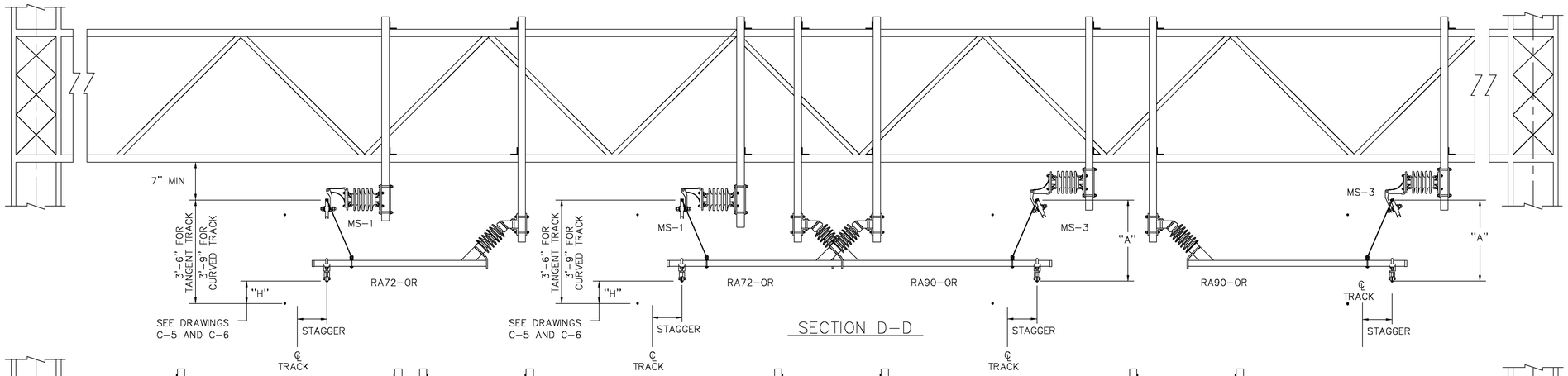

SECTION D-D

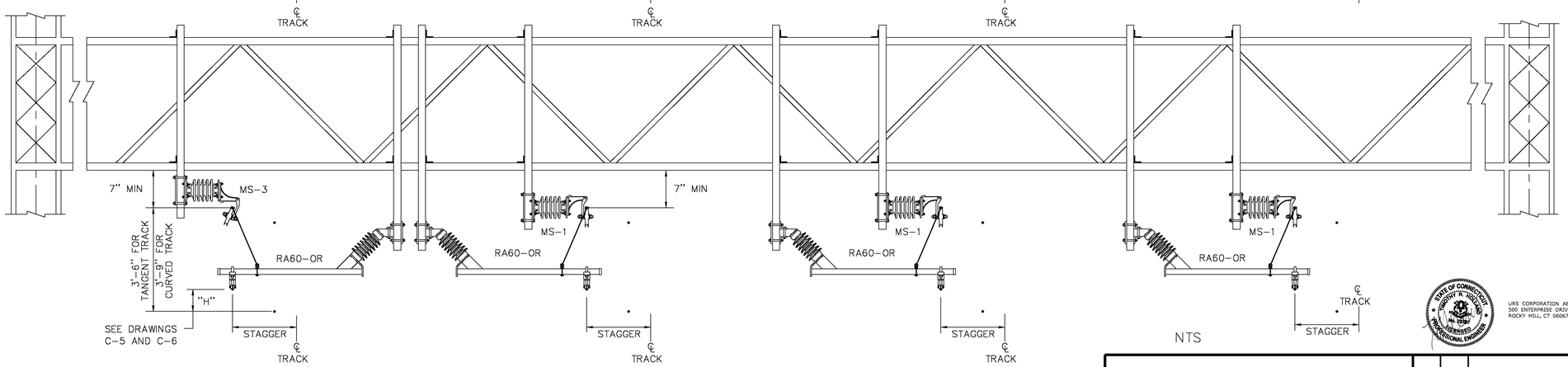

SECTION E-E

NTS

THE INFORMATION, INCLUDING ESTIMATED QUANTITIES OF WORK SHOWN ON THESE SHEETS IS BASED ON LIMITED INVESTIGATIONS BY THE STATE AND IS IN NO WAY WARRANTED TO INDICATE THE TRUE CONDITIONS OR ACTUAL QUANTITIES OR DISTRIBUTION OF QUANTITIES OF WORK WHICH WILL BE REQUIRED.

URS CORPORATION AES
500 ENTERPRISE DRIVE
ROCKY HILL, CT 06067
1-(860)-529-8882

THE Burns GROUP
ENGINEERING AND CONSTRUCTION

Burns Engineering, Inc.
Metro Plex II
8201 Corporate Drive, Suite 800
Landover, MD 20785-2230
phone 703-760-9076 fax 301-577-2088

URS CORPORATION AES
500 ENTERPRISE DRIVE
ROCKY HILL, CT 06067

NO.	DATE	DESCRIPTION

REVISIONS

STATE OF CONNECTICUT
DEPARTMENT OF TRANSPORTATION

SECTION C-1a & C-2 NEW HAVEN LINE

CATENARY REPLACEMENT BETWEEN WALK BRIDGE AND STRUCTURE 636, PECK BRIDGE AND STRUCTURE 863

AUTO-TENSIONED SIMPLE CATENARY – INSULATED OVERLAP, SUPPORT AND REGISTRATION CROSS SECTION

ENGINEER: BURNS ENGINEERING
DESIGNER: MS DRAFTER: HJ CHECKER: JCD
APPROVED: SDB DATE: 09/13/13
STRUCTURE NO. BRIDGE LOG NO. STRUCTURE SHEET NO. C-7

PROJECT CONTROL DATE: 09/13/13 DISK FILENAME: C-7.dwg 100% DESIGN

F H W A REGION	STATE	TOWN	FED. AID PROJ. NO.	PROJ. NO.	YEAR	SHEET NUMBER
1	CONN.	VARIOUS	CT-05-0109	301-0145	2013	01.03.026

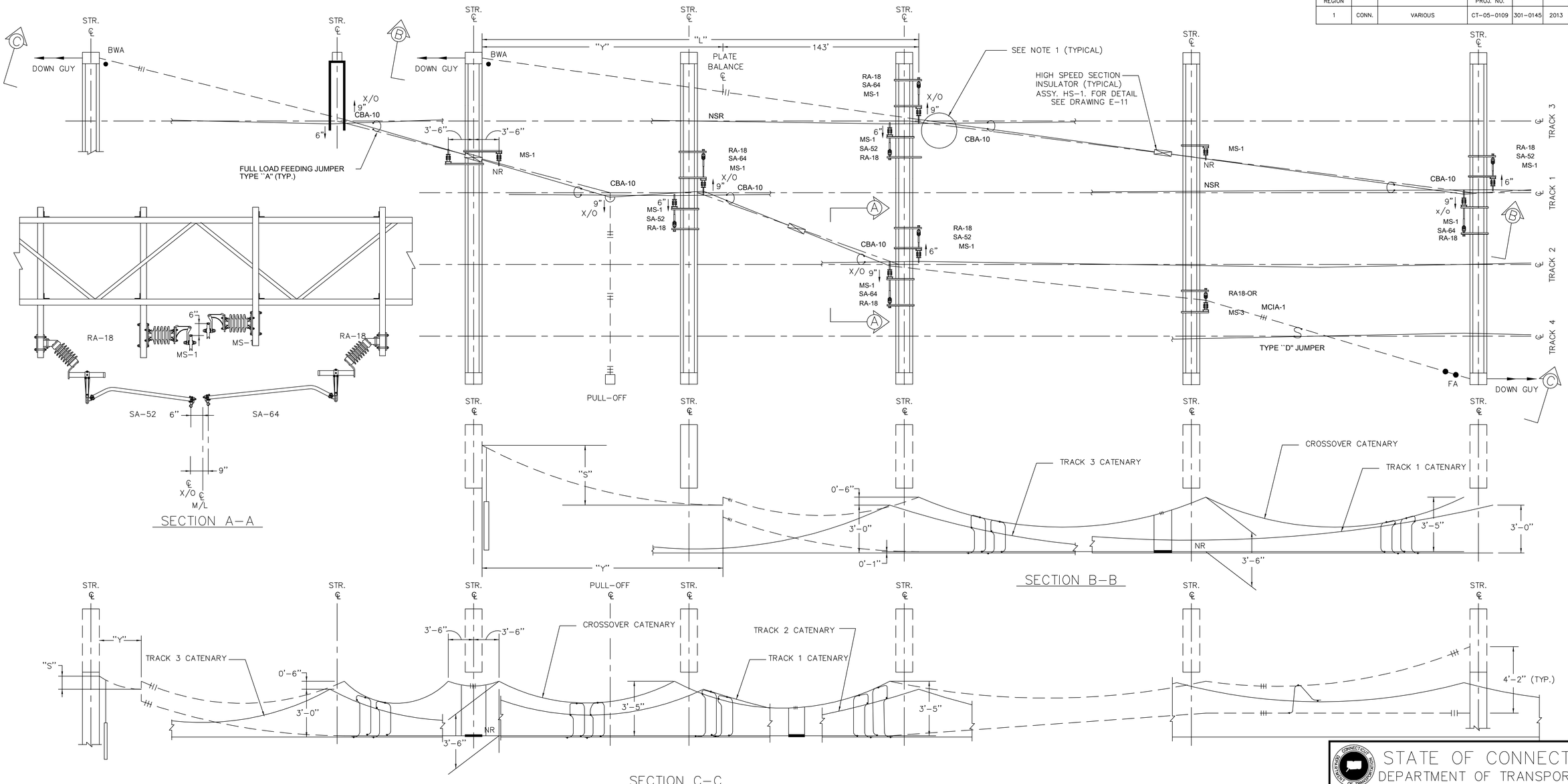

NOTES:

1. WHERE WIRES CROSS:
   a) AT THE STRUCTURES, THE MESSENGER WIRE FOR CROSS-OVER TO BE SUPPORTED HIGHER THAN MAIN LINE MESSENGER WIRE IN ORDER THAT THESE WIRES DO NOT CHAFE.
   b) CONTACT WIRE BRIDGE TO BE INSTALLED AND ALLOWANCE BE MADE FOR TEMPERATURE MOVEMENT. FOR DETAIL SEE DWG. E-5.
2. AT THE STRUCTURES WHERE WIRES ARE KNUCKLED, BOTH MESSENGER AND CONTACT WIRES CAN BE SUPPORTED AT THE SAME HEIGHT.
3. NEW STRUCTURES ARE INSTALLED TO REGISTER AND SUPPORT CROSSOVER CATENARY AND SECTION INSULATORS AS REQUIRED. FOR ACTUAL ARRANGEMENTS SEE LAYOUT AND SED.
4. FOR ACTUAL STAGGERS, WIRE HEIGHTS AND TERMINATION HEIGHTS, SEE LAYOUT AND SED.

OUT OF RUNNING SPAN

A = 3'-5"

L	Y	S	L	Y	S
170'	27'	0'-6 1/2"	240'	97'	2'-1 1/2"
180'	37'	0'-9"	250'	107'	2'-4 1/2"
190'	47'	0'-11 1/2"	260'	117'	2'-7 1/2"
200'	57'	1'-2"	270'	127'	2'-10 1/2"
210'	67'	1'-4 1/2"	280'	137'	3'-1 1/2"
220'	77'	1'-7 1/2"	290'	147'	3'-5"
230'	87'	1'-10 1/2"	300'	157'	3'-8 1/2"

THE INFORMATION, INCLUDING ESTIMATED QUANTITIES OF WORK SHOWN ON THESE SHEETS IS BASED ON LIMITED INVESTIGATIONS BY THE STATE AND IS IN NO WAY WARRANTED TO INDICATE THE TRUE CONDITIONS OR ACTUAL QUANTITIES OR DISTRIBUTION OF QUANTITIES OF WORK WHICH WILL BE REQUIRED.

STATE OF CONNECTICUT
DEPARTMENT OF TRANSPORTATION

SECTION C-1a & C-2 NEW HAVEN LINE

CATENARY REPLACEMENT BETWEEN WALK BRIDGE AND STRUCTURE 636, PECK BRIDGE AND STRUCTURE 863

AUTO-TENSIONED SIMPLE CATENARY - CROSSOVER ARRANGEMENT

URS CORPORATION AES
500 ENTERPRISE DRIVE
ROCKY HILL, CT 06067
1-(860)-529-8882

THE Burns GROUP
ENGINEERING AND CONSTRUCTION
Burns Engineering, Inc.
Metro-Plex II
8201 Corporate Drive, Suite 800
Landover, MD 20785-2230
phone 703-760-9076 fax 301-577-2088

URS CORPORATION AES
500 ENTERPRISE DRIVE
ROCKY HILL, CT 06067

NO.	DATE	DESCRIPTION

REVISIONS

ENGINEER: BURNS ENGINEERING
DESIGNER: MS DRAFTER: HJ CHECKER: JCD
APPROVED: SDB DATE: 09/13/13
STRUCTURE NO. BRIDGE LOG NO. STRUCTURE SHEET NO. C-8

PROJECT CONTROL DATE: 09/13/13 DISK FILENAME: C-8.dwg 100% DESIGN

F H W A REGION	STATE	TOWN	FED. AID PROJ. NO.	PROJ. NO.	YEAR	SHEET NUMBER
1	CONN.	VARIOUS	CT-05-0109	301-0145	2013	01.03.027

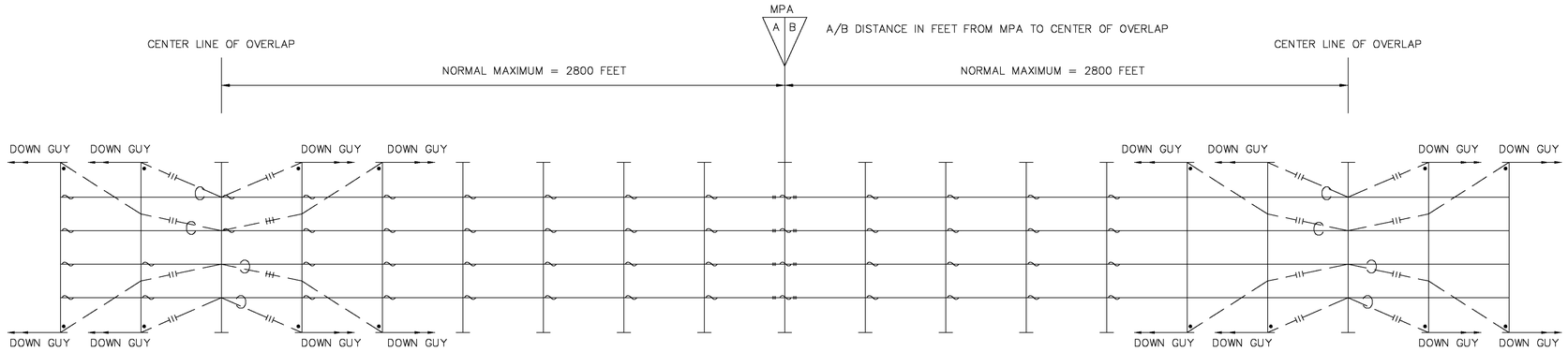

TYPICAL TENSION LENGTH

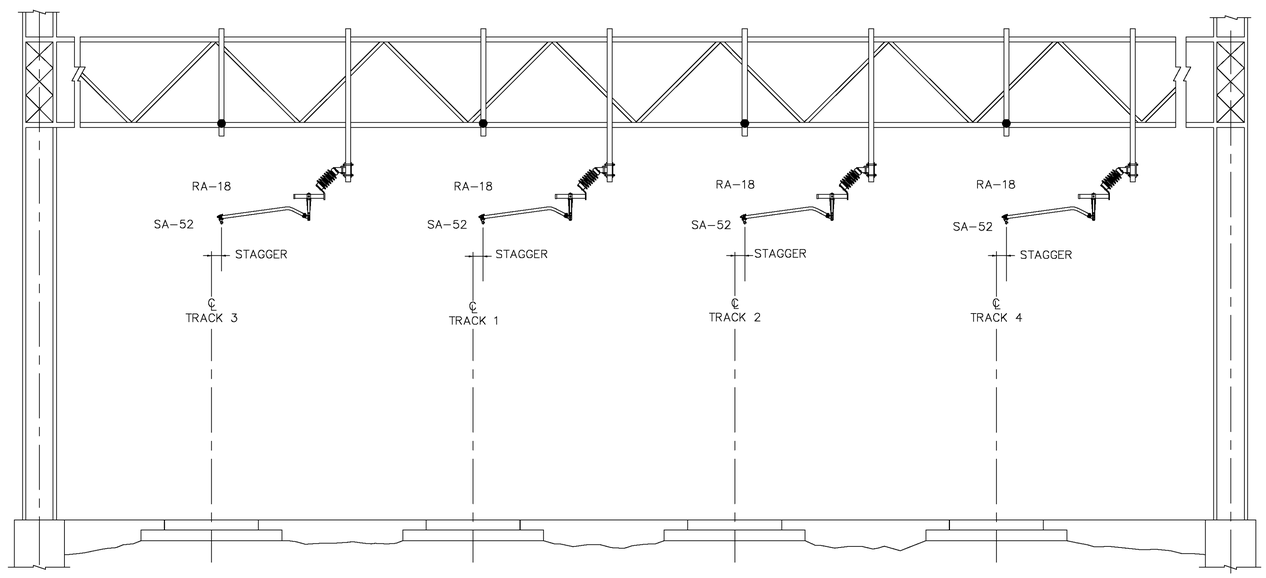

TYPICAL MID-POINT ANCHOR STRUCTURE

NTS

THE INFORMATION, INCLUDING ESTIMATED QUANTITIES OF WORK SHOWN ON THESE SHEETS IS BASED ON LIMITED INVESTIGATIONS BY THE STATE AND IS IN NO WAY WARRANTED TO INDICATE THE TRUE CONDITIONS OR ACTUAL QUANTITIES OR DISTRIBUTION OF QUANTITIES OF WORK WHICH WILL BE REQUIRED.

URS CORPORATION AES
500 ENTERPRISE DRIVE
ROCKY HILL, CT 06067

URS CORPORATION AES
500 ENTERPRISE DRIVE
ROCKY HILL, CT 06067
1-(860)-529-8882

THE Burns GROUP
ENGINEERING AND CONSTRUCTION

Burns Engineering, Inc.
Metro-Plex II
8201 Corporate Drive, Suite 800
Landover, MD 20785-2230
phone 703-760-9076 fax 301-577-0088

NO.	DATE	DESCRIPTION

REVISIONS

STATE OF CONNECTICUT
DEPARTMENT OF TRANSPORTATION

SECTION C-1a & C-2 NEW HAVEN LINE

CATENARY REPLACEMENT BETWEEN WALK BRIDGE AND STRUCTURE 636, PECK BRIDGE AND STRUCTURE 863

MID-POINT ARRANGEMENT

ENGINEER: BURNS ENGINEERING
DESIGNER: MS DRAFTER: HJ CHECKER: JCD
APPROVED: SDB DATE: 09/13/13
STRUCTURE NO. BRIDGE LOG NO. STRUCTURE SHEET NO. C-9

PROJECT CONTROL DATE: 09/13/13 DISK FILENAME: C-9.dwg 100% DESIGN

F.H.W.A. REGION	STATE	TOWN	FED. AID PROJ. NO.	PROJ. NO.	YEAR	SHEET NUMBER
1	CONN.	VARIOUS	CT-05-0109	301-0145	2013	01.03.028

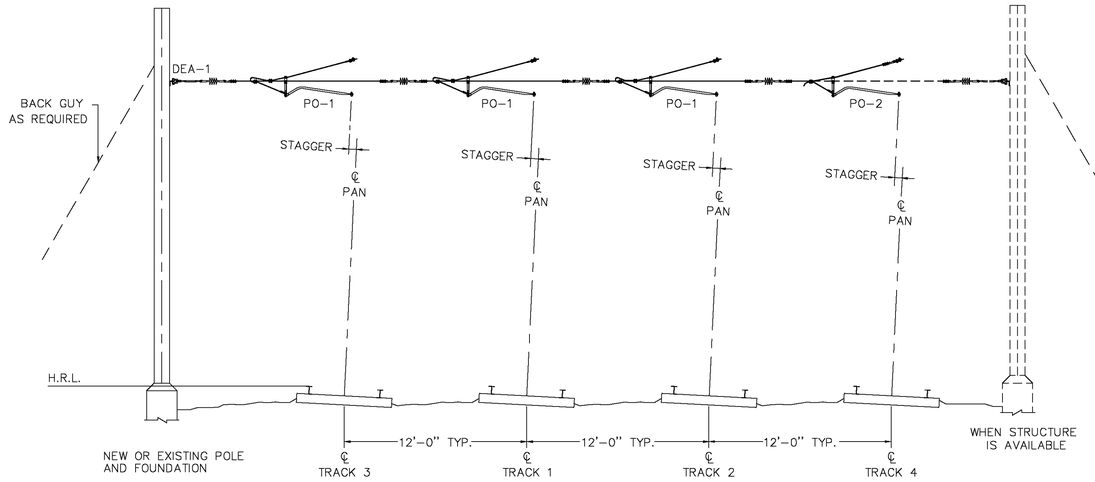

SINGLE WIRE PULL-OFF ARRANGEMENT TYPE "I"

USED WHEN THE SYSTEM DEPTH IS BETWEEN 15"-18"

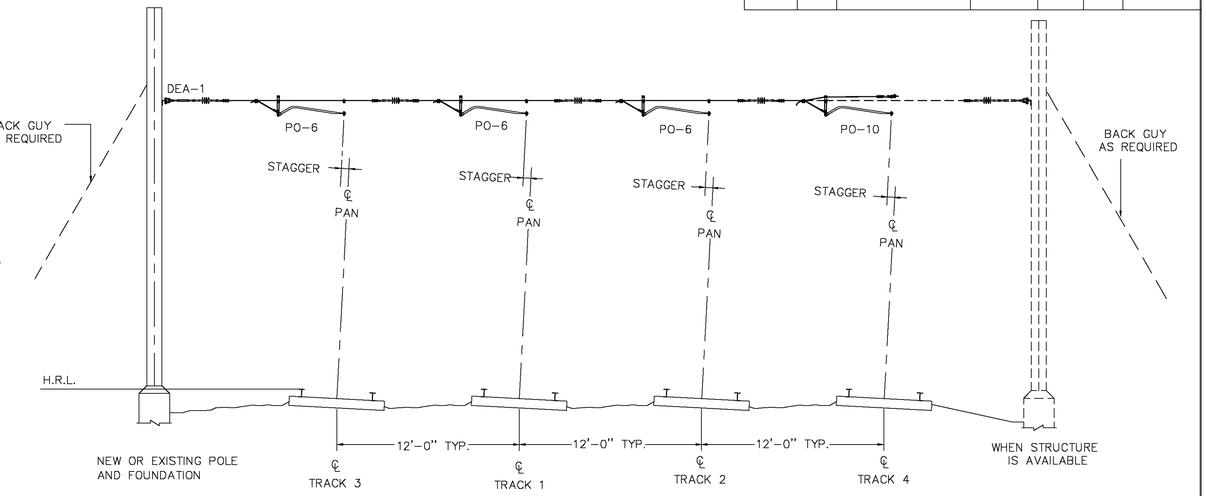

SINGLE WIRE PULL-OFF ARRANGEMENT TYPE "II"

USED WHEN THE SYSTEM DEPTH IS BETWEEN 9"-15"

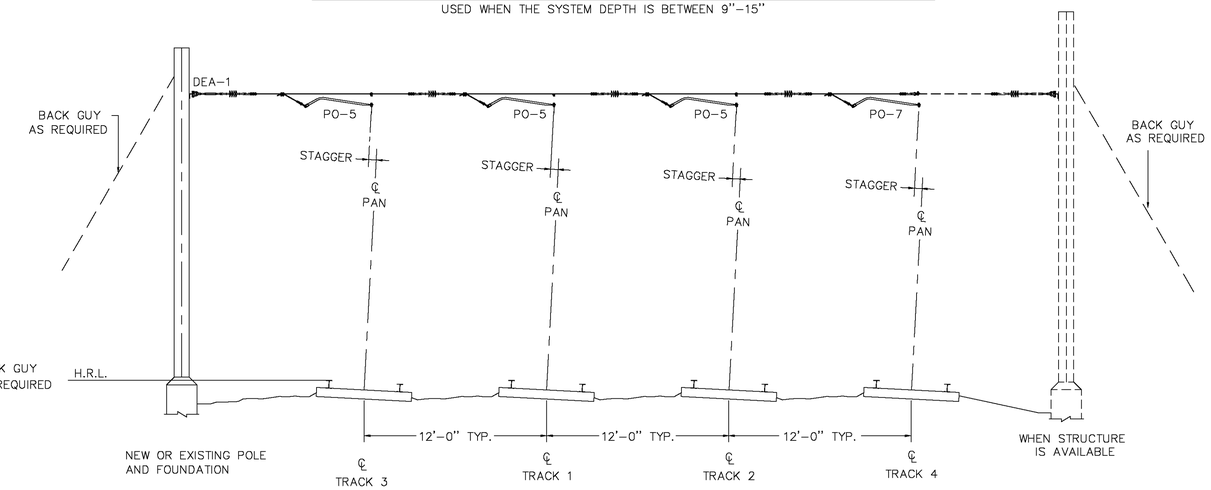

SINGLE WIRE PULL-OFF ARRANGEMENT TYPE "III"

USED WHEN THE SYSTEM DEPTH IS LESS THAN 9"
FOR TEMPORARY CONDITION ONLY

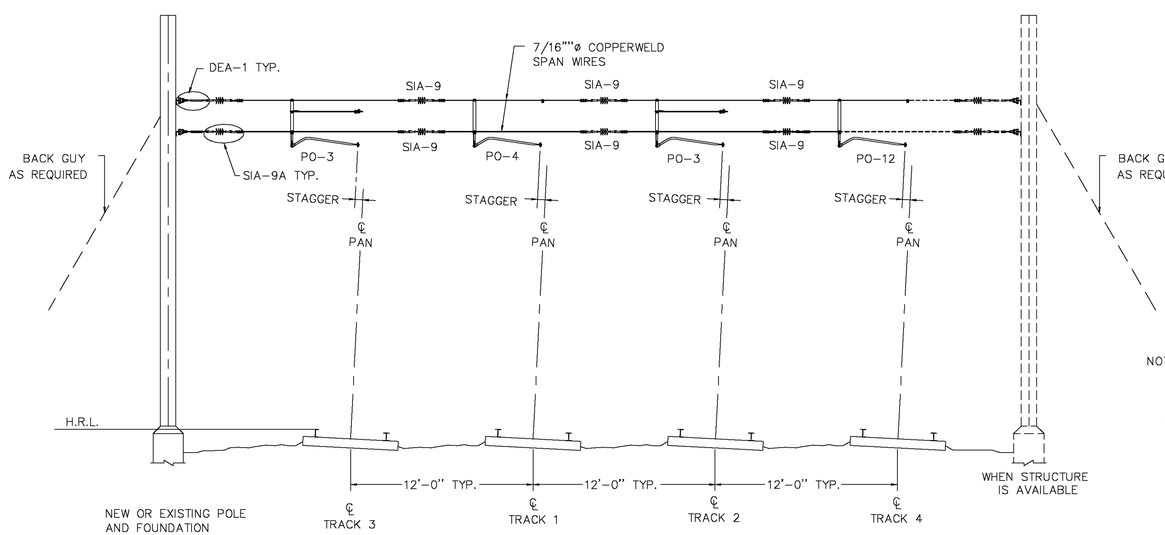

TWIN WIRE PULL-OFF ARRANGEMENTS

FOR SYSTEM DEPTHS OVER 18 INCHES

NOTES:

1. "PULL-OFF" ARRANGEMENTS TO BE ALLOCATED ONLY WHEN SUFFICIENT LOAD EXISTS TO OVERCOME REVERSE WIND LOADING.
2. "PULL-OFF" OR "STEADY SPAN" ARRANGEMENTS SHALL BE USED WHERE MAXIMUM PERMISSIBLE OFFSETS WOULD OTHERWISE BE EXCEEDED.
3. FOR ASSEMBLIES PO-1, PO-2, PO-3, PO-4 AND PO-12, SEE DWG. E-4. FOR ASSEMBLIES PO-5, PO-6, PO-7 AND PO-10, SEE DWG. E-7.

STATE OF CONNECTICUT TIMOTHY A. HOLLAND No. 22587 LICENSED PROFESSIONAL ENGINEER

URS CORPORATION AES
500 ENTERPRISE DRIVE
ROCKY HILL, CT 06067

THE INFORMATION, INCLUDING ESTIMATED QUANTITIES OF WORK SHOWN ON THESE SHEETS IS BASED ON LIMITED INVESTIGATIONS BY THE STATE AND IS IN NO WAY WARRANTED TO INDICATE THE TRUE CONDITIONS OR ACTUAL QUANTITIES OR DISTRIBUTION OF QUANTITIES OF WORK WHICH WILL BE REQUIRED.

URS CORPORATION AES
500 ENTERPRISE DRIVE
ROCKY HILL, CT 06067
1-(860)-529-8882

THE Burns GROUP
ENGINEERING AND CONSTRUCTION
Burns Engineering, Inc.
Metro Plaz II
8201 Corporate Drive, Suite 800
Landover, MD 20785-2230
phone 703-760-9076 fax 301-577-0088

NO.	DATE	DESCRIPTION

REVISIONS

STATE OF CONNECTICUT
DEPARTMENT OF TRANSPORTATION

SECTION C-1a & C-2 NEW HAVEN LINE

CATENARY REPLACEMENT BETWEEN WALK BRIDGE AND STRUCTURE 636, PECK BRIDGE AND STRUCTURE 863

PULL-OFF ARRANGEMENT

ENGINEER: BURNS ENGINEERING
DESIGNER: MS DRAFTER: HJ CHECKER: JCD
APPROVED: SDB DATE: 09/13/13
STRUCTURE NO. BRIDGE LOG NO. STRUCTURE SHEET NO. C-10

PROJECT CONTROL DATE: 09/13/13 DISK FILENAME: C-10.dwg 100% DESIGN

F H W A REGION	STATE	TOWN	FED. AID PROJ. NO.	PROJ. NO.	YEAR	SHEET NUMBER
1	CONN.	VARIOUS	CT-05-0109	301-0145	2013	01.03.029

AUTO-TENSIONED SIMPLE CATENARY WITH PRESAG CONTACT WIRE

DESIGN ITEM	UNITS	MESSENGER	CONTACT WIRE
MAKE UP OF CONDUCTOR		4/0, TYPE E	350KCMIL GROOVED
MATERIAL		COPPER-COPPERWELD	BRONZE ALLOY 80
DIAMETER	IN	0.613	0.620
CROSS SECTIONAL AREA	SQ IN	0.224	0.276
WEIGHT OF CONDUCTOR	LB/FT	0.848	1.063
WEIGHT OF CATENARY (INCLUDING HANGERS)	LB/FT	1.961	
RADIAL THICKNESS OF ICE (1) LIGHT ICE	IN	0.500	0.125
WEIGHT OF ICE (1)	LB/FT	0.694	0.116
WEIGHT OF CATENARY WITH ICE (1)	LB/FT	2.772	
RADIAL THICKNESS OF ICE (2) HEAVY ICE	IN	0.500	0.500
WEIGHT OF ICE (2)	LB/FT	0.694	0.698
WEIGHT OF CATENARY WITH ICE (2)	LB/FT	3.354	
BREAKING LOAD	LB	20730	16410
MAXIMUM DESIGN SPAN / EQUIVALENT SPAN	FT	300/270	
TENSIONS WITHOUT WIND AT :			
70° F	LB	7500	5000
32° F WITH ICE (1)	LB	7500	5000
32° F WITH ICE (2)	LB	7585	5057
-10° F WITH ICE (2)	LB	9039	6026
160° F	LB	6544	4363
MESSENGER SAGS ON 300 FT SPAN AT:			
70° F	IN	33.62	-
32° F WITH ICE (1)	IN	43.77	-
32° F WITH ICE (2)	IN	50.72	-
-10° F WITH ICE (2)	IN	43.98	-
160° F	IN	37.24	-
MODULUS OF ELASTICITY	PSI	19.5×10^{6}	16.0×10^{6}
COEFFICIENT OF EXPANSION	/ ° F	8.4×10^{-6}	9.3×10^{-6}
MINIMUM FACTOR OF SAFETY		2.28	2.70
UPPER/LOWER TEMPERATURE STOP	° F	135 / 15	
NORMAL CONTACT WIRE HT	FT-IN	18'-0"	

WITH CONTACT WIRE 30% WORN

DESIGN ITEM	UNITS	MESSENGER	CONTACT WIRE
WEIGHT OF CATENARY (INCLUDING HANGERS)	LB/FT	1.6424	
WEIGHT OF CATENARY WITH ICE (1)	LB/FT	2.423	
WEIGHT OF CATENARY WITH ICE (2)	LB/FT	2.923	
BREAKING LOAD	LB	20730	11487
TENSIONS WITHOUT WIND AT :			
-10° F NO WIND WITH ICE (2)	LB	8814	5876
MINIMUM FACTOR OF SAFETY		2.35	1.96

MAXIMUM CATENARY STRUCTURE SPACING ON CURVED TRACK FOR A-T EQUIPMENT

MAX. STRUCTURE SPACING (FT)	RADIUS OF CURVE (FT)	DEGREE OF CURVE (°-')
50	187	30°-39'
60	271	21°-9'
70	372	15°-24'
80	491	11°-40'
90	628	9°-8'
100	784	7°-19'
110	960	5°-58'
120	1159	4°-57'
130	1382	4°-9'
140	1629	3°-31'
150	1905	3°-0'
160	2210	2°-36'
170	2548	2°-15'
180	2922	1°-58'
190	3335	1°-43'
200	3792	1°-31'
210	4297	1°-20'
220	4857	1°-11'
230	5476	1°-3'
240	6165	0-56'
250	6930	0-50'
260	7783	0-44'
270	8736	0-39'
280	9805	0-35'
290	11007	0-31'
300	12367	0-28'

STRUCTURE SPACING SHALL BE REDUCED BY 5 FEET FOR DESIGN.

RISE AND FALL AT MID-SPAN FOR A-T SIMPLE CATENARY WITH PRESAG

SPAN (FT)	RISE-1 OPERATING (INCHES)	RISE-2 WORN (INCHES)	FALL-1 OPERATING (INCHES)	FALL-2 NON-OPERATING (INCHES)
50	0.1	0.2	0.4	0.7
60	0.1	0.4	0.5	1.0
70	0.2	0.5	0.7	1.4
80	0.2	0.5	0.9	1.5
90	0.2	0.7	1.1	1.9
100	0.3	0.8	1.4	2.4
110	0.3	1.0	1.6	2.9
120	0.3	1.1	1.8	3.1
130	0.4	1.3	2.1	3.7
140	0.5	1.5	2.5	4.3
150	0.5	1.7	2.9	4.9
160	0.6	1.8	3.1	5.3
170	0.7	2.0	3.5	6.0
180	0.7	2.3	3.9	6.7
190	0.8	2.4	4.2	7.2
200	0.9	2.7	4.7	8.0
210	1.0	3.0	5.2	8.8
220	1.1	3.2	5.7	9.7
230	1.1	3.4	6.1	10.3
240	1.2	3.8	6.6	11.2
250	1.3	4.1	7.2	12.1
260	1.4	4.4	7.8	13.1
270	1.5	4.6	8.2	13.9
280	1.6	5.0	8.8	14.9
290	1.7	5.4	9.5	16.0
300	1.9	5.7	10.2	17.1

RISE-1 AT 0° F, 40 MPH WIND AND WITHOUT ICE.
RISE-2 AT -10° F, 65 MPH WIND, 30% WORN CONTACT WIRE, WITHOUT ICE.
FALL-1 AT 32° F, NO WIND, WITH LIGHT ICE.
FALL-2 AT 32° F, NO WIND, WITH HEAVY ICE.

ERECTION TENSION FOR A-T SIMPLE CATENARY

TEMP (° F)	EQUIVALENT SPAN 270 - 210 FT UNLOADED MESS	LOADED MESS	CONTACT WIRE	TEMP (° F)	EQUIVALENT SPAN 210 - 150 FT UNLOADED MESS	LOADED MESS	CONTACT WIRE	TEMP (° F)	EQUIVALENT SPAN 150 - 90 FT UNLOADED MESS	LOADED MESS	CONTACT WIRE
0	10082	10410	6940	0	10296	10480	6987	0	10453	10541	7027
10	9639	9985	6657	10	9852	10048	6699	10	10010	10103	6736
20	9195	9563	6375	20	9409	9618	6412	20	9566	9667	6444
30	8752	9142	6095	30	8965	9189	6126	30	9123	9231	6154
40	8310	8726	5817	40	8522	8763	5842	40	8679	8796	5864
50	7868	8312	5542	50	8078	8339	5559	50	8235	8362	5575
60	7427	7904	5269	60	7635	7918	5278	60	7792	7930	5287
70	6974	7500	5000	70	7187	7500	5000	70	7345	7500	5000
80	6550	7102	4735	80	6751	7087	4724	80	6905	7072	4715
90	6115	6712	4475	90	6309	6678	4452	90	6461	6647	4431
100	5683	6330	4220	100	5869	6277	4184	100	6018	6225	4150
110	5257	5959	3972	110	5431	5882	3921	110	5575	5808	3872

ERECTION TENSIONS IN POUNDS ARE BASED ON A INITIAL CONDITION OF 60° F DATUM TEMPERATURE.

$$\text{EQUIVALENT SPAN} = \sqrt{\frac{L1^3+L2^3+L3\ \ldots}{L1+L2+L3\ldots}}$$

WHERE L1, L2, L3 ARE ACTUAL SPAN LENGTHS WITHIN A SITE SPECIFIC HALF TENSION LENGTH.

WINDAGE FOR A-T SIMPLE CATENARY

WIND SPEED (MPH)	LOADING CONDITIONS	WINDAGE (LB/FT) MESSENGER ACTUAL	MESSENGER EFFECTIVE	CONTACT WIRE ACTUAL	CONTACT WIRE EFFECTIVE
40	NO ICE @ 60° F	0.21	0.24	0.21	0.18
55	NO ICE @ 60° F	0.40	0.45	0.40	0.35
65	NO ICE @ 60° F	0.55	0.62	0.56	0.49
40	ICE (1) @ 32° F	0.55	0.52	0.30	0.32
55	ICE (2) @ 32° F	1.04	1.20	1.05	0.89
65	ICE (2) @ 32° F	1.45	1.67	1.46	1.25

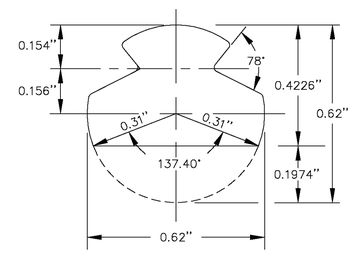

NOTES:

1. ICE(1) DENOTES LIGHT ICE CONDITIONS WITH 1/2" RADIAL ICE ON MESSENGER WIRE AND 1/8" RADIAL ICE ON THE CONTACT WIRE.
2. ICE(2) DENOTES HEAVY ICE CONDITIONS WITH 1/2" RADIAL ICE ON MESSENGER WIRE AND 1/2" RADIAL ICE ON THE CONTACT WIRE.

WORST LOADING COMBINATIONS FOR DESIGN

TEMP (° F)	WIND SPEED (MPH)	ICE LOADING	TENSION (LBS) MESSENGER	TENSION (LBS) CONTACT WIRE	FACTOR OF SAFETY MESSENGER	FACTOR OF SAFETY CONTACT WIRE
OPERATING CONDITIONS						
60	55	NO ICE	7500	5000	2.76	3.28
0	40	ICE (1)	8465	5643	2.45	2.91
NON-OPERATING CONDITION						
0	55	ICE (2)	8922	5949	2.32	2.76
-10	65	NO ICE	8585	5724	2.41	2.87

THE INFORMATION, INCLUDING ESTIMATED QUANTITIES OF WORK SHOWN ON THESE SHEETS IS BASED ON LIMITED INVESTIGATIONS BY THE STATE AND IS IN NO WAY WARRANTED TO INDICATE THE TRUE CONDITIONS OR ACTUAL QUANTITIES OR DISTRIBUTION OF QUANTITIES OF WORK WHICH WILL BE REQUIRED.

STATE OF CONNECTICUT DEPARTMENT OF TRANSPORTATION

SECTION C-1a & C-2 NEW HAVEN LINE

CATENARY REPLACEMENT BETWEEN WALK BRIDGE AND STRUCTURE 636, PECK BRIDGE AND STRUCTURE 863

AUTO-TENSIONED SIMPLE CATENARY CONDUCTOR DATA, STRUCTURE SPACING, RISE AND FALL & ERECTION TENSION CHARTS

STATE OF CONNECTICUT "INGENIUS" HOUSE NO. 15797 LICENSED PROFESSIONAL ENGINEER

URS CORPORATION AES
500 ENTERPRISE DRIVE
ROCKY HILL, CT 06067

URS CORPORATION AES
500 ENTERPRISE DRIVE
ROCKY HILL, CT 06067
1-(860)-529-8882

THE Burns GROUP
ENGINEERING AND CONSTRUCTION

Burns Engineering, Inc.
Metro-Plex II
8201 Corporate Drive, Suite 800
Landover, MD 20785-2230
phone 703-760-9076 fax 301-577-2088

NO.	DATE	DESCRIPTION

REVISIONS

ENGINEER: BURNS ENGINEERING
DESIGNER: MS DRAFTER: HJ CHECKER: JCD
APPROVED: SDB DATE: 09/13/13
STRUCTURE NO. BRIDGE LOG NO. STRUCTURE SHEET NO. D-1

PROJECT CONTROL DATE: 09/13/13 DISK FILENAME: D-1.dwg 100% DESIGN

F H W A REGION	STATE	TOWN	FED. AID PROJ. NO.	PROJ. NO.	YEAR	SHEET NUMBER
1	CONN.	VARIOUS	CT-05-0109	301-0145	2013	01.03.030

MAXIMUM PERMISSIBLE MIDSPAN STATIC OFFSET (MP) FOR A-T EQUIPMENT

TABLE 1. CONTACT WIRE HORIZONTAL DISPLACEMENT PARAMETERS (T)

DESIGN SPAN (FT)	(T)	DESIGN SPAN (FT)	(T)	DESIGN SPAN (FT)	(T)
300	2.92	220	6.92	140	10.02
290	3.52	210	7.42	130	10.32
280	4.02	200	7.82	120	10.62
270	4.52	190	8.22	110	10.92
260	5.02	180	8.62	100	11.12
250	5.52	170	9.02	90	11.32
240	6.02	160	9.42	80	11.52
230	6.52	150	9.72	70	11.72

TABLE 2. STAGGER EFFECT (SE) FOR CONTACT WIRE HORIZONTAL DISPLACEMENT

(SD)	BLOW-OFF (B) – VERSINE (V)								
	2	4	6	8	10	12	14	16	18	20
2	0.1	0.1								
4	0.5	0.3	0.2	0.1	0.1	0.1	0.1	0.1	0.1	0.1
6	1.1	0.6	0.4	0.3	0.2	0.2	0.2	0.1	0.1	0.1
8	2.0	1.0	0.7	0.5	0.4	0.3	0.3	0.3	0.2	0.2
10		1.6	1.0	0.8	0.6	0.5	0.4	0.4	0.3	0.3
12		2.3	1.5	1.1	0.9	0.8	0.6	0.6	0.5	0.5

TABLE 3. CORRECTION FACTOR (H) CONTACT WIRE HT.

CONTACT HEIGHT (FT-IN)	(H)
24'-0"	-3.06
23'-0"	-2.55
22'-0"	-2.04
21'-0"	-1.53
20'-0"	-1.02
19'-0"	-0.51
18'-0"	0.0
17'-0"	+0.51
16'-0"	+1.02

TABLE 4. CALCULATION OF MAXIMUM PERMISSIBLE MIDSPAN STATIC OFFSET (MP)

IF SD $\geq$4(B-V) THEN THE MAXIMUM CONTACT WIRE DISPLACEMENT OCCURS AT SUPPORTS, AND THE MIDSPAN CONTACT WIRE OFFSET DOES NOT GOVERN THE DESIGN.

IF SD < 4(B-V) THEN THE MAXIMUM PERMISSIBLE MIDSPAN OFFSET FOR CONTACT WIRE IS CALCULATED AS FOLLOWS:

MP = T (TABLE 1) – SE (TABLE 2) + H (TABLE 3)

WHERE :

MP = MAXIMUM PERMISSIBLE MIDSPAN STATIC OFFSET (IN)
T = CONTACT WIRE DISPLACEMENT PARAMETER (IN)
B = BLOW-OFF (IN) FOR AT EQUIPMENT (SEE TABLE THIS DWG)
V = VERSINE (IN) FOR DESIGN SPAN
H = CONTACT WIRE HEIGHT CORRECTION FACTOR (IN)
SD = STAGGER DIFFERENCE (IN)
SE = STAGGER EFFECT (IN)

ALONG TRACK MOVEMENT (ATM) AT SUPPORT FOR A-T SIMPLE CATENARY

TEMP (° F)	DISTANCE FROM CATENARY SUPPORT MID-POINT ANCHOR (FT)													
	400	600	800	1000	1200	1400	1600	1800	2000	2200	2400	2600	2800	3000
15	-2.5	-3.7	-4.9	-6.1	-7.4	-8.6	-9.8	-11.0	-12.3	-13.5	-14.7	-16.0	-17.2	-18.4
20	-2.2	-3.3	-4.5	-5.6	-6.7	-7.8	-8.9	-10.0	-11.2	-12.3	-13.4	-14.5	-15.6	-16.7
30	-1.8	-2.7	-3.6	-4.5	-5.4	-6.2	-7.1	-8.0	-8.9	-9.8	-10.7	-11.6	-12.5	-13.4
40	-1.3	-2.0	-2.7	-3.3	-4.0	-4.7	-5.4	-6.0	-6.7	-7.4	-8.0	-8.7	-9.4	-10.0
50	-0.9	-1.3	-1.8	-2.2	-2.7	-3.1	-3.6	-4.0	-4.5	-4.9	-5.4	-5.8	-6.2	-6.7
60	-0.4	-0.7	-0.9	-1.1	-1.3	-1.6	-1.8	-2.0	-2.2	-2.5	-2.7	-2.9	-3.1	-3.3
70	0.0	0.0	0.0	0.0	0.0	0.0	0.0	0.0	0.0	0.0	0.0	0.0	0.0	0.0
80	+0.4	+0.7	+0.9	+1.1	+1.3	+1.6	+1.8	+2.0	+2.2	+2.5	+2.7	+2.9	+3.1	+3.3
90	+0.9	+1.3	+1.8	+2.2	+2.7	+3.1	+3.6	+4.0	+4.5	+4.9	+5.4	+5.8	+6.2	+6.7
100	+1.3	+2.0	+2.7	+3.3	+4.0	+4.7	+5.4	+6.0	+6.7	+7.4	+8.0	+8.7	+9.4	+10.0
110	+1.8	+2.7	+3.6	+4.5	+5.4	+6.2	+7.1	+8.0	+8.9	+9.8	+10.7	+11.6	+12.5	+13.4
120	+2.2	+3.3	+4.5	+5.6	+6.7	+7.8	+8.9	+10.0	+11.2	+12.3	+13.4	+14.5	+15.6	+16.7
130	+2.7	+4.0	+5.4	+6.7	+8.0	+9.4	+10.7	+12.1	+13.4	+14.7	+16.1	+17.4	+18.7	+20.1
135	+2.9	+4.4	+5.8	+7.3	+8.7	+10.2	+11.6	+13.1	+14.5	+16.0	+17.4	+18.9	+20.3	+21.8

ALL ALONG TRACK MOVEMENTS IN INCHES.
'-' DENOTES MOVEMENT TOWARDS MID-POINT ANCHOR
'+' DENOTES MOVEMENT AWAY FROM MID-POINT ANCHOR

VERTICAL AND WIND LOADS AT SUPPORT

SPAN (FT)	VERTICAL LOAD (LBS)		WIND LOAD (LBS) 55MPH WITH ICE (2)	
	NO ICE	WITH ICE	MESSENGER	CONTACT
50	98	168	58	46
60	118	201	70	56
70	137	235	82	64
80	157	268	94	74
90	177	302	106	82
100	196	335	116	92
110	216	369	128	100
120	235	402	140	110
130	255	436	152	120
140	275	470	164	128
150	294	503	176	138
160	314	537	188	146
170	333	570	198	156
180	353	604	210	166
190	373	637	222	174
200	392	671	234	184
210	412	704	246	192
220	431	738	258	202
230	451	771	270	210
240	471	805	280	220
250	490	838	292	230
260	510	872	304	238
270	530	906	316	248
280	549	939	328	256
290	569	973	340	266
300	588	1006	350	276

THE CONDITION FOR LOADING IS 0° F, 55MPH WIND.
LOADS DUE TO SPANS ON EITHER SIDE OF STRUCTURE MUST BE READ SEPARATELY AND ADDED TOGETHER.
FOR VERTICAL LOADS, 'SPAN' DENOTES DISTANCE BETWEEN MESSENGER LOW-POINT TO CATENARY SUPPORT

POSITION OF BALANCE WEIGHT AWAY FROM 70° F SETTING TEMPERATURE FOR A-T SIMPLE CATENARY EQUIPMENT

TEMP DEVIATION FROM 70° F SETTING TEMP (° F)	DISTANCE FROM BALANCE WEIGHT ANCHOR TO MID-POINT ANCHOR (FT)													
	1000	1200	1400	1600	1800	2000	2200	2400	2600	2800	3000	3200	3400	3600
10	0.275	.325	0.4	0.45	0.5	0.55	0.625	0.675	0.725	0.775	0.825	0.9	0.95	1.0
20	0.55	0.675	0.775	0.9	1.0	1.125	1.225	1.35	1.45	1.55	1.675	1.775	1.9	2.0
30	0.825	1.0	1.175	1.35	1.5	1.675	1.675	2.00	2.175	2.35	2.5	2.675	2.85	3.025
40	1.125	1.35	1.55	1.775	2.0	2.225	2.225	2.675	2.9	3.125	3.35	3.575	3.8	4.025
50	1.4	1.675	1.95	2.225	2.5	2.8	3.075	3.35	3.625	3.9	4.175	4.475	4.75	5.025
60	1.675	2.0	2.35	2.675	3.025	3.35	3.675	4.025	4.35	4.675	5.025	5.35	5.7	6.025
65	1.825	2.175	2.55	2.9	3.275	3.625	4.00	4.35	4.725	5.075	5.45	5.8	6.175	6.525

DISTANCE IN FEET FOR BALANCE WEIGHT POSITION AT ARBITRARY TEMPERATURE TO BALANCE WEIGHT POSITION AT 70° F SETTING TEMPERATURE

BLOW-OFF (B) FOR A-T EQUIPMENT

DESIGN SPAN (FT)	BLOW-OFF (INCHES)	DESIGN SPAN (FT)	BLOW-OFF (INCHES)
50	0.3	180	3.7
60	0.4	190	4.1
70	0.6	200	4.5
80	0.8	210	4.9
90	1.0	220	5.4
100	1.2	230	5.8
110	1.4	240	6.3
120	1.7	250	6.8
130	2.0	260	7.3
140	2.3	270	7.8
150	2.6	280	8.3
160	2.9	290	8.9
170	3.3	300	9.4

THE CONDITION FOR BLOW-OFF IS 60° F AND 55MPH WIND

RADIAL LOAD AT SUPPORT DUE TO LINE ANGLE CHANGE

LINE ANGLE CHANGE (DEG)	MESSENGER (LBS)	CONTACT (LBS)
1	156	104
2	311	208
3	467	311
4	622	415
5	778	519
6	933	622
7	1089	726
8	1244	829
9	1399	933
10	1554	1036
11	1709	1140
12	1864	1243
13	2019	1346
14	2173	1449
15	2328	1552

THE CONDITION FOR LOADING IS 0° F, ICE (2) AND 55MPH WIND.

STAGGER CHANGE IN ACROSS TRACK DIRECTION DUE TO ALONG TRACK MOVEMENT

ATM (IN)	STEADY ARM SWING RADIUS (FT)		
	4.0	4.5	5.0
2	0.0	0.0	0.0
4	0.2	0.1	0.1
6	0.4	0.3	0.3
8	0.7	0.6	0.5
10	1.1	0.9	0.8
12	1.5	1.4	1.2
14	2.1	1.8	1.7
16	2.7	2.4	2.2
18	3.5	3.1	2.8
20	4.4	3.8	3.4

STAGGER CHANGE IN INCHES IN ACROSS TRACK DIRECTION TOWARDS THE STEADY ARM SUPPORT

THE INFORMATION, INCLUDING ESTIMATED QUANTITIES OF WORK SHOWN ON THESE SHEETS IS BASED ON LIMITED INVESTIGATIONS BY THE STATE AND IS IN NO WAY WARRANTED TO INDICATE THE TRUE CONDITIONS OR ACTUAL QUANTITIES OR DISTRIBUTION OF QUANTITIES OF WORK WHICH WILL BE REQUIRED.

STATE OF CONNECTICUT
DEPARTMENT OF TRANSPORTATION

SECTION C-1a & C-2 NEW HAVEN LINE

CATENARY REPLACEMENT BETWEEN WALK BRIDGE AND STRUCTURE 636, PECK BRIDGE AND STRUCTURE 863

AUTO-TENSIONED SIMPLE CATENARY LOADING, BLOW-OFF & PERMISSIBLE MIDSPAN STATIC OFFSET CHARTS

STATE OF CONNECTICUT ROBERT A. HECKMAN No. 18397 LICENSED PROFESSIONAL ENGINEER

URS CORPORATION AES
500 ENTERPRISE DRIVE
ROCKY HILL, CT 06067

URS
URS CORPORATION AES
500 ENTERPRISE DRIVE
ROCKY HILL, CT 06067
1-(860)-529-8882

THE Burns GROUP
ENGINEERING AND CONSTRUCTION

Burns Engineering, Inc.
Metro-Plaz II
8201 Corporate Drive, Suite 800
Landover, MD 20785-2230
phone 301-560-9076 fax 301-577-2088

NO.	DATE	DESCRIPTION

REVISIONS

ENGINEER: BURNS ENGINEERING
DESIGNER: MS DRAFTER: HJ CHECKER: JCD
APPROVED: SDB DATE: 09/13/13
STRUCTURE NO. BRIDGE LOG NO. STRUCTURE SHEET NO. D-2

PROJECT CONTROL DATE: 09/13/13 DISK FILENAME: D-2.dwg 100% DESIGN

F H W A REGION	STATE	TOWN	FED. AID PROJ. NO.	PROJ. NO.	YEAR	SHEET NUMBER
1	CONN.	VARIOUS	CT-05-0109	301-0145	2013	01.03.031

CATENARY HANGER LENGTHS
(FOR SYSTEM HEIGHT 3'-6" TO 3'-6")

SPAN LENGTH"L" (FT)	NUMBER OF HANGERS	PRESAG (IN)	HANGER SPACING "A" (FT-IN)	HANGER LENGTHS (FT - IN) D1	D2	D3	D4	D5	D6	D7	D8	D9
320	9	3	35-6 1/2	2-9 1/2	1-9 3/4	1-1 1/2	0-8 1/2	0-6 3/4	0-8 1/2	1-1 1/2	1-9 3/4	2-9 1/2
315	9	3	35-0	2-9 3/4	1-10 1/2	1-2 1/2	0-9 1/2	0-8	0-9 1/2	1-2 1/2	1-10 1/2	2-9 3/4
310	9	3	34-5 1/4	2-10	1-11 1/4	1-3 1/2	0-10 3/4	0-9 1/4	0-10 3/4	1-3 1/2	1-11 1/4	2-10
305	9	3	33-10 1/2	2-10 1/4	1-11 3/4	1-4 1/4	1-0	0-10 1/2	1-0	1-4 1/4	1-11 3/4	2-10 1/4
300	8	3	37-6	2-9 1/2	1-10 3/4	1-3 3/4	1-0	1-0	1-3 3/4	1-10 3/4	2-9 1/2	
295	8	3	36-10 1/2	2-10	1-11 1/2	1-4 3/4	1-1 1/4	1-1 1/4	1-4 3/4	1-11 1/2	2-10	
290	8	3	36-3	2-10 1/4	2-0 1/4	1-5 1/2	1-2 1/4	1-2 1/4	1-5 1/2	2-0 1/4	2-10 1/4	
285	8	2 3/4	35-7 1/2	2-10 1/2	2-0 3/4	1-6 1/4	1-3	1-3	1-6 1/4	2-0 3/4	2-10 1/2	
280	8	2 3/4	35-0	2-10 3/4	2-1 1/2	1-7 1/4	1-4	1-4	1-7 1/4	2-1 1/2	2-10 3/4	
275	8	2 3/4	34-4 1/2	2-11	2-2	1-8 1/4	1-5 1/4	1-5 1/4	1-8 1/4	2-2	2-11	
270	8	2 1/2	33-9	2-11 1/4	2-2 1/2	1-8 3/4	1-5 3/4	1-5 3/4	1-8 3/4	2-2 1/2	2-11 1/4	
265	8	2 1/2	33-1 1/2	2-11 1/2	2-3 1/4	1-9 1/2	1-6 3/4	1-6 3/4	1-9 1/2	2-3 1/4	2-11 1/2	
260	7	2 1/2	37-1 1/2	2-10 3/4	2-2 1/4	1-9 1/4	1-7 1/2	1-9 1/4	2-2 1/4	2-10 3/4		
255	7	2 1/4	36-5	2-11	2-2 3/4	1-9 3/4	1-8 1/4	1-9 3/4	2-2 3/4	2-11		
250	7	2 1/4	35-8 1/2	2-11 1/2	2-3 1/2	1-10 3/4	1-9	1-10 3/4	2-3 1/2	2-11 1/2		
245	7	2 1/4	35-0	2-11 3/4	2-4	1-11 1/2	1-10	1-11 1/2	2-4	2-11 3/4		
240	7	2	34-3 1/4	3-0	2-4 1/2	2-0	1-10 1/2	2-0	2-4 1/2	3-0		
235	7	2	33-6 3/4	3-0 1/4	2-5 1/4	2-1	1-11 1/2	2-1	2-5 1/4	3-0 1/4		
230	7	2	32-10 1/4	3-0 1/2	2-5 3/4	2-1 3/4	2-0 1/2	2-1 3/4	2-5 3/4	3-0 1/2		
225	7	2	37-6	2-11 3/4	2-5	2-1 3/4	2-1 3/4	2-5	2-11 3/4			
220	6	1 3/4	36-8	3-0	2-5 1/2	2-2 1/4	2-2 1/4	2-5 1/2	3-0			
215	6	1 3/4	35-10	3-0 1/4	2-6 1/4	2-3	2-3	2-6 1/4	3-0 1/4			
210	6	1 3/4	35-0	3-0 1/2	2-6 3/4	2-3 3/4	2-3 3/4	2-6 3/4	3-0 1/2			
205	6	1 1/2	34-2	3-0 1/2	2-7	2-4 1/4	2-4 1/4	2-7	3-0 1/2			
200	6	1 1/2	33-4	3-1	2-7 3/4	2-5	2-5	2-7 3/4	3-1			
195	6	1 1/2	32-6	3-1 1/4	2-8 1/4	2-5 3/4	2-5 3/4	2-8 1/4	3-1 1/4			
190	6	1 1/4	31-8	3-1 1/2	2-8 1/2	2-6	2-6	2-8 1/2	3-1 1/2			
185	5	1 1/4	37-0	3-1	2-8 1/4	2-6 1/2	2-8 1/4	3-1				
180	5	1 1/4	36-0	3-1 1/4	2-8 3/4	2-7 1/4	2-8 3/4	3-1 1/4				
175	5	1 1/4	35-0	3-1 1/2	2-9 1/4	2-8	2-9 1/4	3-1 1/2				
170	5	1	34-0	3-1 3/4	2-9 1/2	2-8 1/4	2-9 1/2	3-1 3/4				
165	5	1	33-0	3-2	2-10 1/4	2-8 3/4	2-10 1/4	3-2				
160	5	1	32-0	3-2 1/4	2-10 3/4	2-9 1/2	2-10 3/4	3-2 1/4				
155	4	3/4	31-0	3-2 1/2	2-11	2-9 3/4	2-11	3-2 1/2				
150	4	3/4	37-6	3-2	2-10 3/4	2-10 3/4	3-2					
145	4	3/4	36-3	3-2 1/4	2-11 1/4	2-11 1/4	3-2 1/4					
140	4	1/2	35-0	3-2 1/2	2-11 1/2	2-11 1/2	3-2 1/2					
135	4	1/2	33-9	3-2 3/4	3-0	3-0	3-2 3/4					
130	4	1/2	32-6	3-3	3-0 1/2	3-0 1/2	3-3					
125	4	1/2	31-3	3-3 1/4	3-0 3/4	3-0 3/4	3-3 1/4					
120	4	1/4	30-0	3-3 1/2	3-1	3-1	3-3 1/2					
115	4	1/4	28-9	3-3 3/4	3-1 1/2	3-1 1/2	3-3 3/4					
110	3	1/4	36-8	3-3 1/4	3-3 1/4	3-3 1/4						
105	3	1/4	35-0	3-3 1/2	3-3 3/4	3-3 1/2						
100	3	0	33-4	3-3 3/4	3-2	3-3 3/4						
95	3	0	31-8	3-4	3-2 1/4	3-4						
90	3	0	30-0	3-4	3-2 3/4	3-4						
85	3	0	28-4	3-4 1/4	3-3	3-4 1/4						
80	3	0	26-8	3-4 1/2	3-3 1/4	3-4 1/2						

NOTES:

1. HANGER LENGTHS SHOWN ARE FROM ℄ MESSENGER TO ℄ CONTACT WIRE. THE ACTUAL HANGER LENGTH IS LESS BY 0.156".
2. MAXIMUM HANGER SPACING IS 37'-6".
3. HANGER LENGTH AND HANGER SPACING ARE ROUNDED DOWN TO THE NEAREST 1/4".
4. THE CALCULATION OF PRESAG IS BASED ON 3" PRESAG AT 300 FEET SPAN LENGTH AND 0" AT 100 FEET SPAN LENGTH AND IS ROUNDED TO NEAREST 1/4" INCH.

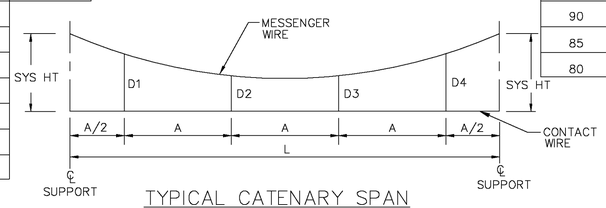

TYPICAL CATENARY SPAN

CATENARY HANGER LENGTHS
(FOR SYSTEM HEIGHT 3'-0" TO 3'-6")

SPAN LENGTH"L" (FT)	NUMBER OF HANGERS	PRESAG (IN)	HANGER SPACING "A" (FT-IN)	HANGER LENGTHS (FT - IN) D1	D2	D3	D4	D5	D6	D7	D8
300	8	3	37-6	2-4	1-6	0-11 1/2	0-8 3/4	0-9 1/2	1-1 3/4	1-9 3/4	2-9 1/4
295	8	3	36-10 1/2	2-4 1/4	1-6 3/4	1-0 1/2	0-9 3/4	0-10 1/2	1-2 3/4	1-10 1/2	2-9 1/2
290	8	3	36-3	2-4 1/2	1-7 1/4	1-1 1/2	0-11	0-11 3/4	1-3 3/4	1-11	2-9 3/4
285	8	2 3/4	35-7 1/2	2-4 3/4	1-7 3/4	1-2	0-11 1/2	1-0 1/2	1-4 1/4	1-11 1/2	2-10
280	8	2 3/4	35-0	2-5	1-8 1/2	1-3	1-0 3/4	1-1 1/2	1-5 1/4	2-0 1/4	2-10 1/4
275	8	2 3/4	34-4 1/2	2-5 1/4	1-9 1/4	1-4	1-1 3/4	1-2 1/2	1-6 1/4	2-1	2-10 1/2
270	8	2 1/2	33-9	2-5 1/2	1-9 1/2	1-4 1/2	1-2 1/2	1-3 1/4	1-6 3/4	2-1 1/2	2-10 3/4
265	8	2 1/2	33-1 1/2	2-5 3/4	1-10 1/4	1-5 1/2	1-3 1/2	1-4 1/4	1-7 3/4	2-2	2-11
260	7	2 1/2	37-1 3/4	2-5 1/4	1-9 1/2	1-5 1/2	1-4 1/2	1-7	2-1	2-10 1/2	
255	7	2 1/4	36-5	2-5 1/2	1-10	1-6	1-5	1-7 3/4	2-1 1/2	2-10 3/4	
250	7	2 1/4	35-8 1/2	2-6	1-10 3/4	1-6 3/4	1-6	1-8 1/2	2-2	2-10 3/4	
245	7	2 1/4	35-0	2-6	1-11 1/2	1-7 3/4	1-7	1-9 1/2	2-2 3/4	2-11 1/4	
240	7	2	34-3 1/4	2-6 1/4	1-11 3/4	1-8 1/4	1-7 1/2	1-10	2-3 1/4	2-11 1/2	
235	7	2	33-6 3/4	2-6 1/2	2-0 /2	1-9	1-8 1/2	1-10 3/4	2-3 3/4	2-11 3/4	
230	7	2	32-10 1/4	2-6 3/4	2-1	1-10	1-9 1/2	1-11 3/4	2-4 1/2	3-0	
225	6	2	37-6	2-6 1/4	2-0 1/2	1-10 1/4	1-11 1/4	2-3 1/2	2-11 1/4		
220	6	1 3/4	36-8	2-6 1/2	2-1	1-10 3/4	1-11 3/4	2-4	2-11 1/2		
215	6	1 3/4	35-10	2-6 3/4	2-1 3/4	1-11 1/2	2-0 1/2	2-4 3/4	2-11 3/4		
210	6	1 3/4	35-0	2-7	2-2 1/4	2-0 1/4	2-1 1/4	2-5 1/4	3-0		
205	6	1 1/2	34-2	2-7 1/4	2-2 1/2	2-0 3/4	2-1 3/4	2-5 1/4	3-0 1/4		
200	6	1 1/2	33-4	2-7 1/2	2-3 1/4	2-1 1/2	2-2 1/2	2-6 1/4	3-0 1/2		
195	6	1 1/2	32-6	2-7 3/4	2-3 3/4	2-2 1/4	2-3 1/4	2-6 3/4	3-0 3/4		
190	6	1 1/4	31-8	2-8	2-4	2-2 1/2	2-3 1/2	2-7	3-1		
185	5	1 1/4	37-0	2-7 3/4	2-4	2-3 1/2	2-6 1/4	3-0 1/2			
180	5	1 1/4	36-0	2-8	2-4 1/2	2-4 1/4	2-7	3-0 3/4			
175	5	1 1/4	35-0	2-8 1/4	2-5 1/4	2-5	2-7 1/2	3-1			
170	5	1	34-0	2-8 1/2	2-5 1/2	2-5 1/4	2-7 3/4	3-1 1/4			
165	5	1	33-0	2-8 3/4	2-6	2-5 3/4	2-8 1/4	3-1 1/2			
160	5	1	32-0	2-8 3/4	2-6 1/2	2-6 1/2	2-9	3-1 3/4			
155	5	3/4	31-0	2-9	2-6 3/4	2-6 3/4	2-9	3-2			
150	4	3/4	37-6	2-8 3/4	2-7	2-8 1/2	3-1 1/4				
145	4	3/4	36-3	2-9	2-7 1/2	2-9	3-1 1/2				
140	4	1/2	35-0	2-9 1/4	2-7 3/4	2-9 1/4	3-1 3/4				
135	4	1/2	33-9	2-9 1/2	2-8 1/4	2-9 3/4	3-2				
130	4	1/2	32-6	2-9 3/4	2-8 3/4	2-10 1/4	3-2 1/4				
125	4	1/2	31-3	2-10	2-9 1/4	2-10 3/4	3-2 1/2				
120	4	1/4	30-0	2-10 1/4	2-9 1/4	2-10 3/4	3-2 3/4				
115	4	1/4	28-9	2-10 1/4	2-9 3/4	2-11 1/4	3-2 3/4				
110	3	1/4	36-8	2-10 1/4	3-0 1/4	3-2 1/4					
105	3	1/4	35-0	2-10 1/2	3-0 3/4	3-2 1/2					
100	3	0	33-4	2-10 3/4	2-11	3-2 3/4					
95	3	0	31-8	2-11	2-11 1/4	3-3					
90	3	0	30-0	2-11	2-11 3/4	3-3					
85	3	0	28-4	2-11 1/4	3-0	3-3 1/4					
80	3	0	26-8	2-11 1/2	3-0 1/4	3-3 1/2					

CATENARY HANGER LENGTH ADJUSTMENTS

ADJUSTMENT FOR NON-STANDARD SYSTEM HEIGHTS

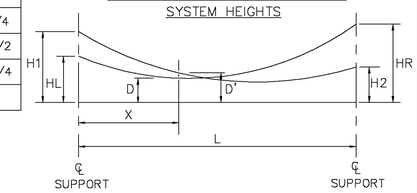

$$D' = D + ((H1 - HL)\,(1 - \frac{X}{L}) - (HR - H2)\,\frac{X}{L})$$

WHERE:
- D' = ADJUSTED HANGER LENGTH
- D = STANDARD HANGER LENGTH
- H1 = ADJUSTED SYSTEM HEIGHT (LEFT)
- H2 = ADJUSTED SYSTEM HEIGHT (RIGHT)
- HL = STANDARD SYSTEM HEIGHT (LEFT)
- HR = STANDARD SYSTEM HEIGHT (RIGHT)
- X = HANGER DISTANCE FROM LEFT SUPPORT
- L = SPAN LENGTH

ADJUSTMENT FOR POINT LOAD IN SPAN

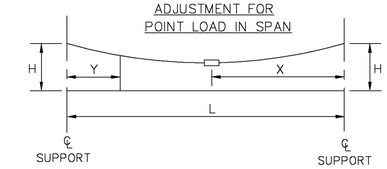

$$R = \frac{12\ MXY}{TL}$$

WHERE:
- R = REDUCTION IN LENGTH OF ANY HANGER (IN)
- M = WEIGHT OF THE POINT LOAD (LB)
- T = MESSENGER TENSION (LB)
- L = SPAN LENGTH (FT)
- X = DISTANCE OF POINT LOAD FROM ONE END OF SPAN (FT)
- Y = DISTANCE OF HANGER TO BE ADJUSTED FROM THE OTHER END OF SPAN (FT)

THE INFORMATION, INCLUDING ESTIMATED QUANTITIES OF WORK SHOWN ON THESE SHEETS IS BASED ON LIMITED INVESTIGATIONS BY THE STATE AND IS IN NO WAY WARRANTED TO INDICATE THE TRUE CONDITIONS OR ACTUAL QUANTITIES OR DISTRIBUTION OF QUANTITIES OF WORK WHICH WILL BE REQUIRED.

URS CORPORATION AES
500 ENTERPRISE DRIVE
ROCKY HILL, CT 06067
1-(860)-529-8882

THE Burns GROUP
ENGINEERING AND CONSTRUCTION
Burns Engineering, Inc.
Metro-Plex II
8201 Corporate Drive, Suite 800
Landover, MD 20785-2230
phone 703-760-9076 fax 301-577-2088

URS CORPORATION AES
500 ENTERPRISE DRIVE
ROCKY HILL, CT 06067

STATE OF CONNECTICUT
DEPARTMENT OF TRANSPORTATION

SECTION C-1a & C-2 NEW HAVEN LINE

CATENARY REPLACEMENT BETWEEN WALK BRIDGE AND STRUCTURE 636, PECK BRIDGE AND STRUCTURE 863

AUTO-TENSIONED SIMPLE CATENARY HANGER LENGTHS

NO.	DATE	DESCRIPTION

REVISIONS

ENGINEER: BURNS ENGINEERING
DESIGNER: MS DRAFTER: HJ CHECKER: JCD
APPROVED: SDB DATE: 09/13/13
STRUCTURE NO. BRIDGE LOG NO. STRUCTURE SHEET NO. D-3

PROJECT CONTROL DATE: 09/13/13 DISK FILENAME: D-3.dwg 100% DESIGN

F H W A REGION	STATE	TOWN	FED. AID PROJ. NO.	PROJ. NO.	YEAR	SHEET NUMBER
1	CONN.	VARIOUS	CT-05-0109	301-0145	2013	01.03.032

FIXED TERMINATION SIMPLE CATENARY WITH LEVEL CONTACT WIRE

DESIGN ITEM	UNITS	MESSENGER	CONTACT WIRE
MAKE UP OF CONDUCTOR		4/0, 19 STRANDS	350KCMIL GROOVED
MATERIAL		COPPERWELD TYPE E	BRONZE ALLOY 80
DIAMETER	IN	0.613	0.620
CROSS SECTIONAL AREA	SQ IN	0.224	0.276
WEIGHT OF CONDUCTOR	LB/FT	0.848	1.063
WEIGHT OF CATENARY (INCLUDING HANGERS)	LB/FT	1.961	
RADIAL THICKNESS OF ICE (1) LIGHT ICE	IN	0.500	0.125
WEIGHT OF ICE (1)	LB/FT	0.694	0.116
WEIGHT OF CATENARY WITH ICE (1)	LB/FT	2.772	
RADIAL THICKNESS OF ICE (2) HEAVY ICE	IN	0.500	0.500
WEIGHT OF ICE (2)	LB/FT	0.694	0.698
WEIGHT OF CATENARY WITH ICE (2)	LB/FT	3.354	
BREAKING LOAD	LB	20730	16410
MAXIMUM DESIGN SPAN / EQUIVALENT SPAN	FT	300/270	
TENSIONS WITHOUT WIND AT :			
60° F	LB	7500	4000
32° F WITH ICE (1)	LB	8785	5163
−10° F WITH ICE (2)	LB	10337	6891
135° F	LB	5448	1059
160° F	LB	4936	446
MESSENGER SAGS ON 300 FT SPAN AT:			
60° F	IN	35.39	–
32° F WITH ICE (1)	IN	40.32	–
−10° F WITH ICE (2)	IN	40.95	–
135° F	IN	46.84	–
160° F	IN	52.45	–
MODULUS OF ELASTICITY	PSI	19.5×10^{6}	16.0×10^{6}
COEFFICIENT OF EXPANSION	/ ° F	8.4×10^{-6}	9.3×10^{-6}
MINIMUM FACTOR OF SAFETY		2.00	2.38
NORMAL CONTACT WIRE HT	FT−IN	18'−0"	

WITH CONTACT WIRE 30% WORN

DESIGN ITEM	UNITS	MESSENGER	CONTACT WIRE
WEIGHT OF CATENARY (INCLUDING HANGERS)	LB/FT	1.65	
WEIGHT OF CATENARY WITH ICE (1)	LB/FT	2.43	
WEIGHT OF CATENARY WITH ICE (2)	LB/FT	2.91	
BREAKING LOAD	LB	20730	11487
TENSIONS WITHOUT WIND AT :			
−10° F NO WIND WITH ICE (2)	LB	10248	5159
MINIMUM FACTOR OF SAFETY		2.02	2.23

RISE AND FALL AT MID−SPAN FOR F−T SIMPLE CATENARY

SPAN (FT)	RISE−1 OPERATING (INCHES)	RISE−2 WORN (INCHES)	FALL−1 OPERATING (INCHES)	FALL−2 NON−OPERATING (INCHES)
60	0.3	0.4	0.5	0.7
70	0.3	0.5	0.7	0.9
80	0.4	0.7	0.9	1.1
90	0.5	0.9	1.0	1.4
100	0.6	1.1	1.3	1.7
110	0.7	1.2	1.5	2.0
120	0.9	1.5	1.8	2.4
130	1.0	1.7	2.0	2.8
140	1.1	1.9	2.3	3.2
150	1.3	2.2	2.6	3.7
160	1.5	2.5	3.0	4.2
170	1.6	2.8	3.3	4.7
180	1.8	3.1	3.8	5.2
190	2.0	3.4	4.1	5.8
200	2.2	3.8	4.6	6.4
210	2.4	4.1	5.0	7.1
220	2.6	4.5	5.5	7.8
230	2.9	4.9	6.0	8.4
240	3.1	5.4	6.5	9.2
250	3.4	5.8	7.0	9.9
260	3.6	6.3	7.6	10.8
270	3.9	6.7	8.1	11.6
280	4.2	7.2	8.7	12.4
290	4.5	7.7	9.3	13.3
300	4.8	8.2	9.9	14.3

RISE−1 AT 0° F, 40 MPH WIND AND WITHOUT ICE.
RISE−2 AT −10° F, 65 MPH WIND, 30% WORN CONTACT WIRE, WITHOUT ICE.
FALL−1 AT 32° F, NO WIND, WITH HEAVY ICE.
FALL−2 AT 160° F, 65 MPH, WITH NO ICE.

ERECTION TENSION FOR F−T SIMPLE CATENARY

TEMP (° F)	EQUIVALENT SPAN 270 − 210 FT UNLOADED MESS	LOADED MESS	CONTACT WIRE	TEMP (° F)	EQUIVALENT SPAN 210 − 150 FT UNLOADED MESS	LOADED MESS	CONTACT WIRE	TEMP (° F)	EQUIVALENT SPAN 150 − 90 FT UNLOADED MESS	LOADED MESS	CONTACT WIRE
−10	9427	9850	6880	−10	9701	9936	6875	−10	9900	10002	6872
0	9067	9505	6468	0	9338	9582	6464	0	9534	9642	6461
10	8708	9163	6056	10	8975	9230	6053	10	9169	9282	6050
20	8350	8823	5644	20	8613	8879	5642	20	8804	8923	5640
30	7994	8486	5232	30	8251	8530	5231	30	8440	8565	5230
40	7638	8153	4821	40	7891	8184	4820	40	8075	8209	4819
50	7284	7824	4410	50	7530	7840	4410	50	7712	7854	4410
60	6916	7500	4000	60	7162	7500	4000	60	7344	7500	4000
70	6583	7182	3591	70	6814	7164	3591	70	6985	7149	3591
80	6236	6871	3184	80	6457	6832	3183	80	6623	6800	3183
90	5892	6568	2780	90	6103	6506	2778	90	6261	6454	2776
100	5553	6274	2379	100	5750	6187	2375	100	5900	6112	2371
110	5218	5992	1984	110	5401	5876	1976	110	5541	5775	1969

ERECTION TENSIONS IN POUNDS ARE BASED ON A INITIAL CONDITION OF 60° F DATUM TEMPERATURE.

$$\text{EQUIVALENT SPAN} = \sqrt{\frac{L1^3 + L2^3 + L3 \ldots}{L1 + L2 + L3 \ldots}}$$

WHERE L1, L2, L3 ARE ACTUAL SPAN LENGTHS WITHIN A SITE SPECIFIC HALF TENSION LENGTH.

WINDAGE FOR F−T SIMPLE CATENARY

WIND SPEED (MPH)	LOADING CONDITIONS	WINDAGE (LB/FT) MESSENGER ACTUAL	MESSENGER EFFECTIVE	CONTACT WIRE ACTUAL	CONTACT WIRE EFFECTIVE
40	NO ICE @ 60° F	0.21	0.25	0.21	0.17
55	NO ICE @ 60° F	0.40	0.48	0.40	0.32
65	NO ICE @ 60° F	0.55	0.70	0.56	0.42
40	ICE (1) @ 32° F	0.55	0.54	0.30	0.31
55	ICE (2) @ 32° F	1.04	1.23	1.05	0.86
65	ICE (2) @ 32° F	1.45	1.70	1.46	1.21

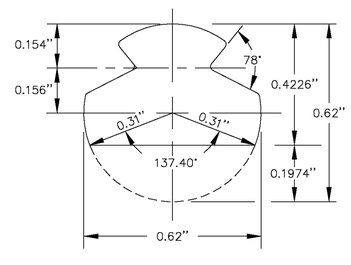

NOTES:

1. ICE(1) DENOTES LIGHT ICE CONDITIONS WITH 1/2" RADIAL ICE ON MESSENGER WIRE AND 1/8" RADIAL ICE ON THE CONTACT WIRE.
2. ICE(2) DENOTES HEAVY ICE CONDITIONS WITH 1/2" RADIAL ICE ON MESSENGER WIRE AND 1/2" RADIAL ICE ON THE CONTACT WIRE.

WORST LOADING COMBINATIONS FOR DESIGN

TEMP (° F)	WIND SPEED (MPH)	ICE LOADING	TENSION (LBS) MESSENGER	TENSION (LBS) CONTACT WIRE	FACTOR OF SAFETY MESSENGER	FACTOR OF SAFETY CONTACT WIRE
OPERATING CONDITIONS						
60	55	NO ICE	7543	4089	2.74	4.01
0	40	ICE (1)	9814	6496	2.11	2.53
NON−OPERATING CONDITION						
0	55	ICE (2)	10174	6733	2.03	2.44
−10	65	NO ICE	9848	6956	2.11	2.36

THE INFORMATION, INCLUDING ESTIMATED QUANTITIES OF WORK SHOWN ON THESE SHEETS IS BASED ON LIMITED INVESTIGATIONS BY THE STATE AND IS IN NO WAY WARRANTED TO INDICATE THE TRUE CONDITIONS OR ACTUAL QUANTITIES OR DISTRIBUTION OF QUANTITIES OF WORK WHICH WILL BE REQUIRED.

URS CORPORATION AES
500 ENTERPRISE DRIVE
ROCKY HILL, CT 06067
1-(860)-529-8882

STATE OF CONNECTICUT
DEPARTMENT OF TRANSPORTATION

SECTION C−1a & C−2 NEW HAVEN LINE

CATENARY REPLACEMENT BETWEEN WALK BRIDGE AND STRUCTURE 636, PECK BRIDGE AND STRUCTURE 863

FIXED TERMINATION SIMPLE CATENARY CONDUCTOR DATA, RISE AND FALL AND ERECTION TENSION CHARTS

STATE OF CONNECTICUT DIRECTOR OF TRANSPORTATION NO. 12345 LICENSED PROFESSIONAL ENGINEER
URS CORPORATION AES
500 ENTERPRISE DRIVE
ROCKY HILL, CT 06067

NO.	DATE	DESCRIPTION

REVISIONS

ENGINEER: URS CORPORATION AES
DESIGNER: RW | DRAFTER: AMK | CHECKER: AJM
APPROVED: T. HOLLAND | DATE: 09/13/13
STRUCTURE NO. | BRIDGE LOG NO. | STRUCTURE SHEET NO. D−4

F H W A REGION	STATE	TOWN	FED. AID PROJ. NO.	PROJ. NO.	YEAR	SHEET NUMBER
1	CONN.	VARIOUS	CT-05-0109	301-0145	2013	01.03.033

ANCILLARY WIRES

DESIGN ITEM	UNITS	GROUND WIRE	SIGNAL FEEDER WIRE	TRACTION FEEDER WIRE	ALONG TRACK JUMPER	
MAKE UP OF CONDUCTOR		4/0, 19 STRAND	2/0, 7 STRAND	4/0, 19 STRAND	500KCMIL(19/.1622)	
MATERIAL		HD COPPER	H D COPPER	H D COPPER	HD COPPER	
DIAMETER	IN	0.528	0.414	0.528	0.811	
CROSS SECTIONAL AREA	SQ IN	0.166	0.105	0.166	0.393	
WEIGHT OF CONDUCTOR	LB/FT	0.653	0.411	0.653	1.544	
BREAKING LOAD	LB	9617	5926	9617	21590	
RADIAL THICKNESS OF ICE	IN	0.500	0.500	0.500	0.500	
WEIGHT OF ICE	LB/FT	0.655	0.583	0.655	0.818	
WT OF CONDUCTOR WITH ICE	LB/FT	1.308	0.994	1.308	2.362	
MODULUS OF ELASTICITY	PSI	17.0×10^{6}	17.0×10^{6}	17.0×10^{6}	17.0×10^{6}	
COEFFICIENT OF EXPANSION	/ ° F	9.4×10^{-6}	9.4×10^{-6}	9.4×10^{-6}	9.4×10^{-6}	
MAXIMUM SPAN	FT	300	300	300	300	215
EQUIVALENT SPAN	FT	270	270	270	270	150
TENSIONS WITHOUT WIND AT:						
60° F	LB	1500	1000	1500	3600	2500
−10° F	LB	2378	1611	2378	5734	5085
−10° F WITH ICE	LB	3182	2285	3182	6771	5615
160° F	LB	986	640	986	2350	1404
SAGS ON MAX. SPAN AT:						
60° F	IN	58.77	55.49	58.77	57.90	42.82
−10° F	IN	37.06	34.43	37.06	36.35	21.06
−10° F WITH ICE	IN	55.51	58.72	55.51	47.45	29.17
160° F	IN	89.44	86.66	89.44	88.71	76.24
MINIMUM FACTOR OF SAFETY		3.01	2.58	3.01	3.14	3.6

CONDITION FOR MINIMUM FACTOR OF SAFETY IS -10° F, 40 MPH WIND SPEED WITH ICE ON EACH CONDUCTOR.

NOTE: WIRE TENSION MAY BE REDUCED TO ALLOW THE SAG OF NEW ANCILLARY WIRES TO MATCH THE SAG OF EXISTING ADJACENT WIRES.

ERECTION TENSIONS FOR ANCILLARY WIRES (LBS)

TEMP (° F)	EQUIVALENT SPAN 270 FT			
	GROUND WIRE	SIGNAL FEEDER WIRE	TRACTION FEEDER WIRE	ALONG TRACK JUMPER
−10	2378	1611	2378	5734
0	2213	1499	2213	5335
10	2062	1394	2062	4968
20	1924	1298	1924	4633
30	1800	1212	1800	4331
40	1688	1133	1688	4059
50	1589	1063	1589	3817
60	1500	1000	1500	3600
70	1421	944	1421	3407
80	1350	894	1350	3235
90	1287	850	1287	3081
100	1230	810	1230	2943
110	1179	774	1179	2818
NO WIND, NO ICE CONDITIONS				

ERECTION TENSIONS FOR ANCILLARY WIRES (LBS)

TEMP (° F)	EQUIVALENT SPAN 150 FT			
	GROUND WIRE	SIGNAL FEEDER WIRE	TRACTION FEEDER WIRE	ALONG TRACK JUMPER
−10	2982	1965	2982	5085
0	2740	1810	2740	4588
10	2505	1659	2505	4127
20	2277	1512	2277	3709
30	2060	1371	2060	3336
40	1856	1237	1856	3012
50	1669	1113	1669	2735
60	1500	1000	1500	2500
70	1351	899	1351	2302
80	1223	811	1223	2134
90	1113	736	1113	1992
100	1021	672	1021	1870
110	942	618	942	1765
NO WIND, NO ICE CONDITIONS				

OCS ANCILLARY WIRES

DESCRIPTION	MATERIAL	BREAKING LOAD	USAGE
3/16" DIA. TYPE 304 (3/4 HARD)	STAINLESS STEEL WIRE	———	HANGERS
7/16" DIA. EXTRA HIGH STRENGTH, 30% CONDUCTIVITY (7 #7)	COPPERWELD	16890 LBS	PULL OFFS AND STEADY SPANS
1/2" DIA. WIRE ROPE	FLEXIBLE STAINLESS STEEL	20000 LBS	BALANCE WEIGHT ANCHOR ASSEMBLIES
5/8" DIA., 19 #9 ALUMOWELD STRAND	ALUMOWELD	35000 LBS	BALANCE WEIGHT TERMINATION STRAND
4/0, 7/16" DIA. (7 #7)	HARD DRAWN COPPER	———	BRIDGE AND STRUCTURE GROUNDING
19 #7 ALUMOWELD STRANDS	ALUMOWELD	51730 LBS	TERMINATION STRANDS
1/2" 19 STRAND SUPPORT MESSENGER	GALVANIZED STEEL (EHS)	26700 LBS	AERIAL CABLE SUPPORT
3/4" DIA STEEL STRANDS	GLAVANIZED STEEL (EHS)	58300 LBS	GUY STRANDS
1" DIA STEEL STRANDS	GLAVANIZED STEEL (EHS)	104500 LBS	GUY STRANDS

THE INFORMATION, INCLUDING ESTIMATED QUANTITIES OF WORK SHOWN ON THESE SHEETS IS BASED ON LIMITED INVESTIGATIONS BY THE STATE AND IS IN NO WAY WARRANTED TO INDICATE THE TRUE CONDITIONS OR ACTUAL QUANTITIES OR DISTRIBUTION OF QUANTITIES OF WORK WHICH WILL BE REQUIRED.

STATE OF CONNECTICUT
DEPARTMENT OF TRANSPORTATION

SECTION C-1a & C-2 NEW HAVEN LINE

CATENARY REPLACEMENT BETWEEN WALK BRIDGE AND STRUCTURE 636, PECK BRIDGE AND STRUCTURE 863

ANCILLARY CONDUCTORS
CONDUCTOR DATA AND ERECTION TENSION CHARTS

URS CORPORATION AES
500 ENTERPRISE DRIVE
ROCKY HILL, CT 06067
1-(860)-529-8882

THE Burns GROUP
ENGINEERING AND CONSTRUCTION
Burns Engineering, Inc.
Metro-Plex II
8201 Corporate Drive, Suite 800
Landover, MD 20785-2230
phone 703-760-9076 fax 301-577-2088

URS CORPORATION AES
500 ENTERPRISE DRIVE
ROCKY HILL, CT 06067

NO.	DATE	DESCRIPTION

REVISIONS

ENGINEER: BURNS ENGINEERING
DESIGNER: MS DRAFTER: HJ CHECKER: JCD
APPROVED: SDB DATE: 09/13/13
STRUCTURE NO. BRIDGE LOG NO. STRUCTURE SHEET NO. D-11

PROJECT CONTROL DATE: 09/13/13 DISK FILENAME: D-11.dwg 100% DESIGN

F H W A REGION	STATE	TOWN	FED. AID PROJ. NO.	PROJ. NO.	YEAR	SHEET NUMBER
1	CONN.	VARIOUS	CT-05-0109	301-0145	2013	01.03.034

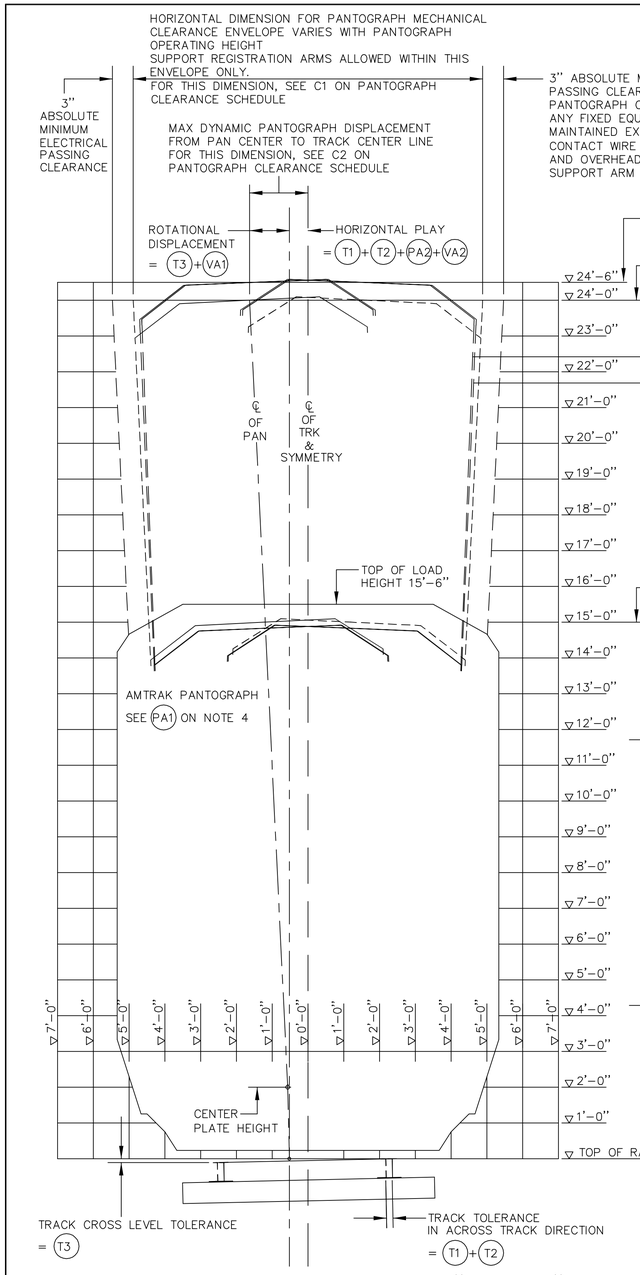

PANTOGRAPH CLEARANCE GAUGE AND "PLATE C" EQUIPMENT DIAGRAM

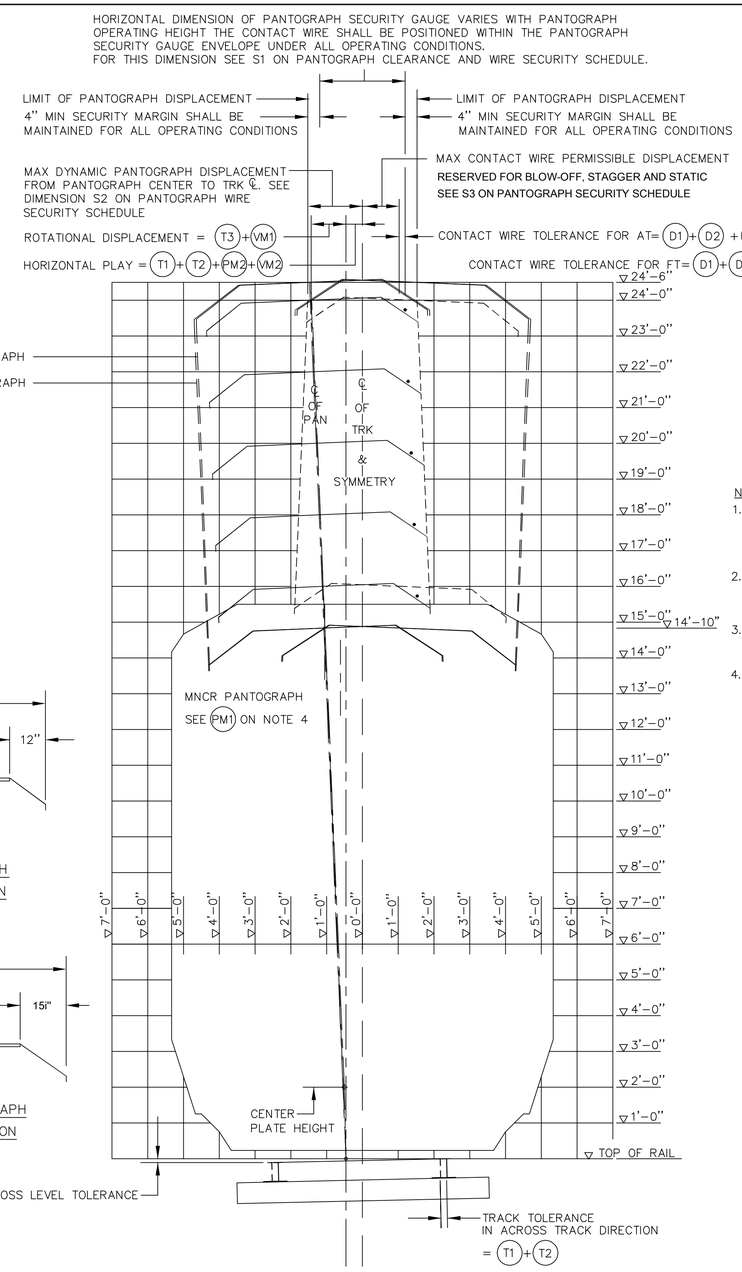

PANTOGRAPH SECURITY GAUGE AND "PLATE C" EQUIPMENT DIAGRAM

PANTOGRAPH CLEARANCE AND WIRE SECURITY SCHEDULE

(ALL DIMENSIONS ARE IN INCHES)

ABOVE TOP OF RAIL (ATR) HEIGHT	C1 PANTOGRAPH MECHANICAL CLEARANCE (FULL WIDTH)	C2 MAX AMTRAK PANTOGRAPH DISPLACEMENT (HALF WAY)	S1 PANTOGRAPH SECURITY GAUGE (FULL WIDTH)	S2 MAX MNCR PANTOGRAPH DISPLACEMENT (HALF WAY)	S3(AT) MAX CW PERMISSIBLE DISPLACEMENT (FOR AT)	S3(FT) MAX CW PERMISSIBLE DISPLACEMENT (FOR FT)
24'-0"	117.08	19.54	28.64	17.18	9.32	12.32
23'-0"	115.92	18.96	29.66	16.67	9.83	12.83
22'-0"	114.76	18.38	30.68	16.16	10.34	13.34
21'-0"	113.60	17.80	31.70	15.65	10.85	13.85
20'-0"	112.42	17.21	32.72	15.14	11.36	14.36
19'-0"	111.28	16.64	33.72	14.64	11.86	14.86
18'-0"	110.10	16.05	34.64	14.18	12.32	15.32
17'-0"	108.96	15.48	35.74	13.63	12.87	15.87
16'-0"	107.78	14.89	36.76	13.12	13.38	16.38
15'-0"	106.62	14.31	37.78	12.61	13.89	16.89

NOTES:

1. AREA ENCLOSED BY PANTOGRAPH CLEARANCE ENVELOPE IS PROHIBITED TO FIXED EQUIPMENT EXCEPT SUPPORT AND REGISTRATION ARMS. THE MECHANICAL CLEARANCE BETWEEN DYNAMIC PANTOGRAPH AND THE STEADY ARM ASSEMBLY SHALL NOT BE LESS THAN 1 1/2 INCHES.
2. PANTOGRAPH CLEARANCE GAUGE SHALL ALSO BE USED TO CHECK CLEARANCES FOR OVERHEAD BRIDGE STRUCTURES AND TO CATENARY SUPPORT AND REGISTRATION TUBES ON TANGENT AND CURVED TRACK.
3. PANTOGRAPH SECURITY GAUGE SHALL BE USED TO CHECK FOR THE RELATIVE POSITIONS BETWEEN A DISPLACED CONTACT WIRE AND THE PANTOGRAPH HEAD.
4. FOLLOWING PARAMETERS WERE CONSIDERED IN DEVELOPING PANTOGRAPH CLEARANCE AND SECURITY GAUGE FOR MAIN LINE CATENARY REPLACEMENT IN CONNECTICUT.

TRACK PARAMETER (USE FRA "CLASS 4" TOLERANCE FOR WORST CASE DESIGN)

T1	TRACK ALIGNMENT	1 1/2"
T2	TRACK GAUGE	3/4"
T3	TRACK CROSS LEVEL	1 1/4"
T4	TRACK LIFT IS NOT CONSIDERED.	

PANTOGRAPH PARAMETER

	HIGH SPEED PANTOGRAPH WIDTH	78.35"W/46.88" CARBON,SINGLE
PA1	AMTRAK PANTOGRAPH WIDTH (RINGSDORFF)	78" W/47"CARBON
PA2	AMTRAK PANTOGRAPH SWAY	2"
PM1	MNCR PANTOGRAPH WIDTH (TRANS TECH)	71" W/47"CARBON
PM2	MNCR PANTOGRAPH SWAY	2"

CONTACT WIRE DISPLACEMENT

CONTACT WIRE DISPLACEMENT IN ACROSS TRACK DIRECTION COMPRISING FOLLOWING PARAMETERS.

D1	CONTACT WIRE ERECTION TOLERANCE	1"
D2	STRUCTURE DEFLECTION DUE TO LIVE LOAD	1"
D3	STAGGER CHANGE FOR AT EQUIPMENT	3" FOR 19" AT MOVEMENT
D4	BLOW OFF AT MIDSPAN	TO BE CALCULATED
D5	STAGGER EFFECT ALLOWANCE	TO BE CALCULATED
D6	STATIC OFFSET	TO BE CALCULATED

VEHICLE PARAMETERS

VA1	AMTRAK VEHICLE BODY ROLL	3°
VA2	AMTRAK VEHICLE LATERAL MOVEMENT ALLOWANCE	2"
VM1	MNCR VEHICLE BODY ROLL MOVEMENT ALLOWANCE	2.3°
VM2	MNCR VEHICLE LATERAL	2"

LATERAL OFFSET
(SECONDARY SUSPENSION FAILED)

POWER CAR PANTOGRAPH =
6.969°−5.788°+1.2035°=2.3845°
(T3)

LOCOMOTIVE PANTOGRAPH =
6.873°−5.788°+1.2035°=2.2885°
(T3)

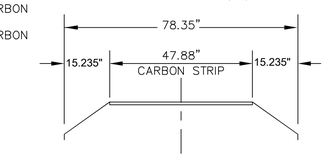

HIGH SPEED PANTOGRAPH
BRECKNELL WILLIS MODEL M-02860-07-L
OUTLINE DIMENSION

NTS

STATE OF CONNECTICUT
DEPARTMENT OF TRANSPORTATION

SECTION C-1a & C-2 NEW HAVEN LINE

CATENARY REPLACEMENT BETWEEN WALK BRIDGE AND STRUCTURE 636, PECK BRIDGE AND STRUCTURE 863

PANTOGRAPH CLEARANCE AND SECURITY GAUGE

URS CORPORATION AES
500 ENTERPRISE DRIVE
ROCKY HILL, CT 06067

STATE OF CONNECTICUT INSTITUTE OF TECHNOLOGY LICENSED PROFESSIONAL ENGINEER

URS CORPORATION AES
500 ENTERPRISE DRIVE
ROCKY HILL, CT 06067
1-(860)-529-8882

THE Burns GROUP
ENGINEERING AND CONSTRUCTION

Burns Engineering, Inc.
Metro-Plex II
8201 Corporate Drive, Suite 800
Landover, MD 20785-2230
phone 703-760-9076 fax 301-577-2088

NO.	DATE	DESCRIPTION

REVISIONS

ENGINEER: BURNS ENGINEERING
DESIGNER: MS DRAFTER: HJ CHECKER: JCD
APPROVED: SDB DATE: 09/13/13
STRUCTURE NO. BRIDGE LOG NO. STRUCTURE SHEET NO. D-12

THE INFORMATION, INCLUDING ESTIMATED QUANTITIES OF WORK SHOWN ON THESE SHEETS IS BASED ON LIMITED INVESTIGATIONS BY THE STATE AND IS IN NO WAY WARRANTED TO INDICATE THE TRUE CONDITIONS OR ACTUAL QUANTITIES OR DISTRIBUTION OF QUANTITIES OF WORK WHICH WILL BE REQUIRED.

PROJECT CONTROL DATE: 09/13/13 DISK FILENAME: D-12.dwg 100% DESIGN

F H W A REGION	STATE	TOWN	FED. AID PROJ. NO.	PROJ. NO.	YEAR	SHEET NUMBER
1	CONN.	VARIOUS	CT-05-0109	301-0145	2013	01.03.035

STR No.	Tk No.	Wire No.	N	A1 (Ft-In)	A (Ft-In)	Hangar Lengths and Distance (X) in Ft-In d1	d2	d3	d4	d5	d6	d7	d8	HL (Ft-In)	L (Ft)	HR (Ft-In)	Span Type	Pre Sag
1047-1047B O.O.R.	Xover	X4	1		71-0	2-7 71-0									208	3-4¾		0
1047B-1048A	Xover	X4	5		31-7	3-1½ 15-9½	2-8¾ 47-4¾	2-7¼ 79-0	2-9 47-4¾	3-1¾ 15-9½				3-4¾	158	3-5½	1A	0
1048A-1048B	Xover	X4	5		30-2¼	3-2 15-1	2-9¾ 45-3½	2-8¼ 75-6	2-9½ 45-3½	3-1¾ 15-1				3-5½	151	3-4¾	1A	0
1048B-1049A O.O.R.	Xover	X4	1		71-0	2-7 71-0									163	3-4¾		0
1088-West Support (Water Street)	3	N1	1			10-7 13-0								1-5	26	0-4¾	1	0
351-352 FT SPAN	3	3	16			91-5¼ 9-5¼	87-0 28-3¾	83-4¾ 47-2¼	80-7½ 66-0¾	78-10 84-11½	77-9 103-10	77-6 122-8½			302			
351-352 FT SPAN	4	4	16			91-5¼ 9-5¼	87-0 28-3¾	83-4¾ 47-2¼	80-7½ 66-0¾	78-10 84-11½	77-9 103-10	77-6 122-8½			302			
352-353	2	2	16		18-11¼	101-0 9-5½	93-2½ 28-4¾	86-3¼ 47-4	80-2½ 66-3¼	75-0 85-2½	70-8 104-1¾	67-2 123-1			303		1	0
352-353	4	8	8		37-6	33-8½ 18-9	22-11¼ 56-3	15-8¾ 93-9	12-1¾ 131-3	12-1¾ 131-3	15-8¾ 93-9	22-11¼ 56-3	33-8½ 18-9		300		5	0
352-353 FT SPAN	1	1	15			91-9½ 9-11½	84-4¼ 29-10¾	77-10½ 49-9¾	72-4¼ 69-9	67-8 89-8¼	64-0¾ 109-7¼	61-5¼ 129-6½			299			
352-353 FT SPAN	2	2	15			91-9½ 9-11½	84-4¼ 29-10¾	77-10½ 49-9¾	72-4¼ 69-9	67-8 89-8¼	64-0¾ 109-7¼	61-5¼ 129-6½			299			
352-353 FT TERMINATION	3	3	3			108-0 18-9	89-3¾ 56-3	52-0¾ 120-4¼							297			
353-354	3	7	8		36-10½	34-0 18-5¼	23-7¾ 55-3¾	16-9 92-2¼	13-3½ 129-0¾	13-3½ 129-0¾	16-9 92-2¼	23-7¾ 55-3¾	34-0 18-5¼		295		1	0
353-354	4	8	8		38-1½	33-5¼ 19-0¾	22-2½ 57-2¼	14-8½ 95-3¾	10-11¾ 133-5¼	10-11¾ 133-5¼	14-8½ 95-3¾	22-2½ 57-2¼	33-5¼ 19-0¾		305		1	0
353-354 FT SPAN	1	1	16			72-5¾ 9-5½	64-3¾ 28-4¾	57-0 47-4	50-6 66-3¼	44-10½ 85-2¾	40-0¾ 104-2	36-2¾ 123-1¼			303			
353-354 FT SPAN	2	2	16			72-4¼ 9-11	63-10 29-9½	56-3¼ 49-8	49-8 69-6¼	44-0¼ 89-4¾	39-4¼ 109-3¼	35-7½ 129-1¾			298			
354-354A	3	7	4		32-6	39-1 16-3	36-6¼ 48-9	36-6¼ 48-9	39-1 16-3						130		1	½
354-354A	4	8	4		32-6	39-1 16-3	36-6¼ 48-9	36-6¼ 48-9	39-1 16-3						130		1	½
354-354A FT SPAN	1	1	7			40-2¼ 8-11	37-5¼ 26-9¼	35-6 44-7¾	34-3¾ 62-5¾	33-10 44-7½	34-0¾ 26-9	35-1¾ 8-10¾			125			
354-354A FT SPAN	2	2	7			40-2¼ 9-3¼	37-2¼ 27-10¼	35-1¾ 46-5	33-10 65-0	33-5¾ 46-5	33-10 27-10¼	35-0¼ 9-3¼			130			
354A-355	3	7	5		35-2¼	37-0¼ 17-7	31-6½ 52-9½	28-11 88-0	29-1¾ 52-9½	32-2½ 17-7					176		1	1¼
354A-355	4	8	5		33-2¼	37-6 16-7	32-4¼ 49-9½	29-10¼ 83-0	29-11½ 49-9½	32-8½ 16-7					166		1	0
354A-355 AT SPAN	2	2	4		36-4¾	0-0 18-2¼	0-0 54-7	0-0 80-0	0-0 48-0						171		3	0
354A-355 FT SPAN	1	1	7		17-3¼	0-0 8-7½	0-0 25-10¾	0-0 43-2	0-0 60-5¼	0-0 77-8½	0-0 76-0	0-0 46-0			171		3	0
354A-355 FT SPAN	2	2	7		17-3¼	0-0 8-7½	0-0 25-10¾	0-0 43-2	0-0 60-5¼	0-0 77-8½	0-0 75-11¾	0-0 45-11¾			171		3	0
354A-355 OVERLAP	1	5	4		36-4¾	0-0 18-2¼	0-0 54-7	0-0 80-0	0-0 48-0						171		3	0
354A-355 OVERLAP SPAN	2	6	4		36-4¾	0-0 18-2¼	0-0 54-7	0-0 80-0	0-0 48-0						171		3	0
355-356A OOR MESSENGER WIRE	3	7A	3			13-9½ 111-4½	16-9½ 56-3	26-6 18-9							279		2A	
355-356A OOR MESSENGER WIRE	4	8A	3			12-0 115-4½	15-11½ 56-3	26-1¾ 18-9							287		2A	
355-TP355	1	5	4		36-0	32-5¼ 18-0	29-5¾ 54-0	29-5¾ 54-0	32-5¼ 18-0						144		1	¾
355-TP355	2	6	4		37-3	32-11¼ 18-7½	31-2¼ 55-10½	32-8¼ 55-10½	37-5¼ 18-7½						149		1	¾

ADDITIONAL HANGER LENGTHS FOR INSULATED OVERLAPS

STR. No.	WIRE No.	COMPRESSION HANGER LENGTHS (FT-IN) AHA-6	AH
		2-7 3/4	2-7 1/4
		16-0	4-0
		——	2-1
		——	4-0
		——	2-6s
		——	4-0
		2-7 3/4	2-7 1/4
		16-0	4-0
		2-7 3/4	2-7 1/4
		16-0	4-0

NOTES:

1. THE DIMENSION "d" IN THE ABOVE TABLE REPRESENTS THE DISTANCE BETWEEN ℄ OF MESSENGER TO ℄ OF CONTACT WIRE. THE ACTUAL HANGER LENGTH IS LESS BY 0.156" IN EACH CASE.
2. HANGER SPACING "X" IS MEASURED FROM THE NEAREST CATENARY SUPPORT STRUCTURE
3. HANGER SPACING AND HANGER LENGTHS ARE ROUNDED TO NEAREST 1/4 INCH.
4. PRIOR TO FABRICATION OF ANY HANGERS, THE CONTRACTOR SHALL VERIFY THE ACTUAL CATENARY SPAN LENGTHS AND SYSTEM HEIGHT AT SUPPORTS. ANY DEVIATION IN CATENARY SPAN LENGTH AND/OR SYSTEM HEIGHT MAY REQUIRE RECALCULATION OF HANGER LENGTHS.
5. THE DATA SHOWN IS FOR EXAMPLE ONLY AND DOES NOT REFLECT ACTUAL VALUES. THIS FORM ONLY SHOWS GENERAL ARRANGEMENT OF DATA.
6. THE ACTUAL HANGER LENGTHS WILL BE PROVIDED BY THE ENGINEER IN THIS FORMAT BASED ON THE CONTRACTOR'S FIELD MEASUREMENTS OF SPANS.

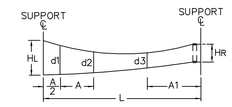

TYPE 4 – NATURAL RISE ANCHOR SPAN PROFILE
TYPE 4A – NATURAL RISE ANCHOR SPAN PROFILE WITH INSPAN INSULATION

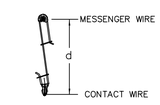

TYPICAL HANGER

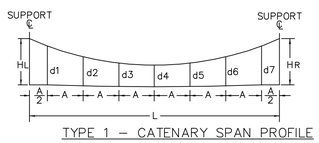

TYPE 1 – CATENARY SPAN PROFILE
TYPE 1A – CATENARY SPAN PROFILE WITH INSPAN INSULATION

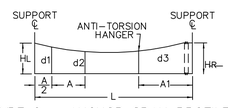

TYPE 2 – ANCHOR SPAN PROFILE
TYPE 2A – ANCHOR SPAN PROFILE WITH INSPAN INSULATION

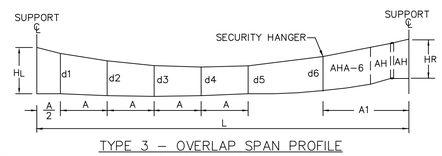

TYPE 3 – OVERLAP SPAN PROFILE
NOTE: FOR DETAIL SEE DWG No. D-4.

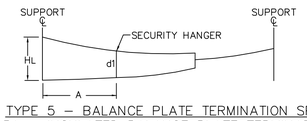

TYPE 5 – BALANCE PLATE TERMINATION SPAN
TYPE 5A – INSULATED BALANCE PLATE TERMINATION SPAN

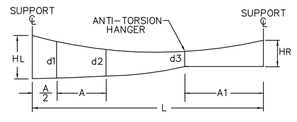

TYPE 6 – NATURAL RISE CATENARY PROFILE
TYPE6A – NATURAL RISE CATENARY PROFILE WITH INSPAN INSULATION

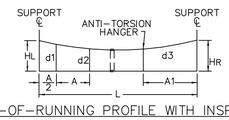

TYPE 7 – OUT-OF-RUNNING PROFILE WITH INSPAN INSULATION

THE INFORMATION, INCLUDING ESTIMATED QUANTITIES OF WORK SHOWN ON THESE SHEETS IS BASED ON LIMITED INVESTIGATIONS BY THE STATE AND IS IN NO WAY WARRANTED TO INDICATE THE TRUE CONDITIONS OR ACTUAL QUANTITIES OR DISTRIBUTION OF QUANTITIES OF WORK WHICH WILL BE REQUIRED.

NTS

STATE OF CONNECTICUT
DEPARTMENT OF TRANSPORTATION

SECTION C-1a & C-2 NEW HAVEN LINE

CATENARY REPLACEMENT BETWEEN WALK BRIDGE AND STRUCTURE 636, PECK BRIDGE AND STRUCTURE 863

HANGER LENGTHS

(SAMPLE HANGER LENGTH FORM)

URS CORPORATION AES
500 ENTERPRISE DRIVE
ROCKY HILL, CT 06067
1-(860)-529-8882

THE Burns GROUP
ENGINEERING AND CONSTRUCTION

Burns Engineering, Inc.
Metro-Plex II
8201 Corporate Drive, Suite 800
Landover, MD 20785-2230
phone 703-760-9076 fax 301-577-2088

STATE OF CONNECTICUT "JOHN P. HOLLAND" NO. 18,780 LICENSED PROFESSIONAL ENGINEER

URS CORPORATION AES
500 ENTERPRISE DRIVE
ROCKY HILL, CT 06067

NO.	DATE	DESCRIPTION

REVISIONS

ENGINEER: BURNS ENGINEERING
DESIGNER: MS DRAFTER: HJ CHECKER: JCD
APPROVED: SDB DATE: 09/13/13
STRUCTURE NO. BRIDGE LOG NO. STRUCTURE SHEET NO. D-13

PROJECT CONTROL DATE: 09/13/13 DISK FILENAME: D-13.dwg 100% DESIGN

F H W A REGION	STATE	TOWN	FED. AID PROJ. NO.	PROJ. NO.	YEAR	SHEET NUMBER
1	CONN.	VARIOUS	CT-05-0109	301-0145	2013	01.03.036

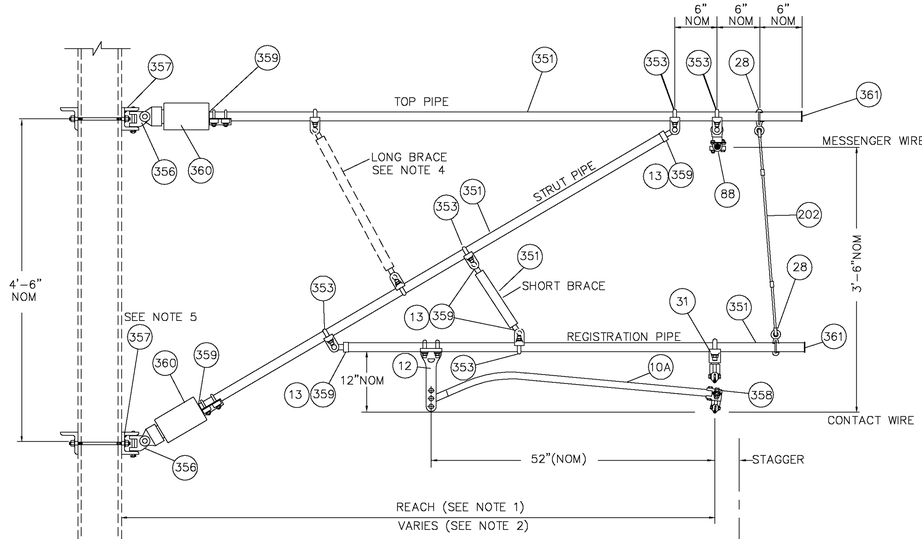

PULL-OFF SINGLE TRACK CANTILEVER
ASSEMBLY CAN-3
ASSEMBLY CAN-5
(SEE NOTE 7)

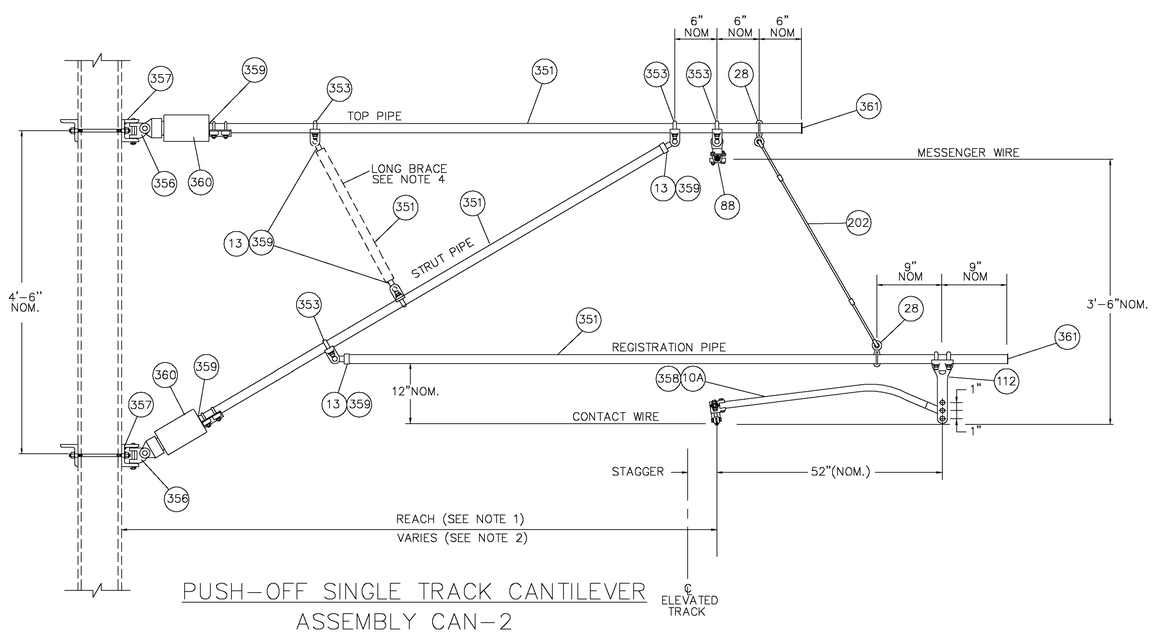

PUSH-OFF SINGLE TRACK CANTILEVER
ASSEMBLY CAN-2

ASSEMBLY CAN-2, CAN-3 AND CAN-5

PART No.	METRO-NORTH No.	DESCRIPTION	QUANTITY CAN-3	QUANTITY CAN-5	QUANTITY CAN-2
10A		STEADY ARM ASSEMBLY SCH40	1	——	1
12	10200155	ADJUSTABLE DROP BRACKET	1	——	1
13	10434459	STEADY ARM END FITTING	4	4	2
28	1020481	PIPE EYE CLAMP 2"	2	2	2
31	10436110	SLIDING CONTACT WIRE CLAMP HOLDER ASSEMBLY	——	1	——
88	10201630	SWIVEL SUSPENSION CLAMP	1	1	1
202	10850090	5/16" S.S. WIRE ROPE W/2 NICOPRESS ASSY	FT	FT	FT
351		PIPE 2" IPS SCH 80	FT	FT	FT
353	10202451	PIPE CLAMP-CLEVIS	5	5	3
356		HINGE	2	2	2
357		HINGE MOUNT	2	2	2
358		INT. PLASTIC SEAL PLUG	1	——	1
359		INT. PLASTIC SEAL PLUG	6	6	4
360		STRUT INSULATOR	2	2	2
361		EXTERNAL PLASTIC SEAL PLUG	2	2	2

NOTES:

1. ON TANGENT TRACK THE CANTILEVER REACH IS EQUAL TO THE DISTANCE FROM CENTERLINE OF TRACK TO FACE OF POLE PLUS THE STAGGER, IF AWAY FROM POLE, MINUS THE THE STAGGER IF TOWARD POLE. ON CURVED TRACK, THE CANTILEVER REACH SHALL ADD OR SUBTRACT THE CONTACT WIRE DISPLACEMENT DUE TO THE TRACK SUPER-ELEVATION.
2. REFER TO CATENARY LAYOUT FOR THE VALUE OF STAGGER, AND OFFSET FROM TRACK CENTERLINE TO POLE FACE.
3. REFER TO CATENARY LAYOUT FOR THE HEIGHTS OF MESSENGER AND CONTACT WIRES.
4. LONG BRACE MAY BE USED IF REQUIRED.
5. FOR TWIN CANTILEVER ASSEMBLY, REPLACE ITEM 357 WITH TWIN CANTILEVER BRACKET ASSEMBLY AS SHOWN.
6. ASSEMBLY CAN-5 IS FOR OUT-OF-RUNNING CATENARY.

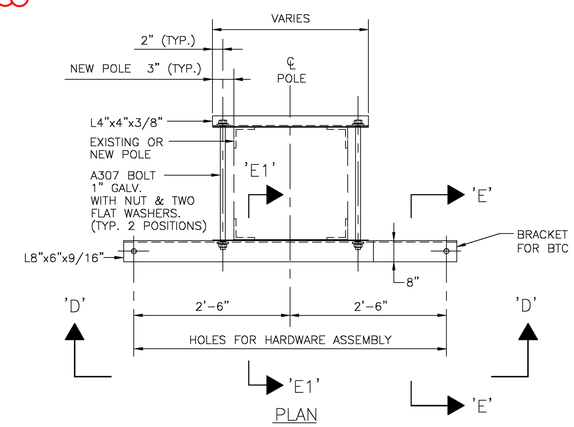

PLAN

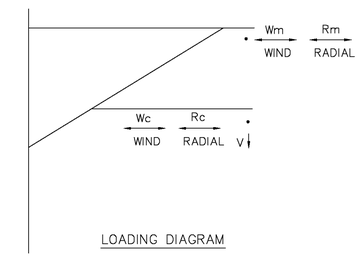

LOADING DIAGRAM

WORST CASE LOADING	
Rm	1050
Wm	350
Rc	700
Wc	276
V	1000

Wm = WIND LOAD ON MESSENGER WIRE
Wc = WIND LOAD ON CONTACT WIRE
Rm = RADIAL LOAD ON MESSENGER WIRE
Rc = RADIAL LOAD ON CONTACT WIRE
V = VERTICAL LOAD OF CATENARY AT SUPPORT

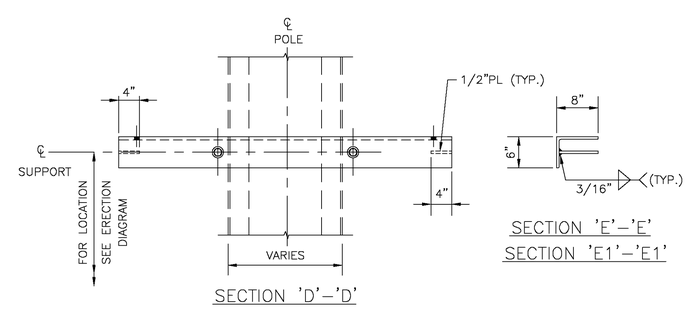

SECTION 'D'-'D'
SECTION 'E'-'E'
SECTION 'E1'-'E1'

POLE BRACKET FOR TWIN CANTILEVERS DETAIL BTC
(USE FOR ASSEMBLIES CAN-2, CAN-3, CAN-5)

URS CORPORATION AES
500 ENTERPRISE DRIVE
ROCKY HILL, CT 06067

THE INFORMATION, INCLUDING ESTIMATED QUANTITIES OF WORK SHOWN ON THESE SHEETS IS BASED ON LIMITED INVESTIGATIONS BY THE STATE AND IS IN NO WAY WARRANTED TO INDICATE THE TRUE CONDITIONS OR ACTUAL QUANTITIES OR DISTRIBUTION OF QUANTITIES OF WORK WHICH WILL BE REQUIRED.

URS CORPORATION AES
500 ENTERPRISE DRIVE
ROCKY HILL, CT 06067
1-(860)-529-8882

NO.	DATE	DESCRIPTION

REVISIONS

STATE OF CONNECTICUT
DEPARTMENT OF TRANSPORTATION

SECTION C-1a & C-2 NEW HAVEN LINE

CATENARY REPLACEMENT BETWEEN WALK BRIDGE AND STRUCTURE 636, PECK BRIDGE AND STRUCTURE 863

MISCELLANEOUS ASSEMBLIES
SHEET 1

ENGINEER: URS CORPORATION AES
DESIGNER: RW | DRAFTER: AMK | CHECKER: AJM
APPROVED: T. HOLLAND | DATE: 09/13/13
STRUCTURE NO. | BRIDGE LOG NO. | STRUCTURE SHEET NO. D-18

PROJECT CONTROL DATE: 09/13/13 DISK FILENAME: D-18.dwg 100% DESIGN

F H W A REGION	STATE	TOWN	FED. AID PROJ. NO.	PROJ. NO.	YEAR	SHEET NUMBER
1	CONN.	VARIOUS	CT-05-0109	301-0145	2013	01.03.037

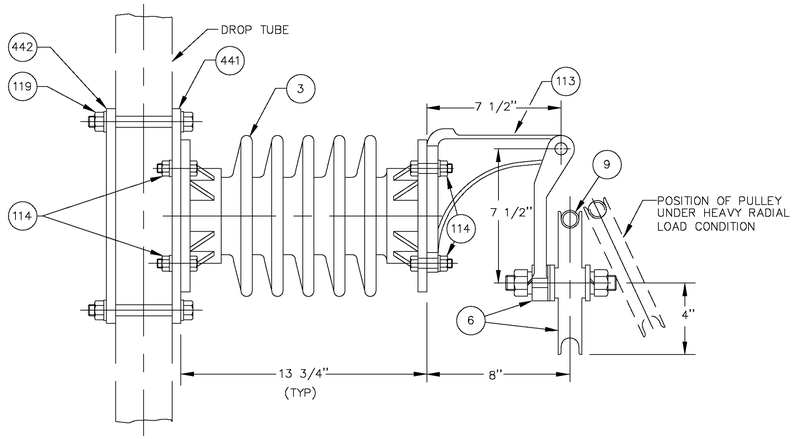

ASSEMBLY MS-1

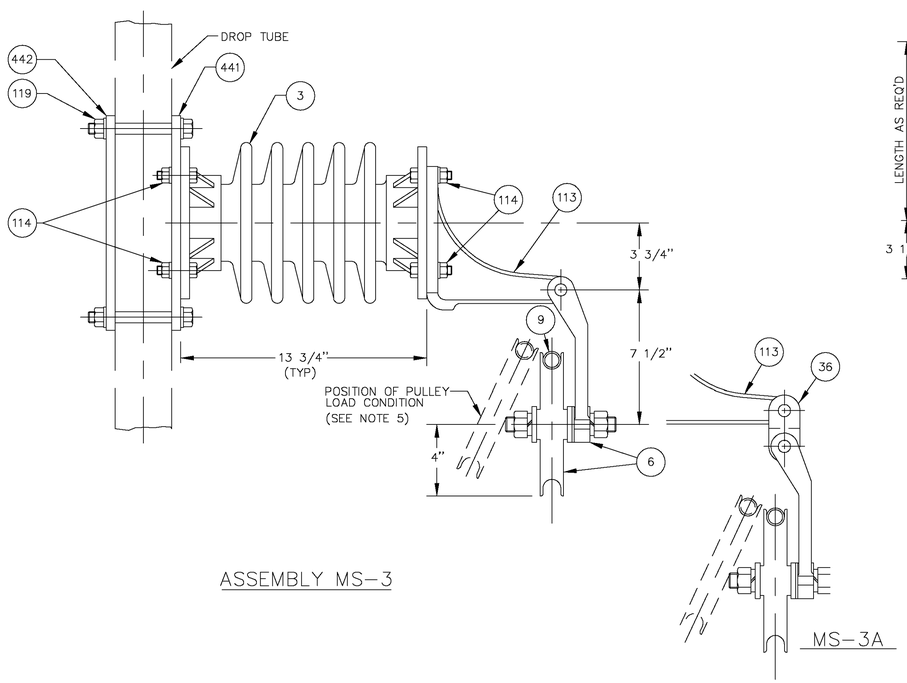

ASSEMBLY MS-3

MS-3A

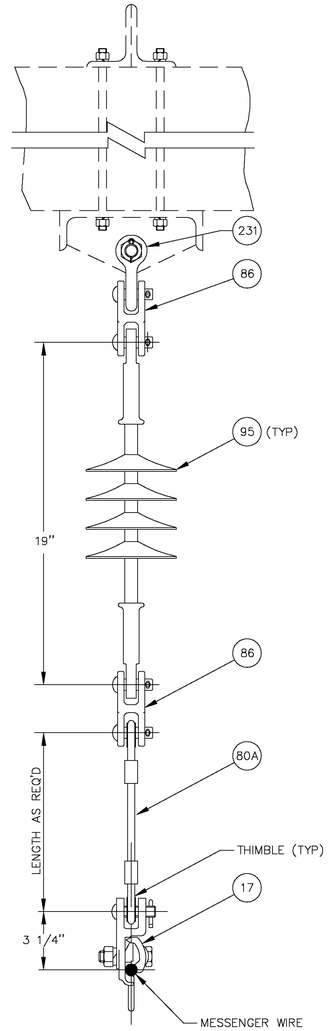

ASSEMBLY MS-4

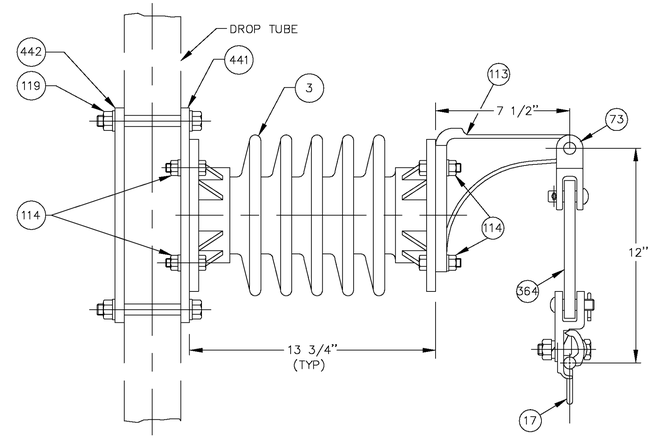

ASSEMBLY MS-2

NOTE: PART 113 MAY BE PLACED UPSIDE DOWN TO PROVIDE ELECTRICAL CLEARANCE WHEN RADIAL LOAD ON MESSENGER IS HIGH.

ASSEMBLIES – MS-1, MS-2, MS-3, MS-3A & MS-4

PART No.	METRO-NORTH No.	DESCRIPTION	QUANTITY				
			MS-1	MS-2	MS-3	MS-3A	MS-4
3	10445100	4000 LB CANTILEVER INSULATOR	1	1	1	1	—
6	10739102	PULLEY ASSEMBLY W/PULLEY HOLDER	1	—	1	1	—
9	10435750	PREFORMED LINE GUARD	1	—	1	1	—
17	10201662	SUSPENSION CLAMP	—	1	—	—	1
36	10206507	LINK TONGUE CLEVIS	—	—	—	1	—
73	10206318	LINK DOUBLE CLEVIS 90°	—	1	—	—	—
80A	1099702	3/8" (7X19 STR) S.S. WIRE ROPE WITH 2 EYES	—	—	—	—	1
86	10206310	LINK CLEVIS CLEVIS W/2 PINS	—	—	—	—	2
95	10445113	SUSPENSION INSULATOR 25,000 LB	—	—	—	—	1
442	10730168	BACK PLATE MESSENGER INSULATOR SUPPORT BRACKET	1	1	1	1	—
113	10200166	PULLEY BRACKET ASSEMBLY	1	1	1	1	—
114	19130913	1/2"ø STAINLESS STEEL BOLT, NUT & LOCKWASHER	8	8	8	8	—
119	19133562	5/8"ø x 5" GALV A307 BOLT, NUT & LOCKWASHER	4	4	4	4	—
231	10850265	5/8" ANCHOR SHACKLE W/ 3/4"ø PIN	—	—	—	—	1
364		LINK EYE-EYE	—	1	—	—	—
441	10730187	FRONT PLATE MESSENGER INSULATOR SUPPORT	1	1	1	1	—

Do we have a Metro-North Part No. for Part No. 364?

NOTES:

1. PREFORMED LINE GUARD IS ONLY REQUIRED WHEN WIRE IS SUPPORTED WITH PULLEY.
2. ASSEMBLY MS-4 AND MS-2 ARE USED FOR F.T. SYSTEM OR WITHIN 600 FT FROM MPA OR FA ON THE A.T. SYSTEM.
3. ASSEMBLY MS-3 IS THE SAME AS MS-1 BUT PULLEY BRACKET IS ROTATED 180° ON INSULATOR, AS SHOWN.
4. USE THIMBLES IN ASSEMBLY MS-4, AS REQUIRED.
5. WHERE RADIAL LOAD CAUSES PULLEY TO SWING INTO AND BIND AGAINST PULLEY BRACKET, LINK TONGUE CLEVIS IS TO BE INSERTED AS SHOWN ON MS-3A.
6. USE NICOPRESS TOOLS AND FERRULES FOR EYE SPLICING OF WIRES, AS REQUIRED.

NTS

THE INFORMATION, INCLUDING ESTIMATED QUANTITIES OF WORK SHOWN ON THESE SHEETS IS BASED ON LIMITED INVESTIGATIONS BY THE STATE AND IS IN NO WAY WARRANTED TO INDICATE THE TRUE CONDITIONS OR ACTUAL QUANTITIES OR DISTRIBUTION OF QUANTITIES OF WORK WHICH WILL BE REQUIRED.

URS CORPORATION AES
500 ENTERPRISE DRIVE
ROCKY HILL, CT 06067

URS
URS CORPORATION AES
500 ENTERPRISE DRIVE
ROCKY HILL, CT 06067
1-(860)-529-8882

THE Burns GROUP
ENGINEERING AND CONSTRUCTION
Burns Engineering, Inc.
Metro-Plex II
8201 Corporate Drive, Suite 800
Landover, MD 20785-2230
phone 301-560-9016 fax 301-577-2088

NO.	DATE	DESCRIPTION

REVISIONS

STATE OF CONNECTICUT
DEPARTMENT OF TRANSPORTATION

SECTION C-1a & C-2 NEW HAVEN LINE

CATENARY REPLACEMENT BETWEEN WALK BRIDGE AND STRUCTURE 636, PECK BRIDGE AND STRUCTURE 863

MESSENGER SUPPORT ASSEMBLIES

ENGINEER: BURNS ENGINEERING
DESIGNER: MS DRAFTER: HJ CHECKER: JCD
APPROVED: SDB DATE: 09/13/13
STRUCTURE NO. BRIDGE LOG NO. STRUCTURE SHEET NO. E-1

PROJECT CONTROL DATE: 09/13/13 DISK FILENAME: E-1.dwg 100% DESIGN

F H W A REGION	STATE	TOWN	FED. AID PROJ. NO.	PROJ. NO.	YEAR	SHEET NUMBER
1	CONN.	VARIOUS	CT-05-0109	301-0145	2013	01.03.038

URS CORPORATION AES
500 ENTERPRISE DRIVE
ROCKY HILL, CT 06067

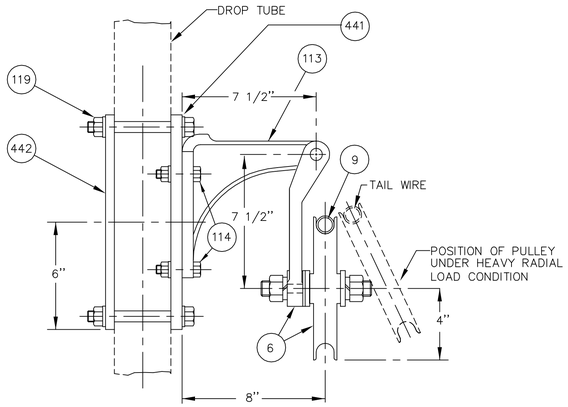

ASSEMBLY TS-1

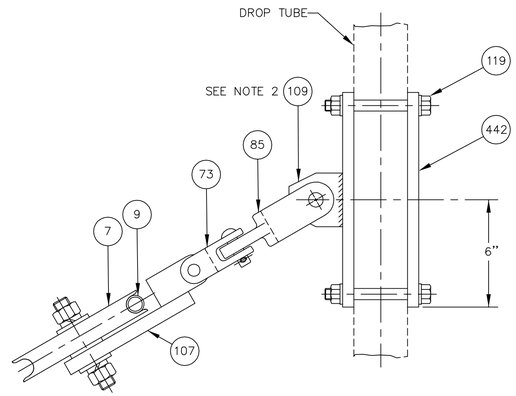

ELEVATION VIEW

ASSEMBLY TS-2

(WITH DOUBLE PULLEY)

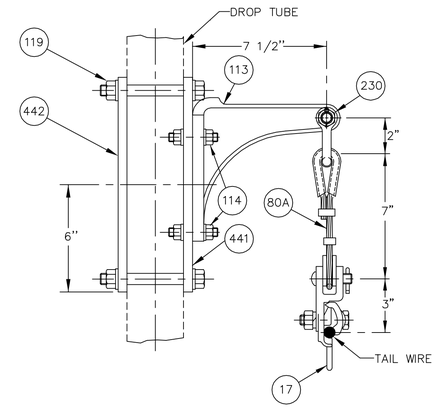

ASSEMBLY TS-3

(SEE NOTE 4)

ASSEMBLIES – TS-1, TS-2 & TS-3					
PART No.	METRO-NORTH No.	DESCRIPTION	QUANTITY		
			TS-1	TS-2	TS-3
6	10739102	PULLEY ASSEMBLY W/PULLEY HOLDER	1	—	—
7	10739101	PULLEY	—	2	—
9	10435750	PREFORMED LINE GUARD	1	1	—
17	10201622	SUSPENSION CLAMP	—	—	1
73	10206340	LINK, DOUBLE CLEVIS 90°	—	1	—
85	10206350	LINK CLEVIS TONGUE 90°	—	1	—
107	10730150	DOUBLE PULLEY PLATE ASSEMBLY	—	1	—
109	10735190	1/2" PLATE 3"x 2"(5 DEG. SUPPORT BRACKET)	—	1	—
442	10730168	BACK PLATE MESSENGER INSULATOR SUPPORT BRACKET	1	1	1
113	10200166	PULLEY BRACKET SUPPORT ASSEMBLY	1	—	1
114	19130913	1/2"ø S.S. BOLT, NUT & LOCKWASHER	4	—	4
119	19133562	5/8"ø x 5" GALV. A307 BOLT, NUT & LOCKWASHER	4	4	4
80A	10850090	3/8" S.S. WIRE ROPE (7x19 STR)WITH 2 EYES, LENGTH AS REQD	—	—	1
230	10850255	1/2" ANCHOR SHACKLE WITH 5/8"ø PIN	—	—	1
441	10730187	FRONT PLATE MESSENGER INSULATOR SUPPORT	1	—	1
442	10730168	BACK PLATE MESSENGER INSULATOR SUPPORT	1	1	1

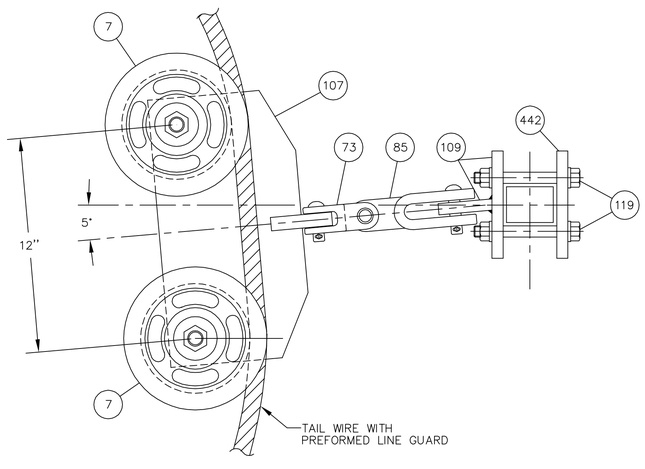

TOP VIEW

NTS

NOTES:

1. SUPPORT BRACKET HAS A 5° OFFSET AND IS REVERSIBLE. MAKE CERTAIN THAT THE OFFSET IS INSTALLED CORRECTLY.
2. ASSEMBLY TS-1 IS FOR A.T. SYSTEM TAIL WIRE SUPPORT.
3. ASSEMBLY TS-2 IS FOR A.T. SYSTEM AND HEAVY RADIAL LOAD CONDITIONS AS PER PLANS.
4. ASSEMBLY TS-3 IS FOR F.T. SYSTEM OR A.T. SYSTEM WITH MPA OR FA WITHIN 600 FT OF THE FIXED END.
5. USE TINNED CONNECTORS FOR CONNECTION TO ALUMINUM CONDUCTOR.
6. USE NICOPRESS TOOLS AND FERRULES FOR EYE SPLICING OF WIRES, AS REQUIRED.

THE INFORMATION, INCLUDING ESTIMATED QUANTITIES OF WORK SHOWN ON THESE SHEETS IS BASED ON LIMITED INVESTIGATIONS BY THE STATE AND IS IN NO WAY WARRANTED TO INDICATE THE TRUE CONDITIONS OR ACTUAL QUANTITIES OR DISTRIBUTION OF QUANTITIES OF WORK WHICH WILL BE REQUIRED.

URS CORPORATION AES
500 ENTERPRISE DRIVE
ROCKY HILL, CT 06067
1-(860)-529-8882

THE Burns GROUP
ENGINEERING AND CONSTRUCTION
Burns Engineering, Inc.
Metro-Plex II
8201 Corporate Drive, Suite 800
Landover, MD 20785-2230
phone 703-760-9076 fax 301-577-2088

NO.	DATE	DESCRIPTION

REVISIONS

STATE OF CONNECTICUT
DEPARTMENT OF TRANSPORTATION

SECTION C-1a & C-2 NEW HAVEN LINE

CATENARY REPLACEMENT BETWEEN WALK BRIDGE AND STRUCTURE 636, PECK BRIDGE AND STRUCTURE 863

TAIL WIRE SUPPORT ASSEMBLIES

ENGINEER: BURNS ENGINEERING

DESIGNER: MS DRAFTER: HJ CHECKER: JCD

APPROVED: SDB DATE: 09/13/13

STRUCTURE NO. BRIDGE LOG NO. STRUCTURE SHEET NO. E-2

PROJECT CONTROL DATE: 09/13/13 DISK FILENAME: E-2.dwg 100% DESIGN

F H W A REGION	STATE	TOWN	FED. AID PROJ. NO.	PROJ. NO.	YEAR	SHEET NUMBER
1	CONN.	VARIOUS	CT-05-0109	301-0145	2013	01.03.039

URS CORPORATION AES
500 ENTERPRISE DRIVE
ROCKY HILL, CT 06067

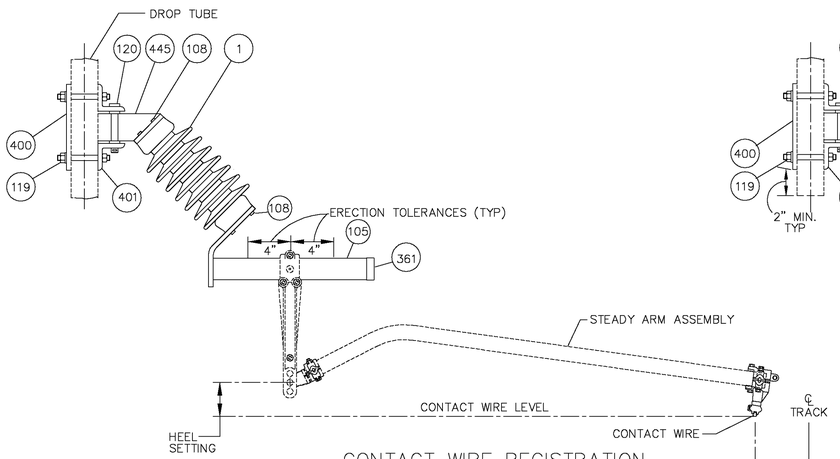

CONTACT WIRE REGISTRATION
(WITH SA-52 OR SA-64 OR SA-X)
ASSEMBLY RA-18

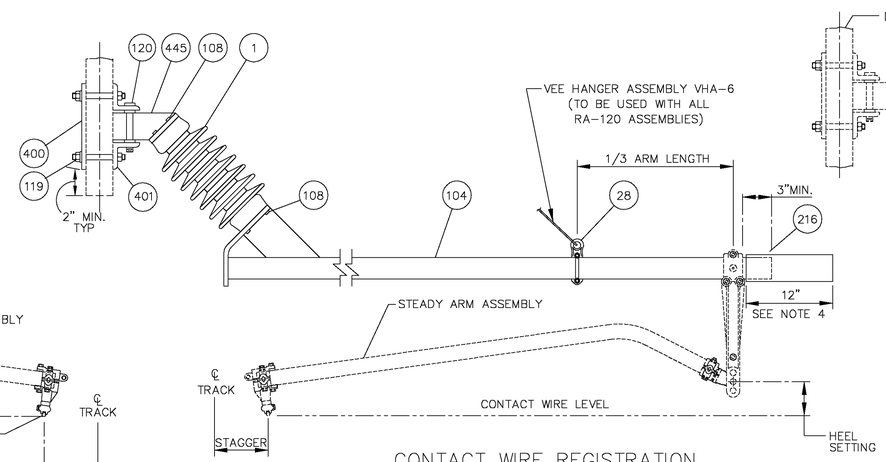

CONTACT WIRE REGISTRATION
(WITH SA-52 OR SA-64 OR SA-X)
ASSEMBLY RA-120

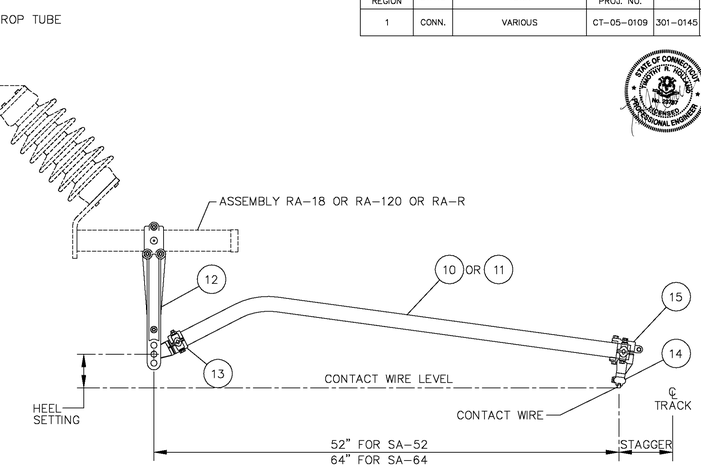

STEADY ARM ASSEMBLY
SA-52 OR SA-64

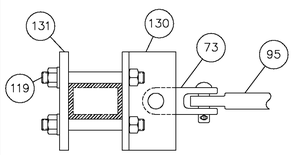

TOP VIEW

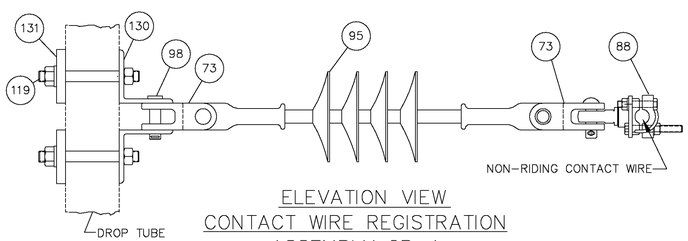

ELEVATION VIEW
CONTACT WIRE REGISTRATION
ASSEMBLY CR-1

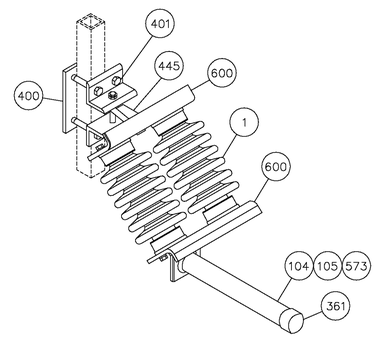

TYPE: RA-18-HL DETAIL
(WITH RA-R-HL OR RA-18-HL OR RA-120-HL)

ASSEMBLIES – CR-1, RA-R, RA-R-HL, RA-18, RA-18-HL, RA-120, RA-12-HL, SA-X, SA-52 & SA-64										
PART No.	METRO-NORTH No.	DESCRIPTION	QTY PER ASSEMBLY								
			CR-1	RA-R	RA-18	RA-120	SA-X	SA-52	SA-64	RA-R-HL	RA-18-HL	RA-120-HL
1	10445110	CANTILEVER INSULATOR (2000 LBS)	—	1	1	1	—	—	—	2	2	2
10	10100171	STEADY ARM 52"	—	—	—	—	—	1	—	—	—	—
11	10100175	STEADY ARM 64"	—	—	—	—	—	—	1	—	—	—
12	10200155	ADJUSTABLE DROP BRACKET	—	—	—	—	1	1	1	—	—	—
13	10434459	STEADY ARM END FITTING	—	—	—	—	1	1	1	—	—	—
14	10202490	SWIVEL CONTACT WIRE CLAMP	—	—	—	—	1	1	1	—	—	—
15	10202489	CONTACT WIRE CLAMP HOLDER	—	—	—	—	1	1	1	—	—	—
20	10100167	STRUT PIPE 1 1/4"IPS SCH. 40	—	—	—	—	1	—	—	—	—	—
28	10202451	PIPE EYE CLAMP	—	—	—	1	—	—	—	—	—	—
73	10206340	LINK, DOUBLE CLEVIS 90°	2	—	—	—	—	—	—	—	—	—
88	10201630	MESSENGER SWIVEL SUSPENSION CLAMP	1	—	—	—	—	—	—	—	—	—
95	10445113	SUSPENSION INSULATOR 25,000 LB	1	—	—	—	—	—	—	—	—	—
98	19132808	5/8"ø x 3" BOLT, NUT & LOCKWASHER	1	—	—	—	—	—	—	—	—	—
104	10000093	REGISTRATION TUBE 120" ASSEMBLY INCLUDING PIPE CAP	—	—	—	1	—	—	—	—	—	1
105	10000085	REGISTRATION TUBE 18" ASSEMBLY	—	—	1	—	—	—	—	—	1	—
108	19130912	1/2"ø x 1 1/4" GALV. BOLT, W/LOCK WASHER	—	8	8	8	—	—	—	16	16	16
400	10730165	HINGED INSULATOR BRACKET BACK PLATE	—	1	1	1	—	—	—	1	1	1
119	19133820	5/8"ø X 5" GALV., BOLT, NUT & LOCKWASHER	4	4	4	4	—	—	—	4	4	4
120	19133825	5/8"ø x 6" BOLT A307 W/NUT & 2 BRONZE WASHERS	—	1	1	1	—	—	—	1	1	1
130	10000040	L 3"x 3"x 3/8"– 5 1/2"LONG	2	—	—	—	—	—	—	—	—	—
131	10730190	1/2" PLATE 3"x 5 1/2"	2	—	—	—	—	—	—	—	—	—
216	10200147	ORANGE RUBBER BOOT 20KV 12" LONG	—	—	—	1	—	—	—	—	—	—
361		EXTERNAL PLASTIC SEAL PLUG	—	1	1	—	—	—	—	1	1	1
401	10854750	INSULATOR BASE SUPPORT (HINGED INSULATOR ASSEMBLY)	—	2	2	2	—	—	—	2	2	2
445	10200011	INSULATOR BASE (HINGED INSULATOR ASSEMBLY)	—	1	1	1	—	—	—	1	1	1
573	10858170	REGISTRATION TUBE 18" ASSEMBLY	—	1	—	—	—	—	—	1	—	—
600		DOUBLE INSULATION ADAPTER PLATE	—	—	—	—	—	—	—	2	2	2

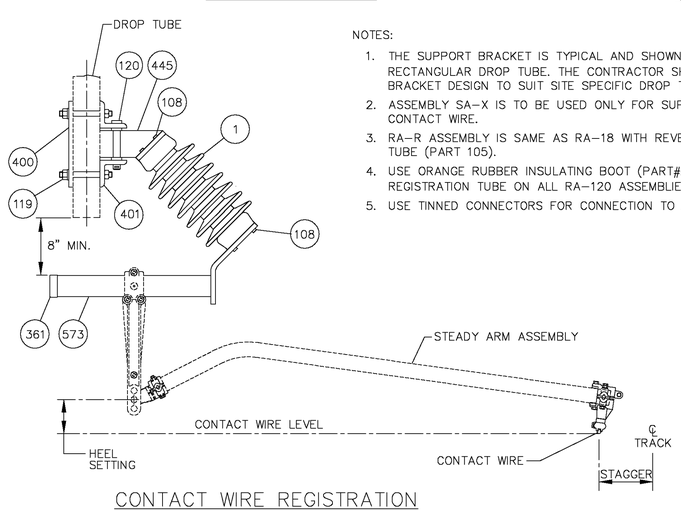

CONTACT WIRE REGISTRATION
(WITH SA-52 OR SA-64 OR SA-X)
ASSEMBLY RA-R

NOTES:

1. THE SUPPORT BRACKET IS TYPICAL AND SHOWN FOR 3"x 2"x 1/4" RECTANGULAR DROP TUBE. THE CONTRACTOR SHALL DEVELOP THE BRACKET DESIGN TO SUIT SITE SPECIFIC DROP TUBES.
2. ASSEMBLY SA-X IS TO BE USED ONLY FOR SUPPORTING NON-RIDING CONTACT WIRE.
3. RA-R ASSEMBLY IS SAME AS RA-18 WITH REVERSED REGISTRATION TUBE (PART 105).
4. USE ORANGE RUBBER INSULATING BOOT (PART#216) ON THE REGISTRATION TUBE ON ALL RA-120 ASSEMBLIES.
5. USE TINNED CONNECTORS FOR CONNECTION TO ALUMINUM CONDUCTOR.

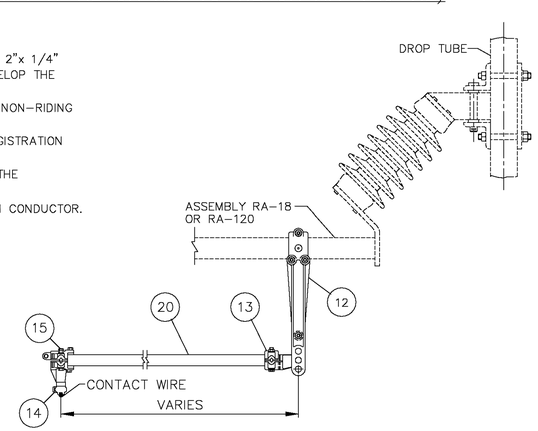

CONTACT WIRE REGISTRATION
ASSEMBLY SA-X

THE INFORMATION, INCLUDING ESTIMATED QUANTITIES OF WORK SHOWN ON THESE SHEETS IS BASED ON LIMITED INVESTIGATIONS BY THE STATE AND IS IN NO WAY WARRANTED TO INDICATE THE TRUE CONDITIONS OR ACTUAL QUANTITIES OR DISTRIBUTION OF QUANTITIES OF WORK WHICH WILL BE REQUIRED.

NTS

URS CORPORATION AES
500 ENTERPRISE DRIVE
ROCKY HILL, CT 06067
1-(860)-529-8882

THE Burns GROUP
ENGINEERING AND CONSTRUCTION
Burns Engineering, Inc.
Metro-Plex II
8201 Corporate Drive, Suite 800
Landover, MD 20785-2230
phone 703-760-9076 fax 301-577-0088

NO.	DATE	DESCRIPTION

REVISIONS

STATE OF CONNECTICUT
DEPARTMENT OF TRANSPORTATION

SECTION C-1a & C-2 NEW HAVEN LINE

CATENARY REPLACEMENT BETWEEN WALK BRIDGE AND STRUCTURE 636, PECK BRIDGE AND STRUCTURE 863

CONTACT WIRE
REGISTRATION ASSEMBLIES

ENGINEER: BURNS ENGINEERING
DESIGNER: MS DRAFTER: HJ CHECKER: JCD
APPROVED: SDB DATE: 09/13/13
STRUCTURE NO. BRIDGE LOG NO. STRUCTURE SHEET NO. E-3

PROJECT CONTROL DATE: 09/13/13 DISK FILENAME: E-3.dwg 100% DESIGN

F.H.W.A. REGION	STATE	TOWN	FED. AID PROJ. NO.	PROJ. NO.	YEAR	SHEET NUMBER
1	CONN.	VARIOUS	CT-05-0109	301-0145	2013	01.03.040

URS CORPORATION AES
500 ENTERPRISE DRIVE
ROCKY HILL, CT 06067

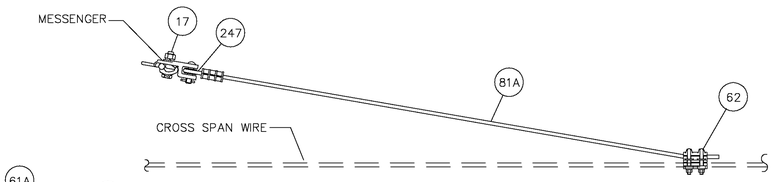

PULL-OFF ASSEMBLY PO-8

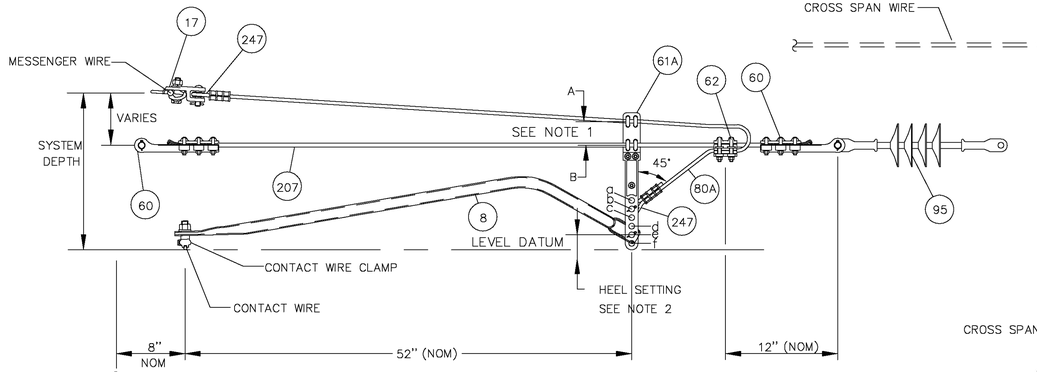

PULL-OFF ASSEMBLY PO-1
(FOR SYSTEM HEIGHT BETWEEN 15" TO 18")

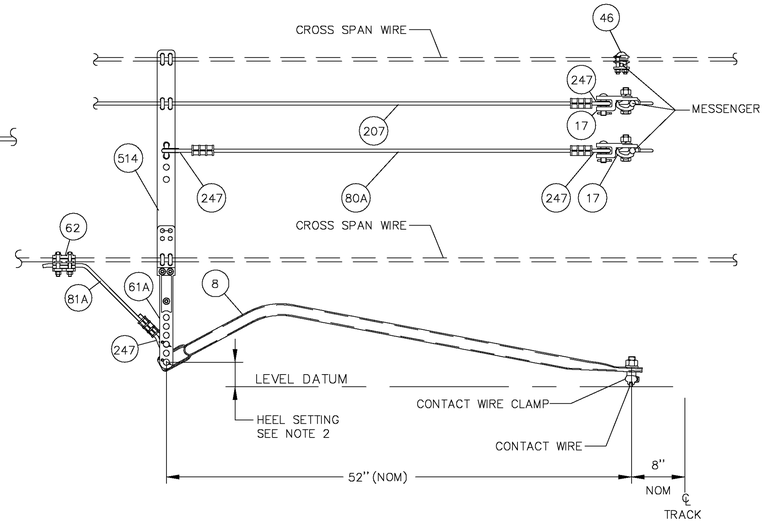

PULL-OFF ASSEMBLIES PO-3, PO-4 AND PO-12
(FOR SYSTEM HEIGHT > 18")

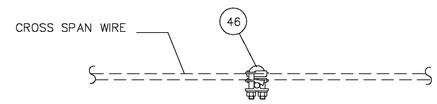

PULL-OFF ASSEMBLY CC-1

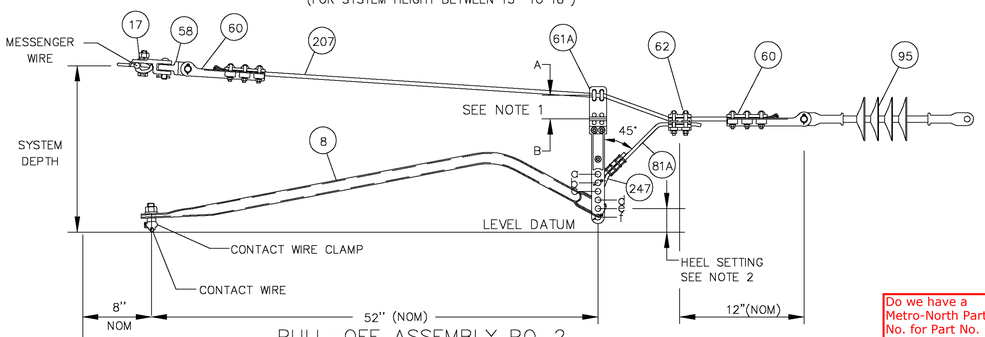

PULL-OFF ASSEMBLY PO-2
(FOR SYSTEM HEIGHT BETWEEN 15" TO 18")

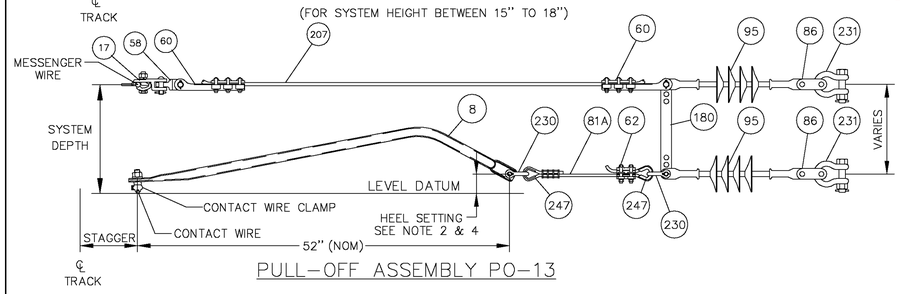

PULL-OFF ASSEMBLY PO-13

Do we have a Metro-North Part No. for Part No. 514?

ASSEMBLIES CC-1, PO-1, PO-2, PO-3, PO-4, PO-8, PO-12, PO-13

PART No.	METRO-NORTH No.	DESCRIPTION	QUANTITY							
			PO-1	PO-2	PO-3	PO-4	PO-8	CC-1	PO-12	PO-13
8	10100142	STEADY ARM COMPLETE WITH CONTACT WIRE CLAMP	1	1	1	1	—	—	1	1
17	10201622	SUSPENSION CLAMP	1	1	1	—	1	—	1	1
46	10201600	CROSS CLAMP	—	—	—	1	—	1	—	—
58	10855291	LINK TONGUE TO TONGUE, 90°	—	1	—	—	—	—	—	1
60	10201621	DEAD END CLAMP	2	2	—	—	—	—	—	2
61A	—	DROP BRACKET	1	1	1	1	—	—	1	—
62	10202488	PARALLEL CLAMP, 7/16"ø COPPERWELD AND 3/8" S.S. WIRE ROPE	1	1	1	1	1	—	1	1
80A	10997040	3/8" S.S. WIRE ROPE (7x19 STR) WITH 2 EYES, LENGTH AS REQUIRED	1	—	1	—	—	—	—	—
81A	—	3/8" S.S. WIRE ROPE (7x19 STR) WITH SINGLE EYE, LENGTH AS REQUIRED	—	1	1	1	1	—	1	1
86	10206310	LINK CLEVIS CLEVIS	—	—	—	—	—	—	—	2
95	10445113	SUSPENSION INSULATOR 25,000 LBS	1	1	—	—	—	—	—	2
180	10852375	GALV. ANTI-TORSION STRAP 3/16" x 1 1/2"	—	—	—	—	—	—	—	1
207	10997017	7/16"ø COPPERWELD WIRE	FT	FT	—	—	—	—	FT	FT
230	10850255	1/2" ANCHOR SHACKLE W/ 5/8"ø PIN	—	—	—	—	—	—	—	2
231	10850265	5/8" ANCHOR SHACKLE W/ 3/4"ø PIN	—	—	—	—	—	—	—	2
514		DROP BRACKET COMPLETE WITH U-BOLTS AND HARDWARE	—	—	1	1	—	—	1	—
22	10100172	CROSS SPAN STEADY ARM COMPLETE W/ END FITTING CLAMP	—	—	—	—	—	—	—	—
		HOLDER AND CONTACT WIRE CLAMP								
247	10858000	3/8" DIA. WIRE ROPE THIMBLE	2	1	3	1	1	—	2	2

NOTES:

1. REFER TO TABLE 1 ON DRAWING E-7 FOR ATTACHMENT LOCATIONS ON PART 61A.
2. HEEL SETTINGS TO BE 2" ± 1/2". HEEL SETTING IS MEASURED AS DISTANCE BETWEEN LEVEL DATUM FROM BOTTOM OF CONTACT WIRE TO CENTERLINE OF STEADY ARM PIN, INSTALLED IN DROP BRACKET OR CONNECTION FITTING.
3. PRIOR TO INSTALLATION OF THE PULL-OFF ASSEMBLY, FIELD VERIFY THE TRACK GEOMETRY AND DIMENSIONS. INSTALL THE SUSPENSION INSULATOR (PART 95) BETWEEN THE TRACKS TO SUIT THE PULL-OFF ASSEMBLY AND MAINTAIN THE CLEARANCE ENVELOPE TO THE ADJACENT TRACK.
4. USE HOLES ON PART 180 FOR POSITIONING THE ATTACHMENTS TO OBTAIN PROPER HEEL SETTING.
5. USE TINNED CONNECTORS FOR CONNECTION TO ALUMINUM CONDUCTOR.

NTS

THE INFORMATION, INCLUDING ESTIMATED QUANTITIES OF WORK SHOWN ON THESE SHEETS IS BASED ON LIMITED INVESTIGATIONS BY THE STATE AND IS IN NO WAY WARRANTED TO INDICATE THE TRUE CONDITIONS OR ACTUAL QUANTITIES OR DISTRIBUTION OF QUANTITIES OF WORK WHICH WILL BE REQUIRED.

URS CORPORATION AES
500 ENTERPRISE DRIVE
ROCKY HILL, CT 06067
1-(860)-529-8882

THE Burns GROUP
ENGINEERING AND CONSTRUCTION
Burns Engineering, Inc.
Metro-Plex II
8201 Corporate Drive, Suite 800
Landover, MD 20785-2230
phone 301-560-9076 fax 301-577-2088

NO.	DATE	DESCRIPTION

REVISIONS

STATE OF CONNECTICUT
DEPARTMENT OF TRANSPORTATION

SECTION C-1a & C-2 NEW HAVEN LINE

CATENARY REPLACEMENT BETWEEN WALK BRIDGE AND STRUCTURE 636, PECK BRIDGE AND STRUCTURE 863

PULL-OFF ASSEMBLIES

ENGINEER: BURNS ENGINEERING
DESIGNER: MS DRAFTER: HJ CHECKER: JCD
APPROVED: SDB DATE: 09/13/13
STRUCTURE NO. BRIDGE LOG NO. STRUCTURE SHEET NO. E-4

F H W A REGION	STATE	TOWN	FED. AID PROJ. NO.	PROJ. NO.	YEAR	SHEET NUMBER
1	CONN.	VARIOUS	CT-05-0109	301-0145	2013	01.03.041

STATE OF CONNECTICUT · DUSTIN K. HUSTED · No. 28361 · LICENSED PROFESSIONAL ENGINEER

URS CORPORATION AES
500 ENTERPRISE DRIVE
ROCKY HILL, CT 06067

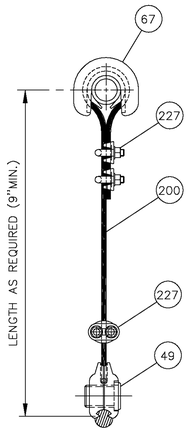

WIRE ROPE HANGER
ASSEMBLY RHA-3

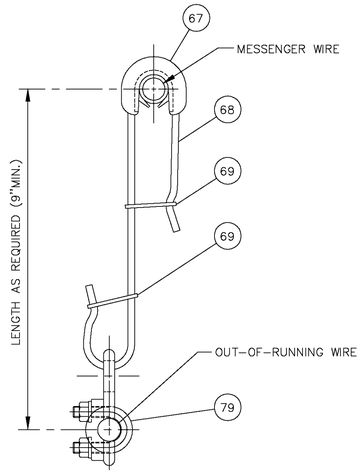

SECURITY HANGER
ASSEMBLY SHA-4

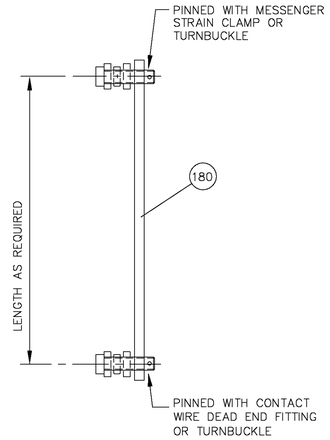

ANTI-TORSION HANGER
ASSEMBLY AHA-5

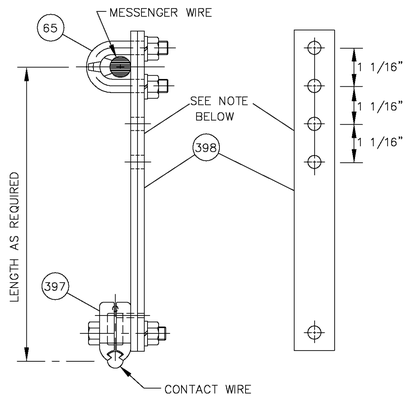

COMPRESSION HANGER
ASSEMBLY AHA-6

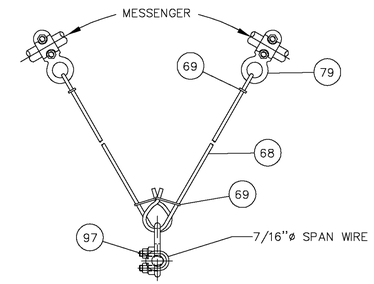

VEE HANGER
ASSEMBLY VHA-11

(FOR VHA-11, END LOOPS ARE TURNED 90°)

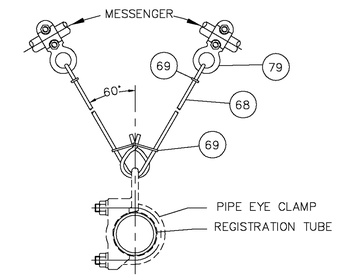

VEE HANGER
ASSEMBLY VHA-6

(FOR VHA-6, END LOOPS ARE TURNED 90°)

NOTE: ADDITIONAL HOLES AS REQUIRED WILL BE PROVIDED ON RIGID HANGER FOR FIELD ADJUSTMENT OF HANGER LENGTH TO SUIT SITE CONDITIONS.

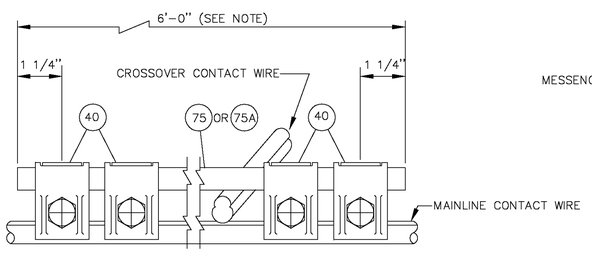

CROSS CONTACT BRIDGE
ASSEMBLY CBA-10

A LONGER CBA-10 PART 75A SHALL BE PROVIDED AS REQUIRED, AT THE DIRECTION OF THE ENGINEER.

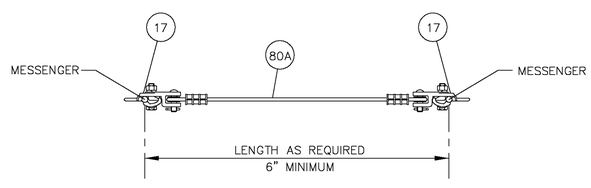

MESSENGER KNUCKLE ASSEMBLY
ASSEMBLY MKA-7

ASSEMBLIES – RHA-3, SHA-4, AHA-5, AHA-6, VHA-6, CKA-8, CKA-9, MKA-7, CBA-10 & VHA-11											
PART No.	METRO-NORTH No.	DESCRIPTION	QUANTITY									
			RHA-3	SHA-4	AHA-5	AHA-6	VHA-6	CKA-8	CKA-9	MKA-7	CBA-10	VHA-11
17	10201622	SUSPENSION CLAMP	—	—	—	—	—	—	—	2	—	—
20	10100167	SPACER BAR 1 1/4" IPS SCH #40 COMPLETE WITH END CAPS	—	—	—	—	—	AS REQ'D	AS REQ'D	—	—	—
31	10436110	CONTACT WIRE CLAMP HOLDER W/CONTACT WIRE CLAMP	—	—	—	—	—	2	—	—	—	—
32		SLIDING CONTACT WIRE CLAMP W/HOLD	—	—	—	—	—	—	2	—	—	—
40	10201624	TROLLEY CONTACT CLAMP	—	—	—	—	—	—	—	—	4	—
49	10201625	TROLLEY WIRE CLAMP	1	—	—	—	—	—	—	—	—	—
65	10100161	PRESSURE BAR ASSEMBLY	—	—	—	1	—	—	—	—	—	—
67	10100143	COPPER ARMOR WITH NEOPRENE ARMOR	1	1	—	—	—	—	—	—	—	—
68	10850050	3/16" STAINLESS STEEL ROD TYPE 304	—	AS REQ'D	—	—	AS REQ'D	—	—	—	—	AS REQ'D
69	10750166	HANGER RETAINER	—	2	—	—	4	—	—	—	—	4
75	10850055	9/16"ø SILICON BRONZE ROD – 6' ROD	—	—	—	—	—	—	—	—	AS REQ'D	—
75A		9/16"ø SILICON BRONZE ROD – 8' ROD	—	—	—	—	—	—	—	—	AS REQ'D	—
79	10202452	MESSENGER HANGER CLAMP	—	1	—	—	2	—	—	—	—	2
80A	10997040	3/8"ø (7x19 STR) S.S. WIRE ROPE W/2 EYES, LEGTH AS REQUIRED	—	—	—	—	—	—	—	1	—	—
97	10202453	MESSENGER HANGER CLAMP	—	—	—	—	—	—	—	—	—	1
180	10852375	3/8" X 1 1/2" GALV. STRAP WITH 2-5/8"ø X 1 1/2" PINS	—	—	1	—	—	—	—	—	—	—
200	10850108	1/4"ø S.S. WIRE ROPE	AS REQ'D	—	—	—	—	—	—	—	—	—
227	10208575	1/4" WIRE ROPE CLIP	AS REQ'D	—	—	—	—	—	—	—	—	—
397		CONTACT WIRE CLAMP	—	—	—	1	—	—	—	—	—	—
398		RIGID HANGER	—	—	—	FT	—	—	—	—	—	—

NOTE:

1. USE TINNED CONNECTORS FOR CONNECTION TO ALUMINUM CONDUCTOR.

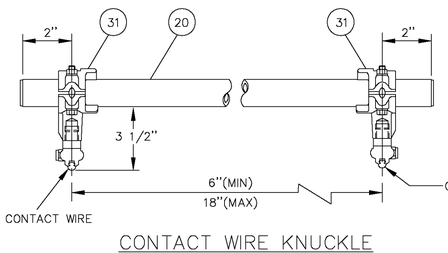

CONTACT WIRE KNUCKLE
ASSEMBLY CKA-8

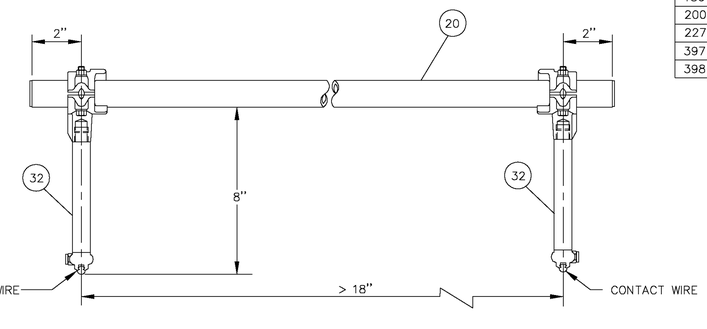

CONTACT WIRE KNUCKLE
ASSEMBLY CKA-9

THE INFORMATION, INCLUDING ESTIMATED QUANTITIES OF WORK SHOWN ON THESE SHEETS IS BASED ON LIMITED INVESTIGATIONS BY THE STATE AND IS IN NO WAY WARRANTED TO INDICATE THE TRUE CONDITIONS OR ACTUAL QUANTITIES OR DISTRIBUTION OF QUANTITIES OF WORK WHICH WILL BE REQUIRED.

NTS

URS CORPORATION AES
500 ENTERPRISE DRIVE
ROCKY HILL, CT 06067
1-(860)-529-8882

THE Burns GROUP
ENGINEERING AND CONSTRUCTION
Burns Engineering, Inc.
Metro-Plex II
8201 Corporate Drive, Suite 800
Landover, MD 20785-2230
phone 703-760-9076 fax 301-577-0088

NO.	DATE	DESCRIPTION

REVISIONS

STATE OF CONNECTICUT
DEPARTMENT OF TRANSPORTATION

SECTION C-1a & C-2 NEW HAVEN LINE

CATENARY REPLACEMENT BETWEEN WALK BRIDGE AND STRUCTURE 636, PECK BRIDGE AND STRUCTURE 863

HANGERS, KNUCKLES & CROSS CONTACT ASSEMBLIES

ENGINEER: BURNS ENGINEERING
DESIGNER: MS DRAFTER: HJ CHECKER: JCD
APPROVED: SDB DATE: 09/13/13
STRUCTURE NO. BRIDGE LOG NO. STRUCTURE SHEET NO. E-5

PROJECT CONTROL DATE: 09/13/13 DISK FILENAME: E-5.dwg 100% DESIGN

F.H.W.A. REGION	STATE	TOWN	FED. AID PROJ. NO.	PROJ. NO.	YEAR	SHEET NUMBER
1	CONN.	VARIOUS	CT-05-0109	301-0145	2013	01.03.042

URS CORPORATION AES
500 ENTERPRISE DRIVE
ROCKY HILL, CT 06067

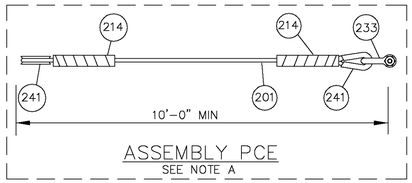

ASSEMBLY PCE
SEE NOTE A

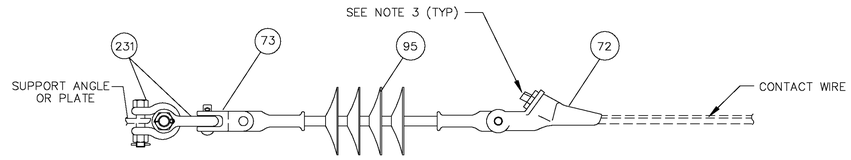

CONTACT WIRE DEAD END ASSEMBLY CDEA-1

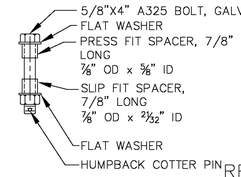

600 REDUCING BOLT

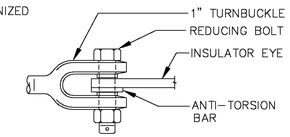

REDUCING BOLT ASSEMBLY

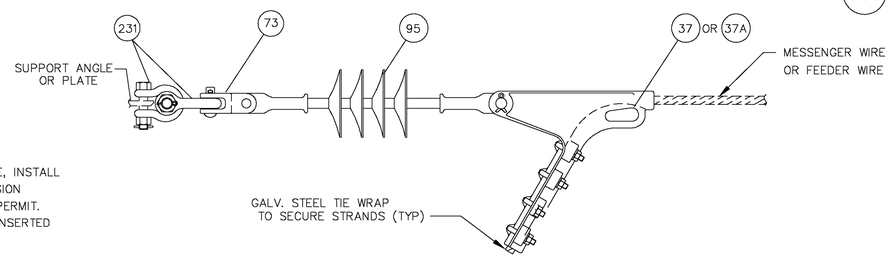

MESSENGER DEAD END ASSEMBLY MDEA-2
4/0 FEEDER DEAD END ASSEMBLY FDEA-3 (SEE NOTE 6)
2/0 FEEDER DEAD END ASSEMBLY FDEA-3A

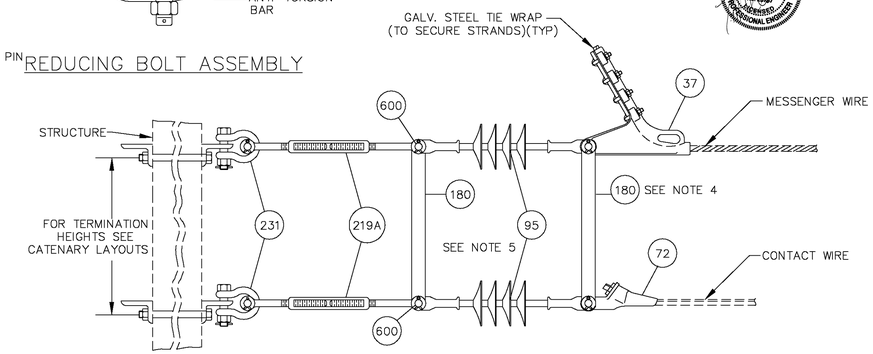

CATENARY DEAD END ASSEMBLY CDEA-5

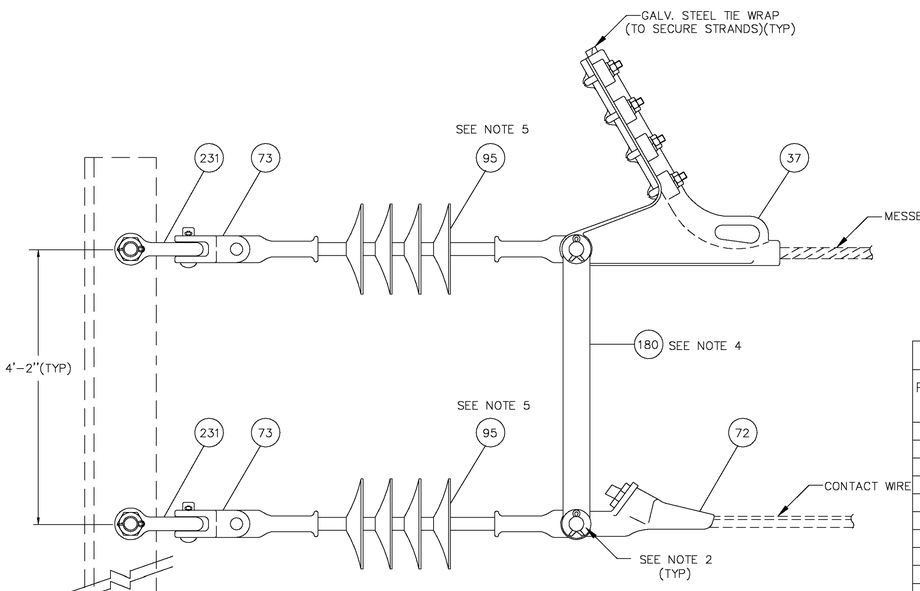

CATENARY DEAD END ASSEMBLY CDEA-4
SEE NOTE A

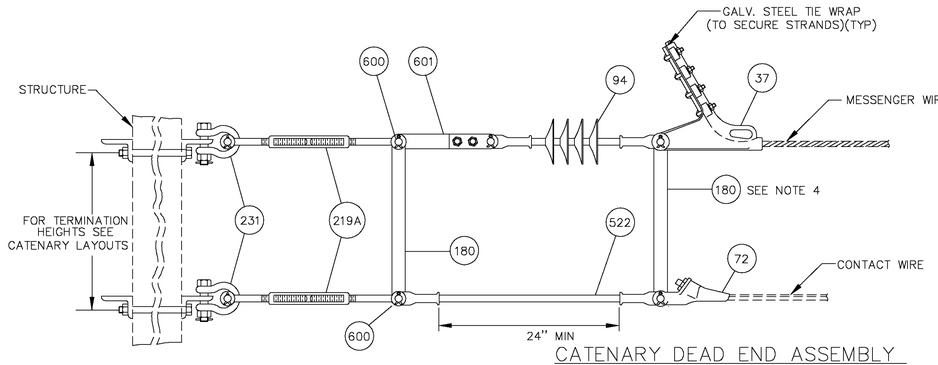

CATENARY DEAD END ASSEMBLY
ASSEMBLY MCIA-3

NOTE A:

WHERE THE DEAD END ASSEMBLY IS ATTACHED TO A CLIMBABLE POLE, INSTALL ASSEMBLY PCE IN PLACE OF PART 86 OR 73 TO BRING THE SUSPENSION INSULATOR 10 FEET CLEAR FROM THE POLE WHERE CIRCUMSTANCES PERMIT. WHEN THE ASSEMBLY INCLUDES A TURNBUCKLE, THE PCE SHALL BE INSERTED BETWEEN THE TURNBUCKLE AND THE INSULATOR.

ASSEMBLIES – CDEA-1, MDEA-2, FDEA-3, FDEA-3A, CDEA-4, CDEA-5 AND PCE

PART No.	METRO-NORTH No.	DESCRIPTION	QUANTITY							
			CDEA-1	MDEA-2	FDEA-3	FDEA-3A	CDEA-4	CDEA-5	MCIA-3	PCE
37	10202402	STRAIN CLAMP CONNECTOR	—	1	1	—	1	1	1	—
37A		STRAIN CLAMP CONNECTOR FOR 2/0 7-STRAND H.D. WIRE	—	—	—	1	—	—	—	—
72	10434410	DEAD END FITTING	1	—	—	—	1	1	1	—
73	10206340	LINK DOUBLE CLEVIS, 90 DEG.	1	1	1	1	2	—	—	—
94	10445115	SUSPENSION INSULATOR 36,000 LBS	—	—	—	—	—	—	1	—
95	10445113	SUSPENSION INSULATOR 25,000 LBS	1	1	1	1	2	2	—	—
180	10852375	GALV. STEEL STRAP (ANTI-TORSION)	—	—	—	—	1	2	2	—
219A	–	1"ø x 6" JAW/JAW TURNBUCKLE	—	—	—	—	—	2	2	—
231	10850265	5/8" ANCHOR SHACKLE WITH 3/4"ø PIN	2	2	2	2	2	2	2	—
233	10201585	7/8" CHAIN SHACKLE	—	—	—	—	—	—	—	1
364		LINK TONGUE TONGUE	—	—	—	—	—	—	—	—
522		25KV CLASS ROD INSULATOR (20,000 LBS)	—	—	—	—	—	—	1	—
201	10997000	19 # 9 ALUMOWELD STRAND	—	—	—	—	—	—	—	FT
214	10435500	PREFORMED BIG GRIP DEAD END	—	—	—	—	—	—	—	2
241	10858000	5/8" THIMBLE	—	—	—	—	—	—	—	2
600		REDUCING BOLT ASSEMBLY (5/8"X4" GALVANZIED BOLT)	—	—	—	—	—	2	2	—
601		LINK EYE-CLEVIS	—	—	—	—	—	—	1	—

NOTES:

1. THE DEAD END ASSEMBLIES WITH 25,000 LB. INSULATOR SHALL BE USED FOR A.T. CATENARY SYSTEM. FOR MESSENGER TERMINATION ON F.T. SYSTEM, REPLACE PART #95 WITH PART #94 (36,000 LBS INSULATOR.)
2. USE EXTRA LONG PIN FOR ASSEMBLY WITH ANTI-TORSION STRAP.
3. FOR DEAD END CLAMP, ITEM 72, USE COMPRESSION SLEEVE TO SUIT CONTACT WIRE SIZE.
4. THE STRAP LENGTH WILL BE EQUAL TO THE TERMINATION SYSTEM HEIGHT.
5. IN CERTAIN CONFIGURATIONS USING CDEA-4 OR CDEA-5 ASSEMBLY, PART 95 WILL BE REPLACED BY EQUIVALENT LINK. FOR ALLOCATION OF THIS ALTERNATIVE SEE CATENARY LAYOUT AND S.E.D.
6. USE PORCELAIN INSULATORS AT ROAD AND RIVER CROSSINGS.
7. USE TINNED CONNECTORS FOR CONNECTION TO ALUMINUM CONDUCTOR.

NTS

THE INFORMATION, INCLUDING ESTIMATED QUANTITIES OF WORK SHOWN ON THESE SHEETS IS BASED ON LIMITED INVESTIGATIONS BY THE STATE AND IS IN NO WAY WARRANTED TO INDICATE THE TRUE CONDITIONS OR ACTUAL QUANTITIES OR DISTRIBUTION OF QUANTITIES OF WORK WHICH WILL BE REQUIRED.

URS CORPORATION AES
500 ENTERPRISE DRIVE
ROCKY HILL, CT 06067
1-(860)-529-8882

THE Burns GROUP
ENGINEERING AND CONSTRUCTION
Burns Engineering, Inc.
Metro-Plaz II
8201 Corporate Drive, Suite 800
Landover, MD 20785-2230
phone 703-760-9076 fax 301-577-2088

NO.	DATE	DESCRIPTION

REVISIONS

STATE OF CONNECTICUT
DEPARTMENT OF TRANSPORTATION

SECTION C-1a & C-2 NEW HAVEN LINE

CATENARY REPLACEMENT BETWEEN WALK BRIDGE AND STRUCTURE 636, PECK BRIDGE AND STRUCTURE 863

DEAD END ASSEMBLIES

ENGINEER: BURNS ENGINEERING
DESIGNER: MS DRAFTER: HJ CHECKER: JCD
APPROVED: SDB DATE: 09/13/13
STRUCTURE NO. BRIDGE LOG NO. STRUCTURE SHEET NO. E-6

PROJECT CONTROL DATE: 09/13/13 DISK FILENAME: E-6.dwg 100% DESIGN

F H W A REGION	STATE	TOWN	FED. AID PROJ. NO.	PROJ. NO.	YEAR	SHEET NUMBER
1	CONN.	VARIOUS	CT-05-0109	301-0145	2013	01.03.043

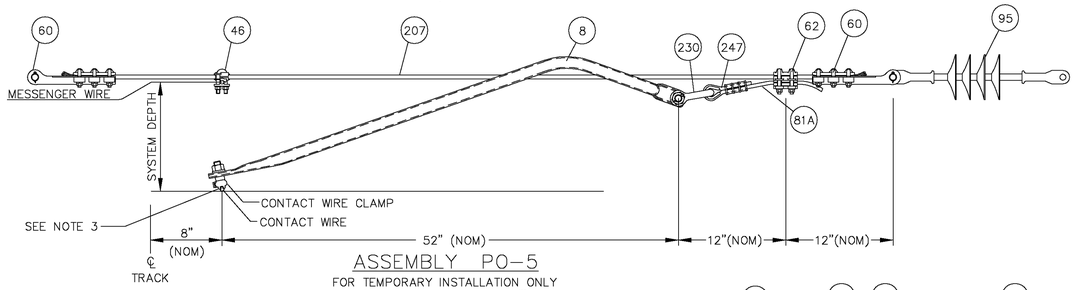

ASSEMBLY PO-5

FOR TEMPORARY INSTALLATION ONLY
(FOR SYSTEM HEIGHT < 9")

TABLE 1

ATTACHMENT LOCATIONS ON PART 61A			
	PART No. 207	PART No. 81A	PART No. 8
SYSTEM DEPTH = 9"	B	f	b
SYSTEM DEPTH = 10"	B	f	c
SYSTEM DEPTH = 11"	B	a	d
SYSTEM DEPTH = 12"	B	b	e
SYSTEM DEPTH = 13"	A	f	c
SYSTEM DEPTH = 14"	A	a	d
SYSTEM DEPTH = 15"	A	b	e

THESE POSITIONS ARE TYPICAL AND MAY HAVE TO BE ADJUSTED TO ATTAIN THE PROPER HEEL SETTING BASED ON THE ACTUAL SYSTEM DEPTH AND THE HEIGHT OF THE PULL-OFF WIRE AT THE DROP BRACKET.

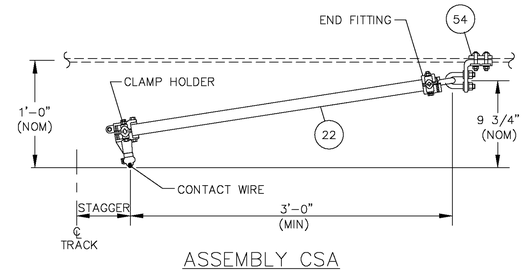

ASSEMBLY CSA

URS CORPORATION AES
500 ENTERPRISE DRIVE
ROCKY HILL, CT 06067

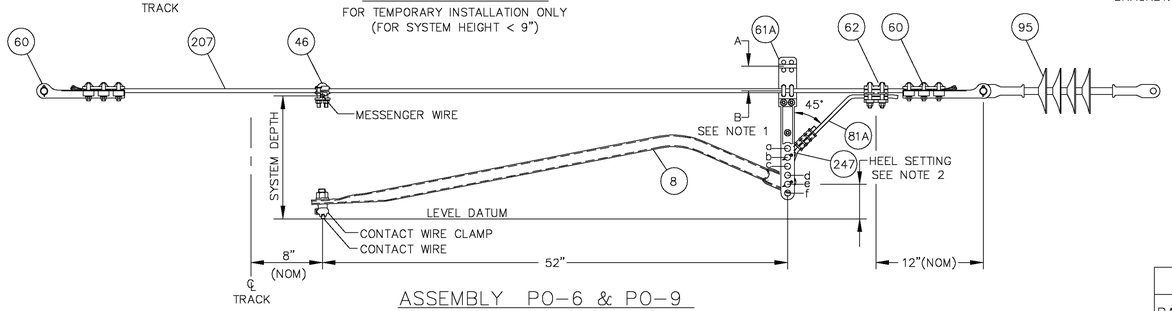

ASSEMBLY PO-6 & PO-9

(USE PO-6 & PO-9 FOR SYSTEM HEIGHT 9" TO 15")
SEE NOTE 1

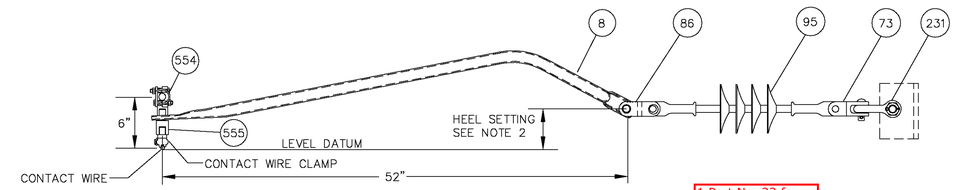

ASSEMBLY PO-14

1 Part No. 22 for CSA?

No Part Numbers?

No Part Numbers?

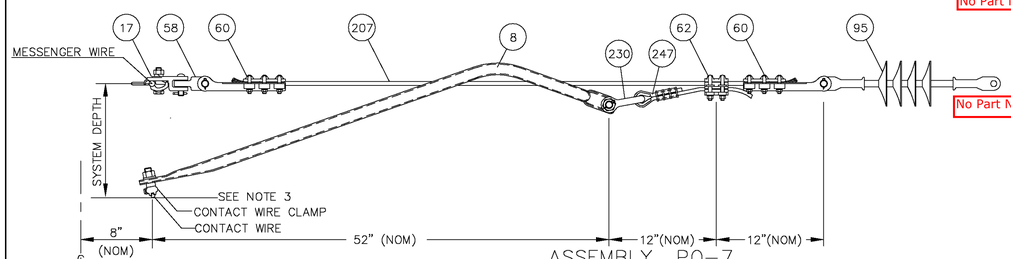

ASSEMBLY PO-7

FOR TEMPORARY INSTALLATION ONLY
FOR SYSTEM HEIGHT < 9"

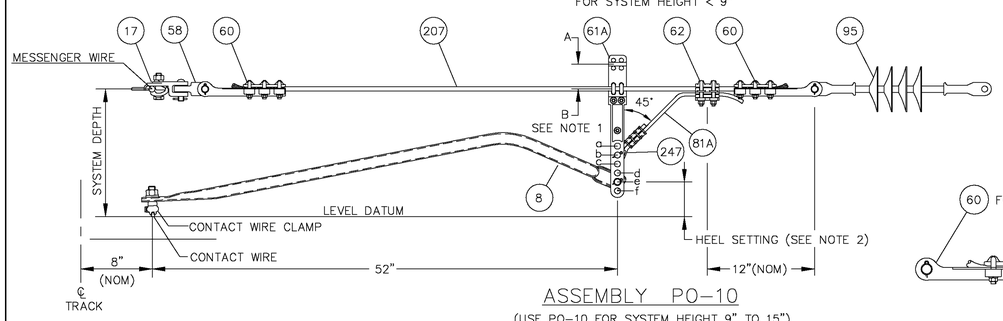

ASSEMBLY PO-10

(USE PO-10 FOR SYSTEM HEIGHT 9" TO 15")
SEE NOTE 1

ASSEMBLIES – CSA, PO-5, PO-6, PO-7, PO-9, PO-10, PO-14, SIA-9, SIA-9A, SIA-9B & SIA-9C												
PART No.	METRO-NORTH No.	DESCRIPTION	QUANTITY										
			CSA	PO-5	PO-6	PO-7	SIA-9	SIA-9A	PO-9	PO-10	SIA-9B	SIA-9C	PO-14
8	10100142	STEADY ARM COMPLETE W/CONTACT WIRE CLAMP	—	1	1	1	—	—	1	1	—	—	1
17	10201622	SUSPENSION CLAMP	—	—	—	1	—	—	—	1	—	—	—
22	10100172	CROSS SPAN STEADY ARM COMPLETE W/END FITTING CLAMP											
		HOLDER AND CONTACT WIRE CLAMP	1	—	—	—	—	—	—	—	—	—	—
46	10201600	CROSS CLAMP	—	1	1	—	—	—	1	—	—	—	—
54	10201627	SPAN WIRE LOOP CLAMP	1	—	—	—	—	—	—	—	—	—	—
58	10855291	DOUBLE EYE LINK 90°	—	—	—	1	—	—	—	1	—	—	—
60	10201621	DEAD END CLAMP	—	2	2	2	2	1	2	2	3	2	—
61A	—	DROP BRACKET	—	—	1	—	—	—	1	1	—	—	—
62	10202488	PARALLEL CLAMP, 7/16"ø COPPERWELD COPPER WIRE AND											
		3/8"ø S.S. WIRE ROPE	—	1	1	1	—	—	1	1	—	—	—
73	10206340	LINK, DOUBLE CLEVIS 90°	—	—	—	—	—	—	—	—	—	—	1
81A	—	3/8" S.S. WIRE ROPE (7x19 STR) WITH SINGLE EYE, LENGTH AS REQUIRED	—	1	1	1	—	—	1	1	—	—	—
86	10206310	LINK CLEVIS CLEVIS	—	—	—	—	—	—	—	—	—	—	1
95	10445113	SUSPENSION INSULATOR 25,000 LB.	—	1	1	1	1	1	1	1	1	1	1
207	10997017	7/16"ø COPPERWELD WIRE	—	FT	FT	FT	FT	FT	FT	FT	FT	FT	—
230	10850255	1/2" ANCHOR SHACKLE	—	1	—	1	—	—	—	—	—	—	—
231	10850265	5/8" ANCHOR SHACKLE WITH 3/4"ø PIN	—	—	—	—	—	—	—	—	—	—	1
554		MESSENGER CLAMP, UPRIGHT	—	—	—	—	—	—	—	—	—	—	1
555		CLAMP ADAPTER	—	—	—	—	—	—	—	—	—	—	1
247	10858000	3/8" DIA. WIRE ROPE THIMBLE	—	1	1	1	—	—	1	1	—	—	—

NOTES:

1. REFER TO TABLE 1 FOR ATTACHMENT LOCATIONS ON PART 61A.
2. HEEL SETTINGS TO BE 2" ± 1/2". HEEL SETTING IS MEASURED AS DISTANCE BETWEEN LEVEL DATUM FROM BOTTOM OF CONTACT WIRE TO CENTERLINE OF STEADY ARM PIN, INSTALLED IN DROP BRACKET OR CONNECTION FITTING.
3. OFFSET CONTACT WIRE CLAMP 4" FOR CLEARANCE BETWEEN SPAN WIRE AND STEADY ARM.
4. USE TINNED CONNECTORS FOR CONNECTION TO ALUMINUM CONDUCTOR.

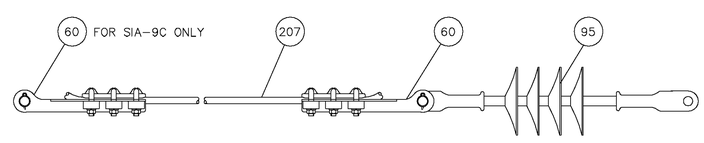

SPAN WIRE INSULATION ASSEMBLY
SIA-9A & SIA-9C

NTS

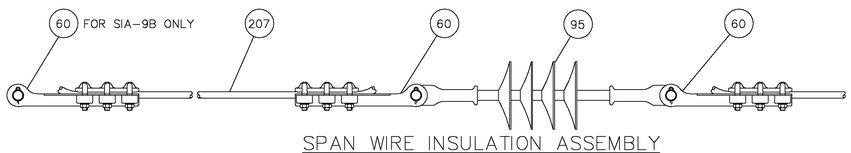

SPAN WIRE INSULATION ASSEMBLY
SIA-9 & SIA-9B

THE INFORMATION, INCLUDING ESTIMATED QUANTITIES OF WORK SHOWN ON THESE SHEETS IS BASED ON LIMITED INVESTIGATIONS BY THE STATE AND IS IN NO WAY WARRANTED TO INDICATE THE TRUE CONDITIONS OR ACTUAL QUANTITIES OR DISTRIBUTION OF QUANTITIES OF WORK WHICH WILL BE REQUIRED.

URS CORPORATION AES
500 ENTERPRISE DRIVE
ROCKY HILL, CT 06067
1-(860)-529-8882

THE Burns GROUP
ENGINEERING AND CONSTRUCTION
Burns Engineering, Inc.
Metro-Plex II
8201 Corporate Drive, Suite 800
Landover, MD 20785-2230
phone 703-760-9076 fax 301-577-2088

NO.	DATE	DESCRIPTION

REVISIONS

STATE OF CONNECTICUT
DEPARTMENT OF TRANSPORTATION

SECTION C-1a & C-2 NEW HAVEN LINE

CATENARY REPLACEMENT BETWEEN WALK BRIDGE AND STRUCTURE 636, PECK BRIDGE AND STRUCTURE 863

CROSS SPAN ASSEMBLIES

ENGINEER: BURNS ENGINEERING
DESIGNER: MS DRAFTER: HJ CHECKER: JCD
APPROVED: SDB DATE: 09/13/13
STRUCTURE NO. BRIDGE LOG NO. STRUCTURE SHEET NO. E-7

100% DESIGN
DISK FILENAME: E-7.dwg
PROJECT CONTROL DATE: 09/13/13

F H W A REGION	STATE	TOWN	FED. AID PROJ. NO.	PROJ. NO.	YEAR	SHEET NUMBER
1	CONN.	VARIOUS	CT-05-0109	301-0145	2013	01.03.044

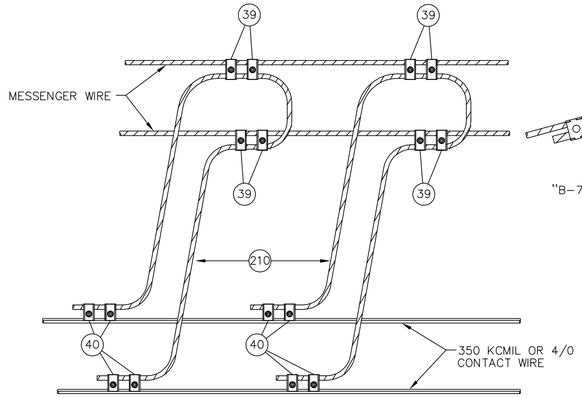

FULL LOAD FEEDING JUMPER
TYPE "A"

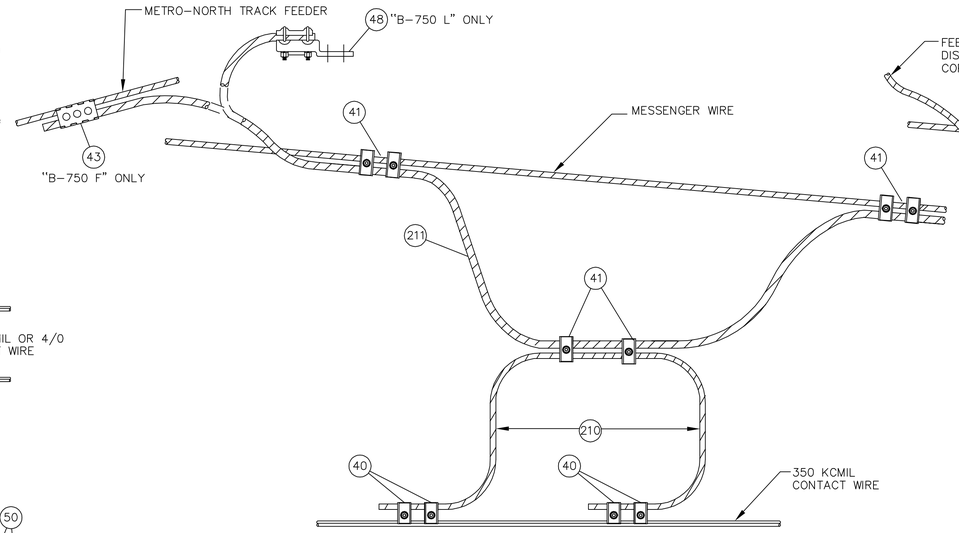

CATENARY FEEDING JUMPER
TYPE "B-750 F"
TYPE "B-750 L"

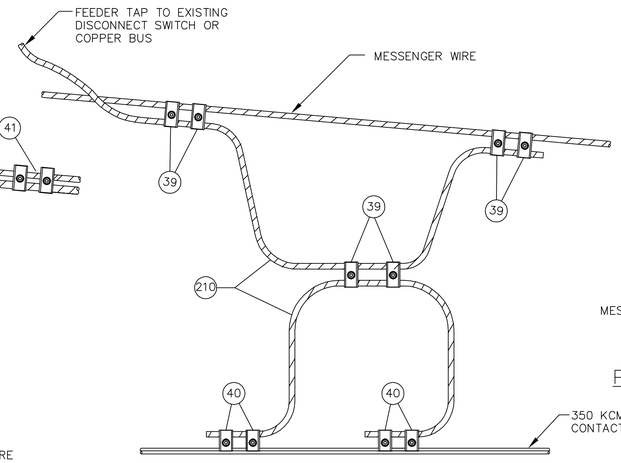

CATENARY FEEDING JUMPER
TYPE "B-4/0"

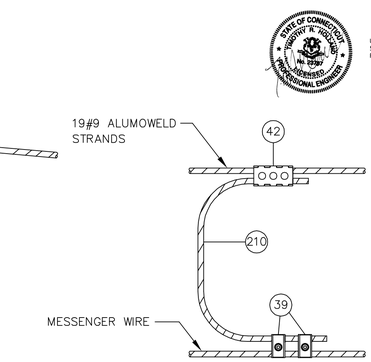

POTENTIAL EQUALIZING JUMPER
TYPE "G"

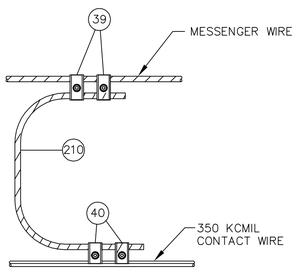

IN-SPAN JUMPER
TYPE "C"

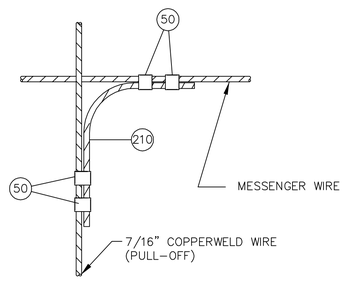

POTENTIAL EQUALIZER JUMPER
TYPE "E"

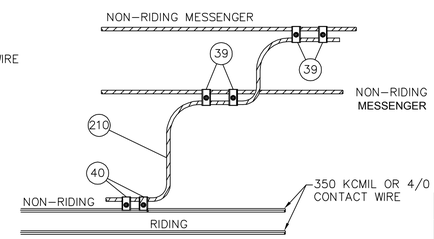

POTENTIAL EQUALIZING JUMPER
TYPE - "D"

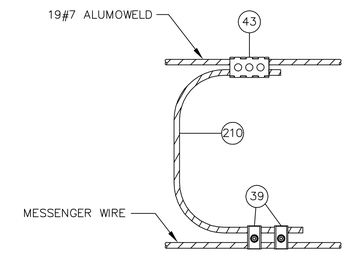

POTENTIAL EQUALIZING JUMPER
TYPE "H"

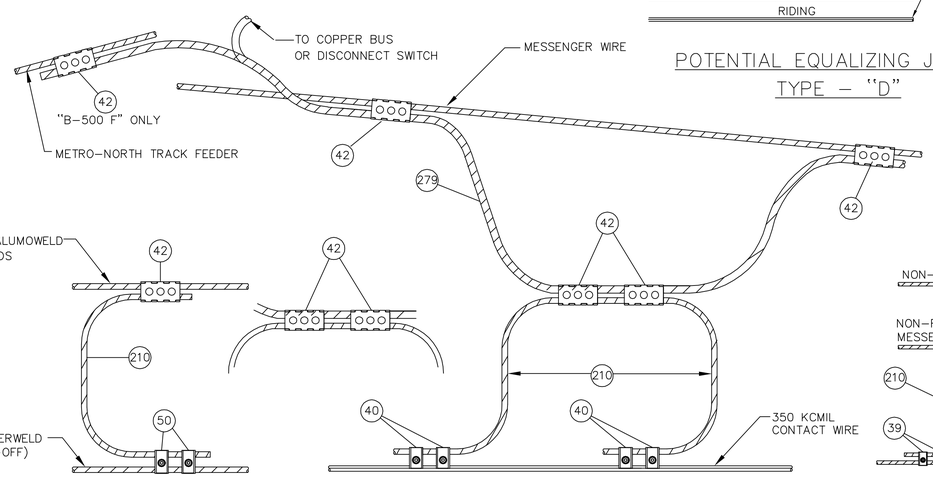

POTENTIAL EQUALIZING JUMPER
TYPE "I"

CATENARY FEEDING JUMPER
TYPE "B-500 C"
TYPE "B-500 F"

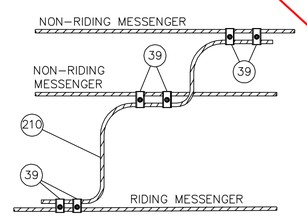

POTENTIAL EQUALIZING JUMPER
TYPE - "F"

ASSEMBLIES TYPE - A, B-4/0, B-500, B-750, C, D, E, F, G, H & I

PART No.	METRO-NORTH No.	DESCRIPTION	QUANTITY											
			TYPE A	TYPE B-4/0	TYPE B-500		TYPE B-750		TYPE C	TYPE D	TYPE E	TYPE F	TYPE G	TYPE H	TYPE I
					C	F	F	L							
39	10201628	PARALLEL CLAMP 5/8" COPPERWELD COPPER TO 4/0 AWG SOFT DRAWN COPPER CONDUCTORS	8	6	—	—	—	—	2	4	—	6	2	2	—
40	10201624	PARALLEL CLAMP 4/0 AWG SOFT DRAWN COPPER TO 350 KCMIL GROOVED COPPER CONDUCTORS	8	4	4	4	4	4	2	2	—	—	—	—	—
41	10201623	PARALLEL CLAMP 5/8" COPPERWELD COPPER TO 750 KCMIL SOFT DRAWN COPPER CONDUCTORS	—	—	—	—	6	6	—	—	—	—	—	—	—
42	10202792	UNIVERSAL PARALLEL CLAMP (TINNED)	—	—	4	5	—	—	—	—	—	—	1	—	1
43	10202847	PARALLEL CLAMP 400 KCMIL COPPER TO 750 KCMIL SOFT DRAWN COPPER CONDUCTORS	—	—	—	—	1	—	—	—	—	—	—	1	—
48	10726375	U-BOLT TERMINAL LUG FOR 750 KCMIL SOFT DRAWN COPPER CONDUCTOR	—	—	—	—	—	1	—	—	—	—	—	—	—
50	10434406	SPLIT BOLT CONNECTOR	—	—	—	—	—	—	—	—	4	—	—	—	2
210	10997111	4/0 AWG SOFT DRAWN COPPER CONDUCTOR CLASS "H"	FT	FT	FT	FT	FT	FT	FT	FT	FT	FT	FT	FT	FT
211	10997119	750 KCMIL SOFT DRAWN COPPER CONDUCTOR	—	—	—	—	FT	FT	—	—	—	—	—	—	—
279		500 KCMIL FLEXIBLE COPPER CONDUCTOR CLASS "H"	—	—	FT	FT	—	—	—	—	—	—	—	—	—

Do we have a Metro-North Part No. for Part No. 279?

NOTE:

1. USE TINNED CONNECTORS FOR CONNECTION TO ALUMINUM CONDUCTOR.
2. JUMPER 'TYPE A' IS INSTALLED WITH SLACK AS REQUIRED BY NOTING WIRE RUN LENGTHS, DISTANCE BETWEEN CIRCUITS, ALONG TRACK DISPLACEMENT, AND AMBIENT TEMPERATURE.

NTS

THE INFORMATION, INCLUDING ESTIMATED QUANTITIES OF WORK SHOWN ON THESE SHEETS IS BASED ON LIMITED INVESTIGATIONS BY THE STATE AND IS IN NO WAY WARRANTED TO INDICATE THE TRUE CONDITIONS OR ACTUAL QUANTITIES OR DISTRIBUTION OF QUANTITIES OF WORK WHICH WILL BE REQUIRED.

URS CORPORATION AES
500 ENTERPRISE DRIVE
ROCKY HILL, CT 06067
1-(860)-529-8882

THE Burns GROUP
ENGINEERING AND CONSTRUCTION
Burns Engineering, Inc.
Metro-Plex II
8201 Corporate Drive, Suite 800
Landover, MD 20785-2230
phone 703-760-9076 fax 301-577-2088

NO.	DATE	DESCRIPTION

REVISIONS

STATE OF CONNECTICUT
DEPARTMENT OF TRANSPORTATION

SECTION C-1a & C-2 NEW HAVEN LINE

CATENARY REPLACEMENT BETWEEN WALK BRIDGE AND STRUCTURE 636, PECK BRIDGE AND STRUCTURE 863

FEEDER AND JUMPER ASSEMBLIES

ENGINEER: BURNS ENGINEERING
DESIGNER: MS DRAFTER: HJ CHECKER: JCD
APPROVED: SDB DATE: 09/13/13
STRUCTURE NO. BRIDGE LOG NO. STRUCTURE SHEET NO. E-8

100% DESIGN
DISK FILENAME: E-8.dwg
PROJECT CONTROL DATE: 09/13/13

F H W A REGION	STATE	TOWN	FED. AID PROJ. NO.	PROJ. NO.	YEAR	SHEET NUMBER
1	CONN.	VARIOUS	CT-05-0109	301-0145	2013	01.03.045

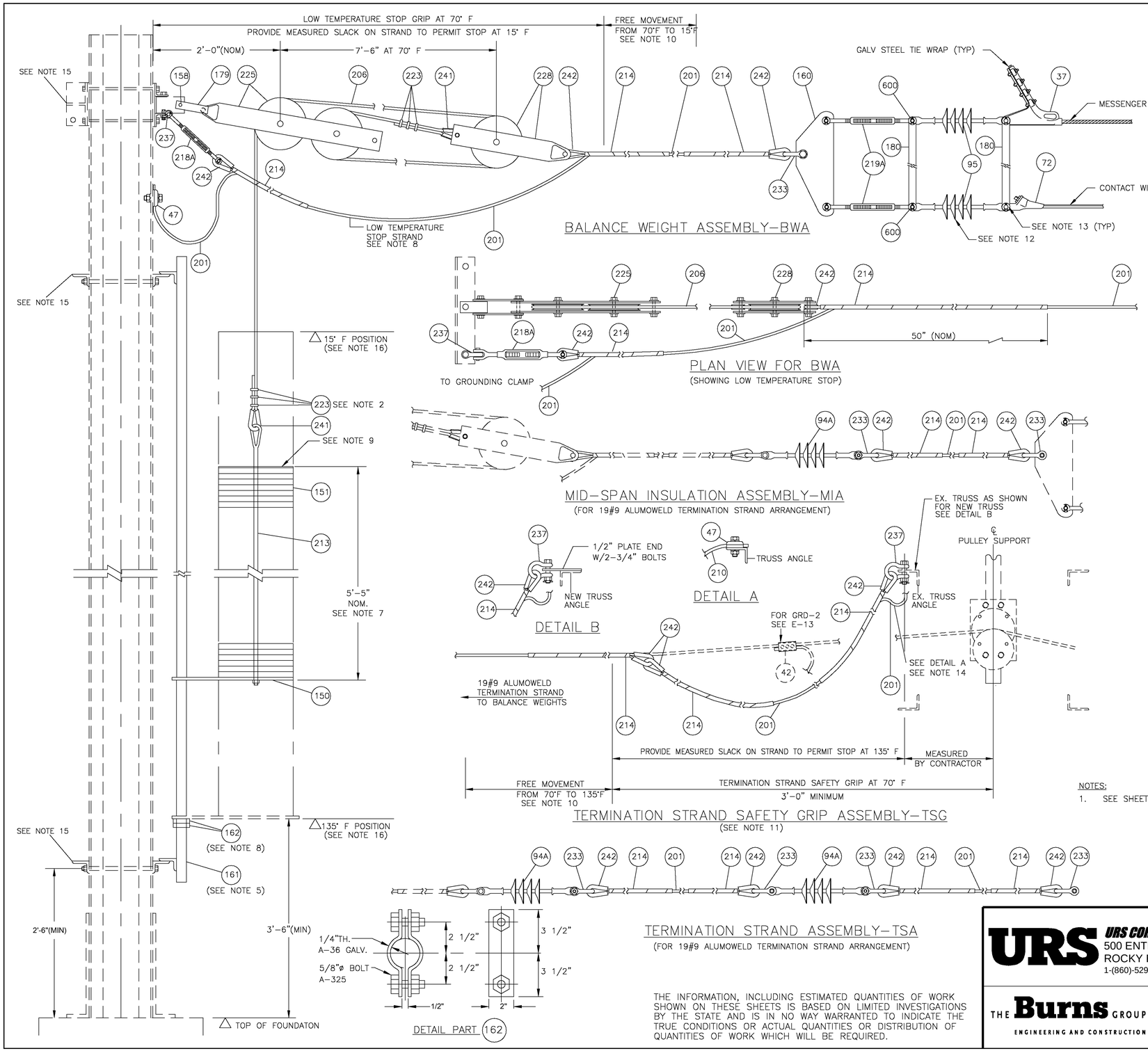

NOTES:

1. SEE SHEET E-9-1 FOR NOTES AND B.O.M.

THE INFORMATION, INCLUDING ESTIMATED QUANTITIES OF WORK SHOWN ON THESE SHEETS IS BASED ON LIMITED INVESTIGATIONS BY THE STATE AND IS IN NO WAY WARRANTED TO INDICATE THE TRUE CONDITIONS OR ACTUAL QUANTITIES OR DISTRIBUTION OF QUANTITIES OF WORK WHICH WILL BE REQUIRED.

URS CORPORATION AES
500 ENTERPRISE DRIVE
ROCKY HILL, CT 06067
1-(860)-529-8882

THE Burns GROUP
ENGINEERING AND CONSTRUCTION
Burns Engineering, Inc.
Metro-Plex II
8201 Corporate Drive, Suite 800
Landover, MD 20785-2230
phone 703-760-9076 fax 301-577-0088

NO.	DATE	DESCRIPTION

REVISIONS

STATE OF CONNECTICUT
DEPARTMENT OF TRANSPORTATION

SECTION C-1a & C-2 NEW HAVEN LINE

CATENARY REPLACEMENT BETWEEN WALK BRIDGE AND STRUCTURE 636, PECK BRIDGE AND STRUCTURE 863

BALANCE WEIGHT ASSEMBLIES
SHEET 1

ENGINEER: BURNS ENGINEERING
DESIGNER: MS DRAFTER: HJ CHECKER: JCD
APPROVED: SDB DATE: 09/13/13
STRUCTURE NO. BRIDGE LOG NO. STRUCTURE SHEET NO. E-9

PROJECT CONTROL DATE: 09/13/13 DISK FILENAME: E-9.dwg 100% DESIGN

F H W A REGION	STATE	TOWN	FED. AID PROJ. NO.	PROJ. NO.	YEAR	SHEET NUMBER
1	CONN.	VARIOUS	CT-05-0109	301-0145	2013	01.03.046

STATE OF CONNECTICUT DIMITRY K. KOSLOVSKY No. 23367 LICENSED PROFESSIONAL ENGINEER

URS CORPORATION AES
500 ENTERPRISE DRIVE
ROCKY HILL, CT 06067

ASSEMBLIES – BWA, MIA, TSG & TSA

PART No.	METRO-NORTH No.	DESCRIPTION	QUANTITY BWA	MIA	TSG	TSA
37	10202492	STRAIN CLAMP CONNECTOR	1	—	—	—
42		UNIVERSAL PARALLEL CLAMP (TINNED)	—	—	3	—
47	10201629	GROUNDING CLAMP (TINNED)	1	—	1	—
72	10434410	DEAD END FITTING TROLLEY WIRE	1	—	—	—
94A		SUSPENSION INSULATOR, 50,000 LBS.	—	1	—	2
95	10445113	SUSPENSION INSULATOR 25,000 LBS.	2	—	—	—
150	10730330	BALANCE WEIGHT PLATE 15"x 23"x 1" (GALV)	1	—	—	—
151	10730335	BALANCE WEIGHT PLATE 15"x 15"x 1" (GALV)	AS REQ'D	—	—	—
158	19144659	1"ø x 5 1/2" BOLT, NUT & WASHER (FOR DOUBLE LINK)	1	—	—	—
160	10738352	YOKE BALANCE PLATE	1	—	—	—
161	10728000	BALANCE WEIGHT GUIDE TUBE 2"IPS (12')	1	—	—	—
161A		BALANCE WEIGHT GUIDE TUBE 2"IPS (14')	1	—	—	—
162		TEMPERATURE STOP CLAMP	2	—	—	—
179	10726355	DOUBLE LINK 5/8"x 2 1/2" x 11 1/2"	1	—	—	—
180	10852375	GALV. ANTI-TORSION STRAP 3/16" x 1 1/2"	2	—	—	—
201	10997000	19 # 9 ALUMOWELD STRAND	FT	FT	—	FT
206	10997050	STAINLESS STEEL WIRE ROPE 1/2"ø	FT	—	FT	—
210	10997111	4/0 SOFT DRAWN COPPER "H"	—	—	—	—
213	10850060	WEIGHT SUPPORT-1" THIMBLE EYE ROD W/NUT	1	—	—	—
214	10435500	PREFORMED BIG GRIP DEAD END	3	2	3	4
218A	–	TURNBUCKLE, 1 1/4" X 12", JAW/JAW	1	—	—	—
219A	–	TURNBUCKLE, 1" X 6", JAW/JAW	2	—	—	—
220	10860100	3/4"x 6" JAW/JAW TURNBUCKLE	2	—	—	—
223	10208650	1/2"ø WIRE ROPE CLIP	6	—	6	—
225	10738925	DOUBLE PULLEY ASSEMBLY	1	—	—	—
228	10738900	SINGLE PULLEY ASSEMBLY	1	—	—	—
233	10201585	7/8"CHAIN SHACKLE	1	2	—	4
237	10850280	7/8" ANCHOR SHACKLE	1	—	1	—
241	10858000	5/8" THIMBLE	2	—	—	—
242	–	3/4" THIMBLE (WITH DOUBLE EXTRA STRONG PIPE INSERT)	3	2	3	4
600	–	REDUCING BOLT ASSEMBLY (5/8"X4" A325 GALVANIZED)	2	—	—	—

"FT" Part 210 for TSG?

NOTES:

1. THE BALANCE WEIGHTS SHALL APPLY A COMBINED TENSION TO THE MESSENGER AND CONTACT WIRES OF 12,500LB.
2. PROVIDE SUFFICIENT TAIL WIRE FOR FIELD ADJUSTMENTS. THE EXCESS TAIL WIRE SHALL BE CUT OFF AFTER INSTALLATION. MAINTAIN 1'-0" MINIMUM CLEARANCE FROM WIRE CLIP TO PULLEY WHEEL.
3. THE YOKE PLATE SHALL BE AS SHOWN ON STANDARD DRAWING.
4. YOKE PLATE SHALL BE IN PLUMB POSITION AT 70° F
5. CONTRACTOR SHALL DETERMINE BALANCE WEIGHT MOVEMENT GUIDE TUBE LENGTH BASED ON PHYSICAL AND MECHANICAL CHARACTERISTICS OF THE PULLEYS, BALANCE ASSEMBLY AND SITE SPECIFIC TENSION LENGTH AND TEMPERATURE VARIATIONS OF THE CATENARY. FOR WIRE RUNS OVER 2,800 FT. IN LENGTH, PART #161A IS TO BE USED.
6. THE BALANCE WEIGHT MOVEMENT WILL BE BASED ON A 4167 LB BALANCE WEIGHT ASSEMBLY.
7. CONTRACTOR SHALL USE MAKE-UP PLATES AS REQUIRED TO ACCOMPLISH A TOTAL BALANCE WEIGHT OF 4167 LBS (± 10 LBS). ROTATE ALL PLATES 90° WHEN STACKING.
8. THE BALANCE WEIGHT SHALL MOVE FREELY WITHIN THE TEMPERATURE RANGE OF 15°F TO 135°F. LOW TEMPERATURE STOP SHALL BE ACCOMPLISHED BY GRIPPING A MOVEMENT-RESTRAINING STRAND TO TAIL WIRE. HIGH TEMPERATURE STOP SHALL BE ACCOMPLISHED AY ATTACHING TWO STOP CLAMPS TO BALANCE WEIGHT GUIDE TUBE.
9. MAKE UP PLATE SIZE TO BE 15" X 15" X 1/4" (GALVANIZED).
10. FREE MOVEMENT SHALL BE DETERMINED BY ALONG TRACK MOVEMENT OF SITE SPECIFIC TENSION LENGTH FROM 70°F DATUM TEMPERATURE TO THE SPECIFIED EXTREME TEMPERATURE.
11. TERMINATION STRAND SAFETY GRIP SHALL BE INSTALLED WHERE TERMINATION STRAND PASSES OVER LINE CATENARY.
12. IN CERTAIN CONFIGURATIONS USING MIA ASSEMBLY, ITEMS 95 WILL BE REPLACED BY 19" X 7/16" C 1 1/2" LINK. FOR ALLOCATION OF THIS ALTERNATIVE SEE CATENARY LAYOUTS AND SEDs.
13. USE EXTRA LONG PIN FOR ASSEMBLY WITH ANTI-TORSION STRAPS.
14. AT PULLEY SUPPORT LOCATION THE TERMINATION STRAND DEAD SECTION BETWEEN TWO INSULATORS SHALL BE GROUNDED TO TRUSS ANGLE STEEL.
15. SEE STRUCTURAL DRAWINGS FOR STEEL BRACKETS DETAILS.
16. THE CONTRACTOR SHALL PROVIDE A CHART TO SHOW THE DIMENSIONS WITH RESPECT 15°F POSITION AND THE 135°F POSITION FROM THE CENTER OF THE WEIGHTS AT 70°F BASED ON THE BALANCE WEIGHT MOVEMENT CHARTS SHOWN ON DWG. D-2. CONTRACTOR SHALL ALSO CALCULATE AND SHOW LOCATION OF HIGH TEMPERATURE STOP ON THIS CHART WITH RESPECT TO WEIGHT STACK GUIDE PLATE (PART 150) AT 70°F.
17. USE TINNED CONNECTORS FOR CONNECTION TO ALUMINUM CONDUCTOR.
18. STEEL BASE ENCASEMENT, SEE DWG. S-12. WHERE BWA'S ARE TO BE INSTALLED ON STRUCTURES WITH FOUNDATION ENCASEMENTS, INSTALLATION SHALL BE AS SHOWN DWG. S-12.

THE INFORMATION, INCLUDING ESTIMATED QUANTITIES OF WORK SHOWN ON THESE SHEETS IS BASED ON LIMITED INVESTIGATIONS BY THE STATE AND IS IN NO WAY WARRANTED TO INDICATE THE TRUE CONDITIONS OR ACTUAL QUANTITIES OR DISTRIBUTION OF QUANTITIES OF WORK WHICH WILL BE REQUIRED.

URS CORPORATION AES
500 ENTERPRISE DRIVE
ROCKY HILL, CT 06067
1-(860)-529-8882

THE Burns GROUP
ENGINEERING AND CONSTRUCTION

Burns Engineering, Inc.
Metro-Plex II
8201 Corporate Drive, Suite 800
Landover, MD 20785-2230
phone 703-760-9076 fax 301-577-1088

NO.	DATE	DESCRIPTION

REVISIONS

STATE OF CONNECTICUT
DEPARTMENT OF TRANSPORTATION

SECTION C-1a & C-2 NEW HAVEN LINE

CATENARY REPLACEMENT BETWEEN WALK BRIDGE AND STRUCTURE 636, PECK BRIDGE AND STRUCTURE 863

BALANCE WEIGHT ASSEMBLIES
SHEET 2

ENGINEER: BURNS ENGINEERING
DESIGNER: MS DRAFTER: HJ CHECKER: JCD
APPROVED: SDB DATE: 09/13/13
STRUCTURE NO. BRIDGE LOG NO. STRUCTURE SHEET NO. E-9-1

PROJECT CONTROL DATE: 09/13/13 DISK FILENAME: E-9-1.dwg 100% DESIGN

F.H.W.A. REGION	STATE	TOWN	FED. AID PROJ. NO.	PROJ. NO.	YEAR	SHEET NUMBER
1	CONN.	VARIOUS	CT-05-0109	301-0145	2013	01.03.047

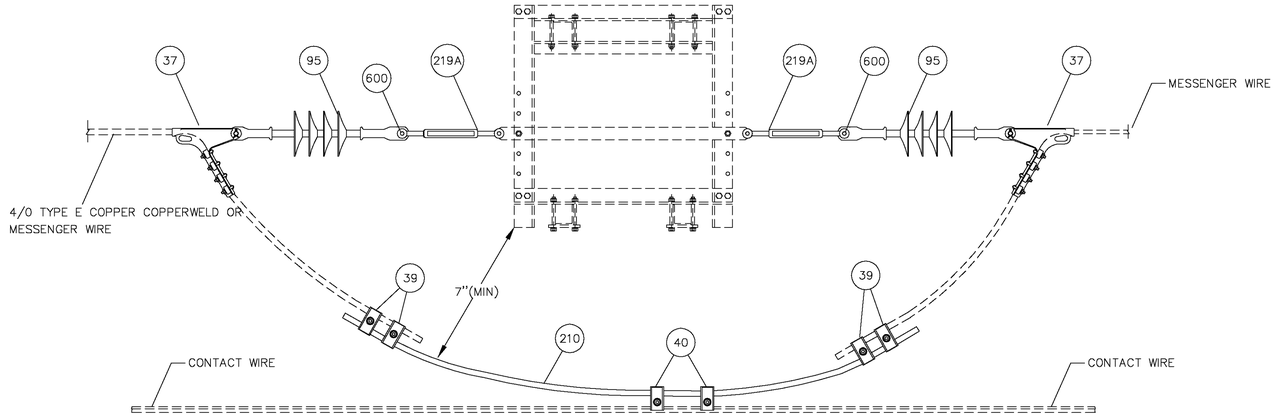

MID-POINT ANCHOR ASSEMBLY – MPA

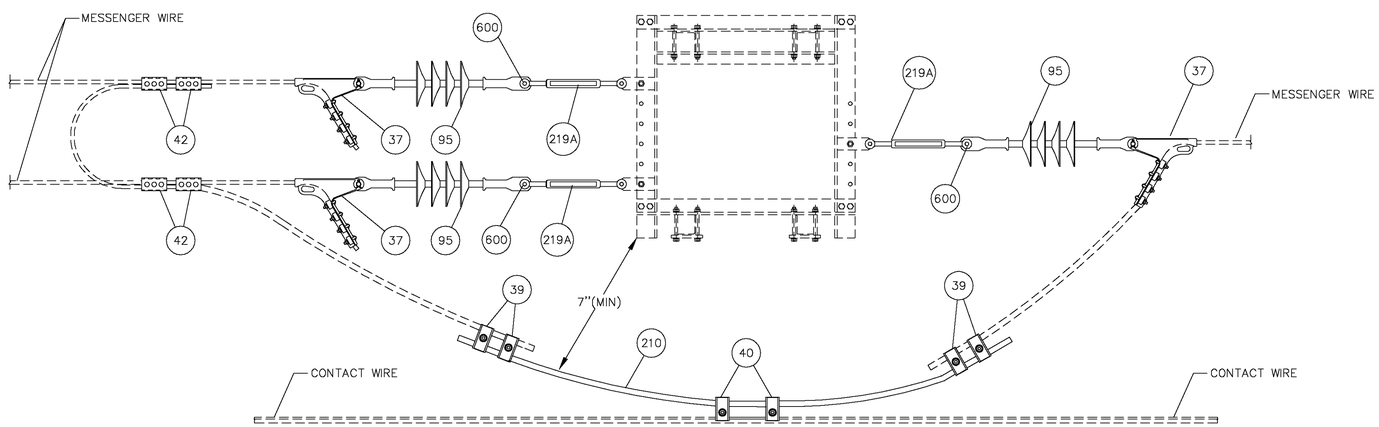

TRANSITIONAL MESSENGER DEAD END ASSEMBLY – TMDEA-1

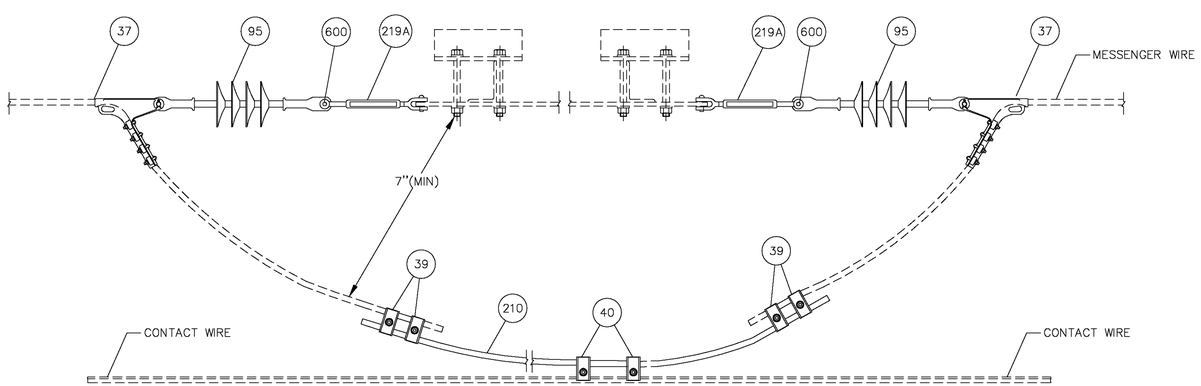

ANCHOR BRIDGE ASSEMBLY – ABA

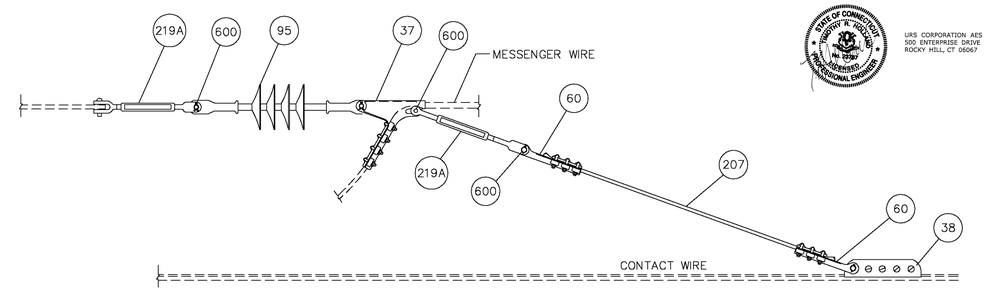

TEMPORARY CONTACT WIRE HOLD BACK ASSEMBLY – THB

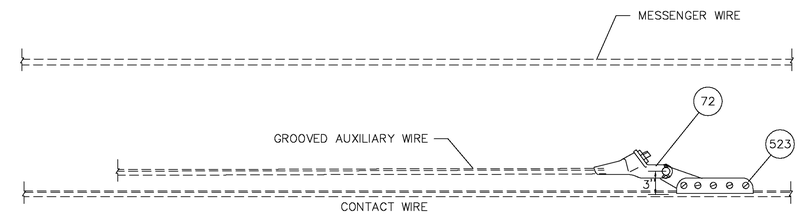

AUXILIARY HOLD BACK ASSEMBLY – AHB-1

ASSEMBLIES – ABA, MPA, THB, TMDEA-1 & AHB-1

PART No.	METRO-NORTH No.	DESCRIPTION	QUANTITY				
			ABA	MPA	THB	TMDEA-1	AHB-1
37	10202492	STRAIN CLAMP CONNECTOR	2	2	1	3	—
38	10202613	CLAMP FOR TROLLEY WIRE	—	—	1	—	—
39	10201628	PARALLEL CABLE CLAMP	4	4	—	4	—
40	10201624	TROLLEY CONTACT CLAMP	2	2	—	2	—
42	10202792	UNIVERSAL CLAMP (TINNED)	—	—	—	4	—
60	10201621	DEAD END CLAMP	—	—	2	—	—
72	10434410	DEAD END FITTING TROLLEY WIRE	—	—	—	—	1
95	10445113	SUSPENSION INSULATOR 25,000 LB	2	2	1	3	—
201	10997000	19 #9 ALUMOWELD STRAND	—	—	—	—	—
207	10997013	7/16" ø COPPERWELD WIRE	—	—	FT	—	—
210	10997111	4/0 SOFT DRAWN COPPER WIRE	FT	FT	—	FT	—
219A	–	TURNBUCKLE 1"x 6" JAW/JAW	2	2	1	3	—
243	10858100	7/16"ø THIMBLE	—	—	—	—	—
523	10434406	AUXILIARY TROLLEY WIRE CLAMP	—	—	—	—	1
600	–	REDUCING BOLT (5/8" X 4" A325 BOLT)	2	2	3	3	—

REFER TO DRAWING E-6 FOR REDUCING BOLT ASSEMBLY

NOTE:

1. THE ASSEMBLIES SHOWN ARE TYPICAL. THE CONTRACTOR SHALL DEVELOP SITE SPECIFIC ARRANGEMENTS TO SUIT STRUCTURAL DETAILS.
2. USE TINNED CONNECTORS FOR CONNECTION TO ALUMINUM CONDUCTOR.

NTS

THE INFORMATION, INCLUDING ESTIMATED QUANTITIES OF WORK SHOWN ON THESE SHEETS IS BASED ON LIMITED INVESTIGATIONS BY THE STATE AND IS IN NO WAY WARRANTED TO INDICATE THE TRUE CONDITIONS OR ACTUAL QUANTITIES OR DISTRIBUTION OF QUANTITIES OF WORK WHICH WILL BE REQUIRED.

URS CORPORATION AES
500 ENTERPRISE DRIVE
ROCKY HILL, CT 06067
1-(860)-529-8882

THE Burns GROUP
ENGINEERING AND CONSTRUCTION
Burns Engineering, Inc.
Metro-Plex II
8201 Corporate Drive, Suite 800
Landover, MD 20785-2230
phone 703-760-9076 fax 301-577-2088

NO.	DATE	DESCRIPTION

REVISIONS

STATE OF CONNECTICUT
DEPARTMENT OF TRANSPORTATION

SECTION C-1a & C-2 NEW HAVEN LINE

CATENARY REPLACEMENT BETWEEN WALK BRIDGE AND STRUCTURE 636, PECK BRIDGE AND STRUCTURE 863

CATENARY ANCHOR ASSEMBLIES

ENGINEER: BURNS ENGINEERING

DESIGNER: MS DRAFTER: HJ CHECKER: JCD

APPROVED: SDB DATE: 09/13/13

STRUCTURE NO. BRIDGE LOG NO. STRUCTURE SHEET NO. E-10

PROJECT CONTROL DATE: 09/13/13 DISK FILENAME: E-10.dwg 100% DESIGN

F H W A REGION	STATE	TOWN	FED. AID PROJ. NO.	PROJ. NO.	YEAR	SHEET NUMBER
1	CONN.	VARIOUS	CT-05-0109	301-0145	2013	01.03.048

URS CORPORATION AES
500 ENTERPRISE DRIVE
ROCKY HILL, CT 06067

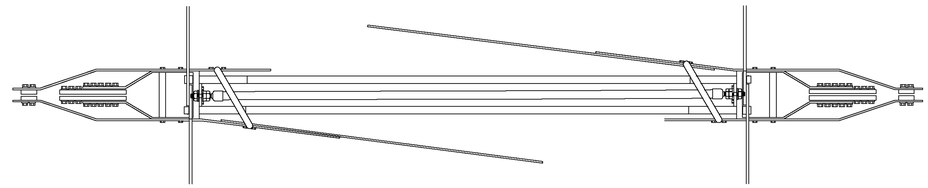

HIGH SPEED SECTION INSULATOR
ASSEMBLY HS-1A
PLAN VIEW

ASSEMBLY HS-1			
PART No.	METRO-NORTH No.	DESCRIPTION	QTY. HS-1
39	10201626	PARALLEL CLAMP 4/0 TYPE E TO 4/0 CU WIRE	4
40	10201624	PARALLEL CLAMP 4/0 TO 350 CONTACT WIRE	4
67	10100143	SADDLE W/NEOPRENE LINER	2
90	10434410	FULL TENSION DEAD END SOCKET	2
95	10445113	SUSPENSION INSULATOR 25,000 LB	1
200	10850108	1/4" STAINLESS STEEL WIRE ROPE	FT
210	10997111	4/0 TYPE H CU WIRE	FT
227	10208575	1/4" WIRE ROPE CLIP	16
255	10640295	HIGH SPEED SECTION INSULATOR ASSEMBLY	1
		RUNNER STABILIZING COMPRESSION ROD	1

No Part Numbers?

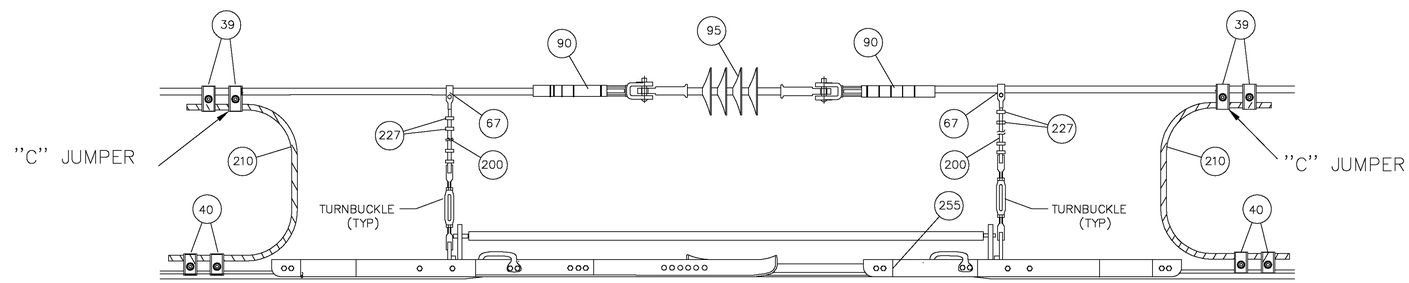

HIGH SPEED SECTION INSULATOR
ASSEMBLY HS-1A
ELEVATION VIEW

NOTES:

1. THE SECTION INSULATOR ARRANGEMENT SHOWN IS TYPICAL. ACTUAL ARRANGEMENT AND IT'S INSTALLATION WILL BE BASED ON MANUFACTURER'S RECOMMENDATIONS SUBJECT TO APPROVAL OF THE ENGINEER.
2. TURNBUCKLES SHALL FORM PART OF SECTION INSULATOR ASSEMBLY (ITEM 255)
3. LENGTH OF 1/4" S.S. WIRE ROPE WILL BE ADJUSTED TO SUIT SYSTEM HEIGHT OR THE CLEARANCE AVAILABLE UNDER THE STRUCTURE.
4. USE TINNED CONNECTORS FOR CONNECTION TO ALUMINUM CONDUCTOR.

NTS

THE INFORMATION, INCLUDING ESTIMATED QUANTITIES OF WORK SHOWN ON THESE SHEETS IS BASED ON LIMITED INVESTIGATIONS BY THE STATE AND IS IN NO WAY WARRANTED TO INDICATE THE TRUE CONDITIONS OR ACTUAL QUANTITIES OR DISTRIBUTION OF QUANTITIES OF WORK WHICH WILL BE REQUIRED.

URS CORPORATION AES
500 ENTERPRISE DRIVE
ROCKY HILL, CT 06067
1-(860)-529-8882

THE Burns GROUP
ENGINEERING AND CONSTRUCTION

Burns Engineering, Inc.
Metro-Plaz II
8201 Corporate Drive, Suite 800
Landover, MD 20785-2230
phone 703-760-9076 fax 301-577-0088

NO.	DATE	DESCRIPTION

REVISIONS

STATE OF CONNECTICUT
DEPARTMENT OF TRANSPORTATION

SECTION C-1a & C-2 NEW HAVEN LINE

CATENARY REPLACEMENT BETWEEN WALK BRIDGE AND STRUCTURE 636, PECK BRIDGE AND STRUCTURE 863

SECTION INSULATOR ASSEMBLIES

ENGINEER: BURNS ENGINEERING
DESIGNER: MS DRAFTER: HJ CHECKER: JCD
APPROVED: SDB DATE: 09/13/13
STRUCTURE NO. BRIDGE LOG NO. STRUCTURE SHEET NO. E-11

PROJECT CONTROL DATE: 09/13/13 DISK FILENAME: E-11.dwg 100% DESIGN

F.H.W.A. REGION	STATE	TOWN	FED. AID PROJ. NO.	PROJ. NO.	YEAR	SHEET NUMBER
1	CONN.	VARIOUS	CT-05-0109	301-0145	2013	01.03.049

URS CORPORATION AES
500 ENTERPRISE DRIVE
ROCKY HILL, CT 06067

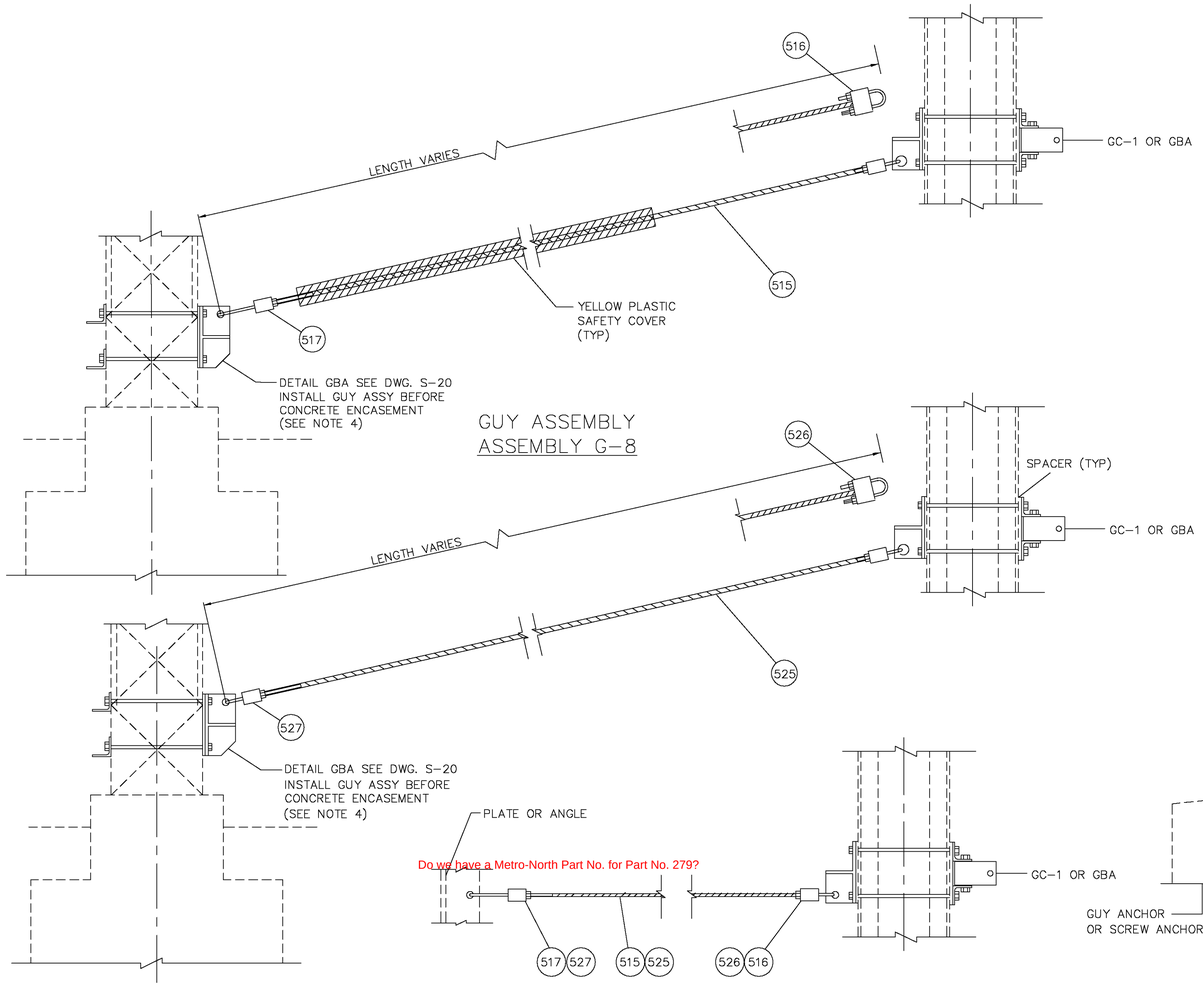

GUY ASSEMBLY
ASSEMBLY G-8

GUY ASSEMBLY
ASSEMBLY G-9

GUY WIRE ASSEMBLY
ASSEMBLY G-5 & G-7

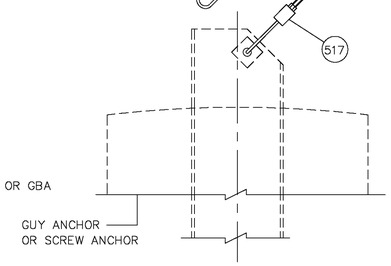

GUY ASSEMBLY
ASSEMBLY G-4

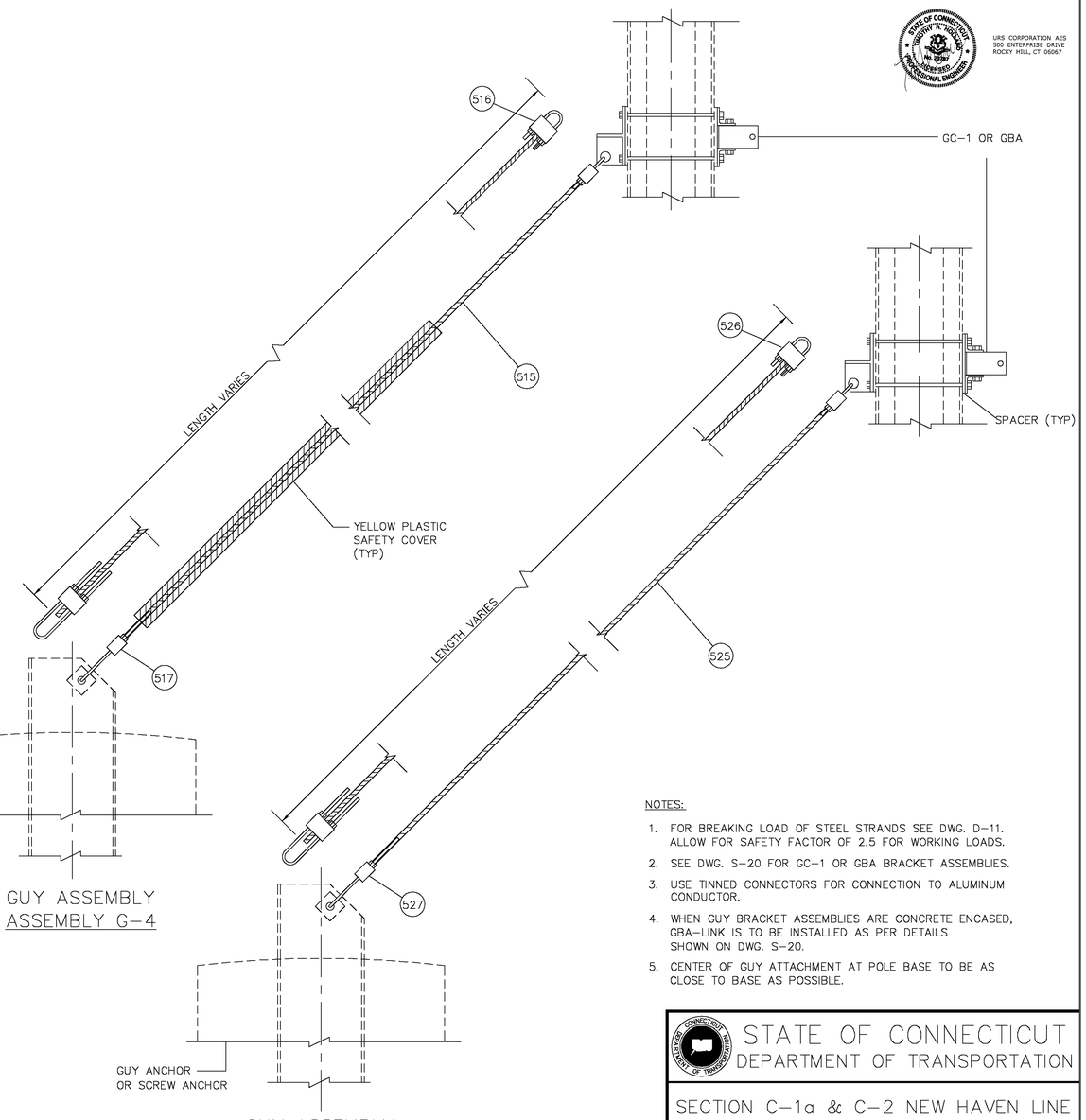

GUY ASSEMBLY
ASSEMBLY G-6

NTS

NOTES:

1. FOR BREAKING LOAD OF STEEL STRANDS SEE DWG. D-11. ALLOW FOR SAFETY FACTOR OF 2.5 FOR WORKING LOADS.
2. SEE DWG. S-20 FOR GC-1 OR GBA BRACKET ASSEMBLIES.
3. USE TINNED CONNECTORS FOR CONNECTION TO ALUMINUM CONDUCTOR.
4. WHEN GUY BRACKET ASSEMBLIES ARE CONCRETE ENCASED, GBA-LINK IS TO BE INSTALLED AS PER DETAILS SHOWN ON DWG. S-20.
5. CENTER OF GUY ATTACHMENT AT POLE BASE TO BE AS CLOSE TO BASE AS POSSIBLE.

ASSEMBLIES G-4, G-5, G-6, G-7, G-8 & G-9

PART No.	METRO-NORTH No.	DESCRIPTION	QUANTITY G-4	G-5	G-6	G-7	G-8	G-9
515		3/4"ø GALVANIZED EHS STEEL STRANDS	FT	—	—	FT	FT	—
516		3/4" NON-ADJUSTABLE GUY STRAND DEADEND GRIP ASSY (STRUCTURE SIDE)	1	—	—	1	1	—
517		3/4" ADJUSTABLE GUY STRAND DEADEND GRIP ASSY (ANCHOR SIDE)	1	—	—	1	1	—
525		1"ø GALVANIZED EHS STEEL STRANDS	—	FT	FT	—	—	FT
526		1" NON-ADJUSTABLE GUY STRAND DEADEND GRIP ASSY (STRUCTURE SIDE)	—	1	1	—	—	1
527		1" ADJUSTABLE GUY STRAND DEADEND GRIP ASSY (ANCHOR SIDE)	—	1	1	—	—	1
—		GC-1 OR GBA BRACKET ASSEMBLY	1	1	1	1	2	2

THE INFORMATION, INCLUDING ESTIMATED QUANTITIES OF WORK SHOWN ON THESE SHEETS IS BASED ON LIMITED INVESTIGATIONS BY THE STATE AND IS IN NO WAY WARRANTED TO INDICATE THE TRUE CONDITIONS OR ACTUAL QUANTITIES OR DISTRIBUTION OF QUANTITIES OF WORK WHICH WILL BE REQUIRED.

URS CORPORATION AES
500 ENTERPRISE DRIVE
ROCKY HILL, CT 06067
1-(860)-529-8882

THE Burns GROUP
ENGINEERING AND CONSTRUCTION
Burns Engineering, Inc.
Metro-Plex II
8201 Corporate Drive, Suite 800
Landover, MD 20785-2230
phone 703-760-9076 fax 301-577-2088

NO.	DATE	DESCRIPTION

REVISIONS

STATE OF CONNECTICUT
DEPARTMENT OF TRANSPORTATION

SECTION C-1a & C-2 NEW HAVEN LINE

CATENARY REPLACEMENT BETWEEN WALK BRIDGE AND STRUCTURE 636, PECK BRIDGE AND STRUCTURE 863

GUY ASSEMBLY

ENGINEER: BURNS ENGINEERING
DESIGNER: MS DRAFTER: HJ/ST CHECKER: JCD
APPROVED: SDB DATE: 09/13/13
STRUCTURE NO. BRIDGE LOG NO. STRUCTURE SHEET NO. E-12

100% DESIGN
DISK FILENAME: E-12.dwg
PROJECT CONTROL DATE: 09/13/13

F.H.W.A. REGION	STATE	TOWN	FED. AID PROJ. NO.	PROJ. NO.	YEAR	SHEET NUMBER
1	CONN.	VARIOUS	CT-05-0109	301-0145	2013	01.03.050

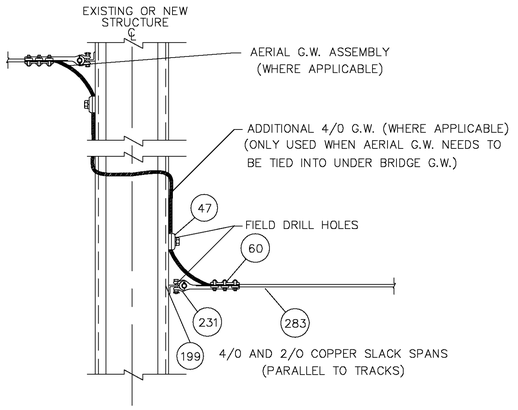

GROUND WIRE CONNECTION TO THE POLES
ASSEMBLY GRD-1

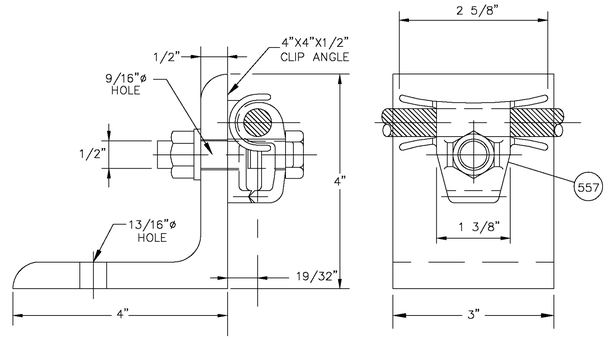

ASSEMBLY GW-1A AND CLIP ANGLE
(SEE NOTES 3, 4, 6, ALTERNATE)

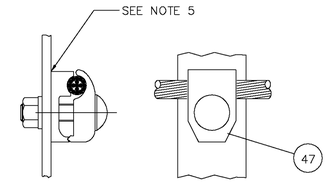

GROUND CONNECTOR
CABLE TO FLAT SURFACE
PART NO. (47)

ASSEMBLIES – GRD-1, GRD-2, GW-1, GW-1A AND GW-1B							
PART No.	METRO-NORTH No.	DESCRIPTION	QUANTITY				
			GRD-1	GRD-2	GW-1	GW-1A	GW-1B
42	10202792	UNIVERSAL PARALLEL CLAMP (TINNED)	—	1	—	—	—
47	10201629	GROUND CONNECTOR (TINNED)	1	1	1	1 *	1
50	10434406	SERVICE CONNECTOR (SPLIT BOLT TYPE)	—	—	2	2 *	2
60	10201621	DEAD END CLAMP	1	—	—	—	—
199		3/4" x 6" FORGED EYEBOLT W/DBBL. NUT ATTACHMENT(7200 LB. WORKING LOAD)	1	—	—	—	—
210	10997111	4/0 COPPER WIRE SOFT DRAWN	—	FT	FT	FT *	
231	10850265	5/8" ANCHOR SHACKLE WITH 3/4" ø PIN	1	—	—	—	—
283		#4/0 AWG, HARD DRAWN COPPER CONDUCTOR	FT	—	AS REQ'D	—	AS REQ'D
520		TRUNNION CLAMP (COPPER ALLOY), COMPLETE WITH U-BOLTS & NUTS	—	—	1	—	1
521		TOP BRACKET (MALLEABLE IRON) COMPLETE WITH 1/2" ø STEEL MOUNTING BOLTS	—	—	1	—	1
557		GROUND WIRE CLAMP ASSEMBLY (SEE NOTE 3)	—	—	—	1	—

* FOR ASSEMBLY GW-1A(ALTERNATE)ONLY

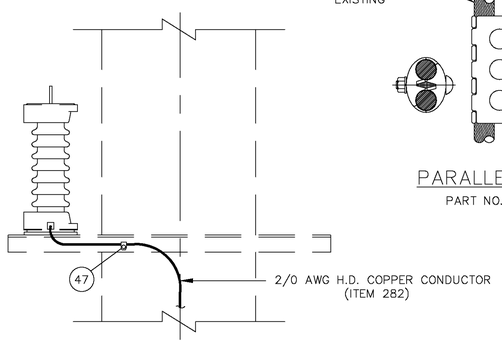

TYPICAL GROUNDING
FOR SURGE ARRESTERS

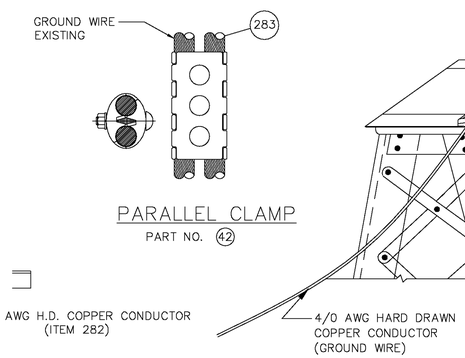

PARALLEL CLAMP
PART NO. (42)

GW-1A
(SEE NOTE 5)

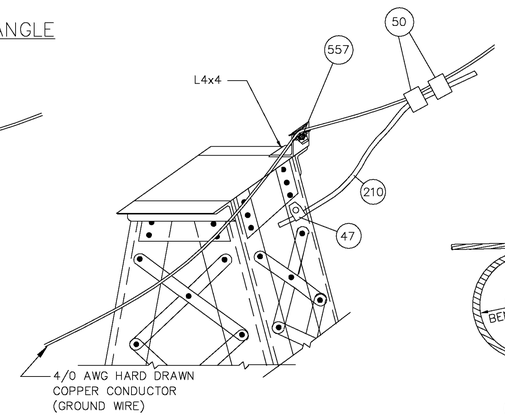

INSTALLATION GW-1A
(WITH ALTERNATE WITH CLIP ANGLE SEE NOTE 5 AND 6)
(WHEN ONLY ONE PART 557 IS USED A GROUND BOUNDING WIRE AND CONNECTORS IS TO BE INSTALLED AS SHOWN)

ASSEMBLY GW-1A MOUNTING DETAILS
(FOR EXISTING STRUCTURES)

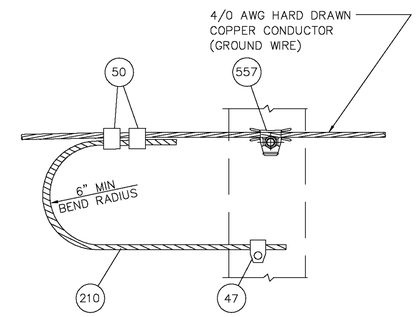

ASSEMBLY GW-1A MOUNTING DETAIL
(FOR NEW STRUCTURES)
(SEE NOTE 6)
(WHEN ONLY ONE PART 557 IS USED A GROUND BOUNDING WIRE AND CONNECTORS IS TO BE INSTALLED AS SHOWN)

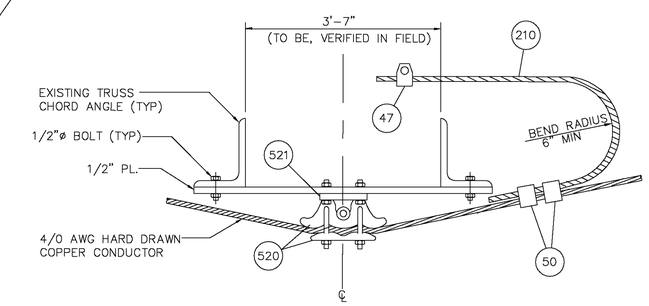

AERIAL GROUND WIRE (UNDER THE TRUSS)
THROUGH CONNECTION & BONDING TO TRUSS
ASSEMBLY GW-1B

NOTES:

1. USE TINNED CONNECTORS FOR CONNECTION TO ALUMINUM CONDUCTOR.
2. GROUNDING WIRE SHOWN TYPICALLY AND SHALL BE ADJUSTED IN THE FIELD AS REQUIRED.
3. THE GROUND WIRE CLAMP ASSEMBLIES SHALL BE ABLE TO SUSTAIN RADIAL LOAD OF 7450 LB AND PRODUCE SLIP STRENGTH OF 3000 LBS.
4. USE TWO GROUND WIRE CLAMPS FOR WIDE STRUCTURES AS REQUIRED.
5. BEFORE INSTALLING THE GROUND CONNECTOR AND/OR GROUND WIRE CLAMP ASSEMBLIES ON THE EXISTING STRUCTURES, REMOVE ALL PAINT AND RUST FROM THE SURFACE UNDERNEATH AND APPLY CONDUCTIVE GREASE AS REQUIRED. AS REQUIRED.
6. IN CURVES, PART NO. 557 CLAMPS WILL BE INSTALLED SO THAT ANY SIDE BENDING OF THE GROUND WIRE AT THE CLAMP IS DONE AGAINST THE LARGER FLARED SIDE PIECE OF THE CLAMP (BEARING THE CLAMP INTO THE CLIP ANGLE).

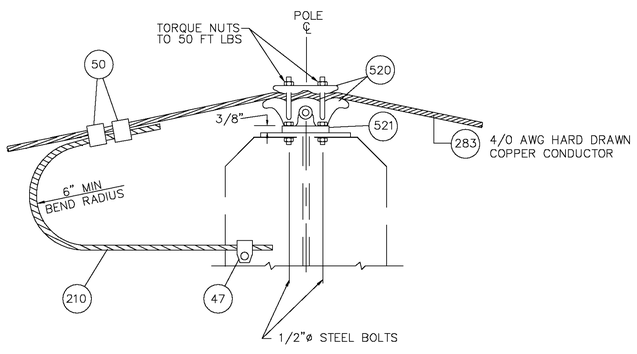

AERIAL GROUND WIRE
THROUGH CONNECTION & BONDING TO POLE
ASSEMBLY GW-1

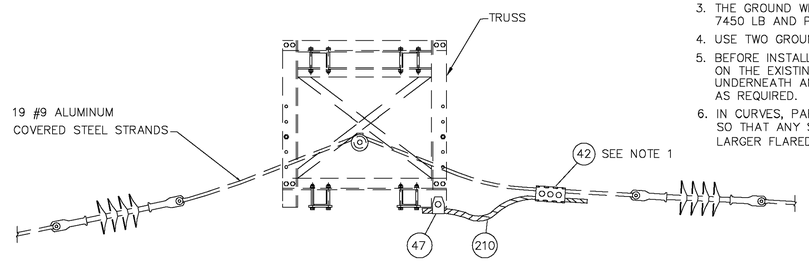

ASSEMBLY GRD-2

NTS

THE INFORMATION, INCLUDING ESTIMATED QUANTITIES OF WORK SHOWN ON THESE SHEETS IS BASED ON LIMITED INVESTIGATIONS BY THE STATE AND IS IN NO WAY WARRANTED TO INDICATE THE TRUE CONDITIONS OR ACTUAL QUANTITIES OR DISTRIBUTION OF QUANTITIES OF WORK WHICH WILL BE REQUIRED.

URS CORPORATION AES
500 ENTERPRISE DRIVE
ROCKY HILL, CT 06067
1-(860)-529-8882

THE Burns GROUP
ENGINEERING AND CONSTRUCTION
Burns Engineering, Inc.
Metro-Plaz II
8200 Corporate Drive, Suite 800
Landover, MD 20785-2230
phone 703-760-9076 fax 301-577-0088

NO.	DATE	DESCRIPTION

REVISIONS

STATE OF CONNECTICUT
DEPARTMENT OF TRANSPORTATION

SECTION C-1a & C-2 NEW HAVEN LINE

CATENARY REPLACEMENT BETWEEN WALK BRIDGE AND STRUCTURE 636, PECK BRIDGE AND STRUCTURE 863

GROUNDING ASSEMBLIES

ENGINEER: BURNS ENGINEERING
DESIGNER: MS DRAFTER: HJ CHECKER: JCD
APPROVED: SDB DATE: 09/13/13
STRUCTURE NO. BRIDGE LOG NO. STRUCTURE SHEET NO. E-13

F H W A REGION	STATE	TOWN	FED. AID PROJ. NO.	PROJ. NO.	YEAR	SHEET NUMBER
1	CONN.	VARIOUS	CT-05-0109	301-0145	2013	01.03.051

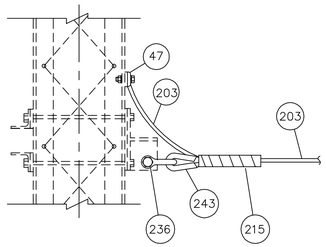

CDEA-7A (CONT.)

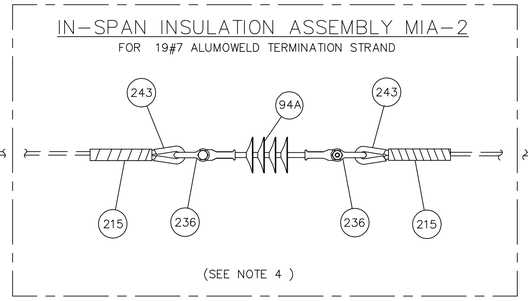

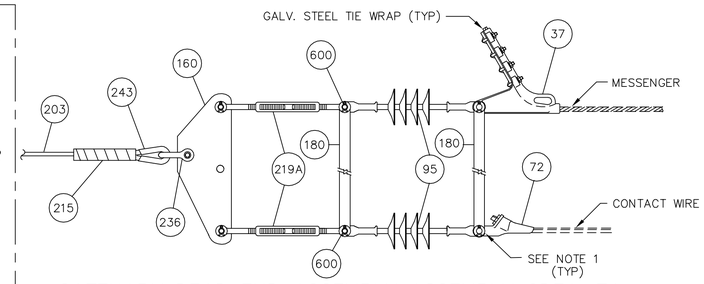

CATENARY DEAD END ASSEMBLY ASSEMBLY CDEA-7A

(FOR USE WITH FIXED TERMINATION SIMPLE CATENARY)

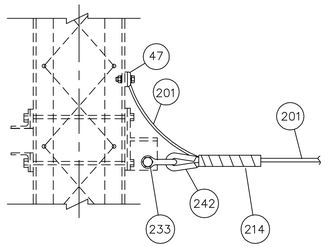

CDEA-7 (CONT.)

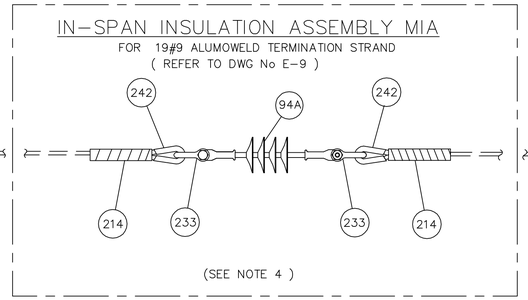

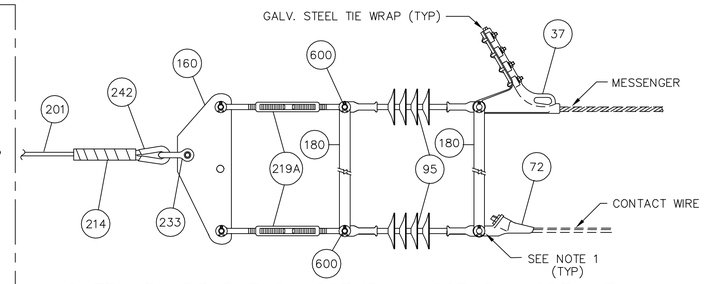

CATENARY DEAD END ASSEMBLY ASSEMBLY CDEA-7

(FOR USE WITH AUTO-TENSIONED SIMPLE CATENARY)

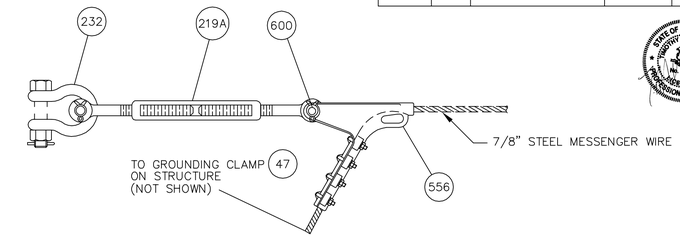

MESSENGER DEAD END ASSEMBLY MDEA-4

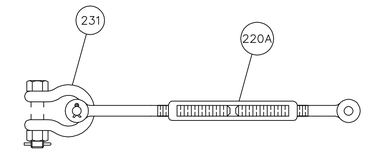

DEA-1

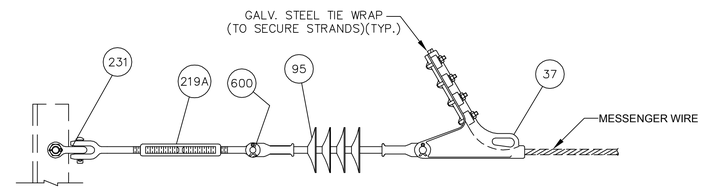

MESSENGER DEAD END ASSEMBLY MDEA-3

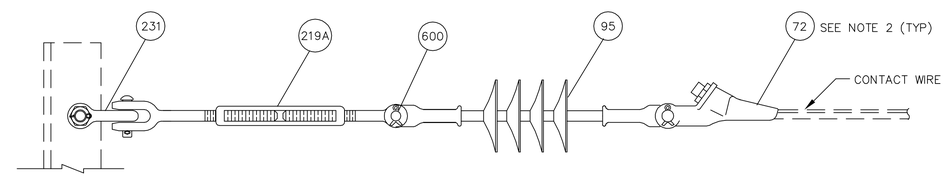

CONTACT WIRE DEAD END ASSEMBLY CDEA-3

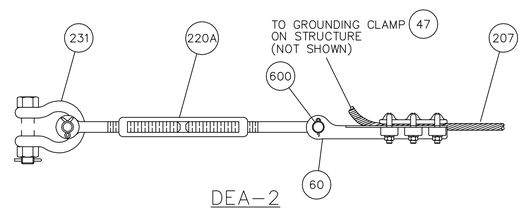

DEA-2

ASSEMBLIES CDEA-3, MDEA-3, DEA-1, DEA-2, DEA-3, MDEA-4, CDEA-7, CDEA-7A, MIA-2 & MIA

PART NO.	METRO-NORTH NO.	DESCRIPTION	QUANTITY									
			CDEA-3	MDEA-3	DEA-1	DEA-2	DEA-3	MDEA-4	CDEA-7	CDEA-7A	MIA-2	MIA
37	10202492	STRAIN CLAMP CONNECTOR	—	1	—	—	—	—	1	1	—	—
47	10201629	GROUNDING CLAMP (TINNED)	—	—	—	1	1	1	1	1	—	—
60	10201621	DEAD END CLAMP	—	—	—	1	2	—	—	—	—	—
72	10434410	DEAD END FITTING	1	—	—	—	—	—	1	1	—	—
			—	—	—	—	—	—	—	—	—	—
94A		SUSPENSION INSULATOR 50,000 LB	—	—	—	—	—	—	—	—	1	1
95	10445113	SUSPENSION INSULATOR 25,000 LB.	1	1	—	—	—	—	2	2	—	—
160	10738352	YOKE BALANCE PLATE	—	—	—	—	—	—	1	1	—	—
180	10852375	GALV. ANTI-TORSION STRAP 3/16"x 1 1/2"	—	—	—	—	—	—	2	2	—	—
201	10997000	19 #9 ALUMINUM COVERED STEEL STRANDS	—	—	—	—	—	—	FT	—	—	—
203	10997060	19 #7 ALUMINUM COVERED STEEL STRANDS	—	—	—	—	—	—	—	FT	—	—
207	10997013	7/16"ø COPPERWELD WIRE	—	—	—	FT	FT	—	—	—	—	—
214	10435500	PREFORMED BIG-GRIP DEAD END "BLACK"	—	—	—	—	—	—	2	—	—	2
215	10435525	PREFORMED BIG-GRIP DEAD END "BLACK"	—	—	—	—	—	—	—	2	2	—
220A	–	1"ø x 6" EYE/JAW TURNBUCKLE	—	1	1	1	1	1	—	—	—	—
219A	–	1"x 6" JAW/JAW TURNBUCKLE	1	—	—	—	—	1	2	2	—	—
231	10850265	5/8" ANCHOR SHACKLE W/3/4"ø PIN	1	1	1	1	1	—	—	—	—	—
232	10850260	3/4" ANCHOR SHACKLE W/7/8"ø PIN	—	—	—	—	—	1	—	—	—	—
233	10201585	7/8" CHAIN SHACKLE	—	—	—	—	—	—	2	—	—	2
236	10850252	1 1/4" CHAIN SHACKLE	—	—	—	—	—	—	—	2	2	—
242	–	3/4" THIMBLE (WITH DOUBLE EXTRA STRONG PIPE INSERT)	—	—	—	—	—	—	2	—	—	2
243	10858100	1 1/4" THIMBLE	—	—	—	—	—	—	—	2	2	—
556		STRAIN CLAMP CONNECTOR FOR 7/8" STEEL	—	—	—	—	—	1	—	—	—	—
		MESSENGER WIRE										
600		REDUCING BOLT (5/8"X4" A325)	1	1	—	1	1	1	2	2	—	—

NOTES:

1. USE EXTRA LONG PIN FOR ASSEMBLY WITH ANTI-TORSION STRAPS
2. FOR DEAD END CLAMP, ITEM 72, USE COMPRESSION SLEEVE TO SUIT CONTACT WIRE SIZE.
3. FOR SWIVEL BRACKET ASSEMBLY REFER TO STEEL DETAIL DRAWINGS.
4. IN-SPAN INSULATION MIA & MIA-2 TO BE ALLOCATED AS REQUIRED AND SHALL BE DETERMINED FROM THE LAYOUT PLAN.
5. USE TINNED CONNECTORS FOR CONNECTION TO ALUMINUM CONDUCTOR.

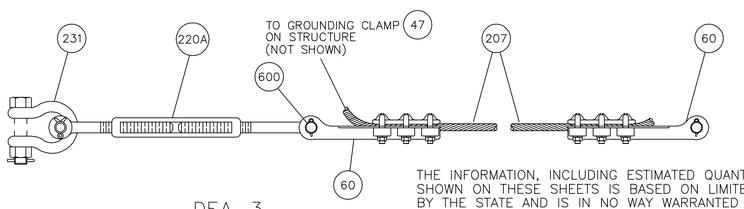

DEA-3

THE INFORMATION, INCLUDING ESTIMATED QUANTITIES OF WORK SHOWN ON THESE SHEETS IS BASED ON LIMITED INVESTIGATIONS BY THE STATE AND IS IN NO WAY WARRANTED TO INDICATE THE TRUE CONDITIONS OR ACTUAL QUANTITIES OR DISTRIBUTION OF QUANTITIES OF WORK WHICH WILL BE REQUIRED.

URS CORPORATION AES
500 ENTERPRISE DRIVE
ROCKY HILL, CT 06067
1-(860)-529-8882

THE Burns GROUP
ENGINEERING AND CONSTRUCTION
Burns Engineering, Inc.
Metro-Plex II
8201 Corporate Drive, Suite 800
Landover, MD 20785-2230
phone 703-760-9076 fax 301-577-2088

NO.	DATE	DESCRIPTION

REVISIONS

STATE OF CONNECTICUT
DEPARTMENT OF TRANSPORTATION

SECTION C-1a & C-2 NEW HAVEN LINE

CATENARY REPLACEMENT BETWEEN WALK BRIDGE AND STRUCTURE 636, PECK BRIDGE AND STRUCTURE 863

MISCELLANEOUS ASSEMBLIES

SHEET 1

ENGINEER: BURNS ENGINEERING

DESIGNER: MS DRAFTER: HJ CHECKER: JCD

APPROVED: SDB DATE: 09/13/13

STRUCTURE NO. BRIDGE LOG NO. STRUCTURE SHEET NO. E-14

100% DESIGN

DISK FILENAME: E-14.dwg

PROJECT CONTROL DATE: 09/13/13

F H W A REGION	STATE	TOWN	FED. AID PROJ. NO.	PROJ. NO.	YEAR	SHEET NUMBER
1	CONN.	VARIOUS	CT-05-0109	301-0145	2013	01.03.052

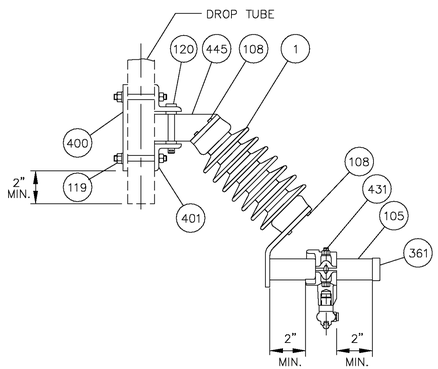

CONTACT WIRE REGISTRATION
ASSEMBLY RA18-OR
(FOR INSULATED OVERLAP)
SEE NOTE 1

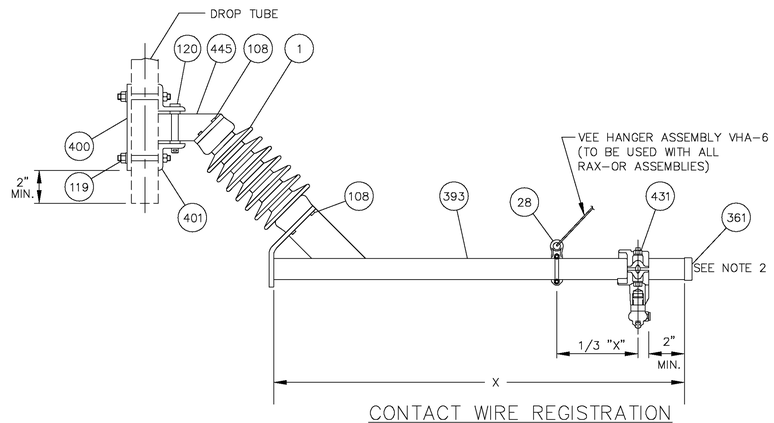

CONTACT WIRE REGISTRATION
ASSEMBLY RAX-OR
ASSEMBLY RA60-OR (X=60")
ASSEMBLY RA72-OR (X=72")
ASSEMBLY RA90-OR (X=90")
(FOR INSULATED OVERLAP)

ASSEMBLIES RA18-OR, RAX-OR

PART No.	METRO-NORTH No.	DESCRIPTION	QTY PER ASSEMBLY RA18-OR	QTY PER ASSEMBLY RAX-OR
1	10445110	CANTILEVER INSULATOR (2000 LBS)	1	1
28	10202451	PIPE EYE CLAMP 2"	——	1
431		SLIDING CONTACT WIRE CLAMP HOLDER ASSY	1	1
73	10206340	LINK DOUBLE CLEVIS 90°	——	——
95	10445113	SUSPENSION INSULATOR 25,000 LB	——	——
105	10000085	REGISTRATION TUBE ASSEMBLY 18"	1	——
108	19130912	1/2"ø x 1 1/4" BOLT, NUT AND LOCKWASHER	8	8
400	10730165	HINGED INSULATOR BRACKET BACK PLATE	1	1
119	19133562	5/8"ø x 5" BOLT, NUT AND LOCKWASHER	4	4
120	19133825	5/8"ø x 6" BOLT, A307 W/NUT AND 2 BRONZE WASHERS	1	1
199	19080120	1/2" x 3" FORGE EYEBOLT W/NUT	——	——
216		INSULATION RUBBER BOOT	——	——
227	10208575	1/4"WIRE ROPE CLIP	——	——
247	10858000	THIMBLE	——	——
254	10640260	LOW SPEED SECTION INSULATOR ASSEMBLY	——	——
255	10640295	HIGH SPEED SECTION INSULATOR ASSEMBLY	——	——
350		1/4" S.S. WIRE ROPE	——	——
361		EXTERNAL PLASTIC SEAL PLUG	1	1
393		REGISTRATION TUBE ASSEMBLY (LENGTH VARIES)	——	1
401		INSULATOR BASE SUPPORT, HINGED INSULATOR ASSY	2	2
445	10260011	HINGED INSULATOR BASE	1	1
——		VEE HANGER ASSEMBLY VHA-6	——	1

NOTES:

1. ASSEMBLY RA18-OR IS USED FOR F.T. SYSTEM OR WITHIN 600 FEET FROM MPA ON THE A.T. SYSTEM.
2. FOR RESTRICTED ELECTRICAL CLEARANCES, REPLACE PART #361 WITH PART #216 (INSULATING RUBBER BOOT).
3. USE TINNED CONNECTORS FOR CONNECTION TO ALUMINUM CONDUCTOR.
4. RAX-OR ASSEMBLIES MAYBE SHORTED AS PER LENGTH NOTED ON ERECTION DIAGRAM.

NTS

THE INFORMATION, INCLUDING ESTIMATED QUANTITIES OF WORK SHOWN ON THESE SHEETS IS BASED ON LIMITED INVESTIGATIONS BY THE STATE AND IS IN NO WAY WARRANTED TO INDICATE THE TRUE CONDITIONS OR ACTUAL QUANTITIES OR DISTRIBUTION OF QUANTITIES OF WORK WHICH WILL BE REQUIRED.

URS CORPORATION AES
500 ENTERPRISE DRIVE
ROCKY HILL, CT 06067
1-(860)-529-8882

THE Burns GROUP
ENGINEERING AND CONSTRUCTION
Burns Engineering, Inc.
Metro-Plaz II
8201 Corporate Drive, Suite 800
Landover, MD 20785-2230
phone 703-760-9076 fax 301-577-0088

NO.	DATE	DESCRIPTION

REVISIONS

STATE OF CONNECTICUT
DEPARTMENT OF TRANSPORTATION

SECTION C-1a & C-2 NEW HAVEN LINE

CATENARY REPLACEMENT BETWEEN WALK BRIDGE AND STRUCTURE 636, PECK BRIDGE AND STRUCTURE 863

MISCELLANEOUS ASSEMBLIES
SHEET 2

ENGINEER: BURNS ENGINEERING
DESIGNER: MS DRAFTER: HJ CHECKER: JCD
APPROVED: SDB DATE: 09/13/13
STRUCTURE NO. BRIDGE LOG NO. STRUCTURE SHEET NO. E-15

PROJECT CONTROL DATE: 09/13/13 DISK FILENAME:E-15.dwg 100% DESIGN

F H W A REGION	STATE	TOWN	FED. AID PROJ. NO.	PROJ. NO.	YEAR	SHEET NUMBER
1	CONN.	VARIOUS	CT-05-0109	301-0145	2013	01.03.053

URS CORPORATION AES
500 ENTERPRISE DRIVE
ROCKY HILL, CT 06067

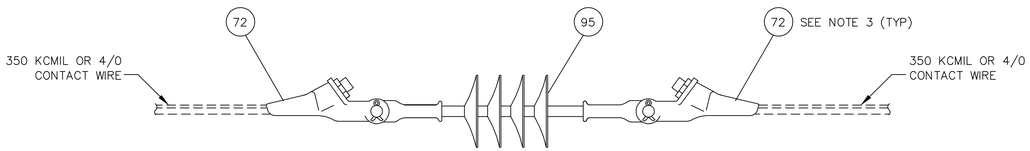

CONTACT WIRE IN-SPAN INSULATION
ASSEMBLY CIA-1

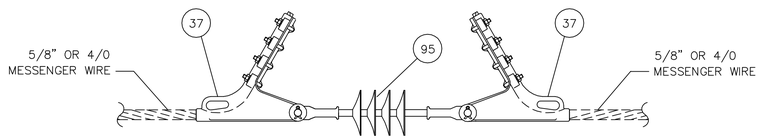

MESSENGER IN-SPAN INSULATION
ASSEMBLY - MIA-1

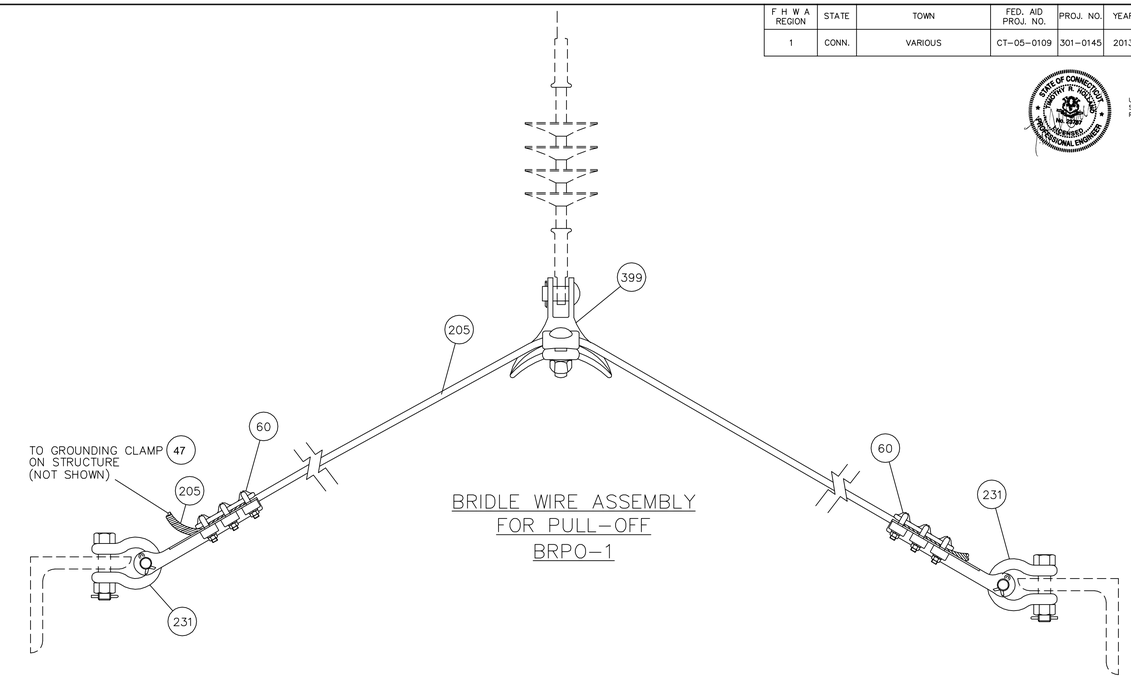

BRIDLE WIRE ASSEMBLY
FOR PULL-OFF
BRPO-1

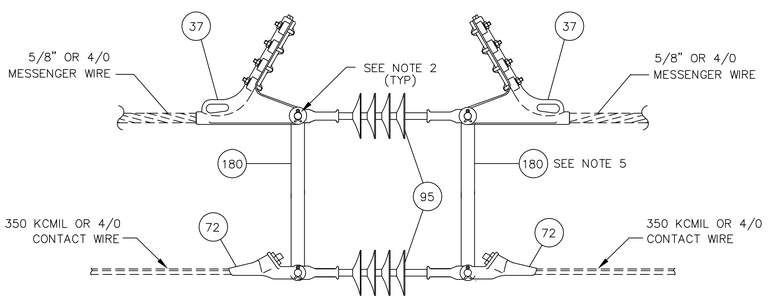

MESSENGER CONTACT IN-SPAN INSULATION
ASSEMBLY MCIA-1

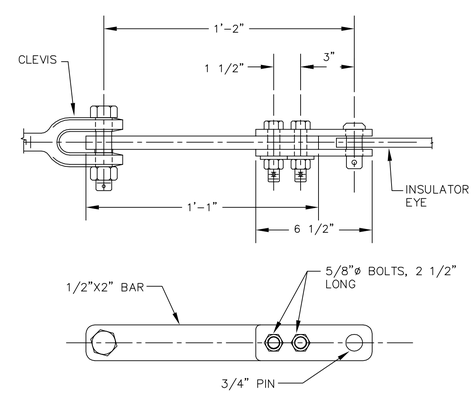

LINK EYE-CLEVIS 601

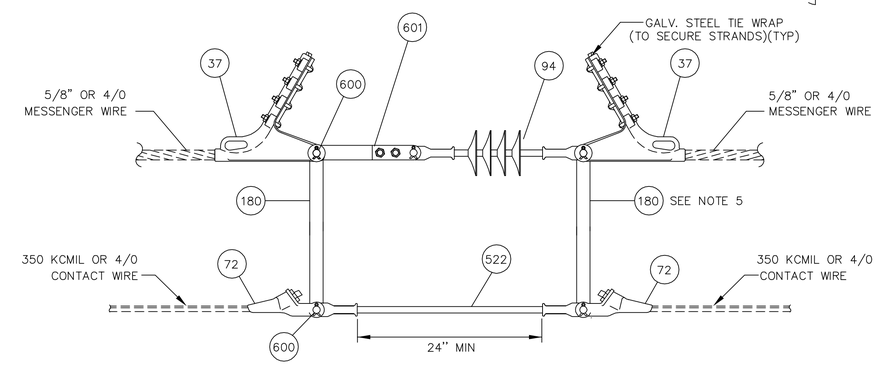

MESSENGER CONTACT IN-SPAN INSULATION
ASSEMBLY MCIA-2

ASSEMBLIES CIA-1, MIA-1, MCIA-1, MCIA-2 & BRPO-1							
PART No.	METRO-NORTH No.	DESCRIPTION	QUANTITY				
			CIA-1	MIA-1	MCIA-1	MCIA-2	BRPO-1
37	10202492	STRAIN CLAMP CONNECTOR	—	2	2	2	—
47	10201629	GROUNDING CLAMP (TINNED)	—	—	—	—	1
60	10201621	DEAD END CLAMP	—	—	—	—	2
72	10434410	DEAD END FITTING	2	—	2	2	—
94	10445115	SUSPENSION INSULATOR 36,000 LBS	—	—	—	1	—
95	10445113	SUSPENSION INSULATOR 25,000 LBS	1	1	2	—	—
180	10852375	3/16" x 1i" GALV STEEL STRAP (ANTI TORSION)	—	—	2	2	—
205	10997035	3/8"ø STAINLESS STEEL WIRE ROPE	—	—	—	—	FT
231	10850265	5/8" ANCHOR SHACKLE WITH 3/4" ø PIN	—	—	—	—	2
		LINK TONGUE TONGUE	—	—	—	1	—
399	82860	ANGLE CLAMP #82860	—	—	—	—	1
522		25KV ROD INSULATOR, TEFLON JACK.(18,000 LBS)	—	—	—	1	—
600		REDUCING BOLT ASSEMBLY (A325 5/8" BOLT)	—	—	—	2	—
601		LINK EYE-CLEVIS	—	—	—	1	—

NOTES:

1. THE IN-SPAN INSULATION ASSEMBLIES CIA-1, MCIA-1 AND MCIA-2 SHALL BE USED ONLY FOR NON-RIDING CONTACT WIRE.
2. USE EXTRA LONG PIN FOR ASSEMBLY WITH ANTI-TORSION STRAPS.
3. FOR DEAD END CLAMP, ITEM 72, USE COMPRESSION SLEEVE TO SUIT CONTACT WIRE SIZE.
4. FOR HANGER LENGTH SEE HANGER LENGTH DRAWING.
5. USE TINNED CONNECTORS FOR CONNECTION TO ALUMINUM CONDUCTOR.

NTS

THE INFORMATION, INCLUDING ESTIMATED QUANTITIES OF WORK SHOWN ON THESE SHEETS IS BASED ON LIMITED INVESTIGATIONS BY THE STATE AND IS IN NO WAY WARRANTED TO INDICATE THE TRUE CONDITIONS OR ACTUAL QUANTITIES OR DISTRIBUTION OF QUANTITIES OF WORK WHICH WILL BE REQUIRED.

URS CORPORATION AES
500 ENTERPRISE DRIVE
ROCKY HILL, CT 06067
1-(860)-529-8882

THE Burns GROUP
ENGINEERING AND CONSTRUCTION
Burns Engineering, Inc.
Metro-Plex II
8201 Corporate Drive, Suite 800
Landover, MD 20785-2230
phone 703-760-9076 fax 301-577-2088

NO.	DATE	DESCRIPTION

REVISIONS

STATE OF CONNECTICUT
DEPARTMENT OF TRANSPORTATION

SECTION C-1a & C-2 NEW HAVEN LINE

CATENARY REPLACEMENT BETWEEN WALK BRIDGE AND STRUCTURE 636, PECK BRIDGE AND STRUCTURE 863

MISCELLANEOUS ASSEMBLIES
SHEET 3

ENGINEER: BURNS ENGINEERING
DESIGNER: MS DRAFTER: HJ CHECKER: JCD
APPROVED: SDB DATE: 09/13/13
STRUCTURE NO. BRIDGE LOG NO. STRUCTURE SHEET NO. E-16

PROJECT CONTROL DATE: 09/13/13 DISK FILENAME: E-16.dwg 100% DESIGN

F H W A REGION	STATE	TOWN	FED. AID PROJ. NO.	PROJ. NO.	YEAR	SHEET NUMBER
1	CONN.	VARIOUS	CT-05-0109	301-0145	2013	01.03.054

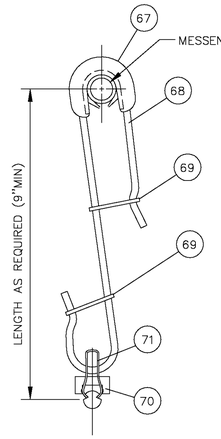

STANDARD CLIP HANGER
ASSEMBLY HA-1
(SEE NOTE 3)

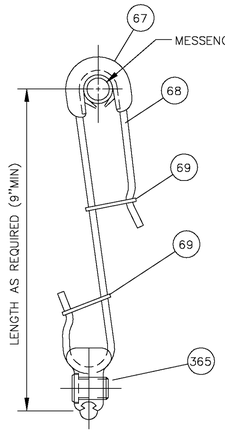

STANDARD HANGER
ASSEMBLY HA-2
(SEE NOTE 3)

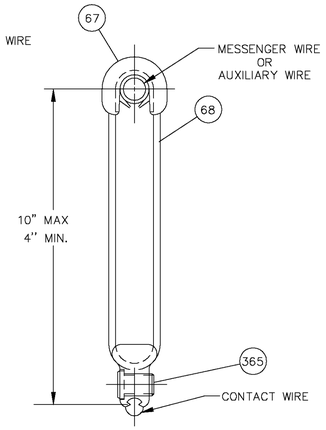

LOOP HANGER
ASSEMBLY LHA-3

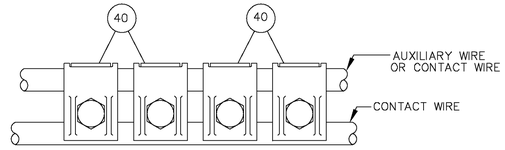

AUXILIARY CONTACT CLAMP
ASSEMBLY ACC-1

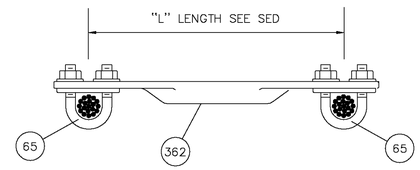

COMPRESSION MESSENGER WIRE KNUCKLE
ASSEMBLY MKA-9

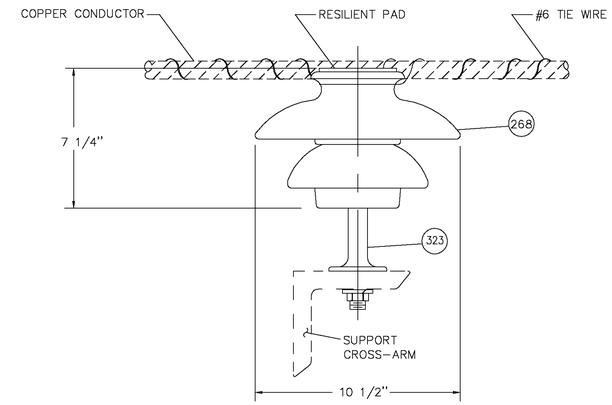

PIN INSULATOR ASSEMBLY 10B
(TYPICAL)

URS CORPORATION AES
500 ENTERPRISE DRIVE
ROCKY HILL, CT 06067

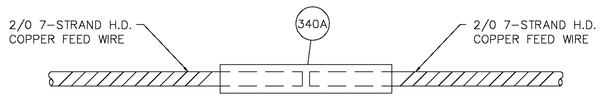

SIGNAL POWER WIRE SPLICE
ASSEMBLY SPS-1
FULL TENSION SPLICE
MINIMUM BREAKING LOAD = 5926 LBS

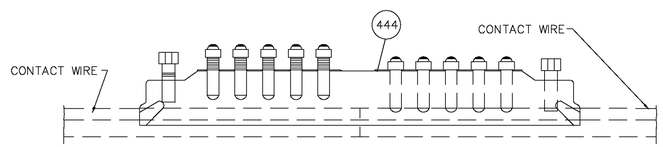

FULL TENSION SPLICE
MINIMUM BREAKING LOAD = 16410 LBS

TROLLEY WIRE SLEEVE
ASSEMBLY CWS-1

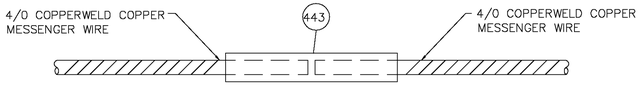

FULL TENSION SPLICE
MINIMUM BREAKING LOAD = 20730 LBS

MESSENGER WIRE SPLICE
ASSEMBLY MWS-1

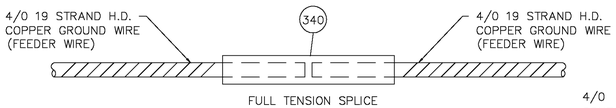

FULL TENSION SPLICE
MINIMUM BREAKING LOAD = 9617 LBS

GROUND WIRE SPLICE
ASSEMBLY GWS-1

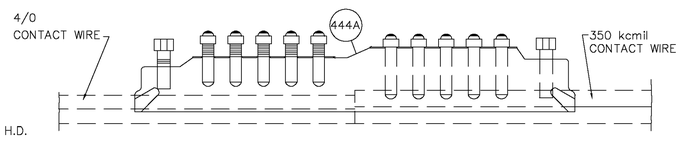

FULL TENSION SPLICE
4/0 MINIMUM BREAKING LOAD = 10820 LBS

COMPROMISE TROLLEY WIRE SPLICE
ASSEMBLY CTS-1

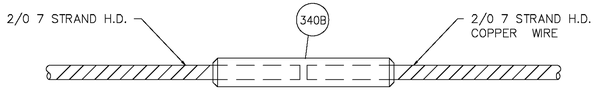

2/0 JUMPER SPLICE
ASSEMBLY FWS-1

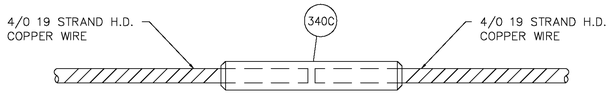

4/0 JUMPER SPLICE
ASSEMBLY FWS-2

ASSEMBLIES HA-1, HA-2, LHA-3,CWS-1,CTS-1,SPS-1,GWS-1,MWS-1,ACC-1,MKA-9 & 10B, FWS-1, FWS-2

PART No.	METRO-NORTH No.	DESCRIPTION	QTY PER ASSEMBLY												
			HA-1	HA-2	LHA-3	CWS-1	CTS-1	SPS-1	GWS-1	MWS-1	ACC-1	MKA-9	10B	FWS-1	FWS-2
40	10201624	TROLLEY CONTACT CLAMP	—	—	—	—	—	—	—	—	4	—	—	—	—
65	10100161	PRESSURE BAR ASSEMBLY	—	—	—	—	—	—	—	—	—	2	—	—	—
67	10100143	COPPER ARMOR WITH NEOPRENE LINER	1	1	1	—	—	—	—	—	—	—	—	—	—
68	10850050	3/16" STAINLESS STEEL ROD TYPE 304	AS REQ'D	AS REQ'D	AS REQ'D	—	—	—	—	—	—	—	—	—	—
69	10750166	HANGER RETAINER	2	2	—	—	—	—	—	—	—	—	—	—	—
70	10-434405	LOCK CLIP	1	—	—	—	—	—	—	—	—	—	—	—	—
71	10-434407	WIRE CLIP	1	—	—	—	—	—	—	—	—	—	—	—	—
268	10620750	35KV, PIN TYPE PORCELAIN INSULATOR	—	—	—	—	—	—	—	—	—	—	1	—	—
323	49493645	12" FORGED STEEL PIN FOR 35KV PIN INSULATOR	—	—	—	—	—	—	—	—	—	—	1	—	—
340	250905	GROUND WIRE SPLICE	—	—	—	—	—	—	1	—	—	—	—	—	—
340A		WIRE SPLICE	—	—	—	—	—	1	—	—	—	—	—	—	—
362		TUBE FOR FEEDER HANGER	—	—	—	—	—	—	—	—	—	FT	—	—	—
365		CONTACT WIRE CLAMP	—	1	1	—	—	—	—	—	—	—	—	—	—
443	10851619	MESSENGER WIRE SPLICE	—	—	—	—	—	—	—	1	—	—	—	—	—
444	10851626	TROLLEY WIRE SLEEVE 350	—	—	—	1	—	—	—	—	—	—	—	—	—
444A		COMPROMISE TROLLEY WIRE SPLICE 350 TO 4/0	—	—	—	—	1	—	—	—	—	—	—	—	—
340B		2/0 FEEDER TAIL WIRE SPLICE	—	—	—	—	—	—	—	—	—	—	—	1	—
340C		4/0 FEEDER TAIL WIRE SPLICE	—	—	—	—	—	—	—	—	—	—	—	—	1

NOTES:

1. LOOP HANGER SHALL BE UTILIZED AT TRANSITIONAL OVERLAPS.
2. USE TINNED CONNECTORS FOR CONNECTION TO ALUMINUM CONDUCTOR.
3. STANDARD CLIP HANGER HA-1 IS TO BE USED BETWEEN STRUCTURES 533 TO 631, 789 TO 798, 804 TO 857 AND 862 TO BR-1, STANDARD HANGER HA-2 IS TO BE USED BETWEEN STRUCTURES 530 TO 533, 798 TO 804 AND 857 TO 862.

NTS

THE INFORMATION, INCLUDING ESTIMATED QUANTITIES OF WORK SHOWN ON THESE SHEETS IS BASED ON LIMITED INVESTIGATIONS BY THE STATE AND IS IN NO WAY WARRANTED TO INDICATE THE TRUE CONDITIONS OR ACTUAL QUANTITIES OR DISTRIBUTION OF QUANTITIES OF WORK WHICH WILL BE REQUIRED.

URS CORPORATION AES
500 ENTERPRISE DRIVE
ROCKY HILL, CT 06067
1-(860)-529-8882

THE Burns GROUP
ENGINEERING AND CONSTRUCTION
Burns Engineering, Inc.
Metro-Plex II
8200 Corporate Drive, Suite 800
Landover, MD 20785-2230
phone 703-760-9076 fax 301-577-2088

NO.	DATE	DESCRIPTION

REVISIONS

STATE OF CONNECTICUT
DEPARTMENT OF TRANSPORTATION

SECTION C-1a & C-2 NEW HAVEN LINE

CATENARY REPLACEMENT BETWEEN WALK BRIDGE AND STRUCTURE 636, PECK BRIDGE AND STRUCTURE 863

MISCELLANEOUS ASSEMBLIES
SHEET 4

ENGINEER: BURNS ENGINEERING
DESIGNER: MS DRAFTER: HJ CHECKER: JCD
APPROVED: SDB DATE: 09/13/13
STRUCTURE NO. BRIDGE LOG NO. STRUCTURE SHEET NO. E-17

PROJECT CONTROL DATE: 09/13/13 DISK FILENAME: E-17.dwg 100% DESIGN

F H W A REGION	STATE	TOWN	FED. AID PROJ. NO.	PROJ. NO.	YEAR	SHEET NUMBER
1	CONN.	VARIOUS	CT-05-0109	301-0145	2013	01.03.055

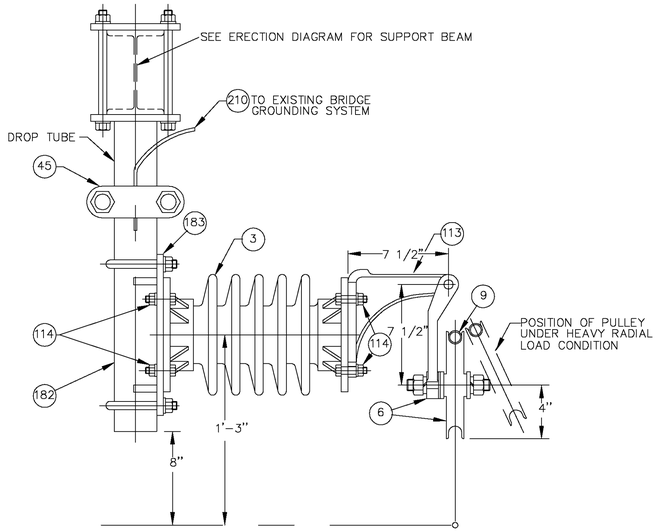

ASSEMBLY MS-5

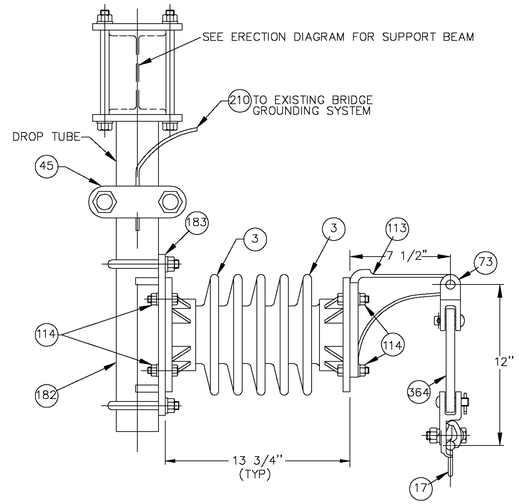

ASSEMBLY MS-6

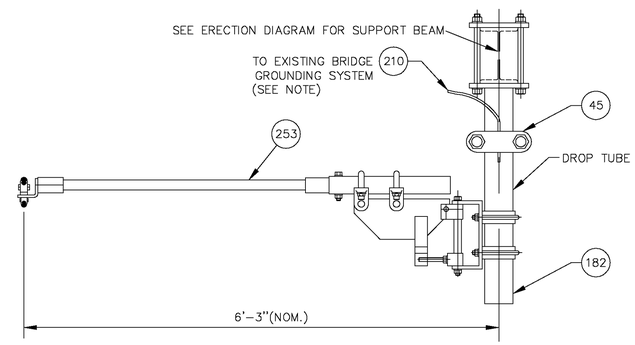

ASSEMBLIES MS-7 & MS-8

ELEVATION VIEW

NOTE: MS-8 SAME AS MS-7 BUT WITH ARM MOUNTED UPSIDE DOWN FOR CLEARANCE

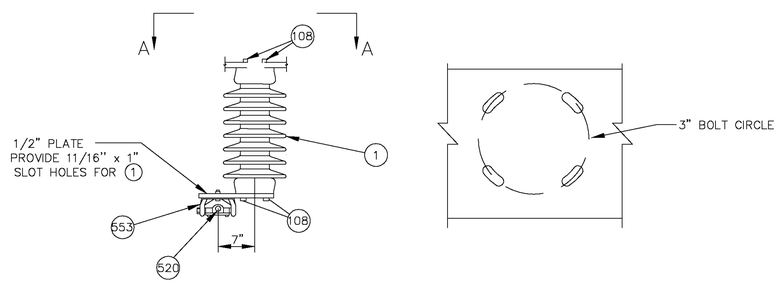

SECTION A-A

ASSEMBLY MS-9

MESSENGER SUPPORT ASSEMBLY

NOTE: ASSEMBLY MS-9 SHALL BE USED AT HOLD-DOWN CATENARY STRUCTURES. FOR ACTUAL LOCATIONS SEE SEDs.

ASSEMBLIES - MS-5, MS-6, MS-7, MS-8 & MS-9

PART No.	METRO-NORTH No.	DESCRIPTION	QUANTITY				
			MS-5	MS-6	MS-7	MS-8	MS-9
1	10445110	CANTILEVER INSULATOR (2000 LBS)	—	—	—	—	1
3	10445100	4000 LB CANTILEVER INSULATOR	1	1	—	—	—
6	10739102	PULLEY ASSEMBLY W/PULLEY HOLDER	1	—	—	—	—
9	10435750	PREFORM LINE GUARD	1	—	—	—	—
17	10201662	SUSPENSION CLAMP	—	1	—	—	—
45	10202460	GROUNDING CONNECTORS	1	1	1	1	—
73	10206310	LINK DOUBLE CLEVIS 90°	—	1	—	—	—
108	19130912	1/2"ø x 1 1/4" BOLT, NUT AND LOCKWASHER	—	—	—	—	8
113	10200166	PULLEY BRACKET ASSEMBLY	1	1	—	—	—
114	19130913	1/2"ø X 1 3/4"S.S. STEEL BOLT, NUT & LOCKWASHER	8	8	—	—	—
182	10434559	DROP TUBE ASSEMBLY	1	1	1	1	—
183	10100132	MESS SUPPORT SADDLE ASSEMBLY W/(2) 1/2"U-BOLTS	1	1	—	—	—
210	10997111	4/0 SOFT DRAWN COPPER WIRE "CLASS H"	AS REQ'D	AS REQ'D	AS REQ'D	AS REQ'D	—
253		BRACKET UNDER BRIDGE ASSEMBLY	—	—	1	1	—
364		LINK TONGUE TONGUE	—	1	—	—	—
520		TRUNNION CLAMP, COPPER ALLOY W/BOLTS AND NUTS	—	—	—	—	1
553		TRUNNION CLAMP BASE	—	—	—	—	1
		1/2" STEEL PLATE	—	—	—	—	1

NOTES:

1. THE CONTRACTOR SHALL VERIFY FIELD CONDITIONS FOR ACTUAL STRUCTURAL ARRANGEMENTS AND PROVIDE THE REQUIRED MATERIALS AND ASSEMBLIES ON SITE SPECIFIC BASIS.
2. USE TINNED CONNECTORS FOR CONNECTION TO ALUMINUM CONDUCTOR.

NTS

THE INFORMATION, INCLUDING ESTIMATED QUANTITIES OF WORK SHOWN ON THESE SHEETS IS BASED ON LIMITED INVESTIGATIONS BY THE STATE AND IS IN NO WAY WARRANTED TO INDICATE THE TRUE CONDITIONS OR ACTUAL QUANTITIES OR DISTRIBUTION OF QUANTITIES OF WORK WHICH WILL BE REQUIRED.

URS CORPORATION AES
500 ENTERPRISE DRIVE
ROCKY HILL, CT 06067
1-(860)-529-8882

THE Burns GROUP
ENGINEERING AND CONSTRUCTION
Burns Engineering, Inc.
Metro-Plex II
8201 Corporate Drive, Suite 800
Landover, MD 20785-2230
phone 703-760-9076 fax 301-577-0088

NO.	DATE	DESCRIPTION

REVISIONS

STATE OF CONNECTICUT
DEPARTMENT OF TRANSPORTATION

SECTION C-1a & C-2 NEW HAVEN LINE

CATENARY REPLACEMENT BETWEEN WALK BRIDGE AND STRUCTURE 636, PECK BRIDGE AND STRUCTURE 863

GENERAL ARRANGEMENT FOR BRIDGE ATTACHMENTS

ENGINEER: BURNS ENGINEERING

DESIGNER: MS DRAFTER: HJ CHECKER: JCD

APPROVED: SDB DATE: 09/13/13

STRUCTURE NO. BRIDGE LOG NO. STRUCTURE SHEET NO. E-19

PROJECT CONTROL DATE: 09/13/13 DISK FILENAME: E-19.dwg 100% DESIGN

F H W A REGION	STATE	TOWN	FED. AID PROJ. NO.	PROJ. NO.	YEAR	SHEET NUMBER
1	CONN.	VARIOUS	CT-05-0109	301-0145	2013	01.03.056

URS CORPORATION AES
500 ENTERPRISE DRIVE
ROCKY HILL, CT 06067

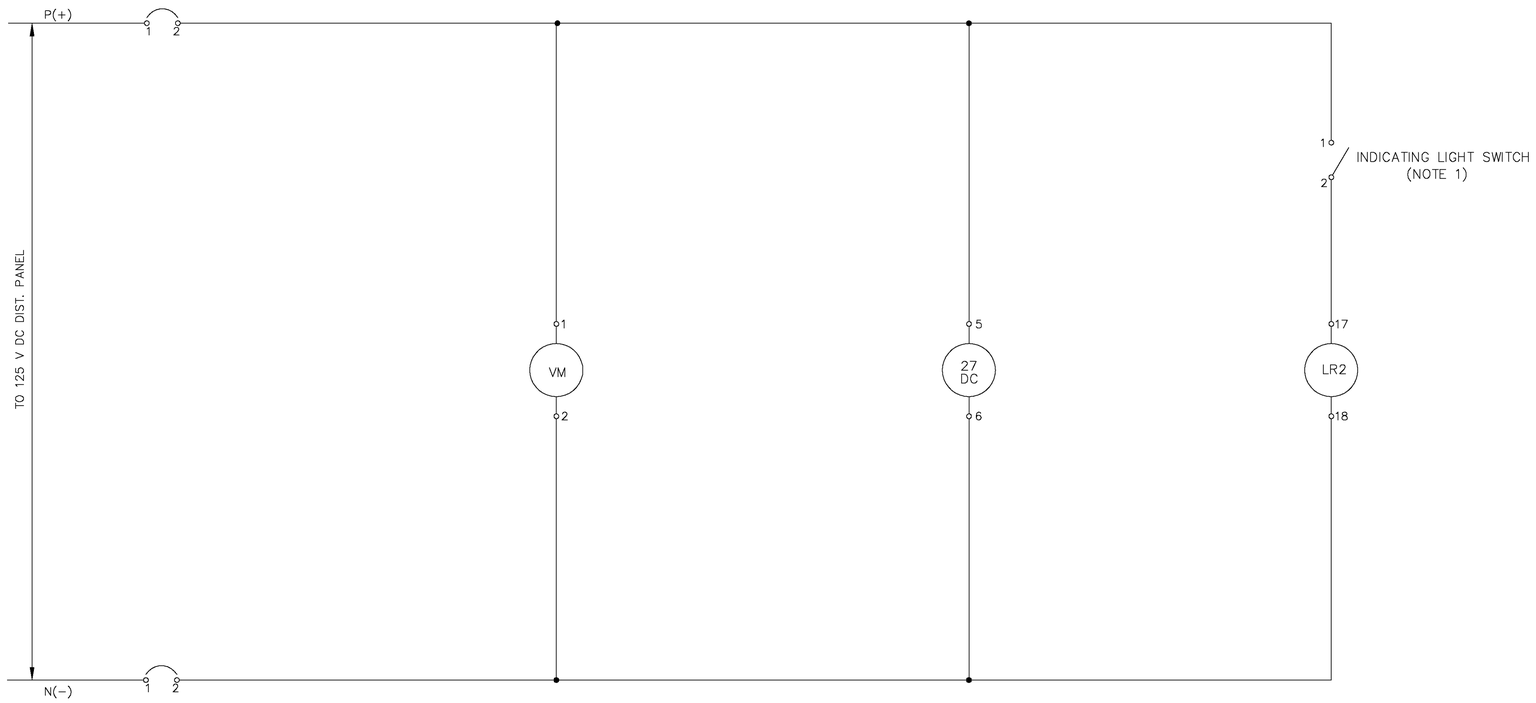

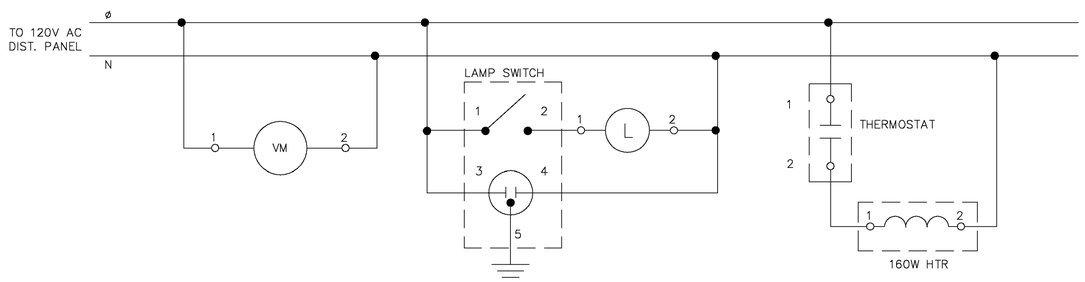

NOTES:

1. INDICATING LIGHT SWITCH SHALL ENERGIZE ALL INDICATING LIGHTS IN MOD CONTROL PANEL VIA CONTACTS FROM INDICATING LIGHT RELAY LR2, AS SHOWN ON SCHEMATIC DIAGRAMS.

THE INFORMATION, INCLUDING ESTIMATED QUANTITIES OF WORK SHOWN ON THESE SHEETS IS BASED ON LIMITED INVESTIGATIONS BY THE STATE AND IS IN NO WAY WARRANTED TO INDICATE THE TRUE CONDITIONS OR ACTUAL QUANTITIES OR DISTRIBUTION OF QUANTITIES OF WORK WHICH WILL BE REQUIRED.

URS CORPORATION AES
500 ENTERPRISE DRIVE
ROCKY HILL, CT 06067
1-(860)-529-8882

THE Burns GROUP
ENGINEERING AND CONSTRUCTION

Burns Engineering, Inc.
Metro-Plaz II
8201 Corporate Drive, Suite 800
Landover, MD 20785-2230
phone 703-760-9076 fax 301-577-0088

NO.	DATE	DESCRIPTION

REVISIONS

STATE OF CONNECTICUT
DEPARTMENT OF TRANSPORTATION

SECTION C-1a & C-2 NEW HAVEN LINE

CATENARY REPLACEMENT BETWEEN WALK BRIDGE AND STRUCTURE 636, PECK BRIDGE AND STRUCTURE 863

MOD CONTROL PANEL
AC & DC SCHEMATICS (TYP.)

ENGINEER: BURNS ENGINEERING
DESIGNER: MS DRAFTER: HJ CHECKER: JCD
APPROVED: SDB DATE: 09/13/13
STRUCTURE NO. BRIDGE LOG NO. STRUCTURE SHEET NO. E-53

PROJECT CONTROL DATE: 09/13/13 DISK FILENAME: E-53.dwg 100% DESIGN

F.H.W.A. REGION	STATE	TOWN	FED. AID PROJ. NO.	PROJ. NO.	YEAR	SHEET NUMBER
1	CONN.	VARIOUS	CT-05-0109	301-0145	2013	01.03.057

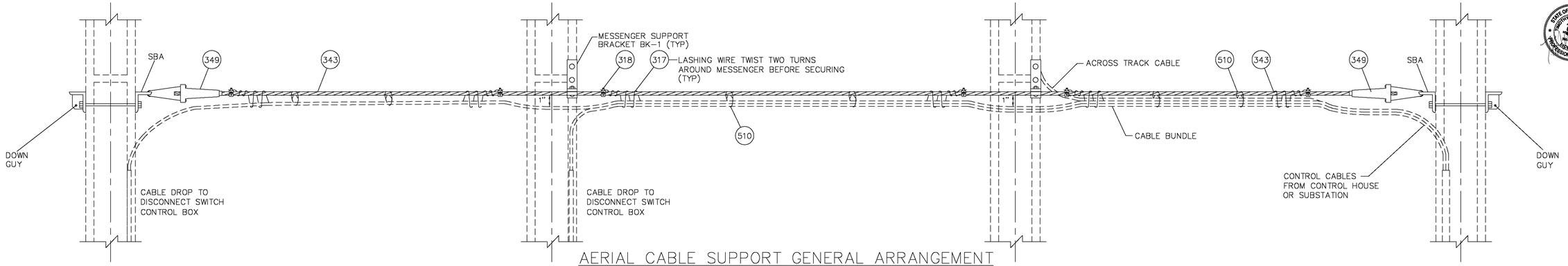

AERIAL CABLE SUPPORT GENERAL ARRANGEMENT
CABLE SUPPORT ASSEMBLY 14A (TYP)
(ALONG TRACK ON STRUCTURES)

URS CORPORATION AES
500 ENTERPRISE DRIVE
ROCKY HILL, CT 06067

NOTES:

1. THE ARRANGEMENTS TO SUPPORT AERIAL CABLES ON STRUCTURES AS SHOWN ARE TYPICAL. THE CONTRACTOR SHALL DEVELOP SITE SPECIFIC ARRANGEMENTS TO SUIT INTENDED REQUIREMENTS.
2. THE ALONG TRACK 7/16" GALV. STEEL WIRE WILL BE TENSIONED TO 3250 LBS AT 60° F. FOR ACROSS TRACK 7/16" GALV. STEEL WIRE THE TENSION WILL BE 2000 LBS.
3. THE AERIAL CABLE SUPPORT ARRANGEMENT FOR ACROSS TRACK CABLES MAY BE INSIDE THE STRUCTURE BOOM AS SHOWN OR ABOVE THE STRUCTURE BOOM DEPENDING ON SITE CONDITIONS AS SHOWN ON SEDS.
4. SEE DWG S-21 FOR DETAILS OF BRACKET BK1. THE QUANTITY IS AS REQUIRED.
5. CONTRACTOR TO PROVIDE A MIDSPAN SUPPORT BRACKET WITHIN TRUSS TO SUPPORT LOADED MESSENGER.

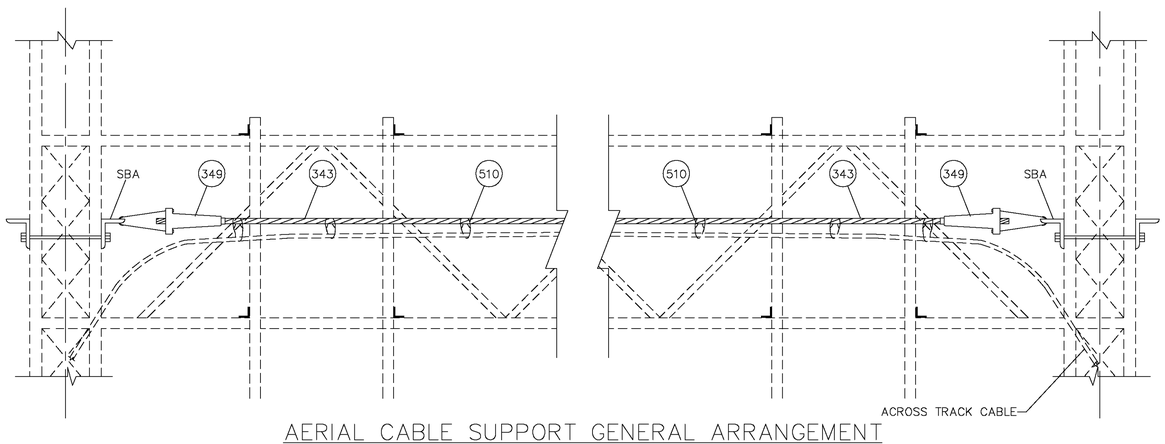

AERIAL CABLE SUPPORT GENERAL ARRANGEMENT
(ACROSS TRACK ON PORTAL TRUSS)
(SEE NOTE 5.)

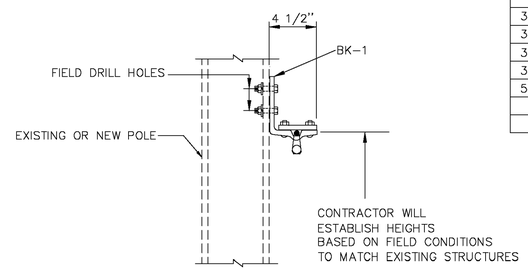

MESSENGER SUPPORT BRACKET BK1
MOUNTING ARRANGEMENT (TYP)
(SEE NOTE 4)

PART NO.	METRO-NORTH NO.	DESCRIPTION	QTY
317		LASHING WIRE	FT
318		LASHING WIRE CLAMP.	AS REQD
343		7/16" 7 STRAND GALV. STEEL WIRE	FT
349		STRANDVISE FOR 7/16" SUPPORT MESSENGER	2
510		GALV. STEEL WIRE RINGS TO SUPPORT CABLES	AS REQD

THE INFORMATION, INCLUDING ESTIMATED QUANTITIES OF WORK SHOWN ON THESE SHEETS IS BASED ON LIMITED INVESTIGATIONS BY THE STATE AND IS IN NO WAY WARRANTED TO INDICATE THE TRUE CONDITIONS OR ACTUAL QUANTITIES OR DISTRIBUTION OF QUANTITIES OF WORK WHICH WILL BE REQUIRED.

URS CORPORATION AES
500 ENTERPRISE DRIVE
ROCKY HILL, CT 06067
1-(860)-529-8882

THE Burns GROUP
ENGINEERING AND CONSTRUCTION
Burns Engineering, Inc.
Metro-Plaz II
8201 Corporate Drive, Suite 800
Landover, MD 20785-2230
phone 703-760-9076 fax 301-577-0088

NO.	DATE	DESCRIPTION

REVISIONS

STATE OF CONNECTICUT
DEPARTMENT OF TRANSPORTATION

SECTION C-1a & C-2 NEW HAVEN LINE

CATENARY REPLACEMENT BETWEEN WALK BRIDGE AND STRUCTURE 636, PECK BRIDGE AND STRUCTURE 863

AERIAL CABLE SUPPORT ARRANGEMENT

ENGINEER: BURNS ENGINEERING
DESIGNER: MS DRAFTER: HJ CHECKER: JCD
APPROVED: SDB DATE: 09/13/13
STRUCTURE NO. BRIDGE LOG NO. STRUCTURE SHEET NO. E-60

PROJECT CONTROL DATE: 09/13/13 DISK FILENAME: E-60.dwg 100% DESIGN

F.H.W.A. REGION	STATE	TOWN	FED. AID PROJ. NO.	PROJ. NO.	YEAR	SHEET NUMBER
1	CONN.	VARIOUS	CT-05-0109	301-0145	2013	01.03.058

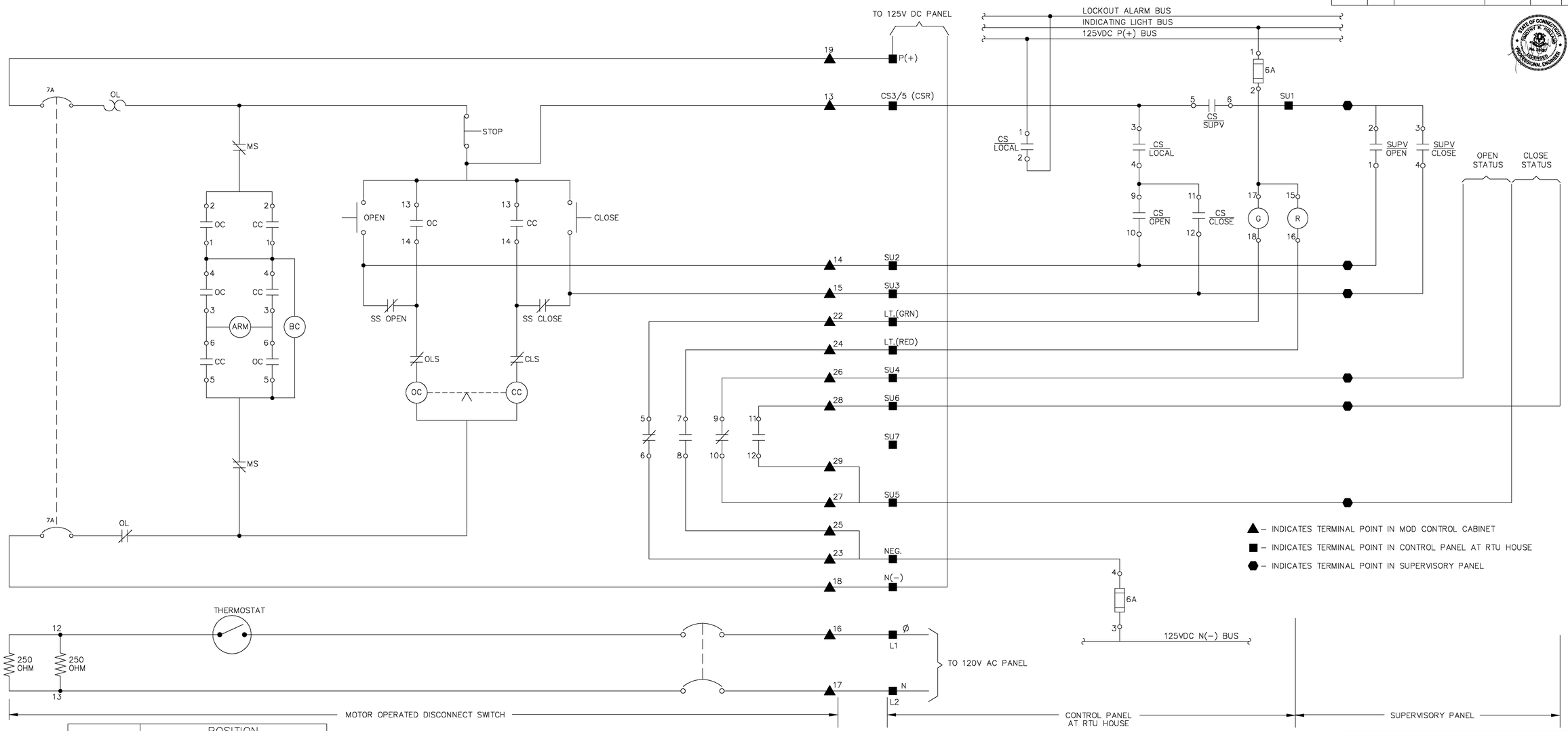

URS CORPORATION AES
500 ENTERPRISE DRIVE
ROCKY HILL, CT 06067

STAGE	POSITION			
	SUPV	LOCAL		
CONTACTS (HANDLE END)	PULL OUT	PUSH IN	CLOSE	OPEN
	LATERAL		ROTARY ①	
1		X		
2		X		
3		X		
4		X		
5	X			
6	X			
7	X			
8	X			
9				X
10				X
11			X	
12			X	
13				X
14				X

CONTROL SWITCH (TYP)

① ROTARY OPERATION TO BE OBTAINABLE ONLY IN PUSH-IN (LOCAL) POSITION.

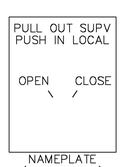

NAMEPLATE (FRONT VIEW)

NOTES:

1. THE CONTROL SCHEMATIC DIAGRAM FOR MOTOR OPERATED DISCONNECT SWITCH SHOWN IS TYPICAL. THE CONTRACTOR SHALL DEVELOP SIMILAR DRAWINGS BASED ON ACTUAL EQUIPMENT SUPPLIED.

THE INFORMATION, INCLUDING ESTIMATED QUANTITIES OF WORK SHOWN ON THESE SHEETS IS BASED ON LIMITED INVESTIGATIONS BY THE STATE AND IS IN NO WAY WARRANTED TO INDICATE THE TRUE CONDITIONS OR ACTUAL QUANTITIES OR DISTRIBUTION OF QUANTITIES OF WORK WHICH WILL BE REQUIRED.

URS CORPORATION AES
500 ENTERPRISE DRIVE
ROCKY HILL, CT 06067
1-(860)-529-8882

THE Burns GROUP
ENGINEERING AND CONSTRUCTION
Burns Engineering, Inc.
Metro-Plex II
8201 Corporate Drive, Suite 800
Landover, MD 20785-2230
phone 301-560-9076 fax 301-577-2088

NO.	DATE	DESCRIPTION

REVISIONS

STATE OF CONNECTICUT
DEPARTMENT OF TRANSPORTATION

SECTION C-1a & C-2 NEW HAVEN LINE

CATENARY REPLACEMENT BETWEEN WALK BRIDGE AND STRUCTURE 636, PECK BRIDGE AND STRUCTURE 863

MOTOR OPERATED SWITCH CONTROL SCHEMATICS (TYP)

ENGINEER: BURNS ENGINEERING
DESIGNER: MS DRAFTER: HJ CHECKER: JCD
APPROVED: SDB DATE: 09/13/13
STRUCTURE NO. BRIDGE LOG NO. STRUCTURE SHEET NO. E-91

100% DESIGN
DISK FILENAME: E-91.dwg
PROJECT CONTROL DATE: 09/13/13

F.H.W.A. REGION	STATE	TOWN	FED. AID PROJ. NO.	PROJ. NO.	YEAR	SHEET NUMBER
1	CONN.	VARIOUS	CT-05-0109	301-0145	2013	01.03.059

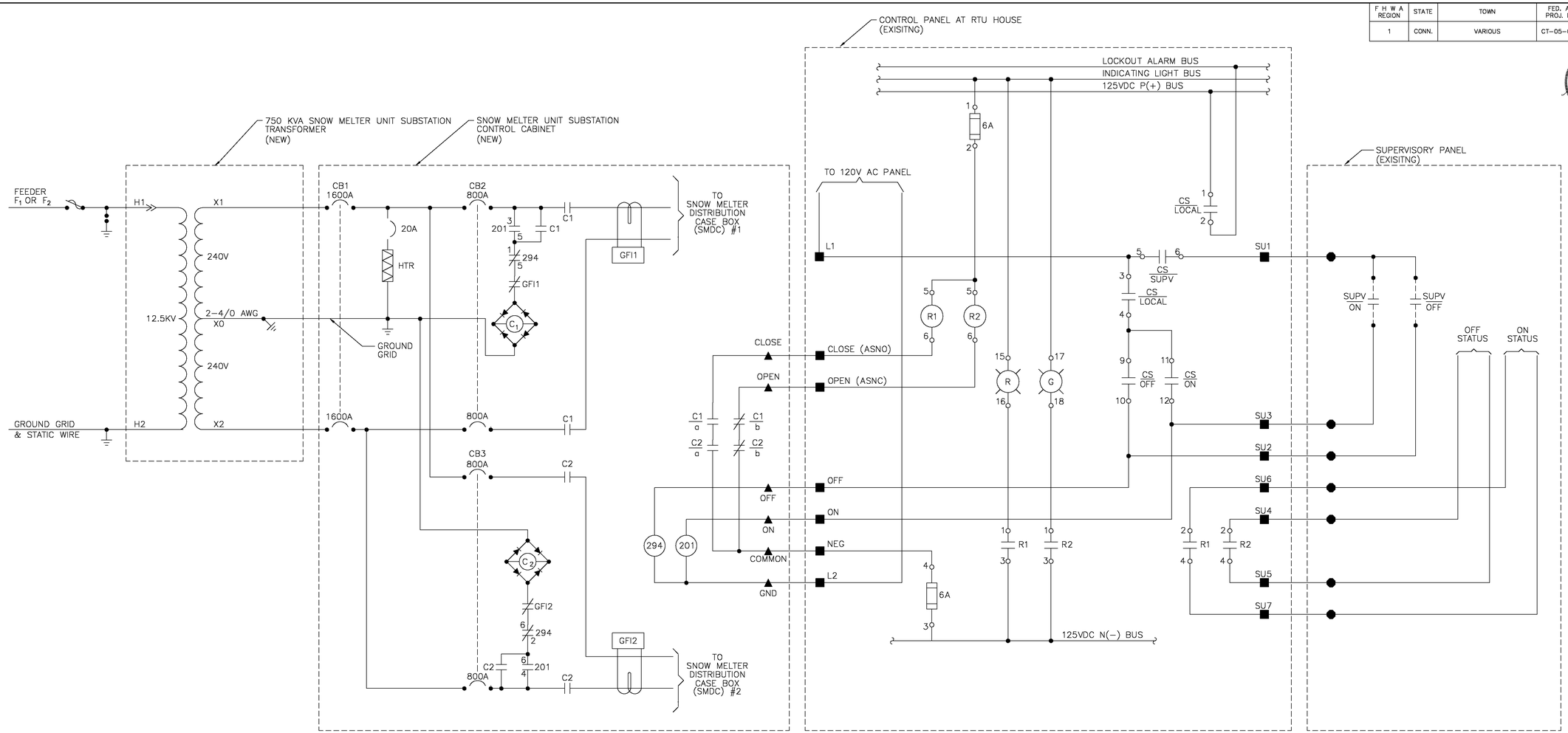

▲ – INDICATES TERMINAL POINTS IN SNOW MELTER CONTROL CABINET

■ – INDICATES TERMINAL POINTS IN CONTROL PANEL AT RTU HOUSE

● – INDICATES TERMINAL POINTS IN SUPERVISORY PANEL

	STAGE	POSITION			
		SUPV.	LOCAL		
	CONTACTS (HANDLE END)	PULL OUT	PUSH IN	CLOSE	OPEN
		LATERAL		ROTARY (1)	
1			X		
2			X		
3			X		
4			X		
5		X			
6		X			
7		X			
8		X			
9					X
10					X
11				X	
12				X	
13					X
14					X

CONTROL SWITCH (TYP)

(1) ROTARY OPERATION TO BE OBTAINABLE ONLY IN PUSH-IN (LOCAL) POSITION

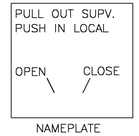

NAMEPLATE (FRONT VIEW)

NOTES:

1. 201 & 294 ARE 120 V AC RELAYS LOCATED IN SNOW MELTER CONTROL CABINET.
2. THE CONTROL SCHEMATIC DIAGRAM FOR SNOW MELTER UNIT SUBSTATION SHOWN IS TYPICAL. THE CONTRACTOR SHALL DEVELOP SIMILAR DRAWINGS BASED ON ACTUAL EQUIPMENT SUPPLIED.

THE INFORMATION, INCLUDING ESTIMATED QUANTITIES OF WORK SHOWN ON THESE SHEETS IS BASED ON LIMITED INVESTIGATIONS BY THE STATE AND IS IN NO WAY WARRANTED TO INDICATE THE TRUE CONDITIONS OR ACTUAL QUANTITIES OR DISTRIBUTION OF QUANTITIES OF WORK WHICH WILL BE REQUIRED.

URS CORPORATION AES
500 ENTERPRISE DRIVE
ROCKY HILL, CT 06067
1-(860)-529-8882

THE Burns GROUP
ENGINEERING AND CONSTRUCTION
Burns Engineering, Inc.
Metro Plex II
8200 Corporate Drive, Suite 800
Landover, MD 20785-2230
phone 703-760-9076 fax 301-577-1088

NO.	DATE	DESCRIPTION

REVISIONS

STATE OF CONNECTICUT
DEPARTMENT OF TRANSPORTATION

SECTION C-1a & C-2 NEW HAVEN LINE

CATENARY REPLACEMENT BETWEEN WALK BRIDGE AND STRUCTURE 636, PECK BRIDGE AND STRUCTURE 863

750 KVA SNOW MELTER UNIT SUBSTATION CONTROL SCHEMATIC

ENGINEER: BURNS ENGINEERING

DESIGNER: MS DRAFTER: HJ CHECKER: JCD

APPROVED: SDB DATE: 09/13/13

STRUCTURE NO. BRIDGE LOG NO. STRUCTURE SHEET NO. E-93

PROJECT CONTROL DATE: 09/13/13 DISK FILENAME: E-93.dwg 100% DESIGN

F H W A REGION	STATE	TOWN	FED. AID PROJ. NO.	PROJ. NO.	YEAR	SHEET NUMBER
1	CONN.	VARIOUS	CT-05-0109	301-0145	2013	01.03.060

STATE OF CONNECTICUT · DUSTIN K. BOLLING · No. 29397 · LICENSED PROFESSIONAL ENGINEER

URS CORPORATION AES
500 ENTERPRISE DRIVE
ROCKY HILL, CT 06067

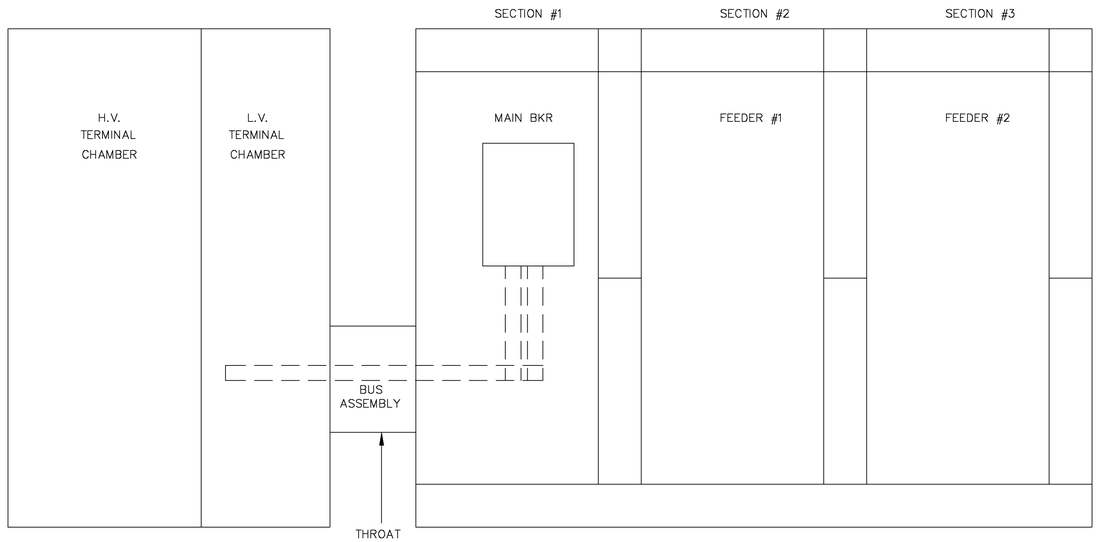

SNOWMELTER UNIT SUBSTATION FRONT VIEW

500 KVA CIRCUIT BREAKER CONTACTOR SCHEDULE			
DEVICE	DEVICE RATING	DEVICE TYPE	FUNCTION
CB1	1200	MAIN BREAKER	SECONDARY MAIN
CB2	600	CONTACTOR	SMDC #1
CB3	600	CONTACTOR	SMDC #2
CB4	20	MOLDED CASE CIRCUIT BREAKER	STRIP HEATERS

750 KVA CIRCUIT BREAKER CONTACTOR SCHEDULE			
DEVICE	DEVICE RATING	DEVICE TYPE	FUNCTION
CB1	1600	MAIN BREAKER	SECONDARY MAIN
CB2	800	CONTACTOR	SMDC #1
CB3	800	CONTACTOR	SMDC #2
CB4	20	MOLDED CASE CIRCUIT BREAKER	STRIP HEATERS

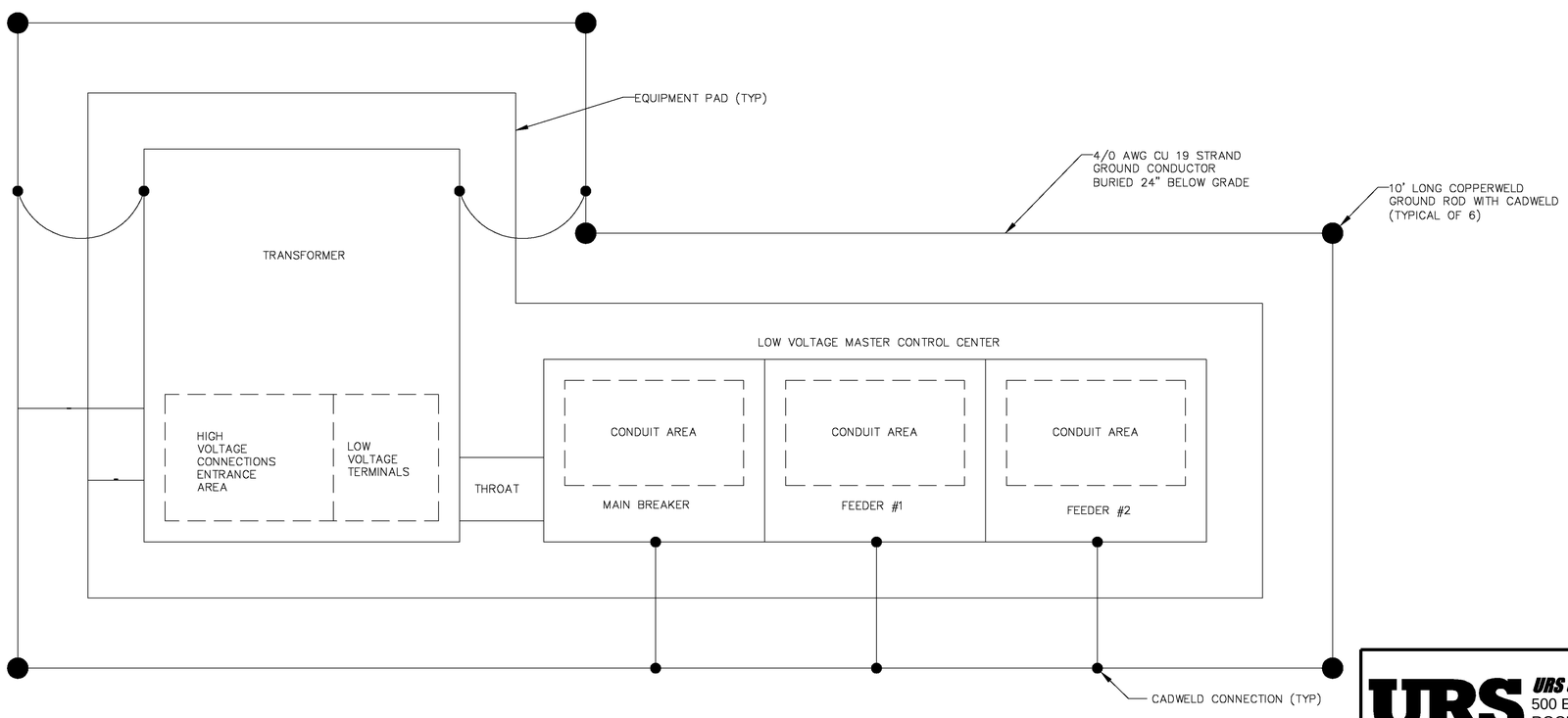

SNOWMELTER UNIT SUBSTATON PLAN VIEW

NOTES:

1. ALL GROUND CONNECTIONS FROM THE EQUIPMENT(S) GROUND LUGS TO THE GROUND LOOP SHALL BE OF 4/0 AWG CU 19 STRAND CABLE AND CADWELDED.
2. THE ROUTING AND ENTRANCE OF THE CONDUITS FOR HIGH VOLTAGE TAP, CONTROL CABLES TO RTU SHALL BE A FIELD DECISION IN COORDINATION WITH THE ENGINEER.
3. THE CABLES AND CONDUITS TO SNOW MELTER DISTRIBUTION CASE SHALL BE BY OTHERS THE CONTRACTOR SHALL COORDINATE WITH THE ENGINEER IN THIS REGARD.

THE INFORMATION, INCLUDING ESTIMATED QUANTITIES OF WORK SHOWN ON THESE SHEETS IS BASED ON LIMITED INVESTIGATIONS BY THE STATE AND IS IN NO WAY WARRANTED TO INDICATE THE TRUE CONDITIONS OR ACTUAL QUANTITIES OR DISTRIBUTION OF QUANTITIES OF WORK WHICH WILL BE REQUIRED.

URS CORPORATION AES
500 ENTERPRISE DRIVE
ROCKY HILL, CT 06067
1-(860)-529-8882

THE Burns GROUP
ENGINEERING AND CONSTRUCTION
Burns Engineering, Inc.
Metro-Plex II
8201 Corporate Drive, Suite 800
Landover, MD 20785-2230
phone 703-760-9076 fax 301-577-2088

NO.	DATE	DESCRIPTION

REVISIONS

STATE OF CONNECTICUT
DEPARTMENT OF TRANSPORTATION

SECTION C-1a & C-2 NEW HAVEN LINE

CATENARY REPLACEMENT BETWEEN WALK BRIDGE AND STRUCTURE 636, PECK BRIDGE AND STRUCTURE 863

SNOW MELTER CABINET
OUTLINE & PLAN VIEWS (TYP)

ENGINEER: BURNS ENGINEERING
DESIGNER: MS DRAFTER: HJ CHECKER: JCD
APPROVED: SDB DATE: 09/13/13
STRUCTURE NO. BRIDGE LOG NO. STRUCTURE SHEET NO. E-102

F H W A REGION	STATE	TOWN	FED. AID PROJ. NO.	PROJ. NO.	YEAR	SHEET NUMBER
1	CONN.	VARIOUS	CT-05-0109	301-0145	2013	01.03.061

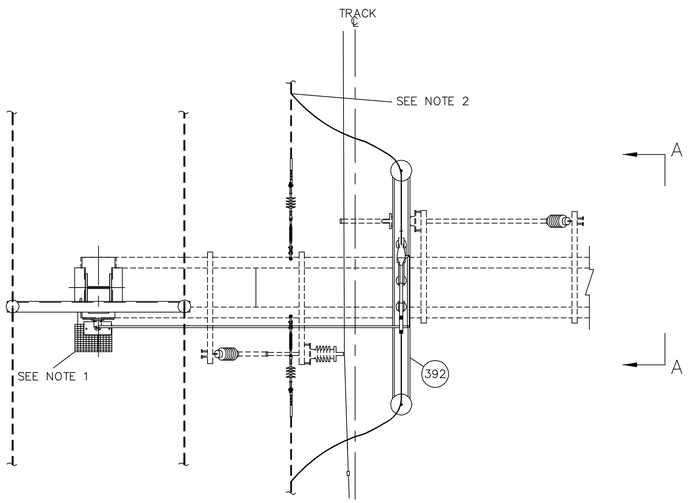

TOP VIEW
DS-1A AND DSVI-1

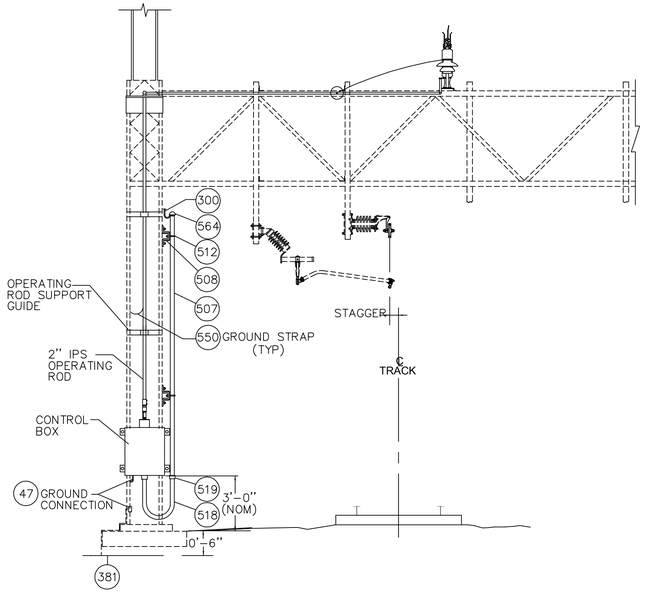

SIDE VIEW
DS-1A AND DSVI-1

ASSEMBLIES – DS-1A, DSVI-1, GW-1A

PART No.	METRO-NORTH No.	DESCRIPTION	QTY DS-1A	QTY DSVI-1	
47	10201629	GROUND CONNECTOR, CABLE TO FLAT SURFACE	1	1	
264		4-HOLE U-BOLT TERMINAL LUG (TO SUIT 500 KCMIL COPPER CONDUCTOR)	2	2	
268		35KV PIN TYPE PORCELAIN INSULATOR	4	2	
300		14C/#10 600V EPR CABLE	FT	FT	
323		FORGED STEEL PIN FOR 35KV PIN INSULATOR	4	2	
329		34.5 KV MOTOR OPERATED DISCONNECT SWITCH	1	——	
329A		MOTOR OPERATED INTERRUPTER DISCONNECT SWITCH	——	1	
381		GROUND MAT	1	1	
392		PIN INSULATOR MOUNTING BRACKET	4	2	
507		1 1/2"ø GALVANIZED RIGID STEEL CONDUIT	FT	——	
508		CONDUIT SUPPORT ASSEMBLY FOR 1i"ø STEEL CONDUIT	AS REQ'D	——	
512		2-PIECE PIPE STRAP FOR 1 1/2"ø CONDUIT	AS REQ'D	——	
518		1 1/2"ø FLEXIBLE METAL CONDUITS	1	——	
519		CONDUIT COUPLER FOR 1 1/2"ø CONDUITS	1	——	
550		GROUND STRAP	1	——	
564		WEATHER HEAD (1 1/2")	1	——	
574		2"ø GALVANIZED RIGID STEEL CONDUIT	FT	FT	
575		WEATHER HEAD (2")	1	1	
576		CONDUIT SUPPORT ASSEMBLY FOR 2"ø STEEL CONDUIT	AS REQ'D	AS REQ'D	
588		2-PIECE PIPE STRAP FOR 2"ø CONDUIT	AS REQ'D	AS REQ'D	
——		2"ø FLEXIBLE METAL CONDUITS	1	1	
——		CONDUIT COUPLER FOR 2"ø CONDUITS	1	1	
——		CATENARY FEEDING JUMPER TYPE B-500 C	2	2	

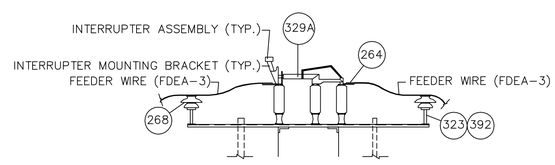

SECTION A-A
DSVI-1- INTERUPTOR DISCONNECT SWITCH

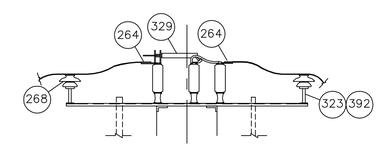

SECTION A-A
DS-1A DISCONNECT SWITCH

NOTES:

1. GROUND MAT SHALL BE SIZED AT LEAST 6'-0" BY 4'-0".
2. FOR CONNECTION TO CATENARY, SEE CATENARY FEEDING JUMPER TYPE B-500 C ON DRAWING E-212.

THE INFORMATION, INCLUDING ESTIMATED QUANTITIES OF WORK SHOWN ON THESE SHEETS IS BASED ON LIMITED INVESTIGATIONS BY THE STATE AND IS IN NO WAY WARRANTED TO INDICATE THE TRUE CONDITIONS OR ACTUAL QUANTITIES OR DISTRIBUTION OF QUANTITIES OF WORK WHICH WILL BE REQUIRED.

URS CORPORATION AES
500 ENTERPRISE DRIVE
ROCKY HILL, CT 06067
1-(860)-529-8882

NO.	DATE	DESCRIPTION

REVISIONS

STATE OF CONNECTICUT
DEPARTMENT OF TRANSPORTATION

SECTION C-1a & C-2 NEW HAVEN LINE

CATENARY REPLACEMENT BETWEEN WALK BRIDGE AND STRUCTURE 636, PECK BRIDGE AND STRUCTURE 863

OVERHEAD WIRE TO DISCONNECT SWITCH ASSEMBLY DETAILS (TYP)

ENGINEER: URS CORPORATION AES
DESIGNER: RW | DRAFTER: AMK | CHECKER: AJM
APPROVED: T. HOLLAND | DATE: 09/13/13
STRUCTURE NO. | BRIDGE LOG NO. | STRUCTURE SHEET NO. E-103

URS CORPORATION AES
500 ENTERPRISE DRIVE
ROCKY HILL, CT 06067

PROJECT CONTROL DATE: 09/13/13 DISK FILENAME: E-103.dwg 100% DESIGN

F H W A REGION	STATE	TOWN	FED. AID PROJ. NO.	PROJ. NO.	YEAR	SHEET NUMBER
1	CONN.	VARIOUS	CT-05-0109	301-0145	2013	01.03.062

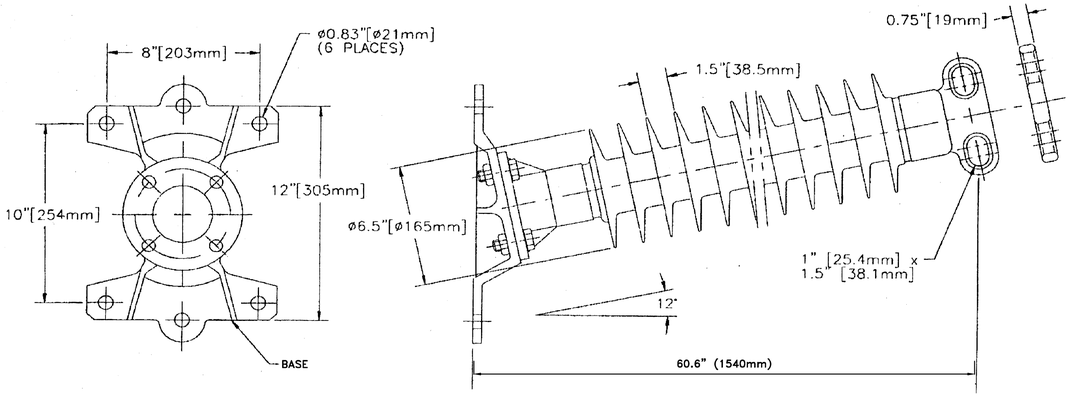

HIGH VOLTAGE POST INSULATOR

Item Description	Manufacturer *	Catalog Number	Ultimate Strength (Kips)	Qty of Assemblies/Str			
				CSA-1272-1	CSA-795-1	GWSA-4/0-1	GWSA-F.O.-1
HORIZONTAL LINE POST INSULATOR-POLYMER	S E E	A B O V E		1	1		
Y-CLEVIS EYE	ANDERSON	85451-2000		1	1	1	
SUSPENSION CLAMP FOR 1272, 45/7 SSAC	ANDERSON	HAS-162-N		1			
SUSPENSION CLAMP FOR 795, 26/7 ACSR	ANDERSON	HAS-118-N			1		
HEX HEAD BOLT WITH NUT, 3/4" DIAMETER X 3"	HUGES BROTHERS	HB-73-1-3/4		4	4		
FLAT WASHER (ROUND) FOR 3/4" DIAMETER BOLT	HUGES BROTHERS	RW2-70		4	4		
NUT FOR 3/4' DIAMETER BOLT	HUGES BROTHERS	MFH70		4	4		
PARALLEL CLAMP, ALUMINUM	BURNDY	YPC28U28				1	
TERMINAL CONECTOR, ALUMINUM	BURNDY	YCA28-2N				1	
1/2" DIAMETER X 2" STEEL BOLT	HUGES BROTHERS	HB51-1/2-1-1/4				2	
SUSPENSION CLAMP, BRONZE	ANDERSON	BRS-83-N				1	
PREFORMED ARMOR ROD	PREFORMED	PLP AR-0323				1	
LOCK WASHER, FOR 1/2" BOLT	HUGES BROTHERS	SLW50					2
ROUND FLAT WASHER, FOR 1/2" BOLT	HUGES BROTHERS	RW1-1/2-50					4
ALUMINUM LUG FOR 4/0 COPPER	BURNDY	YRA28U					2
MACHINE BOLT, STAINLESS STEEL 1/2" X 2"	HUGES BROTHERS	HB52-1-1/4					1
Y-CLEVIS EYE	PREFORMED	YC-5209					1
FIBERLIGN SUSPENSION	PREFORMED	4300117					1
MACHINE BOLT, 1/2" X 2 1/2"	HUGES BROTHERS	HB52-1/2-1-1/4					1
4/0 COPPER, 19 STRAND, FOR GROUNDING						2	2

ALTERNATE MANUFACTURERS ARE:
ALCOA
BURNDY
HUBBELL/ANDERSON/FARGO/A.B. CHANCE
HUGHES BROTHERS
JOSLYN
LINDSEY MANUFACTURING CO.
PREFORM LINE PRODUCTS
RELIABLE/BETHEA POWER PRODUCTS

THE INFORMATION, INCLUDING ESTIMATED QUANTITIES OF WORK SHOWN ON THESE SHEETS IS BASED ON LIMITED INVESTIGATIONS BY THE STATE AND IS IN NO WAY WARRANTED TO INDICATE THE TRUE CONDITIONS OR ACTUAL QUANTITIES OR DISTRIBUTION OF QUANTITIES OF WORK WHICH WILL BE REQUIRED.

TABLE 2

STRUCT. NO.	STRUT INSULATOR ASSEMBLY		GROUND ASSEMBLY	
	CSA-1272-1	CSA-795-1	GWSA-4/0-1	GWSA-F.O.-1
534A-S	3		1	
547A-S	3		1	
548A-S	3		1	
567A-S	3		1	
573A-S	3		1	
590A-S	3		1	
591A-S	3		1	
602A-S	3		1	
615A-S	3		1	
616A-S	3		1	
TOTALS	30	0	10	0

NOTES:

1. FOR GENERAL NOTES, SEE DRAWING G-8.

URS CORPORATION AES
500 ENTERPRISE DRIVE
ROCKY HILL, CT 06067
1-(860)-529-8882

NO.	DATE	DESCRIPTION

REVISIONS

STATE OF CONNECTICUT
DEPARTMENT OF TRANSPORTATION

SECTION C-1a & C-2 NEW HAVEN LINE

CATENARY REPLACEMENT BETWEEN WALK BRIDGE AND STRUCTURE 636, PECK BRIDGE AND STRUCTURE 863

CL&P - INSULATOR DETAILS

ENGINEER: URS CORPORATION AES
DESIGNER: RW | DRAFTER: AMK | CHECKER: AJM
APPROVED: T. HOLLAND | DATE: 09/13/13
STRUCTURE NO. | BRIDGE LOG NO. | STRUCTURE SHEET NO. E-129

F H W A REGION	STATE	TOWN	FED. AID PROJ. NO.	PROJ. NO.	YEAR	SHEET NUMBER
1	CONN.	VARIOUS	CT-05-0109	301-0145	2013	01.03.063

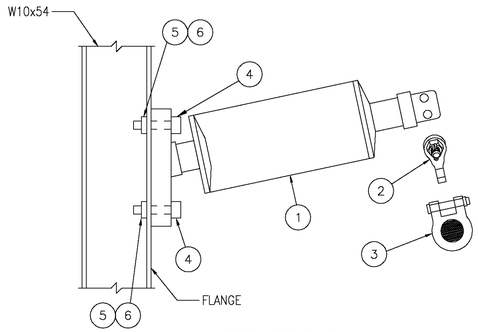

CSA-1272-1

STRUT INSULATOR ASSEMBLY
1272 SSAC
NO SCALE

BILL OF MATERIAL		
ITEM NO	DESCRIPTION	REQ'D
1	HORIZONTAL LINE POST INSULATOR - POLYMER	1
2	Y-CLEVIS EYE	1
3	SUSPENSION CLAMP FOR 1272, 45/7 SSAC	1
4	HEX HEAD BOLT W/ NUT, 3/4" DIA. x 3"	4
5	FLAT WASHER (ROUND) FOR 3/4" DIA. BOLT	4
6	LOCK NUT FOR 3/4" DIA. BOLT	4

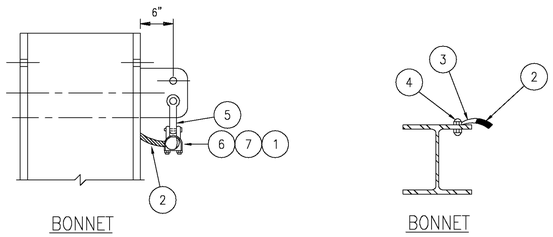

BONNET BONNET

GWSA-4/0-1
GROUNDWIRE SUSPENSION ASSEMBLY
NO SCALE

MATERIAL LIST		
ITEM NO	REQ'D	DESCRIPTION
1	1	PARALLEL CLAMP, ALUMINUM
2	-	4/0 COPPER
3	1	TERMINAL CONNECTOR, ALUMINUM
4	2	1/2" DIA. x 1" GALV. STEEL BOLT & NUT
5	1	Y-CLEVIS-EYE
6	1	SUSPENSION CLAMP, BRONZE
7	1	PREFORMED ARMOR ROD

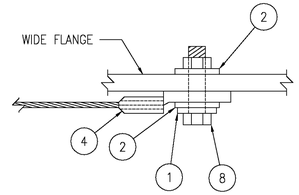

GROUNDING TO WIDE FLANGE

SECTION 1
NO SCALE

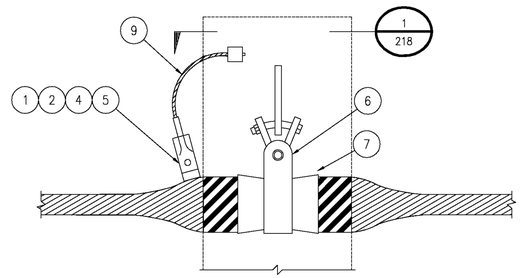

GWSA-F.O.-1

OPGW SUSPENSION ASSEMBLY
NO SCALE

BILL OF MATERIAL		
ITEM NO	DESCRIPTION	QUANTITY
1	LOCK WASHER FOR 1/2"ø BOLT	2
2	ROUND FLAT WASHER FOR 1/2"ø BOLT	4
3	NOT USED	
4	ALUMINUM LUG FOR 4/0 COPPER	2
5	MACHINE BOLT 1/2" x 2"	1
6	Y-CLEVIS EYE	1
7	FIBERLIGN SUSPENSION	1
8	MACHINE BOLT 1/2"x2 1/2"	1
9	4/0 COPPER, 19 STRAND, FOR GROUNDING	*

* AS REQUIRED

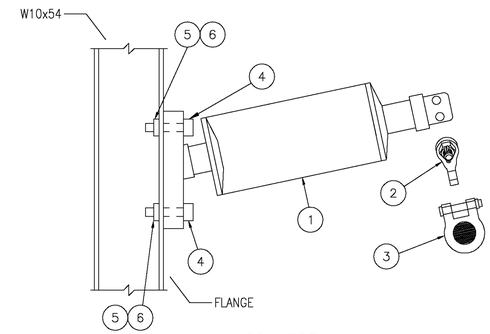

CSA-795-1

STRUT INSULATOR ASSEMBLY
795 ACSR
NO SCALE

BILL OF MATERIAL		
ITEM NO	DESCRIPTION	REQ'D
1	HORIZONTAL LINE POST INSULATOR - POLYMER	1
2	Y-CLEVIS EYE	1
3	SUSPENSION CLAMP FOR 795, 26/7 ACSR	1
4	HEX HEAD BOLT W/ NUT, 3/4" DIA. x 3"	4
5	FLAT WASHER (ROUND) FOR 3/4" DIA. BOLT	4
6	LOCK NUT FOR 3/4" DIA. BOLT	4

NOTES:

1. FOR GENERAL NOTES, SEE DRAWING G-8.
2. FOR MATERIAL LIST, SEE DRAWING E-129.

THE INFORMATION, INCLUDING ESTIMATED QUANTITIES OF WORK SHOWN ON THESE SHEETS IS BASED ON LIMITED INVESTIGATIONS BY THE STATE AND IS IN NO WAY WARRANTED TO INDICATE THE TRUE CONDITIONS OR ACTUAL QUANTITIES OR DISTRIBUTION OF QUANTITIES OF WORK WHICH WILL BE REQUIRED.

URS CORPORATION AES
500 ENTERPRISE DRIVE
ROCKY HILL, CT 06067
1-(860)-529-8882

NO.	DATE	DESCRIPTION

REVISIONS

STATE OF CONNECTICUT
DEPARTMENT OF TRANSPORTATION

SECTION C-1a & C-2 NEW HAVEN LINE

CATENARY REPLACEMENT BETWEEN WALK BRIDGE AND STRUCTURE 636, PECK BRIDGE AND STRUCTURE 863

CL&P - INSULATOR AND GROUNDWIRE

ENGINEER: URS CORPORATION AES
DESIGNER: RW | DRAFTER: AMK | CHECKER: AJM
APPROVED: T. HOLLAND | DATE: 09/13/13
STRUCTURE NO. | BRIDGE LOG NO. | STRUCTURE SHEET NO. E-130

PROJECT CONTROL DATE: 09/13/13 DISK FILENAME: E-130.dwg 100% DESIGN

F H W A REGION	STATE	TOWN	FED. AID PROJ. NO.	PROJ. NO.	YEAR	SHEET NUMBER
1	CONN.	VARIOUS	CT-05-0109	301-0145	2013	01.03.064

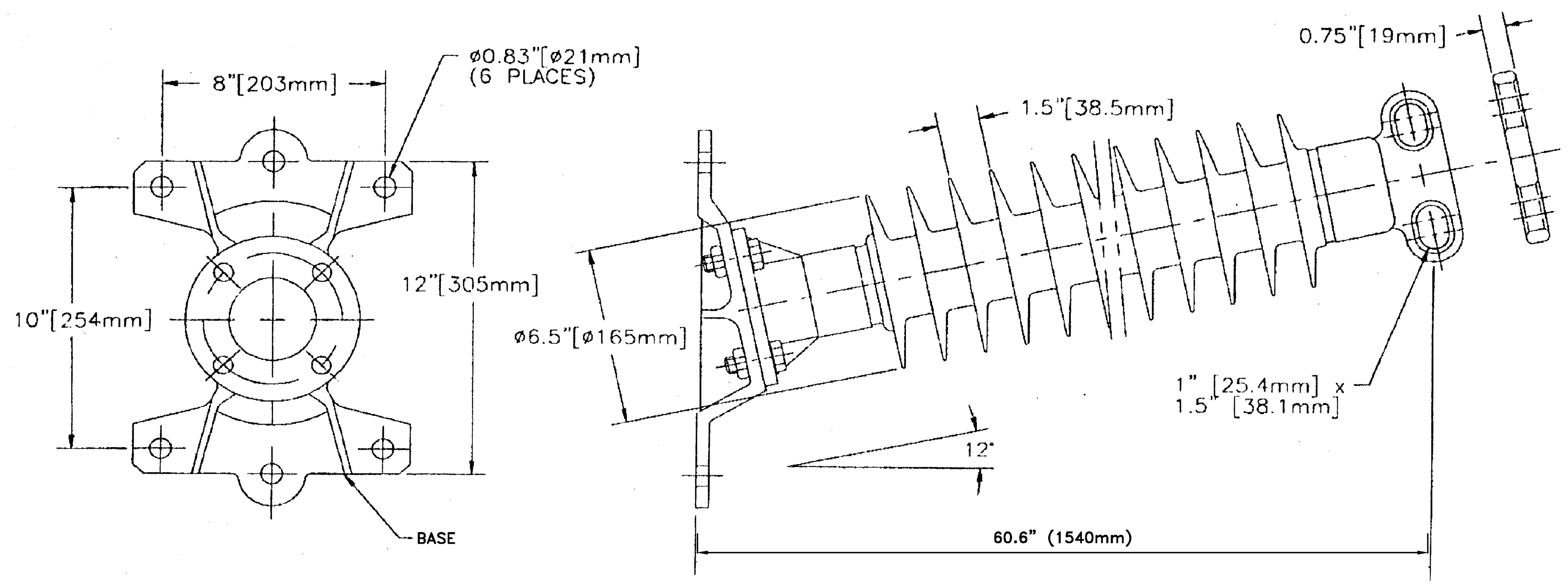

HIGH VOLTAGE POST INSULATOR

TABLE 2

STRUCT. NO.	STRUT INSULATOR ASSEMBLY		GROUND ASSEMBLY		
	CSA-795-2	CSA-1272-1	GWSA-4/0-1		
794A-N	3		1		
794A-S	3		1		
795A-N	3		1		
795A-S	3		1		
796A-N	3		1		
796A-S	3		1		
799A-N	3		1		
799A-S	3		1		
800A-N	3		1		
800A-S	3		1		
801A-N	3		1		
801A-S	3		1		
802B-N	3		1		
802B-S	3		1		
804A-N	3		1		
812A-N	3		1		
849B-N		3	1		
849B-S		3	1		
857A-N		3	1		
857A-S		3	1		
858A-N		3	1		
858A-S		3	1		
859A-N		3	1		
859A-S		3	1		
860A-N		3	1		
860A-S		3	1		
TOTAL	48	30	26	0	0

Item Description	Manufacturer *	Catalog Number	CSA-795-2	CSA-1272-1	GWSA-4/0-1	
HORIZONTAL LINE POST INSULATOR-POLYMER	S E E	A B O V E	1	1		
Y-CLEVIS EYE, FOR CONDUCTOR ATTACHMENT	PREFORMED	YC-5209	1	1		
SUSPENSION CLAMP FOR 795 45/7 ACSR	PREFORMED	AGS-5128	1			
SUSPENSION CLAMP FOR 1272 45/7 SSAC	PREFORMED	AGS-5139		1		
HEX HEAD BOLT WITH NUT, 3/4" DIAMETER X 3"	HUGHES BROTHERS	HB-73-1-3/4	4	4		
ROUND FLAT WASHER FOR 3/4" DIAMETER BOLT	HUGHES BROTHERS	RW2-70	4	4		
LOCKNUT FOR 3/4' DIAMETER BOLT	HUGHES BROTHERS	MFH70	4	4		
PARALLEL CLAMP, 4/0 TO 4/0	BURNDY	YPC28U28			1	
4/0 COPPER, 19 STRAND, FOR GROUNDING					2	
TERMINAL CONNECTOR, FOR 4/0 COPPER	BURNDY	YCA28-2N			1	
HEX HEAD BOLT W/NUT, 1/2"ø BOLT x 2"	HUGHES BROTHERS	HB52-1-1/4			2	
Y-CLEVIS EYE, FOR SHIELD WIRE ATTACHMENT	ANDERSON	85451-2000			1	
SUSPENSION CLAMP FOR 4/0	ANDERSON	BRS-100-N			1	
ARMOR RODS FOR 4/0	PREFORMED	AR-5122			1	

ALTERNATE MANUFACTURERS ARE: ALCOA
BURNDY
HUBBELL/ANDERSON/FARGO/A.B. CHANCE
HUGHES BROTHERS
JOSLYN
LINDSEY MANUFACTURING CO.
PREFORM LINE PRODUCTS
RELIABLE/BETHEA POWER PRODUCTS

NOTES:

1. FOR GENERAL NOTES, SEE DRAWING G-8.

THE INFORMATION, INCLUDING ESTIMATED QUANTITIES OF WORK SHOWN ON THESE SHEETS IS BASED ON LIMITED INVESTIGATIONS BY THE STATE AND IS IN NO WAY WARRANTED TO INDICATE THE TRUE CONDITIONS OR ACTUAL QUANTITIES OR DISTRIBUTION OF QUANTITIES OF WORK WHICH WILL BE REQUIRED.

URS CORPORATION AES
500 ENTERPRISE DRIVE
ROCKY HILL, CT 06067
1-(860)-529-8882

UI United Illuminating
an investor-owned electric light and power company

NO.	DATE	DESCRIPTION
		REVISIONS

STATE OF CONNECTICUT
DEPARTMENT OF TRANSPORTATION

SECTION C-1a & C-2 NEW HAVEN LINE

CATENARY REPLACEMENT BETWEEN WALK BRIDGE AND STRUCTURE 636, PECK BRIDGE AND STRUCTURE 863

UI INSULATOR ASSEMBLY

SHEET 1 OF 2

ENGINEER: WASHINGTON INFRASTRUCTURE SERVICES
DESIGNER: DRAFTER: CHECKER:
APPROVED: DATE:
STRUCTURE NO. BRIDGE LOG NO. STRUCTURE SHEET NO. E-131

PROJECT CONTROL DATE: 09/13/13 DISK FILENAME: E-131.DWG 100% DESIGN

F H W A REGION	STATE	TOWN	FED. AID PROJ. NO.	PROJ. NO.	YEAR	SHEET NUMBER
1	CONN.	VARIOUS	CT-05-0109	301-0145	2013	01.03.065

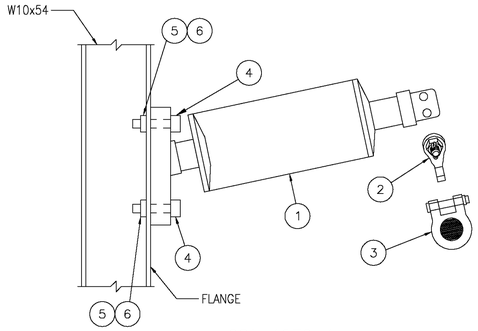

CSA-1272-1

STRUT INSULATOR ASSEMBLY
1272 SSAC

NO SCALE

BILL OF MATERIAL		
ITEM NO	DESCRIPTION	REQ'D
1	HORIZONTAL LINE POST INSULATOR – POLYMER	1
2	Y-CLEVIS EYE	1
3	SUSPENSION CLAMP FOR 1272, 45/7 SSAC	1
4	HEX HEAD BOLT W/ NUT, 3/4" DIA. x 3"	4
5	FLAT WASHER (ROUND) FOR 3/4" DIA. BOLT	4
6	LOCK NUT FOR 3/4" DIA. BOLT	4

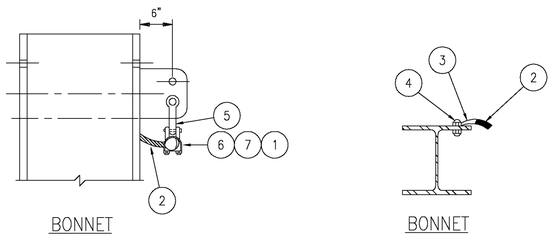

BONNET

BONNET

GWSA-4/0-1

GROUNDWIRE SUSPENSION ASSEMBLY

NO SCALE

MATERIAL LIST		
ITEM NO	REQ'D	DESCRIPTION
1	1	PARALLEL CLAMP, ALUMINUM
2	–	4/0 COPPER
3	1	TERMINAL CONNECTOR, ALUMINUM
4	2	1/2" DIA. x 1" GALV. STEEL BOLT & NUT
5	1	Y-CLEVIS-EYE
6	1	SUSPENSION CLAMP, BRONZE
7	1	PREFORMED ARMOR ROD

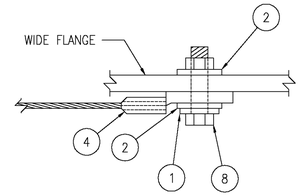

GROUNDING TO WIDE FLANGE

SECTION 1

NO SCALE

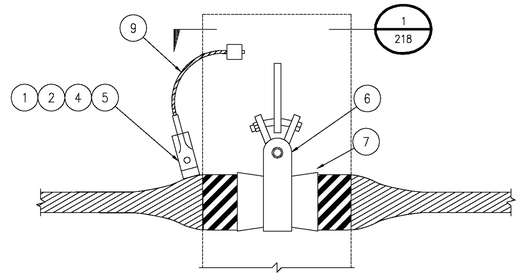

GWSA-F.O.-1

OPGW SUSPENSION ASSEMBLY

NO SCALE

BILL OF MATERIAL		
ITEM NO	DESCRIPTION	QUANTITY
1	LOCK WASHER FOR 1/2"ø BOLT	2
2	ROUND FLAT WASHER FOR 1/2"ø BOLT	4
3	NOT USED	
4	ALUMINUM LUG FOR 4/0 COPPER	2
5	MACHINE BOLT 1/2" x 2"	1
6	Y-CLEVIS EYE	1
7	FIBERLIGN SUSPENSION	1
8	MACHINE BOLT 1/2"x2 1/2"	1
9	4/0 COPPER, 19 STRAND, FOR GROUNDING	*

* AS REQUIRED

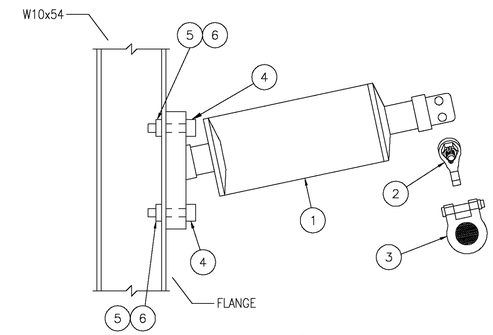

CSA-795-2

STRUT INSULATOR ASSEMBLY
795 ACSR

NO SCALE

BILL OF MATERIAL		
ITEM NO	DESCRIPTION	REQ'D
1	HORIZONTAL LINE POST INSULATOR – POLYMER	1
2	Y-CLEVIS EYE	1
3	SUSPENSION CLAMP FOR 795, 45/7 ACSR	1
4	HEX HEAD BOLT W/ NUT, 3/4" DIA. x 3"	4
5	FLAT WASHER (ROUND) FOR 3/4" DIA. BOLT	4
6	LOCK NUT FOR 3/4" DIA. BOLT	4

NOTES:

1. FOR GENERAL NOTES SEE DRAWING #G-8.
2. FOR MATERIAL LIST SEE DRAWING #E-131.

THE INFORMATION, INCLUDING ESTIMATED QUANTITIES OF WORK SHOWN ON THESE SHEETS IS BASED ON LIMITED INVESTIGATIONS BY THE STATE AND IS IN NO WAY WARRANTED TO INDICATE THE TRUE CONDITIONS OR ACTUAL QUANTITIES OR DISTRIBUTION OF QUANTITIES OF WORK WHICH WILL BE REQUIRED.

URS CORPORATION AES
500 ENTERPRISE DRIVE
ROCKY HILL, CT 06067
1-(860)-529-8882

United Illuminating
an investor-owned electric light and power company

URS CORPORATION AES
500 ENTERPRISE DRIVE
ROCKY HILL, CT 06067

NO.	DATE	DESCRIPTION

REVISIONS

STATE OF CONNECTICUT
DEPARTMENT OF TRANSPORTATION

SECTION C-1a & C-2 NEW HAVEN LINE

CATENARY REPLACEMENT BETWEEN WALK BRIDGE AND STRUCTURE 636, PECK BRIDGE AND STRUCTURE 863

UI INSULATOR ASSEMBLY

SHEET 2 OF 2

ENGINEER: WASHINGTON INFRASTRUCTURE SERVICES

DESIGNER: DRAFTER: CHECKER:

APPROVED: DATE:

STRUCTURE NO. BRIDGE LOG NO. STRUCTURE SHEET NO. E-132

PROJECT CONTROL DATE: 09/13/13 DISK FILENAME: E-132.DWG 100% DESIGN

F H W A REGION	STATE	TOWN	FED. AID PROJ. NO.	PROJ. NO.	YEAR	SHEET NUMBER
1	CONN.	VARIOUS	CT-05-0109	301-0145	2013	01.03.066

URS CORPORATION AES
500 ENTERPRISE DRIVE
ROCKY HILL, CT 06067

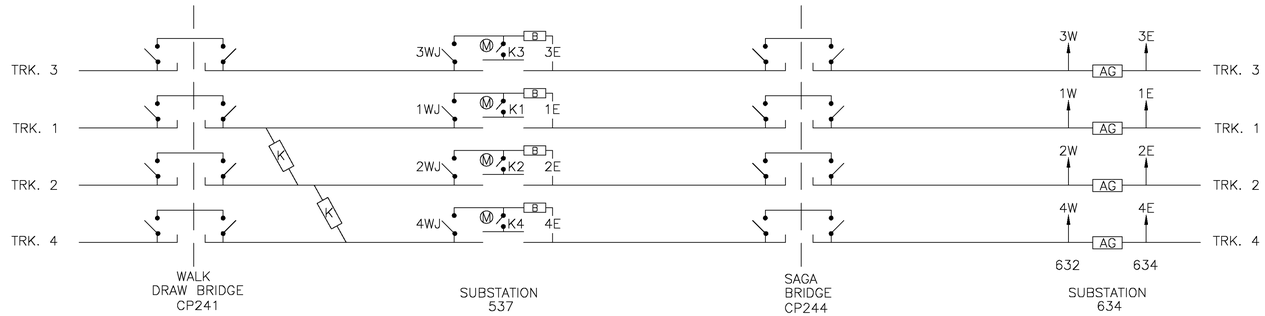

PRESENT SECTIONALIZING

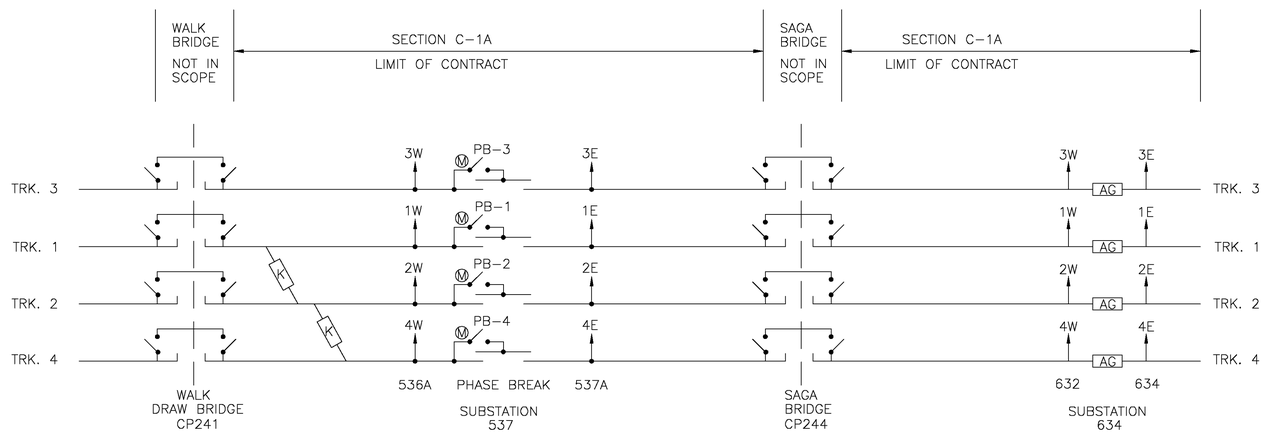

FINAL SECTIONALIZING

LEGEND:

- AIR GAP — AG
- SECTION INSULATOR (HIGH SPEED) — K
- MANUALLY OPERATED DISCONNECT SWITCH
- MOTOR OPERATED DISCONNECT SWITCH
- SUBSTATION FEED
- NORMALLY OPEN CONTACTS

THE INFORMATION, INCLUDING ESTIMATED QUANTITIES OF WORK SHOWN ON THESE SHEETS IS BASED ON LIMITED INVESTIGATIONS BY THE STATE AND IS IN NO WAY WARRANTED TO INDICATE THE TRUE CONDITIONS OR ACTUAL QUANTITIES OR DISTRIBUTION OF QUANTITIES OF WORK WHICH WILL BE REQUIRED.

SCALE: NONE

URS CORPORATION AES
500 ENTERPRISE DRIVE
ROCKY HILL, CT 06067
1-(860)-529-8882

NO.	DATE	DESCRIPTION

REVISIONS

STATE OF CONNECTICUT
DEPARTMENT OF TRANSPORTATION

SECTION C-1a & C-2 NEW HAVEN LINE

CATENARY REPLACEMENT BETWEEN WALK BRIDGE AND STRUCTURE 636, PECK BRIDGE AND STRUCTURE 863

C-1A SECTIONALIZING DIAGRAM

ENGINEER: URS CORPORATION AES
DESIGNER: RW | DRAFTER: AMK | CHECKER: AJM
APPROVED: T. HOLLAND | DATE: 09/13/13
STRUCTURE NO. | BRIDGE LOG NO. | STRUCTURE SHEET NO. E-140

PROJECT CONTROL DATE: 09/13/13 DISK FILENAME: E-140.dwg 100% DESIGN

F H W A REGION	STATE	TOWN	FED. AID PROJ. NO.	PROJ. NO.	YEAR	SHEET NUMBER
1	CONN.	VARIOUS	CT-05-0109	301-0145	2013	01.03.067

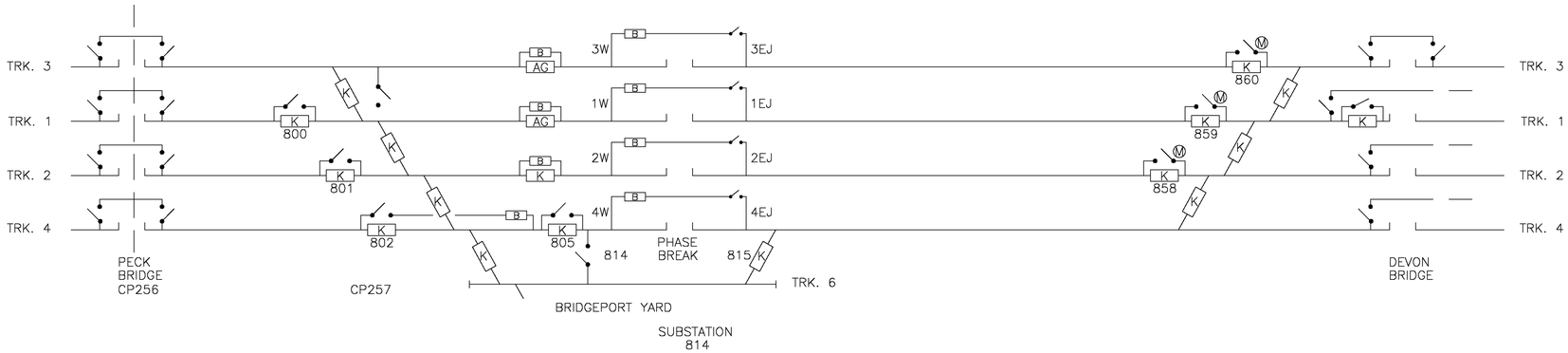

PRESENT SECTIONALIZING

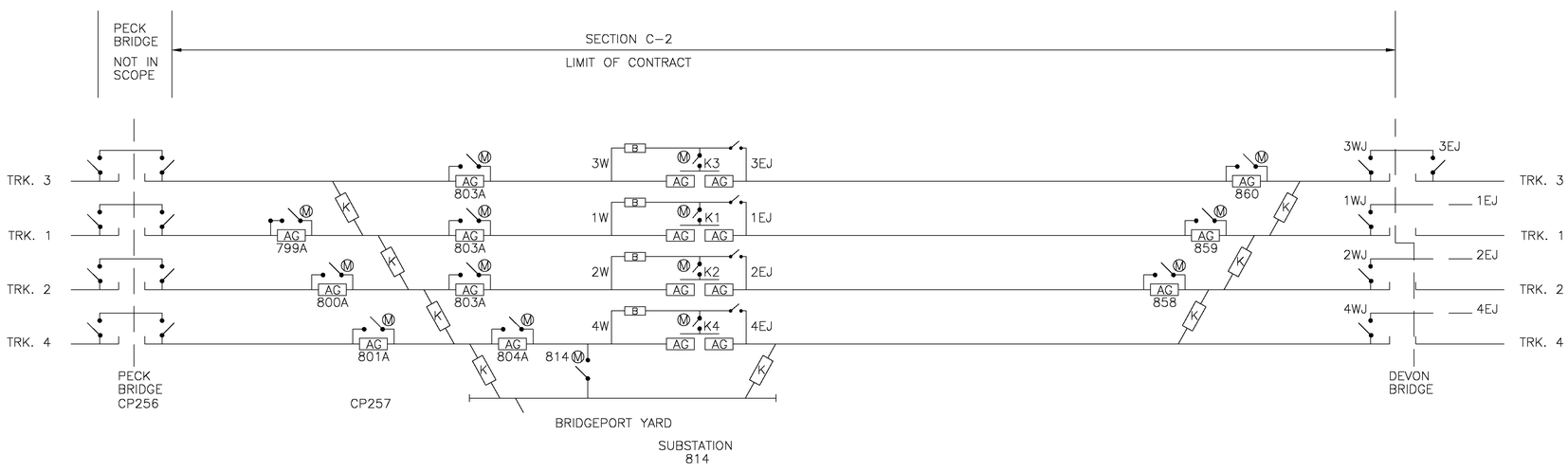

FINAL SECTIONALIZING

NOTES:

1. FOR BRIDGEPORT YARD SECTIONALIZING, SEE SHEETS E-142 & E-143.

LEGEND:

- AIR GAP — AG
- SECTION INSULATOR (HIGH SPEED) — K
- MANUALLY OPERATED DISCONNECT SWITCH
- MOTOR OPERATED DISCONNECT SWITCH
- SUBSTATION FEED
- NORMALLY OPEN CONTACTS

THE INFORMATION, INCLUDING ESTIMATED QUANTITIES OF WORK SHOWN ON THESE SHEETS IS BASED ON LIMITED INVESTIGATIONS BY THE STATE AND IS IN NO WAY WARRANTED TO INDICATE THE TRUE CONDITIONS OR ACTUAL QUANTITIES OR DISTRIBUTION OF QUANTITIES OF WORK WHICH WILL BE REQUIRED.

SCALE: NONE

URS CORPORATION AES
500 ENTERPRISE DRIVE
ROCKY HILL, CT 06067
1-(860)-529-8882

NO.	DATE	DESCRIPTION

REVISIONS

STATE OF CONNECTICUT
DEPARTMENT OF TRANSPORTATION

SECTION C-1a & C-2 NEW HAVEN LINE

CATENARY REPLACEMENT BETWEEN WALK BRIDGE AND STRUCTURE 636, PECK BRIDGE AND STRUCTURE 863

C-2 SECTIONALIZING DIAGRAM

ENGINEER: URS CORPORATION AES
DESIGNER: RW | DRAFTER: AMK | CHECKER: AJM
APPROVED: T. HOLLAND | DATE: 09/13/13
STRUCTURE NO. | BRIDGE LOC NO. | STRUCTURE SHEET NO. E-141

PROJECT CONTROL DATE: 09/13/13 DISK FILENAME: E-141.dwg 100% DESIGN

F H W A REGION	STATE	TOWN	FED. AID PROJ. NO.	PROJ. NO.	YEAR	SHEET NUMBER
1	CONN.	VARIOUS	CT-05-0109	301-0145	2013	01.03.068

URS CORPORATION AES
500 ENTERPRISE DRIVE
ROCKY HILL, CT 06067

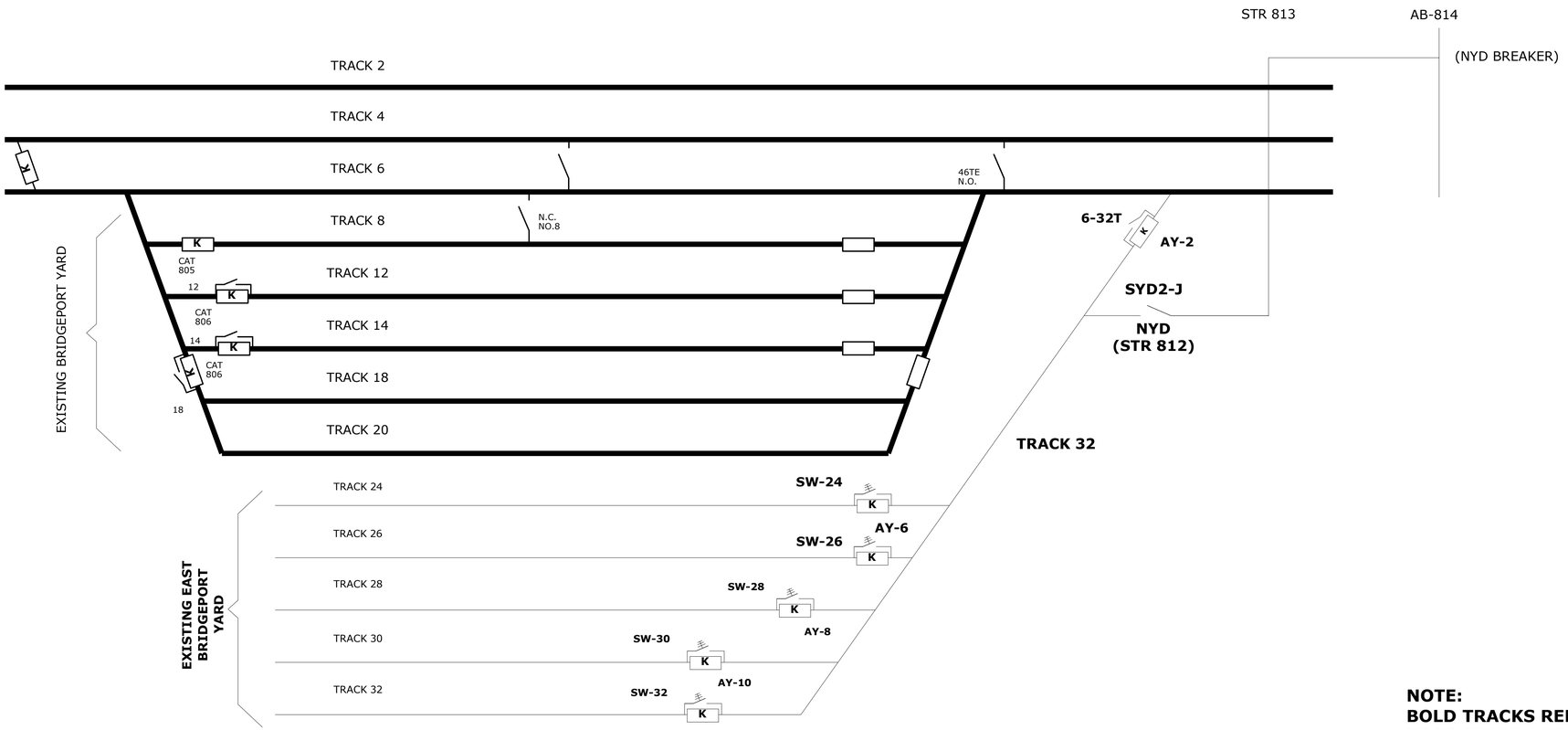

NOTE:
BOLD TRACKS REPRESENT CONTRACT YARD WORK AREA

EXISTING YARD SECTIONALIZING

THE INFORMATION, INCLUDING ESTIMATED QUANTITIES OF WORK SHOWN ON THESE SHEETS IS BASED ON LIMITED INVESTIGATIONS BY THE STATE AND IS IN NO WAY WARRANTED TO INDICATE THE TRUE CONDITIONS OR ACTUAL QUANTITIES OR DISTRIBUTION OF QUANTITIES OF WORK WHICH WILL BE REQUIRED.

URS CORPORATION AES
500 ENTERPRISE DRIVE
ROCKY HILL, CT 06067
1-(860)-529-8882

NO.	DATE	DESCRIPTION

REVISIONS

STATE OF CONNECTICUT
DEPARTMENT OF TRANSPORTATION

SECTION C-1a & C-2 NEW HAVEN LINE

CATENARY REPLACEMENT BETWEEN WALK BRIDGE AND STRUCTURE 636, PECK BRIDGE AND STRUCTURE 863

BRIDGEPORT YARD EXISTING SECTIONALIZING DIAGRAM

ENGINEER: URS CORPORATION AES
DESIGNER: RW | DRAFTER: AMK | CHECKER: AJM
APPROVED: T. HOLLAND | DATE: 09/13/13
STRUCTURE NO. | BRIDGE LOG NO. | STRUCTURE SHEET NO. E-142

PROJECT CONTROL DATE: 09/13/13 DISK FILENAME: E-142.dwg 100% DESIGN

F H W A REGION	STATE	TOWN	FED. AID PROJ. NO.	PROJ. NO.	YEAR	SHEET NUMBER
1	CONN.	VARIOUS	CT-05-0109	301-0145	2013	01.03.069

URS CORPORATION AES
500 ENTERPRISE DRIVE
ROCKY HILL, CT 06067

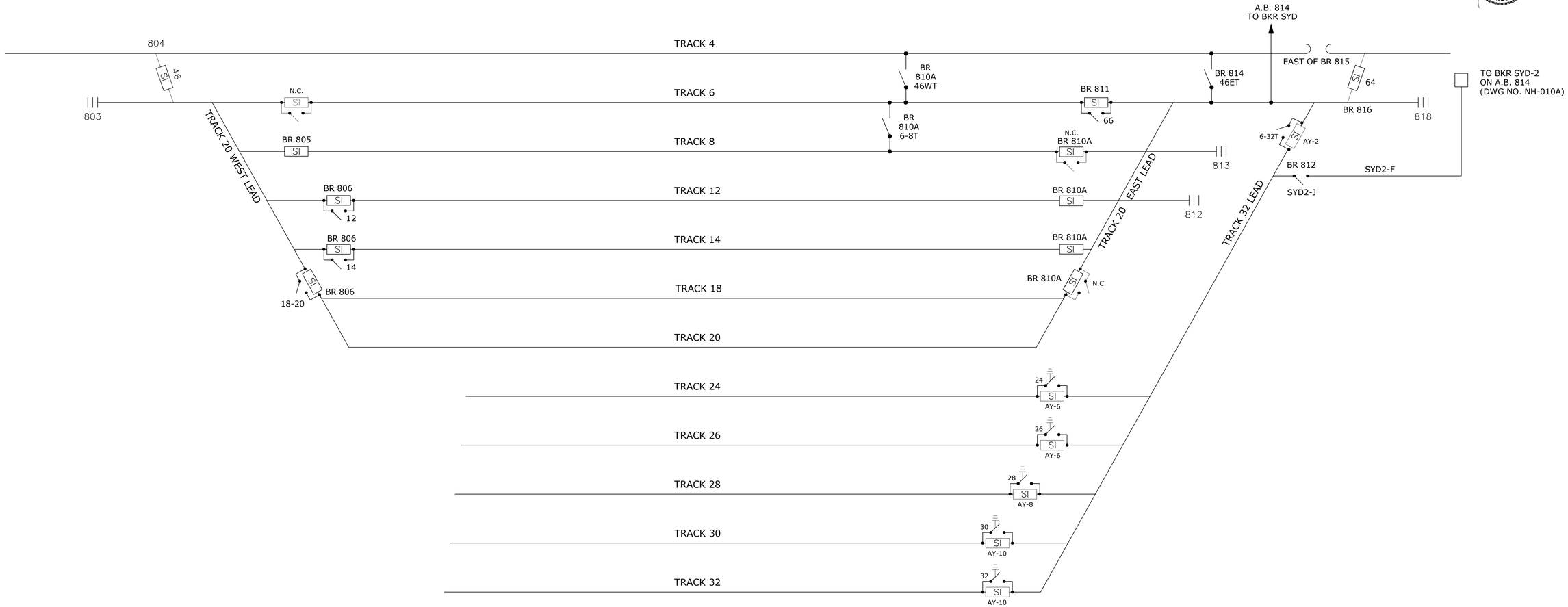

FINAL YARD SECTIONALIZING

THE INFORMATION, INCLUDING ESTIMATED QUANTITIES OF WORK SHOWN ON THESE SHEETS IS BASED ON LIMITED INVESTIGATIONS BY THE STATE AND IS IN NO WAY WARRANTED TO INDICATE THE TRUE CONDITIONS OR ACTUAL QUANTITIES OR DISTRIBUTION OF QUANTITIES OF WORK WHICH WILL BE REQUIRED.

URS CORPORATION AES
500 ENTERPRISE DRIVE
ROCKY HILL, CT 06067
1-(860)-529-8882

NO.	DATE	DESCRIPTION

REVISIONS

STATE OF CONNECTICUT
DEPARTMENT OF TRANSPORTATION

SECTION C-1a & C-2 NEW HAVEN LINE

CATENARY REPLACEMENT BETWEEN WALK BRIDGE AND STRUCTURE 636, PECK BRIDGE AND STRUCTURE 863

BRIDGEPORT YARD FINAL SECTIONALIZING DIAGRAM

ENGINEER: URS CORPORATION AES
DESIGNER: RW | DRAFTER: AMK | CHECKER: AJM
APPROVED: T. HOLLAND | DATE: 09/13/13
STRUCTURE NO. | BRIDGE LOG NO. | STRUCTURE SHEET NO. E-143

PROJECT CONTROL DATE: 09/13/13 DISK FILENAME: E-143.DWG 100% DESIGN

F.H.W.A. REGION	STATE	TOWN	FED. AID PROJ. NO.	PROJ. NO.	YEAR	SHEET NUMBER
1	CONN.	VARIOUS	CT-05-0109	301-0145	2013	01.03.070

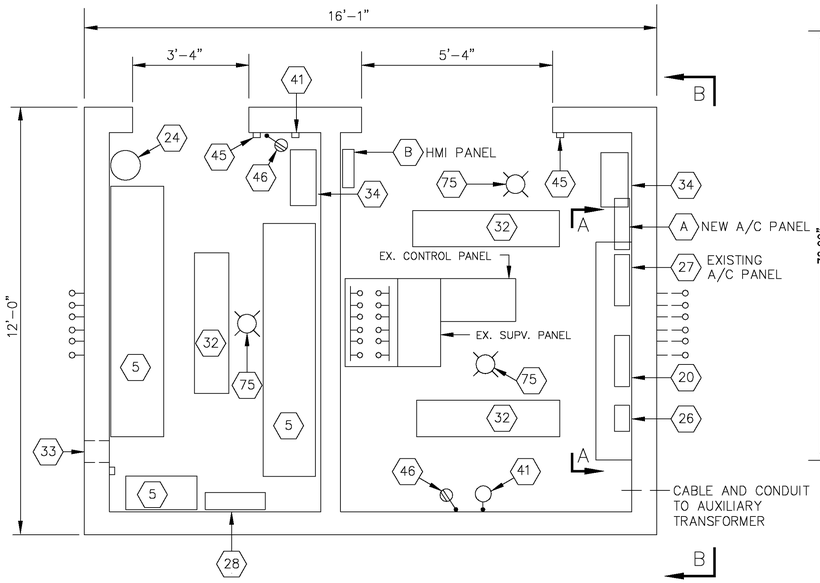

EXISTING CONTROL HOUSE

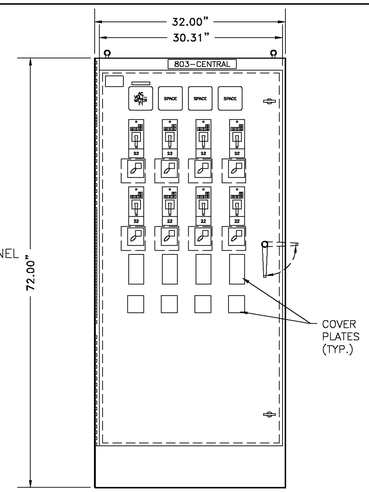

FRONT DOOR VIEW (PARTIAL)
EXISTING CONTROL PANEL

LTG PANEL – LP2 (SUB PNL)

LOCATION: CONTROL HOUSE

MAIN BUS CU. RATED 100 AMPS
LUG SIZE: #2
PANEL FED FROM: LT1

VOLTAGE: 120/240V 1PH. 3 WIRE
SOLID NEUTRAL

DESCRIPTION	CIR. NO.	CIR. NO.	DESCRIPTION
WALKWAY LIGHTING	1	2	CONTROL HOUSE LIGHTS
		4	OUTSIDE PHONE BOX
SPARE	3	6	RECEPTACLES
		8	SPARE
BLANK	9	10	BLANK
BLANK	11	12	BLANK

20A 20A 20A 20A 20A 20A
ØA BØ

D.C. DISTRIBUTION PANEL – DC1

125V DC

LUG SIZE: 4/0
MAIN BUS – COPPER 200A MAIN BREAKER

DESCRIPTION	CIR. NO.	CIR. NO.	DESCRIPTION
HMI	1	2	D.C. LIGHTING
DC TO BREAKER ON 803	3	4	E-PACK
SWITCH HEATER #1	5	6	SWITCH HEATER #2
SIGNAL MOD SW 13	7	8	SIGNAL MOD SW 24

30A 15A 70A 15A 15A 20A 15A 15A

FRONT DOOR VIEW (PARTIAL)
EXISTING CONTROL PANEL

NAMEPLATE TABLE		TAGGING RELAY ADD.	CIM ADD.
LOCATION	NOMENCLATURE		
NP1	CP-257		
CS1/T1	22	XXX	XXX
CS2/T2	44	XXX	XXX
CS3/T3	11	XXX	XXX
CS4/T4	33	XXX	XXX
CS5/T5	S13	XXX	XXX
CS6/T6	S24	XXX	XXX
CS7/T7	SWTR1	XXX	XXX
CS8/T8	SWTR2	XXX	XXX
CS9/T9			
CS10/T10			
CS11/T11			
CS12/T12			

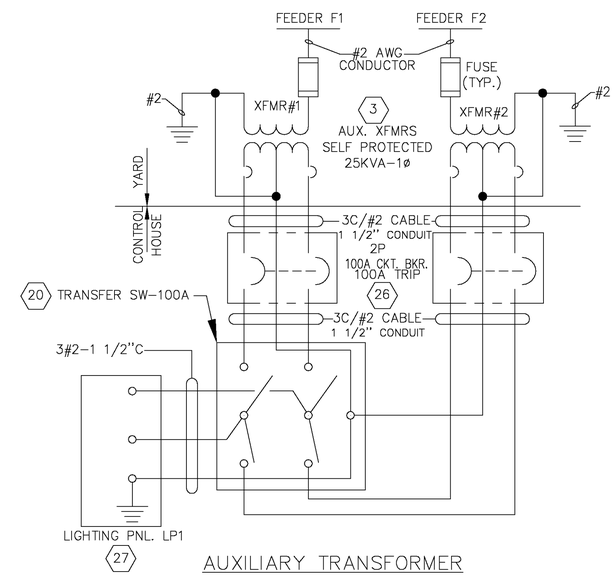

AUXILIARY TRANSFORMER
CONTROL DIAGRAM
(EXISTING)

LTG PANEL – LP1

LOCATION: CONTROL HOUSE

MAIN BUS CU. RATED 100 AMPS
LUG SIZE: #2
PANEL FED FROM 25KVA AUX. XFMRS

VOLTAGE: 120/240V 1PH. 3 WIRE
SOLID NEUTRAL

DESCRIPTION	CIR. NO.	CIR. NO.	DESCRIPTION
SUB PANEL (LP2)	1	4	BATTERY CHARGER
CONTROL ROOM & BATTERY ROOM SPACE HEATERS	3	6	EXAUST FAN
		8	SWITCH HEATER
HEATER	5	10	BRIDGE RECEPTACLE & LTG
		12	HMI
COMMON NEUTRAL CKT			COMMON NEUTRAL CKT

40A 30A 30A 20A 20A 20A 20A 20A
ØA BØ

EXISTING EQUIPMENT LIST (PARTIAL)

ITEM. NO.	DESCRIPTION
3	25KVA – 1ø 13.8KV/240-120V AUXILIARY TRANSFORMER
5	BATTERY CHARGER, BATTERIES, & BATTERY RACK
20	TRANSFER SWITCH – 100A
24	PORTABLE EYE/FACE WASH
27	LIGHTING PANEL LP1 – 120/240V- 1ø-60HZ – 3 WIRE
26	2 POLE – 100A – CIRCUIT BREAKER
28	D.C. DISTRIBUTION PANEL (DC1)
32	LIGHTING FIXTURE – (FLUORESCENT)
33	EXHAUST FAN
34	SPACE HEATER – 4.5KW – 240V
41	THERMOSTAT
45	SWITCH SINGLE POLE, TOGGLE 120V AC
46	RECEPTACLE – DUPLEX – SINGLE POLE – 120V A.C.
50	WIRE TROUGH
75	INCANDESCENT LIGHTING FIXTURE (D.C.)
	CONTROL SWITCH (CS) GE TYPE SB-10
	INDICATING LIGHTS GE TYPE ET-16
A	A/C PANEL
B	HMI PANEL

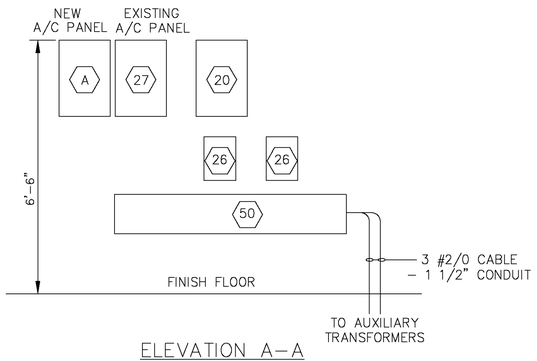

ELEVATION A–A
EQUIPMENT ARRANGEMENT
ON CONTROL HOUSE WALL
(EXISTING)

THE INFORMATION, INCLUDING ESTIMATED QUANTITIES OF WORK SHOWN ON THESE SHEETS IS BASED ON LIMITED INVESTIGATIONS BY THE STATE AND IS IN NO WAY WARRANTED TO INDICATE THE TRUE CONDITIONS OR ACTUAL QUANTITIES OR DISTRIBUTION OF QUANTITIES OF WORK WHICH WILL BE REQUIRED.

N.T.S.

URS CORPORATION AES
500 ENTERPRISE DRIVE
ROCKY HILL, CT 06067
1-(860)-529-8882

THE Burns GROUP
ENGINEERING AND CONSTRUCTION
Burns Engineering, Inc.
Metro-Plex II
8201 Corporate Drive, Suite 800
Landover, MD 20785-2230
phone 703-760-9076 fax 301-577-0088

NO.	DATE	DESCRIPTION

REVISIONS

FOR INFORMATION ONLY

STATE OF CONNECTICUT
DEPARTMENT OF TRANSPORTATION

SECTION C-1a & C-2 NEW HAVEN LINE

CATENARY REPLACEMENT BETWEEN WALK BRIDGE AND STRUCTURE 636, PECK BRIDGE AND STRUCTURE 863

EXISTING CONTROL HOUSE DETAILS – CP 257

ENGINEER: BURNS ENGINEERING
DESIGNER: MS DRAFTER: HJ CHECKER: JCD
APPROVED: SDB DATE: 09/13/13
STRUCTURE NO. BRIDGE LOG NO. STRUCTURE SHEET NO. E-155

PROJECT CONTROL DATE: 09/13/13 DISK FILENAME: E-155.dwg 100% DESIGN

F.H.W.A. REGION	STATE	TOWN	FED. AID PROJ. NO.	PROJ. NO.	YEAR	SHEET NUMBER
1	CONN.	VARIOUS	CT-05-0109	301-0145	2013	01.03.071

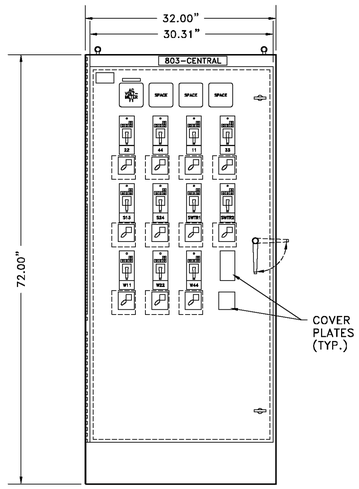

FRONT DOOR VIEW (PARTIAL)
EXISTING CONTROL PANEL

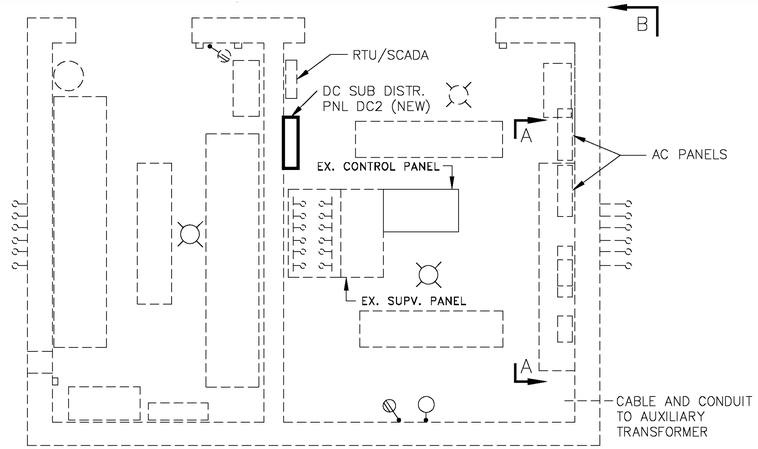

CONTROL HOUSE

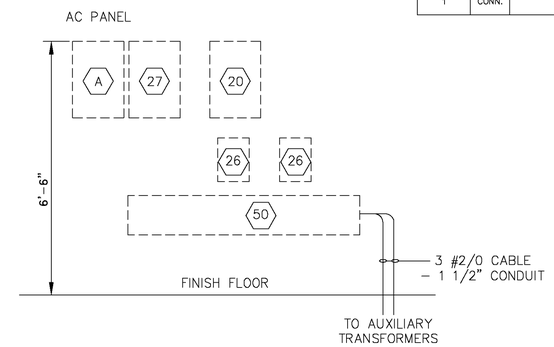

ELEVATION A–A
EQUIPMENT ARRANGEMENT
ON CONTROL HOUSE WALL

NOTES:

1. THE MODIFICATIONS OF CP257 INCLUDE BUT ARE NOT LIMITED TO THE FOLLOWING. SEE DWG E–162 FOR MORE DETAILS.
   - DISMANTLE THE EXISTING TWO MANUAL DISCONNECT SWITCHES ON STRUCTURE 801 AND 802.
   - FURNISH AND INSTALL SEVEN NEW MODS AT THE SPECIFIED LOCATIONS AND REPLACE THE EXISTING SNOW MELTER UNIT (SWR1) WITH NEW SMU AS PER PLANS.
   - INSTALL NEW POWER CABLE AND CONDUIT FOR THE NEW SMU, AND DISCARD OLD SMU, POWER CABLE AND CONDUIT. SEE DWG. E–160 FOR DETAILS.
   - THE CONTRACTOR SHALL INSTALL CONTROL WIRING FOR THE DEVICES 11, 22, 33, 44, 11W, 22W, 44W, SWR1 AND SPARE CONTROL SWITCHES. THE CONTROL WIRING FOR DEVICES S13, AND S24 FROM THE EXISTING CONTROL PANEL TO THE NEW CONTROL PANEL SHALL BE INSTALLED BY METRO–NORTH FORCE ACCOUNT. THE INTERFACE WIRING BETWEEN NEW CONTROL PANEL AND RTU FOR ALL DEVICES SHALL BE INSTALLED BY THE CONTRACTOR IN COORDINATION WITH METRO–NORTH.
   - REROUTE AND CONNECT OLD SMU CONTROL WIRES TO NEW SMU, IF FOUND TO BE ADEQUATE AND IN SATISFACTORY CONDITION. SEE SPECIFICATION FOR DETAILS.
   - DISCONNECT DC LIGHTING LOAD FROM DC1 AND REROUTE WIRING AS REQUIRED. RELACE 15A DC BREAKER FOR CIRCUIT #2 WITH 50A DC BREAKER TO FEED NEW DC PANEL DC2.
   - FURNISH AND INSTALL NEW DC DISTRIBUTION PANEL (DC2) AND CONNECT TO CKT#2 ON DC DISTRIBUTION PANEL DC1.
   - RELABEL AC AND DC DISTRIBUTION PANELS AS LP1, LP2, DC1 & DC2.
   - FURNISH AND INSTALL CONTROL CABLES FROM CONTROL PANEL TO MOD CONTROL BOXES AS PER PLANS.
   - INTERFACE THE FOLLOWING WITH RTU AND SCADA SYSTEM:
     - NEW MODS 11, 22, 33, 44, 11W, 22W, 44W.
     - NEW SNOW MELTER SWR1.
2. THE CONTRACTOR SHALL VERIFY CONDITIONS IN THE FIELD TO BECOME FAMILIAR WITH EXISTING EQUIPMENT AND WIRING DETAILS.
3. THE CONTRACTOR SHALL UNDERTAKE ALL REPAIRS NECESSARY FOR PROPER FINISH ON THE EXISTING PANELS, WHERE REQUIRED.
4. WHEN REROUTED CABLES ARE NOT LONG ENOUGH TO CONNECT TO THE NEW EQUIPMENT, PROVIDE NEW REPLACEMENT CABLES AND CONDUITS AS REQUIRED AT NO ADDITIONAL COST.
5. SEE DWG. E–155 FOR EXISTING ARRANGEMENTS AND ITEMS IDENTIFICATION.
6. ALL RELEASED MATERIAL SHALL BE HANDED OVER TO THE ENGINEER AT THE NOMINATED SITE.

FRONT DOOR VIEW (PARTIAL)
EXISTING CONTROL PANEL

NAMEPLATE TABLE		TAGGING RELAY ADD.	CIM ADD.
LOCATION	NOMENCLATURE		
NP1	CP–257		
CS1/T1	22	XXX	XXX
CS2/T2	44	XXX	XXX
CS3/T3	11	XXX	XXX
CS4/T4	33	XXX	XXX
CS5/T5	S13	XXX	XXX
CS6/T6	S24	XXX	XXX
CS7/T7	SWTR1	XXX	XXX
CS8/T8	SWTR2	XXX	XXX
CS9/T9	W11	XXX	XXX
CS10/T10	W22	XXX	XXX
CS11/T11	W44	XXX	XXX
CS12/T12			

D.C. DISTRIBUTION PANEL – DC1
125V DC

LUG SIZE: 4/0 — MAIN BUS – COPPER 200A MAIN BREAKER

DESCRIPTION	CIR. NO.		CIR. NO.	DESCRIPTION
HMI	1	30A / 15A	2	SUPPLY FOR DISTRIBUTION PNL DC2
DC TO BREAKER ON 803	3	70A / 70A	4	SPARE
SWITCH HEATER #1	5	15A / 15A	6	SWITCH HEATER #2
SIGNAL MOD SW 13	7	30A / 15A	8	SIGNAL MOD SW 24

D.C. DISTRIBUTION PANEL – DC2
125V DC

LUG SIZE: 4/0 — MAIN BUS – COPPER 200A MAIN BREAKER

DESCRIPTION	CIR. NO.		CIR. NO.	DESCRIPTION
MOD 11	1	15A / 15A	2	MOD 22
MOD 33	3	15A / 15A	4	MOD 44
MOD 11W	5	15A / 15A	6	MOD 22W
MOD 44W	7	15A / 15A	8	D.C. LIGHTING

THE INFORMATION, INCLUDING ESTIMATED QUANTITIES OF WORK SHOWN ON THESE SHEETS IS BASED ON LIMITED INVESTIGATIONS BY THE STATE AND IS IN NO WAY WARRANTED TO INDICATE THE TRUE CONDITIONS OR ACTUAL QUANTITIES OR DISTRIBUTION OF QUANTITIES OF WORK WHICH WILL BE REQUIRED.

N.T.S.

URS CORPORATION AES
500 ENTERPRISE DRIVE
ROCKY HILL, CT 06067
1-(860)-529-8882

THE Burns GROUP
ENGINEERING AND CONSTRUCTION
Burns Engineering, Inc.
Metro Plaz II
8201 Corporate Drive, Suite 800
Landover, MD 20785-2230
phone 703-760-9076 fax 301-577-2088

NO.	DATE	DESCRIPTION

REVISIONS

STATE OF CONNECTICUT
DEPARTMENT OF TRANSPORTATION

SECTION C–1a & C–2 NEW HAVEN LINE

CATENARY REPLACEMENT BETWEEN WALK BRIDGE AND STRUCTURE 636, PECK BRIDGE AND STRUCTURE 863

CONTROL HOUSE MODIFICATIONS – CP 257

ENGINEER: BURNS ENGINEERING
DESIGNER: MS — DRAFTER: HJ — CHECKER: JCD
APPROVED: SDB — DATE: 09/13/13
STRUCTURE NO. — BRIDGE LOG NO. — STRUCTURE SHEET NO. E–156

PROJECT CONTROL DATE: 09/13/13 DISK FILENAME: E–156.dwg 100% DESIGN

F H W A REGION	STATE	TOWN	FED. AID PROJ. NO.	PROJ. NO.	YEAR	SHEET NUMBER
1	CONN.	VARIOUS	CT-05-0109	301-0145	2013	01.03.072

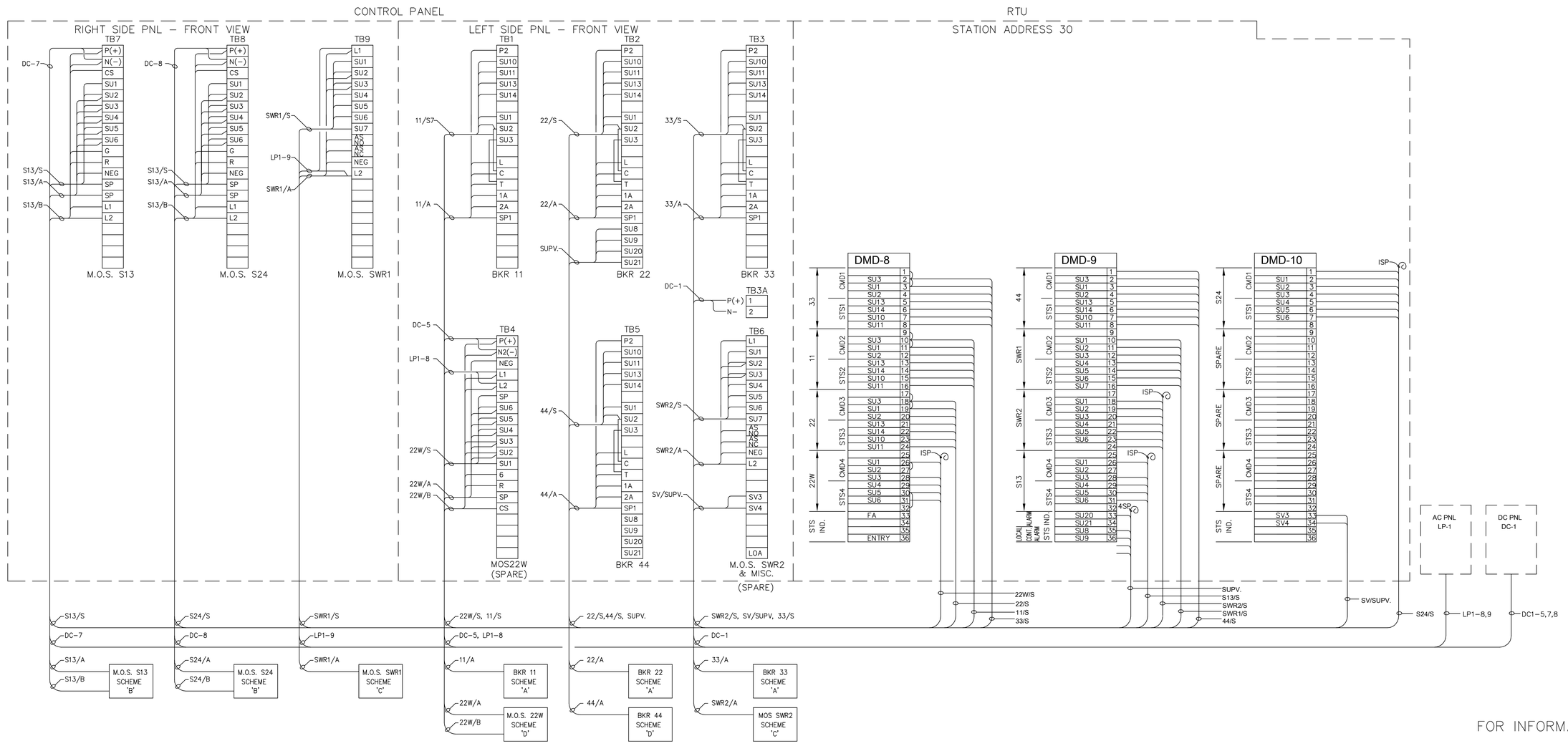

FOR INFORMATION ONLY

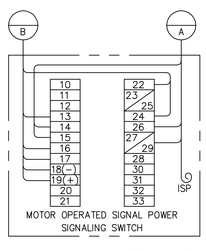

TYPICAL M.O.S. CONNECTION
SCHEME 'B'

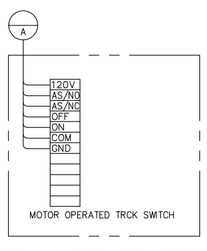

TYPICAL M.O.S. CONNECTION
SCHEME 'B'

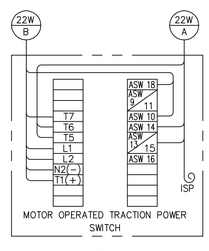

M.O.S. CONNECTION
SCHEME 'D'

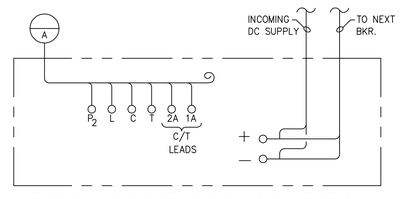

TYPICAL BRIDGE O.C.B. CONNECTION
SCHEME 'A'

NOTES:

1. THIS IS DRAWING IS BASED ON CDOT DWG. NO. 0803-1001.
2. THIS DRAWING IS FOR INFORMATION ONLY. THE CONTRACTOR SHALL VERIFY THE DETAILS IN THE FIELD AND FAMILIARIZE HIMSELF WITH SITE CONDITIONS AND WIRING DETAILS FOR DEVELOPING INTERFACE WITH NEW EQUIPMENT.

N.T.S.

THE INFORMATION, INCLUDING ESTIMATED QUANTITIES OF WORK SHOWN ON THESE SHEETS IS BASED ON LIMITED INVESTIGATIONS BY THE STATE AND IS IN NO WAY WARRANTED TO INDICATE THE TRUE CONDITIONS OR ACTUAL QUANTITIES OR DISTRIBUTION OF QUANTITIES OF WORK WHICH WILL BE REQUIRED.

URS CORPORATION AES
500 ENTERPRISE DRIVE
ROCKY HILL, CT 06067
1-(860)-529-8882

NO.	DATE	DESCRIPTION

REVISIONS

STATE OF CONNECTICUT
DEPARTMENT OF TRANSPORTATION

SECTION C-1a & C-2 NEW HAVEN LINE

CATENARY REPLACEMENT BETWEEN WALK BRIDGE AND STRUCTURE 636, PECK BRIDGE AND STRUCTURE 863

EXISTING INTERCONNECTION DIAGRAM RTU SUPERVISORY & CONTROL PANEL-CP 257

ENGINEER: URS CORPORATION AES
DESIGNER: RW | DRAFTER: AMK | CHECKER: AJM
APPROVED: T. HOLLAND | DATE: 09/13/13
STRUCTURE NO. | BRIDGE LOG NO. | STRUCTURE SHEET NO. E-157

PROJECT CONTROL DATE: 09/13/13 DISK FILENAME: E-157.dwg 100% DESIGN

F H W A REGION	STATE	TOWN	FED. AID PROJ. NO.	PROJ. NO.	YEAR	SHEET NUMBER
1	CONN.	VARIOUS	CT-05-0109	301-0145	2013	01.03.073

STATE OF CONNECTICUT · DUSTIN K. KIDD · No. 29367 · LICENSED PROFESSIONAL ENGINEER

URS CORPORATION AES
500 ENTERPRISE DRIVE
ROCKY HILL, CT 06067

NO.	DEVICE FOR RTU INTERFACE	POINT DESCRIPTION	SUPERVISORY POINT TYPE		
			COMMAND (DO)	STATUS (DI)	GCT ALARM
1	DEVICE 11, 22, 33, 44, 11W, 22W, 44W, S13, S24, SWR1, SWR2, 1 SPARE	OPEN/OFF	X	X	
		CLOSE/ON	X	X	
		LOCAL		X	X
2	DC BUS UNDERVOLTAGE RELAY	LOSS OF 125 VDC SUPPLY		X	X
3	BATTERY CHARGER	LOSS OF AC POWER		X	X
		BATTERY CHARGER FAILURE		X	X
		BATTERY CHAGER HI		X	X
		BATTERY CHARGE LO		X	X
4	BATTERY	DC POSITIVE GROUND FAULT		X	X
		DC NEGATIVE GROUND FAULT		X	X
5	INTRUSION DETECTION	ENTRY		X	X
6	FIRE/SMOKE DETECTION	FIRE		X	X

NOTES:

1. FOR DETAILS OF PLC BASED RTU SCADA SYSTEM, REFER TO SPECIFICATION.
2. THE CONTRACTOR SHALL DEVELOP SUPERVISORY POINT ASSIGNMENT CHARTS FOR EACH RTU INDICATING TERMINAL BOARD TERMINAL NUMBERS, POINT ADDRESS, FUNCTION, DESCRIPTION & REFERENCE TO INTERCONNECTION DIAGRAM PRIOR TO EQUIPMENT FABRICATION.
3. FINAL SUPERVISORY POINT ASSIGNMENT CHARTS SHALL BE SUPPLIED TO RAILROAD IN PAPER COPY FORM AND IN ELECTRONIC DATABASE FORM, COMPLETE WITH SOFTWARE WHICH EDITS THE DATABASE.
4. DESCRIPTIONS OF SUPERVISORY POINTS SHALL IDENTIFY THE EXACT EQUIPMENT UNDER CONTROL OR STATUS MONITORING.
5. TERMINAL BOARD DETAILS AND THEIR NUMBERING SYSTEM FOR CONTROL AND STATUS MODULES SHALL BE SUBMITTED FOR APPROVAL.
6. RACEWAYS FOR ROUTING MNCR TELEPHONE LINES TO THE SCADA CABINET SHALL BE FURNISHED AND INSTALLED BY THE CONTRACTOR.
7. THE RTU CABINET GROUND TERMINAL LUG SHALL BE BONDED TO THE GROUND BUS BAR WITH A MIN. #8 AWG CU 600V INSULATED CABLE.
8. AN MOD TROUBLE SIGNAL SHALL BE INTERNALLY GENERATED BY THE PLC. IF BOTH THE OPEN AND CLOSED STATUS POINTS FOR THE SAME MOD HAVE THE SAME VALUE, THEN AN MOD TROUBLE ANNUNCIATION IS GENERATED AT MASTER STATION AT GRAND CENTRAL TERMINAL (GCT). SEE TABLE BELOW.

MOD OPEN DI POINT	MOD CLOSED DI POINT	MOD TROUBLE ANNUNCIATION
0	0	YES
0	1	NO
1	0	NO
1	1	YES

9. THE CONTRACTOR SHALL INTERFACE NEW PLC BASED SCADA WITH EXISTING EQUIPMENT IN THE CONTROL HOUSE. FURNISH AND INSTALL ANY ADDITIONAL RELAYS/COMPONENTS AND ASSOCIATED WIRING AS REQUIRED.

THE INFORMATION, INCLUDING ESTIMATED QUANTITIES OF WORK SHOWN ON THESE SHEETS IS BASED ON LIMITED INVESTIGATIONS BY THE STATE AND IS IN NO WAY WARRANTED TO INDICATE THE TRUE CONDITIONS OR ACTUAL QUANTITIES OR DISTRIBUTION OF QUANTITIES OF WORK WHICH WILL BE REQUIRED.

URS CORPORATION AES
500 ENTERPRISE DRIVE
ROCKY HILL, CT 06067
1-(860)-529-8882

THE Burns GROUP
ENGINEERING AND CONSTRUCTION

Burns Engineering, Inc.
Metro-Plex II
8201 Corporate Drive, Suite 800
Landover, MD 20785-2230
phone 703-760-9076 fax 301-577-0088

NO.	DATE	DESCRIPTION

REVISIONS

STATE OF CONNECTICUT
DEPARTMENT OF TRANSPORTATION

SECTION C-1a & C-2 NEW HAVEN LINE

CATENARY REPLACEMENT BETWEEN WALK BRIDGE AND STRUCTURE 636, PECK BRIDGE AND STRUCTURE 863

SCADA RTU AND LCP

1/0 POINT SCHEDULE – CP 257

ENGINEER: BURNS ENGINEERING

DESIGNER: MS DRAFTER: HJ CHECKER: JCD

APPROVED: SDB DATE: 09/13/13

STRUCTURE NO. BRIDGE LOG NO. STRUCTURE SHEET NO. E-159

PROJECT CONTROL DATE: 09/13/13 DISK FILENAME: 100% DESIGN

F H W A REGION	STATE	TOWN	FED. AID PROJ. NO.	PROJ. NO.	YEAR	SHEET NUMBER
1	CONN.	VARIOUS	CT-05-0109	301-0145	2013	01.03.074

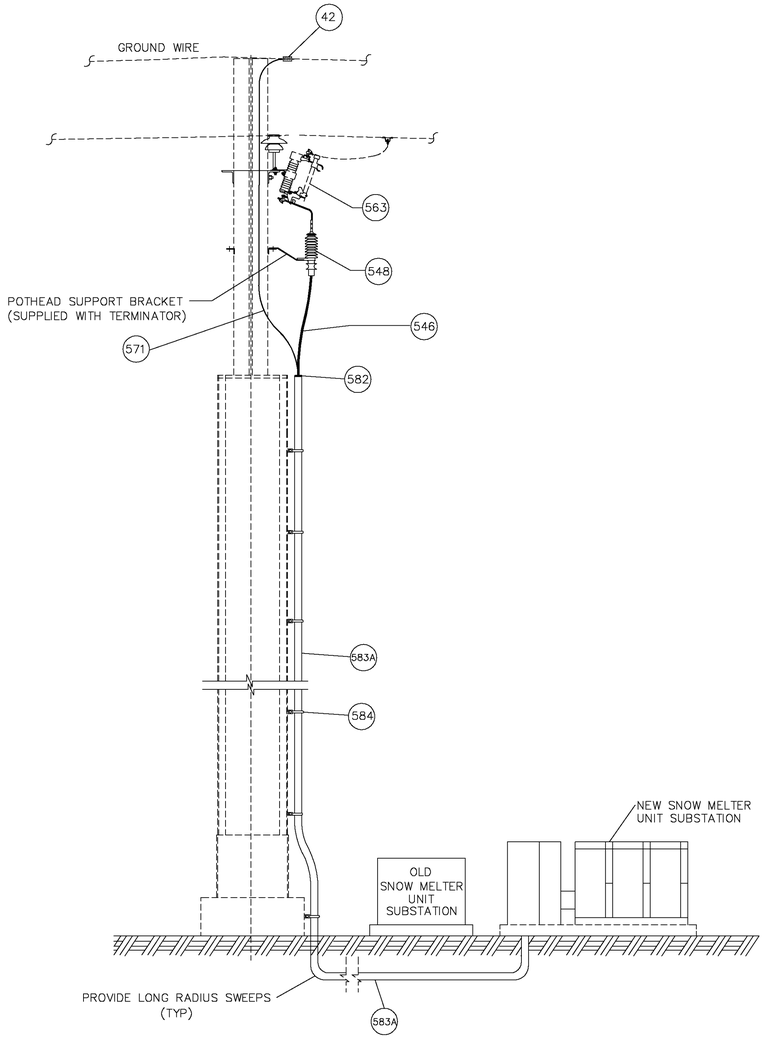

SIDE VIEW

ACROSS TRACK
(ARRESTER NOT
SHOWN FOR CLARITY)

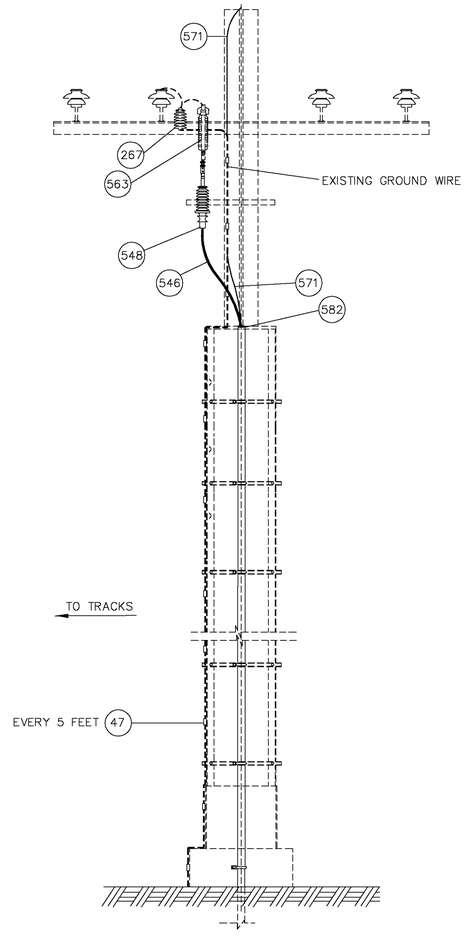

LOOKING EAST

ALONG TRACK

PART No.	METRO-NORTH No.	DESCRIPTION	QTY
42	10202792	UNIVERSAL PARALLEL CLAMP	1
47	10201629	GROUND CONNECTOR, CABLE TO FLAT SURFACE	AS REQ'D
267		27 KV SURGE ARRESTER W/BRACKET	1
546		35 KV 133% 1/C 1/0 AWG. 19 STRAND EPR INSULATION	AS REQ'D
548		35 KV PORCELAIN CABLE TERMINATION WITH SUPPORT BRACKET	1
563		FUSE FOR FUSE CUTOUT ASSEMBLY	1
571		600V 1/C 1/0 AWG EPR INSULATION	AS REQ'D
582		4"ø CONDUIT SEALING END AND CABLE SUPPORT	1
583A		4"ø GRS CONDUIT	AS REQ'D
584		2 PIECE PIPE STRAP FOR 4"ø CONDUIT	AS REQ'D

STATE OF CONNECTICUT
DOUGLAS K. HOLLAND
No. 23397
LICENSED
PROFESSIONAL ENGINEER

URS CORPORATION AES
500 ENTERPRISE DRIVE
ROCKY HILL, CT 06067

NOTES:

1. FOR SNOW MELTER DETAILS SEE DRAWINGS E-93 & E-102.
2. SNOW MELTER CONTROL CABLES, FUSED CUTOUT SWITCH, AND FEEDER TAP SHALL BE RE-USED IF IN SATISFACTORY CONDITION. CONTRACTOR SHALL INSTALL NEW SNOW MELTER, SURGE ARRESTER, FUSE, CONDUITS, SUPPORTS, AND POWER CABLES. PROVIDE ADEQUATE BEND RADIUS FOR CABLES IN CONDUIT. SEE SPECIFICATIONS FOR DETAILS.
3. NEW SNOW MELTERS SHOULD BE LOCATED AS CLOSE AS POSSIBLE TO OLD SNOW MELTER FOUNDATIONS. CONTRACTOR SHALL DETERMINE OPTIMAL LOCATION BASED ON FIELD CONDITIONS. POWER FOR NEW SNOW MELTER SHALL BE FROM EXISTING FEEDER WIRE. INSTALL NEW CONDUIT TO SNOW MELTER SO THAT THE END STUBS UP INSIDE THE HIGH VOLTAGE COMPARTMENT.
4. CONTRACTOR TO REMOVE AND DISCARD OLD SNOW MELTER AFTER NEW SMUS IS OPERATIONAL.
5. CONNECT H2 CONNECTION FROM SMUS TO AERIAL GROUND WIRE.

THE INFORMATION, INCLUDING ESTIMATED QUANTITIES OF WORK SHOWN ON THESE SHEETS IS BASED ON LIMITED INVESTIGATIONS BY THE STATE AND IS IN NO WAY WARRANTED TO INDICATE THE TRUE CONDITIONS OR ACTUAL QUANTITIES OR DISTRIBUTION OF QUANTITIES OF WORK WHICH WILL BE REQUIRED.

URS CORPORATION AES
500 ENTERPRISE DRIVE
ROCKY HILL, CT 06067
1-(860)-529-8882

THE Burns GROUP
ENGINEERING AND CONSTRUCTION

Burns Engineering, Inc.
Metro-Plex II
8201 Corporate Drive, Suite 800
Landover, MD 20785-2230
phone 301-560-9076 fax 301-577-0088

NO.	DATE	DESCRIPTION

REVISIONS

STATE OF CONNECTICUT
DEPARTMENT OF TRANSPORTATION

SECTION C-1a & C-2 NEW HAVEN LINE

CATENARY REPLACEMENT BETWEEN
WALK BRIDGE AND STRUCTURE 636,
PECK BRIDGE AND STRUCTURE 863

SNOW MELTER UNIT SUBSTATION
CATENARY TAP (TYP)

ENGINEER: BURNS ENGINEERING
DESIGNER: MS DRAFTER: HJ CHECKER: JCD
APPROVED: SDB DATE: 09/13/13
STRUCTURE NO. BRIDGE LOG NO. STRUCTURE SHEET NO. E-160

PROJECT CONTROL DATE: 09/13/13 DISK FILENAME: E-160.dwg 100% DESIGN

F H W A REGION	STATE	TOWN	FED. AID PROJ. NO.	PROJ. NO.	YEAR	SHEET NUMBER
1	CONN.	VARIOUS	CT-05-0109	301-0145	2013	01.03.075

URS CORPORATION AES
500 ENTERPRISE DRIVE
ROCKY HILL, CT 06067

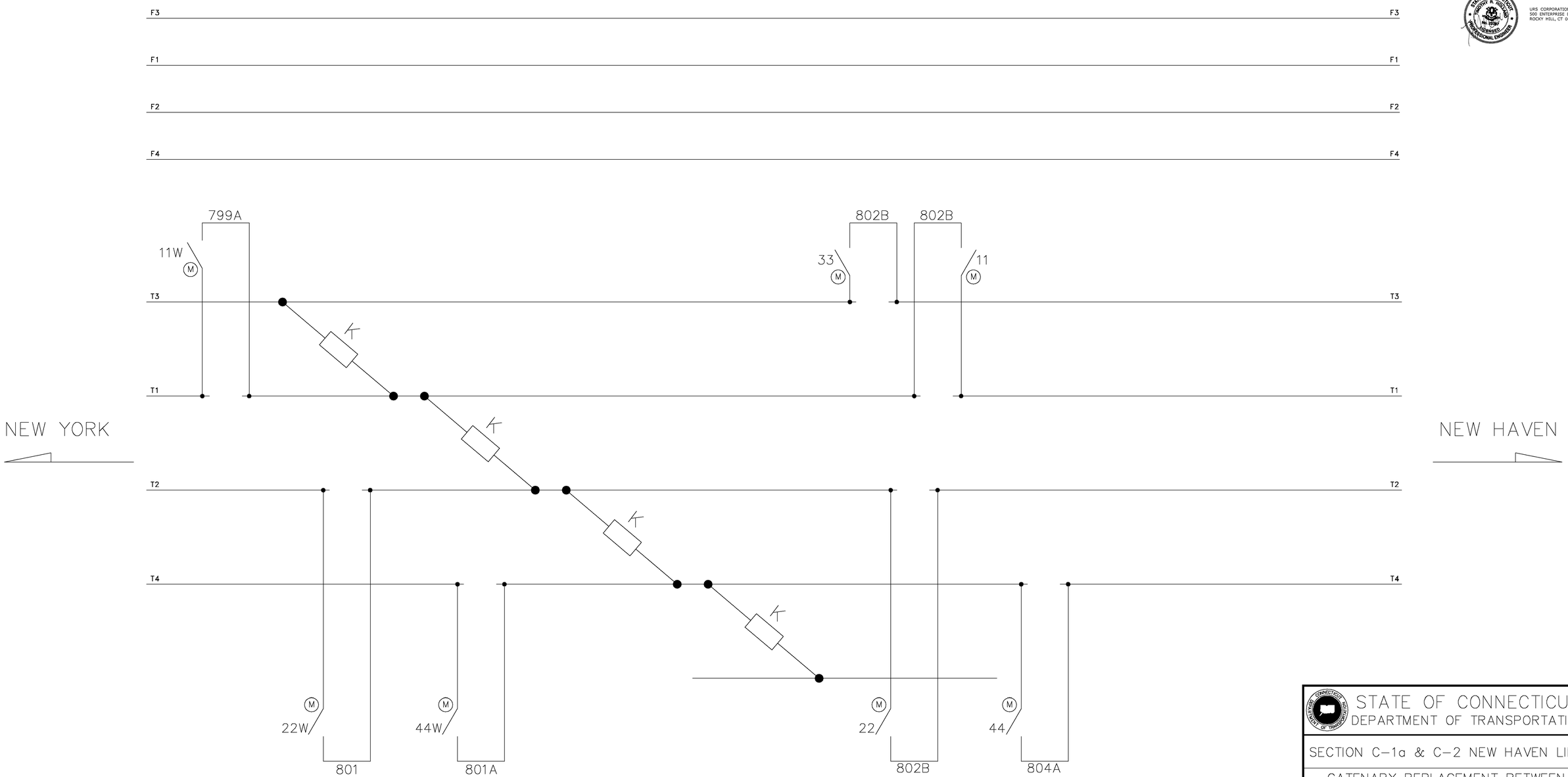

THE INFORMATION, INCLUDING ESTIMATED QUANTITIES OF WORK SHOWN ON THESE SHEETS IS BASED ON LIMITED INVESTIGATIONS BY THE STATE AND IS IN NO WAY WARRANTED TO INDICATE THE TRUE CONDITIONS OR ACTUAL QUANTITIES OR DISTRIBUTION OF QUANTITIES OF WORK WHICH WILL BE REQUIRED.

URS CORPORATION AES
500 ENTERPRISE DRIVE
ROCKY HILL, CT 06067
1-(860)-529-8882

THE Burns GROUP
ENGINEERING AND CONSTRUCTION

Burns Engineering, Inc.
Metro-Plex II
8201 Corporate Drive, Suite 800
Landover, MD 20785-2230
phone 301-560-9076 fax 301-577-0088

NO.	DATE	DESCRIPTION

REVISIONS

STATE OF CONNECTICUT
DEPARTMENT OF TRANSPORTATION

SECTION C-1a & C-2 NEW HAVEN LINE

CATENARY REPLACEMENT BETWEEN WALK BRIDGE AND STRUCTURE 636, PECK BRIDGE AND STRUCTURE 863

SINGLE LINE DIAGRAM –
CP 257

ENGINEER: BURNS ENGINEERING
DESIGNER: MS DRAFTER: HJ CHECKER: JCD
APPROVED: SDB DATE: 09/13/13
STRUCTURE NO. BRIDGE LOG NO. STRUCTURE SHEET NO. E-161

PROJECT CONTROL DATE: 09/13/13 DISK FILENAME: E-161.dwg 100% DESIGN

F H W A REGION	STATE	TOWN	FED. AID PROJ. NO.	PROJ. NO.	YEAR	SHEET NUMBER
1	CONN.	VARIOUS	CT-05-0109	301-0145	2013	01.03.076

URS CORPORATION AES
500 ENTERPRISE DRIVE
ROCKY HILL, CT 06067

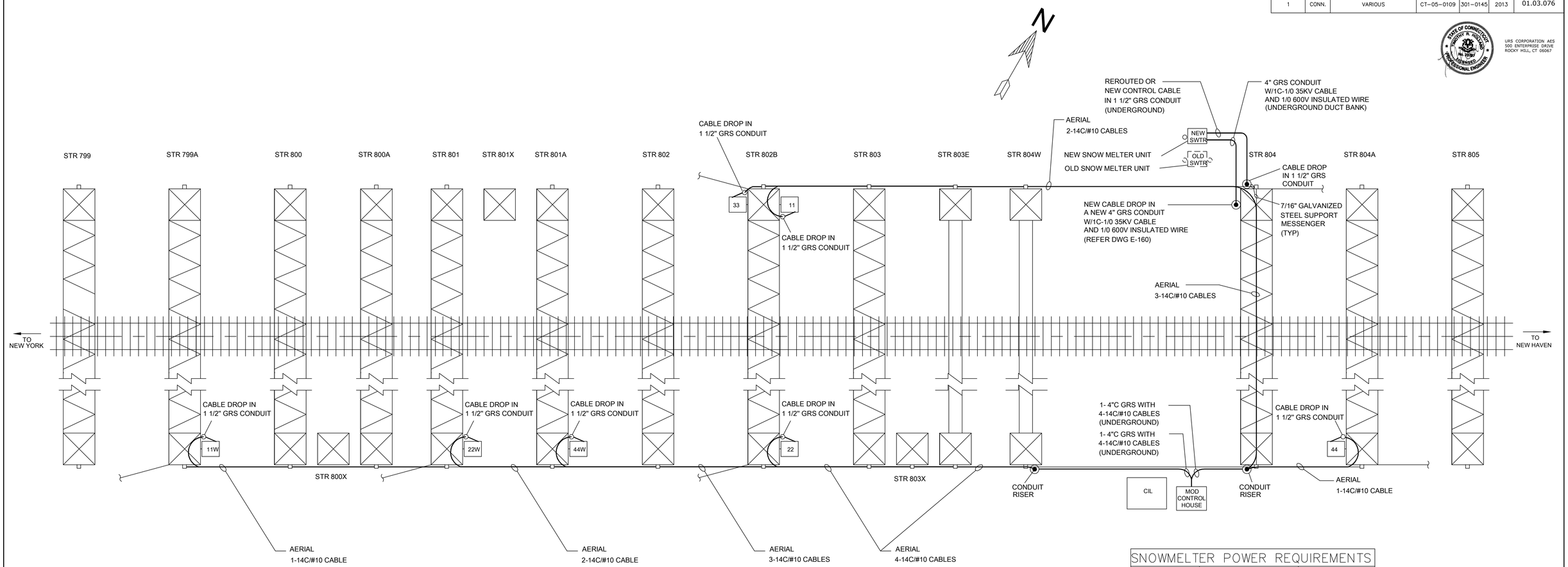

SNOWMELTER POWER REQUIREMENTS		
NAME	TRANSFORMER POWER CAPACITY	CONDUIT DROP AT STRUCTURE
CP 257	750,000 VA	804 N-SIDE

NOTES:

1. THE DRAWING SHOWS THE GENERAL APPROACH TO THE CONTROL CABLES LAYOUT FOR NEW MODS AND SNOW MELTER. THE CONTRACTOR SHALL VERIFY FIELD CONDITIONS FOR UNDERGROUND AND AERIAL CABLE INSTALLATION TO AVOID ANY CONFLICT WITH EXISTING STRUCTURES, S&C CABLES AND UNDERGROUND UTILITIES. ANY CHANGES REQUIRED DURING THE COURSE OF INSTALLATIONS SHALL BE AT NO ADDITIONAL COST TO CDOT.
2. AERIAL RUN OF CABLES SHALL BE SUSPENDED BY 7/16" GALVANIZED STEEL SUPPORT MESSENGER PROVIDED WITH SUITABLE RINGS TO CARRY THE CABLES. ALSO SEE DWG E-60 FOR DETAILS.
3. ACTUAL LOCATION OF CABLE DROP CONDUITS AND CABLE ROUTING EITHER AERIALLY OR UNDERGROUND SHALL BE A FIELD DECISION BY THE ENGINEER.
4. PROVIDE CONDUIT SEALINGS FOR CONDUITS AS REQUIRED.
5. SEE DWG. P-101 AND P-102 FOR SITE LOCATION.
6. SEE DWG. E-160 FOR 35KV POWER CABLE DROP TO SNOW MELTER AND ASSOCIATED DETAILS.
7. ATTACH CABLE SUPPORT MESSENGER TO PULL-OFF STRUCTURES #800X AND #803X, IF REQUIRED.
8. ADJUST HEIGHT OF CABLE SUPPORT MESSENGER TO PROVIDE CLEARANCE TO GROUND AS PER NESC REQUIREMENTS.
9. SEE ALSO NOTES ON DWG. E-156.
10. SEE DWG. E-163 FOR CONDUIT AND CABLE SCHEDULE.

THE INFORMATION, INCLUDING ESTIMATED QUANTITIES OF WORK SHOWN ON THESE SHEETS IS BASED ON LIMITED INVESTIGATIONS BY THE STATE AND IS IN NO WAY WARRANTED TO INDICATE THE TRUE CONDITIONS OR ACTUAL QUANTITIES OR DISTRIBUTION OF QUANTITIES OF WORK WHICH WILL BE REQUIRED.

URS CORPORATION AES
500 ENTERPRISE DRIVE
ROCKY HILL, CT 06067
1-(860)-529-8882

THE Burns GROUP
ENGINEERING AND CONSTRUCTION
Burns Engineering, Inc.
Metro-Plex II
8201 Corporate Drive, Suite 800
Landover, MD 20785-2230
phone 703-760-9076 fax 301-577-2088

NO.	DATE	DESCRIPTION

REVISIONS

STATE OF CONNECTICUT
DEPARTMENT OF TRANSPORTATION

SECTION C-1a & C-2 NEW HAVEN LINE

CATENARY REPLACEMENT BETWEEN WALK BRIDGE AND STRUCTURE 636, PECK BRIDGE AND STRUCTURE 863

SITE PLAN AND CABLE AND CONDUIT ARRANGEMENT – CP 257

ENGINEER: BURNS ENGINEERING
DESIGNER: MS DRAFTER: HJ CHECKER: JCD
APPROVED: SDB DATE: 09/13/13
STRUCTURE NO. BRIDGE LOG NO. STRUCTURE SHEET NO. E-162

PROJECT CONTROL DATE: 09/13/13 DISK FILENAME: E-162.dwg 100% DESIGN

F H W A REGION	STATE	TOWN	FED. AID PROJ. NO.	PROJ. NO.	YEAR	SHEET NUMBER
1	CONN.	VARIOUS	CT-05-0109	301-0145	2013	01.03.077

STATE OF CONNECTICUT · DIMITRY K. KOSOVICH · No. 23357 · LICENSED PROFESSIONAL ENGINEER

URS CORPORATION AES
500 ENTERPRISE DRIVE
ROCKY HILL, CT 06067

CABLE No.	CONDUIT TYPE	FT	CABLE FROM	CABLE TO	WIRE OR CABLE No.	No. & SIZE	INSULATION	RUN	TOTAL	ITEM	REMARKS
35 KV 133% INSULATION POWER CABLES											
	4"ø GRS		STR 804 NORTHSIDE	NEW SNOWMELTER (SWTR1)@ STR 804 NORTHSIDE	1	1/C #1/0 AWG	35KV EPR				E-162, E-156 (NOTE 1)
600 V CABLES											
	4"ø GRS		STR 804W SOUTHSIDE	CP 257 CONTROL HOUSE MOD CONTROL PANEL	4	14/C #10 AWG	600 V EPR				E-162, E-156
	AERIAL		STR 804W SOUTHSIDE	MOD SWITCH 22 @ STR 802B SOUTHSIDE	1	14/C #10 AWG	600 V EPR				E-162, E-156
	AERIAL		STR 804W SOUTHSIDE	MOD SWITCH 44W @ STR 801A SOUTHSIDE	1	14/C #10 AWG	600 V EPR				E-162, E-156
	AERIAL		STR 804W SOUTHSIDE	MOD SWITCH 22W @ STR 801 SOUTHSIDE	1	14/C #10 AWG	600 V EPR				E-162, E-156
	AERIAL		STR 804W SOUTHSIDE	MOD SWITCH 11W @ STR 799A SOUTHSIDE	1	14/C #10 AWG	600 V EPR				E-162, E-156
	4"ø GRS		STR 804 SOUTHSIDE	CP 257 CONTROL HOUSE MOD CONTROL PANEL	4	14/C #10 AWG	600 V EPR				E-162, E-156
	AERIAL		STR 804 SOUTHSIDE	MOD SWITCH 44 @ STR 804A SOUTHSIDE	1	14/C #10 AWG	600 V EPR				E-162, E-156
	AERIAL		STR 804 SOUTHSIDE	MOD SWITCH 11 @ STR 802B NORTHSIDE	1	14/C #10 AWG	600 V EPR				E-162, E-156
	AERIAL		STR 804 SOUTHSIDE	MOD SWITCH 33 @ STR 802B NORTHSIDE	1	14/C #10 AWG	600 V EPR				E-162, E-156
	AERIAL		NEW SMU AT STR 804 NORTHTHSIDE	STR 804 SOUTHSIDE	1	14/C #10 AWG	600 V EPR				E-162, E-156 (NOTE 1)
	NOTE 1		AERIAL GROUND WIRE @ STR 804 NORTHSIDE	H2 RETURN CONNECTION TO NEW SWTR1	1	1/C#1/0 AWG	600 V				E-162, E-156 (NOTE 1)

NOTES:

1. THE 35KV AND 600V CABLES SHALL BE RUN IN THE SAME 4" DIA CONDUIT. PROVIDE TRANSITION COUPLING BETWEEN PVC AND ALUMINUM CONDUIT AS REQUIRED.
2. CONTROL CABLES ORIGINALLY USED FOR THE OLD SNOW MELTER UNIT MAY BE REUSED FOR NEW SNOW MELTER UNIT, IF FOUND TO BE ADEQUATE AND IN SATISFACTORY CONDITION. SEE SPECIFICATION SECTION "BASIC ELECTRICAL MATERIALS AND METHODS" FOR DETAILS. ALTERNATIVELY INSTALL NEW CONTROL CABLE TO THE NEW SNOW MELTER UNIT.

THE INFORMATION, INCLUDING ESTIMATED QUANTITIES OF WORK SHOWN ON THESE SHEETS IS BASED ON LIMITED INVESTIGATIONS BY THE STATE AND IS IN NO WAY WARRANTED TO INDICATE THE TRUE CONDITIONS OR ACTUAL QUANTITIES OR DISTRIBUTION OF QUANTITIES OF WORK WHICH WILL BE REQUIRED.

URS CORPORATION AES
500 ENTERPRISE DRIVE
ROCKY HILL, CT 06067
1-(860)-529-8882

THE Burns GROUP
ENGINEERING AND CONSTRUCTION

Burns Engineering, Inc.
Metro-Plaz II
8201 Corporate Drive, Suite 800
Landover, MD 20785-2230
phone 703-760-9076 fax 301-577-0088

NO.	DATE	DESCRIPTION

REVISIONS

STATE OF CONNECTICUT
DEPARTMENT OF TRANSPORTATION

SECTION C-1a & C-2 NEW HAVEN LINE

CATENARY REPLACEMENT BETWEEN WALK BRIDGE AND STRUCTURE 636, PECK BRIDGE AND STRUCTURE 863

CONDUIT AND CABLE SCHEDULE – CP 257

ENGINEER: BURNS ENGINEERING
DESIGNER: MS DRAFTER: HJ CHECKER: JCD
APPROVED: SDB DATE: 09/13/13
STRUCTURE NO. BRIDGE LOG NO. STRUCTURE SHEET NO. E-163

PROJECT CONTROL DATE: 09/13/13 DISK FILENAME: E-163.dwg 100% DESIGN

F.H.W.A. REGION	STATE	TOWN	FED. AID PROJ. NO.	PROJ. NO.	YEAR	SHEET NUMBER
1	CONN.	VARIOUS	CT-05-0109	301-0145	2013	01.03.078

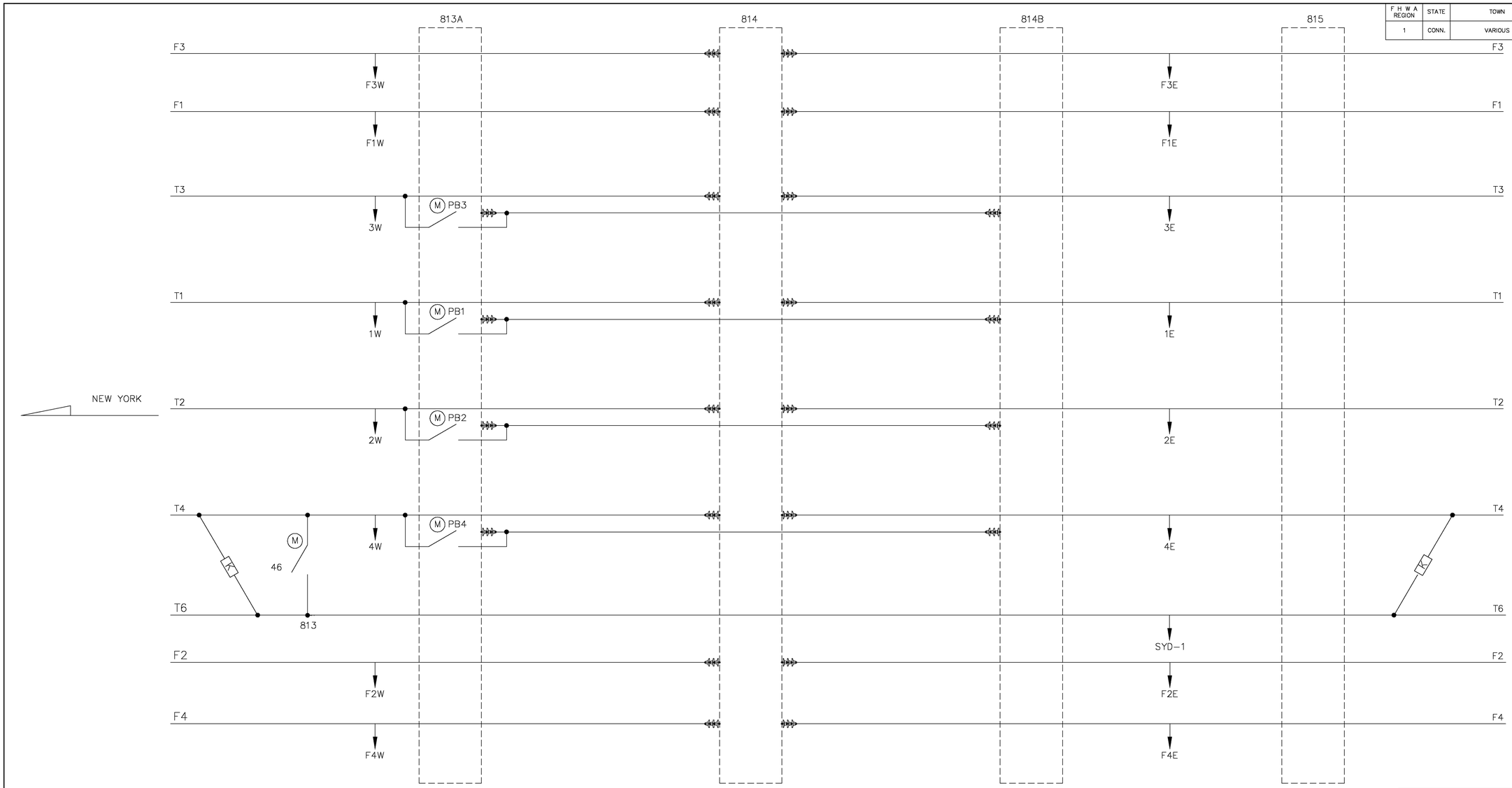

URS CORPORATION AES
500 ENTERPRISE DRIVE
ROCKY HILL, CT 06067

N.T.S.

K — SECTION INSULATOR

DISCONNECT SWITCH (MANUAL)

M — DISCONNECT SWITCH (MOTORIZED)

THE INFORMATION, INCLUDING ESTIMATED QUANTITIES OF WORK SHOWN ON THESE SHEETS IS BASED ON LIMITED INVESTIGATIONS BY THE STATE AND IS IN NO WAY WARRANTED TO INDICATE THE TRUE CONDITIONS OR ACTUAL QUANTITIES OR DISTRIBUTION OF QUANTITIES OF WORK WHICH WILL BE REQUIRED.

URS CORPORATION AES
500 ENTERPRISE DRIVE
ROCKY HILL, CT 06067
1-(860)-529-8882

THE Burns GROUP
ENGINEERING AND CONSTRUCTION

Burns Engineering, Inc.
Metro-Plex II
8201 Corporate Drive, Suite 800
Landover, MD 20785-2230
phone 301-560-9076 fax 301-577-0088

NO.	DATE	DESCRIPTION

REVISIONS

STATE OF CONNECTICUT
DEPARTMENT OF TRANSPORTATION

SECTION C-1a & C-2 NEW HAVEN LINE

CATENARY REPLACEMENT BETWEEN WALK BRIDGE AND STRUCTURE 636, PECK BRIDGE AND STRUCTURE 863

SINGLE LINE DIAGRAM

BRIDGEPORT AB-814

ENGINEER: BURNS ENGINEERING

DESIGNER: MS DRAFTER: HJ CHECKER: JCD

APPROVED: SDB DATE: 09/13/13

STRUCTURE NO. BRIDGE LOG NO. STRUCTURE SHEET NO. E-165

PROJECT CONTROL DATE: 09/13/13 DISK FILENAME: E-165.dwg 100% DESIGN

F.H.W.A. REGION	STATE	TOWN	FED. AID PROJ. NO.	PROJ. NO.	YEAR	SHEET NUMBER
1	CONN.	VARIOUS	CT-05-0109	301-0145	2013	01.03.079

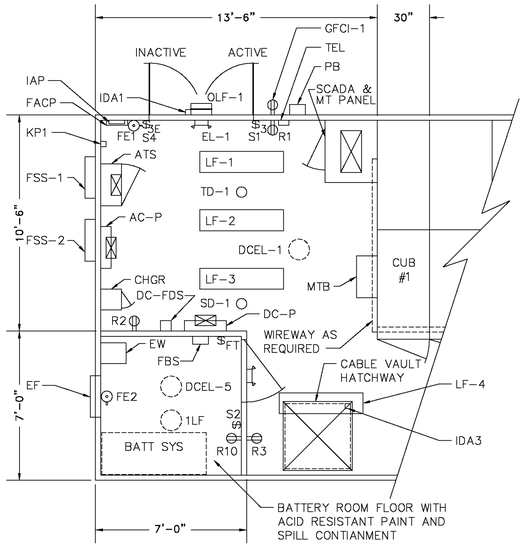

SUBSTATION 814 PLAN

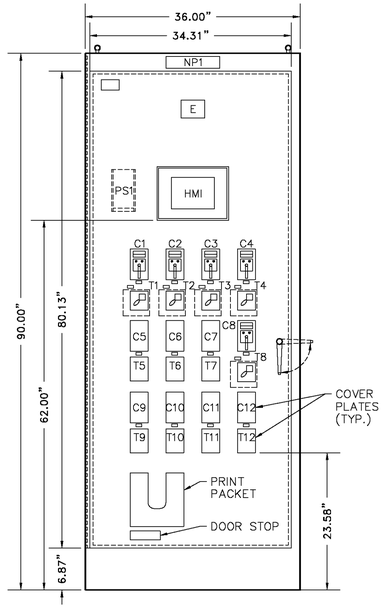

MAIN CABINET (FRONT DOOR VIEW)
EXISTING CONTROL PANEL

NOTES:

1. THE DRAWING IS BASED ON MNR DWG. 0814-6001 AND 0814-6003. DETAILS RELEVANT TO THE PROJECT HAVE BEEN SHOWN.

NAMEPLATE TABLE		TAGGING RELAY ADD.	CIM ADD.
LOCATION	NOMENCLATURE		
NP1	814 EAST BRIDGEPORT		
CS1/T1	SS PB1	101	101
CS2/T2	SS PB2	102	102
CS3/T3	SS PB3	103	103
CS4/T4	SS PB4	104	104
CS8/T8	SWTR-1	117	117

EXISTING EQUIPMENT LIST (PARTIAL)

AC-P	AC PANEL BOARD NEMA-1 ENCLOSURE 10KA, 120/240V, 1ø, 3W, 400A MAIN, 22KAIC
ATS	AUTOMATIC TRANSFER SWITCH, 400A, 12-240V, 1ø, 3W NEMA-1
BATT	BATTERY SYSTEM WITH SPILL COMTAINMENT
BTC	BREAKER TEST CABINET
CHGR	BATTERY CHARGER
DCEL	DC EMERGENCY LIGHT INCANDESCENT 150W
DC-P	125VDC PANEL BOARD
DC-FDS	125VDC FUSED DISCONNECT SWITCH
EF	BATTERY ROOM EXHAUST FAN, 120VAC
EL	EMERGENCY LIGHT FIXTURE WITH BATTERY PACK & EXIT SIGN (EL-2 NO EXIT SIGN)
EW	SALINE EYE WASH GRAVITY FED
FACP	FIRE ALARM CONTROL PANEL
FBS	FAN BY-PASS SWITCH
FE	FIRE EXTINGUSHER 10LB, "ABC" DRY CHEMICAL WITH WALL MOUNTING BRACKET
FT	EXHAUST FAN THERMOSTAT
GFCI	GROUND FAULT CURRENT INTERRUPTER, 120V, 20A
GTCC	GROUND & TEST CONTROL POWER CABINET
HVAC	HEATING VENTILATION AND AIR CONDITIONING UNIT 5-TON, 9KW HTR. 240VAC, 3ø, 0HZ
IAP	INTRUSION ALARM PANEL
LF	LIGHT FIXTURE WITH 2 FLUORESCENT LAMPS T8, 32W AND PRISMATIC DIFFUSER
MTB	MASTER TRIP BOX WITH EMERGENCY PUSHBUTTON
OLF	OUTDOOR LIGHT FIXTURE, WALL-PACK 100W, 120V METAL HALIDE W/ INTEGRAL PHOTOCELL & VANDAL PROOF CAGE
PB	PHONE CO. DEMARCATION BOX
R	DUPLEX RECEPTACLE, 120V, 20A
S	LIGHT SWITCH., 3=3-WAY SW, E=EMERGENCY DC LIGHT SW.
SD	IONIZED SMOKE DETECTOR
FSS	FUSIBLE SAFTEY DISCONNECT SWITCH FOR HVAC, NEMA-3R, 400A, 2ø, 3W
TD	THERMO SMOKE DETECTOR
T	HVAC THERMOSTAT
TEL	TELEPHONE WALL MOUNTED
IDA	INTRUSION DOOR ALARM CONTACT
KP	INTRUSION ALARM KEYPAD

URS CORPORATION AES
500 ENTERPRISE DRIVE
ROCKY HILL, CT 06067

PANEL NO. LP1

AB-814
CONTROL HOUSE

MAIN BUS CU. RATED 100 AMPS
LUG SIZE: #2

PANEL FED FROM 25KVA AUX. XFMR

VOLTAGE: 120/240V 1PH. 3 WIRE
SOLID NEUTRAL

DESCRIPTION	CIR. NO.			CIR. NO.	DESCRIPTION
EXISTING	1	20A	20A	2	EXISTING
EXISTING	3	20A	20A	4	EXISTING
EXISTING	5	30A	30A	6	EXISTING
EXISTING	7	30A	30A	8	EXISTING
EXISTING	9	20A	20A	10	EXISTING
EXISTING	11	20A	20A	12	EXISTING
EXISTING	13	30A	30A	14	EXISTING
EXISTING	15			16	EXISTING
EXISTING	17	20A	20A	18	EXISTING
EXISTING	19			20	EXISTING
EXISTING	21	50A	20A	22	EXISTING
EXISTING	23	20A	20A	24	EXISTING
EXISTING	25	60A	60A	26	EXISTING
EXISTING	27			28	EXISTING
EXISTING	29	60A	20A	30	EXISTING
EXISTING	31			32	EXISTING
SPARE	33	20A	20A	34	SPARE
SPARE	35	20A	20A	36	SPARE
SPARE	37	20A	20A	38	SPARE
SPARE	39	20A	20A	40	SPARE
SPARE	41	20A	20A	42	SPARE

N.T.S.

THE INFORMATION, INCLUDING ESTIMATED QUANTITIES OF WORK SHOWN ON THESE SHEETS IS BASED ON LIMITED INVESTIGATIONS BY THE STATE AND IS IN NO WAY WARRANTED TO INDICATE THE TRUE CONDITIONS OR ACTUAL QUANTITIES OR DISTRIBUTION OF QUANTITIES OF WORK WHICH WILL BE REQUIRED.

URS CORPORATION AES
500 ENTERPRISE DRIVE
ROCKY HILL, CT 06067
1-(860)-529-8882

THE Burns GROUP
ENGINEERING AND CONSTRUCTION

Burns Engineering, Inc.
Metro Plaz II
8201 Corporate Drive, Suite 800
Landover, MD 20785-2230
phone 703-760-9076 fax 301-577-2088

NO.	DATE	DESCRIPTION

REVISIONS

STATE OF CONNECTICUT
DEPARTMENT OF TRANSPORTATION

SECTION C-1a & C-2 NEW HAVEN LINE

CATENARY REPLACEMENT BETWEEN WALK BRIDGE AND STRUCTURE 636, PECK BRIDGE AND STRUCTURE 863

SUBSTATION 814 DETAILS

ENGINEER: BURNS ENGINEERING
DESIGNER: MS DRAFTER: HJ CHECKER: JCD
APPROVED: SDB DATE: 09/13/13
STRUCTURE NO. BRIDGE LOG NO. STRUCTURE SHEET NO. E-166

PROJECT CONTROL DATE: 09/13/13 DISK FILENAME: E-166.dwg 100% DESIGN

F.H.W.A. REGION	STATE	TOWN	FED. AID PROJ. NO.	PROJ. NO.	YEAR	SHEET NUMBER
1	CONN.	VARIOUS	CT-05-0109	301-0145	2013	01.03.080

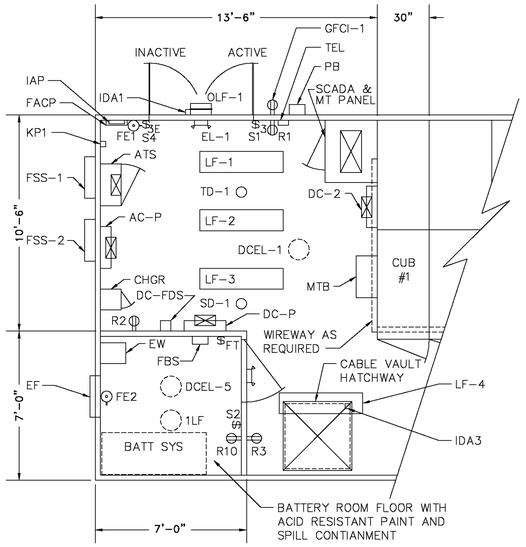

MODIFIED CONTROL HOUSE PLAN

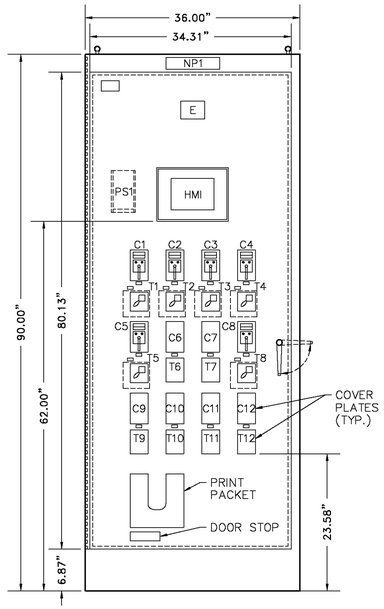

MAIN CABINET (FRONT DOOR VIEW)
EXISTING CONTROL PANEL

NOTES:

1. THE MODIFICATIONS AT THE SUBSTATION AB-814 INCLUDE BUT ARE NOT LIMITED TO THE FOLLOWING. SEE SPECIFICATION FOR MORE DETAILS.
   * FURNISH AND INSTALL FIVE NEW MODs #10, #20, #30, #40, AND #46 AT THE SPECIFIED LOCATIONS ON THE PLANS.
   * CONNECT TO CONTROL SWITCHES, T1, T2, T3, T4 & T8 AND ASSOCIATED TAGGING RELAYS USING TERMINALS IN EXISTING RTU CABINET SEE DWG E-168.
   * FURNISH AND INSTALL NEW DC PANEL WITH FIVE 20A BREAKERS
   * FEED NEW DC PANEL FROM EXISTING DC PANEL USING BREAKER MARKED "MOD DC PANEL."
   * UTILIZE FIVE EXISTING SPARE 20A BREAKERS ON CIRCUITS #33, #35, #37, #39 AND #41 ON THE PANEL LP2 FOR 120V AC POWER SUPPLY TO MOD CONTROL SWITCHES AS INDICATED ON THE PLANS. FURNISH AND INSTALL REQUISITE CONTROL WIRING (DWG E-173 AND E-174).
   * FURNISH AND INSTALL CONTROL CABLES FROM RTU MOD PANEL TO MOD CONTROL BOXES AS PER PLANS. SEE DWG. E-173 & E-174.
   * PROVIDE GROUNDING FOR NEW EQUIPMENT AS REQUIRED.
   * FURNISH AND INSTALL ALL HARDWARE REQUIRED FOR PROPER INSTALLATION AND WIRING OF THE NEW EQUIPMENT AND ACCESSORIES.
   * VERIFY CONDITIONS IN THE FIELD TO BECOME FAMILIAR WITH THE EXISTING EQUIPMENT AND WIRING DETAILS.
   * UNDERTAKE ALL REPAIRS NECESSARY FOR PROPER FINISH ON THE RETAINED PANELS.
2. MNR SHALL INSTALL ALL WIRING AND MAKE REQUIRED CHANGES TO THE RTU SUPERVISORY EQUIPMENT. (DWG E-170 AND E-171).
3. THE DRAWING IS BASED ON MNR DWG. 0814-6001 AND 0814-6003. DETAILS RELEVANT TO THE PROJECT HAVE BEEN SHOWN.

NAMEPLATE TABLE		TAGGING RELAY ADD.	CIM ADD.
LOCATION	NOMENCLATURE		
NP1	814 EAST BRIDGEPORT		
CS1/T1	SS PB1	101	101
CS2/T2	SS PB2	102	102
CS3/T3	SS PB3	103	103
CS4/T4	SS PB4	104	104
CS5/T5	SS 46	105	105
CS8/T8	SWTR-1	117	117

URS CORPORATION AES
500 ENTERPRISE DRIVE
ROCKY HILL, CT 06067

EXISTING EQUIPMENT LIST (PARTIAL)

AC-P	AC PANEL BOARD NEMA-1 ENCLOSURE 10KA, 120/240V, 1ø, 3W, 400A MAIN, 22KAIC
ATS	AUTOMATIC TRANSFER SWITCH, 400A, 12-240V, 1ø, 3W NEMA-1
BATT	BATTERY SYSTEM WITH SPILL COMTAINMENT
BTC	BREAKER TEST CABINET
CHGR	BATTERY CHARGER
DCEL	DC EMERGENCY LIGHT INCANDESCENT 150W
DC-P	125VDC PANEL BOARD
DC-FDS	125VDC FUSED DISCONNECT SWITCH
EF	BATTERY ROOM EXHAUST FAN, 120VAC
EL	EMERGENCY LIGHT FIXTURE WITH BATTERY PACK & EXIT SIGN (EL-2 NO EXIT SIGN)
EW	SALINE EYE WASH GRAVITY FED
FACP	FIRE ALARM CONTROL PANEL
FBS	FAN BY-PASS SWITCH
FE	FIRE EXTINGUSHER 10LB, "ABC" DRY CHEMICAL WITH WALL MOUNTING BRACKET
FT	EXHAUST FAN THERMOSTAT
GFCI	GROUND FAULT CURRENT INTERRUPTER, 120V, 20A
GTCC	GROUND & TEST CONTROL POWER CABINET
HVAC	HEATING VENTILATION AND AIR CONDITIONING UNIT 5-TON, 9KW HTR. 240VAC, 3ø, 0HZ
IAP	INTRUSION ALARM PANEL
LF	LIGHT FIXTURE WITH 2 FLUORESCENT LAMPS T8, 32W AND PRISMATIC DIFFUSER
MTB	MASTER TRIP BOX WITH EMERGENCY PUSHBUTTON
OLF	OUTDOOR LIGHT FIXTURE, WALL-PACK 100W, 120V METAL HALIDE W/ INTEGRAL PHOTOCELL & VANDAL PROOF CAGE
PB	PHONE CO. DEMARCATION BOX
R	DUPLEX RECEPTACLE, 120V, 20A
S	LIGHT SWITCH., 3=3-WAY SW, E=EMERGENCY DC LIGHT SW.
SD	IONIZED SMOKE DETECTOR
FSS	FUSIBLE SAFTEY DISCONNECT SWITCH FOR HVAC, NEMA-3R, 400A, 2ø, 3W
TD	THERMO SMOKE DETECTOR
T	HVAC THERMOSTAT
TEL	TELEPHONE WALL MOUNTED
IDA	INTRUSION DOOR ALARM CONTACT
KP	INTRUSION ALARM KEYPAD

PANEL NO. LP1

AB-814 CONTROL HOUSE

MAIN BUS CU. RATED 100 AMPS
LUG SIZE: #2

PANEL FED FROM 25KVA AUX. XFMR

VOLTAGE: 120/240V 1PH. 3 WIRE — SOLID NEUTRAL

DESCRIPTION	CIR. NO.			CIR. NO.	DESCRIPTION
EXISTING	1	20A	20A	2	EXISTING
EXISTING	3	20A	20A	4	EXISTING
EXISTING	5	30A	30A	6	EXISTING
EXISTING	7	30A	30A	8	EXISTING
EXISTING	9	20A	20A	10	EXISTING
EXISTING	11	20A	20A	12	EXISTING
EXISTING	13	30A	30A	14	EXISTING
EXISTING	15			16	EXISTING
EXISTING	17	20A	20A	18	EXISTING
EXISTING	19			20	EXISTING
EXISTING	21	50A	20A	22	EXISTING
EXISTING	23	20A	20A	24	EXISTING
EXISTING	25	60A	60A	26	EXISTING
EXISTING	27			28	EXISTING
EXISTING	29	60A	20A	30	EXISTING
EXISTING	31			32	EXISTING
M.O.D. PB1	33	20A	20A	34	SPARE
M.O.D. PB2	35	20A	20A	36	SPARE
M.O.D. PB3	37	20A	20A	38	SPARE
M.O.D. PB4	39	20A	20A	40	SPARE
M.O.D. 46	41	20A	20A	42	SPARE

D.C. DISTRIBUTION PANEL 'DC2'

225A RATING — SURFACE MOUNTED

125V. D.C.

DESCRIPTION	CKT. NO.			CKT. NO.	DESCRIPTION
M.O.D. PB1	1	20A	20A	2	M.O.D. PB4
M.O.D. PB2	3	20A	20A	4	SPARE
M.O.D. 46	5	20A	20A	6	SPARE
M.O.D. PB3	7	20A	20A	8	SPARE

N.T.S.

THE INFORMATION, INCLUDING ESTIMATED QUANTITIES OF WORK SHOWN ON THESE SHEETS IS BASED ON LIMITED INVESTIGATIONS BY THE STATE AND IS IN NO WAY WARRANTED TO INDICATE THE TRUE CONDITIONS OR ACTUAL QUANTITIES OR DISTRIBUTION OF QUANTITIES OF WORK WHICH WILL BE REQUIRED.

THE Burns GROUP
ENGINEERING AND CONSTRUCTION
Burns Engineering, Inc.
Metro Plaz II
8201 Corporate Drive, Suite 800
Landover, MD 20785-2230
phone 703-760-9076 fax 301-577-2088

NO.	DATE	DESCRIPTION

REVISIONS

STATE OF CONNECTICUT
DEPARTMENT OF TRANSPORTATION

SECTION C-1a & C-2 NEW HAVEN LINE

CATENARY REPLACEMENT BETWEEN WALK BRIDGE AND STRUCTURE 636, PECK BRIDGE AND STRUCTURE 863

CONTROL HOUSE DETAILS (MODIFIED)
BRIDGEPORT AB-814

ENGINEER: BURNS ENGINEERING
DESIGNER: MS — DRAFTER: HJ — CHECKER: JCD
APPROVED: SDB — DATE: 09/13/13
STRUCTURE NO. — BRIDGE LOG NO. — STRUCTURE SHEET NO. E-167

PROJECT CONTROL DATE: 09/13/13 — DISK FILENAME: E-167.dwg — 100% DESIGN

F.H.W.A. REGION	STATE	TOWN	FED. AID PROJ. NO.	PROJ. NO.	YEAR	SHEET NUMBER
1	CONN.	VARIOUS	CT-05-0109	301-0145	2013	01.03.081

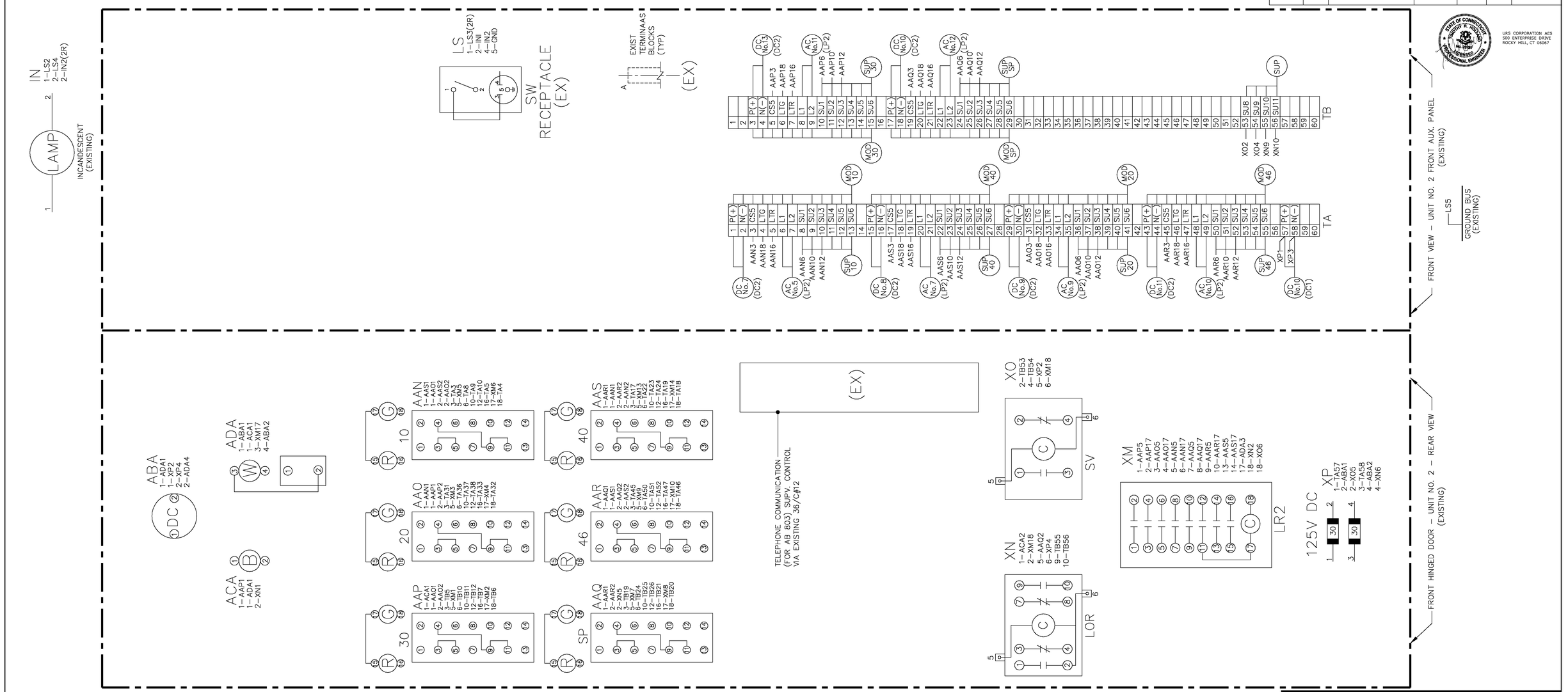

URS CORPORATION AES
500 ENTERPRISE DRIVE
ROCKY HILL, CT 06067

NOTES:

1. ALL ITEMS, EXCEPT THOSE INDICATED AS EXISTING, ARE NEW.
2. THE DRAWING INDICATES THE GENERAL APPROACH TO THE WIRING OF THE CONTROL SWITCHES AND ASSOCIATED EQUIPMENT. THE CONTRACTOR SHALL, HOWEVER, DEVELOP COMPLETE WIRING DIAGRAMS BASED ON THE SPECIFIC EQUIPMENT SUPPLIED AND INSTALLED SUBJECT TO THE APPROVAL OF THE ENGINEER.
3. THE DRAWING IS BASED ON MNR DWG. 0814-1005.
4. ALSO SEE DWG E-53 FOR MOD CONTROL PANEL AC & DC SCHEMATICS. FURNISH AND INSTALL ALL EQUIPMENT AS REQUIRED.

THE INFORMATION, INCLUDING ESTIMATED QUANTITIES OF WORK SHOWN ON THESE SHEETS IS BASED ON LIMITED INVESTIGATIONS BY THE STATE AND IS IN NO WAY WARRANTED TO INDICATE THE TRUE CONDITIONS OR ACTUAL QUANTITIES OR DISTRIBUTION OF QUANTITIES OF WORK WHICH WILL BE REQUIRED.

N.T.S.

URS CORPORATION AES
500 ENTERPRISE DRIVE
ROCKY HILL, CT 06067
1-(860)-529-8882

THE Burns GROUP
ENGINEERING AND CONSTRUCTION

Burns Engineering, Inc.
Metro-Plaz II
8201 Corporate Drive, Suite 800
Landover, MD 20785-2230
phone 301-560-9076 fax 301-577-2088

NO.	DATE	DESCRIPTION

REVISIONS

STATE OF CONNECTICUT
DEPARTMENT OF TRANSPORTATION

SECTION C-1a & C-2 NEW HAVEN LINE

CATENARY REPLACEMENT BETWEEN WALK BRIDGE AND STRUCTURE 636, PECK BRIDGE AND STRUCTURE 863

CONTROL PANEL WIRING DIAGRAM
UNIT NO. 2 FRONT -
BRIDGEPORT AB-814

ENGINEER: BURNS ENGINEERING
DESIGNER: MS DRAFTER: HJ CHECKER: JCD
APPROVED: SDB DATE: 09/13/13
STRUCTURE NO. BRIDGE LOG NO. STRUCTURE SHEET NO. E-168

PROJECT CONTROL DATE: 09/13/13 DISK FILENAME: E-168.dwg 100% DESIGN

F.H.W.A. REGION	STATE	TOWN	FED. AID PROJ. NO.	PROJ. NO.	YEAR	SHEET NUMBER
1	CONN.	VARIOUS	CT-05-0109	301-0145	2013	01.03.082

URS CORPORATION AES
500 ENTERPRISE DRIVE
ROCKY HILL, CT 06067

STATION ADDRESS 23

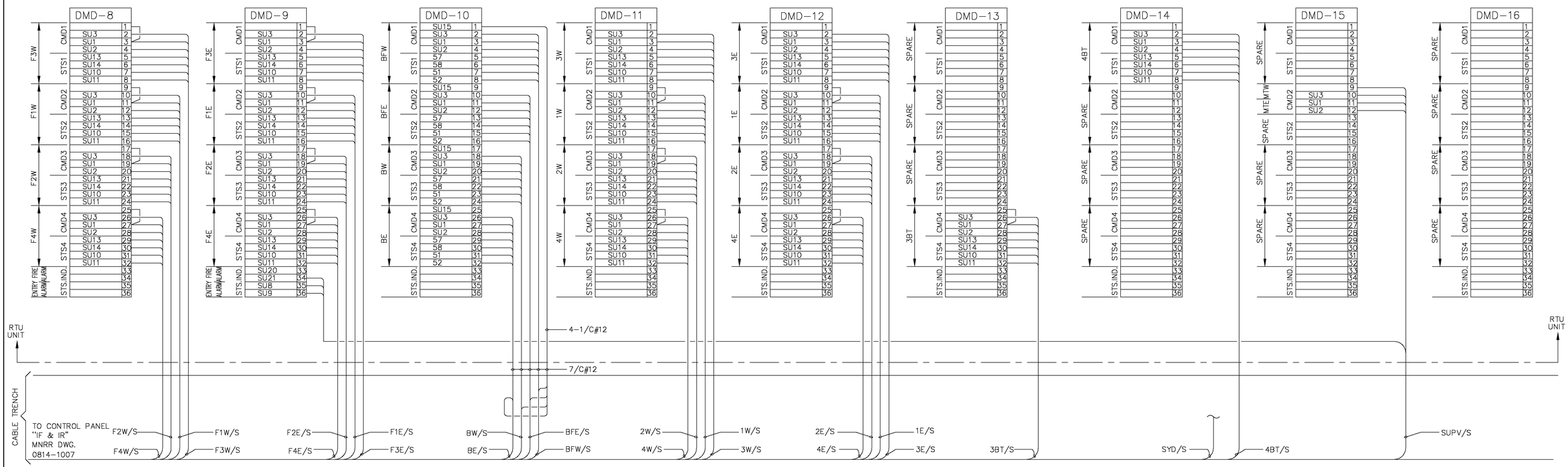

FOR INFORMATION ONLY

N.T.S.

NOTE:

1. THIS DRAWING IS BASED ON MNRR DWG 0814-1008.

THE INFORMATION, INCLUDING ESTIMATED QUANTITIES OF WORK SHOWN ON THESE SHEETS IS BASED ON LIMITED INVESTIGATIONS BY THE STATE AND IS IN NO WAY WARRANTED TO INDICATE THE TRUE CONDITIONS OR ACTUAL QUANTITIES OR DISTRIBUTION OF QUANTITIES OF WORK WHICH WILL BE REQUIRED.

URS CORPORATION AES
500 ENTERPRISE DRIVE
ROCKY HILL, CT 06067
1-(860)-529-8882

THE Burns GROUP
ENGINEERING AND CONSTRUCTION

Burns Engineering, Inc.
Metro Plaz II
8201 Corporate Drive, Suite 800
Landover, MD 20785-2230
phone 703-760-9076 fax 301-577-2088

NO.	DATE	DESCRIPTION

REVISIONS

STATE OF CONNECTICUT
DEPARTMENT OF TRANSPORTATION

SECTION C-1a & C-2 NEW HAVEN LINE

CATENARY REPLACEMENT BETWEEN WALK BRIDGE AND STRUCTURE 636, PECK BRIDGE AND STRUCTURE 863

RTU INTERCONNECTION DIAGRAM (EX.)
BRIDGEPORT AB-814

ENGINEER: BURNS ENGINEERING
DESIGNER: MS DRAFTER: HJ CHECKER: JCD
APPROVED: SDB DATE: 09/13/13
STRUCTURE NO. BRIDGE LOG NO. STRUCTURE SHEET NO. E-170

PROJECT CONTROL DATE: 09/13/13 DISK FILENAME: E-170.dwg 100% DESIGN

F H W A REGION	STATE	TOWN	FED. AID PROJ. NO.	PROJ. NO.	YEAR	SHEET NUMBER
1	CONN.	VARIOUS	CT-05-0109	301-0145	2013	01.03.083

STATE OF CONNECTICUT DUSTIN K. HOLLAND 29287 LICENSED PROFESSIONAL ENGINEER

URS CORPORATION AES
500 ENTERPRISE DRIVE
ROCKY HILL, CT 06067

STATION ADDRESS 23

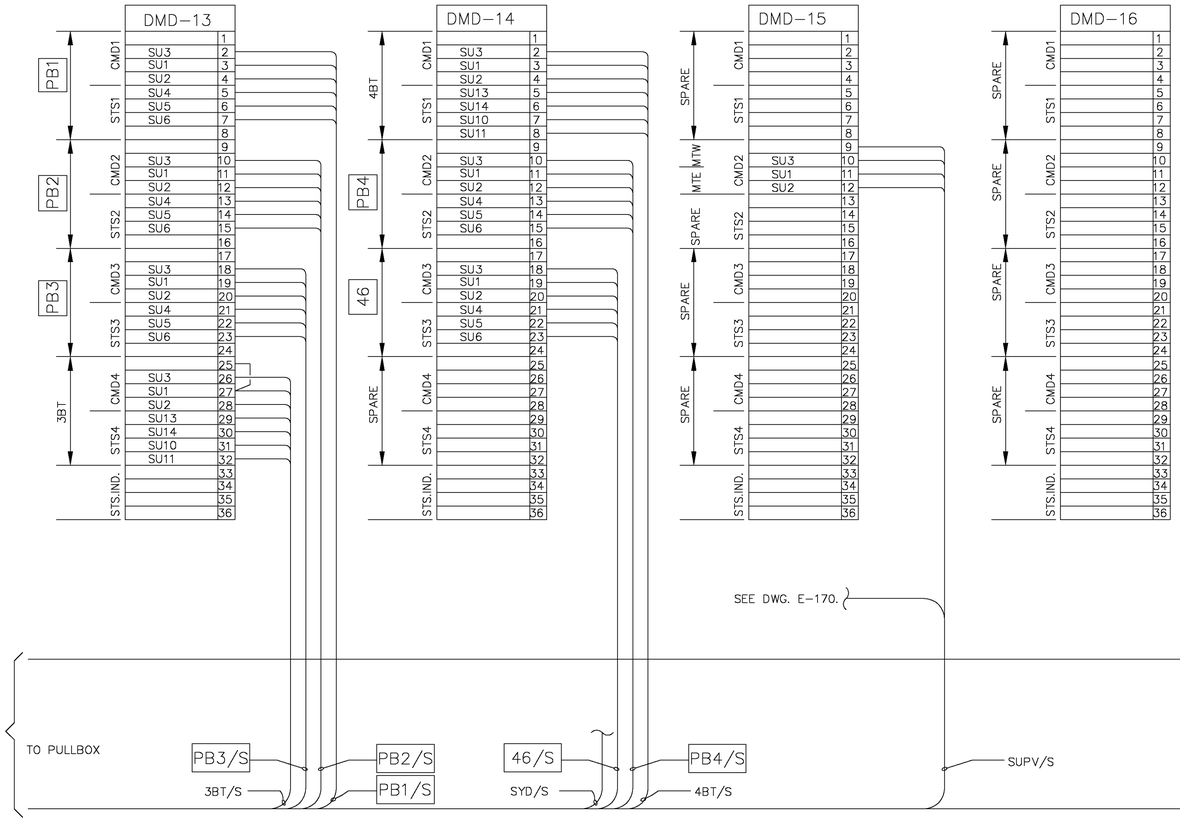

NOTES:

1. ONLY THOSE PORTIONS OF THE PANELS THAT AFFECT THIS PROJECT ARE SHOWN.
2. THIS DRAWING IS BASED ON MNRR DWG 0814-1008.
3. SUPERVISORY CONTROL WIRING FOR NEW MOD's 10,20,30,40 & 46 IS HIGHLIGHTED.

N.T.S.

THE INFORMATION, INCLUDING ESTIMATED QUANTITIES OF WORK SHOWN ON THESE SHEETS IS BASED ON LIMITED INVESTIGATIONS BY THE STATE AND IS IN NO WAY WARRANTED TO INDICATE THE TRUE CONDITIONS OR ACTUAL QUANTITIES OR DISTRIBUTION OF QUANTITIES OF WORK WHICH WILL BE REQUIRED.

URS CORPORATION AES
500 ENTERPRISE DRIVE
ROCKY HILL, CT 06067
1-(860)-529-8882

THE Burns GROUP
ENGINEERING AND CONSTRUCTION

Burns Engineering, Inc.
Metro Plex II
8201 Corporate Drive, Suite 800
Landover, MD 20785-2230
phone 703-760-9076 fax 301-577-0088

NO.	DATE	DESCRIPTION

REVISIONS

BRIDGEPORT AB-814

STATE OF CONNECTICUT
DEPARTMENT OF TRANSPORTATION

SECTION C-1a & C-2 NEW HAVEN LINE

CATENARY REPLACEMENT BETWEEN WALK BRIDGE AND STRUCTURE 636, PECK BRIDGE AND STRUCTURE 863

RTU INTERCONNECTION DIAGRAM (MODIFIED) BRIDGEPORT AB-814

ENGINEER: BURNS ENGINEERING
DESIGNER: MS DRAFTER: HJ CHECKER: JCD
APPROVED: SDB DATE: 09/13/13
STRUCTURE NO. BRIDGE LOG NO. STRUCTURE SHEET NO. E-171

PROJECT CONTROL DATE: 09/13/13 DISK FILENAME: E-171.dwg 100% DESIGN

F H W A REGION	STATE	TOWN	FED. AID PROJ. NO.	PROJ. NO.	YEAR	SHEET NUMBER
1	CONN.	VARIOUS	CT-05-0109	301-0145	2013	01.03.084

URS CORPORATION AES
500 ENTERPRISE DRIVE
ROCKY HILL, CT 06067

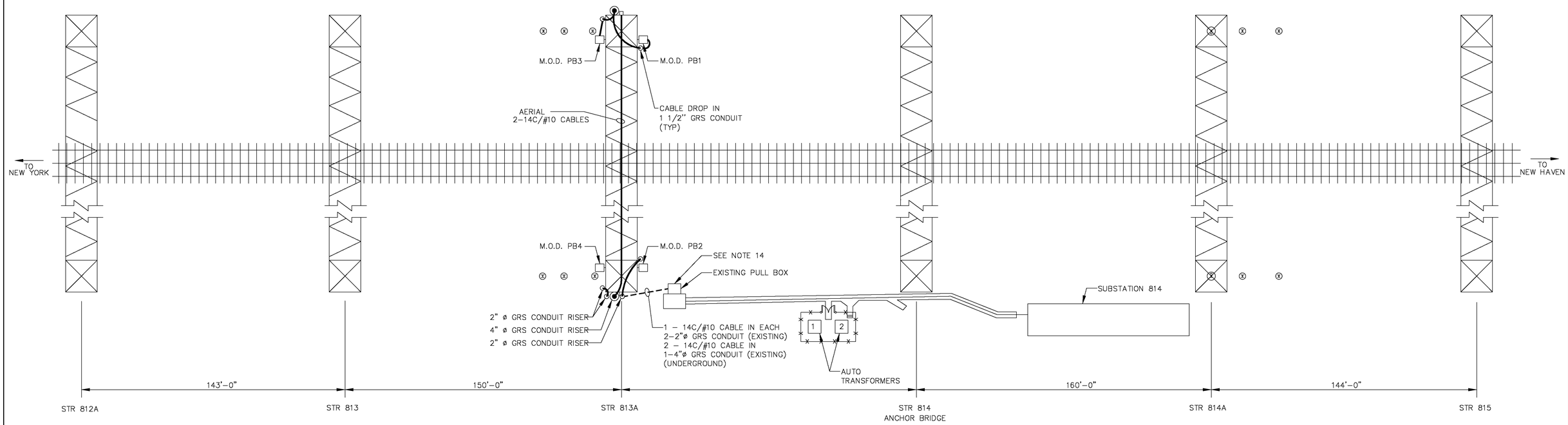

NOTES:

1. THE DRAWING SHOWS THE GENERAL APPROACH TO THE CONTROL CABLES LAYOUT FOR NEW MODS VERIFY FIELD CONDITIONS FOR UNDERGROUND AND AERIAL CABLE INSTALLATION TO AVOID ANY CONFLICT WITH EXISTING STRUCTURES, S&C CABLES AND UNDERGROUND UTILITIES. ANY CHANGES REQUIRED DURING THE COURSE OF INSTALLATIONS SHALL BE AT NO ADDITIONAL COST TO CDOT.
2. AERIAL RUN OF CABLES SHALL BE SUSPENDED BY 7/16" GALVANIZED STEEL SUPPORT MESSENGER PROVIDED WITH SUITABLE RINGS TO CARRY THE CABLES. ALSO SEE DWG E-60 FOR DETAILS. DEVELOP SITE SPECIFIC SUPPORT AND TERMINATION ARRANGEMENTS FOR APPROVAL OF THE ENGINEER.
3. ACTUAL LOCATION OF CABLE DROP CONDUITS AND CABLE ROUTING EITHER AERIALLY OR UNDERGROUND SHALL BE A FIELD DECISION BY THE CONTRACTOR IN COORDINATION WITH THE ENGINEER.
4. PROVIDE CONDUIT END SEALINGS FOR CONDUITS AS REQUIRED.
5. SEE DWG. P-104 AND P-105 FOR SITE LOCATION.
6. SEE ALSO NOTES ON DWG. E-167 AND E-60.
7. SEE DWG. E-174 FOR CONDUIT AND CABLE SCHEDULE.
8. ADJUST HEIGHT OF CABLE SUPPORT MESSENGER TO PROVIDE CLEARANCE TO GROUND AS PER NESC REQUIREMENTS.
9. THE CONTRACTOR SHALL FURNISH ALL HARDWARE AND SUPPORT BRACKETS FOR GROUND AS REQUIRED FOR COMPLETE INSTALLATION.
10. MAINTAIN MINIMUM CONDUIT BEND RADIUS GREATER THAN MINIMUM MANUFACTURER RECOMMENDED CABLE BEND RADIUS.
11. INSTALL UNDERGROUND CONDUITS SUCH THAT THE TOP OF THE CONDUIT(S) IS 3 FT BELOW GRADE. BOTTOM OF TRENCH SHALL INCLUDE 6" OF GRANULAR FILL.
12. ALL UNDERGROUND CONDUITS SHALL BE STUBBED UP IN CONCRETE ENCASEMENT TO THE TOP OF THE FOUNDATION AT THE RELATED STRUCTURE IN COORDINATION WITH THE ENGINEER.
13. THE CONTRACTOR SHALL COORDINATE WITH CDOT AND INSTALL ALL CONTROL CABLES FROM THE FIELD EQUIPMENT TO THE SUBSTATION CONTROL HOUSE AND LEAVE SUFFICIENT LENGTHS OF THESE CABLES FOR FINAL CONNECTIONS TO CONTROL CABINETS BY RAILROAD.
14. RUN (1) 14C/#10 CABLE IN EACH OF THE (2)-2"ø CONDUIT (EXISTING) AND RUN (3) 14C/#10 CABLES IN (1)-4"ø CONDUIT (EXISTING) FOR MODS TO CONTROLS HOUSE.

N.T.S.

THE INFORMATION, INCLUDING ESTIMATED QUANTITIES OF WORK SHOWN ON THESE SHEETS IS BASED ON LIMITED INVESTIGATIONS BY THE STATE AND IS IN NO WAY WARRANTED TO INDICATE THE TRUE CONDITIONS OR ACTUAL QUANTITIES OR DISTRIBUTION OF QUANTITIES OF WORK WHICH WILL BE REQUIRED.

URS CORPORATION AES
500 ENTERPRISE DRIVE
ROCKY HILL, CT 06067
1-(860)-529-8882

THE Burns GROUP
ENGINEERING AND CONSTRUCTION
Burns Engineering, Inc.
Metro-Plaz II
8201 Corporate Drive, Suite 800
Landover, MD 20785-2230
phone 301-560-9076 fax 301-577-2088

NO.	DATE	DESCRIPTION

REVISIONS

STATE OF CONNECTICUT
DEPARTMENT OF TRANSPORTATION

SECTION C-1a & C-2 NEW HAVEN LINE

CATENARY REPLACEMENT BETWEEN WALK BRIDGE AND STRUCTURE 636, PECK BRIDGE AND STRUCTURE 863

SITE PLAN

BRIDGEPORT AB-814

ENGINEER: BURNS ENGINEERING
DESIGNER: MS DRAFTER: HJ CHECKER: JCD
APPROVED: SDB DATE: 09/13/13
STRUCTURE NO. BRIDGE LOG NO. STRUCTURE SHEET NO. E-173

PROJECT CONTROL DATE: 09/13/13 DISK FILENAME: E-173.dwg 100% DESIGN

F H W A REGION	STATE	TOWN	FED. AID PROJ. NO.	PROJ. NO.	YEAR	SHEET NUMBER
1	CONN.	VARIOUS	CT-05-0109	301-0145	2013	01.03.085

URS CORPORATION AES
500 ENTERPRISE DRIVE
ROCKY HILL, CT 06067

CABLE No.	CONDUIT TYPE	CONDUIT FT	CABLE FROM	CABLE TO	WIRE OR CABLE No.	No. & SIZE	INSULATION	RUN	TOTAL	ITEM	REMARKS
	600 V CABLES										
	4"ø GRS		STR 813A NORTHSIDE PULLBOX	AB-814 CONTROL HOUSE CONTROL PANEL (UNIT 2F)	5	14/C #10 AWG	600 V EPR				E-173, E-60
	4"ø GRS CONDUIT RISER		STR 813A NORTHSIDE PULLBOX	MOD SWITCH PB1 @ STR 814A NORTHSIDE	1	14/C #10 AWG	600 V EPR				E-173, E-60
	2"ø GRS CONDUIT RISER		STR 813A NORTHSIDE PULLBOX	MOD SWITCH PB2 @ STR 814A NORTHSIDE	1	14/C #10 AWG	600 V EPR				E-173, E-60
	2"ø GRS CONDUIT RISER, AERIAL		STR 813A NORTHSIDE PULLBOX	MOD SWITCH PB3 @ STR 814A SOUTHSIDE	1	14/C #10 AWG	600 V EPR				E-173, E-60
	2"ø GRS CONDUIT RISER, AERIAL		STR 813A NORTHSIDE PULLBOX	MOD SWITCH PB4 @ STR 814A SOUTHSIDE	1	14/C #10 AWG	600 V EPR				E-173, E-60

NOTES:

1. SEE NOTES ON DWG E-173.

N.T.S.

THE INFORMATION, INCLUDING ESTIMATED QUANTITIES OF WORK SHOWN ON THESE SHEETS IS BASED ON LIMITED INVESTIGATIONS BY THE STATE AND IS IN NO WAY WARRANTED TO INDICATE THE TRUE CONDITIONS OR ACTUAL QUANTITIES OR DISTRIBUTION OF QUANTITIES OF WORK WHICH WILL BE REQUIRED.

URS CORPORATION AES
500 ENTERPRISE DRIVE
ROCKY HILL, CT 06067
1-(860)-529-8882

THE Burns GROUP
ENGINEERING AND CONSTRUCTION
Burns Engineering, Inc.
Metro-Plaz II
8201 Corporate Drive, Suite 800
Landover, MD 20785-2230
phone 703-760-9076 fax 301-577-0088

NO.	DATE	DESCRIPTION

REVISIONS

STATE OF CONNECTICUT
DEPARTMENT OF TRANSPORTATION

SECTION C-1a & C-2 NEW HAVEN LINE

CATENARY REPLACEMENT BETWEEN WALK BRIDGE AND STRUCTURE 636, PECK BRIDGE AND STRUCTURE 863

CONDUIT AND CABLE SCHEDULE

BRIDGEPORT AB-814

ENGINEER: BURNS ENGINEERING

DESIGNER: MS DRAFTER: HJ CHECKER: JCD

APPROVED: SDB DATE: 09/13/13

STRUCTURE NO. BRIDGE LOG NO. STRUCTURE SHEET NO. E-174

PROJECT CONTROL DATE: 09/13/13 DISK FILENAME: E-174.dwg 100% DESIGN

F H W A REGION	STATE	TOWN	FED. AID PROJ. NO.	PROJ. NO.	YEAR	SHEET NUMBER
1	CONN.	VARIOUS	CT-05-0109	301-0145	2013	01.03.086

URS CORPORATION AES
500 ENTERPRISE DRIVE
ROCKY HILL, CT 06067

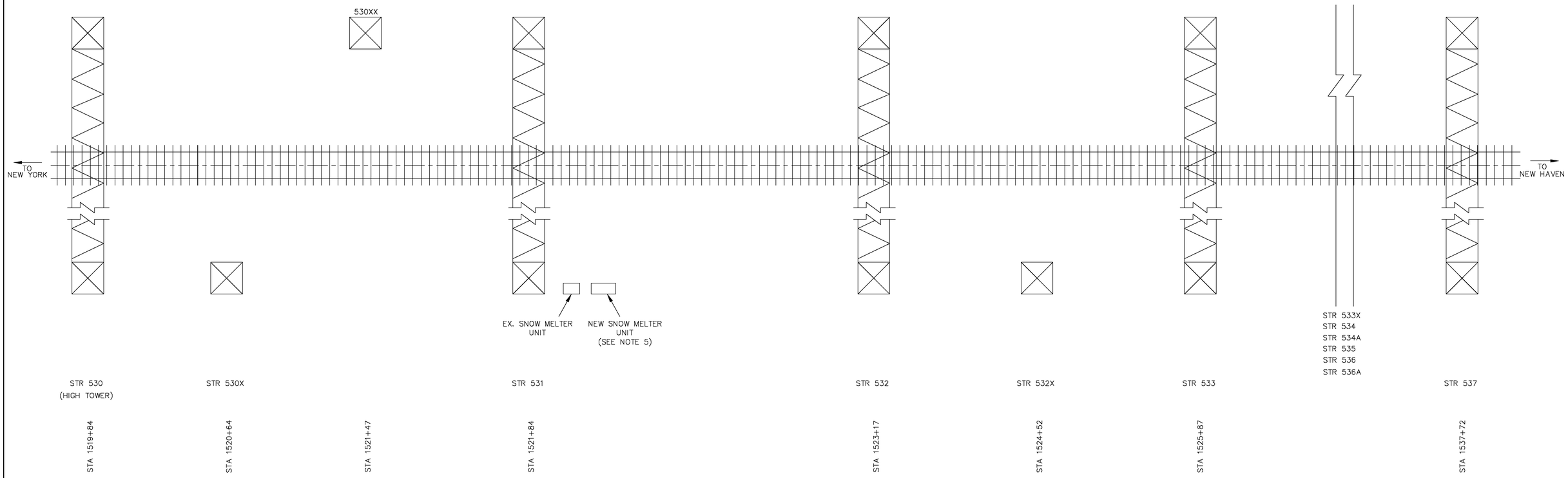

NOTES:

1. THE CONTRACTOR SHALL VERIFY THE FIELD CONDITIONS AND FAMILIARIZE WITH PHYSICAL DETAILS AS REQUIRED. ALSO SEE DWG P-32 AND P-33.
2. THE EXISTING CONTROLS RUN FROM ANCHOR BRIDGE 537 SUBSTATION CONTROL HOUSE ARE AERIAL TO THE EXISTING SNOW MELTER UNIT AT STRUCTURE 531. THE SAME ARRANGEMENT SHALL BE RETAINED WITH NEW SNOW MELTER.
3. THE FEED TO THE NEW SNOW MELTER UNIT AT STR 531 SHALL BE TAPPED OFF OF FEEDER #2.
4. SEE ALSO DWG E-93A, E-102A, E-160A AND E-178 FOR MORE DETAILS.
5. THE ACTUAL LOCATION OF NEW SNOW MELTER UNIT SHALL BE A FIELD DECISION BY THE ENGINEER.

SNOW MELTER POWER REQUIREMENTS

NAME	TRANSFORMER POWER CAPACITY	CONDUIT DROP AT STRUCTURE
CP 241@ STR531	750,000 VA	531 S-SIDE

THE INFORMATION, INCLUDING ESTIMATED QUANTITIES OF WORK SHOWN ON THESE SHEETS IS BASED ON LIMITED INVESTIGATIONS BY THE STATE AND IS IN NO WAY WARRANTED TO INDICATE THE TRUE CONDITIONS OR ACTUAL QUANTITIES OR DISTRIBUTION OF QUANTITIES OF WORK WHICH WILL BE REQUIRED.

URS CORPORATION AES
500 ENTERPRISE DRIVE
ROCKY HILL, CT 06067
1-(860)-529-8882

THE Burns GROUP
ENGINEERING AND CONSTRUCTION
Burns Engineering, Inc.
Metro-Plaz II
8201 Corporate Drive, Suite 800
Landover, MD 20785-2230
phone 301-560-9076 fax 301-577-2088

NO.	DATE	DESCRIPTION

REVISIONS

STATE OF CONNECTICUT
DEPARTMENT OF TRANSPORTATION

SECTION C-1a & C-2 NEW HAVEN LINE

CATENARY REPLACEMENT BETWEEN WALK BRIDGE AND STRUCTURE 636, PECK BRIDGE AND STRUCTURE 863

SITE PLAN

CP 241 @ STR. 531

ENGINEER: BURNS ENGINEERING
DESIGNER: MS DRAFTER: HJ CHECKER: JCD
APPROVED: SDB DATE: 09/13/13
STRUCTURE NO. BRIDGE LOG NO. STRUCTURE SHEET NO. E-177

PROJECT CONTROL DATE: 09/13/13 DISK FILENAME: E-177.dwg 100% DESIGN

F H W A REGION	STATE	TOWN	FED. AID PROJ. NO.	PROJ. NO.	YEAR	SHEET NUMBER
1	CONN.	VARIOUS	CT-05-0109	301-0145	2013	01.03.087

STATE OF CONNECTICUT
DUSTIN K. JOHNSON
No. 29367
LICENSED
PROFESSIONAL ENGINEER

URS CORPORATION AES
500 ENTERPRISE DRIVE
ROCKY HILL, CT 06067

CABLE No.	CONDUIT TYPE	CONDUIT FT	CABLE FROM	CABLE TO	WIRE OR CABLE No.	No. & SIZE	INSULATION	RUN	TOTAL	ITEM	REMARKS
35 KV 133% INSULATION POWER CABLES											
	4"ø AL/PVC		STR 531 SOUTHSIDE (FEEDER #2)	NEW SNOW MELTER UNIT @ STR 531 SOUTHSIDE	1	1/C #1/0 AWG	35KV EPR				E-160A, E-102A, (NOTE 1)
600 V CABLES											
	————		AERIAL GROUND WIRE @ STR 531 SOUTHSIDE	H2 RETURN CONNECTION TO NEW SNOW MELTER UNIT	1	1/C#1/0 AWG	600 V				E-160A, E-102A, (NOTE 1)

NOTES:

1. THE 35KV POWER CABLE AND 600V GROUND CABLE SHALL BE RUN IN THE SAME 4" DIA CONDUIT. PROVIDE TRANSITION COUPLING BETWEEN PVC AND ALUMINUM CONDUIT AS REQUIRED.
2. CONTROL CABLES ORIGINALLY USED FOR THE OLD SNOW MELTER UNIT MAY BE REUSED FOR NEW SNOW MELTER UNIT, IF FOUND TO BE ADEQUATE AND IN SATISFACTORY CONDITION. SEE SPECIFICATION SECTIONS "BASIC ELECTRICAL MATERIALS AND METHODS" AND "750KVA SNOWMELTER UNIT SUBSTATIONS" FOR DETAILS. ALTERNATIVELY INSTALL NEW CONTROL CABLES FROM MOD CONTROL PANEL (ANCHOR BRIDGE SUBSTATION AT STR 537) TO THE NEW SNOW MELTER UNIT.

THE INFORMATION, INCLUDING ESTIMATED QUANTITIES OF WORK SHOWN ON THESE SHEETS IS BASED ON LIMITED INVESTIGATIONS BY THE STATE AND IS IN NO WAY WARRANTED TO INDICATE THE TRUE CONDITIONS OR ACTUAL QUANTITIES OR DISTRIBUTION OF QUANTITIES OF WORK WHICH WILL BE REQUIRED.

URS CORPORATION AES
500 ENTERPRISE DRIVE
ROCKY HILL, CT 06067
1-(860)-529-8882

THE Burns GROUP
ENGINEERING AND CONSTRUCTION

Burns Engineering, Inc.
Metro-Plaz II
8201 Corporate Drive, Suite 800
Landover, MD 20785-2230
phone 703-760-9076 fax 301-577-0088

NO.	DATE	DESCRIPTION

REVISIONS

STATE OF CONNECTICUT
DEPARTMENT OF TRANSPORTATION

SECTION C-1a & C-2 NEW HAVEN LINE

CATENARY REPLACEMENT BETWEEN WALK BRIDGE AND STRUCTURE 636, PECK BRIDGE AND STRUCTURE 863

CONDUIT AND CABLE SCHEDULE

CP 241 @ STR. 531

ENGINEER: BURNS ENGINEERING
DESIGNER: MS DRAFTER: HJ CHECKER: JCD
APPROVED: SDB DATE: 09/13/13
STRUCTURE NO. BRIDGE LOG NO. STRUCTURE SHEET NO. E-178

PROJECT CONTROL DATE: 09/13/13 DISK FILENAME: E-178.dwg 100% DESIGN

F H W A REGION	STATE	TOWN	FED. AID PROJ. NO.	PROJ. NO.	YEAR	SHEET NUMBER
1	CONN.	VARIOUS	CT-05-0109	301-0145	2013	01.03.088

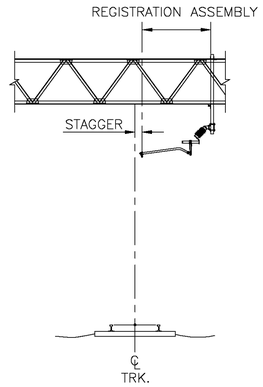

TANGENT TRACK

1. PROJECT AND MARK CENTERLINE OF TRACK ONTO BOTTOM OF TRUSS BY OPTICAL/LASER GAUGE.
2. LOCATE STEADY ARM DROP TUBE FROM THIS MARK BY SUM OF REQUIRED STAGGER AND ACTUAL DIMENSIONS OF STEADY ARM AND STEADY ARM SUPPORT ASSEMBLIES, AS SHOWN ON ERECTION DIAGRAMS.
3. DETERMINE IF STEADY ARM DROP TUBE AND ASSEMBLIES CAN BE INSTALLED AS SHOWN ON ERECTION DIAGRAMS OR INSTALL MODIFIED AS SHOWN IN DIAGRAMS AND METHODS ON THIS DRAWING.
4. LOCATE MS ASSEMBLY DROP TUBE FROM THIS MARK BY SUM OF REQUIRED STAGGER, CALCULATED SWING OUT OR IN OF MS ASSEMBLY PULLEY, AND ACTUAL DIMESIONS OF MS ASSEMBLY.
5. DETERMINE IF MS ASSEMBLY DROP TUBE AND ASSEMBLIES CAN BE INSTALLED AS SHOWN ON ERECTION DIAGRAMS OR INSTALL MODIFIED AS SHOWN IN DIAGRAMS AND METHODS ON THIS DRAWING.

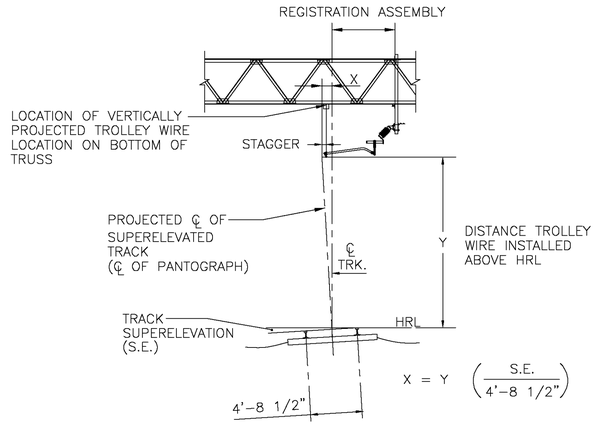

CURVED TRACK WITH MIRROR GAUGE

1. PROJECT AND MARK CENTERLINE OF TRACK ONTO BOTTOM OF TRUSS BY OPTICAL/LASER GAUGE.
2. FROM THIS MARK LOCATE VERTICALLY PROJECTED TROLLEY WIRE LOCATION ON BOTTOM OF TRUSS BY MEASUREMENT OF STAGGER AS SHOWN ON ERECTION DIAGRAMS, AND DIMENSION "X" AND THE LENGTH OF THE REGISTRATION ASSEMBLY.

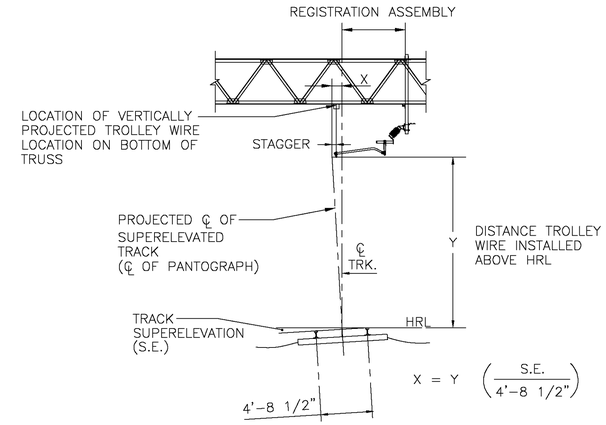

CURVED TRACK W/ PLUMB BOB

1. PROJECT AND MARK CENTERLINE OF TRACK ONTO BOTTOM OF TRUSS BY USE OF A PLUMB BOB.
2. FROM THIS MARK LOCATE VERTICALLY PROJECTED TROLLEY WIRE BY ADDING DIMENSION X MINUS STAGGER (FROM ERECTION DIAGRAM)

* 3. ±1/2" FOR SYSTEM HEIGHTS OF 1'-6" OR LESS, INCREASING TO ±2" FOR SYSTEM HEIGHTS OF 3'-0" OR GREATER.

NOTE: NEW AND OLD TRUSSES VARY IN POSITION OF CHORD ANGLES AND DIAGONAL BRACES.

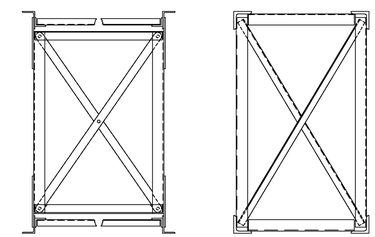

OLD TRUSS NEW TRUSS

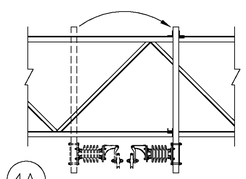

4A

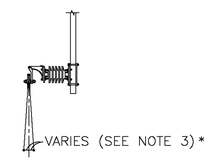

5A

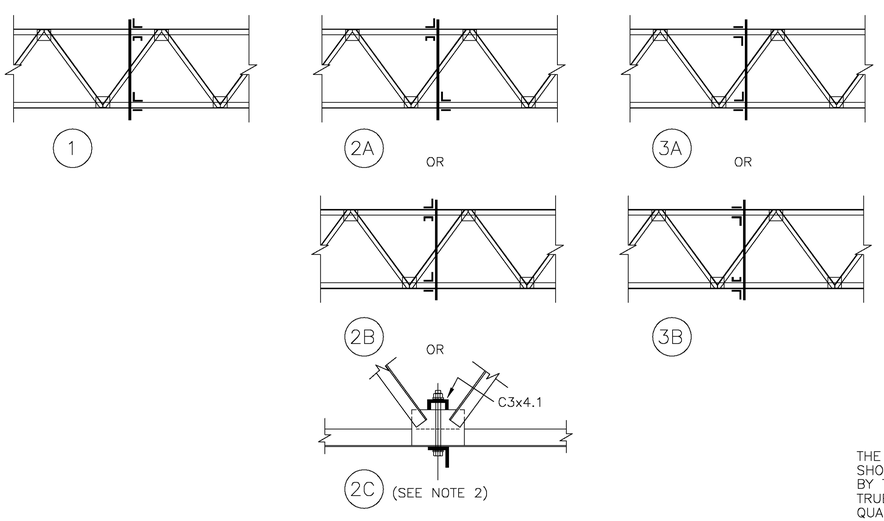

PLACE DROP TUBE SUPPORT ANGLES AS PER PLANS → IF THERE IS INTERFERENCE WITH TRUSS BRACING (SEE NOTE 2) → MOVE DROP TUBE SUPPORT ANGLES TO OPPOSITE SIDE OF DROP TUBE → IF THERE STILL IS INTERFERENCE WITH TRUSS BRACING → REVERSE TOP AND/OR BOTTOM SUPPORTS

- IF THERE STILL IS INTERFERENCE WITH MESSENGER SUPPORT DROP TUBE → REVERSE MS-1 OR MS-2 → IF SHIFT NOT PERMISSIBLE → PLACE MESSENGER NOT MORE THAN ±2" OFF CENTER OF CONTACT WIRE
- IF THERE STILL IS INTERFERENCE WITH MESSENGER SUPPORT DROP TUBE → SHIFT DROP TUBE TO LEFT OR RIGHT 2 1/2" (WHICH STILL KEEPS THE DROP BRACKET WITHIN THE 5" CENTER POSITION OF THE REGISTRATION TUBE) → IF THERE STILL IS INTERFERENCE → CHANGE FROM RA-18 TO RA-R OR CHANGE FROM SA-54 TO SA-64

NOTES:

1. SEE DWG. S-13 FOR CLAMPING ARRANGEMENTS FOR DROP TUBE SUPPORT.
2. WHERE DROP TUBE SUPPORTS FALL AT GUSSET PLATES, THESE SUPPORTS MAY BE INSTALLED OVER AND AROUND THE GUSSET PLATES WITH THE DROP TUBE ANGLES, BACK PLATES, AND BACKER CHANNEL AS SHOWN. LONGER BOLTS, DEPENDING ON THE HEIGHT OF THE GUSSET PLATE MAY BE REQUIRED FOR THESE APPLICATIONS.

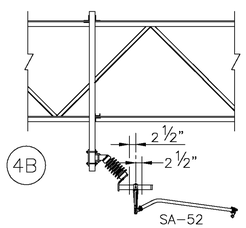

4B

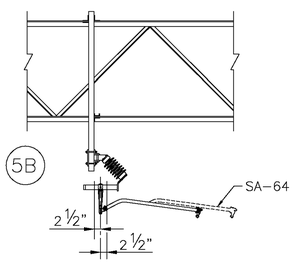

5B

SCALE: NONE

THE INFORMATION, INCLUDING ESTIMATED QUANTITIES OF WORK SHOWN ON THESE SHEETS IS BASED ON LIMITED INVESTIGATIONS BY THE STATE AND IS IN NO WAY WARRANTED TO INDICATE THE TRUE CONDITIONS OR ACTUAL QUANTITIES OR DISTRIBUTION OF QUANTITIES OF WORK WHICH WILL BE REQUIRED.

URS CORPORATION AES
500 ENTERPRISE DRIVE
ROCKY HILL, CT 06067
1-(860)-529-8882

NO.	DATE	DESCRIPTION

REVISIONS

URS CORPORATION AES
500 ENTERPRISE DRIVE
ROCKY HILL, CT 06067

STATE OF CONNECTICUT
DEPARTMENT OF TRANSPORTATION

SECTION C-1a & C-2 NEW HAVEN LINE

CATENARY REPLACEMENT BETWEEN WALK BRIDGE AND STRUCTURE 636, PECK BRIDGE AND STRUCTURE 863

DROP TUBE PLACEMENT

ENGINEER: URS CORPORATION AES
DESIGNER: RW | DRAFTER: AMK | CHECKER: AJM
APPROVED: T. HOLLAND | DATE: 09/13/13
STRUCTURE NO. | BRIDGE LOG NO. | STRUCTURE SHEET NO. F-6

PROJECT CONTROL DATE: 09/13/13 DISK FILENAME: F-6.dwg 100% DESIGN

F H W A REGION	STATE	TOWN	FED. AID PROJ. NO.	PROJ. NO.	YEAR	SHEET NUMBER
1	CONN.	VARIOUS	CT-05-0109	301-0145	2013	01.03.089

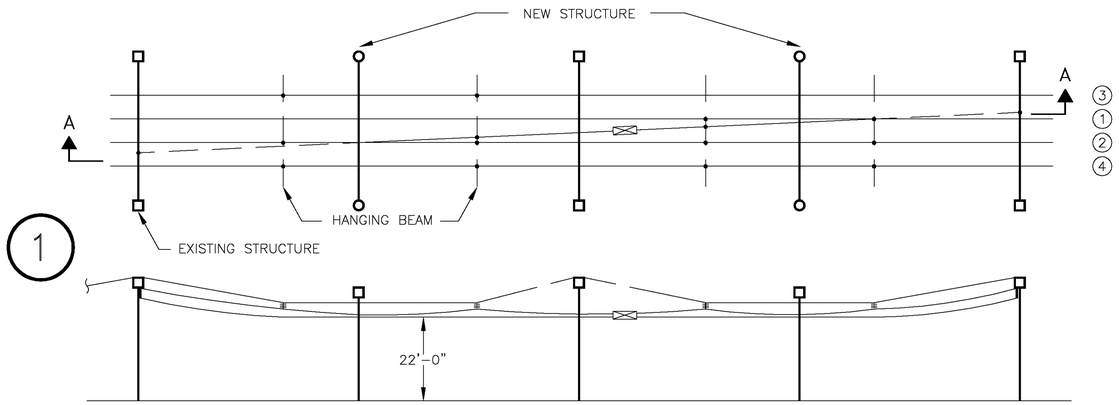

SECTION A-A

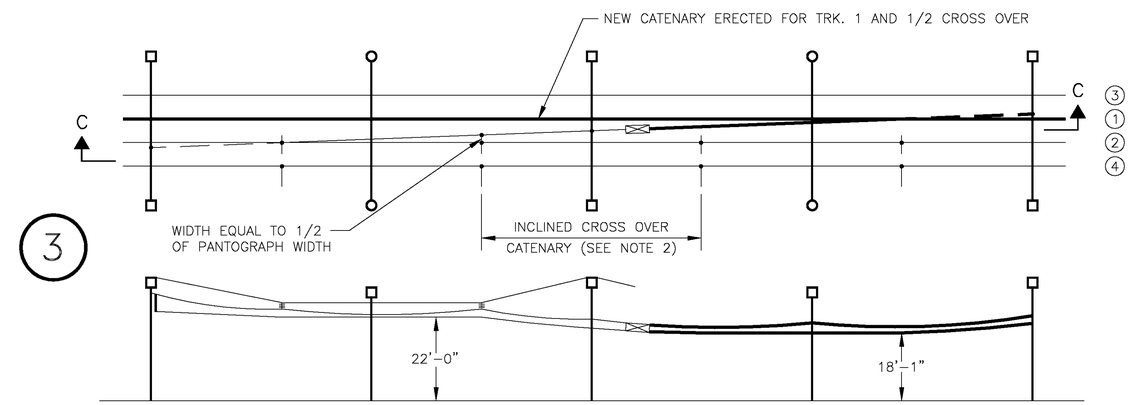

SECTION C
(SEE NOTE 3)

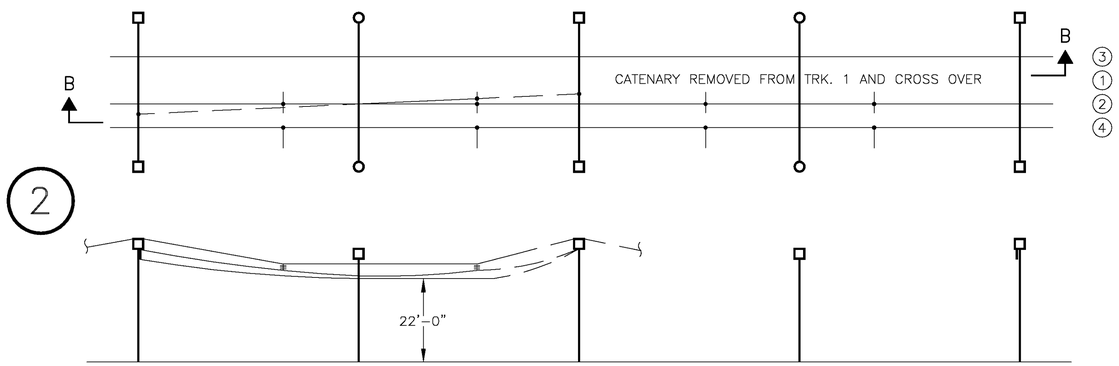

SECTION B-B

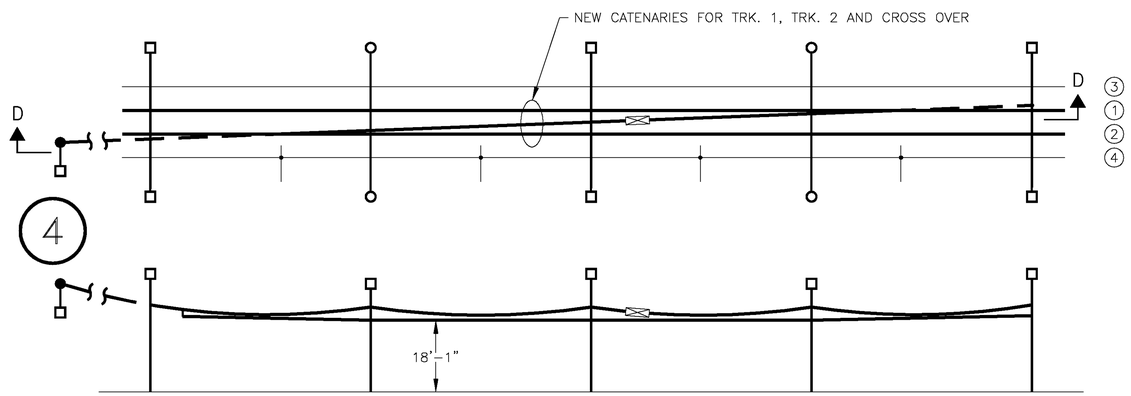

SECTION D

SUGGESTED MEANS OF CONSTRUCTING CROSS-OVERS AT CP241 AND CP261

NOTES:

1) THE INDICATED SEQUENCE FOR STAGED CROSS OVER CATENARY CONSTRUCTION IS INTENDED FOR CROSS OVERS TO BE KEPT OPERATIONAL DURING CONSTRUCTION, ACCORDING TO THE STAGING PLAN.
2) THE TEMPORARILY INCLINED PORTION OF THE CROSS OVER CATENARY SHOULD START ONLY AFTER ITS SEPARATION FROM THE THROUGH TRACK CATENARY IS EQUAL TO HALF THE PANTOGRAPH WIDTH.
3) IF THE CROSS-OVER IS TO CARRY TRAFFIC, IT MAY BE NECESSARY TO TEMPORARILY LOWER THE HIGHER OLD CATENARY AND TEMPORARILY RAISE THE NEW CATENARY.

LEGEND:

EXISTING CATENARY
NEW CATENARY

SCALE: NONE

URS CORPORATION AES
500 ENTERPRISE DRIVE
ROCKY HILL, CT 06067
1-(860)-529-8882

NO.	DATE	DESCRIPTION

REVISIONS

URS CORPORATION AES
500 ENTERPRISE DRIVE
ROCKY HILL, CT 06067

STATE OF CONNECTICUT
DEPARTMENT OF TRANSPORTATION

SECTION C-1a & C-2 NEW HAVEN LINE

CATENARY REPLACEMENT BETWEEN WALK BRIDGE AND STRUCTURE 636, PECK BRIDGE AND STRUCTURE 863

TYPICAL SEQUENCE FOR CROSS OVER TRACK CATENARY REPLACEMENT

ENGINEER: URS CORPORATION AES
DESIGNER: RW | DRAFTER: AMK | CHECKER: AJM
APPROVED: T. HOLLAND | DATE: 09/13/13
STRUCTURE NO. | BRIDGE LOG NO. | STRUCTURE SHEET NO. F-7

PROJECT CONTROL DATE: 09/13/13 DISK FILENAME: F-7.dwg 100% DESIGN

F H W A REGION	STATE	TOWN	FED. AID PROJ. NO.	PROJ. NO.	YEAR	SHEET NUMBER
1	CONN.	VARIOUS	CT-05-0109	301-0145	2013	01.03.090

LIMITS OF REPOINTING AT WALL FOUNDATIONS AND INSTALLATION OF GA-4 ASSEMBLIES

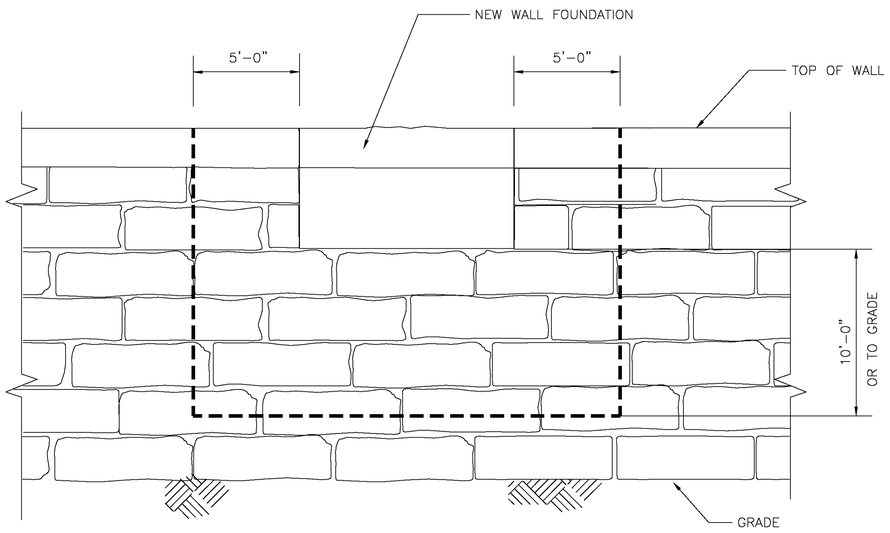

ELEVATION

REPOINTING LIMITS OF WALL FOUNDATION

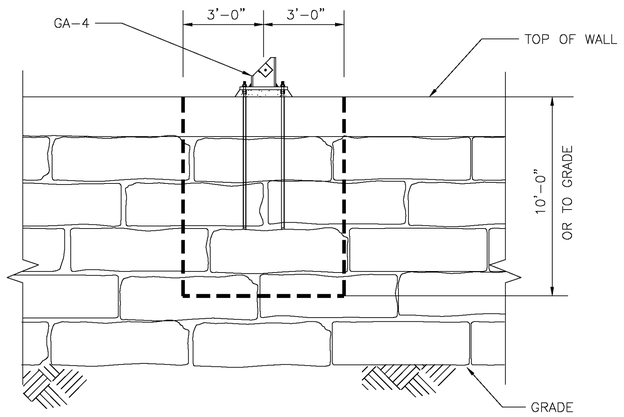

ELEVATION

REPOINTING LIMITS OF GA-4 INSTALLATION

NOTES:

1. FOR GENERAL NOTES, SEE DRAWING G-8.

SCALE: NONE

THE INFORMATION, INCLUDING ESTIMATED QUANTITIES OF WORK SHOWN ON THESE SHEETS IS BASED ON LIMITED INVESTIGATIONS BY THE STATE AND IS IN NO WAY WARRANTED TO INDICATE THE TRUE CONDITIONS OR ACTUAL QUANTITIES OR DISTRIBUTION OF QUANTITIES OF WORK WHICH WILL BE REQUIRED.

URS CORPORATION AES
500 ENTERPRISE DRIVE
ROCKY HILL, CT 06067
1-(860)-529-8882

NO.	DATE	DESCRIPTION

REVISIONS

STATE OF CONNECTICUT
DEPARTMENT OF TRANSPORTATION

SECTION C-1a & C-2 NEW HAVEN LINE

CATENARY REPLACEMENT BETWEEN WALK BRIDGE AND STRUCTURE 636, PECK BRIDGE AND STRUCTURE 863

LIMITS OF REPOINTING

ENGINEER: URS CORPORATION AES

DESIGNER: RW | DRAFTER: AMK | CHECKER: AJM

APPROVED: T. HOLLAND | DATE: 09/13/13

STRUCTURE NO. | BRIDGE LOG NO. | STRUCTURE SHEET NO. F-12

PROJECT CONTROL DATE: 09/13/13 DISK FILENAME: F-12.dwg 100% DESIGN

F H W A REGION	STATE	TOWN	FED. AID PROJ. NO.	PROJ. NO.	YEAR	SHEET NUMBER
1	CONN.	VARIOUS	CT-05-0109	301-0145	2013	01.03.091

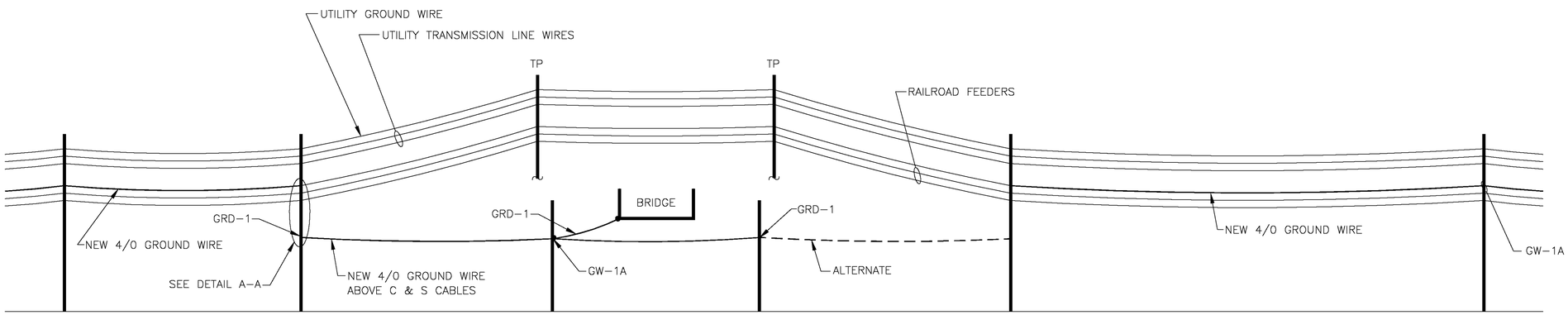

AERIAL GROUND WIRE AT TYPICAL OVERGRADE BRIDGE

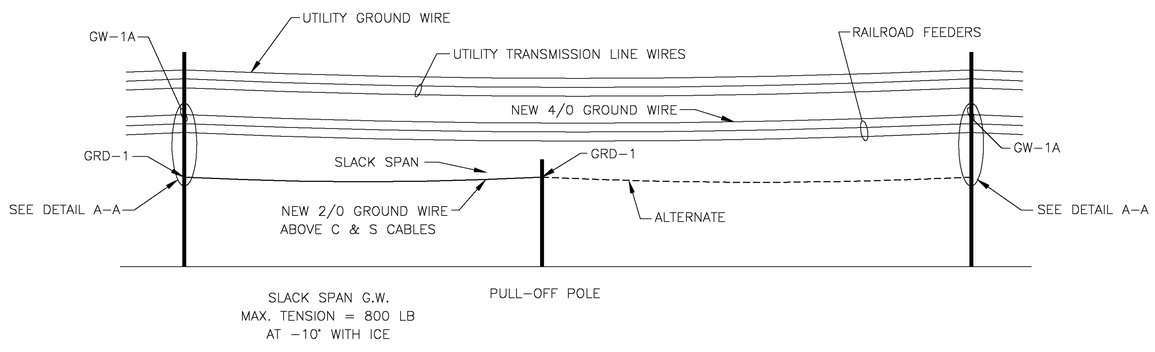

AERIAL GROUND WIRE AT TYPICAL PULL-OFF POLE

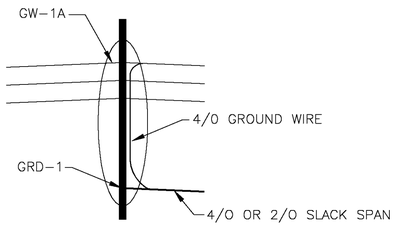

DETAIL A-A

SEE DWG. E-13 FOR ADDITIONAL INFORMATION

NO SCALE

THE INFORMATION, INCLUDING ESTIMATED QUANTITIES OF WORK SHOWN ON THESE SHEETS IS BASED ON LIMITED INVESTIGATIONS BY THE STATE AND IS IN NO WAY WARRANTED TO INDICATE THE TRUE CONDITIONS OR ACTUAL QUANTITIES OR DISTRIBUTION OF QUANTITIES OF WORK WHICH WILL BE REQUIRED.

URS CORPORATION AES
500 ENTERPRISE DRIVE
ROCKY HILL, CT 06067
1-(860)-529-8882

NO.	DATE	DESCRIPTION

REVISIONS

STATE OF CONNECTICUT
DEPARTMENT OF TRANSPORTATION

SECTION C-1a & C-2 NEW HAVEN LINE

CATENARY REPLACEMENT BETWEEN WALK BRIDGE AND STRUCTURE 636, PECK BRIDGE AND STRUCTURE 863

TYPICAL GROUNDING OF EXISTING STRUCTURES
TYPICAL GROUND WIRE PROFILE

ENGINEER: URS CORPORATION AES
DESIGNER: RW | DRAFTER: AMK | CHECKER: AJM
APPROVED: T. HOLLAND | DATE: 09/13/13
STRUCTURE NO. | BRIDGE LOG NO. | STRUCTURE SHEET NO. F-24

PROJECT CONTROL DATE: 09/13/13 DISK FILENAME: F-24.dwg 100% DESIGN

F H W A REGION	STATE	TOWN	FED. AID PROJ. NO.	PROJ. NO.	YEAR	SHEET NUMBER
1	CONN.	VARIOUS	CT-05-0109	301-0145	2013	01.03.092

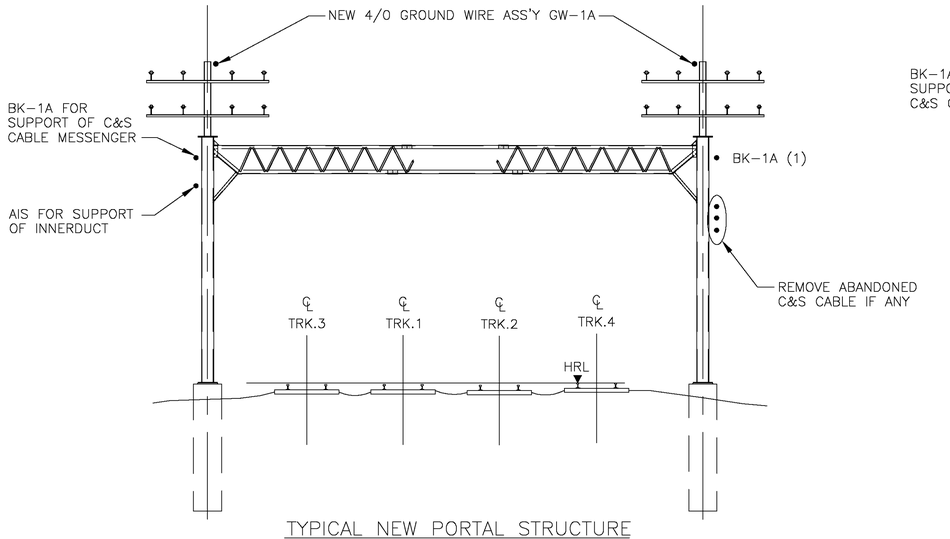

TYPICAL NEW PORTAL STRUCTURE

LOOKING EAST

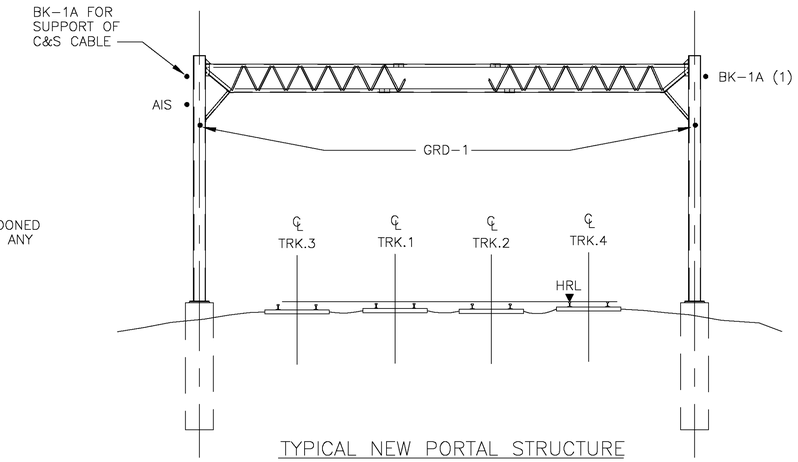

TYPICAL NEW PORTAL STRUCTURE

WITHOUT FEEDERS

LOOKING EAST

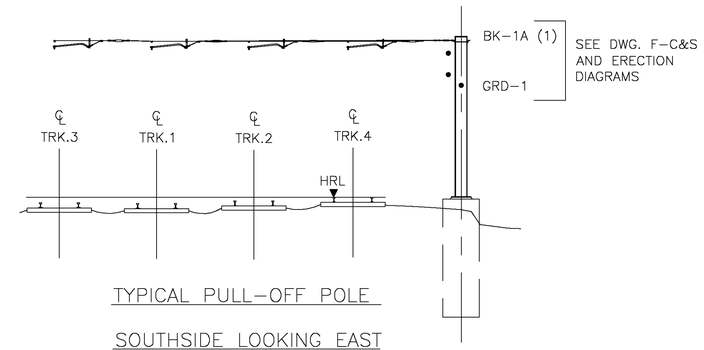

TYPICAL PULL-OFF POLE

SOUTHSIDE LOOKING EAST

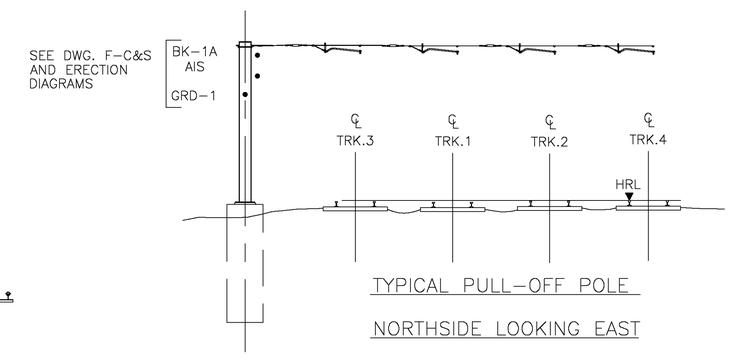

TYPICAL PULL-OFF POLE

NORTHSIDE LOOKING EAST

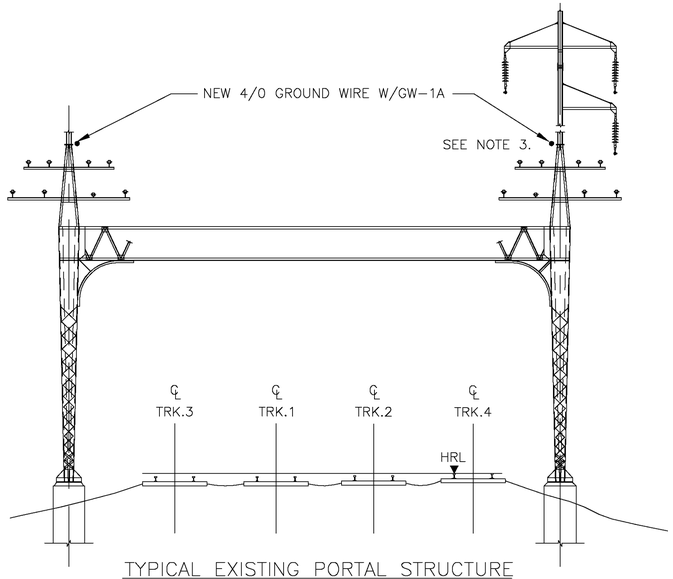

TYPICAL EXISTING PORTAL STRUCTURE

WITH OVERBUILT TRANSMISSION LINES

LOOKING EAST

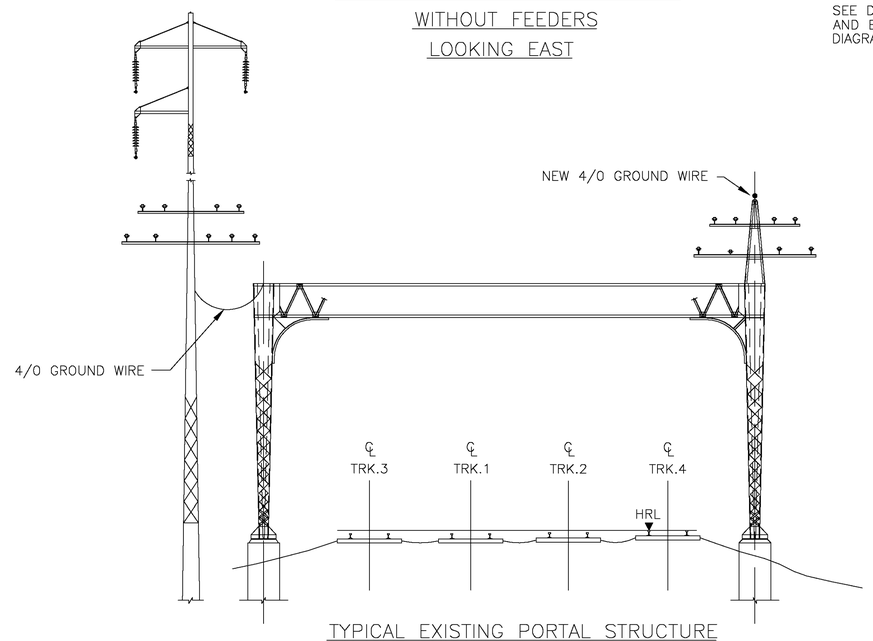

TYPICAL EXISTING PORTAL STRUCTURE

WITH SEPARATE TRANSMISSION LINES STRUCTURE

CARRYING RAILROAD FEEDERS

NOTES:

1) NEW GROUND WIRE SHALL BE TENSIONED FOR A SAG EQUAL TO ADJACENT FEEDER WIRE.
2) WHERE AN EXISTING 2/0 GROUND WIRE IS IN PLACE, IT SHALL BE REPLACED WITH A 4/0 WIRE.
3) ON STRUCTURES WITH UTILITY OVERBUILDS, THE GROUND WIRE CAN BE RELOCATED UNDER THE TOP R.R. FEEDER CROSSARM (TRACK SIDE) ONLY WHEN THERE IS NOT SAFE WORKING CLEARANCE TO THE UTILITY FEEDER.

SCALE: NONE

THE INFORMATION, INCLUDING ESTIMATED QUANTITIES OF WORK SHOWN ON THESE SHEETS IS BASED ON LIMITED INVESTIGATIONS BY THE STATE AND IS IN NO WAY WARRANTED TO INDICATE THE TRUE CONDITIONS OR ACTUAL QUANTITIES OR DISTRIBUTION OF QUANTITIES OF WORK WHICH WILL BE REQUIRED.

URS CORPORATION AES
500 ENTERPRISE DRIVE
ROCKY HILL, CT 06067
1-(860)-529-8882

NO.	DATE	DESCRIPTION

REVISIONS

STATE OF CONNECTICUT
DEPARTMENT OF TRANSPORTATION

SECTION C-1a & C-2 NEW HAVEN LINE

CATENARY REPLACEMENT BETWEEN WALK BRIDGE AND STRUCTURE 636, PECK BRIDGE AND STRUCTURE 863

TYPICAL GROUND WIRE AND INNER DUCT SUPPORTS

ENGINEER: URS CORPORATION AES

DESIGNER: RW | DRAFTER: AMK | CHECKER: AJM

APPROVED: T. HOLLAND | DATE: 09/13/13

STRUCTURE NO. | BRIDGE LOG NO. | STRUCTURE SHEET NO. F-25

PROJECT CONTROL DATE: 09/13/13 DISK FILENAME: F-25.dwg 100% DESIGN

F H W A REGION	STATE	TOWN	FED. AID PROJ. NO.	PROJ. NO.	YEAR	SHEET NUMBER
1	CONN.	VARIOUS	CT-05-0109	301-0145	2013	01.03.093

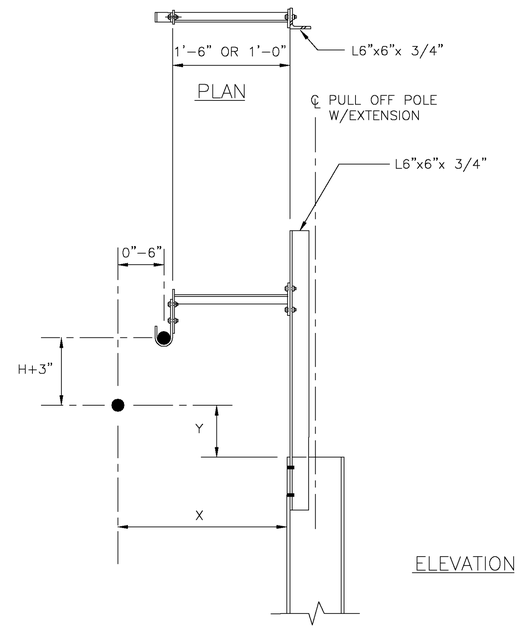

CABLE SUPPORT AT PULL OFF POLE EXTENSION

SEE DWG. S-14 FOR STEEL DETAIL

AT 60°F, WHEN Y ≥ 18" AND X ≥ 24" NO ATTACHMENT IS REQUIRED.

WHEN Y< 18" AND/OR X< 24" INSTALL POLE EXTENSION AND CABLE SUPPORT BRACKET AS NOTED BELOW.

ATTACH CABLE TO POLE OR POLE EXTENSION BY RAISING THE CABLE BY AMOUNT SHOWN IN TABLE PLUS 3" AND PULL CABLE TOWARDS POLE UP TO 6" USING PROPER CABLE BRACKET.

"H" VALUE

°F	C & S	COMM.	FIBER OPTIC
0	0"	0"	0"
10	3/4"	1 1/4"	1 1/4"
20	1 1/2"	2 1/2"	2 1/2"
30	2 1/4"	3 1/4"	3 1/4"
40	3"	5"	5"
50	3 3/4"	6 1/4"	6 1/4"
60	4 1/2"	7 1/2"	7 1/2"
70	5 1/4"	8 3/4"	8 3/4"
80	6"	10"	10"
90	6 3/4"	11 1/4"	11 1/4"
100	7 1/2"	12 1/2"	12 1/2"

REQUIREMENT FOR C&S AND FIBER OPTIC CABLE MESSENGER SUPPORT ON NEW PULL-OFF POLES

1. SINGLE CABLE MESSENGER

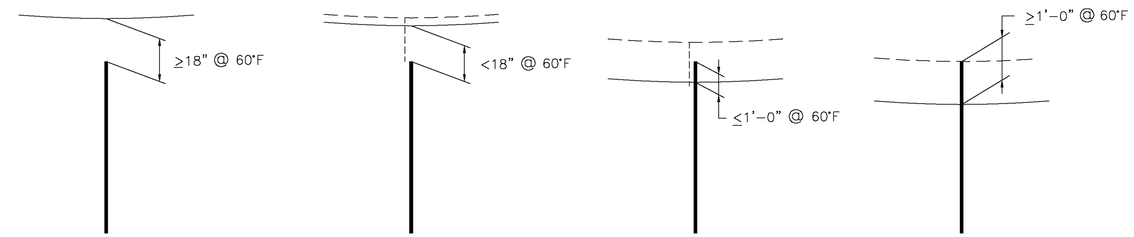

NO ATTACHMENT NEEDED

ADD POLE EXTENSION AND LIFT AND ATTACH MESSENGER 2'-0" ABOVE TOP OF POLE

LIFT MESSENGER 1'-0" AND ATTACH TO POLE EXTENSION

LIFT MESSENGER 1'-0" AND ATTACH TO POLE (BUT NOT HIGHER THAN ADJACENT STRUCTURES)

2. TWO CABLE MESSENGERS

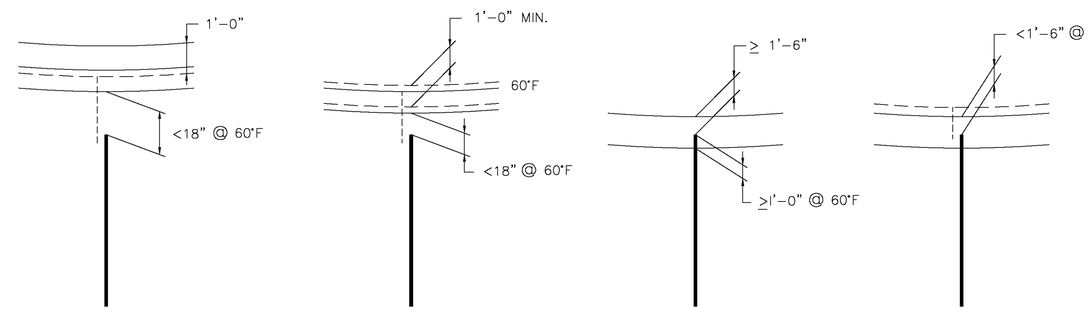

LIFT ONLY LOWER MESSENGER ON TO POLE EXTENSION IF, AFTER LIFTING, 1'-0" MINIMUM REMAINS TO NEXT CABLE

EXTEND POLE EXTENSION TO ALLOW MESSENGERS TO BE SEPERATED BY A MINIMUM OF 1'-0"

LIFT MESSENGER 1'-0" AND ATTACHED TO POLE (BUT NOT HIGHER THAN ADJACENT STRUCTURES) NO POLE EXTENSION REQUIRED

ADD POLE EXTENSION ONLY FOR UPPER MESSENGER

NOTES

1) CLEARANCES SHOWN ARE FOR 60 DEGREES F AMBIENT TEMPERATURE. CONDITIONS AND VARIATIONS WILL OCCUR THROUGHOUT THE AMBIENT TEMPERATURE RANGE. TYPICAL VALUES FOR GUIDANCE ARE GIVEN IN NOTES 2 & 3.
2) CLEARANCES AT 100 DEGREES F AMBIENT TEMPERTATURE CAN BE UP TO 12" LESS THAN SHOWN.
3) CLEARANCES AT 0 DEGREE F AMBIENT TEMPERTATURE MUST BE 12" MORE THAN SHOWN.
4) FOR PULL-OFF POLE EXTENSION SEE DWG. S-6.
5) FOR MESSENGER SUPPORT BRACKETS SEE DWG. S-14.
6) MAINTAIN A MINIMUM OF 1'-0" SEPARATION BETWEEN FIBER OPTIC DUCT AND C&S CABLES AT SUPPORT AND IN-SPAN.

STATE OF CONNECTICUT REGISTERED PROFESSIONAL ENGINEER

URS CORPORATION AES
500 ENTERPRISE DRIVE
ROCKY HILL, CT 06067

SCALE: NONE

THE INFORMATION, INCLUDING ESTIMATED QUANTITIES OF WORK SHOWN ON THESE SHEETS IS BASED ON LIMITED INVESTIGATIONS BY THE STATE AND IS IN NO WAY WARRANTED TO INDICATE THE TRUE CONDITIONS OR ACTUAL QUANTITIES OR DISTRIBUTION OF QUANTITIES OF WORK WHICH WILL BE REQUIRED.

URS CORPORATION AES
500 ENTERPRISE DRIVE
ROCKY HILL, CT 06067
1-(860)-529-8882

NO.	DATE	DESCRIPTION

REVISIONS

STATE OF CONNECTICUT
DEPARTMENT OF TRANSPORTATION

SECTION C-1a & C-2 NEW HAVEN LINE

CATENARY REPLACEMENT BETWEEN WALK BRIDGE AND STRUCTURE 636, PECK BRIDGE AND STRUCTURE 863

CABLE MESSENGER ATTACHMENT TO PULL-OFF POLES

ENGINEER: URS CORPORATION AES
DESIGNER: RW | DRAFTER: AMK | CHECKER: AJM
APPROVED: T. HOLLAND | DATE: 09/13/13
STRUCTURE NO. | BRIDGE LOG NO. | STRUCTURE SHEET NO. F-32

PROJECT CONTROL DATE: 09/13/13 DISK FILENAME: F-32.dwg 100% DESIGN

F H W A REGION	STATE	TOWN	FED. AID PROJ. NO.	PROJ. NO.	YEAR	SHEET NUMBER
1	CONN.	VARIOUS	CT-05-0109	301-0145	2013	01.03.094

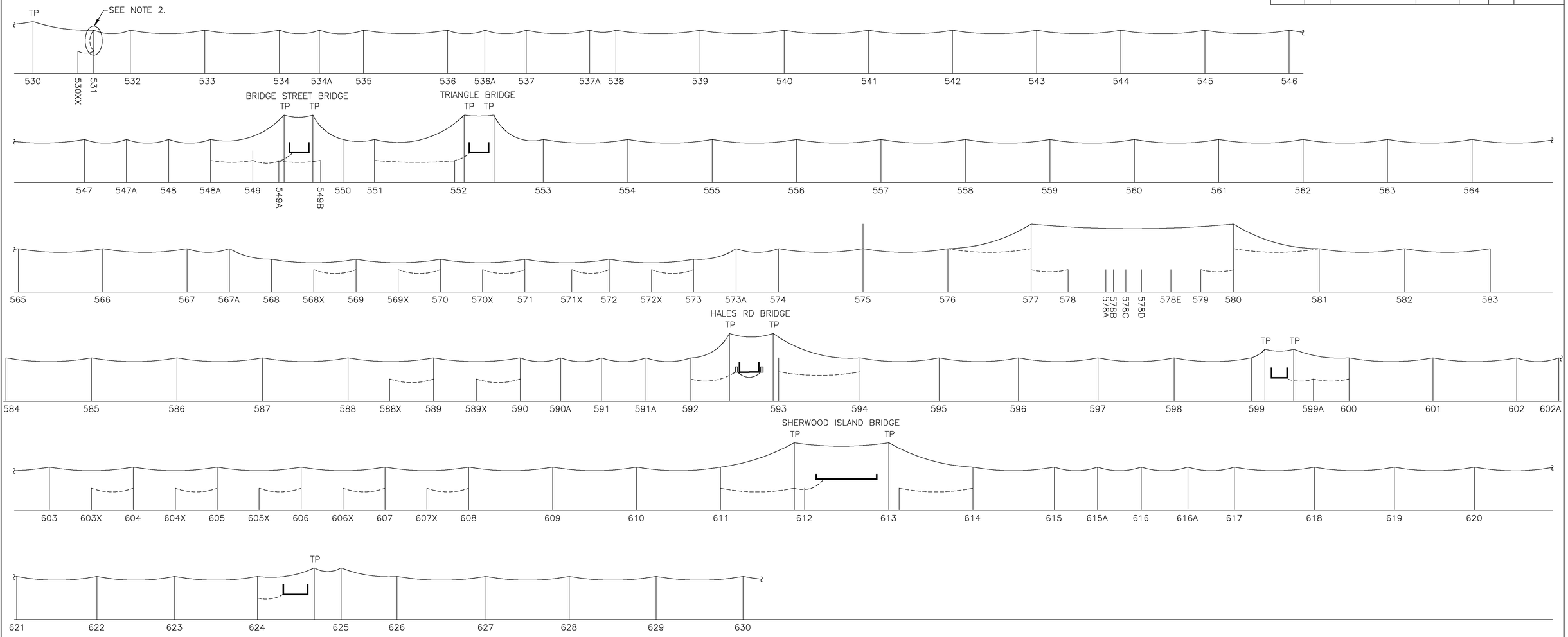

NORTH SIDE PROFILE

LEGEND:

GW-1A

GRD-1

NOTES:

1. FOR TYPICAL GROUND WIRE PROFILE SEE DWG. F-24 AND DETAIL SEE DWG. F-25.
2. SEE DWG. F-24, DETAIL A-A FOR MORE INFORMATION.
3. NEW AERIAL GROUND WIRE MUST BE CONTINUOUS ON ONE SIDE BEFORE THE THIRD MAIN 7/8 MESSENGER IS REMOVED.

THE INFORMATION, INCLUDING ESTIMATED QUANTITIES OF WORK SHOWN ON THESE SHEETS IS BASED ON LIMITED INVESTIGATIONS BY THE STATE AND IS IN NO WAY WARRANTED TO INDICATE THE TRUE CONDITIONS OR ACTUAL QUANTITIES OR DISTRIBUTION OF QUANTITIES OF WORK WHICH WILL BE REQUIRED.

SCALE: NONE

URS CORPORATION AES
500 ENTERPRISE DRIVE
ROCKY HILL, CT 06067
1-(860)-529-8882

STATE OF CONNECTICUT
DEPARTMENT OF TRANSPORTATION

SECTION C-1a & C-2 NEW HAVEN LINE

CATENARY REPLACEMENT BETWEEN WALK BRIDGE AND STRUCTURE 636, PECK BRIDGE AND STRUCTURE 863

GROUND WIRE PROFILE – SHEET 1

NO.	DATE	DESCRIPTION

REVISIONS

ENGINEER: URS CORPORATION AES
DESIGNER: RW | DRAFTER: AMK | CHECKER: AJM
APPROVED: T. HOLLAND | DATE: 09/13/13
STRUCTURE NO. | BRIDGE LOG NO. | STRUCTURE SHEET NO. F-33

100% DESIGN
DISK FILENAME: F-33.DWG
PROJECT CONTROL DATE: 09/13/13

F H W A REGION	STATE	TOWN	FED. AID PROJ. NO.	PROJ. NO.	YEAR	SHEET NUMBER
1	CONN.	VARIOUS	CT-05-0109	301-0145	2013	01.03.095

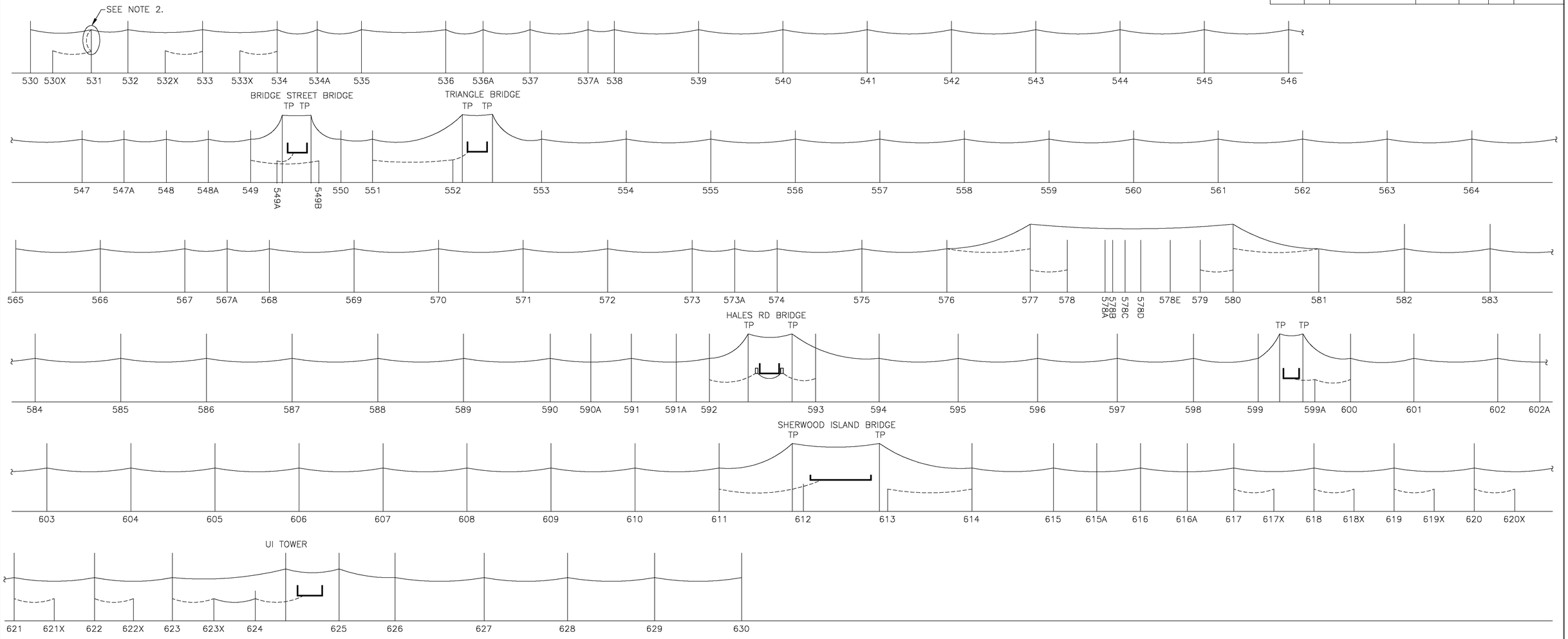

SOUTH SIDE PROFILE

LEGEND:

GW-1A

GRD-1

NOTES:

1. FOR TYPICAL GROUND WIRE PROFILE SEE DWG. F-24 AND DETAIL SEE DWG. F-25.
2. SEE SHEET F-24, DETAIL A-A FOR MORE INFORMATION.
3. NEW AERIAL GROUND WIRE MUST BE CONTINUOUS ON ONE SIDE BEFORE THE THIRD MAIN 7/8 MESSENGER IS REMOVED.
4. CONTRACTOR MUST LOCATE POSITION ON STR. 577 AND 580 FOR APPROVAL BY MNRR.

THE INFORMATION, INCLUDING ESTIMATED QUANTITIES OF WORK SHOWN ON THESE SHEETS IS BASED ON LIMITED INVESTIGATIONS BY THE STATE AND IS IN NO WAY WARRANTED TO INDICATE THE TRUE CONDITIONS OR ACTUAL QUANTITIES OR DISTRIBUTION OF QUANTITIES OF WORK WHICH WILL BE REQUIRED.

SCALE: NONE

URS CORPORATION AES
500 ENTERPRISE DRIVE
ROCKY HILL, CT 06067
1-(860)-529-8882

URS CORPORATION AES
500 ENTERPRISE DRIVE
ROCKY HILL, CT 06067

NO.	DATE	DESCRIPTION

REVISIONS

STATE OF CONNECTICUT
DEPARTMENT OF TRANSPORTATION

SECTION C-1a & C-2 NEW HAVEN LINE

CATENARY REPLACEMENT BETWEEN WALK BRIDGE AND STRUCTURE 636, PECK BRIDGE AND STRUCTURE 863

GROUND WIRE PROFILE – SHEET 1

ENGINEER: URS CORPORATION AES

DESIGNER: RW | DRAFTER: AMK | CHECKER: AJM

APPROVED: T. HOLLAND | DATE: 09/13/13

STRUCTURE NO. | BRIDGE LOG NO. | STRUCTURE SHEET NO. F-34

PROJECT CONTROL DATE: 09/13/13 DISK FILENAME: F-34.DWG 100% DESIGN

F H W A REGION	STATE	TOWN	FED. AID PROJ. NO.	PROJ. NO.	YEAR	SHEET NUMBER
1	CONN.	VARIOUS	CT-05-0109	301-0145	2013	01.03.096

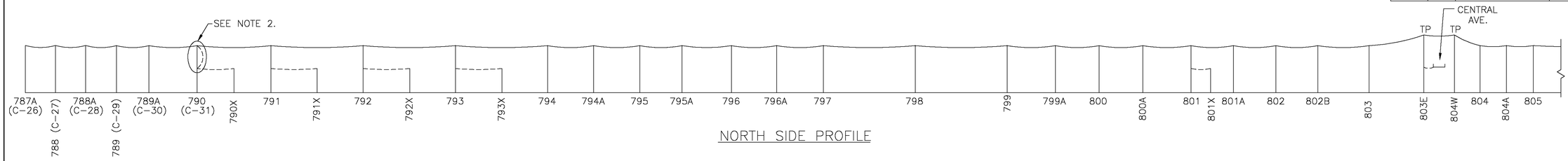

NORTH SIDE PROFILE

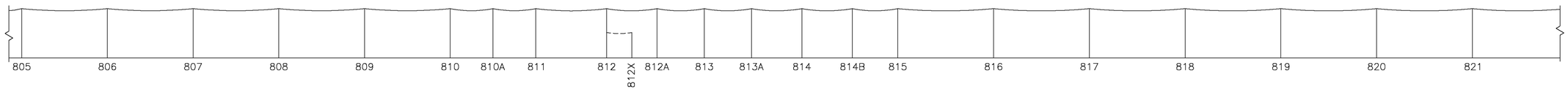

NORTH SIDE PROFILE

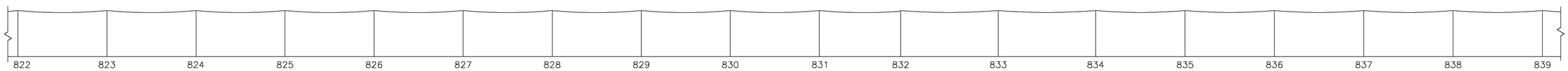

NORTH SIDE PROFILE

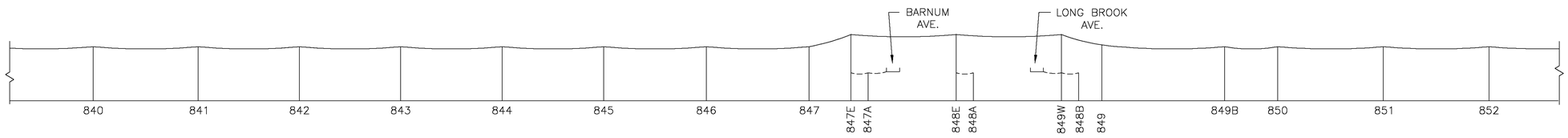

NORTH SIDE PROFILE

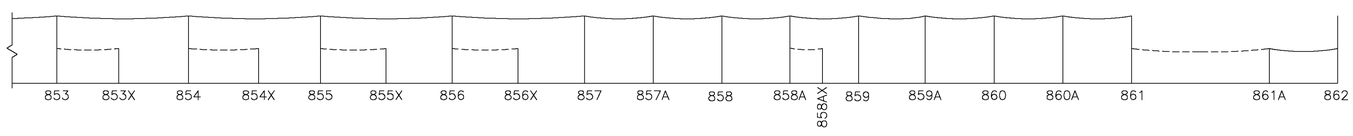

NORTH SIDE PROFILE

LEGEND:

GW-1A

GRD-1

NOTES:

1. FOR TYPICAL GROUND WIRE PROFILE SEE DWG. NO. F-24 AND DETAIL SEE DWG. NO. F-25.
2. SEE SHEET F-4, DETAIL A-A FOR MORE INFORMATION.
3. NEW AERIAL GROUND WIRE MUST BE CONTINOUS ON ONE SIDE BEFORE THE THIRD MAIN 7/8 MESSNGER IS REMOVED.

THE INFORMATION, INCLUDING ESTIMATED QUANTITIES OF WORK SHOWN ON THESE SHEETS IS BASED ON LIMITED INVESTIGATIONS BY THE STATE AND IS IN NO WAY WARRANTED TO INDICATE THE TRUE CONDITIONS OR ACTUAL QUANTITIES OR DISTRIBUTION OF QUANTITIES OF WORK WHICH WILL BE REQUIRED.

SCALE: NONE

STATE OF CONNECTICUT
DEPARTMENT OF TRANSPORTATION

SECTION C-1a & C-2 NEW HAVEN LINE

CATENARY REPLACEMENT BETWEEN WALK BRIDGE AND STRUCTURE 636, PECK BRIDGE AND STRUCTURE 863

GROUND WIRE PROFILE – SHEET 1
NORTH SIDE

STRUCTURE 788 TO STRUCTURE 831

URS CORPORATION AES
500 ENTERPRISE DRIVE
ROCKY HILL, CT 06067
1-(860)-529-8882

NO.	DATE	DESCRIPTION

REVISIONS

ENGINEER: URS CORPORATION AES

DESIGNER: RW | DRAFTER: AMK | CHECKER: AJM

APPROVED: T. HOLLAND | DATE: 09/13/13

STRUCTURE NO. | BRIDGE LOG NO. | STRUCTURE SHEET NO. F-35

PROJECT CONTROL DATE: 09/13/13 DISK FILENAME: F-35.DWG 100% DESIGN

F H W A REGION	STATE	TOWN	FED. AID PROJ. NO.	PROJ. NO.	YEAR	SHEET NUMBER
1	CONN.	VARIOUS	CT-05-0109	301-0145	2013	01.03.097

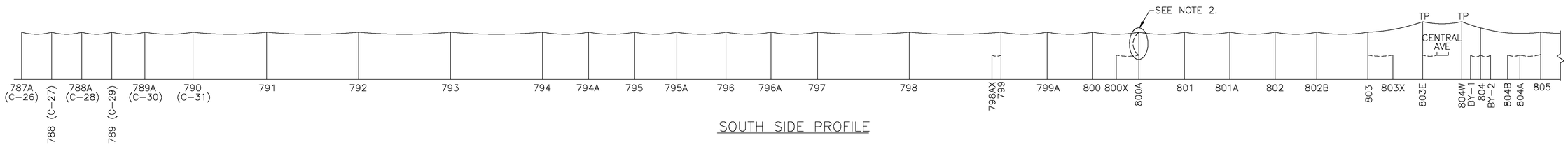

SOUTH SIDE PROFILE

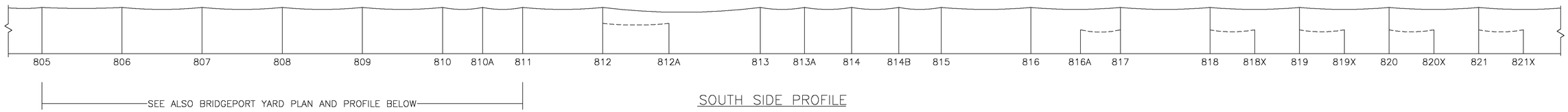

SOUTH SIDE PROFILE

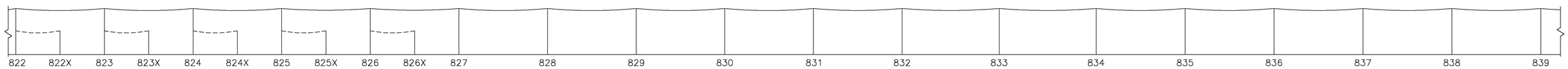

SOUTH SIDE PROFILE

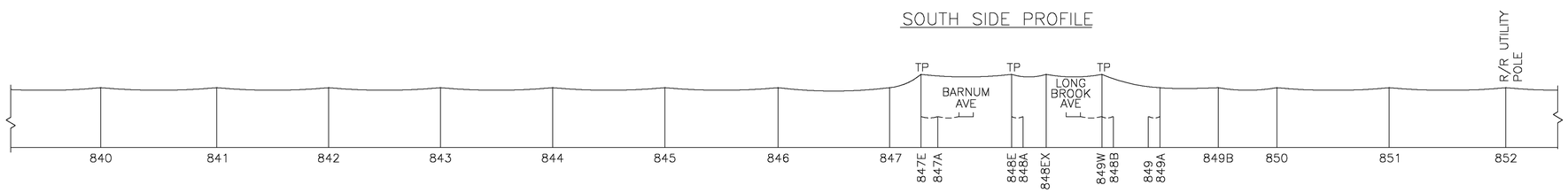

SOUTH SIDE PROFILE

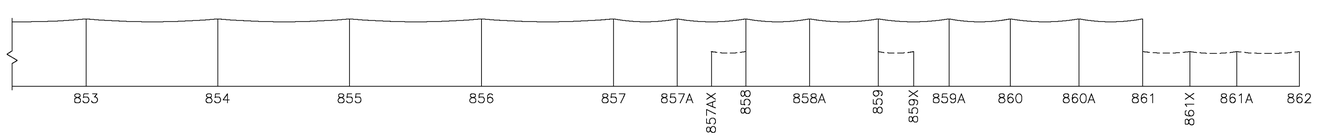

SOUTH SIDE PROFILE

LEGEND:

GW-1A

GRD-1

NOTES:

1. FOR TYPICAL GROUND WIRE PROFILE SEE DWG. NO. F-24 AND DETAIL SEE DWG. NO. F-25.
2. SEE SHEET F-4, DETAIL A-A FOR MORE INFORMATION.
3. NEW AERIAL GROUND WIRE MUST BE CONTINOUS ON ONE SIDE BEFORE THE THIRD MAIN 7/8 MESSNGER IS REMOVED.

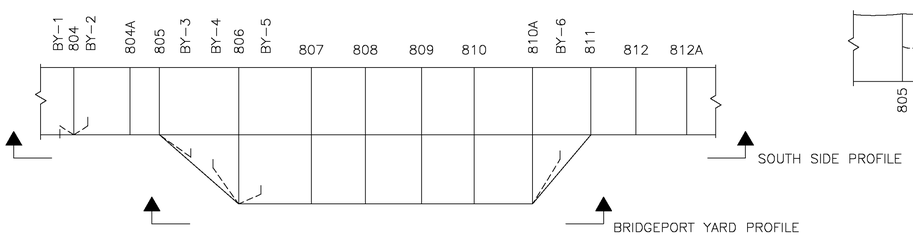

BRIDGEPORT YARD PLAN

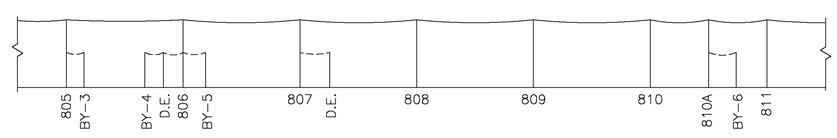

BRIDGEPORT YARD PROFILE

SCALE: NONE

THE INFORMATION, INCLUDING ESTIMATED QUANTITIES OF WORK SHOWN ON THESE SHEETS IS BASED ON LIMITED INVESTIGATIONS BY THE STATE AND IS IN NO WAY WARRANTED TO INDICATE THE TRUE CONDITIONS OR ACTUAL QUANTITIES OR DISTRIBUTION OF QUANTITIES OF WORK WHICH WILL BE REQUIRED.

URS CORPORATION AES
500 ENTERPRISE DRIVE
ROCKY HILL, CT 06067
1-(860)-529-8882

NO.	DATE	DESCRIPTION

REVISIONS

URS CORPORATION AES
500 ENTERPRISE DRIVE
ROCKY HILL, CT 06067

STATE OF CONNECTICUT
DEPARTMENT OF TRANSPORTATION

SECTION C-1a & C-2 NEW HAVEN LINE

CATENARY REPLACEMENT BETWEEN WALK BRIDGE AND STRUCTURE 636, PECK BRIDGE AND STRUCTURE 863

GROUND WIRE PROFILE – SHEET 2
SOUTH SIDE

STRUCTURE 788 TO STRUCTURE 862

ENGINEER: URS CORPORATION AES
DESIGNER: RW | DRAFTER: AMK | CHECKER: AJM
APPROVED: T. HOLLAND | DATE: 09/13/13
STRUCTURE NO. | BRIDGE LOG NO. | STRUCTURE SHEET NO. F-36

100% DESIGN
DISK FILENAME: F-36.DWG
PROJECT CONTROL DATE: 09/13/13

F H W A REGION	STATE	TOWN	FED. AID PROJ. NO.	PROJ. NO.	YEAR	SHEET NUMBER
1	CONN.	VARIOUS	CT-05-0109	301-0145	2013	01.03.098

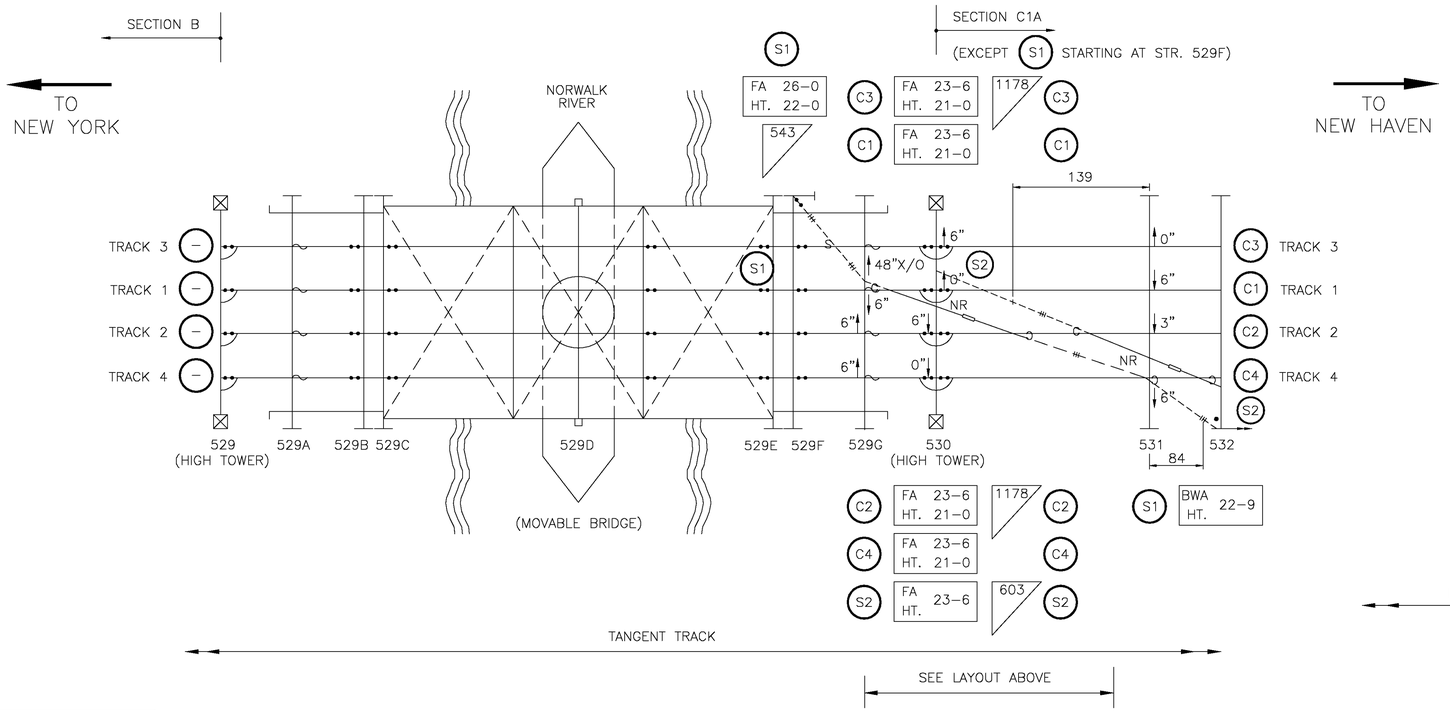

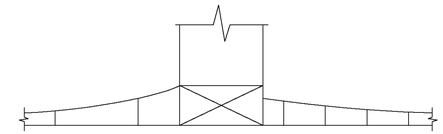

PRESENT ARRANGEMENT

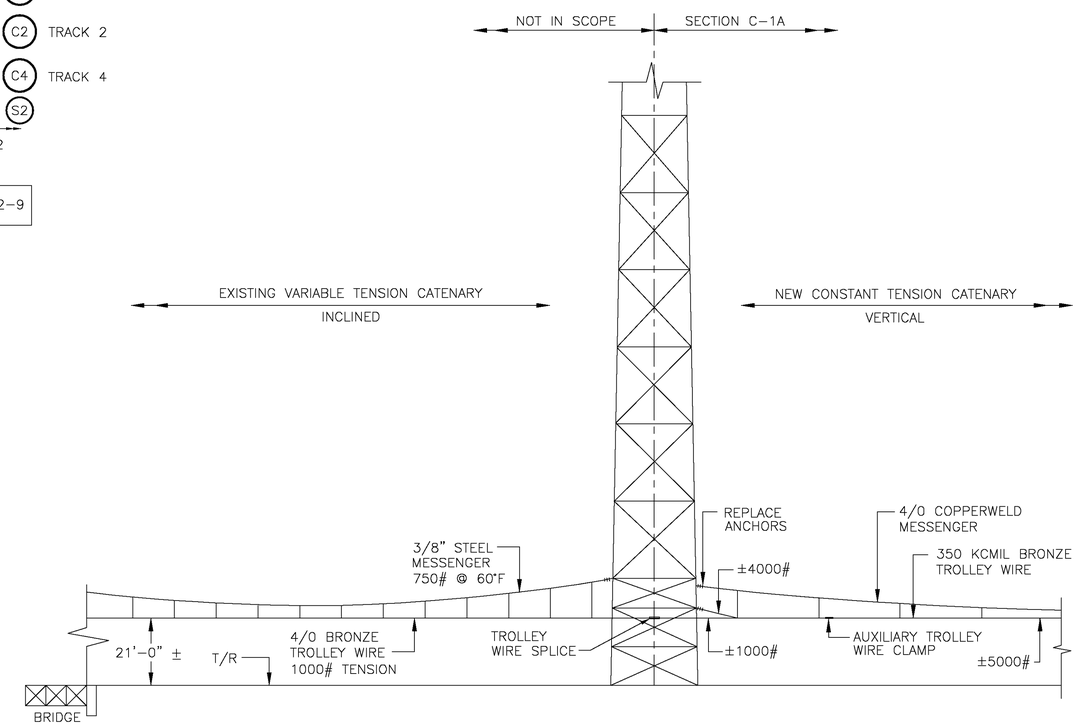

HIGH TOWER 530

STAGGER														
STRUCTURE NUMBER		529	529A	529B	529C		529D		529E	529F	529G	530	531	532
STATIONING		1512+70	1514+35	1515+58	–		–		–	1517+74	1518+79	1519+84	1521+84	1523+17
SPAN (FEET)		165	123	–	–	–	–	–	–	105	105	200	133	
VERSINE (INCHES)		–	–	–	–	–	–	–						
CONTACT WIRE HT. H.R.L.	TRACK 3	EX 20-6	–	–	–	–	–	–	–	–	–	21-0	20-7	
MESSENGER WIRE HT. H.R.L.	TRACK 3	EX 23-0	–	–	–	–	–	–	–	–	–	23-6	22-10	
UNDERSIDE OF TRUSS TO H.R.L.	TRACK 3	23-11	–	–	–	–	–	–	–	–	–	24-5	23-6	
CONTACT WIRE HT. H.R.L.	TRACK 1	–	–	–	–	–	–	–				21-0	20-7	
MESSENGER WIRE HT. H.R.L.	TRACK 1	–	–	–	–	–	–	–				23-6	22-10	
UNDERSIDE OF TRUSS TO H.R.L.	TRACK 1	–	–	–	–	–	–	–				24-5	23-6	
CONTACT WIRE HT. H.R.L.	TRACK 2	–	–	–	–	–	–	–				21-0	20-7	
MESSENGER WIRE HT. H.R.L.	TRACK 2	–	–	–	–	–	–	–				23-4	22-8	
UNDERSIDE OF TRUSS TO H.R.L.	TRACK 2	–	–	–	–	–	–	–				24-5	23-6	
CONTACT WIRE HT. H.R.L.	TRACK 4	–	–	–	–	–	–	–				21-0	20-7	
MESSENGER WIRE HT. H.R.L.	TRACK 4	–	–	–	–	–	–	–				23-6	22-10	
UNDERSIDE OF TRUSS TO H.R.L.	TRACK 4	–	–	–	–	–	–	–				24-5	23-6	

CONTACT WIRE HT. H.R.L.	S-1	22-1	21-1	20-8	
MESSENGER WIRE HT. H.R.L.	S-1	26-0	23-7	22-8	
UNDERSIDE OF TRUSS TO H.R.L.	S-1		24-5	23-6	
CONTACT WIRE HT. H.R.L.	S-2	–	–	20-8	20-6
MESSENGER WIRE HT. H.R.L.	S-2	–	–	23-2	23-6
UNDERSIDE OF TRUSS TO H.R.L.	S-2	–	–	23-6	24-10

LEGEND:

K KNUCKLE
NSR NOT SUPPORTED OR REGISTERED
NS NOT SUPPORTED
NR NOT REGISTERED
FIXED TERMINATION WITH GUY
BALANCE WEIGHT WITH GUY

NOTES:

1. ALL HEIGHTS ARE ROUNDED TO THE NEAREST 1/2".

THE INFORMATION, INCLUDING ESTIMATED QUANTITIES OF WORK SHOWN ON THESE SHEETS IS BASED ON LIMITED INVESTIGATIONS BY THE STATE AND IS IN NO WAY WARRANTED TO INDICATE THE TRUE CONDITIONS OR ACTUAL QUANTITIES OR DISTRIBUTION OF QUANTITIES OF WORK WHICH WILL BE REQUIRED.

SCALE: NONE

URS CORPORATION AES
500 ENTERPRISE DRIVE
ROCKY HILL, CT 06067
1-(860)-529-8882

NO.	DATE	DESCRIPTION

REVISIONS

STATE OF CONNECTICUT
DEPARTMENT OF TRANSPORTATION

SECTION C-1a & C-2 NEW HAVEN LINE

CATENARY REPLACEMENT BETWEEN WALK BRIDGE AND STRUCTURE 636, PECK BRIDGE AND STRUCTURE 863

CATENARY LAYOUT

STRUCTURE 529 TO STRUCTURE 532

ENGINEER: URS CORPORATION AES
DESIGNER: RW | DRAFTER: AMK | CHECKER: AJM
APPROVED: T. HOLLAND | DATE: 09/13/13
STRUCTURE NO. | BRIDGE LOG NO. | STRUCTURE SHEET NO. L-14

100% DESIGN
DISK FILENAME: L-14.dwg
PROJECT CONTROL DATE: 09/13/13

F H W A REGION	STATE	TOWN	FED. AID PROJ. NO.	PROJ. NO.	YEAR	SHEET NUMBER
1	CONN.	VARIOUS	CT-05-0109	301-0145	2013	01.03.099

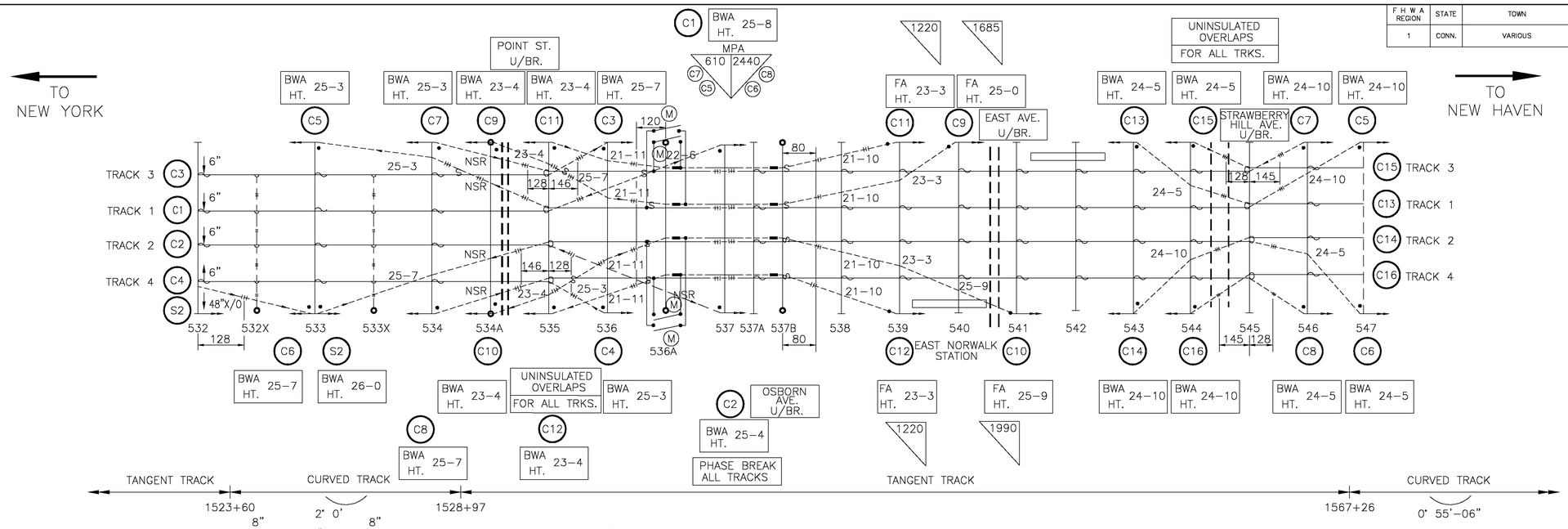

STAGGER																								
STRUCTURE NUMBER		532	532X	533	533X	534	534A	535	536	536A	537	537A	537B	538	539	540	541	542	543	544	545	546	547	
STATIONING*		1523+17	1524+52	1525+87	1527+22	1528+57	1530+02	1531+62	1534+67	1536+12	1537+72	1539+04	1539+82	1540+77	1543+82	1546+87	1549+92	1552+97	1556+02	1559+07	1562+12	1565+17	1568+22	
SPAN (FEET)			135	135	135	135	145	160	305	145	160	132	78	95	305	305	305	305	305	305	305	305	305	
VERSINE (INCHES)			7	10	11	7 1/2	2 1/2	1/2																
CONTACT WIRE HT. H.R.L.	TRACK 3	20–5	–	19–10	–	19–5	19–1	18–10	18–3	19–3 18–0	18–0 18–9	–	20–1 18–0	18–0	18–0	18–0	18–0	18–0	18–0	18–0	18–0	18–0	
MESSENGER WIRE HT. H.R.L.		23–11	–	22–10	–	22–11	22–7	21–10 22–4	21–9	22–0 21–6	21–0 24–7	–	22–0 21–6	21–6	21–6	21–6	21–6	21–6	21–6	21–6	21–0 21–6	21–6	
UNDERSIDE OF TRUSS TO H.R.L.		24–10	–	23–10	–	25–6	26–0	26–1	25–11	26–0	25–9	–	26–0	26–10	25–11	27–1	27–1	26–4	26–1	26–0	26–3	26–3	
CONTACT WIRE HT. H.R.L.	TRACK 1	20–5	–	19–10	–	19–5	19–1	18–10	18–3	19–3 18–0	18–0 18–9	–	20–1 18–0	18–0	18–0	18–0	18–0	18–0	18–0	18–0	18–0	18–0	
MESSENGER WIRE HT. H.R.L.		23–11	–	22–10	–	22–11	22–7	21–10 22–4	21–9	22–0 21–6	21–0 24–7	–	22–0 21–6	21–6	21–6	21–6	21–6	21–6	21–6	21–6	21–0 21–6	21–6	
UNDERSIDE OF TRUSS TO H.R.L.		24–10	–	23–10	–	25–6	26–0	26–1	25–11	26–0	25–9	–	26–0	26–10	25–11	27–1	27–1	26–4	26–1	26–0	26–3	26–3	
CONTACT WIRE HT. H.R.L.	TRACK 2	20–5	–	19–10	–	19–5	19–1	18–10	18–3	19–3 18–0	18–0 18–9	–	20–1 18–0	18–0	18–0	18–0	18–0	18–0	18–0	18–0	18–0	18–0	
MESSENGER WIRE HT. H.R.L.		23–11	–	22–10	–	22–11	22–7	22–4 21–10	21–9	22–0 21–6	21–0 24–7	–	22–0 21–6	21–6	21–6	21–6	21–6	21–6	21–6	21–6	21–6 21–0	21–6	
UNDERSIDE OF TRUSS TO H.R.L.		24–10	–	23–10	–	25–6	26–0	26–1	25–11	26–0	25–9	–	26–0	26–10	25–11	27–1	27–1	26–4	26–1	26–0	26–3	26–3	
CONTACT WIRE HT. H.R.L.	TRACK 4	20–5	–	19–10	–	19–5	19–1	18–10	18–3	19–3 18–0	18–0 18–9	–	20–1 18–0	18–0	18–0	18–0	18–0	18–0	18–0	18–0	18–0	18–0	
MESSENGER WIRE HT. H.R.L.		23–11	–	22–10	–	22–11	22–7	22–4 21–10	21–9	22–0 21–6	21–0 24–7	–	22–0 21–6	21–6	21–6	21–6	21–6	21–6	21–6	21–6	21–6 21–0	21–6	
UNDERSIDE OF TRUSS TO H.R.L.		24–10	–	23–10	–	25–6	26–0	26–1	25–11	26–0	25–9	–	26–0	26–10	25–11	27–1	27–1	26–4	26–1	26–0	26–3	26–3	
CONTACT WIRE HT. H.R.L.	S2	20–6	–																				
MESSENGER WIRE HT. H.R.L.		23–6	–																				
UNDERSIDE OF TRUSS TO H.R.L.		24–10	–																				

LEGEND:

K KNUCKLE
NSR NOT SUPPORTED OR REGISTERED
NS NOT SUPPORTED
NR NOT REGISTERED

FIXED TERMINATION WITH GUY

BALANCE WEIGHT WITH GUY

NOTES:

1. ALL HEIGHTS ARE ROUNDED TO THE NEAREST 1/2".

THE INFORMATION, INCLUDING ESTIMATED QUANTITIES OF WORK SHOWN ON THESE SHEETS IS BASED ON LIMITED INVESTIGATIONS BY THE STATE AND IS IN NO WAY WARRANTED TO INDICATE THE TRUE CONDITIONS OR ACTUAL QUANTITIES OR DISTRIBUTION OF QUANTITIES OF WORK WHICH WILL BE REQUIRED.

SCALE: NONE

URS CORPORATION AES
500 ENTERPRISE DRIVE
ROCKY HILL, CT 06067
1-(860)-529-8882

URS CORPORATION AES
500 ENTERPRISE DRIVE
ROCKY HILL, CT 06067

NO.	DATE	DESCRIPTION

REVISIONS

STATE OF CONNECTICUT
DEPARTMENT OF TRANSPORTATION

SECTION C–1a & C–2 NEW HAVEN LINE

CATENARY REPLACEMENT BETWEEN WALK BRIDGE AND STRUCTURE 636, PECK BRIDGE AND STRUCTURE 863

CATENARY LAYOUT

STRUCTURE 532 TO STRUCTURE 547

ENGINEER: URS CORPORATION AES
DESIGNER: RW | DRAFTER: AMK | CHECKER: AJM
APPROVED: T. HOLLAND | DATE: 09/13/13
STRUCTURE NO. | BRIDGE LOG NO. | STRUCTURE SHEET NO. L–15

PROJECT CONTROL DATE: 09/13/13 DISK FILENAME: L–15.dwg 100% DESIGN

F H W A REGION	STATE	TOWN	FED. AID PROJ. NO.	PROJ. NO.	YEAR	SHEET NUMBER
1	CONN.	VARIOUS	CT-05-0109	301-0145	2013	01.03.100

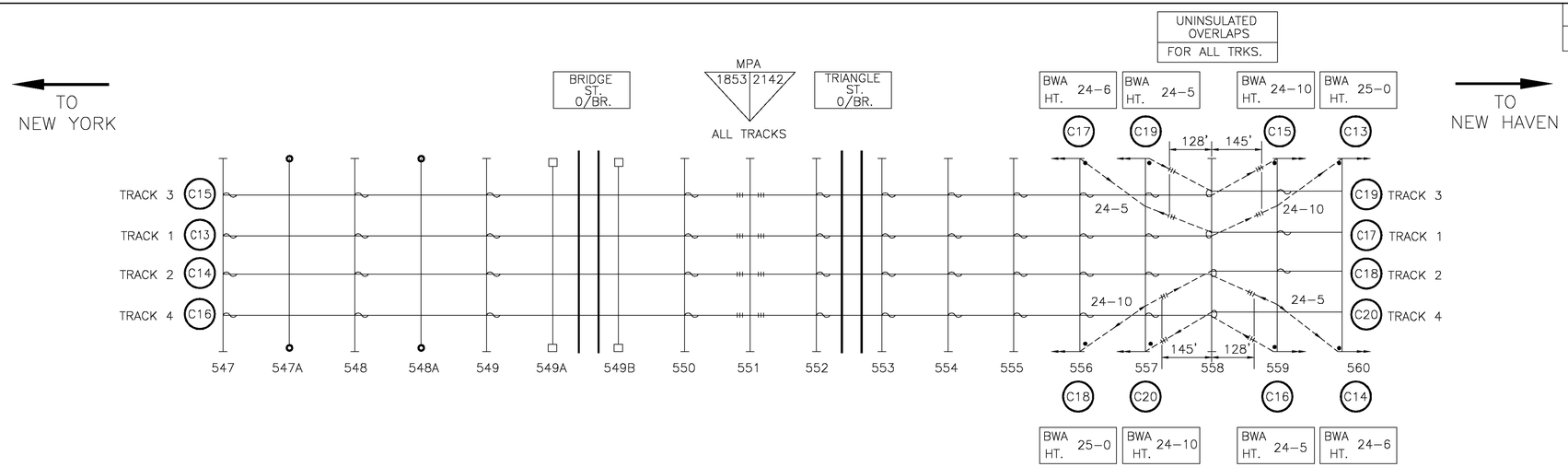

STAGGER		3"	6"	6"	6"	6"	6"	4"	6"	6"	6"	6"	6"	6"	6"	6"	6"	6"	6"
STRUCTURE NUMBER		547	547A	548	548A	549	549A	549B	550	551	552	553	554	555	556	557	558	559	560
STATIONING*		1568+22	1569+74	1571+27	1572+79	1574+32	1575+67	1576+24	1577+59	1580+65	1583+71	1586+77	1589+83	1592+89	1595+95	1599+01	1602+07	1605+13	1608+19
SPAN (FEET)			152	153	152	153	135	57	135	306	306	306	306	306	306	306	306	306	306
VERSINE (INCHES)			5 1/2	6	6	6	5	1/2	1										
CONTACT WIRE HT. H.R.L.	TRACK 3	17-3	17-0	16-9	16-6	16-3	16-3	16-3	16-3	16-9	17-3	17-9	18-0	18-0	18-0	18-0	18-0	18-0	
MESSENGER WIRE HT. H.R.L.	TRACK 3	20-9	20-6	20-3	20-0	18-9	16-10	16-10	18-9	21-9	20-9	21-3	21-6	21-6	21-6	21-6	21-0 21-6	21-6	
UNDERSIDE OF TRUSS TO H.R.L.	TRACK 3	26-0	26-0	26-5	26-0	23-7	–	–	23-10	26-11	27-5	26-8	26-5	26-5	26-6	26-6	26-6	26-5	
CONTACT WIRE HT. H.R.L.	TRACK 1	17-3	17-0	16-9	16-6	16-3	16-3	16-3	16-3	16-9	17-3	17-9	18-0	18-0	18-0	18-0	18-0	18-0	
MESSENGER WIRE HT. H.R.L.	TRACK 1	20-9	20-6	20-3	20-0	18-9	16-10	16-10	18-9	21-9	20-9	21-3	21-6	21-6	21-6	21-6	21-0 21-6	21-6	
UNDERSIDE OF TRUSS TO H.R.L.	TRACK 1	26-0	26-0	26-5	26-0	23-7	–	–	23-10	26-11	27-5	26-8	26-5	26-5	26-6	26-6	26-6	26-5	
CONTACT WIRE HT. H.R.L.	TRACK 2	17-3	17-0	16-9	16-6	16-3	16-3	16-3	16-3	16-9	17-3	17-9	18-0	18-0	18-0	18-0	18-0	18-0	
MESSENGER WIRE HT. H.R.L.	TRACK 2	20-9	20-6	20-3	20-0	18-9	16-10	16-10	18-9	21-9	20-9	21-3	21-6	21-6	21-6	21-6	21-6 21-0	21-6	
UNDERSIDE OF TRUSS TO H.R.L.	TRACK 2	26-0	26-0	26-5	26-0	23-7	–	–	23-10	26-11	27-5	26-8	26-5	26-5	26-6	26-6	26-6	26-5	
CONTACT WIRE HT. H.R.L.	TRACK 4	17-3	17-0	16-9	16-6	16-3	16-3	16-3	16-3	16-9	17-3	17-9	18-0	18-0	18-0	18-0	18-0	18-0	
MESSENGER WIRE HT. H.R.L.	TRACK 4	20-9	20-6	20-3	20-0	18-9	16-10	16-10	18-9	21-9	20-9	21-3	21-6	21-6	21-6	21-6	21-6 21-0	21-6	
UNDERSIDE OF TRUSS TO H.R.L.	TRACK 4	26-0	26-0	26-5	16-0	23-7	–	–	23-10	26-11	27-5	26-8	26-5	26-5	26-6	26-6	26-6	26-5	

LEGEND:

K KNUCKLE
NSR NOT SUPPORTED OR REGISTERED
NS NOT SUPPORTED
NR NOT REGISTERED

FIXED TERMINATION WITH GUY

BALANCE WEIGHT WITH GUY

NOTES:

1. ALL HEIGHTS ARE ROUNDED TO THE NEAREST 1/2".
2. FOR CATENARY PROFILES UNDER BRIDGE ST. AND TRIANGLE ST. SEE DWG. B-7.

THE INFORMATION, INCLUDING ESTIMATED QUANTITIES OF WORK SHOWN ON THESE SHEETS IS BASED ON LIMITED INVESTIGATIONS BY THE STATE AND IS IN NO WAY WARRANTED TO INDICATE THE TRUE CONDITIONS OR ACTUAL QUANTITIES OR DISTRIBUTION OF QUANTITIES OF WORK WHICH WILL BE REQUIRED.

SCALE: NONE

URS CORPORATION AES
500 ENTERPRISE DRIVE
ROCKY HILL, CT 06067
1-(860)-529-8882

NO.	DATE	DESCRIPTION

REVISIONS

STATE OF CONNECTICUT
DEPARTMENT OF TRANSPORTATION

SECTION C-1a & C-2 NEW HAVEN LINE

CATENARY REPLACEMENT BETWEEN WALK BRIDGE AND STRUCTURE 636, PECK BRIDGE AND STRUCTURE 863

CATENARY LAYOUT

STRUCTURE 547 TO STRUCTURE 560

ENGINEER: URS CORPORATION AES
DESIGNER: RW | DRAFTER: AMK | CHECKER: AJM
APPROVED: T. HOLLAND | DATE: 09/13/13
STRUCTURE NO. | BRIDGE LOG NO. | STRUCTURE SHEET NO. L-16

PROJECT CONTROL DATE: 09/13/13 DISK FILENAME: L-16.dwg 100% DESIGN

F H W A REGION	STATE	TOWN	FED. AID PROJ. NO.	PROJ. NO.	YEAR	SHEET NUMBER
1	CONN.	VARIOUS	CT-05-0109	301-0145	2013	01.03.101

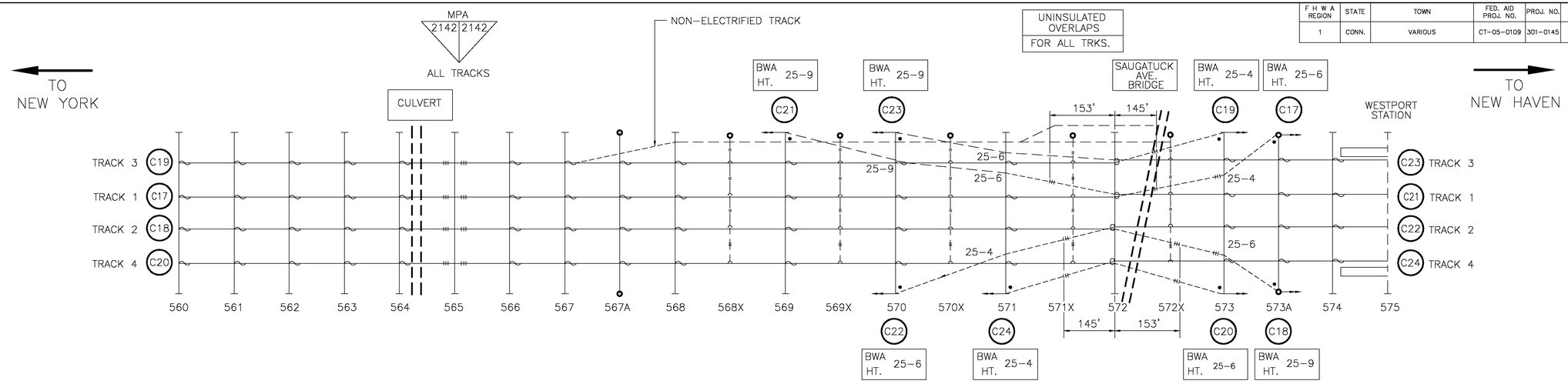

STAGGER		6"	6"	6"	6"	6"	6"	6"	6"	8"	8"	8"	8"	8"	8"	8"	8"	8"	6"	8"	8"	8"	6"	
STRUCTURE NUMBER		560	561	562	563	564	565	566	567	567A	568	568X	569	569X	570	570X	571	571X	572	572X	573	573A	574	575
STATIONING*		1608+19	1611+25	1614+31	1617+37	1620+43	1623+49	1626+55	1629+61	1631+14	1632+67	1634+20	1635+73	1637+26	1638+79	1640+32	1641+85	1643+55	1644+91	1646+44	1647+97	1649+51	1651+04	1654+11
SPAN (FEET)		306	306	306	306	306	306	306	153	153	153	153	153	153	153	153	153	170	136	153	153	154	153	307
VERSINE (INCHES)									1	7	7	7	6 1/2	6	7	7	8	5	7	7	6	2 1/2		
CONTACT WIRE HT. H.R.L.	TRACK 3	18-0	18-0	18-0	18-0	18-0	18-0	18-0	18-0	18-0	18-0	–	18-0	–	18-0	–	18-0	–	18-6	–	19-0	19-0	19-0	
MESSENGER WIRE HT. H.R.L.	TRACK 3	21-6	21-6	21-6	21-6	21-6	23-0	21-6	21-6	21-6	22-0	–	22-0	–	22-0	–	22-0	–	22-0 22-3	–	23-0	22-6	22-6	
UNDERSIDE OF TRUSS TO H.R.L.	TRACK 3	26-3	26-1	26-1	25-10	25-4	24-11	25-4	25-5	26-0	25-1	–	24-6	–	24-5	–	24-9	–	24-9	–	24-8	26-0	27-3	
CONTACT WIRE HT. H.R.L.	TRACK 1	18-0	18-0	18-0	18-0	18-0	18-0	18-0	18-0	18-0	18-0	–	18-0	–	18-0	–	18-0	–	18-6	–	19-0	19-0	19-0	
MESSENGER WIRE HT. H.R.L.	TRACK 1	21-6	21-6	21-6	21-6	21-6	23-0	21-6	21-6	21-6	22-0	–	22-0	–	22-0	–	22-0	–	22-0 22-3	–	23-0	22-6	22-6	
UNDERSIDE OF TRUSS TO H.R.L.	TRACK 1	26-3	26-1	26-1	25-10	25-4	24-11	25-4	25-5	26-0	25-1	–	24-6	–	24-5	–	24-9	–	24-9	–	24-8	26-0	27-3	
CONTACT WIRE HT. H.R.L.	TRACK 2	18-0	18-0	18-0	18-0	18-0	18-0	18-0	18-0	18-0	18-0	–	18-0	–	18-0	–	18-0	–	18-6	–	19-0	19-0	19-0	
MESSENGER WIRE HT. H.R.L.	TRACK 2	21-6	21-6	21-6	21-6	21-6	23-0	21-6	21-6	21-6	22-0	–	22-0	–	22-0	–	22-0	–	22-3 22-0	–	23-0	22-6	22-6	
UNDERSIDE OF TRUSS TO H.R.L.	TRACK 2	26-3	26-1	26-1	25-10	25-4	24-11	25-4	25-5	26-0	25-1	–	24-6	–	24-5	–	24-9	–	24-9	–	24-8	26-0	27-3	
CONTACT WIRE HT. H.R.L.	TRACK 4	18-0	18-0	18-0	18-0	18-0	18-0	18-0	18-0	18-0	18-0	–	18-0	–	18-0	–	18-0	–	18-6	–	19-0	19-0	19-0	
MESSENGER WIRE HT. H.R.L.	TRACK 4	21-6	21-6	21-6	21-6	21-6	23-0	21-6	21-6	21-6	22-0	–	22-0	–	22-0	–	22-0	–	22-3 22-0	–	23-0	22-6	22-6	
UNDERSIDE OF TRUSS TO H.R.L.	TRACK 4	26-3	26-1	26-1	25-10	25-4	24-11	25-4	25-5	26-0	25-1	–	24-6	–	24-5	–	24-9	–	24-9	–	24-8	26-0	27-3	

LEGEND:

K KNUCKLE
NSR NOT SUPPORTED OR REGISTERED
NS NOT SUPPORTED
NR NOT REGISTERED

FIXED TERMINATION WITH GUY

BALANCE WEIGHT WITH GUY

NOTES:

1. ALL HEIGHTS ARE ROUNDED TO THE NEAREST 1/2".

THE INFORMATION, INCLUDING ESTIMATED QUANTITIES OF WORK SHOWN ON THESE SHEETS IS BASED ON LIMITED INVESTIGATIONS BY THE STATE AND IS IN NO WAY WARRANTED TO INDICATE THE TRUE CONDITIONS OR ACTUAL QUANTITIES OR DISTRIBUTION OF QUANTITIES OF WORK WHICH WILL BE REQUIRED.

SCALE: NONE

URS CORPORATION AES
500 ENTERPRISE DRIVE
ROCKY HILL, CT 06067
1-(860)-529-8882

NO.	DATE	DESCRIPTION

REVISIONS

URS CORPORATION AES
500 ENTERPRISE DRIVE
ROCKY HILL, CT 06067

STATE OF CONNECTICUT
DEPARTMENT OF TRANSPORTATION

SECTION C-1a & C-2 NEW HAVEN LINE

CATENARY REPLACEMENT BETWEEN WALK BRIDGE AND STRUCTURE 636, PECK BRIDGE AND STRUCTURE 863

CATENARY LAYOUT

STRUCTURE 560 TO STRUCTURE 575

ENGINEER: URS CORPORATION AES
DESIGNER: RW | DRAFTER: AMK | CHECKER: AJM
APPROVED: T. HOLLAND | DATE: 09/13/13
STRUCTURE NO. | BRIDGE LOG NO. | STRUCTURE SHEET NO. L-17

PROJECT CONTROL DATE: 09/13/13 DISK FILENAME: L-17.dwg 100% DESIGN

F H W A REGION	STATE	TOWN	FED. AID PROJ. NO.	PROJ. NO.	YEAR	SHEET NUMBER
1	CONN.	VARIOUS	CT-05-0109	301-0145	2013	01.03.102

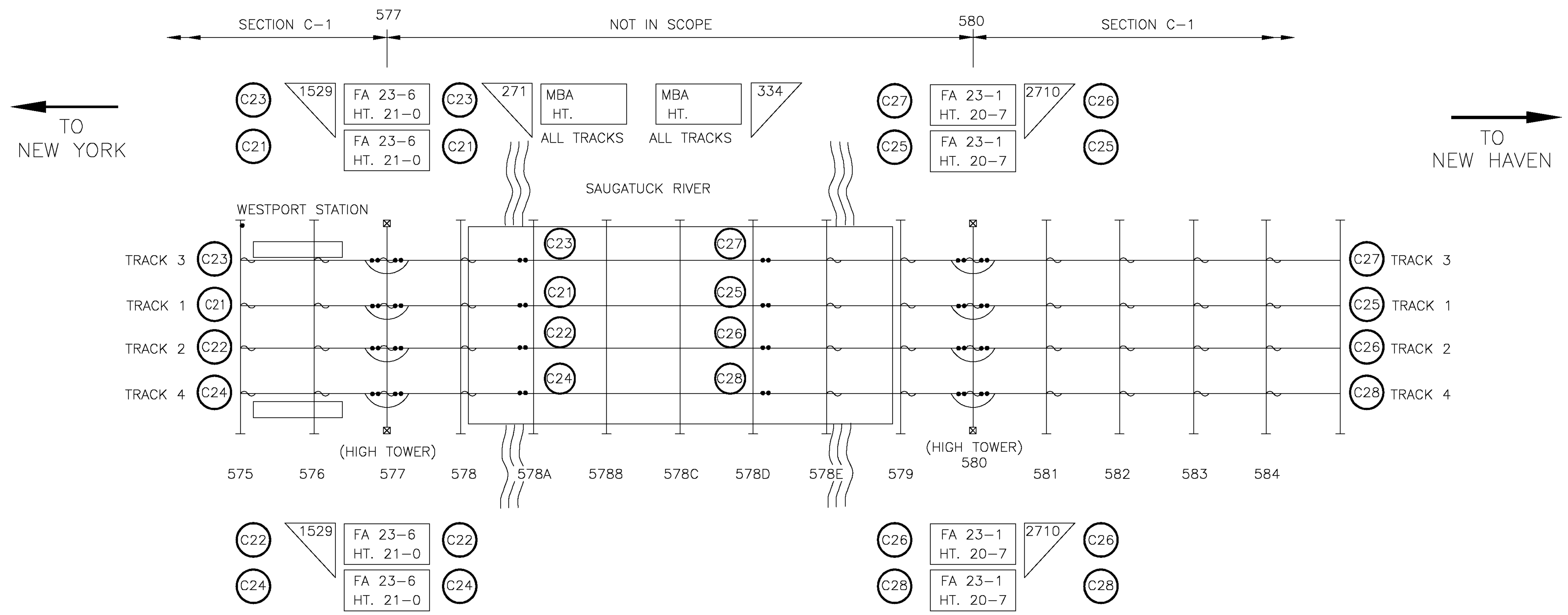

		575	576	577	578	578A	578B	578C	578D	578E	579	580	581	582	583	584	585
STAGGER		6"	6"	6"								6"	6"	6"	6"	6"	
STRUCTURE NUMBER		575	576	577	578	578A	578B	578C	578D	578E	579	580	581	582	583	584	585
STATIONING*		1654+11	1657+18	1660+20	1661+54	1662+91	1663+18	1663+63	1664+20	1665+27	1666+35	1667+54	1670+64	1673+74	1673+74	1679+94	1683+04
SPAN (FEET)		307	302	134	137	27	45	57	107	108	119	310	310	310	310	310	
VERSINE (INCHES)																	
CONTACT WIRE HT. H.R.L.	TRACK 3	19-0	19-6	20-0								20-3	20-0	19-6	19-0	18-6	
MESSENGER WIRE HT. H.R.L.	TRACK 3	22-3	23-0	22-6								22-9	24-3	23-0	22-6	22-0	
UNDERSIDE OF TRUSS TO H.R.L.	TRACK 3	23-0	25-2	23-3	22-10						23-4	23-8	25-7	26-11	26-9	26-6	
CONTACT WIRE HT. H.R.L.	TRACK 1	19-0	19-6	20-0								20-3	20-0	19-6	19-0	18-6	
MESSENGER WIRE HT. H.R.L.	TRACK 1	22-3	23-0	22-6								22-9	24-3	23-0	22-6	22-0	
UNDERSIDE OF TRUSS TO H.R.L.	TRACK 1	23-0	25-2	23-3	22-10						23-4	23-8	25-7	26-11	26-9	26-6	
CONTACT WIRE HT. H.R.L.	TRACK 2	19-0	19-6	20-0								20-3	20-0	19-6	19-0	18-6	
MESSENGER WIRE HT. H.R.L.	TRACK 2	22-3	23-0	22-6								22-9	24-3	23-0	22-6	22-0	
UNDERSIDE OF TRUSS TO H.R.L.	TRACK 2	23-0	25-2	23-3	22-10						23-4	23-8	25-7	26-11	26-9	26-6	
CONTACT WIRE HT. H.R.L.	TRACK 4	19-0	19-6	20-0								20-3	20-0	19-6	19-0	18-6	
MESSENGER WIRE HT. H.R.L.	TRACK 4	22-3	23-0	22-6								22-9	24-3	23-0	22-6	22-0	
UNDERSIDE OF TRUSS TO H.R.L.	TRACK 4	23-0	25-2	23-3	22-10						23-4	23-8	25-7	26-11	26-9	26-6	

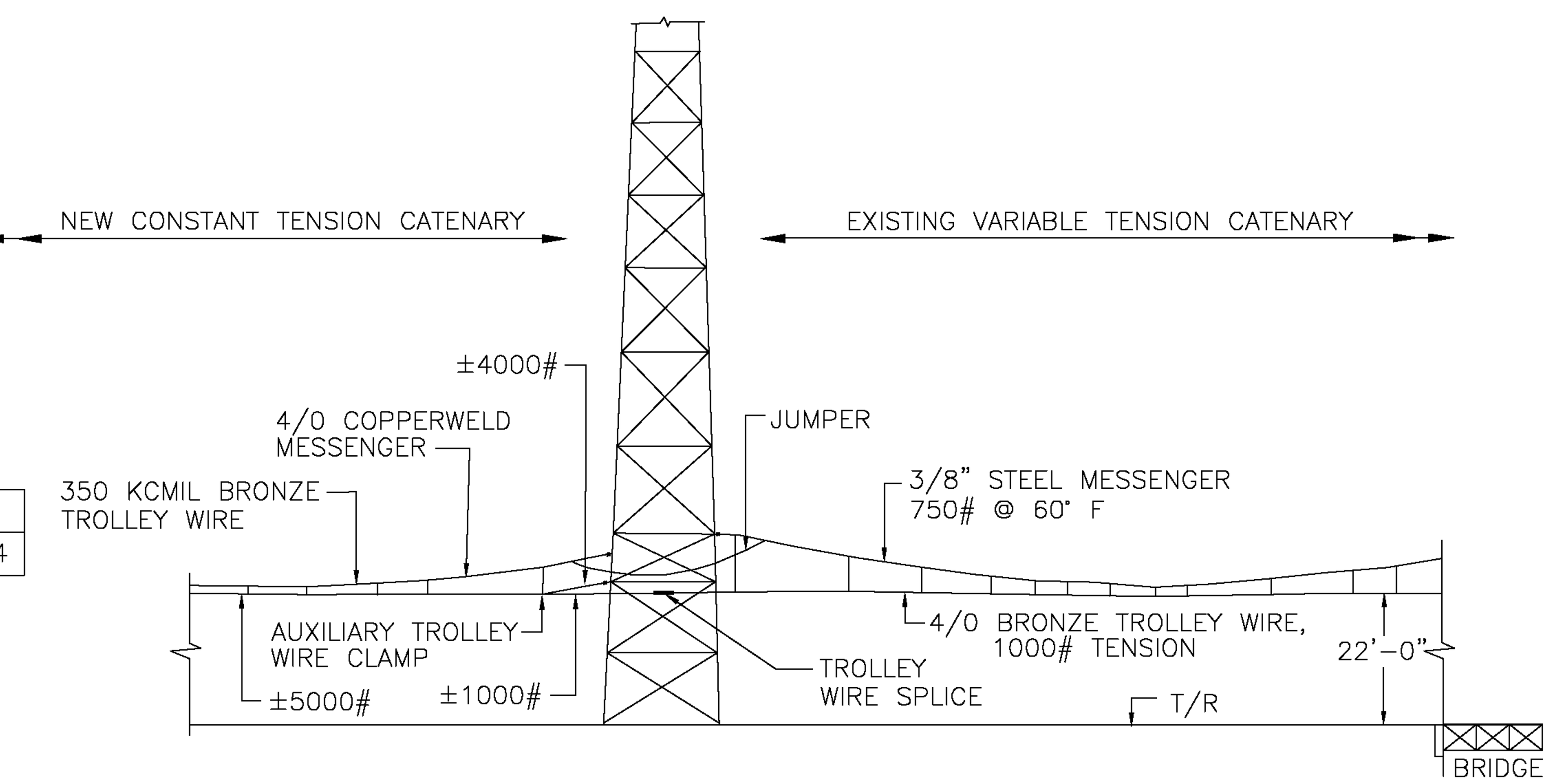

HIGH TOWER 577
(HIGH TOWER 580 OPPOSITE HAND)

LEGEND:

- K KNUCKLE
- NSR NOT SUPPORTED OR REGISTERED
- NS NOT SUPPORTED
- NR NOT REGISTERED
- FIXED TERMINATION WITH GUY
- BALANCE WEIGHT WITH GUY

NOTES:

1. ALL HEIGHTS ARE ROUNDED TO THE NEAREST 1/2".
2. A NEW 4/0 JUMPER (NOT SHOWN) WILL CONNECT THE CATENARY MESSENGERS ON EACH SIDE OF THE HIGH TOWER.
3. THE LENGTH AND VERTICAL ANGLE OF THE EQUALIZING WIRE WILL BE CALCULATED TO ELIMINATE UPLIFT ON THE CONTACT WIRE AT THE AUXILIARY TROLLEY WIRE CLAMP.

SCALE: NONE

THE INFORMATION, INCLUDING ESTIMATED QUANTITIES OF WORK SHOWN ON THESE SHEETS IS BASED ON LIMITED INVESTIGATIONS BY THE STATE AND IS IN NO WAY WARRANTED TO INDICATE THE TRUE CONDITIONS OR ACTUAL QUANTITIES OR DISTRIBUTION OF QUANTITIES OF WORK WHICH WILL BE REQUIRED.

URS
URS CORPORATION AES
500 ENTERPRISE DRIVE
ROCKY HILL, CT 06067
1-(860)-529-8882

NO.	DATE	DESCRIPTION
REVISIONS		

STATE OF CONNECTICUT
DEPARTMENT OF TRANSPORTATION

SECTION C-1a & C-2 NEW HAVEN LINE

CATENARY REPLACEMENT BETWEEN WALK BRIDGE AND STRUCTURE 636, PECK BRIDGE AND STRUCTURE 863

CATENARY LAYOUT

STRUCTURE 575 TO STRUCTURE 585

ENGINEER: URS CORPORATION AES
DESIGNER: RW | DRAFTER: AMK | CHECKER: AJM
APPROVED: T. HOLLAND | DATE: 09/13/13
STRUCTURE NO. | BRIDGE LOG NO. | STRUCTURE SHEET NO. L-18

PROJECT CONTROL DATE: 09/13/13 DISK FILENAME: L-18.dwg 100% DESIGN

F H W A REGION	STATE	TOWN	FED. AID PROJ. NO.	PROJ. NO.	YEAR	SHEET NUMBER
1	CONN.	VARIOUS	CT-05-0109	301-0145	2013	01.03.103

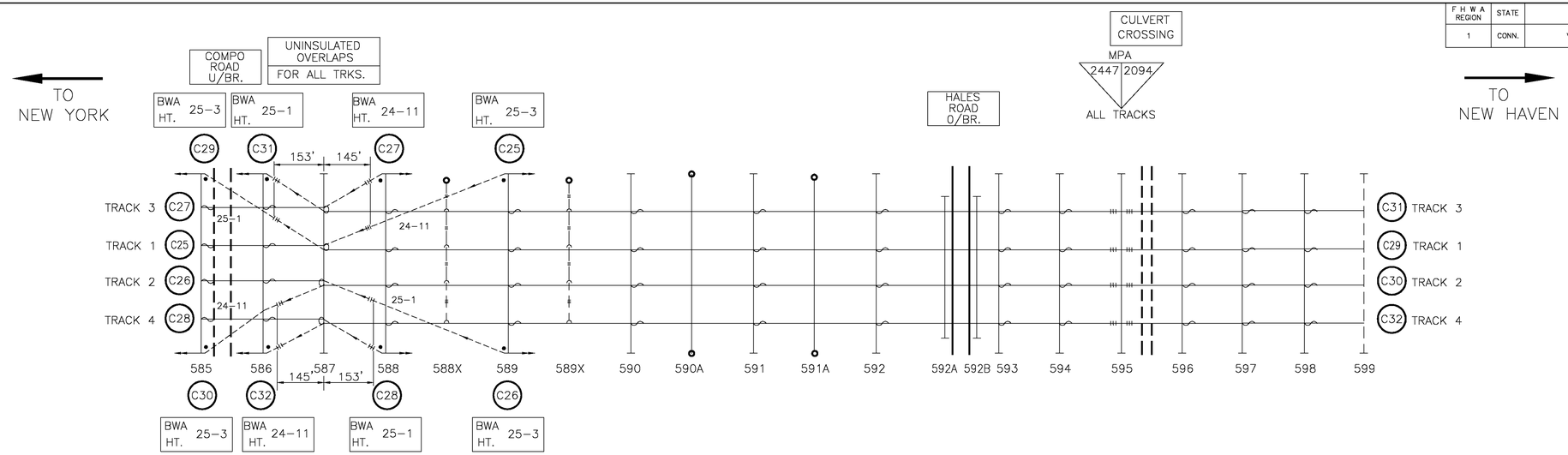

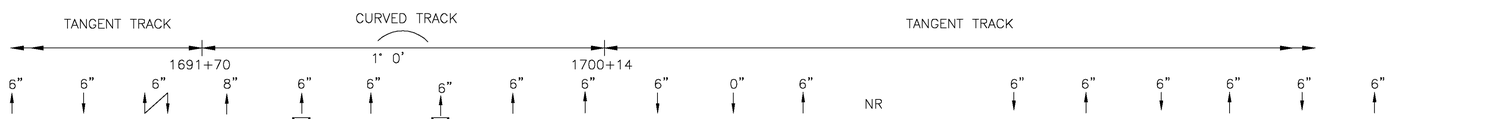

STAGGER																					
STRUCTURE NUMBER		585	586	587	588	588X	589	589X	590	590A	591	591A	592	592A	592B	593	594	595	596	597	598	599
STATIONING*		1683+04	1686+14	1689+24	1692+34	1693+89	1695+44	1696+99	1698+53	1700+00	1701+47	1703+09	1704+71	1706+13	1706+53	1707+90	1710+85	1713+71	1716+59	1719+47	1722+23	1725+23
SPAN (FEET)			310	310	310	155	155	155	154	147	147	162	162	142	40	137	295	286	288	288	276	300
VERSINE (INCHES)					2	6	6	6	6	6												
CONTACT WIRE HT. H.R.L.	TRACK 3	18-0	18-0	18-0	18-0	–	18-0	–	17-6	17-3	17-0	16-9	16-6	16-6	16-6	16-6	17-0	17-6	17-6	17-6	17-0	
MESSENGER WIRE HT. H.R.L.	TRACK 3	21-6	21-6	21-6 21-9	22-0	–	22-0	–	21-6	20-9	20-6	20-3	19-0	17-9	17-9	20-0	20-6	23-6	21-0	21-0	20-6	
UNDERSIDE OF TRUSS TO H.R.L.	TRACK 3	26-6	27-1	27-4	26-9	–	26-8	–	26-5	26-0	26-9	26-0	24-2	19-6	19-6	24-4	26-1	25-9	26-2	26-4	26-3	
CONTACT WIRE HT. H.R.L.	TRACK 1	18-0	18-0	18-0	18-0	–	18-0	–	17-6	17-3	17-0	16-9	16-6	16-6	16-6	16-6	17-0	17-6	17-6	17-6	17-0	
MESSENGER WIRE HT. H.R.L.	TRACK 1	21-6	21-6	21-6 21-9	22-0	–	22-0	–	21-6	20-9	20-6	20-3	19-0	17-9	17-9	20-0	20-6	23-6	21-0	21-0	20-6	
UNDERSIDE OF TRUSS TO H.R.L.	TRACK 1	26-6	27-1	27-4	26-9	–	26-8	–	26-5	26-0	26-9	26-0	24-2	19-6	19-6	24-4	26-1	25-9	26-2	26-4	26-3	
CONTACT WIRE HT. H.R.L.	TRACK 2	18-0	18-0	18-0	18-0	–	18-0	–	17-6	17-3	17-0	16-9	16-6	16-6	16-6	16-6	17-0	17-6	17-6	17-6	17-0	
MESSENGER WIRE HT. H.R.L.	TRACK 2	21-6	21-6	21-9 21-6	22-0	–	22-0	–	21-6	20-9	20-6	20-3	19-0	17-9	17-9	20-0	20-6	23-6	21-0	21-0	20-6	
UNDERSIDE OF TRUSS TO H.R.L.	TRACK 2	26-6	27-1	27-4	26-9	–	26-8	–	26-5	26-0	26-9	26-0	24-2	19-6	19-6	24-4	26-1	25-9	26-2	26-4	26-3	
CONTACT WIRE HT. H.R.L.	TRACK 4	18-0	18-0	18-0	18-0	–	18-0	–	17-6	17-3	17-0	16-9	16-6	16-6	16-6	16-6	17-0	17-6	17-6	17-6	17-0	
MESSENGER WIRE HT. H.R.L.	TRACK 4	21-6	21-6	21-9 21-6	22-0	–	22-0	–	21-6	20-9	20-6	20-3	19-0	17-9	17-9	20-0	20-6	23-6	21-0	21-0	20-6	
UNDERSIDE OF TRUSS TO H.R.L.	TRACK 4	26-6	27-1	27-4	26-9	–	26-8	–	26-5	26-0	26-9	26-0	24-2	19-6	19-6	24-4	26-1	25-9	26-2	26-4	26-3	

LEGEND:

K KNUCKLE
NSR NOT SUPPORTED OR REGISTERED
NS NOT SUPPORTED
NR NOT REGISTERED

FIXED TERMINATION WITH GUY

BALANCE WEIGHT WITH GUY

NOTES:

1. ALL HEIGHTS ARE ROUNDED TO THE NEAREST 1/2".
2. FOR CATENARY PROFILES UNDER HALES ROAD SEE DWG. B-8.

THE INFORMATION, INCLUDING ESTIMATED QUANTITIES OF WORK SHOWN ON THESE SHEETS IS BASED ON LIMITED INVESTIGATIONS BY THE STATE AND IS IN NO WAY WARRANTED TO INDICATE THE TRUE CONDITIONS OR ACTUAL QUANTITIES OR DISTRIBUTION OF QUANTITIES OF WORK WHICH WILL BE REQUIRED.

SCALE: NONE

URS CORPORATION AES
500 ENTERPRISE DRIVE
ROCKY HILL, CT 06067
1-(860)-529-8882

URS CORPORATION AES
500 ENTERPRISE DRIVE
ROCKY HILL, CT 06067

NO.	DATE	DESCRIPTION

REVISIONS

STATE OF CONNECTICUT
DEPARTMENT OF TRANSPORTATION

SECTION C-1a & C-2 NEW HAVEN LINE

CATENARY REPLACEMENT BETWEEN WALK BRIDGE AND STRUCTURE 636, PECK BRIDGE AND STRUCTURE 863

CATENARY LAYOUT

STRUCTURE 585 TO STRUCTURE 599

ENGINEER: URS CORPORATION AES
DESIGNER: RW | DRAFTER: AMK | CHECKER: AJM
APPROVED: T. HOLLAND | DATE: 09/13/13
STRUCTURE NO. | BRIDGE LOG NO. | STRUCTURE SHEET NO. L-19

100% DESIGN
DISK FILENAME: L-19.dwg
PROJECT CONTROL DATE: 09/13/13

F H W A REGION	STATE	TOWN	FED. AID PROJ. NO.	PROJ. NO.	YEAR	SHEET NUMBER
1	CONN.	VARIOUS	CT-05-0109	301-0145	2013	01.03.104

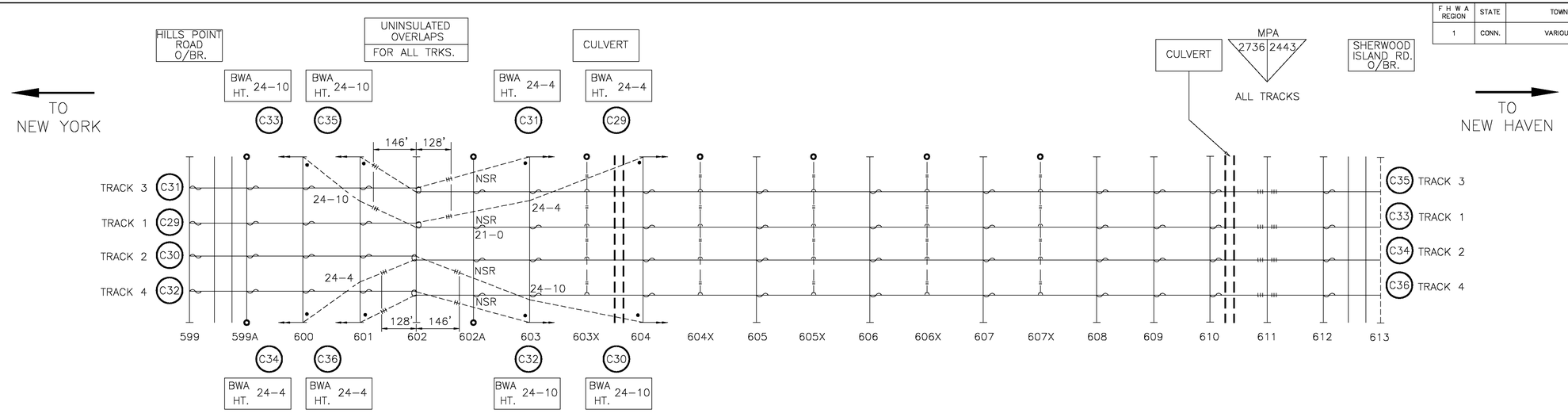

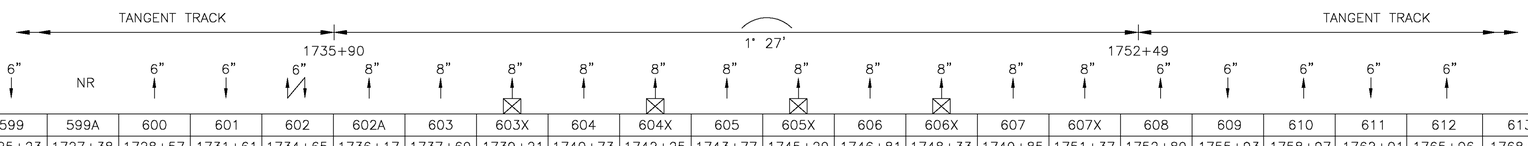

STAGGER																						
STRUCTURE NUMBER		599	599A	600	601	602	602A	603	603X	604	604X	605	605X	606	606X	607	607X	608	609	610	611	612	613
STATIONING*		1725+23	1727+38	1728+57	1731+61	1734+65	1736+17	1737+69	1739+21	1740+73	1742+25	1743+77	1745+29	1746+81	1748+33	1749+85	1751+37	1752+89	1755+93	1758+97	1762+01	1765+06	1768+11
SPAN (FEET)			215	119	304	304	152	152	152	152	152	152	152	152	152	152	152	152	304	304	304	305	305
VERSINE (INCHES)							2	7 1/2	9	8 1/2	8 1/2	9	9	9	8 1/2	8 1/2	9 1/2	5					
CONTACT WIRE HT. H.R.L.	TRACK 3	16-6	16-6	16-9	17-5	18-0	18-0	18-0	–	18-0	–	18-0	–	18-0	–	18-0	–	18-0	18-0	18-0	18-0	18-0	
MESSENGER WIRE HT. H.R.L.	TRACK 3	20-0	19-0	19-3	21-11	21-0 21-6	21-6	22-0	–	22-0	–	22-0	–	22-0	–	22-0	–	22-0	21-6	21-6	24-6	21-6	
UNDERSIDE OF TRUSS TO H.R.L.	TRACK 3	23-2	21-6	27-0	26-10	26-3	26-0	26-2	–	26-3	–	25-11	–	25-9	–	26-0	–	26-2	26-6	26-5	26-8	26-8	
CONTACT WIRE HT. H.R.L.	TRACK 1	16-6	16-6	16-9	17-5	18-0	18-0	18-0	–	18-0	–	18-0	–	18-0	–	18-0	–	18-0	18-0	18-0	18-0	18-0	
MESSENGER WIRE HT. H.R.L.	TRACK 1	20-0	19-0	19-3	21-11	21-0 21-6	21-6	22-0	–	22-0	–	22-0	–	22-0	–	22-0	–	22-0	21-6	21-6	24-6	21-6	
UNDERSIDE OF TRUSS TO H.R.L.	TRACK 1	23-2	21-6	27-0	26-10	26-3	26-0	26-2	–	26-3	–	25-11	–	25-9	–	26-0	–	26-2	26-6	26-5	26-8	26-8	
CONTACT WIRE HT. H.R.L.	TRACK 2	21-3	16-6	16-9	17-5	18-0	18-0	18-0	–	18-0	–	18-0	–	18-0	–	18-0	–	18-0	18-0	18-0	18-0	18-0	
MESSENGER WIRE HT. H.R.L.	TRACK 2	24-9	19-0	19-3	21-11	21-6 21-0	21-6	22-0	–	22-0	–	22-0	–	22-0	–	22-0	–	22-0	21-6	21-6	24-6	21-6	
UNDERSIDE OF TRUSS TO H.R.L.	TRACK 2	23-2	21-6	27-0	26-10	26-3	26-0	26-2	–	26-3	–	25-11	–	25-9	–	26-0	–	26-2	26-6	26-5	26-8	26-8	
CONTACT WIRE HT. H.R.L.	TRACK 4	21-3	16-6	16-9	17-5	18-0	18-0	18-0	–	18-0	–	18-0	–	18-0	–	18-0	–	18-0	18-0	18-0	18-0	18-0	
MESSENGER WIRE HT. H.R.L.	TRACK 4	24-9	19-0	19-3	21-11	21-6 21-0	21-6	22-0	–	22-0	–	22-0	–	22-0	–	22-0	–	22-0	21-6	21-6	24-6	21-6	
UNDERSIDE OF TRUSS TO H.R.L.	TRACK 4	23-2	21-6	27-0	26-10	26-3	26-0	26-2	–	26-3	–	25-11	–	25-9	–	26-0	–	26-2	26-6	26-5	26-8	26-8	

LEGEND:

K KNUCKLE
NSR NOT SUPPORTED OR REGISTERED
NS NOT SUPPORTED
NR NOT REGISTERED
FIXED TERMINATION WITH GUY
BALANCE WEIGHT WITH GUY

NOTES:

1. ALL HEIGHTS ARE ROUNDED TO THE NEAREST 1/2".
2. FOR CATENARY PROFILES UNDER HILLS POINT ROAD AND SHERWOOD ISLAND ROAD, SEE DWGS. B-8 AND B-9.

THE INFORMATION, INCLUDING ESTIMATED QUANTITIES OF WORK SHOWN ON THESE SHEETS IS BASED ON LIMITED INVESTIGATIONS BY THE STATE AND IS IN NO WAY WARRANTED TO INDICATE THE TRUE CONDITIONS OR ACTUAL QUANTITIES OR DISTRIBUTION OF QUANTITIES OF WORK WHICH WILL BE REQUIRED.

SCALE: NONE

URS CORPORATION AES
500 ENTERPRISE DRIVE
ROCKY HILL, CT 06067
1-(860)-529-8882

STATE OF CONNECTICUT
DEPARTMENT OF TRANSPORTATION

SECTION C-1a & C-2 NEW HAVEN LINE

CATENARY REPLACEMENT BETWEEN WALK BRIDGE AND STRUCTURE 636, PECK BRIDGE AND STRUCTURE 863

CATENARY LAYOUT

STRUCTURE 599 TO STRUCTURE 613

NO.	DATE	DESCRIPTION

REVISIONS

ENGINEER: URS CORPORATION AES
DESIGNER: RW | DRAFTER: AMK | CHECKER: AJM
APPROVED: T. HOLLAND | DATE: 09/13/13
STRUCTURE NO. | BRIDGE LOG NO. | STRUCTURE SHEET NO. L-20

100% DESIGN
DISK FILENAME: L-20.dwg
PROJECT CONTROL DATE: 09/13/13

F H W A REGION	STATE	TOWN	FED. AID PROJ. NO.	PROJ. NO.	YEAR	SHEET NUMBER
1	CONN.	VARIOUS	CT-05-0109	301-0145	2013	01.03.105

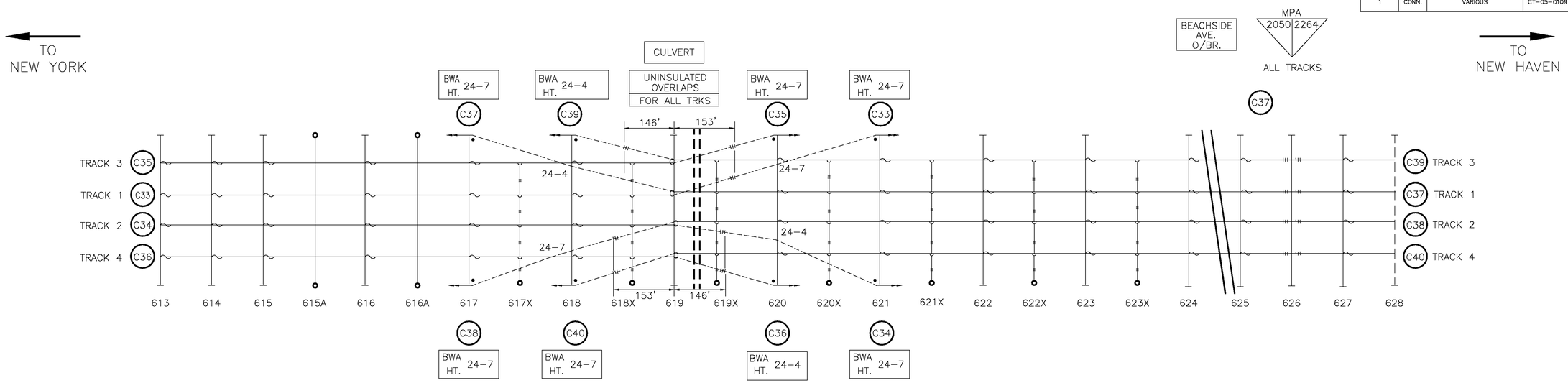

STAGGER		6"	6"	6"	6"	8"	8"	8"	8"	8"	8"	6"	8"	8"	8"	8"	8"	8"	8"	8"	8"	8"	6"	6"	6"	
STRUCTURE NUMBER		613	614	615	615A	616	616A	617	617X	618	618X	619	619X	620	620X	621	621X	622	622X	623	623X	624	625	626	627	628
STATIONING*		1768+11	1771+16	1774+11	1775+68	1777+26	1778+95	1780+64	1782+09	1783+54	1784+99	1786+44	1787+89	1789+34	1790+80	1792+25	1793+70	1795+16	1796+57	1797+98	1799+48	1800+98	1804+01	1806+94	1810+16	1813+18
SPAN (FEET)			305	295	157	158	169	169	145	145	145	145	145	145	146	145	145	146	141	141	150	150	303	293	322	302
VERSINE (INCHES)					3 1/2	9 1/2	12	11 1/2	8 1/2	8	8 1/2	8 1/2	8 1/2	8 1/2	8 1/2	8 1/2	8 1/2	9 1/2	9	8 1/2	9	10	6 1/2			
CONTACT WIRE HT. H.R.L.	TRACK 3	18-0	18-0	18-0	18-0	18-0	18-0	18-0	–	18-0	–	18-0	–	18-0	–	18-0	–	18-0	–	18-0	–	18-0	18-0	18-0	18-0	
MESSENGER WIRE HT. H.R.L.	TRACK 3	21-6	21-6	21-6	21-6	21-6	21-6	21-9	–	21-9	–	21-6 21-9	–	21-9	–	21-9	–	21-9	–	21-9	–	21-9	21-6	22-0	21-9	
UNDERSIDE OF TRUSS TO H.R.L.	TRACK 3	26-9	26-8	26-6	26-0	23-5	26-0	23-6	–	25-10	–	25-8	–	25-10	–	27-4	–	25-9	–	26-4	–	23-10	24-1	24-0	26-8	
CONTACT WIRE HT. H.R.L.	TRACK 1	18-0	18-0	18-0	18-0	18-0	18-0	18-0	–	18-0	–	18-0	–	18-0	–	18-0	–	18-0	–	18-0	–	18-0	18-0	18-0	18-0	
MESSENGER WIRE HT. H.R.L.	TRACK 1	21-6	21-6	21-6	21-6	21-6	21-6	21-9	–	21-9	–	21-6 21-9	–	21-9	–	21-9	–	21-9	–	21-9	–	21-9	21-6	22-0	21-9	
UNDERSIDE OF TRUSS TO H.R.L.	TRACK 1	26-9	26-8	27-5	26-0	26-5	26-0	26-6	–	25-10	–	25-8	–	25-10	–	27-4	–	25-9	–	26-4	–	23-10	24-1	24-0	26-8	
CONTACT WIRE HT. H.R.L.	TRACK 2	18-0	18-0	18-0	18-0	18-0	18-0	18-0	–	18-0	–	18-0	–	18-0	–	18-0	–	18-0	–	18-0	–	18-0	18-0	18-0	18-0	
MESSENGER WIRE HT. H.R.L.	TRACK 2	21-6	21-6	21-6	21-6	21-6	21-6	21-9	–	21-9	–	21-9 21-6	–	21-9	–	21-9	–	21-9	–	21-9	–	21-9	21-6	22-0	21-9	
UNDERSIDE OF TRUSS TO H.R.L.	TRACK 2	26-9	26-8	27-5	26-0	26-5	26-0	26-6	–	25-10	–	25-8	–	25-10	–	27-4	–	25-9	–	26-4	–	23-10	24-1	24-0	26-8	
CONTACT WIRE HT. H.R.L.	TRACK 4	18-0	18-0	18-0	18-0	18-0	18-0	18-0	–	18-0	–	18-0	–	18-0	–	18-0	–	18-0	–	18-0	–	18-0	18-0	18-0	18-0	
MESSENGER WIRE HT. H.R.L.	TRACK 4	21-6	21-6	21-6	21-6	21-6	21-6	21-9	–	21-9	–	21-9 21-6	–	21-9	–	21-9	–	21-9	–	21-9	–	21-9	21-6	22-0	21-9	
UNDERSIDE OF TRUSS TO H.R.L.	TRACK 4	26-9	26-8	27-5	26-0	26-5	26-0	26-6	–	25-10	–	25-8	–	25-10	–	27-4	–	25-9	–	26-4	–	23-10	24-1	24-0	26-8	

LEGEND:

K KNUCKLE
NSR NOT SUPPORTED OR REGISTERED
NS NOT SUPPORTED
NR NOT REGISTERED

FIXED TERMINATION WITH GUY

BALANCE WEIGHT WITH GUY

NOTES:

1. ALL HEIGHTS ARE ROUNDED TO THE NEAREST 1/2".
2. FOR CATENARY PROFILES UNDER BEACHSIDE AVE. BRIDGE SEE DWG. B-9.

THE INFORMATION, INCLUDING ESTIMATED QUANTITIES OF WORK SHOWN ON THESE SHEETS IS BASED ON LIMITED INVESTIGATIONS BY THE STATE AND IS IN NO WAY WARRANTED TO INDICATE THE TRUE CONDITIONS OR ACTUAL QUANTITIES OR DISTRIBUTION OF QUANTITIES OF WORK WHICH WILL BE REQUIRED.

SCALE: NONE

URS CORPORATION AES
500 ENTERPRISE DRIVE
ROCKY HILL, CT 06067
1-(860)-529-8882

NO.	DATE	DESCRIPTION

REVISIONS

STATE OF CONNECTICUT
DEPARTMENT OF TRANSPORTATION

SECTION C-1a & C-2 NEW HAVEN LINE

CATENARY REPLACEMENT BETWEEN WALK BRIDGE AND STRUCTURE 636, PECK BRIDGE AND STRUCTURE 863

CATENARY LAYOUT

STRUCTURE 613 TO STRUCTURE 628

ENGINEER: URS CORPORATION AES
DESIGNER: RW | DRAFTER: AMK | CHECKER: AJM
APPROVED: T. HOLLAND | DATE: 09/13/13
STRUCTURE NO. | BRIDGE LOG NO. | STRUCTURE SHEET NO. L-21

100% DESIGN
DISK FILENAME: L-21.dwg
PROJECT CONTROL DATE: 09/13/13

F H W A REGION	STATE	TOWN	FED. AID PROJ. NO.	PROJ. NO.	YEAR	SHEET NUMBER
1	CONN.	VARIOUS	CT-05-0109	301-0145	2013	01.03.106

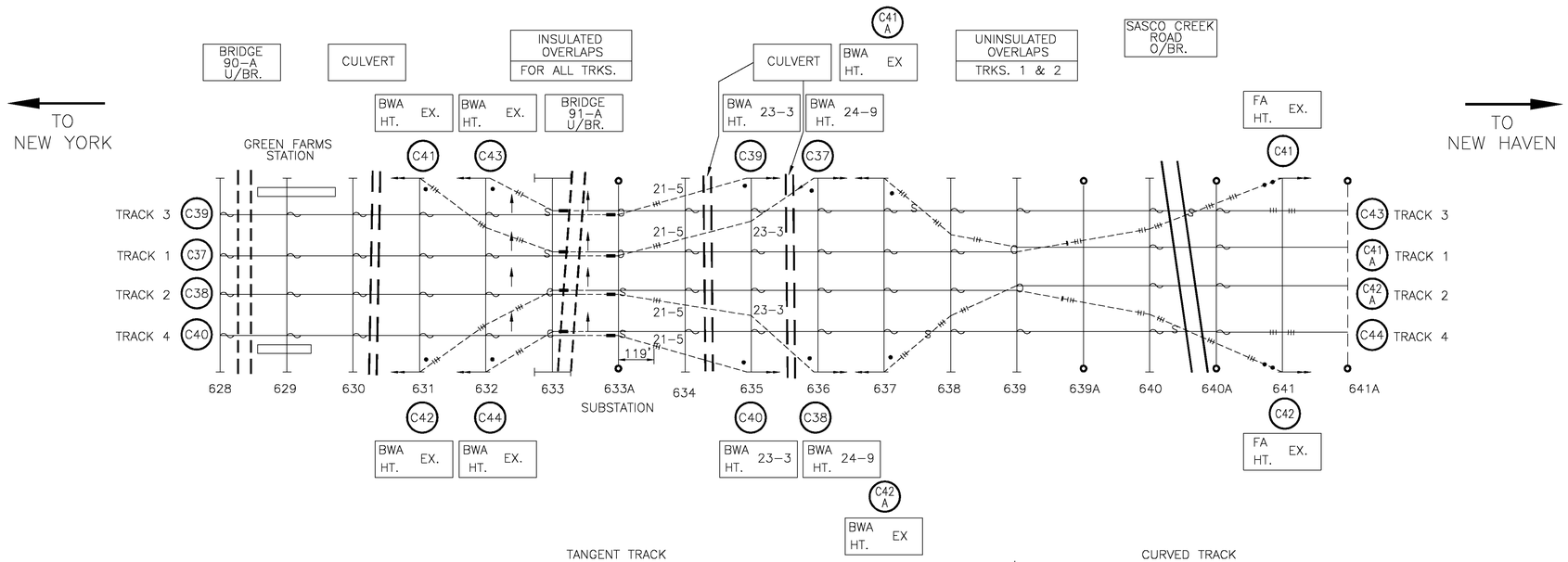

STAGGER																		
STRUCTURE NUMBER		628	629	630	631	632	633	633A	634	635	636	637	638	639	639A	640	640A	641	641A
STATIONING*		1813+18	1816+33	1819+48	1822+63	1825+78	1828+68	1830+48	1831+90	1835+02	1838+14	1841+26	1844+29	1847+41	1849+02	1850+64	1852+82	1853+94	1855+50
SPAN (FEET)			315	315	315	315	290	180	142	312	312	312	303	312	161	162	218	112	156
VERSINE (INCHES)															6 1/2	6 1/2	12 1/2	3	6
CONTACT WIRE HT. H.R.L.	TRACK 3	18-0	18-0	18-0	18-0	18-0	18-9 18-0	18-0 18-9	EX.	EX.	EX.	EX.	EX.	EX.	EX.	EX.	EX.	EX.
MESSENGER WIRE HT. H.R.L.	TRACK 3	21-9	21-9	21-9	21-9	21-9	21-6 21-0	21-0 21-6	EX.	EX.	EX.	EX.	EX.	EX.	EX.	EX.	EX.	EX.
UNDERSIDE OF TRUSS TO H.R.L.	TRACK 3	27-5	27-6	26-0	26-1	26-4	23-1	27-0	26-10	26-11	27-1	27-2	27-4	27-1	26-0	22-9	26-0	23-10
CONTACT WIRE HT. H.R.L.	TRACK 1	18-0	18-0	18-0	18-0	18-0	18-9 18-0	18-0 18-9	EX.	EX.	EX.	EX.	EX.	EX.	EX.	EX.	EX.	EX.
MESSENGER WIRE HT. H.R.L.	TRACK 1	21-9	21-9	21-9	21-9	21-9	21-6 21-0	21-0 21-6	EX.	EX.	EX.	EX.	EX.	EX.	EX.	EX.	EX.	EX.
UNDERSIDE OF TRUSS TO H.R.L.	TRACK 1	27-5	27-6	26-0	26-1	26-4	23-1	27-0	26-10	26-11	27-1	27-2	27-4	27-1	26-0	22-9	26-0	23-10
CONTACT WIRE HT. H.R.L.	TRACK 2	18-0	18-0	18-0	18-0	18-0	18-9 18-0	18-0 18-9	EX.	EX.	EX.	EX.	EX.	EX.	EX.	EX.	EX.	EX.
MESSENGER WIRE HT. H.R.L.	TRACK 2	21-9	21-9	21-9	21-9	21-9	21-6 21-0	21-0 21-6	EX.	EX.	EX.	EX.	EX.	EX.	EX.	EX.	EX.	EX.
UNDERSIDE OF TRUSS TO H.R.L.	TRACK 2	27-5	27-6	26-0	26-1	26-4	23-1	27-0	26-10	26-11	27-1	27-2	27-4	27-1	26-0	22-9	26-0	23-10
CONTACT WIRE HT. H.R.L.	TRACK 4	18-0	18-0	18-0	18-0	18-0	18-9 18-0	18-0 18-9	EX.	EX.	EX.	EX.	EX.	EX.	EX.	EX.	EX.	EX.
MESSENGER WIRE HT. H.R.L.	TRACK 4	21-9	21-9	21-9	21-9	21-9	21-6 21-0	21-0 21-6	EX.	EX.	EX.	EX.	EX.	EX.	EX.	EX.	EX.	EX.
UNDERSIDE OF TRUSS TO H.R.L.	TRACK 4	27-5	27-6	26-0	26-1	26-4	23-1	27-0	26-10	26-11	27-1	27-2	27-4	27-1	26-0	22-9	26-0	23-10

LEGEND:

K KNUCKLE
NSR NOT SUPPORTED OR REGISTERED
NS NOT SUPPORTED
NR NOT REGISTERED
FIXED TERMINATION WITH GUY
BALANCE WEIGHT WITH GUY

NOTES:

1. ALL HEIGHTS ARE ROUNDED TO THE NEAREST 1/2".

THE INFORMATION, INCLUDING ESTIMATED QUANTITIES OF WORK SHOWN ON THESE SHEETS IS BASED ON LIMITED INVESTIGATIONS BY THE STATE AND IS IN NO WAY WARRANTED TO INDICATE THE TRUE CONDITIONS OR ACTUAL QUANTITIES OR DISTRIBUTION OF QUANTITIES OF WORK WHICH WILL BE REQUIRED.

SCALE: NONE

URS CORPORATION AES
500 ENTERPRISE DRIVE
ROCKY HILL, CT 06067
1-(860)-529-8882

NO.	DATE	DESCRIPTION

REVISIONS

STATE OF CONNECTICUT
DEPARTMENT OF TRANSPORTATION

SECTION C-1a & C-2 NEW HAVEN LINE

CATENARY REPLACEMENT BETWEEN WALK BRIDGE AND STRUCTURE 636, PECK BRIDGE AND STRUCTURE 863

CATENARY LAYOUT

STRUCTURE 628 TO STRUCTURE 641A

ENGINEER: URS CORPORATION AES
DESIGNER: RW | DRAFTER: AMK | CHECKER: AJM
APPROVED: T. HOLLAND | DATE: 09/13/13
STRUCTURE NO. | BRIDGE LOG NO. | STRUCTURE SHEET NO. L-22

100% DESIGN
DISK FILENAME: L-22.dwg
PROJECT CONTROL DATE: 09/13/13

F H W A REGION	STATE	TOWN	FED. AID PROJ. NO.	PROJ. NO.	YEAR	SHEET NUMBER
1	CONN.	VARIOUS	CT-05-0109	301-0145	2013	01.03.107

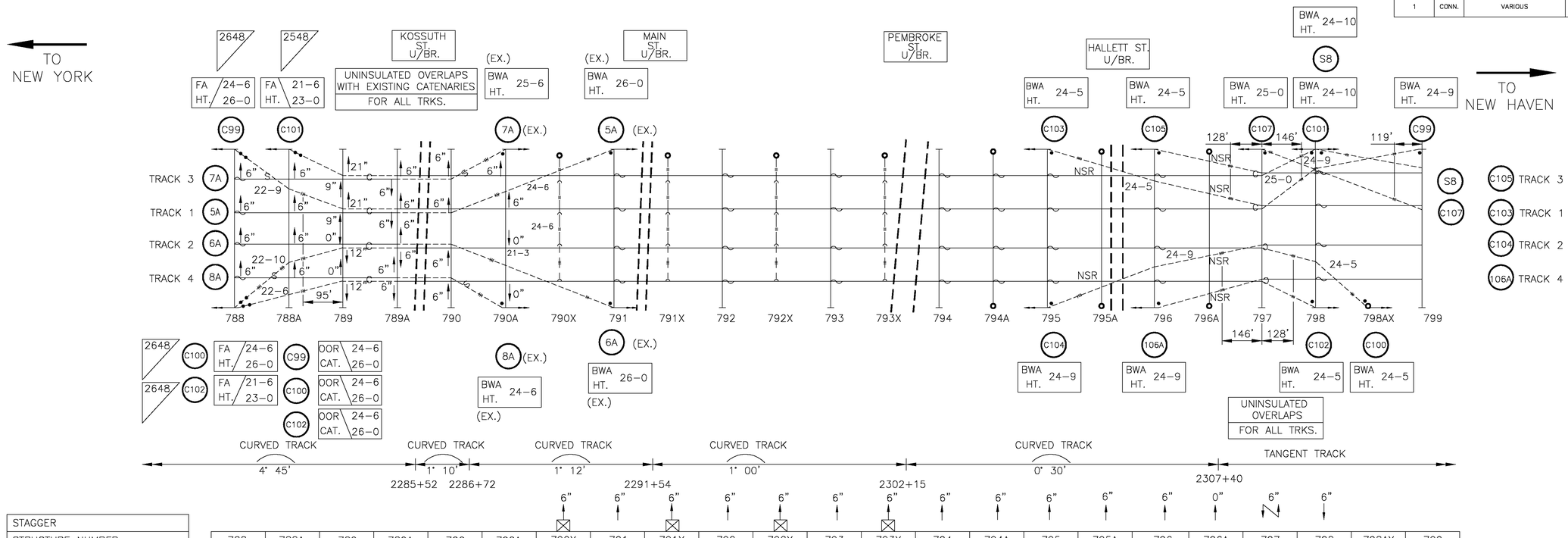

STAGGER																									
STRUCTURE NUMBER		788	788A	789	789A	790	790A	790X	791	791X	792	792X	793	793X	794	794A	795	795A	796	796A	797	798	798AX	799
STATIONING*		2282+47	2283+47	2284+47	2285+37	2286+57	2288+17	2289+42	2290+62	2292+15	2293+68	2295+21	2296+74	2298+27	2299+80	2301+33	2302+85	2304+26	2305+90	2307+40	2308+95	2312+00	2314+65	2315+05
SPAN (FEET)		100	100	90	120	160	125	120	153	153	153	153	153	153	153	153	152	141	164	150	155	305	265	40
VERSINE (INCHES)		11 1/2	9 1/2	6 1/2	7 1/2	4 1/2	5	4 1/2	6 1/2	6 1/2	6 1/2	6	5 1/2	7 1/2	5	4	2 1/2	4 1/2	2 1/2					
CONTACT WIRE HT. H.R.L.	TRACK 3	19–9	19–11 1/2	21–9 1/2 20–4 1/2	20–6 1/2	20–8	20–0	–	19–6	–	19–0	–	18–6	–	18–0	18–0	18–0	18–0	18–0	18–0	18–0	18–0		
MESSENGER WIRE HT. H.R.L.	TRACK 3	22–6	22–7	24–3 1/2 22–9 1/2	24–6 1/2 22–10	24–3 1/2	23–6	–	23–6	–	23–0	–	22–6	–	22–0	22–0	22–0	21–6	21–6	21–6	21–0 21–6	21–6		
UNDERSIDE OF TRUSS TO H.R.L.	TRACK 3	28–10	27–11	29–11	29–11	30–2	28–11	–	27–1	–	26–8	–	26–9	–	26–11	27–6	26–4	27–6	27–6	27–6	27–6	27–6		
CONTACT WIRE HT. H.R.L.	TRACK 1	19–4 1/2	19–5	20–8 1/2 19–8 1/2	19–11 1/2	20–2	20–0	–	19–6	–	19–0	–	18–6	–	18–0	18–0	18–0	18–0	18–0	18–0	18–0	18–0		
MESSENGER WIRE HT. H.R.L.	TRACK 1	22–6 1/2	22–6	24–2 22–8	23–9 1/2 22–3 1/2	24–11	23–6	–	23–6	–	23–0	–	22–6	–	22–0	22–0	22–0	21–6	21–6	21–6	21–0 21–6	21–6		
UNDERSIDE OF TRUSS TO H.R.L.	TRACK 1	28–10	27–11	29–11	29–11	30–2	28–11	–	27–1	–	26–8	–	26–9	–	26–11	27–6	26–4	27–6	27–6	27–6	27–6	27–6		
CONTACT WIRE HT. H.R.L.	TRACK 2	19–9	19–10	19–11 1/2 20–11 1/2	19–10	19–9	19–6	–	19–6	–	19–0	–	18–6	–	18–0	18–0	18–0	18–0	18–0	18–0	18–0	18–0		
MESSENGER WIRE HT. H.R.L.	TRACK 2	22–10 1/2	22–10	22–10 1/2 24–4 1/2	22–2 23–8	22–11 1/2	23–0	–	23–6	–	23–0	–	22–6	–	22–0	22–0	22–0	21–6	21–6	21–6	21–6 21–0	21–6		
UNDERSIDE OF TRUSS TO H.R.L.	TRACK 2	28–10	27–11	29–11	29–11	30–2	28–11	–	27–1	–	26–8	–	26–9	–	26–11	27–6	26–4	27–6	27–6	27–6	27–6	27–6		
CONTACT WIRE HT. H.R.L.	TRACK 4	19–2 1/2	19–2 1/2	19–4 1/2 19–9 1/2	19–6 1/2	19–7	19–6	–	19–6	–	19–0	–	18–6	–	18–0	18–0	18–0	18–0	18–0	18–0	18–0	18–0		
MESSENGER WIRE HT. H.R.L.	TRACK 4	22–8	22–7	22–8 24–2	21–10 1/2 23–4 1/2	22–9 1/2	23–0	–	23–6	–	23–0	–	22–6	–	22–0	22–0	22–0	21–6	21–6	21–6	21–6 21–0	21–6		
UNDERSIDE OF TRUSS TO H.R.L.	TRACK 4	28–10	27–11	29–11	29–11	30–2	28–11	–	27–1	–	26–8	–	26–9	–	26–11	27–6	26–4	27–6	27–6	27–6	27–6	27–6		

LEGEND:

K KNUCKLE
NSR NOT SUPPORTED OR REGISTERED
NS NOT SUPPORTED
NR NOT REGISTERED

FIXED TERMINATION WITH GUY

BALANCE WEIGHT WITH GUY

NOTES:

1. CATENARY SUPPORTS & REGISTRATIONS TO REMAIN FOR EXISTING CATENARIES 5A, 6A, 7A & 8A. NO CHANGES REQUIRED UP TO STRUCTURE 790A. THE WIRE HEIGHTS FOR THESE LOCATIONS HAVE BEEN ROUNDED TO THE NEAREST 1/2 INCH.

THE INFORMATION, INCLUDING ESTIMATED QUANTITIES OF WORK SHOWN ON THESE SHEETS IS BASED ON LIMITED INVESTIGATIONS BY THE STATE AND IS IN NO WAY WARRANTED TO INDICATE THE TRUE CONDITIONS OR ACTUAL QUANTITIES OR DISTRIBUTION OF QUANTITIES OF WORK WHICH WILL BE REQUIRED.

SCALE: NONE

URS CORPORATION AES
500 ENTERPRISE DRIVE
ROCKY HILL, CT 06067
1-(860)-529-8882

NO.	DATE	DESCRIPTION

REVISIONS

STATE OF CONNECTICUT
DEPARTMENT OF TRANSPORTATION

SECTION C–1a & C–2 NEW HAVEN LINE

CATENARY REPLACEMENT BETWEEN WALK BRIDGE AND STRUCTURE 636, PECK BRIDGE AND STRUCTURE 863

CATENARY LAYOUT

STRUCTURE 788 TO STRUCTURE 799

ENGINEER: URS CORPORATION AES
DESIGNER: RW | DRAFTER: AMK | CHECKER: AJM
APPROVED: T. HOLLAND | DATE: 09/13/13
STRUCTURE NO. | BRIDGE LOG NO. | STRUCTURE SHEET NO. L–40

100% DESIGN
DISK FILENAME: L–40.dwg
PROJECT CONTROL DATE: 09/13/13

F H W A REGION	STATE	TOWN	FED. AID PROJ. NO.	PROJ. NO.	YEAR	SHEET NUMBER
1	CONN.	VARIOUS	CT-05-0109	301-0145	2013	01.03.108

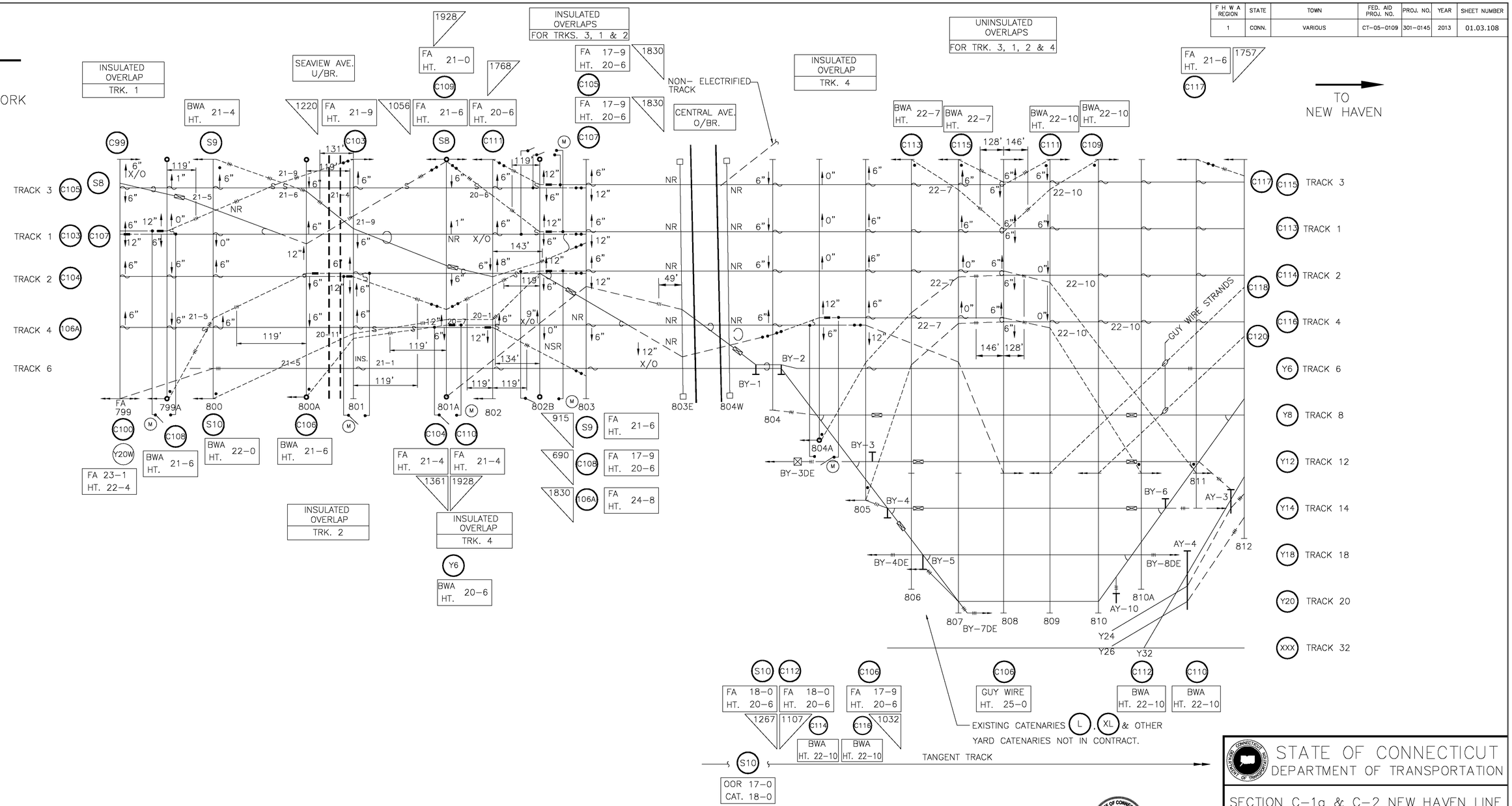

LEGEND:

K	KNUCKLE
NSR	NOT SUPPORTED OR REGISTERED
NS	NOT SUPPORTED
NR	NOT REGISTERED
FIXED TERMINATION WITH GUY	
BALANCE WEIGHT WITH GUY	

NOTES:

1. ALL HEIGHTS ARE ROUNDED TO THE NEAREST 1/2".
2. FOR CATENARY PROFILES UNDER CENTRAL AVENUE, SEE SHEET B-16.

THE INFORMATION, INCLUDING ESTIMATED QUANTITIES OF WORK SHOWN ON THESE SHEETS IS BASED ON LIMITED INVESTIGATIONS BY THE STATE AND IS IN NO WAY WARRANTED TO INDICATE THE TRUE CONDITIONS OR ACTUAL QUANTITIES OR DISTRIBUTION OF QUANTITIES OF WORK WHICH WILL BE REQUIRED.

SCALE: NONE

URS CORPORATION AES
500 ENTERPRISE DRIVE
ROCKY HILL, CT 06067
1-(860)-529-8882

NO.	DATE	DESCRIPTION

REVISIONS

URS CORPORATION AES
500 ENTERPRISE DRIVE
ROCKY HILL, CT 06067

STATE OF CONNECTICUT
DEPARTMENT OF TRANSPORTATION

SECTION C-1a & C-2 NEW HAVEN LINE

CATENARY REPLACEMENT BETWEEN WALK BRIDGE AND STRUCTURE 636, PECK BRIDGE AND STRUCTURE 863

CATENARY LAYOUT

STRUCTURE 799 TO STRUCTURE 812

ENGINEER: URS CORPORATION AES
DESIGNER: RW | DRAFTER: AMK | CHECKER: AJM
APPROVED: T. HOLLAND | DATE: 09/13/13
STRUCTURE NO. | BRIDGE LOG NO. | STRUCTURE SHEET NO. L-41-1

PROJECT CONTROL DATE: 09/13/13 DISK FILENAME: L-41-1.dwg 100% DESIGN

F.H.W.A. REGION	STATE	TOWN	FED. AID PROJ. NO.	PROJ. NO.	YEAR	SHEET NUMBER
1	CONN.	VARIOUS	CT-05-0109	301-0145	2013	01.03.109

STAGGER																																			
		SEE LAYOUT ABOVE																				6"		SEE LAYOUT ABOVE				6"		6"		6"		6"
STR. NO.		799	799A	800	800A	801	801A	802	802B	803	803E	804W	BY-1	804	BY-2	804A	BY-3DE	805	BY-3	BY-4DE	BY-4	806	BY-5	807	BY-7DE	808	809	810	AY-10	810A	BY-8DE	BY-6	811	812
STATIONING*		2315+05	2316+65	2318+10	2319+55	2321+15	2322+56	2324+16	2325+55	2327+25			2330+39	2330+77	2331+29	2332+20	2332+42	2333+68	2334+31	2335+78	2335+90	2336+40	2337+80	2339+12	2339+83	2341+84	2344+56	2347+28	2347+84	2349+84	2350+65	2351+20	2352+72	2354+97
SPAN (')			160	145	145	160	141	160	139	170	104	70	SEE ABOVE	38	52	91	22	126	63	147	12	50	140	132	71	201	272	272	56	200	81	55	152	225
VERSINE (")																																			
C/W HT.	TRACK 3	18-0	18-0	18-0	18-0	18-0	17-9	17-6	18-0 17-3	17-0	16-9	16-9	–	17-0	–	17-0	–	17-0	–	–	–	17-0	–	17-0	–	17-0	17-6	18-0	–	18-0	–	–	18-0
M/W HT.		21-0	21-0	21-6	21-6	21-6	20-9	20-6	20-9 20-3	19-6	17-9	17-9	–	19-6	–	20-6	–	20-6	–	–	–	20-6	–	20-6	–	20-0 20-6	21-0	21-6	–	21-6	–	–	21-6
U/S OF TRUSS		27-6	26-0	24-5	26-0	26-3	26-0	25-10	26-0	20-4	20-6	20-10	–	22-5	–	26-0	–	24-3	–	–	–	23-9	–	23-6	–	23-7	23-6	23-11	–	23-10	–	–	24-4
C/W HT.	TRACK 1	18-0 18-9	18-9 18-0	18-0	18-0	18-0	17-9	17-6	18-0 17-3	17-0	16-9	16-9	–	17-0	–	17-0	–	17-0	–	–	–	17-0	–	17-0	–	17-0	17-6	18-0	–	18-0	–	–	18-0
M/W HT.		21-0 21-6	21-6 21-0	21-0	21-0	21-0	20-9	21-0	20-9 20-3	19-6	17-9	17-9	–	19-0	–	20-6	–	20-6	–	–	–	20-6	–	20-6	–	20-0 20-6	21-0	21-6	–	21-6	–	–	21-6
U/S OF TRUSS		27-6	26-0	24-5	26-0	26-3	26-0	25-10	26-0	20-4	20-6	20-10	–	22-5	–	26-0	–	24-3	–	–	–	23-9	–	23-6	–	23-7	23-6	23-11	–	23-10	–	–	24-4
C/W HT.	TRACK 2	18-0	18-0	18-0	18-9 18-0	18-0 18-9	17-9	17-6	18-0 17-3	17-0	16-9	16-9	–	17-0	–	17-0	–	17-0	–	–	–	17-0	–	17-0	–	17-0	17-6	18-0	–	18-0	–	–	18-0
M/W HT.		21-6	21-6	21-6	21-6 21-0	21-0 21-6	20-9	20-6	20-9 20-3	19-6	17-9	17-9	–	19-0	–	20-6	–	20-6	–	–	–	20-6	–	20-6	–	20-6 20-0	21-0	21-6	–	21-6	–	–	21-6
U/S OF TRUSS		27-6	26-0	24-5	26-0	26-0	26-0	25-10	26-0	20-4	20-6	20-10	–	22-5	–	26-0	–	24-3	–	–	–	23-9	–	23-6	–	23-7	23-6	23-11	–	23-10	–	–	24-4
C/W HT.	TRACK 4	18-0	18-0	18-0	18-0	18-0	18-6 17-9	17-6 18-3	17-3	17-0	16-9	16-9	–	17-0	–	17-9 17-0	–	17-0	–	–	–	17-0	–	17-0	–	17-0	17-6	18-0	–	18-0	–	–	18-0
M/W HT.		21-6	21-6	21-6	21-6	21-6	21-3 20-9	20-6 21-0	20-9	19-6	17-9	17-9	–	19-6	–	20-6 20-0	–	20-6	–	–	–	20-6	–	20-6	–	20-6 20-0	21-0	21-6	–	21-6	–	–	21-6
U/S OF TRUSS		27-6	26-0	24-5	26-0	26-3	26-0	25-10	26-0	20-4	20-6	20-10	–	22-5	–	26-0	–	24-3	–	–	–	23-9	–	23-6	–	23-7	23-6	23-11	–	23-10	–	–	24-4
C/W HT.	TRACK 6		–	18-0	–	18-0	–	17-6	17-3	17-0	16-9	16-9	16-10	–	17-0	18-0	–	19-2	–	–	–	18-8	–	18-2	–	18-0	17-11	18-0	–	18-0	–	–	18-6
M/W HT.			–	21-6	–	21-6	–	21-0	20-3	19-6	18-9	17-9	19-4	–	20-6	21-6	–	22-2	–	–	–	21-8	–	21-1	–	21-0	20-11	21-0	–	21-0	–	–	22-0
U/S OF TRUSS				24-5		26-3		25-10	26-0	20-4	20-6	20-10	–	–	–	26-0	–	–	–	–	–	–	–	–	–	–	–	–	–	–	–	–	–
C/W HT.	TRACK 8															17-5	–	19-2	–	–	–	18-9	–	18-3	–	17-11	17-8	17-7	–	17-9	–	–	18-5
M/W HT.																19-11	–	22-2	–	–	–	21-9	–	21-3	–	20-11	20-8	20-7	–	20-9	–	–	21-11
U/S OF TRUSS																26-0	–	24-3	–	–	–	–	–	–	–	–	–	–	–	–	–	–	–
C/W HT.	TRACK 12																	18-6	18-1	–	–	18-8	–	18-4	–	18-1	17-10	17-8	–	17-9	–	–	19-1
M/W HT.																		20-6	21-7	–	–	21-8	–	21-4	–	21-1	20-10	20-8	–	20-9	–	–	21-7
U/S OF TRUSS																		24-3	–	–	–	–	–	–	–	–	–	–	–	–	–	–	–
C/W HT.	TRACK 14																		–	–	18-8	18-9	–	17-11	–	17-8	17-6	17-6	–	17-3	–	18-1	19-6
M/W HT.																			–	–	21-2	21-3	–	20-11	–	20-8	20-6	20-6	–	20-3	–	20-7	22-0
U/S OF TRUSS																			–	–	–	–	–	–	–	–	–	–	–	–	–	–	–
C/W HT.	TRACK 18																		–	–	–	18-10	18-6	18-0	–	17-10	17-6	17-4	–	17-2	–	–	–
M/W HT.																			–	–	–	21-6	20-11	21-0	–	20-10	20-6	20-4	–	19-8	–	–	–
U/S OF TRUSS																			–	–	–	–	–	–	–	–	–	–	–	–	–	–	–
C/W HT.	TRACK 20	22-4									17-3	16-10	16-10	–	17-0	17-4	–	17-10	18-0	–	18-7	18-9	18-5	18-0 18-1	–	17-8	17-3	17-2	–	17-1	–	18-0	19-0
M/W HT.		23-1									18-9	18-7	20-4	–	19-6	20-4	–	21-4	20-6	–	20-1	21-3	21-11	21-0 20-7	–	20-8	20-3	20-2	–	20-1	–	21-0	22-0
U/S OF TRUSS		27-6									20-6	20-10	–	–	–	26-0	–	24-3	–	–	–	–	–	–	–	–	–	–	–	–	–	–	–

U/S OF TRUSS	S-8	18-1	18-1	18-1	18-9
U/S OF TRUSS	S-8	21-6	21-6	21-6	21-6

CONTACT WIRE HT. H.R.L.	S-10	17-4	–	–
MESSENGER WIRE HT. H.R.L.	S-10	20-6	19-9	18-0

CONTACT WIRE HT. H.R.L.	S-9	18-5	17-10	17-7	19-7
MESSENGER WIRE HT. H.R.L.	S-9	21-6	21-3	21-0	21-0

NOTES:

1. ALL HEIGHTS ARE ROUNDED TO THE NEAREST 1/2".

THE INFORMATION, INCLUDING ESTIMATED QUANTITIES OF WORK SHOWN ON THESE SHEETS IS BASED ON LIMITED INVESTIGATIONS BY THE STATE AND IS IN NO WAY WARRANTED TO INDICATE THE TRUE CONDITIONS OR ACTUAL QUANTITIES OR DISTRIBUTION OF QUANTITIES OF WORK WHICH WILL BE REQUIRED.

SCALE: NONE

STATE OF CONNECTICUT LICENSED PROFESSIONAL ENGINEER

URS CORPORATION AES
500 ENTERPRISE DRIVE
ROCKY HILL, CT 06067

URS CORPORATION AES
500 ENTERPRISE DRIVE
ROCKY HILL, CT 06067
1-(860)-529-8882

NO.	DATE	DESCRIPTION

REVISIONS

STATE OF CONNECTICUT
DEPARTMENT OF TRANSPORTATION

SECTION C-1a & C-2 NEW HAVEN LINE

CATENARY REPLACEMENT BETWEEN WALK BRIDGE AND STRUCTURE 636, PECK BRIDGE AND STRUCTURE 863

CATENARY LAYOUT

STRUCTURE 799 TO STRUCTURE 812

ENGINEER: URS CORPORATION AES

DESIGNER: RW | DRAFTER: AMK | CHECKER: AJM

APPROVED: T. HOLLAND | DATE: 09/13/13

STRUCTURE NO. | BRIDGE LOG NO. | STRUCTURE SHEET NO. L-41-2

100% DESIGN

DISK FILENAME: L-41-2.dwg

PROJECT CONTROL DATE: 09/13/13

F H W A REGION	STATE	TOWN	FED. AID PROJ. NO.	PROJ. NO.	YEAR	SHEET NUMBER
1	CONN.	VARIOUS	CT-05-0109	301-0145	2013	01.03.110

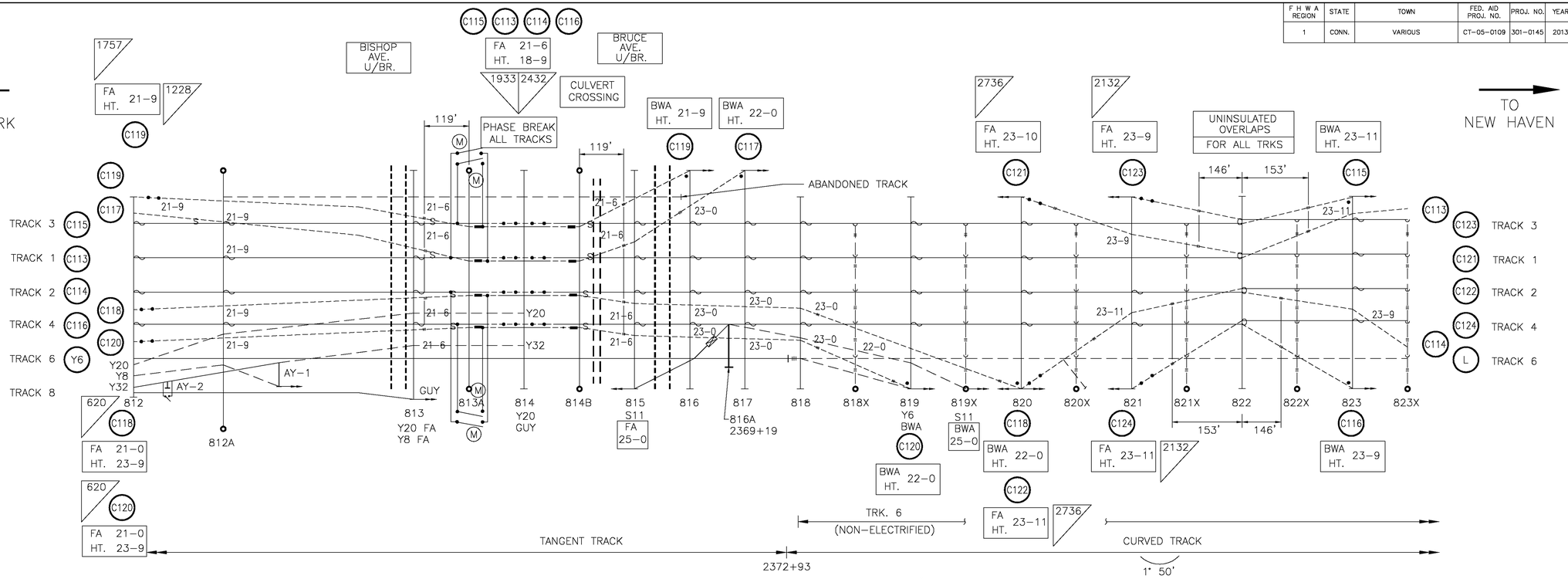

STAGGER		6"	6"		6"	9"	9"	9"	6"	6"		6"	0"	8"	8"	8"	8"	8"	8"	8"	6"	8"	8"	8"
STR. NO.		812	812A	AY-1	813	813A	814	814B	815	816	816A	817	818	818X	819	819X	820	820X	821	821X	822	822X	823	823X
STATIONING*		2354+97	2355+87	2356+87	2358+07	2359+57	2361+17	2362+73	2364+21	2367+25	2369+14	2370+29	2373-33	2374+85	2376+37	2377+89	2379+41	2380+93	2382+45	2383+97	2385+49	2387+01	2388+53	2390+05
SPAN (')			90	100	120	150	160	156	148	304	189	115	304	152	152	152	152	152	152	152	152	152	152	152
VERSINE (")													4	9	11 1/2	11 1/2	11	11 1/2	11 1/2	11 1/2	10 1/2	11	11	11 1/2
C/W HT.	TRACK 3	18-0	18-0	–	18-0	18-0 18-9	18-9 18-0	18-0 18-9	18-0	18-0	–	18-0	18-0	–	18-0	–	18-0	–	17-6	–	17-0	–	17-6	–
M/W HT.	TRACK 3	21-6	21-6	–	21-6	21-0 21-6	21-6 21-0	21-0 21-6	21-6	21-6	–	21-6	22-0	–	22-0	–	22-0	–	21-6	–	20-6 20-9	–	21-6	–
U/S OF TRUSS	TRACK 3	24-6	25-0	–	24-10	26-0	23-9	28-0	24-4	24-2	–	24-9	24-6	–	25-2	–	24-9	–	24-8	–	24-8	–	24-7	–
C/W HT.	TRACK 1	18-0	18-0		18-0	18-0 18-9	18-9 18-0	18-0 18-9	18-0	18-0		18-0	18-0	–	18-0	–	18-0	–	17-6	–	17-0	–	17-6	–
M/W HT.	TRACK 1	21-6	21-6		21-6	21-0 21-6	21-6 21-0	21-0 21-6	21-6	21-6		21-6	22-0	–	22-0	–	22-0	–	21-6	–	20-6 20-9	–	21-6	–
U/S OF TRUSS	TRACK 1	24-6	25-0		24-10	26-0	23-9	28-0	24-4	24-2		24-9	24-6	–	25-2	–	24-9	–	24-8	–	24-8	–	24-7	–
C/W HT.	TRACK 2	18-0	18-0		18-0	18-0 18-9	18-9 18-0	18-0 18-9	18-0	18-0		18-0	18-0	–	18-0	–	18-0	–	17-6	–	17-0	–	17-6	–
M/W HT.	TRACK 2	21-6	21-6		21-6	21-0 21-6	21-6 21-0	21-0 21-6	21-6	21-6		21-6	22-0	–	22-0	–	22-0	–	21-6	–	20-9 20-6	–	21-6	–
U/S OF TRUSS	TRACK 2	24-6	25-0		24-10	26-0	23-9	28-0	24-4	24-2		24-9	24-6	–	25-2	–	24-9	–	24-8	–	24-8	–	24-7	–
C/W HT.	TRACK 4	18-0	18-0		18-0	18-0 18-9	18-9 18-0	18-0 18-9	18-0	18-0		18-0	18-0	–	18-0	–	18-0	–	17-6	–	17-0	–	17-6	–
M/W HT.	TRACK 4	21-6	21-6		21-6	21-0 21-6	21-6 21-0	21-0 21-6	21-6	21-6		21-6	22-0	–	22-0	–	22-0	–	21-6	–	20-9 20-6	–	21-6	–
U/S OF TRUSS	TRACK 4	24-6	25-0		24-10	26-0	23-9	28-0	24-4	24-2		24-9	24-6	–	25-2	–	24-9	–	24-8	–	24-8	–	24-7	–
C/W HT.	TRACK 6	20-1	21-0	21-6	21-3	20-6	19-6	18-6	18-3	18-0		18-0												
M/W HT.	TRACK 6	23-1	24-0	22-6		24-0	23-0	22-0	21-9	21-6		21-6												
U/S OF TRUSS	TRACK 6	24-6	25-0	–		–																		
C/W HT.	TRACK 8	20-7	22-1																					
M/W HT.	TRACK 8	23-1	23-7																					
U/S OF TRUSS	TRACK 8	24-6	25-0																					
C/W HT.	TRACK 20	20-6	21-1		23-0																			
M/W HT.	TRACK 20	23-6	24-1		26-0																			
U/S OF TRUSS	TRACK 20	24-6	25-0																					

C/W HT.	S11	18-6	18-1	19-1
M/W HT.	S11	21-9	21-9	21-9
U/S OF TRUSS	S11	–	–	–

NOTES:

1. ALL HEIGHTS ARE ROUNDED TO THE NEAREST 1/2".

LEGEND:

K KNUCKLE
NSR NOT SUPPORTED OR REGISTERED
NS NOT SUPPORTED
NR NOT REGISTERED
FIXED TERMINATION WITH GUY
BALANCE WEIGHT WITH GUY

THE INFORMATION, INCLUDING ESTIMATED QUANTITIES OF WORK SHOWN ON THESE SHEETS IS BASED ON LIMITED INVESTIGATIONS BY THE STATE AND IS IN NO WAY WARRANTED TO INDICATE THE TRUE CONDITIONS OR ACTUAL QUANTITIES OR DISTRIBUTION OF QUANTITIES OF WORK WHICH WILL BE REQUIRED.

SCALE: NONE

URS CORPORATION AES
500 ENTERPRISE DRIVE
ROCKY HILL, CT 06067
1-(860)-529-8882

STATE OF CONNECTICUT
DEPARTMENT OF TRANSPORTATION

SECTION C-1a & C-2 NEW HAVEN LINE

CATENARY REPLACEMENT BETWEEN WALK BRIDGE AND STRUCTURE 636, PECK BRIDGE AND STRUCTURE 863

CATENARY LAYOUT

STRUCTURE 812 TO STRUCTURE 823X

ENGINEER: URS CORPORATION AES
DESIGNER: RW | DRAFTER: AMK | CHECKER: AJM
APPROVED: T. HOLLAND | DATE: 09/13/13
STRUCTURE NO. | BRIDGE LOG NO. | STRUCTURE SHEET NO. L-42

NO.	DATE	DESCRIPTION

REVISIONS

100% DESIGN
DISK FILENAME: L-42.dwg
PROJECT CONTROL DATE: 09/13/13

F H W A REGION	STATE	TOWN	FED. AID PROJ. NO.	PROJ. NO.	YEAR	SHEET NUMBER
1	CONN.	VARIOUS	CT-05-0109	301-0145	2013	01.03.111

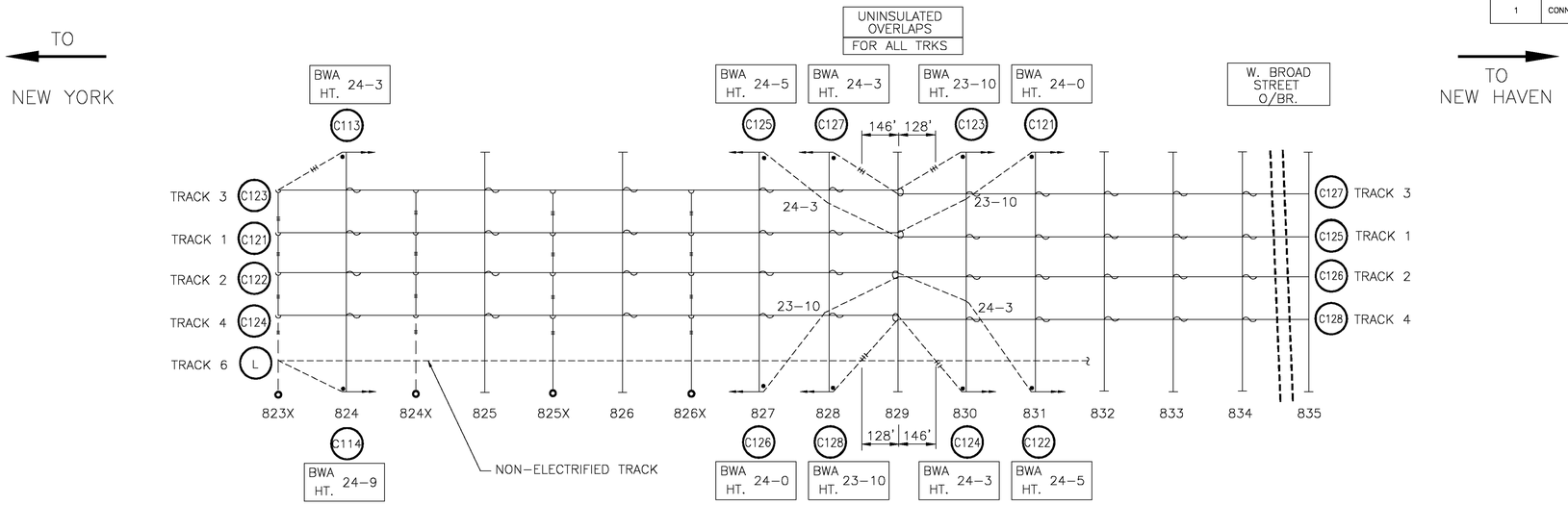

STAGGER																	
STRUCTURE NUMBER		823X	824	824X	825	825X	826	826X	827	828	829	830	831	832	833	834	835
STATIONING*		2390+05	2391+57	2393+09	2397+95	2396+13	2397+65	2399+17	2400+69	2403+73	2406+77	2409+81	2412+85	2415+89	2418+93	2421+97	2425+02
SPAN (FEET)			152	152	152	152	152	152	152	304	304	304	304	304	304	304	305
VERSINE (INCHES)			11 1/2	11 1/2	11 1/2	12	12	9	4 1/2								
CONTACT WIRE HT. H.R.L.	TRACK 3	–	17-9	–	18-0	–	18-0	–	18-0	18-0	17-6	18-0	18-0	18-0	18-0	18-0	
MESSENGER WIRE HT. H.R.L.	TRACK 3	–	21-9	–	22-0	–	22-0	–	22-0	21-6	20-6 21-0	21-6	21-6	21-6	21-6	21-6	
UNDERSIDE OF TRUSS TO H.R.L.	TRACK 3	–	24-9	–	24-9	–	24-8	–	25-1	25-5	25-4	24-11	25-0	25-2	25-3	25-10	
CONTACT WIRE HT. H.R.L.	TRACK 1	–	17-9	–	18-0	–	18-0	–	18-0	18-0	17-6	18-0	18-0	18-0	18-0	18-0	
MESSENGER WIRE HT. H.R.L.	TRACK 1	–	21-9	–	22-0	–	22-0	–	22-0	21-6	20-6 21-0	21-6	21-6	21-6	21-6	21-6	
UNDERSIDE OF TRUSS TO H.R.L.	TRACK 1	–	24-9	–	24-9	–	24-8	–	25-1	25-5	25-4	24-11	25-0	25-2	25-3	25-10	
CONTACT WIRE HT. H.R.L.	TRACK 2	–	17-9	–	18-0	–	18-0	–	18-0	18-0	17-6	18-0	18-0	18-0	18-0	18-0	
MESSENGER WIRE HT. H.R.L.	TRACK 2	–	21-9	–	22-0	–	22-0	–	22-0	21-6	21-0 20-6	21-6	21-6	21-6	21-6	21-6	
UNDERSIDE OF TRUSS TO H.R.L.	TRACK 2	–	24-9	–	24-9	–	24-8	–	25-1	25-5	25-4	24-11	25-0	25-2	25-3	25-10	
CONTACT WIRE HT. H.R.L.	TRACK 4	–	17-9	–	18-0	–	18-0	–	18-0	18-0	17-6	18-0	18-0	18-0	18-0	18-0	
MESSENGER WIRE HT. H.R.L.	TRACK 4	–	21-9	–	22-0	–	22-0	–	22-0	21-6	21-0 20-6	21-6	21-6	21-6	21-6	21-6	
UNDERSIDE OF TRUSS TO H.R.L.	TRACK 4	–	24-9	–	24-9	–	24-8	–	25-1	25-5	25-4	24-11	25-0	25-2	25-3	25-10	

LEGEND:

K KNUCKLE
NSR NOT SUPPORTED OR REGISTERED
NS NOT SUPPORTED
NR NOT REGISTERED
FIXED TERMINATION WITH GUY
BALANCE WEIGHT WITH GUY

NOTES:

1. ALL HEIGHTS ARE ROUNDED TO THE NEAREST 1/2".

THE INFORMATION, INCLUDING ESTIMATED QUANTITIES OF WORK SHOWN ON THESE SHEETS IS BASED ON LIMITED INVESTIGATIONS BY THE STATE AND IS IN NO WAY WARRANTED TO INDICATE THE TRUE CONDITIONS OR ACTUAL QUANTITIES OR DISTRIBUTION OF QUANTITIES OF WORK WHICH WILL BE REQUIRED.

SCALE: NONE

URS CORPORATION AES
500 ENTERPRISE DRIVE
ROCKY HILL, CT 06067
1-(860)-529-8882

NO.	DATE	DESCRIPTION

REVISIONS

URS CORPORATION AES
500 ENTERPRISE DRIVE
ROCKY HILL, CT 06067

STATE OF CONNECTICUT
DEPARTMENT OF TRANSPORTATION

SECTION C-1a & C-2 NEW HAVEN LINE

CATENARY REPLACEMENT BETWEEN WALK BRIDGE AND STRUCTURE 636, PECK BRIDGE AND STRUCTURE 863

CATENARY LAYOUT

STRUCTURE 823X TO STRUCTURE 835

ENGINEER: URS CORPORATION AES
DESIGNER: RW | DRAFTER: AMK | CHECKER: AJM
APPROVED: T. HOLLAND | DATE: 09/13/13
STRUCTURE NO. | BRIDGE LOG NO. | STRUCTURE SHEET NO. L-43

PROJECT CONTROL DATE: 09/13/13 DISK FILENAME: L-43.dwg 100% DESIGN

F H W A REGION	STATE	TOWN	FED. AID PROJ. NO.	PROJ. NO.	YEAR	SHEET NUMBER
1	CONN.	VARIOUS	CT-05-0109	301-0145	2013	01.03.112

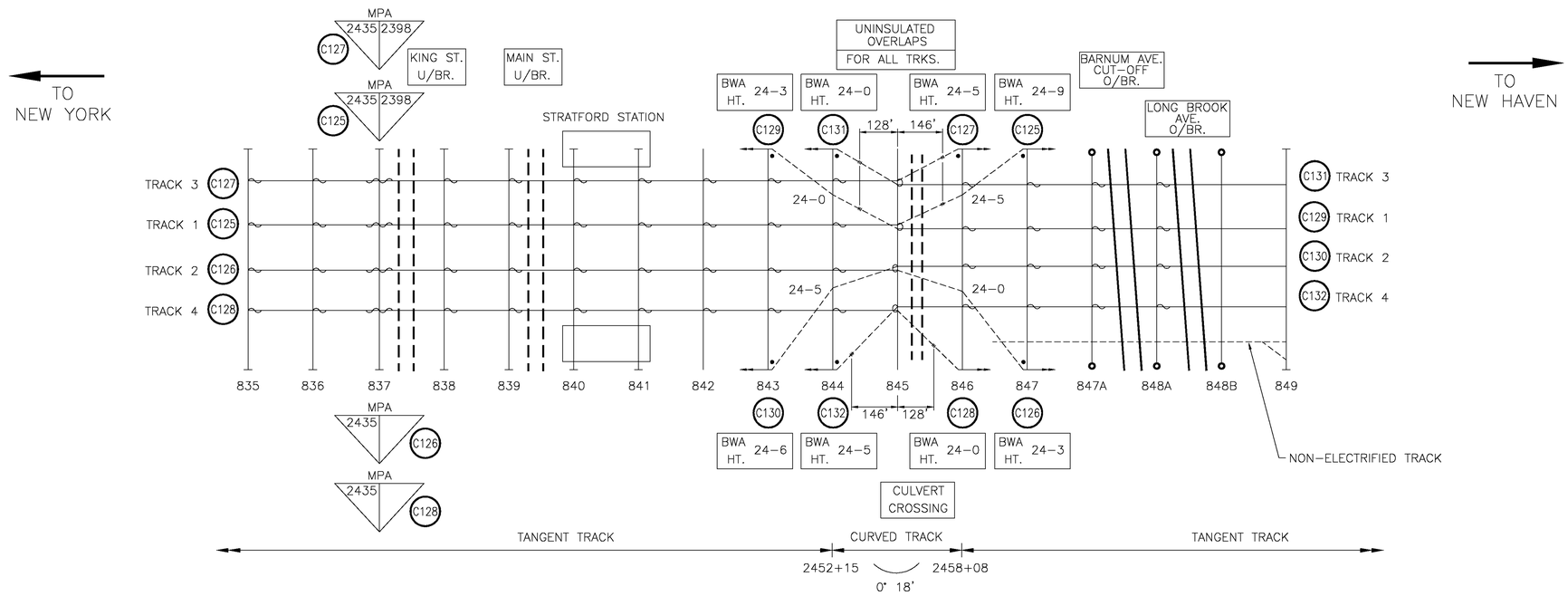

STAGGER		6"	6"	6"	6"	6"	6"	6"	6"	6"	3"	6" 6"	9"	6"	6"	6"	NR	
STRUCTURE NUMBER		835	836	837	838	839	840	841	842	843	844	845	846	847	847A	848A	848B	849
STATIONING*		2425+02	2428+07	2431+12	2434+17	2437+22	2440+27	2443+32	2446+26	2449+20	2452+15	2455+10	2458+08	2461+04	2462+34	2464+52	2466+29	2467+29
SPAN (FEET)			305	305	305	305	305	305	294	294	295	295	298	296	130	218	177	100
VERSINE (INCHES)												7	6 3/4					
CONTACT WIRE HT. H.R.L.	TRACK 3	18-0	18-0	18-0	18-0	18-0	18-0	18-0	18-0	18-0	18-0	17-11	17-5	16-11	16-9	16-4	–	
MESSENGER WIRE HT. H.R.L.	TRACK 3	21-6	21-6	21-6	21-6	21-6	21-6	21-6	21-6	21-6	21-6	20-11 21-5	20-11	20-5	20-3	18-7	17-3	
UNDERSIDE OF TRUSS TO H.R.L.	TRACK 3	26-0	25-10	25-11	25-6	25-9	26-0	26-8	25-3	24-4	25-0	24-8	25-9	25-8	24-6	24-6	22-0	
CONTACT WIRE HT. H.R.L.	TRACK 1	18-0	18-0	18-0	18-0	18-0	18-0	18-0	18-0	18-0	18-0	17-11	17-5	16-11	16-9	16-4	–	
MESSENGER WIRE HT. H.R.L.	TRACK 1	21-6	21-6	21-6	21-6	21-6	21-6	21-6	21-6	21-6	21-6	20-11 21-5	20-11	20-5	20-3	18-7	17-3	
UNDERSIDE OF TRUSS TO H.R.L.	TRACK 1	26-0	25-10	25-11	25-6	25-9	26-0	26-8	25-3	24-4	25-0	24-8	25-9	25-8	24-6	24-6	22-0	
CONTACT WIRE HT. H.R.L.	TRACK 2	18-0	18-0	18-0	18-0	18-0	18-0	18-0	18-0	18-0	18-0	17-11	17-5	16-11	16-9	16-4	–	
MESSENGER WIRE HT. H.R.L.	TRACK 2	21-6	21-6	21-6	21-6	21-6	21-6	21-6	21-6	21-6	21-6	20-11 21-5	20-11	20-5	20-3	18-7	17-3	
UNDERSIDE OF TRUSS TO H.R.L.	TRACK 2	26-0	25-10	25-11	25-6	25-9	26-0	26-8	25-3	24-4	25-0	24-8	25-9	25-8	24-6	24-6	22-0	
CONTACT WIRE HT. H.R.L.	TRACK 4	18-0	18-0	18-0	18-0	18-0	18-0	18-0	18-0	18-0	18-0	17-11	17-5	16-11	16-9	16-4	–	
MESSENGER WIRE HT. H.R.L.	TRACK 4	21-6	21-6	21-6	21-6	21-6	21-6	21-6	21-6	21-6	21-6	20-11 21-5	20-11	20-5	20-3	18-7	17-3	
UNDERSIDE OF TRUSS TO H.R.L.	TRACK 4	26-0	25-10	25-11	25-6	25-9	26-0	26-8	25-3	24-4	25-0	24-8	25-9	25-8	24-6	24-6	22-0	

LEGEND:

K KNUCKLE
NSR NOT SUPPORTED OR REGISTERED
NS NOT SUPPORTED
NR NOT REGISTERED

FIXED TERMINATION WITH GUY

BALANCE WEIGHT WITH GUY

NOTES:

1. ALL HEIGHTS ARE ROUNDED TO THE NEAREST 1/2".
2. FOR CATENARY PROFILES UNDER BARNUM AVE. AND LONG BROOK AVE. SEE DWG. B-17.

THE INFORMATION, INCLUDING ESTIMATED QUANTITIES OF WORK SHOWN ON THESE SHEETS IS BASED ON LIMITED INVESTIGATIONS BY THE STATE AND IS IN NO WAY WARRANTED TO INDICATE THE TRUE CONDITIONS OR ACTUAL QUANTITIES OR DISTRIBUTION OF QUANTITIES OF WORK WHICH WILL BE REQUIRED.

SCALE: NONE

URS CORPORATION AES
500 ENTERPRISE DRIVE
ROCKY HILL, CT 06067
1-(860)-529-8882

NO.	DATE	DESCRIPTION

REVISIONS

URS CORPORATION AES
500 ENTERPRISE DRIVE
ROCKY HILL, CT 06067

STATE OF CONNECTICUT
DEPARTMENT OF TRANSPORTATION

SECTION C-1a & C-2 NEW HAVEN LINE

CATENARY REPLACEMENT BETWEEN WALK BRIDGE AND STRUCTURE 636, PECK BRIDGE AND STRUCTURE 863

CATENARY LAYOUT

STRUCTURE 835 TO STRUCTURE 849

ENGINEER: URS CORPORATION AES
DESIGNER: RW | DRAFTER: AMK | CHECKER: AJM
APPROVED: T. HOLLAND | DATE: 09/13/13
STRUCTURE NO. | BRIDGE LOG NO. | STRUCTURE SHEET NO. L-44

100% DESIGN
DISK FILENAME: L-44.dwg
PROJECT CONTROL DATE: 09/13/13

F H W A REGION	STATE	TOWN	FED. AID PROJ. NO.	PROJ. NO.	YEAR	SHEET NUMBER
1	CONN.	VARIOUS	CT-05-0109	301-0145	2013	01.03.113

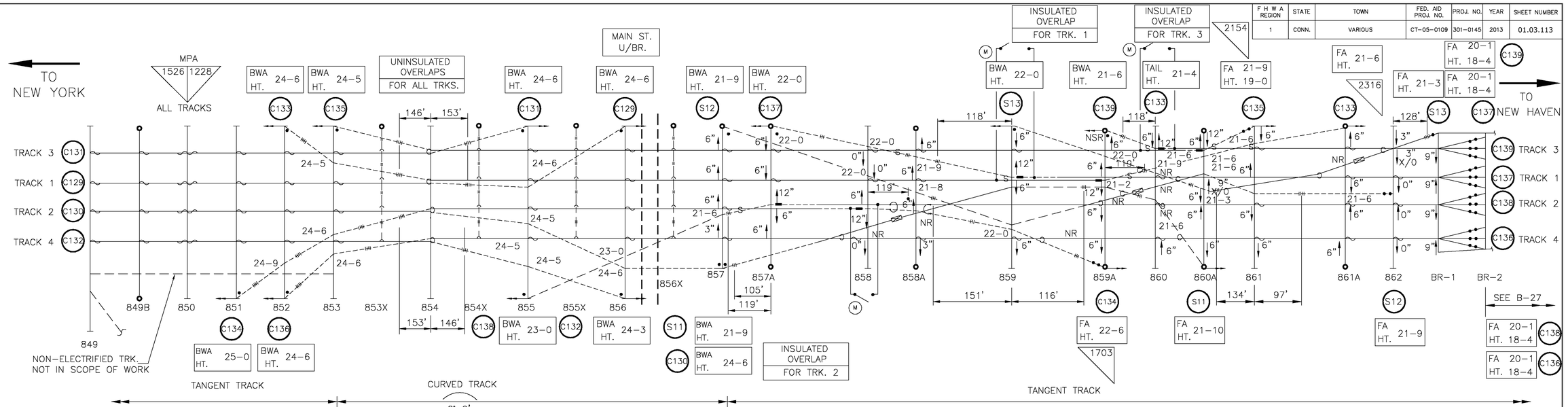

STAGGER																												
STRUCTURE NUMBER	849	849B	850	851	852	853	853X	854	854X	855	855X	856	856X	857	857A	858	858A	859	859A	860	860A	861	861A	862	BR-1	BR-2
STATIONING*	2467+29	2468+82	2470+36	2473+43	2476+50	2479+57	2481+01	2482+64	2484+27	2485+71	2487+24	2488+78	2490+31	2491+86	2493+34	2494+94	2496+42	2498+02	2499+67	2501+10	2502+70	2504+18	2505+80	2507+26	2508+75	2509+85
SPAN (FEET)		153	154	307	307	307	144	163	163	144	153	154	153	155	148	160	148	160	165	143	160	148	162	146	149	109
VERSINE (INCHES)						9	9 1/2	13 1/2	13 1/2	12 1/2	13	12	14	6	3/4	1/2										
CONTACT WIRE HT. H.R.L. (TRACK 3)	16-3	16-3	16-6	17-0	17-0	17-6	–	17-6	–	18-0	–	18-0	–	18-0	18-0	18-0	18-0	18-0	18-0	18-9 18-0	18-0 18-9	18-0	18-0	18-3	–	18-4
MESSENGER WIRE HT. H.R.L. (TRACK 3)	18-6	19-0	20-0	20-6	20-6	21-3	–	21-0 21-3	–	22-0	–	21-9	–	21-6	21-6	21-6	21-6	21-6	21-6	21-6 21-0	21-0 21-6	21-6	21-6	21-9	19-5 1/2	20-1
UNDERSIDE OF TRUSS TO H.R.L. (TRACK 3)	20-1	24-6	25-7	25-2	25-3	25-0	–	24-3	–	25-4	–	25-10	–	22-5	27-0	25-0	27-6	25-6	26-0	25-9	26-0	25-0	27-6	23-3	20-1	20-1
CONTACT WIRE HT. H.R.L. (TRACK 1)	16-3	16-3	16-6	17-0	17-0	17-6	–	17-6	–	18-0	–	18-0	–	18-0	18-0	18-0	18-0	18-9 18-0	18-0 18-9	–	18-0	18-0	18-0	18-3	–	18-4
MESSENGER WIRE HT. H.R.L. (TRACK 1)	18-6	19-0	20-0	20-6	20-6	21-3	–	21-0 21-3	–	22-0	–	21-9	–	21-6	21-6	21-6	21-6	21-6 21-0	21-0 21-6	21-0	21-0	21-0	21-0	21-9	19-5 1/2	20-1
UNDERSIDE OF TRUSS TO H.R.L. (TRACK 1)	21-10	24-6	25-7	25-2	25-3	25-0	–	24-3	–	25-4	–	25-10	–	22-5	27-0	25-0	26-0	25-6	26-0	25-9	26-0	25-0	27-6	23-3	20-1	20-1
CONTACT WIRE HT. H.R.L. (TRACK 2)	16-3	16-3	16-6	17-0	17-0	17-6	–	17-6	–	18-0	–	18-0	–	18-0	18-9 18-0	18-0 18-9	18-0	18-0	–	18-0	18-0	18-0	18-0	18-3	–	18-4
MESSENGER WIRE HT. H.R.L. (TRACK 2)	18-6	19-0	20-0	20-6	20-6	21-3	–	21-3 21-0	–	22-0	–	21-9	–	21-6	21-6 21-0	21-0 21-6	21-0	21-0	21-6	21-6	21-6	21-6	21-6	21-9	19-5 1/2	20-1
UNDERSIDE OF TRUSS TO H.R.L. (TRACK 2)	21-10	24-6	25-7	25-2	25-3	25-0	–	24-3	–	25-4	–	25-10	–	22-5	27-0	25-0	26-0	25-6	26-0	25-9	26-0	25-0	27-6	23-3	20-1	20-1
CONTACT WIRE HT. H.R.L. (TRACK 4)	16-3	16-3	16-6	17-0	17-0	17-6	–	17-6	–	18-0	–	18-0	–	18-0	18-0	18-0	18-0	18-0	18-0	18-0	18-0	18-0	18-0	18-3	–	–
MESSENGER WIRE HT. H.R.L. (TRACK 4)	18-6	19-0	20-0	20-6	20-6	21-3	–	21-3 21-0	–	22-0	–	21-9	–	21-6	21-0	21-0	21-6	21-6	21-6	21-6	21-6	21-6	21-6	21-9	19-5 1/2	20-1
UNDERSIDE OF TRUSS TO H.R.L. (TRACK 4)	21-10	24-6	25-7	25-2	25-3	25-0	–	24-3	–	25-4	–	25-10	–	22-5	27-0	25-0	26-0	25-6	26-0	25-9	26-0	25-0	27-6	23-3	20-1	20-1

CONTACT WIRE HT. H.R.L. (S-13)	–	–	18-1	18-1	18-4	
MESSENGER WIRE HT. H.R.L. (S-13)	–	–	21-6	21-6	21-4	
UNDERSIDE OF TRUSS TO H.R.L. (S-13)	–	–	25-0	27-6	23-3	
CONTACT WIRE HT. H.R.L. (S-12)	–	–	–	18-4	18-1	18-1	18-1	18-9
MESSENGER WIRE HT. H.R.L. (S-12)	–	–	–	22-0	21-3	21-6	21-6	21-0
UNDERSIDE OF TRUSS TO H.R.L. (S-12)	–	–	–	25-6	26-0	25-9	26-0	25-0
CONTACT WIRE HT. H.R.L. (S-11)	19-1	18-1	18-1	18-10	–	18-1	18-1	
MESSENGER WIRE HT. H.R.L. (S-11)	21-6	21-6	21-6	20-4	21-6	21-6	21-6	
UNDERSIDE OF TRUSS TO H.R.L. (S-11)	27-0	25-0	26-0	25-6	26-0	27-6	26-0	

LEGEND:

K KNUCKLE
NSR NOT SUPPORTED OR REGISTERED
NS NOT SUPPORTED
NR NOT REGISTERED
FIXED TERMINATION WITH GUY
BALANCE WEIGHT WITH GUY

NOTES:

1. ALL HEIGHTS ARE ROUNDED TO THE NEAREST 1/2".
2. FOR CROSS-OVER CATENARY PROFILES, SEE DWGS. PI-1 THRU PI-10.

THE INFORMATION, INCLUDING ESTIMATED QUANTITIES OF WORK SHOWN ON THESE SHEETS IS BASED ON LIMITED INVESTIGATIONS BY THE STATE AND IS IN NO WAY WARRANTED TO INDICATE THE TRUE CONDITIONS OR ACTUAL QUANTITIES OR DISTRIBUTION OF QUANTITIES OF WORK WHICH WILL BE REQUIRED.

SCALE: NONE

URS CORPORATION AES
500 ENTERPRISE DRIVE
ROCKY HILL, CT 06067
1-(860)-529-8882

URS CORPORATION AES
500 ENTERPRISE DRIVE
ROCKY HILL, CT 06067

NO.	DATE	DESCRIPTION

REVISIONS

STATE OF CONNECTICUT
DEPARTMENT OF TRANSPORTATION

SECTION C-1a & C-2 NEW HAVEN LINE

CATENARY REPLACEMENT BETWEEN WALK BRIDGE AND STRUCTURE 636, PECK BRIDGE AND STRUCTURE 863

CATENARY LAYOUT

STRUCTURE 849 TO STRUCTURE BR-2C

ENGINEER: URS CORPORATION AES
DESIGNER: RW | DRAFTER: AMK | CHECKER: AJM
APPROVED: T. HOLLAND | DATE: 09/13/13
STRUCTURE NO. | BRIDGE LOG NO. | STRUCTURE SHEET NO. L-45

100% DESIGN
DISK FILENAME: L-45.dwg
PROJECT CONTROL DATE: 09/13/13

F H W A REGION	STATE	TOWN	FED. AID PROJ. NO.	PROJ. NO.	YEAR	SHEET NUMBER
1	CONN.	VARIOUS	CT-05-0109	301-0145	2013	01.03.114

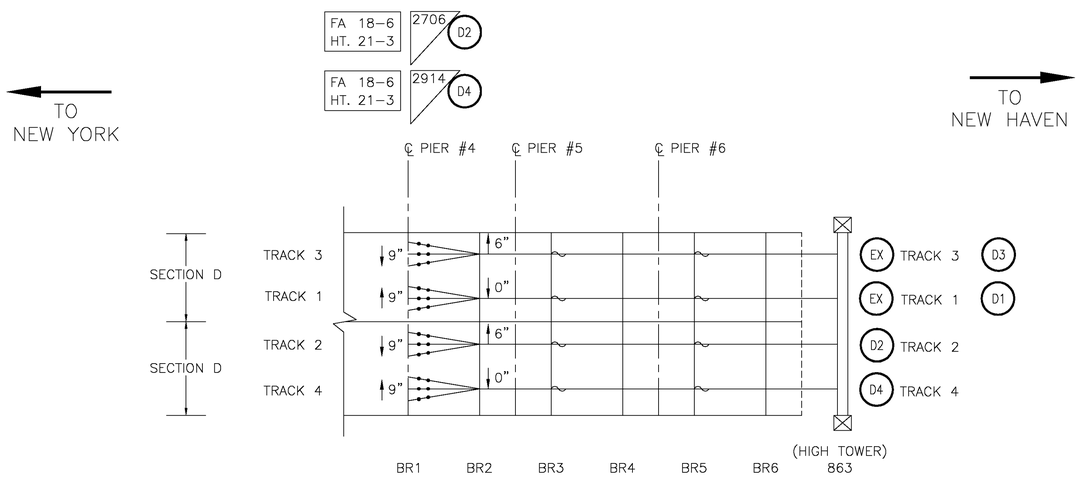

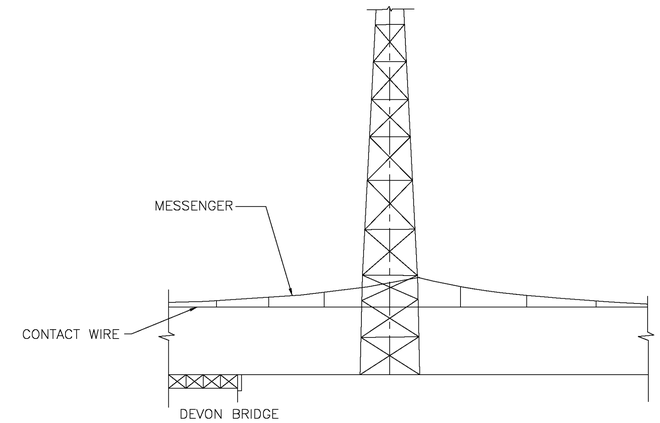

HIGH TOWER 863
FOR TRACKS 2 & 4

NEW CONSTANT TENSION CATENARY SYSTEM SEE DWG. ED-XXX

SEE B-29

STAGGER		SEE LAYOUT ABOVE		6"	6"	6"	6"	
STRUCTURE NUMBER		BR1	BR2	BR3	BR4	BR5	BR6	863
STATIONING*		2512+81	2514+16	2515+45	2516+38	2517+67	2518+60	2520+42
SPAN (FEET)			135	129	93	129	93	182
VERSINE (INCHES)			–	–	–	–	–	–
CONTACT WIRE HT. H.R.L.	TRACK 3	18-3	18-2	18-1	18-0	17-11	17-10	
MESSENGER WIRE HT. H.R.L.	TRACK 3	21-3	20-5	20-4	20-3	20-2	20-1	
UNDERSIDE OF TRUSS TO H.R.L.	TRACK 3	21-3	22-6	22-6	22-6	22-6	22-6	
CONTACT WIRE HT. H.R.L.	TRACK 1	18-3	18-2	18-1	18-0	17-11	17-10	
MESSENGER WIRE HT. H.R.L.	TRACK 1	21-3	20-5	20-4	20-3	20-2	20-1	
UNDERSIDE OF TRUSS TO H.R.L.	TRACK 1	22-6	22-6	22-6	22-6	22-6	22-6	
CONTACT WIRE HT. H.R.L.	TRACK 2	18-3	18-2	18-1	18-0	17-11	17-10	
MESSENGER WIRE HT. H.R.L.	TRACK 2	21-3	20-5	20-4	20-3	20-2	20-1	
UNDERSIDE OF TRUSS TO H.R.L.	TRACK 2	22-6	22-6	22-6	22-6	22-6	22-6	
CONTACT WIRE HT. H.R.L.	TRACK 4	18-3	18-2	18-1	18-0	17-11	17-10	
MESSENGER WIRE HT. H.R.L.	TRACK 4	21-3	20-5	20-4	20-3	20-2	20-1	
UNDERSIDE OF TRUSS TO H.R.L.	TRACK 4	22-6	22-6	22-6	22-6	22-6	22-6	

SECTION D (EXISTING)

SECTION D (EXISTING)

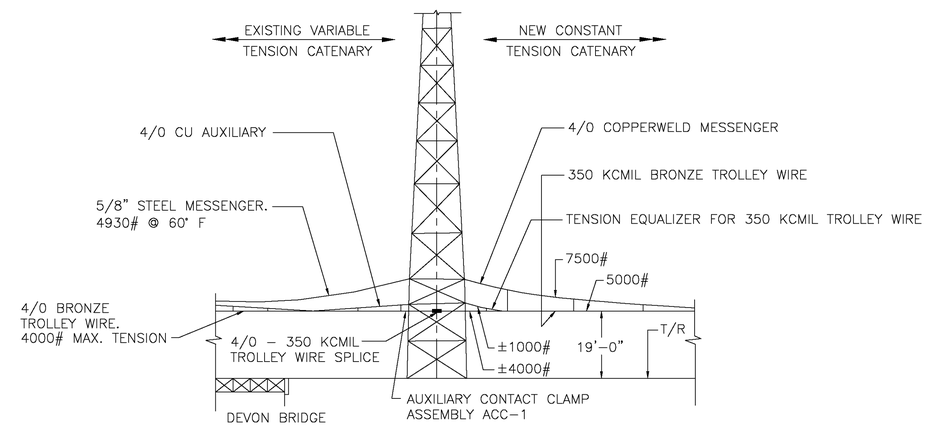

HIGH TOWER 863
FOR ALL TRACKS
(EXISTING CONDITION)

LEGEND:

K KNUCKLE
NSR NOT SUPPORTED OR REGISTERED
NS NOT SUPPORTED
NR NOT REGISTERED

FIXED TERMINATION WITH GUY

BALANCE WEIGHT WITH GUY

NOTES:

1. ALL HEIGHTS ARE ROUNDED TO THE NEAREST 1/2".

THE INFORMATION, INCLUDING ESTIMATED QUANTITIES OF WORK SHOWN ON THESE SHEETS IS BASED ON LIMITED INVESTIGATIONS BY THE STATE AND IS IN NO WAY WARRANTED TO INDICATE THE TRUE CONDITIONS OR ACTUAL QUANTITIES OR DISTRIBUTION OF QUANTITIES OF WORK WHICH WILL BE REQUIRED.

SCALE: NONE

URS CORPORATION AES
500 ENTERPRISE DRIVE
ROCKY HILL, CT 06067
1-(860)-529-8882

NO.	DATE	DESCRIPTION

REVISIONS

STATE OF CONNECTICUT
DEPARTMENT OF TRANSPORTATION

SECTION C-1a & C-2 NEW HAVEN LINE

CATENARY REPLACEMENT BETWEEN WALK BRIDGE AND STRUCTURE 636, PECK BRIDGE AND STRUCTURE 863

CATENARY LAYOUT

STRUCTURE BR1 TO STRUCTURE 863

ENGINEER: URS CORPORATION AES
DESIGNER: RW | DRAFTER: AMK | CHECKER: AJM
APPROVED: T. HOLLAND | DATE: 09/13/13
STRUCTURE NO. | BRIDGE LOG NO. | STRUCTURE SHEET NO. L-46

PROJECT CONTROL DATE: 09/13/13 DISK FILENAME: L-46.dwg 100% DESIGN

F H W A REGION	STATE	TOWN	FED. AID PROJ. NO.	PROJ. NO.	YEAR	SHEET NUMBER
1	CONN.	VARIOUS	CT-05-0109	301-0145	2013	01.03.115

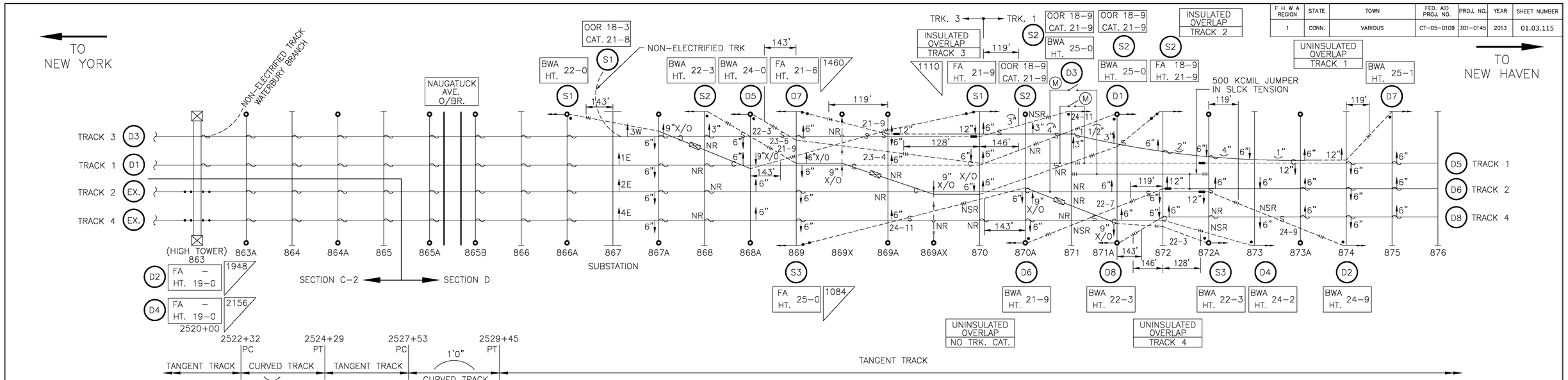

SEE LAYOUT ABOVE FOR STAGGERS

STAGGER	8"	8"	8"	0"	6"	6"	NR	6"	6"	6"

STRUCTURE NUMBER	863	863A	864	864A	865	865A	865B	866	866A	867	867A	868	868A	869	869X	869A	869AX	870	870A	871	871A	872	872A	873	873A	874	875	876
STATIONING*	2520+42	2522+37	2523+67	2524+82	2526+88	2528+34	2528+89	2430+24	2531+43	2533+31	2534+87	2536+38	2537+47	2539+45	2539+90	2540+93	2542+04	2542+53	2544+01	2545+61	2546+64	2548+69	2550+29	2551+77	2553+25	2554+85	2557+93	2561+01
SPAN (FEET)		195	130	115	206	146	55	135	119	188	156	151	109	198	45	103	111	49	148	160	103	205	160	148	148	160	308	308
VERSINE (INCHES)		2	4	2		3 1/2	1	2																				
TRACK 3 CONTACT WIRE HT. H.R.L.	17-6	17-2	16-11	16-8	16-3	16-0	–	16-3	16-6	16-10	17-2	17-5	17-7	18-0	–	18-9 18-0	–	18-0 18-9	18-0	18-0	18-0	18-0	18-0	18-0				
TRACK 3 MESSENGER WIRE HT. H.R.L.	20-6	20-8	20-5	20-2	18-3	17-0	17-0	18-3	20-0	20-4	20-2	20-11	21-1	21-6	–	21-6 21-0	–	21-0 21-6	21-6	21-6	21-6	21-6	21-6	21-6				
TRACK 3 UNDERSIDE OF TRUSS TO H.R.L.	23-7	24-0	27-6	24-0	24-10	21-0	21-0	24-7	24-0	23-8	26-0	26-10	26-0	26-10	–	29-0	–	26-8	26-0	26-10	26-6	26-0	26-0	26-1				
																NO #1 TRACK								NO #3 TRACK				
TRACK 1 CONTACT WIRE HT. H.R.L.	17-6	17-2	16-11	16-8	16-3	16-0	–	16-3	16-6	16-10	17-2	–	17-7	18-0	–	18-0	–	19-9 18-9	18-0	–	18-9	18-9	18-9	18-9	18-0 18-9	18-9 18-0	18-0	
TRACK 1 MESSENGER WIRE HT. H.R.L.	20-6	20-8	20-5	20-2	18-3	17-0	17-0	18-3	20-0	20-4	20-8	20-11	20-7	21-6	–	21-0	–	23-3 22-3	22-6	22-3	22-3	22-3	21-6	21-6	21-0 21-6	21-6 21-0	21-6	
TRACK 1 UNDERSIDE OF TRUSS TO H.R.L.	23-7	24-0	27-6	24-0	24-10	21-0	21-0	24-7	24-0	23-8	26-0	26-10	26-0	26-10	–	29-0	–	26-8	26-0	26-10	26-6	26-0	26-6	26-1	26-0	26-5	26-4	
TRACK 2 CONTACT WIRE HT. H.R.L.	17-6	17-2	16-11	16-8	16-3	16-0	–	16-3	16-6	16-10	17-2	–	17-7	18-0	–	–	–	18-0	19-0	–	18-0	18-9 18-0	18-0 18-9	18-0	18-0	18-0	18-0	
TRACK 2 MESSENGER WIRE HT. H.R.L.	20-6	20-8	20-5	20-2	18-3	17-0	17-0	18-3	20-0	20-4	20-8	20-11	21-1	21-6	–	21-0	–	21-0	21-0	21-6	21-6	21-6 21-0	21-0 21-6	21-6	21-6	21-6	21-6	
TRACK 2 UNDERSIDE OF TRUSS TO H.R.L.	23-7	24-0	27-6	24-0	24-10	21-0	21-0	24-7	24-0	23-8	26-0		26-0	26-10	–	29-0	–	26-8	26-0	26-10	26-6	26-0	26-6	26-1	26-0	26-5	26-4	
TRACK 4 CONTACT WIRE HT. H.R.L.	17-6	17-2	16-11	16-8	16-3	16-0	–	16-3	16-6	16-10	17-2	–	17-7	18-0	–	18-0	–	–	18-0	–	18-0	18-0	–	18-0	18-0	18-0	18-0	
TRACK 4 MESSENGER WIRE HT. H.R.L.	20-6	20-8	20-5	20-2	18-3	17-0	17-0	18-3	20-0	20-4	20-8	20-11	21-1	21-6	–	21-0	–	21-6	21-6	21-6	21-0	21-6 21-0	21-6	21-6	21-6	21-6	21-6	
TRACK 4 UNDERSIDE OF TRUSS TO H.R.L.	23-7	24-0	27-6	24-0	24-10	21-0	21-0	24-7	24-0	23-8	26-0	26-10	26-0	26-10	–	29-0	–	26-8	26-0	26-10	26-6	26-0	26-6	26-1	26-0	26-5	26-4	

WIRE S1			
CONTACT WIRE HT. H.R.L.	17-3	–	17-8
MESSENGER WIRE HT. H.R.L.	20-8	20-11	21-1
UNDERSIDE OF TRUSS TO H.R.L.	26-0	26-10	26-0

WIRE S3			
CONTACT WIRE HT. H.R.L.	18-1	–	18-1
MESSENGER WIRE HT. H.R.L.	21-6	21-6	21-6
UNDERSIDE OF TRUSS TO H.R.L.	26-0	26-10	26-6

WIRE S2					
CONTACT WIRE HT. H.R.L.	18-1	–	–	–	18-1
MESSENGER WIRE HT. H.R.L.	21-6	–	21-6	–	21-6
UNDERSIDE OF TRUSS TO H.R.L.	26-10	–	29-0	–	26-8

LEGEND:

K KNUCKLE
NSR NOT SUPPORTED OR REGISTERED
NS NOT SUPPORTED
NR NOT REGISTERED
FIXED TERMINATION WITH GUY
BALANCE WEIGHT WITH GUY

NOTES:

1. ALL HEIGHTS ARE ROUNDED TO THE NEAREST 1/2".

THE INFORMATION, INCLUDING ESTIMATED QUANTITIES OF WORK SHOWN ON THESE SHEETS IS BASED ON LIMITED INVESTIGATIONS BY THE STATE AND IS IN NO WAY WARRANTED TO INDICATE THE TRUE CONDITIONS OR ACTUAL QUANTITIES OR DISTRIBUTION OF QUANTITIES OF WORK WHICH WILL BE REQUIRED.

SCALE: NONE

URS CORPORATION AES
500 ENTERPRISE DRIVE
ROCKY HILL, CT 06067
1-(860)-529-8882

URS CORPORATION AES
500 ENTERPRISE DRIVE
ROCKY HILL, CT 06067

NO.	DATE	DESCRIPTION

REVISIONS

STATE OF CONNECTICUT
DEPARTMENT OF TRANSPORTATION

SECTION C-1a & C-2 NEW HAVEN LINE

CATENARY REPLACEMENT BETWEEN WALK BRIDGE AND STRUCTURE 636, PECK BRIDGE AND STRUCTURE 863

CATENARY LAYOUT CP-261

STRUCTURE 863 TO STRUCTURE 876

ENGINEER: URS CORPORATION AES
DESIGNER: RW | DRAFTER: AMK | CHECKER: AJM
APPROVED: T. HOLLAND | DATE: 09/13/13
STRUCTURE NO. | BRIDGE LOG NO. | STRUCTURE SHEET NO. L-47

100% DESIGN
DISK FILENAME: L-47.dwg
PROJECT CONTROL DATE: 09/13/13