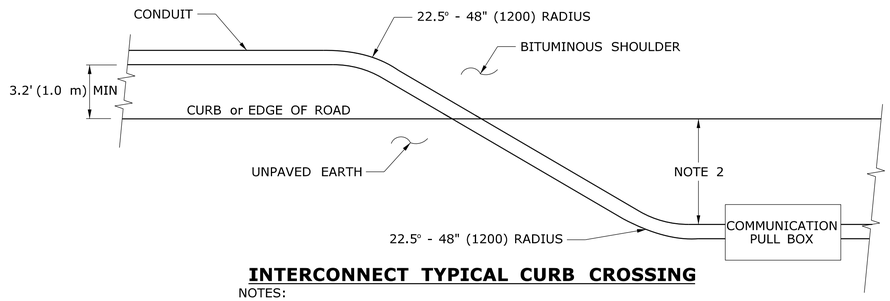

INTERCONNECT TYPICAL CURB CROSSING

NOTES:

1. RESTORE AREAS DISTURBED BY TRENCH TO ORIGINAL CONDITION.
2. INSTALL PULL BOX A MINIMUM OF 10' (3.0 m) FROM CURB UNLESS OTHERWISE SHOWN ON PLANS OR DIRECTED BY ENGINEER.

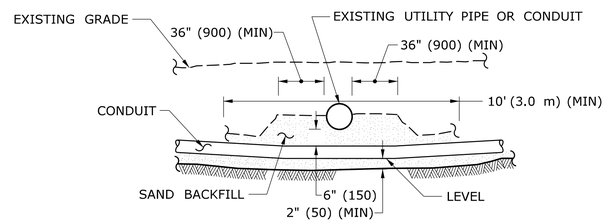

CROSSING UNDER EXISTING UTILITY

NOTES:

1. WHEN ENCOUNTERED AT APPROXIMATELY THE SAME DEPTH, CROSS BENEATH.
2. PROTECT & SUPPORT EXPOSED EXISTING UTILITY.

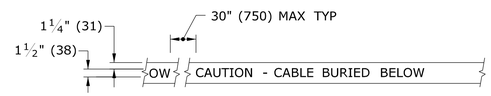

DETECTABLE WARNING TAPE

NOTE:

STANDARD SPECIFICATIONS, ARTICLE: 1.05.15

1. TAPE COLORS:
   COMMUNICATION - ORANGE BACKGROUND / BLACK LEGEND
   POWER - RED BACKGROUND / BLACK LEGEND

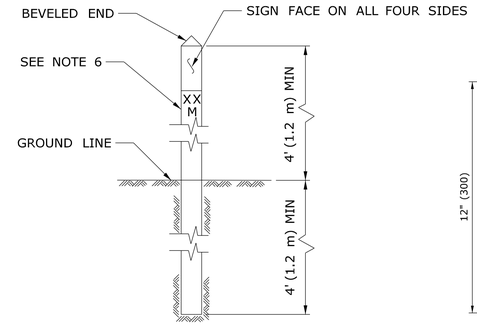

INTERCONNECT CONDUIT IDENTIFICATION POST

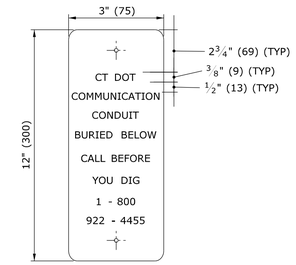

SIGN FACE DETAIL

SIGN # 41-4669

NOTES:

1. 4" x 4" (100 x 100) NOMINAL, PRESSURE TREATED WOOD POST.
2. ATTACH SIGN TO POST WITH ¼" x 1¼" (6 x 31) STAINLESS STEEL LAG SCREW WITH NYLON WASHER ON FACE OF SIGN.
3. SIGN COLORS: BACKGROUND - ORANGE (RETROREFLECTIVE) LEGEND - BLACK (OPAQUE).
4. INSTALL POST APPROX 24" (600) FROM RMC IN VICINITY OF EACH PULL BOX.
5. INSTALL POSTS BETWEEN PULL BOXES, APPROX 10' (3.0 m) OFF CURB. SPACE POSTS 1500'± (460 m±) APART.
6. PERMANENTLY ATTACH STAINLESS STEEL NUMBERS INDICATING DISTANCE TO TRENCH IN FEET (METERS) CONTAINING COMMUNICATION CABLE. ATTACH NUMBERS TO SIDE OF POST FACING CONDUIT. INCLUDE "M" SUFFIX IF METERS.

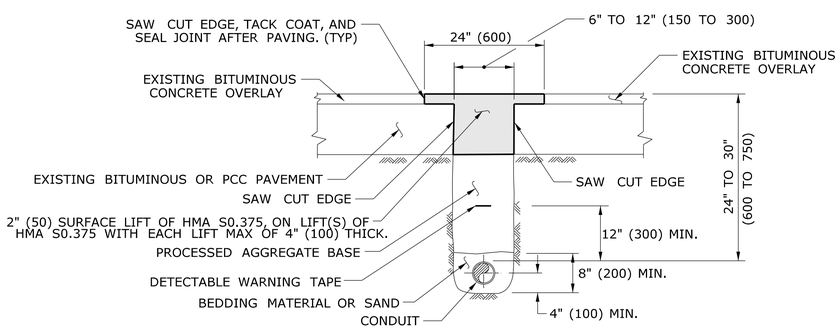

PAVEMENT - BITUMINOUS CONCRETE OR OVERLAYED PORTLAND CEMENT CONCRETE

NOTES:

STANDARD SPECIFICATIONS, ARTICLE: 3.04 & 4.06.03

1. TOTAL HOT MIX ASPHALT (HMA) THICKNESS TO MATCH EXISTING BITUMINOUS CONCRETE AND PORTLAND CEMENT CONCRETE (PCC) THICKNESS.
2. WHEN ALLOWED BY ENGINEER, USE CONTROLLED LOW STRENGTH MATERIAL (CLSM) AS BEDDING MATERIAL. TOP OF CLSM AT LEAST 20" (500) BELOW SURFACE.

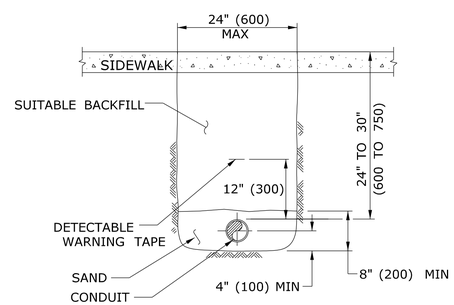

SIDEWALK

NOTES:

STANDARD SPECIFICATIONS, ARTICLE: 9.21 & 9.22

1. WHERE CONCRETE SIDEWALK DAMAGED OR CUT, REPLACE THE ENTIRE SECTION BETWEEN JOINTS. REPLACEMENT SIDEWALK IS PAID FOR AT THE CONTRACT UNIT PRICE FOR "CONCRETE SIDEWALK".

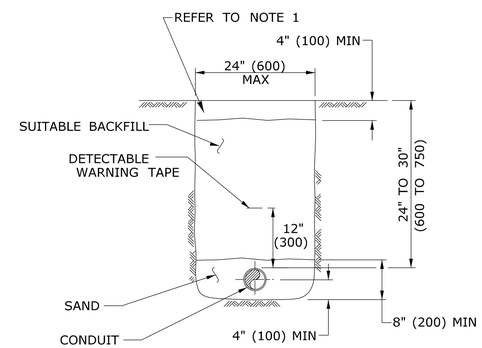

EARTH

NOTES:

STANDARD SPECIFICATIONS, ARTICLE: 9.50

1. IN MOWED AREAS: PLACE TOPSOIL, FERTILIZER, SEED, & MULCH.

GENERAL NOTES:

1. TOP OF CONDUIT NO LESS THAN 24" (600) DEEP.
2. COMPACT BACKFILL IN ≤6" (150) LIFTS. HAND COMPACTION NOT PERMITTED.

LEGEND AS SHOWN ON TRAFFIC CONTROL SIGNAL PLAN:

-- RMC (RIGID METAL CONDUIT)

REV.	DATE	REVISION DESCRIPTION
1	4-2012	REVISED BITUMINOUS CONRCETE TO HMA, & MINOR REVISIONS.

THE INFORMATION, INCLUDING ESTIMATED QUANTITIES OF WORK, SHOWN ON THESE SHEETS IS BASED ON LIMITED INVESTIGATIONS BY THE STATE AND IS IN NO WAY WARRANTED TO INDICATE THE CONDITIONS OF ACTUAL QUANTITIES OF WORK WHICH WILL BE REQUIRED.

Plotted Date: 4/14/2012

DIMENSIONS ARE IN ENGLISH ('.') & METRIC UNITS (mm).
METRIC DIMENSIONS ARE ROUNDED:
- OVER 1" TO NEAREST 5 mm
- UNDER 1" TO NEAREST 1 mm.

NOT TO SCALE

STATE OF CONNECTICUT
DEPARTMENT OF TRANSPORTATION

Filename: CTDOT_TRAFFIC_STD.dgn Model: TR-1001_01

SUBMITTED BY: NAME/DATE/TIME: Tracy L. Fogarty 2012.05.01 12:54:42-04'00'

APPROVED BY: NAME/DATE/TIME: Timothy M. Wilson 2012.05.09 10:23:34-04'00'

CTDOT STANDARD SHEET

OFFICE OF ENGINEERING

STANDARD SHEET TITLE:

TRENCHING & BACKFILLING, ELECTRICAL CONDUIT

STANDARD SHEET NO.: TR-1001_01