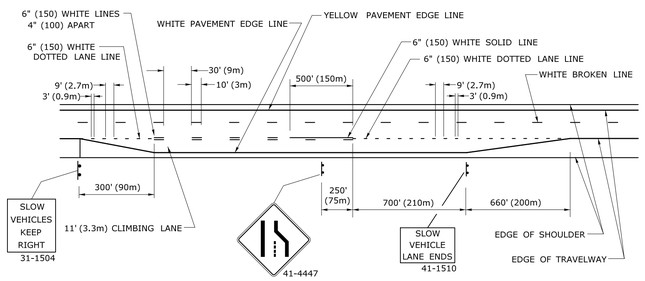

L TYPICAL CLIMBING LANE

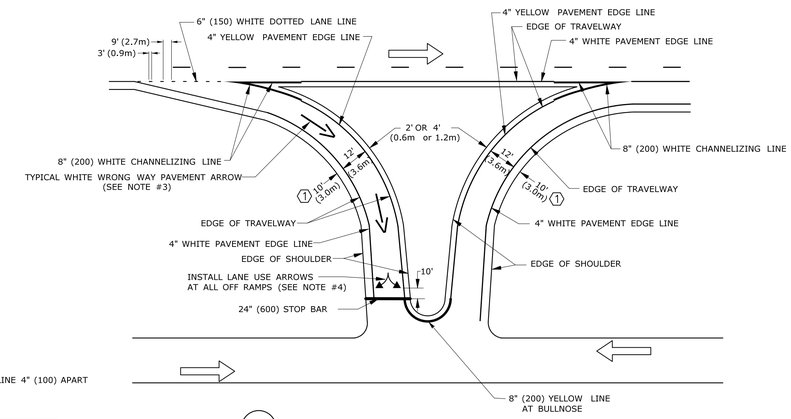

O TYPICAL RAMP TREATMENT

1 IF WIDTH IS LESS THAN DIMENSION SHOWN, CONTACT THE ENGINEER.

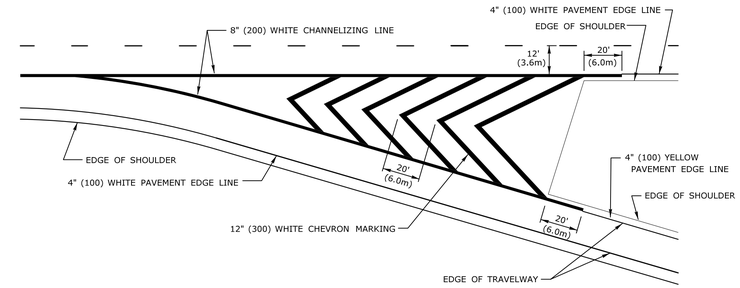

Q TYPICAL CHEVRON MARKINGS AT GORE AREAS OF BITUMINOUS PAVEMENT WHERE CALLED FOR ON THE PLANS

NOTES:

1. BROKEN LINES AND CLIMBING LANE BROKEN LINES - 10' (3m) LINE, 30' (9m) SPACE
2. SEE DETAILS J AND K ON STANDARD SHEET "PAVEMENT MARKINGS FOR DIVIDED HIGHWAYS" (SHEET # TR-1210_01) FOR RELATIONSHIP OF DIRECTIONAL LINES AND PAVEMENT EDGE LINE TO EDGE OF TRAVELWAY.
3. TWO WHITE WRONG WAY PAVEMENT ARROWS SHALL BE INSTALLED. THE FIRST SHALL BE INSTALLED 100' FROM THE LANE-USE ARROW(S), THE SECOND SHOULD BE 250'± FROM THE FIRST WHERE SPACE PERMITS.
4. AT OFF RAMPS WITH MORE THAN ONE LANE, INSTALL LANE USE ARROWS IN EACH LANE. INSTALL SETS OF LANE USE ARROWS EQUALLY SPACED FROM THE STOP BAR TO THE BEGINNING OF THE MULTI LANE SECTION (160' MAX SPACING).

DENOTES DIRECTION OF TRAVEL

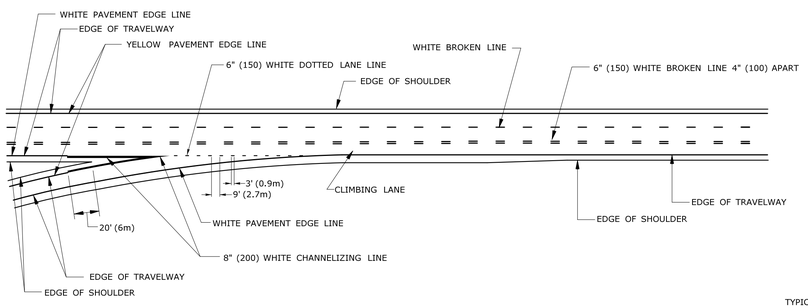

M TREATMENT OF CLIMBING LANE - THROUGH ACCELERATION LANE

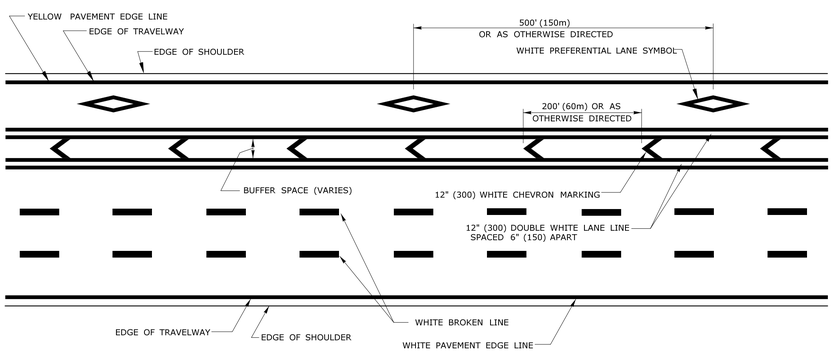

N TYPICAL HIGH OCCUPANCY VEHICLE (HOV) LANE

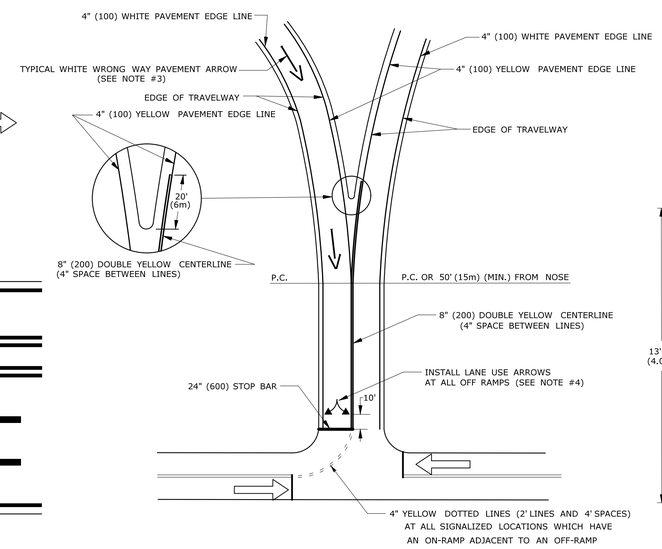

P TYPICAL CENTERLINE MARKING ON ABUTTING RAMPS AT INTERSECTING ROADWAYS

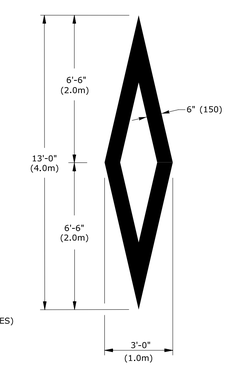

WHITE PREFERENTIAL LANE SYMBOL

13.0 S.F. (1.2m²)

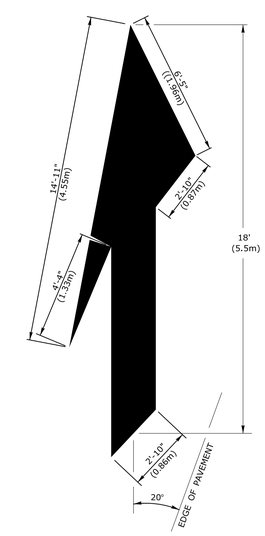

WHITE LANE REDUCTION ARROW

41.8 S.F. (3.9m²)

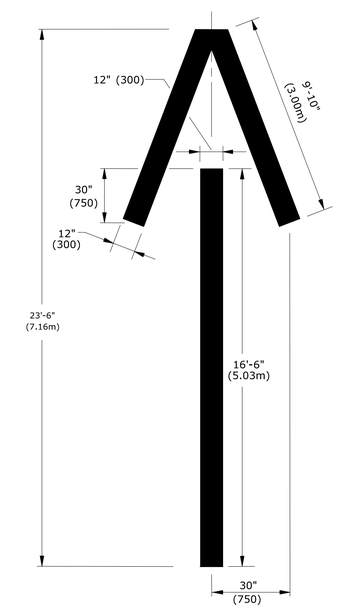

WHITE WRONG WAY PAVEMENT ARROW

36.2 S.F. (3.4m²)

REV.	DATE	REVISION DESCRIPTION
3	12-2013	REVISED DETAILS L O P & Q. REMOVED PREFORMED PLASTIC PAVEMENT MARKING NOTE. REVISED WRONG WAY PAVEMENT ARROW NOTES. ADDED LANE USE ARROWS & NOTE.
2	2-2011	ADDED PAVEMENT MARKING S.F. (m²).
1	7-2010	REVISED MARKINGS TO MEET 2009 MUTCD.

THE INFORMATION, INCLUDING ESTIMATED QUANTITIES OF WORK, SHOWN ON THESE SHEETS IS BASED ON LIMITED INVESTIGATIONS BY THE STATE AND IS IN NO WAY WARRANTED TO INDICATE THE CONDITIONS OF ACTUAL QUANTITIES OF WORK WHICH WILL BE REQUIRED.

Plotted Date: 12/4/2013

DIMENSIONS ARE IN ENGLISH ("') & METRIC UNITS (mm). METRIC DIMENSIONS ARE ROUNDED: - OVER 1" TO NEAREST 5 mm - UNDER 1" TO NEAREST 1 mm.

NOT TO SCALE

STATE OF CONNECTICUT
DEPARTMENT OF TRANSPORTATION

Filename: CTDOT_TRAFFIC_STD.dgn Model: TR-1210_02

SUBMITTED BY: NAME/DATE/TIME: Mark F. Makuch 2013.12.10 08:12:51-05'00'

APPROVED BY: NAME/DATE/TIME: Charles S. Harlow 2013.12.10 11:30:57-05'00'

CTDOT STANDARD SHEET

OFFICE OF ENGINEERING

STANDARD SHEET TITLE:

PAVEMENT MARKINGS (DURABLE MARKINGS) FOR DIVIDED HIGHWAYS

STANDARD SHEET NO.: TR-1210_02