STRUCTURE NO. 01765

INTERSTATE-84 EB
over
AMTRAK RR & LOCAL ROADS
HARTFORD

Indepth & Special Inspection
on
8/13/2012

Inspected by Baker - 23
for Area 6

TEAM:	Forwarded to TE3	Sowatei Lomotey	Date	10/10/2012
TE3:	Reviewed by TE3	Sowatei Lomotey	Date	1/17/2012
	BMM Required	Yes		
	Town Bridge	No		
	Rating <= 5 (Items 58,59,60 or 62)	Yes		
	Rating Change 2 or More Values	No		
	Forwarded to Supervisor	Leo Cain Jr.	Date	10/17/2012
	Forwarded to "To Be Copied Drawer"	☐	Date	
	Date BRI-19 Entered	10/17/2012		
SUPERVISOR:	Reviewed by Supervisor	Leo Cain Jr.	Date	10/22/2012
SUPPORT:	Date Copies Made	10·23·12	BMM No	12·558
	Scanned By:	LA	Date Scanned	10/27/12
	PDF Box No			

NBI: Yes

CONNECTICUT
DEPARTMENT OF TRANSPORTATION

RECEIVED
OCT 10 2012
CONNECTICUT DOT

STATE PROJECT NO. 170-3013
BRIDGE SAFETY INSPECTION

BRIDGE NO. 01765
INTERSTATE 84 EASTBOUND
OVER
AMTRAK & LOCAL ROADS
HARTFORD, CONNECTICUT

STATE OF CONNECTICUT
WILLIAM M. KRISTOFF
No. 20004
LICENSED
PROFESSIONAL ENGINEER
10/9/12

IN-DEPTH INSPECTION
AUGUST 13, 2012
LAST DAY OF INSPECTION: SEPTEMBER 12, 2012

Prepared By:

Baker

Michael Baker Engineering, Inc.
500 Enterprise Drive, Suite 2B
Rocky Hill, CT 06067

2/193

STATE OF CONNECTICUT
DEPARTMENT OF TRANSPORTATION
BUREAU OF HIGHWAYS

INSPECTION REPORT TRANSMITTAL FORM
FORM BRI-27, REV. 9/97

Structure No. 01765 Town Hartford

Inspectors Michael Baker Engineering (MJO, BH) Date August 13, 2012

TABLE OF CONTENTS

LOOSE FORMS (not bound in report)	No. of Sheets Enclosed
Maintenance Memo	3
Flagging Memos	--
BRI-11, Seismic Screening Data Sheet	--
BRI-12, Fracture Critical Inspection Data Sheet	--
BRI-19, HWY Bridge SI&A Form	2
BRI-25, Under Entry SI&A Form	--
BRI-39, RR Bridge SI&A Form	--
BRI-49, Sign Structure SI&A Form	--
PONTIS Element Data Collection Form	2

Plans: Proj. Nos.: 63-137 (1961), 63-197 (1963), 63-479 (1991). Check here if already on file: X

Bound Report Pages Numbers	Sheet
Title Cover Sheet	1
Table of Contents	2
Location Map	3
Executive Summary	N/A
BRI-18, Bridge Inspection Form	4-12
BRI-48, Sign Structure Inspection Form	--
Field Notes (Include Forms BRI-10, BRI-13, BRI-14, BRI-15, BRI-16, BRI-17, BRI-29, BRI-30)	13-140
Calculations:	
Load Rating Evaluation	--
Quantities & Cost Estimate	--
Photo Sheets	141-186
Negatives	187-193
Back-up Material	33 sheets

Baker

LOCATION MAP

Bridge 01765: Interstate 84 EB over AMTRAK & Local Roads

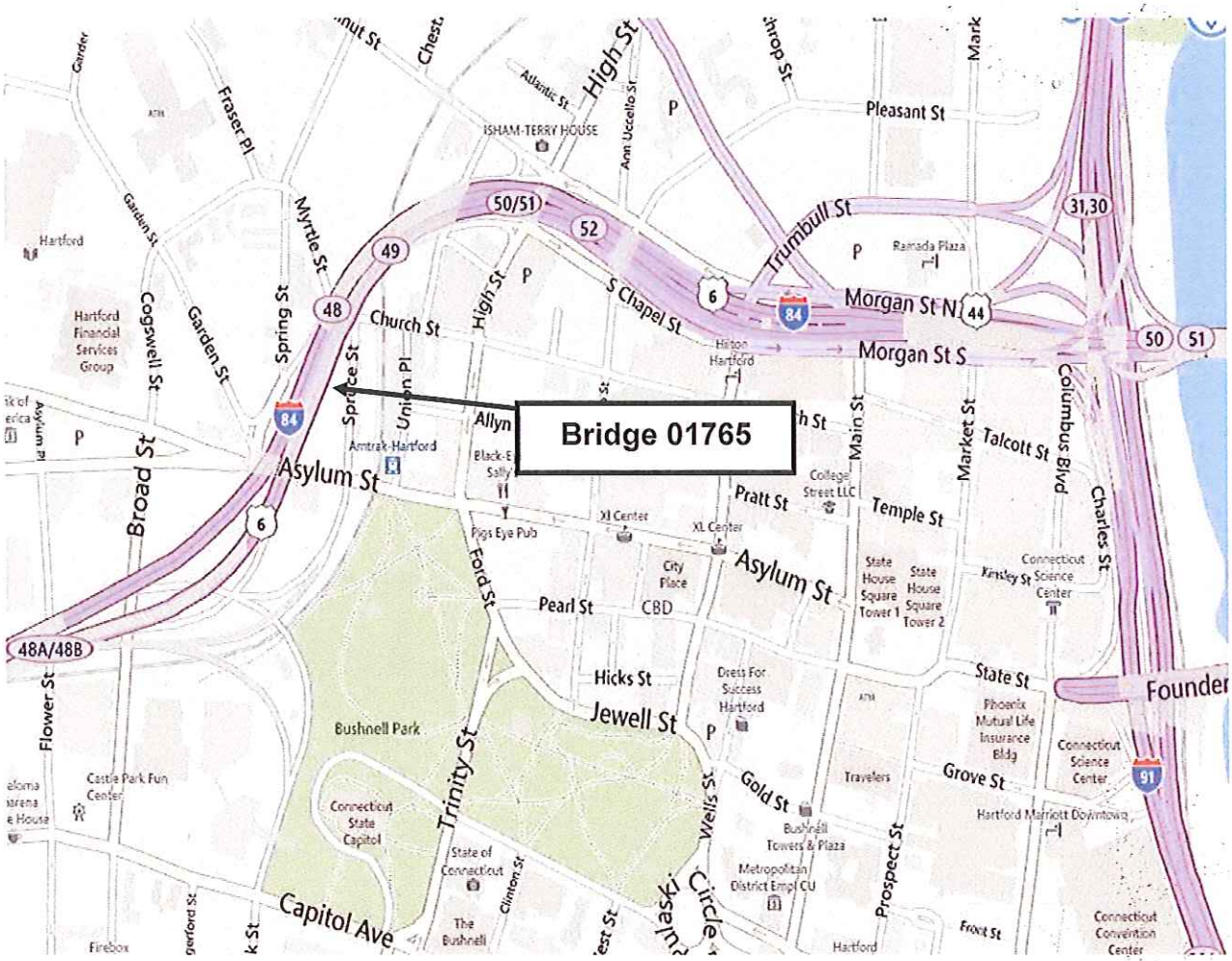

Connecticut Department of Transportation

Bridge Inspection Report BRI-18

Bridge #: 01765 **Inspection Date: 08/13/2012**

Inspection Type:	Indepth	**Previous Inspection Date:**	10/11/2010	**Snooper Required:**	No
Inspection Performed By:	Baker Engineering	**Feature Carried:**	INTERSTATE-84 EB	**Snooper Used:**	No
Town:	HARTFORD	**Feature Intersected:**	AMTRAK RR & LOCAL ROADS	**Year Built:**	1966
Location:	.86 W OF EXIT TO I-91 SB	**Main Design:**	Stringer/Multi-beam or Girder	**Year Rebuilt:**	1992
Main Material:	Steel continuous				

Visits **Inspectors:**

Visit Date:	Temp:	Start Time:	End Time:	Inspector:	Task:
8/13/2012	85	8:00:00 AM	4:00:00 PM	B. Howlett	Inspector
9/12/2012	75	8:00:00 AM	2:00:00 PM	M. Orlowsky	Lead Inspector

DECK: - **Overall Rating:** 4

	Rating	
OVERLAY:	5	The bituminous overlay has heavy raveling (up to 1.75" deep in span 4), random uneven patches, heavy cracking, moderate to heavy wheel rutting, and paving seams are raveled up to 4" wide x 1.5" deep (span 1). There are gaps up to 3/4" wide between the joint headers and overlay (span 6), as well as potholes up to 4" wide x 3" deep along the headers (span 9). There is hollow bituminous up to 1' from a clogged scupper at the south curb line of span 9. There is heavy debris on the pavement in the unused portion of the bridge between the north fascia parapet and the north roadway barrier. See sheets 22-29 and photos 8-11 & 17.
DECK-STR. CONDITION:	4	There are stay in-place forms at the underside of deck in spans 1-4 between the girders; remaining spans have bare decks. The stay-in-place forms are rusted out at the end diaphragm haunches, around the weeps, and other random locations (typically less than 5% of total span area). The bare and/or exposed end diaphragm haunches have hollow areas and spalls up to 3" deep at locations throughout. The girder haunches have large spalled, dull and hollow areas at numerous locations throughout the bridge. BS&E was notified about potential spalls in the girder 1 haunches near pier 4 and a Priority B BMM was issued prior to submittal of this report. The undersides of the joints have hollow and spalled concrete with up to 5" deep corner spalls with exposed rebar. Note that the deck ends are in contact at the span 1 pin & hanger joint at 83 degrees Fahrenheit. The underside of the deck panels and overhangs also have transverse and extensive hairline map cracks with rust and/or efflorescence. Random transverse cracks have adjacent hollow areas up to 1' wide. There are random large hollow/dull areas within the map cracking. There are random large spalls with exposed rebar, up to 2.5" deep. There are random honeycomb areas, up to 2.5" deep with exposed rebar. There also random sloppy concrete repairs and formwork left in place along the deck underside. Note that there are numerous dull/hollow areas in the underside of the joints, end

		diaphragm haunches, girder haunches, and deck that are over sidewalks (span 1), local roads (spans 1, 7 & 8) , parking lot (span 6) , over paved slopes adjacent to parking areas (spans 3-5), over a shed for the parking area (span 5), and over the railroad (span 9). See the framing sheets for all locations. Average underside of deck deterioration is estimated to be 18.2%, with a maximum of 58.6% deterioration in span 5. See sheets 66-118 & 140 and photos 4, 12-16, 63 & 70. Based on the percent deterioration of the deck in spans 5 & 6, the overall deck rating could be a "3" per CT BIM Section 10.1. However, the rating is only lowered to "4" since total underside of deck deterioration is less than 20% and spalling does not appear to be affecting the serviceability of the deck at this time.
CURBS:	7	The vertical faced curbs at the north and south fascia parapets have random cracked mortar joints. In addition, the curb at the southwest corner of span 1 has a full height x 4' long x 2" deep corner spall. The views of the tops of the vertical faced curbs are obstructed by concrete barriers in place on top of the safety walks along the travelway. The north roadway parapet in spans 1-6 has sloped granite curbs with random cracked mortar joints. See "Expansion Joints" item below for cracked steel curb plates. Average curb reveals were found to be 3-1/4" along the sloped cubs and 7-1/2" along the vertical faced curbs adjacent to the roadway. See sheets 22-30 and photos 17 & 18.
MEDIAN:	N	See "Parapets" and "Curbs" item for the north roadway barrier.
SIDEWALKS:	7	The south safety walk was not visible due to the jersey barrier mounted on top of the safety walk. The safety walk along the north fascia parapet in the unused portions of the roadway has light scaling, random hairline cracks, and random debris. See sheets 22-29 and photos 17 & 18.
PARAPET:	5	The concrete parapets have light to moderate scaling, random map cracking with efflorescence, and random hairline cracks with efflorescence and rust, some of which are slightly open. Former 4" deep void at the base of the north parapet in span 1 has been repaired since the last inspection. The outside face of the southeast wingwall parapet has random spalls up to 1' x 1' x 1" deep. There are concrete barriers mounted on top of the south safety walk throughout, and on top of the north safety walk in spans 6-10. The adjacent concrete barriers have up to 2.5" lateral misalignment and barriers overhang the curbs by up to 3". The barriers have random deteriorated grout pockets, scrapes/gouges, spalled/deteriorated mortar beds, and hairline map and linear cracking, both with random rust and/or efflorescence. The bottoms of the barriers have random large spalls up to 4" deep x 8" high with random exposed rebar. There are also hollow areas and spalls up to 2" deep in the barriers along the vertical joints. The north barrier in span 8 has a 2.5' x 1' x full depth spalled/hollow area with exposed rebar. Steel plates in the barriers have random minor impact damage. The previous missing and loose bolts in the steel plate at the span 10 south barrier have been repaired. See sheets 22-29 & 121 and photos 17 - 20.
RAILING:	6	There is no railing on top of the south parapet. There is a single aluminum railing along the north roadway parapet in spans 1-6 with random minor scrapes. The steel two-pipe railing along the north fascia parapet in spans 1-6 has light to moderate rust throughout. One pipe section is missing from the north fascia railing in span 5. See sheets 22-29 and photos 17 – 21
PAINT:	5	Less than 50% of the painted surfaces are rusting along the two-pipe railing along the north roadway parapet. Also, see above item.
FENCE:	N	-
DRAINS:	4	Scupper grates/basins: There are a total of seven clogged scuppers in spans 2,5, 6, 9 and 10. Other random scupper grates are up to 20% clogged, but pipes are clear. See sheets 23-29 and photo 22. Drain pipes: There is a disconnected/missing scupper pipe in bay 1, span 2 that drains onto the pier 1 cap. There is an abandoned joint trough drain with no downspout at the north

		end of the span 3 pin & hanger joint that was leaking at the time of inspection. The drain pipe is missing at the scupper at the northwest corner of span 4 and was draining onto the cap at the time of inspection. There is a scupper pipe that is disconnected and has debris inside at the southeast corner in the hung portion of span 6. There is a missing scupper pipe clean-out cover at the southwest corner of the hung portion of span 6 and at the east elevation of pier 6. The scupper pipe is clogged at the southeast corner of the hung portion of span 9. A scupper pipe is disconnected in the southwest corner of span 10 and the pipe sounds clogged when tapped with a hammer. See sheets 70-139 and photos 23-26. Weep pipes: The span 3 & 4 weeps in bay 2 are short and drain onto bracing members or pier caps at four locations. One weep at the southeast corner of span 3 drains onto a PVC scupper pipe. Weep pipes have been repaired at several locations throughout the structure. See sheets 66-118 and photos 27-28.
LIGHTING STANDARD:	4	One of four anchor bolt covers is missing from the light standard base at the south parapet in span 9. The junction box cover at the pier 1 base has random missing screws, but the cover is secure. The under-bridge lights in span 1 were not on during the daytime inspection. See sheets 23-29 & 70. There are small conduits for under-bridge lighting that are connected to the superstructure in several spans. Several consecutive conduit hangers are disconnected, rusted out, or broken in spans 1 and span 6 at several locations, allowing the conduit to sag up to 1.5' at several locations. The transverse conduit at the northwest corner of span 6 is disconnected from girders 1-3, the conduit is separated, hangs down significantly and wires are exposed (located behind a fence – no pedestrian access). In addition, two conduit elbows/couplers have access covers that are missing or rusted through, exposing wires in span 1 (not accessible by pedestrians). BS&E was notified about sagging conduits in span 1 via email on August 14, 2012. Overall rating is decreased due to consecutive broken conduit hangers, allowing conduits to sag. See sheets 70-118 and photos 29-31.
UTILITIES TYPE/SIZE:	N	See "Light Standards" item above for deteriorated under-bridge light conduits.
CONSTR JOINTS:	6	Construction joints have areas of efflorescence and past water leakage (no change).
EXPANSION JOINTS:	4	Asphaltic plug joints: The asphaltic plug joints in the left and left-center lanes in spans 1-3 have been recently replaced. The old portions of these joints, as well as the other asphaltic plug joints, have moderate to heavy wheel rutting, random settled/depressed areas up to 1" deep, heavy wear, and random bituminous patches. There are also random cohesion and adhesion cracks up to 1.5" wide (±100 total linear feet), joint plates were visible at isolated cracks (pier 5, west hinge joint), up to ¾" deep raveling/potholes in the joint material, and heaving up to 2" high (span 3, east line of hangers near the right shoulder line). There are isolated potholes in paved over joints in the unused portion of the roadway between the north fascia parapet and north roadway parapet. The ends of the east abutment joint are settled 1" due to settlement of the adjacent approach bituminous. Active leakage was noted at the span 3 hinge joint. See sheets 23-29 and photos 32-35. Elastomeric concrete headers with pourable sealant joints: The elastomeric concrete headers at pier 4 have cracks up to 1/8" wide, and random hollow areas. This joint has a 4' long x full width bituminous patch and the adjacent 8' of header to the north is breaking up; these areas vibrate and bang under live load. BS&E was notified about this condition on the day of inspection. Headers at other joints have random large hollow areas, cracks up to ¼" wide, and corner spalling. The west header at the north end of the west pin & hanger line in span 9 is ½" higher than the east header. The headers at the east line of pin & hangers in span 9 have hollow, map cracked, and breaking up areas with up to ¼" depressions. The east header in the right/ramp lane is heaved up to 1.5" and hollow. The sealant is debonded for the full length of some joints. Some areas have foam in place of sealant. Random recent repairs have been made to the headers. There are gaps up to 3/4" wide between the headers and bituminous. No change was noted to the 7" long crack in the curb plate at the north end of the joint at the span 6, east pin & hanger line. BS&E was notified about the deteriorated joints via email on September 6, 2012 and a Priority B BMM was issued at that time for the

	vibrating header at pier 4. See sheets 23-29 & 70-118 and photos 35-39 & 91.

59. SUPERSTRUCTURE: -

Overall Rating: 4 5

See

	Rating	
BEARING DEVICES:	5	Rocker bearings: Rocker bearings have peeling paint and varying degrees of rust, up to laminated. There is crushed rust, laminated rust, and random debris under the curved rocker surface, in some cases filling that void between the underside of the rocker and masonry plate. In addition, there is up to 1/4" impacted rust between the rockers and masonry plates at their point of contact. Impacted rust below the span 5, girder 5 rocker at pier 4 is uneven, causing the rocker and girder to be out of plumb, up to ¼" over 9" (measured at the girder web). Anchor bolt nuts are backed off at some locations, and some nuts have rosebudding with up to 60% section loss. Random bearings show little to no evidence of movement when comparing previous bearing measurements. Random masonry plates have minor undermining due to spalling of the pedestals (<5% undermining). See sheets 32-36 and photos 40-42. Sliding bearings: Sliding bearings at the east abutment have light to moderate rust and random anchor bolt nuts are not fully engaged. Note that all bearings were in contraction at 80 degrees Fahrenheit, indicating possible abnormal movement. See sheet 37 and photo 43. Fixed bearings: Fixed bearings have areas of light to moderate rust and random tipped anchor bolts. Bearings at pier 9 have isolated laminated rust (girder 1) and up to 3/8" impacted rust under the anchor bolt washers (girder 9). Random masonry plates have minor undermining due to spalling of the pedestals (<5% undermining). Spalls expose isolated anchor bolts. See sheets 66-118 and photos 44-45. Fixed hinges: The fixed hinges have light rust on the assemblies and bolts/nuts (span 3). Random nuts turn when struck; note that all cotter pins are in place. There are areas of staining due to joint leakage (isolated active leakage at the time of inspection). There is random abrasion rust where hanger plates and pins rub. Hinges in span 6 have up to ¼" gaps between the webs and hinge plates. See "Girders" item below for section losses to the girders at the hanger locations. All measurements were within 1/8" of previous measurements, except for the span 6, girder 6 "V" measurement which would actually indicate that the hung span has risen since the last inspection. All measurements were double checked and no areas of distress were noted. No deficiencies were noted during the ultrasonic testing of the pins. See sheets 42-45 & 50-53 and photos 46-47. Expansion hangers: The span 1 hanger plates have minor bows and light rust is starting to form on the plates. In addition, the span 1 deck ends are in contact at the pin and hangers, leaving no room for expansion and causing the underside of the deck ends to spall. Wind locks have areas of heavy rust, isolated laminated rust with up to 3/16" section loss (span 1) and abrasion rust where the plates rub. There is random heavy staining from previous joint leakage (dry at the time of inspection) and random heavy pigeon debris. Random nuts turn by hand or when struck with a hammer (cotter pins are in place). There are up to 3/16" gaps between the hanger nuts and hanger plates at the west line in span 9. All "V" measurements were within 1/8" of last inspection, except at span 9, west line, girder 7 where the "V" measurement varied by ¼", but is most likely due to laminated rust that was removed for the measurement. Also note that the span 9, girder 2 east hanger "V" measurement varied by 3/16" since the last inspection. Random top and bottom measurements varied by up to 3/16" from the last inspection. All measurements were typically double checked and no areas of distress were noted. Also, these

		larger discrepancies were compared against past measurements for any trends. "J" measurements at the span 1, 6 & 9 hanger lines indicate that the girders are moving in the proper direction based on the temperature change; however, the amount of movement is greater than expected/theoretical. This may be due to the large skew/alignment of the girders at these hanger lines. Also, the bottom flanges of girder 7 at the span 9 east hanger line were within 1/16" of each other and touched under live load during the inspection. Note that expansion of hangers in this line is limited by bottom flange openings, not the "J" web openings, due to skew. No deficiencies were noted during the ultrasonic testing of the pins. See sheets 38-41, 46-49 & 54-65 and photos 48-51.
STRINGERS:	N	-
GIRDERS:	~~4~~ 5 SEE, 5 L.C.C. THERE IS NO JUSTIFICATION OF LOWER RATING. SEE. 10/16/12 Work to begin on worse beam ends. See sheets 67, 68 + 69 for locations "5" Priority Leo Cain Jr. 10/22/12	Girders: The girder top and bottom flanges have random varying degrees of laminated rust and section loss near the bearings in non-critical zones. In critical zones, the fascia girder bottom flanges have areas of up to 1/2" deep section loss (span 7, girder 9) resulting in at least 5% section loss in four locations, up to a maximum of 18% bottom flange loss (span 6, girder 9). The adjacent webs and stiffeners have section losses, typically not more than 1/8" deep (less critical zones). See below for web loss in critical zones. What about G1 (fascia girder)? — SEE 2010 REPORT SEE The girder webs at piers 4 and 7 have numerous areas with web losses in bearing in excess of 25% and up to 88% worst case (span 5, girder 9 at pier 4). Girder ends at these locations have deep section losses and/or rusted through holes in the webs and/or stiffeners, typically in the bottom 5". There are a total of 5 locations of greater than 50% bearing loss. Despite these losses at the web bases, web losses in shear are less than 10% at all locations at the piers, and there are no signs of any buckling/crippling. The girder webs and stiffeners at the hinges and hangers have areas of section losses, up to 5/8" total in the thickened web bases (Span 1, girder 2 – 1" original) and adjacent stiffener bases have as little as 1/16" remaining (span 1, girder 2 at the hanger). There are isolated rusted through holes in the base of the span 6, girder 9 web base (non-thickened area), just past the web transition at the hinge (west line). Random webs have section losses in their upper portions. Despite the above noted losses, web losses in shear are less than 10% at the hinges and hangers. Diaphragms: End diaphragms below the joints have areas laminated rust and areas of heavy section loss, worst along the channel flanges and lower horizontal strut angles. Random flanges and/or angle legs are rusted through. Also, the top 4.5" of an end diaphragm channel connection plate at the span 1, girder 2 hanger has rusted out. The span 8 end diaphragms at pier 7 are encased in concrete and have numerous large hollow and spalled areas with exposed rebar. Note that these hollow areas are over local roads and/or dirt areas where people were seen parking (loose concrete was removed at the time of inspection). Lateral bracing members: Lateral bracing members have random areas of laminated rust due to leakage from short weeps above. See "Drains" item above. General: Also see "Collision Damage", "Welds-Cracks" and "Member Alignment" items below for related deterioration to the girders and diaphragms. There are areas of heavy pigeon debris on the girders, diaphragms, and bracing members. Per CT BIM Section 10.5, rating could be lowered to a "3" due to section losses noted above. However, since there are no signs of buckling/crippling at deteriorated web ends at piers 4 & 7, rating is lowered only to a "4". See sheets 66-118 and photos 27, 52-64.
FLOOR BEAMS:	N	-
TRUSSES-GENERAL:	N	-
TRUSSES-PORTALS:	N	-
TRUSSES-BRACING:	N	-

PAINT:	5	There are random areas of peeling paint and active rust with section loss; see above items. Less than 50% of the paint system is deteriorated.
RUST:	3	See above items.
MACHINERY MOV SPAN:	N	-
RIVETS & BOLTS:	6	There is a broken bolt in the bottom flange splice in the hung portion of girder 1 in span 9 (no change). Bolted splices were check hands-on. Random splice bolts have light to moderate surface rust. See sheets 66-118 and photo 65.
WELDS - CRACKS:	6	There are random sloppy welds throughout, particularly overhead welds. There is a short vertical plate at the north elevation of girder 6 in span 8 near pier 8 that is only tack welded in place. Bottom flange transitions (fatigue category B) were inspected hands-on; no deficiencies were found. Lateral gusset plate welds in tension zones (fatigue category E) were inspected hands-on, and some were found to be sloppy while others were missing or incomplete (no cracks noted). Some welds appear to be missing due to insufficient room for welding. Isolated previously reported cracked welds in spans 1 and 9 are repaired, while isolated previously reported cracked welds appeared to be sloppy, not cracked. See sheets 70-118 and photos 66-67.
TIMBER DECAY:	N	-
CONCRETE CRACKING:	N	-
COLLISION DAMAGE:	5	Random diaphragm members are bowed/bent up to 4". The bottom flange of span 1, girder 1 has random scrapes and gouges up to 2.5" long x 3/4" wide x 5/16" high along its bottom edges that are not ground flush. The span 9 girder 5 bottom flange splice plate has a 4" wide x 1/8" deep gouge. A previous cracked stiffener/connection plate weld due to previous impact damage at the south side of span 1, girder 1 was previously repaired. The diaphragm in this area is bent/bowed 2" and the stiffener is slightly bent. See sheets 70-118 and photos 68-69.
MEMBER ALIGNMENT:	5	The deck ends at the pin and hanger in span 1 were in contact at the time of inspection (83 degrees Fahrenheit). Impacted rust below the span 5, girder 5 rocker at pier 4 is uneven, causing the rocker and girder to be out of plumb, up to ¼" over 9" (measured at the girder web). The girders in the hung portion of span 6 have an estimated 2"-3" of sag, and girder 1 is ¼" out of plumb over 9". Girders in others spans also have negative camber. The bottom flanges of girder 7 at the span 9 east hanger line were within 1/16" of each other and touched under live load during the inspection. See sheets 70-118 and photos 41 & 70-73
DEFLECT. UNDER LOAD:	N	Normal.
VIBRATION UNDER LOAD:	N	Normal.
STAND PIPES:	N	-
BARREL LADDERS:	N	-

ARE BARREL LADDERS OSHA COMPLIANT? N/A

---

60. SUBSTRUCTURE:	-	**Overall Rating:**	6

	Rating	
ABUTMENTS-STEM:	6	The abutment stems have random concrete patches, random hairline cracks with efflorescence, silt stains, minor popouts, and missing/deteriorated joint fill material. Stems have random 1" deep spalls with isolated exposed rebar. The west abutment stem has several hollow areas up to 2.5' x 15" with isolated adjacent spalling. Note that these hollow areas are next to a sidewalk. The east abutment south end face has a large concrete patch with map cracking with efflorescence, as well as a 2

		square feet hollow area with minor spalling. See sheets 119-121 and photos 74-75. The concrete pedestals have spalls with and without exposed rebar that are up to full length x full height x 2" deep and extending up to 6" across the tops of the pedestals (girder 5 pedestal at the east abutment). Isolated other pedestal spalls are smaller, but up to 3" deep. Pedestals have random hollow areas, including girder 4 at the west abutment where a hollow area next to a spall has cracks up to 1/16" wide. Note that there is an adjacent sidewalk at this location. Pedestal spalls do not undermine the abutment bearings. See sheets 119-120 and photos 44 & 76.
ABUTMENTS-BACKWALL:	6	The concrete backwalls have silt staining, random popouts, deteriorated/missing joint fill material, and hairline cracks with random efflorescence. The west abutment backwall has a total of 3 square feet of hollow concrete and random spalls up to 2" deep. Note that there is a sidewalk adjacent to the abutment. The east abutment backwall has 3 square feet of hollow concrete and a 2' x 1' x 6" deep corner spall behind girder 9. See sheets 119-120 and photo 77.
ABUTMENTS-FOOTINGS:	N	Not visible.
ABUTMENTS-SETTLEMENT:	7	The northeast and southeast wingwall bases are misaligned/pushed out up to 1-1/8" past the east abutment end faces at the chisel marks near the ground. The tops of these wingwalls are pushed out an additional 5/16" at the chisels marks 12' above. All measurements are within 1/16" of previous measurements. See sheet 121.
ABUTMENTS-WINGWALLS:	6	The northwest and southwest wingwalls have random hairline cracks, isolated shallow rebars, light scaling, and an isolated 15" x 5" x 6" deep corner spall with exposed rebar. The northeast and southeast wingwalls have random small hollow areas, hairline cracks with light efflorescence, light scaling, deteriorated joint fill material, and random spalls/scrapes up to ½" deep. See sheets 119 & 121 and photo 78.
PIERS/BENTS-CAPS:	6	The concrete pier caps have numerous hairline cracks, hairline map cracking, minor honeycomb, and light scaling. There are random hollow areas up to 5' x 3' (pier 7) with random adjacent spalling up to 1.5" deep. There are random spalls with exposed rebar up to 2.5 square feet in area (pier 3) and up to 3" deep (pier 6). There are also pockets of scaling up to ¾" deep (pier 4). Concrete patches have map cracking with areas of rust and efflorescence. Patches also have perimeter voids up to 1" deep with random adjacent concrete. The rub coat is spalling off at some locations. See sheets 122-139 and photos 79-81 The concrete pedestals have small popouts and random hairline cracks that extend below the bearings; isolated cracks are 1/32" wide. Random pedestals have hollow areas with 1/16" wide cracks. The pedestals have random spalls with exposed rebar up to full length x full height x 5" deep with random undermining that is typically less than 5%. Girder 2, 6 & 9 pedestals at pier 3 have spalls with exposed anchor bolts. Pedestal deterioration is worst at the east elevation of pier 4, where all pedestals have spalled and/or hollow areas. See sheets 122-139 and photos 45 & 82.
PIERS/BENTS-PILE BENT:	N	-
PIERS/BENTS-COLUMNS:	6	The concrete pier columns have random cracks, some with rust and/ or efflorescence and up to 1/8" wide at isolated locations (pier 7, column 2). There are also random shallow rebars, light scaling, and popouts. There are hollow areas up to 20' x 3' (pier 7, column 2) and spalls with exposed rebar were found to be up to 6' high x 16" wide x 3" deep (pier 2, column 1). Pier columns have large concrete patches with hairline cracks and map cracking, both with random rust and efflorescence. The concrete patches at pier 4, column 3 have map cracking with dampness and 1/16" wide cracks with rust. Random patches are dull sounding. There is concrete between the pier 1 base that looks the same as the bridge railing for an adjacent bridge. This concrete has random hollow areas, cracks up to 1/8" wide and spalls up to 6" deep with random exposed rebar. See sheets 122-139 and photos 79, 83 & 84.
PIERS/BENTS-FOOTING:	N	Not visible.

PIERS/BENTS-SETTLMT:	8	-
EROSION-SCOUR:	6	There is erosion around the perimeter of pier 3, column 3, up to 2' wide x 1' deep. See sheet 126.
CONCRETE CRACK-SPALL:	6	See above items.
STEEL CORROSION:	N	-
PAINT:	N	-
TIMBER DECAY:	N	-
COLLISION DAMAGE:	7	There are random scrapes up to ½" deep in the substructure units, most likely from construction. See sheets 119-139.
DEBRIS:	5	There are areas of moderate to heavy pigeon, sand, and concrete debris on the bridge seats. See sheets 119-139 and photo 85.

---

61. CHANNEL & CHANNEL PROTECTION:	-	Overall Rating:	N

---

62. CULVERTS & RETAINING WALL:	-	Overall Rating:	N

---

65. APPROACH CONDITION	-	Overall Rating:	5

	Rating	
APPROACH SLAB:	5	Paved over. Rating is based on the condition of the approach pavement. See "Approach Pavement" item below.
RELIEF JOINTS:	N	None visible.
APPROACH GUIDE RAIL:	5	Concrete approach barriers have scrapes, random spalls up to 2.5" deep, deteriorated grout pockets, up to 1" lateral misalignment, and random hairline cracks with areas of rust and/or efflorescence. The northwest approach has a 2' x 1' x full depth spalled area with exposed rebar, adjacent hollow areas and a 1/8" wide crack. The southwest barrier has a 4' x 10" x full depth spalled and hollow/broken area. The impact attenuator at the east approach gore area has moderate damage. See sheets 24, 25 & 29 and photos 86-88.
APPROACH PAVEMENT:	5	The west approach pavement near the bridge has heavy raveling (up to 1.5" deep), settled patches, heavy map cracking, and approximately 4 square feet of potholes up to 1.5" deep. Farther from the bridge, the west approach pavement is newer and has light wheel rutting, random linear cracks, and areas of map cracking up to 1' wide. See sheets 24-25 and photo 89. The east approach bituminous in the ramp and gore is older and has heavy raveling (up to 1" deep), uneven patches, and heavy map cracking. The pavement is settled up to 1" adjacent to the joints in the shoulder areas. There are also random potholes and/or areas of peeled bituminous up to 1.5" deep in the right lane near

		the bridge and the gore area near the attenuator. The approach pavement in the travel lanes is newer (skim coat between the shoulder lines) and has minor raveling along the seams, isolated bituminous patches, and random linear cracks and map cracking, typically less than ¼" wide. See sheets 24 & 29 and photo 8 & 90.
APPROACH EMBANKMENT:	8	-

TRAFFIC SAFETY FEATURES

	Rating	
BRIDGE RAILINGS:	Last Inspection: 0 Current: 0	Do not meet current standards for NHS bridges (<42" high solid concrete in spans 1-6).
TRANSITIONS:	Last Inspection: 1 Current: 1	Meet current standards (jersey barrier with smooth transitions).
APPROACH GUARDRAILS:	Last Inspection: 1 Current: 1	Meet current standards (jersey barriers).
APPR. GUARDRAIL ENDS:	Last Inspection: 1 Current: 1	Meet current standards (continuous highway barriers).

36. LOAD POSTING

	- Posted Loading -	
SINGLE UNIT (TONS):	Last Inspection: - Current: -	-
SEMI TRAILER (TONS):	Last Inspection: - Current: -	-
4 AXLE (TONS):	Last Inspection: - Current: -	-
3S2 (TONS):	Last Inspection: - Current: -	-
ADVANCE WARNING (Y/N):	N	-
LEGIBILITY:	N	-
VISIBILITY/LOCATION:	N	-

67. MISCELLANEOUS

	Rating	
MIN. VERT.	Last Inspection:	Over Asylum Street. See clearance diagrams, sheets 18-20.

UNDERCLEARANCE:	14' 0" Current: 14' 0"	
POSTED CLR. UNDER BRIDGE:	Last Inspection: 13' 9" Current: 13' 9"	Posted on Asylum Southbound <0.1 mile north of the bridge only. There are no clearance posting signs for Asylum Northbound between the bridge and Spruce Street. However, just south of Spruce, there is a RR bridge that is posted for 13'-5".
POSTED CLR. ON BRIDGE:	Last Inspection: -' -" Current: -' -"	-
ADVANCED WARNING (YES/NO):	No	-
SPEED LIMIT (IF ANY):	Last Inspection: 40 Current: 50	Posted on Bridge. See photo 92.
CHARACTER OF TRAFIC:		Heavy volume, mixed vehicles.

ADDITIONAL NOTES:

Bridge ID is legible.
Bridge is labeled from west to east, with girders now labeled from north to south per CT BIM section 6.1 and per BS&E email dated August 8, 2012. Girders were previously labeled from south to north, per the original plans.
Bridge was inspected using a 45' lift truck and 80' manlift.
Hartford police were used for closures over local roads.
AMTRAK flagman was present for span 9 over AMTRAK.
State trooper and crash trucks were used for I-84 rolling pattern for top of deck inspection during daytime hours.
ConnDOT maintenance opened the gate in the parking lot adjacent to the bridge for access to spans 2-5 (contact Bill Morrison at 860-566-3102).
Also contact Djay Gonzalez at 860-209-9554 (extension 3080) to notify parking attendants of inspection in parking areas adjacent to bridge.
ConnDOT maintenance moved a concrete barrier on Hoadley Place to allow access to span 10 and a portion of span 9 (contact Bill Morrison at 860-566-3102).
Access to the west side of the AMTRAK railway was achieved by having Central New England RR open a lock on a gate to an abandoned lot along Edwards Street. A bucket truck was then driven across the Central New England RR track and then along the AMTRAK track. Note that freight cars can be parked at this area, possibly blocking access. Main office contact for Central New England RR is 860-666-1030 or 860-666-1636 (Debbie Bellavue, office manager).
Access to the east side of the AMTRAK railway was achieved via a dirt access road off of Windsor Street through a locked gate that the AMTRAK flagman opened.

ADDITIONAL COMMENTS:

A BMM was submitted with this report. Also note that Priority B BMM's for deteriorated/vibrating joint headers and loose haunches adjacent to traffic/parking were sent in advance of this report. A Priority C BMM was also sent in advance of this report for significant steel section losses and widespread hollow concrete in the deck and substructure.

Inspectors' Signatures:

1) _____ Date: 10/9/2012

2) _____ Date: 10/9/2012

	3)	Date: ----/----/------ --
	4)	Date: ----/----/------ --
P.E. Signature:		Date: 10/9/12 --
P.E. #:	20004	Date: ----/----/------ --
Reviewed by:	conndot	Date: 10/17/12 --

Baker

SUPPLEMENTAL SHEET

☒ FIELD ORIGINAL ☐ TRANSCRIBED BY:_____

BRIDGE NO. 1765

CREW: SEE BELOW

DATE: SEE BELOW

SHEET 13/193

DESCRIPTION: TIME LOG

			DESCRIPTION:	TIME AT SITE:	
DATE:	8/13/12				
WEATHER:	SUNNY 80'S	CREW:	MJO, BH	8:00	TO 4:00 ±
EQUIP. LIST:	CUBE	SNOOPER:			TO
		LIFT:	BKR	8:00	TO 4:00
		CRASH TRUCK:			TO
ARROW HRS.	TO	TROOPER:			TO
VISITORS:		HTFD PD	: MURTHA	9:00	TO 3:00

TC & NOTES: LOCAL CLOSURE ON ASYLUM AVE ; SP #1 HH's, ED D's + U/S D's @ SP #1 PH; CONDUIT HANGING ;

			DESCRIPTION:	TIME AT SITE:	
DATE:	8/14/12				
WEATHER:	VARIABLE, 80'S	CREW:	JM, PB, BH, MJO	7:10	TO 4:00
EQUIP. LIST:	PICK-UP	SNOOPER:	–		TO
		LIFT:	RENTAL 40'; 80' MANLIFT	7:10	TO 4:00
		CRASH TRUCK:	–		TO
ARROW HRS.	TO	TROOPER:	–		TO
VISITORS:		RR FLAG	: (1) AMTRAK : R. GIGURE	7:00	TO 2:15

TC & NOTES: INST PARTS OF SP 9 OVER RR

			DESCRIPTION:	TIME AT SITE:	
DATE:	8/15/12				
WEATHER:	SUNNY 80	CREW:	MJO/BH	8:00	TO 4:00
EQUIP. LIST:	CUBE	SNOOPER:	–		TO
		LIFT:	80' MAN LIFT	8:00	TO 4:00
		CRASH TRUCK:	–		TO
ARROW HRS.	TO	TROOPER:			TO
VISITORS:		HTFD PD.	: MURTHA	9:00	TO 3:00

TC & NOTES: INST PARTS OF SP # 7 + 8

			DESCRIPTION:	TIME AT SITE:	
DATE:	8/16/12				
WEATHER:	MORNING SHOWERS, PCLOUDY 75°F	CREW:	MJO, JAC, VS, BH.	8:00	TO 4:20 ±
EQUIP. LIST:	CUBE	SNOOPER:			TO
		LIFT:	RENTAL 40', 80' MANLIFT, BAKER 40'	8:00	TO 4:20 ±
		CRASH TRUCK:			TO
ARROW HRS.	TO	TROOPER:			TO
VISITORS:		HTFD PD	: KUCHY	8:30	TO 1:30

TC & NOTES: INSPECTED SPANS 2+3, PARTIAL 4+5, PIERS 1-3 O/PIRT ADJ TO PARKING LOT SP #8 OVER SPANCE IN CONJ W/ 1766 OVER SPANCE

Baker

SUPPLEMENTAL SHEET

☒ FIELD ORIGINAL ☐ TRANSCRIBED BY:

BRIDGE NO. 1765	DATE: SEE BELOW
CREW: SEE BELOW	SHEET 14/193

DESCRIPTION: TIME LOG

DATE: 8/20/12
WEATHER: VARIABLE, 70'S
EQUIP. LIST:
ARROW HRS. TO
VISITORS: BILL MORRISON

	DESCRIPTION:	TIME AT SITE:
CREW:	MJO, BH	8:30 TO 3:45
SNOOPER:	—	TO
LIFT:	80' MAN LIFT	TO
CRASH TRUCK:	—	8:30 TO 3:45
TROOPER:	—	TO
:	—	TO

TC & NOTES: WORKED IN PARKING LOT - FINISHED SP #5 + PART OF SP #4; MET W/ MR. MORRISON ABOUT MOVING BARRIERS @ HOADLEY RD.

DATE: 8/21/12
WEATHER: SUNNY, 80
EQUIP. LIST:
ARROW HRS. TO
VISITORS: STAUGHEN, LAPIERRE, VAN ALLEN, MORRISON; BS&E.

	DESCRIPTION:	TIME AT SITE:
CREW:	MJO, BH	8:00 TO 4:15
SNOOPER:	—	TO
LIFT:	80' MAN LIFT	8:00 TO 4:15
CRASH TRUCK:	—	TO
TROOPER:	—	TO
:	—	TO

TC & NOTES: FINISHED SP #6 OVER LOT

DATE: 8/22/12
WEATHER: SUNNY 80'S
EQUIP. LIST: RAM
ARROW HRS. TO
VISITORS:

	DESCRIPTION:	TIME AT SITE:
CREW:	MJO, BH	8:00 TO 4:15
SNOOPER:	—	TO
LIFT:	(2) 40' E-L LIFTS	8:00 TO 4:15
CRASH TRUCK:	—	TO
TROOPER:	—	TO
:	—	TO

TC & NOTES: INSP REST OF SP #9, 10, 4 & 5 OVER DIRT (NO T.C.)

DATE: 8/23/12
WEATHER: PSUNNY 80'S
EQUIP. LIST:
ARROW HRS. TO
VISITORS: D. TASSAVOR

	DESCRIPTION:	TIME AT SITE:
CREW:	JAC	8:30AM TO 3:15PM
SNOOPER:	—	TO
LIFT:	40' BAKER LIFT	8:30AM TO 3:15PM
CRASH TRUCK:		TO
TROOPER:		TO
VT TEST :	JEFF W.	9:00AM TO 3:00PM

TC & NOTES: VT TESTING ON SPAN 9 EAST P+H LINE COMPLETE.

Baker

SUPPLEMENTAL SHEET

☒ FIELD ORIGINAL ☐ TRANSCRIBED BY:_____

BRIDGE NO. 01765 | DATE: SEE BELOW

CREW: SEE BELOW | SHEET 15/193

DESCRIPTION: TIME LOG

DATE:	8/24/12		DESCRIPTION:	TIME AT SITE:	
WEATHER:	P SUNNY 80'S	CREW:	JAC	8:15AM TO	3:45PM
EQUIP. LIST:		SNOOPER:		TO	
		LIFT:	80' MAN LIFT	8:15AM TO	3:30 PM
		CRASH TRUCK:		TO	
ARROW HRS.	TO	TROOPER:		TO	
VISITORS:		UT TEST:	JEFF W.	8:30 AM TO	3:30 PM
TC & NOTES:	COMPLETED BOTH LINES IN SPAN 6.				

DATE:	8/27/12		DESCRIPTION:	TIME AT SITE:	
WEATHER:	P. SUNNY 80'S	CREW:	BH	8:15AM TO	5:00PM
EQUIP. LIST:		SNOOPER:		TO	
		LIFT:	E-L 33'	8:15AM TO	5:00PM
		CRASH TRUCK:		TO	
ARROW HRS.	TO	TROOPER: HARTFORD PD		8:30AM TO	3:00PM
VISITORS:		UT TESTER:	DAVE B.	9:30AM TO	5:00PM
TC & NOTES:	UT TEST SPAN 1 (ALL PINS). & SPAN 9, W. PRIT, G1-G3.				

DATE:	9/6/12		DESCRIPTION:	TIME AT SITE:	
WEATHER:	SUNNY 80'S	CREW:	MJ/BH	8:30 TO	2:45
EQUIP. LIST:	CUBE	SNOOPER:	–	TO	
		LIFT:	–	TO	
		CRASH TRUCK:	(4)	TO	
ARROW HRS.	TO	TROOPER:	KASPCNOWSKI #193	8:45 TO	2:45
VISITORS:	TASSAWOR, ~2:00 PM	TROOPER:	SANDERS #973	8:45 TO	2:45
TC & NOTES:	ROLLING PATTERN – RT + LT LN				

DATE:	9/11/12		DESCRIPTION:	TIME AT SITE:	
WEATHER:	SUNNY, 80'S	CREW:	MJ; UT TESTER	7:00 TO	1:45
EQUIP. LIST:	BKR LIFT	SNOOPER:		TO	
		LIFT:	BKR	7:00 TO	1:45
		CRASH TRUCK:	–	TO	
ARROW HRS.	TO	TROOPER:	–	TO	
VISITORS:		AMERICAN FLAG:	CLIFF	7:00 TO	1:15
TC & NOTES:	UT TESTED PINS – FINISHED N. LINE SP #9				

Baker

SUPPLEMENTAL SHEET

☒ FIELD ORIGINAL ☐ TRANSCRIBED BY:

BRIDGE NO. 01765

DATE: SEE BELOW

CREW: SEE BELOW

SHEET 16/193

DESCRIPTION: TIME LOG

DATE: 9/12/12
WEATHER: SUNNY 75°F
EQUIP. LIST: 40' LIFT
ARROW HRS. TO
VISITORS:
TC & NOTES: INSP COMPLETE

	DESCRIPTION:	TIME AT SITE:
CREW:	BH	8:00 TO 2:00
SNOOPER:		TO
LIFT:		TO
CRASH TRUCK:		TO
TROOPER:		TO
UT TESTER:	DAVE	8:00 TO 2:00

DATE:
WEATHER:
EQUIP. LIST:
ARROW HRS. TO
VISITORS:
TC & NOTES:

	DESCRIPTION:	TIME AT SITE:
CREW:		TO
SNOOPER:		TO
LIFT:		TO
CRASH TRUCK:		TO
TROOPER:		TO
:		TO

DATE:
WEATHER:
EQUIP. LIST:
ARROW HRS. TO
VISITORS:
TC & NOTES:

	DESCRIPTION:	TIME AT SITE:
CREW:		TO
SNOOPER:		TO
LIFT:		TO
CRASH TRUCK:		TO
TROOPER:		TO
:		TO

DATE:
WEATHER:
EQUIP. LIST:
ARROW HRS. TO
VISITORS:
TC & NOTES:

	DESCRIPTION:	TIME AT SITE:
CREW:		TO
SNOOPER:		TO
LIFT:		TO
CRASH TRUCK:		TO
TROOPER:		TO
:		TO

Baker

SUPPLEMENTAL SHEET

☒ FIELD ORIGINAL ☐ TRANSCRIBED BY: ____

BRIDGE NO. 1765	DATE: VARIOUS
CREW: VARIOUS	SHEET 17 OF 193

DESCRIPTION: KEY PLAN

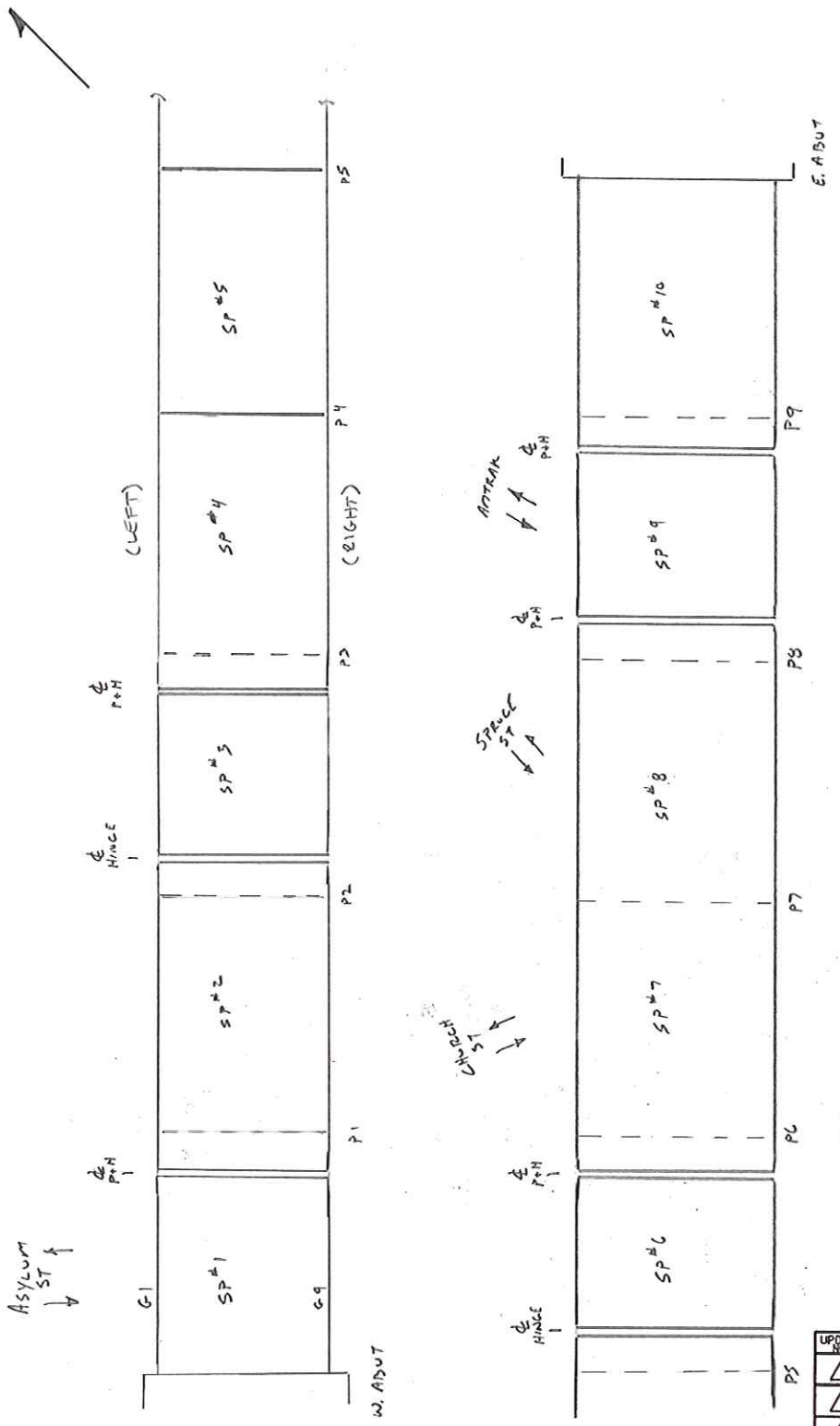

KEY PLAN

UPDATE NO.	DATE	COMPANY	CREW
△			
△			
△			
△			

Baker

SUPPLEMENTAL SHEET

☒ FIELD ORIGINAL ☐ TRANSCRIBED BY:_____

BRIDGE NO. 01765	DATE: 8/13/12
CREW: BH/JSD	SHEET 18/193

DESCRIPTION: CLEARANCE DIAGRAM

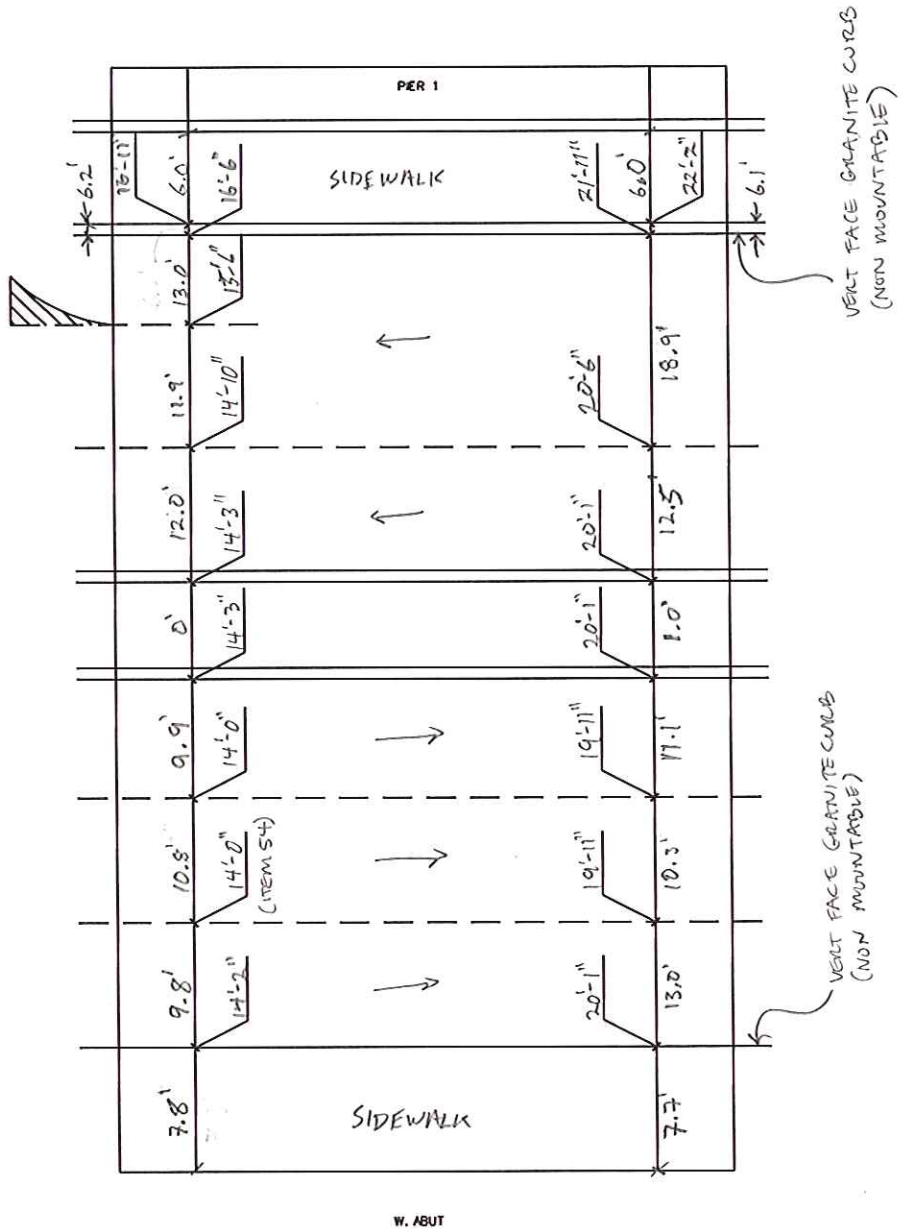

SPAN 1 OVER ASYLUM STREET (NTS)

UPDATE NO.	DATE	COMPANY	CREW
△			
△			
△			
△			

Baker	☒ FIELD ORIGINAL ☐ TRANSCRIBED BY: ____	STRUCTURE: 01765	DATE: 8/15/12
		CREW: MJD/BH	SHEET: 19/193

DESCRIPTION: CLEARANCES

LEGEND
X = LAY WILL BE CONTROLED BY ADJACENT BRI #1966

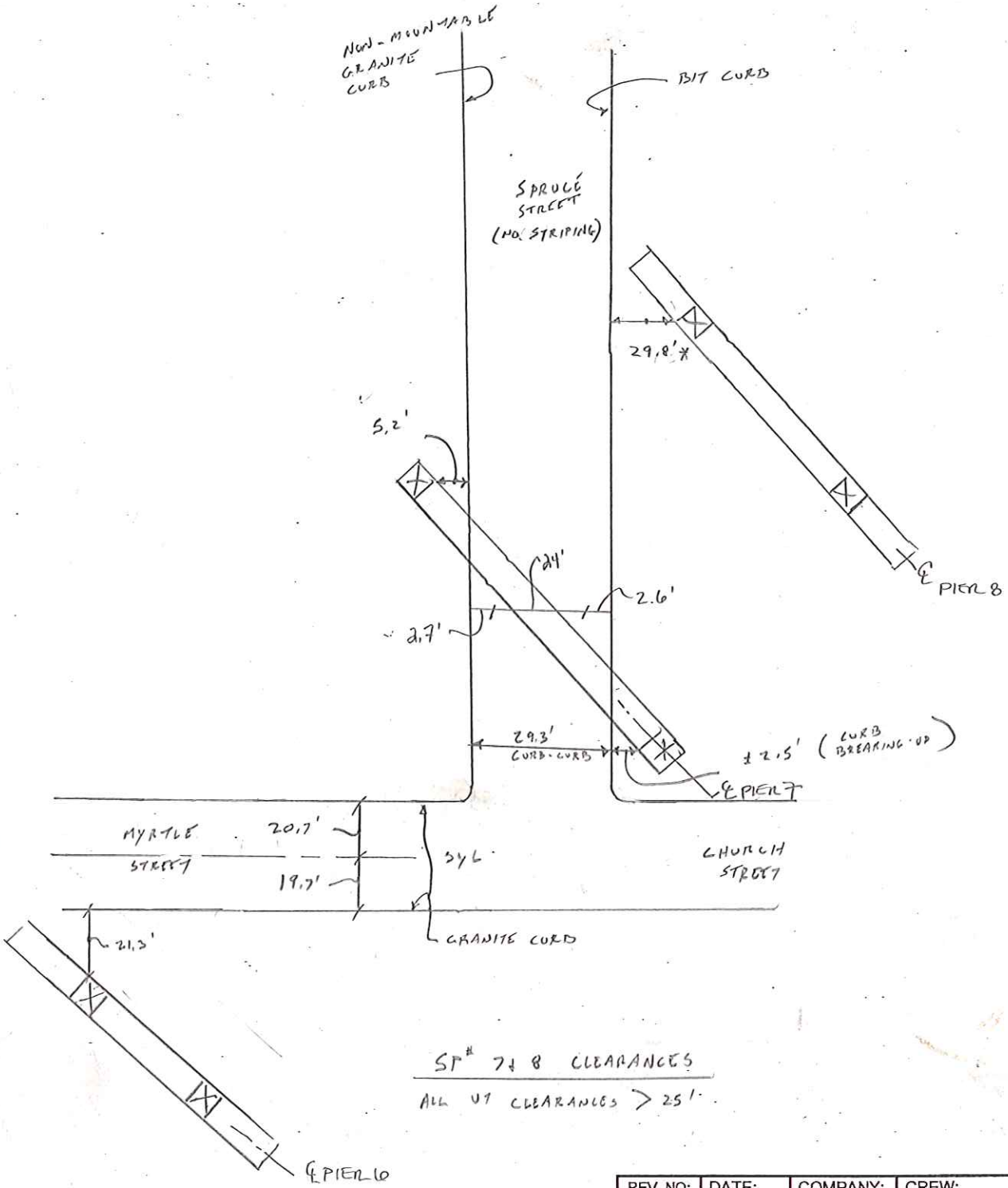

SP# 7 & 8 CLEARANCES

ALL UT CLEARANCES > 25'.

REV. NO:	DATE:	COMPANY:	CREW:
△			
△			
△			
△			

Baker

SUPPLEMENTAL SHEET

☒ FIELD ORIGINAL ☐ TRANSCRIBED BY:_____

BRIDGE NO. 01765	DATE: 8/14/12
CREW: BH, MSO	SHEET 20/193

DESCRIPTION: CLEARANCE DIAGRAM

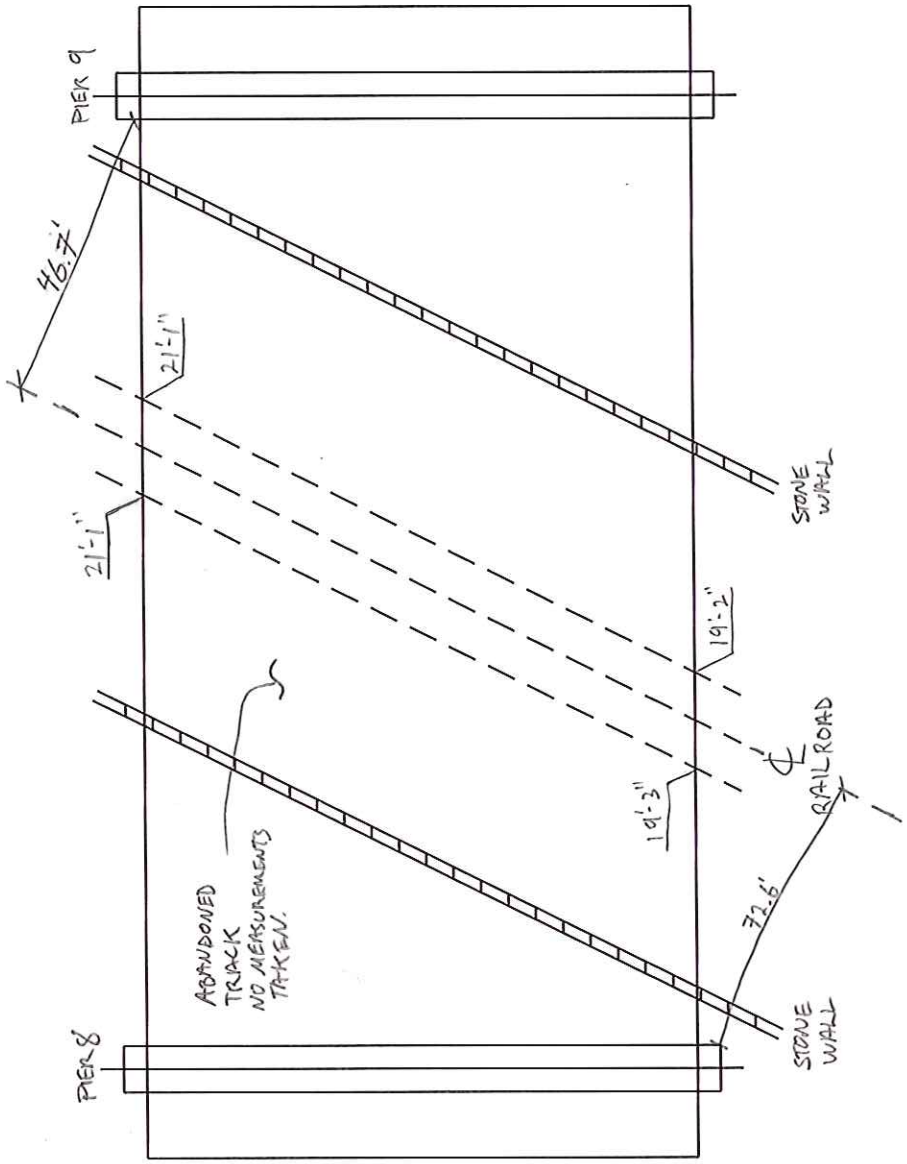

SPAN 9 OVER RAILROAD

UPDATE NO.	DATE	COMPANY	CREW
△			
△			
△			
△			

Baker

SUPPLEMENTAL SHEET

☐ FIELD ORIGINAL ☒ TRANSCRIBED BY: MRD

BRIDGE NO. 01765	DATE: 9/6/12
CREW: BA/MRD	SHEET 21/193

DESCRIPTION: CLEARANCES

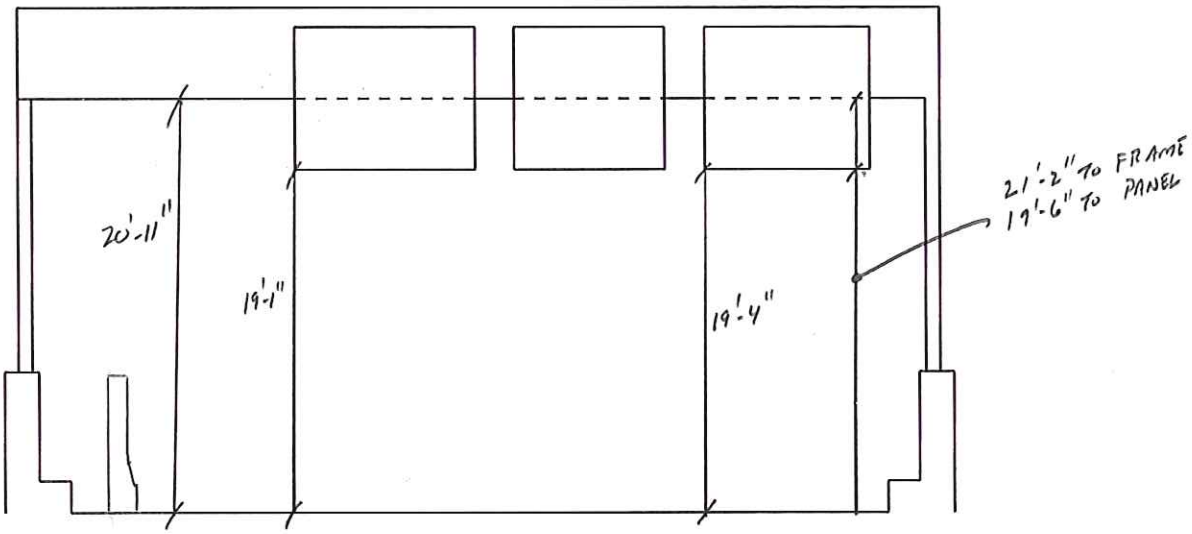

OVERHEAD SIGN IN SPAN 4 (NTS)

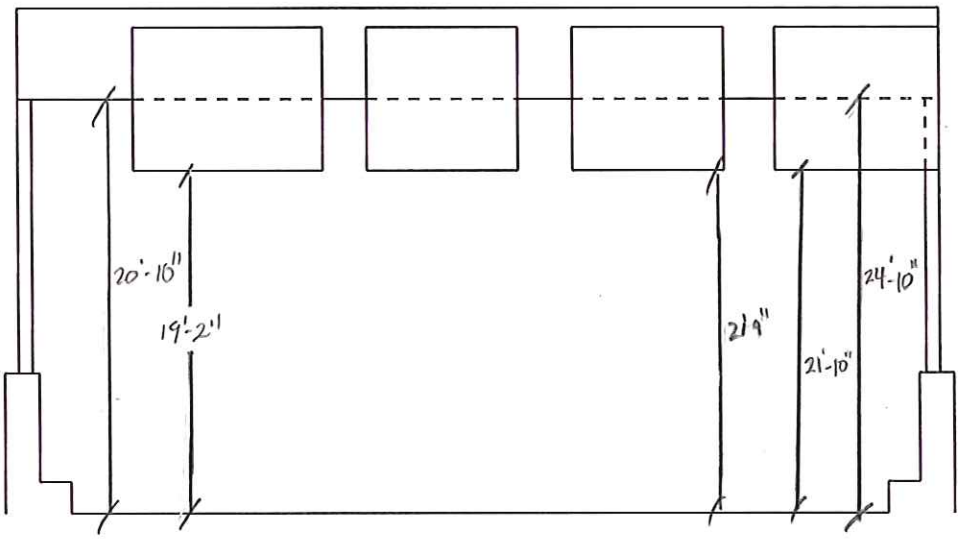

OVERHEAD SIGN IN SPAN 10 (NTS)

LEGEND

- HOLLOW AREA
- SHALLOW REBAR
- SPALL AREA
- SPALL AREA WITH EXPOSED REBAR
- MAP CRACKS (MpC) OR HAIRLINE MAP CRACKS (HLMpC)
- HAIRLINE CRACK (HLC) OR CRACKS (CRK)
- HONEY COMB AREA
- SCALE AREA (HVY, MED OR LT)
- ✖ WITH EFFLORESCENCE

* MEAS ONLY TAKEN @ RT & LT LANES → CLEARANCES TO BE FULLY MEAS'D @ UPCOMING OHSS INSP

UPDATE NO.	DATE	COMPANY	CREW
△			
△			
△			
△			

Baker	Bridge No. 1765	Date: 9/6/12
SUPPLEMENTAL SHEET	Crew: MJO/BH	Sheet 22/113

Top of Deck- GENERAL NOTES

Overlay: 5

BR OVERLAY W/ HVY RAVEL; UNEVEN PATCHES; HVY #; 2"W x 1"DP RAVEL @ SEAMS
- MOD- HVY WHEEL RUTTING

Deck —

SEE FRAMING NOTES

Curbs 7

- VT FACED @ SOUTH PPT & N. FASCIA PPT - RAND CRK'D MORTAR JOINTS.
- SLOPED @ N. ROADWAY PPT — RAND SCRAPES, RAND CRK'D MORTAR JOINT. SP#1.6

Median N

Sidewalks 7

- NOT VIS @ SOUTH → J. BARRIER
- SAFETY WK ADJ TO N. FASCIA PPT W/ LT ⊡ & RAND ~, DEBRIS

Parapet 5

- S. PPT W/ BARRIER IN FRONT ON TOP OF WALK; SIMILAR @ N. PPT SP#6.10
  - BARRIERS W/ RAND 2½" MISALIGN, RAND #* RUST {, DET GRAVY POCKETS & DET MORTAR BEDS; OVERHANG CURBS UP TO 3"; BTT 8" OF BARRIER W/ RAND ⊡'S UP TO 4"DP W/ RAND REBAR; BARRIERS W/ RAND ⊡ {RUST # & ⊡'S 2"DP ADJ TO VT JTS; RAND OTHER MINOR ⊡'S & ⊡'S; RAND SCRAPES/GOUGES
  - TOP OF ORIG PPT W/ LT ⊡, ~
- N. ROWAY PPT W/ RAND VT { SLIGHTLY OPEN W/ RAND *, RUST, AND LT ⊡ (TO MOD); RAND #* - SP#1.6
- N. FASCIA PPT W RAND { *

Railing 6

- REMOVED @ SOUTH
- N. ROWAY PPT W/ SINGLE ALUM BARRIER W/ MINOR SCRAPES (SP#1-10)
- N. FASCIA PPT W/ AREAS OF LT-MOD RUST THRU-OUT (SP#1.6)

Baker	Bridge No. 1765	Date: 9/6/12
SUPPLEMENTAL SHEET	Crew: MR, BH	Sheet 23/113

Top of deck (continued)

Paint 5
RAIL PAINT @ N. PPT @ SP # 1-6 [TWO PIPE RAIL @ N. FASCIA PPT)

Fence N

Drains 4
SEE SKETCHES FOR SCUPPERS

Light Standards 4
SEE SKETCHES

Utilities –
SEE FRAMING PLAN SKETCHES

Construction Joints 6
SEE FRAMING SKETCHES

Expansion Joints 4
- APJ's @ LT TWO LANES RECENTLY REPLACED @ SP # 1.3.
- OLD APJ's w/ MOD-HUY WHEEL RUTTING

Baker	Bridge No. 01765	Date: 9/6/12
SUPPLEMENTAL SHEET	Crew: MJ, BH	Sheet 24/113

Approaches: Overall Rating =

Approach Slab 5
PAVED OVER

Relief Joints N
NONE VISIBLE

Approach guide rail 5
APPR J. BARRIERS W/ RAND SCRAPES, } + RUST, RAND ☒'S UP TO 2½"DP; DCT GROUT POCKETS, 1 1" LT MISALIGN

Approach pavement 5
W. APPR NEAR BR W/ HVY RAVELING, SETT'D PATCHES (±1"DP) ±4 SF POTHOLES UP TO 1½" DP & RT LN, HVY #
- FARTHER FROM BR. BIT IS NEWER + HAS LONG'L ITV {'S; # UP TO ¼; LT WHEEL RUTS
E. APPR BIT & RAMP & GORE IS OLDER & HAS HVY RAVEL, UNEVEN PATCHES + HVY #; THERE IS A 20' x 15' AREA W/ RAVEL UP TO 1" DP & RAND PN'S & PEELED BIT UP TO 1½" DP IN THE RAMP LN NEAR BR & GORE AREA NEAR ATTENUATOR
- APPR PVMT IN TRAVEL LANES IS NEWER (SKIM COAT B/W GYL & SWL) W/ RAND }— + # TYP ≤ ½"~ MINOR RAVELING & SEAMS + ISOL BIT PATCHES

Approach Embankment 8

Item 36

Bridge Railings [0]

Transitions [1]
- CONC BARRIER & LEADING EDGES

Approach guide rails 0/1
- CONC BARRIER & LEADING EDGES

Guide Rail ends 0/1
- CONC BARRIER & LEADING EDGES

Baker

SUPPLEMENTAL SHEET

☑ FIELD ORIGINAL ☐ TRANSCRIBED BY:_____

BRIDGE NO. 01765	DATE: 9/6/12
CREW: MJO, BH	SHEET 25/193

DESCRIPTION: TOP OF DECK

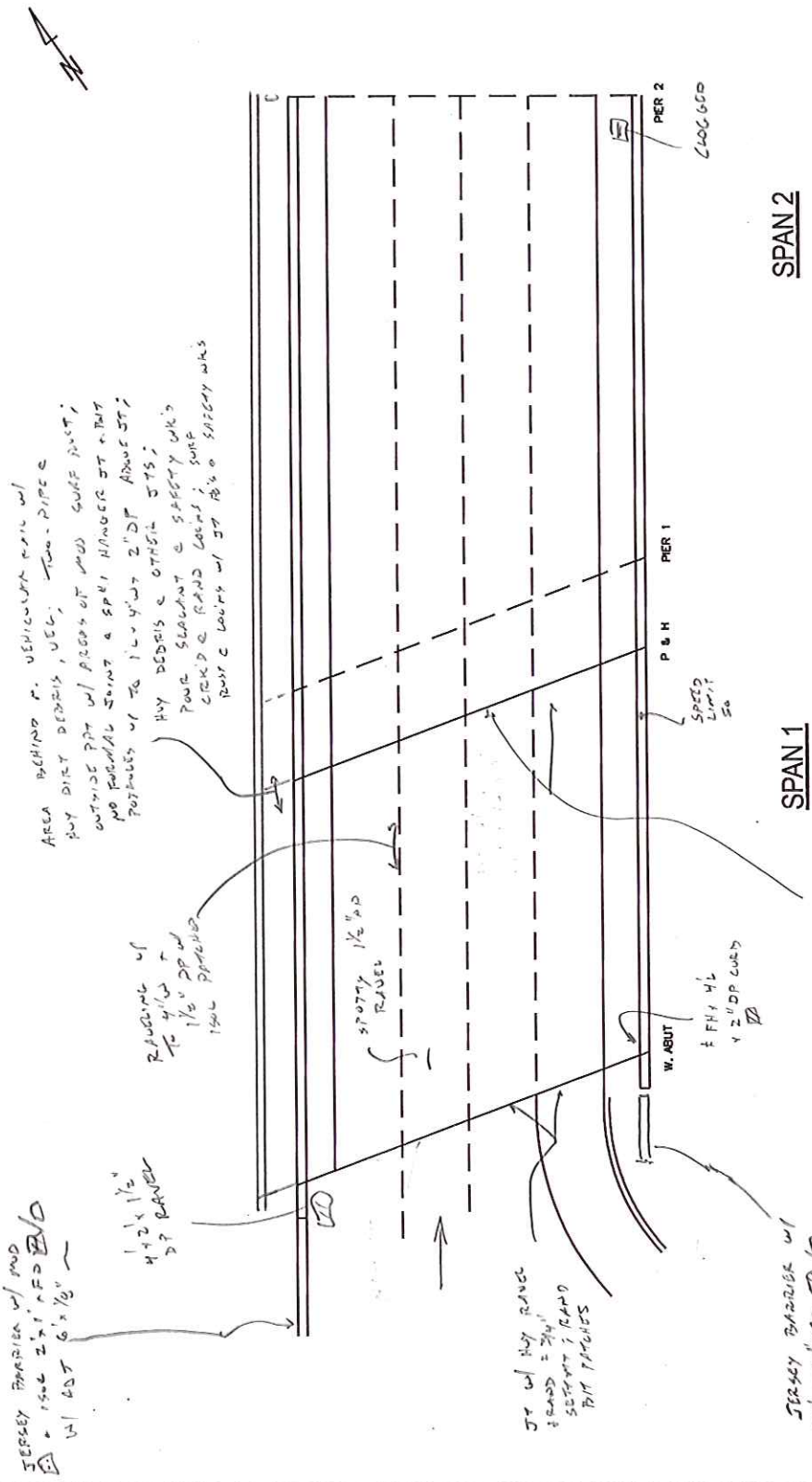

TOP OF DECK - SPANS 1-2

UPDATE NO.	DATE	COMPANY	CREW
△			
△			
△			
△			

LEGEND

- HOLLOW AREA
- SHALLOW REBAR
- SPALL AREA
- SPALL AREA WITH EXPOSED REBAR
- MAP CRACKS (MpC) OR HAIRLINE MAP CRACKS (HLMpC)
- HAIRLINE CRACK (HLC) OR CRACKS (CRK)
- HONEY COMB AREA
- SCALE AREA (HVY, MED OR LT)
- WITH EFFLORESCENCE

Baker

SUPPLEMENTAL SHEET

☒ FIELD ORIGINAL ☐ TRANSCRIBED BY:_____

BRIDGE NO. 01765	DATE: 9/6/12
CREW: MT, BH	SHEET 26/193

DESCRIPTION: TOP OF DECK

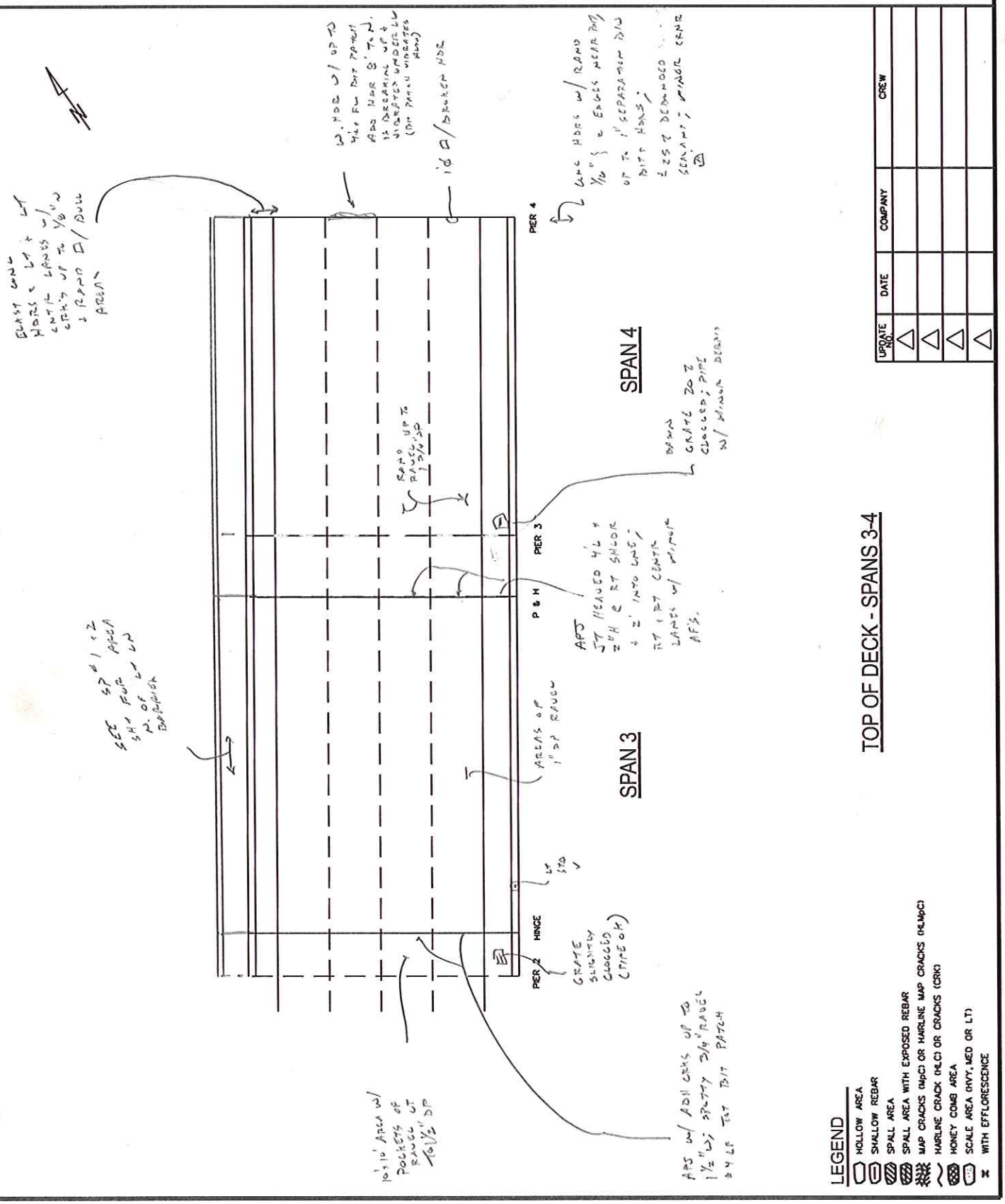

Baker

SUPPLEMENTAL SHEET

☒ FIELD ORIGINAL ☐ TRANSCRIBED BY:_____

BRIDGE NO. 01765	DATE: 9/6/12
CREW: VTB, BH	SHEET 27/113

DESCRIPTION: TOP OF DECK

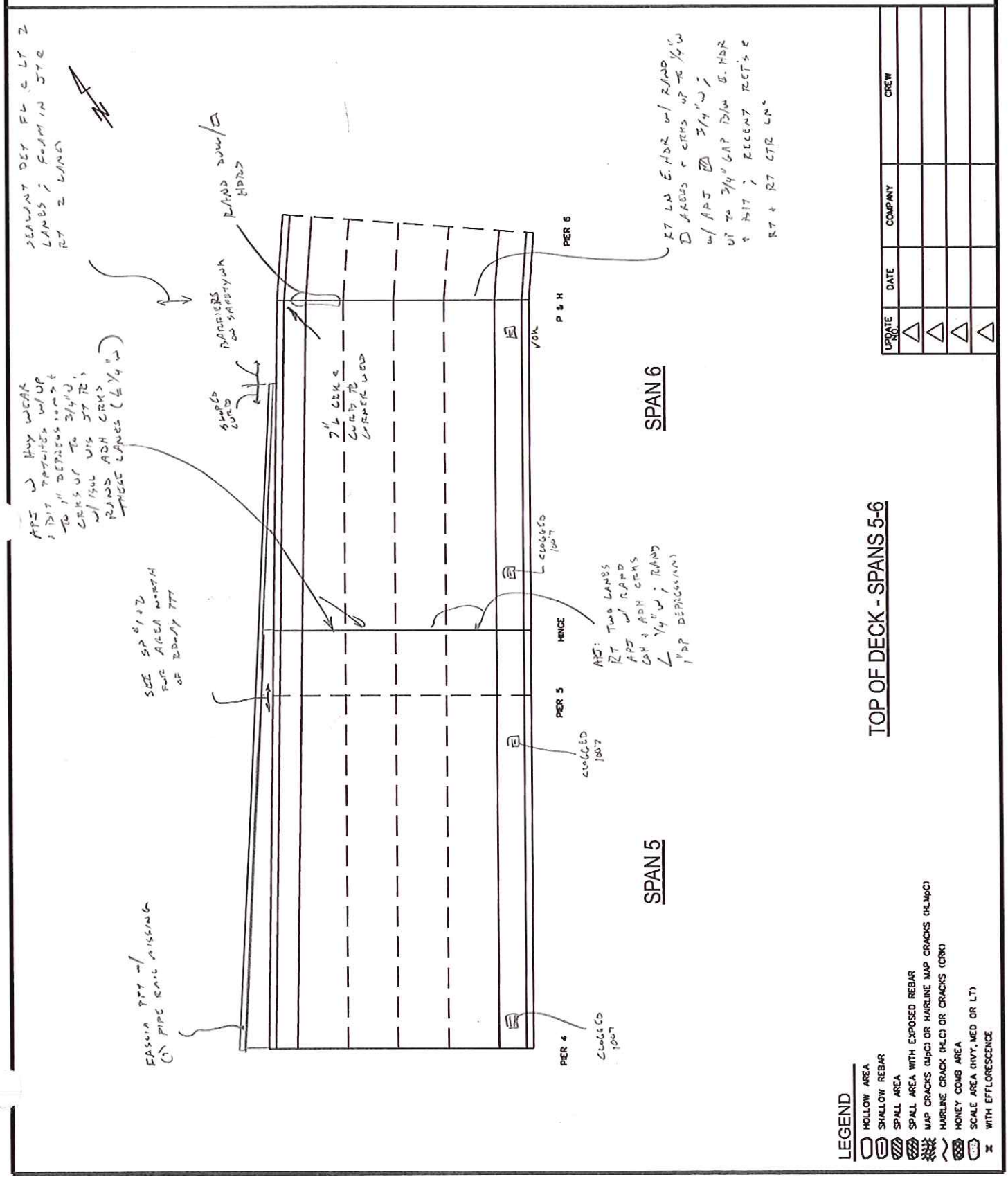

TOP OF DECK - SPANS 5-6

UPDATE NO.	DATE	COMPANY	CREW
△			
△			
△			
△			

LEGEND

- HOLLOW AREA
- SHALLOW REBAR
- SPALL AREA
- SPALL AREA WITH EXPOSED REBAR
- MAP CRACKS (MpC) OR HAIRLINE MAP CRACKS (HLMpC)
- HAIRLINE CRACK (HLC) OR CRACKS (CRK)
- HONEY COMB AREA
- SCALE AREA (HVY, MED OR LT)
- X WITH EFFLORESCENCE

Baker

SUPPLEMENTAL SHEET

☒ FIELD ORIGINAL ☐ TRANSCRIBED BY:_____

BRIDGE NO. 01765	DATE: 9/6/12
CREW: MP, BH	SHEET 28/193

DESCRIPTION: TOP OF DECK

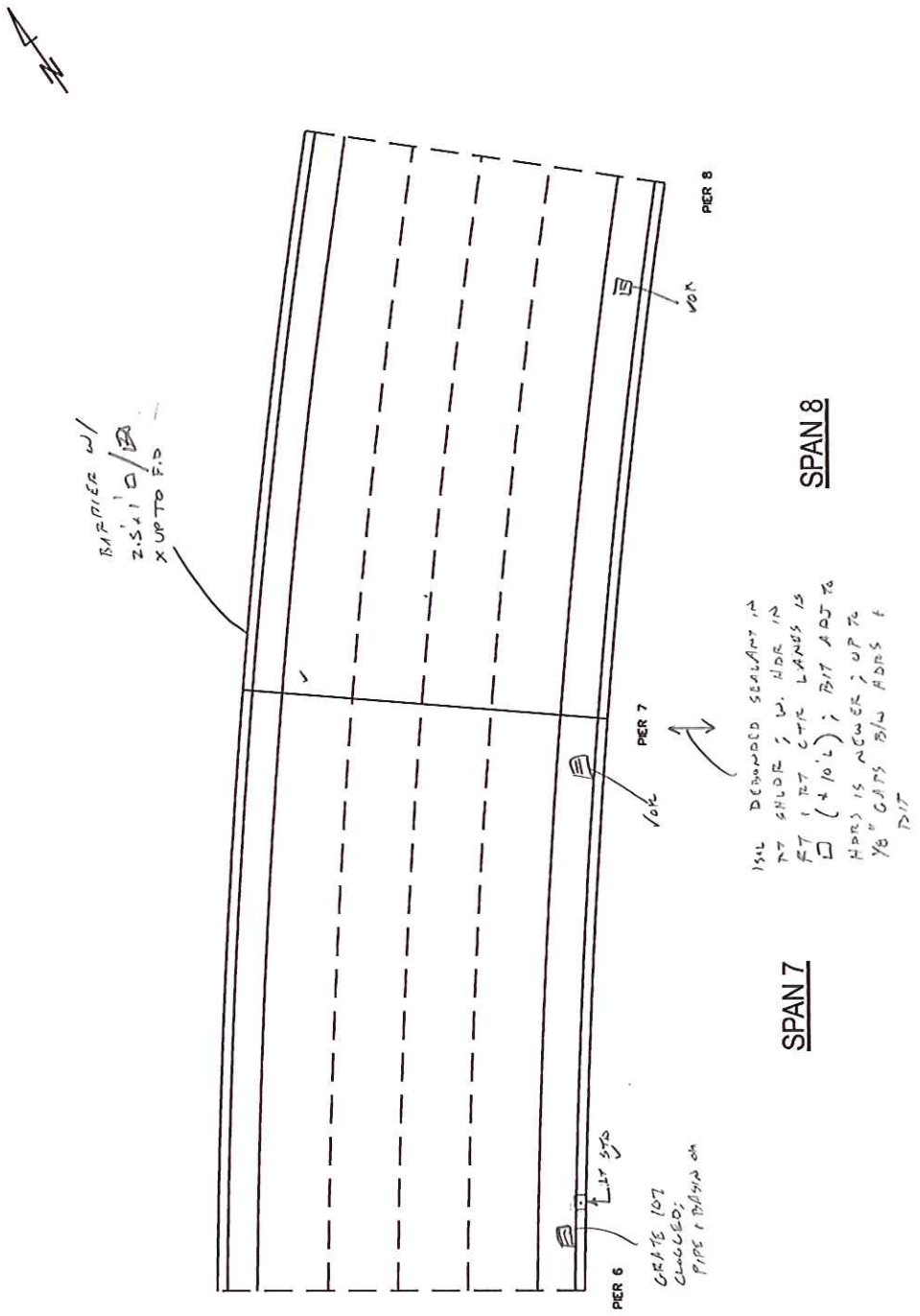

TOP OF DECK - SPANS 7-8

UPDATE NO.	DATE	COMPANY	CREW
△			
△			
△			
△			

LEGEND

- HOLLOW AREA
- SHALLOW REBAR
- SPALL AREA
- SPALL AREA WITH EXPOSED REBAR
- MAP CRACKS (MpC) OR HAIRLINE MAP CRACKS (HLMpC)
- HAIRLINE CRACK (HLC) OR CRACKS (CRK)
- HONEY COMB AREA
- SCALE AREA (HVY, MED OR LT)
- X WITH EFFLORESCENCE

Baker

SUPPLEMENTAL SHEET

☒ FIELD ORIGINAL ☐ TRANSCRIBED BY:_____

BRIDGE NO. 01765	DATE: 7/6/12
CREW: MJO, BH	SHEET 29/113

DESCRIPTION: TOP OF DECK

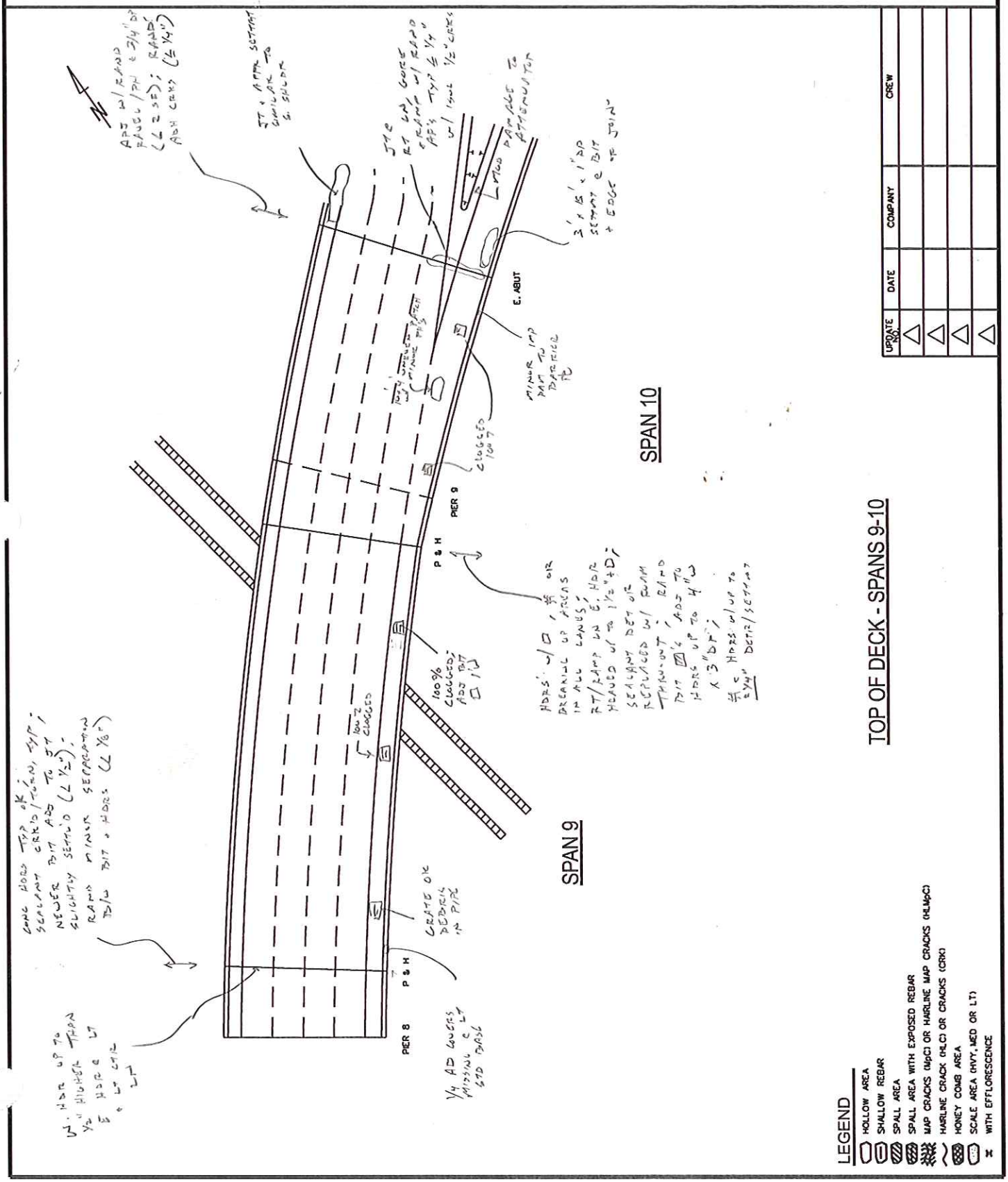

Baker

SUPPLEMENTAL SHEET

☒ FIELD ORIGINAL ☐ TRANSCRIBED BY:_____

BRIDGE NO. 01765 | DATE: 9/6/12

CREW: BH, MJD | SHEET 30/193

DESCRIPTION: PARAPET JOINT MEASUREMENTS

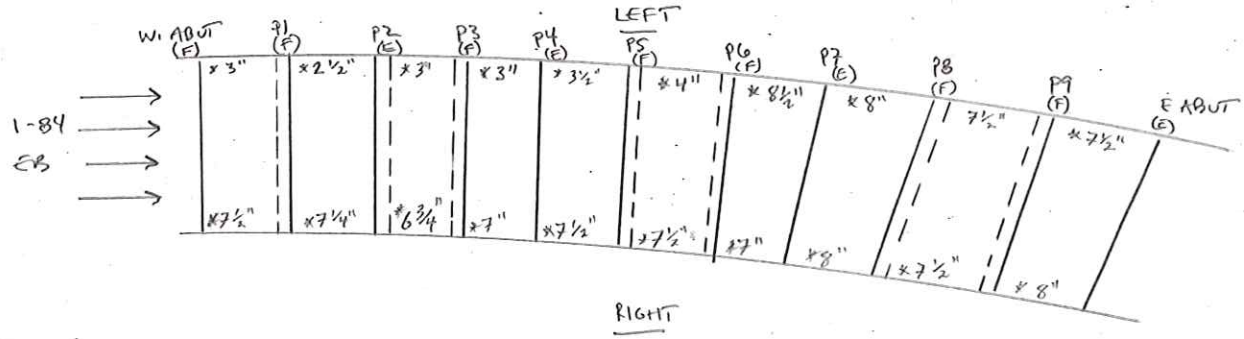

--- PIN & HANGER LINE

* CURB REVEAL

LOCATION	MEASUREMENT < 50° F				MEASUREMENT > 50° F				JOINT TYPE
	LEFT	RIGHT	TEMP	DATE	LEFT	RIGHT	TEMP	DATE	
W. ABUT					4½"	¾"	75°F	9/6/12	APJ
SP#1 (P&H)					3¾"	1¼"			APJ
SP#3 (W. P&H)					4¼"	1"			APJ
SP#3 (E. P&H)					4"	2⅛"			APJ
PIER 4					① 4⅝"	15/16"			CONC. HEADERS W/ SEALANT
SP#6 (W. P&H)					4"	⅞"			APJ
SP#6 (E. P&H)					⑥ 3"	1½"			CONC. HEADERS W/ SEALANT
PIER 7					4⅝"	3" *			"
SP#9 (W. P&H)					4⅝"	1⅜" *			"
SP#9 (E. P&H)					① 6"	⅜"			"
E. ABUT					① 4⅜"	2⅛"			APJ

GENERAL NOTES: - ALL MEASUREMENT DOUBLE CHECKED
- RIGHT MEAS TAKEN @ INSIDE CHAM-CHAM
- LEFT MEAS TAKEN @ OUTSIDE CHAM-CHAM DUE TO SEALANT.
* MEAS TAKEN @ OUTSIDE CHAM-CHAM DUE TO SEALANT.
① NO SEALANT, MEAS. @ INSIDE CHAMFER: P4 (2"), SP#6 (E. P&H) (2⅞"), SP#9 (E. P&H) (5 1/16"), E. ABUT (4")

JOINT MEASUREMENT

Form BRI-17, Rev 6/99

Bridge #: 01765 **Location:** I-84 EB over Amtrak, local roads & parking lot **Town of:** Hartford

Deck Joint Location	Deck Joint Type	Effect Span (ft.)	2010 Measurement			2012 Measurement			Differential Movements			Comment	Difference between Actual & Calc. Movements	
			TEMP deg	Date.. 11/07/10 Left (in)	Right (in)	TEMP deg	Date.. 09/06/12 Left (in)	Right (in)	Actual Left	Actual Right	by Formula		Left (in)	Right (in)
W. Abut	Plug	0.0	40	2- 1/16	14/16	75	4- 8/16	12/16	-2- 7/16	2/16	0		-2- 7/16	2/16
S1	Plug	94.0	40	1-11/16	1- 6/16	75	3-12/16	1- 4/16	-2- 1/16	2/16	4/16		-2- 5/16	- 2/16
S3 W	Plug	0.0	40	1-12/16	1- 3/16	75	4- 4/16	1	-2- 8/16	3/16	0		-2- 8/16	3/16
S3 E	Plug	252.0	40	2- 8/16	1-10/16	75	4	2- 2/16	-1- 8/16	- 8/16	11/16		-2- 3/16	-1- 3/16
Pier 4	Pour Seal	221.0	40	2- 3/16	2- 2/16	75	4-10/16	15/16	-2- 7/16	1- 3/16	10/16		-3- 1/16	9/16
S6 W	Plug	0.0	40	1-12/16	13/16	75	4	14/16	-2- 4/16	- 1/16	0		-2- 4/16	- 1/16
S6 E	Pour Seal	131.0	40	2- 9/16	2- 4/16	75	3	1- 8/16	- 7/16	12/16	6/16		- 13/16	6/16
Pier 7	Pour Seal	232.0	40	3-12/16	3-10/16	75	4-10/16	3	- 14/16	10/16	10/16		-1- 8/16	-0
S9 W	Pour Seal	112.0	40	3-14/16	1- 3/16	75	4-10/16	1- 6/16	- 12/16	- 3/16	5/16		-1- 1/16	- 8/16
S9 E	Pour Seal	112.0	40	5-10/16	1- 3/16	75	6	6/16	- 6/16	13/16	5/16		- 11/16	8/16
E. Abut	Plug	116.0	40	2-12/16	2- 8/16	75	4-14/16	2- 2/16	-2- 2/16	6/16	5/16		-2- 7/16	1/16

NOTE: Left measurements taken at outside to outside of chamfer due to heavy sealant at the joint (new sealant at some locations).

* Note: Place the higher temperature measurements to the right side of the table.
A negative differential movement indicates possible abnormal movement.
The "Effective Span" is the length contributing to expansion at the joint. This should be 0 at fixed joints.

Printed On : 10/5/2012

FIELD NOTES

BRIDGE NO. 1765	DATE: 8/16/12
CREW: JAC/MJO	SHEET 32/193

ROCKER BEARING MEASUREMENTS

Form BRI-15, Rev. 9/97

Span No. = 2

Substructure Unit = PIER 2

Temperature = 75 °F

$\theta = \sin^{-1} (F-B)/W$

$Y = R \tan \theta$

The "Front" of the bearing is the side facing the fixed bearing.

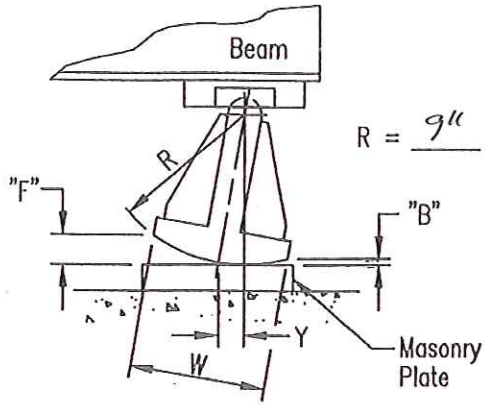

R = 9"

W = 7"

NOTE:

"F" & "B" should be measured at the left side corners of the rocker or on the side closest to to the front face of the substructure on skewed bridges.

Beam	"F"	"B"	Y	Cont. or Exp.	Comments
9 (1)	1 13/16"	1 3/16"	13/16"	E	UP TO 1/16" IN UNDER ROCKER.
6 (4)	1 9/16"	1 1/16"	5/8"	E	
4 (6)	1 11/16"	1 1/8"	3/4"	E	
1 (9)	1 3/4"	1 3/16"	3/4"	E	LT RUST + PEELING PAINT ON MAS. PL.
↑ PREV BRG #					

FIELD NOTES

BRIDGE NO. 01765	DATE: 8/20/12
CREW: MR, BH	SHEET 33/193

ROCKER BEARING MEASUREMENTS

Form BRI-15, Rev. 9/97

Span No. = 4

Substructure Unit = PIER 4

Temperature = 78 °F GS-9

$\theta = \sin^{-1} (F-B)/W$

$Y = R \tan \theta$

The "Front" of the bearing is the side facing the fixed bearing.

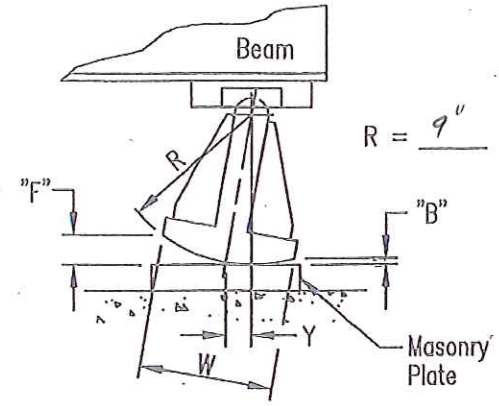

R = 9"

W = 7"

NOTE:

"F" & "B" should be measured at the left side corners of the rocker or on the side closest to to the front face of the substructure on skewed bridges.

Beam	"F"	"B"	Y	Cont. or Exp.	Comments
1 (7)	7/8"	1/2"	1/2"	E	LR & U/S ROCKER & RUST @ TOP EDGE SOLE PL S. AB W/ ROCKBUDD'S ; 1/16"-1/8" SR B/W ROCKER/MAS & CONTACT
3 (7)	7/8"	1/2"	1/2"	E	LT RUST
5 (5)	1"	1/2"	5/8"	E	SEE G7 NOTES.
7 (5)	3/4"	1/4"	5/8"	E	MID RUST; LR & DIRT UNDER ROCKER
9 (1)	9/16"	3/8"	1/4"	E	UP TO 60% AB NUT LOSS ; MED-HVY RUST LR/ DEBRIS FILLS GAP UNDER ROCKER
	PREV BRI No.				

FIELD NOTES	BRIDGE NO. 1765	DATE: 8/16/12
	CREW: MTD, JAC	SHEET 34/193

ROCKER BEARING MEASUREMENTS

Form BRI-15, Rev. 9/97

Span No. = 5

Substructure Unit = PIER 4

Temperature = 85 °F 61-65
75°F 67-69

$\theta = \sin^{-1}(F-B)/W$

$Y = R \tan \theta$

The "Front" of the bearing is the side facing the fixed bearing.

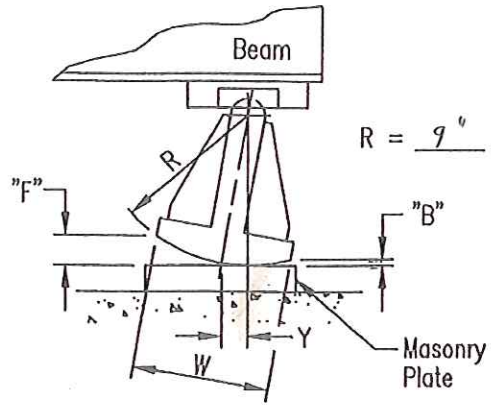

R = 9"

W = 7"

NOTE:

"F" & "B" should be measured at the left side corners of the rocker or on the side closest to to the front face of the substructure on skewed bridges.

Beam	"F"	"B"	Y	Cont. or Exp.	Comments
		SP#5 @	PIER	4	
1 (9)	13/16"	1/2"	3/8"	E	LR B/W SOLE PL + TOP OF ROCKER; CRUSHED RUST UNDER ROCKER; LT-MOD GEN RUST;
3 (7)	1"	1/2"	5/8"	E	LT DEBRIS UNDER ROCKER, LT RUST
5 (5)	1 1/8"	1/4"	1 1/8"	E	HVY LR @ COMPONENTS → BRG NOT PLUMB DUE TO UNEVEN (1/4 - 1/2") IR BELOW ROCKER CAUSING BM TO BE OUT OF PLUMB
7 (3)	7/8"	9/16"	3/8"	E	LR/DEBRIS FILL GAP UNDER ROCKER
9 (1)	3/4"	11/16"	1/16"	E	S. AB NOT BACKED OFF + 1 1/2"; SEE G7
	PREV BM NO.				BRGS NOT MEAS W/ MOD RUST; LR @ AB NUTS W/ ±50 TSL; AREAS OF UP TO 1/4 EST IR BELOW ROCKER; RAND BRGS W/ LR @ COMPONENTS (GG WORST NON-MEASURED BRG)

FIELD NOTES	BRIDGE NO. 1765	DATE: 8/15/12
	CREW: MJO/BH	SHEET 35/193

ROCKER BEARING MEASUREMENTS

Form BRI-15, Rev. 9/97

Span No. = 7

Substructure Unit = P7

Temperature = 90 °F

$\theta = \sin^{-1}(F-B)/W$

$Y = R \tan \theta$

The "Front" of the bearing is the side facing the fixed bearing.

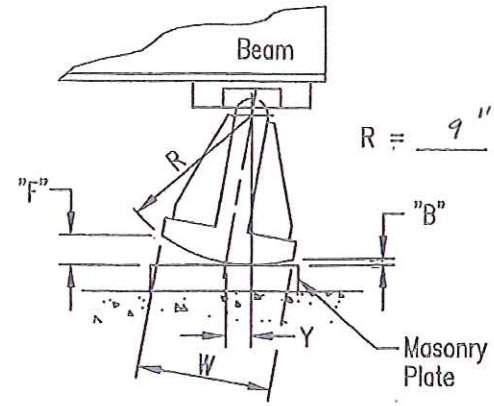

R = 9"

W = 7"

NOTE:

"F" & "B" should be measured at the left side corners of the rocker or on the side closest to to the front face of the substructure on skewed bridges.

Beam	"F"	"B"	Y	Cont. or Exp.	Comments
1 (9)	7/8"	1/2"	1/2"	E	
5 (5)	1 1/8"	7/8"	5/16"	E	LAM RUST, ROSE BOT AB'S & NUTS.
7 (3)	1 1/4"	1 1/8"	3/16"	E	AREAS OF LR ; AB NUTS w/ ± 25% SL
8 (2)	7/8"	13/16" vv	1/16"	E	AREAS OF LR ; S. AB w/ ROSEBUDDING
9 (1)	1"	1" vv	0	—	AREAS OF LR; S. AB TILTED E
↑	PREV BM #				GEN - NO VIS. EVID MOVMT; REMOVAL OF LR MAY ACCOUNT FOR THIS

FIELD NOTES	BRIDGE NO. 1765	DATE: 8/16/12
	CREW: BH / VS	SHEET 36/193

ROCKER BEARING MEASUREMENTS

Form BRI-15, Rev. 9/97

Span No. = 8

Substructure Unit = PIER 7

Temperature = 75°F

$\theta = \sin^{-1}(F-B)/W$

$Y = R \tan \theta$

The "Front" of the bearing is the side facing the fixed bearing.

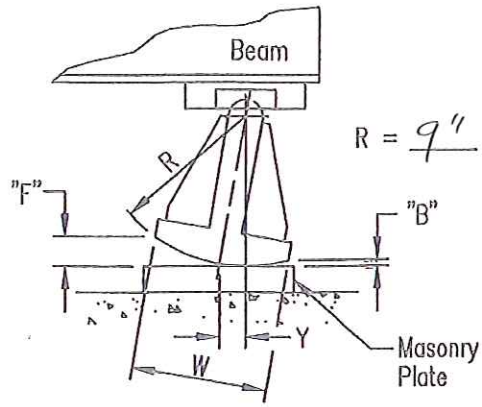

R = 9"

W = 7"

NOTE:

"F" & "B" should be measured at the left side corners of the rocker or on the side closest to to the front face of the substructure on skewed bridges.

Beam	"F"	"B"	Y	Cont. or Exp.	Comments
1 (9)	3/4"	15/16"	-1/4"	C	LT-MOD SURFACE RUST
5 (5)	1/2"	3/4"	-5/16"	C	3/8" LAM RUST B/W ROCKER & MAS PL (MIGHT INTERFERE W/ CONTRS
7 (3)	1/2"	3/4"	-5/16	C	3/8" LR under rocker (might interfere w/ movement)
9 (1)	7/16"	7/8"	-9/16	C	
↑ FREW BM #					
					Gen. Notes.
					- exp. bmg's w/ LT - MOD. RUST
					& up TO 3/8" L.R. UNDER ROCKER

FIELD NOTES

BRIDGE NO. 01765	DATE: 8/22/12
CREW: BH, MJO	SHEET 37/143

SLIDING BEARING MEASUREMENTS

Form BRI-14, Rev. 9/01

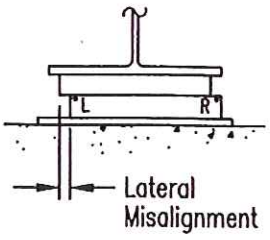

FRONT VIEW

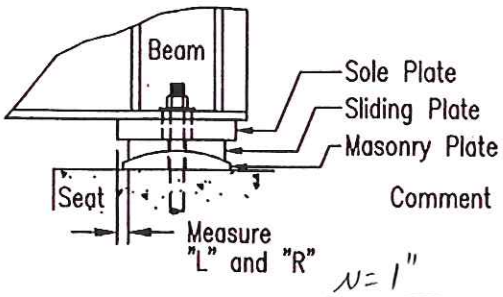

N = 1"

SIDE VIEW

Span No. = 10

Substructure Unit = EAST ABUT

Temperature = 80°F

Comment On:
- Presence of keepers or work done on bearings.
- Undermining of bearing. Attach sketch with dimensions.
- Cracking of plates or welds.
- Condition of anchor bolts.

Beam	Movement				Condition			Comments
	"L"	"R"	Mode Exp. or Contr.	Lateral Misalign.	Bearing Frozen?	Normal Mov't?	Rust ? H/M/L	
1 (9)	2 1/16"	1 7/8"	C	1/8" R	*	N	L-M	SOUTH AB NUT NOT FULLY ENGAGED
3 (7)	1 9/16"	1 5/16"	C	1/16" R	*	N	L-M	
5 (5)	1 1/2"	1 3/4"	C	–	*	N	L-M	
7 (3)	1 1/8"	1 1/8"	C	1/8" L	*	N	L-M	AB NUTS NOT FULLY ENGAGED
9 (1)	1 3/4"	1 7/8"	C	1/8" R	*	N	L-M	
								GEN: LT-MOD SURFACE RUST ON ALL COMPONENTS
								* = END OF MOVMT, BUT IN CONTR. @ 80°F

PIN & HANGER DATA SHEET

Form BRI-29, Rev. 6/99

Measurements Taken By: MJO Date: 8/13/12

Bridge No.: 1765 I-84 E/B / ASYLUM, ETC Town: HTFD

Hanger Location: SP #1 Effective span for Movement: 94 (ft) Page: of

Beam No.	V (in)	J (in)	Tr (in)	Br (in)	Tl (in)	Bl (in)	Out to Out (in)	Secondary System Type	Gap[1] (Y/N)	Nut Restraint System	Temp	Comments
9(1)	3/8"	2 5/16"	2 7/16"	2 1/8"	2 3/8"	2 1/4"	5 11/16"	N/A	N/A	CATTCH	83°	
8(2)	5/16"	2 3/4"	2 1/4"	2 1/16"	2 1/8"	2 1/16"	5 7/16"					WIND LOCK
7(3)	5/8"	2 1/16"	2 7/16"	2 3/16"	2 1/8"	2 1/16"	5 5/16"					
6(4)	3/16"	2 3/4"	2 1/4"	2 1/16"	2 1/16"	2 3/16"	5 1/2"					WIND LOCK
5(5)	15/16"	2 3/4"	2 1/4"	2 1/8"	2 1/8"	2 1/16"	5 3/8"					
4(6)	1/16"	2 5/8"	2 1/8"	2 1/16	2 1/8"	2"	5 1/4"					WIND LOCK
3(7)	3/4"	1 13/16"	2 1/8"	2 1/8"	2 1/8"	2 1/16"	5 3/8"					
2(8)	1/16"	2 1/4"	2 1/8"	2 1/8"	2 3/16"	2 1/8"	5 1/4"					WINDLOCK W/ LR - 1/8"-3/16" SL'S
1(9)	3/8"	2 13/16"	2 1/4"	2 3/16"	2 1/16"	2 3/16"	5 7/16"					
~~10~~												

( ) = BEAM NO @ 2010 INSP

Notes:

1) For Pin & Hanger assemblies with a redundant support system, indicate if there is a gap between the redundant system (bearing) and the bottom flange of the suspended girder.
2) All measurements are taken in reference to log direction.
   - **V** : Vertical misalignment of girders @ left edge of girder's bottom flange. - HOLDING LEVEL HORIZ/PLUMB
   - **J** : Joint opening between webs, measured just above the bottom flange fillet, on the left face of the girder's web.
   - **Out to Out** : The out-to-out of hangers taken at the leading edge, based on log direction.
3) Use a permanent marker to indicate locations of field measurements.

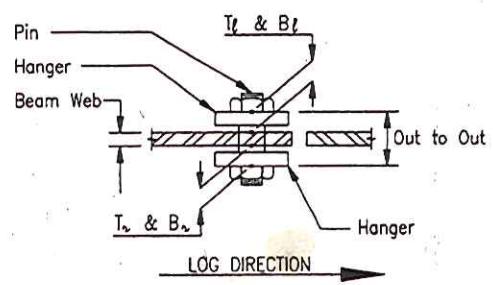

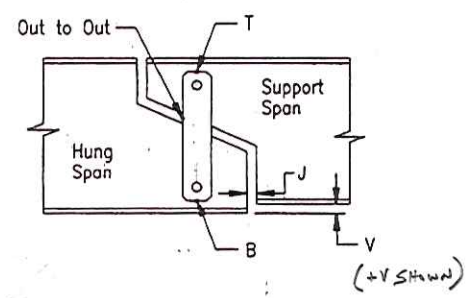

GEN
- LT RUST FORMING ON SS HANGER PL'S; PL'S W/ MINOR BOWS
- WIND LOCKS W/ MOD-HVY RUST + ABRASION RUST
- HVY STAINS FROM JT SEALE; HDRS CLOSED — NO ROOM FOR EXP
- RAND NUTS TURN WHEN STRUCK

38/93

File: P&h_form.xls(Data1), Printed: 9/24/01

PIN & HANGER DATA SHEET

Form BRI-29, Rev. 9/97

Measurements Taken By: MJO Date: 8/13/2012

Measurements Reviewed By: WMK Date: 9/28/2012

Page: of

Bridge No.: 01765 Interstate 84 EB over Amtrak & Local Roads Town: Hartford

Hanger Location: Span 1 Effective span for Movement: 94

Beam No.	V (in)	J (in)	T_r (in)	B_r (in)	T_ℓ (in)	B_ℓ (in)	Out to Out (in)	Secondary System Type	Gap[1] (Y/N)	Nut Restraint System	Temp Deg. F	Comments (2012 Measurements)
9 (1)	3/8	2 5/16	2 1/16	2 1/8	2 3/8	2 1/4	5 11/16	None	N/A	Cotter	83	See previous sheet.
8 (2)	5/16	2 3/4	2 1/4	2 1/16	2 1/8	2 1/16	5 7/16	None	N/A	Cotter	83	See previous sheet.
7 (3)	5/8	2 1/16	2 3/16	2 3/16	2 1/8	2 1/16	5 5/16	None	N/A	Cotter	83	See previous sheet.
6 (4)	3/16	2 3/4	2 1/4	2 1/16	2 1/16	2 3/16	5 1/2	None	N/A	Cotter	83	See previous sheet.
5 (5)	15/16	2 3/4	2 1/4	2 1/8	2 1/8	2 1/16	5 3/8	None	N/A	Cotter	83	See previous sheet.
4 (6)	1/16	2 5/8	2 1/8	2 1/16	2 1/8	2	5 1/4	None	N/A	Cotter	83	See previous sheet.
3 (7)	3/4	1 13/16	2 1/8	2 1/8	2 1/8	2 1/16	5 3/8	None	N/A	Cotter	83	See previous sheet.
2 (8)	1/16	2 1/4	2 1/8	2 1/8	2 3/16	2 1/8	5 1/4	None	N/A	Cotter	83	See previous sheet.
1 (9)	3/8	2 13/16	2 1/4	2 3/16	2 1/16	2 3/16	5 7/16	None	N/A	Cotter	83	See previous sheet.
												Girders were renumbered this inspection. First girder number represents 2012 girder number. Girder number in parenthesis is the same girder, but with 2010 numbering convention.

Notes:

1) For Pin & Hanger assemblies with a redundant support system, indicate if there is a gap between the redundant system (bearing) and the bottom flange of the suspended girder.
2) All measurements are taken in reference to log direction.
   - **V** : Vertical misalignment of girders @ left edge of girder's bottom flange.
   - **J** : Joint opening between webs, measured just above the bottom flange fillet, on the left face of the girder's web.
   - **Out to Out** : The out-to-out of hangers taken at the leading edge, based on log direction.
3) Use a permanent marker to indicate locations of field measurements.

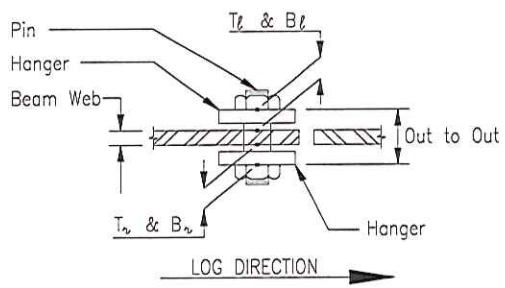

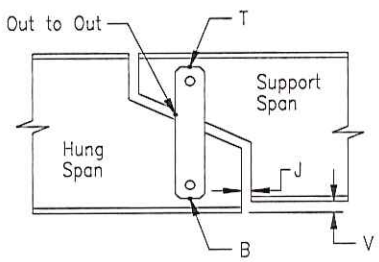

3/13

PIN & HANGER DATA SHEET

Form BRI-29, Rev. 9/97

Measurements Taken By: MAI Date: 10/20/2010

Measurements Reviewed By: ZRI Date: 10/20/2010

Page: of

Bridge No.: 01765 Interstate 84 EB over Amtrak & Local Roads Town: Hartford

Hanger Location: Span 1 Effective span for Movement: 94

Beam No.	V (in)	J (in)	T_r (in)	B_r (in)	T_ℓ (in)	B_ℓ (in)	Out to Out (in)	Secondary System Type	Gap[1] (Y/N)	Nut Restraint System	Temp °F	Comments (2010 Measurements)
9 (1)	3/8	2 7/8	2 1/16	2 1/8	2 7/16	2 1/4	5 9/16	None	M/A	Cotter	53	See 2010 report for comments
8 (2)	5/16	3 1/4	2 1/4	2 1/16	2 3/16	2 1/16	5 3/8	None	N/A	Cotter	53	See 2010 report for comments
7 (3)	11/16	2 5/8	2 1/4	2 3/16	2 1/8	2	5 1/4	None	N/A	Cotter	53	See 2010 report for comments
6 (4)	1/4	3 1/4	2 1/16	2 1/16	2 1/16	2 3/16	5 7/16	None	N/A	Cotter	53	See 2010 report for comments
5 (5)	1	3 5/16	2 1/4	2 1/8	2 1/16	2 1/16	5 5/16	None	N/A	Cotter	53	See 2010 report for comments
4 (6)	3/16	3	2 1/8	2 1/16	2 1/8	2	5 5/16	None	N/A	Cotter	53	See 2010 report for comments
3 (7)	3/4	2 3/16	2 1/8	2 1/8	2 1/16	2 1/16	5 3/8	None	N/A	Cotter	53	See 2010 report for comments
2 (8)	1/8	2 5/8	2 1/8	2 1/8	2 1/8	2 1/8	5 1/4	None	N/A	Cotter	53	See 2010 report for comments
1 (9)	3/8	3 3/16	2 1/4	2 1/4	2 1/16	2 3/16	5 7/16	None	N/A	Cotter	53	See 2010 report for comments

Notes:

1) For Pin & Hanger assemblies with a redundant support system, indicate if there is a gap between the redundant system (bearing) and the bottom flange of the suspended girder.

2) All measurements are taken in reference to log direction.

V : Vertical misalignment of girders @ left edge of girder's bottom flange.

J : Joint opening between webs, measured just above the bottom flange fillet, on the left face of the girder's web.

Out to Out : The out-to-out of hangers taken at the leading edge, based on log direction.

3) Use a permanent marker to indicate locations of field measurements.

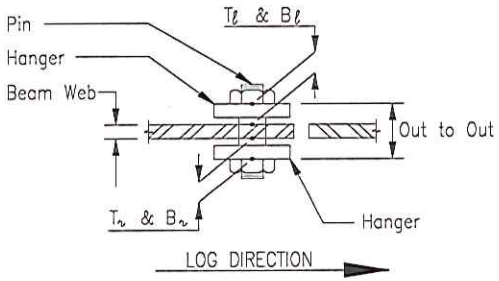

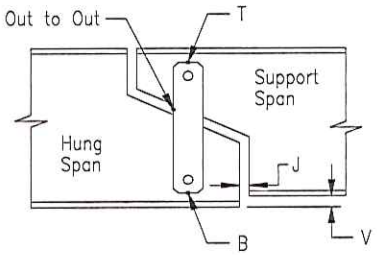

40/63

PIN & HANGER ANALYSIS SHEET

Form BRI-29, Rev. 9/97

Measurements Taken By: -- Date: --

Bridge No.: 01765 Interstate 84 EB over Amtrak & Local Roads Town: Hartford Measurements Reviewed By: WMK Date: 9/28/2010

Hanger Location: Span 1 Effective span for Movement: 94 Page: of

Beam No.	V (in)	J (in)	Calc'd J (in)	Calc'd Diff. in J's (in)	T_r (in)	B_r (in)	T_ℓ (in)	B_ℓ (in)	Out to Out (in)	Comments (Comparison Sheet)
9 (1)	0	- 9/16	- 4/16	5/16	0	0	- 1/16	0	1/8	Out-Out was 5-9/16" in 2002-2010, and 5-11/16 in 2012.
8 (2)	0	- 1/2	- 4/16	4/16	0	0	- 1/16	0	1/16	
7 (3)	- 1/16	- 9/16	- 4/16	5/16	- 1/16	0	0	1/16	1/16	
6 (4)	- 1/16	- 1/2	- 4/16	4/16	3/16	0	0	0	1/16	Tr was 2-1/4" in 2002, 2-3/16" in 2004-2008, 2-1/16" in 2010, and 2-1/4" in 2012.
5 (5)	- 1/16	- 9/16	- 4/16	5/16	0	0	1/16	0	1/16	
4 (6)	- 1/8	- 3/8	- 4/16	2/16	0	0	0	0	- 1/16	V was -1/16" in 2002-2004, -3/16" in 2006, 3/16" in 2008-2010, 1/16" in 2012.
3 (7)	0	- 3/8	- 4/16	2/16	0	0	1/16	0	0	
2 (8)	- 1/16	- 3/8	- 4/16	2/16	0	0	1/16	0	0	
1 (9)	0	- 3/8	- 4/16	2/16	0	- 1/16	0	0	0	
										Differences greater than or equal to 1/8" or are highlighted, except at "J" and "Calculated J", which are temperature dependant. All measurements were double checked. No areas of distress were noted.

Additional Review Comments:

J measurements indicate that girders are moving in the correct direction, based on temperature.

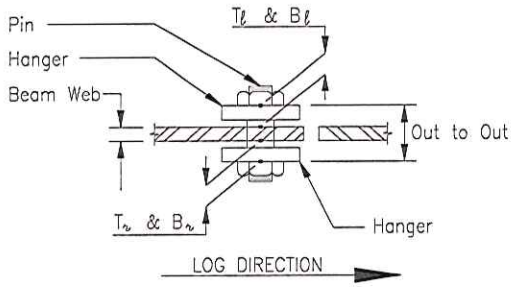

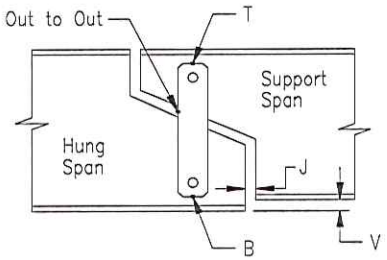

4/43

HINGE DATA SHEET

Form BRI-30, Rev. 9/97

Measurements Taken By: MJS Date: 8/16/12
TEMP = ±82°

Bridge No.: 1765 I-84 E/B OVER LOCAL ROAD, ETC Town: HTFD Date:

Hinge Located: SP #3 W. LINE HINGES Effective span for Movement: — (ft) Page: of

Beam No.	V (in) LEFT OTHERWISE LT/RT	J (in)	R (in)	L (in)	Secondary System Type	Gap[1] (Y/N)	Nut Restraint System	Comments
9(1)	7/8" JJ	1 1/16"	7/8"	1"	N/A	N/A	COTTER	SEE GEN NOTES, TYP ALL GIRDERS
8(2)	7/16"/11/16"	1"	13/16"	1 1/16"				
7(3)	1/4"	3/4"	13/16"	1 1/16"				
6(4)	3/8"	7/8"	13/16"	15/16"				AD < HINGE TE / WEB INTERFACE
5(5)	5/16"	1 1/16"	15/16"	1"				
4(6)	1/8"	7/8"	15/16"	7/8"				SEE GG
3(7)	1/16"	7/8"	7/8"	1"				
2(8)	(-) 3/16"	7/8"	7/8"	1"				
1(9)	1/4"	7/8"	1"	1"				
10								

( ) = BEAM NO @ 2010 INSP

Notes:

1) For Hinge assemblies with a redundant support system, indicate if there is a gap between the redundant system (bearing) and the bottom flange of the suspended girder.
2) All measurements are taken in reference to log direction.
   - **V** : Vertical misalignment of girders @ left edge of girder's bottom flange.
   - **J** : Joint opening between webs, measured just above the bottom flange fillet, on the left face of the girder's web.
3) Use a permanent marker to indicate locations of field measurements.

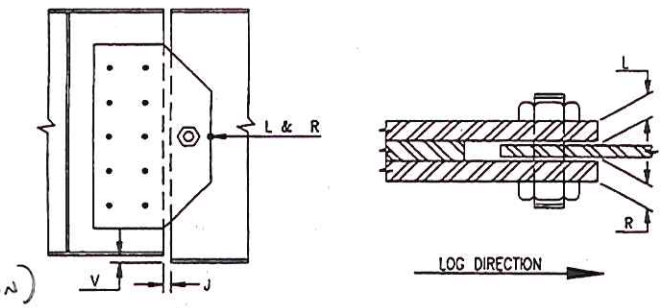

(+ V SHOWN)

GEN
- SPOTTY LT RUST ON ASSEMBLIES + BOLTS/NUTS
- RAND NUTS TURN WHEN STRUCK, COTTER PINS IN PLACE; RAND MNOR GAPS B/W HINGE PL'S + WEBS
- AREAS OF HVY RUST ON WEBS ADJ TO ASSEMBLIES
- RAND LEAKE ONTO HINGES

12/13

HINGE DATA SHEET

Form BRI-30, Rev. 9/97

Measurements Taken By: MJO Date: 8/16/2012

Measurements Reviewed By: WMK Date: 9/28/2012

Page: _____ of _____

Bridge No.: 01765 Interstate 84 EB over Amtrak & Local Roads Town: Hartford

Hinge Located: Span 3, fixed hinge (west line). Effective span for Movement: 0

Beam No.	V (IN)	J (IN)	R (IN)	L (IN)	Secondary System Type	Gap[1] (Y/N)	Nut Restraint System	Comments (2012 Measurements)
9 (1)	3/8	1 1/16	7/8	1	None	N/A	Cotter	See Previous sheet.
8 (2)	11/16	1	13/16	1 1/16	None	N/A	Cotter	Right measurement used for V (V measurements taken at left and right side due to discrepancy)
7 (3)	1/4	3/4	13/16	1 1/16	None	N/A	Cotter	See Previous sheet.
6 (4)	3/8	7/8	13/16	15/16	None	N/A	Cotter	See Previous sheet.
5 (5)	5/16	1 1/16	15/16	1	None	N/A	Cotter	See Previous sheet.
4 (6)	1/8	7/8	15/16	7/8	None	N/A	Cotter	See Previous sheet.
3 (7)	1/16	7/8	7/8	1	None	N/A	Cotter	See Previous sheet.
2 (8)	- 3/16	7/8	7/8	1	None	N/A	Cotter	See Previous sheet.
1 (9)	1/4	7/8	1	1	None	N/A	Cotter	See Previous sheet.
								Girders were renumbered this inspection. First girder number represents 2012 girder number. Girder number in parenthesis is the same girder, but with 2010 numbering convention.

Notes:

1) For Hinge assemblies with a redundant support system, indicate if there is a gap between the redundant system (bearing) and the bottom flange of the suspended girder.
2) All measurements are taken in reference to log direction.
   - **V** : Vertical misalignment of girders @ left edge of girder's bottom flange.
   - **J** : Joint opening between webs, measured just above the bottom flange fillet, on the left face of the girder's web.
3) Use a permanent marker to indicate locations of field measurements.

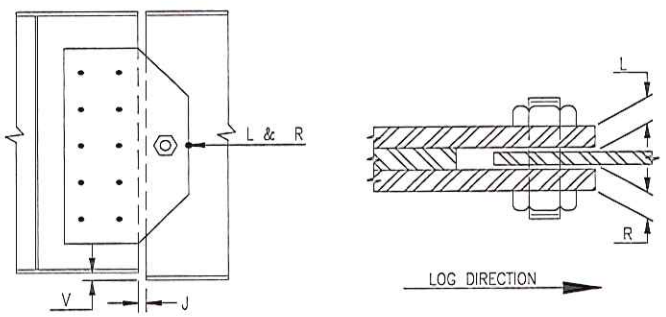

43/43

HINGE ANALYSIS SHEET

Form BRI-30, Rev. 9/97

Measurements Taken By: MAI Date: 10/19/2010

Measurements Reviewed By: CC Date: 10/19/2010

Page: of

Bridge No.: 01765 Interstate 84 EB over Amtrak & Local Roads Town: Hartford

Hanger Location: Span 3, fixed hinge (west line) Effective span for Movement: 0

Beam No.	V (in)	J (in)	R (in)	L (in)	Secondary System Type	Gap[1] (Y/N)	Nut Restraint System	Comments (2010 Measurements)
9 (1)	1/4	1 1/16	7/8	1	None	N/A	Cotter	See 2010 report for comments.
8 (2)	11/16	1	13/16	1	None	N/A	Cotter	See 2010 report for comments.
7 (3)	1/4	3/4	3/4	1	None	N/A	Cotter	See 2010 report for comments.
6 (4)	7/16	7/8	13/16	15/16	None	N/A	Cotter	See 2010 report for comments.
5 (5)	5/16	1 1/16	7/8	1	None	N/A	Cotter	See 2010 report for comments.
4 (6)	1/16	7/8	1	7/8	None	N/A	Cotter	See 2010 report for comments.
3 (7)	1/16	13/16	7/8	1	None	N/A	Cotter	See 2010 report for comments.
2 (8)	- 3/16	7/8	7/8	1	None	N/A	Cotter	See 2010 report for comments.
1 (9)	1/4	7/8	1	15/16	None	N/A	Cotter	See 2010 report for comments.

Notes:

1) For Hinge assemblies with a redundant support system, indicate if there is a gap between the redundant system (bearing) and the bottom flange of the suspended girder.
2) All measurements are taken in reference to log direction.
   - **V** : Vertical misalignment of girders @ left edge of girder's bottom flange.
   - **J** : Joint opening between webs, measured just above the bottom flange fillet, on the left face of the girder's web.
3) Use a permanent marker to indicate locations of field measurements.

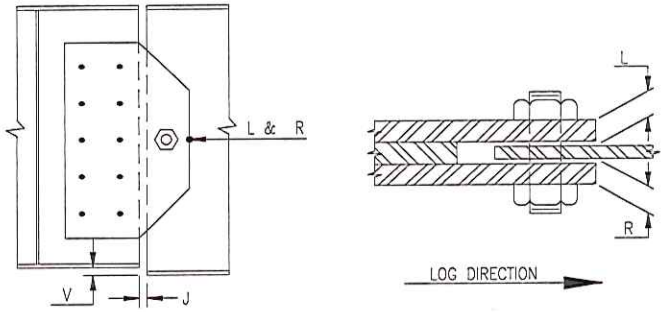

44/93

HINGE ANALYSIS SHEET

Form BRI-30, Rev. 9/97

Measurements Taken By: -- Date: --

Bridge No.: 01765 Interstate 84 EB over Amtrak & Local Roads Town: Hartford

Measurements Reviewed By: WMK Date: 9/28/2012

Hanger Location: Span 3, fixed hinge (west line) Effective span for Movement: 0

Page: of

Beam No.	V (mm)	J (mm)	R (mm)	L (mm)	Reviewer's Comments (Comparison sheet)
9 (1)	2/16	0	0	0	V was 3/16" in 2002, 1/4" in 2004-2010, and 3/8" in 2012.
8 (2)	0	0	0	1/16	
7 (3)	0	0	1/16	1/16	
6 (4)	- 1/16	0	0	0	
5 (5)	0	0	1/16	0	
4 (6)	1/16	0	- 1/16	0	
3 (7)	0	1/16	0	0	
2 (8)	0	0	0	0	
1 (9)	0	0	0	1/16	
					General: Diffferences greater than or equal to 1/8" are shaded and were double checked. No areas of distress were noted.

Additional Review Comments:

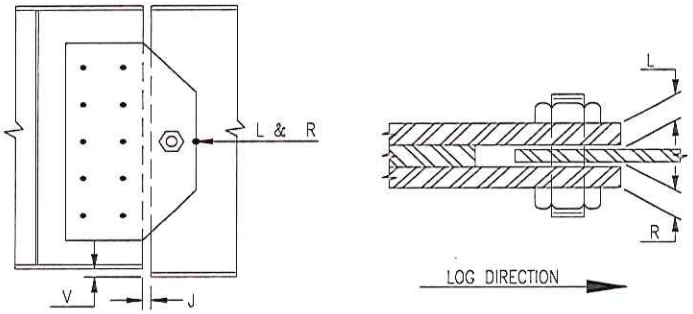

45/43

PIN & HANGER DATA SHEET

Form BRI-29, Rev. 6/99

Measurements Taken By: MJC Date: 8/16/12

Bridge No.: 1765 I-84 E/B OVER LOCAL RDS, ETC Town: HTRD

Hanger Location: SP #3 - EAST WEST P+H Effective span for Movement: 252 (ft)

Page: of

Beam No.	V (in)	J (in)	Tr (in)	Br (in)	T/ (in)	B/ (in)	Out to Out (in)	Secondary System Type	Gap[1] (Y/N)	Nut Restraint System	Temp	Comments
9(1)	1/4"	2" vv	2 9/16"	2 5/8"	2 5/8"	2 5/8"	6 3/8"	N/A	N/A	COTTER	85°	
8(2)	3/16"	2 5/8"	2 9/16"	2 3/4"	2 11/16"	2 5/8"	6 3/8"					WINDLOCK W/AD + LT RUST
7(3)	0"	2 5/16"	2 9/16"	2 11/16"	2 3/4"	2 9/16"	6 3/8"					
6(4)	1/2"	2 1/2"	2 9/16"	2 5/8"	2 5/8"	2 11/16"	6 3/8"					WINDLOCK W/AD + LT RUST
5(5)	0"	2 3/8"	2 9/16"	2 11/16"	2 3/4"	2 9/16"	6 3/8"					
4(6)	5/16"	2 1/4"	2 9/16"	2 9/16"	2 5/8"	2 11/16"	6 5/16"					WINDLOCK W/AD + HVY RUST
3(7)	(-) 3/16"	2 11/16	2 5/8"	2 3/4"	2 9/16"	2 5/8	6 7/16" vv					
2(8)	1/4"	2 5/16"	2 11/16"	2 5/8"	2 9/16"	2 9/16"	6 5/16"					WINDLOCK W/AD + MOD - HVY RUST
1(9)	3/8"	2"	2 5/8"	2 9/16"	2 9/16"	2 1/2"	6 5/16"					
~~10~~												

( ) = BEAM NO @ 2010 INSP

Notes:

1) For Pin & Hanger assemblies with a redundant support system, indicate if there is a gap between the redundant system (bearing) and the bottom flange of the suspended girder.
2) All measurements are taken in reference to log direction.
   - **V** : Vertical misalignment of girders @ left edge of girder's bottom flange.
   - **J** : Joint opening between webs, measured just above the bottom flange fillet, on the left face of the girder's web.
   - **Out to Out** : The out-to-out of hangers taken at the leading edge, based on log direction.
3) Use a permanent marker to indicate locations of field measurements.

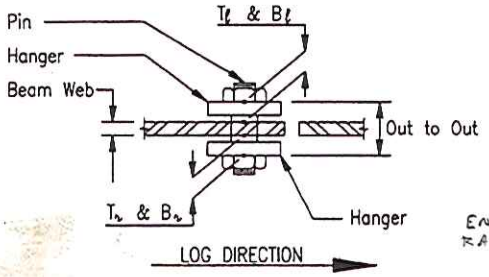

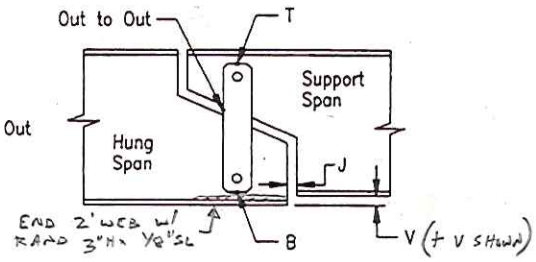

GEN
- AREAS OF HVY BIRD DEBIS ON HANGER PL'S + PINS/NUTS
- RAND NUTS TURN WHEN STRUCK
- AREAS OF HVY RUST ON GIRDERS IN VICINITY OF ASSEMBLIES

4/9/13

PIN & HANGER DATA SHEET

Form BRI-29, Rev. 9/97

Measurements Taken By: MJO Date: 8/16/2012

Measurements Reviewed By: WMK Date: 9/28/2012

Page: of

Bridge No.: 01765 I-84 Eastbound over Amtrak & Local Roads Town: Hartford

Hanger Location: Span 3, expansion hangers (east line). Effective span for Movement: 252

Beam No.	V (in)	J (in)	T_r (in)	B_r (in)	T_ℓ (in)	B_ℓ (in)	Out to Out (in)	Secondary System Type	Gap[1] (Y/N)	Nut Restraint System	Temp Deg. F	Comments (2012 Measurements)
9 (1)	1/4	2	2 9/16	2 5/8	2 5/8	2 5/8	6 3/8	None	N/a	Cotter	85	See previous sheet.
8 (2)	3/16	2 5/8	2 9/16	2 3/4	2 11/16	2 5/8	6 3/8	None	N/a	Cotter	85	See previous sheet.
7 (3)	0	2 5/16	2 9/16	2 11/16	2 3/4	2 9/16	6 3/8	None	N/a	Cotter	85	See previous sheet.
6 (4)	1/2	2 1/2	2 9/16	2 5/8	2 5/8	2 11/16	6 3/8	None	N/a	Cotter	85	See previous sheet.
5 (5)	0	2 3/8	2 9/16	2 11/16	2 3/4	2 9/16	6 3/8	None	N/a	Cotter	85	See previous sheet.
4 (6)	5/16	2 1/4	2 9/16	2 9/16	2 5/8	2 11/16	6 5/16	None	N/a	Cotter	85	See previous sheet.
3 (7)	- 3/16	2 11/16	2 5/8	2 3/4	2 9/16	2 5/8	6 7/16	None	N/a	Cotter	85	See previous sheet.
2 (8)	1/4	2 5/16	2 11/16	2 5/8	2 9/16	2 9/16	6 5/16	None	N/a	Cotter	85	See previous sheet.
1 (9)	3/8	2	2 5/8	2 9/16	2 9/16	2 1/2	6 5/16	None	N/a	Cotter	85	See previous sheet.
												Girders were renumbered this inspection. First girder number represents 2012 girder number. Girder number in parenthesis is the same girder, but with 2010 numbering convention.

Notes:

1) For Pin & Hanger assemblies with a redundant support system, indicate if there is a gap between the redundant system (bearing) and the bottom flange of the suspended girder.
2) All measurements are taken in reference to log direction.
   - **V** : Vertical misalignment of girders @ left edge of girder's bottom flange.
   - **J** : Joint opening between webs, measured just above the bottom flange fillet, on the left face of the girder's web.
   - **Out to Out** : The out-to-out of hangers taken at the leading edge, based on log direction.
3) Use a permanent marker to indicate locations of field measurements.

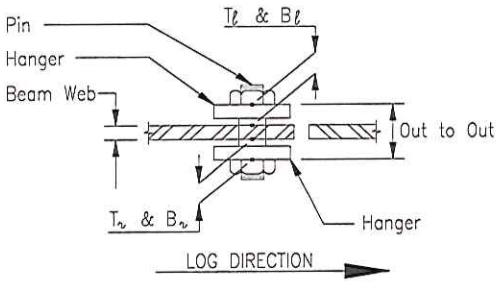

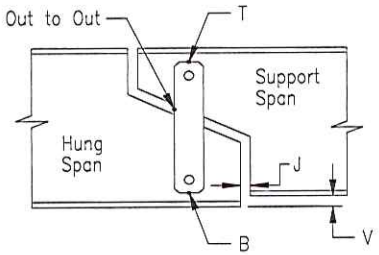

47/93

PIN & HANGER DATA SHEET

Form BRI-29, Rev. 9/97

Measurements Taken By: MAI Date: 10/18/2010

Measurements Reviewed By: CC Date: 10/18/2010

Page: _____ of _____

Bridge No.: 01765 I-84 Eastbound over Amtrak & Local Roads Town: Hartford

Hanger Location: Span 3, expansion hangers (east line) Effective span for Movement: 252

Beam No.	V (in)	J (in)	T_r (in)	B_r (in)	T_ℓ (in)	B_ℓ (in)	Out to Out (in)	Secondary System Type	Gap[1] (Y/N)	Nut Restraint System	Temp °F	Comments (2010 Measurements)
9 (1)	1/4	2 5/8	2 9/16	2 5/8	2 5/8	2 9/16	6 3/8	None	N/a	Cotter	53	See 2010 report for comments.
8 (2)	3/16	3 1/8	2 9/16	2 3/4	2 5/8	2 5/8	6 3/8	None	N/a	Cotter	53	See 2010 report for comments.
7 (3)	1/16	2 15/16	2 9/16	2 11/16	2 11/16	2 9/16	6 5/16	None	N/a	Cotter	53	See 2010 report for comments.
6 (4)	9/16	3 1/8	2 9/16	2 9/16	2 5/8	2 9/16	6 5/16	None	N/a	Cotter	53	See 2010 report for comments.
5 (5)	- 1/16	3	2 5/8	2 11/16	2 13/16	2 9/16	6 5/16	None	N/a	Cotter	53	See 2010 report for comments.
4 (6)	1/4	2 7/8	2 5/8	2 9/16	2 9/16	2 11/16	6 5/16	None	N/a	Cotter	53	See 2010 report for comments.
3 (7)	- 1/4	3 5/16	2 5/8	2 3/4	2 5/8	2 5/8	6 5/16	None	N/a	Cotter	53	See 2010 report for comments.
2 (8)	1/4	2 15/16	2 11/16	2 5/8	2 9/16	2 9/16	6 5/16	None	N/a	Cotter	53	See 2010 report for comments.
1 (9)	7/16	2 5/8	2 5/8	2 5/8	2 9/16	2 1/2	6 5/16	None	N/a	Cotter	53	See 2010 report for comments.

Notes:

1) For Pin & Hanger assemblies with a redundant support system, indicate if there is a gap between the redundant system (bearing) and the bottom flange of the suspended girder.

2) All measurements are taken in reference to log direction.

V : Vertical misalignment of girders @ left edge of girder's bottom flange.

J : Joint opening between webs, measured just above the bottom flange fillet, on the left face of the girder's web.

Out to Out : The out-to-out of hangers taken at the leading edge, based on log direction.

3) Use a permanent marker to indicate locations of field measurements.

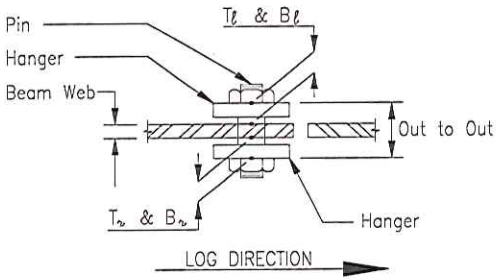

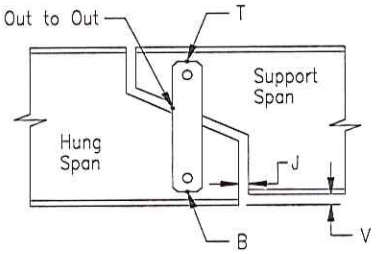

49/93

PIN & HANGER ANALYSIS SHEET

Form BRI-29, Rev. 9/97

Measurements Taken By: -- Date: --

Bridge No.: 01765 I-84 Eastbound over Amtrak & Local Roads Town: Hartford Measurements Reviewed By: WMK Date: 9/28/2012

Hanger Location: Span 3 expansion hangers (east line) Effective span for Movement: 252 Page: of

Beam No.	V (in)	J (in)	Calc'd J (in)	Calc'd Diff. in J's (in)	T_r (in)	B_r (in)	T_ℓ (in)	B_ℓ (in)	Out to Out (in)	Reviewer's Comments (Comparison Sheet)
9 (1)	0	- 5/8	-0.629	0	0	0	0	1/16	0	
8 (2)	0	- 1/2	-0.629	2/16	0	0	1/16	0	0	
7 (3)	- 1/16	- 5/8	-0.629	0	0	0	1/16	0	1/16	
6 (4)	- 1/16	- 5/8	-0.629	0	0	1/16	0	1/8	1/16	Bl was 2-9/16" in 2002-2010. 2-11/16 in 2012.
5 (5)	1/16	- 5/8	-0.629	0	- 1/16	0	- 1/16	0	1/16	
4 (6)	1/16	- 5/8	-0.629	0	- 1/16	0	1/16	0	0	
3 (7)	1/16	- 5/8	-0.629	0	0	0	- 1/16	0	1/8	Out-Out was 6-7/16" in 2002, 6-3/8" in 2004, 6-5/16" in 2006-2010 and 6-7/16" in 2012
2 (8)	0	- 5/8	-0.629	0	0	0	0	0	0	
1 (9)	- 1/16	- 5/8	-0.629	0	0	- 1/16	0	0	0	
										Differences greater than or equal to 1/8" are highlighted, except at "J" and "Calculated J", which are temperature dependant. All measurements were double checked. No distress was noted.

Additional Review Comments:

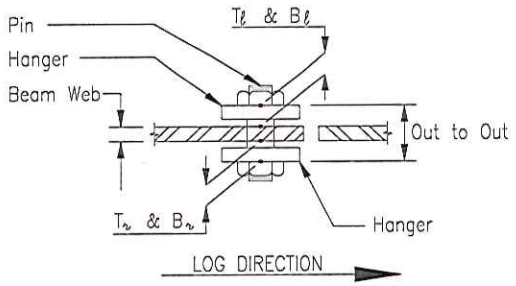

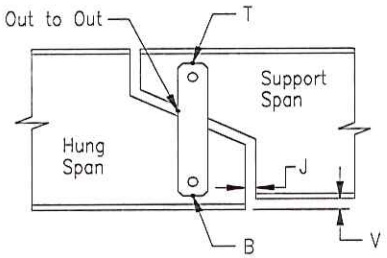

44/43

HINGE DATA SHEET

Form BRI-30, Rev. 9/97

Measurements Taken By: DK/MJO Date: 8/21/12

Bridge No.: 1765 I-84 E/B OVER ASYLUM, ETC Town: HTFD Date:

Hinge Located: SP #6, WEST LINE Effective span for Movement: 0 (ft) Page: of

Beam No.	V (in)	J (in)	R (in)	L (in)	Secondary System Type	Gap[1] (Y/N)	Nut Restraint System	Comments
9 (1)	(-) 3/16"	3/4"	15/16"	1 1/16"	N/A	N/A	COTTER	
8 (2)	1"	1 1/16"	7/8"	15/16"				SEE GS
7 (3)	(-) 13/16" VV	15/16"	1"	15/16"				SEE GS
6 (4)	(-) 1/2" VV	1"	15/16"	7/8"				SEE GS ; GAP B/W NUT + PL NOT SEEN
5 (5)	15/16"	1 1/16"	7/8"	1 1/8"				± 1/4" GAP B/W PL'S (MEAS @ LEFT)
4 (6)	(-) 3/4" VV	7/8"	7/8"	15/16"				7/16" GAP B/W PL'S (TOP LEFT)
3 (7)	(-) 1 3/16"	9/16"	1"	7/8"				✓
2 (8)	(-) 9/16"	13/16" VV	13/16"	15/16"				✓
1 (9)	1/4"	1 1/16" VV	15/16"	1 1/4"				UP TO 1/8" GAP B/W PL'S

(#) = BM NO @ 2010 INSP

Notes:

1) For Hinge assemblies with a redundant support system, indicate if there is a gap between the redundant system (bearing) and the bottom flange of the suspended girder.
2) All measurements are taken in reference to log direction.
   - **V** : Vertical misalignment of girders @ left edge of girder's bottom flange.
   - **J** : Joint opening between webs, measured just above the bottom flange fillet, on the left face of the girder's web.
3) Use a permanent marker to indicate locations of field measurements.

TYP UP TO 1/8" SL @ BOT 4", ONLY SHOWN IF ≥ 3/16" @ S.L ELEV SKETCHES

ADJ BF'S UP TO 6" W/ UP TO 3/16" SL (NON-CRIT ZONES)

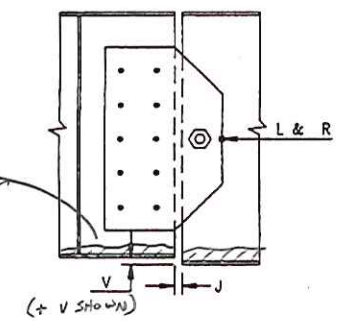

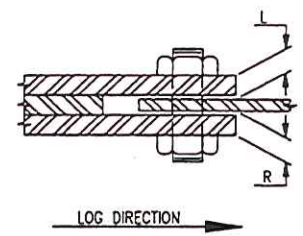

GEN
- RAND GAP'S B/W PL'S, UP TO 1/8" TYP (GREATER GAPS SHOWN @ SMTS)
- HVY SILT STAINS @ HINGES (NO ACTIVE LKAGE @ TIME OF INSP)

50/175

HINGE DATA SHEET

Form BRI-30, Rev. 9/97

Measurements Taken By: MJO Date: 8/21/2012

Bridge No.: 01765 Interstate 84 EB over Amtrak & Local Roads Town: Hartford Measurements Reviewed By: WMK Date: 9/28/2012

Hinge Located: Span 6 hinges (west line). Effective span for Movement: 0 Page: _____ of _____

Beam No.	V (IN)	J (IN)	R (IN)	L (IN)	Secondary System Type	Gap[1] (Y/N)	Nut Restraint System	Comments (2012 Measurements)
9 (1)	- 3/16	3/4	15/16	1 1/16	None	N/A	Cotter	See previous sheet.
8 (2)	1	1 1/16	7/8	15/16	None	N/A	Cotter	See previous sheet.
7 (3)	- 13/16	15/16	1	15/16	None	N/A	Cotter	See previous sheet.
6 (4)	- 1/2	1	15/16	7/8	None	N/A	Cotter	See previous sheet.
5 (5)	15/16	1 1/16	7/8	1 1/8	None	N/A	Cotter	See previous sheet.
4 (6)	- 3/4	7/8	7/8	15/16	None	N/A	Cotter	See previous sheet.
3 (7)	-1 3/16	9/16	1	7/8	None	N/A	Cotter	See previous sheet.
2 (8)	- 9/16	13/16	13/16	15/16	None	N/A	Cotter	See previous sheet.
1 (9)	1/4	1 1/16	15/16	1 1/4	None	N/A	Cotter	See previous sheet.
								Girders were renumbered this inspection. First girder number represents 2012 girder number. Girder number in parenthesis is the same girder, but with 2010 numbering convention.

Notes:

1) For Hinge assemblies with a redundant support system, indicate if there is a gap between the redundant system (bearing) and the bottom flange of the suspended girder.
2) All measurements are taken in reference to log direction.
   - **V** : Vertical misalignment of girders @ left edge of girder's bottom flange.
   - **J** : Joint opening between webs, measured just above the bottom flange fillet, on the left face of the girder's web.
3) Use a permanent marker to indicate locations of field measurements.

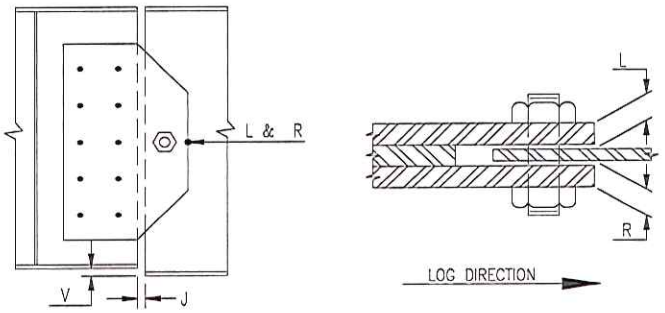

51/93

HINGE ANALYSIS SHEET

Form BRI-30, Rev. 9/97

Measurements Taken By: DT Date: 10/14/2010

Measurements Reviewed By: ZRI Date: 10/14/2010

Page: _____ of _____

Bridge No.: 01765 Interstate 84 EB over Amtrak & Local Roads Town: Hartford

Hanger Location: Span 6 hinges (west line). Effective span for Movement: 0

Beam No.	V (in)	J (in)	R (in)	L (in)	Secondary System Type	Gap[1] (Y/N)	Nut Restraint System	Comments (2010 Measurements)
9 (1)	- 3/16	11/16	15/16	1	None	N/A	Cotter	See 2010 report for comments.
8 (2)	15/16	1	7/8	15/16	None	N/A	Cotter	See 2010 report for comments.
7 (3)	- 11/16	7/8	1	7/8	None	N/A	Cotter	See 2010 report for comments.
6 (4)	- 3/4	1	7/8	15/16	None	N/A	Cotter	See 2010 report for comments.
5 (5)	7/8	15/16	13/16	1 1/8	None	N/A	Cotter	See 2010 report for comments.
4 (6)	- 5/8	7/8	7/8	15/16	None	N/A	Cotter	See 2010 report for comments.
3 (7)	-1 3/16	9/16	15/16	7/8	None	N/A	Cotter	See 2010 report for comments.
2 (8)	- 5/8	11/16	13/16	15/16	None	N/A	Cotter	See 2010 report for comments.
1 (9)	5/16	15/16	15/16	1 1/4	None	N/A	Cotter	See 2010 report for comments.

Notes:

1) For Hinge assemblies with a redundant support system, indicate if there is a gap between the redundant system (bearing) and the bottom flange of the suspended girder.
2) All measurements are taken in reference to log direction.
   - **V** : Vertical misalignment of girders @ left edge of girder's bottom flange.
   - **J** : Joint opening between webs, measured just above the bottom flange fillet, on the left face of the girder's web.
3) Use a permanent marker to indicate locations of field measurements.

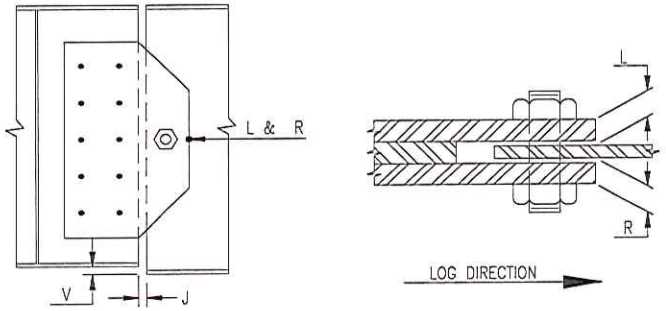

52/193

HINGE ANALYSIS SHEET

Form BRI-30, Rev. 9/97

Measurements Taken By: -- Date: --

Bridge No.: 01765 Interstate 84 EB over Amtrak & Local Roads Town: Hartford

Measurements Reviewed By: WMK Date: 9/28/2012

Hanger Location: Span 6 hinges (west line). Effective span for Movement: 0

Page: of

Beam No.	V (mm)	J (mm)	R (mm)	L (mm)	Reviewer's Comments (Comparison sheet)
9 (1)	0	1/16	0	1/16	
8 (2)	1/16	1/16	0	0	
7 (3)	- 2/16	1/16	0	1/16	V was -10/16" in 2002, -11/16" in 2004-2010, and -13/16" in 2012.
6 (4)	4/16	0	1/16	- 1/16	V was -3/4" in 2002-2010 and -1/2" in 2012.
5 (5)	1/16	2/16	1/16	0	
4 (6)	- 2/16	0	0	0	V was -15/16" in 2002, -14/16" in 2004, -5/8" in 2006-2010, and -3/4" in 2012.
3 (7)	0	0	1/16	0	
2 (8)	1/16	2/16	0	0	
1 (9)	- 1/16	2/16	0	0	
					General: Differences greater than or equal to 1/8" are shaded, except at "J". Measurements were double checked and no distress was noted.

Additional Review Comments:

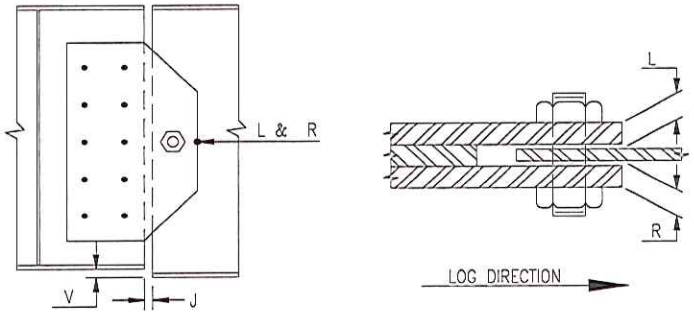

53/43

PIN & HANGER DATA SHEET

Form BRI-29, Rev. 6/99

Measurements Taken By: BH/MJO Date: 6/21/12

Bridge No.: 01765 I-84 E/B OVER ASYLUM, ETC. **Town:** HTFD

Hanger Location: SP # 6, EAST LINE Effective span for Movement: 131 (ft)

Page: of

Beam No.	V (in)	J (in)	Tr (in)	Br (in)	T/ (in)	B/ (in)	Out to Out (in)	Secondary System Type	Gap[1] (Y/N)	Nut Restraint System	Temp	Comments
		ALL DBL CHECK'D										
9 (1)	9/16" W	3"	2 1/16"	2 5/16" W	2 1/4"	2 1/16"	5 3/8"	N/A	N/A	CONTER	80°	
8 (2)	1/2"	1 3/4"	2 3/16"	2 1/8"	2 1/4"	2 1/4"	5 5/16"					WINDLOCK
7 (3)	-5/8"	2"	2 1/8"	2 1/8"	2 1/8"	2 1/4"	5 1/4"					
6 (4)	5/16"	1 5/8"	2 1/8"	2 1/8"	2 1/16"	2 1/16"	5 1/4"					WINDLOCK
5 (5)	(-) 3/8"	2 3/8"	2 1/16"	2 1/16"	2 1/8"	2 1/8"	5 7/16"					
4 (6)	7/16"	2 1/4"	2 1/16"	2 1/16"	2 1/8"	2 1/16"	5 3/8"					WINDLOCK
3 (7)	(-) 3/8"	2 3/8	2 3/16"	2 1/16"	2 3/16"	2 1/8"	5 1/4"					
2 (8)	5/16"	1 7/8" W	2 5/16" W	2"	2 3/16"	2 1/4"	5 3/8"					WINDLOCK
1 (9)	1/16"	2 7/16"	2 1/16"	2 3/16"	2 1/8"	2 1/16"	5 1/4"	—	—	—	—	
A												

(#) = BM No. @ 2010 INSP

Notes:

1) For Pin & Hanger assemblies with a redundant support system, indicate if there is a gap between the redundant system (bearing) and the bottom flange of the suspended girder.

2) All measurements are taken in reference to log direction.

V : Vertical misalignment of girders @ left edge of girder's bottom flange. → MEASURED @ U/S WINDLOCK IF PRESENT

J : Joint opening between webs, measured just above the bottom flange fillet, on the left face of the girder's web.

Out to Out : The out-to-out of hangers taken at the leading edge, based on log direction.

3) Use a permanent marker to indicate locations of field measurements.

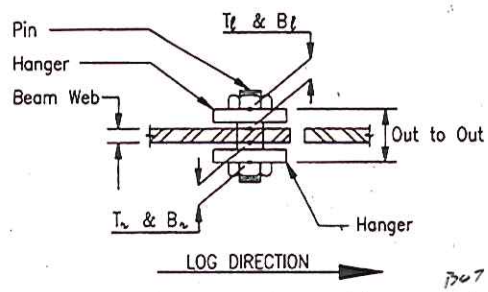

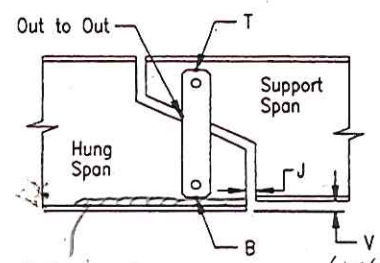

GEN
- RAND NUTS TURN WHEN STRUCK

BOT 3" HUNG SPAN WEB W/ LR UP TO ± 3'L x 4" H W/ 1/8" SL @ BOTH SIDES ;
END ± 10' BF W/ LR + UP TO 1/8" SL (TAPERS TOWARD MIDSPAN)

5/4/13

PIN & HANGER DATA SHEET

Form BRI-29, Rev. 9/97

Measurements Taken By: BH/MJO Date: 8/21/2012

Measurements Reviewed By: WMK Date: 9/28/2012

Page: of

Bridge No.: 01765 Interstate 84 EB over Amtrak & Local Roads Town: Hartford

Hanger Location: Span 6 expansion hangers (east line). Effective span for Movement: 131

Beam No.	V (in)	J (in)	T_r (in)	B_r (in)	T_ℓ (in)	B_ℓ (in)	Out to Out (in)	Secondary System Type	Gap[1] (Y/N)	Nut Restraint System	Temp Deg. F	Comments (2012 Measurements)
9 (1)	9/16	3	2 1/16	2 5/16	2 1/4	2 1/16	5 3/8	None	N/A	Cotter	80	See previous sheet.
8 (2)	1/2	1 3/4	2 3/16	2 1/8	2 1/4	2 1/4	5 5/16	None	N/A	Cotter	80	See previous sheet.
7 (3)	- 5/8	2	2 1/8	2 1/8	2 1/8	2 1/4	5 1/4	None	N/A	Cotter	80	See previous sheet.
6 (4)	5/16	1 5/8	2 1/8	2 1/8	2 1/16	2 1/16	5 1/4	None	N/A	Cotter	80	See previous sheet.
5 (5)	- 3/8	2 3/8	2 1/16	2 1/16	2 1/8	2 1/8	5 7/16	None	N/A	Cotter	80	See previous sheet.
4 (6)	7/16	2 1/4	2 1/16	2 1/16	2 1/8	2 1/16	5 3/8	None	N/A	Cotter	80	See previous sheet.
3 (7)	- 3/8	2 3/8	2 3/16	2 1/16	2 3/16	2 1/8	5 1/4	None	N/A	Cotter	80	See previous sheet.
2 (8)	5/16	1 7/8	2 5/16	2	2 3/16	2 1/4	5 3/8	None	N/A	Cotter	80	See previous sheet.
1 (9)	1/16	2 7/16	2 1/16	2 3/16	2 1/8	2 1/16	5 1/4	None	N/A	Cotter	80	See previous sheet.
												Girders were renumbered this inspection. First girder number represents 2012 girder number. Girder number in parenthesis is the same girder, but with 2010 numbering convention.

Notes:

1) For Pin & Hanger assemblies with a redundant support system, indicate if there is a gap between the redundant system (bearing) and the bottom flange of the suspended girder.
2) All measurements are taken in reference to log direction.
   - **V** : Vertical misalignment of girders @ left edge of girder's bottom flange.
   - **J** : Joint opening between webs, measured just above the bottom flange fillet, on the left face of the girder's web.
   - **Out to Out** : The out-to-out of hangers taken at the leading edge, based on log direction.
3) Use a permanent marker to indicate locations of field measurements.

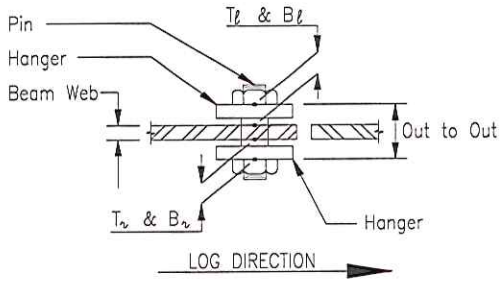

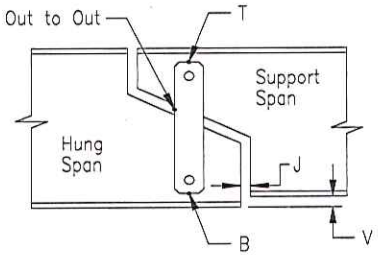

55/63

PIN & HANGER DATA SHEET

Form BRI-29, Rev. 9/97

Measurements Taken By: DY Date: 10/14/2010

Measurements Reviewed By: ZRI Date: 10/14/2010

Page: of

Bridge No.: 01765 Interstate 84 EB over Amtrak & Local Roads Town: Hartford

Hanger Location: Span 6 expansion hangers (east line). Effective span for Movement: 131

Beam No.	V (in)	J (in)	T_r (in)	B_r (in)	T_ℓ (in)	B_ℓ (in)	Out to Out (in)	Secondary System Type	Gap[1] (Y/N)	Nut Restraint System	Temp °F	Comments (2010 Measurements)
9 (1)	11/16	3 1/4	2 1/16	2 3/16	2 5/16	2 1/16	5 7/16	None	N/A	Cotter	60	See 2010 report for comments.
8 (2)	7/16	2 5/8	2 1/8	2 1/8	2 3/16	2 1/4	5 3/8	None	N/A	Cotter	60	See 2010 report for comments.
7 (3)	- 5/8	3 7/16	2 3/16	2 1/16	2 3/16	2 1/4	5 1/4	None	N/A	Cotter	60	See 2010 report for comments.
6 (4)	5/16	3 1/16	2 1/16	2 1/8	2 1/8	2 1/8	5 5/16	None	N/A	Cotter	60	See 2010 report for comments.
5 (5)	- 3/8	3 1/8	2 1/8	2 1/8	2 1/16	2 3/16	5 3/8	None	N/A	Cotter	60	See 2010 report for comments.
4 (6)	1/2	2 7/16	2 1/8	2 1/8	2 1/8	2 1/8	5 7/16	None	N/A	Cotter	60	See 2010 report for comments.
3 (7)	- 3/8	2 3/4	2 3/16	2 1/8	2 3/16	2 3/16	5 1/4	None	N/A	Cotter	60	See 2010 report for comments.
2 (8)	5/16	2 1/2	2 3/16	2 1/16	2 1/4	2 1/4	5 5/16	None	N/A	Cotter	60	See 2010 report for comments.
1 (9)	1/8	3 1/2	2 1/8	2 1/4	2 3/16	2 1/16	5 5/16	None	N/A	Cotter	60	See 2010 report for comments.

Notes:

1) For Pin & Hanger assemblies with a redundant support system, indicate if there is a gap between the redundant system (bearing) and the bottom flange of the suspended girder.

2) All measurements are taken in reference to log direction.

V : Vertical misalignment of girders @ left edge of girder's bottom flange.

J : Joint opening between webs, measured just above the bottom flange fillet, on the left face of the girder's web.

Out to Out : The out-to-out of hangers taken at the leading edge, based on log direction.

3) Use a permanent marker to indicate locations of field measurements.

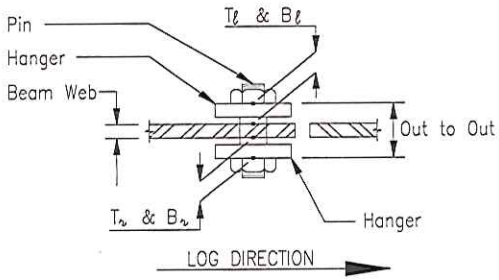

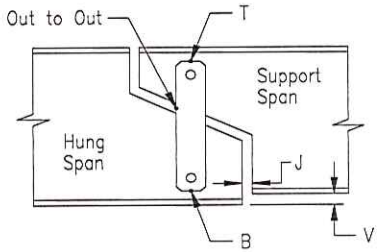

5/1/13

PIN & HANGER ANALYSIS SHEET

Form BRI-29, Rev. 9/97

Measurements Taken By: --- Date: ---

Bridge No.: 01765 Interstate 84 EB over Amtrak & Local Roads Town: Hartford Measurements Reviewed By: WMK Date: 9/28/2012

Hanger Location: Span 6 expansion hangers (east line). Effective span for Movement: 131 Page: of

Beam No.	V (in)	J (in)	Calc'd J (in)	Calc'd Diff. in J's (in)	T_r (in)	B_r (in)	T_ℓ (in)	B_ℓ (in)	Out to Out (in)	Reviewer's Comments (Comparison Sheet)
9 (1)	- 1/8	- 1/4	- 3/16	1/16	0	1/8	- 1/16	0	- 1/16	V was 9/16" in 2002, 1/2" in 2004, 11/16" in 2006, 10/16" in 2008, 11/16" in 2010 and 9/16" in 2012. Br was 2-5/16" in 2002-2008, 2-3/16" in 2010 and 2-5/16" in 2012.
8 (2)	1/16	- 7/8	- 3/16	11/16	1/16	0	1/16	0	- 1/16	
7 (3)	0	-1 7/16	- 3/16	1 4/16	- 1/16	1/16	- 1/16	0	0	
6 (4)	0	-1 7/16	- 3/16	1 4/16	1/16	0	- 1/16	- 1/16	- 1/16	
5 (5)	0	- 3/4	- 3/16	9/16	- 1/16	- 1/16	1/16	- 1/16	1/16	
4 (6)	- 1/16	- 3/16	- 3/16	0	- 1/16	- 1/16	0	- 1/16	- 1/16	
3 (7)	0	- 3/8	- 3/16	3/16	0	- 1/16	0	- 1/16	0	
2 (8)	0	- 5/8	- 3/16	7/16	1/8	- 1/16	- 1/16	0	1/16	Tr was 2-1/4" in 2002-2008, 2-3/16" in 2010 and 2-5/16" in 2012.
1 (9)	- 1/16	-1 1/16	- 3/16	14/16	- 1/16	- 1/16	- 1/16	0	- 1/16	
										Differences greater than or equal to 1/8" are highlighted, except at "J" and "Calculated J", which are temperature dependant. All measurements were double checked. No distress was noted.

Additional Review Comments:

Based on the "J" measurements, the girders are moving in the correct direction, based on the temperatures (60° - 80°, expansion, therefore gaps should get smaller). Large differences in "J" measurements may be due to the large skew at this location.

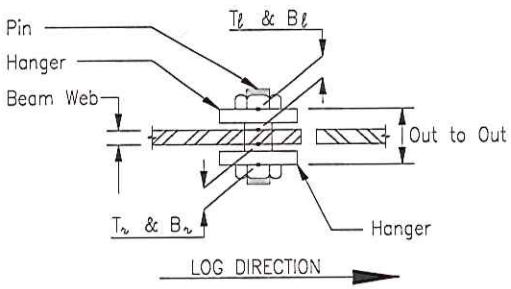

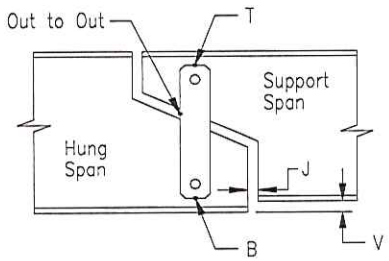

57/63

PIN & HANGER DATA SHEET

Form BRI-29, Rev. 6/99

Measurements Taken By: PMB Date: 8/14/12

Bridge No.: 1765 I-84 E/B over Asylum, etc. Town: Hartford

Hanger Location: SPAN 9 – WEST LINE PIN & HANGER Effective span for Movement: 112 (ft)

Page: of

Beam No.	V (in)	J (in)	Tr (in)	Br (in)	T/ (in)	B/ (in)	Out to Out (in)	Secondary System Type	Gap[1] (Y/N)	Nut Restraint System	Temp	Comments
9(1)	1/8	2 1/8	3 12/16	3 10/16	3 11/16	3 12/16	8 6/16	N/A	N	Cotter Pin	82	N. AND S. BOTTOM NUTS TURNED by hand
8(2)	-14/16	1 14/16	3 10/16	3 8/16	3 11/16	3 14/16	8 3/8	✓	✓	✓	✓	N. BOTTOM NUT TURNED by hand
7(3)	* 8/16	2	3 10/16	3 14/16	3 13/16	3 9/16	8 8/16	✓	✓	✓	✓	BOTTOM SOUTH NUT 3/16" GAP BTWN NUT & Hanger
6(4)	-4/16	1 7/8	3 14/16	3 10/16	3 11/16	3 10/16	8 3/8	✓	✓	✓	✓	TOP N. NUT w/ 3/16" GAP BTWN NUT & HANGER
5(5)	-6/16	2 1/16	3 11/16	3 11/16	3 10/16	3 9/16	8 3/8	✓	✓	✓	✓	N. BOT NUT TURNS WHEN STRUCK
4(6)	-9/16	2 8/16	3 9/16	3 10/16	3 14/16	3 10/16	8 7/16	✓	✓	✓	✓	N. BOTTOM NUT MOVED by hand
3(7)	-12/16	1 1/2	3 13/16	3 10/16	3 11/16	3 9/16	8 5/16	✓	✓	✓	✓	
2(8)	-5/16	2	3 12/16	3 12/16	3 10/16	3 9/16	8 5/16					N. BOTT NUT Turned by hand
1(9)	1/8"	1 7/8	3 14/16	3 9/16	3 10/16	3 13/16	8 1/2					
↑	PREV BEAM NO.											

Notes: * LAMINATION RUST ACCOUNTS FOR DIFFERENCE

1) For Pin & Hanger assemblies with a redundant support system, indicate if there is a gap between the redundant system (bearing) and the bottom flange of the suspended girder.
2) All measurements are taken in reference to log direction.
   - **V** : Vertical misalignment of girders @ left edge of girder's bottom flange.
   - **J** : Joint opening between webs, measured just above the bottom flange fillet, on the left face of the girder's web.
   - **Out to Out** : The out-to-out of hangers taken at the leading edge, based on log direction.
3) Use a permanent marker to indicate locations of field measurements.

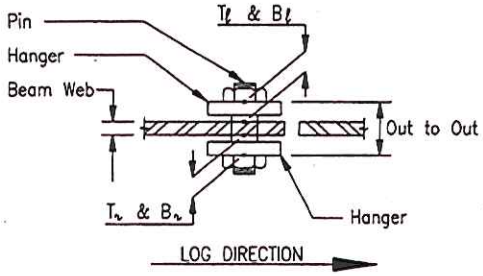

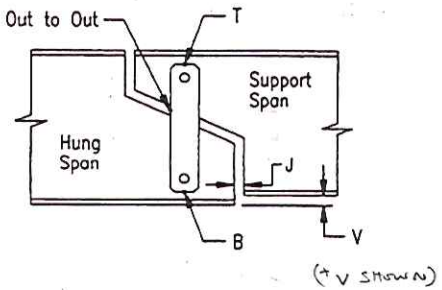

58/13

File: P&h_form.xls(Data1), Printed: 9/24/01

PIN & HANGER DATA SHEET

Form BRI-29, Rev. 9/97

Measurements Taken By: PMB Date: 8/14/2012

Measurements Reviewed By: WMK Date: 9/28/2012

Page: of

Bridge No.: 01765 Interstate 84 EB over Amtrak & Local Roads Town: Hartford

Hanger Location: Span 9 expansion hangers, west line. Effective span for Movement: 112

Beam No.	V (in)	J (in)	T_r (in)	B_r (in)	T_ℓ (in)	B_ℓ (in)	Out to Out (in)	Secondary System Type	Gap[1] (Y/N)	Nut Restraint System	Temp Deg. F	Comments (2012 Measurements)
9 (1)	1/8	2 1/8	3 3/4	3 5/8	3 11/16	3 3/4	8 3/8	None	N/A	Cotter	82	See previous sheet.
8 (2)	- 7/8	1 1/4	3 5/8	3 1/2	3 11/16	3 7/8	8 3/8	None	N/A	Cotter	82	See previous sheet.
7 (3)	- 1/2	2	3 5/8	3 5/8	3 13/16	3 9/16	8 1/2	None	N/A	Cotter	82	See previous sheet.
6 (4)	- 1/4	1 7/8	3 7/8	3 5/8	3 11/16	3 5/8	8 3/8	None	N/A	Cotter	82	See previous sheet.
5 (5)	- 3/8	2 1/16	3 11/16	3 11/16	3 5/8	3 9/16	8 3/8	None	N/A	Cotter	82	See previous sheet.
4 (6)	- 9/16	2 1/2	3 9/16	3 5/8	3 7/8	3 5/8	8 7/16	None	N/A	Cotter	82	See previous sheet.
3 (7)	- 3/4	1 1/2	3 13/16	3 5/8	3 11/16	3 9/16	8 5/16	None	N/A	Cotter	82	See previous sheet.
2 (8)	- 5/16	2	3 3/4	2 3/4	3 5/8	3 9/16	8 5/16	None	N/A	Cotter	82	See previous sheet.
1 (9)	1/8	1 7/8	3 7/8	3 9/16	3 5/8	3 13/16	8 1/2	None	N/A	Cotter	82	See previous sheet.
												Girders were renumbered this inspection. First girder number represents 2012 girder number. Girder number in parenthesis is the same girder, but with 2010 numbering convention.

Notes:

1) For Pin & Hanger assemblies with a redundant support system, indicate if there is a gap between the redundant system (bearing) and the bottom flange of the suspended girder.

2) All measurements are taken in reference to log direction.

V : Vertical misalignment of girders @ left edge of girder's bottom flange.

J : Joint opening between webs, measured just above the bottom flange fillet, on the left face of the girder's web.

Out to Out : The out-to-out of hangers taken at the leading edge, based on log direction.

3) Use a permanent marker to indicate locations of field measurements.

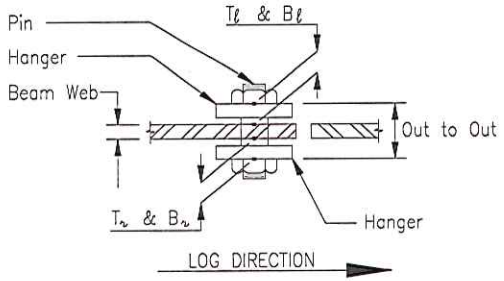

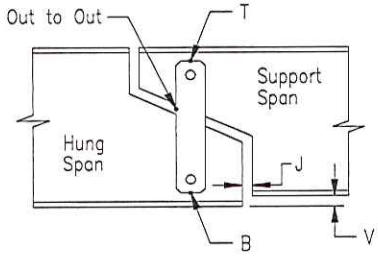

59/93

PIN & HANGER DATA SHEET

Form BRI-29, Rev. 9/97

Measurements Taken By: SE Date: 10/11/2010

Bridge No.: 01765 Interstate 84 EB over Amtrak & Local Roads Town: Hartford

Measurements Reviewed By: ZRI Date: 10/11/2010

Hanger Location: Span 9 expansion hangers, west line. Effective span for Movement: 112

Page: of

Beam No.	V (in)	J (in)	T_r (in)	B_r (in)	T_ℓ (in)	B_ℓ (in)	Out to Out (in)	Secondary System Type	Gap[1] (Y/N)	Nut Restraint System	Temp °F	Comments (2010 Measurements)
9 (1)	1/8	2 1/4	3 5/8	3 3/4	3 3/4	3 11/16	8 7/16	None	N/A	Cotter	71	See 2010 report for comments
8 (2)	- 13/16	1 9/16	3 5/8	3 1/2	3 11/16	3 7/8	8 1/2	None	N/A	Cotter	71	See 2010 report for comments
7 (3)	- 1/4	2 1/4	3 5/8	3 5/8	3 3/4	3 5/8	8 7/16	None	N/A	Cotter	71	See 2010 report for comments
6 (4)	- 3/16	2 1/8	3 7/8	3 5/8	3 5/8	3 11/16	8 5/16	None	N/A	Cotter	71	See 2010 report for comments
5 (5)	- 5/16	2 1/8	3 5/8	3 11/16	3 5/8	3 9/16	8 1/4	None	N/A	Cotter	71	See 2010 report for comments
4 (6)	- 1/2	2 3/4	3 5/8	3 5/8	3 3/4	3 5/8	8 3/8	None	N/A	Cotter	71	See 2010 report for comments
3 (7)	- 11/16	1 11/16	3 13/16	3 5/8	3 5/8	3 5/8	8 5/16	None	N/A	Cotter	71	See 2010 report for comments
2 (8)	- 5/16	2 5/16	3 11/16	3 3/4	3 9/16	3 9/16	8 7/16	None	N/A	Cotter	71	See 2010 report for comments
1 (9)	1/8	2 1/8	3 13/16	3 9/16	3 5/8	3 13/16	8 1/2	None	N/A	Cotter	71	See 2010 report for comments

Notes:

1) For Pin & Hanger assemblies with a redundant support system, indicate if there is a gap between the redundant system (bearing) and the bottom flange of the suspended girder.

2) All measurements are taken in reference to log direction.

V : Vertical misalignment of girders @ left edge of girder's bottom flange.

J : Joint opening between webs, measured just above the bottom flange fillet, on the left face of the girder's web.

Out to Out : The out-to-out of hangers taken at the leading edge, based on log direction.

3) Use a permanent marker to indicate locations of field measurements.

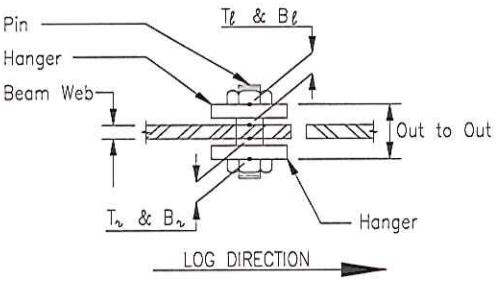

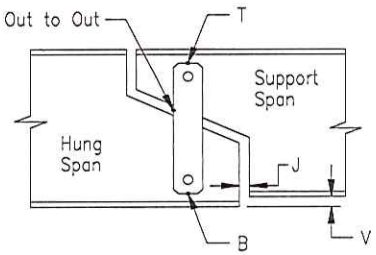

60/143

PIN & HANGER ANALYSIS SHEET

Form BRI-29, Rev. 9/97

Measurements Taken By: --- Date: ---

Measurements Reviewed By: WMK Date: 9/28/2012

Page: ____ of ____

Bridge No.: 01765 Interstate 84 EB over Amtrak & Local Roads Town: Hartford

Hanger Location: Span 9 expansion hangers, west line. Effective span for Movement: 112

Beam No.	V (in)	J (in)	Calc'd J (in)	Calc'd Diff. in J's (in)	T_r (in)	B_r (in)	T_ℓ (in)	B_ℓ (in)	Out to Out (in)	Reviewer's Comments (Comparison Sheet)
9 (1)	0	- 1/8	-0.096	0	1/8	- 1/8	- 1/16	1/16	- 1/16	Tr was 3-11/16" in 2002 - 2008, 3-5/8" in 2010, and 3-3/4" in 2012. Br was 3-5/8" in 2002-2008, 3-3/4" in 2010 and 3-5/8" in 2012.
8 (2)	- 1/16	- 5/16	-0.096	3/16	0	0	0	0	- 1/8	Out-Out was 8-3/8" in 2002, 8-7/16" in 2004-2008, 8-1/2" in 2010, and 8-3/8" in 2012.
7 (3)	- 1/4	- 1/4	-0.096	2/16	0	0	1/16	- 1/16	1/16	Laminated rust removed - most likely cause for "V" discrepancy.
6 (4)	- 1/16	- 1/4	-0.096	2/16	0	0	1/16	- 1/16	1/16	
5 (5)	- 1/16	- 1/16	-0.096	1/16	1/16	0	0	0	1/8	Out-Out was 8-1/4" in 2002-2006, 8-5/16" in 2008, 8-1/4" in 2010, and 8-3/8" in 2012.
4 (6)	- 1/16	- 1/4	-0.096	2/16	- 1/16	0	1/8	0	1/16	Tl was 3-13/16" in 2002-2008, 3-3/4" in 2010 and 3-7/8" in 2012.
3 (7)	- 1/16	- 3/16	-0.096	1/16	0	0	1/16	- 1/16	0	
2 (8)	0	- 5/16	-0.096	3/16	1/16	-1	1/16	0	- 1/8	Out-Out was 8-3/8" in 2002-2006, 8-7/16" in 2008-2010, and 8-5/16" in 2012.
1 (9)	0	- 1/4	-0.096	2/16	1/16	0	0	0	0	
										Differences greater than or equal to 1/8" are highlighted, except at "J" and "Calculated J", which are temperature dependant. All measurements were double checked. No distress was noted.

Additional Review Comments:

Based on the "J" measurements, the girders are moving in the correct direction (71° - 82° Fahrenheit, expansion, therefore gaps should get smaller).

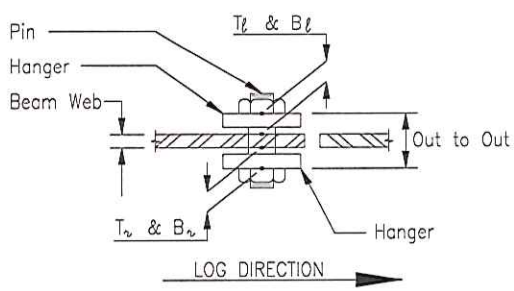

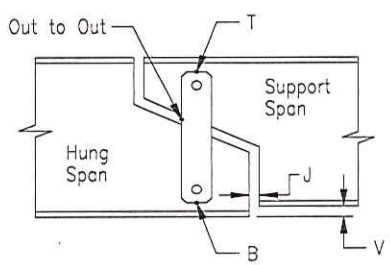

6/13

PIN & HANGER DATA SHEET

Form BRI-29, Rev. 6/99

Measurements Taken By: BH / MJD Date: 8/14 + 8/22/12

Bridge No.: 01765 I-84 E/B over Asylum, etc. **Town:** HTFD

Hanger Location: SPAN 9 EAST LINE **Effective span for Movement:** 112 (ft)

Page: _____ of _____

Beam No.	V (in)	J (in)	Tr (in)	Br (in)	Tl (in)	Bl (in)	Out to Out (in)	Secondary System Type	Gap[1] (Y/N)	Nut Restraint System	Temp	Comments
9(1)	1/2"	1 3/16" ✓✓	3 13/16"	3 3/4"	3 5/8" ✓✓	3 11/16"	8 1/2"	N/A	N/A	COTTER	80°F	✓
8(2)	- 3/8"	2 3/8" ✓✓	3 3/4"	3 13/16"	3 5/8"	3 5/8"	8 7/16"					WINDLOCK
7(3)	- 3/8"	1 1/16" ✓✓	3 13/16"	① 3 3/4" ✓✓	3 9/16"	3 3/4"	8 1/2"					① = LR REMOVED FOR BR MEAS; BF'S TOUCH UNDER LL MOVMT @ TIME OF INSP (±1/16" GAP)
6(4)	- 9/16"	1 1/16" ✓✓	3 11/16"	3 3/4"	3 15/16"	3 5/8"	8 1/2"					WIND LOCK
5(5)	+ 9/16"	7/8" ✓✓	3 11/16"	3 5/8"	3 5/8"	3 5/8"	8 1/2" ✓✓					
4(6)	- 3/4"	2 7/16" ✓✓	3 7/8"	3 5/8"	3 3/4"	3 1/2"	8 1/2"					WIND LOCK
3(7)	- 1/2" ✓✓	1 1/4" ✓✓	3 11/16"	3 9/16"	3 11/16"	3 11/16" ✓✓	8 3/16"				80°F	
2(8)	- 1/2" ✓✓	13/16" ✓✓	3 11/16"	3 11/16"	3 9/16"	3 5/8"	8 1/4"				80°F	WIND LOCK
1(9)	- 3/16"	7/8" ✓✓	3 11/16"	3 11/16"	3 5/8"	3 5/8" ✓✓	8 3/4"				80°F	
↑												

PREV BEAM NO.

Notes:

1) For Pin & Hanger assemblies with a redundant support system, indicate if there is a gap between the redundant system (bearing) and the bottom flange of the suspended girder.

2) All measurements are taken in reference to log direction.

- **V** : Vertical misalignment of girders @ left edge of girder's bottom flange.
- **J** : Joint opening between webs, measured just above the bottom flange fillet, on the left face of the girder's web.
- **Out to Out** : The out-to-out of hangers taken at the leading edge, based on log direction.

3) Use a permanent marker to indicate locations of field measurements.

WEBS NOT LINED UP DUE TO "TURN" @ HINGE → MEAS @ W. SIDE WEB BASE TO SUPPORT SPAN WEB; NOTE THAT BF CLEARANCE WILL LIMIT TRAVEL OF HINGE

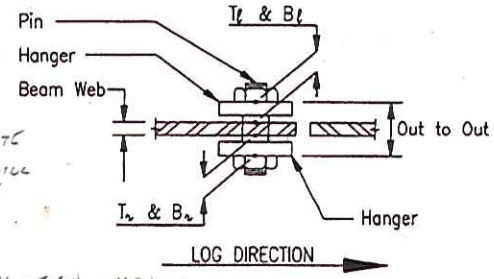

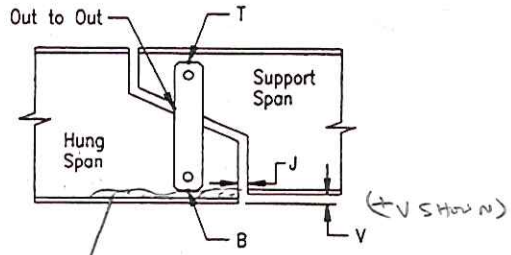

GEN
· RAND NUTS TURN WHEN STRUCK
· WINDLOCKS W/ AD

BOT OF WEBS W/ LR UP TO 6"x6"x UP TO 6"H W/ UP TO 1/2" SL ± (SHOWN IF > 1/2") ; ADJ BF'S W/ LR + UP TO 1/8" SL ±, (NON-CRIT ZONE).

6/11/13

File: P&h_form.xls(Data1), Printed: 9/24/01

PIN & HANGER DATA SHEET

Form BRI-29, Rev. 9/97

Measurements Taken By: BH/MJO Date: 8/14/2012

Measurements Reviewed By: WMK Date: 9/28/2012

Page: of

Bridge No.: 01765 Interstate 84 EB over Amtrak & Local Roads Town: Hartford

Hanger Location: Span 9 expansion hangers, east line. Effective span for Movement: 112

Beam No.	V (in)	J (in)	T_r (in)	B_r (in)	T_ℓ (in)	B_ℓ (in)	Out to Out (in)	Secondary System Type	Gap[1] (Y/N)	Nut Restraint System	Temp Deg. F	Comments (2012 Measurements)
9 (1)	1/2	1 3/16	3 13/16	3 3/4	3 5/8	3 11/16	8 1/2	None	N/A	Cotter	80	See previous sheet.
8 (2)	- 3/8	2 3/8	3 3/4	3 13/16	3 5/8	3 5/8	8 7/16	None	N/A	Cotter	80	See previous sheet.
7 (3)	- 3/8	1 1/16	3 13/16	3 3/4	3 9/16	3 3/4	8 1/2	None	N/A	Cotter	80	Laminated rust removed for Br measurement.
6 (4)	- 9/16	1 1/16	3 11/16	3 3/4	3 15/16	3 5/8	8 1/2	None	N/A	Cotter	80	See previous sheet.
5 (5)	9/16	7/8	3 11/16	3 5/8	3 5/8	3 5/8	8 1/2	None	N/A	Cotter	80	See previous sheet.
4 (6)	- 3/4	2 7/16	3 7/8	3 5/8	3 3/4	3 1/2	8 1/2	None	N/A	Cotter	80	See previous sheet.
3 (7)	- 1/2	1 1/4	3 11/16	3 9/16	3 11/16	3 11/16	8 3/16	None	N/A	Cotter	80	See previous sheet.
2 (8)	- 1/2	13/16	3 11/16	3 11/16	3 9/16	3 5/8	8 1/4	None	N/A	Cotter	80	See previous sheet.
1 (9)	- 3/16	7/8	3 11/16	3 11/16	3 5/8	3 5/8	8 3/4	None	N/A	Cotter	80	See previous sheet.
												Girders were renumbered this inspection. First girder number represents 2012 girder number. Girder number in parenthesis is the same girder, but with 2010 numbering convention.

Notes:

1) For Pin & Hanger assemblies with a redundant support system, indicate if there is a gap between the redundant system (bearing) and the bottom flange of the suspended girder.

2) All measurements are taken in reference to log direction.

V : Vertical misalignment of girders @ left edge of girder's bottom flange.

J : Joint opening between webs, measured just above the bottom flange fillet, on the left face of the girder's web.

Out to Out : The out-to-out of hangers taken at the leading edge, based on log direction.

3) Use a permanent marker to indicate locations of field measurements.

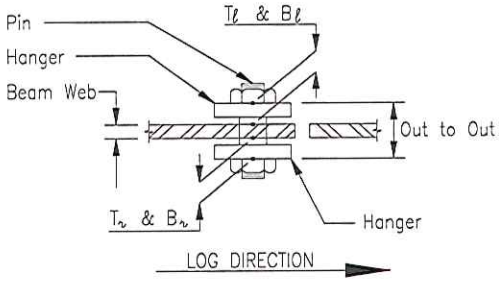

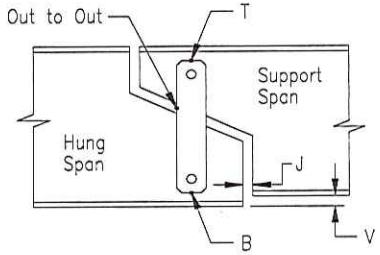

63/193

PIN & HANGER DATA SHEET

Form BRI-29, Rev. 9/97

Measurements Taken By: LLV Date: 3/19/2009

Measurements Reviewed By: JCW Date: 3/19/2009

Page: of

Bridge No.: 01765 Interstate 84 EB over Amtrak & Local Roads Town: Hartford

Hanger Location: Span 9 expansion hangers, east line. Effective span for Movement: 112

Beam No.	V (in)	J (in)	T_r (in)	B_r (in)	T_ℓ (in)	B_ℓ (in)	Out to Out (in)	Secondary System Type	Gap[1] (Y/N)	Nut Restraint System	Temp °F	Comments (2009 Measurements for 2008 inspection)
9 (1)	1/2	2 3/8	3 3/4	3 3/4	3 13/16	3 11/16	8 1/2	None	N/A	Cotter	40	See 2009 report for comments.
8 (2)	- 3/8	2 3/4	3 11/16	3 13/16	3 11/16	3 5/8	8 1/2	None	N/A	Cotter	40	See 2009 report for comments.
7 (3)	- 3/8	1 5/8	3 3/4	3 1/2	3 9/16	3 13/16	8 7/16	None	N/A	Cotter	40	See 2009 report for comments.
6 (4)	- 1/2	1 3/4	3 3/4	3 3/4	3 7/8	3 11/16	8 1/2	None	N/A	Cotter	40	See 2009 report for comments.
5 (5)	5/8	1 3/4	3 11/16	3 11/16	3 5/8	3 9/16	8 3/8	None	N/A	Cotter	40	See 2009 report for comments.
4 (6)	- 3/4	2 7/8	3 13/16	3 9/16	3 13/16	3 9/16	8 7/16	None	N/A	Cotter	40	See 2009 report for comments.
3 (7)	- 7/16	2 1/8	3 3/4	3 5/8	3 9/16	3 11/16	8 1/4	None	N/A	Cotter	40	See 2009 report for comments.
2 (8)	- 5/16	1 1/2	3 3/4	3 5/8	3 9/16	3 5/8	8 5/16	None	N/A	Cotter	40	See 2009 report for comments.
1 (9)	- 1/4	1 3/4	3 11/16	3 11/16	3 3/4	3 9/16	8 3/4	None	N/A	Cotter	40	See 2009 report for comments.

Notes:

1) For Pin & Hanger assemblies with a redundant support system, indicate if there is a gap between the redundant system (bearing) and the bottom flange of the suspended girder.

2) All measurements are taken in reference to log direction.

V : Vertical misalignment of girders @ left edge of girder's bottom flange.

J : Joint opening between webs, measured just above the bottom flange fillet, on the left face of the girder's web.

Out to Out : The out-to-out of hangers taken at the leading edge, based on log direction.

3) Use a permanent marker to indicate locations of field measurements.

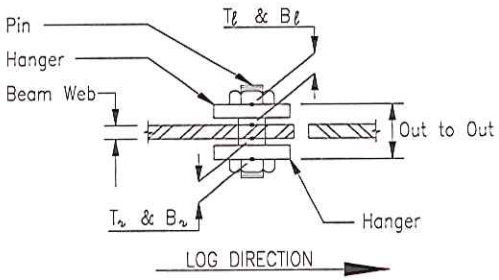

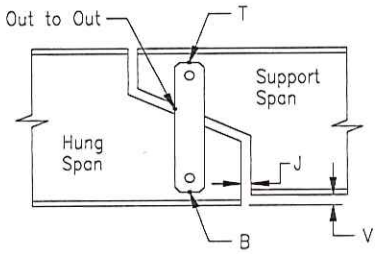

6 of 63

PIN & HANGER ANALYSIS SHEET

Form BRI-29, Rev. 9/97

Measurements Taken By: --- Date: ---

Bridge No.: 01765 Interstate 84 EB over Amtrak & Local Roads Town: Hartford Measurements Reviewed By: WMK Date: 9/28/2012

Hanger Location: Span 9 expansion hangers, east line. Effective span for Movement: 112 Page: of

Beam No.	V (in)	J (in)	Calc'd J (in)	Calc'd Diff. in J's (in)	T_r (in)	B_r (in)	T_ℓ (in)	B_ℓ (in)	Out to Out (in)	Reviewer's Comments (Comparison Sheet)
9 (1)	0	-1 3/16	- 6/16	13/16	1/16	0	- 3/16	0	0	Tl was 3-3/4" in 2002-2004. 3-13/16" in 2006-2008, and 3-5/8" in 2012.
8 (2)	0	- 3/8	- 6/16	0	1/16	0	- 1/16	0	- 1/16	
7 (3)	0	- 9/16	- 6/16	3/16	1/16	1/4	0	- 1/16	1/16	Laminated rust removed for Br measurement
6 (4)	- 1/16	- 11/16	- 6/16	5/16	- 1/16	0	1/16	- 1/16	0	
5 (5)	- 1/16	- 7/8	- 6/16	8/16	0	- 1/16	0	1/16	1/8	Out-Out was 8-1/2" in 2002, 8-7/16" 2004, 8-3/8" in 2006-2008, and 8-1/2" in 2012.
4 (6)	0	- 7/16	- 6/16	1/16	1/16	1/16	- 1/16	- 1/16	1/16	
3 (7)	- 1/16	- 7/8	- 6/16	8/16	- 1/16	- 1/16	1/8	0	- 1/16	Tl was 3-13/16" in 2002, 3-3/4" in 2004, 3-9/16" in 2006-2008, and 3-11/16" in 2012.
2 (8)	- 3/16	- 11/16	- 6/16	5/16	- 1/16	1/16	0	0	- 1/16	V was -5/16" in 2002-2008 and -1/2" in 2012.
1 (9)	1/16	- 7/8	- 6/16	8/16	0	0	- 1/8	1/16	0	Tl was 3-7/8" in 2002, 3-13/16" in 2004, 3-3/4" in 2006-2008, and 3-5/8" in 2012.
										Differences greater than or equal to 1/8" are highlighted, except at "J" and "Calculated J", which are temperature dependant. All measurements were double checked. No distress was noted.

Additional Review Comments:

Based on the "J" measurements, the girders are moving in the correct direction, based on temperatures (40° - 80° Fahrenheit, expansion, therefore gaps should get smaller). Large differences in "J" measurements may be due to a large skew at this location.

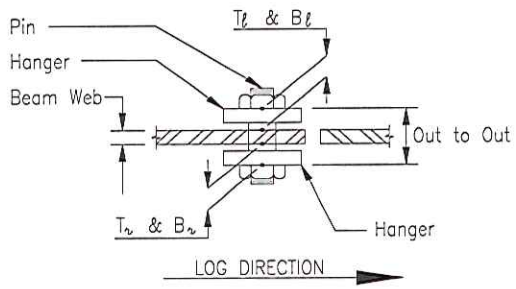

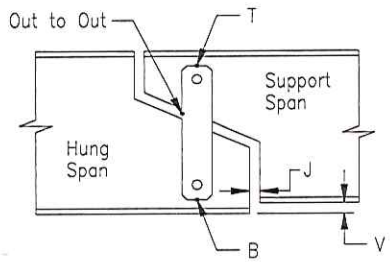

65/93

65A/193

TEAM Industrial Services, Inc.

Team Industrial Services.
196 Woodlawn Road
Berlin CT 06037

(860) 828-6333
(860) 828-7488 FAX

REPORT OF NON-DESTRUCTIVE EXAMINATION
Ultrasonic Inspection - Report 13720530

Client: Baker Enterprise
Address: Suite 2B
Rocky Hill Ct.

Jobsite: Bridge #1765
Address: 84 East and Asylum St.
Hartford Ct

Contact Name: Bill Kristoff
Site Contact(s): Mike Jakiel

Components Inspected: UT Shearwave Inspection was performed on:
Span 1 Girder 1 thru Girder 9(18 pins).
Span 3 all pins(27 pins).
Span 6 all pins (27 pins).
Span 9 West Pin and East Pin Hanger Girder 1 thru 9(36 pins).

Results: No rejectable indications noted

Inspector's Name (Print): David Beaupre/Jeff Watkins
Level: II/III
Inspector's Signature: David Beaupre/Jeff Watkins
Date: 10/2/12

Specification: ASTM E114-95/ASME V
Purchase Order # Proj.# 170-3013
Procedure: UT.ASTM.5 Rev.0/22.H800
Acceptance: Report Findings
Ultrasonic: [X] A-Scan [ ] B-Scan [ ] C-Scan [X] Contact [ ] Immersion
Equipment: Mfg: KB Model: USN-60 S/N: 015WR7
Transducer: Mfg.: Harisonic Model: Gamma S/N M3004 Angle: 45
Size: .500" Frequency: 2.25 MHz
Mfg.: Harisonic Model: Gamma S/N 42746 Angle: 15
Size: .500" Frequency: 2.25 MHz
Calibration Block: Type: Material: CSTL S/N: Lich-2
Scanning: [X] Manual [ ] Automatic Couplant: UltraGel II Batch # 08-5960
Pattern: P-Path Scanning Speed < 4 IPS % Overlap 50

Form #22.6-46

Baker	☒ FIELD ORIGINAL ☐ TRANSCRIBED BY: ____	STRUCTURE: 1765	DATE: 8/13/12
		CREW: MJD/BH	SHEET: CC/193

DESCRIPTION: GEN NOTES

GEN NOTES

DECK ITEMS

- SIP'S IN MOST SPANS W/ AREAS OF HVY SURF RUST; SIP'S @ ENDS & ADJ TO WPS W/ RTH'S UP TO 1' WIDE
- TOTAL DECK IN SP#9 HAS NUMEROUS EPOXY COATED SPALLS & RAND FORMS ARE LEFT IN PLACE, ISOL AREAS OF MINOR HONEYCOMBING, RAND RUSTED REBAR CHAIRS,
- SIP'S AWAY FROM DECK ENDS & WPS W/ RAND RTH'S (L 22)
- BARE DECK SPANS – CP'S NOT NOTED UNLESS ☒/☒'D.; RAND LF HC; RAND SMALL ☒/P.O'S; CP'S SLOPPY & SOME LIGHTS.
- WEEPS NOT SHOWN UNLESS DEFIC

BRGS

- SEE INDIVIDUAL SPAN SHTS OR BRG MEAS SHTS

SUPER

- WELDED ⅊ GIRDERS W/ MOD – HVY SURF RUST
- SL'S IN NON-CRITICAL ZONES NOT SHOWN; SL'S @ WEBS, FLG'S & STIFF SHOWN ONLY IF > 1/16" DP & IN CRIT ZONES
- RAND HVY PIGEON DEBRIS @ BF'S & DIAPH MEMBERS
- RAND STIFF REPAIRS @ PTH LOC'NS
- END DIAPH CHANNELS W/ RAND LR & UP TO 1/8" DP SC
- RAND MISSING ERECTION BOLTS

REV. NO:	DATE:	COMPANY:	CREW:
△			
△			
△			
△			

S.O. No. BR # 1765

Subject: GIRDER FLG SL'S @ CRIT ZONES (>5%)

Sheet No. _____ of _____

Drawing No. _____

Computed by MTD Checked By TD Date 9/12

SP #1-5, 8 + 10

- FLG SL'S < 5%

SP #6

- G9 → HUNG POSITION B/W E. TRANS + P+H → NOTE (5) → 7/8" ORIG BF
  - ↳ ONE LEG w/ 9/16" REM @ BF
    - ↳ $\frac{(7/8" - 9/16")(1/2)}{7/8"}$ = 18% BF LOSS

- SP #7
  - GIRDER 9 BF JUST WEST OF W. TRANS → NOTE (4) → 16" x 1 3/4" ORIG BF
    - ↳ S. LEG w/ 1 1/4" ORIG = 1/2" SL
      - ↳ $\frac{1/2" SL (1/2)}{1\ 3/4}$ = 14% BF LOSS

- GIRDER 9 B/W BOLTED SPLICE + E TRANS → NOTE (5) → 16" x 2 1/4" ORIG BF
  - ↳ S. LEG BF w/ 2" MIN REM.
    - ↳ $\frac{1/4" SL (1/2)}{2"}$ = 6% BF LOSS

- SP #9
  - G1 ±6' WEST OF BOLTED SPLICE (E. BOLTED SPLICE) → 24" x 2 1/2" BF ⊥
    - BF N. LEG w/ 2 1/4" REM + FW N. LEG
      - ↳ (1/4" SL)(1/2) / 2.5" → 5% BF SL

S.O. No. BR #1765

Subject: GIRDER WEB LOSSES

Sheet No. ____ of ____

Drawing No. ____

Computed by MJU Checked By TD Date 9/12

GIRDER WEB LOSSES IN CRIT ZONES

- LOSSES IN SHEAR ONLY SHOWN LOSSES APPROACH 25%
- LOSSES IN BRG ONLY SHOWN LOSSES APPROACH 25%

- SP # 1
  - VOK @ W. ABUT
  - PIN + HANGER LINE - 53" x 1" ⌀ @ HANGER (3/8" AWAY FROM P&H)
    - UP TO 5/8" TOT WEB LOSS @ BOTH SIDES (GIRDER 2) - <10% LOSS IN SHEAR
      {MOST ALL SPANS

- SP # 2 + 3
  - VOK (LOSSES < THRESHOLDS ABOVE)

- SP # 4 - G9 @ P4
  - WEB ORIG IN BRG → 2 BRG STIFF'S @ (1) SIDE + ONE BRG STIFF @ OTHER SIDE
    - USE FORMULA FOR (2) SETS BRG STIFFS
      ↳ $A_{BRG} = (2 \cdot 9 \cdot t_w + \Sigma t_{BRG\ STIFFS})t_w + A_{BRG\ STIFFS} = (2 \cdot 9 \cdot 3/8" + 6")3/8 + 2(8")1/2" + 8"(11/16") = 18.28 in^2$
  - WEB LOSS = $\pm 6"(1/4") + 8"(1/8") + 8"(3/16") = 4 in^2 / 18.28 in^2$ → 22% WEB LOSS IN BRG
    [≈ 25% IF USE ORIG AREA
    CALC FOR (1) BRG STIFF

SP # 5 @ P4
- A_{BRG} FOR G1-G8 → (2) SETS OF STIFF'S [SEE ABRG FORMULA ABOVE]
  $A_{BRG} = (2 \cdot 9 \cdot 3/8" + 6\ 1/2")3/8" + 4(7", 1/2") \Rightarrow 19.0 in^2$ (C.L BRG STIFF TAKEN FROM SP # 5 G4 @ P4 FIELD SKETCH)

- SP # 5, G4 @ P4
  - ASSUME WEB LOSS BEHIND BRG = 3.4" L ($9 \cdot t_w = 9 \cdot 3/8" = 3.4"$) ; SA
  - $Loss_{WEB} + L_{STIFF'S} = \left(\left[3.4"(1/8") + 6.5"(1/16") + 6.5"(1/8")\right] + \left[(7")(5/16" + 7/32" + 1/16" + 5/16")\right]\right) / 19.0 in^2 = 42\%$ LOSS IN BRG

- SP # 5, G5 @ P4
  - LOSS IN FRONT + BEHIND BRG = 3.4" L (SEE SP # 5, G4 CALC)
  - $L_{WEB} + L_{STIFF'S} = \left(\left[3.4"(1/16" + 1/8") + 6.5"(3/8")\right] + \left[7"(3/16" + 3/8" + 7/16" + 1/16")\right]\right) / 19.0 in^2 = 55\%$ LOSS IN BRG

S.O. No. BR #1765

Subject: GIRDER WEB LOSSES, CONT'D

Sheet No. ____ of ____

Drawing No. ____

Computed by MJO Checked By TD Date 9/12

Baker

SP #5 @ P4, CONT'D

- SP #5, G6 @ P4
  - WEB B/W STIFF'S → ASSUME WE CANNOT TAKE LOAD
  - $Loss_{WEB} + Loss_{STIFF'S} = \left(\left[3.4'' \cdot 1/8'' + 6''(3/8'')\right] + \left[7''(1/2'' + 7/32'' + 1/4'' + 1/2''\right]\right) / 19.0\,in^2 =$ 68% LOSS IN BRG

- SP #5, G7 @ P4
  - ASSUME WEB B/W STIFFS W/ NO CAPACITY
  - $Loss_{WEB} + Loss_{STIFFS} = \left(\left[3.4'' \times 1/8'' + 6.5''(3/8'')\right] + \left[7''(1/2'' + 3/8 + 5/16'' + 13/32''\right]\right) / 19.0\,in^2 =$ 76% LOSS IN BRG

- SP #5, G8 @ P4
  - $Loss_{WEB} + Loss_{STIFFS} = \left(\left[6.5''(3/8'')\right] + \left[7''(1/8'' + 1/8'' + 1/4'' + 3/16'')\right]\right) / 19.0\,in^2 =$ 38% LOSS IN BRG

- SP #5, G9 @ P4
  - USE A_{ORIG} CALC ASSUMING (2) SETS STIFFS → $A_{ORIG} = (2 \cdot 9 \cdot t_w + \underbrace{d \cdot t \text{ STIFFS}}_{\text{ASSUME } 6.5''}) t_w + A_{BRG\ STIFFS}$ (ASSUME ALL (3) ARE 7" x 1/2")

    $A_{ORIG} = (2 \cdot 9 \cdot 3/8'' + 6.5'')\ 3/8'' + (3)(7'')(1/2'') = 15.5\,in^2$

  - $Loss_{WEB} + Loss_{STIFFS} = \left(\left[(6.5'' + 3.4'') \times \underbrace{5/16''}_{\text{SAY } \pm 1/16'' \text{ REM @ BRG, AVG}}\right] + \left[7''(1/2'' + 1/2'' + 1/2''\right]\right) / 15.5\,in^2 =$ 88% LOSS IN BRG

SP #7 @ P7

- $A_{ORIG\ BRG}$ - SIMILAR TO SP5 @ P4 (d-d BRG STIFF FIELD MEAS WITHIN 1/2") → SAY SAME AS SP #5 → 19.0 in², EXCEPT G9
- GIRDERS 4-7 @ P7 → (2) STIFF'S W/SL @ FRONT, BUT OTHER STIFF'S + WEB W/ REP PL'S → NO CALC
- GIRDER 9 @ P7 → SAME $A_{ORIG\ BRG}$ AS SP #5, G9 @ P7 =

  $Loss_{WEB} + Loss_{STIFF} = \left(\left[3.4(1/2'') + (33.5)(3/32'') + 6.5''(1/4'')\right] + \left[7(1/2'' + 1/2'')\right]\right) / 15.5\,in^2 =$ 69% LOSS IN BRG

SP #8-10

√OK (LOSSES < THRESHOLD FOR CALC'S)

Baker

SUPPLEMENTAL SHEET

☑ FIELD ORIGINAL ☐ TRANSCRIBED BY:_____

BRIDGE NO. 01765	DATE: 8/13/12
CREW: MP / BH	SHEET 70/193

DESCRIPTION: SUPERSTRUCTURE

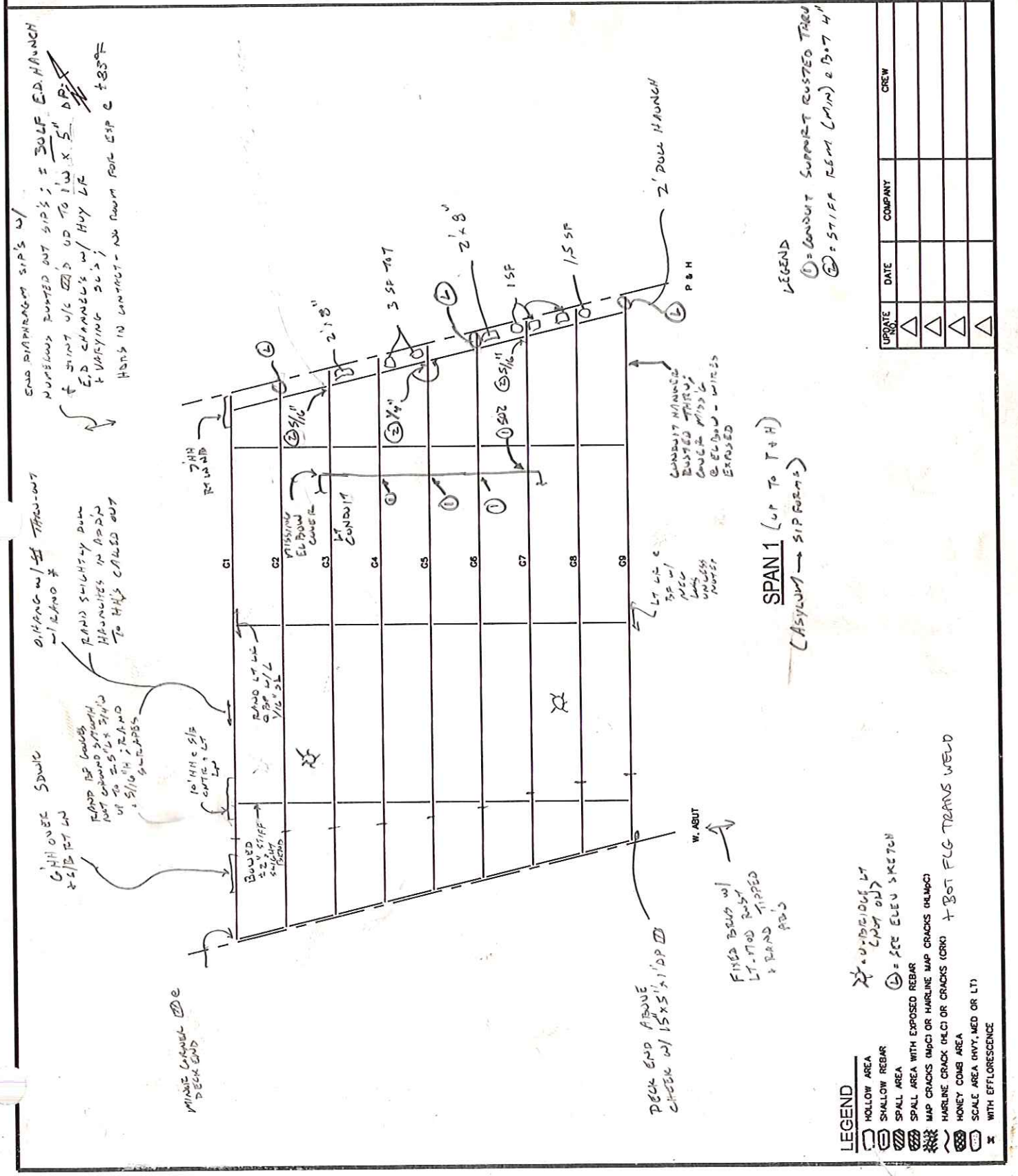

Baker

SUPPLEMENTAL SHEET

☐ FIELD ORIGINAL ☒ TRANSCRIBED BY:_____

BRIDGE NO. 01765	DATE: 8/13/12
CREW: MW, BH	SHEET 11/193

DESCRIPTION: SUPERSTRUCTURE

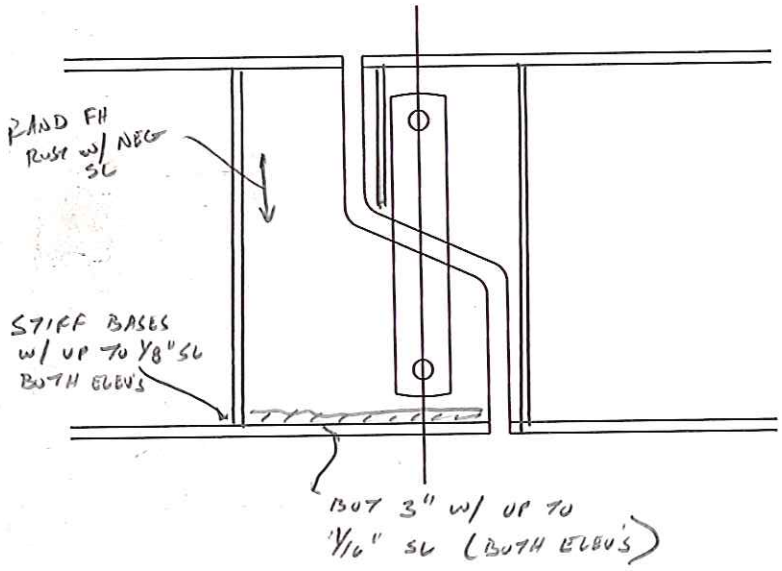

Typ PIN + HANGER - SP'L

UPDATE NO.	DATE	COMPANY	CREW
△			
△			
△			
△			

Baker

SUPPLEMENTAL SHEET

☒ FIELD ORIGINAL ☐ TRANSCRIBED BY:_____

BRIDGE NO. 01765	DATE: 8/13/12
CREW: VTO, BH	SHEET 72/193

DESCRIPTION: SUPER STRUCTURE

TOP 4½" OF E.D CONN PL RUSTED OUT, NEWER LARGER PL WELDED BELOW; E.D CHAN W/ HUY LR, VARYING SL @ WEB, FLG'S OF CHAN W/KE + BF RUSTED OUT ± 4"L LONG

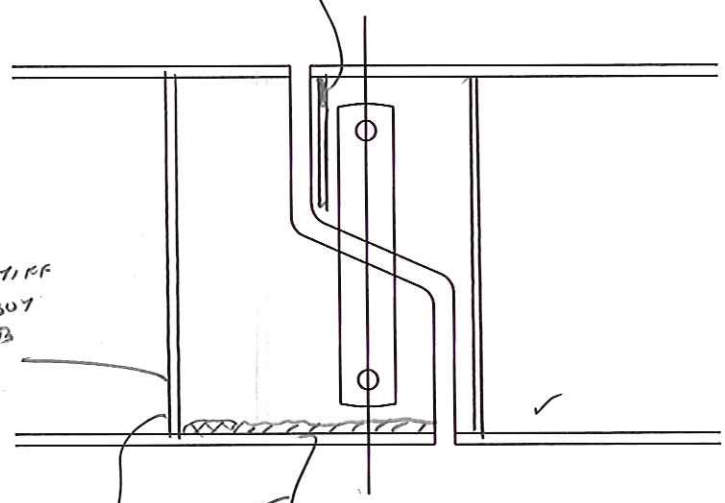

S. ELEV - BOT 19" OF STIFF CUT-OUT + REPLACED BUT NOT WELDED TO WEB (ONLY TO BF + REM STIFF ABOVE)

STIFF @ N. ELEV W/ ± 1/16" REM @ BOT 3";

BOT OF WEB @ N. ELEV W/ ±2'L x 3"H + UP TO 1/4" SL (STARTS @ JT).

S. ELEV W/ 34"L (JT TO STIFF) x UP TO 1/4" DP x 6½" H SL (1" ORIG WEB)

SPOTTY 3/8" DP SL

SP #1, GIRDER 2 (S. ELEV)

GEN
- NO BF LOSS IN CRIT ZONE

UPDATE NO.	DATE	COMPANY	CREW
△			
△			
△			
△			

Baker

SUPPLEMENTAL SHEET

☒ FIELD ORIGINAL ☐ TRANSCRIBED BY:_____

BRIDGE NO. 01765	DATE: 8/13/12
CREW: MJO/BH	SHEET 73/193

DESCRIPTION: SUPERSTRUCTURE

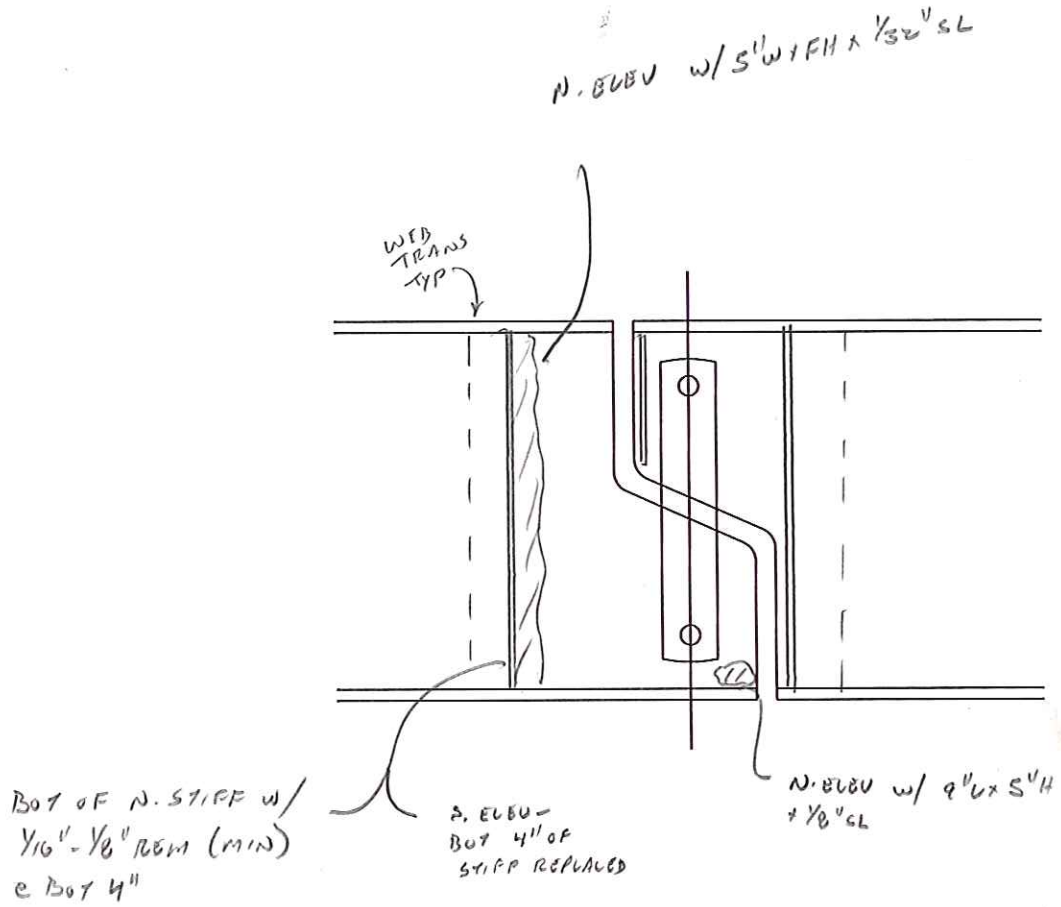

SP #1, GIRDER 6, S. ELEV

GEN
- HUY JT STAINING.

UPDATE NO.	DATE	COMPANY	CREW
△			
△			
△			
△			

Baker

SUPPLEMENTAL SHEET

☒ FIELD ORIGINAL ☐ TRANSCRIBED BY:_____

BRIDGE NO. 01765	DATE: 8/13/12
CREW: MJO/BH	SHEET 74/193

DESCRIPTION: SUPERSTRUCTURE

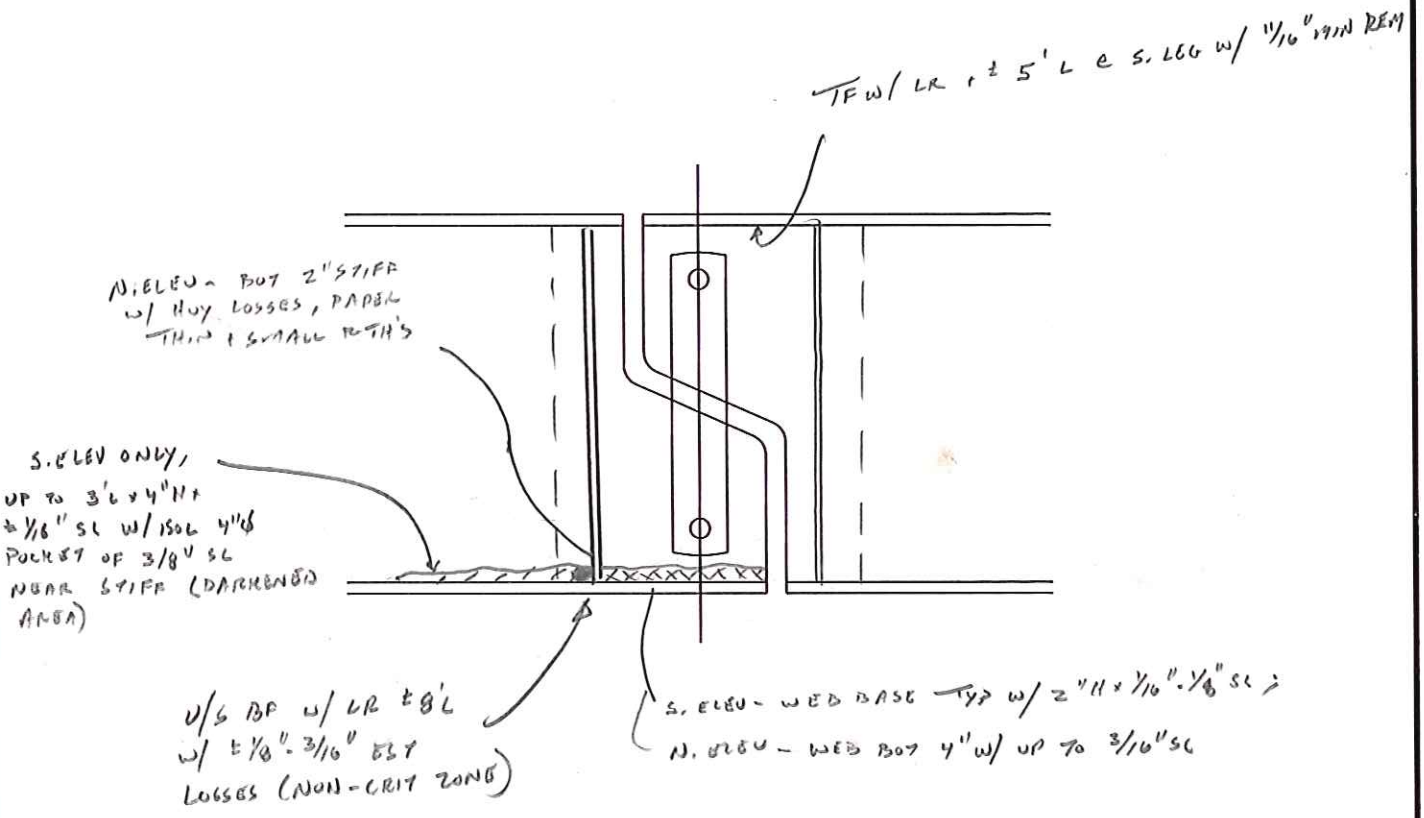

SP #1, GIRDER 9, S. ELEV

UPDATE NO.	DATE	COMPANY	CREW
△			
△			
△			
△			

Baker

SUPPLEMENTAL SHEET

☑ FIELD ORIGINAL ☐ TRANSCRIBED BY:_____

BRIDGE NO. 01765	DATE: 8/13/12
CREW: MTO/BH/JAC	SHEET 75/193

DESCRIPTION: SUPERSTRUCTURE

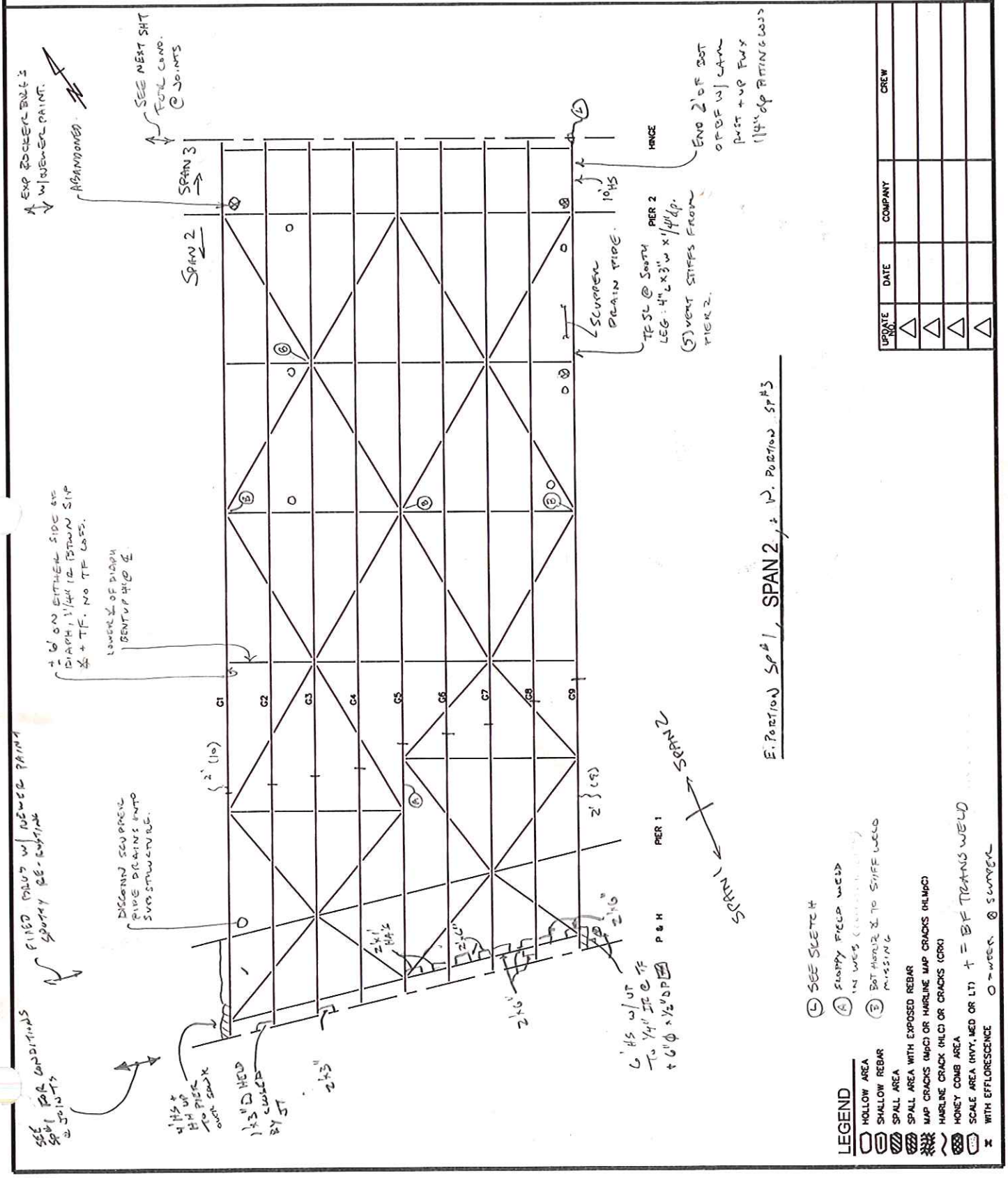

UPDATE NO.	DATE	COMPANY	CREW

Baker

SUPPLEMENTAL SHEET

☒ FIELD ORIGINAL ☐ TRANSCRIBED BY: ____

DESCRIPTION: SUPERSTRUCTURE

BRIDGE NO. 01765	DATE: 8/16/12
CREW: MJV/JAC	SHEET 76/113

DIAPH FLG's w/ RAND LR & UP TO 1/8" PITT

MINOR EDGE ▨ @ U/S JT & E. SIDE JT; W. SIDE JT w/ RAND D, PIT ▨'s & ▨'s UP TO 3" DP (TYP ≤2"); E.D. SIP's w/ AREAS OF HVY RUST & RAND RTH's; RAND ALTNE LKG @ JT (± 1/3 JT); ISOL JT MAT'L HANGS DOWN

SEE NOTE @ LT FOR HANGING JT MAT'L; ED NOTES; SIP NOTES; HEAVILY RUSTED TROUGH OR JT PB's @ U/S JOINT

WEB BASE THIS PANEL w/ LR 1.5"H w/UP TO 1/8"SL; BF w/ AREAS OF LR & SL UP TO 3 1/2" W w/ 1 5/16" REM

ABANDONED JT TROUGH DRAIN PIPE W/O DOWN-SPOUT, LEAKING

4'HS

WEEPS THIS BAY ARE SHORT, BUT DO NOT DRAIN ONTO PR ELEMENTS, U.O.N.

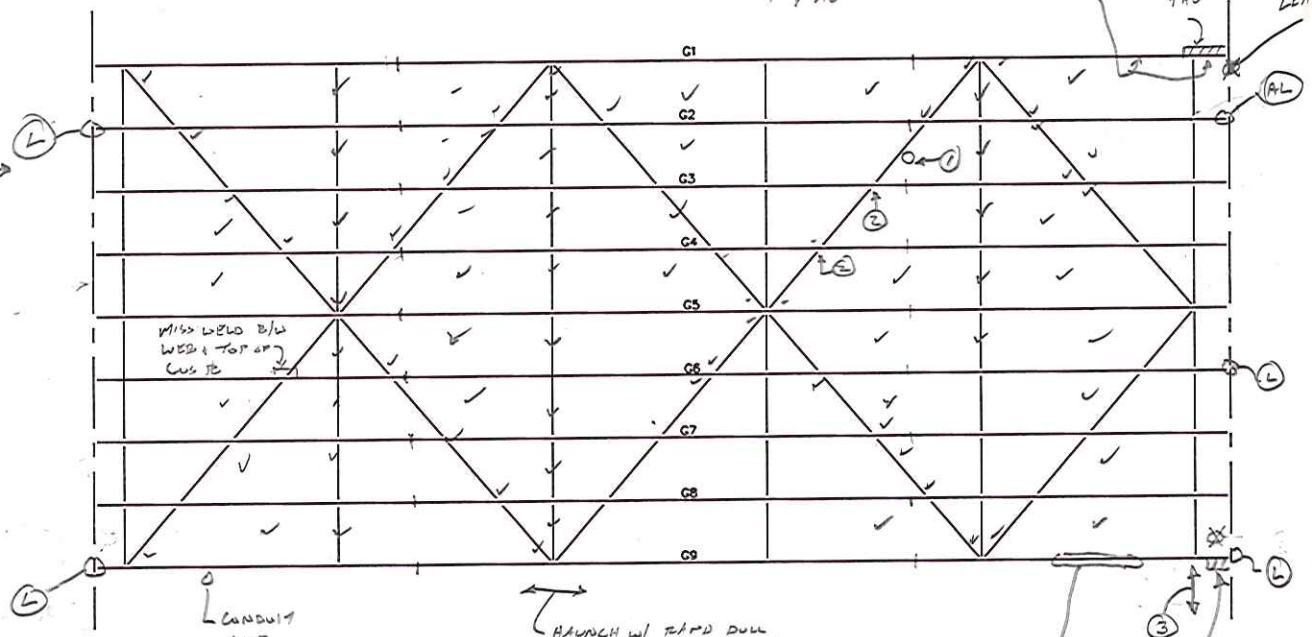

WEEPS EXTEND BELOW BF, U.O.N

CONDUIT STUB

HAUNCH w/ RAND DULL AREAS (NOT CRK/LOOSE) OVER PAVED SLOPE ADJ TO PARKING

HINGE

P & H

2'S HAUNCH ▨ ADJ 2'IS ☐

STARTING ± 4.5' FROM DIAPH → 1ST STIFF RUSTED OUT @ BOT 1"; BF w/ 7"W x ± 1/8" LOSS x 9'L, EXTENDING FROM HEEL OF BM (OKA EDGE)

LEGEND
1. WEEP NOT DIRECTLY ABOVE BRACING BUT MAY DRAIN ONTO & DURING HIGH WINDS (LR @ ⊗).
2. SLOPPY/SHORT WELDS @ BRACING CONN
3. @ DIAPH STIFF BASES w/ LR & AS LITTLE AS 1/8" REM; RAND STIFF'S w/ WELDED RED PL'S; END 6' BMS w/ RAND 1/8"SL (NON-CRIT ZONE)

SPAN 3 – HUNG PORTION

(OVER DIRT)

LEGEND

- HOLLOW AREA
- SHALLOW REBAR
- SPALL AREA
- SPALL AREA WITH EXPOSED REBAR
- MAP CRACKS (MpC) OR HAIRLINE MAP CRACKS (HLMpC)
- HAIRLINE CRACK (HLC) OR CRACKS (CRK)
- HONEY COMB AREA
- SCALE AREA (HVY, MED OR LT)
- WITH EFFLORESCENCE

O = WEEP

⊗ = SCUPPER

(L) = SEE ELEV SKETCH

— BF TRANS

UPDATE NO.	DATE	COMPANY	CREW
△			
△			
△			
△			

Baker

SUPPLEMENTAL SHEET

☒ FIELD ORIGINAL ☐ TRANSCRIBED BY:_____

BRIDGE NO. 01765	DATE: 8/16/2012
CREW: MTD	SHEET 77/193

DESCRIPTION: SP #3 - TYP LOSSES @ E. LINE P&H

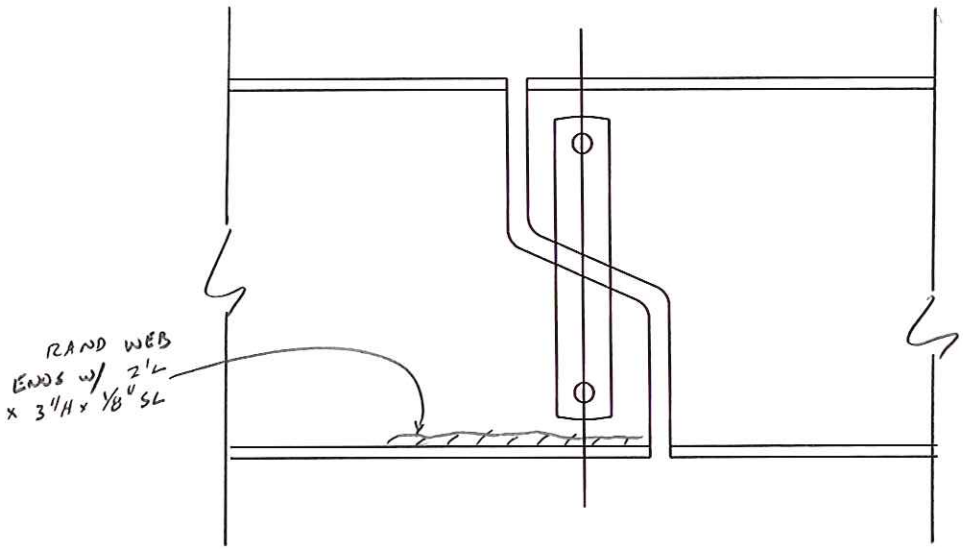

TYP SL'S @ SP #3, P&H (E. LINE)

GEN
- SL SKETCH ONLY DONE IF SL > 1/8" DD ONE SIDE
- AREAS OF HVY RUST ON GIRDERS IN VICINITY OF ASSEMBLIES

UPDATE NO.	DATE	COMPANY	CREW
△			
△			
△			
△			

Baker

SUPPLEMENTAL SHEET

☑ FIELD ORIGINAL ☐ TRANSCRIBED BY:_____

BRIDGE NO. 01765	DATE: 8/16/12
CREW: MJO, JAC	SHEET 78/193

DESCRIPTION: SUPERSTRUCTURE

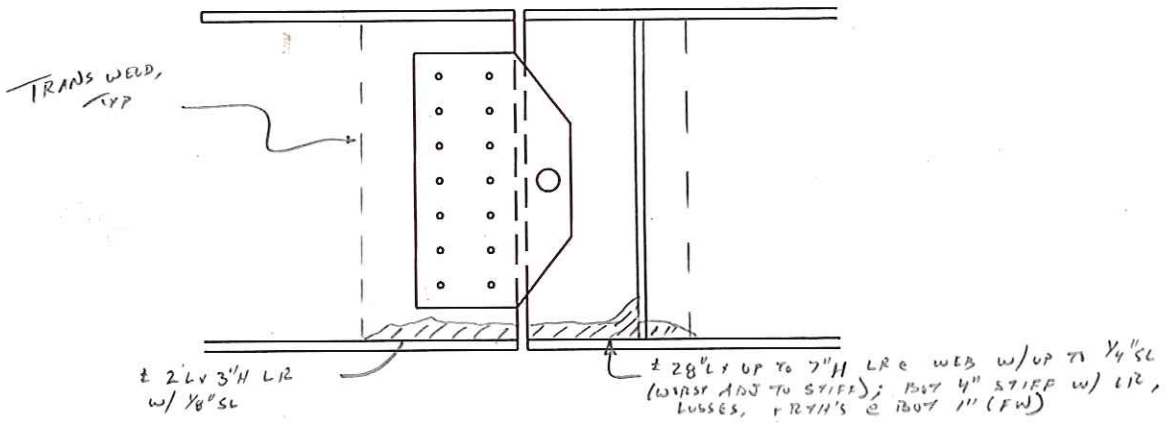

SP #3, G2 @ HINGE (W. LINE)

S. ELEV

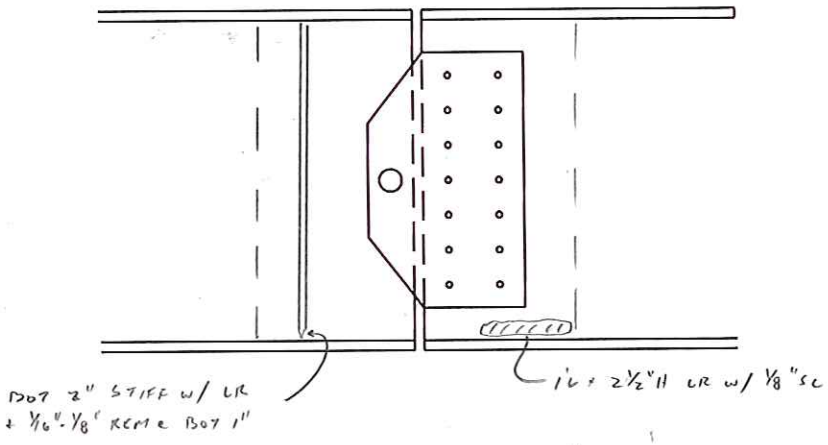

SP #3, G2 @ HINGE (W. LINE)

N. ELEV

UPDATE NO.	DATE	COMPANY	CREW
△			
△			
△			
△			

Baker

SUPPLEMENTAL SHEET

☒ FIELD ORIGINAL ☐ TRANSCRIBED BY:_____

BRIDGE NO. 01765	DATE: 8/16/12
CREW: MTO, JAC	SHEET 79/143

DESCRIPTION: SUPERSTRUCTURE

GEN
- BOTH BF'S W/ LR & VARYING LOSSES @ END S' (NON-CRIT ZONE);
- TF'S W/ LR, UP TO 1/8"SL (EST) @ END ± 4' (LOSS @ END 2' ±)

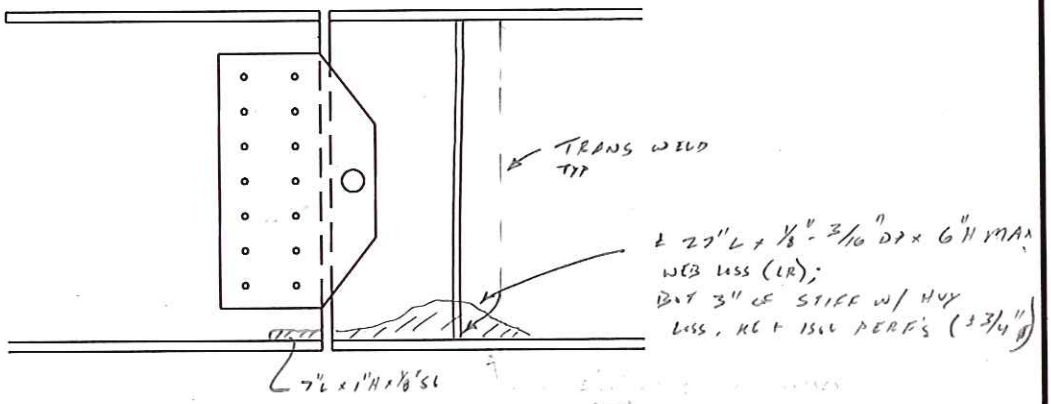

SP #3, G9 @ HINGE (WEST LINE)
S. ELEV

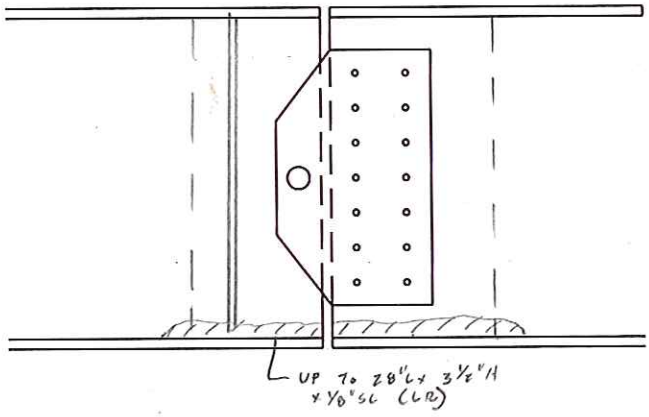

SP #3, G9 @ HINGE (W. LINE
N. ELEV

UPDATE NO.	DATE	COMPANY	CREW
△			
△			
△			
△			

Baker

SUPPLEMENTAL SHEET

☒ FIELD ORIGINAL ☐ TRANSCRIBED BY:_____

BRIDGE NO. 01765	DATE: 8/16/12
CREW: MJO, JAC	SHEET 80/193

DESCRIPTION: SUPERSTRUCTURE

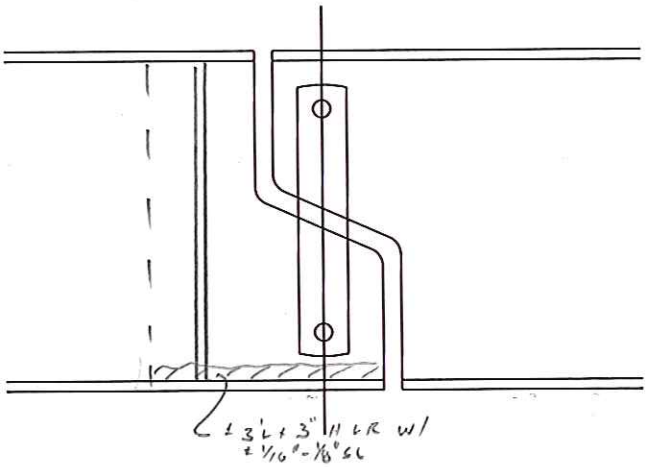

SPAN #3, 62 e PTH (E. LINE)
(S. ELEV)

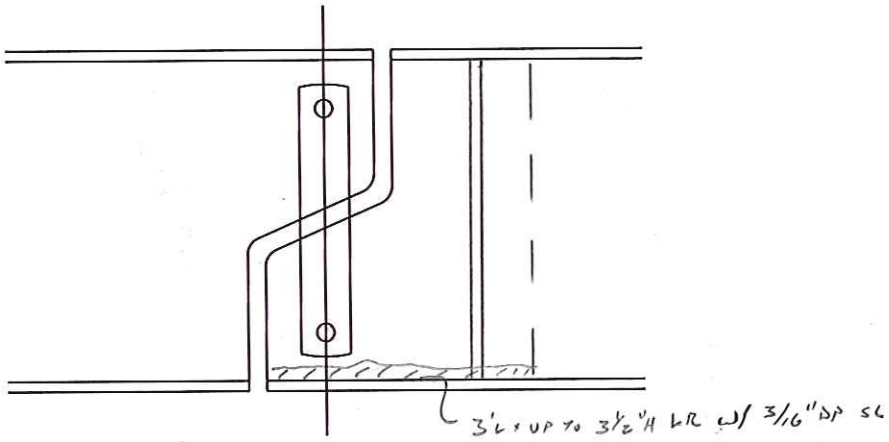

SP #3, 62 e PTH (E. LINE)
(N. ELEV)

UPDATE NO.	DATE	COMPANY	CREW
△			
△			
△			
△			

Baker

SUPPLEMENTAL SHEET

☒ FIELD ORIGINAL ☐ TRANSCRIBED BY:_____

BRIDGE NO. 01765	DATE: 8/16/12
CREW: MTO, JAC	SHEET 81/193

DESCRIPTION: SUPERSTRUCTURE

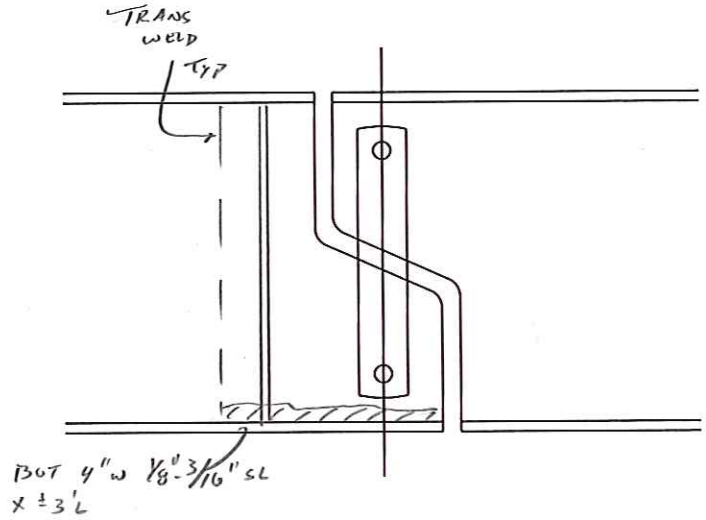

SP #3, GIRDER 6 @ P+H (E. LINE)
(S. ELEV)

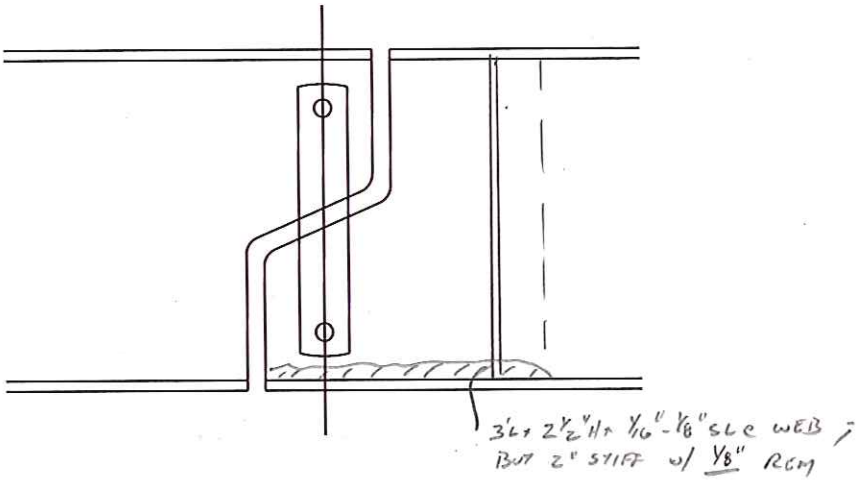

SP #3, GIRDER 6 @ P+H (E. LINE)
N. ELEV

UPDATE NO.	DATE	COMPANY	CREW
△			
△			
△			
△			

Baker

SUPPLEMENTAL SHEET

☑ FIELD ORIGINAL ☐ TRANSCRIBED BY:_____

BRIDGE NO. 01765	DATE: 8/16/12
CREW: MRD, JAC	SHEET 82/193

DESCRIPTION: SUPERSTRUCTURE

MINOR LOSSES →

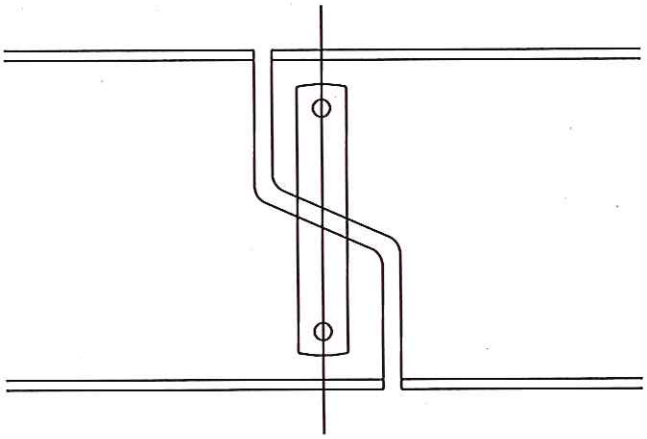

SP #3 G9 @ P+H (E. LINE)
S. ELEV

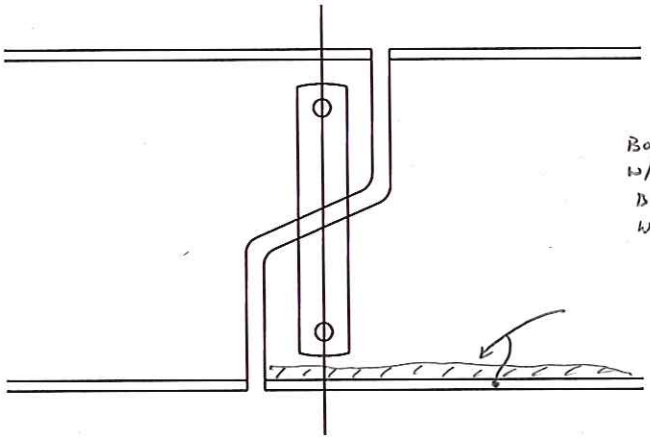

BOT OF WEB + BF 6'L
W/ HVY LR →
BF N. LEG W/ ± 1 3/16" REM;
WEB W/ 3" HY 3/16" SL

SP #3, G9 @ P+H (E. LINE)
N. ELEV

UPDATE NO.	DATE	COMPANY	CREW
△			
△			
△			
△			

Baker

SUPPLEMENTAL SHEET

☒ FIELD ORIGINAL ☐ TRANSCRIBED BY:_____

BRIDGE NO. 01765	DATE: 8/16/12
CREW: MJO/JAL	SHEET 83/193

DESCRIPTION: SUPERSTRUCTURE

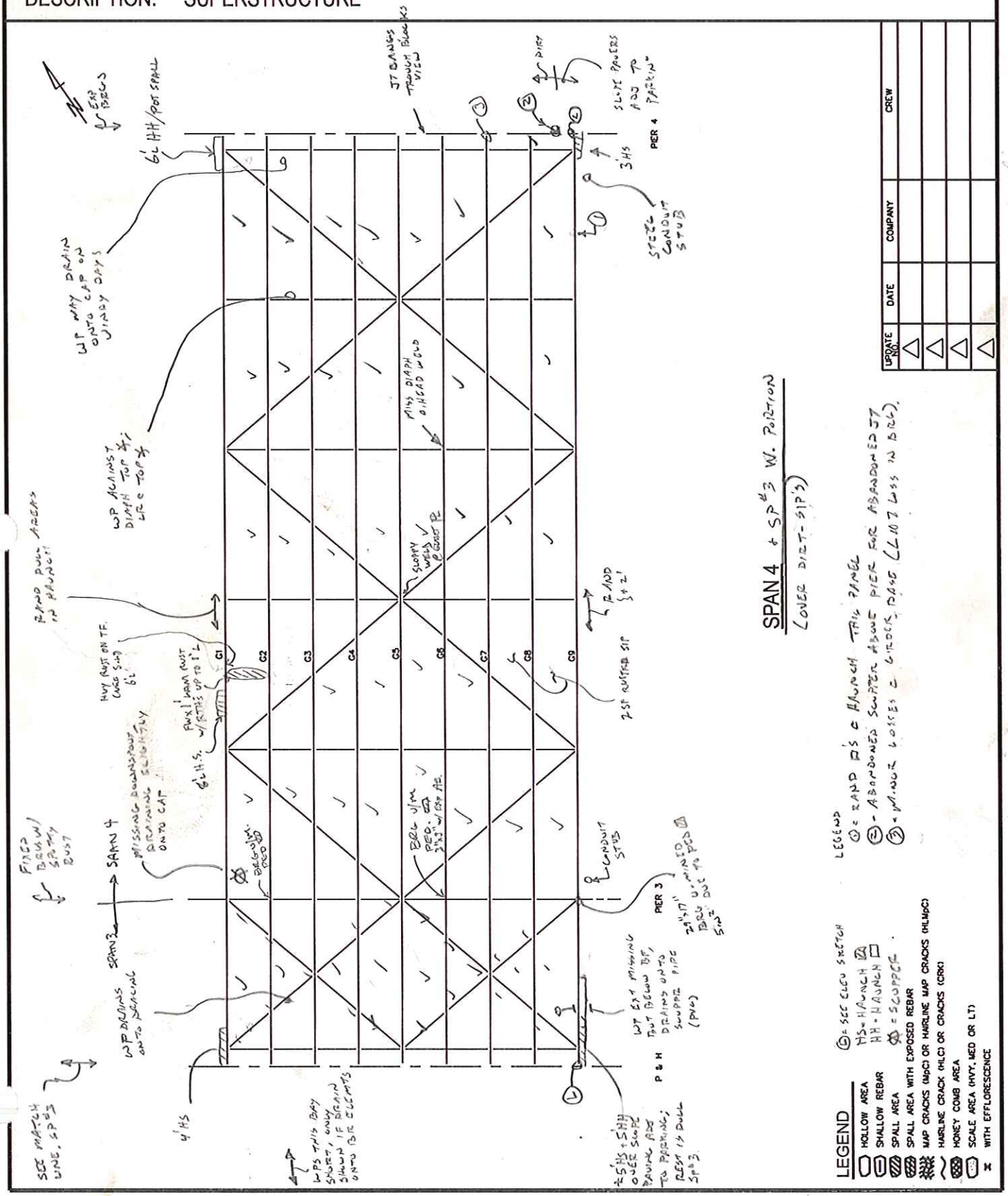

Baker

SUPPLEMENTAL SHEET

☑ FIELD ORIGINAL ☐ TRANSCRIBED BY:_____

BRIDGE NO. 1765	DATE: 8/20/12
CREW: MJO, BH	SHEET 83A / 193

DESCRIPTION: SUPERSTRUCTURE

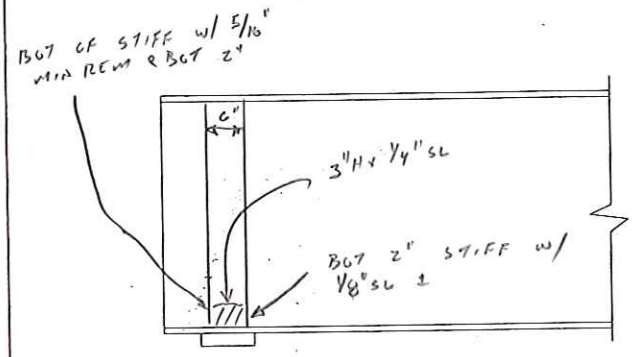

SP #4, GIRDER 9 @ P4

N. ELEV

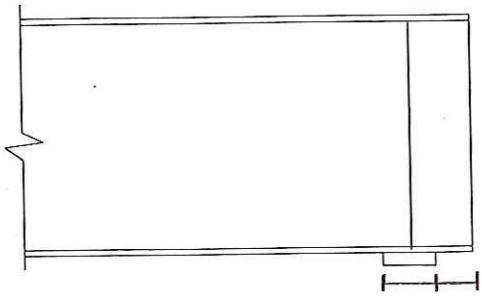

SP #4, GIRDER 9 @ P4

S. ELEV

Baker

SUPPLEMENTAL SHEET

☑ FIELD ORIGINAL ☐ TRANSCRIBED BY:_____

BRIDGE NO. 01765	DATE: 8/16/12
CREW: MJO/JAC	SHEET 84/193

DESCRIPTION: SUPERSTRUCTURE

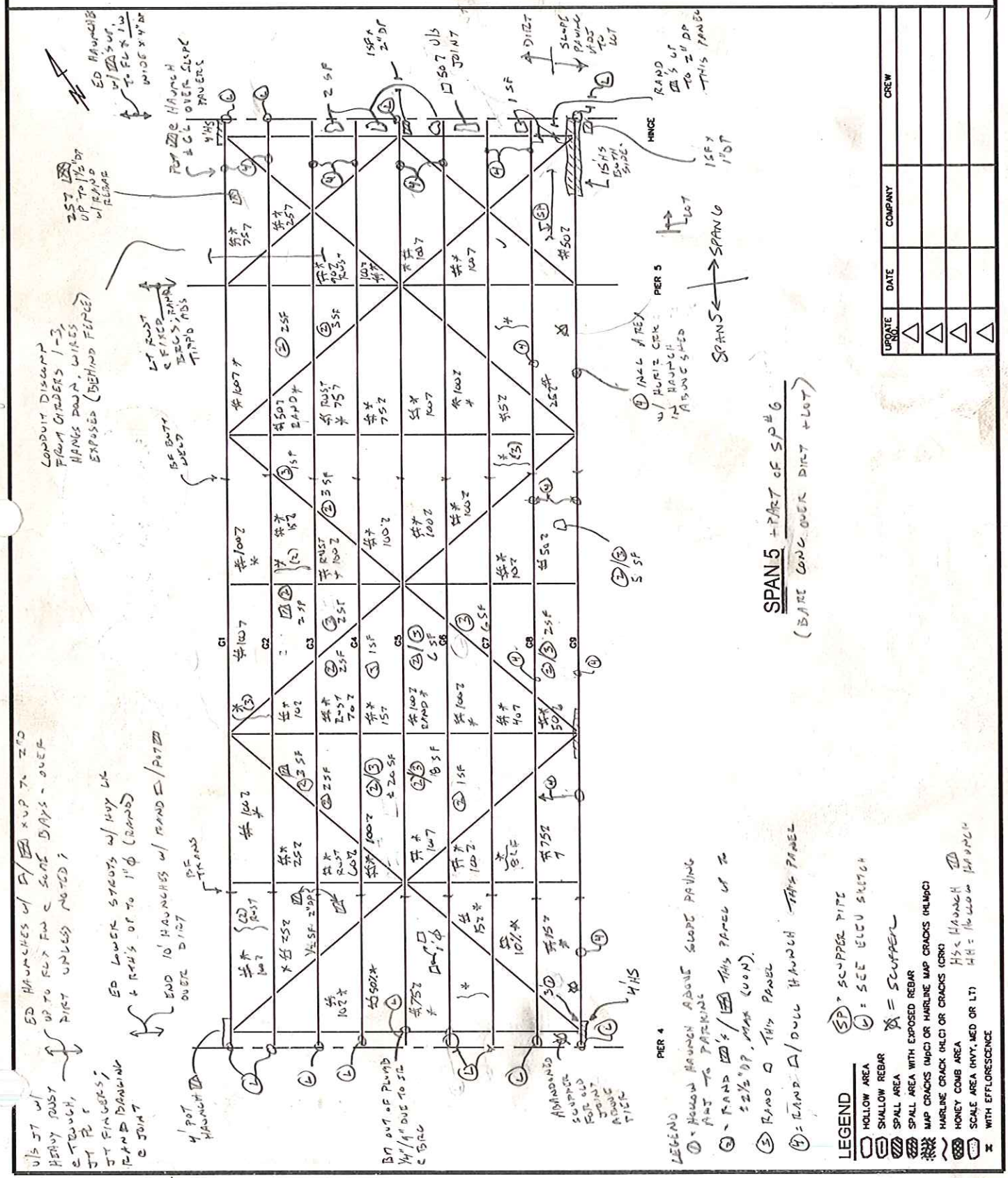

Baker

SUPPLEMENTAL SHEET

☒ FIELD ORIGINAL ☐ TRANSCRIBED BY:_____

BRIDGE NO. 1765	DATE: 8/22/12
CREW: MJD/BH	SHEET 85/113

DESCRIPTION: SUPERSTRUCTURE

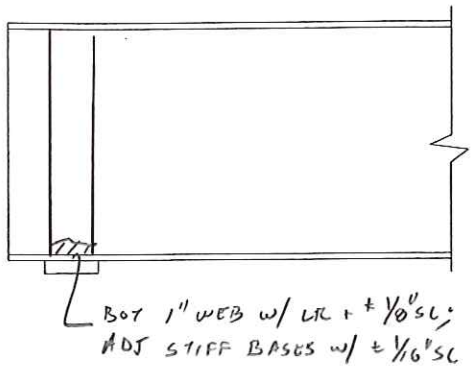

SPAN 6, GIRDER 1 @ PIER 4

S. ELEV

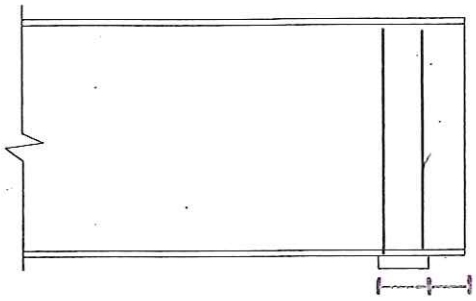

SPAN 5, GIRDER 1 @ PIER 4

N. ELEV

Baker

SUPPLEMENTAL SHEET

☒ FIELD ORIGINAL ☐ TRANSCRIBED BY:_____

BRIDGE NO. 01765	DATE: 8/22/12
CREW: MJP, BH	SHEET 86/193

DESCRIPTION: SUPERSTRUCTURE

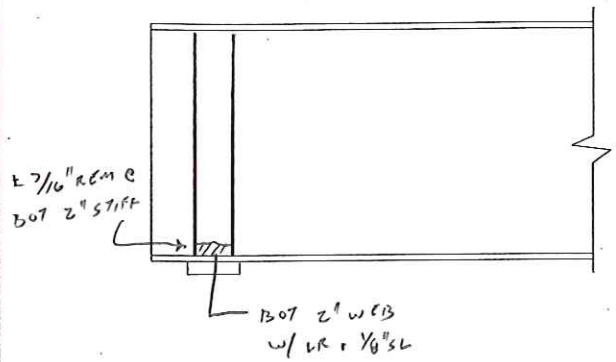

SPAN 5, GIRDER 2 @ PIER 4

S. ELEV

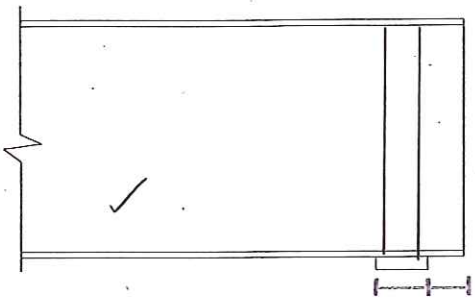

SPAN 5, GIRDER 2 @ PIER 4

N. ELEV

Baker

SUPPLEMENTAL SHEET

☒ FIELD ORIGINAL ☐ TRANSCRIBED BY:_____

BRIDGE NO. 1765	DATE: 8/20/12
CREW: MPD/BH	SHEET 87/193

DESCRIPTION: SUPERSTRUCTURE

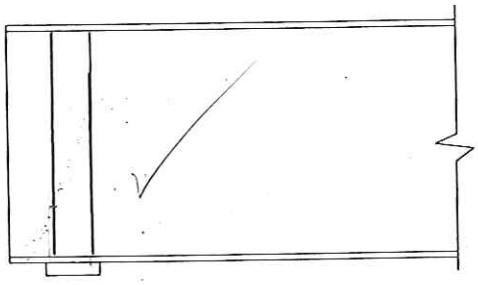

SP #5, GIRDER 3 @ P4

S. ELEV

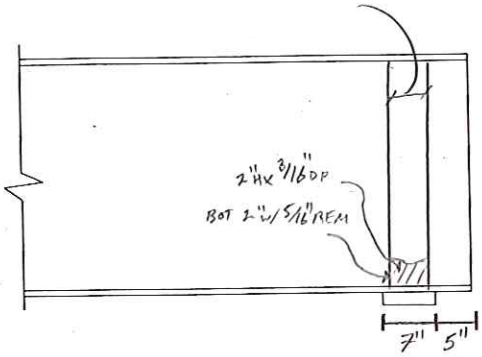

SP #5, GIRDER 3 @ PIER 4

N. ELEV

Baker

SUPPLEMENTAL SHEET

☒ FIELD ORIGINAL ☐ TRANSCRIBED BY:_____

BRIDGE NO. 1765	DATE: 8/20/12
CREW: MJD, BH	SHEET 88/193

DESCRIPTION: SUPERSTRUCTURE

BOT 4" WEB w/ ± 1/4" MIN REM
BOT 3" STIFF w/ 3/16" MIN REM

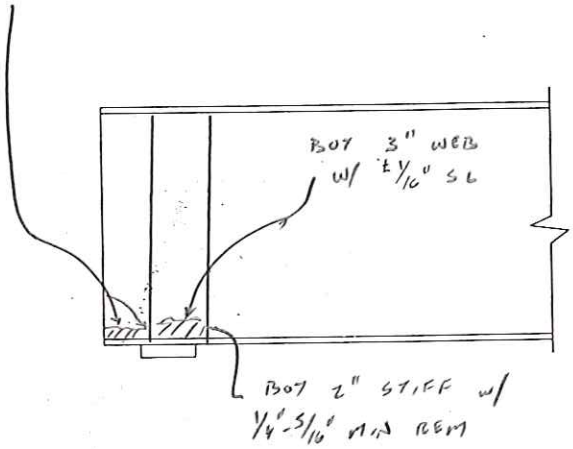

SP #5 GIRDER 4 @ PIER 4

S. ELEV

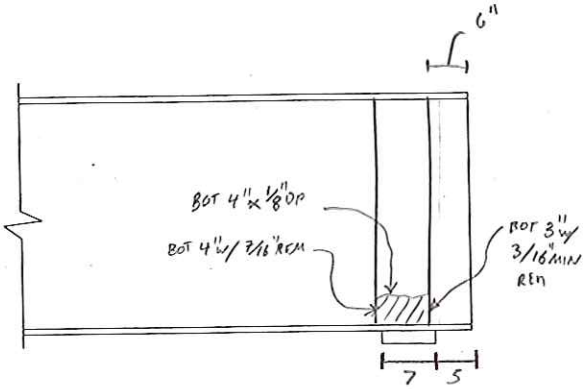

SP #5 GIRDER 4 @ PIER 4

N. ELEV

Baker

SUPPLEMENTAL SHEET

☒ FIELD ORIGINAL ☐ TRANSCRIBED BY:_____

BRIDGE NO. 01765	DATE: 8/20/12
CREW: MJO, BH	SHEET 89/193

DESCRIPTION: SUPERSTRUCTURE

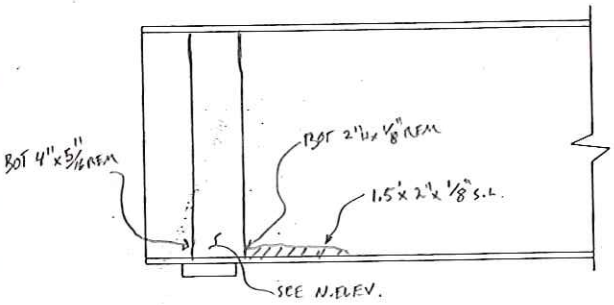

SP #5, GIRDER S @ PIER 4

S. ELEV

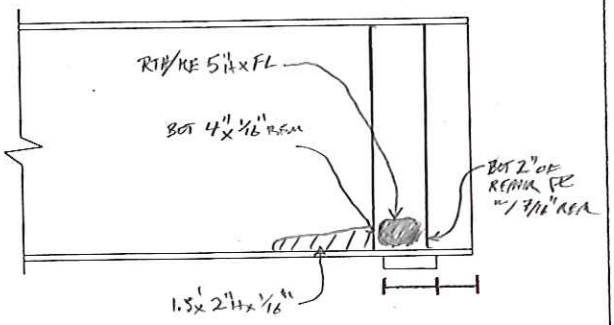

SP #5, GIRDER S @ PIER 4

N. ELEV

Baker

SUPPLEMENTAL SHEET

☒ FIELD ORIGINAL ☐ TRANSCRIBED BY:_____

BRIDGE NO. 1765	DATE: 8/16/12
CREW: MB/JAC	SHEET 10/193

DESCRIPTION: SUPERSTRUCTURE

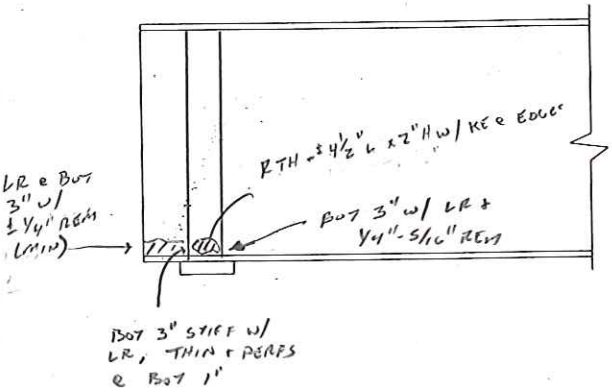

SP #5, G6 @ PIER 4

S. ELEV

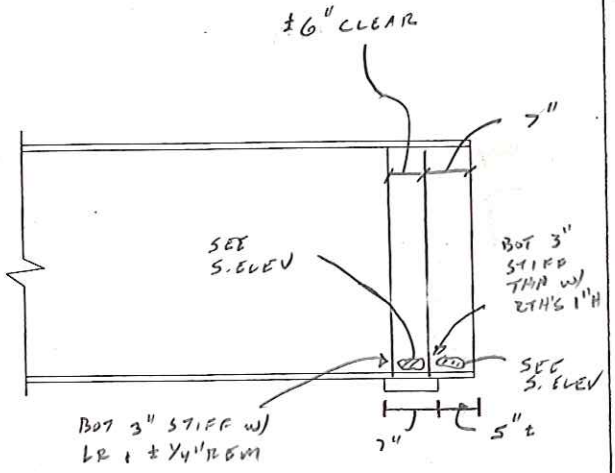

SP #5, G6 @ PIER 4

N. ELEV

Baker

SUPPLEMENTAL SHEET

☒ FIELD ORIGINAL ☐ TRANSCRIBED BY:_____

BRIDGE NO. 01765	DATE: 8/20/12
CREW: MTO, BH	SHEET 91/193

DESCRIPTION: SUPER STRUCTURE

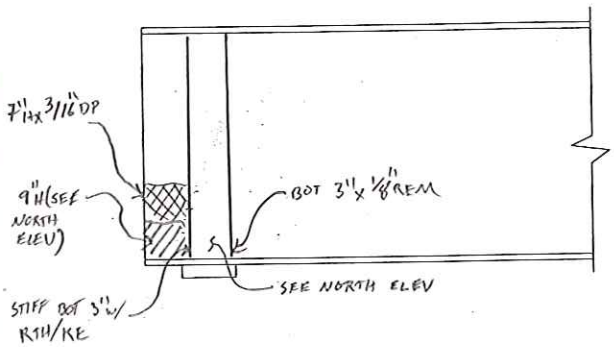

SP #5, GIRDER 7 @ PIER 4

S. ELEV

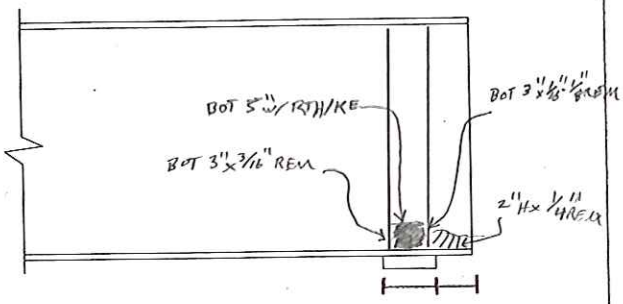

SP #5, GIRDER 7 @ PIER 4

N. ELEV

Baker

SUPPLEMENTAL SHEET

☒ FIELD ORIGINAL ☐ TRANSCRIBED BY:_____

BRIDGE NO. 01765	DATE: 8/20/12
CREW: MJO/BH	SHEET 92/193

DESCRIPTION: SUPER STRUCTURE

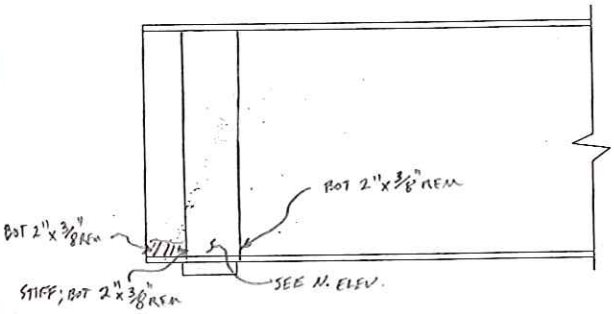

SP# 5, GIRDER 8 @ PIER 4

SOUTH ELEVATION

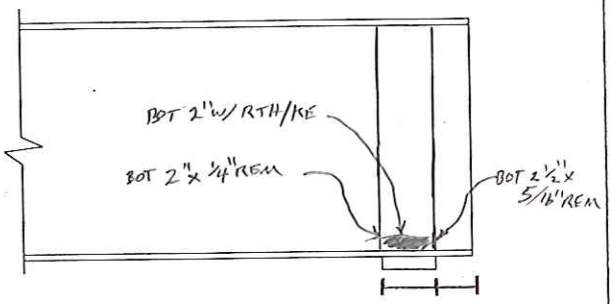

SP# 5, GIRDER 8, PIER 4

NORTH ELEV.

Baker

SUPPLEMENTAL SHEET

☒ FIELD ORIGINAL ☐ TRANSCRIBED BY:_____

BRIDGE NO. 01705	DATE: 8/20/12
CREW: MTO, BH	SHEET 93/193

DESCRIPTION: SUPERSTRUCTURE

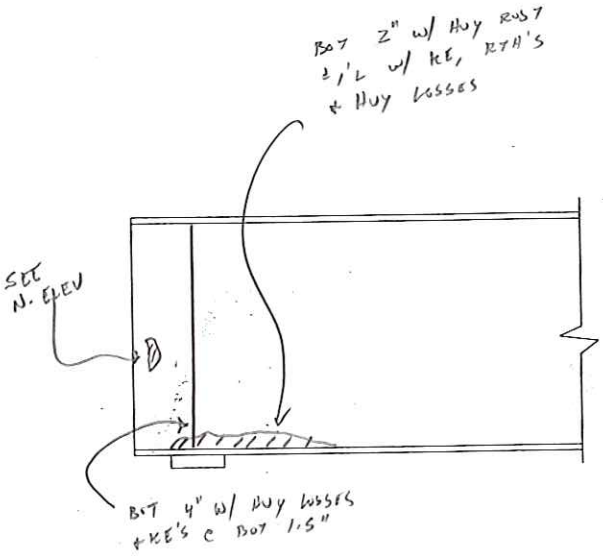

SP#5, GIRDER 9 @ PIER 4

SOUTH ELEVATION

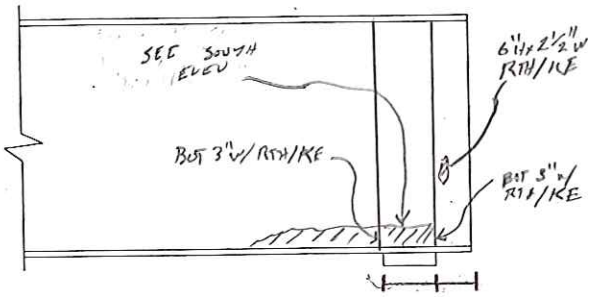

SP#5, GIRDER 9, @ PIER 4

NORTH ELEVATION

Baker

SUPPLEMENTAL SHEET

☒ FIELD ORIGINAL ☐ TRANSCRIBED BY:_____

BRIDGE NO. 01765	DATE: 8/21/12
CREW: MJO/DH	SHEET 94/193

DESCRIPTION: SUPERSTRUCTURE

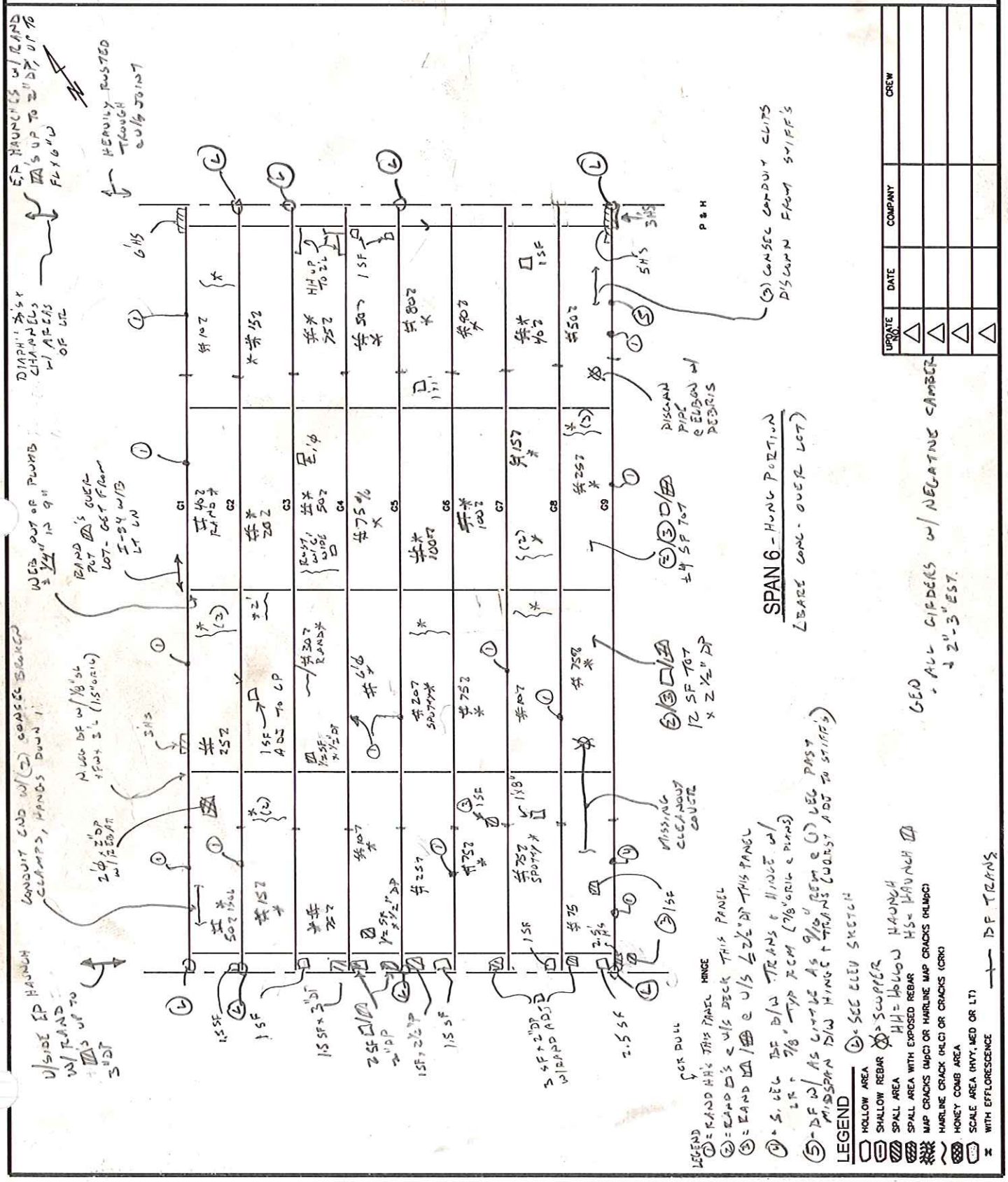

Baker

SUPPLEMENTAL SHEET

☒ FIELD ORIGINAL ☐ TRANSCRIBED BY:_____

BRIDGE NO. 01765	DATE: 8/21/12
CREW: MJO/BH	SHEET 95/193

DESCRIPTION: TYP LOSSES @ SP #6 HINGES, W. LINE

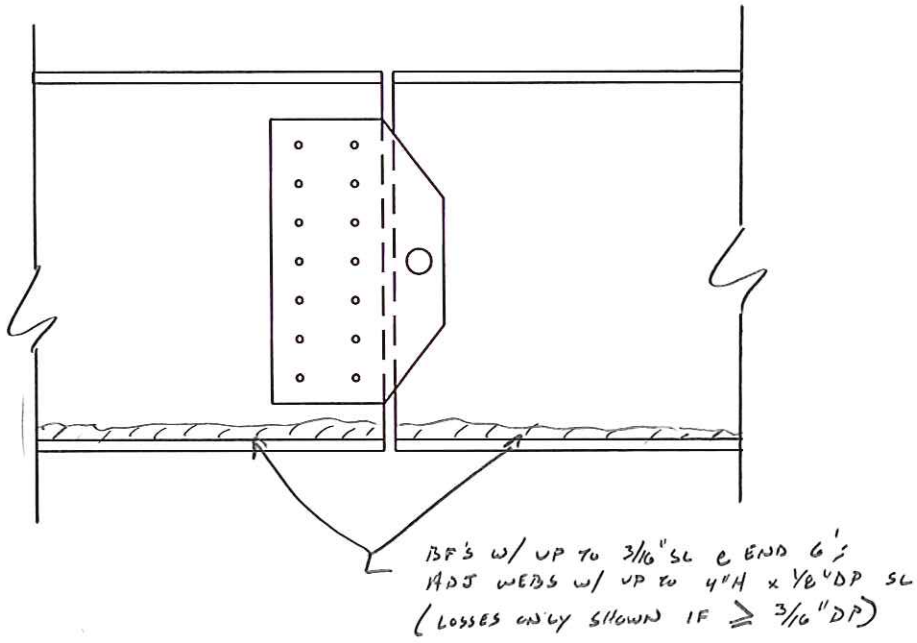

TYP LOSSES @ SP #6 HINGES, W. LINE

UPDATE NO.	DATE	COMPANY	CREW
△			
△			
△			
△			

Baker

SUPPLEMENTAL SHEET

☑ FIELD ORIGINAL ☐ TRANSCRIBED BY:_____

BRIDGE NO. 01765	DATE: BH/MJO
CREW: 8/21/12	SHEET 96 /193

DESCRIPTION: TYP LOSSES @ SP #6 HANGERS (E. LINE)

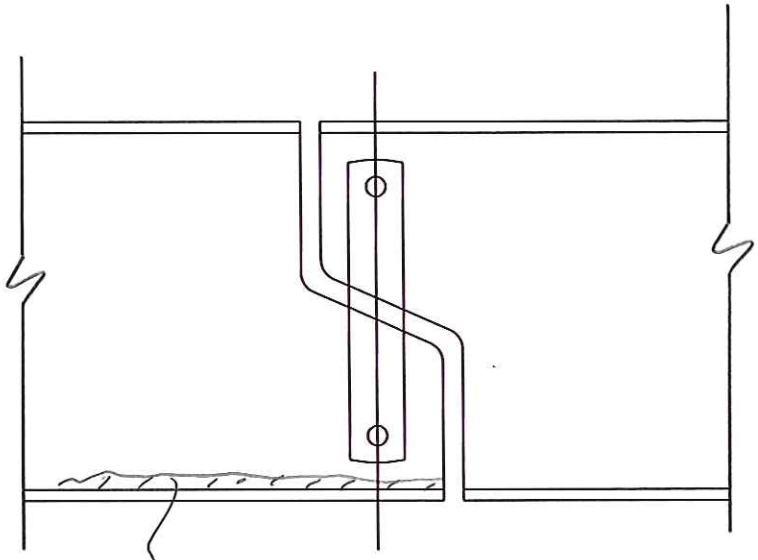

BOT 3" HUNG SPAN W/ LR +UP TO 1/8" SL ; END 10' BF W/ LR W/ UP TO 1/8" SL (TAPERS TO ZERO AS YOU MOVE AWAY FROM JOINT).

TYP LOSSES @ SP #6 HANGERS (E. LINE)

GEN
· WEB LOSSES ONLY SHOWN IF ≥ 3/16" DP @ (1) SIDE

UPDATE NO.	DATE	COMPANY	CREW
△			
△			
△			
△			

Baker

SUPPLEMENTAL SHEET

☒ FIELD ORIGINAL ☐ TRANSCRIBED BY:_____

BRIDGE NO. 01765	DATE: 8/21/12
CREW: MP/BH	SHEET 97/193

DESCRIPTION: SUPERSTRUCTURE

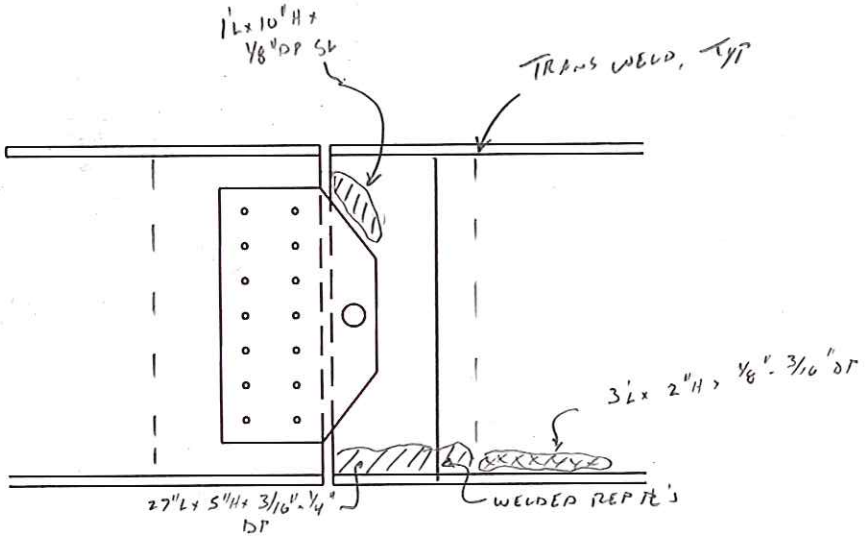

SPAN #6, GIRDER 1, W. LINE
S. ELEV

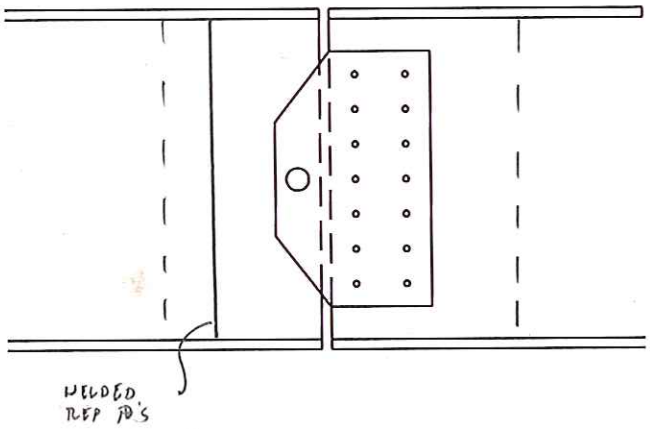

SPAN #6, GIRDER 1, W. LINE
N. ELEV

UPDATE NO.	DATE	COMPANY	CREW
△			
△			
△			
△			

Baker

SUPPLEMENTAL SHEET

☑ FIELD ORIGINAL ☐ TRANSCRIBED BY:_____

BRIDGE NO. 01765	DATE: 8/21/12
CREW: MJP/BH	SHEET 98/193

DESCRIPTION: SUPERSTRUCTURE

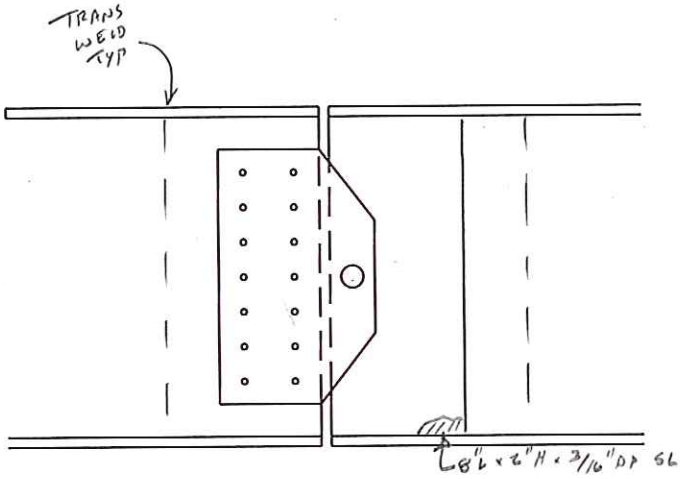

SP #6, GIRDER 2, W. LINE
S. ELEV

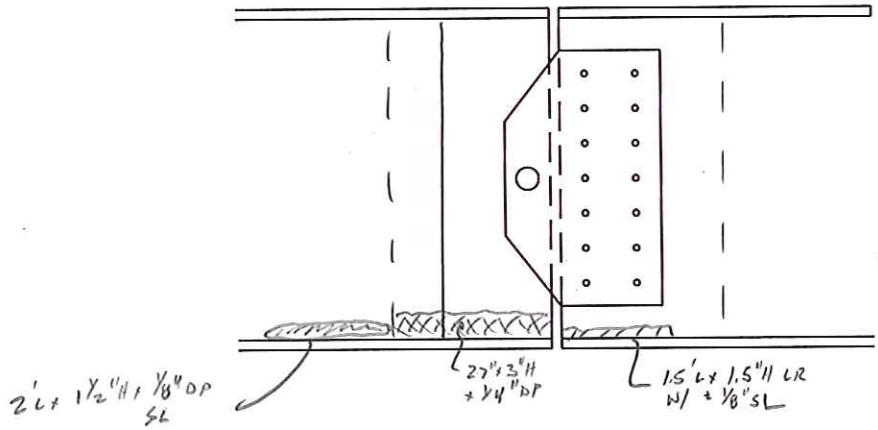

SP #6, GIRDER 2, W. LINE
N. ELEV

UPDATE NO.	DATE	COMPANY	CREW
△			
△			
△			
△			

Baker

SUPPLEMENTAL SHEET

☑ FIELD ORIGINAL ☐ TRANSCRIBED BY:_____

BRIDGE NO. 01765	DATE: 8/21/12
CREW: MJD/BH	SHEET 99/193

DESCRIPTION: SUPERSTRUCTURE

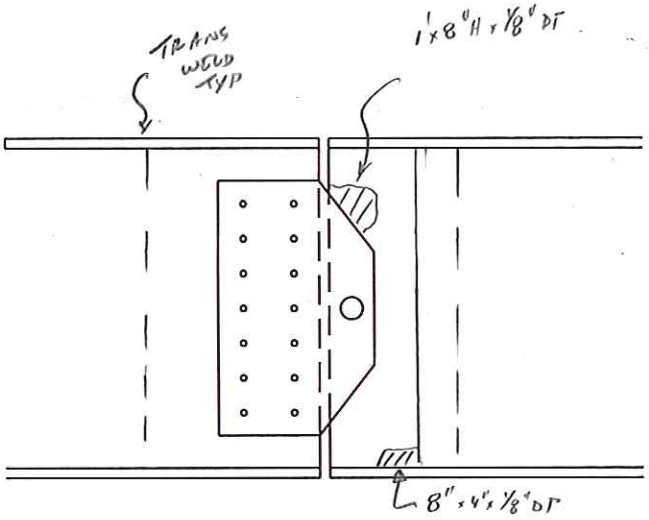

SP #6, GIRDER S, W. LINE
S. ELEV

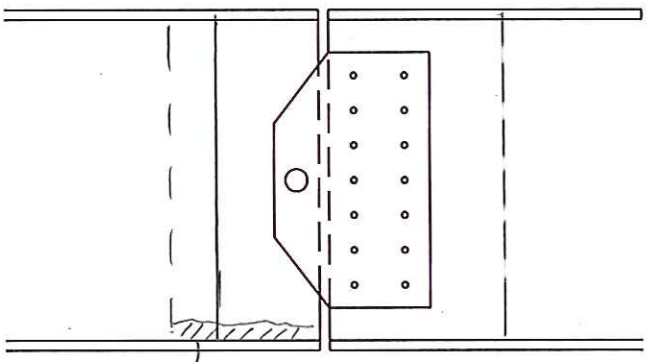

SP #6, GIRDER S, W. LINE
N. ELEV

UPDATE NO.	DATE	COMPANY	CREW
△			
△			
△			
△			

Baker

SUPPLEMENTAL SHEET

☑ FIELD ORIGINAL ☐ TRANSCRIBED BY:_____

BRIDGE NO. 01765	DATE: 8/21/12
CREW: MJB, BH	SHEET 100 /193

DESCRIPTION: SUPERSTRUCTURE

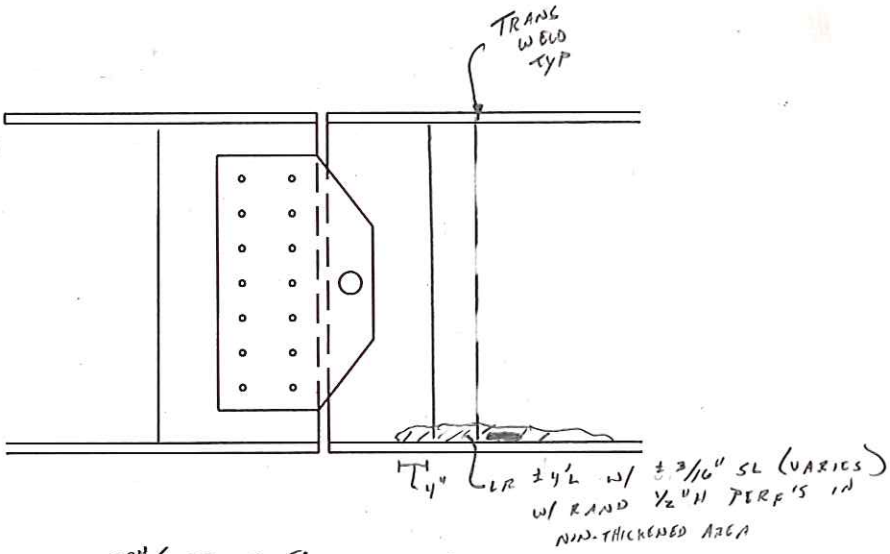

SP#6, GIRDER 9, W. LINE
S. ELEV

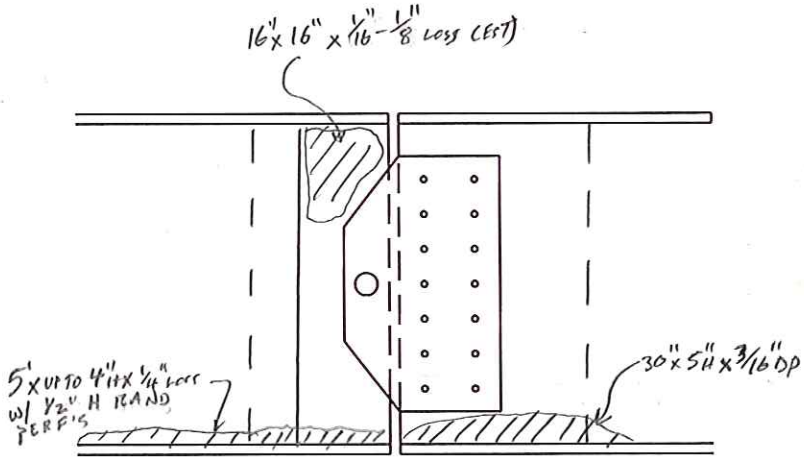

SP#6, GIRDER 9, W. LINE
N. ELEV.

UPDATE NO.	DATE	COMPANY	CREW
△			
△			
△			
△			

Baker

SUPPLEMENTAL SHEET

☒ FIELD ORIGINAL ☐ TRANSCRIBED BY:_____

BRIDGE NO. 01765	DATE: 8/21/12
CREW: MD/BH	SHEET 101/193

DESCRIPTION: SUPERSTRUCTURE

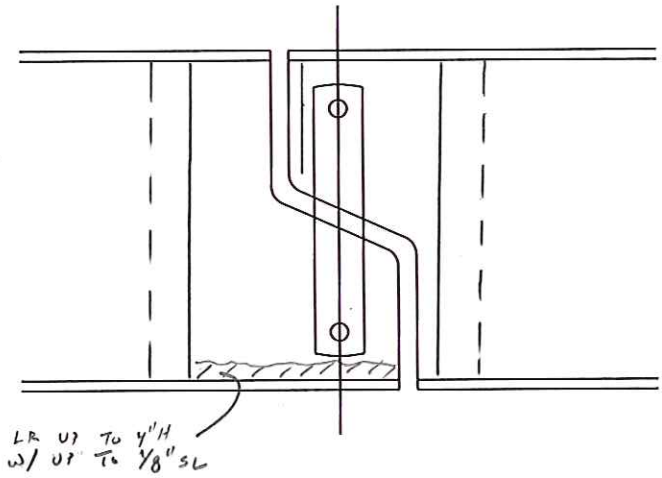

SP #6, GIRDER 2, E. LINE
S. ELEV

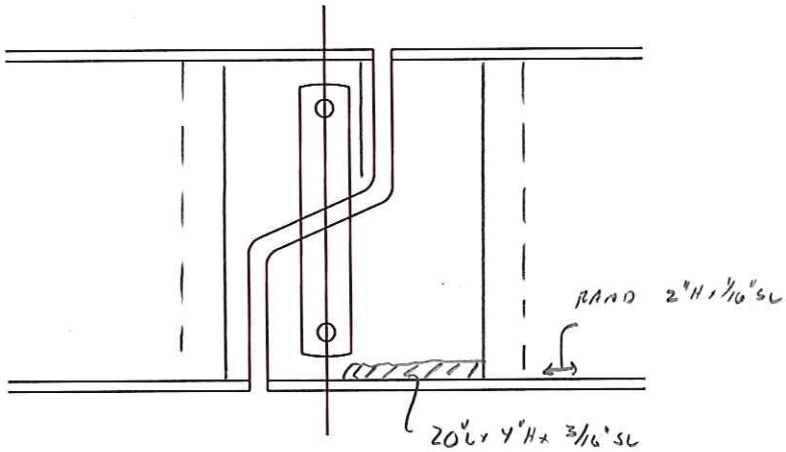

SP #6, GIRDER 2, E. LINE
N. ELEV

UPDATE NO.	DATE	COMPANY	CREW
△			
△			
△			
△			

Baker

SUPPLEMENTAL SHEET

☑ FIELD ORIGINAL ☐ TRANSCRIBED BY:_____

BRIDGE NO. 01765	DATE: 8/21/12
CREW: MP, BH	SHEET 102/193

DESCRIPTION: SUPERSTRUCTURE

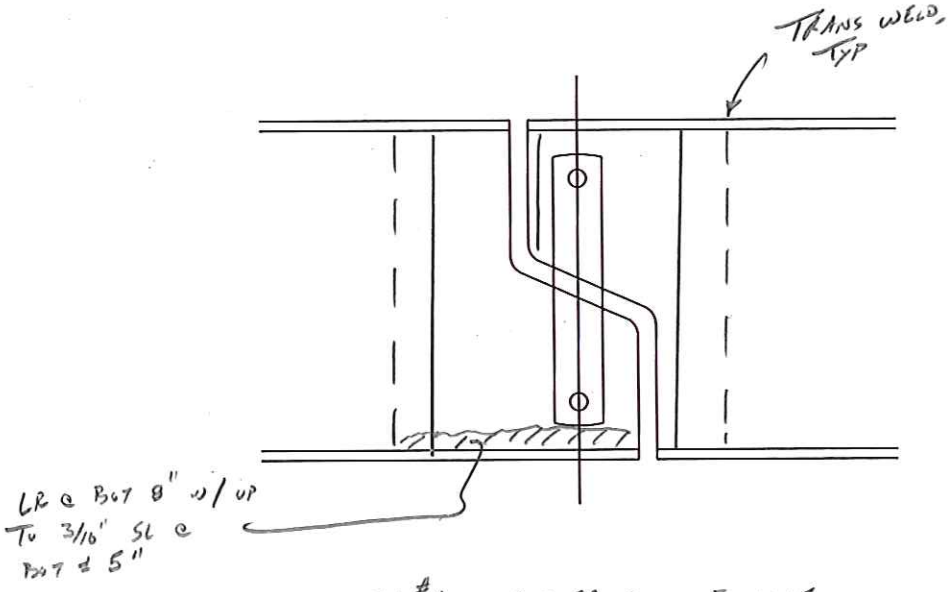

SP #6, GIRDER 3, E. LINE

S. ELEV

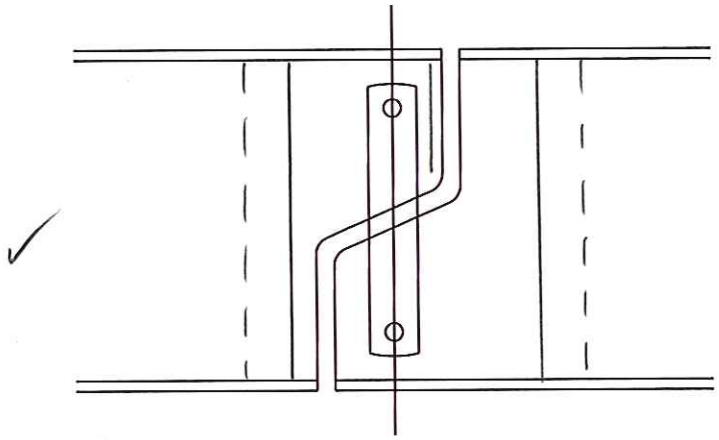

SP #6, GIRDER 3, E. LINE

N. ELEV

UPDATE NO.	DATE	COMPANY	CREW
△			
△			
△			
△			

Baker

SUPPLEMENTAL SHEET

☒ FIELD ORIGINAL ☐ TRANSCRIBED BY:_____

BRIDGE NO. 01765	DATE: 8/21/12
CREW: MD, BH	SHEET 163 / 193

DESCRIPTION: SUPERSTRUCTURE

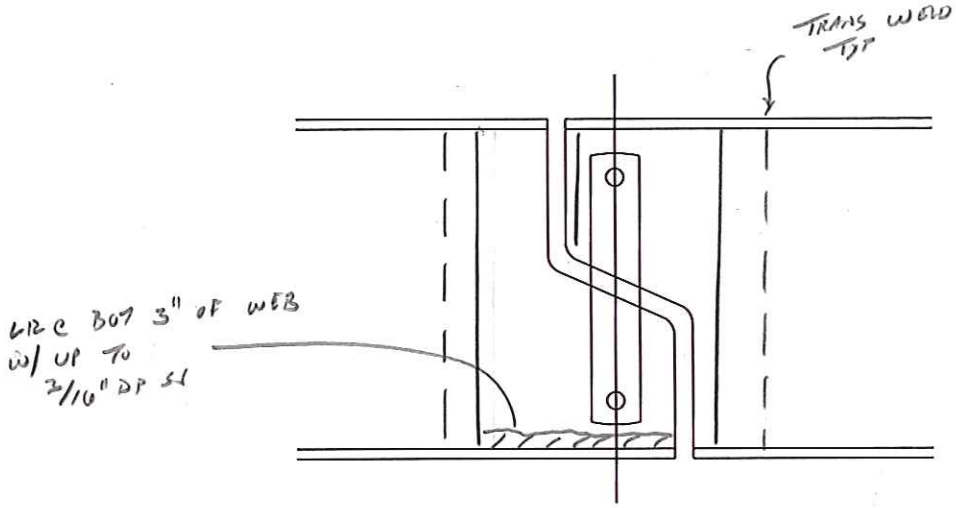

SP # 6, GIRDER 5, E. LINE
S. ELEV

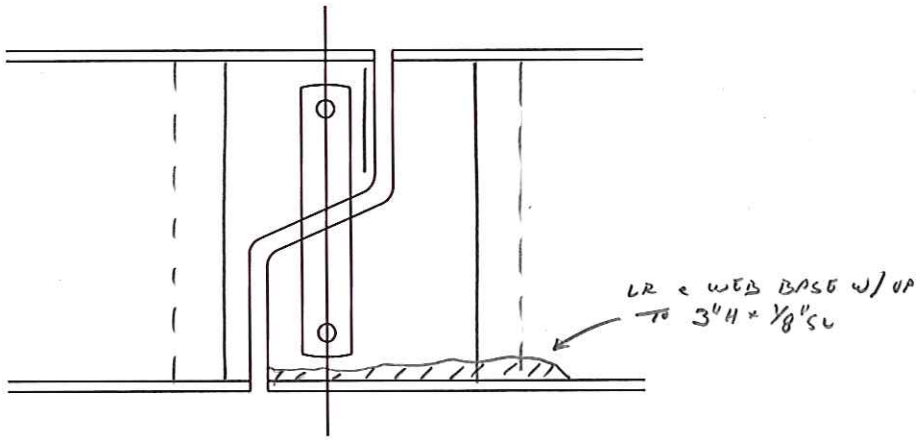

SP # 6, GIRDER 5, E. LINE
N. ELEV

UPDATE NO.	DATE	COMPANY	CREW
△			
△			
△			
△			

Baker

SUPPLEMENTAL SHEET

☒ FIELD ORIGINAL ☐ TRANSCRIBED BY:_____

BRIDGE NO. 01765	DATE: 8/21/12
CREW: MJO/BH	SHEET 104/193

DESCRIPTION: SUPERSTRUCTURE

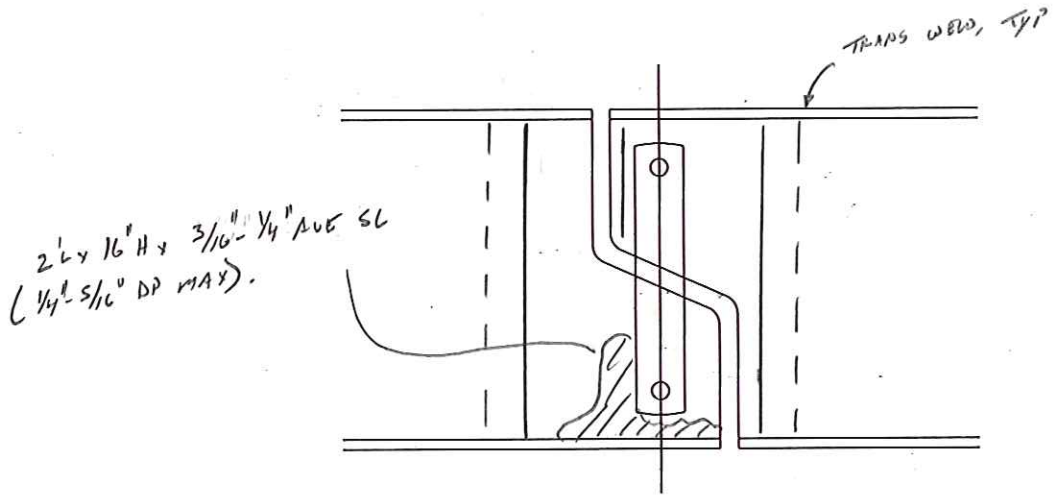

SP #6, GIRDER 9, E. LINE
S. ELEV

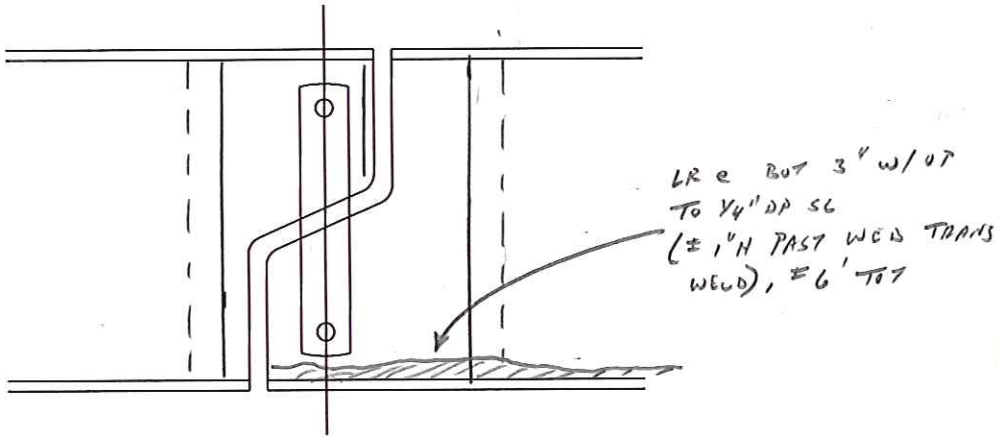

SP #6, GIRDER 9, E. LINE
N. ELEV

UPDATE NO.	DATE	COMPANY	CREW
△			
△			
△			
△			

Baker

SUPPLEMENTAL SHEET

☒ FIELD ORIGINAL ☐ TRANSCRIBED BY: ____

DESCRIPTION: SUPERSTRUCTURE

BRIDGE NO. 01765 | DATE: 8/15/12

CREW: MP/BH | SHEET 165/193

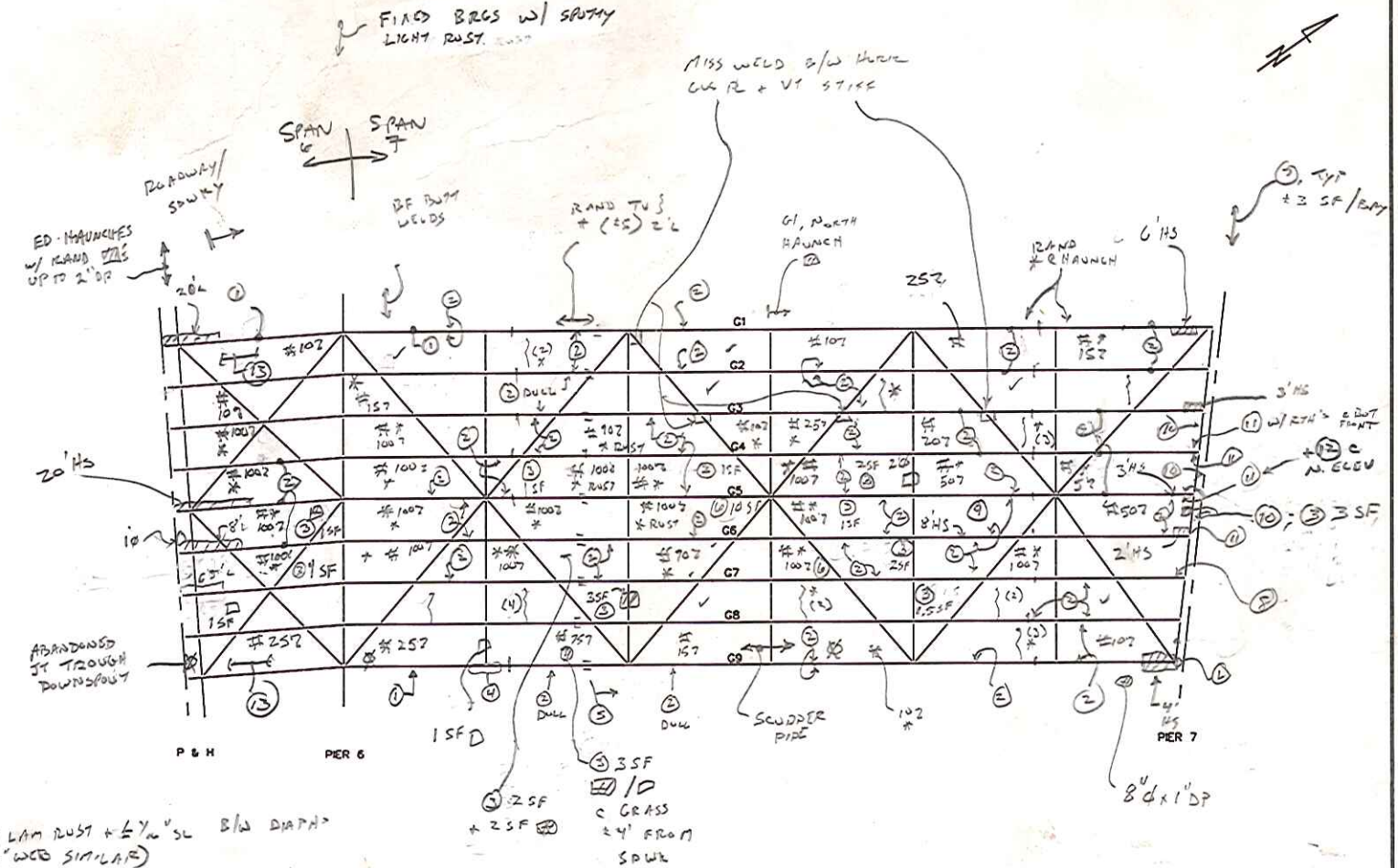

LEGEND

① - BF w/ LAM RUST + ±1/16" SL B/W DIAPH'S (BOT 6" WEB SIMILAR)

② - RAND □'S UP TO FL PANEL @ HAUNCH

③ - ⊞ UP TO 2½" DP (ISOL 3" DP)

④ = S. LEG BF w/ LR 10'L w/ 1¼" MIN REP

⑤ - S. LEG BF w/ LR + 2" MIN REM B/W BOLTED SPLICE + E. TRANS

⑥ = RAND □'S IN #*

⑦ ED. HAUNCH w/ RAND □, ⊞ 3" DP, ~ *

⑧ NW STIFF RUSTED THRU @ BOT 1.5"; WEB IN FRONT 2'L x 2" + 5/16" SL; REP PL'S @ WEB B/W BRG STIFFS + NE STIFF w/ REP PL

⑨ PANEL w/ 75%; ⑥ ISOL; ③ ± 4 SF

⑩ ED LOWER STRUT ⊥ w/ HVY LOSSES + RTH'S @ HORIZ WEB

⑪ - BOT 3" OF FRONT BRG STIFF w/ ±1/8" REM; REP PL'S @ END STIFF + B/W BRG STIFFS

⑫ - WEB IN FRONT OF BRG STIFF w/ 2'L LR + 3" ⊥ w/ 1/4" SL

⑬ SEVERAL CONSECUTIVE CONDUIT CLAMPS BROKEN; CONDUIT DISCONN + SAGS ≥ 1.5

SPAN 7 + PART SP #6

(BARE DECK - OVER ROAD/LOT)

LEGEND

- HOLLOW AREA
- SHALLOW REBAR
- SPALL AREA
- SPALL AREA WITH EXPOSED REBAR
- MAP CRACKS (MpC) OR HAIRLINE MAP CRACKS (HLMpC)
- HAIRLINE CRACK (HLC) OR CRACKS (CRK)
- HONEY COMB AREA
- SCALE AREA (HVY, MED OR LT)
- WITH EFFLORESCENCE

⊗ = SCUPPER

UPDATE NO.	DATE	COMPANY	CREW
△			
△			
△			
△			

Baker	☑ FIELD ORIGINAL ☐ TRANSCRIBED BY: ____	STRUCTURE: 1765	DATE: 8/15/12
		CREW: MJO/BH	SHEET: 106 /193

DESCRIPTION: SUPERSTRUCTURE

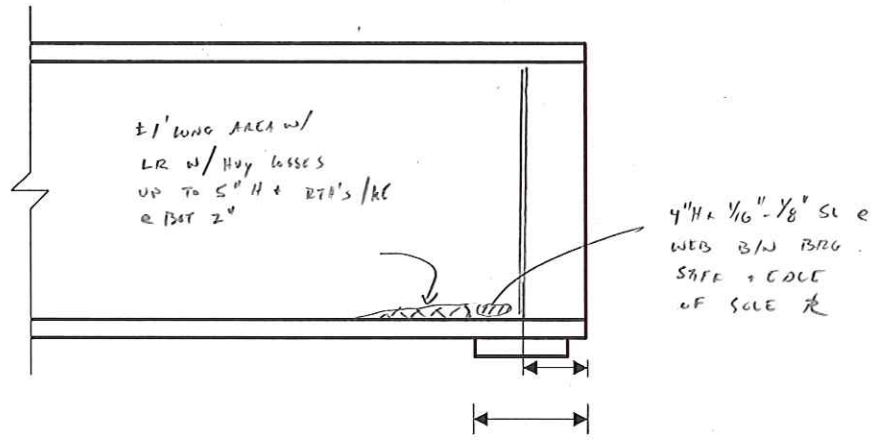

SP#7, G4 @ P7, S. ELEV

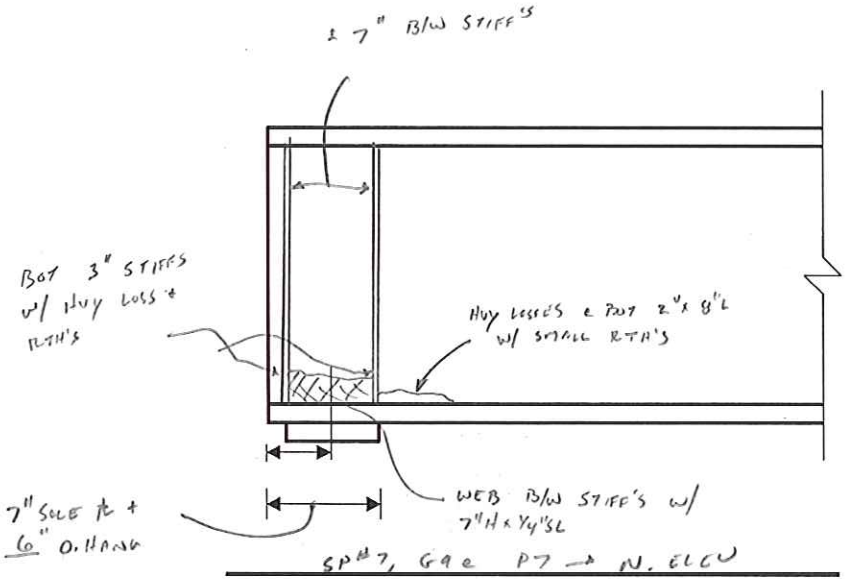

SP#7, G4 @ P7 → N. ELEV

LEGEND

- HOLLOW AREA
- SHALLOW REBAR
- SPALL AREA
- SPALL AREA WITH EXPOSED REBAR
- MAP CRACKS (MpC) OR HAIRLINE MAP CRACKS (HLMpC)
- HAIRLINE CRACK (HLC) OR CRACKS (CRK)
- HONEY COMB AREA
- SCALE AREA (HVY, MED OR LT)
- x WITH EFFLORESCENCE

REV. NO:	DATE:	COMPANY:	CREW:
△			
△			
△			
△			

Baker

SUPPLEMENTAL SHEET

☒ FIELD ORIGINAL ☐ TRANSCRIBED BY:_____

BRIDGE NO. 01765	DATE: 8/14/12
CREW: JM, PB	SHEET 107 /193

DESCRIPTION: SUPERSTRUCTURE

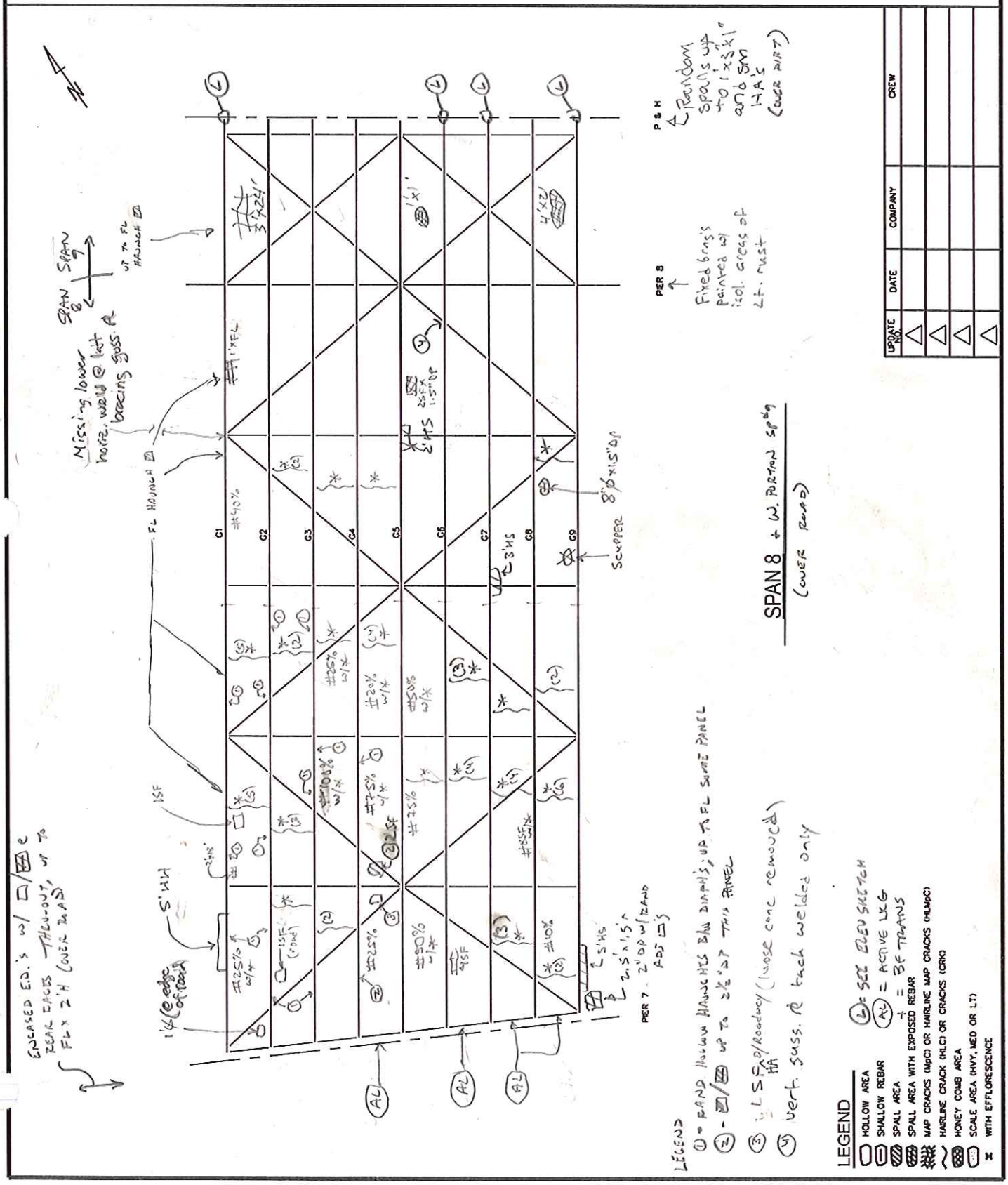

UPDATE NO.	DATE	COMPANY	CREW
△			
△			
△			
△			

Baker

SUPPLEMENTAL SHEET

☒ FIELD ORIGINAL ☐ TRANSCRIBED BY:_____

BRIDGE NO. 01765	DATE: 8/14/12
CREW: BH, MJO	SHEET 108/193

DESCRIPTION: SUPERSTRUCTURE

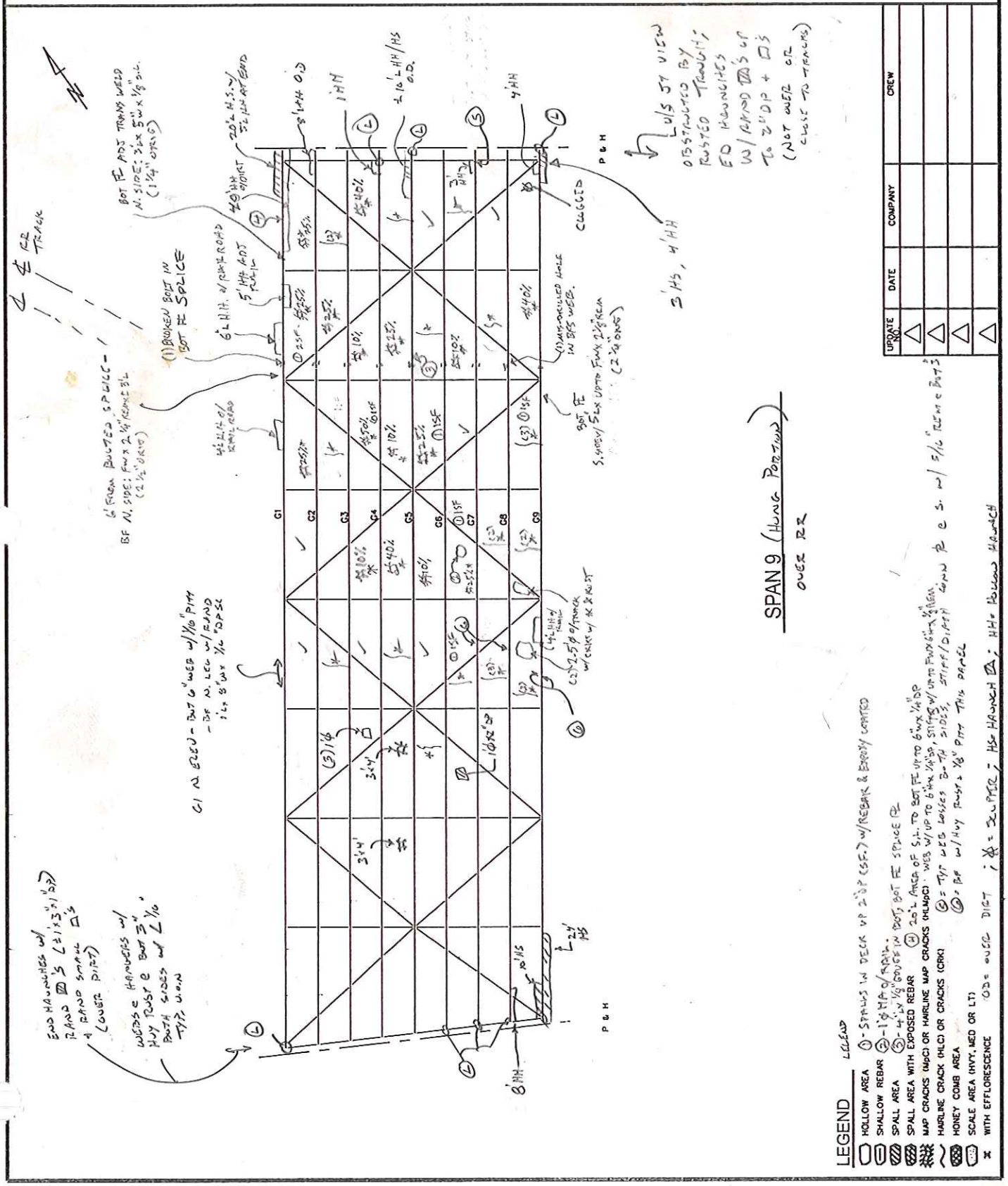

Baker

SUPPLEMENTAL SHEET

☐ FIELD ORIGINAL ☒ TRANSCRIBED BY: MJV

BRIDGE NO. 01765	DATE: 8/14/12
CREW: BH	SHEET 109/193

DESCRIPTION: TYP LOSSES @ SP #9, E. LINE OF HANGERS

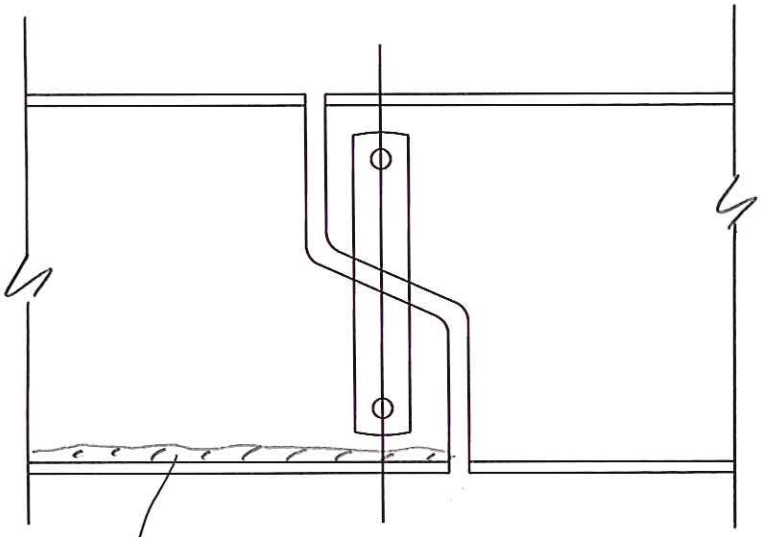

BOT 6" OF WEBS W/ LR UP TO 6' LONG W/ UP TO 1/8" SL; ADJ BP'S W/ LR + UP TO 1/8" SL (NON-CRIT ZONE).

TYP LOSSES @ SP #9, E. LINE OF HANGERS

GEN
- LOSSES ONLY SHOWN IF > THAN 1/8" @ WEB @ (1) ELEV.

UPDATE NO.	DATE	COMPANY	CREW
△			
△			
△			
△			

Baker

SUPPLEMENTAL SHEET

☒ FIELD ORIGINAL ☐ TRANSCRIBED BY:_____

BRIDGE NO. 01765	DATE: 8/14/12
CREW: JM, PB	SHEET 110/193

DESCRIPTION: SUPERSTRUCTURE.

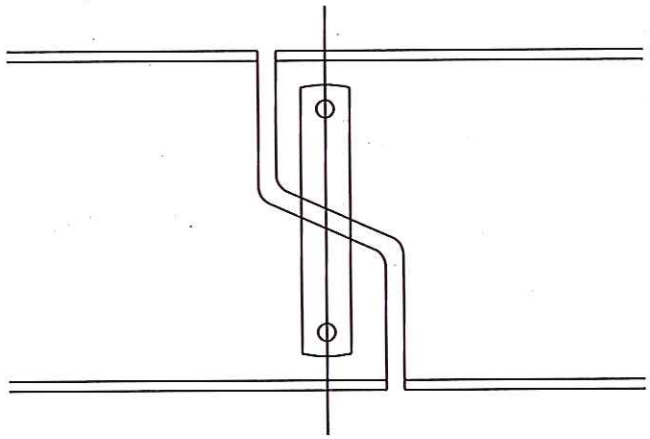

SP 9, G1, N. ELEV. - WEST LINE PIN + HANGER

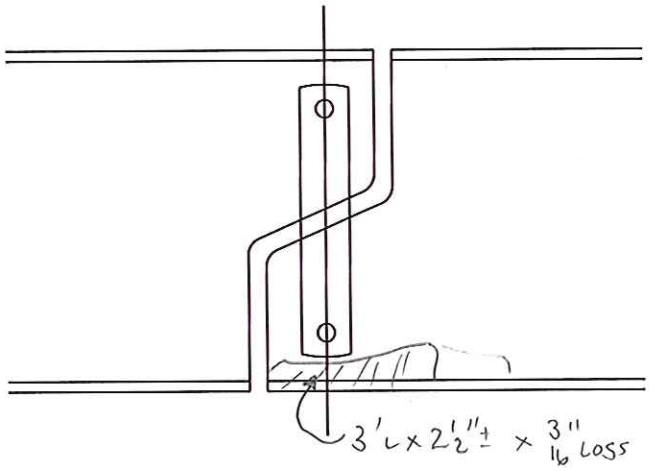

Span 9 G 1 S. ELEV. - WEST LINE PIN + HANGER

UPDATE NO.	DATE	COMPANY	CREW
△			
△			
△			
△			

Baker

SUPPLEMENTAL SHEET

☒ FIELD ORIGINAL ☐ TRANSCRIBED BY:_____

BRIDGE NO. 01765	DATE: 8/14/12
CREW: BH/JM	SHEET 111/193

DESCRIPTION: SUPERSTRUCTURE

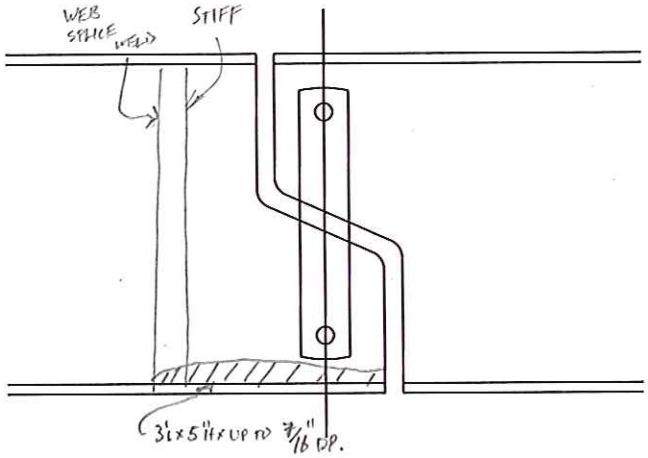

SP#9, G1 EAST LINE PIN + HANGER
(SOUTH ELEV)

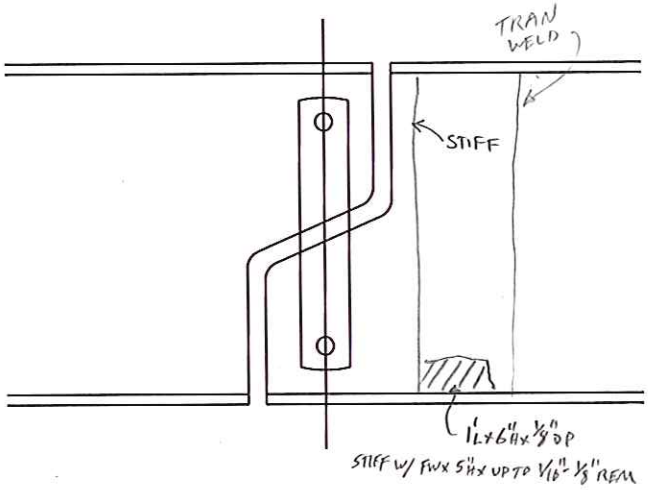

SP#9 G1 EAST LINE PIN + HANGERS
(NORTH ELEV

UPDATE NO.	DATE	COMPANY	CREW
△			
△			
△			
△			

Baker

SUPPLEMENTAL SHEET

☒ FIELD ORIGINAL ☐ TRANSCRIBED BY:_____

BRIDGE NO. 01765	DATE: 8/22/12
CREW: VA TB/BH	SHEET 112/193

DESCRIPTION: SUPERSTRUCTURE

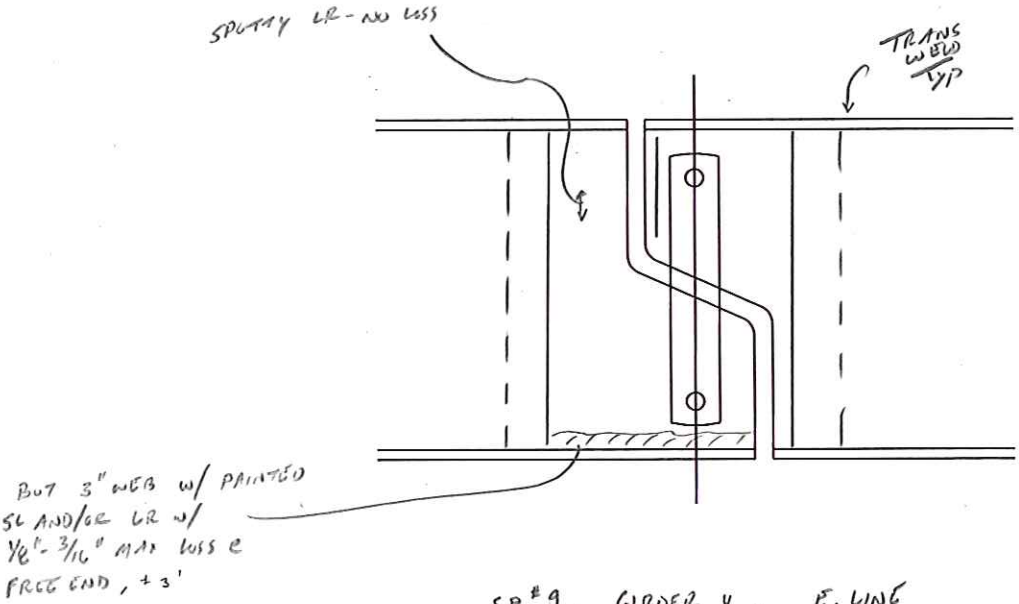

SP #9, GIRDER 4, E. LINE

S. ELEV

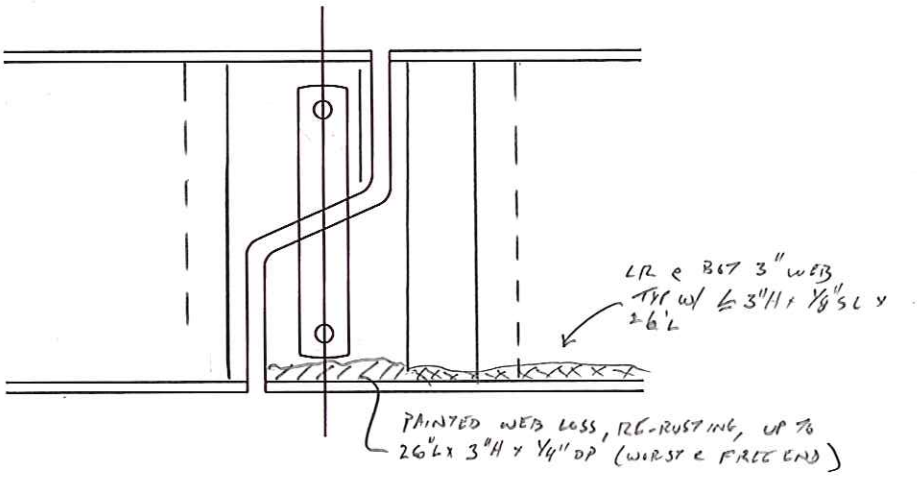

SP #9, GIRDER 4, E. LINE

N. ELEV

UPDATE NO.	DATE	COMPANY	CREW
△			
△			
△			
△			

Baker

SUPPLEMENTAL SHEET

☒ FIELD ORIGINAL ☐ TRANSCRIBED BY:_____

BRIDGE NO. 01765	DATE: 8/22/12
CREW: MJD/BH	SHEET 113/193

DESCRIPTION: SUPER STRUCTURE

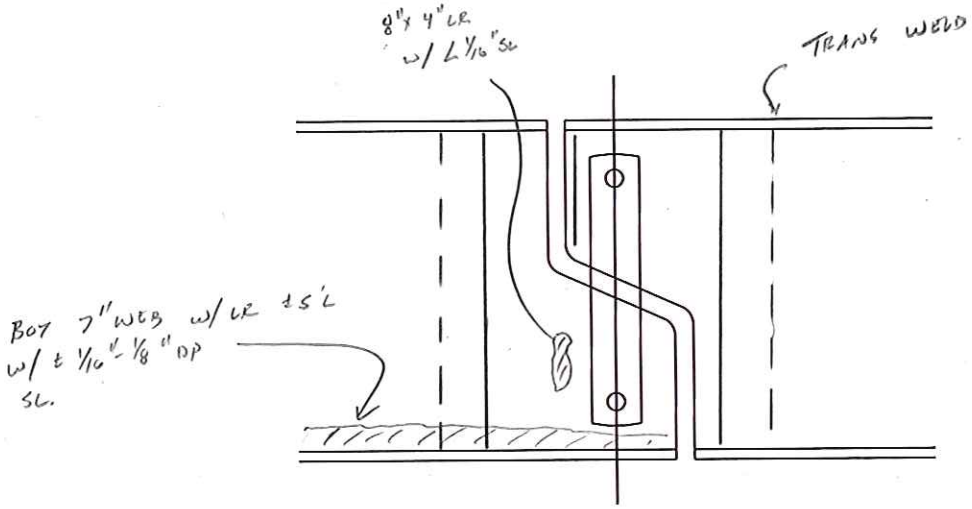

SP # 9 GIRDER 5, E. LINE
S. ELEV

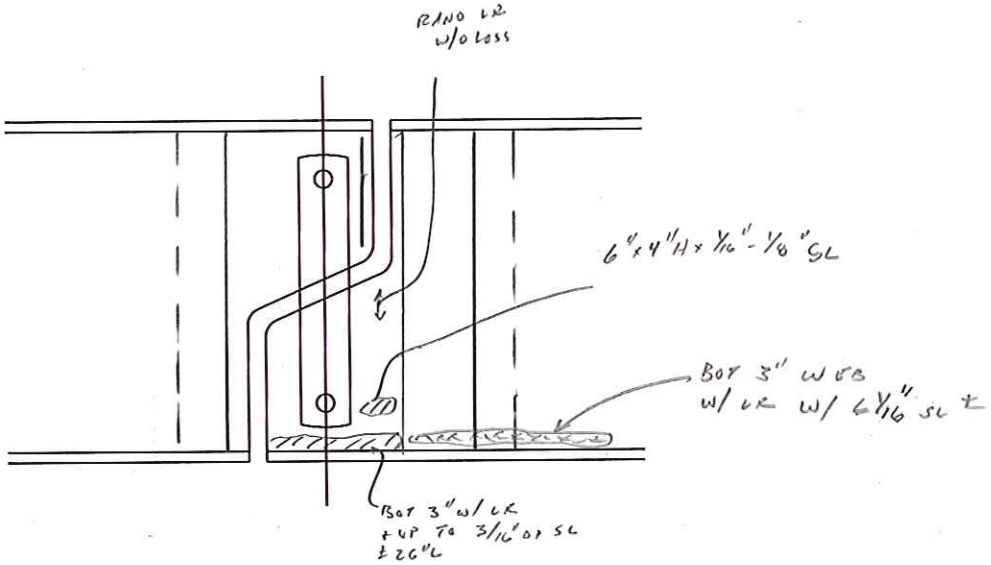

SP # 9 GIRDER 5, E. LINE
N. ELEV

UPDATE NO.	DATE	COMPANY	CREW
△			
△			
△			
△			

Baker

SUPPLEMENTAL SHEET

☒ FIELD ORIGINAL ☐ TRANSCRIBED BY:_____

BRIDGE NO. 01765	DATE: 8/14/12
CREW: JM, PB	SHEET 114 / 193

DESCRIPTION: SUPERSTRUCTURE

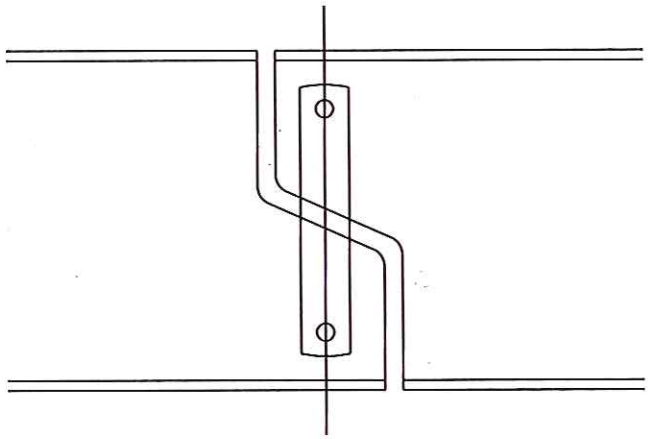

SP #9, G6, N. ELEV - WEST LINE PIN + HANGER

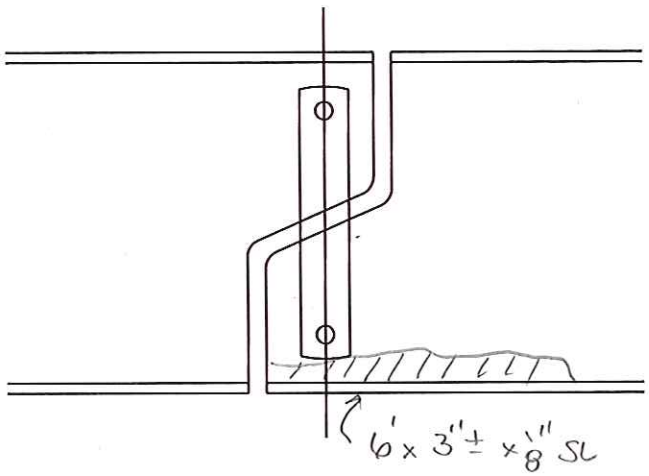

Sp 9, G 6 S. Elev. - WEST LINE PIN + HANGER

UPDATE NO.	DATE	COMPANY	CREW
△			
△			
△			
△			

Baker

SUPPLEMENTAL SHEET

☒ FIELD ORIGINAL ☐ TRANSCRIBED BY:_____

BRIDGE NO. 01765	DATE: 8/14/12
CREW: JM, PB	SHEET 115/193

DESCRIPTION: SUPERSTRUCTURE

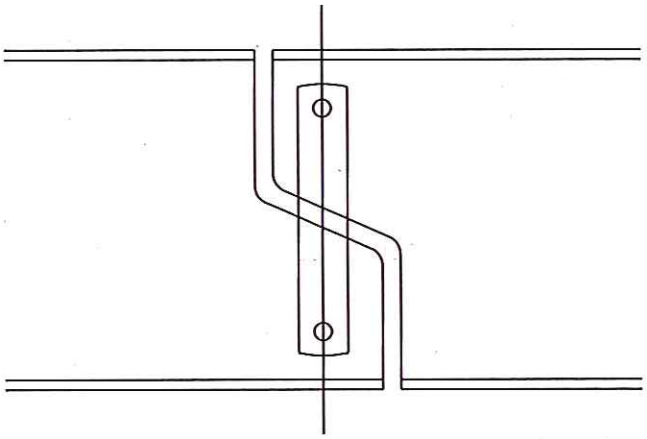

SP #9, G7, N. ELEV, WEST LINE PIN + HANGER

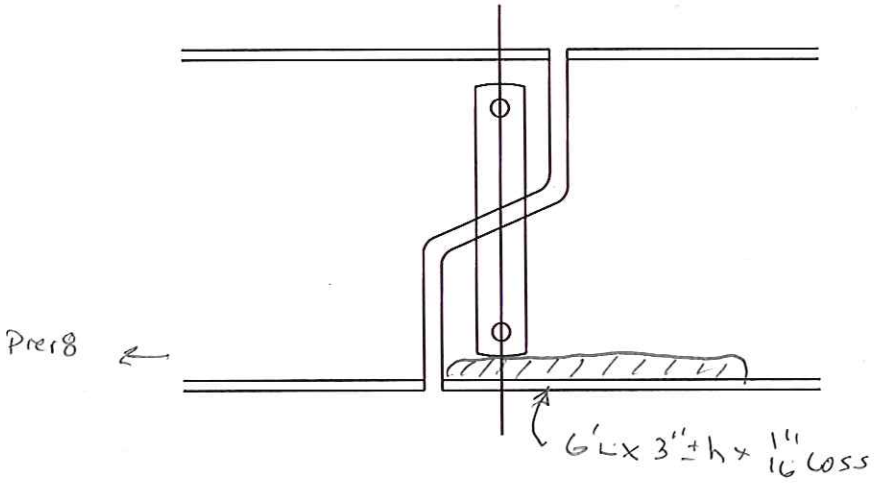

Sp.9, G7 S. Elev., WEST LINE PIN + HANGER

UPDATE NO.	DATE	COMPANY	CREW
△			
△			
△			
△			

Baker

SUPPLEMENTAL SHEET

☒ FIELD ORIGINAL ☐ TRANSCRIBED BY:_____

BRIDGE NO. 01765	DATE: 8/14/12
CREW: JM/PB	SHEET 116/193

DESCRIPTION: SUPERSTRUCTURE

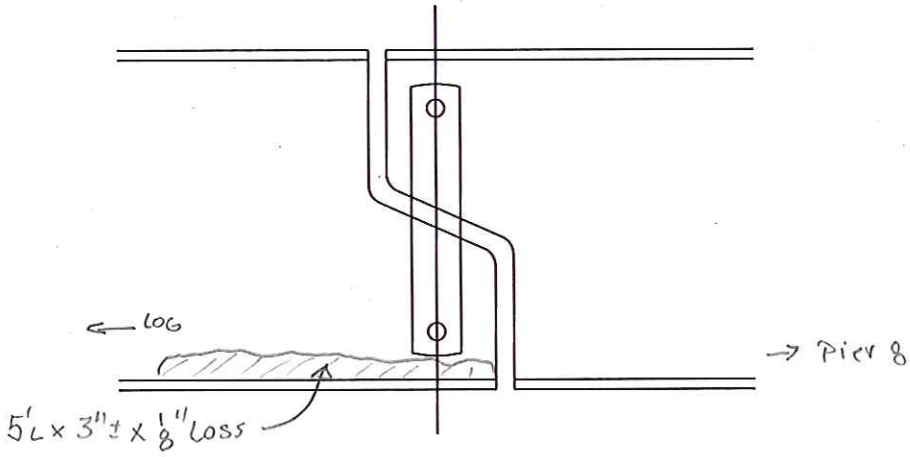

SPAN 9, G8, N. Elevation, WEST LINE PGH

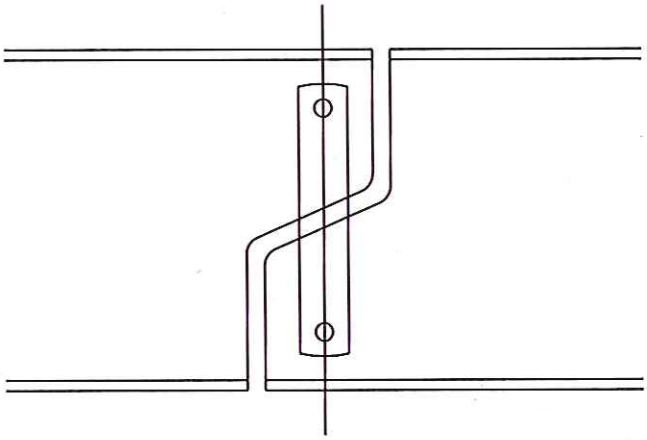

SPAN 9, GIRDER 8, N. ELEV

UPDATE NO.	DATE	COMPANY	CREW
△			
△			
△			
△			

Baker

SUPPLEMENTAL SHEET

☑ FIELD ORIGINAL ☐ TRANSCRIBED BY:_____

BRIDGE NO. 01765	DATE: 8/22/12
CREW: MTD, BH	SHEET 117/193

DESCRIPTION: SUPERSTRUCTURE

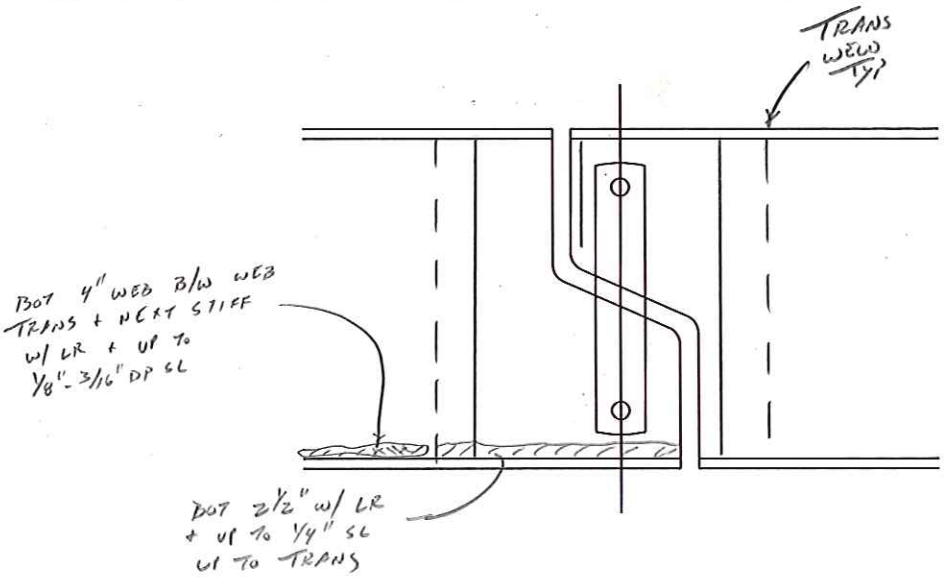

SP #9, GIRDER 9, E. LINE

S. ELEV

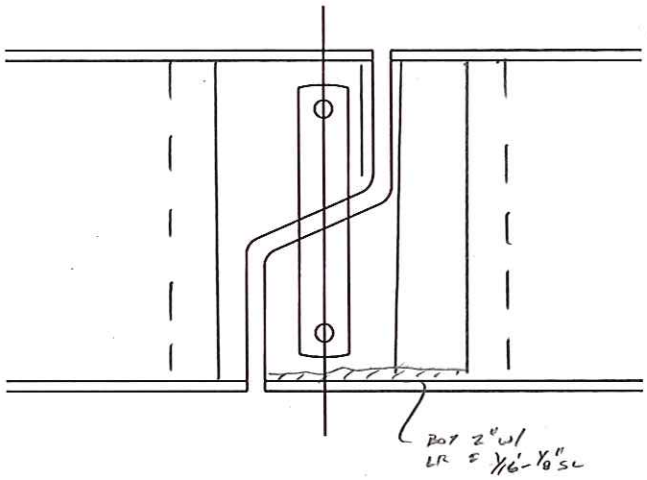

SP #9, GIRDER 9, E. LINE

N. ELEV

UPDATE NO.	DATE	COMPANY	CREW
△			
△			
△			
△			

Baker

SUPPLEMENTAL SHEET

☒ FIELD ORIGINAL ☐ TRANSCRIBED BY:_____	BRIDGE NO. 01765	DATE: 8/22/12
	CREW: BH, MJO	SHEET 118/193

DESCRIPTION: SUPERSTRUCTURE

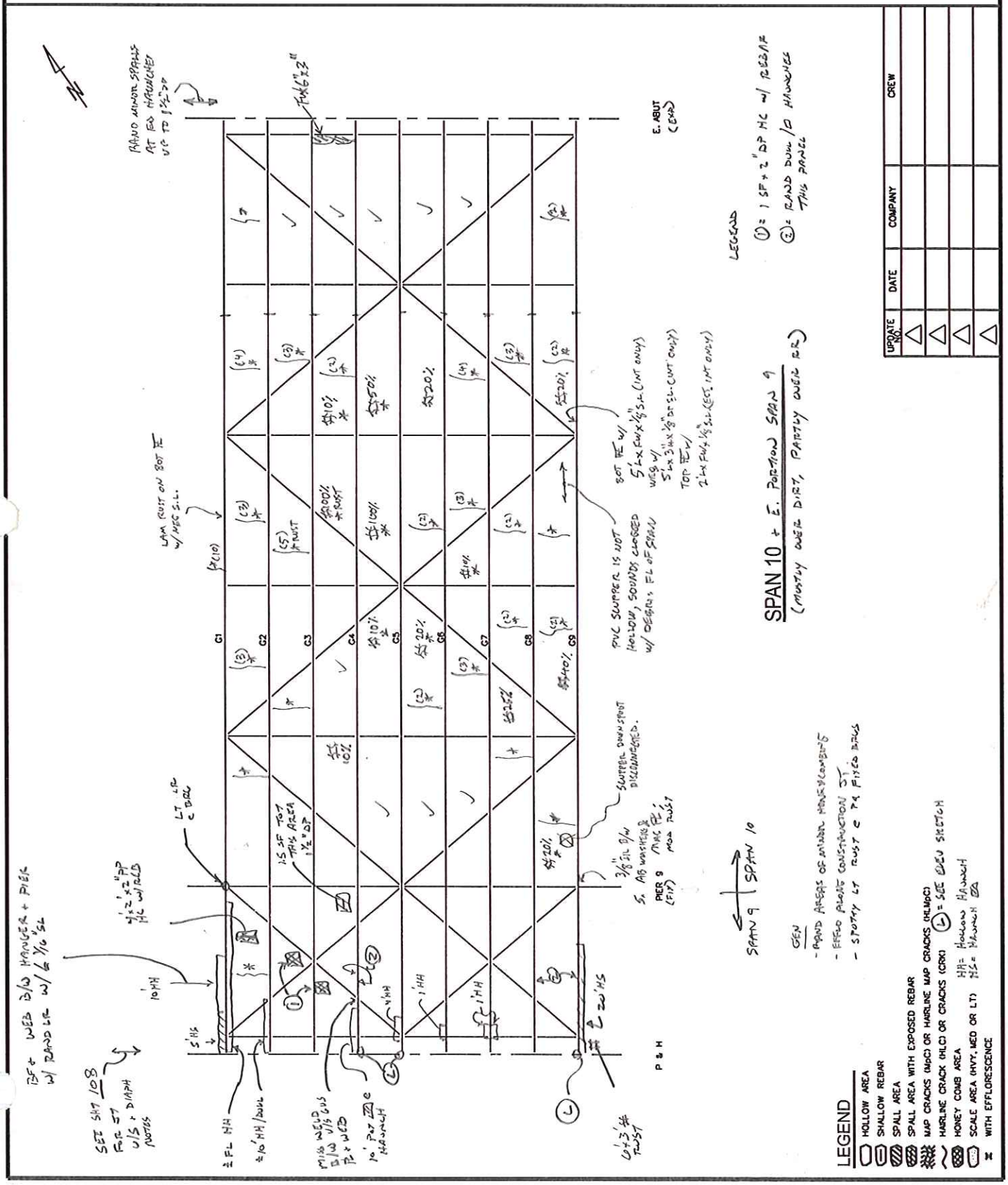

Baker

SUPPLEMENTAL SHEET

☑ FIELD ORIGINAL ☐ TRANSCRIBED BY:_____

BRIDGE NO. 01765	DATE: 8/13/12
CREW: MTO/BH	SHEET 119/193

DESCRIPTION: SUBSTRUCTURE

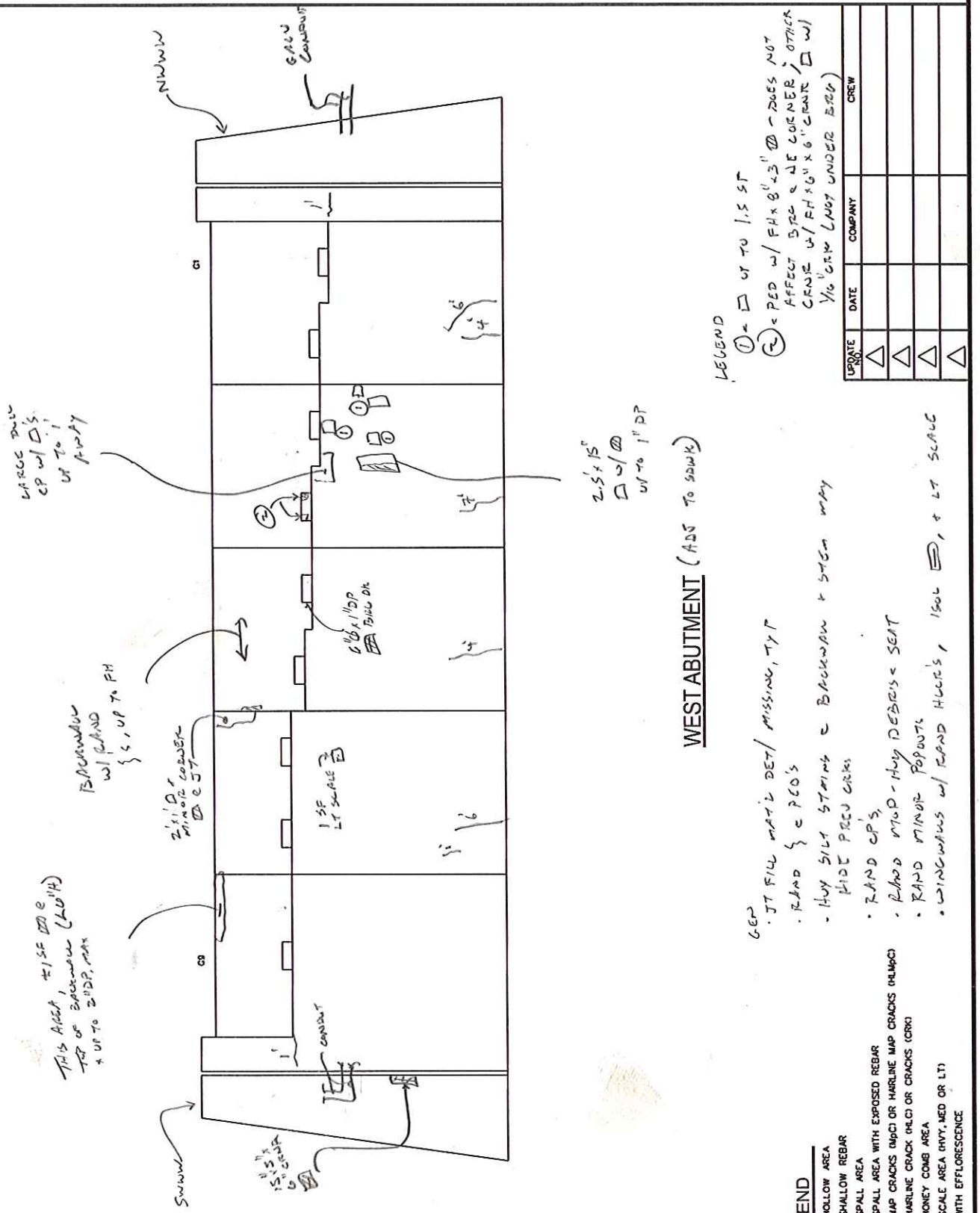

Baker

SUPPLEMENTAL SHEET

☒ FIELD ORIGINAL ☐ TRANSCRIBED BY:_____

BRIDGE NO. 01765	DATE: 8/22/12
CREW: BH, MJO	SHEET 120/193

DESCRIPTION: SUBSTRUCTURE

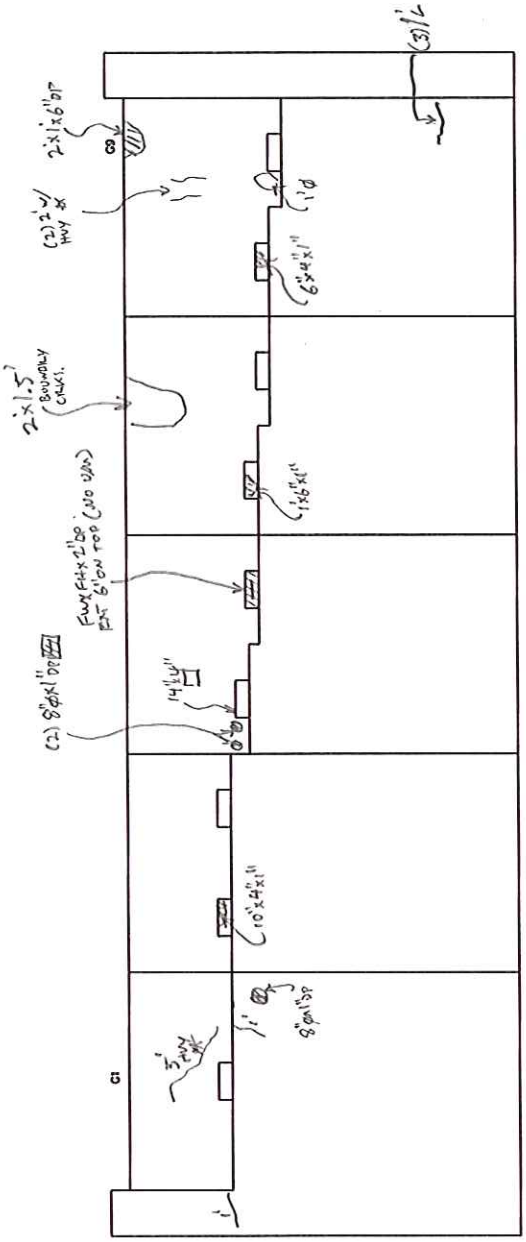

EAST ABUTMENT

BRIDGE NOTES
- MISSING/DIST JT ANGTL THRU-OUT
- BRAND ATTACH, OF LT SCALE.
- EVIDENCE OF PAST JT LEAKAGE
- MOD CONTAM ALONG BASE

LEGEND
- HOLLOW AREA
- SHALLOW REBAR
- SPALL AREA
- SPALL AREA WITH EXPOSED REBAR
- MAP CRACKS (MpC) OR HAIRLINE MAP CRACKS (HLMpC)
- HAIRLINE CRACK (HLC) OR CRACKS (CRK)
- HONEY COMB AREA
- SCALE AREA (HVY, MED OR LT)
- WITH EFFLORESCENCE

UPDATE NO.	DATE	COMPANY	CREW
△			
△			
△			
△			

Baker

SUPPLEMENTAL SHEET

☒ FIELD ORIGINAL ☐ TRANSCRIBED BY:_____

BRIDGE NO. 01765	DATE: 8/22/12
CREW: BH, MJO	SHEET 121/193

DESCRIPTION: SUBSTRUCTURE

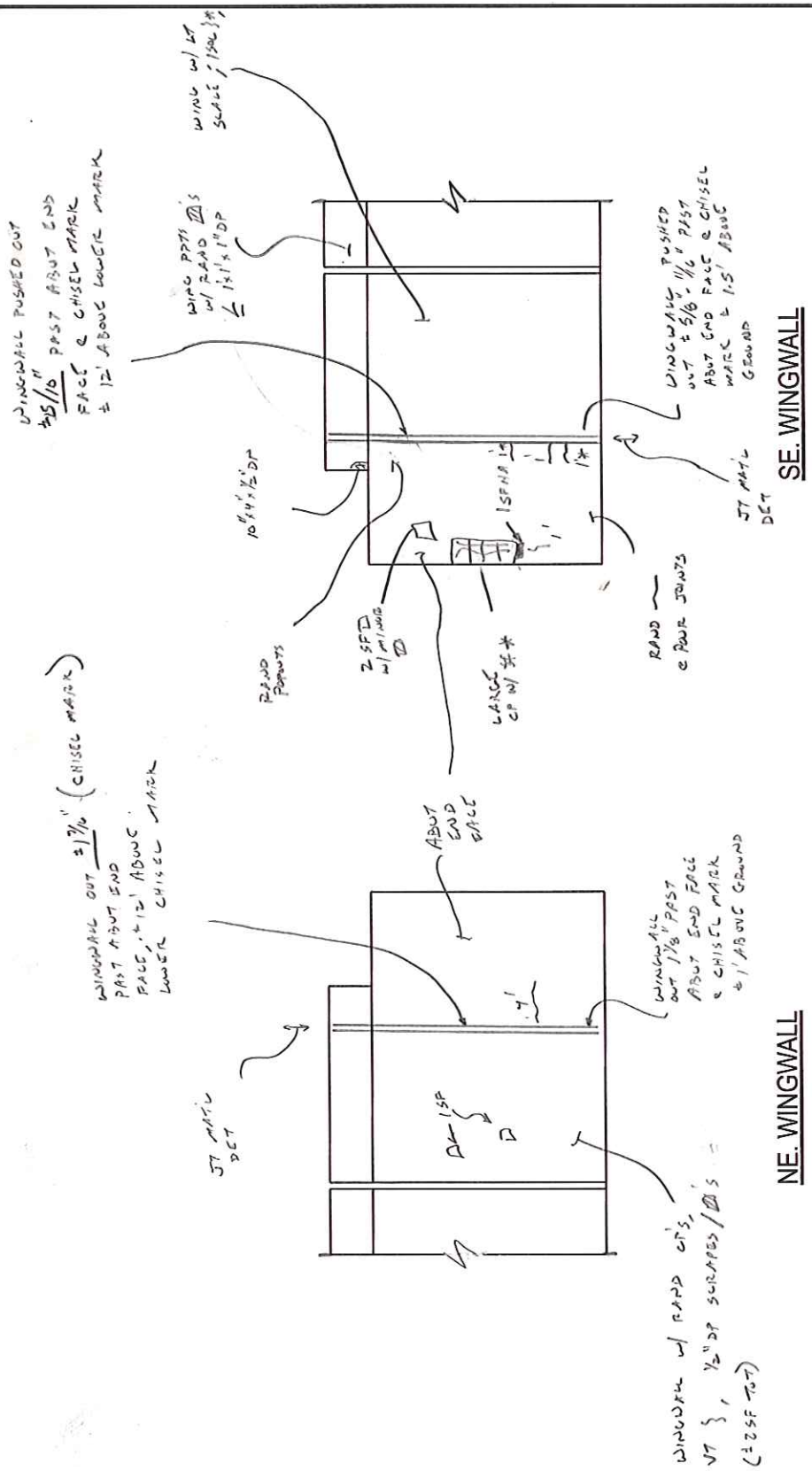

UPDATE NO.	DATE	COMPANY	CREW

LEGEND

- HOLLOW AREA
- SHALLOW REBAR
- SPALL AREA
- SPALL AREA WITH EXPOSED REBAR
- MAP CRACKS (MpC) OR HAIRLINE MAP CRACKS (HLMpC)
- HAIRLINE CRACK (HLC) OR CRACKS (CRK)
- HONEY COMB AREA
- SCALE AREA (HVY, MED OR LT)
- x WITH EFFLORESCENCE

Baker

SUPPLEMENTAL SHEET

☒ FIELD ORIGINAL ☐ TRANSCRIBED BY:_____

BRIDGE NO. 01765	DATE: 8/13/12
CREW: BH/MJD	SHEET 122/193

DESCRIPTION: SUBSTRUCTURE

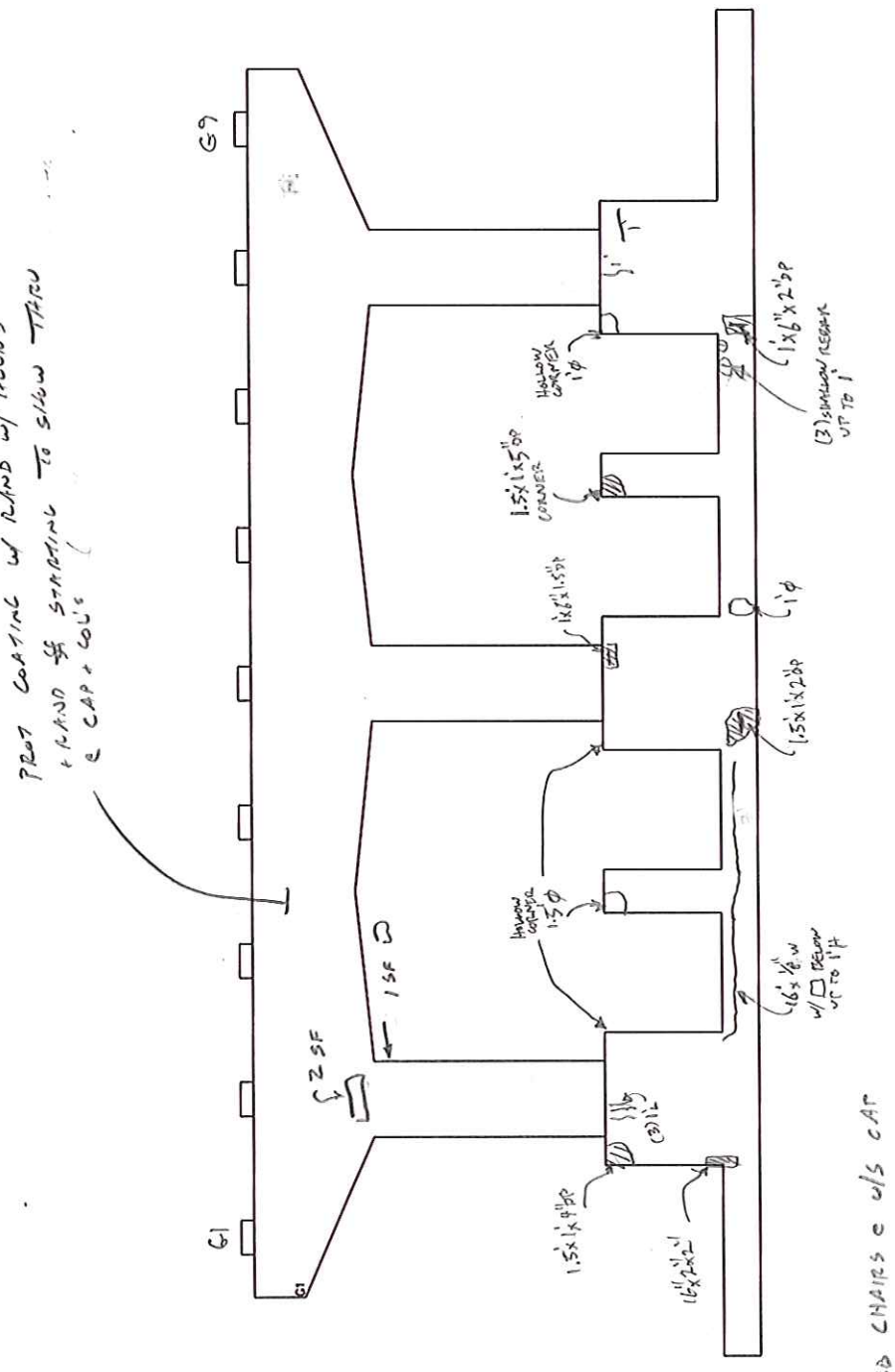

PIER 1 - WEST ELEVATION

UPDATE NO.	DATE	COMPANY	CREW
△			
△			
△			
△			

LEGEND

- HOLLOW AREA
- SHALLOW REBAR
- SPALL AREA
- SPALL AREA WITH EXPOSED REBAR
- MAP CRACKS (MpC) OR HAIRLINE MAP CRACKS (HLMpC)
- HAIRLINE CRACK (HLC) OR CRACKS (CRK)
- HONEY COMB AREA
- SCALE AREA (HVY, MED OR LT)
- × WITH EFFLORESCENCE

Baker

SUPPLEMENTAL SHEET

☑ FIELD ORIGINAL ☐ TRANSCRIBED BY:_____

BRIDGE NO. 01765	DATE: 8/16/2012
CREW: JAC / MJO	SHEET 123 / 193

DESCRIPTION: SUBSTRUCTURE

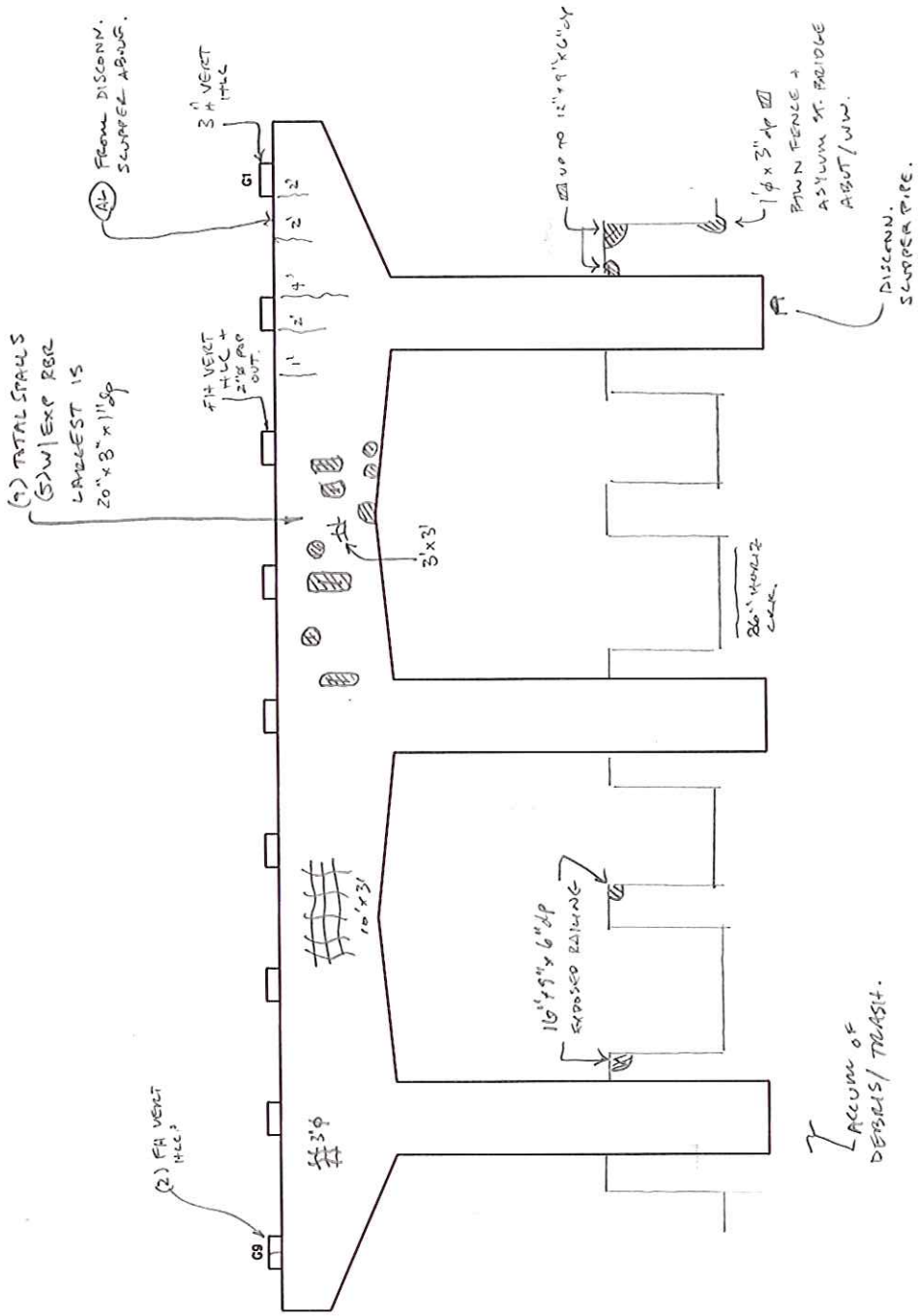

PIER 1 - EAST ELEVATION

GEN:

- FENCE POST CAPS ARE CRIC'D/HOLLOW, ▨ WHERE NOTED.
- AREAS OF PAINTED OVER GRAFFITI THRU-OUT.
- SMALL POP-OUTS THRU-OUT / SOMEWHAT TRACE CHANGES.
- PEELING PROTECTIVE COATING THRU-OUT

UPDATE NO.	DATE	COMPANY	CREW
△			
△			
△			
△			

LEGEND

- HOLLOW AREA
- SHALLOW REBAR
- SPALL AREA
- SPALL AREA WITH EXPOSED REBAR
- MAP CRACKS (MpC) OR HAIRLINE MAP CRACKS (HLMpC)
- HAIRLINE CRACK (HLC) OR CRACKS (CRX)
- HONEY COMB AREA
- SCALE AREA (HVY, MED OR LT)
- WITH EFFLORESCENCE

Baker

SUPPLEMENTAL SHEET

☒ FIELD ORIGINAL ☐ TRANSCRIBED BY:_____

BRIDGE NO. 01765	DATE: 8/16/12
CREW: JAC/MJO	SHEET 124/193

DESCRIPTION: SUBSTRUCTURE

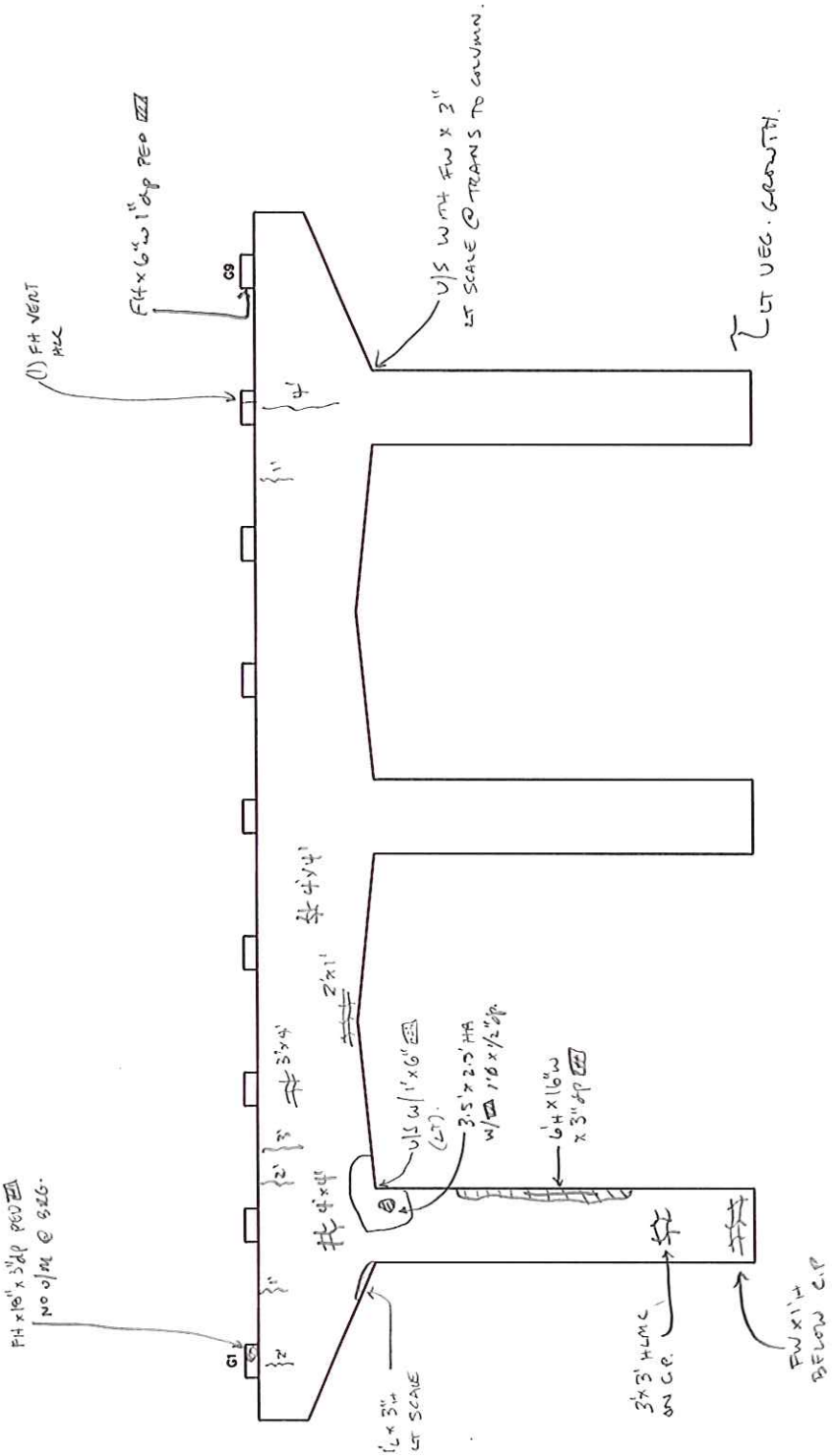

PIER 2 - WEST ELEVATION

UPDATE NO.	DATE	COMPANY	CREW
△			
△			
△			
△			

LEGEND

- HOLLOW AREA
- SHALLOW REBAR
- SPALL AREA
- SPALL AREA WITH EXPOSED REBAR
- MAP CRACKS (MpC) OR HAIRLINE MAP CRACKS (HLMpC)
- HAIRLINE CRACK (HLC) OR CRACKS (CRK)
- HONEY COMB AREA
- SCALE AREA (HVY, MED OR LT)
- x WITH EFFLORESCENCE

Baker

SUPPLEMENTAL SHEET

☒ FIELD ORIGINAL ☐ TRANSCRIBED BY:_____

BRIDGE NO. 01765	DATE: 8/16/12
CREW: JAC/MJO	SHEET 129/193

DESCRIPTION: SUBSTRUCTURE

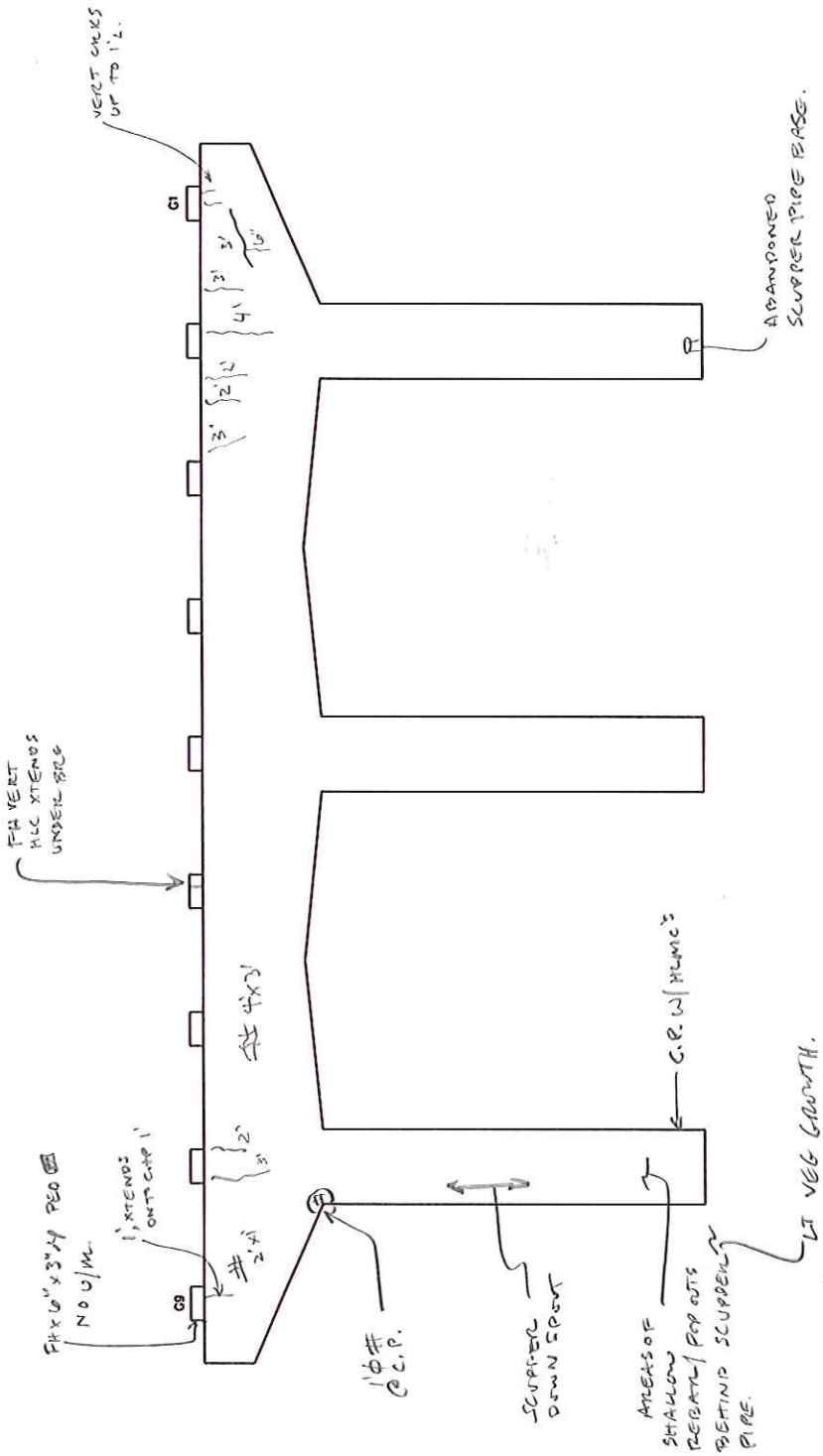

PIER 2 - EAST ELEVATION

- SLURRY DOWNSPOUT W/ HVY RUST STAINS

UPDATE NO.	DATE	COMPANY	CREW
△			
△			
△			
△			

LEGEND

- HOLLOW AREA
- SHALLOW REBAR
- SPALL AREA
- SPALL AREA WITH EXPOSED REBAR
- MAP CRACKS (MpC) OR HAIRLINE MAP CRACKS (HLMpC)
- HAIRLINE CRACK (HLC) OR CRACKS (CRK)
- HONEY COMB AREA
- SCALE AREA (HVY, MED OR LT)
- X WITH EFFLORESCENCE

Baker

SUPPLEMENTAL SHEET

☒ FIELD ORIGINAL ☐ TRANSCRIBED BY:_____

BRIDGE NO. 01765	DATE: 8/16/12
CREW: MJO/JHL	SHEET 126/193

DESCRIPTION: SUBSTRUCTURE

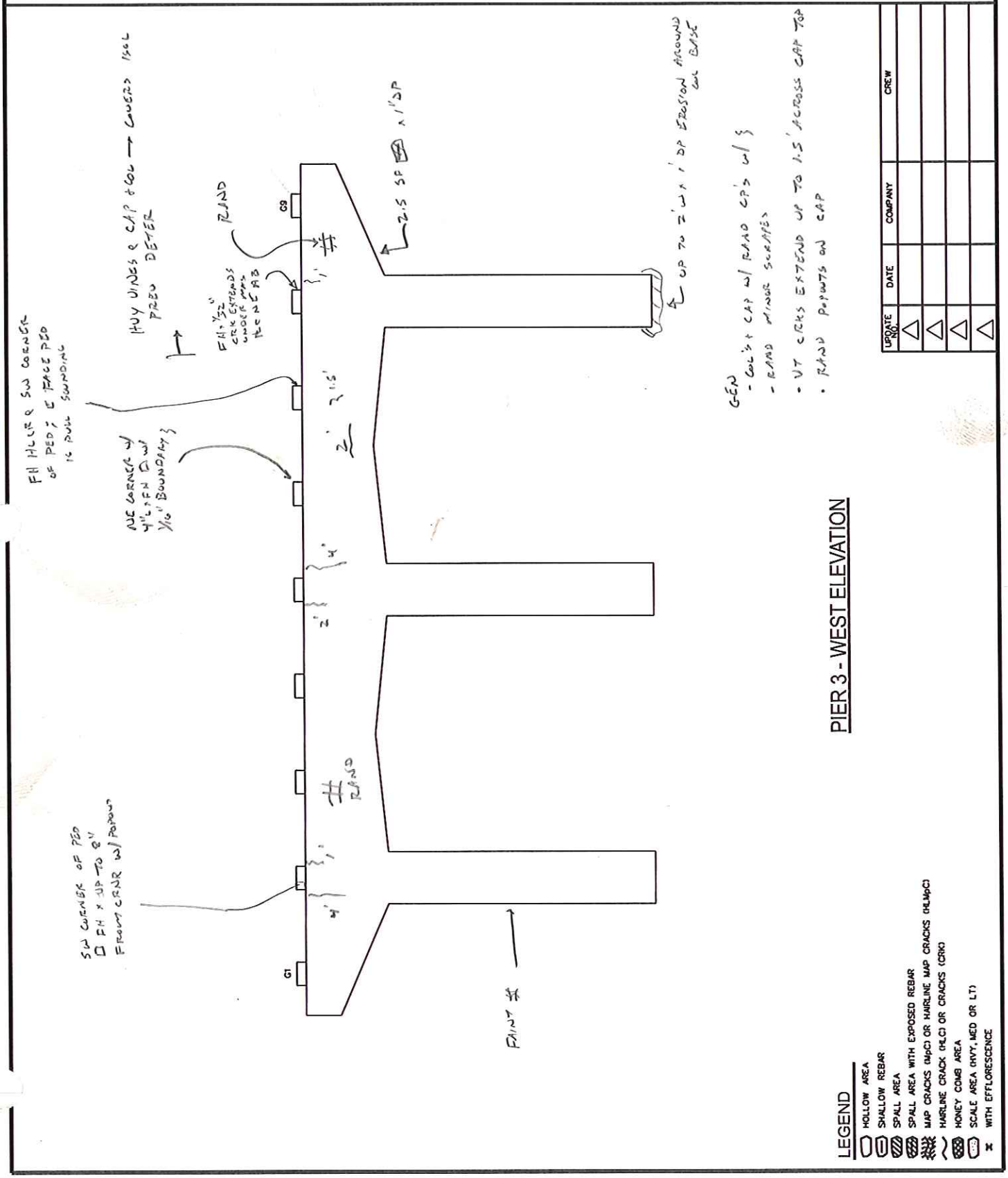

Baker

SUPPLEMENTAL SHEET

☑ FIELD ORIGINAL ☐ TRANSCRIBED BY:_____

BRIDGE NO. 01765	DATE: 8/16/12
CREW: JAC / MJo	SHEET 127/193

DESCRIPTION: SUBSTRUCTURE

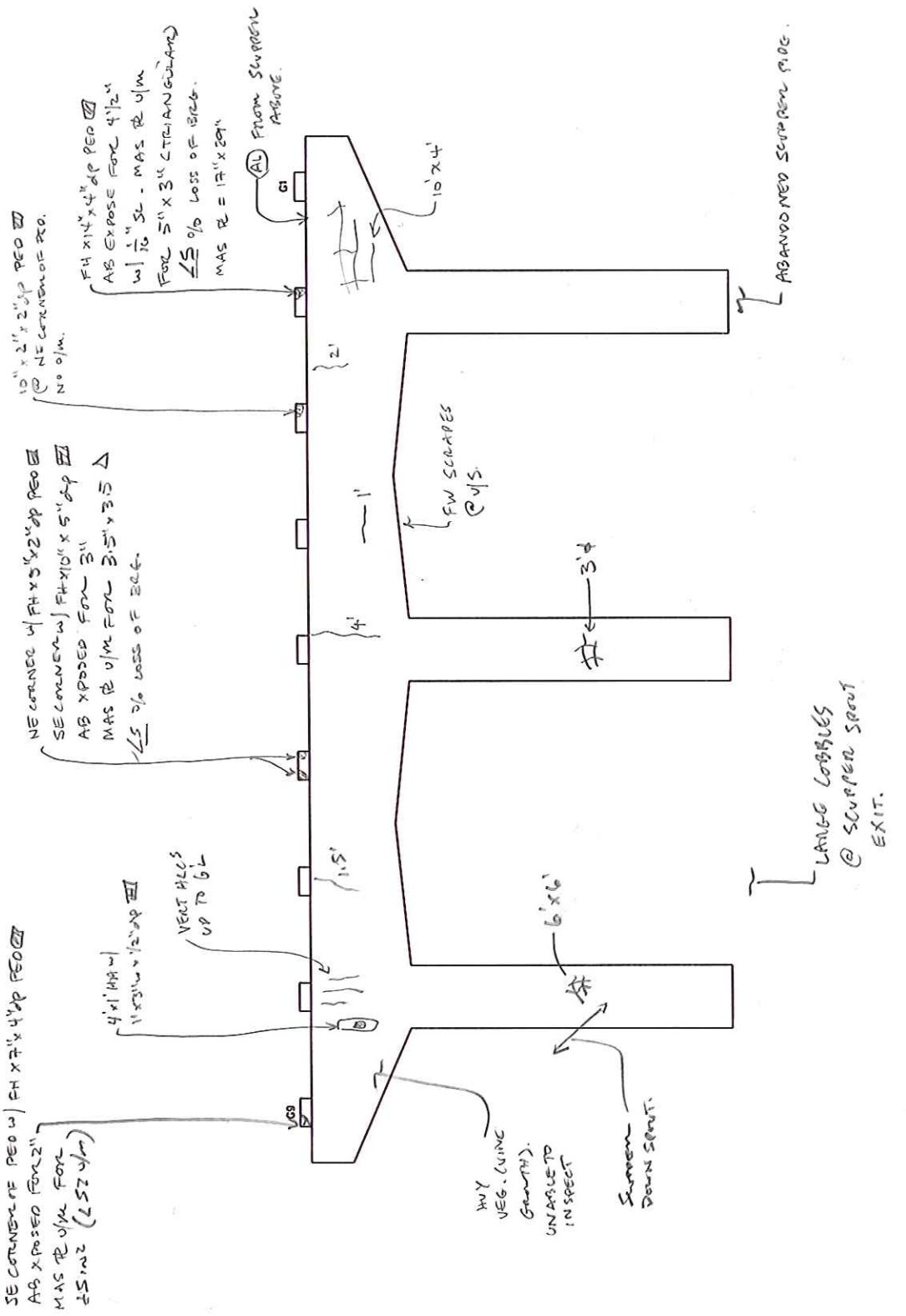

UPDATE NO.	DATE	COMPANY	CREW

LEGEND

- HOLLOW AREA
- SHALLOW REBAR
- SPALL AREA
- SPALL AREA WITH EXPOSED REBAR
- MAP CRACKS (MpC) OR HAIRLINE MAP CRACKS (HLMpC)
- HAIRLINE CRACK (HLC) OR CRACKS (CRK)
- HONEY COMB AREA
- SCALE AREA (HVY, MED OR LT)
- X WITH EFFLORESCENCE

Baker

SUPPLEMENTAL SHEET

☒ FIELD ORIGINAL ☐ TRANSCRIBED BY:_____

BRIDGE NO. 01765	DATE: 8/20/12
CREW: MJO / BH	SHEET 128/193

DESCRIPTION: SUBSTRUCTURE

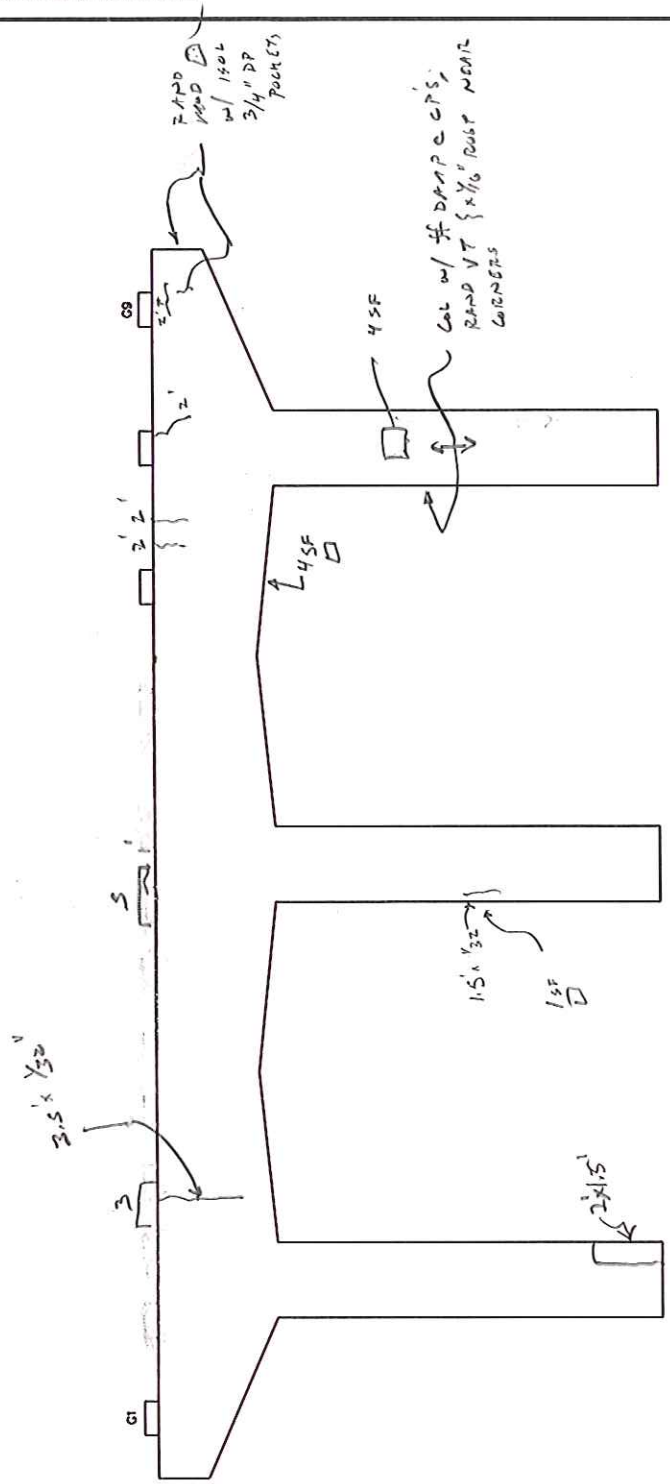

PIER 4 - WEST ELEVATION

CEP
- Hvy silt stains & cap scal'
- Rand rub coat @ 'ing off
- CP's & cap & col's w/ ** Busted CP's — only
Shown if cap 1/32" or more wide

UPDATE NO.	DATE	COMPANY	CREW
△			
△			
△			
△			

LEGEND

- HOLLOW AREA
- SHALLOW REBAR
- SPALL AREA
- SPALL AREA WITH EXPOSED REBAR
- MAP CRACKS (MpC) OR HAIRLINE MAP CRACKS (HLMpC)
- HAIRLINE CRACK (HLC) OR CRACKS (CRK)
- HONEY COMB AREA
- SCALE AREA (HVY, MED OR LT)
- ** WITH EFFLORESCENCE

Baker

SUPPLEMENTAL SHEET

☒ FIELD ORIGINAL ☐ TRANSCRIBED BY:_____

BRIDGE NO. 01765	DATE: 8/16/12
CREW: MP, JAC	SHEET 129/193

DESCRIPTION: SUBSTRUCTURE

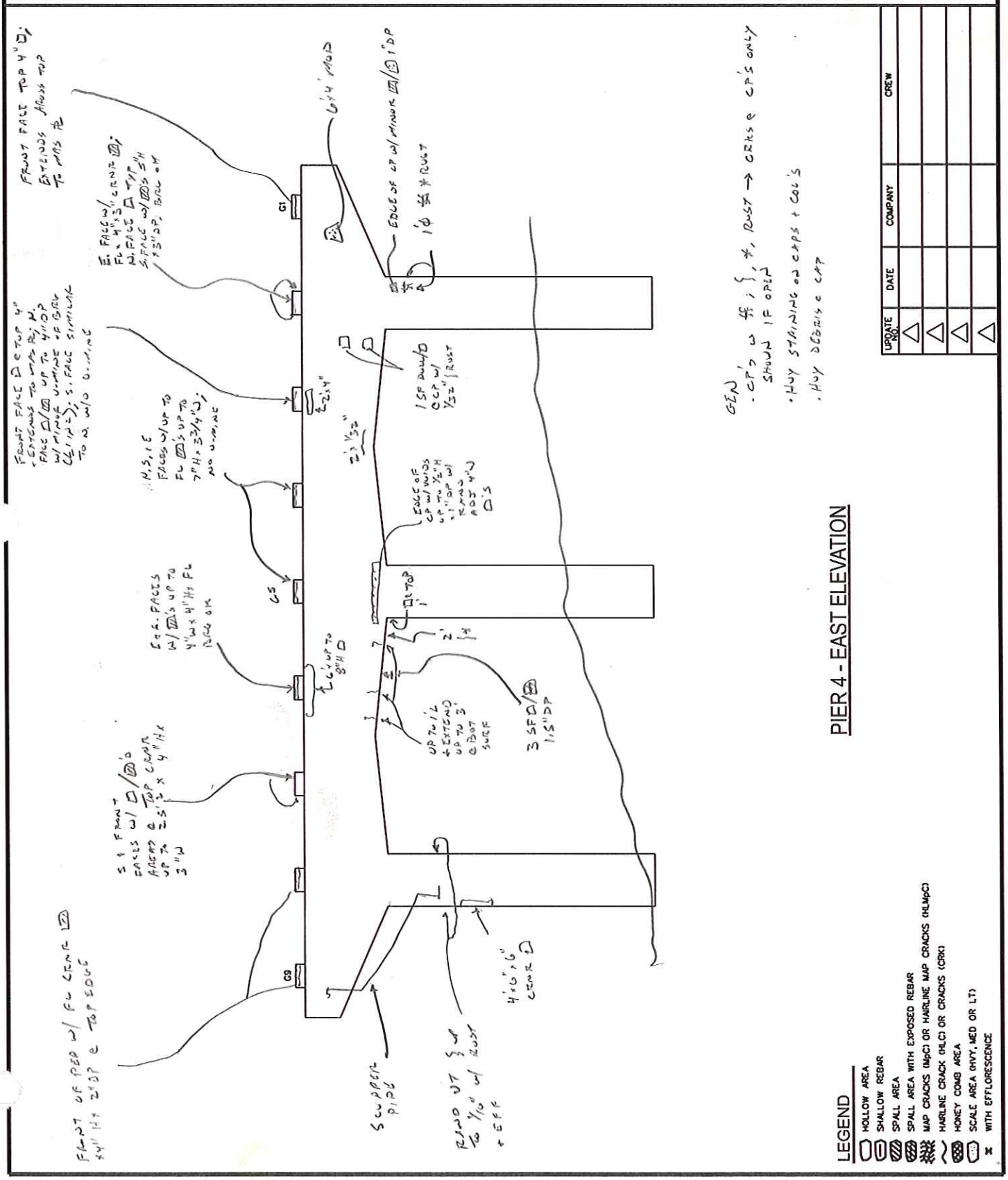

Baker

SUPPLEMENTAL SHEET

☒ FIELD ORIGINAL ☐ TRANSCRIBED BY:_____

BRIDGE NO. 01765	DATE: 8/21/12
CREW: MB/BH	SHEET 130/193

DESCRIPTION: SUBSTRUCTURE

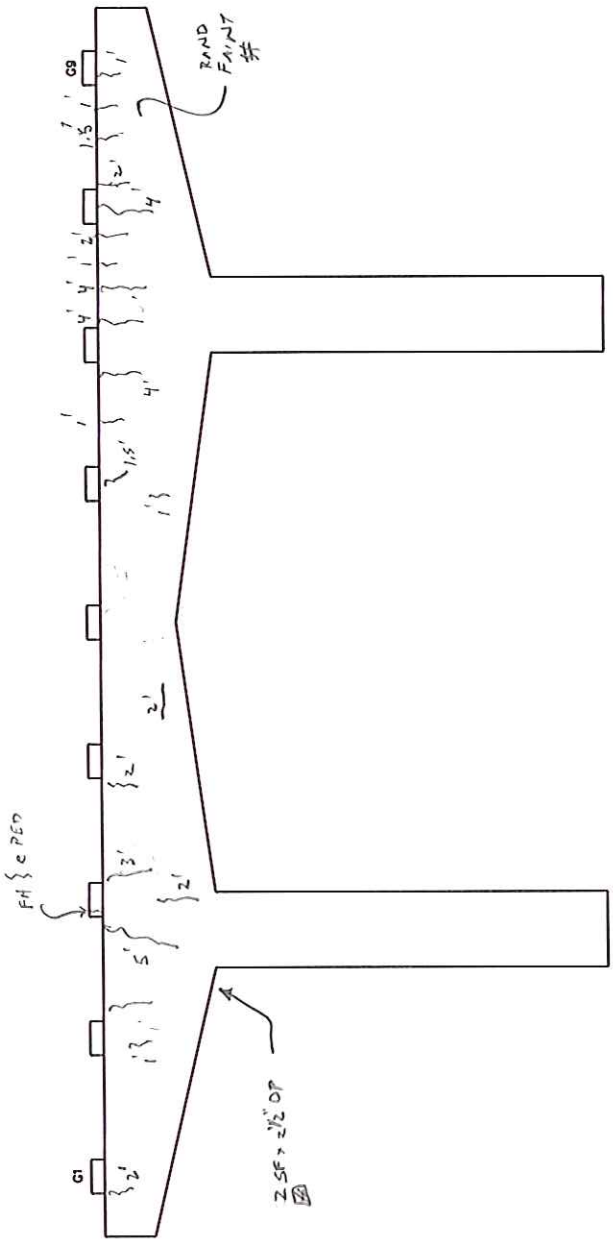

PIER 5 - WEST ELEVATION

UPDATE NO.	DATE	COMPANY	CREW

LEGEND

- HOLLOW AREA
- SHALLOW REBAR
- SPALL AREA
- SPALL AREA WITH EXPOSED REBAR
- MAP CRACKS (MpC) OR HAIRLINE MAP CRACKS (HLMpC)
- HAIRLINE CRACK (HLC) OR CRACKS (CRK)
- HONEY COMB AREA
- SCALE AREA (HVY, MED OR LT)
- X WITH EFFLORESCENCE

Baker

SUPPLEMENTAL SHEET

☒ FIELD ORIGINAL ☐ TRANSCRIBED BY:_____

BRIDGE NO. 01765	DATE: 8/21/12
CREW: BH, MJO	SHEET 131/193

DESCRIPTION: SUBSTRUCTURE

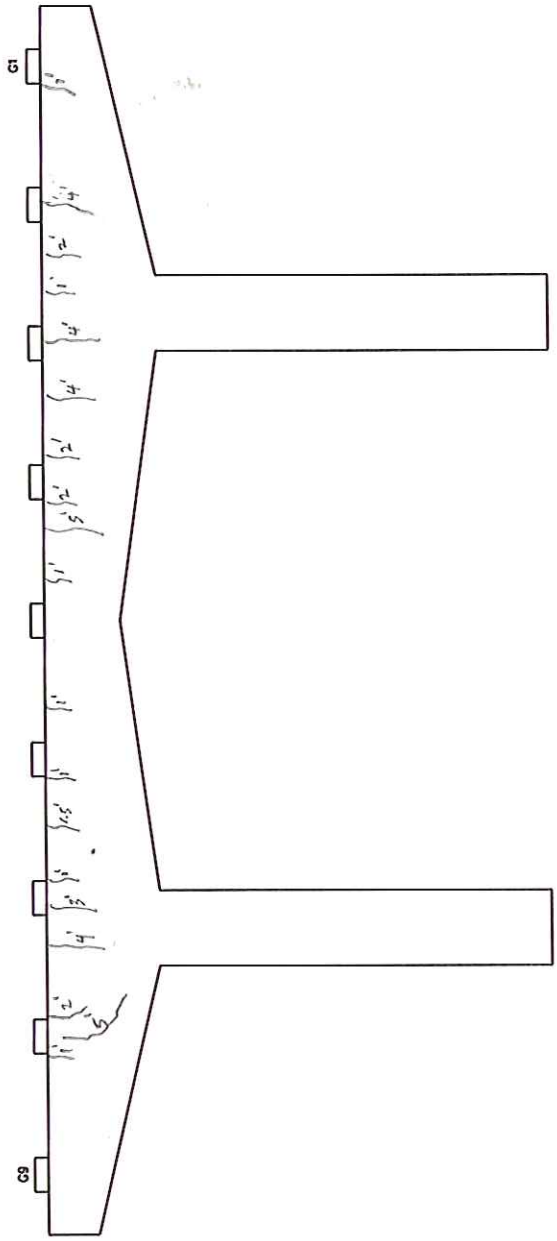

PIER 5 - EAST ELEVATION

UPDATE NO.	DATE	COMPANY	CREW
△			
△			
△			
△			

LEGEND

- HOLLOW AREA
- SHALLOW REBAR
- SPALL AREA
- SPALL AREA WITH EXPOSED REBAR
- MAP CRACKS (MpC) OR HAIRLINE MAP CRACKS (HLMpC)
- HAIRLINE CRACK (HLC) OR CRACKS (CRK)
- HONEY COMB AREA
- SCALE AREA (HVY, MED OR LT)
- x WITH EFFLORESCENCE

Baker

SUPPLEMENTAL SHEET

☒ FIELD ORIGINAL ☐ TRANSCRIBED BY:_____

BRIDGE NO. 01765	DATE: 8/21/12
CREW: BH, MJD	SHEET 132/193

DESCRIPTION: SUBSTRUCTURE

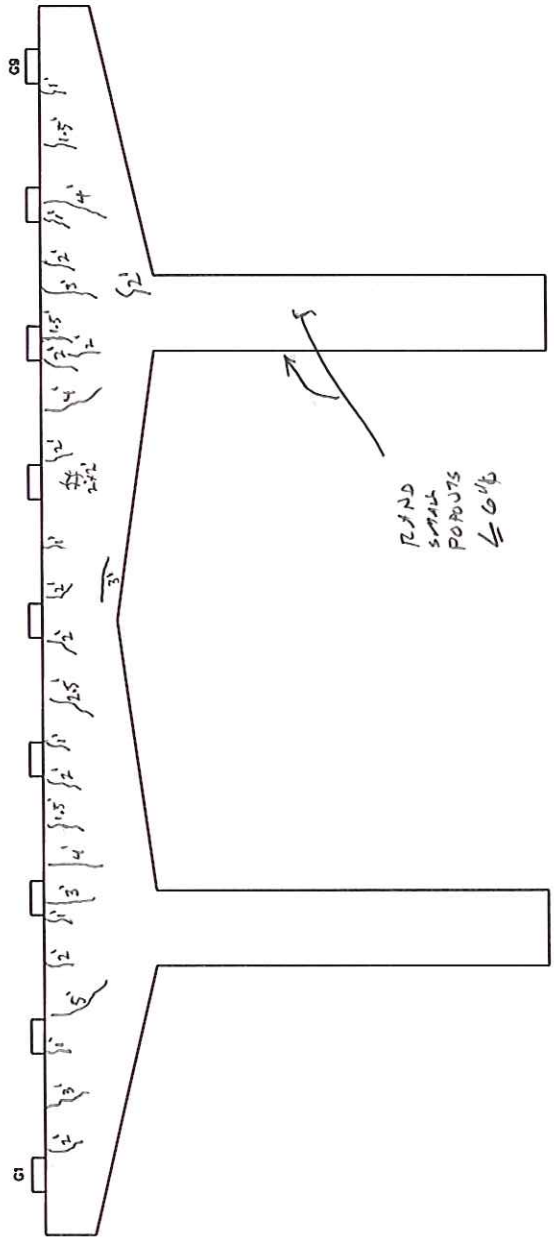

PIER 6 - WEST ELEVATION

UPDATE NO.	DATE	COMPANY	CREW

LEGEND

- HOLLOW AREA
- SHALLOW REBAR
- SPALL AREA
- SPALL AREA WITH EXPOSED REBAR
- MAP CRACKS (MpC) OR HAIRLINE MAP CRACKS (HLMpC)
- HAIRLINE CRACK (HLC) OR CRACKS (CRK)
- HONEY COMB AREA
- SCALE AREA (HVY, MED OR LT)
- X WITH EFFLORESCENCE

Baker

SUPPLEMENTAL SHEET

☒ FIELD ORIGINAL ☐ TRANSCRIBED BY:_____

BRIDGE NO. 01765	DATE: 8/15/12
CREW: BH, MJO	SHEET 133/193

DESCRIPTION: SUBSTRUCTURE

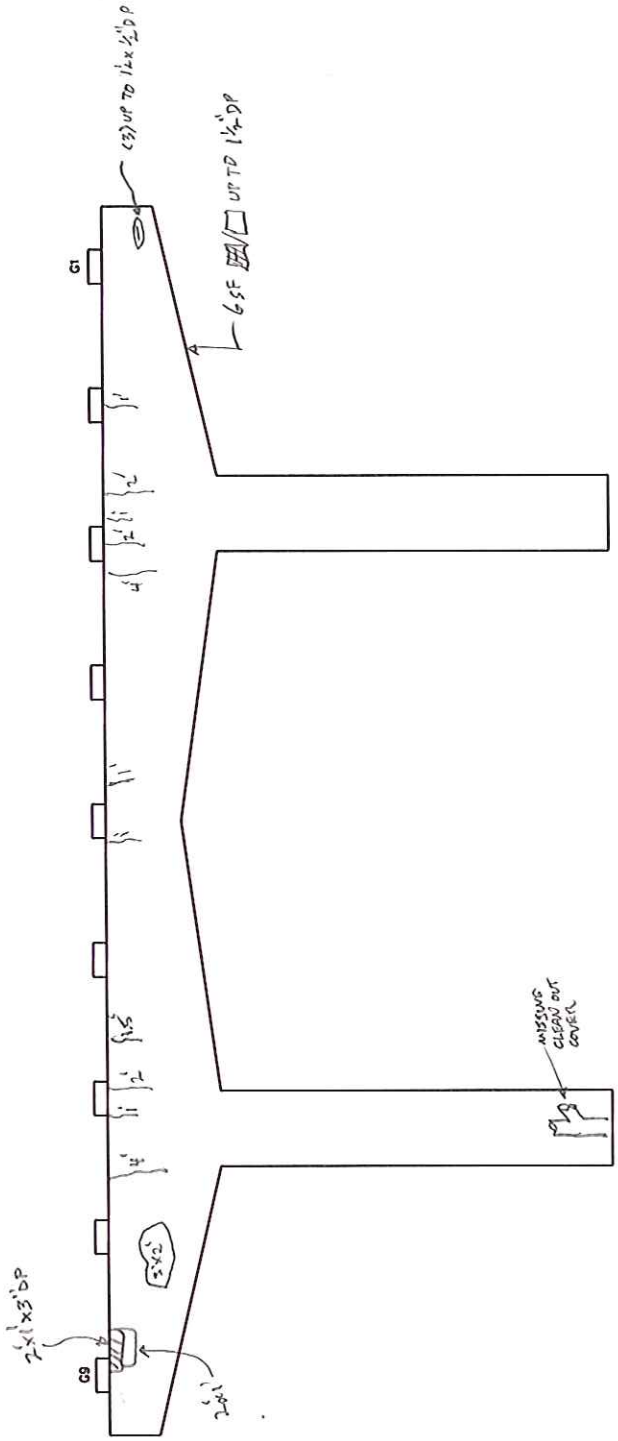

PIER 6 - EAST ELEVATION

UPDATE NO.	DATE	COMPANY	CREW
△			
△			
△			
△			

LEGEND

- HOLLOW AREA
- SHALLOW REBAR
- SPALL AREA
- SPALL AREA WITH EXPOSED REBAR
- MAP CRACKS (MpC) OR HAIRLINE MAP CRACKS (HLMpC)
- HAIRLINE CRACK (HLC) OR CRACKS (CRK)
- HONEY COMB AREA
- SCALE AREA (HVY, MED OR LT)
- x WITH EFFLORESCENCE

Baker

SUPPLEMENTAL SHEET

☑ FIELD ORIGINAL ☐ TRANSCRIBED BY:_____

BRIDGE NO. 01765	DATE: 8/15/12
CREW: 314/1138	SHEET 134/193

DESCRIPTION: SUBSTRUCTURE

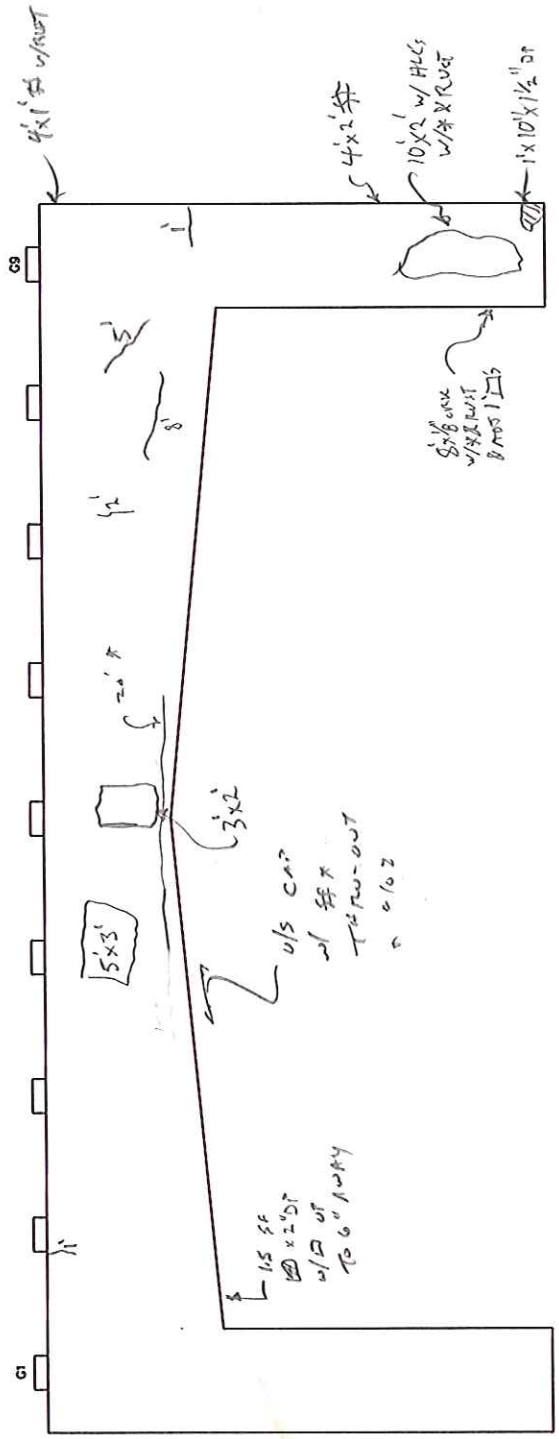

PIER 7 - WEST ELEVATION

UPDATE NO.	DATE	COMPANY	CREW

LEGEND

- HOLLOW AREA
- SHALLOW REBAR
- SPALL AREA
- SPALL AREA WITH EXPOSED REBAR
- MAP CRACKS (MpC) OR HAIRLINE MAP CRACKS (HLMpC)
- HAIRLINE CRACK (HLC) OR CRACKS (CRK)
- HONEY COMB AREA
- SCALE AREA (HVY, MED OR LT)
- WITH EFFLORESCENCE

Baker

SUPPLEMENTAL SHEET

☒ FIELD ORIGINAL ☐ TRANSCRIBED BY:_____

BRIDGE NO. 01765	DATE: 8/18/12
CREW: BH, YS	SHEET 135/193

DESCRIPTION: SUBSTRUCTURE

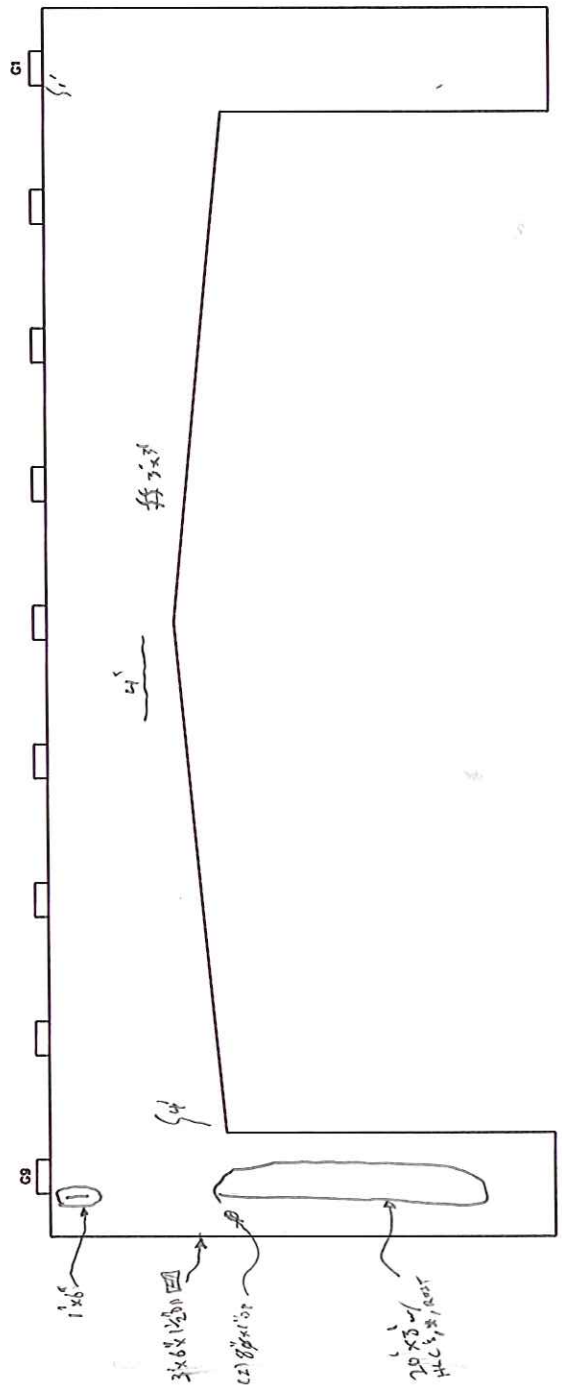

PIER 7 - EAST ELEVATION

UPDATE NO.	DATE	COMPANY	CREW
△			
△			
△			
△			

LEGEND

- HOLLOW AREA
- SHALLOW REBAR
- SPALL AREA
- SPALL AREA WITH EXPOSED REBAR
- MAP CRACKS (MpC) OR HAIRLINE MAP CRACKS (HLMpC)
- HAIRLINE CRACK (HLC) OR CRACKS (CRK)
- HONEY COMB AREA
- SCALE AREA (HVY, MED OR LT)
- X WITH EFFLORESCENCE

Baker

SUPPLEMENTAL SHEET

☒ FIELD ORIGINAL ☐ TRANSCRIBED BY:_____

BRIDGE NO. 01765	DATE: 8/16/12
CREW: BH, YS	SHEET 136 /193

DESCRIPTION: SUBSTRUCTURE

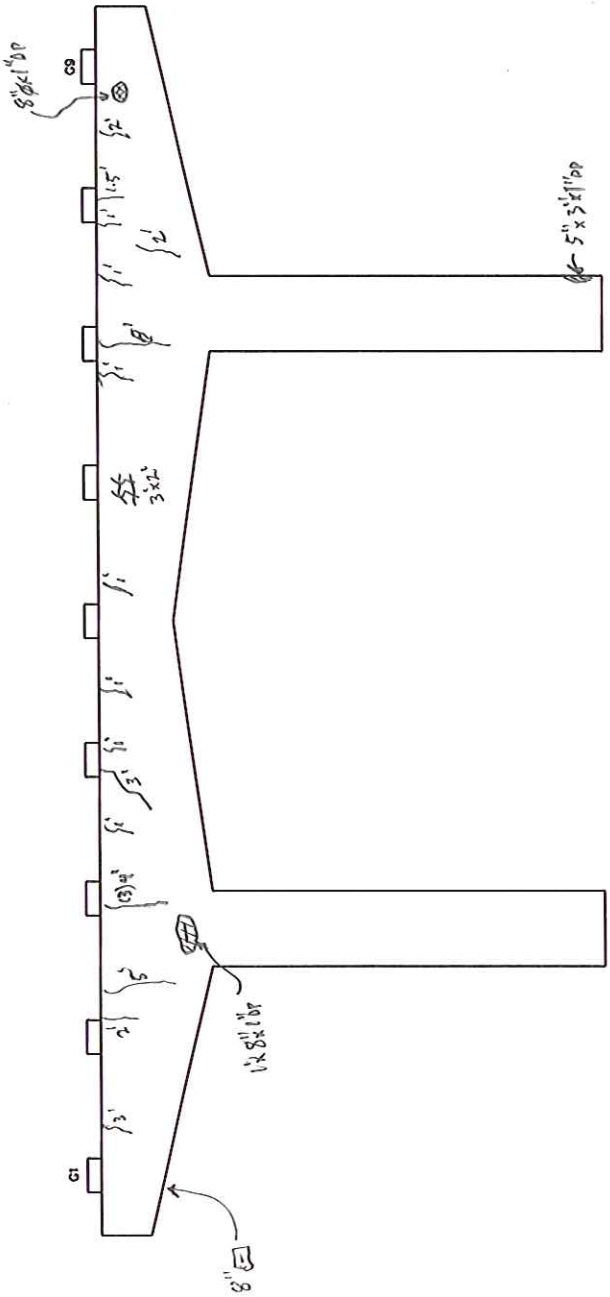

PIER 8 - WEST ELEVATION

UPDATE NO.	DATE	COMPANY	CREW
△			
△			
△			
△			

LEGEND

- HOLLOW AREA
- SHALLOW REBAR
- SPALL AREA
- SPALL AREA WITH EXPOSED REBAR
- MAP CRACKS (MpC) OR HAIRLINE MAP CRACKS (HLMpC)
- HAIRLINE CRACK (HLC) OR CRACKS (CRK)
- HONEY COMB AREA
- SCALE AREA (HVY, MED OR LT)
- X WITH EFFLORESCENCE

Baker

SUPPLEMENTAL SHEET

☒ FIELD ORIGINAL ☐ TRANSCRIBED BY:_____

BRIDGE NO. 01765	DATE: 8/14/12
CREW: JM, PMB	SHEET 137/193

DESCRIPTION: SUBSTRUCTURE

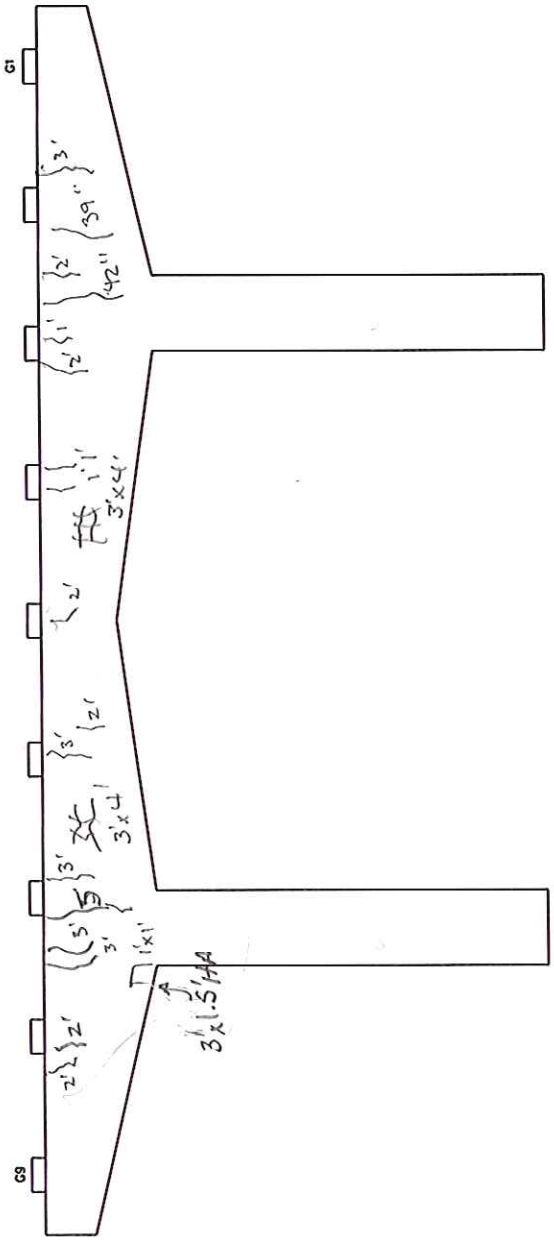

PIER 8 - EAST ELEVATION

UPDATE NO.	DATE	COMPANY	CREW
△			
△			
△			
△			

LEGEND

- HOLLOW AREA
- SHALLOW REBAR
- SPALL AREA
- SPALL AREA WITH EXPOSED REBAR
- MAP CRACKS (MpC) OR HAIRLINE MAP CRACKS (HLMpC)
- HAIRLINE CRACK (HLC) OR CRACKS (CRK)
- HONEY COMB AREA
- SCALE AREA (HVY, MED OR LT)
- X WITH EFFLORESCENCE

Baker

SUPPLEMENTAL SHEET

☑ FIELD ORIGINAL ☐ TRANSCRIBED BY:______

BRIDGE NO. 01765	DATE: 8/22/12
CREW: MTD/BH	SHEET 138/193

DESCRIPTION: SUBSTRUCTURE

UPDATE NO.	DATE	COMPANY	CREW
△			
△			
△			
△			

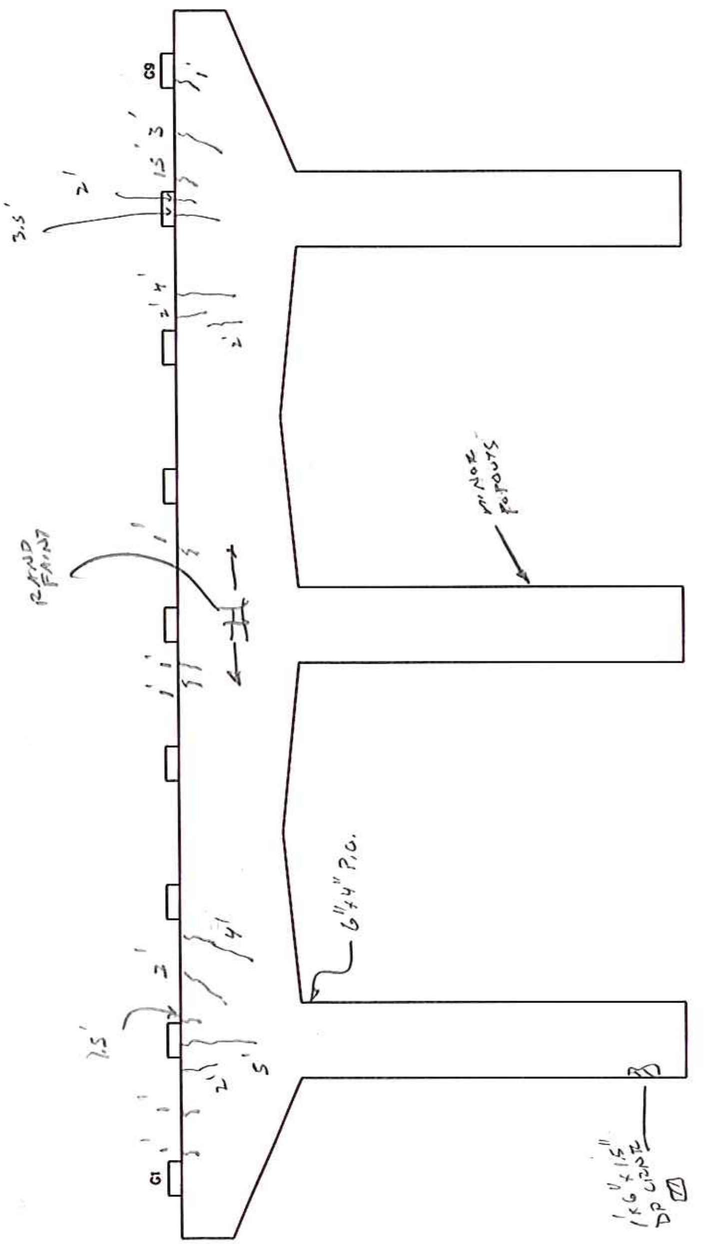

PIER 9 - WEST ELEVATION

LEGEND
- HOLLOW AREA
- SHALLOW REBAR
- SPALL AREA
- SPALL AREA WITH EXPOSED REBAR
- MAP CRACKS (MpC) OR HAIRLINE MAP CRACKS (HLMpC)
- HAIRLINE CRACK (HLC) OR CRACKS (CRK)
- HONEY COMB AREA
- SCALE AREA (HVY, MED OR LT)
- WITH EFFLORESCENCE

Baker

SUPPLEMENTAL SHEET

☒ FIELD ORIGINAL ☐ TRANSCRIBED BY:______	BRIDGE NO. 01765	DATE: 8/22/12
	CREW: BH, MJO	SHEET 139 /193

DESCRIPTION: SUBSTRUCTURE

UPDATE NO.	DATE	COMPANY	CREW
△			
△			
△			
△			

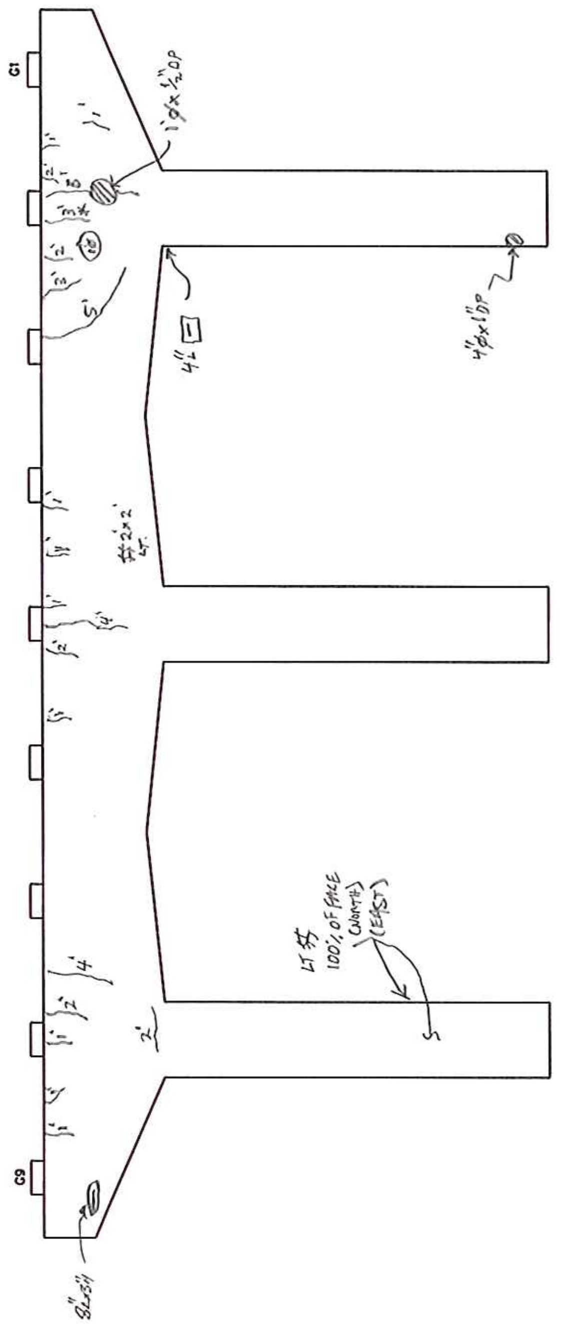

PIER 9 - EAST ELEVATION

LEGEND
- HOLLOW AREA
- SHALLOW REBAR
- SPALL AREA
- SPALL AREA WITH EXPOSED REBAR
- MAP CRACKS (MpC) OR HAIRLINE MAP CRACKS (HLMpC)
- HAIRLINE CRACK (HLC) OR CRACKS (CRK)
- HONEY COMB AREA
- SCALE AREA (HVY, MED OR LT)
- WITH EFFLORESCENCE

140/193

Bridge No: 01765 Date: 9/20/2012 Prepared By: BH

CONCRETE DETERIORATION WORKSHEET

		Deterioration By Span - In Square Feet										
		Span Number										
Deterioration Type		1	2	3	4	5	6	7	8	9	10	Total
Spalled and Delaminated Areas	*Top*											0
	Bot.	60	0	40	37	160	145	190	130	150	10	922
Scale (Moderate to Severe Only)	*Top*											0
	Bot.											0
Cracks:with Efflorescence (Use 6" width x length)	*Bot.*				10	44	56	44	192	96	212	654
Cracks w/o Efflo.(Use 3" width x Length)	*Top*											0
	Bot.		10			4	2	16	8			40
Map Cracking: w/Efflorescence (Use full Area)	*Bot.*					4086	3987	2898	450	600	576	12597
Map Cracking w/o Efflo.(Use 50% of Area)	*Top*											
	Bot.					162	261	185	225	48	105	986
Honeycombed Areas (only areas more than 1 1/2" deep)	*Bot.*						47					47
Total Deterioration	*Bot.*	60	10	40	47	4456	4498	3333	1005	894	903	15246
Span Area		6203	7308	9903	7355	7608	8578	8728	6305	14203	7704	83895
% Spalled and Delaminated on top	*Top*	0.0%	0.0%	0.0%	0.0%	0.0%	0.0%	0.0%	0.0%	0.0%	0.0%	
% Deterioration on Bottom	*Bot.*	1.0%	0.1%	0.4%	0.6%	58.6%	52.4%	38.2%	15.9%	6.3%	11.7%	18.2%

Bridge No.	01765	**Inspected by:**	M. Orlowsky
Town:	Hartford	**Inspected by:**	B. Howlett
Feature Carried:	Interstate 84 Eastbound	**Date Inspected:**	August 13, 2012
Feature Crossed:	AMTRAK & Local Roads	**Project No.:**	170-3013

Photo #1 :
Bridge ID.

Photo #2 :
North elevation.

Prepared by:

Baker

Bridge No.	01765	**Inspected by:**	M. Orlowsky
Town:	Hartford	**Inspected by:**	B. Howlett
Feature Carried:	Interstate 84 Eastbound	**Date Inspected:**	August 13, 2012
Feature Crossed:	AMTRAK & Local Roads	**Project No.:**	170-3013

Photo #3 :
South elevation.

Photo #4 :
Typical underside, span 1.

Prepared by:

Baker

Bridge No.	01765	**Inspected by:**	M. Orlowsky
Town:	Hartford	**Inspected by:**	B. Howlett
Feature Carried:	Interstate 84 Eastbound	**Date Inspected:**	August 13, 2012
Feature Crossed:	AMTRAK & Local Roads	**Project No.:**	170-3013

Photo #5 :
Bridge from the west approach.

Photo #6 :
Bridge from the east approach.

Prepared by:

Baker

Bridge No.	01765	**Inspected by:**	M. Orlowsky
Town:	Hartford	**Inspected by:**	B. Howlett
Feature Carried:	Interstate 84 Eastbound	**Date Inspected:**	August 13, 2012
Feature Crossed:	AMTRAK & Local Roads	**Project No.:**	170-3013

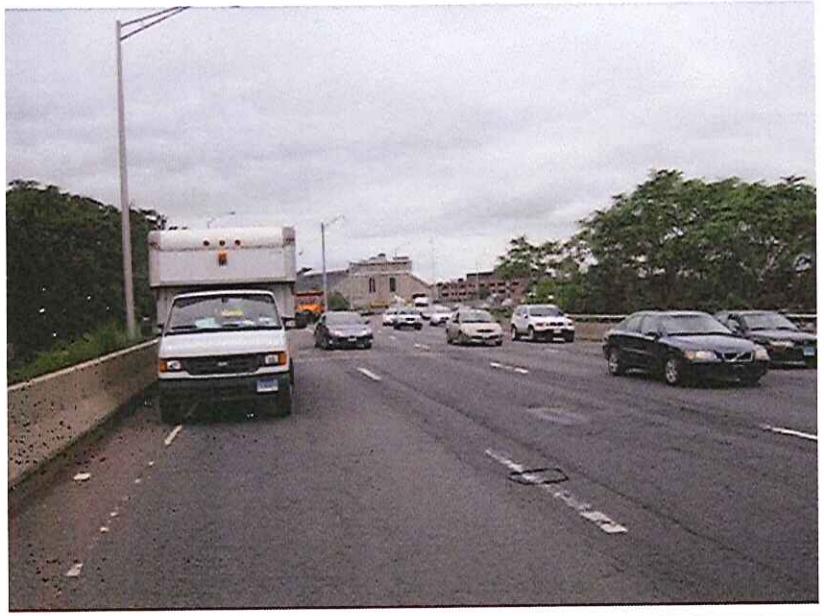

Photo #7 :
West approach from the bridge.

Photo #8 :
East approach from the bridge. Note the cracking in the bridge and approach pavements.

Prepared by:

Baker

Bridge No.	01765	**Inspected by:**	M. Orlowsky
Town:	Hartford	**Inspected by:**	B. Howlett
Feature Carried:	Interstate 84 Eastbound	**Date Inspected:**	August 13, 2012
Feature Crossed:	AMTRAK & Local Roads	**Project No.:**	170-3013

Photo #9 :
Typical top of deck.

Photo #10 :
Span 3, west end: Bridge overlay with raveling, cracking and uneven patches.

Prepared by:

Baker

Bridge No.	01765	**Inspected by:**	M. Orlowsky
Town:	Hartford	**Inspected by:**	B. Howlett
Feature Carried:	Interstate 84 Eastbound	**Date Inspected:**	August 13, 2012
Feature Crossed:	AMTRAK & Local Roads	**Project No.:**	170-3013

Photo #11 :
Span 4 overlay with up to 1.75" raveling.

Photo #12 :
Span 4, girder 1 at pier 4: Potential spall in the girder haunch. Deteriorated concrete was subsequently removed as part of Priority B BMM sent in advance of this report.

Prepared by:
Baker

Bridge No.	01765	**Inspected by:**	M. Orlowsky
Town:	Hartford	**Inspected by:**	B. Howlett
Feature Carried:	Interstate 84 Eastbound	**Date Inspected:**	August 13, 2012
Feature Crossed:	AMTRAK & Local Roads	**Project No.:**	170-3013

Photo #13 :
Span 1, bay 2 underside of deck at hanger joint: Large corner spall with exposed rebar.

Photo #14 :
Span 7, bay 5, panel 3: Underside of deck with map cracking with efflorescence and a large hollow area over a local road.

Prepared by:
Baker

Bridge No.	01765	**Inspected by:**	M. Orlowsky
Town:	Hartford	**Inspected by:**	B. Howlett
Feature Carried:	Interstate 84 Eastbound	**Date Inspected:**	August 13, 2012
Feature Crossed:	AMTRAK & Local Roads	**Project No.:**	170-3013

Photo #15 :
Span 5, bay 4, panel 2: Map cracked area with efflorescence and approximately 20 square feet of hollow and spalled concrete with exposed rebar (over dirt).

Photo #16 :
Span 9, bay 8, panel 4: Hollow area over the railroad.

Prepared by:
Baker

Bridge No.	01765	**Inspected by:**	M. Orlowsky
Town:	Hartford	**Inspected by:**	B. Howlett
Feature Carried:	Interstate 84 Eastbound	**Date Inspected:**	August 13, 2012
Feature Crossed:	AMTRAK & Local Roads	**Project No.:**	170-3013

Photo #17 :
Unused portion of deck between the north roadway parapet and the north fascia parapet. Note the two-pipe railing, safety walk, vertical faced curb, parapet and heavy debris.

Photo #18 :
South parapet: Typical spalling along the base of the jersey barriers on top of the safety walk. Also note the deteriorated mortar bed below the barrier section.

Prepared by:
Baker

Bridge No.	01765	**Inspected by:**	M. Orlowsky
Town:	Hartford	**Inspected by:**	B. Howlett
Feature Carried:	Interstate 84 Eastbound	**Date Inspected:**	August 13, 2012
Feature Crossed:	AMTRAK & Local Roads	**Project No.:**	170-3013

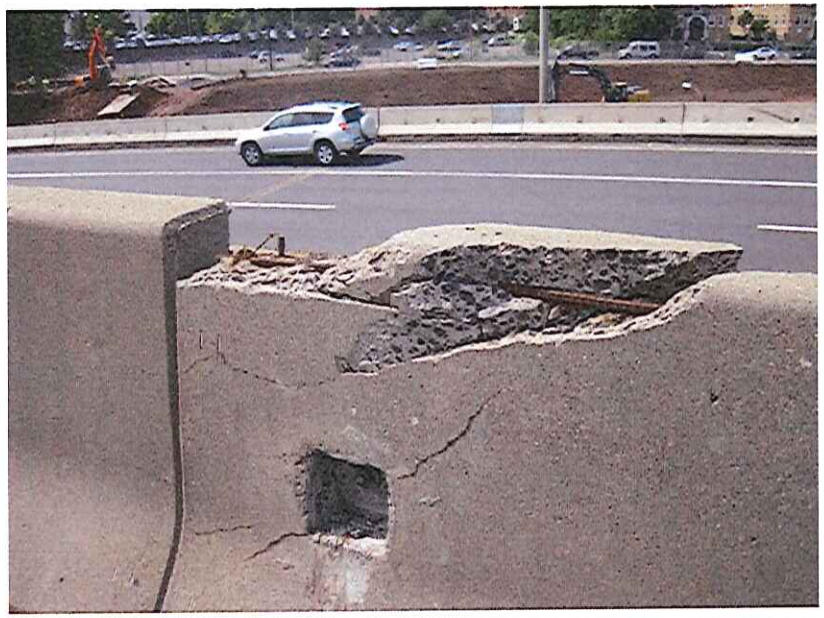

Photo #19 :
Span 8: Large full depth spall and hollow area in the barrier on top of the north safety walk.

Photo #20 :
Typical lateral misalignment of the barrier sections on top of the safety walks.

Prepared by:
Baker

Bridge No.	01765	**Inspected by:**	M. Orlowsky
Town:	Hartford	**Inspected by:**	B. Howlett
Feature Carried:	Interstate 84 Eastbound	**Date Inspected:**	August 13, 2012
Feature Crossed:	AMTRAK & Local Roads	**Project No.:**	170-3013

Photo #21 :
Span 5, north fascia parapet: Missing rail section.

Photo #22 :
Span 2: Clogged scupper along the south curb line.

Prepared by:

Baker

Bridge No.	01765	**Inspected by:**	M. Orlowsky
Town:	Hartford	**Inspected by:**	B. Howlett
Feature Carried:	Interstate 84 Eastbound	**Date Inspected:**	August 13, 2012
Feature Crossed:	AMTRAK & Local Roads	**Project No.:**	170-3013

Photo #23 :
Span 2, northwest corner: Missing scupper pipe drains onto pier 1.

Photo #24 :
Span 3: Abandoned joint trough without scupper pipe at the north end of the joint below the line of pin and hangers (east line) was leaking at the time of inspection.

Prepared by:
Baker

Bridge No.	01765	**Inspected by:**	M. Orlowsky
Town:	Hartford	**Inspected by:**	B. Howlett
Feature Carried:	Interstate 84 Eastbound	**Date Inspected:**	August 13, 2012
Feature Crossed:	AMTRAK & Local Roads	**Project No.:**	170-3013

Photo #25 :
Span 9, bay 8 near east line of pin & hangers: Clogged scupper pipe.

Photo #26 :
Span 6, bay 8, panel 5: Disconnected scupper pipe at the elbow.

Prepared by:

Baker

Bridge No.	01765	**Inspected by:**	M. Orlowsky
Town:	Hartford	**Inspected by:**	B. Howlett
Feature Carried:	Interstate 84 Eastbound	**Date Inspected:**	August 13, 2012
Feature Crossed:	AMTRAK & Local Roads	**Project No.:**	170-3013

Photo #27 :
Span 3, bay 2 near the pin and hanger line (east line): Weep drains onto the bracing member below.

Photo #28 :
Span 3: Typical extended weep.

Prepared by:

Baker

Bridge No.	01765	**Inspected by:**	M. Orlowsky
Town:	Hartford	**Inspected by:**	B. Howlett
Feature Carried:	Interstate 84 Eastbound	**Date Inspected:**	August 13, 2012
Feature Crossed:	AMTRAK & Local Roads	**Project No.:**	170-3013

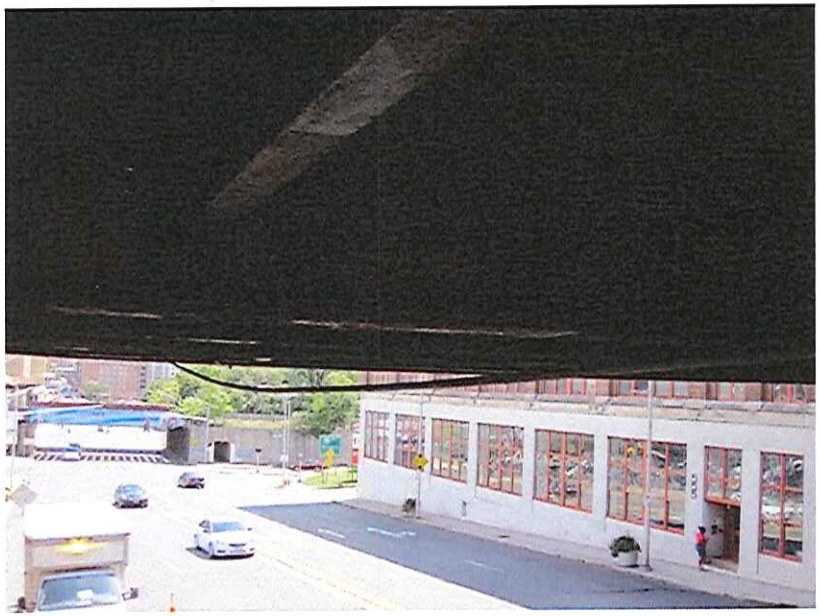

Photo #29 :
Span 1: Transverse conduit hangs down due to broken straps.

Photo #30 :
Span 1, southeast corner: Missing access cover at a conduit elbow.

Prepared by:
Baker

Bridge No.	01765	**Inspected by:**	M. Orlowsky
Town:	Hartford	**Inspected by:**	B. Howlett
Feature Carried:	Interstate 84 Eastbound	**Date Inspected:**	August 13, 2012
Feature Crossed:	AMTRAK & Local Roads	**Project No.:**	170-3013

Photo #31 :
Northwest corner of span 6: Transverse conduit is disconnected from girders 1-3, hangs down, is separated, and wires are exposed (behind a fence – no pedestrian access).

Photo #32 :
Span 1 asphaltic plug joint at the pin & hanger line: Note the cracks and bituminous patches in the joint in the foreground. Also note that the north end of joint was recently replaced (far end of the joint).

Prepared by:
Baker

Bridge No.	01765	**Inspected by:**	M. Orlowsky
Town:	Hartford	**Inspected by:**	B. Howlett
Feature Carried:	Interstate 84 Eastbound	**Date Inspected:**	August 13, 2012
Feature Crossed:	AMTRAK & Local Roads	**Project No.:**	170-3013

Photo #33 :
Span 3, asphaltic plug joint at hinge line (west line):
Adhesion cracks up to 1.5" wide.

Photo #34 :
Span 3, asphaltic plug joint at the hanger line (east line):
Joint is heaved in the shoulder.

Prepared by:
Baker

Bridge No.	01765	**Inspected by:**	M. Orlowsky
Town:	Hartford	**Inspected by:**	B. Howlett
Feature Carried:	Interstate 84 Eastbound	**Date Inspected:**	August 13, 2012
Feature Crossed:	AMTRAK & Local Roads	**Project No.:**	170-3013

Photo #35 :
Northeast corner of bridge: Settlement of the north end of the east abutment asphaltic plug joint and adjacent approach pavement.

Photo #36 :
Pier 4 deck joint: Bituminous patch at the west header and adjacent cracked header vibrates under live load. Priority B BMM was issued for this condition.

Prepared by:
Baker

Bridge No.	01765	**Inspected by:**	M. Orlowsky
Town:	Hartford	**Inspected by:**	B. Howlett
Feature Carried:	Interstate 84 Eastbound	**Date Inspected:**	August 13, 2012
Feature Crossed:	AMTRAK & Local Roads	**Project No.:**	170-3013

Photo #37 :
Span 6, joint at the hanger line (east line): Recent repairs to the header. Note that there is no seal between the headers, just areas of foam.

Photo #38 :
Span 9, joint at the east hanger line: East header is cracked, hollow, breaking up and heaved up to 1.5".

Prepared by:
Baker

Bridge No.	01765	**Inspected by:**	M. Orlowsky
Town:	Hartford	**Inspected by:**	B. Howlett
Feature Carried:	Interstate 84 Eastbound	**Date Inspected:**	August 13, 2012
Feature Crossed:	AMTRAK & Local Roads	**Project No.:**	170-3013

Photo #39 :
Span 9, joint at the east hanger line: East header is cracked, hollow, and breaking up. Note there is no seal between the headers, just areas of foam.

Photo #40 :
Span 5, girder 5 bearing at pier 4: Uneven laminated rust below the rocker and masonry plate has caused the rocker and the girder to be out of plumb.

Prepared by:
Baker

Bridge No.	01765	**Inspected by:**	M. Orlowsky
Town:	Hartford	**Inspected by:**	B. Howlett
Feature Carried:	Interstate 84 Eastbound	**Date Inspected:**	August 13, 2012
Feature Crossed:	AMTRAK & Local Roads	**Project No.:**	170-3013

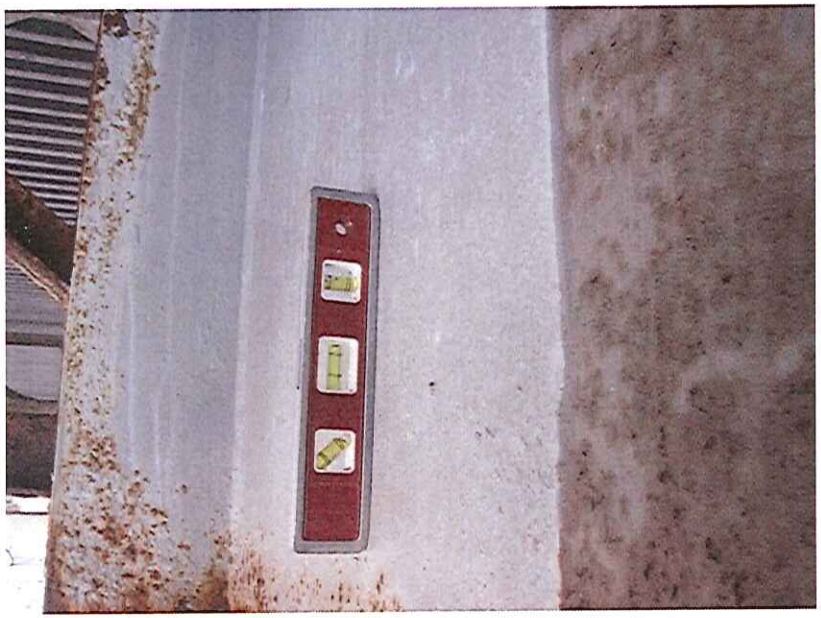

Photo #41 :
Span 5, girder 5 at pier 4: Girder is out of plumb due to uneven impacted rust between the underside of the rocker and masonry plate (see previous photo).

Photo #42 :
Span 8, girder 5 at pier 7: Heavy to laminated rust on the bearing components and rosebudding of the anchor bolt nuts.

Prepared by:
Baker

Bridge No.	01765	**Inspected by:**	M. Orlowsky
Town:	Hartford	**Inspected by:**	B. Howlett
Feature Carried:	Interstate 84 Eastbound	**Date Inspected:**	August 13, 2012
Feature Crossed:	AMTRAK & Local Roads	**Project No.:**	170-3013

Photo #43 :
Span 10, girder 1 bearing at the east abutment: Typical condition of the sliding bearings.

Photo #44 :
Span 1, girder 4 bearing at the west abutment, typical. Also note the pedestal spall.

Prepared by:

Baker

Bridge No.	01765	**Inspected by:**	M. Orlowsky
Town:	Hartford	**Inspected by:**	B. Howlett
Feature Carried:	Interstate 84 Eastbound	**Date Inspected:**	August 13, 2012
Feature Crossed:	AMTRAK & Local Roads	**Project No.:**	170-3013

Photo #45 :
Girder 2 pedestal at pier 3: Spall in the pedestal undermines the corner of the masonry plate and exposes the anchor bolt.

Photo #46 :
Span 6, girder 6 hinge (west line): Heavy stains from previous joint leakage (dry at the time of inspection).

Prepared by:
Baker

Bridge No.	01765	**Inspected by:**	M. Orlowsky
Town:	Hartford	**Inspected by:**	B. Howlett
Feature Carried:	Interstate 84 Eastbound	**Date Inspected:**	August 13, 2012
Feature Crossed:	AMTRAK & Local Roads	**Project No.:**	170-3013

Photo #47 :
Span 3, girder 6 hinge: Abrasion rust where the hanger plates rub.

Photo #48 :
Typical expansion hanger (span 9, west line).

Prepared by:

Baker

Bridge No.	01765	**Inspected by:**	M. Orlowsky
Town:	Hartford	**Inspected by:**	B. Howlett
Feature Carried:	Interstate 84 Eastbound	**Date Inspected:**	August 13, 2012
Feature Crossed:	AMTRAK & Local Roads	**Project No.:**	170-3013

Photo #49 :
Span 1, girder 6 pin and hanger: Heavy staining from previous joint leakage (dry at the time of inspection).

Photo #50 :
Span 1, girder 2 pin and hanger wind lock with laminated rust and section loss.

Prepared by:

Baker

Bridge No.	01765	**Inspected by:**	M. Orlowsky
Town:	Hartford	**Inspected by:**	B. Howlett
Feature Carried:	Interstate 84 Eastbound	**Date Inspected:**	August 13, 2012
Feature Crossed:	AMTRAK & Local Roads	**Project No.:**	170-3013

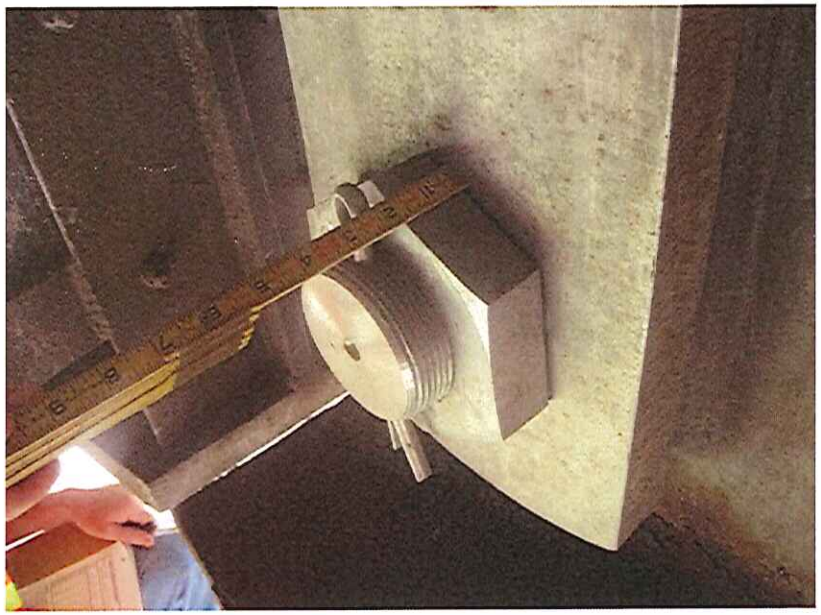

Photo #51 :
Span 9, girder 7, west pin and hanger: Up to 3/16" gap between the hanger plate and pin nut.

Photo #52 :
Span 7, girder 9: Laminated rust along the bottom flange near midspan.

Prepared by:

Baker

Bridge No.	01765	**Inspected by:**	M. Orlowsky
Town:	Hartford	**Inspected by:**	B. Howlett
Feature Carried:	Interstate 84 Eastbound	**Date Inspected:**	August 13, 2012
Feature Crossed:	AMTRAK & Local Roads	**Project No.:**	170-3013

Photo #53 :
Span 7, girder 9 bottom flange with section loss near midspan.

Photo #54 :
Span 9, girder 9 bottom flange with laminated rust and section loss along the bottom flange and the adjacent web and stiffener bases.

Prepared by:
Baker

Bridge No.	01765	**Inspected by:**	M. Orlowsky
Town:	Hartford	**Inspected by:**	B. Howlett
Feature Carried:	Interstate 84 Eastbound	**Date Inspected:**	August 13, 2012
Feature Crossed:	AMTRAK & Local Roads	**Project No.:**	170-3013

Photo #55 :
Span 5, girder 5 at pier 4: Rusted through holes in the web base and section loss to the bearing stiffeners.

Photo #56 :
Span 5, girder 7 at pier 4: Rusted through holes in the web base and stiffener base.

Prepared by:
Baker

Bridge No.	01765	**Inspected by:**	M. Orlowsky
Town:	Hartford	**Inspected by:**	B. Howlett
Feature Carried:	Interstate 84 Eastbound	**Date Inspected:**	August 13, 2012
Feature Crossed:	AMTRAK & Local Roads	**Project No.:**	170-3013

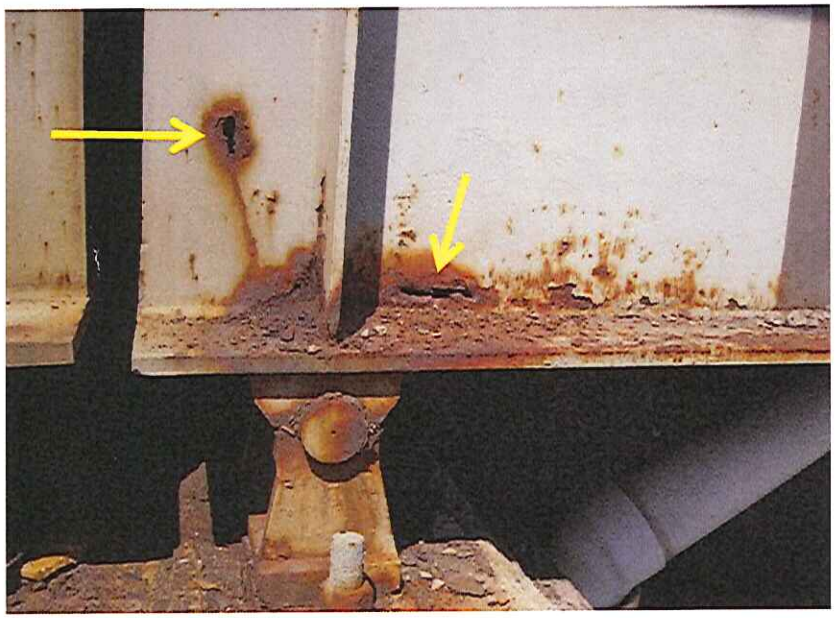

Photo #57 :
Span 5, girder 9 at pier 4: Heavy losses and rusted through holes at the web and stiffener bases. Also note the rusted through hole in the web above the rear edge of the bearing.

Photo #58 :
Span 7, girder 9 at pier 7: Rusted through holes at the web and stiffener bases.

Prepared by:

Baker

Bridge No.	01765	**Inspected by:**	M. Orlowsky
Town:	Hartford	**Inspected by:**	B. Howlett
Feature Carried:	Interstate 84 Eastbound	**Date Inspected:**	August 13, 2012
Feature Crossed:	AMTRAK & Local Roads	**Project No.:**	170-3013

Photo #59 :
Span 1, girder 2 at pin and hanger: Typical losses in the thickened portions of the girder web bases near the pin and hangers.

Photo #60 :
Span 6, girder 9 at hinge (west line): Section loss to the base of the web. Note the rusted through holes at the base of the web in the non-thickened portion of the web, just east of the web transition.

Prepared by:
Baker

Bridge No.	01765	**Inspected by:**	M. Orlowsky
Town:	Hartford	**Inspected by:**	B. Howlett
Feature Carried:	Interstate 84 Eastbound	**Date Inspected:**	August 13, 2012
Feature Crossed:	AMTRAK & Local Roads	**Project No.:**	170-3013

Photo #61 :
Span 6, girder 9 at pin and hanger (east line): Section loss in the thickened portion of the web.

Photo #62 :
Span 7, bay 5 end diaphragm lower strut with rusted through holes at pier 7.

Prepared by:
Baker

Bridge No.	01765	**Inspected by:**	M. Orlowsky
Town:	Hartford	**Inspected by:**	B. Howlett
Feature Carried:	Interstate 84 Eastbound	**Date Inspected:**	August 13, 2012
Feature Crossed:	AMTRAK & Local Roads	**Project No.:**	170-3013

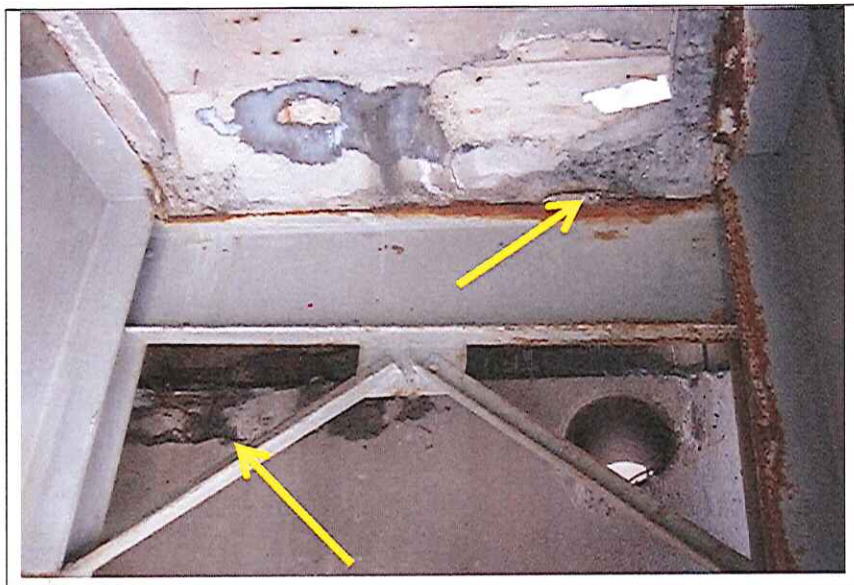

Photo #63 :
Typical deteriorated concrete in the end diaphragm haunches at pier 7 and also in the span 8 encased end diaphragms at pier 7.

Photo #64 :
Typical heavy pigeon debris along the girders.

Prepared by:

Baker

Bridge No.	01765	**Inspected by:**	M. Orlowsky
Town:	Hartford	**Inspected by:**	B. Howlett
Feature Carried:	Interstate 84 Eastbound	**Date Inspected:**	August 13, 2012
Feature Crossed:	AMTRAK & Local Roads	**Project No.:**	170-3013

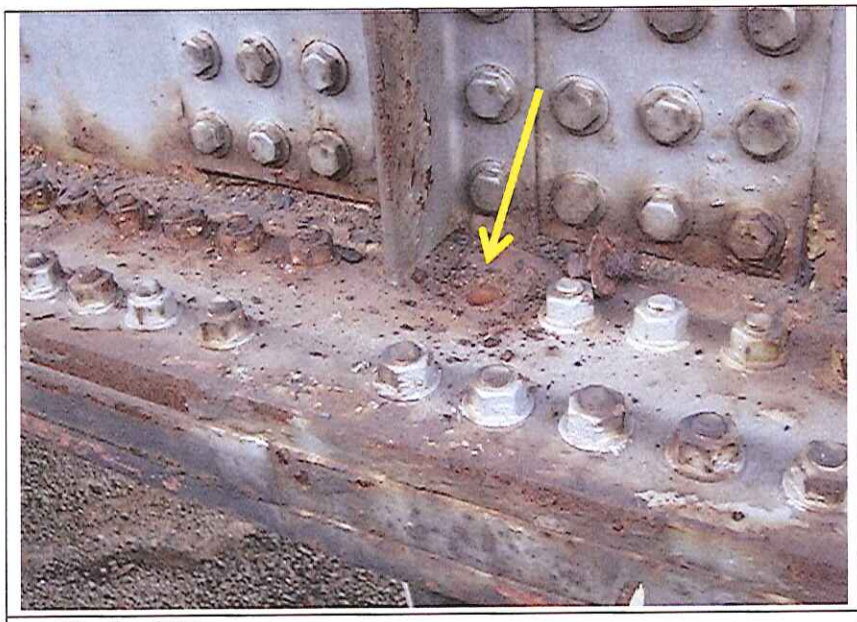

Photo #65 :
Span 9, girder 1: Broken bolt in the bottom flange splice.

Photo #66 :
Span 8, girder 6, north elevation: Vertical plate is only tack welded in place.

Prepared by:
Baker

Bridge No.	01765	**Inspected by:**	M. Orlowsky
Town:	Hartford	**Inspected by:**	B. Howlett
Feature Carried:	Interstate 84 Eastbound	**Date Inspected:**	August 13, 2012
Feature Crossed:	AMTRAK & Local Roads	**Project No.:**	170-3013

Photo #67 :
Span 7, girder 1: Typical missing welds along the underside of the lateral bracing gusset plates.

Photo #68 :
Span 1, girder 1 bottom flange gouge.

Prepared by:
Baker

Bridge No.	01765	**Inspected by:**	M. Orlowsky
Town:	Hartford	**Inspected by:**	B. Howlett
Feature Carried:	Interstate 84 Eastbound	**Date Inspected:**	August 13, 2012
Feature Crossed:	AMTRAK & Local Roads	**Project No.:**	170-3013

Photo #69 :
Span 2, bay 1: Bent diaphragm members.

Photo #70 :
Span 1, underside of the pin and hanger joint: Headers were in contact at 83 degrees Fahrenheit.

Prepared by:
Baker

Bridge No.	01765	**Inspected by:**	M. Orlowsky
Town:	Hartford	**Inspected by:**	B. Howlett
Feature Carried:	Interstate 84 Eastbound	**Date Inspected:**	August 13, 2012
Feature Crossed:	AMTRAK & Local Roads	**Project No.:**	170-3013

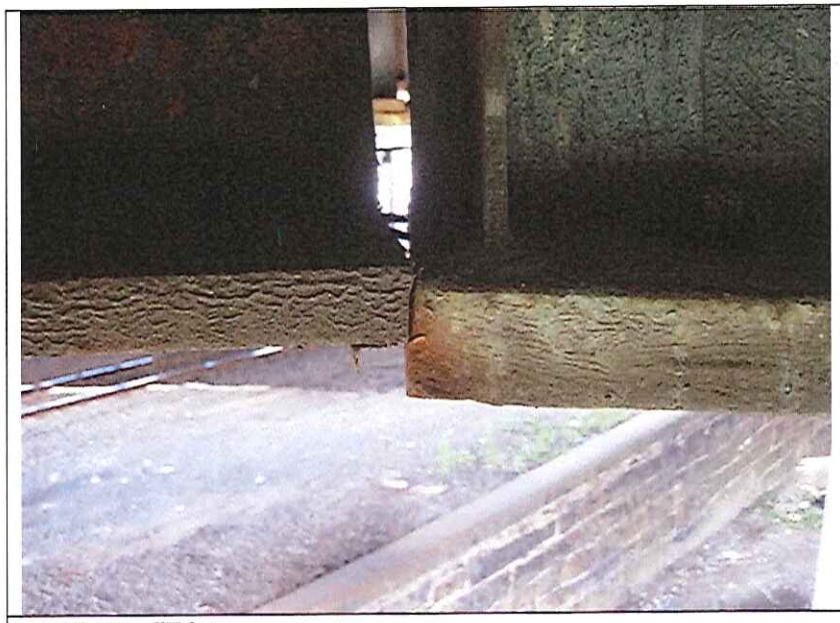

Photo #71 :
Span 9, girder 7 bottom flanges at the east pin and hanger line were within 1/16" of each other at the time of inspection and touched under live load (note the abrasion rust at point of contact).

Photo #72 :
Span 6, girder 1 is out of plumb.

Prepared by:

Baker

Bridge No.	01765	**Inspected by:**	M. Orlowsky
Town:	Hartford	**Inspected by:**	B. Howlett
Feature Carried:	Interstate 84 Eastbound	**Date Inspected:**	August 13, 2012
Feature Crossed:	AMTRAK & Local Roads	**Project No.:**	170-3013

Photo #73 :
Span 6, girder 1, negative camber.

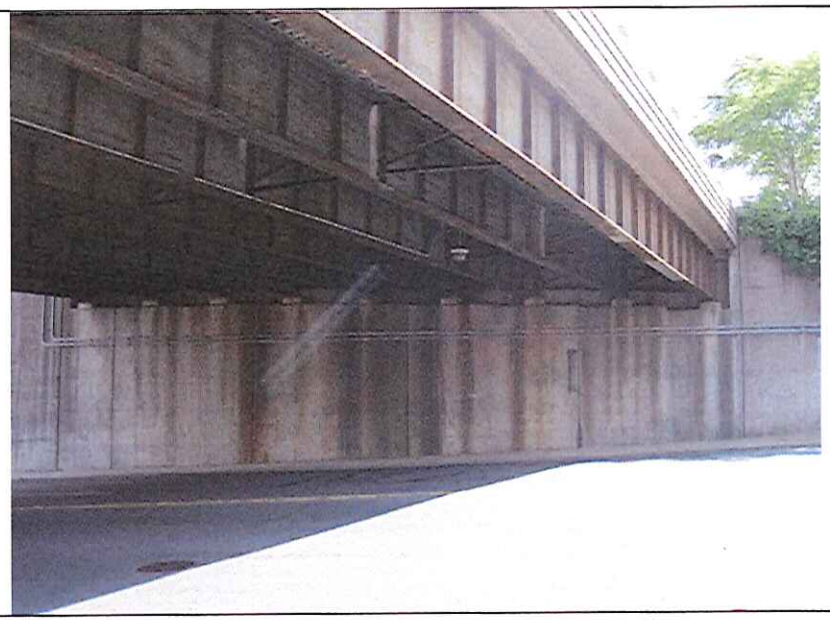

Photo #74 :
West abutment, typical.

Prepared by:

Baker

Bridge No.	01765	**Inspected by:**	M. Orlowsky
Town:	Hartford	**Inspected by:**	B. Howlett
Feature Carried:	Interstate 84 Eastbound	**Date Inspected:**	August 13, 2012
Feature Crossed:	AMTRAK & Local Roads	**Project No.:**	170-3013

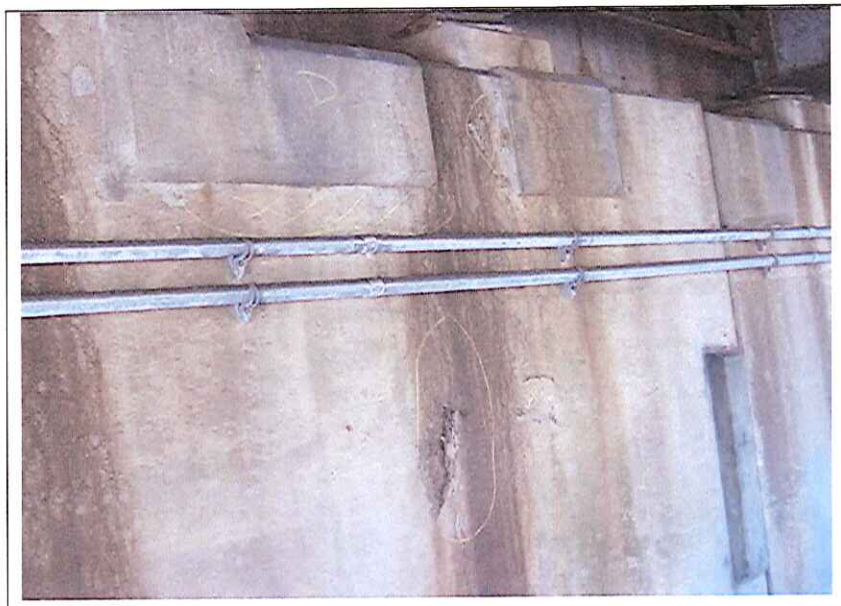

Photo #75 :
Hollow and spalled areas in the west abutment stem, adjacent to a sidewalk along Asylum Street.

Photo #76 :
Girder 4 pedestal at the west abutment: Hollow area in the pedestal adjacent to a sidewalk along Asylum Street.

Prepared by:
Baker

Bridge No.	01765	**Inspected by:**	M. Orlowsky
Town:	Hartford	**Inspected by:**	B. Howlett
Feature Carried:	Interstate 84 Eastbound	**Date Inspected:**	August 13, 2012
Feature Crossed:	AMTRAK & Local Roads	**Project No.:**	170-3013

Photo #77 :
West abutment backwall between girders 6 & 7: Hollow areas in the backwall adjacent to a sidewalk along Asylum Street.

Photo #78 :
Spall with exposed rebar in the southwest wingwall.

Prepared by:

Baker

Bridge No.	01765	**Inspected by:**	M. Orlowsky
Town:	Hartford	**Inspected by:**	B. Howlett
Feature Carried:	Interstate 84 Eastbound	**Date Inspected:**	August 13, 2012
Feature Crossed:	AMTRAK & Local Roads	**Project No.:**	170-3013

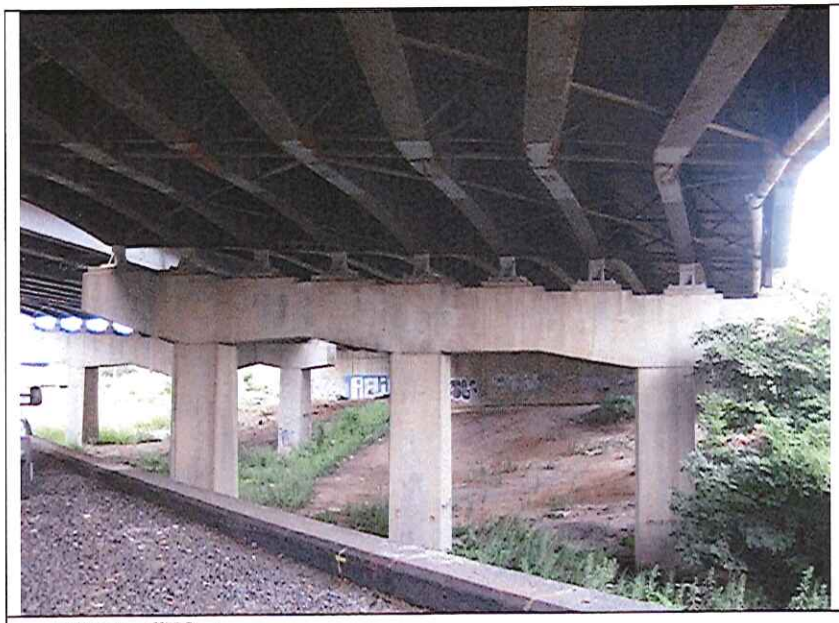

Photo #79 :
Pier 9, typical.

Photo #80 :
Pier 1 cap, west elevation. Hollow area in the cap adjacent to a sidewalk along Asylum Street.

Prepared by:
Baker

Bridge No.	01765	**Inspected by:**	M. Orlowsky
Town:	Hartford	**Inspected by:**	B. Howlett
Feature Carried:	Interstate 84 Eastbound	**Date Inspected:**	August 13, 2012
Feature Crossed:	AMTRAK & Local Roads	**Project No.:**	170-3013

Photo #81 :
Pier 1 cap, east elevation with spalls with exposed rebar.

Photo #82 :
Span 5 pedestals at pier 4: Spalls in several consecutive pedestals.

Prepared by:
Baker

Bridge No.	01765	**Inspected by:**	M. Orlowsky
Town:	Hartford	**Inspected by:**	B. Howlett
Feature Carried:	Interstate 84 Eastbound	**Date Inspected:**	August 13, 2012
Feature Crossed:	AMTRAK & Local Roads	**Project No.:**	170-3013

Photo #83 :
Pier 1, column 1: Spall at the column base.

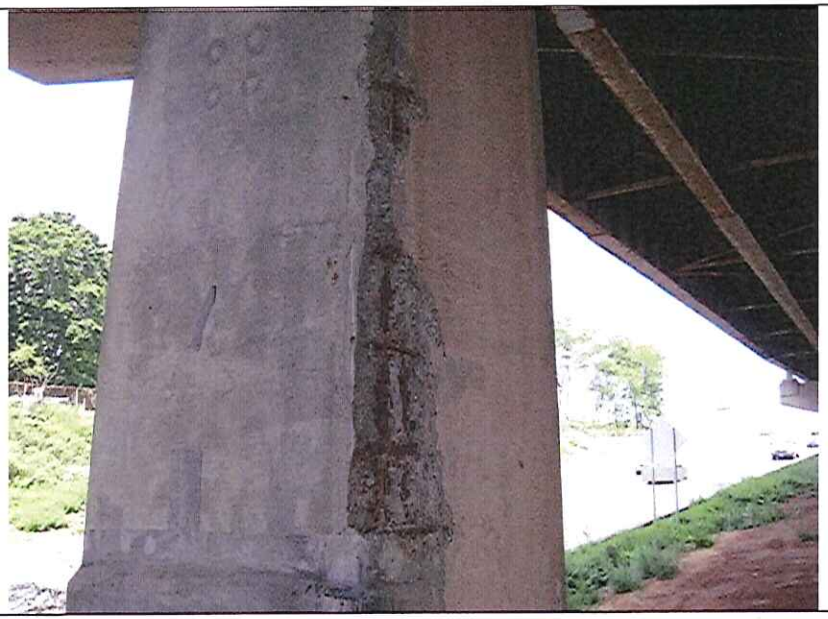

Photo #84 :
Pier 2, column 1: Hollow and spalled concrete with exposed rebar.

Prepared by:
Baker

Bridge No.	01765	**Inspected by:**	M. Orlowsky
Town:	Hartford	**Inspected by:**	B. Howlett
Feature Carried:	Interstate 84 Eastbound	**Date Inspected:**	August 13, 2012
Feature Crossed:	AMTRAK & Local Roads	**Project No.:**	170-3013

Photo #85 :
Debris accumulation on the pier 4 cap.

Photo #86 :
Spalled, cracked and hollow concrete at the northwest approach barriers.

Prepared by:

Baker

Bridge No.	01765	**Inspected by:**	M. Orlowsky
Town:	Hartford	**Inspected by:**	B. Howlett
Feature Carried:	Interstate 84 Eastbound	**Date Inspected:**	August 13, 2012
Feature Crossed:	AMTRAK & Local Roads	**Project No.:**	170-3013

Photo #87 :
Southwest approach barriers with a large full depth spall and hollow/broken area.

Photo #88 :
Impact damage to the attenuator at the east approach gore area.

Prepared by:
Baker

Bridge No.	01765	**Inspected by:**	M. Orlowsky
Town:	Hartford	**Inspected by:**	B. Howlett
Feature Carried:	Interstate 84 Eastbound	**Date Inspected:**	August 13, 2012
Feature Crossed:	AMTRAK & Local Roads	**Project No.:**	170-3013

Photo #89 :
Deteriorated bituminous at the west approach.

Photo #90 :
Deteriorated bituminous at the east approach.

Prepared by:

Baker

Bridge No.	01765	**Inspected by:**	M. Orlowsky
Town:	Hartford	**Inspected by:**	B. Howlett
Feature Carried:	Interstate 84 Eastbound	**Date Inspected:**	August 13, 2012
Feature Crossed:	AMTRAK & Local Roads	**Project No.:**	170-3013

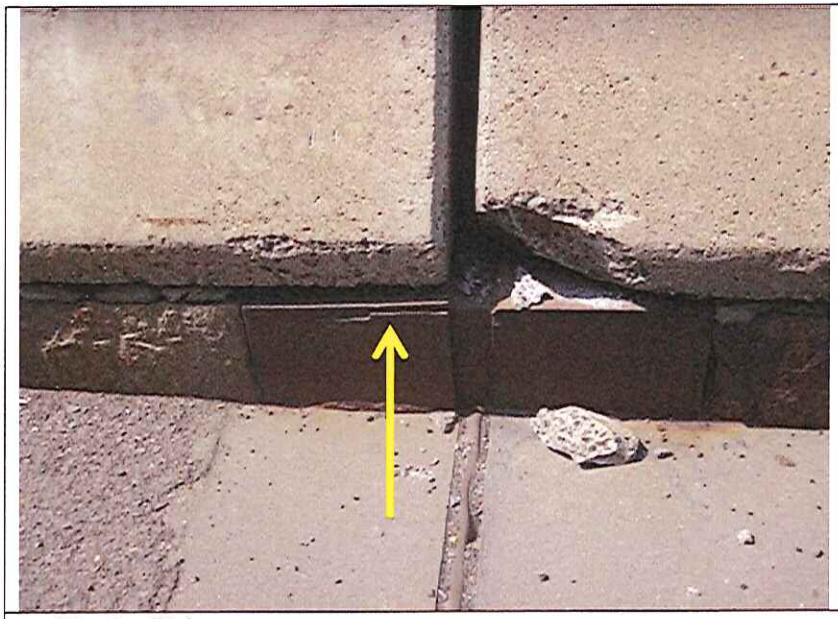

Photo #91 :
North end of the joint at the span 6 pin and hanger line (east line) with a crack in the curb plate

Photo #92 :
Speed limit sign posted on the bridge.

Prepared by:
Baker

ID

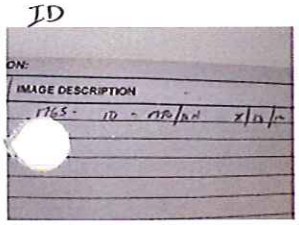

001.jpg

ID

002.jpg

SP1G1 HA e WK + LN

003.jpg

SP1 G1 GAUGE

004.jpg

W. ABUT ☐'s, ANJ WK

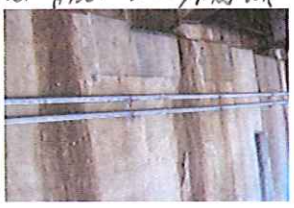

005.jpg

G1 DIAPH WELD PROB REP

006.jpg

W. ABUT DRAIN ☐

007.jpg

W. ABUT DW ☐

008.jpg

G1 PED e W. ABUT ☐

009.jpg

SW WING ☐

010.jpg

TYP PIGEON

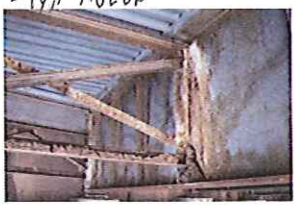

011.jpg

W. ABUT G4 PED ☐

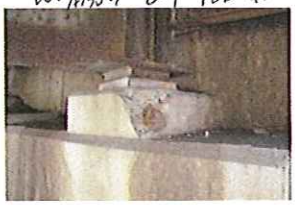

012.jpg

SP1-SIGN e

013.jpg

SP1-OHSS

014.jpg

SP1-OHSS

015.jpg

SP1- OHSS

016.jpg

SP #1 SE- CONDUIT ACCESS

017.jpg

SP #1 U/S PtH J1
TYP CRISSED J1

018.jpg

SP #1 CONDUIT -

019.jpg

SP1 G2- G2, S6, WINDLOCK

020.jpg

SP #1 G2 e PtH

021.jpg

SAME

022.jpg

SAME

023.jpg

SP1, BAY 2 EOJ e PtH

024.jpg

SP #1, BAY 2 e PtH - ☐

025.jpg

SP #1 G6 PtH - HOT JT LIKE STAINS

026.jpg

SP1 G4 PtH, S. ELEV
1/8" DP PACKET OF SL

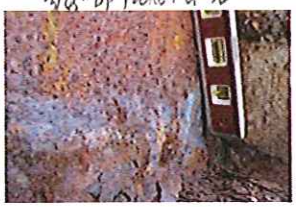

027.jpg

SP1 G4 e PtH → HS W/ HR

028.jpg

SP1, S. ELEV - OHSS

029.jpg

S. ELEV

030.jpg

P1

031.jpg

TYP OF SP1

032.jpg

N. ELEV

033.jpg

W. ABUT

034.jpg

P1 BASE

035.jpg

PICKP D

036.jpg

PI COL 2 BASE

037.jpg

ID

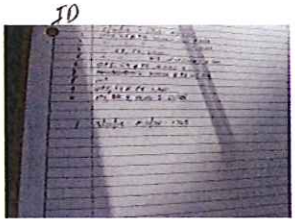

038.jpg

SP #5 CONDUIT EPS - BROKEN CONDUIT

039.jpg

SP #6 - BAY 1 CONDUIT HANGS DOWN

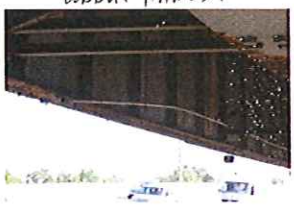

040.jpg

SP #6, G6 - SAME W.? PAIR

041.jpg

SP 6, G1 - S. E PAIR SE ADJ

042.jpg

SP #6, BAY 8 PANEL 2

043.jpg

SP #6, BAY 8 PANEL 2 MISS COVER

044.jpg

SP #6, BAY 8 PANEL 5 DISCONN

045.jpg

SP #6, G9 BF SP BW TRANS + E. PAIR

046.jpg

SP #6 G1 BT HS

047.jpg

SP 6 G1 - NEG CAMB

048.jpg

SAME

049.jpg

SP #6, G9 S. ELEV, E PAIR SE

050.jpg

SP #6, G1 - OUT OF PLUMB

051.jpg

ID

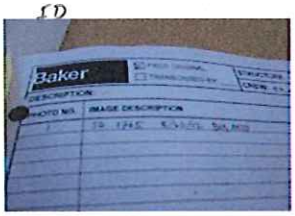

052.jpg

SP #10, BAY 8 - DISCONN

053.jpg

GLEV. ADJ - OK

054.jpg

CS PED & E. ADJ

055.jpg

SP #10, G9 - SE ADJ TO SUPP

056.jpg

S. ELEV

057.jpg

ID

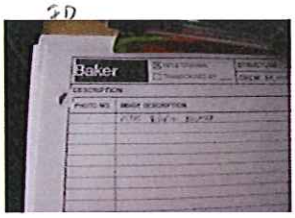

058.jpg

SP 9, G1 - BROKEN BF PAINT

059.jpg

SP 9 G1 - HIT OVER RR

060.jpg

SP 9 G1 BF SL

061.jpg

SP 9 - HIT OVER RR

062.jpg

SP 9, G1 - PAN CRK REP'D

063.jpg

SP 9, BAY 4 PANEL 5 FORMS OVER RR

064.jpg

SP 9, BAY 6 PAN - OVER RR

065.jpg

SP 9, BAY 8 PAN 4 OVER RR

066.jpg

SP 9, BAY 8, PAN 5 OVER RR

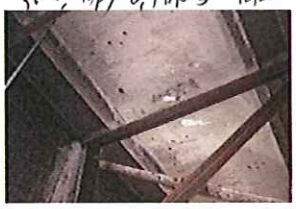

067.jpg

SP 9, G5 BF GOOD

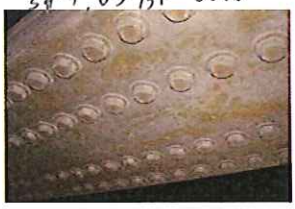

068.jpg

SP 9, G9 BF SL

069.jpg

SP 9 G8 - MIS PAIL & SPLICE

070.jpg

SP9 G1 BF - SL NEAR TRANS

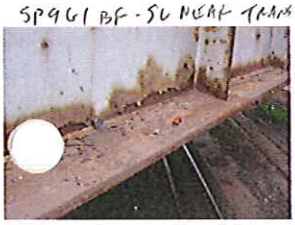

071.jpg

SP9 G1 NEAR E PTH - SL

072.jpg

SAME

073.jpg

SP 9, G1 "V"

074.jpg

SP9 G1-E. PTH - SLC S.

075.jpg

AMTRAK ROW.

076.jpg

P9

077.jpg

79

078.jpg

ID

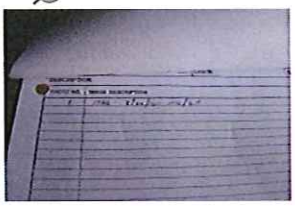

079.jpg

SP9 G7E - BF TOUCH & LL

080.jpg

SP 9 PAY B, E. LINE - CLOGGED

081.jpg

SP 4, G6, PAY 3 ? SLOPPY NOT CORD

082.jpg

P3 G6. ☑

083.jpg

G1 POT HOLE ☑ NEAR P3

084.jpg

SAME -

085.jpg

SAME

086.jpg

SAME

087.jpg

ID

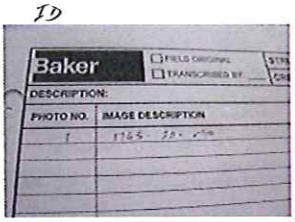

088.JPG

W. APPR

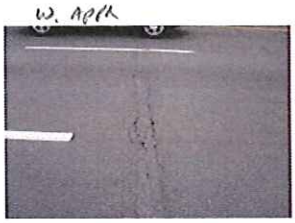

089.JPG

NW BARRIER

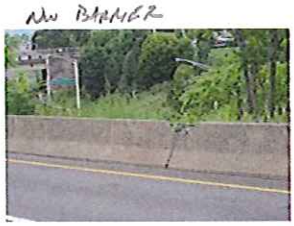

090.JPG

SW BARRIER

091.JPG

W. APPR NEAR BR

092.JPG

G7 1 LIFRAMY

093.JPG

SP LM 1

094.JPG

TYP S. BARRIER CHAIN

095.JPG

SP #1, SW - CURB ☑

096.JPG

SP #2 CLOGGED

097.JPG

TYP JB ☑ - S.

098.JPG

S. - TYP DSP CLOG

099.JPG

JTC W. LINE SP3, 18" W

100.JPG

W. END SP #3 DIP

101.JPG

SP #3 SE - PARK CLG

102.JPG

SP 4 - 1 3/4" RAVEL

103.JPG

SP 9 - E. JOINT

104.JPG

SP 1 E. JOINT

105.JPG

SP #10 S. PPT MISALIGN

106.JPG

E. APPR BIT

107.JPG

E. APPR IMP ATTEN

108.JPG

ID

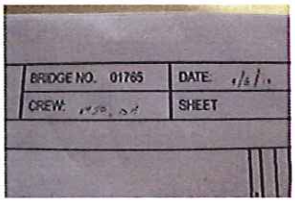

109.JPG

NW BARRIER

110.JPG

UN. USED DECK

111.JPG

SP #1 JT - UNUSED

112.JPG

SP 5. N OUTSIDE PPT - MISS RAIL

113.JPG

SP #8 - NW PPT

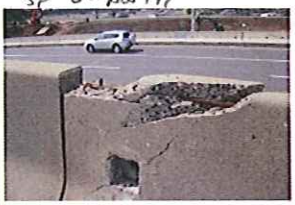

114.JPG

SP 9 E JOIN

115.JPG

NO APPR + E. ABUT JT SEPAR

116.JPG

PIER 4 JT

117.JPG

ID

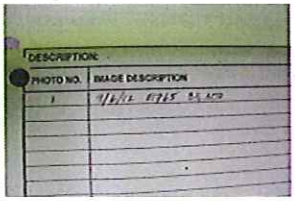

118.JPG

BR FR W.

119.JPG

BR FR W

120.JPG

W. APPR

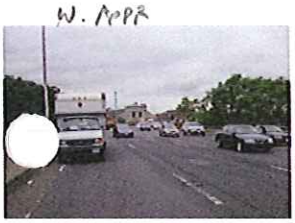

121.JPG

W. ABUT JT

122.JPG

ID

123.JPG

T.O.D

124.JPG

SP 1 PATH

125.JPG

SP 4 MISS

126.JPG

SP3 - W. PATH LINE

127.JPG

SP 3, E PATH LINE

128.JPG

SP 3 E. LINE - HV CHKD

129.JPG

PH JT

130.JPG

SP 6 W PATH

131.JPG

SP6 E PATH - RECENT REP

132.JPG

SP6 E - GAP B/W BIT + HDR

133.JPG

PT JT

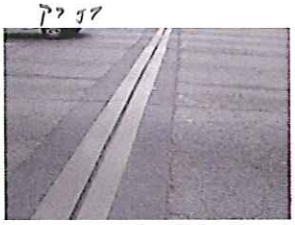

134.JPG

W/SS SP #10

135.JPG

E. APPR

136.JPG

SP 9 E. LINE

137.JPG

SP9 E. LINE

138.JPG

BR FR E

139.JPG

E. ABUT JT

140.JPG

E. APPR

141.JPG

SP #6 G1 NEG CAMB

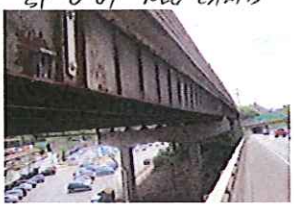

142.JPG

SAME

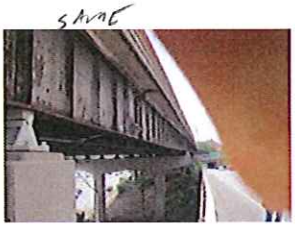

143.JPG

SAME

144.JPG

SP #6, E PIT -

145.JPG

ID

146.jpg

P1 S. COL

147.jpg

SP #2, G5 -

148.jpg

PIE -

149.jpg

SP #2 NEAR NW - DISCOUN SCUPP

150.jpg

SAME

151.jpg

SAME - PIPE @ BASE NOT CONN TO SUPER

152.jpg

SP #2, BAY - 2ND INT DIAPH & REM?

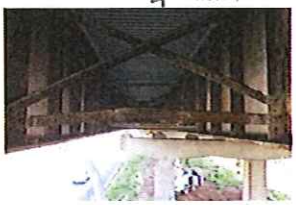

153.jpg

SAME

154.jpg

SP #2, G1 - 1 1/4" SR B/W SIDE & GIRD

155.jpg

SP #2, BAY 8 - REP'D WP

156.jpg

G4 TF SL (1/2 STIFFS FROM PRV)

157.jpg

P2 W. - COL 1 & 1/4 D's

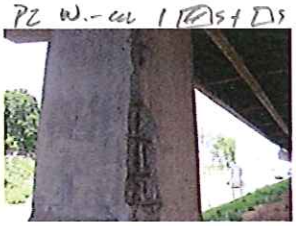

158.jpg

SAME

159.jpg

TYP REPAIR

G1 PED @ P2 - PED

160.jpg

G6 @ P2 - 1 EPED

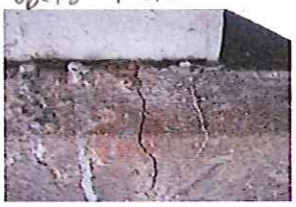

161.jpg

SAME

162.jpg

G2 PED @ P3 - D, EXP

163.jpg

SAME

164.jpg

P3 BAY 1 - AL

165.jpg

G6 PED @ P3

166.jpg

SAME

167.jpg

P3 VINE

168.jpg

P3 VINE

169.jpg

VOID

170.jpg

G9 @ P3 - PED

171.jpg

ID

172.jpg

SP 3, G9 W. LINE - SL

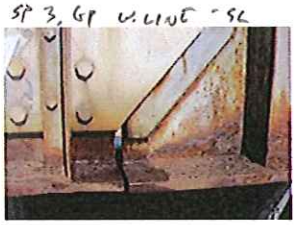

173.jpg

SP 3 G6 - W. HINGE - AD

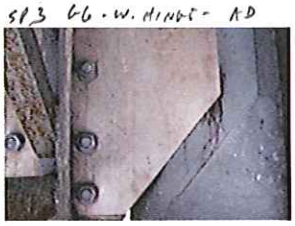

174.jpg

SP #3 - TYP BATTLE SIDE HINGE

175.jpg

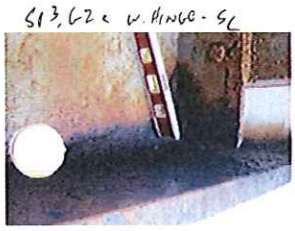

176.jpg

177.jpg

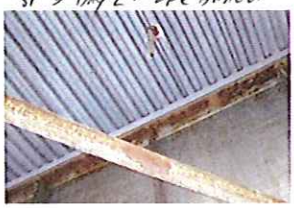

178.jpg

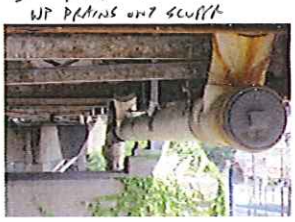

179.jpg

180.jpg

181.jpg

182.jpg

183.jpg

184.jpg

185.jpg

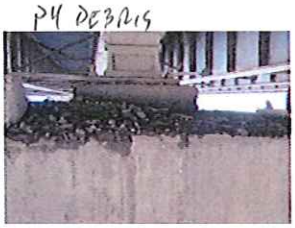

186.jpg

187.jpg

188.jpg

189.jpg

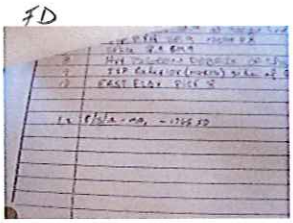

190.jpg

191.jpg

192.jpg

193.jpg

194.jpg

195.jpg

196.jpg

197.jpg

198.jpg

199.jpg

200.jpg

201.jpg

202.jpg

203.jpg

204.jpg

205.jpg

206.jpg

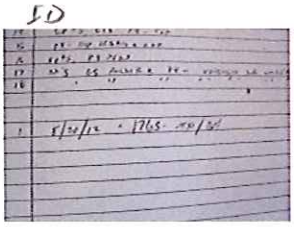

207.jpg

208.jpg

209.jpg

210.jpg

SP 5, G7 e P7 LRe BRG

211.jpg

SP5 G9 e P4 - S

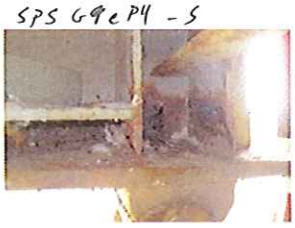

212.jpg

SP 5, G9 e P4 PANEL SCUM

213.jpg

VOID

214.jpg

SP 5, G9 e P4 - S.

215.jpg

SP #5, BAY 4, PAN 2

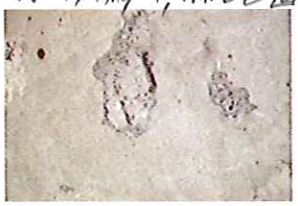

216.jpg

SP #9, BAY 2, PAN 8 FLTP MH HS

217.jpg

SP 9, G8, S. TYP BY RUST

218.jpg

TYP

219.jpg

TYP e SP #9 W. LINE

220.jpg

SP #9 TYP HS e EDE W. LINE

221.jpg

TYP - SP 9, W. LINE

222.jpg

SP #9, G9 SPLICE, TYP

223.jpg

SP 9 - TYP PIG. DEB

224.jpg

SP 9 G1 - TYP

225.jpg

P8 - TYP

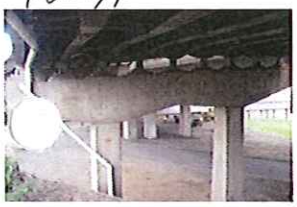

226.jpg

ID

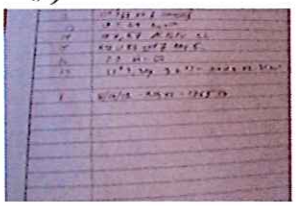

227.jpg

SP #8 G1 - HS + H

228.jpg

SP 8 G1 HS

229.jpg

SP #8 HH

230.jpg

SP 8, P7 - G5 RPD

231.jpg

SP8 BAY 5, PAN 5 VE CUS IL W TACK ONLY

232.jpg

MICHAEL BAKER ENGINEERING, INC.

BRIDGE # 01765

ADDITIONAL FIELD NOTES

(BACK-UP MATERIAL)

DATE: August 13, 2012

Baker	☒ FIELD ORIGINAL ☐ TRANSCRIBED BY: ____	STRUCTURE: 1765	DATE: VARIOUS
		CREW: VARIOUS	SHEET:

DESCRIPTION:

PHOTO NO.	IMAGE DESCRIPTION
1	1765 - MJO, JAL - 8/16/12
2	SP #3, G9 @ HINGE
3	" G6 - AD @ HINGE
4	SP #3. TYP RTHE SIPC HINGE E.D.
5	" G2 @ HINGE - 1/4" WEB LOSS + RTHE STIFF
6	SP #3. BAY 2 - TYP SLOT WP
7	" " " → WP MAY DRAIN ONTO ⊥ (LR)
8	" BAY 8 NEAR PIER - WP EXT MISS → DRAINS ONTO SCUPPER
9	SP #3, G9 HANGER NEAR PTH (E. END) - HS, HH OVER SLOPE ADJ TO PARAPET
10	P3 G9 BRC W-HINGE DUE TO PCD
11	SP #3, BAY 1 @ E. LINE - (AL) @ ABANDED TT TROUGH - NO DOWNSPOUT, NEARG
12	SP #4, BAY 8 SCUPP - NO DOWNSPOUT - DRAINS SLIGHTLY ONTO CAP
13	SP #3 NEAR PTH (EAST LINE) - DRAINS ONTO BRACKET
14	SP #5, G1 @ P4 - TYP
15	P4 - HVY DEBRIS @ CAP
16	SP #5, P4 PCDS
17	SP 5 G5 ROCKER @ P4 - UNEVEN LR UNDER ROCKER
18	" " " " " " " " → BRG NOT PLUMB
1	8/20/12 - 1765 - MJO / BM
2	SP #5, G5 @ P4, SECTION LOSS N. ELEV.
3	" " " " " S. ELEV.
4	" G7, P4, S. ELEV.
5	" " " BRG w/ LR/DEBRIS IN GAP.
6	SP #5, G9 @ P4, N. ELEV S.L.
7	ABANDONED END SCUPPER @ P4 ADJ. G9
8	VOID
9	SP #5, G9 @ P4 S. ELEV.
10	SP #5, BAY 4, PANEL 2 ☐/☐
1	8/21/12 - MJO/BM - 1765
2	BROKEN CONDUIT SP #6 @ PIER 5
3	CONDUIT IN SP #6 HANGING DOWN
4	SP #6, G6, HINGE. SILT STAINS
5	SP #6, G9, S. ELEV.
6	SP #6, BAY 8, PANEL 2
7	SP #6, BAY 8, PANEL 2 - MISS CLEANOUT COVER
8	SP #6, BAY 8, PANEL 5
9	" G9 BF LOSS B/W TRANS + E UPE PTH.
10	SP #6, G1, POT ☐
11	SP #6 G1 NEF CAMBER (TWISTED)?
12	SP #6, G9, S. ELEV, S.L. @ E. PIN & HANGER
13	" G1 - OUT OF PLUMB 1/4"/9" @ MIDSPAN

Baker	☒ FIELD ORIGINAL ☐ TRANSCRIBED BY: ____	STRUCTURE: 01765	DATE: 8/14/12
		CREW: BH, MJD	SHEET:

DESCRIPTION:

PHOTO NO.	IMAGE DESCRIPTION
1	01765 8/14/12 BH, MJD
2	BROKEN BOLT IN BOT FE BFS. G1 SPAN 9
3	HH O/ RAIL-ROAD ABOVE BFS.
4	S.L. ON BOT FE G1 NEAR BFS.
5	HH of BFS O/ RAIL SP#9
6	PREV NOTED CRK WELD @ G2 N.ELEV HORIZ GUSSET PL. REPAIRED.
7	BAY 4 PANEL 5 [illegible], TYP FORMS LEFT IN PLACE. O/RAIL.
8.	BAY 6 PANEL 5 SP#9 HA O/ TRACKS
9	BAY 8 PANEL 4 SP#9 HA O/ RAIL
10	" " " 5 " " "
11	SP#9 G5 GOUGE IN BFS.
12	SL. BOT FE G9 SP#9 ADJ BFS
13	MIS-DRILLED HOLE IN BFS. G8, SP#9
14	SP#9, G1, S.L. @ BOT FE ADJ TRANS WELD
15,16	SP#9 G1, S.L. ADJ PRH
17	G1 E. PRH. SP#9 'V'
18	S.L @ E PRH SP#9, G1, S.ELEV.
19-21	SP#9 AMTRAK R.O.W. (VOID)
1	1765 8/16/12 JHC
2	PIER 1 FENCE @ N SIDE OF S. COLUMN
3	G5, SPAN 2, S ELEV, PANEL 1, CONSTRUCTION GOUGE IN WEB, NOT SMOOTH.
4	SPALLING @ P1, E ELEV.
5-7	SPAN 2, ADJ TO G1, NW CORNER OF SPAN, DISCON SCUPPER, (AL) ON SUB, PIPE @ BASE
8-9	DIAPH LOWER ∠ BTWN G1 & G2, SPAN 2, 2ND INT DIAPH FROM P1.
10	UP TO 1¼" IR BTWN SLP ∠ + TF, SPAN 2, G1, S ELEV 2ND INT DIAPH.
11	WEEP XTENDED BELOW STEEL, SP 2, ADJ TO G9, PANEL 4
12	SL @ TF, G9, S VERT STIFF FROM P2.
13-14	PIER 2, W ELEV, N MOST COLUMN w/ SPALLS/HA's.
15	PED @ G1, O/P2, TYP ROLLER BRG.
16-17	VERT HLC IN G6 PEDESTAL, E ELEV EXTENDING UNDER BRG.
18-19	G2 PED, SPAN 4, P3, E ELEV OF PEDESTAL, MAS PL O/HL.
20	(AL) ON P3, E ELEV ADJ TO PED FOR G1 DUE TO DISCONN SCUPPER ABOVE.
21	SE CORNER OF PED UNDER G6, P3, SPAN 4.
22	NE " " " " " " "
23-25	HVY VINE GROWTH @ S END OF P3, E. ELEV.
26	SE CORNER OF PED UNDER G9 @ P3

Baker	☒ FIELD ORIGINAL ☐ TRANSCRIBED BY: ____	STRUCTURE: 01765	DATE: 9/6/12
		CREW: BH, MJO	SHEET:

DESCRIPTION: -

PHOTO NO.	IMAGE DESCRIPTION
1	9/6/12 01765 BH, MJO
2, 3	BR FR W. APPR
4	W. APPR FR BR
5	W. ABUT JT
6	ID SE PPT
7	TYP TOD
8	SP#1 P&H JT
9	OHSS SP# 4 (21597)
10	SP#3 W. P&H. JT
11	SP#3 E P&H JT
12	" " " " HEAVE IN SHLDR
13	PIER 4 JT
14	SP#6 W. P&H JT
15	" " E. " " "
16	" " " " " " @ (R) LANE
17	PIER 7 JT
18	OHSS SP# 10 (21598)
19	E. APPR FR BR
20, 21	SP# 9 E. P&H JT.
22	BR FR E. APPR
23	E. ABUT JT
24	E. APPR FR BR
25-27	SP#6. NEG CAMBER ON G1
26	SP#6. E. P&H JT @ (L) CRK

Baker	☐ FIELD ORIGINAL ☐ TRANSCRIBED BY: ____	STRUCTURE: 1765	DATE: 9/6/12
		CREW: MJO / BH	SHEET:

DESCRIPTION:

PHOTO NO.	IMAGE DESCRIPTION
1	1765 - ID - MJO
2	W. APPR B17
3	NW BARRIER
4	SW BARRIER
5W	W. APPR NEAR BR
6	SP #1 OVERLAY
7	TYP BARRIER OPENG S. CURB
8	SP #1 SW - WLD [D]
9	SP #2, S. SCUPPER CLOGGED
10	TYP J. BARRIER [D]
11	S. BARRIER - TYP OPNG SOUTH
12	SP #3 ADJ @ W. LIPC - 1.5" AS
13	BR OVERLAY @ W. END SP #3, E. PART #2
14	B7 SHOR NEAR P3 - SCUP
15	SP #4 RAVEL 1 3/4" DP
16, 17	SP #1, E. JOINT
18	SP #10 - PTT MISALIG
19	E. APPR PUMP @ RAMP
20	" " IMP DAM TO ATTENUATOR
1	ID
2	NW BARRIER
3	SP #1 - 3 N. OF BARRIER
4	J7 @ SP #1 POH N. OF L1 ON BARRIER - P1
5	SP #5 FASCIA PTT - PIPE RAIL MISSING
6	SP #8 NW PTT
7	SP #9 E JOINT $I
8	NE APPR PUMP / J7 SCUP MJ

Baker	☒ FIELD ORIGINAL ☐ TRANSCRIBED BY: ____	STRUCTURE: 1765	DATE: VARIOUS
		CREW: VARIOUS	SHEET:

DESCRIPTION: -

PHOTO NO.	IMAGE DESCRIPTION
1	1765 - 8/22/12 - MTO/BM
2	SP#9, G7 E. LINE - BF'S TUCLA INDEX LL
3	SP#9 BAY 8 @ E. LINE - CLOGGED SCUPP
4	SP#4, G5, BAY 3 SLOPPY WELD (PREV NOTED CRIK)
5	PIER 3 G6 BRG, EXP AB.
6-9	POT SPALLS IN HANDRAIL @ P4. NEAT TO B4 N.

REV: JC - 02/17/09

Baker	☒ FIELD ORIGINAL ☐ TRANSCRIBED BY: ____	STRUCTURE: 1765	DATE: 8/22/12
		CREW: BH, MJO	SHEET:

DESCRIPTION:

PHOTO NO.	IMAGE DESCRIPTION
1	ID 1765 8/22/12 BH, MJO
2	SP# 10, BAY 8, PANEL 1, DISCONN. SCUPPER
3	TYP SLIDING BRG D1 @ E. ABUT
4	SP# 10, D5 @ E.ABUT SPALL IN MAS PAD
5	SP# 10, D9 PANEL 4 S.L. ADJ SCUPPER

REV: JC - 02/17/09

Baker	☐ FIELD ORIGINAL ☐ TRANSCRIBED BY: ____	STRUCTURE: 1765	DATE: 8/13/12
		CREW:	SHEET:

DESCRIPTION:

PHOTO NO.	IMAGE DESCRIPTION
1,2	1765 - ID - MTO/BH 8/13/12
3	SP#1, G1-HH - SANKES/BRYAN
4	TYP SP#1, G1 GAUGE
5	W. ABUT SIGN D's
—	VOID
6	G1 @ 1st DIAPH - PREV REP'D WELD
7	W. BARRIER D's
8	" " D
9	W. ABUT G4 GRNGR D
10	SW WING EA
11	TYP PICKER
12	W. ABUT, G4 PED EA
13-16	OHSS ATTACHED TO ST
17	SP#1 SE - MISS CONDUIT + RUSTED THRU PANEL @ CONDUIT FOR LIGHTS
18	TYP CLOSED JT @ SP#1 P&H
19	SP#1 — CONDUIT W/ 3 ADJ RUSTED THRU + 1 SOT RUSTED THRU STRAP
20	BRK SP#1-G2 WINDLOCK - LK + SC
21-23	SP#1, G2 @ P&H
24	SP#1, BAY 2 CO @ P&H.
25	" " @ P&H. US JT EA
26	SP#1 - G6 @ P&H → HOY JT LKG STAINS
27	" - G9 S.ELEV @ P&H - 3/8" DP RUST SC
28	" - G9 - HS @ P&H W/ IR
29	SMALL OHSS @ SP#1 S.ELEV
30	S. ELEV
31	P/S - TYP
32	TYP U/S HP1
33	N. ELEV
34	W. ABUT
35	EA @ P1 BASE
36	D @ P1 CAP, S.
37	EA @ P1 COL 2, W.

Baker	☐ FIELD ORIGINAL ☐ TRANSCRIBED BY: ____	STRUCTURE: 1765	DATE: SEE BELOW
		CREW: SEE BELOW	SHEET:

DESCRIPTION:

PHOTO NO.	IMAGE DESCRIPTION JTM PB 8/14/12
1	SPAN 9 BAY 2 PANEL 8 ON inside of deck w/ wood form
	hollow haunch (Beam 8), SPALLED Haunch (Beam 9)
2	SP. 9 BM 8 S. ELEV. Bottom of web TYP. Heavy Rust @ Hanger line
3	SP. 9 BM 7 Bottom S. Nut 3/16" Gap Btwn Nut and Hanger
4	TYP Hvy Rust on Bottom of web at hanger line SP. 9
5	TYP haunch SP. 9 at Hanger line
6	TYP P7H SP. 9 NEAR P8
7	Splice SP. 9 BM 9
8	Hvy PIGEON DEBRIS BF Span 9 BM 7-8-9
9	TYP Exterior (NORTH) side of G1
10	EAST ELEV pier 8
1, 2	8/15/12 - MJD, - 1765 ID
3	SP#7 BAY 8 TYP PIGEON DEBRIS
4	MISSING CLEAN-OUT CAP. PIER 6
5	PIER 6, SP#7, @ G9
6	SP#7, G9 - BF
7	" " " MID-SPAN
8	SP#7, BAY 8, PANEL 2, o/ GRASS.
9	" , BAY 5, PANEL 3 o/ ROAD
10	SP#7, G1 2nd DIAPH MISS WELD
11	SP#7, P7, G9 N WEB RTH.
12	SP#7 & 8 EA & HAUNCHES
13	SP 7, G9 RUST
14	SP 7, G7 N. ELEV. S.L.
15	RTH IN ED SP#7 BAY 5.
16	P7 W - ☐
17	SP#7, BAY 3 @ P7 - RTH @ ED SPAN UTR #2
1	8/16/12 - BH, YS - 1765 ID
2	SP#8, N. FASCIA AT P7 HH.
3	" " H.S.
4	SP#8, BAY, PANEL ☐
5	SP 8, P7, G5 DRG
	BAY 5, PANEL 5 G6, VT GUSSET PL BACK WELD ONLY

STATE OF CONNECTICUT
DEPARTMENT OF TRANSPORTATION

MEMORANDUM

subject: BMM No. 11-330
Bridge No. 01765
Interstate 84 EB over Amtrak Railroad
and Local Roads
Hartford

date: June 23, 2011

to: Mr. Robert P. Mongillo
Transportation Maintenance Administrator
Bureau of Engineering
and Highway Operations

from: Sandra A. Dumas
Transportation Supervising Engineer
Bridge Safety and Evaluation
Bureau of Engineering and Construction

Attached are two copies of our most recent inspection report for the subject structure. The following deficiencies were found:

MAKE NEW ITEM

1. ~~This item supersedes BMM 09-348 item 2. There are two clogged scupper grates in spans 2, 5 & 9 and one clogged scupper grate in spans 7 & 10 in the south shoulder. See photo 1.~~

UPDATE

2. This item supersedes BMM 09-348 item 3. Drain pipes in spans 2 through 6, 9 and 10 have been disconnected, misaligned or fully/partially missing and some are clogged with sand and debris. This condition allows the water to leak out from the joints and connections and at some locations onto superstructure or substructure members causing heavy rust and section loss on steel and/or concrete delamination. See photos 2 and 3. ~~Also, the clean-out cap of downspout is missing at pier 4 in span 5.~~ See photo 4. NOT TRUE

MAKE NEW ITEM – MOST FIXED, FEW BROKEN / SHORT MOST LIKELY REP'D TAPPED AGAIN

3. This item supersedes BMM 09-348 item 4. Twenty-one (21) PVC weep pipes are broken/short (not extended below bottom flange) and leaking onto SIP panels or superstructure members causing moderate rust on steel in spans 1, 2, 4 and 8. See photo 5.

UPDATE w/ BRG LOSS

4. The girder ends near piers and pin and hanger assemblies exhibit laminated rust with up to ¼ inch deep section loss, especially in Spans 1 and 5. Worst condition noted for girder G8 in Span 1 near the pin and hanger line with up to 6.25% section loss in web. Also, there are rusted through holes up to 3 inches x 4 inches in webs of for girders G1 through G6 above bearing area between the bearing stiffeners at pier 4 in span 5. The bearing stiffeners at these locations also exhibit section losses with rusted through holes up to 3 inches x 2 icnhes at the bottom. See photo 6. REPAIR 2.5"x 3/4" & 5/16" H e EDGE

5. Span 1, Girder G9 has ~~six~~ collision gouges up to 1 inch x 2 inches x ½ inch deep at the edge of bottom flange REPAIR and six scrapes ~~up to ½ inch x 1 foot x 1/8 inch deep~~ on bottom flange close to west abutment. See photo 7. SP'd G5 w/ 4"L x 1/8" DP GOUGE e BF SPLICE ℄

Please direct persons under your jurisdiction to:

1. Clean the clogged scupper grates in spans 2, 5, 7, 9 and 10 (8 EA).
2. Repair broken/missing section of drain pipes and open sections with sand and debris inside (+/- 40 LF). Also, provide downspout cap at pier 4 (1 EA).
3. Extend PVC weeps below the bottom flanges of girders (+/- 126 LF).
4. Clean rust and spot paint girder ends (+/- 1500 SF) and strengthen the girders and stiffeners by providing repair plates at the rust holes (100 Lbs).
5. Grind/smooth the collision gouges at the bottom flange of girder G9 in span 1 (1 LF).

BMM No.
Bridge No. 01765

Item Nos. 1 through 3 should be considered Priority C; Item Nos. 4 and 5 should be considered Priority D. There may be other deficiencies which are considered routine maintenance and should be corrected.

The attached inspection report also notes that the following items were issued under previous BMM's and have not been addressed.

BMM No.	Item
02-606	1. ~~There are random pin and hanger assembly nuts in span 9, which can be turned by hand. Previously noted loose pin and hanger nuts in span 6 were found tight during this inspection. See photo 9. (Priority C)~~
08-742	1. ~~Span 6, the east pin and hanger joint has a 12' long section of hollow sounding elastomeric concrete header (west header) in the right two lanes of I-84 EB. See photo 10. (Priority C)~~
09-348	1. The underside of deck has hollow areas (intact) located over live traffic, parking and dirt areas: (Priority C) • Span 5, at fixed pin and hanger line, north side of girder G2, 2' x 6" hollow area. • Span 5, at fixed pin and hanger line south side of girder G4, 1' diameter hollow area. (Both hollow areas in span 5 are over dirt area and not over live traffic/parking area. Previously noted over live traffic/parking area). • Span 6, at fixed pin and hanger line, north side of girder G2, 1' diameter hollow area. • Span 6, at fixed pin and hanger line, south side of girder G7, 1' diameter hollow area. • Span 6, between girders G1 and G2, at midspan, 2' x 1'and two 1' x 1' hollow areas around existing spalls but intact at time of inspection. See photo 11. • Span 7, between girders G3 and G4, at midspan, 1' diameter x 1" deep spall with exposed rebar (previously noted an 18" diameter hollow area, removed at time of inspection) with an adjacent 10" diameter hollow concrete patch (intact). • Span 7, between girders G1 and G2, at end diaphragm, 1' x 6" hollow area at end haunch. • Span 8, between girders G8 and G9, at pier 7, 1' diameter hollow area (over dirt area, previously noted over live traffic/parking area). • Span 8, at pier 7, the end diaphragms are encased in concrete and have hollow areas over the roadway. 5. The asphaltic plug joints at both abutments, at the pin & hanger joints in spans 1, 3 and at span 6 west hanger joint exhibit random adhesion and cohesion cracks open up to 1" wide (previously noted ½" wide). See photo 12. The pourable joint seal with elastomeric headers at other joints have areas of missing joint seal up to full length causing the water to leak onto superstructure and substructure below. See photo 10. There is evidence of past leakage below. (Priority D)

COTTER PINS IN PLACE DO NOT REIGSUE

NEW ITEM FOR ALL JOTS W/ CONC HDR

NUMEROUS AREAS - REF FLAMING SHTS

APJ'S ALL ALWAYS NEW ITEM → WMP SEAL W/ CONC HDR WORK

NEW ITEM FOR CONC HDR REPAIR + WMP AND SEAL

Numbers PEA ☑'s

BMM No.
Bridge No. 01765

6. Girders G1 and G8 pedestals at pier 3 have spalls with exposed anchor bolts and undermining of the masonry plate up 2" deep with less than 5% loss of bearing area. See photo 13. (Priority D)

Bridge Safety and Evaluation believes that these repairs are structurally important and should be addressed.

All repairs shall be performed utilizing appropriate approved materials and tried and proven methods unless otherwise specified.

If you have any questions concerning this matter, please contact Sandra A. Dumas at (860) 594-2072. Please contact me when this work has been completed.

Attachments – 13 Photos

Muhammad Asif Iqbal/mai/jjm

cc: Scott A. Hill – Robert P. Zaffetti – Sandra A. Dumas – James J. Matulis
AI Engineers, Inc.
Team 2 (Jaronczyk – Mozzicato)

STATE OF CONNECTICUT
DEPARTMENT OF TRANSPORTATION

MEMORANDUM

subject: **BMM No. 09-348**
Bridge No. 01765
I-84 E.B. over Local Roads & Amtrak
Hartford

date: 7/20/09

to: Mr. Robert P. Mongillo
Transportation Maintenance Administrator
Bureau of Highway Operations

from: Sandra A. Dumas
Sandra A. Dumas
Transportation Supervising Engineer
Bridge Safety and Evaluation
Bureau of Engineering and Construction

VOID - APPLICABLE ITEMS CARRIED FORWARD TO 11-330

Attached are two copies of our most recent inspection report for the subject structure. The following deficiencies were found:

1. The underside of deck has hollow areas located over live traffic and parking areas:
   - Span 5, at fixed pin and hanger line, north side of girder G2, 2' x 6" hollow area
   - Span 5, at fixed pin and hanger line, south side of girder G4, 1' diameter hollow area
   - Span 6, at fixed pin and hanger line, north side of girder G2, 1' diameter hollow area
   - Span 6, at fixed pin and hanger line, north side of girder G2-G5, each have a 1' diameter hollow area
   - Span 6, at fixed pin and hanger line, south side of girder G7, 1' diameter hollow area
   - Span 6, between girders G1 and G2, at midspan, 2' x 1' and a two 1' x 1' hollow areas around existing spalls
   - Span 7, between girders G3 and G4, at midspan, 18" diameter hollow sounding concrete patch
   - Span 7, between girders G1 and G2, at end diaphragm, 1' x 6" hollow area at haunch
   - Span 8, between girders G8 and G9, at pier 7, 1' diameter hollow area
   - Span 8, at pier 7, the end diaphragms are encased in concrete and have hollow areas over the roadway.
2. There are two plugged scuppers in span 2 and one plugged scupper in spans 5 and one plugged scupper in span 10.
3. This item supersedes item 1 of BMM 04-300. There are sections of missing or disconnected drainpipe in span Nos. 2, 3, 4, 5, 6, 8 and 10 causing the water to leak onto superstructure and substructure below.
4. There are a total of three short/broken PVC weep pipes in spans 3 and 8 leaking onto SIP forms and superstructure.
5. The asphlatic plug joints at spans 1, 3 pin and hanger joints and at span 6 west hanger joint have cohesion and adhesion failures cracks up to 1/2 inch wide. There is active leakage or evidence of leakage below. The pourable joint seal with elastomeric headers at other joints have areas of missing joint seal up to full length causing the water to leak onto superstructure and substructure below.
6. Girder G1 and G8 pedestals at pier 3 have spalls undermining the masonry plates with less than 5% loss of bearing area.

Please direct persons under your jurisdiction to:

1. Remove the hollow areas (LS).
2. Clear the scuppers (4 EA).
3. Repair the sections of missing or disconnected drainpipes (±50 LF).
4. Extend weep pipes (±18 LF).
5. Seal the cracks in the asphaltic plug joints (joints (±200 LF). Seal the deteriorated pourable joint seals (±150 LF).
6. Repair the pedestals (± 1 CF).

Item Nos. 1 through 4 should be considered Priority C and Items Nos. 5 and 6 should be considered priority D. There may be other deficiencies which are considered routine maintenance and should be corrected.

The attached inspection report also notes that the following item was issued under a previous BMM and has not been addressed.

BMM No.	Item
02-606	3. There are random pin and hanger assembly nuts in spans 6 & 9, which can be turned by hand. (Priority C)

Bridge Safety and Evaluation believes that this repair is structurally important and should be addressed.

All repairs shall be performed utilizing appropriate, approved materials and tried and proven methods unless otherwise specified.

If you have any questions concerning this matter, please contact me at (860) 594-2072. Please notify this office when the work has been completed.

Attachments

Laszlo L. Vers/llv

cc: Joseph J. Obara
Robert P. Zaffetti – Sandra A. Dumas – Rosmery Rodriguez
HAKS Engineers, P.C.
Team 3

STATE OF CONNECTICUT
DEPARTMENT OF TRANSPORTATION

memorandum

subject: BRIDGE COMMITMENTS
BRIDGE NUMBER: 1765
BRIDGE MAINT. MEMO: 08-741

date: December 11, 2008

to: Mr. Robert P. Mongillo
Trans. Maintenance Administrator
Bureau of Engineering and
Highway Operations

from: Ronald P. Cormier
Trans. Maintenance Director
Bureau of Engineering and
Highway Operations

The following information is provided to you as requested:

BRIDGE NUMBER: 1765

ROUTE CROSSING: I-84 E/B; (O) Amtrak & Locals

TOWN: Hartford

B.M.M. NO./DATE: 08-741 / December 1, 2008

STAFF MEMO DATE: December 9, 2008

REQUIRED REPAIR(S) & PRIORITY(S):
1. Remove loose sections and repair the headers - Priority Code "A"
2. Remove loose sections and repair the headers - Priority Code "B"

ANTICIPATED START DATE:
1. December 1, 2008
2. December 8, 2008

REMARKS:

DATE TOTAL COMMITMENT COMPLETED: November 23, 2008

Paul T. Rizzo/mcs
cc: Paul T. Rizzo - District File
William E. Morrison - Alan Ference - Bridge File
Completed File

STATE OF CONNECTICUT
DEPARTMENT OF TRANSPORTATION

MEMORANDUM

subject: **BMM No. 08-741**
Bridge No. 01765
I-84 EB over AMTRAK & Local Streets
Hartford

date: December 01, 2008

to: Mr. Robert P. Mongillo
Transportation Maintenance Administrator
Bureau of Engineering
and Highway Operations

from: Sandra A. Dumas for Robert P. Zaffetti
Manager of Bridge Safety and Evaluation
Bureau of Engineering
and Highway Operations

This memorandum is a follow-up to a telephone conversation on November 22, 2008 between Bill Morrison of your staff and Sandra Dumas of Bridge Safety and Evaluation, concerning the following deficiency and recommendation for the subject structure:

1. Span 9, the west pin and hanger joint has a 7 feet long section of loose elastomeric concrete header (east header) in the right center lane of I-84 EB. The header is bouncing under live load.
2. Pier 7 joint has an 8 feet long section of loose elastomeric concrete header (west header) in the right lane of I-84 EB. A 2 foot adjacent section is missing.

Please direct persons under your jurisdiction to:

1. Remove loose sections and repair the headers (17 LF).

Item 1 is considered **Priority A** and item 2 is considered **Priority B**.

VOID - COMPLETED

This inspection is currently in progress. **Maintenance forces responded and repaired the joints during the inspection on November 23, 2008.** Additional items may be forwarded with the final inspection report.

All repairs shall be performed utilizing appropriate, approved materials and tried and proven methods unless otherwise specified. If you have any questions concerning this matter, please contact Sandra A. Dumas at (860) 594-2072. Please contact me when this work has been completed.

Laszlo L. Vers/llv

cc: Michael W. Lonergan - Richard T. Jankovich
James H. Norman
Joseph J. Obara
Robert P. Zaffetti – Sandra A. Dumas – Rosmery Rodriguez
Joseph E. Chilstrom, FHWA
HAKS Engineers, P.C.
Team 1
File

DEC - 1 2008

AND HIGHWAY OPERATIONS

STATE OF CONNECTICUT
DEPARTMENT OF TRANSPORTATION

MEMORANDUM

subject: **BMM No. 08-742**
Bridge No. 01765
I-84 EB over AMTRAK & Local Streets
Hartford

date: December 01, 2008

to: Mr. Robert P. Mongillo
Transportation Maintenance Administrator
Bureau of Engineering
and Highway Operations

from: Sandra A. Dumas
Transportation Supervising Engineer
Bridge Safety and Evaluation
Bureau of Engineering
and Highway Operations

Sandra A. Dumas

During our current inspection of the subject structure, the following deficiency was found:

1. Span 6, the east pin and hanger joint has a 12 feet section of hollow sounding elastomeric concrete header (west header) in the right two lanes of I-84 EB.

Please direct persons under your jurisdiction to:

1. Remove the delaminated section of the header and repair (12 feet).

The above item is considered **Priority C.**

This inspection is currently in progress. Additional items may be forwarded with the final inspection report.

All repairs shall be performed utilizing appropriate, approved materials and tried and proven methods unless otherwise specified.

If you have any questions concerning this matter, please contact me at (860) 594-2072. Please notify this office when the work has been completed.

Attachments - 2 Photos

Laszlo L. Vers/llv

cc: Joseph J. Obara
Robert P. Zaffetti – Sandra A. Dumas – Rosmery Rodriguez
HAKS Engineers, P.C.
Team 1

VOID

FORWARDED
CARRIED
11-330

1-13-09

STATE OF CONNECTICUT
DEPARTMENT OF TRANSPORTATION

subject: BRIDGE COMMITMENT COMPLETED

memorandum

date: December 29, 2008

to: Mr. Robert P. Zaffetti
Mgr. of Bridge Safety and Evaluation
Bureau of Engineering and
Highway Operations

from: Robert P. Mongillo
Trans. Maint. Administrator
Bureau of Engineering and
Highway Operations

STATE OF CONNECTICUT

D.O.T.

STAFF

MAINTENANCE

TRANSMITTAL

* B.M.M. NO.. 08-741
* BRIDGE NO.. 01765
* ROUTE.. Interstate 84 EB
* O/U.. Amtrak & Locals
* TOWN.. Hartford
* SOURCE.. R.P.Z.
* SOURCE DATE.. December 1, 2008
* COMPLETED.. November 23, 2008
* DATE SENT.. December 29, 2008

Attached is a memo itemizing the work performed, method of repair and the date of completion of each phase as per the above listed request.

TDU

Attachment

B.S.&E. ACTIONS
Date: 1·9·09
Please review the enclosed completed Repairs. These repairs were considered A Priority A B. Reply with your findings.
RPZ

Engineer 3 _____
Date to field: _____
Date checked: _____

completed in MEMO 11·23·08

Lichtenstein
Consulting Engineers

Field Notes

PROJECT NO 2057 BRIDGE NO 01765
DATE 6/6/02 SHEET 3 4/83
CREW SB, RS, PH

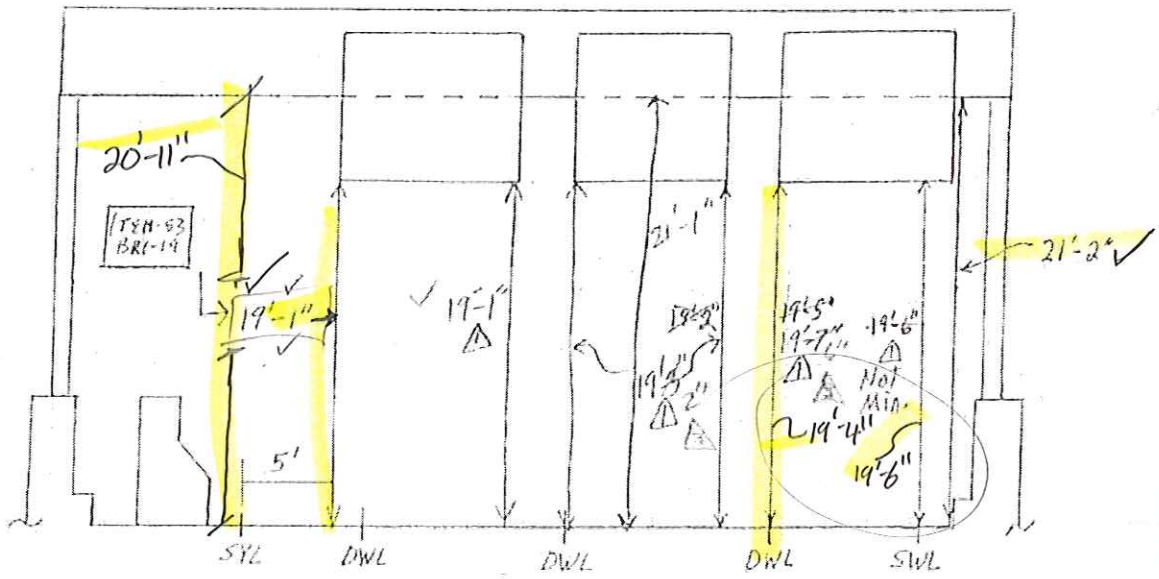

OVERHEAD SIGN IN SPAN 4 (NTS)
(OHSS # 21597)

LEGEND
SYL - SOLID YELLOW LINE
SWL - SOLID WHITE LINE
DWL - DASHED WHITE LINE

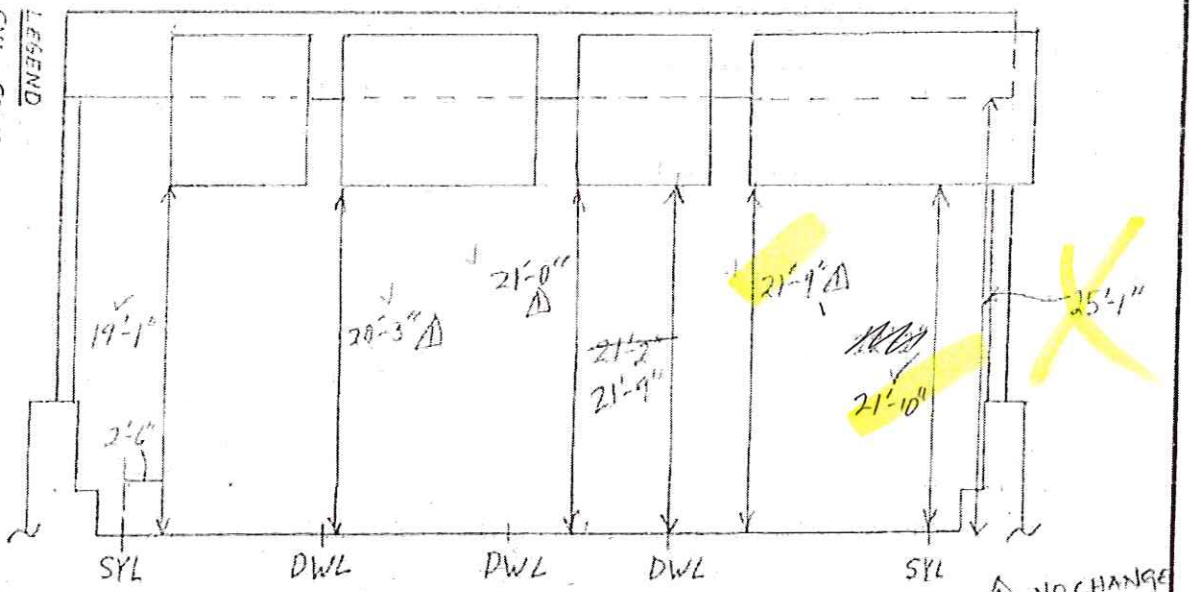

1 NO CHANGE

OVERHEAD SIGN IN SPAN ~~9~~ 10 (NTS) 1
(OHSS # 21596)

2 NO CHANGE

REVISION 1	DATE 4/17/2004	CREW WMK, MS (BAKER)	REVISION 2	DATE 8/22/06	CREW MAN, MJW, EL
REVISION 3	DATE 11/22/08	CREW LLV, PHH (HAKS)	REVISION 4	DATE 11/1/2010	CREW DY, MAI, ZRI.

Baker

SUPPLEMENTAL SHEET

☐ FIELD ORIGINAL ☐ TRANSCRIBED BY:_____

DESCRIPTION: SUPERSTRUCTURE

BRIDGE NO. 01765

CREW: JM, PB

DATE: 8/14/12

SHEET

- G1 NORTH Side @ Bott. web up 6" h w/ 1/16" pitting
@ BF EXTERIOR Areas up to 1'x8"x1/16" SF

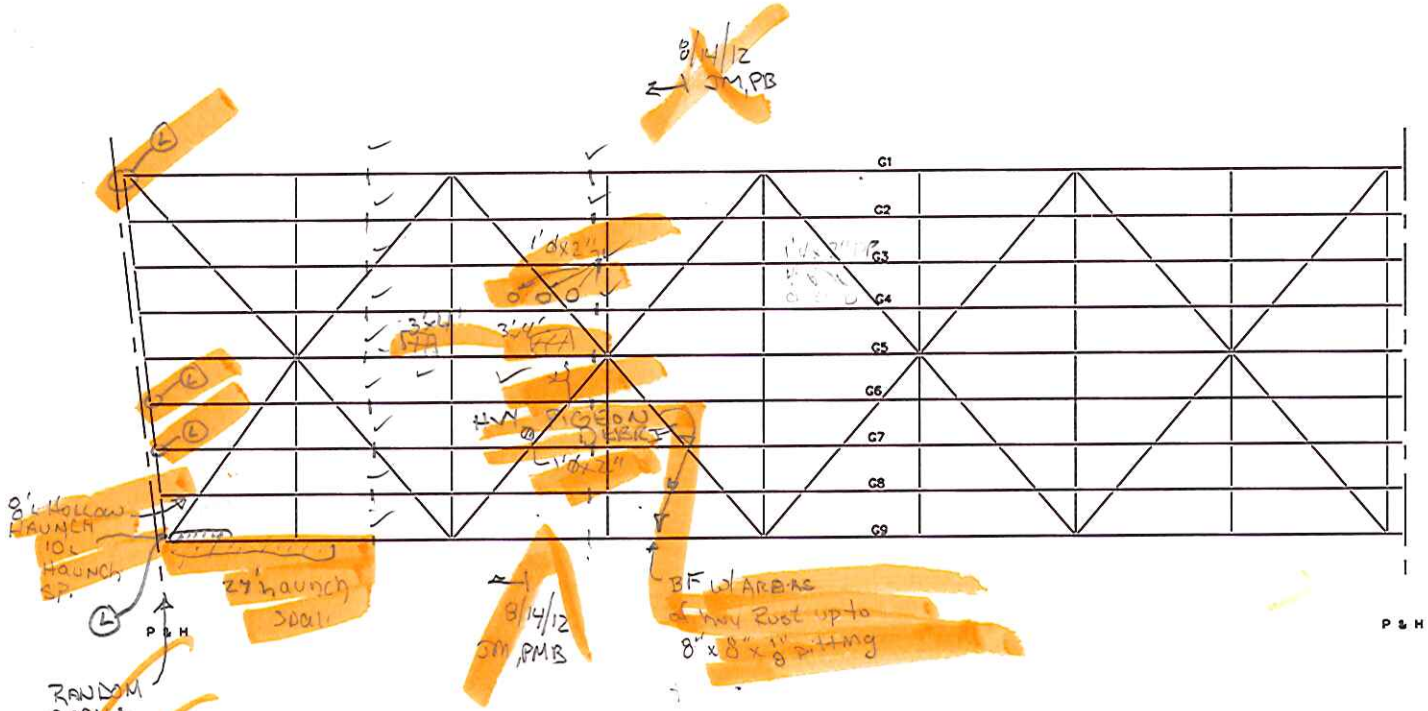

RANDOM SPALLS in END Haunch 1'x3"x1" & Sm. HA's (OVER DIRT)

SPAN 9 – HUNG PORTION
(OVER RR)

- at hanger line hung side at Bottom of web Hvy Rust 3"± high w/ NEG. SL BOTH sides
- Random Areas of pigeon Debris on BF

LEGEND

- HOLLOW AREA
- SHALLOW REBAR
- SPALL AREA
- SPALL AREA WITH EXPOSED REBAR
- MAP CRACKS (MpC) OR HAIRLINE MAP CRACKS (HLMpC)
- HAIRLINE CRACK (HLC) OR CRACKS (CRK)
- HONEY COMB AREA
- SCALE AREA (HVY, MED OR LT)
- WITH EFFLORESCENCE

(L) = SEE ELEV SKETCH

UPDATE NO.	DATE	COMPANY	CREW
△			
△			
△			
△			

Baker

SUPPLEMENTAL SHEET

☑ FIELD ORIGINAL ☐ TRANSCRIBED BY:_____

BRIDGE NO. 01765	DATE: 8/22/12
CREW: MTD, BH	SHEET

DESCRIPTION: SUPERSTRUCTURE

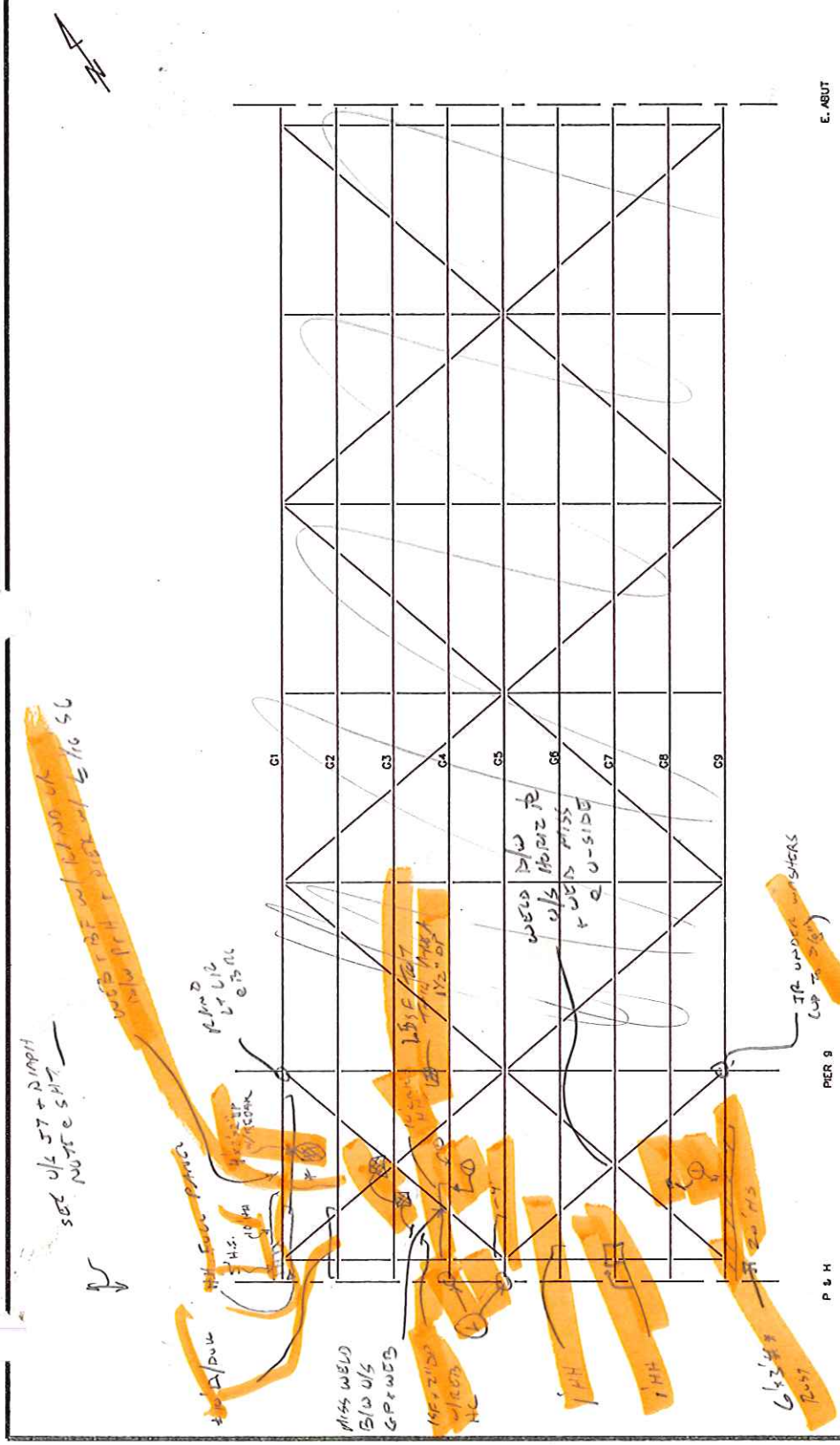

SPAN 10 + E. POSITION SPEC
(MOSTLY OVER DIRT)
HAIRLINES THRU PRINTS

LEGEND
① = BAND DULL / D

UPDATE NO.	DATE	COMPANY	CREW
△			
△			
△			
△			

LEGEND
- HOLLOW AREA
- SHALLOW REBAR
- SPALL AREA
- SPALL AREA WITH EXPOSED REBAR
- MAP CRACKS (MpC) OR HAIRLINE MAP CRACKS (HLMpC)
- HAIRLINE CRACK (HLC) OR CRACKS (CRK)
- HONEY COMB AREA
- SCALE AREA (HVY, MED OR LT)
- WITH EFFLORESCENCE

CRD, MMD & HAWKINS

Orlowsky, Michael

From: Kristoff, William
Sent: Tuesday, August 14, 2012 11:40 AM
To: Lomotey, Sowatei K.; Cain, Leo C; Afrazi, Sohrab
Cc: McGuinness, Paul; Jakiel, Michael; Orlowsky, Michael
Subject: RE: Bridge 01765 0 I-84 EB over AMTRAK & Local Roads in Hartford.

I have a call into the field, but I believe this is an electrical conduit servicing the underbridge lighting in span 1 over Asylum Street, so I would assume its CL&P.

From: Lomotey, Sowatei K. [mailto:Sowatei.Lomotey@ct.gov]
Sent: Tuesday, August 14, 2012 11:27 AM
To: Kristoff, William; Cain, Leo C; Afrazi, Sohrab
Cc: McGuinness, Paul; Jakiel, Michael; Orlowsky, Michael
Subject: RE: Bridge 01765 0 I-84 EB over AMTRAK & Local Roads in Hartford.

Bill,
Can you find out who owns the "Hanging Conduit" and our Utility Department will contact them.

Thank you
skl

From: Kristoff, William [mailto:wkristoff@mbakercorp.com]
Sent: Tuesday, August 14, 2012 9:47 AM
To: Cain, Leo C; Lomotey, Sowatei K.
Cc: McGuinness, Paul; Jakiel, Michael; Kristoff, William; Orlowsky, Michael
Subject: FW: Bridge 01765 0 I-84 EB over AMTRAK & Local Roads in Hartford.

Guys,

See the below email and attached photos for the above bridge.

We will put the hollow areas on a priority C BMM and submit at a later date, but probably prior to the final report submission since this is a bigger bridge.

We were thinking of also making the conduit a C. It does hang down up to a 1', but not in the area of minimum clearance in this span which is along the west fascia.

Please let us know if you disagree with any of the above.

Thanks,

Bill

From: Orlowsky, Michael
Sent: Monday, August 13, 2012 4:45 PM
To: Kristoff, William
Subject: Bridge 01765 0 I-84 EB over AMTRAK & Local Roads in Hartford.

Per our discussion,

1. In span 1, there are hollow areas in the fascia girder deck haunches, underside of the joint at the pin & hanger, and end diaphragms at the pin & hangers. Also note that there are hollow areas in the west abutment and pier 1 adjacent to sidewalks (photos 003.jpg, 005.jpg and 025.jpg).
2. There is a transverse conduit for the under-bridge lights in span 1 that is supported by five hangers. Three consecutive hangers are rusted through and another is rusted through 50% (new condition this inspection). The conduit hangs down ±1' (photo 019.jpg)

See attached sketches and photos.

MJO

Orlowsky, Michael

From:	Kristoff, William
Sent:	Tuesday, August 14, 2012 11:03 AM
To:	david.trott@teaminc.com; rob.luko@teaminc.com
Cc:	McGuinness, Paul; Jakiel, Michael; Orlowsky, Michael; Kristoff, William
Subject:	UT pin testing on Bridge 01765 in Hartford, CT: I-84 EB over local roads, Amtrak RR and parking lots
Attachments:	01765 PLANS - 1963.pdf; 01765_Location Map.pdf; 01765 fix hanger.jpg; 01765 exp hanger.jpg

Morning Dave,

We need seven (7) pin and hanger lines for the above bridge UT tested, typical to the other pin testing you have done for us for CT DOT.

See the attached location map, typical photos and partial plans for the above bridge. These plans only show the first 4 spans, but are there are ten total spans. The typical pin and hanger detail is shown on page 9 of 16 of the attached pdf. This is one hanger line in span 1 (2 pins per girder, 9 girders), then two lines each in spans 3, 6 and 9. Spans 3 and 6 have both expansion (2 pins per girder, 9 girders) and fixed hangers (1 pin per girder, 9 girders). Both lines in span 9 are expansion type (2 pins per girder, 9 girders). Thus, total pins needing testing is approximately 108. These pins were replaced with stainless steel pins at some point in the past.

We are currently out there all of this week and most of next week with access equipment. Ideally, it would great if you can get a technician out there later this week and/or next week, but now this may be short notice.

Please let me know your staff availability ASAP.

Also, one line may be over Amtrak RR, but I don't have confirmation of this yet, but will. Do your technicians have Amtrak Railroad safety training?

I will send the remaining plans for this bridge after we obtain them from the department.

Please call with any questions and/or concerns with this work.

Thanks,

Bill

William Kristoff, PE
Michael Baker Engineering, Inc.
500 Enterprise Drive, Suite 2B
Rocky Hill, CT 06067
860-563-3044 (office)
860-257-2409 (direct line)
860-471-0606 (cell)
860-529-6627 (fax)

Orlowsky, Michael

'om: Kristoff, William
Sent: Monday, August 13, 2012 2:13 PM
To: Orlowsky, Michael; Jakiel, Michael
Subject: FW: Bridge 01765 in Hartford: I-84 EB over Amtrak, local roads and parking lot - Pin and Hanger UT testing

FYI

From: Cain, Leo C [mailto:Leo.Cain@ct.gov]
Sent: Monday, August 13, 2012 1:54 PM
To: Kristoff, William
Subject: RE: Bridge 01765 in Hartford: I-84 EB over Amtrak, local roads and parking lot - Pin and Hanger UT testing

Yes

Also per page 6-139

From: Kristoff, William [mailto:wkristoff@mbakercorp.com]
Sent: Monday, August 13, 2012 12:23 PM
To: Cain, Leo C; Lomotey, Sowatei K.
Cc: McGuinness, Paul; Jakiel, Michael; Orlowsky, Michael; Kristoff, William
Subject: Bridge 01765 in Hartford: I-84 EB over Amtrak, local roads and parking lot - Pin and Hanger UT testing

Guys,

We are doing the in-depth inspection of the above bridge which has 7 pin and hanger lines that do NOT have a redundant support assembly. Thus, per page 6-83 of the BIM we need to have all these pins UT tested.

Please confirm the department wants this done. Technically, these should have also been done back in 2002.

Thanks,

Bill

Orlowsky, Michael

:om:	Kristoff, William
Sent:	Thursday, August 09, 2012 9:36 AM
To:	Cain, Leo C (Leo.Cain@ct.gov); 'Lomotey, Sowatei K.' (Sowatei.Lomotey@ct.gov)
Cc:	Jakiel, Michael; McGuinness, Paul; Orlowsky, Michael; Kristoff, William
Subject:	FW: Bridge Nos. 01765 & 01766
Attachments:	IMG_5846.JPG; IMG_5847.JPG; IMG_5848.JPG; 01765 locked gate map.pdf

Guys,
We recon'd these bridges in Hartford yesterday, which we are planning on starting next week.

We have 2 access issues we need help with (see Mikes email below):

1. We need a key to a locked gate in the back of a parking lot adjacent to these two bridges. See attached photos 5847 and 5848, and attached plan view sketch of gate location.
2. If needed, would we be able to get the barriers moved along Hoadley Place to access the end spans? See attached photo 5846. We are going to check another way to access these end areas later today, so this may not required, but will let you know.

I will be out of the office for most of the day. If you need more information on these issues, please contact Mike Orlowsky via email or phone, 860-257-2407.

Thanks,

ill

From: Orlowsky, Michael
Sent: Wednesday, August 08, 2012 5:21 PM
To: Kristoff, William
Subject: Bridge Nos. 01765 & 01766

William,

Today Brian and I did some recon work for Bridges 01765 & 01766. There is a locked gate located in the parking lot across from the train station with a DOT lock on it. We will need to have this lock opened to access spans 2-5. Also, there are concrete barriers located along Hoadley PL near its intersection with Foot Guard PL. At least one of these barriers will need to be moved to allow access to the end spans of Bridges 01765 & 01766. See attached photos.

Previous 01765 inspection said to "contact Djay Gonzalas at 860-209-9554, extension 3080 in order to access spans 2-6 along and over the parking lot at the north side of Spruce Street". I am not sure if this person is from the parking lot of ConnDOT. The gentleman working at parking lot does not have a key to the parking lot gate.

MJO

Orlowsky, Michael

:om: Kristoff, William
Sent: Wednesday, August 08, 2012 8:03 AM
To: Orlowsky, Michael; Howlett, Brian; Skoplyak, Yaroslav
Cc: Long, Christopher
Subject: FW: Bridge 01765 - I-84EB over Amtrak RR and local roads in Hartford: bridge labeling

FYI – they want us to label it properly

From: Lomotey, Sowatei K. [mailto:Sowatei.Lomotey@ct.gov]
Sent: Wednesday, August 08, 2012 7:59 AM
To: Kristoff, William; Cain, Leo C
Cc: McGuinness, Paul; Jakiel, Michael; Orlowsky, Michael
Subject: RE: Bridge 01765 - I-84EB over Amtrak RR and local roads in Hartford: bridge labeling

Bill,
The in-depth inspection provides you with the opportunity to label the girders appropriately to the BIM. Provide a legend sheet to correlate what is shown differently on the plans.

Thanks
skl

From: Kristoff, William [mailto:wkristoff@mbakercorp.com]
Sent: Tuesday, August 07, 2012 4:17 PM
To: Cain, Leo C; Lomotey, Sowatei K.
Cc: McGuinness, Paul; Jakiel, Michael; Kristoff, William; Orlowsky, Michael
Subject: Bridge 01765 - I-84EB over Amtrak RR and local roads in Hartford: bridge labeling

Guys,

Just a FYI: we are doing the in-depth inspection of this bridge starting next week. The spans are labeled west to east, but the girders are numbered south to north based on the plans. Even though the girder labeling is not per the BIM, we are not going to change it.

If you disagree, please let us know.

Thanks,

Bill

Orlowsky, Michael

From: Kristoff, William
Sent: Thursday, August 23, 2012 5:59 PM
To: 'Lomotey, Sowatei K.' (Sowatei.Lomotey@ct.gov); Cain, Leo C (Leo.Cain@ct.gov)
Cc: McGuinness, Paul; Jakiel, Michael; Orlowsky, Michael; Kristoff, William
Subject: FW: Potential spalls in girder haunches for Bridge No. 01765.
Attachments: Pier 4 Potential Spall.jpg; Span 6 potential spall.jpg; Westbound next to pier 4.jpg; Westbound next to span 7.jpg; 01765 BMM (Priority B - Haunches next to I84) Baker.doc

Sorry for the delay. See the attached BMM for these areas.

From: Kristoff, William
Sent: Thursday, August 23, 2012 11:14 AM
To: Cain, Leo C (Leo.Cain@ct.gov); 'Lomotey, Sowatei K.' (Sowatei.Lomotey@ct.gov)
Cc: Jakiel, Michael; Orlowsky, Michael; McGuinness, Paul; Kristoff, William
Subject: FW: Potential spalls in girder haunches for Bridge No. 01765.

Guys,

See the below email and attached photos of potential spalls that we couldn't safely remove for bridge 01765 in Hartford. We will prepare a priority B BMM for these items and forward to you this afternoon.

Please call/email with any questions or concerns on this item.

Thanks,

Bill

From: Orlowsky, Michael
Sent: Thursday, August 23, 2012 10:53 AM
To: Kristoff, William
Subject: Potential spalls in girder haunches for Bridge No. 01765.

William,

Per our conversation yesterday, there are potential spalls in the girder 1 deck haunches at pier 4 (spans 4 & 5) and also in span 6 adjacent to I-84 westbound.

Potential spalls at pier 4 are adjacent to I-84 Eastbound and there is a definite danger that if we attempted to remove those haunches that they could hit the pier on the way down and fall into I-84 westbound. I didn't want to have place the travelling public at risk. I don't think the concrete would have hit a car, but if people would swerve at 60 miles per hour, the potential for accidents is definitely there. Note that these spans are over dirt areas.

The potential spalls in span 6 were not removed because it would be extremely difficult to remove those haunches without damaging the man-lift. Since Bridge No. 01766 is adjacent to Bridge No. 01765, it is difficult to position the manlift in such a way that the concrete did not fall onto the boom or into the basket (tough to keep the basket away from the fascia with I-84 westbound so close). There was also the same fear that if spalled haunch hit the girder bottom flange, that concrete could fall into I-84 westbound. Note that this span is over a parking lot.

STATE OF CONNECTICUT
DEPARTMENT OF TRANSPORTATION

MEMORANDUM

subject: **BMM No.** 12-475
Bridge No. 01765
Interstate 84 Eastbound over AMTRAK
& Local Roads
Hartford

date: 8/24/12

to:
Transportation Maintenance Administrator
Bureau of Highway Operations

from: Leo C. Cain Jr.
Transportation Supervising Engineer
Bridge Safety and Evaluation
Bureau of Engineering and Construction

This memorandum is a follow-up to a telephone conversation on (Month Day, Year) between (Maintenance Staff) of your staff and (Bridge Safety Staff) of Bridge Safety and Evaluation, concerning the following deficiency and recommendation for the subject structure:

1. There are large potential spalls in the girder 1 deck haunches at pier 4 (spans 4 & 5) and also at several locations along the girder 1 haunch in span 6. The haunches are cracked and/or have areas of impacted rust between the girder top flanges and haunches. Note that while these hollow areas are over dirt or parking areas, there is the potential for spalled concrete to fall into the adjacent I-84 westbound roadway during removal.

Please direct persons under your jurisdiction to:

1. Remove hollow haunches (<1/2 cubic yard).

All repairs shall be performed utilizing appropriate, approved materials and tried and proven methods unless otherwise specified.

This item is considered **Priority B**. Additional items may be forwarded with the final inspection report.

If you have any questions concerning this matter, please contact Sowatei Lomotey at (860) 594-3394. Please contact me when this work has been completed.

M. Orlowsky/mjo

cc: Thomas A. Harley – James H. Norman – Rabih M. Barakat
Scott A. Hill - Robert P. Zaffetti - Leo C. Cain Jr. - Sowatei Lomotey
Ted Aldieri, FHWA
Michael Baker Engineering, Inc.

ACCEPTED
SENT

STATE OF CONNECTICUT
DEPARTMENT OF TRANSPORTATION

MEMORANDUM

subject: **BMM No.** 12-514
Bridge No. 01765
Interstate 84 EB over AMTRAK & Local Roads
Hartford

date: 9/7/12

to:
Transportation Maintenance Administrator
Bureau of Highway Operations

from: Leo C. Cain Jr.
Transportation Supervising Engineer
Bridge Safety and Evaluation
Bureau of Engineering and Construction

This memorandum is a follow-up to a telephone conversation on (Month Day, Year) between (Maintenance Staff) of your staff and (Bridge Safety Staff) of Bridge Safety and Evaluation, concerning the following deficiency and recommendation for the subject structure:

1. The pier 4 elastomeric concrete joint header has a large bituminous patch and an adjacent 8 feet long hollow and broken up area in the west header in the left center lane. The patch and the broken up areas vibrate/deflect up to ½ inch (estimated) under live load. Note that the headers for this joint also have other hollow areas, corner spalls, and cracks up to 1/8 inch wide away from the left center lane. See the attached photo.
2. The elastomeric concrete joint header at the east line of pin & hangers in span 9 is heaved up 1.5 inches in the right lane/ramp area. It could not be determined if there was deflection under live load since that lane was closed during the inspection. The headers along the entire length of this joint have random hollow areas, random breaking up areas, and map cracked areas that are depressed up to ¼ inch. See the attached photos.

Please direct persons under your jurisdiction to:

1. Repair the joint headers (<1 cubic yard).
2. Repair the joint headers (<1 cubic yard).

All repairs shall be performed utilizing appropriate, approved materials and tried and proven methods unless otherwise specified.

These items are considered **Priority B**. Additional items may be forwarded with the final inspection report.

If you have any questions concerning this matter, please contact Sowatei Lomotey at (860) 594-3394. Please contact me when this work has been completed.

M. Orlowsky/mjo

SENT TO
BS&E
9/6/12

cc: Thomas A. Harley – Jennifer Trio
James H. Norman
Scott A. Hill - Robert P. Zaffetti - Leo C. Cain Jr. - Sowatei Lomotey
Ted Aldieri, FHWA
Michael Baker Engineering, Inc.

STATE OF CONNECTICUT
DEPARTMENT OF TRANSPORTATION

MEMORANDUM

subject: **BMM No.**
Bridge No. 01765
Interstate 84 Eastbound over AMTRAK
& Local Roads
Hartford

date:

to:
Transportation Maintenance Administrator
Bureau of Highway Operations

from: Leo C. Cain Jr.
Transportation Supervising Engineer
Bridge Safety and Evaluation
Bureau of Engineering and Construction

This memorandum is a follow-up to a telephone conversation on (Month Day, Year) between (Maintenance Staff) of your staff and (Bridge Safety Staff) of Bridge Safety and Evaluation, concerning the following deficiency and recommendation for the subject structure:

1. There are large potential spalls in the girder 1 deck haunches at pier 4 (spans 4 & 5) and also at several locations along the girder 1 haunch in span 6. The haunches are cracked and/or have areas of impacted rust between the girder top flanges and haunches. Note that while these hollow areas are over dirt or parking areas, there is the potential for spalled concrete to fall into the adjacent I-84 westbound roadway during removal.

Please direct persons under your jurisdiction to:

1. Remove hollow haunches (<1/2 cubic yard).

All repairs shall be performed utilizing appropriate, approved materials and tried and proven methods unless otherwise specified.

This item is considered **Priority B**. Additional items may be forwarded with the final inspection report.

If you have any questions concerning this matter, please contact Sowatei Lomotey at (860) 594-3394. Please contact me when this work has been completed.

M. Orlowsky/mjo

cc: Thomas A. Harley – James H. Norman – Rabih M. Barakat
Scott A. Hill - Robert P. Zaffetti - Leo C. Cain Jr. - Sowatei Lomotey
Ted Aldieri, FHWA
Michael Baker Engineering, Inc.

ALREADY SENT TO BSE & REPAIRS WILL BE DONE

STATE OF CONNECTICUT
DEPARTMENT OF TRANSPORTATION

MEMORANDUM

subject: **BMM No.**
Bridge No. 01765
I-84 EB over AMTRAK & Local Roads
Hartford

Added to BMM 12-558

date:

to:
Transportation Maintenance Administrator
Bureau of Highway Operations

from: Leo C. Cain Jr.
Transportation Supervising Engineer
Bridge Safety and Evaluation
Bureau of Engineering and Construction

We are in receipt of the most recent inspection report for the subject structure which indicates the location of the following deficiency:

1. The girder webs at piers 4 & 7 have numerous areas with web losses in bearing in excess of 25% and up to 88% with rusted through holes in the webs and stiffener bases above the bearings. The girder webs and stiffeners at the hinges have areas of section losses, up to 5/8 inch deep (total both sides) in the thickened web bases, and adjacent stiffener bases have as little as 1/16 inch remaining. There are isolated rusted through holes in the non-thickened web bases near the pin and hangers (span 6, girder 9 west line of hangers). In critical zones, the fascia girder bottom flanges have areas of up to ½ inch deep section loss, resulting in up to 18% section loss. The adjacent webs and stiffeners have section losses, typically not more than 1/8 inch deep Areas of critical losses in the webs and flanges in addition to locations noted above are as follows (See 2012 report photos 52-61) :
   - Webs in bearing:
     - Span 4, girder 9 at pier 4.
     - Span 5, girders 4-9 at pier 4.
     - Span 7, girder 9 at pier 7.
   - Bottom flanges in critical zones:
     - Span 6, girder 9.
     - Span 7, girder 9.
     - Span 9, girder 1.
2. The deck has hollow and/or dull areas throughout in the underside and along the girder haunches and end diaphragm haunches that are over sidewalks, local roads, parking lot, paved slopes adjacent to parking, over a shed for the parking area, and over the railroad. See the 2012 report framing plans for locations (See 2012 report photos 12-16).
3. The west abutment stem, west abutment pedestals, west abutment backwall, and piers 1, 6, 7 & 8 caps and columns have hollow areas adjacent to sidewalks, over local roads, or over areas where cars were seen parked (See 2012 report photos 75-80).

SENT TO BMM 10/5/12

Please direct persons under your jurisdiction to:

1. Clean, paint, and repair the steel girders, as required following analysis.
2. Remove deteriorated concrete from the deck underside (±2 cubic yards).
3. Remove the deteriorated concrete from the substructure (<1 cubic yard).

These items are considered **Priority C.** All repairs shall be performed utilizing appropriate, approved materials and tried and proven methods unless otherwise specified.

This report is currently under review by Bridge Safety staff. Additional items may be forwarded with copies of the approved inspection report.

If you have any questions concerning this matter, please contact me at (860) 594-3171. Please notify this office when the work has been completed.

M. Orlowsky/mjo

cc: Scott A. Hill - Robert P. Zaffetti - Leo C. Cain Jr. - Sowatei Lomotey
Michael Baker Engineering, Inc.

STRUCTURE EVALUATION

SHEET 2 OF 2 FORM BRI-19 REV 10/00

SHEET_____ OF_____

Bridge Number	01765	NBIS Length	
Town Name	HARTFORD	Yes	1271
Facility Carried	INTERSTATE-84 EB		
Feature Crossed	AMTRAK RR & LOCAL ROADS		

Inspected By: M. ORLOWSKY & B. HOWLETT

CLASSIFICATION

112) NBIS Bridge Length	Yes	
104) Highway System	1	On System
26) Functional Class	11	Urban Principal Arterial - Interstate
100) Defense Highway	1	Route is on a Interstate STRAHNET Route
101) Parallel Structure	R	Right structure of parallel bridges
102) Direction of Traffic	1	1-way traffic
103) Temporary Structure		
110) Designated National Network	1	On national network
20) Toll	3	On Free Road
21) Maintain	1	State Highway Agency
22) Owner	1	State Highway Agency
Report Class	S	STATE
37) Historical Significance	5	Bridge is not eligible for National Register

WATERWAY

DrainageBasinCode

38) Navigation Control

39) Navigation Vert Clr. 40) Navigation Horiz Clr.

116) Vert-Lift Brg Nav Min

111) Pier Abutment Protection

PROPOSED IMPROVEMENTS

75A) Type of Work Proposed

75B) Work Done By

76) Length of Struct. Improvement ft ft

94) Bridge Improvement Cost $

95) Roadway Improvement Cost $

96) Total Project Cost $

97) Year of Improvement Cost Est.

114) Future ADT 115) Year Future ADT

List No. Project No. Advertised

POSTED SIGNS & UTILITIES

Other Posted Signs 1

Other Posted Signs 2

Actual P.L. Single Unit Truck	tons		Actual P.L. 4Axle Truck	tons	
Rec. P.L. Single Unit Truck	tons		Rec. P.L. 4Axle Truck	tons	
Actual P.L. Semi-TrailerTruck	tons		Actual P.L. 3S2 Truck	tons	
Rec. P.L. Semi-TrailerTruck	tons		Rec. P.L. 3S2 Truck	tons	
Rec. P.L. All Vehicles	tons		Actual P.L. All Vehicles	tons	
Posted Vert Clearance On Bridge	ft	in		ft	In
Posted Vert UnderClearance	13 ft	9 in		ft	In
Posted Speed Limit	40 mph			50	mph
Utility					

LOAD RATING AND POSTING

31) Design Load	5	Evaluation Code	L	
63) Operating Rating Type	1	Year of Evaluation	1998	
64) Operating Rating	73.0	70) Bridge Posting	5	
65) Inventory Rating Type	1	41) Structure Status	A	A
66) Inventory Rating	43.0			

CONDITION

		Rating	By
58) Deck	5	4	MTO
59) Superstructure	6	4	MTO
60) Substructure	6	6	MTO
61) Channel & Chan. Protection	N	N	MTO
62) Culverts	N	N	MTO

see 5

APPRAISALS

		Rating	By
67) Structure Evaluation	5	4	WHE
68) Deck Geometry	4	4	MTO
69) Under Clear Vert & Horiz	3	3	MTO
71) Waterway Adequacy	N	N	MTO
72) Approach Rdwy Alignment	6	6	MTO
113) Scour Critical			

see

Items 58 Thru 72 Checked By:

36) Traffic Safety Features:

A) Bridge Railings	0	0
B) Transitions	1	1
C) Approach Guardrail	1	1
D) Approach Guardrail End	1	1

OTHER FEATURES

Fence Required	No	Barrel Ladder	No	
Fence Present	No	Stand Pipes	No	
Fence Height	0.0 ft	Cat Walks	No	
Fence Type	BLANK	Movable Inspection System	No	
Fence Material		Loose Concrete Checked?	Yes	Y
Fence Top Type				

INSPECTION COMMENTS

Proposed Next Indepth Insp Year	2012
Senior	Ned Statchen
Supervisor	Theodore Lapierr

PE 20004 10/9/12

REVIEWED BY: _____ Date _____

Bridge Number 01765

Inspected By: M. ORLOWSKY & B. HOWLETT

Sufficiency Rating 66.72
Previous Inspection Date 10/11/2010

BS&E Received ☐ Data Entry By: SL
Copies Made ☐ Data Entry Date: 10-17-12

STATE OF CONNECTICUT
DEPARTMENT OF TRANSPORTATION
BRIDGE SAFETY & EVALUATION

STRUCTURE EVALUATION

SHEET 1 OF 2 FORM BRI-19 REV 10/00

SHEET_____ OF_____

90) Inspection Date	Inspection Team	91) Frequency	Class:
08 13 12	20 23	24	03
Indepth Insp	Deck Survey	Access	Flagman
5/23/2002 8/13/12	1/1/1900	24	

RED FLAG ☐

CRITICAL FEATURE INSPECTIONS

	Type	Frequency	Team	Date	
Fracture:					
Uwater:					
Special:	A A	24 24	20 23	10/11/2010	8/13/2012

IDENTIFICATION

Bridge Name
Town Name HARTFORD Town Code 37070
5) Inventory Route:
A) Record Type 1 D) Route Number 00084
B) Signing Prefix 1 Interstate High E) Directional Suffix 2 East
C) Level of Service 1 Mainline
6) Feature Intersected AMTRAK RR & LOCAL ROADS
7) Facility Carried: INTERSTATE-84 EB
9) Location .86 W OF EXIT TO I-91 SB
11) Milepoint 61.63 Miles
16) Latitude 41deg 46 min 12.00 sec deg min . sec
17) Longitude 72deg 41 min .00 sec deg min . sec
98) Border Bridge:
A) State Code B) Percent Responsibility %
C) Border Town Name
99) Border Bridge Structure No

STRUCTURE TYPE AND MATERIAL

43) Structure Type, Main:
A) Material 4 Steel continuous B) Design Type 2 Stringer/Multi-beam o
44) Structure Type, Approach:
A) Material 0 Other B) Design Type 0 Other
45) Number of Spans, Main Unit 10
46) Number of Approach Spans 0
107) Deck Structure Type 1 Concrete Cast-in-Place
108) Wearing Surface/Protective System:
A) Type of Wearing Surface 6 Bituminous
B) Type of Membrane 8 Unknown
C) Type of Deck Protection 0 None

AGE AND SERVICE

27) Year Built 1966 106) Year Reconstructed 1992
42) Type of Service:
A) On 1 Highway B) Under 4 HIGHWAY-RAILRO
28) Number of Lanes:
A) On 4 B) Under 12
29) Average Daily Traffic 80500 083100 Half ADT?: -Yes Y
109) Percent Truck 14%
30) Year of ADT 2009 2011
19) Bypass, Detour Length 1miles

GEOMETRIC DATA

48) Length of Max Span 220ft
49) Structure Length 1271ft
50) Curb or Sidewalk Widths:
A) Left 1.5ft . B) Right 1.5ft 00.0 ft
51) Brg Rdwy width,curb-curb 54.0ft . ft
52) Deck Width, Out-Out 70.5ft . ft
32) Approach Roadway Width 44ft ft
33) Bridge Median 0 No Median
Deck Area 83895 sqft sqft
34) Skew Angle 99deg
35) Structure Flared 1
10)Inv. Rte. Min. Vert Clearance 19ft 1in ft in
47) Log Inv. Rte. Total Horiz Clr.: 54.0ft . ft
47) RLog Inv. Rte. Total Horiz. Clr.: ft . ft
53) Min Vert Clearance Over Bridge 19ft 1in ft in
54) Min Vert Under Clearance H Ref 14ft 0in Ref ft in
55) Min Lat Under Clearance on Right R Ref 5.0ft H Ref 00.0 ft *
56) Min Lat Under Clearance on Left 0.0ft . ft

BRIDGE COMMENTS

Project No. 0063-0479 (1996): Rehabilitation (List 05).
SUMMER-WINTER JOINT MEASUREMENT LIST (KMR 3/1/10).

* ITEM 55 - NON MOUNTABLE GRANITE CURBS @ ASYLUM ST.

Your Agency Name

Your Office Name
Your Department Name

Structure Inventory and Appraisal Sheet (English Units)

Bridge Key: 01765 Agency ID: 01765 SR: 36.0 SD/FO: SD

IDENTIFICATION

State 1:	09 Connecticut	Struc Num 8:	01765
Facility Carried 7:	INTERSTATE-84 EB	Location 9:	.88 W OF EXIT TO I-91 SB
Rte (On/Under) 5A:	Route On Structure	Rte. Signing Prefix 5B:	1 Interstate Hwy
Level of Service 5C:	1 Mainline	Route Number 5D:	00084
Directional Suffix 5E:	2 East	% Responsibility:	0.00
SHD District 2:	01	County Code 3:	Hartford
Place Code 4:	HARTFORD	Mile Post 11:	61.617 mi
Feature Intersected 6:	AMTRAK RR & LOCAL ROADS		
Latitude 16:	41° 14' 12"	Longitude 17	072° 41' 00"
Border Bridge Code 98	Unknown (P)		
Border Bridge Number 99	NA		

INSPECTION

Frequency 91:	24 months	Inspection Date 90:	8/13/2012	Next Inspection:	8/13/2014
FC Frequency 92A:	NA	FC Inspection Date 93A:	NA	Next FC Inspection:	NA
UW Frequency 92B:	NA	UW Inspection Date 93B:	NA	Next UW Inspection	NA
SI Frequency 92C:	24 months	SI Date 93C:	8/13/2012	Next SI:	~~10/8/2010~~ 8/13/2014
Element Frequency:	24 months	Element Insp. Date:	~~10/11/2010~~ 8/13/2012	Next Elem. Insp.:	8/13/2014

CLASSIFICATION

Defense Highway 100:	1 STRAHNET hwy	Parallel Structure 101:	Right of || bridge
Direction of Traffic 102:	1 1-way traffic	Temporary Structure 103:	Unknown (NBI)
Highway System 104:	1 On the NHS	NBIS Length 112:	Long Enough
Toll Facility 20:	3 On free road	Functional Class 26:	11 Urban Interstate
Defense Hwy 110:	1 STRAHNET hwy	Historical Significance 37:	5 Not eligible for NRHP
Owner 22:	01 State Highway Agency		
Custodian 21:	01 State Highway Agency		

STRUCTURE TYPE AND MATERIALS

Number of Approach Spans 46	0	Number of Spans Main Unit 45:	10

4 Steel Continuous

Deck Type 107:	1 Concrete-Cast-in-Place
Wearing Surface 108A:	6 Bituminous
Membrane 108B:	8 Unknown
Deck protection 108C	None

CONDITION

Deck 58:	4 Poor	Super 59:	~~4 Poor~~ 5	Sub 60:	6 Satisfactory
Culvert 62:	N N/A (NBI)	Channel/Channel Protection 61:	N N/A (NBI)		

SCF

AGE AND SERVICE

Year Built 27:	1966	Year Reconstructed 106:	1992		
Type of Service on 42A	1 Highway				
Type of Service under 42B	4 Highway-railroad				
Lanes on 28A:	4	Lanes under 28B:	12	Detour Length 19:	1.2 mi
ADT 29:	83,100	Truck ADT 109:	14%	Year of ADT 30:	2011

LOAD RATING AND POSTING

Inventory Rating Method 65:	1 LF Load Factor	Operating Rating Method 63:	1 LF Load Factor
Inventory Rating 66:	HS23.7	Operating Rating 64:	HS40.2
Design Load 31:	5 MS 18 (HS 20)	Posting 70:	5 At/Above Legal Loads
Posting Status 41:	A Open, no restriction		

GEOMETRIC DATA

Length Max Span 48:	220.14 ft	Structure Length 49:	1,271.00 ft
Curb/Sdwlk Width L 50A	1.64 ft	Curb/Sidewalk Width R 50B	1.64 ft
Width Curb to Curb 51:	54.13 ft	Width Out to Out 52:	70.54 ft
Approach Roadway width 32: (w/ shoulders)	43.96 ft	Median 33:	0 No median
Deck Area:	83,693.92 sq. ft		
Skew 34:	99.00°	Structure Flared 35	1 Yes, flared
Vertical Clearance 10	19.09 ft	Horizontal Clearance 47:	54.13 ft

Minimum Vertical Clearance Over Bridge 53:	19.09 ft
Minimum Vertical Underclearance Reference 54A	H Hwy beneath struct
Minimum Vertical Underclearance 54B:	14.01 ft
Minimum Lateral Underclearance Reference R 55A:	H Hwy beneath struct
Minimum Lateral Underclearance R 55:	4.92 ft
Minimum Lateral Underclearance L 56:	0.00 ft

APPRAISAL

Bridge Rail 36A:	0 Substandard	Approach Rail 36C:	1 Meets Standards
Transition 36B:	1 Meets Standards	Approach Rail Ends 36D:	1 Meets Standards
Str Evaluation 67:	4 Minimum Tolerable	Deck Geometry 68:	4 Tolerable
Underclearance, Vertical and Horizontal 69:	3 Tolerable		
Waterway Adequacy 71:	N Not applicable	Approach Alignment 72:	6 Equal Min Criteria
Scour Critical 113:	N Not Over Waterway		

PROPOSED IMPROVEMENTS

Bridge Cost 94:	$1,000	Type of Work 75:	38 Other Structural
Roadway Cost 95:	$1,000	Length of Improvement 76	0.3 ft
Total Cost 96:	$2,000	Future ADT 114:	41,875
Year of Cost Estimate 97	2000	Year of Future ADT 115:	2029

NAVIGATION DATA

Navigation Control 38	NA-no waterway		
Vertical Clearance 39	0.0 ft	Horizontal Clearance 40:	0.0 ft
Pier Protection 111:	Unknown (NBI)	Lift Bridge Vertical Clearance 116	0.0 ft

Structure Inventory and Appraisal Sheet (English Units)

ELEMENT CONDITION STATE DATA

Str Unit	Elm/Env	Description	Units	Total Qty	% in 1	Qty. St. 1	% in 2	Qty. St. 2	% in 3	Qty. St. 3	% in 4	Qty. St. 4	% in 5	Qty. St. 5
0	14/3	P Conc Deck/AC Ovly	(SF)	83,895	0%	0	100%	83,895	0%	0	0%	0	0%	0
0	107/3	Paint Stl Opn Girder	(LF)	11,362	58%	6,590	15%	1,704	25%	2,840	1%	114	1%	114
0	160/3	Unpnt Stl Pin/Hanger	(EA)	63	100%	63	0%	0	0%	0	0%	0	0%	0
0	205/3	R/Conc Column	(EA)	23	87%	20	13%	3	0%	0	0%	0	0%	0
0	215/3	R/Conc Abutment	(LF)	154	93%	143	5%	8	2%	3	0%	0	0%	0
0	234/3	R/Conc Cap	(LF)	577	90%	520	8%	46	2%	12	0%	0	0%	0
0	301/3	Pourable Joint Seal	(LF)	270	76%	205	19%	51	5%	14	0%	0	0%	0
0	305/3	Asphaltic Plug Joint	(LF)	344	75%	258	25%	86	0%	0	0%	0	0%	0
0	311/3	Moveable Bearing	(EA)	54	67%	36	33%	18	0%	0	0%	0	0%	0
0	313/3	Fixed Bearing	(EA)	63	100%	63	0%	0	0%	0	0%	0	0%	0
0	331/3	Conc Bridge Railing	(LF)	2,769	95%	2,631	5%	138	0%	0	0%	0	0%	0
0	359/3	Soffit Smart Flag	(EA)	1	0%	0	0%	0	0%	0	0%	0	100%	1
0	363/3	Section Loss SmFlag	(EA)	1	0%	0	0%	0	100%	1	0%	0	0%	0
0	370/3	deck drainage system	(LF)	873	93%	812	5%	44	2%	17	0%	0	0%	0
0	371/3	Free Fall Pipes, Scu	(EA)	18	22%	4	0%	0	78%	14	0%	0	0%	0