03 - DETAILS AND LAYOUTS
INDEX OF DRAWINGS

DRAWING NUMBER	DRAWING TITLE	DRAWING NUMBER	DRAWING TITLE
-	-		

DESIGNED BY:

URS
URS CORPORATION AES
500 ENTERPRISE DRIVE
ROCKY HILL, CT 06067

PROGRESS PLANS

REV.	DATE	REVISION DESCRIPTION	SHEET NO.
-	-	-	-
-	-	-	-
-	-	-	-
-	-	-	-
-	-	-	-
-	-	-	-

THE INFORMATION, INCLUDING ESTIMATED QUANTITIES OF WORK, SHOWN ON THESE SHEETS IS BASED ON LIMITED INVESTIGATIONS BY THE STATE AND IS IN NO WAY WARRANTED TO INDICATE THE CONDITIONS OF ACTUAL QUANTITIES OF WORK WHICH WILL BE REQUIRED.

Plotted Date: 11/12/2014

DESIGNER/DRAFTER: R. WOODHOUSE
CHECKED BY: T. HOLLAND

STATE OF CONNECTICUT
DEPARTMENT OF TRANSPORTATION

Filename: ...\MSH_0301_0163_TSH-V2-S03.dgn

SIGNATURE/
BLOCK:

PROJECT TITLE:
STAMFORD YARD CATENARY IMPROVEMENTS AND TRACK 7 EXTENSION

TOWN: **STAMFORD**

DRAWING TITLE: **DETAILS AND LAYOUTS INDEX OF DRAWINGS**

PROJECT NO. **301-163**
DRAWING NO. **SCS-00**
SHEET NO. **02.03.000**

11/12/2014
P:\500 CADD-GIS-Graphics\510 CADD\510.04 Struc. Bridge\MSta. Contract. Sheet. Files\MSH_0301_0163_TSH-V2-S03.dgn

Border Version: 11/14/08

F H W A REGION	STATE	TOWN	FED. AID PROJ. NO.	PROJ. NO.	YEAR	SHEET NUMBER
1	CONN.	VARIOUS		301-163	2014	

ITEM	DESCRIPTION	UNIT	QTY	ITEM	DESCRIPTION	UNIT	QTY	ITEM	DESCRIPTION	UNIT	QTY

THE INFORMATION, INCLUDING ESTIMATED QUANTITIES OF WORK SHOWN ON THESE SHEETS IS BASED ON LIMITED INVESTIGATIONS BY THE STATE AND IS IN NO WAY WARRANTED TO INDICATE THE TRUE CONDITIONS OR ACTUAL QUANTITIES OR DISTRIBUTION OF QUANTITIES OF WORK WHICH WILL BE REQUIRED.

URS
URS CORPORATION AES
500 ENTERPRISE DRIVE
ROCKY HILL, CT 06067
1-(860)-529-8882

NO.	DATE	DESCRIPTION

REVISIONS

STATE OF CONNECTICUT
DEPARTMENT OF TRANSPORTATION

STAMFORD YARD CATENARY IMPROVEMENTS

DETAILED ESTIMATE SHEET

ENGINEER: URS CORPORATION AES

DESIGNER: RW | DRAFTER: AMK | CHECKER: AJM

APPROVED: T. HOLLAND | DATE: XX/XX/XX

STRUCTURE NO. | BRIDGE LOG NO. | STRUCTURE SHEET NO. G-6

PROJECT CONTROL DATE: XX/XX/XX DISK FILENAME: G-6.dwg XX% DESIGN

F H W A REGION	STATE	TOWN	FED. AID PROJ. NO.	PROJ. NO.	YEAR	SHEET NUMBER
1	CONN.	VARIOUS		301-163	2014	

GENERAL NOTES

1. ALL WORK SHALL BE PERFORMED IN STRICT ACCORDANCE WITH THE REQUIREMENTS OF RELATED SECTIONS OF CDOT FORM 816, NATIONAL ELECTRICAL CODE (LATEST EDITION), NATIONAL ELECTRICAL SAFETY CODE (LATEST EDITION) AND AMERICAN RAILWAY ENGINEERING AND MAINTENANCE OF WAY ASSOCIATIONS (AREMA) AND AISC. FOR ORDER OF PRECEDENCE FOR THE CONTRACT DOCUMENTS REFER TO FORM 816 SECT. 1.05.04.

2. THE CONTRACTOR SHALL FIELD VERIFY AND LOCATE ALL OVERHEAD AND UNDERGROUND PUBLIC AND RAILROAD UTILITIES. PRIOR TO COMMENCEMENT OF THE WORK, THE ENGINEER, RAILROAD, AND THE UTILITY MUST BE NOTIFIED. REFER TO CDOT FORM 816 SECT. 1.05.06. ANY DAMAGE TO THE EXISTING UTILITIES SHALL BE REPAIRED BY THE CONTRACTOR AT HIS OWN COST.

3. THE CONTRACTOR SHALL VERIFY THE ACTUAL LOCATIONS OF EXISTING UTILITIES AND DUCT BANKS PRIOR TO COMMENCEMENT OF WORK.

4. THE CONTRACTOR SHALL PROTECT, PRESERVE, INCORPORATE, TEMPORARILY RELOCATE AND, IF NECESSARY, SUPPORT ALL EXISTING UTILITIES, AND ITEMS TO REMAIN. THE CONTRACTOR SHALL REPAIR OR REPLACED ANY ITEM DAMAGED DURING THE COURSE OF WORK AT NO ADDITIONAL COST, TO THE SATISFACTION OF THE ENGINEER.

5. THE CONTRACTOR SHALL PROTECT FROM DAMAGE ALL MONUMENTS, SURVEY POINTS AND BENCH MARKS NOT DESIGNATED FOR REMOVAL AND SHALL ESTABLISH OFFSET POINTS AS REQUIRED.

6. DUE TO THE NATURE OF PROJECTS RELATING TO THE REPLACEMENT OF EXISTING CATENARY SYSTEMS, REQUIRED MODIFICATIONS AND RELOCATIONS OF EXISTING FACILITIES CAN NOT ALWAYS BE ACCURATELY DETERMINED PRIOR TO THE COMMENCEMENT OF WORK. THE CONTRACTOR IS ADVISED THAT SIGNAL CABINETS, SIGNAL CABLES, CABLE TRAYS, LADDERS, PLATFORMS, GUYS, AND/OR OTHER IMPEDIMENTS AT EXISTING STRUCTURES MAY HAVE TO BE REMOVED AND/OR RELOCATED TO COMPLETE THE REQUIRED PROJECT TASKS. THESE REMOVALS/RELOCATIONS SHALL BE PERFORMED BY THE CONTRACTOR AT NO ADDITIONAL COST TO THE STATE. THE CONTRACTOR MUST RECEIVE APPROVAL FROM ENGINEER PRIOR TO THE RELOCATION / REMOVALS.

7. APPROVAL, BY THE ENGINEER, OF SHOP DRAWINGS AND PROCEDURES FOR CONSTRUCTION AND TESTING SHALL NOT ABSOLVE THE CONTRACTOR FROM ANY LIABILITY.

8. ALONG TRACK STATIONING OF POLE FOUNDATIONS AND DOWN GUY ANCHOR FOUNDATIONS SHALL BE VERIFIED BY THE CONTRACTOR PRIOR TO COMMENCING WORK. ANY CONFLICTS SHOULD BE REFERRED TO THE ENGINEER FOR RESOLUTION.

9. POLE OFFSET DIMENSION IS GIVEN FROM CENTERLINE OF TRACK TO FACE OF CATENARY SUPPORT STRUCTURE AT HIGH RAIL LEVEL, AND MUST BE VERIFIED BY THE CONTRACTOR PRIOR TO FABRICATION OF ANY AFFECTED STRUCTURES OR ASSEMBLIES.

10. HANGER LENGTH WILL BE SUPPLIED TO THE CONTRACTOR IN ACCORDANCE WITH HIS SUPPLIED FIELD DIMENSIONS. ANY ADDITIONAL ADJUSTMENTS WILL BE THE CONTRACTOR'S RESPONSIBILITY.

11. ALLOWABLE CONTACT WIRE GRADIENT IN TEMPORARY SITUATIONS SHALL BE NOT GREATER THAN 1 IN 3 TIMES THE LINE SPEED IN MPH.

12. THE CONTRACTOR SHALL CONSULT THE ENGINEER FOR RESOLVING ANY CONFLICT IN MAINTAINING WIRE HEIGHTS AT A PARTICULAR LOCATION.

13. CONTACT WIRE STAGGERS RELATE TO THE PROJECTED CENTERLINE OF TRACK, NORMAL TO RAIL AND ALL VERTICAL DIMENSIONS RELATE TO THE HIGHEST RAIL LEVEL (H.R.L.) OF THE HIGHEST ELECTRIFIED TRACK.

14. A MINIMUM OF 1-1/2 INCHES MECHANICAL CLEARANCE SHALL BE MAINTAINED BETWEEN A MOVING PANTOGRAPH AND ANY CATENARY SUPPORT AND REGISTRATION ASSEMBLIES.

15. REFERENCED ASSEMBLY NUMBERS SHOWN IN THE CONTRACT DRAWINGS ARE RAILROAD'S TYPICAL STANDARD ARRANGEMENTS AND SHALL BE BROKEN DOWN INTO ITEMS FOR MATERIAL ORDERING PURPOSES. THE COMPONENTS SHALL CONFORM TO THE DRAWINGS PROVIDED IN THIS PACKAGE AND MUST BE INTERCHANGEABLE WITH EXISTING RAILROAD PARTS.

16. THE CONTRACTOR SHALL UNDERTAKE ADEQUATE MEASURES TO PROTECT AERIAL CABLES AND TRANSMISSION LINE WIRES AND CONDUCTORS FROM ANY DAMAGE WHILE ERECTING NEW POLES OR DRILLING CAISSONS. SHOULD ANY CABLE OR CONDUCTOR BE DAMAGED DURING THE CONTRACTORS TRACK OUTAGE TIME, IT WILL BECOME NECESSARY TO TERMINATE THE TRACK OUTAGE TO PERFORM THE REQUIRED REPAIR AND TESTING.

17. IT SHALL BE THE CONTRACTOR'S RESPONSIBILITY TO SEE THAT HE HAS THE LATEST APPROVED SET OF DRAWINGS AND SPECIFICATIONS BEFORE STARTING ANY PART OF THE WORK.

18. IT IS THE RESPONSIBILITY OF THE CONTRACTOR TO CHECK THE DIMENSIONS OF EXISTING STRUCTURE TO ENSURE PROPER FIT BEFORE PROCEEDING WITH THE FABRICATION OF STRUCTURAL STEEL.

19. NO EXPLOSIVES OF ANY NATURE OR DANGEROUS MATERIALS OF ANY KIND SHALL BE USED DURING THE CONSTRUCTION OF THE PROJECT WITHOUT THE APPROVAL OF THE ENGINEER.

20. ALL EXISTING CATENARY STRUCTURE STATIONING IS BASED ON N.Y.N.H. & H.R.R. ELECTRIFICATION CATENARY STRUCTURE CROSS SECTIONS.

21. GUY ANCHORS SHALL BE INSTALLED IN LINE WITH THE CONDUCTORS BEING TERMINATED UNLESS OTHERWISE NOTIFIED.

22. TEMPORARY SUPPORT SHALL BE PROVIDED TO THE CATENARY STRUCTURES WHEN LOADING CONDITIONS DIFFER TO THOSE SHOWN ON THE CONTRACT PLANS ARE ANTICIPATED. THE TEMPORARY SUPPORT IS SUBJECT TO APPROVAL BY THE ENGINEER.

23. NEW PULL-OFF POLES SHALL BE RAKED 1/8 INCH PER FOOT OF HEIGHT AWAY FROM THE TRACK.

24. TRACK WORK HAS BEEN PERFORMED AFTER THE SURVEY WAS MADE ON WHICH WIRE HEIGHTS, VERSINE AND SUPERELEVATION WERE ESTABLISHED AND SHOWN ON THE ERECTION DIAGRAMS AND CATENARY LAYOUTS PLANS. THE TRACK WORK MAY HAVE RESULTED IN CHANGES THAT WILL AFFECT THE DESIGN CRITERIA. THE CONTRACTOR SHALL VERIFY THE TOP OF RAIL TO BOTTOM OF TRUSS DIMENSIONS AT EACH BRIDGE OR CATENARY STRUCTURE FOR EACH TRACK AND VERIFY THE VERSINES FOR EACH SPAN ON ALL THE CURVES (TAKEN ON ONE INSIDE TRACK ONLY). ADVISE THE ENGINEER OF ANY DISCREPANCIES FROM THE PLANS 8 (EIGHT) WEEKS PRIOR TO THE START OF ANY CATENARY WORK, SO THE DESIGN MAY BE ADJUSTED ACCORDINGLY. FAILURE TO PROVIDE THESE DISCREPANCIES WILL RESULT IN CORRECTIVE WORK BY THE CONTRACTOR AT NO ADDITIONAL COST TO THE STATE. SURVEY WILL REQUIRE THE PRESENCE OF A MNRR FLAGMAN AND A CLASS "A" MAN. SHOULD ANY TRACK WORK BE PERFORMED BY THE RAILROAD AFTER THE CONTRACTOR'S INITIAL SURVEY, THAT TRACK IS TO BE RE-SURVEYED BY THE CONTRACTOR.

25. STATIONING OF STRUCTURES IS ON BASE LINE WHICH IS LOCATED ON CENTER BETWEEN TRACK 1 AND 2.

26. A 3 FT. MINIMUM CLEARANCE IS REQUIRED BETWEEN LIVE CONDUCTORS AND CLIMBABLE STRUCTURES. THE CONTRACTOR SHALL MAINTAIN THIS MINIMUM CLEARANCE FOR ALL TEMPORARY WORK. WHEN ADJUSTMENTS ARE REQUIRED TO MOVE OR RELOCATE LIVE CONDUCTORS, THE WORK SHALL BE DONE AT NO ADDITIONAL COST TO THE STATE.

27. THE CONTRACTOR IS ADVISED THAT CONSTRUCTION ACTIVITIES WILL OCCUR IN THE VICINITY OF NORTH EAST UTILITY (N.E.U.) AND UNITED ILLUMINATING CO. (UI) HIGH VOLTAGE LINES. OUTAGES ARE REQUIRED WHEN THE CONTRACTOR IS WORKING WITHIN A MINIMUM OF 20' OF (N.E.U. OR UI) HIGH VOLTAGE LINES. THE CONTRACTOR SHALL BE RESPONSIBLE FOR COORDINATING NECESSARY OUTAGES, A MINIMUM OF 6 MONTHS IN ADVANCE OF THE REQUIRED OUTAGE, THROUGH THE (N.E.U. OR UI) CONSTRUCTION REPRESENTATIVE IN WRITING, WITH A COPY OF THE REQUEST TO THE ENGINEER. NO UTILITY OUTAGES WILL BE AVAILABLE BETWEEN MEMORIAL DAY THRU LABOR DAY. (N.E.U. OR UI) OUTAGES MAY BE REQUIRED FOR THE FOLLOWING ACTIVITES: INSTALLATION OF STRUCTURAL STEEL, STEEL (MISCELLANEOUS) STRUCTURAL STEEL REPAIRS, AERIAL GROUND WIRE & WORK ON RAILROAD FEEDER AND SIGNAL WIRES, AS WELL AS REMOVAL OF AERIAL GROUND AND/OR ALONG TRACK JUMPER WIRE.

28. THE CONTRACTOR IS ADVISED THAT THEY ARE RESPONSIBLE FOR PERFORMING TWO SURVEYS ON THE (N.E.U. OR UI) FEEDERS. THE FIRST SURVEY WILL ESTABLISH EXISTING CONDITIONS PRIOR TO PREPARING STEEL SHOP DRAWINGS. THE SECOND SURVEY WILL DOCUMENT AS-BUILT CONDITIONS.

29. CONTRACTOR SHALL PROVIDE SHOP DRAWINGS FOR ALL TYPICAL EQUIPMENT DRAWINGS BASED ON EQUIPMENT BEING PROVIDED.

30. CONTRACTOR SHALL DEVELOP AN INSTALLATION PLAN FOR THE SNOW MELTER CABINET AND SUBMIT TO ENGINEER FOR APPROVAL PRIOR TO INSTALLATION. INSTALLATION PLAN SHALL BE BASED ON FIELD CONDITIONS AND INCLUDE CONDUIT SIZE, TYPE AND DEPTH.

THE INFORMATION, INCLUDING ESTIMATED QUANTITIES OF WORK SHOWN ON THESE SHEETS IS BASED ON LIMITED INVESTIGATIONS BY THE STATE AND IS IN NO WAY WARRANTED TO INDICATE THE TRUE CONDITIONS OR ACTUAL QUANTITIES OR DISTRIBUTION OF QUANTITIES OF WORK WHICH WILL BE REQUIRED.

URS CORPORATION AES
500 ENTERPRISE DRIVE
ROCKY HILL, CT 06067
1-(860)-529-8882

NO.	DATE	DESCRIPTION

REVISIONS

STATE OF CONNECTICUT
DEPARTMENT OF TRANSPORTATION

STAMFORD YARD CATENARY IMPROVEMENTS

GENERAL NOTES

ENGINEER: URS CORPORATION AES
DESIGNER: RW | DRAFTER: AMK | CHECKER: AJM
APPROVED: T. HOLLAND | DATE: XX/XX/XX
STRUCTURE NO. | BRIDGE LOG NO. | STRUCTURE SHEET NO. G-8

F H W A REGION	STATE	TOWN	FED. AID PROJ. NO.	PROJ. NO.	YEAR	SHEET NUMBER
1	CONN.	VARIOUS		301-163	2014	

STEADY SPAN PULL OFF

TWIN WIRE PULL OFF (MULTI TRACK)

WITH ALONG TRACK DOWN GUY

PULL OFF SINGLE WIRE PULL OFF (1 TRACK) (MULTI TRACK)

BACK GUY

ALONG TRACK DOWN GUY

FIXED ANCHOR WITH ALONG TRACK DOWN GUY — FA — INSULATION IN SPAN — FA — INSULATION AT POLE

BALANCE WEIGHT ANCHOR WITH ALONG TRACK DOWN GUY — BWA — INSULATION IN SPAN

RIDING CONTACT WIRE (WITH CONTACT WIRE DIRECTION OF PULL AND STAGGER IN INCHES) — 6"

NON-RIDING CONTACT WIRE (WITH CONTACT WIRE DIRECTION OF PULL AND STAGGER IN INCHES) — 3"

KNUCKLE (JOINING CATENARIES)

CROSS OVER

IN SPAN INSULATION

FULL FEEDING — RIDING — RIDING

POTENTIAL EQUALIZING JUMPER — RIDING — NON-RIDING

HIGH RAIL LEVEL — HRL

PULL OFF STRUCTURES

TRACK CENTERLINE

PERPENDICULAR TO

MILE POST

AIR GAP (SECTIONING DIAGRAM) — AG

SECTION INSULATOR (SECTIONING DIAGRAM) — K

SECTION INSULATOR (HIGH SPEED)

SECTION INSULATOR (LOW SPEED)

OVERBRIDGE

UNDERGRADE BRIDGE

WIRE RUN NUMBER — 4

TROLLEY AIR BREAK

SUPERELEVATION — 1

FIXED ANCHOR LENGTH DISTANCE IN FEET FROM TERMINATION TO TERMINATION — 2300 — NXX

VERSINE (MID ORDINATE) AND CURVE DIRECTION — 6"

HEIGHT RELATIVE TO HIGH RAIL LEVEL — +1'-6"

IN SPAN FEEDING JUMPER

UNINSULATED OVERLAPS OUTER & INNER TRACKS (TANGENT TRACK) — DOWN GUY DOWN GUY — DOWN GUY DOWN GUY

INSULATED OVERLAPS OUTER & INNER TRACKS (TANGENT TRACK) — DOWN GUY DOWN GUY — DOWN GUY DOWN GUY

TWIN CANTILEVER

SINGLE CANTILEVER

SECTION NOT ELECTRIFIED

SUBSTATION FEED

UNINSULATED OVERLAP

INDICATING LIGHT (R = RED, G = GREEN, A = AMBER, B = BLUE, W = WHITE, Y = YELLOW) — R

PART NUMBER — 260

ITEM NUMBER — 6

AUTO-TRANSFORMER — RAIL

POTHEAD

NORMALLY OPEN CONTACTS

NORMALLY CLOSED CONTACTS

BATTERY

PHASE BREAK

GROUND CONNECTION/GROUNDING

FUSE

FUSE DISCONNECT

DUPLEX RECEPTACLE

DENOTES TERMINAL FOR EXTERNAL CONNECTION

LOCAL ALARM RELAY — LOR

RESISTOR — R

RED LIGHT — R

GREEN LIGHT — G

AUXILIARY TRANSFORMER

LIGHTNING OR SURGE ARRESTER WITH GROUND CONNECTION — LA

MANUAL PUSHBUTTON SWITCH – NORMALLY OPEN

MANUAL PUSHBUTTON SWITCH – NORMALLY CLOSED

VOLTMETER — V

DRAW-OUT DEVICE

MOLDED CASE CIRCUIT BREAKER

TEST SWITCH — TS

AMMETER — A

CONTROL SWITCH INTERLOCK SUPERVISORY — CS S

CONTROL SWITCH INTERLOCK (LOCAL) — CS L

CONTROL SWITCH INTERLOCK CLOSING — CS C

SUPERVISORY CONTROL SWITCH INTERLOCK CLOSING — SUPV C

RELAY COIL

MOD CONTROL BOX — 55

POLE MOUNTED AUXILIARY TRANSFORMER

NO CONNECTION

ELECTRIC CONNECTION

MANUALLY OPERATED DISCONNECT SWITCH

MOTOR OPERATED DISCONNECT SWITCH — M

GROUNDING SWITCH

THE INFORMATION, INCLUDING ESTIMATED QUANTITIES OF WORK SHOWN ON THESE SHEETS IS BASED ON LIMITED INVESTIGATIONS BY THE STATE AND IS IN NO WAY WARRANTED TO INDICATE THE TRUE CONDITIONS OR ACTUAL QUANTITIES OR DISTRIBUTION OF QUANTITIES OF WORK WHICH WILL BE REQUIRED.

URS CORPORATION AES
500 ENTERPRISE DRIVE
ROCKY HILL, CT 06067
1-(860)-529-8882

NO.	DATE	DESCRIPTION

REVISIONS

STATE OF CONNECTICUT
DEPARTMENT OF TRANSPORTATION

STAMFORD YARD CATENARY IMPROVEMENTS

LEGEND

ENGINEER: URS CORPORATION AES

DESIGNER: RW | DRAFTER: AMK | CHECKER: AJM

APPROVED: T. HOLLAND | DATE: XX/XX/XX

STRUCTURE NO. | BRIDGE LOG NO. | STRUCTURE SHEET NO. G-9

PROJECT CONTROL DATE: XX/XX/XX DISK FILENAME: G-9.dwg XX% DESIGN

F H W A REGION	STATE	TOWN	FED. AID PROJ. NO.	PROJ. NO.	YEAR	SHEET NUMBER
1	CONN.	VARIOUS		301-163	2014	

A	AMPERE
ABAN	ABANDONED
ABUT	ABUTMENT
AC	ALTERNATING CURRENT
ACI	AMERICAN CONCRETE INSTITUTE
ACT	ACTUAL
ADJ	ADJACENT
AFF	ABOVE FINISHED FLOOR
AH	AHEAD
AISC	AMERICAN INSTITUTE OF STEEL CONSTRUCTION
APPROX	APPROXIMATE
AREA	AMERICAN RAILWAY ENGINEERING ASSOCIATION
ASSY	ASSEMBLY
ASTM	AMERICAN SOCIETY OF TESTING & MATERIALS
A-T, A.T.	AUTO - TENSIONED
ATM	ALONG TRACK MOVEMENT
ATS	AUTOMATIC TRANSFER SWITCH
AUX	AUXILIARY
AVE	AVENUE
AWG	AMERICAN WIRE GAUGE
AWS	AMERICAN WELDING SOCIETY
&	AND
BAT	BATTERY
B/B	BACK TO BACK
BCH	BATTERY CHARGER
BH	BATTERY HOUSE
BK	BACK
BKR	BREAKER
BLDG	BUILDING
BLVD	BOULEVARD
BM	BILL OF MATERIAL
BO	BLOW-OFF
BR	BRIDGE
BRKT	BRACKET
BRZ	BRONZE
B-SPAN	BODY SPAN
BT	BUS TIE
BTM	BOTTOM
BWA	BALANCE WEIGHT ANCHOR
BZ	BRONZE
C	CONDUIT
CA	CABLE
CAB	CABINET
CAP	CAPACITOR
CAT	CATENARY
CB	CIRCUIT BREAKER
CDOT	CONNECTICUT DEPARTMENT OF TRANSPORTATION
CF	CUBIC FEET
CFM	CUBIC FEET PER MINUTE
CFT	CENTIFEET
CHAM	CHAMFER
CHGR	CHARGER
CKT	CIRCUIT
℄	CENTERLINE
CLF	CHAIN LINK FENCE
CL&P	CONNECTICUT LIGHT AND POWER
CLR	CLEARANCE OR CLEAR
CO	CONDUIT ONLY, COMPANY
COMM	COMMUNICATION
COMP	COMPOSITE
CONC	CONCRETE
COND	CONDUIT/CONDUCTOR
CONST	CONSTRUCTION OR CONSTRUCT
CONT	CONTINUATION, CONTINUOUS, CONTROL
CONTR	CONTRACTOR
CR	CONDUIT RISER
CS	CURVE-SPIRAL
CT	CURRENT TRANSFORMER
CTR	CENTER
Cu.	COPPER
CU YD	CUBIC YARD
CW	CONTACT WIRE

DC	DIRECT CURRENT
DE	DEAD END
DEG, °	DEGREE
DEPT	DEPARTMENT
DET	DETAIL
DGA	DOWN GUY ANCHOR
DIA, ø	DIAMETER (ALSO SHOWN ø)
DIAG	DIAGRAM
DIFF	DIFFERENCE
DIM	DIMENSION
DISC	DISCONNECT
DIST	DISTANCE
DIST	DISTRIBUTION
DP	DISTRIBUTION PANEL
DWG	DRAWING
E	EXPONENT (10_x), EAST
EA	EACH
Ea	SUPERELEVATION IN INCHES
E/O	EAST OF
EB	EAST BOUND
EHS	EXTRA HIGH STRENGTH
ELEC	ELECTRIC, ELECTRICAL
EL, ELEV	ELEVATION
EMH	ELECTRICAL MANHOLE
ENCL	ENCLOSURE
EPB	EMERGENCY PUSH BUTTON
EQ	EQUAL
EQN	EQUATION
EQUIP	EQUIPMENT
ETC	ET CETERA
EX.,EXIST	EXISTING
F	FAHRENHEIT
F#	FEEDER #
FA	FIXED ANCHOR
FS	FAR SIDE
FBO	FURNISHED BY OTHERS
FDN	FOUNDATION
FDR	FEEDER
FIN	FINISH
FL	FLOOR
FLX	FLEXIBLE
F.O.S.	FACTOR OF SAFETY
FPM	FEET PER MINUTE
FREQ	FREQUENCY
FRYD	FREIGHT YARD
FT, '	FEET
F.T./F-T	FIXED TERMINATION
FTA	FIXED TERMINATION ANCHOR
FU	FUSE
GALV	GALVANIZED
G/L	GROUND LINE
GND	GROUND
GRD	GROUND
GRS	GALVANIZED RIGID STEEL
GS	GALVANIZED STEEL
GW	GUY WIRE
GW	GROUND WIRE
HEX	HEXAGONAL
HH	HAND HOLE
HORIZ	HORIZONTAL
HRL	HIGH RAIL LEVEL
HT	HEIGHT
HTR	HEATER
HS	HIGH STRENGTH STEEL
HV	HIGH VOLTAGE
HVAC	HEATING VENTILATING & AIR CONDITIONING
Hz	HERTZ
H.D.	HARD DRAWN

IB	IMPEDANCE BONDS
IC	INTERRUPTING CURRENT
ICS	INDICATING CONTROL SWITCH
ID	INSIDE DIAMETER
IEEE	INSTITUTE OF ELECTRICAL AND ELECTRONIC ENGINEERS
IFC	INTERFACE CABINET
IHRL	INDIVIDUAL HIGH RAIL LEVEL
IL	INTERLOCK
IN, "	INCH
INCL	INCLUDE, INCLUDING
INDIC	INDICATION
INDV	INDIVIDUAL
INSR	INSULATOR
INSUL	INSULATION
INTLK	INTERLOCK
I.R.	IN-RUNNING (RIDING CONTACT WIRE)
I/S	IN-SPAN
J	JUMPER
JCT	JUNCTION
K	KIP OR KIPS
KCMIL	THOUSAND CIRCULAR MILES
K-FT	KIP-FOOT
KV	KILOVOLT
KVA	KILOVOLT AMPERE
KSF	KIPS PER SQUARE FOOT
KSI	KIPS PER SQUARE INCH
KW	KILOWATT
KWH	KILOWATT HOUR
L	LEFT/SPAN LENGTH
LA	LIGHTNING ARRESTOR
LBA	LOCAL BELL ALARM
LB,LBS	POUND,POUNDS
LB/FT	POUNDS PER FOOT
LC	LOCAL CONTROL DEVICE AT EQUIPMENT
LCP	LOCAL CONTROL PANEL
LF	LINEAR FEET
LG	LONG OR LENGTH
L.H.	LEFT HAND
LOC	LOCATION
LOCL	LOCAL
L.O.	LOCK OUT
LOR	LOCKOUT RELAY
LP	LOW-POINT
LS	LUMP SUM
LT	LIGHT
LTG	LIGHTING
LTNG	LIGHTNING
LV	LOW VOLTAGE
M	MOMENTS
MAG	MAGNETIC
MAX	MAXIMUM
MANUF	MANUFACTURER
MCB	MOLDED CASE BREAKER
MECH	MECHANICAL
MESS	MESSENGER
MH	MANHOLE
MJ	MAIN JUMPER
MIN	MINIMUM
MISC	MISCELLANEOUS
M-N	METRO-NORTH
MOD	MOTOR OPERATED DISCONNECT
MOS	MANUALLY OPERATED SWITCH
MP	MILE POST
MPA	MID-POINT ANCHOR

MPH	MILES PER HOUR
MR	MULTI-RATIO
MS	MIDSPAN
MSO	MIDSPAN OFFSET (STATIC)
MTD	MOUNTED
MTG	MOUNTING
MTR	METERING
MTS	MANUAL TRANSFER SWITCH
MV	MILLIVOLTS
MW, M/W	MESSENGER WIRE
M/L	MAIN LINE
N	NORTH, AC SYSTEM NEUTRAL
NA	NOT APPLICABLE
NC, N.C.	NORMALLY CLOSED, NEW CANAAN FEED
NCF	NEW CANAAN FEEDER
NEC	NATIONAL ELECTRICAL CODE
NEG (-)	NEGATIVE
NESC	NATIONAL ELECTRICAL SAFETY CODE
NF	NEAR FACE
N.H.	NEW HAVEN
NIC, N.I.C.	NOT IN CONTRACT
NO, N.O.	NORMALLY OPEN
No., #	NUMBER
NOM	NOMINAL
NORM	NORMAL
NR	NOT REGISTERED
NS	NOT SUPPORTED
N/S	NOT SUPPORTED
NSR	NOT SUPPORTED AND NOT REGISTERED
NTS	NOT TO SCALE
NS	NEAR SIDE
NY	NORTH YARD
O/BR	OVER BRIDGE
OC	ON CENTER
OCS	OVERHEAD CATENARY SYSTEM
OD	OUTSIDE DIAMETER
OH	OVERHEAD
O/H	OVERHEAD
OHL	OVERHEAD LINE
O/L	OVERLAP
OOR	OUT OF RUNNING
OPR	OPERATE
Ø	PHASE
PAN	PANTOGRAPH
PB	PULL BOX
PG	PHASE GAP
PH OR ø	PHASE
PL	PLATE
PLAT	PLATFORM
PNL	PANEL
PO	PULL-OFF
POS	POSITION
POS (+)	POSITIVE
PS	POINT OF SWITCH
LB, LBS	POUND, POUNDS
LB/FT	POUNDS PER FOOT
PRI	PRIMARY
PROP	PROPOSED
PSF	POUNDS PER SQUARE FOOT
PSI	POUNDS PER SQUARE INCH
PT	POTENTIAL TRANSFORMER
PTD	PAINTED
PU	PICK-UP
PVC	POLYVINYL CHLORIDE
PWR	POWER
PVMT	PAVEMENT
PH	PHASE

QTY	QUANTITY
R	RADIUS, RIGHT
RCPT	RECEPTACLE
RD	ROAD
RE	RUNNING EDGE OF RAIL
REF	REFERENCE
REM	REMOTE
RET W	RETAINING WALL
REV	REVISE
REQD	REQUIRED
R.H.	RIGHT HAND
RL	RAIL LEVEL
RLY	RELAY
RM	ROOM
ROW	RIGHT-OF-WAY
RR	RAIL ROAD
R/R	RAIL ROAD
RTU	REMOTE TERMINAL UNIT
S	SHEAR, STAGGER
SC	SUPERVISORY CONTROL
SCADA	SUPERVISORY CONTROL AND DATA ACQUISITION
SCITC	SUPERVISORY CONTROL INTERFACE TERMINAL CABINET
SE	STAGGER EFFECT
SEC	SECOND
SECD	SECONDARY
SECT	SECTION
SED	STRUCTURE ERECTION DIAGRAM
SERV.	SERVICE
SI	SECTION INSULATOR
SIG	SIGNAL
SL	STREET LIGHT
SMT	SNOW MELTING TRANSFORMER
SMU	SNOW MELTER UNIT
SOP	SETTING OUT POINT
SP	SPARE
SPEC	SPECIFICATION
SPS	SMALL PART STEELWORK
SPST	SINGLE POLE SINGLE THROW
SQ. IN.	SQUARE INCH
SQ. FT.	SQUARE FEET
SS	SANITARY SEWER
S.S.	STAINLESS STEEL
ST	SPIRAL-TANGENT, STORM SEWER LINE, STREET
STA	STATION, STATIONING
STAM	STAMFORD
STD	STANDARD
STM	SINGLE TRACK MILE
STR	STRUCTURE
STRUCT	STRUCTURE
SUB	SUBSTATION
SUPV	SUPERVISORY
SUSP	SUSPENDED
SW	SWITCH
SWA	SINGLE WIRE ANCHOR
SWH	SWITCH HEATER
SWGR	SWITCHGEAR
SWS	SWITCHING STATION
SY	SOUTH YARD
SYE	SOUTH YARD EAST
SYN	SYNCHRONIZE, SYNTHETIC
SYS	SYSTEM

T	TRIP
T#	TRACK #
TBD	TO BE DETERMINED
TBR	TO BE REMOVED
TECH	TECHNICAL
TEL	TELEPHONE
TELE.	TELEPHONE
TEMP	TEMPERATURE, TEMPORARY
TERM	TERMINATION
T/F	TOP OF FOUNDATION
T/G	TOP OF GROUND LINE
TH.	THICK
THERM	THERMOSTAT
THRU	THROUGH
TL	TENSION LENGTH
T/LR	TOP OF LOW RAIL
TO	TURNOUT
T.O.P.	TOES OF POINTS
TP	TRACTION POWER
TPS	TRACTION POWER SUBSTATION
TR	TRANSFORMER
TRANSF	TRANSFORMER
TRANSM	TRANSMISSION
T/R	TOP OF RAIL
TRK	TRACK
T/W	TROLLEY WIRE
TYP, TYP.	TYPICAL
U/BR	UNDER BRIDGE
UG	UNDERGRADE, UNDERGROUND
U/G	UNDERGROUND
U/S	UNDERSIDE
U/SIDE	UNDERSIDE
UNINS	UNINSULATED
UTIL	UTILITY
V	VOLT, VERTICAL
VA	VOLT AMPS
VEN	VENTILATION
VERT	VERTICAL
V_w	WIND VELOCITY
W	WITH, WEST
W/	WITH
WB	WEST BOUND
WF	WIDE FLANGE
WG	WATER GAUGE
WT	WEIGHT
W/O	WITHOUT
XFMR	TRANSFORMER
X-ING	CROSSING
X/O	CROSSOVER
X-SECT	CROSS SECTION
YD	YARD

THE INFORMATION, INCLUDING ESTIMATED QUANTITIES OF WORK SHOWN ON THESE SHEETS IS BASED ON LIMITED INVESTIGATIONS BY THE STATE AND IS IN NO WAY WARRANTED TO INDICATE THE TRUE CONDITIONS OR ACTUAL QUANTITIES OR DISTRIBUTION OF QUANTITIES OF WORK WHICH WILL BE REQUIRED.

URS CORPORATION AES
500 ENTERPRISE DRIVE
ROCKY HILL, CT 06067
1-(860)-529-8882

NO.	DATE	DESCRIPTION

REVISIONS

STATE OF CONNECTICUT
DEPARTMENT OF TRANSPORTATION

STAMFORD YARD CATENARY IMPROVEMENTS

ABBREVIATIONS

ENGINEER: URS CORPORATION AES
DESIGNER: RW | DRAFTER: AMK | CHECKER: AJM
APPROVED: T. HOLLAND | DATE: XX/XX/XX
STRUCTURE NO. | BRIDGE LOG NO. | STRUCTURE SHEET NO. G-10

PROJECT CONTROL DATE: XX/XX/XX DISK FILENAME: G-10.dwg XX% DESIGN

F H W A REGION	STATE	TOWN	FED. AID PROJ. NO.	PROJ. NO.	YEAR	SHEET NUMBER
1	CONN.	VARIOUS		301-163	2014	

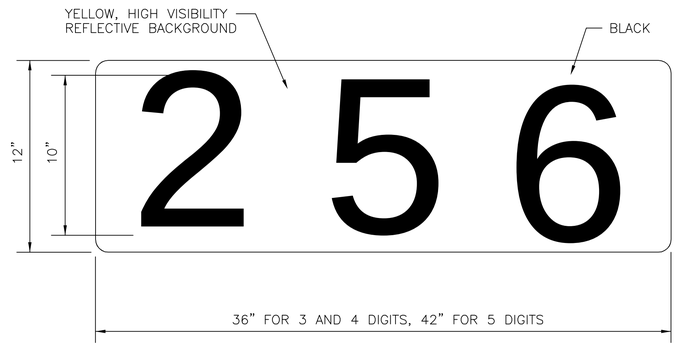

TYPE 'A'

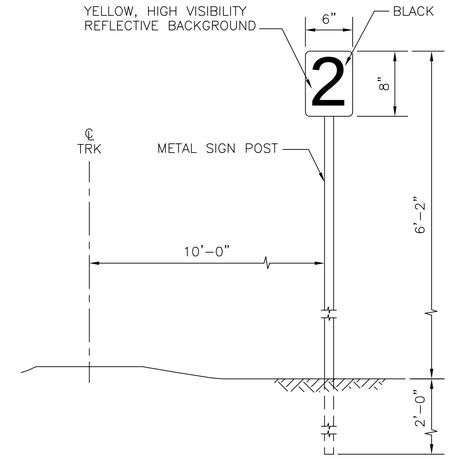

TYPE 'B'
CAR MARKER SIGN

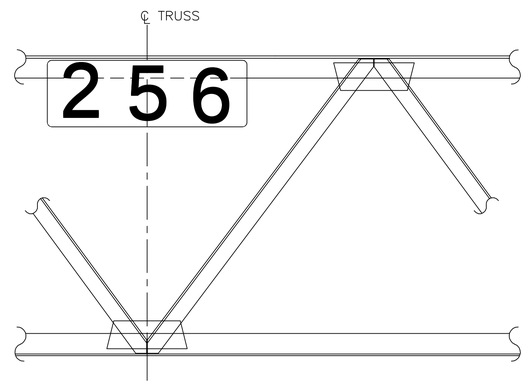

LOCATION OF TYPE 'A' SIGN
(LOCATE AS CLOSE TO CENTER OF TRUSS AS PRACTICAL)

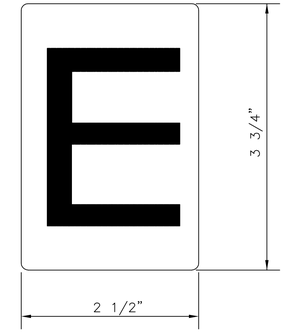

ACTUAL SIZE OF BLACK LETTERS AND NUMBERS ON YELLOW "SCOTCHLITE" BACKGROUND

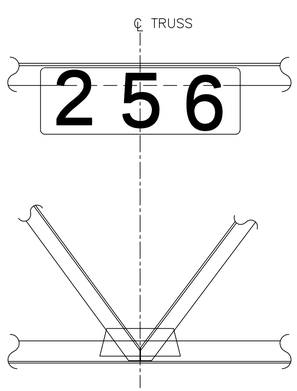

LOCATION OF TYPE 'A' SIGN
(LOCATE AS CLOSE TO CENTER OF TRUSS AS PRACTICAL)

NOTES:

POSITIONING OF SIGNS:

1. TYPE 'A': ONE SIGN ON EAST AND WEST SIDE OF TRUSS. SIGN TO BE INSTALLED CLEAR OF DROP TUBE SUPPORTS AND RIVET HEADS.
2. TYPE 'B': THERE SHALL BE 3 SIGNS (1, 2, 3) BEYOND THE ENDS OF EACH PLATFORM.
3. TYPE 'D': ONE SIGN ON EAST AND WEST SIDE OF POLE, EACH SIDE OF TRACK AT 6'-0" ABOVE NEAREST RAIL LEVEL.
4. FOR GENERAL NOTES, SEE DRAWING G-8.

SCALE: NONE

THE INFORMATION, INCLUDING ESTIMATED QUANTITIES OF WORK SHOWN ON THESE SHEETS IS BASED ON LIMITED INVESTIGATIONS BY THE STATE AND IS IN NO WAY WARRANTED TO INDICATE THE TRUE CONDITIONS OR ACTUAL QUANTITIES OR DISTRIBUTION OF QUANTITIES OF WORK WHICH WILL BE REQUIRED.

URS CORPORATION AES
500 ENTERPRISE DRIVE
ROCKY HILL, CT 06067
1-(860)-529-8882

NO.	DATE	DESCRIPTION

REVISIONS

STATE OF CONNECTICUT
DEPARTMENT OF TRANSPORTATION

STAMFORD YARD CATENARY IMPROVEMENTS

SIGNS

ENGINEER: URS CORPORATION AES
DESIGNER: RW | DRAFTER: AMK | CHECKER: AJM
APPROVED: T. HOLLAND | DATE: XX/XX/XX
STRUCTURE NO. | BRIDGE LOG NO. | STRUCTURE SHEET NO. G-13

PROJECT CONTROL DATE: XX/XX/XX DISK FILENAME: G-13.dwg XX% DESIGN

F H W A REGION	STATE	TOWN	FED. AID PROJ. NO.	PROJ. NO.	YEAR	SHEET NUMBER
1	CONN.	VARIOUS		301-163	2014	

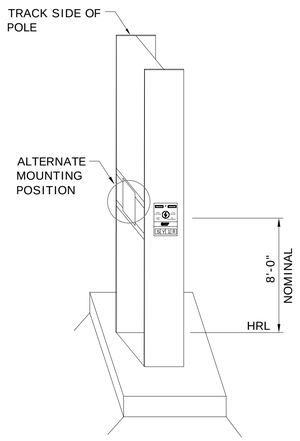

TYPICAL MOUNTING OF SIGN TYPE D

(TYPICAL SIGN MOUNTING LOCATION IS BOTH SIDES OF ALL POLES)

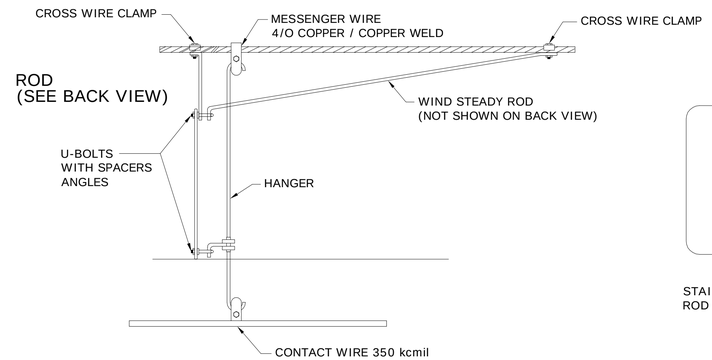

SIDE VIEW

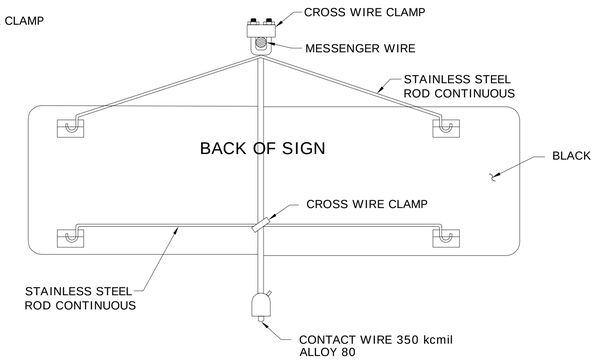

BACK VIEW

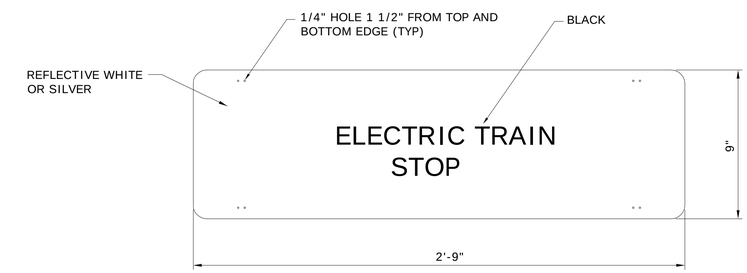

FRONT VIEW

ASSEMBLY ETS

(TYPICAL LOCATION, END OF ELECTRIFICATION)

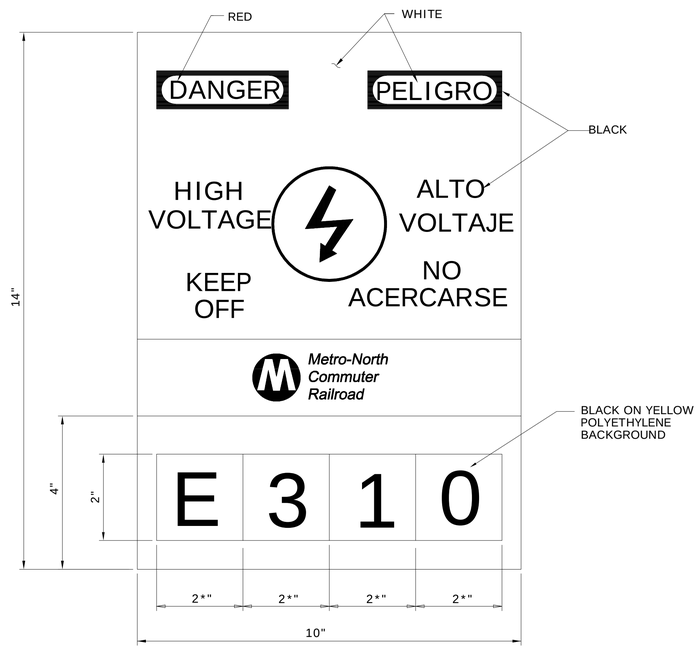

TYPE D

NOTES:

1. WARNING SIGN SHALL BE 0.125" THICK RIGID ALUMINUM OR .25" THICK LEXAN BACKING PLATE. ALL SHARP EDGES SHALL BE ROUNDED.
2. SIGNS SHALL BE ATTACHED USING ATTACHMENTS AND HARDWARE AS SHOWN.
3. LETTERS SHALL BE ON FRONT OF SIGN ONLY.

THE INFORMATION, INCLUDING ESTIMATED QUANTITIES OF WORK SHOWN ON THESE SHEETS IS BASED ON LIMITED INVESTIGATIONS BY THE STATE AND IS IN NO WAY WARRANTED TO INDICATE THE TRUE CONDITIONS OR ACTUAL QUANTITIES OR DISTRIBUTION OF QUANTITIES OF WORK WHICH WILL BE REQUIRED.

URS CORPORATION AES
500 ENTERPRISE DRIVE
ROCKY HILL, CT 06067
1-(860)-529-8882

NO.	DATE	DESCRIPTION

REVISIONS

STATE OF CONNECTICUT
DEPARTMENT OF TRANSPORTATION

STAMFORD YARD CATENARY IMPROVEMENTS

SIGNAGE

ENGINEER: URS CORPORATION AES
DESIGNER: RW | DRAFTER: AMK | CHECKER: AJM
APPROVED: T. HOLLAND | DATE: XX/XX/XX
STRUCTURE NO. | BRIDGE LOG NO. | STRUCTURE SHEET NO. G-14

PROJECT CONTROL DATE: XX/XX/XX DISK FILENAME: G-14.DWG XX% DESIGN

F H W A REGION	STATE	TOWN	FED. AID PROJ. NO.	PROJ. NO.	YEAR	SHEET NUMBER
1	CONN.	VARIOUS		301-163	2014	

ITEM	REF. DRAWING
10B	E-17
14A	E-60
ABA	E-10
ABAS	S-11
ACC	E-17
AHA	E-5
AHB	E-10
AIS	S-21
BK	E-60, S-21
BP	S-25
BR	S-25
BRPO	E-16
BWA	E-9
CA	S-9, S-10
CAN	D-18
CBA	E-5
CC	E-4
CDEA	E-6, E-14
CDS	S-11
CIA	E-16
CKA	E-5
CSA	E-7
CSD	S-11, S-15, S-16
CTS	E-17
CWS	E-17
DBA	S-15
DEA	E-14
DS	E-103, E-172
DSVI	E-103
DT	S-13, S-17, S-18
DTS	S-14
FDEA	E-6
FOUNDATION TYPE 'X'	S-36 TO S-41
FWS	E-17

ITEM	REF. DRAWING
G	E-12
GA	S-31, S-32, S-33
GBA	S-20
GC	S-20
GRA	S-33
GRD	E-13
GTSB	S-12
GW	E-13
GWS	E-17
HA	E-17
HS	E-11
JS	S-11
JWS	S-9
JDD	S-9
LHA	E-17
MCDS	S-19
MCIA	E-6, E-16
MDEA	E-6, E-14
MIA	E-9, E-14, E-16
MKA	E-5, E-17
MPA	E-10
MPAS	S-15
MS	E-1, E-19
MWS	E-17
P	S-4, S-6
PCE	E-6
PE	S-9, S-10
PF	S-7
PE-CD	S-6
PO	E-4, E-7
PEP	S-6
RA	E-3, E-15
RHA	E-5

ITEM	REF. DRAWING
SA	E-3
SBA	S-14, S-16, S-20
SHA	E-5
SIA	E-7
SPS	E-17
T	S-1, S-2
THB	E-10
TMDEA	E-10
TS	E-2
TSA	E-9
TSG	E-9
TYPE "X" JUMPER	E-8
VHA	E-5

THE INFORMATION, INCLUDING ESTIMATED QUANTITIES OF WORK SHOWN ON THESE SHEETS IS BASED ON LIMITED INVESTIGATIONS BY THE STATE AND IS IN NO WAY WARRANTED TO INDICATE THE TRUE CONDITIONS OR ACTUAL QUANTITIES OR DISTRIBUTION OF QUANTITIES OF WORK WHICH WILL BE REQUIRED.

URS
URS CORPORATION AES
500 ENTERPRISE DRIVE
ROCKY HILL, CT 06067
1-(860)-529-8882

NO.	DATE	DESCRIPTION

REVISIONS

STATE OF CONNECTICUT
DEPARTMENT OF TRANSPORTATION

STAMFORD YARD CATENARY IMPROVEMENTS

INDEX TO B.O.M. REFERENCES

ENGINEER: URS CORPORATION AES
DESIGNER: RW | DRAFTER: AMK | CHECKER: AJM
APPROVED: T. HOLLAND | DATE: XX/XX/XX
STRUCTURE NO. | BRIDGE LOG NO. | STRUCTURE SHEET NO. G-36

PROJECT CONTROL DATE: XX/XX/XX DISK FILENAME: G-36.dwg XX% DESIGN

F H W A REGION	STATE	TOWN	FED. AID PROJ. NO.	PROJ. NO.	YEAR	SHEET NUMBER
1	CONN.	VARIOUS		301-163	2014	

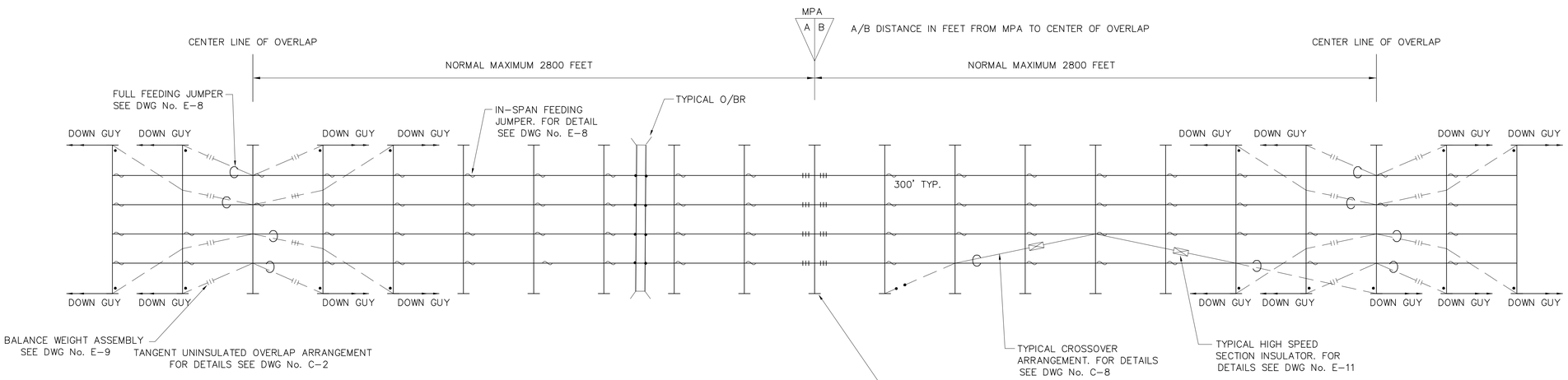

TANGENT TRACK

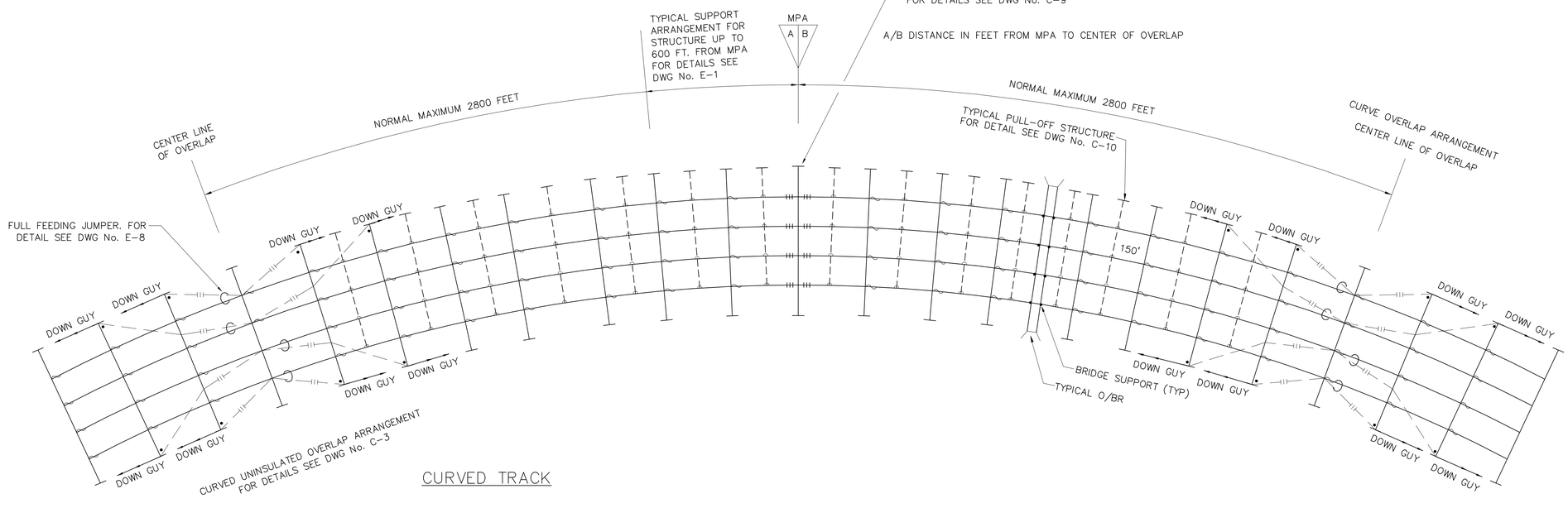

CURVED TRACK

NOTES:

1. PULL-OFF STRUCTURE SHALL BE USED WHEN MAXIMUM MID SPAN OFFSET BETWEEN TWO REGISTRATION SUPPORTING STRUCTURE IS EXCEEDED.

THE INFORMATION, INCLUDING ESTIMATED QUANTITIES OF WORK SHOWN ON THESE SHEETS IS BASED ON LIMITED INVESTIGATIONS BY THE STATE AND IS IN NO WAY WARRANTED TO INDICATE THE TRUE CONDITIONS OR ACTUAL QUANTITIES OR DISTRIBUTION OF QUANTITIES OF WORK WHICH WILL BE REQUIRED.

URS CORPORATION AES
500 ENTERPRISE DRIVE
ROCKY HILL, CT 06067
1-(860)-529-8882

N.T.S.

NO.	DATE	DESCRIPTION

REVISIONS

STATE OF CONNECTICUT
DEPARTMENT OF TRANSPORTATION

STAMFORD YARD CATENARY IMPROVEMENTS

TYPICAL TENSION LENGTH

ENGINEER: URS CORPORATION AES
DESIGNER: RW | DRAFTER: AMK | CHECKER: AJM
APPROVED: T. HOLLAND | DATE: XX/XX/XX
STRUCTURE NO. | BRIDGE LOG NO. | STRUCTURE SHEET NO. C-1

PROJECT CONTROL DATE: XX/XX/XX DISK FILENAME: C-1.dwg XX% DESIGN

F H W A REGION	STATE	TOWN	FED. AID PROJ. NO.	PROJ. NO.	YEAR	SHEET NUMBER
1	CONN.	VARIOUS		301-163	2014	

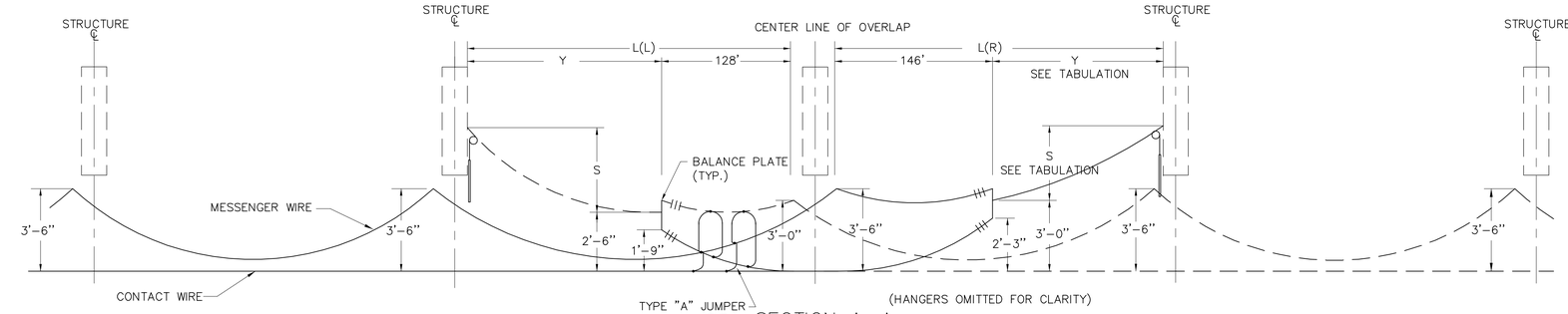

SECTION A-A

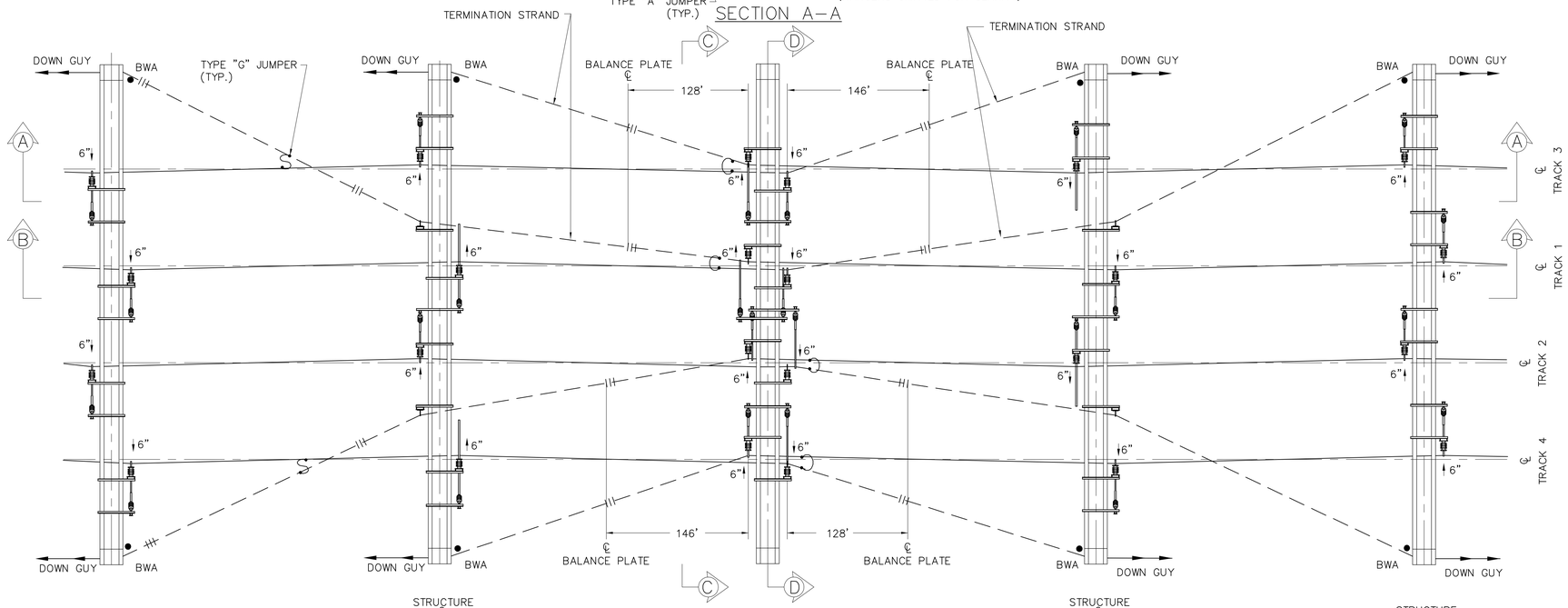

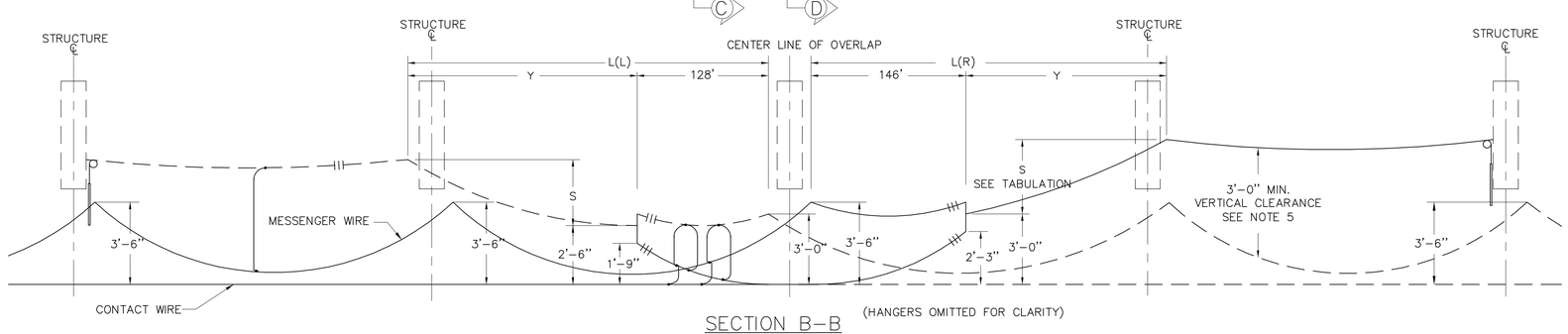

SECTION B-B

OUT OF RUNNING SPAN					
3'-0" SYSTEM HEIGHT			3'-6" SYSTEM HEIGHT		
L(L)	Y	S	L(R)	Y	S
160'	32'	0'-7"			
170'	42'	0'-9"			
180'	52'	0'-11 1/2"	180'	34'	0'-8 1/2"
190'	62'	1'-2"	190'	44'	0'-11"
200'	72'	1'-4 1/2"	200'	54'	1'-1 1/2"
210'	82'	1'-7"	210'	64'	1'-4 1/2"
220'	92'	1'-10"	220'	74'	1'-7"
230'	102'	2'-0 1/2"	230'	84'	1'-10"
240'	112'	2'-3 1/2"	240'	94'	2'-1"
250'	122'	2'-6"	250'	104'	2'-4"
260'	132'	2'-9"	260'	114'	2'-7"
270'	142'	3'-0"	270'	124'	2'-10"
280'	152'	3'-3 1/2"	280'	134'	3'-1 1/2"
290'	162'	3'-6 1/2"	290'	144'	3'-4 1/2"
300'	172'	3'-9 1/2"	300'	154'	3'-8"

NOTES

1. DIMENSIONS SHOWN ARE TYPICAL ONLY.
2. 3" VERTICAL SEPARATION MUST BE MAINTAINED WHERE MESSENGERS CROSS EACH OTHER.
3. FOR SECTION "C-C" AND "D-D" SEE DRAWING C-4.
4. FOR ACTUAL OVERLAP ARRANGEMENT SEE LAYOUT AND SED.
5. INSPAN INSULATION AND POTENTIAL JUMPERS SHALL BE INSTALLED WHERE THE 3'-0" VERTICAL CLEARANCE BETWEEN THE OOR WIRE AND IN-RUNNING CATENARY CAN NOT BE ACHIEVED.

THE INFORMATION, INCLUDING ESTIMATED QUANTITIES OF WORK SHOWN ON THESE SHEETS IS BASED ON LIMITED INVESTIGATIONS BY THE STATE AND IS IN NO WAY WARRANTED TO INDICATE THE TRUE CONDITIONS OR ACTUAL QUANTITIES OR DISTRIBUTION OF QUANTITIES OF WORK WHICH WILL BE REQUIRED.

URS CORPORATION AES
500 ENTERPRISE DRIVE
ROCKY HILL, CT 06067
1-(860)-529-8882

NO.	DATE	DESCRIPTION

REVISIONS

STATE OF CONNECTICUT
DEPARTMENT OF TRANSPORTATION

STAMFORD YARD CATENARY IMPROVEMENTS

AUTO-TENSIONED SIMPLE CATENARY - UNINSULATED OVERLAP, TANGENT TRACK

ENGINEER: URS CORPORATION AES
DESIGNER: RW | DRAFTER: AMK | CHECKER: AJM
APPROVED: T. HOLLAND | DATE: XX/XX/XX
STRUCTURE NO. | BRIDGE LOG NO. | STRUCTURE SHEET NO. C-2

PROJECT CONTROL DATE: XX/XX/XX
DISK FILENAME: C-2.dwg
XX% DESIGN

F H W A REGION	STATE	TOWN	FED. AID PROJ. NO.	PROJ. NO.	YEAR	SHEET NUMBER
1	CONN.	VARIOUS		301-163	2014	

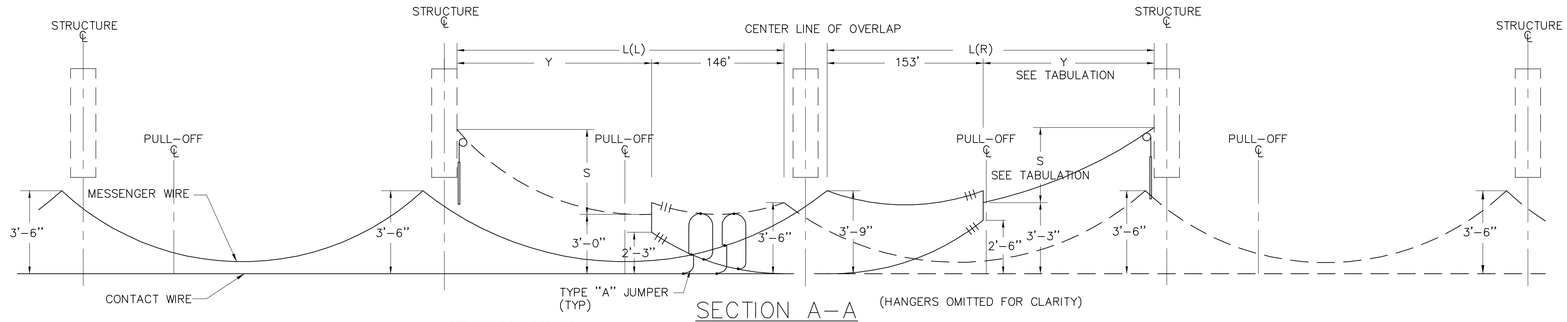

SECTION A-A

(HANGERS OMITTED FOR CLARITY)

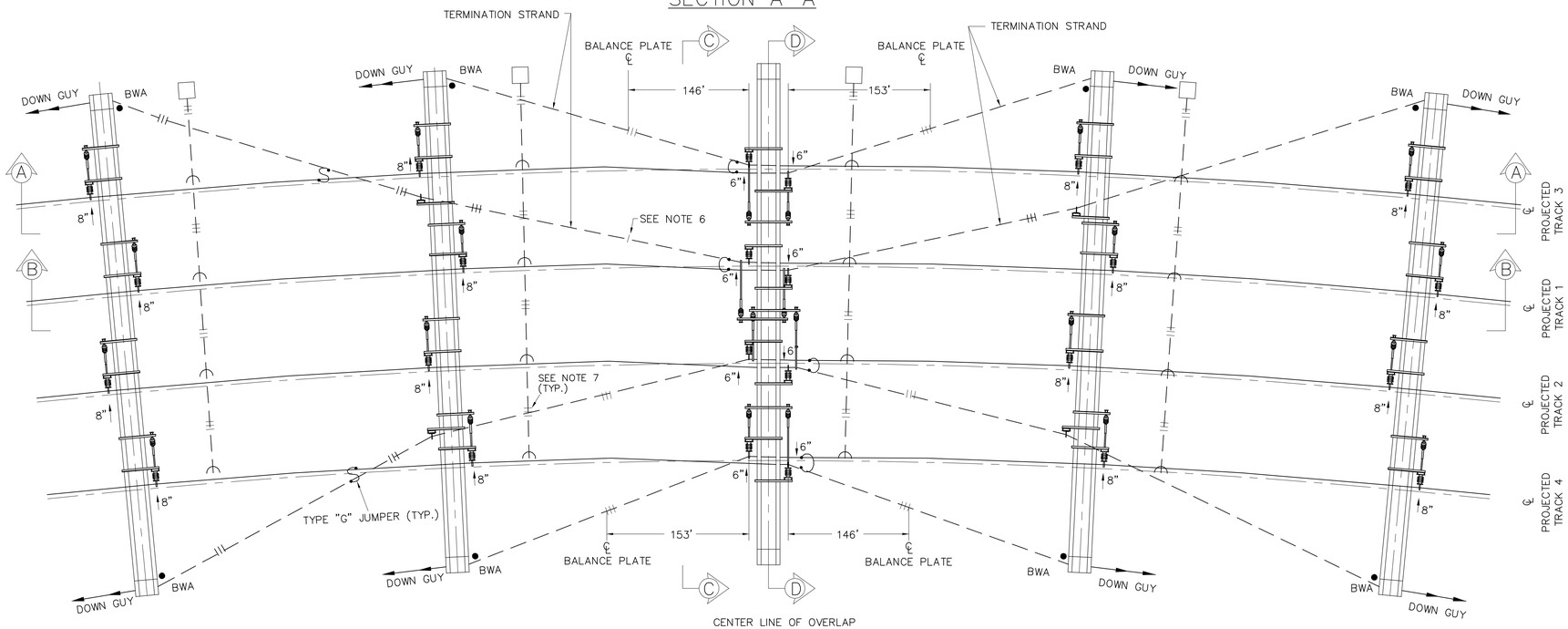

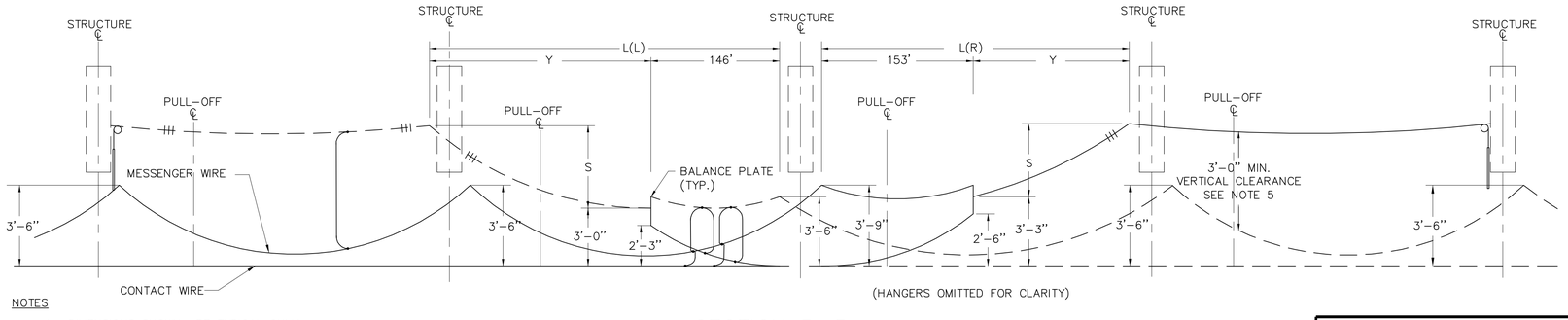

(HANGERS OMITTED FOR CLARITY)

SECTION B-B

OUT OF RUNNING SPAN					
3'-6" SYSTEM HEIGHT			3'-9" SYSTEM HEIGHT		
L(L)	Y	S	L(R)	Y	S
180'	34'	0'-8 1/2"	180'	27'	0'-5"
190'	44'	0'-11"	190'	37'	0'-7"
200'	54'	1'-1 1/2"	200'	47'	0'-9"
210'	64'	1'-4 1/2"	210'	57'	1'-0"
220'	74'	1'-7"	220'	67'	1'-3"
230'	84'	1'-10"	230'	77'	1'-6"
240'	94'	2'-1"	240'	87'	1'-9"
250'	104'	2'-4"	250'	97'	2'-0"
260'	114'	2'-7"	260'	107'	2'-3"
270'	124'	2'-10"	270'	117'	2'-6"
280'	134'	3'-1 1/2"	280'	127'	2'-9"
290'	144'	3'-4 1/2"	290'	137'	3'-0"
300'	154'	3'-8"	300'	147'	3'-4"

NOTES

1. DIMENSIONS SHOWN ARE TYPICAL ONLY.
2. 3" VERTICAL SEPARATION MUST BE MAINTAINED WHERE MESSENGERS CROSS EACH OTHER.
3. FOR SECTION "C-C" AND "D-D" SEE DRAWING C-4.
4. FOR ACTUAL OVERLAP ARRANGEMENT SEE LAYOUT AND SED.
5. INSPAN INSULATION AND POTENTIAL JUMPERS SHALL BE INSTALLED WHERE THE 3'-0" VERTICAL CLEARANCE BETWEEN THE OOR WIRE AND IN-RUNNING CATENARY CAN NOT BE ACHIEVED.
6. REPLACE BALANCE PLATE TERMINATION INSULATORS WITH LINKS.
7. WHEN THE INSULATORS ARE TOO CLOSE ON TOP OF THE PULL-OFF WIRE, REPLACE BALANCE PLATE TERMINATION INSULATORS WITH LINKS, AND ADD MIA ASSEMBLY AS REQUIRED.

URS CORPORATION AES
500 ENTERPRISE DRIVE
ROCKY HILL, CT 06067
1-(860)-529-8882

NO.	DATE	DESCRIPTION

REVISIONS

STATE OF CONNECTICUT
DEPARTMENT OF TRANSPORTATION

STAMFORD YARD CATENARY IMPROVEMENTS

AUTO-TENSIONED SIMPLE CATENARY – UNINSULATED OVERLAP, CURVED TRACK

ENGINEER: URS CORPORATION AES
DESIGNER: RW | DRAFTER: AMK | CHECKER: AJM
APPROVED: T. HOLLAND | DATE: XX/XX/XX
STRUCTURE NO. | BRIDGE LOG NO. | STRUCTURE SHEET NO. C-3

PROJECT CONTROL DATE: XX/XX/XX DISK FILENAME: C-3.dwg XX% DESIGN

F H W A REGION	STATE	TOWN	FED. AID PROJ. NO.	PROJ. NO.	YEAR	SHEET NUMBER
1	CONN.	VARIOUS		301-163	2014	

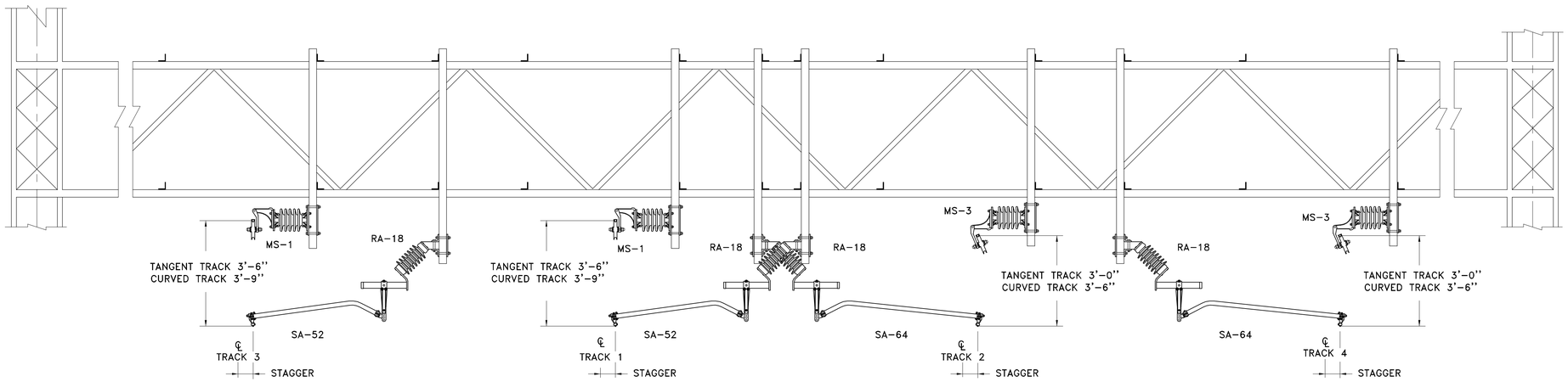

SECTION D-D

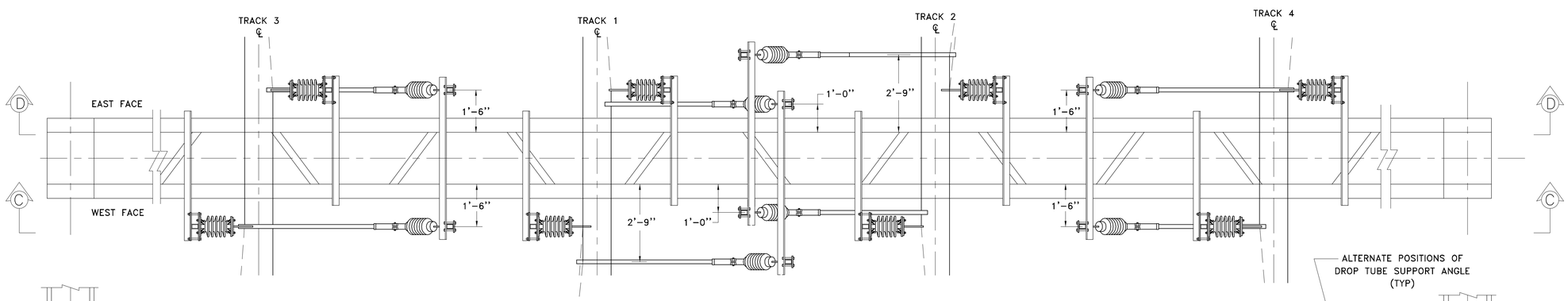

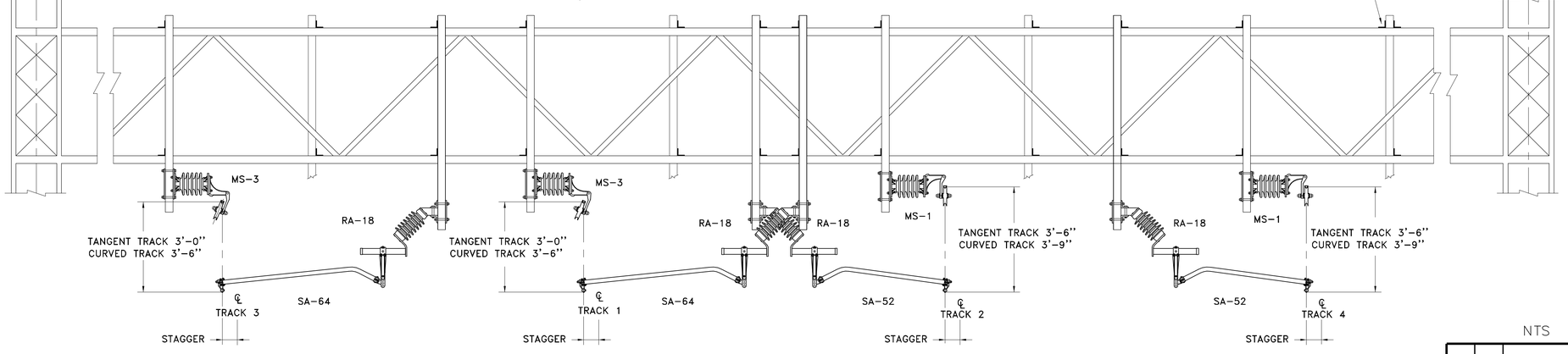

SECTION C-C

THE INFORMATION, INCLUDING ESTIMATED QUANTITIES OF WORK SHOWN ON THESE SHEETS IS BASED ON LIMITED INVESTIGATIONS BY THE STATE AND IS IN NO WAY WARRANTED TO INDICATE THE TRUE CONDITIONS OR ACTUAL QUANTITIES OR DISTRIBUTION OF QUANTITIES OF WORK WHICH WILL BE REQUIRED.

URS CORPORATION AES
500 ENTERPRISE DRIVE
ROCKY HILL, CT 06067
1-(860)-529-8882

NTS

NO.	DATE	DESCRIPTION

REVISIONS

STATE OF CONNECTICUT
DEPARTMENT OF TRANSPORTATION

STAMFORD YARD CATENARY IMPROVEMENTS

AUTO-TENSIONED SIMPLE CATENARY – UNINSULATED OVERLAP, SUPPORT AND REGISTRATION CROSS SECTION

ENGINEER: URS CORPORATION AES
DESIGNER: RW | DRAFTER: AMK | CHECKER: AJM
APPROVED: T. HOLLAND | DATE: XX/XX/XX
STRUCTURE NO. | BRIDGE LOG NO. | STRUCTURE SHEET NO. C-4

PROJECT CONTROL DATE: XX/XX/XX DISK FILENAME: C-4.dwg XX% DESIGN

F H W A REGION	STATE	TOWN	FED. AID PROJ. NO.	PROJ. NO.	YEAR	SHEET NUMBER
1	CONN.	VARIOUS		301-163	2014	

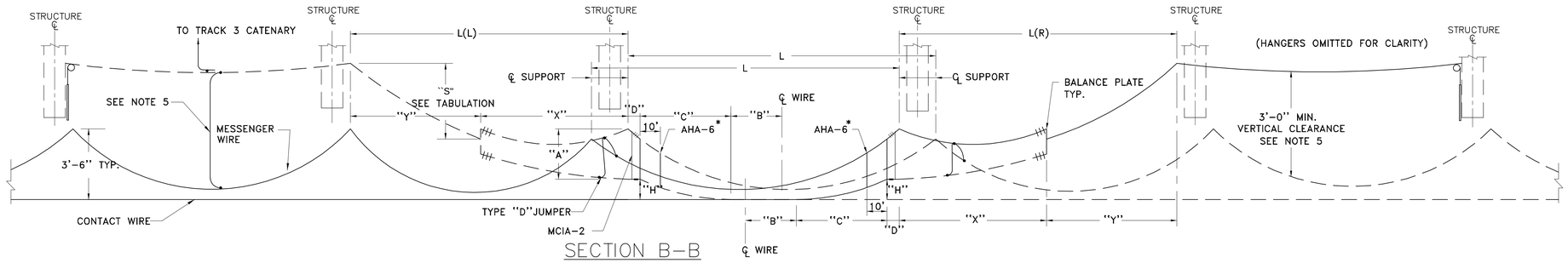

SECTION B-B

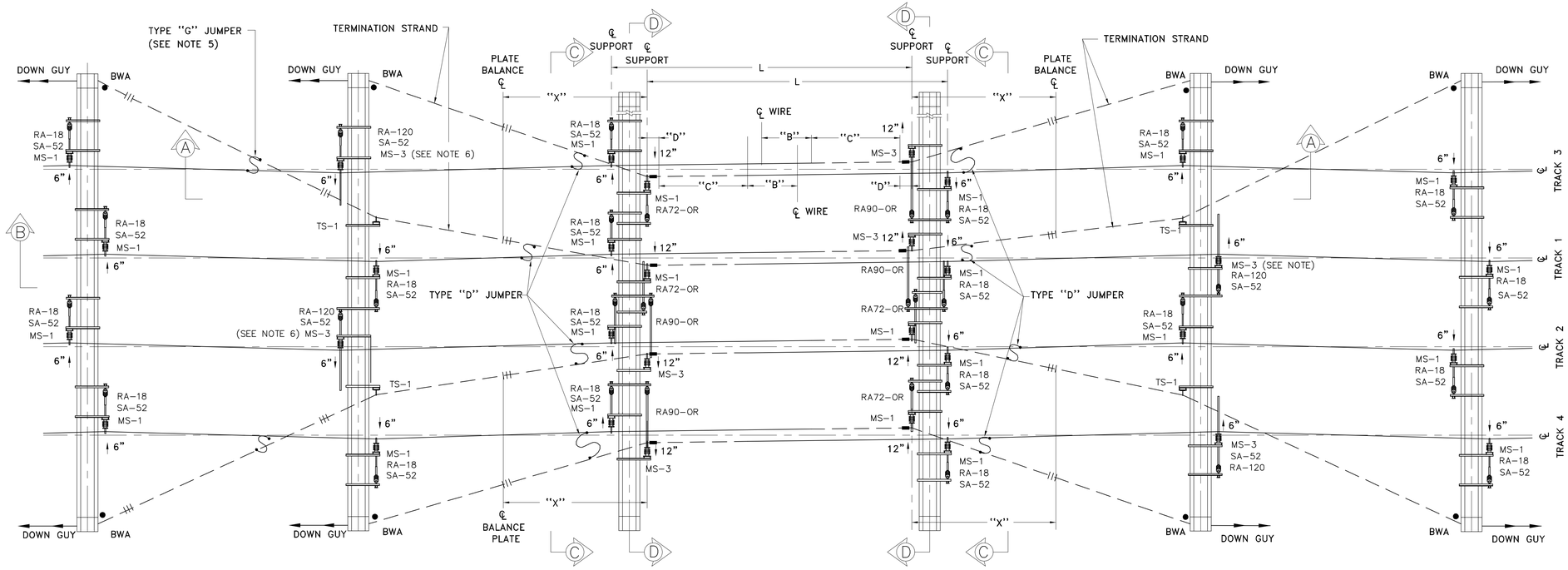

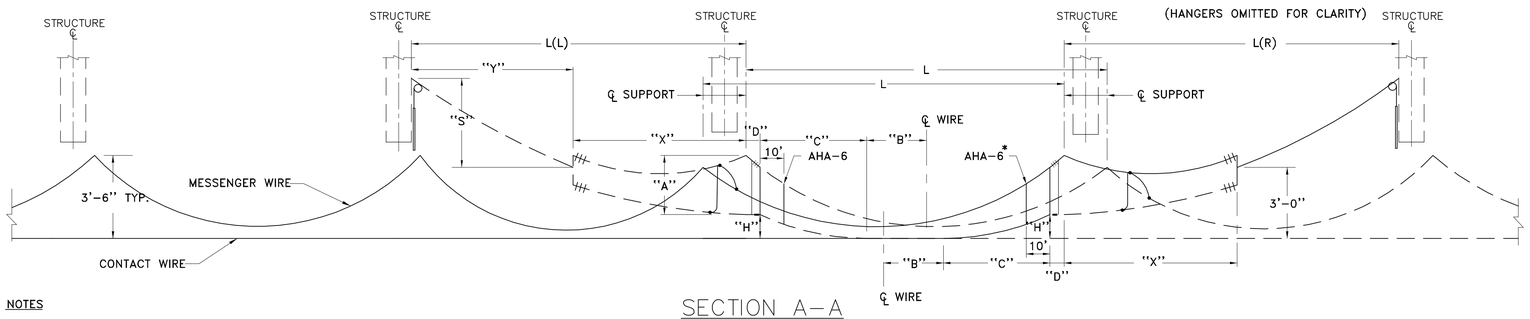

SECTION A-A

INSULATED O/L SPAN					
L	B	C	D	H	ASSY.
160*	5'	69'	6'	9"	AHA-6
165*	7.5'	69'	6'	9"	AHA-6
170*	5'	74'	6'	9"	AHA-6
175*	7.5'	74'	6'	9"	AHA-6
180*	10'	74'	6'	9"	AHA-6
185	12.5'	74'	6'	9"	AHA-6
190	5'	84'	6'	9"	
195	7.5	84'	6'	9"	
200	10'	84'	6'	9"	
205	12.5'	84'	6'	9"	
210	15'	84'	6'	9"	
215	17.5'	84'	6'	9"	
220	20'	84'	6'	9"	
225	9.5'	97'	6'	12"	
230	12'	97'	6'	12"	
235	14.5'	97'	6'	12"	
240	17'	97'	6'	12"	

* INSTALL ASSEMBLY AHA-6.

OUT OF RUNNING SPAN				
L(L) OR L(R)	A = 2'-9" X = 119'		A = 2'-6" X = 108'	
	Y	S	Y	S
140			32'	0'-6"
150	31'	0'-6"	42'	0'-8"
160	41'	0'-8 1/2"	52'	0-10"
170	51'	0-10 1/2"	62'	1'-0"
180	61'	1'-1"	72'	1'-2 1/2"
190	71'	1'-3 1/2"	82'	1'-5"
200	81'	1'-6"	92'	1'-7"
210	91'	1'-8 1/2"	102'	1'-9 1/2"
220	101'	1'-11"	112'	2'-0"
225	106'	2'-0 1/2"	117'	2'-1 1/2"
230	111'	2'-2"	122'	2'-2 1/2"
240	121'	2'-4 1/2"	132'	2'-5 1/2"
250	131'	2'-7"	142'	2'-8"
260	141'	2'-10"	152'	2'-11"
270	151'	3'-1"	162'	3'-2"
280	161'	3'-4"	172'	3'-5"
290	171'	3'-7"	182'	3'-8"
300	181'	3'-10 1/2"	192'	3'-11"

NOTES

1. DIMENSIONS SHOWN ARE TYPICAL ONLY.
2. 3" VERTICAL SEPARATION MUST BE MAINTAINED WHERE MESSENGERS CROSS EACH OTHER.
3. FOR SECTION "C-C" AND "D-D" SEE DRAWING C-7.
4. FOR ACTUAL OVERLAP ARRANGEMENT SEE LAYOUT AND SED.
5. INSPAN INSULATION AND POTENTIAL JUMPERS SHALL BE INSTALLED WHERE THE 3'-0" VERTICAL CLEARANCE BETWEEN THE OOR WIRE AND IN-RUNNING CATENARY CAN NOT BE ACHIEVED.
6. OOR CONTACT WIRE REGISTRATION ARM SHOULD ALWAYS BE IN TENSION.

THE INFORMATION, INCLUDING ESTIMATED QUANTITIES OF WORK SHOWN ON THESE SHEETS IS BASED ON LIMITED INVESTIGATIONS BY THE STATE AND IS IN NO WAY WARRANTED TO INDICATE THE TRUE CONDITIONS OR ACTUAL QUANTITIES OR DISTRIBUTION OF QUANTITIES OF WORK WHICH WILL BE REQUIRED.

URS CORPORATION AES
500 ENTERPRISE DRIVE
ROCKY HILL, CT 06067
1-(860)-529-8882

NO.	DATE	DESCRIPTION

REVISIONS

STATE OF CONNECTICUT
DEPARTMENT OF TRANSPORTATION

STAMFORD YARD CATENARY IMPROVEMENTS

AUTO-TENSIONED SIMPLE CATENARY - INSULATED OVERLAP, TANGENT TRACK

ENGINEER: URS CORPORATION AES
DESIGNER: RW | DRAFTER: AMK | CHECKER: AJM
APPROVED: T. HOLLAND | DATE: XX/XX/XX
STRUCTURE NO. | BRIDGE LOG NO. | STRUCTURE SHEET NO. C-5

PROJECT CONTROL DATE: XX/XX/XX DISK FILENAME: C-5.dwg XX% DESIGN

F H W A REGION	STATE	TOWN	FED. AID PROJ. NO.	PROJ. NO.	YEAR	SHEET NUMBER
1	CONN.	VARIOUS		301-163	2014	

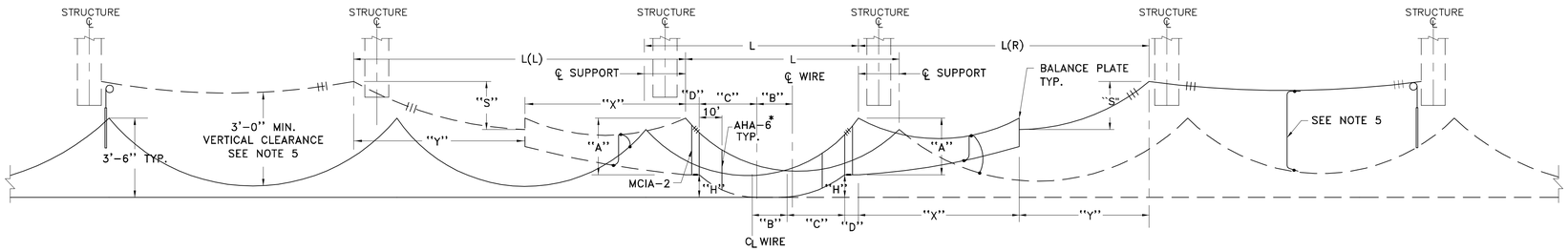

SECTION B-B

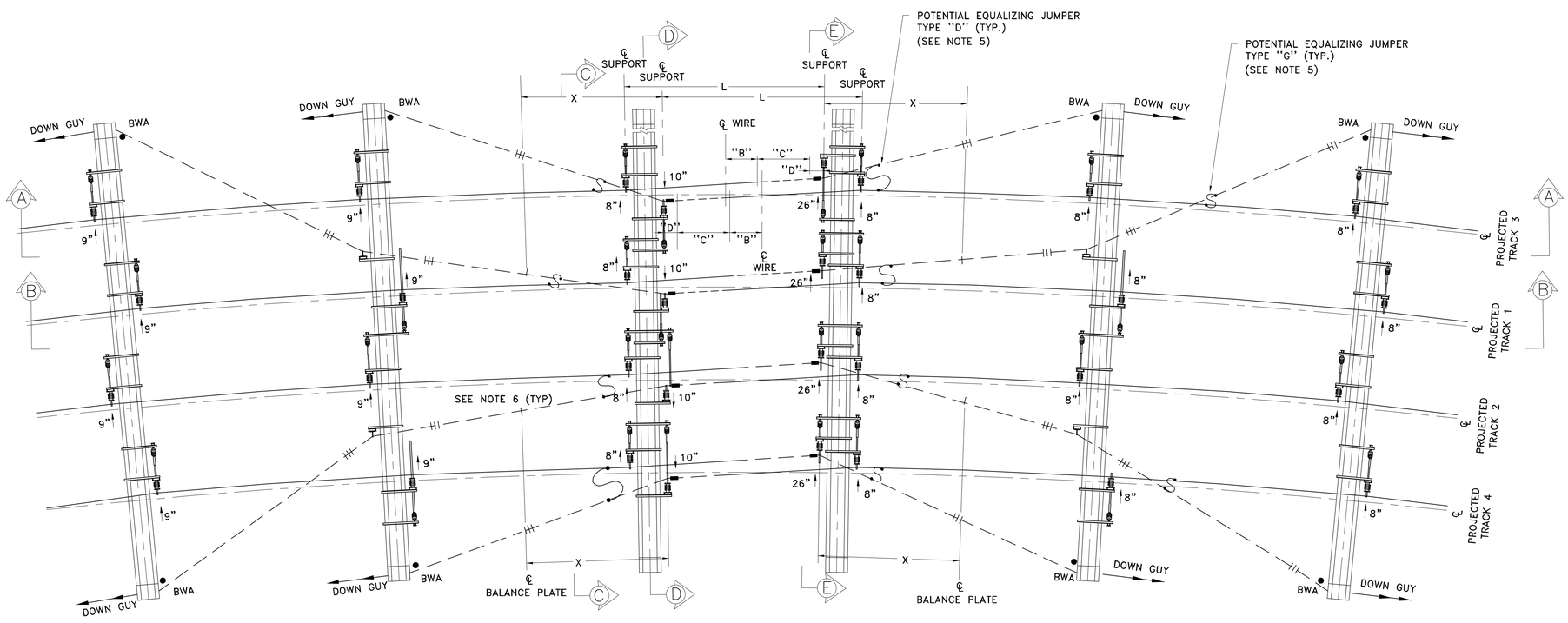

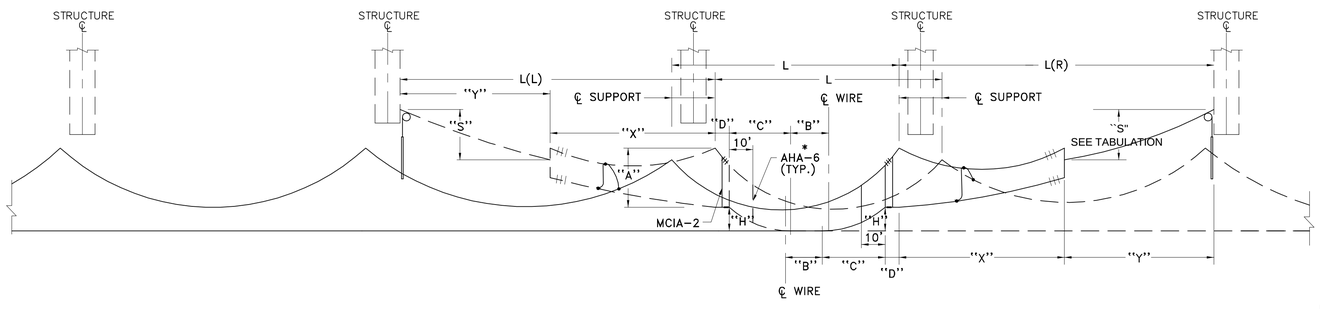

SECTION A-A

NOTES

1. DIMENSIONS SHOWN ARE TYPICAL ONLY.
2. 3" VERTICAL SEPARATION MUST BE MAINTAINED WHERE MESSENGERS CROSS EACH OTHER.
3. FOR SECTION "C-C", "D-D" AND "E-E", SEE DRAWING C-7.
4. FOR ACTUAL OVERLAP ARRANGEMENT SEE LAYOUT AND SED.
5. INSPAN INSULATION AND POTENTIAL JUMPERS SHALL BE INSTALLED WHERE THE 3'-0" VERTICAL CLEARANCE BETWEEN THE OOR WIRE AND IN-RUNNING CATENARY CAN NOT BE ACHIEVED.
6. REPLACE BALANCE PLATE TERMINATION INSULATORS WITH LINKS.
7. OOR CONTACT WIRE REGISTRATION ARM SHOULD ALWAYS BE IN TENSION.
8. USE ADDITIONAL CATENARY SUPPORT TO REDUCE THE LOADING, AS REQUIRED.

INSULATED O/L SPAN

L	B	C	D	H	ASSY.
160*	5'	69'	6'	9"	AHA-6
165*	7.5'	69'	6'	9"	AHA-6
170*	5'	74'	6'	9"	AHA-6
175*	7.5'	74'	6'	9"	AHA-6
180*	10'	74'	6'	9"	AHA-6
185	12.5'	74'	6'	9"	AHA-6
190	5'	84'	6'	9"	
195	7.5	84'	6'	9"	
200	10'	84'	6'	9"	
205	12.5'	84'	6'	9"	
210	15'	84'	6'	9"	
215	17.5'	84'	6'	9"	
220	20'	84'	6'	9"	
225	9.5'	97'	6'	12"	
230	12'	97'	6'	12"	
235	14.5'	97'	6'	12"	
240	17'	97'	6'	12"	

* INSTALL ASSEMBLY AHA-6.

OUT OF RUNNING SPAN

L(L) OR L(R)	A = 2'-9" X = 119'		A = 3'-0" X = 128'	
	Y	S	Y	S
150	31'	0'-6"		
160	41'	0'-8 1/2"	32'	0-7"
170	51'	0-10 1/2"	42'	0'-9"
180	61'	1'-1"	52'	0'-11 1/2"
190	71'	1'-3 1/2"	62'	1'-2"
200	81'	1'-6"	72'	1'-4 1/2"
210	91'	1'-8 1/2"	82'	1'-7"
220	101'	1'-11"	92'	1'-9 1/2"
225	106'	2'-0 1/2"	97'	1'-11"
230	111'	2'-2"	102'	2'-0 1/2"
240	121'	2'-4 1/2"	112'	2'-3"
250	131'	2'-7"	122'	2'-6"
260	141'	2'-10"	132'	2'-9"
270	151'	3'-1"	142'	3'-0"
280	161'	3'-4"	152'	3'-3 1/2"
290	171'	3'-7"	162'	3'-6 1/2"
300	181'	3'-10 1/2"	172'	3'-9 1/2"

THE INFORMATION, INCLUDING ESTIMATED QUANTITIES OF WORK SHOWN ON THESE SHEETS IS BASED ON LIMITED INVESTIGATIONS BY THE STATE AND IS IN NO WAY WARRANTED TO INDICATE THE TRUE CONDITIONS OR ACTUAL QUANTITIES OR DISTRIBUTION OF QUANTITIES OF WORK WHICH WILL BE REQUIRED.

URS CORPORATION AES
500 ENTERPRISE DRIVE
ROCKY HILL, CT 06067
1-(860)-529-8882

NO.	DATE	DESCRIPTION

REVISIONS

STATE OF CONNECTICUT
DEPARTMENT OF TRANSPORTATION

STAMFORD YARD CATENARY IMPROVEMENTS

AUTO-TENSIONED SIMPLE CATENARY - INSULATED OVERLAP, CURVED TRACK

ENGINEER: URS CORPORATION AES
DESIGNER: RW | DRAFTER: AMK | CHECKER: AJM
APPROVED: T. HOLLAND | DATE: XX/XX/XX
STRUCTURE NO. | BRIDGE LOG NO. | STRUCTURE SHEET NO. C-6

PROJECT CONTROL DATE: XX/XX/XX DISK FILENAME: C-6.dwg XX% DESIGN

F H W A REGION	STATE	TOWN	FED. AID PROJ. NO.	PROJ. NO.	YEAR	SHEET NUMBER
1	CONN.	VARIOUS		301-163	2014	

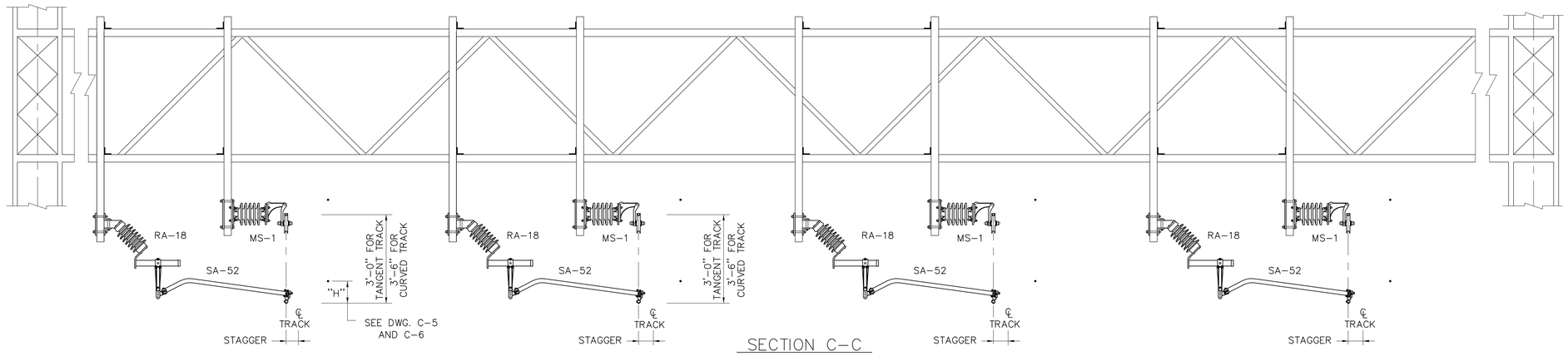

SECTION C-C

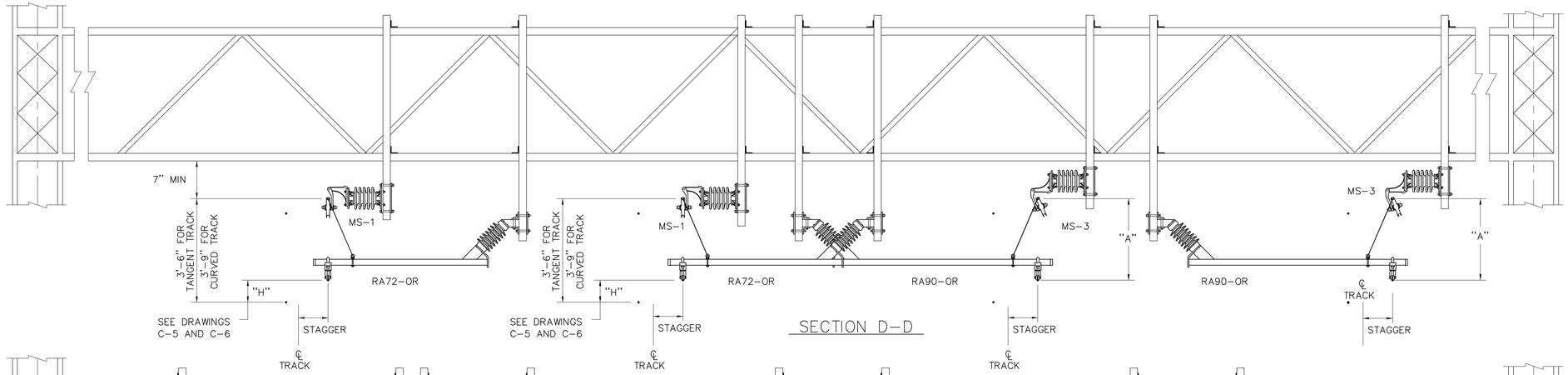

SECTION D-D

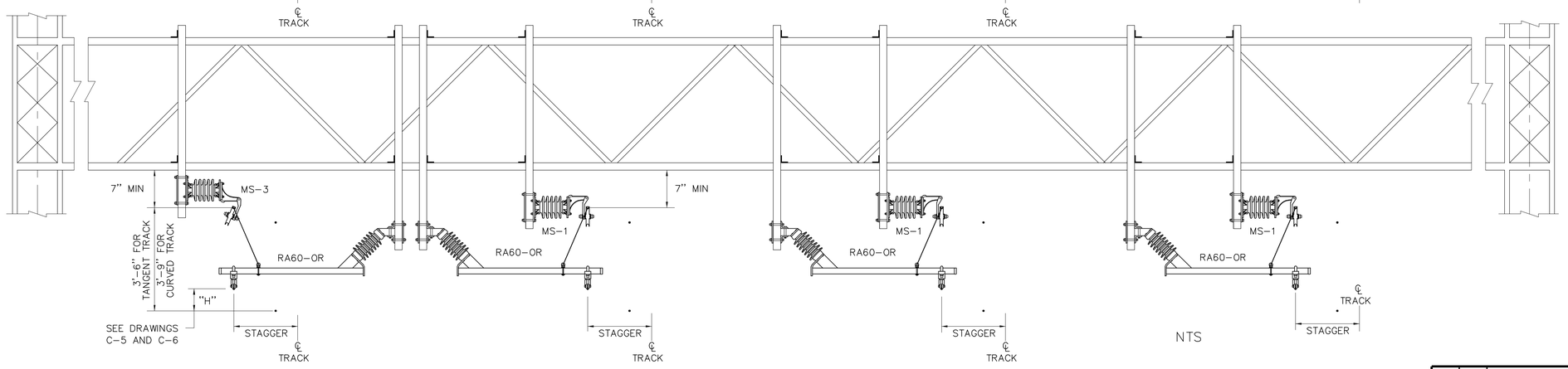

SECTION E-E

NTS

THE INFORMATION, INCLUDING ESTIMATED QUANTITIES OF WORK SHOWN ON THESE SHEETS IS BASED ON LIMITED INVESTIGATIONS BY THE STATE AND IS IN NO WAY WARRANTED TO INDICATE THE TRUE CONDITIONS OR ACTUAL QUANTITIES OR DISTRIBUTION OF QUANTITIES OF WORK WHICH WILL BE REQUIRED.

URS CORPORATION AES
500 ENTERPRISE DRIVE
ROCKY HILL, CT 06067
1-(860)-529-8882

NO.	DATE	DESCRIPTION

REVISIONS

STATE OF CONNECTICUT
DEPARTMENT OF TRANSPORTATION

STAMFORD YARD CATENARY IMPROVEMENTS

AUTO-TENSIONED SIMPLE CATENARY - INSULATED OVERLAP, SUPPORT AND REGISTRATION CROSS SECTION

ENGINEER: URS CORPORATION AES
DESIGNER: RW | DRAFTER: AMK | CHECKER: AJM
APPROVED: T. HOLLAND | DATE: XX/XX/XX
STRUCTURE NO. | BRIDGE LOG NO. | STRUCTURE SHEET NO. C-7

PROJECT CONTROL DATE: XX/XX/XX DISK FILENAME: C-7.dwg XX% DESIGN

F H W A REGION	STATE	TOWN	FED. AID PROJ. NO.	PROJ. NO.	YEAR	SHEET NUMBER
1	CONN.	VARIOUS		301-163	2014	

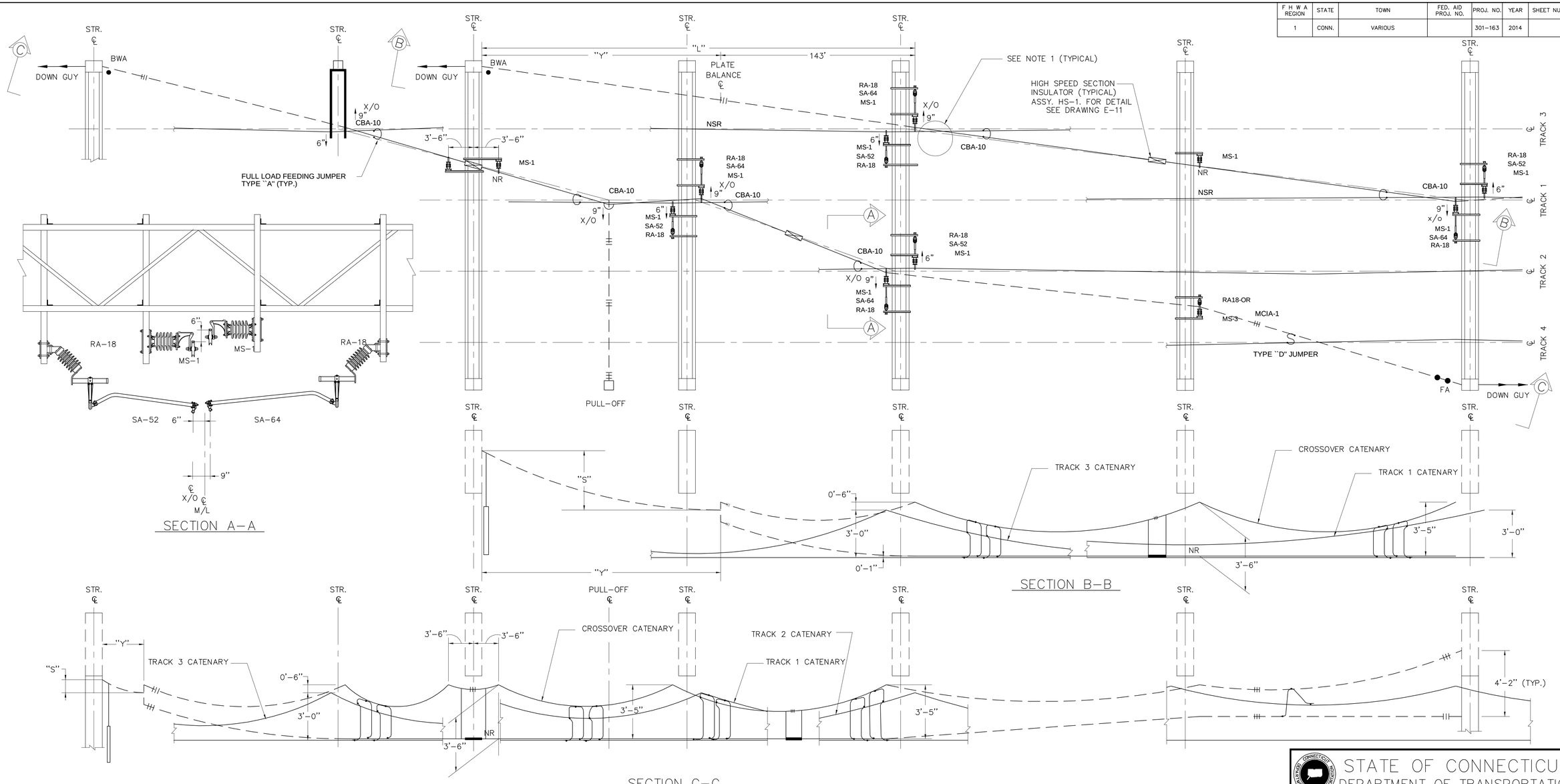

NOTES:

1. WHERE WIRES CROSS:
   a) AT THE STRUCTURES, THE MESSENGER WIRE FOR CROSS-OVER TO BE SUPPORTED HIGHER THAN MAIN LINE MESSENGER WIRE IN ORDER THAT THESE WIRES DO NOT CHAFE.
   b) CONTACT WIRE BRIDGE TO BE INSTALLED AND ALLOWANCE BE MADE FOR TEMPERATURE MOVEMENT. FOR DETAIL SEE DWG. E-5.
2. AT THE STRUCTURES WHERE WIRES ARE KNUCKLED, BOTH MESSENGER AND CONTACT WIRES CAN BE SUPPORTED AT THE SAME HEIGHT.
3. NEW STRUCTURES ARE INSTALLED TO REGISTER AND SUPPORT CROSSOVER CATENARY AND SECTION INSULATORS AS REQUIRED. FOR ACTUAL ARRANGEMENTS SEE LAYOUT AND SED.
4. FOR ACTUAL STAGGERS, WIRE HEIGHTS AND TERMINATION HEIGHTS, SEE LAYOUT AND SED.

OUT OF RUNNING SPAN

A = 3'-5"

L	Y	S	L	Y	S
170'	27'	0'-6 1/2"	240'	97'	2'-1 1/2"
180'	37'	0'-9"	250'	107'	2'-4 1/2"
190'	47'	0'-11 1/2"	260'	117'	2'-7 1/2"
200'	57'	1'-2"	270'	127'	2'-10 1/2"
210'	67'	1'-4 1/2"	280'	137'	3'-1 1/2"
220'	77'	1'-7 1/2"	290'	147'	3'-5"
230'	87'	1'-10 1/2"	300'	157'	3'-8 1/2"

THE INFORMATION, INCLUDING ESTIMATED QUANTITIES OF WORK SHOWN ON THESE SHEETS IS BASED ON LIMITED INVESTIGATIONS BY THE STATE AND IS IN NO WAY WARRANTED TO INDICATE THE TRUE CONDITIONS OR ACTUAL QUANTITIES OR DISTRIBUTION OF QUANTITIES OF WORK WHICH WILL BE REQUIRED.

URS CORPORATION AES
500 ENTERPRISE DRIVE
ROCKY HILL, CT 06067
1-(860)-529-8882

NO.	DATE	DESCRIPTION

REVISIONS

STATE OF CONNECTICUT
DEPARTMENT OF TRANSPORTATION

STAMFORD YARD CATENARY IMPROVEMENTS

AUTO-TENSIONED SIMPLE CATENARY - CROSSOVER ARRANGEMENT

ENGINEER: URS CORPORATION AES
DESIGNER: RW | DRAFTER: AMK | CHECKER: AJM
APPROVED: T. HOLLAND | DATE: XX/XX/XX
STRUCTURE NO. | BRIDGE LOG NO. | STRUCTURE SHEET NO. C-8

PROJECT CONTROL DATE: XX/XX/XX DISK FILENAME: C-8.dwg XX% DESIGN

F H W A REGION	STATE	TOWN	FED. AID PROJ. NO.	PROJ. NO.	YEAR	SHEET NUMBER
1	CONN.	VARIOUS		301-163	2014	

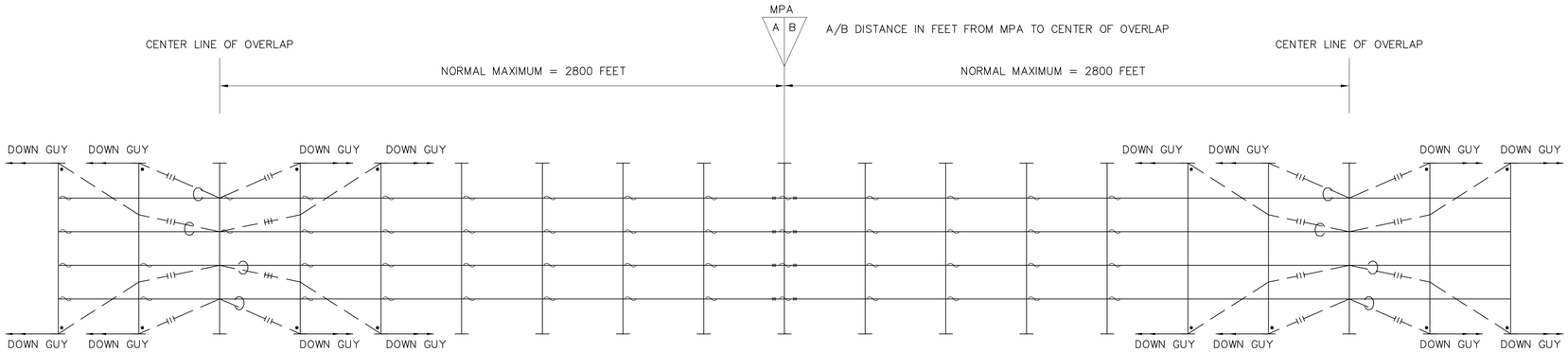

TYPICAL TENSION LENGTH

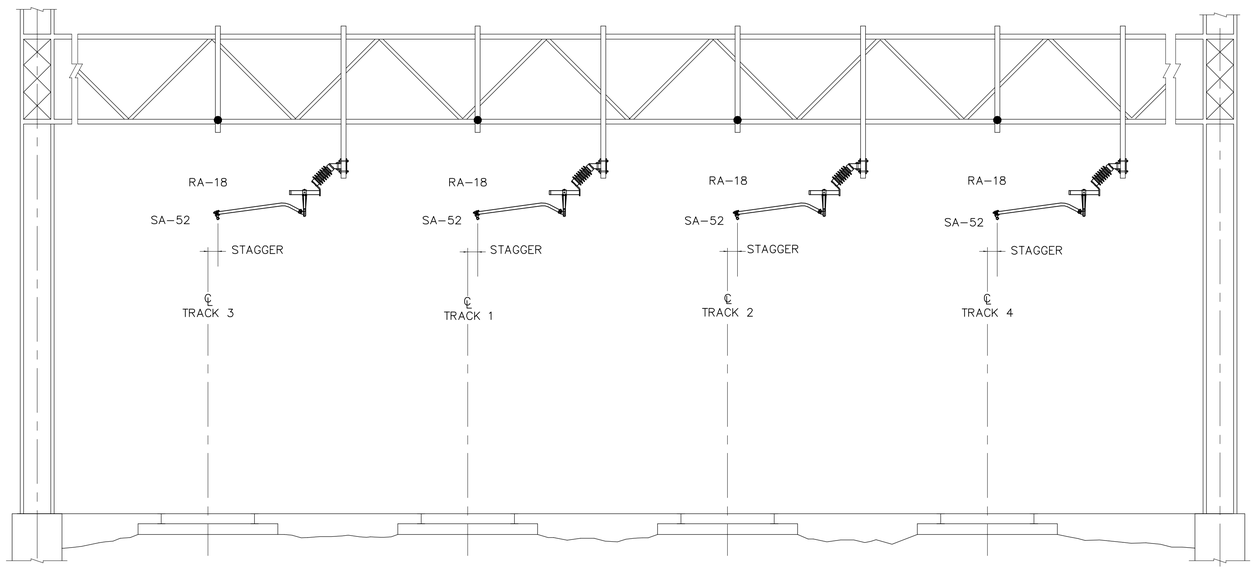

TYPICAL MID-POINT ANCHOR STRUCTURE

NTS

THE INFORMATION, INCLUDING ESTIMATED QUANTITIES OF WORK SHOWN ON THESE SHEETS IS BASED ON LIMITED INVESTIGATIONS BY THE STATE AND IS IN NO WAY WARRANTED TO INDICATE THE TRUE CONDITIONS OR ACTUAL QUANTITIES OR DISTRIBUTION OF QUANTITIES OF WORK WHICH WILL BE REQUIRED.

URS
URS CORPORATION AES
500 ENTERPRISE DRIVE
ROCKY HILL, CT 06067
1-(860)-529-8882

NO.	DATE	DESCRIPTION

REVISIONS

STATE OF CONNECTICUT
DEPARTMENT OF TRANSPORTATION

STAMFORD YARD CATENARY IMPROVEMENTS

MID-POINT ARRANGEMENT

ENGINEER: URS CORPORATION AES
DESIGNER: RW | DRAFTER: AMK | CHECKER: AJM
APPROVED: T. HOLLAND | DATE: XX/XX/XX
STRUCTURE NO. | BRIDGE LOG NO. | STRUCTURE SHEET NO. C-9

PROJECT CONTROL DATE: XX/XX/XX DISK FILENAME: C-9.dwg XX% DESIGN

F H W A REGION	STATE	TOWN	FED. AID PROJ. NO.	PROJ. NO.	YEAR	SHEET NUMBER
1	CONN.	VARIOUS		301-163	2014	

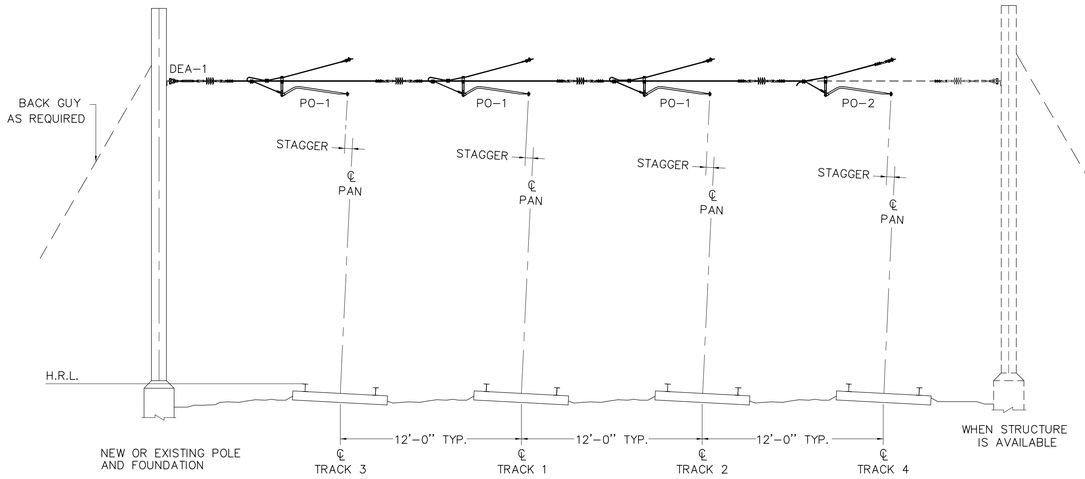

SINGLE WIRE PULL-OFF ARRANGEMENT TYPE "I"

USED WHEN THE SYSTEM DEPTH IS BETWEEN 15"-18"

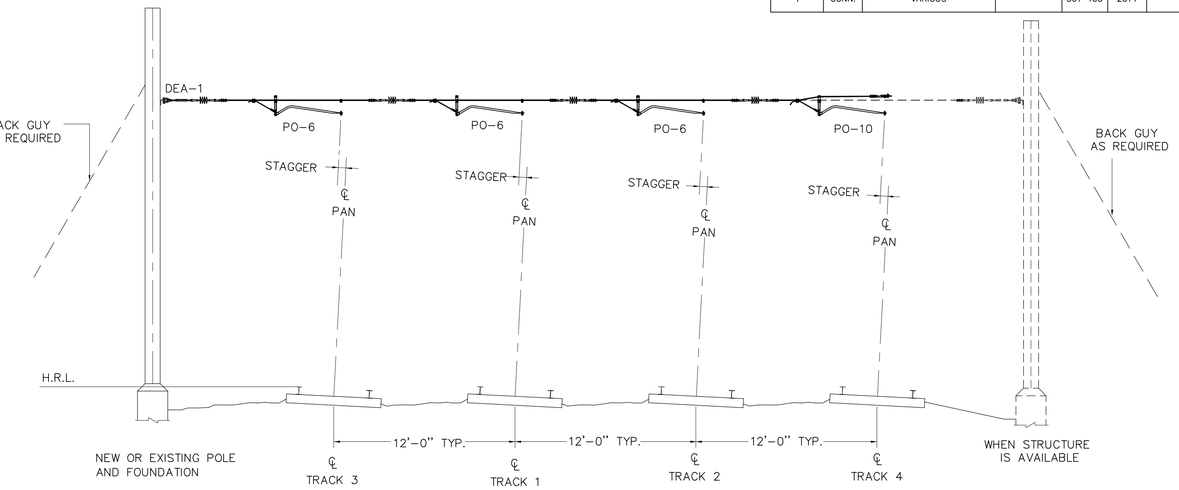

SINGLE WIRE PULL-OFF ARRANGEMENT TYPE "II"

USED WHEN THE SYSTEM DEPTH IS BETWEEN 9"-15"

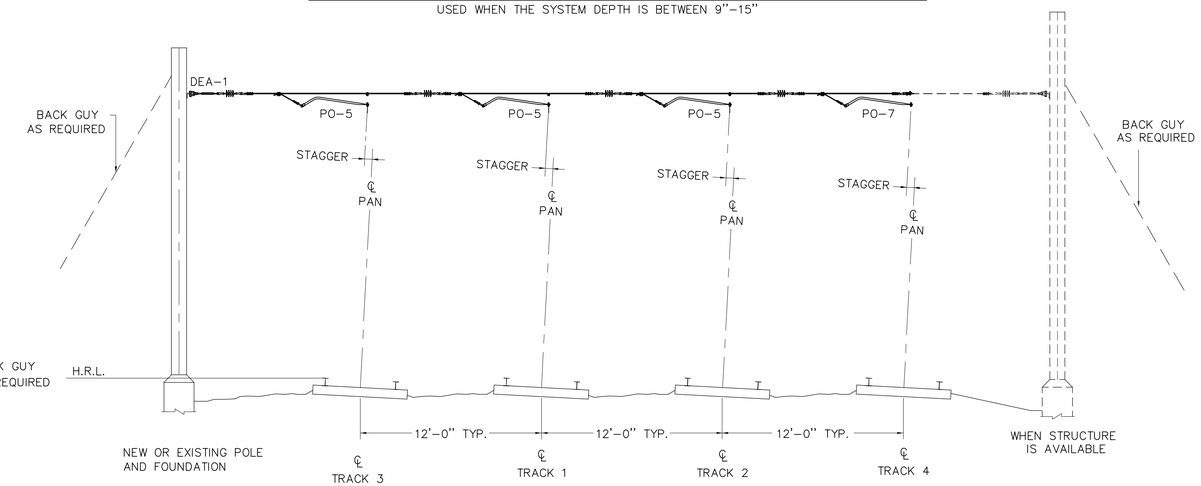

SINGLE WIRE PULL-OFF ARRANGEMENT TYPE "III"

USED WHEN THE SYSTEM DEPTH IS LESS THAN 9"
FOR TEMPORARY CONDITION ONLY

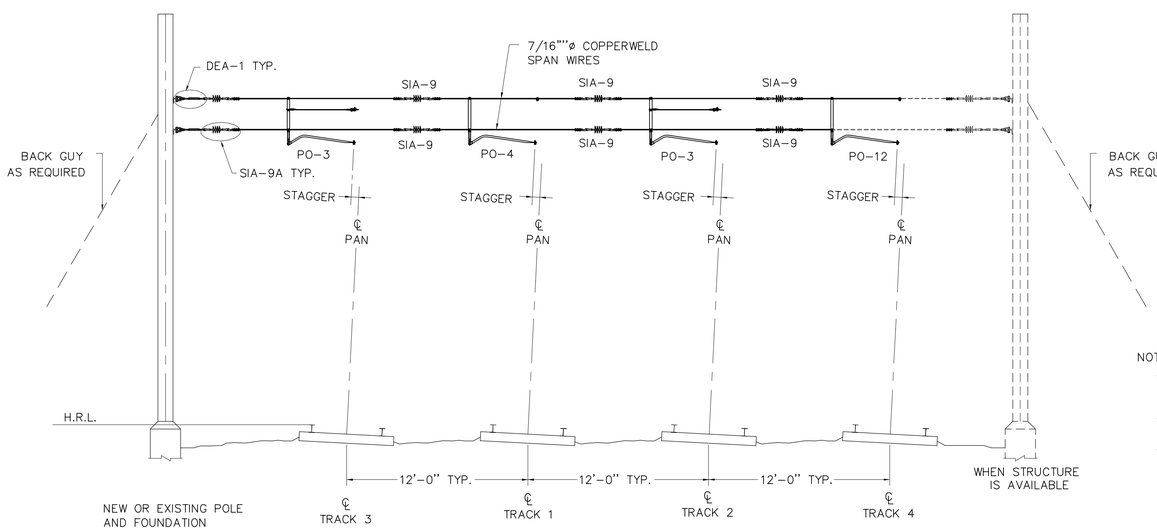

TWIN WIRE PULL-OFF ARRANGEMENTS

FOR SYSTEM DEPTHS OVER 18 INCHES

NOTES:

1. "PULL-OFF" ARRANGEMENTS TO BE ALLOCATED ONLY WHEN SUFFICIENT LOAD EXISTS TO OVERCOME REVERSE WIND LOADING.
2. "PULL-OFF" OR "STEADY SPAN" ARRANGEMENTS SHALL BE USED WHERE MAXIMUM PERMISSIBLE OFFSETS WOULD OTHERWISE BE EXCEEDED.
3. FOR ASSEMBLIES PO-1, PO-2, PO-3, PO-4 AND PO-12, SEE DWG. E-4. FOR ASSEMBLIES PO-5, PO-6, PO-7 AND PO-10, SEE DWG. E-7.

THE INFORMATION, INCLUDING ESTIMATED QUANTITIES OF WORK SHOWN ON THESE SHEETS IS BASED ON LIMITED INVESTIGATIONS BY THE STATE AND IS IN NO WAY WARRANTED TO INDICATE THE TRUE CONDITIONS OR ACTUAL QUANTITIES OR DISTRIBUTION OF QUANTITIES OF WORK WHICH WILL BE REQUIRED.

URS CORPORATION AES
500 ENTERPRISE DRIVE
ROCKY HILL, CT 06067
1-(860)-529-8882

NO.	DATE	DESCRIPTION

REVISIONS

STATE OF CONNECTICUT
DEPARTMENT OF TRANSPORTATION

STAMFORD YARD CATENARY IMPROVEMENTS

PULL-OFF ARRANGEMENT

ENGINEER: URS CORPORATION AES
DESIGNER: RW | DRAFTER: AMK | CHECKER: AJM
APPROVED: T. HOLLAND | DATE: XX/XX/XX
STRUCTURE NO. | BRIDGE LOG NO. | STRUCTURE SHEET NO. C-10

PROJECT CONTROL DATE: XX/XX/XX DISK FILENAME: C-10.dwg XX% DESIGN

F H W A REGION	STATE	TOWN	FED. AID PROJ. NO.	PROJ. NO.	YEAR	SHEET NUMBER
1	CONN.	VARIOUS		301-163	2014	

AUTO-TENSIONED SIMPLE CATENARY WITH PRESAG CONTACT WIRE

DESIGN ITEM	UNITS	MESSENGER	CONTACT WIRE
MAKE UP OF CONDUCTOR		4/0, TYPE E	350KCMIL GROOVED
MATERIAL		COPPER-COPPERWELD	BRONZE ALLOY 80
DIAMETER	IN	0.613	0.620
CROSS SECTIONAL AREA	SQ IN	0.224	0.276
WEIGHT OF CONDUCTOR	LB/FT	0.848	1.063
WEIGHT OF CATENARY (INCLUDING HANGERS)	LB/FT	1.961	
RADIAL THICKNESS OF ICE (1) LIGHT ICE	IN	0.500	0.125
WEIGHT OF ICE (1)	LB/FT	0.694	0.116
WEIGHT OF CATENARY WITH ICE (1)	LB/FT	2.772	
RADIAL THICKNESS OF ICE (2) HEAVY ICE	IN	0.500	0.500
WEIGHT OF ICE (2)	LB/FT	0.694	0.698
WEIGHT OF CATENARY WITH ICE (2)	LB/FT	3.354	
BREAKING LOAD	LB	20730	16410
MAXIMUM DESIGN SPAN / EQUIVALENT SPAN	FT	300/270	
TENSIONS WITHOUT WIND AT :			
70° F	LB	7500	5000
32° F WITH ICE (1)	LB	7500	5000
32° F WITH ICE (2)	LB	7585	5057
-10° F WITH ICE (2)	LB	9039	6026
160° F	LB	6544	4363
MESSENGER SAGS ON 300 FT SPAN AT:			
70° F	IN	33.62	-
32° F WITH ICE (1)	IN	43.77	-
32° F WITH ICE (2)	IN	50.72	-
-10° F WITH ICE (2)	IN	43.98	-
160° F	IN	37.24	-
MODULUS OF ELASTICITY	PSI	19.5×10^{6}	16.0×10^{6}
COEFFICIENT OF EXPANSION	/ ° F	8.4×10^{-6}	9.3×10^{-6}
MINIMUM FACTOR OF SAFETY		2.28	2.70
UPPER/LOWER TEMPERATURE STOP	° F	135 / 15	
NORMAL CONTACT WIRE HT	FT-IN	18'-0"	

WITH CONTACT WIRE 30% WORN

DESIGN ITEM	UNITS	MESSENGER	CONTACT WIRE
WEIGHT OF CATENARY (INCLUDING HANGERS)	LB/FT	1.6424	
WEIGHT OF CATENARY WITH ICE (1)	LB/FT	2.423	
WEIGHT OF CATENARY WITH ICE (2)	LB/FT	2.923	
BREAKING LOAD	LB	20730	11487
TENSIONS WITHOUT WIND AT :			
-10° F NO WIND WITH ICE (2)	LB	8814	5876
MINIMUM FACTOR OF SAFETY		2.35	1.96

MAXIMUM CATENARY STRUCTURE SPACING ON CURVED TRACK FOR A-T EQUIPMENT

MAX. STRUCTURE SPACING (FT)	RADIUS OF CURVE (FT)	DEGREE OF CURVE (°-')
50	187	30°-39'
60	271	21°-9'
70	372	15°-24'
80	491	11°-40'
90	628	9°-8'
100	784	7°-19'
110	960	5°-58'
120	1159	4°-57'
130	1382	4°-9'
140	1629	3°-31'
150	1905	3°-0'
160	2210	2°-36'
170	2548	2°-15'
180	2922	1°-58'
190	3335	1°-43'
200	3792	1°-31'
210	4297	1°-20'
220	4857	1°-11'
230	5476	1°-3'
240	6165	0-56'
250	6930	0-50'
260	7783	0-44'
270	8736	0-39'
280	9805	0-35'
290	11007	0-31'
300	12367	0-28'

STRUCTURE SPACING SHALL BE REDUCED BY 5 FEET FOR DESIGN.

RISE AND FALL AT MID-SPAN FOR A-T SIMPLE CATENARY WITH PRESAG

SPAN (FT)	RISE-1 OPERATING (INCHES)	RISE-2 WORN (INCHES)	FALL-1 OPERATING (INCHES)	FALL-2 NON-OPERATING (INCHES)
50	0.1	0.2	0.4	0.7
60	0.1	0.4	0.5	1.0
70	0.2	0.5	0.7	1.4
80	0.2	0.5	0.9	1.5
90	0.2	0.7	1.1	1.9
100	0.3	0.8	1.4	2.4
110	0.3	1.0	1.6	2.9
120	0.3	1.1	1.8	3.1
130	0.4	1.3	2.1	3.7
140	0.5	1.5	2.5	4.3
150	0.5	1.7	2.9	4.9
160	0.6	1.8	3.1	5.3
170	0.7	2.0	3.5	6.0
180	0.7	2.3	3.9	6.7
190	0.8	2.4	4.2	7.2
200	0.9	2.7	4.7	8.0
210	1.0	3.0	5.2	8.8
220	1.1	3.2	5.7	9.7
230	1.1	3.4	6.1	10.3
240	1.2	3.8	6.6	11.2
250	1.3	4.1	7.2	12.1
260	1.4	4.4	7.8	13.1
270	1.5	4.6	8.2	13.9
280	1.6	5.0	8.8	14.9
290	1.7	5.4	9.5	16.0
300	1.9	5.7	10.2	17.1

RISE-1 AT 0° F, 40 MPH WIND AND WITHOUT ICE.
RISE-2 AT -10° F, 65 MPH WIND, 30% WORN CONTACT WIRE, WITHOUT ICE.
FALL-1 AT 32° F, NO WIND, WITH LIGHT ICE.
FALL-2 AT 32° F, NO WIND, WITH HEAVY ICE.

ERECTION TENSION FOR A-T SIMPLE CATENARY

TEMP (° F)	EQUIVALENT SPAN 270 - 210 FT UNLOADED MESS	LOADED MESS	CONTACT WIRE	TEMP (° F)	EQUIVALENT SPAN 210 - 150 FT UNLOADED MESS	LOADED MESS	CONTACT WIRE	TEMP (° F)	EQUIVALENT SPAN 150 - 90 FT UNLOADED MESS	LOADED MESS	CONTACT WIRE
0	10082	10410	6940	0	10296	10480	6987	0	10453	10541	7027
10	9639	9985	6657	10	9852	10048	6699	10	10010	10103	6736
20	9195	9563	6375	20	9409	9618	6412	20	9566	9667	6444
30	8752	9142	6095	30	8965	9189	6126	30	9123	9231	6154
40	8310	8726	5817	40	8522	8763	5842	40	8679	8796	5864
50	7868	8312	5542	50	8078	8339	5559	50	8235	8362	5575
60	7427	7904	5269	60	7635	7918	5278	60	7792	7930	5287
70	6974	7500	5000	70	7187	7500	5000	70	7345	7500	5000
80	6550	7102	4735	80	6751	7087	4724	80	6905	7072	4715
90	6115	6712	4475	90	6309	6678	4452	90	6461	6647	4431
100	5683	6330	4220	100	5869	6277	4184	100	6018	6225	4150
110	5257	5959	3972	110	5431	5882	3921	110	5575	5808	3872

ERECTION TENSIONS IN POUNDS ARE BASED ON A INITIAL CONDITION OF 60° F DATUM TEMPERATURE.

$$\text{EQUIVALENT SPAN} = \sqrt{\frac{L1^3 + L2^3 + L3 \ldots}{L1 + L2 + L3 \ldots}}$$

WHERE L1, L2, L3 ARE ACTUAL SPAN LENGTHS WITHIN A SITE SPECIFIC HALF TENSION LENGTH.

WINDAGE FOR A-T SIMPLE CATENARY

WIND SPEED (MPH)	LOADING CONDITIONS	WINDAGE (LB/FT) MESSENGER ACTUAL	MESSENGER EFFECTIVE	CONTACT WIRE ACTUAL	CONTACT WIRE EFFECTIVE
40	NO ICE @ 60° F	0.21	0.24	0.21	0.18
55	NO ICE @ 60° F	0.40	0.45	0.40	0.35
65	NO ICE @ 60° F	0.55	0.62	0.56	0.49
40	ICE (1) @ 32° F	0.55	0.52	0.30	0.32
55	ICE (2) @ 32° F	1.04	1.20	1.05	0.89
65	ICE (2) @ 32° F	1.45	1.67	1.46	1.25

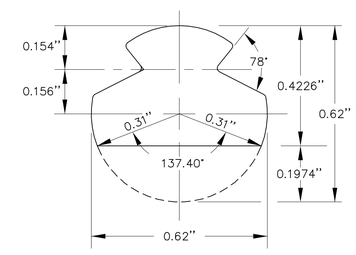

NOTES:

1. ICE(1) DENOTES LIGHT ICE CONDITIONS WITH 1/2" RADIAL ICE ON MESSENGER WIRE AND 1/8" RADIAL ICE ON THE CONTACT WIRE.
2. ICE(2) DENOTES HEAVY ICE CONDITIONS WITH 1/2" RADIAL ICE ON MESSENGER WIRE AND 1/2" RADIAL ICE ON THE CONTACT WIRE.

WORST LOADING COMBINATIONS FOR DESIGN

TEMP (° F)	WIND SPEED (MPH)	ICE LOADING	TENSION (LBS) MESSENGER	TENSION (LBS) CONTACT WIRE	FACTOR OF SAFETY MESSENGER	FACTOR OF SAFETY CONTACT WIRE
OPERATING CONDITIONS						
60	55	NO ICE	7500	5000	2.76	3.28
0	40	ICE (1)	8465	5643	2.45	2.91
NON-OPERATING CONDITION						
0	55	ICE (2)	8922	5949	2.32	2.76
-10	65	NO ICE	8585	5724	2.41	2.87

THE INFORMATION, INCLUDING ESTIMATED QUANTITIES OF WORK SHOWN ON THESE SHEETS IS BASED ON LIMITED INVESTIGATIONS BY THE STATE AND IS IN NO WAY WARRANTED TO INDICATE THE TRUE CONDITIONS OR ACTUAL QUANTITIES OR DISTRIBUTION OF QUANTITIES OF WORK WHICH WILL BE REQUIRED.

URS CORPORATION AES
500 ENTERPRISE DRIVE
ROCKY HILL, CT 06067
1-(860)-529-8882

NO.	DATE	DESCRIPTION

REVISIONS

STATE OF CONNECTICUT
DEPARTMENT OF TRANSPORTATION

STAMFORD YARD CATENARY IMPROVEMENTS

AUTO-TENSIONED SIMPLE CATENARY CONDUCTOR DATA, STRUCTURE SPACING, RISE AND FALL & ERECTION TENSION CHARTS

ENGINEER: URS CORPORATION AES
DESIGNER: RW | DRAFTER: AMK | CHECKER: AJM
APPROVED: T. HOLLAND | DATE: XX/XX/XX
STRUCTURE NO. | BRIDGE LOG NO. | STRUCTURE SHEET NO. D-1

PROJECT CONTROL DATE: XX/XX/XX DISK FILENAME: D-1.dwg XX% DESIGN

F H W A REGION	STATE	TOWN	FED. AID PROJ. NO.	PROJ. NO.	YEAR	SHEET NUMBER
1	CONN.	VARIOUS		301-163	2014	

MAXIMUM PERMISSIBLE MIDSPAN STATIC OFFSET (MP) FOR A-T EQUIPMENT

TABLE 1. CONTACT WIRE HORIZONTAL DISPLACEMENT PARAMETERS (T)

DESIGN SPAN (FT)	(T)	DESIGN SPAN (FT)	(T)	DESIGN SPAN (FT)	(T)
300	2.92	220	6.92	140	10.02
290	3.52	210	7.42	130	10.32
280	4.02	200	7.82	120	10.62
270	4.52	190	8.22	110	10.92
260	5.02	180	8.62	100	11.12
250	5.52	170	9.02	90	11.32
240	6.02	160	9.42	80	11.52
230	6.52	150	9.72	70	11.72

TABLE 2. STAGGER EFFECT (SE) FOR CONTACT WIRE HORIZONTAL DISPLACEMENT

(SD)	BLOW-OFF (B) - VERSINE (V)									
	2	4	6	8	10	12	14	16	18	20
2	0.1	0.1								
4	0.5	0.3	0.2	0.1	0.1	0.1	0.1	0.1	0.1	0.1
6	1.1	0.6	0.4	0.3	0.2	0.2	0.2	0.1	0.1	0.1
8	2.0	1.0	0.7	0.5	0.4	0.3	0.3	0.3	0.2	0.2
10		1.6	1.0	0.8	0.6	0.5	0.4	0.4	0.3	0.3
12		2.3	1.5	1.1	0.9	0.8	0.6	0.6	0.5	0.5

TABLE 3. CORRECTION FACTOR (H) CONTACT WIRE HT.

CONTACT HEIGHT (FT-IN)	(H)
24'-0"	-3.06
23'-0"	-2.55
22'-0"	-2.04
21'-0"	-1.53
20'-0"	-1.02
19'-0"	-0.51
18'-0"	0.0
17'-0"	+0.51
16'-0"	+1.02

TABLE 4. CALCULATION OF MAXIMUM PERMISSIBLE MIDSPAN STATIC OFFSET (MP)

IF SD $\geq$ 4(B-V) THEN THE MAXIMUM CONTACT WIRE DISPLACEMENT OCCURS AT SUPPORTS, AND THE MIDSPAN CONTACT WIRE OFFSET DOES NOT GOVERN THE DESIGN.

IF SD < 4(B-V) THEN THE MAXIMUM PERMISSIBLE MIDSPAN OFFSET FOR CONTACT WIRE IS CALCULATED AS FOLLOWS:

MP = T (TABLE 1) - SE (TABLE 2) + H (TABLE 3)

WHERE :

MP = MAXIMUM PERMISSIBLE MIDSPAN STATIC OFFSET (IN)
T = CONTACT WIRE DISPLACEMENT PARAMETER (IN)
B = BLOW-OFF (IN) FOR AT EQUIPMENT (SEE TABLE THIS DWG)
V = VERSINE (IN) FOR DESIGN SPAN
H = CONTACT WIRE HEIGHT CORRECTION FACTOR (IN)
SD = STAGGER DIFFERENCE (IN)
SE = STAGGER EFFECT (IN)

ALONG TRACK MOVEMENT (ATM) AT SUPPORT FOR A-T SIMPLE CATENARY

TEMP (° F)	DISTANCE FROM CATENARY SUPPORT MID-POINT ANCHOR (FT)													
	400	600	800	1000	1200	1400	1600	1800	2000	2200	2400	2600	2800	3000
15	-2.5	-3.7	-4.9	-6.1	-7.4	-8.6	-9.8	-11.0	-12.3	-13.5	-14.7	-16.0	-17.2	-18.4
20	-2.2	-3.3	-4.5	-5.6	-6.7	-7.8	-8.9	-10.0	-11.2	-12.3	-13.4	-14.5	-15.6	-16.7
30	-1.8	-2.7	-3.6	-4.5	-5.4	-6.2	-7.1	-8.0	-8.9	-9.8	-10.7	-11.6	-12.5	-13.4
40	-1.3	-2.0	-2.7	-3.3	-4.0	-4.7	-5.4	-6.0	-6.7	-7.4	-8.0	-8.7	-9.4	-10.0
50	-0.9	-1.3	-1.8	-2.2	-2.7	-3.1	-3.6	-4.0	-4.5	-4.9	-5.4	-5.8	-6.2	-6.7
60	-0.4	-0.7	-0.9	-1.1	-1.3	-1.6	-1.8	-2.0	-2.2	-2.5	-2.7	-2.9	-3.1	-3.3
70	0.0	0.0	0.0	0.0	0.0	0.0	0.0	0.0	0.0	0.0	0.0	0.0	0.0	0.0
80	+0.4	+0.7	+0.9	+1.1	+1.3	+1.6	+1.8	+2.0	+2.2	+2.5	+2.7	+2.9	+3.1	+3.3
90	+0.9	+1.3	+1.8	+2.2	+2.7	+3.1	+3.6	+4.0	+4.5	+4.9	+5.4	+5.8	+6.2	+6.7
100	+1.3	+2.0	+2.7	+3.3	+4.0	+4.7	+5.4	+6.0	+6.7	+7.4	+8.0	+8.7	+9.4	+10.0
110	+1.8	+2.7	+3.6	+4.5	+5.4	+6.2	+7.1	+8.0	+8.9	+9.8	+10.7	+11.6	+12.5	+13.4
120	+2.2	+3.3	+4.5	+5.6	+6.7	+7.8	+8.9	+10.0	+11.2	+12.3	+13.4	+14.5	+15.6	+16.7
130	+2.7	+4.0	+5.4	+6.7	+8.0	+9.4	+10.7	+12.1	+13.4	+14.7	+16.1	+17.4	+18.7	+20.1
135	+2.9	+4.4	+5.8	+7.3	+8.7	+10.2	+11.6	+13.1	+14.5	+16.0	+17.4	+18.9	+20.3	+21.8

ALL ALONG TRACK MOVEMENTS IN INCHES.
'-' DENOTES MOVEMENT TOWARDS MID-POINT ANCHOR
'+' DENOTES MOVEMENT AWAY FROM MID-POINT ANCHOR

VERTICAL AND WIND LOADS AT SUPPORT

SPAN (FT)	VERTICAL LOAD (LBS)		WIND LOAD (LBS) 55MPH WITH ICE (2)	
	NO ICE	WITH ICE	MESSENGER	CONTACT
50	98	168	58	46
60	118	201	70	56
70	137	235	82	64
80	157	268	94	74
90	177	302	106	82
100	196	335	116	92
110	216	369	128	100
120	235	402	140	110
130	255	436	152	120
140	275	470	164	128
150	294	503	176	138
160	314	537	188	146
170	333	570	198	156
180	353	604	210	166
190	373	637	222	174
200	392	671	234	184
210	412	704	246	192
220	431	738	258	202
230	451	771	270	210
240	471	805	280	220
250	490	838	292	230
260	510	872	304	238
270	530	906	316	248
280	549	939	328	256
290	569	973	340	266
300	588	1006	350	276

THE CONDITION FOR LOADING IS 0° F, 55MPH WIND.
LOADS DUE TO SPANS ON EITHER SIDE OF STRUCTURE MUST BE READ SEPARATELY AND ADDED TOGETHER.
FOR VERTICAL LOADS, 'SPAN' DENOTES DISTANCE BETWEEN MESSENGER LOW-POINT TO CATENARY SUPPORT

POSITION OF BALANCE WEIGHT AWAY FROM 70° F SETTING TEMPERATURE FOR A-T SIMPLE CATENARY EQUIPMENT

TEMP DEVIATION FROM 70° F SETTING TEMP (° F)	DISTANCE FROM BALANCE WEIGHT ANCHOR TO MID-POINT ANCHOR (FT)													
	1000	1200	1400	1600	1800	2000	2200	2400	2600	2800	3000	3200	3400	3600
10	0.275	.325	0.4	0.45	0.5	0.55	0.625	0.675	0.725	0.775	0.825	0.9	0.95	1.0
20	0.55	0.675	0.775	0.9	1.0	1.125	1.225	1.35	1.45	1.55	1.675	1.775	1.9	2.0
30	0.825	1.0	1.175	1.35	1.5	1.675	1.675	2.00	2.175	2.35	2.5	2.675	2.85	3.025
40	1.125	1.35	1.55	1.775	2.0	2.225	2.225	2.675	2.9	3.125	3.35	3.575	3.8	4.025
50	1.4	1.675	1.95	2.225	2.5	2.8	3.075	3.35	3.625	3.9	4.175	4.475	4.75	5.025
60	1.675	2.0	2.35	2.675	3.025	3.35	3.675	4.025	4.35	4.675	5.025	5.35	5.7	6.025
65	1.825	2.175	2.55	2.9	3.275	3.625	4.00	4.35	4.725	5.075	5.45	5.8	6.175	6.525

DISTANCE IN FEET FOR BALANCE WEIGHT POSITION AT ARBITRARY TEMPERATURE TO BALANCE WEIGHT POSITION AT 70° F SETTING TEMPERATURE

BLOW-OFF (B) FOR A-T EQUIPMENT

DESIGN SPAN (FT)	BLOW-OFF (INCHES)	DESIGN SPAN (FT)	BLOW-OFF (INCHES)
50	0.3	180	3.7
60	0.4	190	4.1
70	0.6	200	4.5
80	0.8	210	4.9
90	1.0	220	5.4
100	1.2	230	5.8
110	1.4	240	6.3
120	1.7	250	6.8
130	2.0	260	7.3
140	2.3	270	7.8
150	2.6	280	8.3
160	2.9	290	8.9
170	3.3	300	9.4

THE CONDITION FOR BLOW-OFF IS 60° F AND 55MPH WIND

RADIAL LOAD AT SUPPORT DUE TO LINE ANGLE CHANGE

LINE ANGLE CHANGE (DEG)	MESSENGER (LBS)	CONTACT (LBS)
1	156	104
2	311	208
3	467	311
4	622	415
5	778	519
6	933	622
7	1089	726
8	1244	829
9	1399	933
10	1554	1036
11	1709	1140
12	1864	1243
13	2019	1346
14	2173	1449
15	2328	1552

THE CONDITION FOR LOADING IS 0° F, ICE (2) AND 55MPH WIND.

STAGGER CHANGE IN ACROSS TRACK DIRECTION DUE TO ALONG TRACK MOVEMENT

ATM (IN)	STEADY ARM SWING RADIUS (FT)		
	4.0	4.5	5.0
2	0.0	0.0	0.0
4	0.2	0.1	0.1
6	0.4	0.3	0.3
8	0.7	0.6	0.5
10	1.1	0.9	0.8
12	1.5	1.4	1.2
14	2.1	1.8	1.7
16	2.7	2.4	2.2
18	3.5	3.1	2.8
20	4.4	3.8	3.4

STAGGER CHANGE IN INCHES IN ACROSS TRACK DIRECTION TOWARDS THE STEADY ARM SUPPORT

THE INFORMATION, INCLUDING ESTIMATED QUANTITIES OF WORK SHOWN ON THESE SHEETS IS BASED ON LIMITED INVESTIGATIONS BY THE STATE AND IS IN NO WAY WARRANTED TO INDICATE THE TRUE CONDITIONS OR ACTUAL QUANTITIES OR DISTRIBUTION OF QUANTITIES OF WORK WHICH WILL BE REQUIRED.

URS
URS CORPORATION AES
500 ENTERPRISE DRIVE
ROCKY HILL, CT 06067
1-(860)-529-8882

NO.	DATE	DESCRIPTION

REVISIONS

STATE OF CONNECTICUT
DEPARTMENT OF TRANSPORTATION

STAMFORD YARD CATENARY IMPROVEMENTS

AUTO-TENSIONED SIMPLE CATENARY LOADING, BLOW-OFF & PERMISSIBLE MIDSPAN STATIC OFFSET CHARTS

ENGINEER: URS CORPORATION AES
DESIGNER: RW | DRAFTER: AMK | CHECKER: AJM
APPROVED: T. HOLLAND | DATE: XX/XX/XX
STRUCTURE NO. | BRIDGE LOG NO. | STRUCTURE SHEET NO. D-2

PROJECT CONTROL DATE: XX/XX/XX DISK FILENAME: D-2.dwg XX% DESIGN

F H W A REGION	STATE	TOWN	FED. AID PROJ. NO.	PROJ. NO.	YEAR	SHEET NUMBER
1	CONN.	VARIOUS		301-163	2014	

CATENARY HANGER LENGTHS
(FOR SYSTEM HEIGHT 3'-6" TO 3'-6")

SPAN LENGTH "L" (FT)	NUMBER OF HANGERS	PRESAG (IN)	HANGER SPACING "A" (FT-IN)	HANGER LENGTHS (FT - IN) D1	D2	D3	D4	D5	D6	D7	D8	D9
320	9	3	35-6 1/2	2-9 1/2	1-9 3/4	1-1 1/2	0-8 1/2	0-6 3/4	0-8 1/2	1-1 1/2	1-9 3/4	2-9 1/2
315	9	3	35-0	2-9 3/4	1-10 1/2	1-2 1/2	0-9 1/2	0-8	0-9 1/2	1-2 1/2	1-10 1/2	2-9 3/4
310	9	3	34-5 1/4	2-10	1-11 1/4	1-3 1/2	0-10 3/4	0-9 1/4	0-10 3/4	1-3 1/2	1-11 1/4	2-10
305	9	3	33-10 1/2	2-10 1/4	1-11 3/4	1-4 1/4	1-0	0-10 1/2	1-0	1-4 1/4	1-11 3/4	2-10 1/4
300	8	3	37-6	2-9 1/2	1-10 3/4	1-3 3/4	1-0	1-0	1-3 3/4	1-10 3/4	2-9 1/2	
295	8	3	36-10 1/2	2-10	1-11 1/2	1-4 3/4	1-1 1/4	1-1 1/4	1-4 3/4	1-11 1/2	2-10	
290	8	3	36-3	2-10 1/4	2-0 1/4	1-5 1/2	1-2 1/4	1-2 1/4	1-5 1/2	2-0 1/4	2-10 1/4	
285	8	2 3/4	35-7 1/2	2-10 1/2	2-0 3/4	1-6 1/4	1-3	1-3	1-6 1/4	2-0 3/4	2-10 1/2	
280	8	2 3/4	35-0	2-10 3/4	2-1 1/2	1-7 1/4	1-4	1-4	1-7 1/4	2-1 1/2	2-10 3/4	
275	8	2 3/4	34-4 1/2	2-11	2-2	1-8 1/4	1-5 1/4	1-5 1/4	1-8 1/4	2-2	2-11	
270	8	2 1/2	33-9	2-11 1/4	2-2 1/2	1-8 3/4	1-5 3/4	1-5 3/4	1-8 3/4	2-2 1/2	2-11 1/4	
265	8	2 1/2	33-1 1/2	2-11 1/2	2-3 1/4	1-9 1/2	1-6 3/4	1-6 3/4	1-9 1/2	2-3 1/4	2-11 1/2	
260	7	2 1/2	37-1 1/2	2-10 3/4	2-2 1/4	1-9 1/4	1-7 1/2	1-9 1/4	2-2 1/4	2-10 3/4		
255	7	2 1/4	36-5	2-11	2-2 3/4	1-9 3/4	1-8 1/4	1-9 3/4	2-2 3/4	2-11		
250	7	2 1/4	35-8 1/2	2-11 1/2	2-3 1/2	1-10 3/4	1-9	1-10 3/4	2-3 1/2	2-11 1/2		
245	7	2 1/4	35-0	2-11 3/4	2-4	1-11 1/2	1-10	1-11 1/2	2-4	2-11 3/4		
240	7	2	34-3 1/4	3-0	2-4 1/2	2-0	1-10 1/2	2-0	2-4 1/2	3-0		
235	7	2	33-6 3/4	3-0 1/4	2-5 1/4	2-1	1-11 1/2	2-1	2-5 1/4	3-0 1/4		
230	7	2	32-10 1/4	3-0 1/2	2-5 3/4	2-1 3/4	2-0 1/2	2-1 3/4	2-5 3/4	3-0 1/2		
225	7	2	37-6	2-11 3/4	2-5	2-1 3/4	2-1 3/4	2-5	2-11 3/4			
220	6	1 3/4	36-8	3-0	2-5 1/2	2-2 1/4	2-2 1/4	2-5 1/2	3-0			
215	6	1 3/4	35-10	3-0 1/4	2-6 1/4	2-3	2-3	2-6 1/4	3-0 1/4			
210	6	1 3/4	35-0	3-0 1/2	2-6 3/4	2-3 3/4	2-3 3/4	2-6 3/4	3-0 1/2			
205	6	1 1/2	34-2	3-0 1/2	2-7	2-4 1/4	2-4 1/4	2-7	3-0 1/2			
200	6	1 1/2	33-4	3-1	2-7 3/4	2-5	2-5	2-7 3/4	3-1			
195	6	1 1/2	32-6	3-1 1/4	2-8 1/4	2-5 3/4	2-5 3/4	2-8 1/4	3-1 1/4			
190	6	1 1/4	31-8	3-1 1/2	2-8 1/2	2-6	2-6	2-8 1/2	3-1 1/2			
185	5	1 1/4	37-0	3-1	2-8 1/4	2-6 1/2	2-8 1/4	3-1				
180	5	1 1/4	36-0	3-1 1/4	2-8 3/4	2-7 1/4	2-8 3/4	3-1 1/4				
175	5	1 1/4	35-0	3-1 1/2	2-9 1/4	2-8	2-9 1/4	3-1 1/2				
170	5	1	34-0	3-1 3/4	2-9 1/2	2-8 1/4	2-9 1/2	3-1 3/4				
165	5	1	33-0	3-2	2-10 1/4	2-8 3/4	2-10 1/4	3-2				
160	5	1	32-0	3-2 1/4	2-10 3/4	2-9 1/2	2-10 3/4	3-2 1/4				
155	4	3/4	31-0	3-2 1/2	2-11	2-9 3/4	2-11	3-2 1/2				
150	4	3/4	37-6	3-2	2-10 3/4	2-10 3/4	3-2					
145	4	3/4	36-3	3-2 1/4	2-11 1/4	2-11 1/4	3-2 1/4					
140	4	1/2	35-0	3-2 1/2	2-11 1/2	2-11 1/2	3-2 1/2					
135	4	1/2	33-9	3-2 3/4	3-0	3-0	3-2 3/4					
130	4	1/2	32-6	3-3	3-0 1/2	3-0 1/2	3-3					
125	4	1/2	31-3	3-3 1/4	3-0 3/4	3-0 3/4	3-3 1/4					
120	4	1/4	30-0	3-3 1/2	3-1	3-1	3-3 1/2					
115	4	1/4	28-9	3-3 3/4	3-1 1/2	3-1 1/2	3-3 3/4					
110	3	1/4	36-8	3-3 1/4	3-3 1/4	3-3 1/4						
105	3	1/4	35-0	3-3 1/2	3-3 3/4	3-3 1/2						
100	3	0	33-4	3-3 3/4	3-2	3-3 3/4						
95	3	0	31-8	3-4	3-2 1/4	3-4						
90	3	0	30-0	3-4	3-2 3/4	3-4						
85	3	0	28-4	3-4 1/4	3-3	3-4 1/4						
80	3	0	26-8	3-4 1/2	3-3 1/4	3-4 1/2						

NOTES:

1. HANGER LENGTHS SHOWN ARE FROM ℄ MESSENGER TO ℄ CONTACT WIRE. THE ACTUAL HANGER LENGTH IS LESS BY 0.156".
2. MAXIMUM HANGER SPACING IS 37'-6".
3. HANGER LENGTH AND HANGER SPACING ARE ROUNDED DOWN TO THE NEAREST 1/4".
4. THE CALCULATION OF PRESAG IS BASED ON 3" PRESAG AT 300 FEET SPAN LENGTH AND 0" AT 100 FEET SPAN LENGTH AND IS ROUNDED TO NEAREST 1/4" INCH.

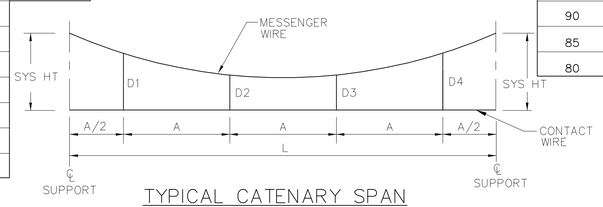

TYPICAL CATENARY SPAN

CATENARY HANGER LENGTHS
(FOR SYSTEM HEIGHT 3'-0" TO 3'-6")

SPAN LENGTH "L" (FT)	NUMBER OF HANGERS	PRESAG (IN)	HANGER SPACING "A" (FT-IN)	HANGER LENGTHS (FT - IN) D1	D2	D3	D4	D5	D6	D7	D8
300	8	3	37-6	2-4	1-6	0-11 1/2	0-8 3/4	0-9 1/2	1-1 3/4	1-9 3/4	2-9 1/4
295	8	3	36-10 1/2	2-4 1/4	1-6 3/4	1-0 1/2	0-9 3/4	0-10 1/2	1-2 3/4	1-10 1/2	2-9 1/2
290	8	3	36-3	2-4 1/2	1-7 1/4	1-1 1/2	0-11	0-11 3/4	1-3 3/4	1-11	2-9 3/4
285	8	2 3/4	35-7 1/2	2-4 3/4	1-7 3/4	1-2	0-11 1/2	1-0 1/2	1-4 1/4	1-11 1/2	2-10
280	8	2 3/4	35-0	2-5	1-8 1/2	1-3	1-0 3/4	1-1 1/2	1-5 1/4	2-0 1/4	2-10 1/4
275	8	2 3/4	34-4 1/2	2-5 1/4	1-9 1/4	1-4	1-1 3/4	1-2 1/2	1-6 1/4	2-1	2-10 1/2
270	8	2 1/2	33-9	2-5 1/2	1-9 1/2	1-4 1/2	1-2 1/2	1-3 1/4	1-6 3/4	2-1 1/2	2-10 3/4
265	8	2 1/2	33-1 1/2	2-5 3/4	1-10 1/4	1-5 1/2	1-3 1/2	1-4 1/4	1-7 3/4	2-2	2-11
260	7	2 1/2	37-1 3/4	2-5 1/4	1-9 1/2	1-5 1/2	1-4 1/2	1-7	2-1	2-10 1/2	
255	7	2 1/4	36-5	2-5 1/2	1-10	1-6	1-5	1-7 3/4	2-1 1/2	2-10 3/4	
250	7	2 1/4	35-8 1/2	2-6	1-10 3/4	1-6 3/4	1-6	1-8 1/2	2-2	2-10 3/4	
245	7	2 1/4	35-0	2-6	1-11 1/2	1-7 3/4	1-7	1-9 1/2	2-2 3/4	2-11 1/4	
240	7	2	34-3 1/4	2-6 1/4	1-11 3/4	1-8 1/4	1-7 1/2	1-10	2-3 1/4	2-11 1/2	
235	7	2	33-6 3/4	2-6 1/2	2-0 /2	1-9	1-8 1/2	1-10 3/4	2-3 3/4	2-11 3/4	
230	7	2	32-10 1/4	2-6 3/4	2-1	1-10	1-9 1/2	1-11 3/4	2-4 1/2	3-0	
225	6	2	37-6	2-6 1/4	2-0 1/2	1-10 1/4	1-11 1/4	2-3 1/2	2-11 1/4		
220	6	1 3/4	36-8	2-6 1/2	2-1	1-10 3/4	1-11 3/4	2-4	2-11 1/2		
215	6	1 3/4	35-10	2-6 3/4	2-1 3/4	1-11 1/2	2-0 1/2	2-4 3/4	2-11 3/4		
210	6	1 3/4	35-0	2-7	2-2 1/4	2-0 1/4	2-1 1/4	2-5 1/4	3-0		
205	6	1 1/2	34-2	2-7 1/4	2-2 1/2	2-0 3/4	2-1 3/4	2-5 1/4	3-0 1/4		
200	6	1 1/2	33-4	2-7 1/2	2-3 1/4	2-1 1/2	2-2 1/2	2-6 1/4	3-0 1/2		
195	6	1 1/2	32-6	2-7 3/4	2-3 3/4	2-2 1/4	2-3 1/4	2-6 3/4	3-0 3/4		
190	6	1 1/4	31-8	2-8	2-4	2-2 1/2	2-3 1/2	2-7	3-1		
185	5	1 1/4	37-0	2-7 3/4	2-4	2-3 1/2	2-6 1/4	3-0 1/2			
180	5	1 1/4	36-0	2-8	2-4 1/2	2-4 1/4	2-7	3-0 3/4			
175	5	1 1/4	35-0	2-8 1/4	2-5 1/4	2-5	2-7 1/2	3-1			
170	5	1	34-0	2-8 1/2	2-5 1/2	2-5 1/4	2-7 3/4	3-1 1/4			
165	5	1	33-0	2-8 3/4	2-6	2-5 3/4	2-8 1/4	3-1 1/2			
160	5	1	32-0	2-8 3/4	2-6 1/2	2-6 1/2	2-9	3-1 3/4			
155	5	3/4	31-0	2-9	2-6 3/4	2-6 3/4	2-9	3-2			
150	4	3/4	37-6	2-8 3/4	2-7	2-8 1/2	3-1 1/4				
145	4	3/4	36-3	2-9	2-7 1/2	2-9	3-1 1/2				
140	4	1/2	35-0	2-9 1/4	2-7 3/4	2-9 1/4	3-1 3/4				
135	4	1/2	33-9	2-9 1/2	2-8 1/4	2-9 3/4	3-2				
130	4	1/2	32-6	2-9 3/4	2-8 3/4	2-10 1/4	3-2 1/4				
125	4	1/2	31-3	2-10	2-9 1/4	2-10 3/4	3-2 1/2				
120	4	1/4	30-0	2-10 1/4	2-9 1/4	2-10 3/4	3-2 3/4				
115	4	1/4	28-9	2-10 1/4	2-9 3/4	2-11 1/4	3-2 3/4				
110	3	1/4	36-8	2-10 1/4	3-0 1/4	3-2 1/4					
105	3	1/4	35-0	2-10 1/2	3-0 3/4	3-2 1/2					
100	3	0	33-4	2-10 3/4	2-11	3-2 3/4					
95	3	0	31-8	2-11	2-11 1/4	3-3					
90	3	0	30-0	2-11	2-11 3/4	3-3					
85	3	0	28-4	2-11 1/4	3-0	3-3 1/4					
80	3	0	26-8	2-11 1/2	3-0 1/4	3-3 1/2					

CATENARY HANGER LENGTH ADJUSTMENTS

ADJUSTMENT FOR NON-STANDARD SYSTEM HEIGHTS

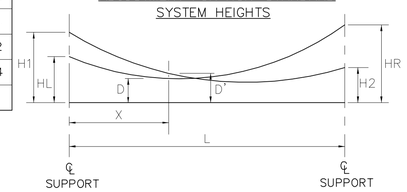

$$D' = D + ((H1 - HL)\,(1 - \frac{X}{L}) - (HR - H2)\,\frac{X}{L})$$

WHERE:
- D' = ADJUSTED HANGER LENGTH
- D = STANDARD HANGER LENGTH
- H1 = ADJUSTED SYSTEM HEIGHT (LEFT)
- H2 = ADJUSTED SYSTEM HEIGHT (RIGHT)
- HL = STANDARD SYSTEM HEIGHT (LEFT)
- HR = STANDARD SYSTEM HEIGHT (RIGHT)
- X = HANGER DISTANCE FROM LEFT SUPPORT
- L = SPAN LENGTH

ADJUSTMENT FOR POINT LOAD IN SPAN

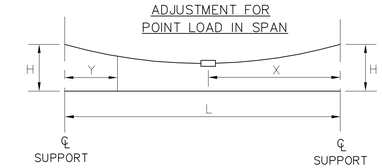

$$R = \frac{12\ MXY}{TL}$$

WHERE:
- R = REDUCTION IN LENGTH OF ANY HANGER (IN)
- M = WEIGHT OF THE POINT LOAD (LB)
- T = MESSENGER TENSION (LB)
- L = SPAN LENGTH (FT)
- X = DISTANCE OF POINT LOAD FROM ONE END OF SPAN (FT)
- Y = DISTANCE OF HANGER TO BE ADJUSTED FROM THE OTHER END OF SPAN (FT)

THE INFORMATION, INCLUDING ESTIMATED QUANTITIES OF WORK SHOWN ON THESE SHEETS IS BASED ON LIMITED INVESTIGATIONS BY THE STATE AND IS IN NO WAY WARRANTED TO INDICATE THE TRUE CONDITIONS OR ACTUAL QUANTITIES OR DISTRIBUTION OF QUANTITIES OF WORK WHICH WILL BE REQUIRED.

URS CORPORATION AES
500 ENTERPRISE DRIVE
ROCKY HILL, CT 06067
1-(860)-529-8882

NO.	DATE	DESCRIPTION

REVISIONS

STATE OF CONNECTICUT
DEPARTMENT OF TRANSPORTATION

STAMFORD YARD CATENARY IMPROVEMENTS

AUTO-TENSIONED SIMPLE CATENARY HANGER LENGTHS

ENGINEER: URS CORPORATION AES
DESIGNER: RW | DRAFTER: AMK | CHECKER: AJM
APPROVED: T. HOLLAND | DATE: XX/XX/XX
STRUCTURE NO. | BRIDGE LOG NO. | STRUCTURE SHEET NO. D-3

PROJECT CONTROL DATE: XX/XX/XX DISK FILENAME: D-3.dwg XX% DESIGN

F H W A REGION	STATE	TOWN	FED. AID PROJ. NO.	PROJ. NO.	YEAR	SHEET NUMBER
1	CONN.	VARIOUS		301-163	2014	

FIXED TERMINATION SIMPLE CATENARY WITH LEVEL CONTACT WIRE

DESIGN ITEM	UNITS	MESSENGER	CONTACT WIRE
MAKE UP OF CONDUCTOR		4/0, 19 STRANDS	350KCMIL GROOVED
MATERIAL		COPPERWELD TYPE E	BRONZE ALLOY 80
DIAMETER	IN	0.613	0.620
CROSS SECTIONAL AREA	SQ IN	0.224	0.276
WEIGHT OF CONDUCTOR	LB/FT	0.848	1.063
WEIGHT OF CATENARY (INCLUDING HANGERS)	LB/FT	1.961	
RADIAL THICKNESS OF ICE (1) LIGHT ICE	IN	0.500	0.125
WEIGHT OF ICE (1)	LB/FT	0.694	0.116
WEIGHT OF CATENARY WITH ICE (1)	LB/FT	2.772	
RADIAL THICKNESS OF ICE (2) HEAVY ICE	IN	0.500	0.500
WEIGHT OF ICE (2)	LB/FT	0.694	0.698
WEIGHT OF CATENARY WITH ICE (2)	LB/FT	3.354	
BREAKING LOAD	LB	20730	16410
MAXIMUM DESIGN SPAN / EQUIVALENT SPAN	FT	300/270	
TENSIONS WITHOUT WIND AT :			
60° F	LB	7500	4000
32° F WITH ICE (1)	LB	8785	5163
-10° F WITH ICE (2)	LB	10337	6891
135° F	LB	5448	1059
160° F	LB	4936	446
MESSENGER SAGS ON 300 FT SPAN AT:			
60° F	IN	35.39	-
32° F WITH ICE (1)	IN	40.32	-
-10° F WITH ICE (2)	IN	40.95	-
135° F	IN	46.84	-
160° F	IN	52.45	-
MODULUS OF ELASTICITY	PSI	19.5×10^{6}	16.0×10^{6}
COEFFICIENT OF EXPANSION	/ ° F	8.4×10^{-6}	9.3×10^{-6}
MINIMUM FACTOR OF SAFETY		2.00	2.38
NORMAL CONTACT WIRE HT	FT-IN	18'-0"	

WITH CONTACT WIRE 30% WORN

DESIGN ITEM	UNITS	MESSENGER	CONTACT WIRE
WEIGHT OF CATENARY (INCLUDING HANGERS)	LB/FT	1.65	
WEIGHT OF CATENARY WITH ICE (1)	LB/FT	2.43	
WEIGHT OF CATENARY WITH ICE (2)	LB/FT	2.91	
BREAKING LOAD	LB	20730	11487
TENSIONS WITHOUT WIND AT :			
-10° F NO WIND WITH ICE (2)	LB	10248	5159
MINIMUM FACTOR OF SAFETY		2.02	2.23

RISE AND FALL AT MID-SPAN FOR F-T SIMPLE CATENARY

SPAN (FT)	RISE-1 OPERATING (INCHES)	RISE-2 WORN (INCHES)	FALL-1 OPERATING (INCHES)	FALL-2 NON-OPERATING (INCHES)
60	0.3	0.4	0.5	0.7
70	0.3	0.5	0.7	0.9
80	0.4	0.7	0.9	1.1
90	0.5	0.9	1.0	1.4
100	0.6	1.1	1.3	1.7
110	0.7	1.2	1.5	2.0
120	0.9	1.5	1.8	2.4
130	1.0	1.7	2.0	2.8
140	1.1	1.9	2.3	3.2
150	1.3	2.2	2.6	3.7
160	1.5	2.5	3.0	4.2
170	1.6	2.8	3.3	4.7
180	1.8	3.1	3.8	5.2
190	2.0	3.4	4.1	5.8
200	2.2	3.8	4.6	6.4
210	2.4	4.1	5.0	7.1
220	2.6	4.5	5.5	7.8
230	2.9	4.9	6.0	8.4
240	3.1	5.4	6.5	9.2
250	3.4	5.8	7.0	9.9
260	3.6	6.3	7.6	10.8
270	3.9	6.7	8.1	11.6
280	4.2	7.2	8.7	12.4
290	4.5	7.7	9.3	13.3
300	4.8	8.2	9.9	14.3

RISE-1 AT 0° F, 40 MPH WIND AND WITHOUT ICE.
RISE-2 AT -10° F, 65 MPH WIND, 30% WORN CONTACT WIRE, WITHOUT ICE.
FALL-1 AT 32° F, NO WIND, WITH HEAVY ICE.
FALL-2 AT 160° F, 65 MPH, WITH NO ICE.

ERECTION TENSION FOR F-T SIMPLE CATENARY

TEMP (° F)	EQUIVALENT SPAN 270 - 210 FT UNLOADED MESS	LOADED MESS	CONTACT WIRE	TEMP (° F)	EQUIVALENT SPAN 210 - 150 FT UNLOADED MESS	LOADED MESS	CONTACT WIRE	TEMP (° F)	EQUIVALENT SPAN 150 - 90 FT UNLOADED MESS	LOADED MESS	CONTACT WIRE
-10	9427	9850	6880	-10	9701	9936	6875	-10	9900	10002	6872
0	9067	9505	6468	0	9338	9582	6464	0	9534	9642	6461
10	8708	9163	6056	10	8975	9230	6053	10	9169	9282	6050
20	8350	8823	5644	20	8613	8879	5642	20	8804	8923	5640
30	7994	8486	5232	30	8251	8530	5231	30	8440	8565	5230
40	7638	8153	4821	40	7891	8184	4820	40	8075	8209	4819
50	7284	7824	4410	50	7530	7840	4410	50	7712	7854	4410
60	6916	7500	4000	60	7162	7500	4000	60	7344	7500	4000
70	6583	7182	3591	70	6814	7164	3591	70	6985	7149	3591
80	6236	6871	3184	80	6457	6832	3183	80	6623	6800	3183
90	5892	6568	2780	90	6103	6506	2778	90	6261	6454	2776
100	5553	6274	2379	100	5750	6187	2375	100	5900	6112	2371
110	5218	5992	1984	110	5401	5876	1976	110	5541	5775	1969

ERECTION TENSIONS IN POUNDS ARE BASED ON A INITIAL CONDITION OF 60° F DATUM TEMPERATURE.

$$\text{EQUIVALENT SPAN} = \sqrt{\frac{L1^3 + L2^3 + L3 \ldots}{L1 + L2 + L3 \ldots}}$$

WHERE L1, L2, L3 ARE ACTUAL SPAN LENGTHS WITHIN A SITE SPECIFIC HALF TENSION LENGTH.

WINDAGE FOR F-T SIMPLE CATENARY

WIND SPEED (MPH)	LOADING CONDITIONS	WINDAGE (LB/FT) MESSENGER ACTUAL	MESSENGER EFFECTIVE	CONTACT WIRE ACTUAL	CONTACT WIRE EFFECTIVE
40	NO ICE @ 60° F	0.21	0.25	0.21	0.17
55	NO ICE @ 60° F	0.40	0.48	0.40	0.32
65	NO ICE @ 60° F	0.55	0.70	0.56	0.42
40	ICE (1) @ 32° F	0.55	0.54	0.30	0.31
55	ICE (2) @ 32° F	1.04	1.23	1.05	0.86
65	ICE (2) @ 32° F	1.45	1.70	1.46	1.21

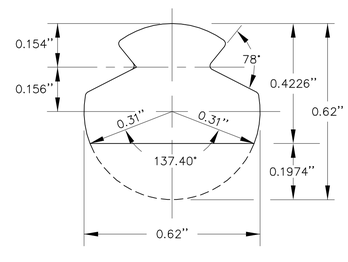

NOTES:

1. ICE(1) DENOTES LIGHT ICE CONDITIONS WITH 1/2" RADIAL ICE ON MESSENGER WIRE AND 1/8" RADIAL ICE ON THE CONTACT WIRE.
2. ICE(2) DENOTES HEAVY ICE CONDITIONS WITH 1/2" RADIAL ICE ON MESSENGER WIRE AND 1/2" RADIAL ICE ON THE CONTACT WIRE.

WORST LOADING COMBINATIONS FOR DESIGN

TEMP (° F)	WIND SPEED (MPH)	ICE LOADING	TENSION (LBS) MESSENGER	TENSION (LBS) CONTACT WIRE	FACTOR OF SAFETY MESSENGER	FACTOR OF SAFETY CONTACT WIRE
OPERATING CONDITIONS						
60	55	NO ICE	7543	4089	2.74	4.01
0	40	ICE (1)	9814	6496	2.11	2.53
NON-OPERATING CONDITION						
0	55	ICE (2)	10174	6733	2.03	2.44
-10	65	NO ICE	9848	6956	2.11	2.36

THE INFORMATION, INCLUDING ESTIMATED QUANTITIES OF WORK SHOWN ON THESE SHEETS IS BASED ON LIMITED INVESTIGATIONS BY THE STATE AND IS IN NO WAY WARRANTED TO INDICATE THE TRUE CONDITIONS OR ACTUAL QUANTITIES OR DISTRIBUTION OF QUANTITIES OF WORK WHICH WILL BE REQUIRED.

URS CORPORATION AES
500 ENTERPRISE DRIVE
ROCKY HILL, CT 06067
1-(860)-529-8882

NO.	DATE	DESCRIPTION

REVISIONS

STATE OF CONNECTICUT
DEPARTMENT OF TRANSPORTATION

STAMFORD YARD CATENARY IMPROVEMENTS

FIXED TERMINATION SIMPLE CATENARY CONDUCTOR DATA, RISE AND FALL AND ERECTION TENSION CHARTS

ENGINEER: URS CORPORATION AES
DESIGNER: RW | DRAFTER: AMK | CHECKER: AJM
APPROVED: T. HOLLAND | DATE: XX/XX/XX
STRUCTURE NO. | BRIDGE LOG NO. | STRUCTURE SHEET NO. D-4

PROJECT CONTROL DATE: XX/XX/XX DISK FILENAME: D-4.dwg XX% DESIGN

F H W A REGION	STATE	TOWN	FED. AID PROJ. NO.	PROJ. NO.	YEAR	SHEET NUMBER
1	CONN.	VARIOUS		301-163	2014	

ANCILLARY WIRES

DESIGN ITEM	UNITS	GROUND WIRE	SIGNAL FEEDER WIRE	TRACTION FEEDER WIRE	ALONG TRACK JUMPER	
MAKE UP OF CONDUCTOR		4/0, 19 STRAND	2/0, 7 STRAND	4/0, 19 STRAND	500KCMIL(19/.1622)	
MATERIAL		HD COPPER	H D COPPER	H D COPPER	HD COPPER	
DIAMETER	IN	0.528	0.414	0.528	0.811	
CROSS SECTIONAL AREA	SQ IN	0.166	0.105	0.166	0.393	
WEIGHT OF CONDUCTOR	LB/FT	0.653	0.411	0.653	1.544	
BREAKING LOAD	LB	9617	5926	9617	21590	
RADIAL THICKNESS OF ICE	IN	0.500	0.500	0.500	0.500	
WEIGHT OF ICE	LB/FT	0.655	0.583	0.655	0.818	
WT OF CONDUCTOR WITH ICE	LB/FT	1.308	0.994	1.308	2.362	
MODULUS OF ELASTICITY	PSI	17.0×10^{6}	17.0×10^{6}	17.0×10^{6}	17.0×10^{6}	
COEFFICIENT OF EXPANSION	/ ° F	9.4×10^{-6}	9.4×10^{-6}	9.4×10^{-6}	9.4×10^{-6}	
MAXIMUM SPAN	FT	300	300	300	300	215
EQUIVALENT SPAN	FT	270	270	270	270	150
TENSIONS WITHOUT WIND AT:						
60° F	LB	1500	1000	1500	3600	2500
-10° F	LB	2378	1611	2378	5734	5085
-10° F WITH ICE	LB	3182	2285	3182	6771	5615
160° F	LB	986	640	986	2350	1404
SAGS ON MAX. SPAN AT:						
60° F	IN	58.77	55.49	58.77	57.90	42.82
-10° F	IN	37.06	34.43	37.06	36.35	21.06
-10° F WITH ICE	IN	55.51	58.72	55.51	47.45	29.17
160° F	IN	89.44	86.66	89.44	88.71	76.24
MINIMUM FACTOR OF SAFETY		3.01	2.58	3.01	3.14	3.6

CONDITION FOR MINIMUM FACTOR OF SAFETY IS -10° F, 40 MPH WIND SPEED WITH ICE ON EACH CONDUCTOR.

NOTE: WIRE TENSION MAY BE REDUCED TO ALLOW THE SAG OF NEW ANCILLARY WIRES TO MATCH THE SAG OF EXISTING ADJACENT WIRES.

OCS ANCILLARY WIRES

DESCRIPTION	MATERIAL	BREAKING LOAD	USAGE
3/16" DIA. TYPE 304 (3/4 HARD)	STAINLESS STEEL WIRE	———	HANGERS
7/16" DIA. EXTRA HIGH STRENGTH, 30% CONDUCTIVITY (7 #7)	COPPERWELD	16890 LBS	PULL OFFS AND STEADY SPANS
1/2" DIA. WIRE ROPE	FLEXIBLE STAINLESS STEEL	20000 LBS	BALANCE WEIGHT ANCHOR ASSEMBLIES
5/8" DIA., 19 #9 ALUMOWELD STRAND	ALUMOWELD	35000 LBS	BALANCE WEIGHT TERMINATION STRAND
4/0, 7/16" DIA. (7 #7)	HARD DRAWN COPPER	———	BRIDGE AND STRUCTURE GROUNDING
19 #7 ALUMOWELD STRANDS	ALUMOWELD	51730 LBS	TERMINATION STRANDS
1/2" 19 STRAND SUPPORT MESSENGER	GALVANIZED STEEL (EHS)	26700 LBS	AERIAL CABLE SUPPORT
3/4" DIA STEEL STRANDS	GLAVANIZED STEEL (EHS)	58300 LBS	GUY STRANDS
1" DIA STEEL STRANDS	GLAVANIZED STEEL (EHS)	104500 LBS	GUY STRANDS

ERECTION TENSIONS FOR ANCILLARY WIRES (LBS)

TEMP (° F)	EQUIVALENT SPAN 270 FT			
	GROUND WIRE	SIGNAL FEEDER WIRE	TRACTION FEEDER WIRE	ALONG TRACK JUMPER
-10	2378	1611	2378	5734
0	2213	1499	2213	5335
10	2062	1394	2062	4968
20	1924	1298	1924	4633
30	1800	1212	1800	4331
40	1688	1133	1688	4059
50	1589	1063	1589	3817
60	1500	1000	1500	3600
70	1421	944	1421	3407
80	1350	894	1350	3235
90	1287	850	1287	3081
100	1230	810	1230	2943
110	1179	774	1179	2818
NO WIND, NO ICE CONDITIONS				

ERECTION TENSIONS FOR ANCILLARY WIRES (LBS)

TEMP (° F)	EQUIVALENT SPAN 150 FT			
	GROUND WIRE	SIGNAL FEEDER WIRE	TRACTION FEEDER WIRE	ALONG TRACK JUMPER
-10	2982	1965	2982	5085
0	2740	1810	2740	4588
10	2505	1659	2505	4127
20	2277	1512	2277	3709
30	2060	1371	2060	3336
40	1856	1237	1856	3012
50	1669	1113	1669	2735
60	1500	1000	1500	2500
70	1351	899	1351	2302
80	1223	811	1223	2134
90	1113	736	1113	1992
100	1021	672	1021	1870
110	942	618	942	1765
NO WIND, NO ICE CONDITIONS				

THE INFORMATION, INCLUDING ESTIMATED QUANTITIES OF WORK SHOWN ON THESE SHEETS IS BASED ON LIMITED INVESTIGATIONS BY THE STATE AND IS IN NO WAY WARRANTED TO INDICATE THE TRUE CONDITIONS OR ACTUAL QUANTITIES OR DISTRIBUTION OF QUANTITIES OF WORK WHICH WILL BE REQUIRED.

URS CORPORATION AES
500 ENTERPRISE DRIVE
ROCKY HILL, CT 06067
1-(860)-529-8882

NO.	DATE	DESCRIPTION

REVISIONS

STATE OF CONNECTICUT
DEPARTMENT OF TRANSPORTATION

STAMFORD YARD CATENARY IMPROVEMENTS

ANCILLARY CONDUCTORS
CONDUCTOR DATA AND ERECTION TENSION CHARTS

ENGINEER: URS CORPORATION AES
DESIGNER: RW | DRAFTER: AMK | CHECKER: AJM
APPROVED: T. HOLLAND | DATE: XX/XX/XX
STRUCTURE NO. | BRIDGE LOG NO. | STRUCTURE SHEET NO. D-11

PROJECT CONTROL DATE: XX/XX/XX DISK FILENAME: D-11.dwg XX% DESIGN

F H W A REGION	STATE	TOWN	FED. AID PROJ. NO.	PROJ. NO.	YEAR	SHEET NUMBER
1	CONN.	VARIOUS		301-163	2014	

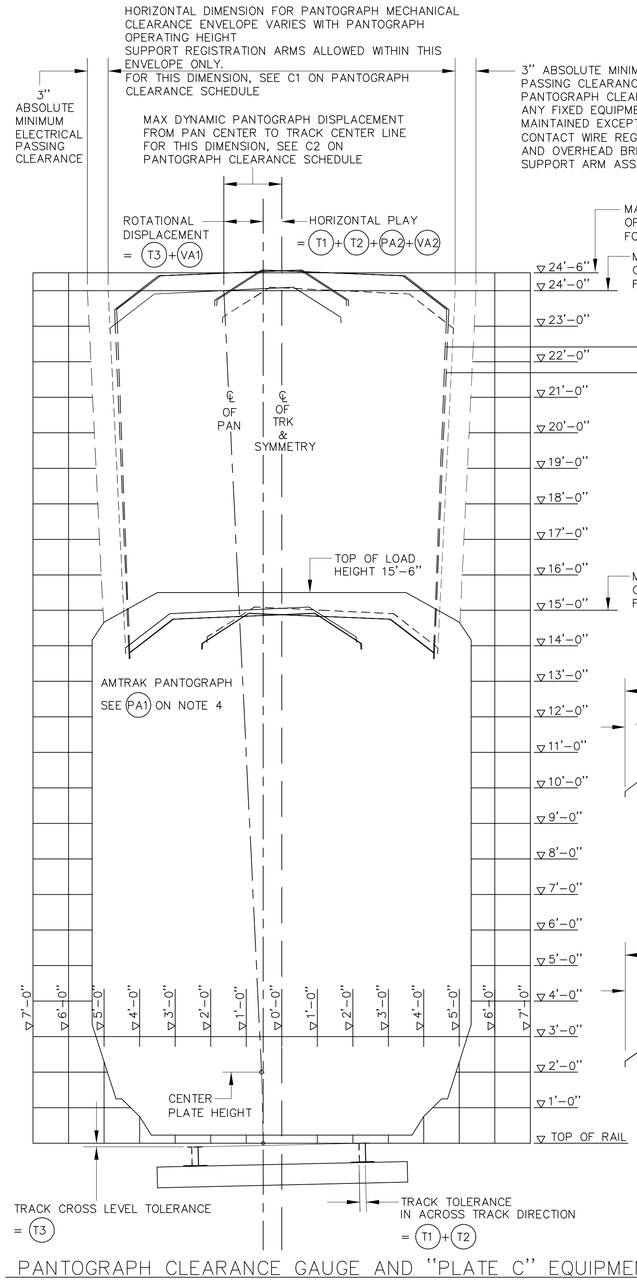

PANTOGRAPH CLEARANCE GAUGE AND "PLATE C" EQUIPMENT DIAGRAM

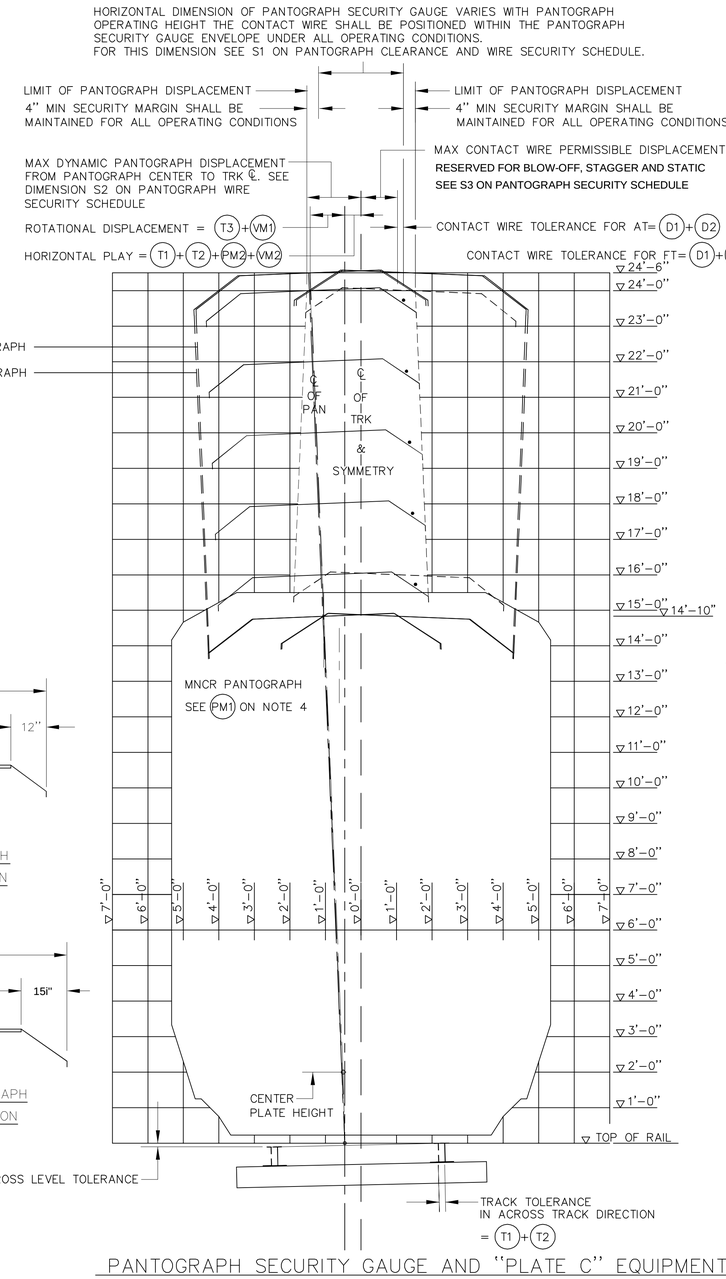

PANTOGRAPH SECURITY GAUGE AND "PLATE C" EQUIPMENT DIAGRAM

PANTOGRAPH CLEARANCE AND WIRE SECURITY SCHEDULE
(ALL DIMENSIONS ARE IN INCHES)

ABOVE TOP OF RAIL (ATR) HEIGHT	C1 PANTOGRAPH MECHANICAL CLEARANCE (FULL WIDTH)	C2 MAX AMTRAK PANTOGRAPH DISPLACEMENT (HALF WAY)	S1 PANTOGRAPH SECURITY GAUGE (FULL WIDTH)	S2 MAX MNCR PANTOGRAPH DISPLACEMENT (HALF WAY)	S3(AT) MAX CW PERMISSIBLE DISPLACEMENT (FOR AT)	S3(FT) MAX CW PERMISSIBLE DISPLACEMENT (FOR FT)
24'-0"	117.08	19.54	28.64	17.18	9.32	12.32
23'-0"	115.92	18.96	29.66	16.67	9.83	12.83
22'-0"	114.76	18.38	30.68	16.16	10.34	13.34
21'-0"	113.60	17.80	31.70	15.65	10.85	13.85
20'-0"	112.42	17.21	32.72	15.14	11.36	14.36
19'-0"	111.28	16.64	33.72	14.64	11.86	14.86
18'-0"	110.10	16.05	34.64	14.18	12.32	15.32
17'-0"	108.96	15.48	35.74	13.63	12.87	15.87
16'-0"	107.78	14.89	36.76	13.12	13.38	16.38
15'-0"	106.62	14.31	37.78	12.61	13.89	16.89

NOTES:

1. AREA ENCLOSED BY PANTOGRAPH CLEARANCE ENVELOPE IS PROHIBITED TO FIXED EQUIPMENT EXCEPT SUPPORT AND REGISTRATION ARMS. THE MECHANICAL CLEARANCE BETWEEN DYNAMIC PANTOGRAPH AND THE STEADY ARM ASSEMBLY SHALL NOT BE LESS THAN 1 1/2 INCHES.
2. PANTOGRAPH CLEARANCE GAUGE SHALL ALSO BE USED TO CHECK CLEARANCES FOR OVERHEAD BRIDGE STRUCTURES AND TO CATENARY SUPPORT AND REGISTRATION TUBES ON TANGENT AND CURVED TRACK.
3. PANTOGRAPH SECURITY GAUGE SHALL BE USED TO CHECK FOR THE RELATIVE POSITIONS BETWEEN A DISPLACED CONTACT WIRE AND THE PANTOGRAPH HEAD.
4. FOLLOWING PARAMETERS WERE CONSIDERED IN DEVELOPING PANTOGRAPH CLEARANCE AND SECURITY GAUGE FOR MAIN LINE CATENARY REPLACEMENT IN CONNECTICUT.

TRACK PARAMETER (USE FRA "CLASS 4" TOLERANCE FOR WORST CASE DESIGN)

T1	TRACK ALIGNMENT	1 1/2"
T2	TRACK GAUGE	3/4"
T3	TRACK CROSS LEVEL	1 1/4"
T4	TRACK LIFT IS NOT CONSIDERED.	

PANTOGRAPH PARAMETER

	HIGH SPEED PANTOGRAPH WIDTH	78.35"W/46.88" CARBON,SINGLE	
PA1	AMTRAK PANTOGRAPH WIDTH (RINGSDORFF)	78"	W/47"CARBON
PA2	AMTRAK PANTOGRAPH SWAY	2"	
PM1	MNCR PANTOGRAPH WIDTH (TRANS TECH)	71"	W/47"CARBON
PM2	MNCR PANTOGRAPH SWAY	2"	

CONTACT WIRE DISPLACEMENT

CONTACT WIRE DISPLACEMENT IN ACROSS TRACK DIRECTION COMPRISING FOLLOWING PARAMETERS.

D1	CONTACT WIRE ERECTION TOLERANCE	1"
D2	STRUCTURE DEFLECTION DUE TO LIVE LOAD	1"
D3	STAGGER CHANGE FOR AT EQUIPMENT	3" FOR 19" AT MOVEMENT
D4	BLOW OFF AT MIDSPAN	TO BE CALCULATED
D5	STAGGER EFFECT ALLOWANCE	TO BE CALCULATED
D6	STATIC OFFSET	TO BE CALCULATED

VEHICLE PARAMETERS

VA1	AMTRAK VEHICLE BODY ROLL	3°
VA2	AMTRAK VEHICLE LATERAL MOVEMENT ALLOWANCE	2"
VM1	MNCR VEHICLE BODY ROLL MOVEMENT ALLOWANCE	2.3°
VM2	MNCR VEHICLE LATERAL	2"

LATERAL OFFSET
(SECONDARY SUSPENSION FAILED)

POWER CAR PANTOGRAPH =
6.969°-5.788°+1.2035°=2.3845°
(T3)

LOCOMOTIVE PANTOGRAPH =
6.873°-5.788°+1.2035°=2.2885°
(T3)

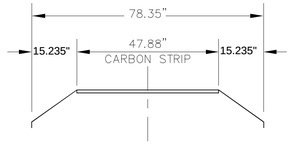

HIGH SPEED PANTOGRAPH
BRECKNELL WILLIS MODEL M-02860-07-L
OUTLINE DIMENSION

THE INFORMATION, INCLUDING ESTIMATED QUANTITIES OF WORK SHOWN ON THESE SHEETS IS BASED ON LIMITED INVESTIGATIONS BY THE STATE AND IS IN NO WAY WARRANTED TO INDICATE THE TRUE CONDITIONS OR ACTUAL QUANTITIES OR DISTRIBUTION OF QUANTITIES OF WORK WHICH WILL BE REQUIRED.

URS CORPORATION AES
500 ENTERPRISE DRIVE
ROCKY HILL, CT 06067
1-(860)-529-8882

NTS

NO.	DATE	DESCRIPTION

REVISIONS

STATE OF CONNECTICUT
DEPARTMENT OF TRANSPORTATION

STAMFORD YARD CATENARY IMPROVEMENTS

PANTOGRAPH CLEARANCE AND SECURITY GAUGE

ENGINEER: URS CORPORATION AES
DESIGNER: RW | DRAFTER: AMK | CHECKER: AJM
APPROVED: T. HOLLAND | DATE: XX/XX/XX
STRUCTURE NO. | BRIDGE LOG NO. | STRUCTURE SHEET NO. D-12

PROJECT CONTROL DATE: XX/XX/XX DISK FILENAME: D-12.dwg XX% DESIGN

F H W A REGION	STATE	TOWN	FED. AID PROJ. NO.	PROJ. NO.	YEAR	SHEET NUMBER
1	CONN.	VARIOUS		301-163	2014	

STR No.	Tk No.	Wire No.	N	A1 (Ft-In)	A (Ft-In)	Hangar Lengths and Distance (X) in Ft-In d1	d2	d3	d4	d5	d6	d7	d8	HL (Ft-In)	L (Ft)	HR (Ft-In)	Span Type	Pre Sag
1047-1047B O.O.R.	Xover	X4	1		71-0	2-7 71-0									208	3-4¾		0
1047B-1048A	Xover	X4	5		31-7	3-1½ 15-9½	2-8¾ 47-4¾	2-7¼ 79-0	2-9 47-4¾	3-1¾ 15-9½				3-4¾	158	3-5½	1A	0
1048A-1048B	Xover	X4	5		30-2¼	3-2 15-1	2-9¾ 45-3½	2-8¾ 75-6	2-9½ 45-3½	3-1¾ 15-1				3-5½	151	3-4¾	1A	0
1048B-1049A O.O.R.	Xover	X4	1		71-0	2-7 71-0									163	3-4¾		0
1088-West Support (Water Street)	3	N1	1			10-7 13-0								1-5	26	0-4¾	1	0
351-352 FT SPAN	3	3	16			91-5¼ 9-5¼	87-0 28-3¾	83-4¾ 47-2¼	80-7½ 66-0¾	78-10 84-11½	77-9 103-10	77-6 122-8½			302			
351-352 FT SPAN	4	4	16			91-5¼ 9-5¼	87-0 28-3¾	83-4¾ 47-2¼	80-7½ 66-0¾	78-10 84-11½	77-9 103-10	77-6 122-8½			302			
352-353	2	2	16		18-11¼	101-0 9-5½	93-2½ 28-4¾	86-3¼ 47-4	80-2½ 66-3¼	75-0 85-2½	70-8 104-1¾	67-2 123-1			303		1	0
352-353	4	8	8		37-6	33-8½ 18-9	22-11¼ 56-3	15-8¾ 93-9	12-1¾ 131-3	12-1¾ 131-3	15-8¾ 93-9	22-11¼ 56-3	33-8½ 18-9		300		5	0
352-353 FT SPAN	1	1	15			91-9½ 9-11½	84-4¼ 29-10¼	77-10½ 49-9¾	72-4¼ 69-9	67-8 89-8¼	64-0¾ 109-7¼	61-5¼ 129-6½			299			
352-353 FT SPAN	2	2	15			91-9½ 9-11½	84-4¼ 29-10¼	77-10½ 49-9¾	72-4¼ 69-9	67-8 89-8¼	64-0¾ 109-7¼	61-5¼ 129-6½			299			
352-353 FT TERMINATION	3	3	3			108-0 18-9	89-3¾ 56-3	52-0¾ 120-4¼							297			
353-354	3	7	8		36-10½	34-0 18-5¼	23-7¼ 55-3¾	16-9 92-2¼	13-3½ 129-0¾	13-3½ 129-0¾	16-9 92-2¼	23-7¼ 55-3¾	34-0 18-5¼		295		1	0
353-354	4	8	8		38-1½	33-5¼ 19-0¾	22-2½ 57-2¼	14-8½ 95-3¾	10-11¾ 133-5¼	10-11¾ 133-5¼	14-8½ 95-3¾	22-2½ 57-2¼	33-5¼ 19-0¾		305		1	0
353-354 FT SPAN	1	1	16			72-5¾ 9-5½	64-3¾ 28-4¾	57-0 47-4	50-6 66-3¼	44-10½ 85-2¾	40-0¾ 104-2	36-2¾ 123-1¼			303			
353-354 FT SPAN	2	2	15			72-4¼ 9-11	63-10 29-9½	56-3¼ 49-8	49-8 69-6¼	44-0¾ 89-4¾	39-4¼ 109-3¼	35-7½ 129-1¾			298			
354-354A	3	7	4		32-6	39-1 16-3	36-6¼ 48-9	36-6¼ 48-9	39-1 16-3						130		1	½
354-354A	4	8	4		32-6	39-1 16-3	36-6¼ 48-9	36-6¼ 48-9	39-1 16-3						130		1	½
354-354A FT SPAN	1	1	7			40-2¼ 8-11	37-5¼ 26-9¼	35-6 44-7¾	34-3¾ 62-5¾	33-10 44-7½	34-0¾ 26-9	35-1¾ 8-10¾			125			
354-354A FT SPAN	2	2	7			40-2¼ 9-3¼	37-2¼ 27-10¼	35-1¾ 46-5	33-10 65-0	33-5¾ 46-5	33-10 27-10¼	35-0¼ 9-3¼			130			
354A-355	3	7	5		35-2¼	37-0¼ 17-7	31-6½ 52-9½	28-11 88-0	29-1¾ 52-9½	32-2½ 17-7					176		1	1¼
354A-355	4	8	5		33-2¼	37-6 16-7	32-4¼ 49-9½	29-10¼ 83-0	29-11½ 49-9½	32-8½ 16-7					166		1	0
354A-355 AT SPAN	2	2	4		36-4¾	0-0 18-2¼	0-0 54-7	0-0 80-0	0-0 48-0						171		3	0
354A-355 FT SPAN	1	1	7		17-3¼	0-0 8-7½	0-0 25-10¾	0-0 43-2	0-0 60-5¼	0-0 77-8½	0-0 76-0	0-0 46-0			171		3	0
354A-355 FT SPAN	2	2	7		17-3¼	0-0 8-7½	0-0 25-10¾	0-0 43-2	0-0 60-5¼	0-0 77-8½	0-0 75-11¾	0-0 45-11¾			171		3	0
354A-355 OVERLAP	1	5	4		36-4¾	0-0 18-2¼	0-0 54-7	0-0 80-0	0-0 48-0						171		3	0
354A-355 OVERLAP SPAN	2	6	4		36-4¾	0-0 18-2¼	0-0 54-7	0-0 80-0	0-0 48-0						171		3	0
355-356A OOR MESSENGER WIRE	3	7A	3			13-9½ 111-4½	16-9½ 56-3	26-6 18-9							279		2A	
355-356A OOR MESSENGER WIRE	4	8A	3			12-0 115-4½	15-11½ 56-3	26-1¾ 18-9							287		2A	
355-TP355	1	5	4		36-0	32-5¼ 18-0	29-5¾ 54-0	29-5¾ 54-0	32-5¼ 18-0						144		1	¾
355-TP355	2	6	4		37-3	32-11¼ 18-7½	31-2¼ 55-10½	32-8¼ 55-10½	37-5¼ 18-7½						149		1	¾

ADDITIONAL HANGER LENGTHS
FOR INSULATED OVERLAPS

STR. No.	WIRE No.	COMPRESSION HANGER LENGTHS (FT-IN) AHA-6	AH
		2-7 3/4	2-7 1/4
		16-0	4-0
		——	2-1
		——	4-0
		——	2-6s
		——	4-0
		2-7 3/4	2-7 1/4
		16-0	4-0
		2-7 3/4	2-7 1/4
		16-0	4-0

NOTES:

1. THE DIMENSION "d" IN THE ABOVE TABLE REPRESENTS THE DISTANCE BETWEEN ℄ OF MESSENGER TO ℄ OF CONTACT WIRE. THE ACTUAL HANGER LENGTH IS LESS BY 0.156" IN EACH CASE.
2. HANGER SPACING "X" IS MEASURED FROM THE NEAREST CATENARY SUPPORT STRUCTURE
3. HANGER SPACING AND HANGER LENGTHS ARE ROUNDED TO NEAREST 1/4 INCH.
4. PRIOR TO FABRICATION OF ANY HANGERS, THE CONTRACTOR SHALL VERIFY THE ACTUAL CATENARY SPAN LENGTHS AND SYSTEM HEIGHT AT SUPPORTS. ANY DEVIATION IN CATENARY SPAN LENGTH AND/OR SYSTEM HEIGHT MAY REQUIRE RECALCULATION OF HANGER LENGTHS.
5. THE DATA SHOWN IS FOR EXAMPLE ONLY AND DOES NOT REFLECT ACTUAL VALUES. THIS FORM ONLY SHOWS GENERAL ARRANGEMENT OF DATA.
6. THE ACTUAL HANGER LENGTHS WILL BE PROVIDED BY THE ENGINEER IN THIS FORMAT BASED ON THE CONTRACTOR'S FIELD MEASUREMENTS OF SPANS.

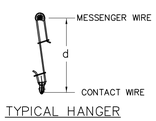

TYPICAL HANGER

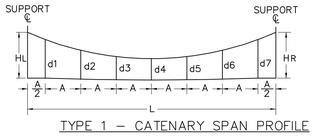

TYPE 1 – CATENARY SPAN PROFILE
TYPE 1A – CATENARY SPAN PROFILE WITH INSPAN INSULATION

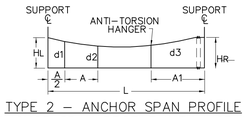

TYPE 2 – ANCHOR SPAN PROFILE
TYPE 2A – ANCHOR SPAN PROFILE WITH INSPAN INSULATION

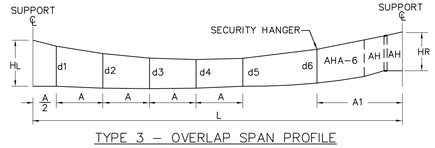

TYPE 3 – OVERLAP SPAN PROFILE
NOTE: FOR DETAIL SEE DWG No. D-4.

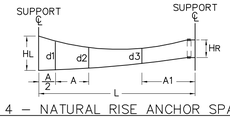

TYPE 4 – NATURAL RISE ANCHOR SPAN PROFILE
TYPE 4A – NATURAL RISE ANCHOR SPAN PROFILE WITH INSPAN INSULATION

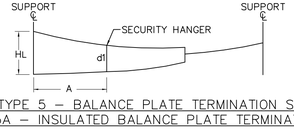

TYPE 5 – BALANCE PLATE TERMINATION SPAN
TYPE 5A – INSULATED BALANCE PLATE TERMINATION SPAN

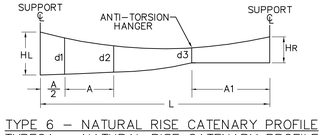

TYPE 6 – NATURAL RISE CATENARY PROFILE
TYPE6A – NATURAL RISE CATENARY PROFILE WITH INSPAN INSULATION

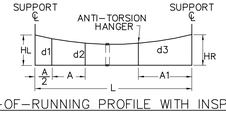

TYPE 7 – OUT-OF-RUNNING PROFILE WITH INSPAN INSULATION

THE INFORMATION, INCLUDING ESTIMATED QUANTITIES OF WORK SHOWN ON THESE SHEETS IS BASED ON LIMITED INVESTIGATIONS BY THE STATE AND IS IN NO WAY WARRANTED TO INDICATE THE TRUE CONDITIONS OR ACTUAL QUANTITIES OR DISTRIBUTION OF QUANTITIES OF WORK WHICH WILL BE REQUIRED.

URS CORPORATION AES
500 ENTERPRISE DRIVE
ROCKY HILL, CT 06067
1-(860)-529-8882

NTS

NO.	DATE	DESCRIPTION

REVISIONS

STATE OF CONNECTICUT
DEPARTMENT OF TRANSPORTATION

STAMFORD YARD CATENARY IMPROVEMENTS

HANGER LENGTHS
(SAMPLE HANGER LENGTH FORM)

ENGINEER: URS CORPORATION AES
DESIGNER: RW | DRAFTER: AMK | CHECKER: AJM
APPROVED: T. HOLLAND | DATE: XX/XX/XX
STRUCTURE NO. | BRIDGE LOG NO. | STRUCTURE SHEET NO. D-13

PROJECT CONTROL DATE: XX/XX/XX DISK FILENAME: D-13.dwg XX% DESIGN

F H W A REGION	STATE	TOWN	FED. AID PROJ. NO.	PROJ. NO.	YEAR	SHEET NUMBER
1	CONN.	VARIOUS		301-163	2014	

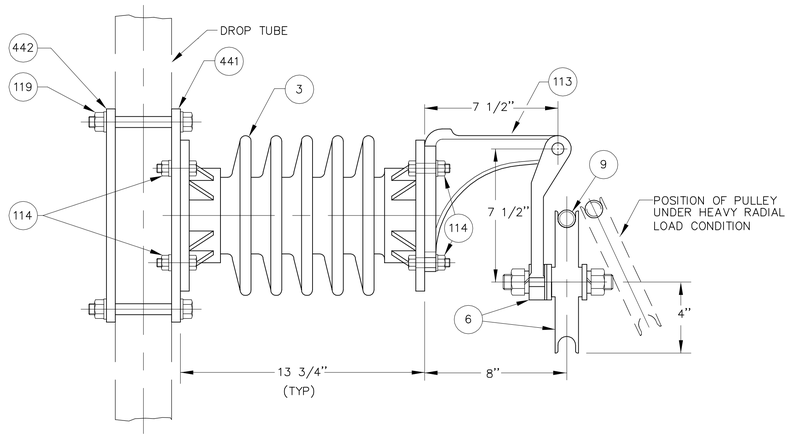

ASSEMBLY MS-1

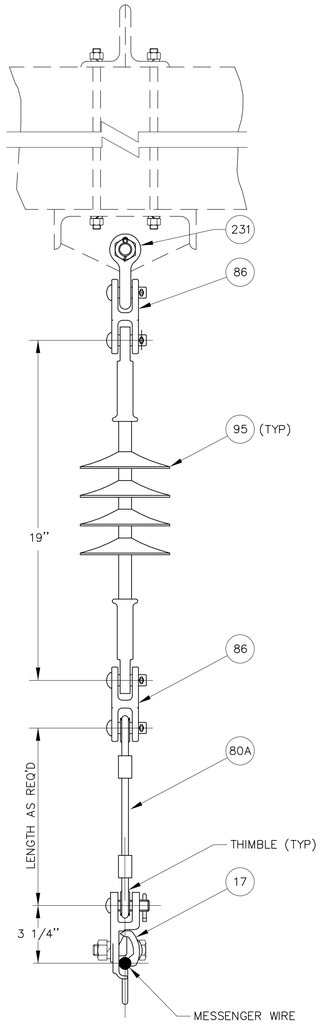

ASSEMBLY MS-4

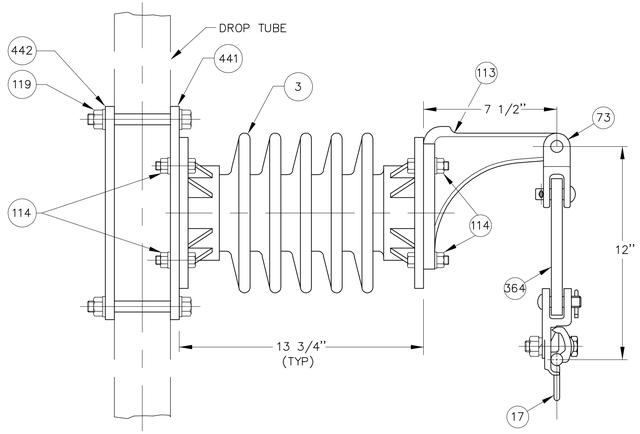

ASSEMBLY MS-2

NOTE: PART 113 MAY BE PLACED UPSIDE DOWN TO PROVIDE ELECTRICAL CLEARANCE WHEN RADIAL LOAD ON MESSENGER IS HIGH.

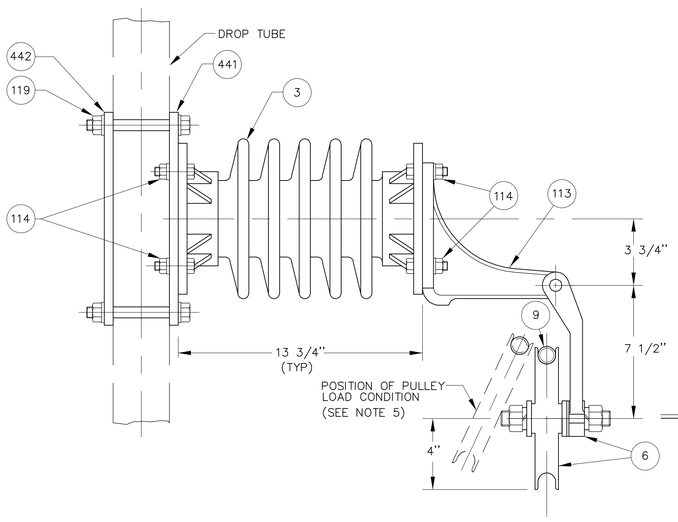

ASSEMBLY MS-3

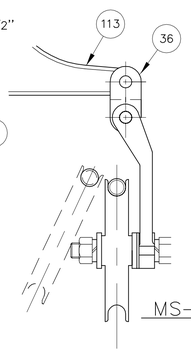

MS-3A

ASSEMBLIES – MS-1, MS-2, MS-3, MS-3A & MS-4

PART No.	METRO-NORTH No.	DESCRIPTION	QUANTITY MS-1	MS-2	MS-3	MS-3A	MS-4
3	10445100	4000 LB CANTILEVER INSULATOR	1	1	1	1	—
6	10739102	PULLEY ASSEMBLY W/PULLEY HOLDER	1	—	1	1	—
9	10435750	PREFORMED LINE GUARD	1	—	1	1	—
17	10201662	SUSPENSION CLAMP	—	1	—	—	1
36	10206507	LINK TONGUE CLEVIS	—	—	—	1	—
73	10206318	LINK DOUBLE CLEVIS 90°	—	1	—	—	—
80A	1099702	3/8" (7X19 STR) S.S. WIRE ROPE WITH 2 EYES	—	—	—	—	1
86	10206310	LINK CLEVIS CLEVIS W/2 PINS	—	—	—	—	2
95	10445113	SUSPENSION INSULATOR 25,000 LB	—	—	—	—	1
442	10730168	BACK PLATE MESSENGER INSULATOR SUPPORT BRACKET	1	1	1	1	—
113	10200166	PULLEY BRACKET ASSEMBLY	1	1	1	1	—
114	19130913	1/2"ø STAINLESS STEEL BOLT, NUT & LOCKWASHER	8	8	8	8	—
119	19133562	5/8"ø x 5" GALV A307 BOLT, NUT & LOCKWASHER	4	4	4	4	—
231	10850265	5/8" ANCHOR SHACKLE W/ 3/4"ø PIN	—	—	—	—	1
364		LINK EYE-EYE	—	1	—	—	—
441	10730187	FRONT PLATE MESSENGER INSULATOR SUPPORT	1	1	1	1	—

NOTES:

1. PREFORMED LINE GUARD IS ONLY REQUIRED WHEN WIRE IS SUPPORTED WITH PULLEY.
2. ASSEMBLY MS-4 AND MS-2 ARE USED FOR F.T. SYSTEM OR WITHIN 600 FT FROM MPA OR FA ON THE A.T. SYSTEM.
3. ASSEMBLY MS-3 IS THE SAME AS MS-1 BUT PULLEY BRACKET IS ROTATED 180° ON INSULATOR, AS SHOWN.
4. USE THIMBLES IN ASSEMBLY MS-4, AS REQUIRED.
5. WHERE RADIAL LOAD CAUSES PULLEY TO SWING INTO AND BIND AGAINST PULLEY BRACKET, LINK TONGUE CLEVIS IS TO BE INSERTED AS SHOWN ON MS-3A.
6. USE NICOPRESS TOOLS AND FERRULES FOR EYE SPLICING OF WIRES, AS REQUIRED.

NTS

THE INFORMATION, INCLUDING ESTIMATED QUANTITIES OF WORK SHOWN ON THESE SHEETS IS BASED ON LIMITED INVESTIGATIONS BY THE STATE AND IS IN NO WAY WARRANTED TO INDICATE THE TRUE CONDITIONS OR ACTUAL QUANTITIES OR DISTRIBUTION OF QUANTITIES OF WORK WHICH WILL BE REQUIRED.

URS CORPORATION AES
500 ENTERPRISE DRIVE
ROCKY HILL, CT 06067
1-(860)-529-8882

NO.	DATE	DESCRIPTION

REVISIONS

STATE OF CONNECTICUT
DEPARTMENT OF TRANSPORTATION

STAMFORD YARD CATENARY IMPROVEMENTS

MESSENGER SUPPORT ASSEMBLIES

ENGINEER: URS CORPORATION AES
DESIGNER: RW | DRAFTER: AMK | CHECKER: AJM
APPROVED: T. HOLLAND | DATE: XX/XX/XX
STRUCTURE NO. | BRIDGE LOG NO. | STRUCTURE SHEET NO. E-1

PROJECT CONTROL DATE: XX/XX/XX DISK FILENAME:E-1.dwg XX% DESIGN

F H W A REGION	STATE	TOWN	FED. AID PROJ. NO.	PROJ. NO.	YEAR	SHEET NUMBER
1	CONN.	VARIOUS		301-163	2014	

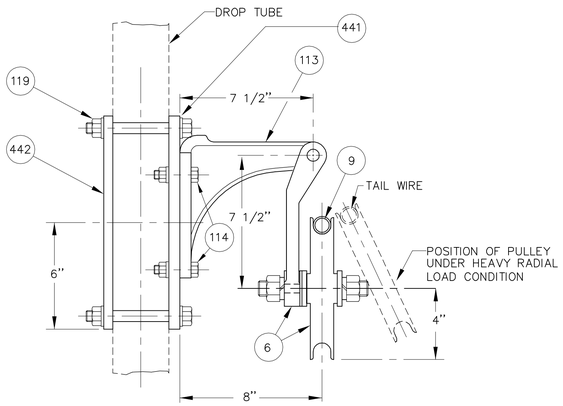

ASSEMBLY TS-1

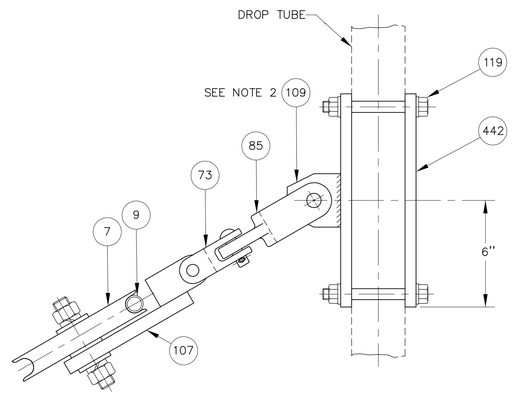

ELEVATION VIEW

ASSEMBLY TS-2

(WITH DOUBLE PULLEY)

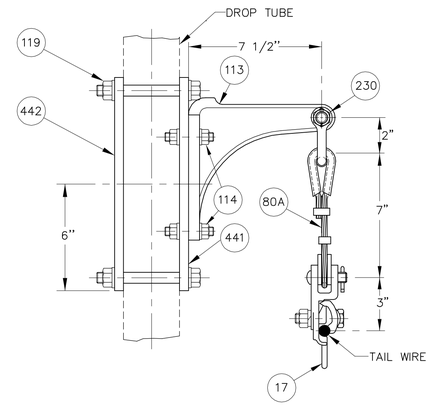

ASSEMBLY TS-3

(SEE NOTE 4)

ASSEMBLIES – TS-1, TS-2 & TS-3					
PART No.	METRO-NORTH No.	DESCRIPTION	QUANTITY		
			TS-1	TS-2	TS-3
6	10739102	PULLEY ASSEMBLY W/PULLEY HOLDER	1	—	—
7	10739101	PULLEY	—	2	—
9	10435750	PREFORMED LINE GUARD	1	1	—
17	10201622	SUSPENSION CLAMP	—	—	1
73	10206340	LINK, DOUBLE CLEVIS 90°	—	1	—
85	10206350	LINK CLEVIS TONGUE 90°	—	1	—
107	10730150	DOUBLE PULLEY PLATE ASSEMBLY	—	1	—
109	10735190	1/2" PLATE 3"x 2"(5 DEG. SUPPORT BRACKET)	—	1	—
442	10730168	BACK PLATE MESSENGER INSULATOR SUPPORT BRACKET	1	1	1
113	10200166	PULLEY BRACKET SUPPORT ASSEMBLY	1	—	1
114	19130913	1/2"ø S.S. BOLT, NUT & LOCKWASHER	4	—	4
119	19133562	5/8"ø x 5" GALV. A307 BOLT, NUT & LOCKWASHER	4	4	4
80A	10850090	3/8" S.S. WIRE ROPE (7x19 STR)WITH 2 EYES, LENGTH AS REQD	—	—	1
230	10850255	1/2" ANCHOR SHACKLE WITH 5/8"ø PIN	—	—	1
441	10730187	FRONT PLATE MESSENGER INSULATOR SUPPORT	1	—	1
442	10730168	BACK PLATE MESSENGER INSULATOR SUPPORT	1	1	1

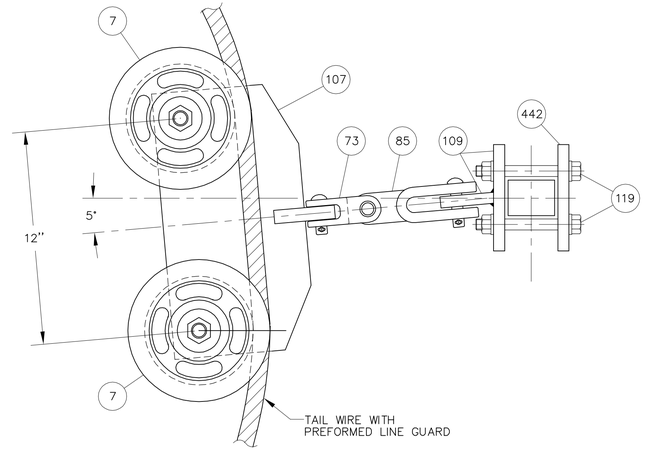

TOP VIEW

NOTES:

1. SUPPORT BRACKET HAS A 5° OFFSET AND IS REVERSIBLE. MAKE CERTAIN THAT THE OFFSET IS INSTALLED CORRECTLY.
2. ASSEMBLY TS-1 IS FOR A.T. SYSTEM TAIL WIRE SUPPORT.
3. ASSEMBLY TS-2 IS FOR A.T. SYSTEM AND HEAVY RADIAL LOAD CONDITIONS AS PER PLANS.
4. ASSEMBLY TS-3 IS FOR F.T. SYSTEM OR A.T. SYSTEM WITH MPA OR FA WITHIN 600 FT OF THE FIXED END.
5. USE TINNED CONNECTORS FOR CONNECTION TO ALUMINUM CONDUCTOR.
6. USE NICOPRESS TOOLS AND FERRULES FOR EYE SPLICING OF WIRES, AS REQUIRED.

THE INFORMATION, INCLUDING ESTIMATED QUANTITIES OF WORK SHOWN ON THESE SHEETS IS BASED ON LIMITED INVESTIGATIONS BY THE STATE AND IS IN NO WAY WARRANTED TO INDICATE THE TRUE CONDITIONS OR ACTUAL QUANTITIES OR DISTRIBUTION OF QUANTITIES OF WORK WHICH WILL BE REQUIRED.

URS CORPORATION AES
500 ENTERPRISE DRIVE
ROCKY HILL, CT 06067
1-(860)-529-8882

NTS

NO.	DATE	DESCRIPTION

REVISIONS

STATE OF CONNECTICUT
DEPARTMENT OF TRANSPORTATION

STAMFORD YARD CATENARY IMPROVEMENTS

TAIL WIRE SUPPORT ASSEMBLIES

ENGINEER: URS CORPORATION AES

DESIGNER: RW | DRAFTER: AMK | CHECKER: AJM

APPROVED: T. HOLLAND | DATE: XX/XX/XX

STRUCTURE NO. | BRIDGE LOG NO. | STRUCTURE SHEET NO. E-2

PROJECT CONTROL DATE: XX/XX/XX DISK FILENAME: E-2.dwg XX% DESIGN

F H W A REGION	STATE	TOWN	FED. AID PROJ. NO.	PROJ. NO.	YEAR	SHEET NUMBER
1	CONN.	VARIOUS		301-163	2014	

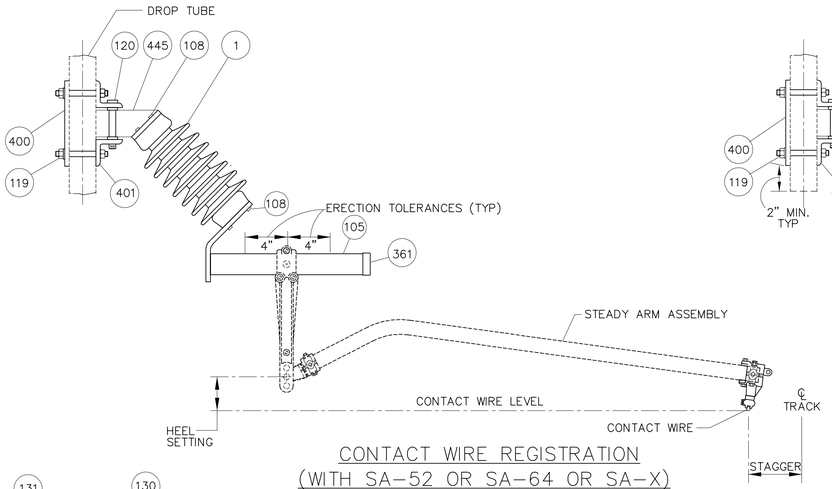

CONTACT WIRE REGISTRATION
(WITH SA-52 OR SA-64 OR SA-X)
ASSEMBLY RA-18

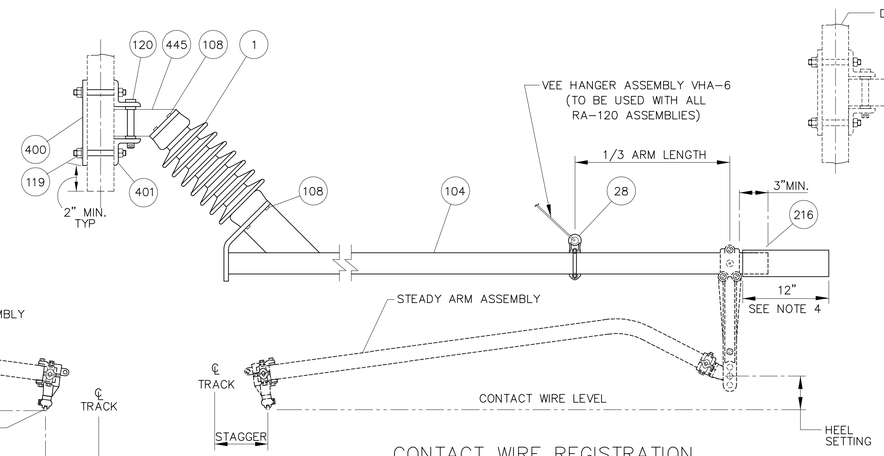

CONTACT WIRE REGISTRATION
(WITH SA-52 OR SA-64 OR SA-X)
ASSEMBLY RA-120

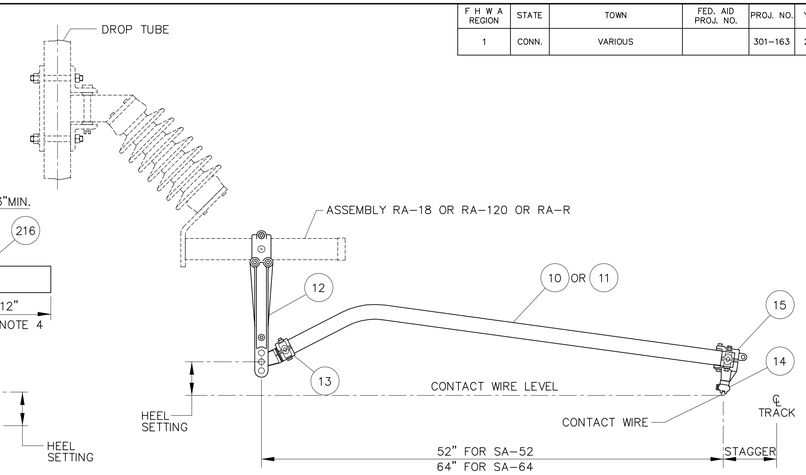

STEADY ARM ASSEMBLY
SA-52 OR SA-64

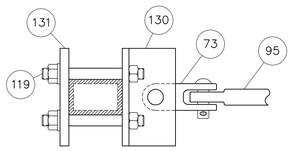

TOP VIEW

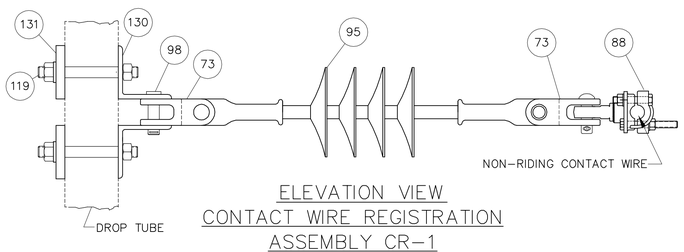

ELEVATION VIEW
CONTACT WIRE REGISTRATION
ASSEMBLY CR-1

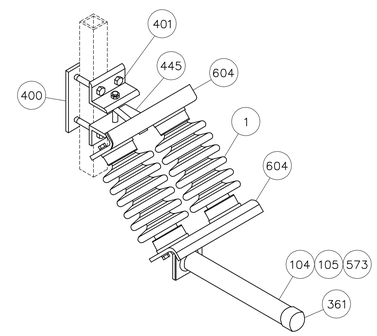

TYPE: RA-18-HL DETAIL
(WITH RA-R-HL OR RA-18-HL OR RA-120-HL)

ASSEMBLIES – CR-1, RA-R, RA-R-HL, RA-18, RA-18-HL, RA-120, RA-12-HL, SA-X, SA-52 & SA-64											
PART No.	METRO-NORTH No.	DESCRIPTION	QTY PER ASSEMBLY									
			CR-1	RA-R	RA-18	RA-120	SA-X	SA-52	SA-64	RA-R-HL	RA-18-HL	RA-120-HL
1	10445110	CANTILEVER INSULATOR (2000 LBS)	—	1	1	1	—	—	—	2	2	2
10	10100171	STEADY ARM 52"	—	—	—	—	—	1	—	—	—	—
11	10100175	STEADY ARM 64"	—	—	—	—	—	—	1	—	—	—
12	10200155	ADJUSTABLE DROP BRACKET	—	—	—	—	1	1	1	—	—	—
13	10434459	STEADY ARM END FITTING	—	—	—	—	1	1	1	—	—	—
14	10202490	SWIVEL CONTACT WIRE CLAMP	—	—	—	—	1	1	1	—	—	—
15	10202489	CONTACT WIRE CLAMP HOLDER	—	—	—	—	1	1	1	—	—	—
20	10100167	STRUT PIPE 1 1/4"IPS SCH. 40	—	—	—	—	1	—	—	—	—	—
28	10202451	PIPE EYE CLAMP	—	—	—	1	—	—	—	—	—	—
73	10206340	LINK, DOUBLE CLEVIS 90°	2	—	—	—	—	—	—	—	—	—
88	10201630	MESSENGER SWIVEL SUSPENSION CLAMP	1	—	—	—	—	—	—	—	—	—
95	10445113	SUSPENSION INSULATOR 25,000 LB	1	—	—	—	—	—	—	—	—	—
98	19132808	5/8"ø x 3" BOLT, NUT & LOCKWASHER	1	—	—	—	—	—	—	—	—	—
104	10000093	REGISTRATION TUBE 120" ASSEMBLY INCLUDING PIPE CAP	—	—	—	1	—	—	—	—	—	1
105	10000085	REGISTRATION TUBE 18" ASSEMBLY	—	—	1	—	—	—	—	—	1	—
108	19130912	1/2"ø x 1 1/4" GALV. BOLT, W/LOCK WASHER	—	8	8	8	—	—	—	16	16	16
400	10730165	HINGED INSULATOR BRACKET BACK PLATE	—	1	1	1	—	—	—	1	1	1
119	19133820	5/8"ø X 5" GALV., BOLT, NUT & LOCKWASHER	4	4	4	4	—	—	—	4	4	4
120	19133825	5/8"ø x 6" BOLT A307 W/NUT & 2 BRONZE WASHERS	—	1	1	1	—	—	—	1	1	1
130	10000040	L 3"x 3"x 3/8"– 5 1/2"LONG	2	—	—	—	—	—	—	—	—	—
131	10730190	1/2" PLATE 3"x 5 1/2"	2	—	—	—	—	—	—	—	—	—
216	10200147	ORANGE RUBBER BOOT 20KV 12" LONG	—	—	—	1	—	—	—	—	—	—
361		EXTERNAL PLASTIC SEAL PLUG	—	1	1	—	—	—	—	1	1	1
401	10854750	INSULATOR BASE SUPPORT (HINGED INSULATOR ASSEMBLY)	—	2	2	2	—	—	—	2	2	2
445	10200011	INSULATOR BASE (HINGED INSULATOR ASSEMBLY)	—	1	1	1	—	—	—	1	1	1
573	10858170	REGISTRATION TUBE 18" ASSEMBLY	—	1	—	—	—	—	—	1	—	—
604		DOUBLE INSULATION ADAPTER PLATE	—	—	—	—	—	—	—	2	2	2

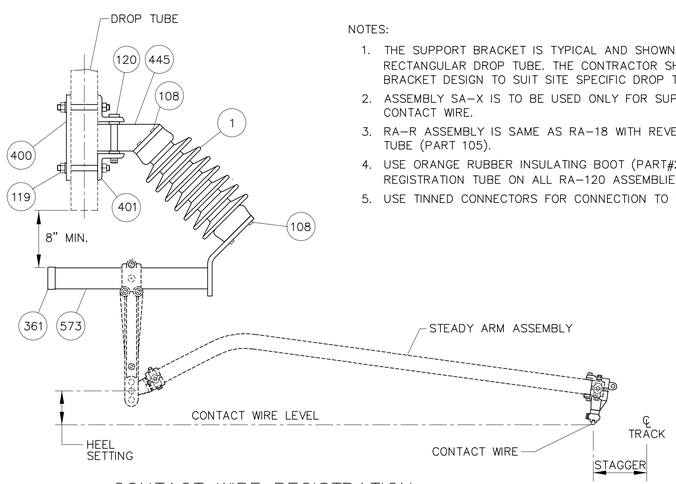

CONTACT WIRE REGISTRATION
(WITH SA-52 OR SA-64 OR SA-X)
ASSEMBLY RA-R

NOTES:

1. THE SUPPORT BRACKET IS TYPICAL AND SHOWN FOR 3"x 2"x 1/4" RECTANGULAR DROP TUBE. THE CONTRACTOR SHALL DEVELOP THE BRACKET DESIGN TO SUIT SITE SPECIFIC DROP TUBES.
2. ASSEMBLY SA-X IS TO BE USED ONLY FOR SUPPORTING NON-RIDING CONTACT WIRE.
3. RA-R ASSEMBLY IS SAME AS RA-18 WITH REVERSED REGISTRATION TUBE (PART 105).
4. USE ORANGE RUBBER INSULATING BOOT (PART#216) ON THE REGISTRATION TUBE ON ALL RA-120 ASSEMBLIES.
5. USE TINNED CONNECTORS FOR CONNECTION TO ALUMINUM CONDUCTOR.

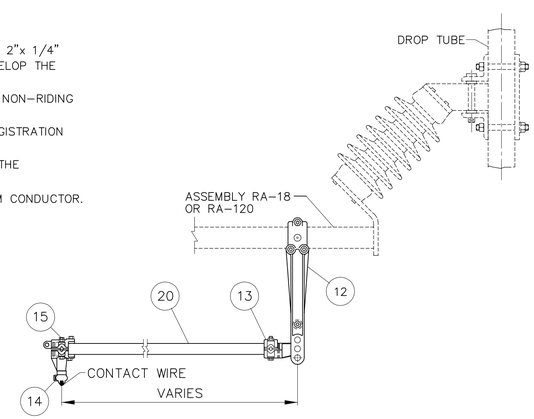

CONTACT WIRE REGISTRATION
ASSEMBLY SA-X

THE INFORMATION, INCLUDING ESTIMATED QUANTITIES OF WORK SHOWN ON THESE SHEETS IS BASED ON LIMITED INVESTIGATIONS BY THE STATE AND IS IN NO WAY WARRANTED TO INDICATE THE TRUE CONDITIONS OR ACTUAL QUANTITIES OR DISTRIBUTION OF QUANTITIES OF WORK WHICH WILL BE REQUIRED.

NTS

NO.	DATE	DESCRIPTION

REVISIONS

URS CORPORATION AES
500 ENTERPRISE DRIVE
ROCKY HILL, CT 06067
1-(860)-529-8882

STATE OF CONNECTICUT
DEPARTMENT OF TRANSPORTATION

STAMFORD YARD CATENARY IMPROVEMENTS

CONTACT WIRE
REGISTRATION ASSEMBLIES

ENGINEER: URS CORPORATION AES
DESIGNER: RW | DRAFTER: AMK | CHECKER: AJM
APPROVED: T. HOLLAND | DATE: XX/XX/XX
STRUCTURE NO. | BRIDGE LOG NO. | STRUCTURE SHEET NO. E-3

PROJECT CONTROL DATE: XX/XX/XX DISK FILENAME: E-3.dwg XX% DESIGN

F H W A REGION	STATE	TOWN	FED. AID PROJ. NO.	PROJ. NO.	YEAR	SHEET NUMBER
1	CONN.	VARIOUS		301-163	2014	

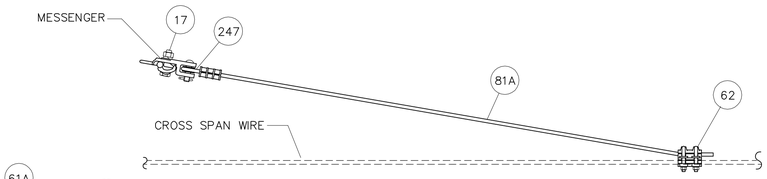

PULL-OFF ASSEMBLY PO-8

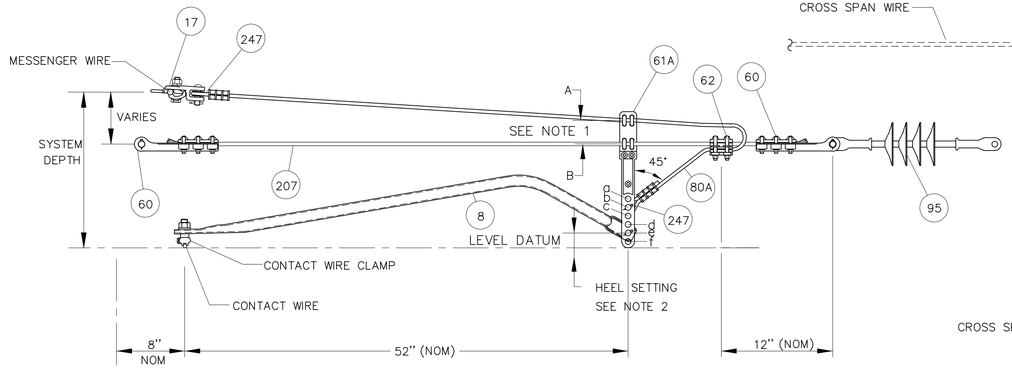

PULL-OFF ASSEMBLY PO-1

(FOR SYSTEM HEIGHT BETWEEN 15" TO 18")

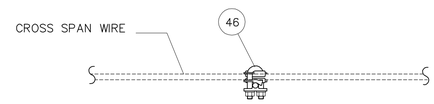

PULL-OFF ASSEMBLY CC-1

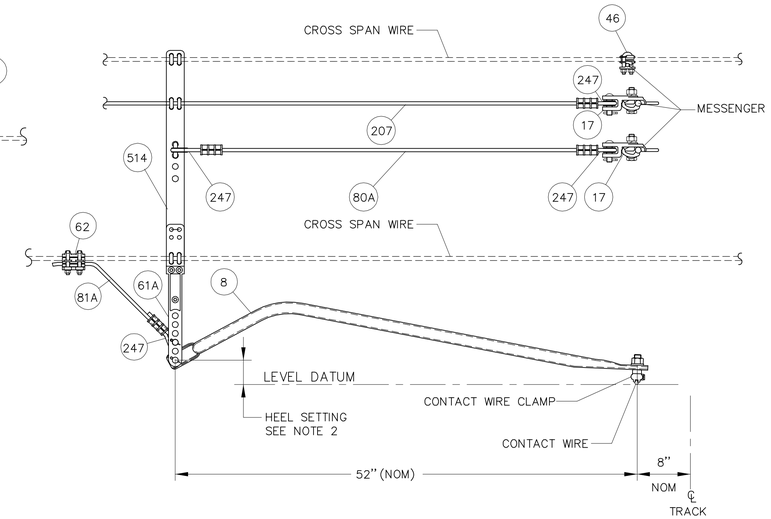

PULL-OFF ASSEMBLIES PO-3, PO-4 AND PO-12

(FOR SYSTEM HEIGHT > 18")

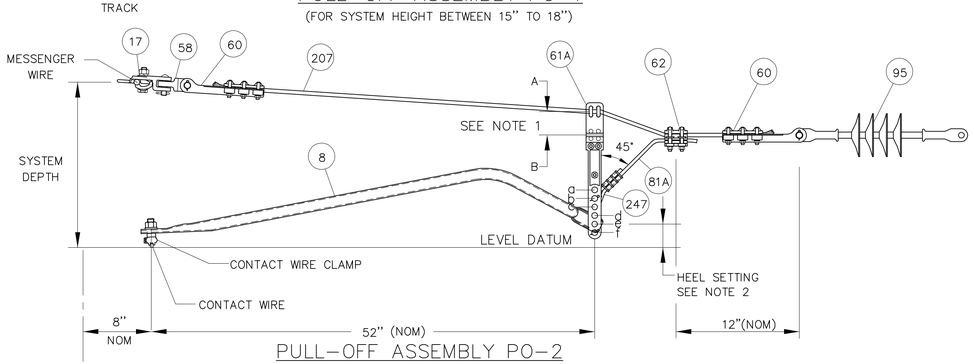

PULL-OFF ASSEMBLY PO-2

(FOR SYSTEM HEIGHT BETWEEN 15" TO 18")

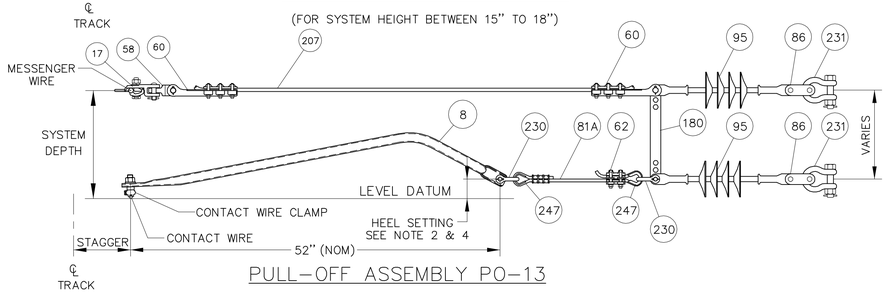

PULL-OFF ASSEMBLY PO-13

ASSEMBLIES CC-1, PO-1, PO-2, PO-3, PO-4, PO-8, PO-12, PO-13									
PART No.	METRO-NORTH No.	DESCRIPTION	QUANTITY							
			PO-1	PO-2	PO-3	PO-4	PO-8	CC-1	PO-12	PO-13
8	10100142	STEADY ARM COMPLETE WITH CONTACT WIRE CLAMP	1	1	1	1	—	—	1	1
17	10201622	SUSPENSION CLAMP	1	1	1	—	1	—	1	1
46	10201600	CROSS CLAMP	—	—	—	1	—	1	—	—
58	10855291	LINK TONGUE TO TONGUE, 90°	—	1	—	—	—	—	—	1
60	10201621	DEAD END CLAMP	2	2	—	—	—	—	—	2
61A	—	DROP BRACKET	1	1	1	1	—	—	1	—
62	10202488	PARALLEL CLAMP, 7/16"ø COPPERWELD AND 3/8" S.S. WIRE ROPE	1	1	1	1	1	—	1	1
80A	10997040	3/8" S.S. WIRE ROPE (7x19 STR) WITH 2 EYES, LENGTH AS REQUIRED	1	—	1	—	—	—	—	—
81A	—	3/8" S.S. WIRE ROPE (7x19 STR) WITH SINGLE EYE, LENGTH AS REQUIRED	—	1	1	1	1	—	1	1
86	10206310	LINK CLEVIS CLEVIS	—	—	—	—	—	—	—	2
95	10445113	SUSPENSION INSULATOR 25,000 LBS	1	1	—	—	—	—	—	2
180	10852375	GALV. ANTI-TORSION STRAP 3/16" x 1 1/2"	—	—	—	—	—	—	—	1
207	10997017	7/16"ø COPPERWELD WIRE	FT	FT	—	—	—	—	FT	FT
230	10850255	1/2" ANCHOR SHACKLE W/ 5/8"ø PIN	—	—	—	—	—	—	—	2
231	10850265	5/8" ANCHOR SHACKLE W/ 3/4"ø PIN	—	—	—	—	—	—	—	2
514		DROP BRACKET COMPLETE WITH U-BOLTS AND HARDWARE	—	—	1	1	—	—	1	—
22	10100172	CROSS SPAN STEADY ARM COMPLETE W/ END FITTING CLAMP	—	—	—	—	—	—	—	—
		HOLDER AND CONTACT WIRE CLAMP								
247	10858000	3/8" DIA. WIRE ROPE THIMBLE	2	1	3	1	1	—	2	2

NOTES:

1. REFER TO TABLE 1 ON DRAWING E-7 FOR ATTACHMENT LOCATIONS ON PART 61A.
2. HEEL SETTINGS TO BE 2" ± 1/2". HEEL SETTING IS MEASURED AS DISTANCE BETWEEN LEVEL DATUM FROM BOTTOM OF CONTACT WIRE TO CENTERLINE OF STEADY ARM PIN, INSTALLED IN DROP BRACKET OR CONNECTION FITTING.
3. PRIOR TO INSTALLATION OF THE PULL-OFF ASSEMBLY, FIELD VERIFY THE TRACK GEOMETRY AND DIMENSIONS. INSTALL THE SUSPENSION INSULATOR (PART 95) BETWEEN THE TRACKS TO SUIT THE PULL-OFF ASSEMBLY AND MAINTAIN THE CLEARANCE ENVELOPE TO THE ADJACENT TRACK.
4. USE HOLES ON PART 180 FOR POSITIONING THE ATTACHMENTS TO OBTAIN PROPER HEEL SETTING.
5. USE TINNED CONNECTORS FOR CONNECTION TO ALUMINUM CONDUCTOR.

NTS

THE INFORMATION, INCLUDING ESTIMATED QUANTITIES OF WORK SHOWN ON THESE SHEETS IS BASED ON LIMITED INVESTIGATIONS BY THE STATE AND IS IN NO WAY WARRANTED TO INDICATE THE TRUE CONDITIONS OR ACTUAL QUANTITIES OR DISTRIBUTION OF QUANTITIES OF WORK WHICH WILL BE REQUIRED.

URS CORPORATION AES
500 ENTERPRISE DRIVE
ROCKY HILL, CT 06067
1-(860)-529-8882

NO.	DATE	DESCRIPTION

REVISIONS

STATE OF CONNECTICUT
DEPARTMENT OF TRANSPORTATION

STAMFORD YARD CATENARY IMPROVEMENTS

PULL-OFF ASSEMBLIES

ENGINEER: URS CORPORATION AES
DESIGNER: RW | DRAFTER: AMK | CHECKER: AJM
APPROVED: T. HOLLAND | DATE: XX/XX/XX
STRUCTURE NO. | BRIDGE LOG NO. | STRUCTURE SHEET NO. E-4

PROJECT CONTROL DATE: XX/XX/XX DISK FILENAME: E-4.dwg XX% DESIGN

F H W A REGION	STATE	TOWN	FED. AID PROJ. NO.	PROJ. NO.	YEAR	SHEET NUMBER
1	CONN.	VARIOUS		301-163	2014	

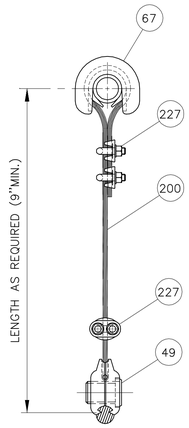

WIRE ROPE HANGER
ASSEMBLY RHA-3

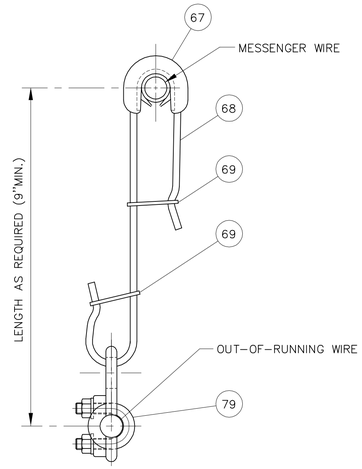

SECURITY HANGER
ASSEMBLY SHA-4

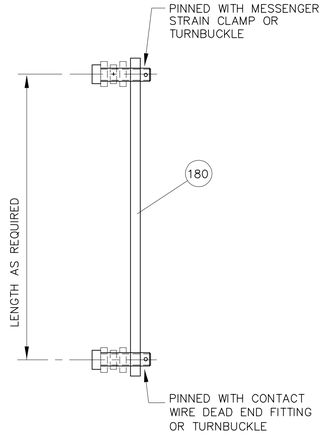

ANTI-TORSION HANGER
ASSEMBLY AHA-5

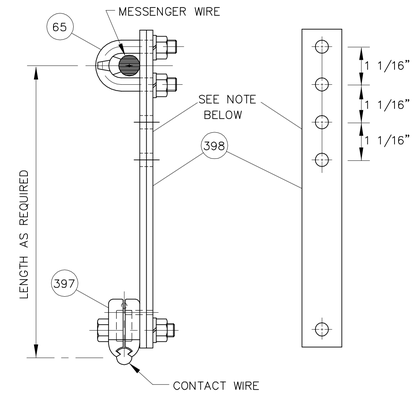

COMPRESSION HANGER
ASSEMBLY AHA-6

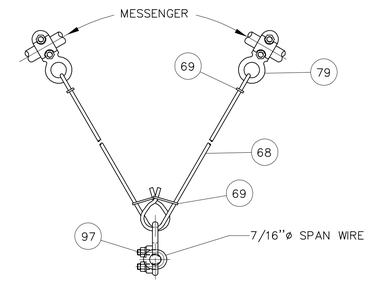

VEE HANGER
ASSEMBLY VHA-11

(FOR VHA-11, END LOOPS ARE TURNED 90°)

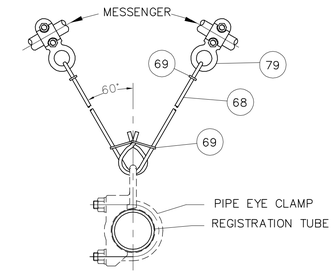

VEE HANGER
ASSEMBLY VHA-6

(FOR VHA-6, END LOOPS ARE TURNED 90°)

NOTE: ADDITIONAL HOLES AS REQUIRED WILL BE PROVIDED ON RIGID HANGER FOR FIELD ADJUSTMENT OF HANGER LENGTH TO SUIT SITE CONDITIONS.

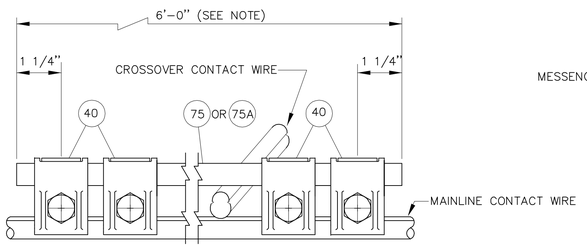

CROSS CONTACT BRIDGE
ASSEMBLY CBA-10

A LONGER CBA-10 PART 75A SHALL BE PROVIDED AS REQUIRED, AT THE DIRECTION OF THE ENGINEER.

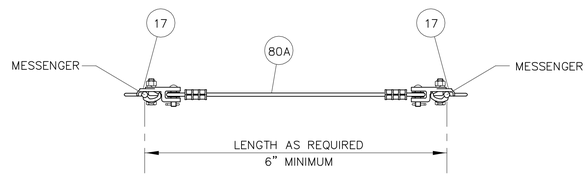

MESSENGER KNUCKLE ASSEMBLY
ASSEMBLY MKA-7

ASSEMBLIES – RHA-3, SHA-4, AHA-5, AHA-6, VHA-6, CKA-8, CKA-9, MKA-7, CBA-10 & VHA-11											
PART No.	METRO-NORTH No.	DESCRIPTION	QUANTITY									
			RHA-3	SHA-4	AHA-5	AHA-6	VHA-6	CKA-8	CKA-9	MKA-7	CBA-10	VHA-11
17	10201622	SUSPENSION CLAMP	—	—	—	—	—	—	—	2	—	—
20	10100167	SPACER BAR 1 1/4" IPS SCH #40 COMPLETE WITH END CAPS	—	—	—	—	—	AS REQ'D	AS REQ'D	—	—	—
31	10436110	CONTACT WIRE CLAMP HOLDER W/CONTACT WIRE CLAMP	—	—	—	—	—	2	—	—	—	—
32		SLIDING CONTACT WIRE CLAMP W/HOLD	—	—	—	—	—	—	2	—	—	—
40	10201624	TROLLEY CONTACT CLAMP	—	—	—	—	—	—	—	—	4	—
49	10201625	TROLLEY WIRE CLAMP	1	—	—	—	—	—	—	—	—	—
65	10100161	PRESSURE BAR ASSEMBLY	—	—	—	1	—	—	—	—	—	—
67	10100143	COPPER ARMOR WITH NEOPRENE ARMOR	1	1	—	—	—	—	—	—	—	—
68	10850050	3/16" STAINLESS STEEL ROD TYPE 304	—	AS REQ'D	—	—	AS REQ'D	—	—	—	—	AS REQ'D
69	10750166	HANGER RETAINER	—	2	—	—	4	—	—	—	—	4
75	10850055	9/16"ø SILICON BRONZE ROD – 6' ROD	—	—	—	—	—	—	—	—	AS REQ'D	—
75A		9/16"ø SILICON BRONZE ROD – 8' ROD	—	—	—	—	—	—	—	—	AS REQ'D	—
79	10202452	MESSENGER HANGER CLAMP	—	1	—	—	2	—	—	—	—	2
80A	10997040	3/8"ø (7x19 STR) S.S. WIRE ROPE W/2 EYES, LEGTH AS REQUIRED	—	—	—	—	—	—	—	1	—	—
97	10202453	MESSENGER HANGER CLAMP	—	—	—	—	—	—	—	—	—	1
180	10852375	3/8" X 1 1/2" GALV. STRAP WITH 2-5/8"ø X 1 1/2" PINS	—	—	1	—	—	—	—	—	—	—
200	10850108	1/4"ø S.S. WIRE ROPE	AS REQ'D	—	—	—	—	—	—	—	—	—
227	10208575	1/4" WIRE ROPE CLIP	AS REQ'D	—	—	—	—	—	—	—	—	—
397		CONTACT WIRE CLAMP	—	—	—	1	—	—	—	—	—	—
398		RIGID HANGER	—	—	—	FT	—	—	—	—	—	—

NOTE:

1. USE TINNED CONNECTORS FOR CONNECTION TO ALUMINUM CONDUCTOR.

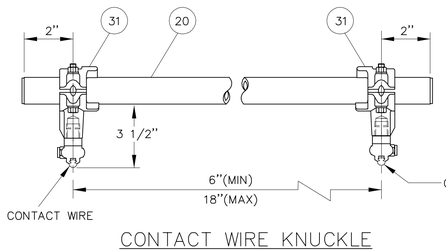

CONTACT WIRE KNUCKLE
ASSEMBLY CKA-8

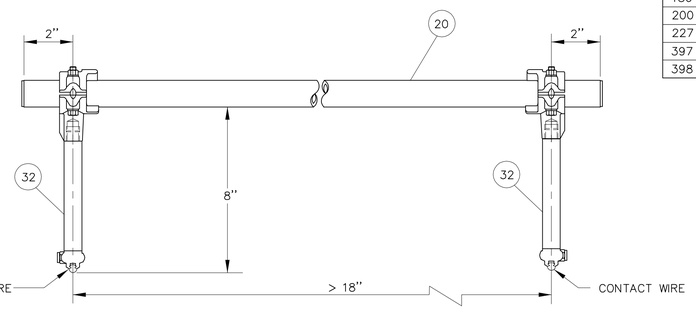

CONTACT WIRE KNUCKLE
ASSEMBLY CKA-9

THE INFORMATION, INCLUDING ESTIMATED QUANTITIES OF WORK SHOWN ON THESE SHEETS IS BASED ON LIMITED INVESTIGATIONS BY THE STATE AND IS IN NO WAY WARRANTED TO INDICATE THE TRUE CONDITIONS OR ACTUAL QUANTITIES OR DISTRIBUTION OF QUANTITIES OF WORK WHICH WILL BE REQUIRED.

URS CORPORATION AES
500 ENTERPRISE DRIVE
ROCKY HILL, CT 06067
1-(860)-529-8882

NTS

NO.	DATE	DESCRIPTION

REVISIONS

STATE OF CONNECTICUT
DEPARTMENT OF TRANSPORTATION

STAMFORD YARD CATENARY IMPROVEMENTS

HANGERS, KNUCKLES & CROSS CONTACT ASSEMBLIES

ENGINEER: URS CORPORATION AES
DESIGNER: RW | DRAFTER: AMK | CHECKER: AJM
APPROVED: T. HOLLAND | DATE: XX/XX/XX
STRUCTURE NO. | BRIDGE LOG NO. | STRUCTURE SHEET NO. E-5

PROJECT CONTROL DATE: XX/XX/XX DISK FILENAME: E-5.dwg XX% DESIGN

F H W A REGION	STATE	TOWN	FED. AID PROJ. NO.	PROJ. NO.	YEAR	SHEET NUMBER
1	CONN.	VARIOUS		301-163	2014	

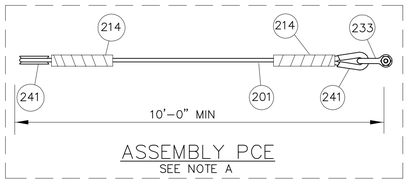

ASSEMBLY PCE
SEE NOTE A

NOTE A:

WHERE THE DEAD END ASSEMBLY IS ATTACHED TO A CLIMBABLE POLE, INSTALL ASSEMBLY PCE IN PLACE OF PART 86 OR 73 TO BRING THE SUSPENSION INSULATOR 10 FEET CLEAR FROM THE POLE WHERE CIRCUMSTANCES PERMIT. WHEN THE ASSEMBLY INCLUDES A TURNBUCKLE, THE PCE SHALL BE INSERTED BETWEEN THE TURNBUCKLE AND THE INSULATOR.

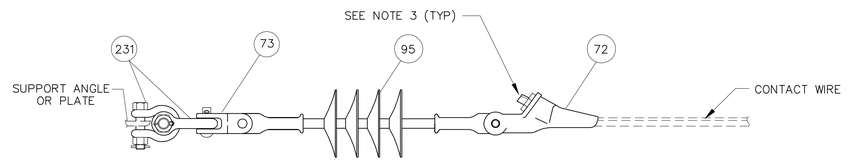

CONTACT WIRE DEAD END ASSEMBLY CDEA-1

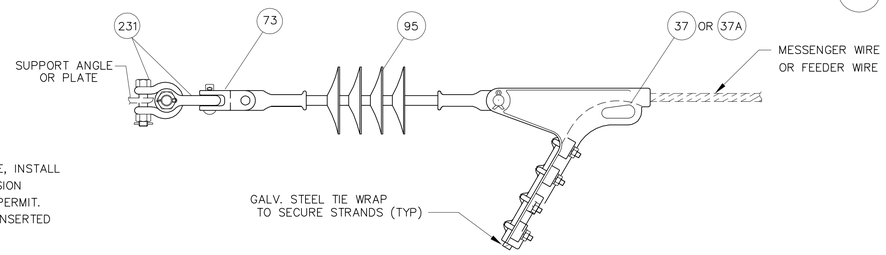

MESSENGER DEAD END ASSEMBLY MDEA-2
4/0 FEEDER DEAD END ASSEMBLY FDEA-3 (SEE NOTE 6)
2/0 FEEDER DEAD END ASSEMBLY FDEA-3A

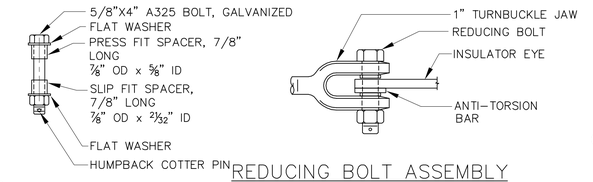

600 REDUCING BOLT

REDUCING BOLT ASSEMBLY

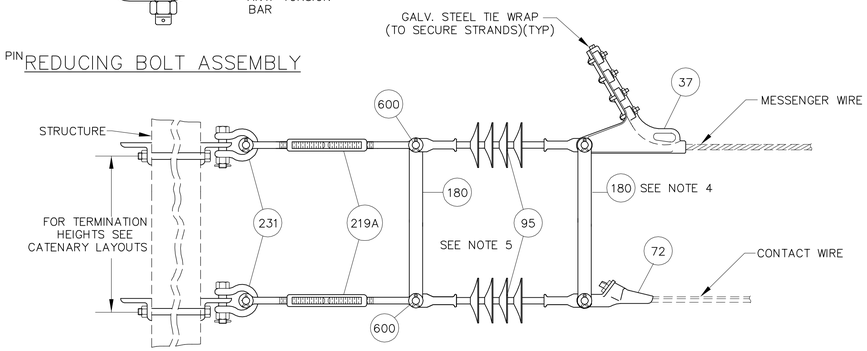

CATENARY DEAD END ASSEMBLY CDEA-5

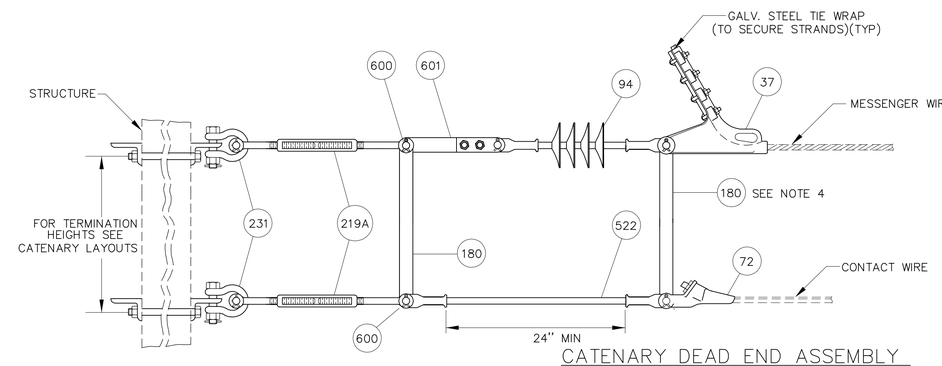

CATENARY DEAD END ASSEMBLY
ASSEMBLY MCIA-3

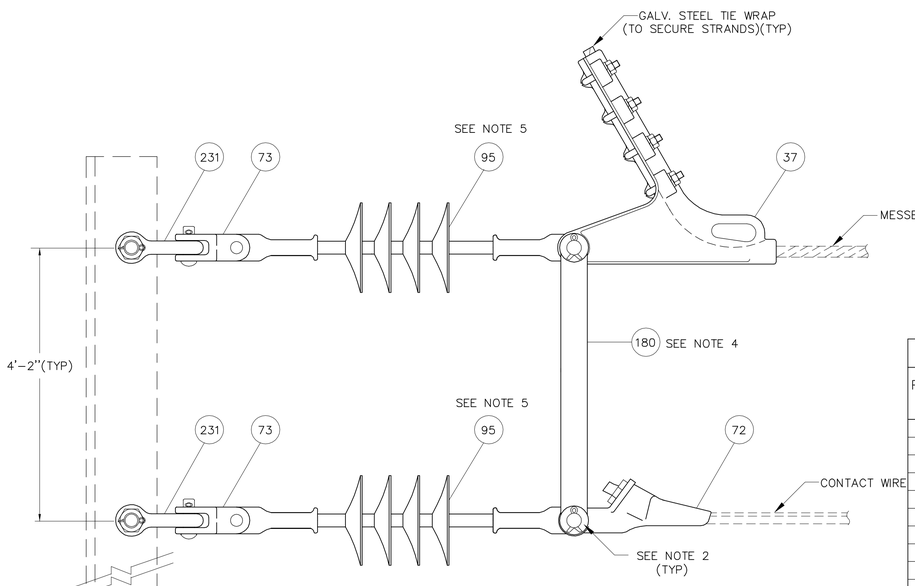

CATENARY DEAD END ASSEMBLY CDEA-4
SEE NOTE A

ASSEMBLIES – CDEA-1, MDEA-2, FDEA-3, FDEA-3A, CDEA-4, CDEA-5 AND PCE

PART No.	METRO-NORTH No.	DESCRIPTION	QUANTITY							
			CDEA-1	MDEA-2	FDEA-3	FDEA-3A	CDEA-4	CDEA-5	MCIA-3	PCE
37	10202492	STRAIN CLAMP CONNECTOR	—	1	1	—	1	1	1	—
37A		STRAIN CLAMP CONNECTOR FOR 2/0 7-STRAND H.D. WIRE	—	—	—	1	—	—	—	—
72	10434410	DEAD END FITTING	1	—	—	—	1	1	1	—
73	10206340	LINK DOUBLE CLEVIS, 90 DEG.	1	1	1	1	2	—	—	—
94	10445115	SUSPENSION INSULATOR 36,000 LBS	—	—	—	—	—	—	1	—
95	10445113	SUSPENSION INSULATOR 25,000 LBS	1	1	1	1	2	2	—	—
180	10852375	GALV. STEEL STRAP (ANTI-TORSION)	—	—	—	—	1	2	2	—
219A	–	1"ø x 6" JAW/JAW TURNBUCKLE	—	—	—	—	—	2	2	—
231	10850265	5/8" ANCHOR SHACKLE WITH 3/4"ø PIN	2	2	2	2	2	2	2	—
233	10201585	7/8" CHAIN SHACKLE	—	—	—	—	—	—	—	1
364		LINK TONGUE TONGUE	—	—	—	—	—	—	—	—
522		25KV CLASS ROD INSULATOR (20,000 LBS)	—	—	—	—	—	—	1	—
201	10997000	19 # 9 ALUMOWELD STRAND	—	—	—	—	—	—	—	FT
214	10435500	PREFORMED BIG GRIP DEAD END	—	—	—	—	—	—	—	2
241	10858000	5/8" THIMBLE	—	—	—	—	—	—	—	2
600		REDUCING BOLT ASSEMBLY (5/8"X4" GALVANZIED BOLT)	—	—	—	—	—	2	2	—
601		LINK EYE-CLEVIS	—	—	—	—	—	—	1	—

NOTES:

1. THE DEAD END ASSEMBLIES WITH 25,000 LB. INSULATOR SHALL BE USED FOR A.T. CATENARY SYSTEM. FOR MESSENGER TERMINATION ON F.T. SYSTEM, REPLACE PART #95 WITH PART #94 (36,000 LBS INSULATOR.)
2. USE EXTRA LONG PIN FOR ASSEMBLY WITH ANTI-TORSION STRAP.
3. FOR DEAD END CLAMP, ITEM 72, USE COMPRESSION SLEEVE TO SUIT CONTACT WIRE SIZE.
4. THE STRAP LENGTH WILL BE EQUAL TO THE TERMINATION SYSTEM HEIGHT.
5. IN CERTAIN CONFIGURATIONS USING CDEA-4 OR CDEA-5 ASSEMBLY, PART 95 WILL BE REPLACED BY EQUIVALENT LINK. FOR ALLOCATION OF THIS ALTERNATIVE SEE CATENARY LAYOUT AND S.E.D.
6. USE PORCELAIN INSULATORS AT ROAD AND RIVER CROSSINGS.
7. USE TINNED CONNECTORS FOR CONNECTION TO ALUMINUM CONDUCTOR.

NTS

THE INFORMATION, INCLUDING ESTIMATED QUANTITIES OF WORK SHOWN ON THESE SHEETS IS BASED ON LIMITED INVESTIGATIONS BY THE STATE AND IS IN NO WAY WARRANTED TO INDICATE THE TRUE CONDITIONS OR ACTUAL QUANTITIES OR DISTRIBUTION OF QUANTITIES OF WORK WHICH WILL BE REQUIRED.

URS CORPORATION AES
500 ENTERPRISE DRIVE
ROCKY HILL, CT 06067
1-(860)-529-8882

NO.	DATE	DESCRIPTION

REVISIONS

STATE OF CONNECTICUT
DEPARTMENT OF TRANSPORTATION

STAMFORD YARD CATENARY IMPROVEMENTS

DEAD END ASSEMBLIES

ENGINEER: URS CORPORATION AES
DESIGNER: RW | DRAFTER: AMK | CHECKER: AJM
APPROVED: T. HOLLAND | DATE: XX/XX/XX
STRUCTURE NO. | BRIDGE LOG NO. | STRUCTURE SHEET NO. E-6

PROJECT CONTROL DATE: XX/XX/XX DISK FILENAME: E-6.dwg XX% DESIGN

F H W A REGION	STATE	TOWN	FED. AID PROJ. NO.	PROJ. NO.	YEAR	SHEET NUMBER
1	CONN.	VARIOUS		301-163	2014	

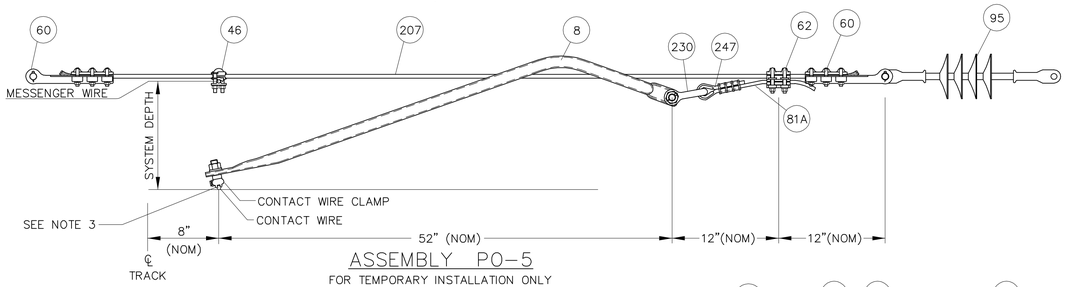

ASSEMBLY PO-5

FOR TEMPORARY INSTALLATION ONLY
(FOR SYSTEM HEIGHT < 9")

TABLE 1

ATTACHMENT LOCATIONS ON PART 61A			
	PART No. 207	PART No. 81A	PART No. 8
SYSTEM DEPTH = 9"	B	f	b
SYSTEM DEPTH = 10"	B	f	c
SYSTEM DEPTH = 11"	B	a	d
SYSTEM DEPTH = 12"	B	b	e
SYSTEM DEPTH = 13"	A	f	c
SYSTEM DEPTH = 14"	A	a	d
SYSTEM DEPTH = 15"	A	b	e

THESE POSITIONS ARE TYPICAL AND MAY HAVE TO BE ADJUSTED TO ATTAIN THE PROPER HEEL SETTING BASED ON THE ACTUAL SYSTEM DEPTH AND THE HEIGHT OF THE PULL-OFF WIRE AT THE DROP BRACKET.

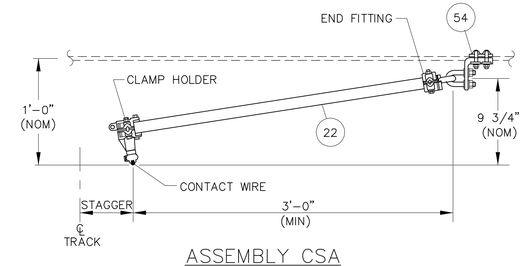

ASSEMBLY CSA

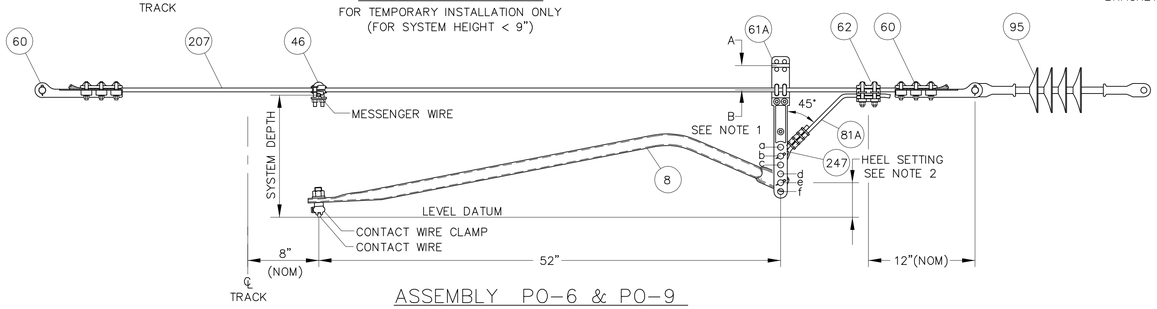

ASSEMBLY PO-6 & PO-9

(USE PO-6 & PO-9 FOR SYSTEM HEIGHT 9" TO 15")
SEE NOTE 1

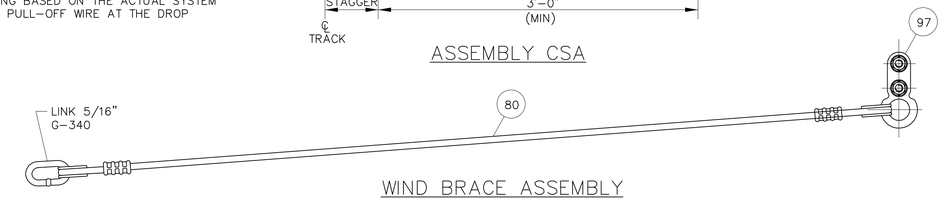

WIND BRACE ASSEMBLY

ASSEMBLIES – CSA, PO-5, PO-6, PO-7, PO-9, PO-10, PO-14, SIA-9, SIA-9A, SIA-9B, SIA-9C AND WB												
PART No.	METRO-NORTH No.	DESCRIPTION	QUANTITY									
			CSA	PO-5	PO-6	PO-7	SIA-9	SIA-9A	PO-9	PO-10	SIA-9B	SIA-9C	WB
8	10100142	STEADY ARM COMPLETE W/CONTACT WIRE CLAMP	—	1	1	1	—	—	1	1	—	—	—
17	10201622	SUSPENSION CLAMP	—	—	—	1	—	—	—	1	—	—	—
22	10100172	CROSS SPAN STEADY ARM COMPLETE W/END FITTING CLAMP											—
		HOLDER AND CONTACT WIRE CLAMP	1	—	—	—	—	—	—	—	—	—	—
46	10201600	CROSS CLAMP	—	1	1	—	—	—	1	—	—	—	—
54	10201627	SPAN WIRE LOOP CLAMP	1	—	—	—	—	—	—	—	—	—	—
58	10855291	DOUBLE EYE LINK 90°	—	—	—	1	—	—	—	1	—	—	—
60	10201621	DEAD END CLAMP	—	2	2	2	2	1	2	2	3	2	—
61A	—	DROP BRACKET	—	—	1	—	—	—	1	1	—	—	—
62	10202488	PARALLEL CLAMP, 7/16"ø COPPERWELD COPPER WIRE AND											—
		3/8"ø S.S. WIRE ROPE	—	1	1	1	—	—	1	1	—	—	—
73	10206340	LINK, DOUBLE CLEVIS 90°	—	—	—	—	—	—	—	—	—	—	—
80	10997042	3/8" S.S. WIRE ROPE WITH 2 EYES, LENGTH AS REQUIRED	—	—	—	—	—	—	—	—	—	—	1
81A	—	3/8" S.S. WIRE ROPE (7x19 STR) WITH SINGLE EYE, LENGTH AS REQUIRED	—	1	1	1	—	—	1	1	—	—	—
86	10206310	LINK CLEVIS CLEVIS	—	—	—	—	—	—	—	—	—	—	—
95	10445113	SUSPENSION INSULATOR 25,000 LB.	—	1	1	1	1	1	1	1	1	1	—
97	10202453	MESSAGE HANGER CLAMP	—	—	—	—	—	—	—	—	—	—	1
207	10997017	7/16"ø COPPERWELD WIRE	—	FT	FT	FT	FT	FT	FT	FT	FT	FT	—
230	10850255	1/2" ANCHOR SHACKLE	—	1	—	1	—	—	—	—	—	—	—
231	10850265	5/8" ANCHOR SHACKLE WITH 3/4"ø PIN	—	—	—	—	—	—	—	—	—	—	—
554		MESSENGER CLAMP, UPRIGHT	—	—	—	—	—	—	—	—	—	—	—
555		CLAMP ADAPTER	—	—	—	—	—	—	—	—	—	—	—
247	10858000	3/8" DIA. WIRE ROPE THIMBLE	—	1	1	1	—	—	1	1	—	—	—
		LINK, 5/16" GALV. G-340	—	—	—	—	—	—	—	—	—	—	1

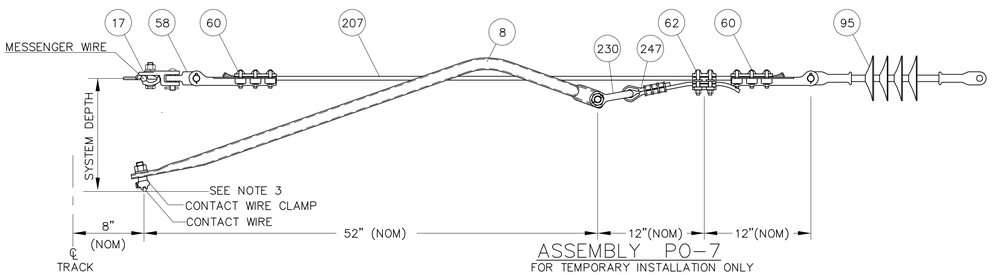

ASSEMBLY PO-7

FOR TEMPORARY INSTALLATION ONLY
FOR SYSTEM HEIGHT < 9"

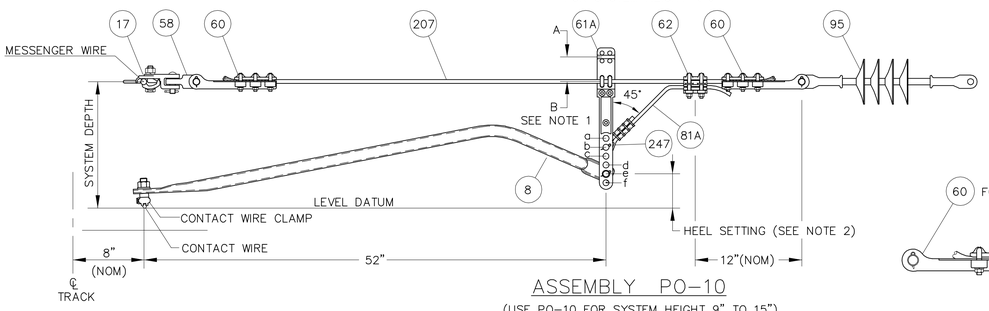

ASSEMBLY PO-10

(USE PO-10 FOR SYSTEM HEIGHT 9" TO 15")
SEE NOTE 1

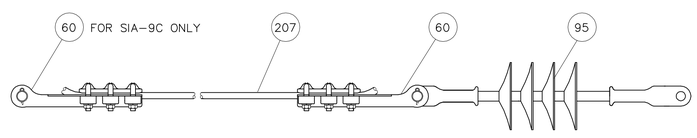

SPAN WIRE INSULATION ASSEMBLY

SIA-9A & SIA-9C

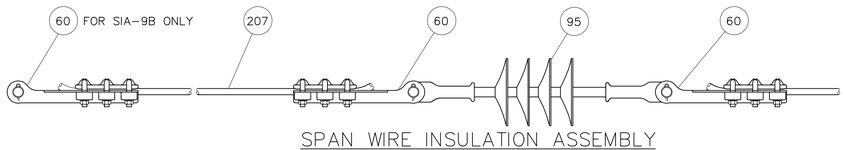

SPAN WIRE INSULATION ASSEMBLY

SIA-9 & SIA-9B

NOTES:

1. REFER TO TABLE 1 FOR ATTACHMENT LOCATIONS ON PART 61A.
2. HEEL SETTINGS TO BE 2" ± 1/2". HEEL SETTING IS MEASURED AS DISTANCE BETWEEN LEVEL DATUM FROM BOTTOM OF CONTACT WIRE TO CENTERLINE OF STEADY ARM PIN, INSTALLED IN DROP BRACKET OR CONNECTION FITTING.
3. OFFSET CONTACT WIRE CLAMP 4" FOR CLEARANCE BETWEEN SPAN WIRE AND STEADY ARM.
4. USE TINNED CONNECTORS FOR CONNECTION TO ALUMINUM CONDUCTOR.

THE INFORMATION, INCLUDING ESTIMATED QUANTITIES OF WORK SHOWN ON THESE SHEETS IS BASED ON LIMITED INVESTIGATIONS BY THE STATE AND IS IN NO WAY WARRANTED TO INDICATE THE TRUE CONDITIONS OR ACTUAL QUANTITIES OR DISTRIBUTION OF QUANTITIES OF WORK WHICH WILL BE REQUIRED.

URS CORPORATION AES
500 ENTERPRISE DRIVE
ROCKY HILL, CT 06067
1-(860)-529-8882

NTS

NO.	DATE	DESCRIPTION

REVISIONS

STATE OF CONNECTICUT
DEPARTMENT OF TRANSPORTATION

STAMFORD YARD CATENARY IMPROVEMENTS

CROSS SPAN ASSEMBLIES

ENGINEER: URS CORPORATION AES
DESIGNER: RW | DRAFTER: AMK | CHECKER: AJM
APPROVED: T. HOLLAND | DATE: XX/XX/XX
STRUCTURE NO. | BRIDGE LOG NO. | STRUCTURE SHEET NO. E-7

PROJECT CONTROL DATE: XX/XX/XX | DISK FILENAME: E-7.dwg | XX% DESIGN

F H W A REGION	STATE	TOWN	FED. AID PROJ. NO.	PROJ. NO.	YEAR	SHEET NUMBER
1	CONN.	VARIOUS		301-163	2014	

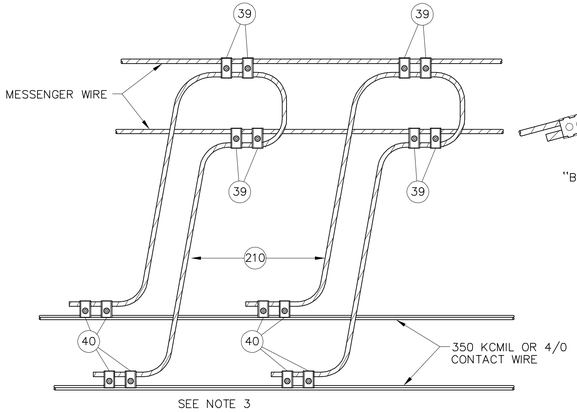

FULL LOAD FEEDING JUMPER
TYPE "A"

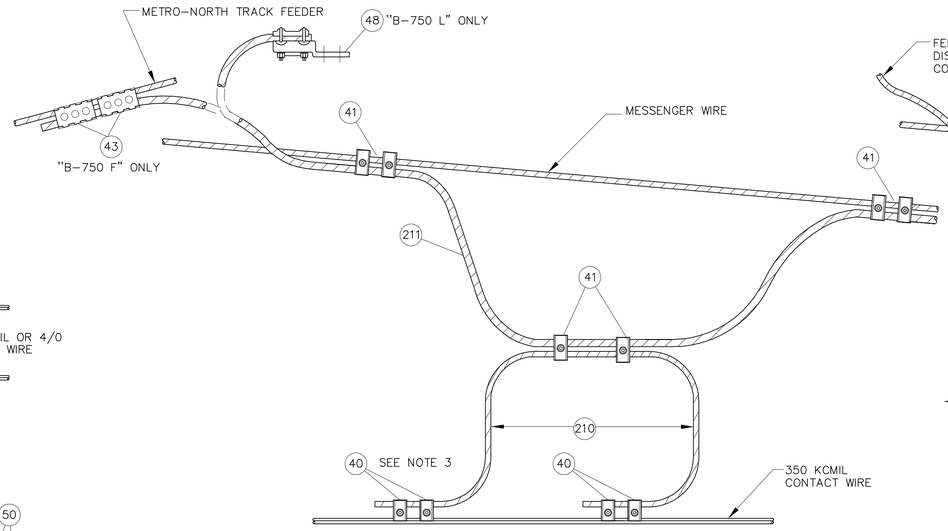

CATENARY FEEDING JUMPER
TYPE "B-750 F"
TYPE "B-750 L"

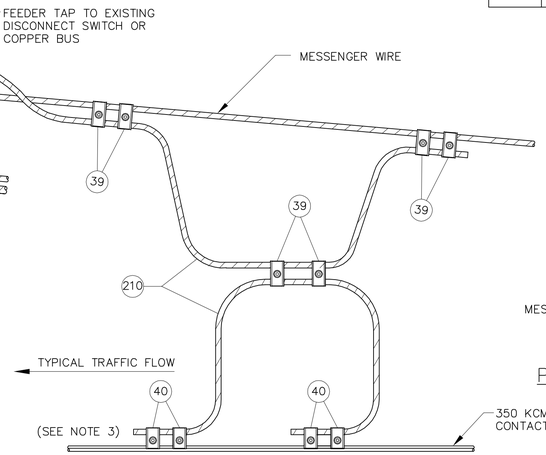

CATENARY FEEDING JUMPER
TYPE "B-4/0"

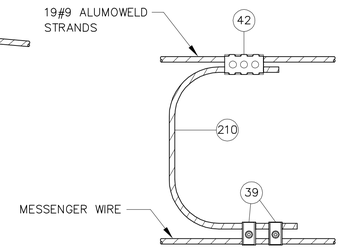

POTENTIAL EQUALIZING JUMPER
TYPE "G"

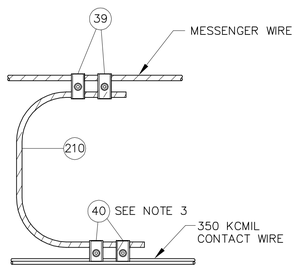

IN-SPAN JUMPER
TYPE "C"

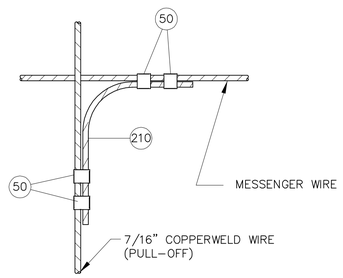

POTENTIAL EQUALIZER JUMPER
TYPE "E"

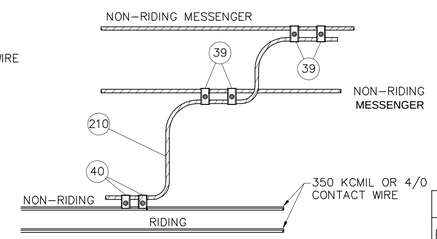

POTENTIAL EQUALIZING JUMPER
TYPE - "D"

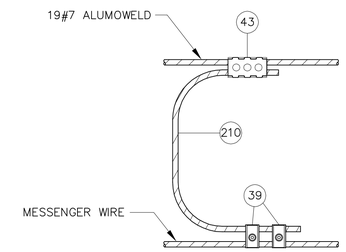

POTENTIAL EQUALIZING JUMPER
TYPE "H"

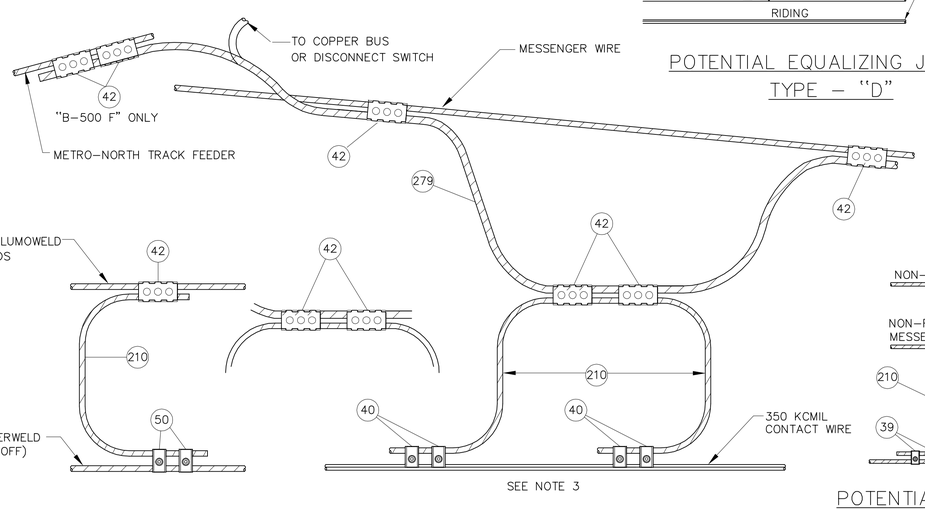

POTENTIAL EQUALIZING JUMPER
TYPE "I"

CATENARY FEEDING JUMPER
TYPE "B-500 C"
TYPE "B-500 F"

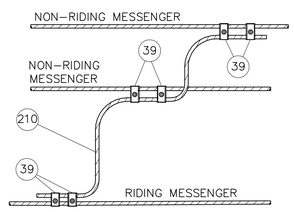

POTENTIAL EQUALIZING JUMPER
TYPE - "F"

ASSEMBLIES TYPE - A, B-4/0, B-500, B-750, C, D, E, F, G, H & I

PART No.	METRO-NORTH No.	DESCRIPTION	QUANTITY												
			TYPE A	TYPE B-4/0	TYPE B-500		TYPE B-750		TYPE C	TYPE D	TYPE E	TYPE F	TYPE G	TYPE H	TYPE I
					C	F	F	L							
39	10201628	PARALLEL CLAMP 5/8" COPPERWELD COPPER TO 4/0 AWG SOFT DRAWN COPPER CONDUCTORS	8	6	—	—	—	—	2	4	—	6	2	2	—
40	10201624	PARALLEL CLAMP 4/0 AWG SOFT DRAWN COPPER TO 350 KCMIL GROOVED COPPER CONDUCTORS	8	4	4	4	4	4	2	2	—	—	—	—	—
41	10201623	PARALLEL CLAMP 5/8" COPPERWELD COPPER TO 750 KCMIL SOFT DRAWN COPPER CONDUCTORS	—	—	—	—	6	6	—	—	—	—	—	—	—
42	10202792	UNIVERSAL PARALLEL CLAMP (TINNED)	—	—	4	6	—	—	—	—	—	—	1	—	1
43	10202847	PARALLEL CLAMP 400 KCMIL COPPER TO 750 KCMIL SOFT DRAWN COPPER CONDUCTORS	—	—	—	—	2	—	—	—	—	—	—	1	—
48	10726375	U-BOLT TERMINAL LUG FOR 750 KCMIL SOFT DRAWN COPPER CONDUCTOR	—	—	—	—	—	1	—	—	—	—	—	—	—
50	10434406	SPLIT BOLT CONNECTOR	—	—	—	—	—	—	—	—	4	—	—	—	2
210	10997111	4/0 AWG SOFT DRAWN COPPER CONDUCTOR CLASS "H"	FT	FT	FT	FT	FT	FT	FT	FT	FT	FT	FT	FT	FT
211	10997119	750 KCMIL SOFT DRAWN COPPER CONDUCTOR	—	—	—	—	FT	FT	—	—	—	—	—	—	—
279		500 KCMIL FLEXIBLE COPPER CONDUCTOR CLASS "H"	—	—	FT	FT	—	—	—	—	—	—	—	—	—

NOTE:

1. USE TINNED CONNECTORS FOR CONNECTION TO ALUMINUM CONDUCTOR.
2. JUMPER 'TYPE A' IS INSTALLED WITH SLACK AS REQUIRED BY NOTING WIRE RUN LENGTHS, DISTANCE BETWEEN CIRCUITS, ALONG TRACK DISPLACEMENT, AND AMBIENT TEMPERATURE.
3. JUMPER TAILS CONNECTED TO THE CONTACT WIRE ARE TO POINT IN THE TYPICAL DIRECTION OF TRAFFIC.

THE INFORMATION, INCLUDING ESTIMATED QUANTITIES OF WORK SHOWN ON THESE SHEETS IS BASED ON LIMITED INVESTIGATIONS BY THE STATE AND IS IN NO WAY WARRANTED TO INDICATE THE TRUE CONDITIONS OR ACTUAL QUANTITIES OR DISTRIBUTION OF QUANTITIES OF WORK WHICH WILL BE REQUIRED.

NTS

URS CORPORATION AES
500 ENTERPRISE DRIVE
ROCKY HILL, CT 06067
1-(860)-529-8882

NO.	DATE	DESCRIPTION

REVISIONS

STATE OF CONNECTICUT
DEPARTMENT OF TRANSPORTATION

STAMFORD YARD CATENARY IMPROVEMENTS

FEEDER AND JUMPER ASSEMBLIES

ENGINEER: URS CORPORATION AES
DESIGNER: RW | DRAFTER: AMK | CHECKER: AJM
APPROVED: T. HOLLAND | DATE: XX/XX/XX
STRUCTURE NO. | BRIDGE LOG NO. | STRUCTURE SHEET NO. E-8

PROJECT CONTROL DATE: XX/XX/XX DISK FILENAME: E-8.dwg XX% DESIGN

F H W A REGION	STATE	TOWN	FED. AID PROJ. NO.	PROJ. NO.	YEAR	SHEET NUMBER
1	CONN.	VARIOUS		301-163	2014	

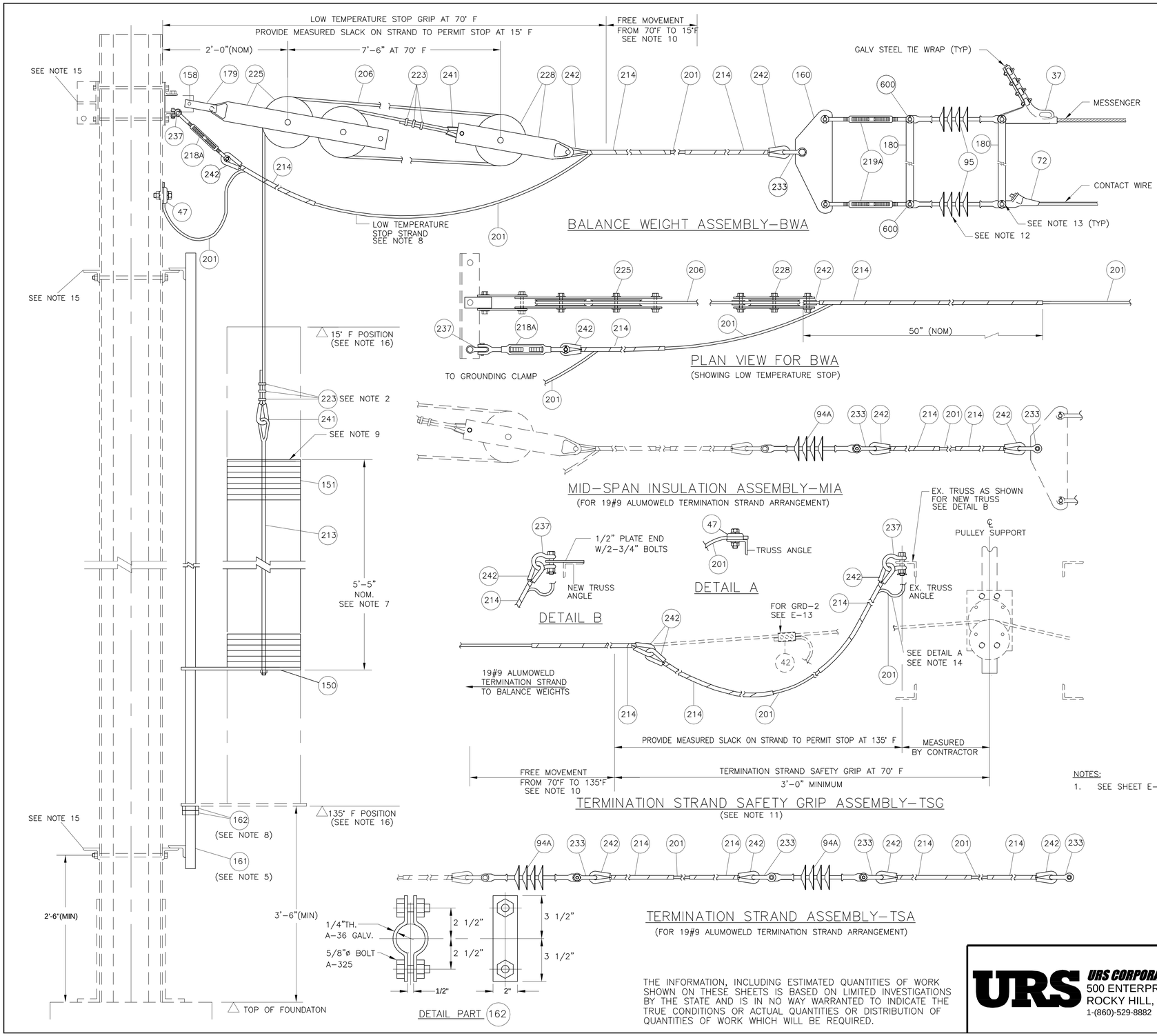

NOTES:

1. SEE SHEET E-9-1 FOR NOTES AND B.O.M.

THE INFORMATION, INCLUDING ESTIMATED QUANTITIES OF WORK SHOWN ON THESE SHEETS IS BASED ON LIMITED INVESTIGATIONS BY THE STATE AND IS IN NO WAY WARRANTED TO INDICATE THE TRUE CONDITIONS OR ACTUAL QUANTITIES OR DISTRIBUTION OF QUANTITIES OF WORK WHICH WILL BE REQUIRED.

URS CORPORATION AES
500 ENTERPRISE DRIVE
ROCKY HILL, CT 06067
1-(860)-529-8882

NO.	DATE	DESCRIPTION

REVISIONS

STATE OF CONNECTICUT
DEPARTMENT OF TRANSPORTATION

STAMFORD YARD CATENARY IMPROVEMENTS

BALANCE WEIGHT ASSEMBLIES
SHEET 1

ENGINEER: URS CORPORATION AES
DESIGNER: RW | DRAFTER: AMK | CHECKER: AJM
APPROVED: T. HOLLAND | DATE: XX/XX/XX
STRUCTURE NO. | BRIDGE LOG NO. | STRUCTURE SHEET NO. E-9

PROJECT CONTROL DATE: XX/XX/XX DISK FILENAME: E-9.dwg XX% DESIGN

F H W A REGION	STATE	TOWN	FED. AID PROJ. NO.	PROJ. NO.	YEAR	SHEET NUMBER
1	CONN.	VARIOUS		301-163	2014	

ASSEMBLIES – BWA, MIA, TSG & TSA

PART No.	METRO-NORTH No.	DESCRIPTION	QUANTITY			
			BWA	MIA	TSG	TSA
37	10202492	STRAIN CLAMP CONNECTOR	1	—	—	—
42		UNIVERSAL PARALLEL CLAMP (TINNED)	—	—	3	—
47	10201629	GROUNDING CLAMP (TINNED)	1	—	1	—
72	10434410	DEAD END FITTING TROLLEY WIRE	1	—	—	—
94A		SUSPENSION INSULATOR, 50,000 LBS.	—	1	—	2
95	10445113	SUSPENSION INSULATOR 25,000 LBS.	2	—	—	—
150	10730330	BALANCE WEIGHT PLATE 15"x 23"x 1" (GALV)	1	—	—	—
151	10730335	BALANCE WEIGHT PLATE 15"x 15"x 1" (GALV)	AS REQ'D	—	—	—
158	19144659	1"ø x 5 1/2" BOLT, NUT & WASHER (FOR DOUBLE LINK)	1	—	—	—
160	10738352	YOKE BALANCE PLATE	1	—	—	—
161	10728000	BALANCE WEIGHT GUIDE TUBE 2"IPS (12')	1	—	—	—
161A		BALANCE WEIGHT GUIDE TUBE 2"IPS (14')	1	—	—	—
162		TEMPERATURE STOP CLAMP	2	—	—	—
179	10726355	DOUBLE LINK 5/8"x 2 1/2" x 11 1/2"	1	—	—	—
180	10852375	GALV. ANTI-TORSION STRAP 3/16" x 1 1/2"	2	—	—	—
201	10997000	19 # 9 ALUMOWELD STRAND	FT	FT	FT	FT
206	10997050	STAINLESS STEEL WIRE ROPE 1/2"ø	FT	—	—	—
210	10997111	4/0 SOFT DRAWN COPPER "H"	—	—	—	—
213	10850060	WEIGHT SUPPORT-1" THIMBLE EYE ROD W/NUT	1	—	—	—
214	10435500	PREFORMED BIG GRIP DEAD END	3	2	3	4
218A	–	TURNBUCKLE, 1 1/4" X 12", JAW/JAW	1	—	—	—
219A	–	TURNBUCKLE, 1" X 6", JAW/JAW	2	—	—	—
220	10860100	3/4"x 6" JAW/JAW TURNBUCKLE	—	—	—	—
223	10208650	1/2"ø WIRE ROPE CLIP	6	—	6	—
225	10738925	DOUBLE PULLEY ASSEMBLY	1	—	—	—
228	10738900	SINGLE PULLEY ASSEMBLY	1	—	—	—
233	10201585	7/8"CHAIN SHACKLE	1	2	—	4
237	10850280	7/8" ANCHOR SHACKLE	1	—	1	—
241	10858000	5/8" THIMBLE	2	—	—	—
242	–	3/4" THIMBLE (WITH DOUBLE EXTRA STRONG PIPE INSERT)	3	2	3	4
600	–	REDUCING BOLT ASSEMBLY (5/8"X4" A325 GALVANIZED)	2	—	—	—

NOTES:

1. THE BALANCE WEIGHTS SHALL APPLY A COMBINED TENSION TO THE MESSENGER AND CONTACT WIRES OF 12,500LB.
2. PROVIDE SUFFICIENT TAIL WIRE FOR FIELD ADJUSTMENTS. THE EXCESS TAIL WIRE SHALL BE CUT OFF AFTER INSTALLATION. MAINTAIN 1'-0" MINIMUM CLEARANCE FROM WIRE CLIP TO PULLEY WHEEL.
3. THE YOKE PLATE SHALL BE AS SHOWN ON STANDARD DRAWING.
4. YOKE PLATE SHALL BE IN PLUMB POSITION AT 70° F
5. CONTRACTOR SHALL DETERMINE BALANCE WEIGHT MOVEMENT GUIDE TUBE LENGTH BASED ON PHYSICAL AND MECHANICAL CHARACTERISTICS OF THE PULLEYS, BALANCE ASSEMBLY AND SITE SPECIFIC TENSION LENGTH AND TEMPERATURE VARIATIONS OF THE CATENARY. FOR WIRE RUNS OVER 2,800 FT. IN LENGTH, PART #161A IS TO BE USED.
6. THE BALANCE WEIGHT MOVEMENT WILL BE BASED ON A 4167 LB BALANCE WEIGHT ASSEMBLY.
7. CONTRACTOR SHALL USE MAKE-UP PLATES AS REQUIRED TO ACCOMPLISH A TOTAL BALANCE WEIGHT OF 4167 LBS (± 10 LBS). ROTATE ALL PLATES 90° WHEN STACKING.
8. THE BALANCE WEIGHT SHALL MOVE FREELY WITHIN THE TEMPERATURE RANGE OF 15°F TO 135°F. LOW TEMPERATURE STOP SHALL BE ACCOMPLISHED BY GRIPPING A MOVEMENT-RESTRAINING STRAND TO TAIL WIRE. HIGH TEMPERATURE STOP SHALL BE ACCOMPLISHED AY ATTACHING TWO STOP CLAMPS TO BALANCE WEIGHT GUIDE TUBE.
9. MAKE UP PLATE SIZE TO BE 15" X 15" X 1/4" (GALVANIZED).
10. FREE MOVEMENT SHALL BE DETERMINED BY ALONG TRACK MOVEMENT OF SITE SPECIFIC TENSION LENGTH FROM 70°F DATUM TEMPERATURE TO THE SPECIFIED EXTREME TEMPERATURE.
11. TERMINATION STRAND SAFETY GRIP SHALL BE INSTALLED WHERE TERMINATION STRAND PASSES OVER LINE CATENARY.
12. IN CERTAIN CONFIGURATIONS USING MIA ASSEMBLY, ITEMS 95 WILL BE REPLACED BY 19" X 7/16" C 1 1/2" LINK. FOR ALLOCATION OF THIS ALTERNATIVE SEE CATENARY LAYOUTS AND SEDs.
13. USE EXTRA LONG PIN FOR ASSEMBLY WITH ANTI-TORSION STRAPS.
14. AT PULLEY SUPPORT LOCATION THE TERMINATION STRAND DEAD SECTION BETWEEN TWO INSULATORS SHALL BE GROUNDED TO TRUSS ANGLE STEEL.
15. SEE STRUCTURAL DRAWINGS FOR STEEL BRACKETS DETAILS.
16. THE CONTRACTOR SHALL PROVIDE A CHART TO SHOW THE DIMENSIONS WITH RESPECT 15°F POSITION AND THE 135°F POSITION FROM THE CENTER OF THE WEIGHTS AT 70°F BASED ON THE BALANCE WEIGHT MOVEMENT CHARTS SHOWN ON DWG. D-2. CONTRACTOR SHALL ALSO CALCULATE AND SHOW LOCATION OF HIGH TEMPERATURE STOP ON THIS CHART WITH RESPECT TO WEIGHT STACK GUIDE PLATE (PART 150) AT 70°F.
17. USE TINNED CONNECTORS FOR CONNECTION TO ALUMINUM CONDUCTOR.
18. STEEL BASE ENCASEMENT, SEE DWG. S-12. WHERE BWA'S ARE TO BE INSTALLED ON STRUCTURES WITH FOUNDATION ENCASEMENTS, INSTALLATION SHALL BE AS SHOWN DWG. S-12.

THE INFORMATION, INCLUDING ESTIMATED QUANTITIES OF WORK SHOWN ON THESE SHEETS IS BASED ON LIMITED INVESTIGATIONS BY THE STATE AND IS IN NO WAY WARRANTED TO INDICATE THE TRUE CONDITIONS OR ACTUAL QUANTITIES OR DISTRIBUTION OF QUANTITIES OF WORK WHICH WILL BE REQUIRED.

URS CORPORATION AES
500 ENTERPRISE DRIVE
ROCKY HILL, CT 06067
1-(860)-529-8882

NO.	DATE	DESCRIPTION

REVISIONS

STATE OF CONNECTICUT
DEPARTMENT OF TRANSPORTATION

STAMFORD YARD CATENARY IMPROVEMENTS

BALANCE WEIGHT ASSEMBLIES
SHEET 2

ENGINEER: URS CORPORATION AES
DESIGNER: RW | DRAFTER: AMK | CHECKER: AJM
APPROVED: T. HOLLAND | DATE: XX/XX/XX
STRUCTURE NO. | BRIDGE LOG NO. | STRUCTURE SHEET NO. E-9-1

PROJECT CONTROL DATE: XX/XX/XX DISK FILENAME: E-9-1.dwg XX% DESIGN

F H W A REGION	STATE	TOWN	FED. AID PROJ. NO.	PROJ. NO.	YEAR	SHEET NUMBER
1	CONN.	VARIOUS		301-163	2014	

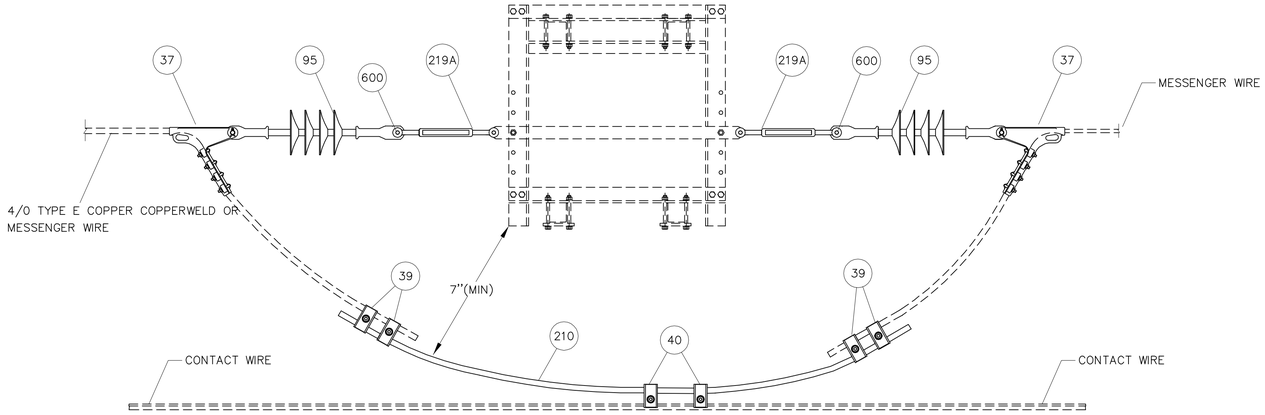

MID-POINT ANCHOR ASSEMBLY – MPA

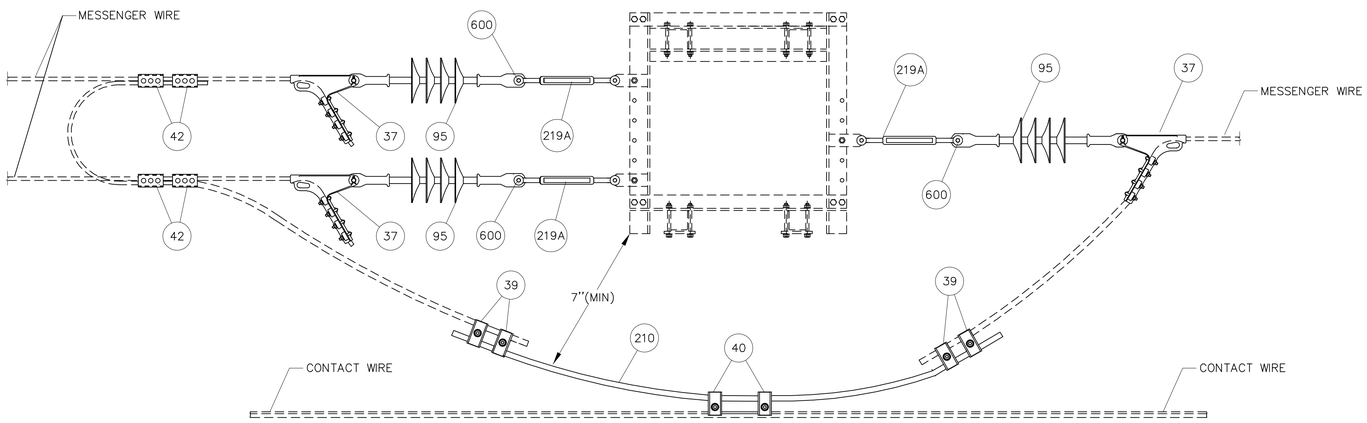

TRANSITIONAL MESSENGER DEAD END ASSEMBLY – TMDEA-1

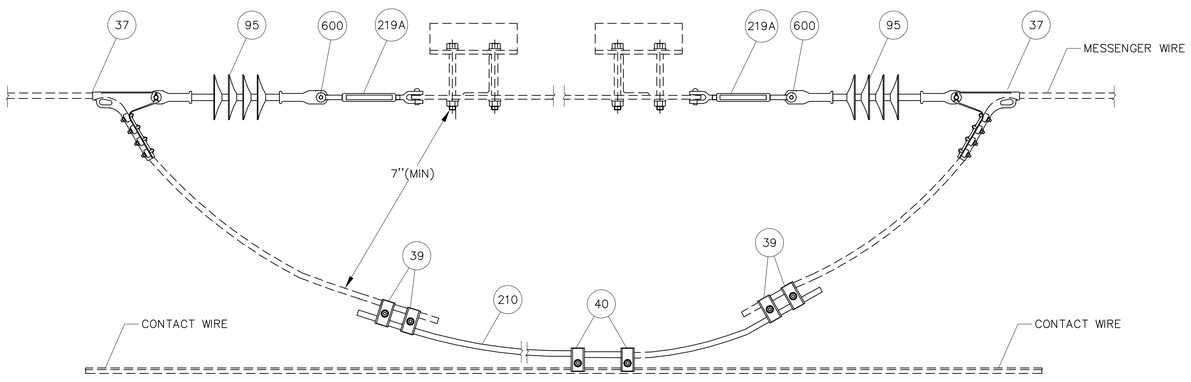

ANCHOR BRIDGE ASSEMBLY – ABA

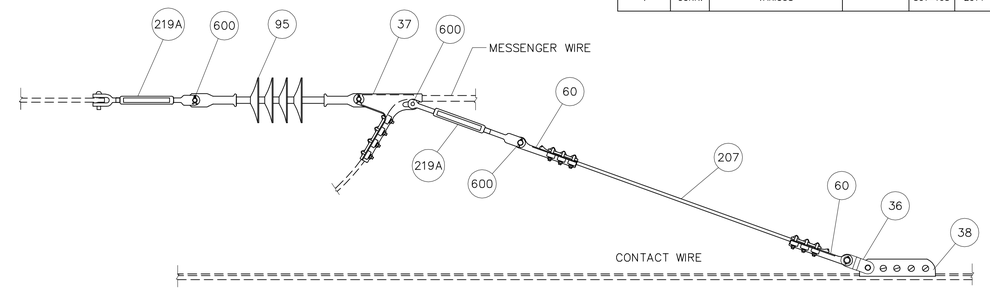

TEMPORARY CONTACT WIRE HOLD BACK ASSEMBLY – THB

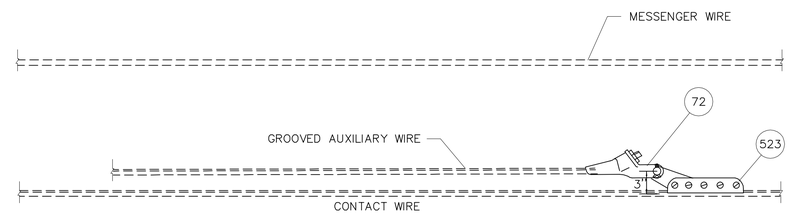

AUXILIARY HOLD BACK ASSEMBLY – AHB-1

ASSEMBLIES – ABA, MPA, THB, TMDEA-1 & AHB-1

PART No.	METRO-NORTH No.	DESCRIPTION	QUANTITY				
			ABA	MPA	THB	TMDEA-1	AHB-1
36	10206507	LINK TONGUE-CLEVIS	—	—	1	—	—
37	10202492	STRAIN CLAMP CONNECTOR	2	2	1	3	—
38	10202613	CLAMP FOR TROLLEY WIRE	—	—	1	—	—
39	10201628	PARALLEL CABLE CLAMP	4	4	—	4	—
40	10201624	TROLLEY CONTACT CLAMP	2	2	—	2	—
42	10202792	UNIVERSAL CLAMP (TINNED)	—	—	—	4	—
60	10201621	DEAD END CLAMP	—	—	2	—	—
72	10434410	DEAD END FITTING TROLLEY WIRE	—	—	—	—	1
95	10445113	SUSPENSION INSULATOR 25,000 LB	2	2	1	3	—
201	10997000	19 #9 ALUMOWELD STRAND	—	—	—	—	—
207	10997013	7/16" ø COPPERWELD WIRE	—	—	FT	—	—
210	10997111	4/0 SOFT DRAWN COPPER WIRE	FT	FT	—	FT	—
219A	–	TURNBUCKLE 1"x 6" JAW/JAW	2	2	1	3	—
243	10858100	7/16"ø THIMBLE	—	—	—	—	—
523	10434406	AUXILIARY TROLLEY WIRE CLAMP	—	—	—	—	1
600	–	REDUCING BOLT (5/8" X 4" A325 BOLT)	2	2	3	3	—

REFER TO DRAWING E-6 FOR REDUCING BOLT ASSEMBLY

NOTE:

1. THE ASSEMBLIES SHOWN ARE TYPICAL. THE CONTRACTOR SHALL DEVELOP SITE SPECIFIC ARRANGEMENTS TO SUIT STRUCTURAL DETAILS.
2. USE TINNED CONNECTORS FOR CONNECTION TO ALUMINUM CONDUCTOR.

THE INFORMATION, INCLUDING ESTIMATED QUANTITIES OF WORK SHOWN ON THESE SHEETS IS BASED ON LIMITED INVESTIGATIONS BY THE STATE AND IS IN NO WAY WARRANTED TO INDICATE THE TRUE CONDITIONS OR ACTUAL QUANTITIES OR DISTRIBUTION OF QUANTITIES OF WORK WHICH WILL BE REQUIRED.

URS CORPORATION AES
500 ENTERPRISE DRIVE
ROCKY HILL, CT 06067
1-(860)-529-8882

NTS

NO.	DATE	DESCRIPTION

REVISIONS

STATE OF CONNECTICUT
DEPARTMENT OF TRANSPORTATION

STAMFORD YARD CATENARY IMPROVEMENTS

CATENARY ANCHOR ASSEMBLIES

ENGINEER: URS CORPORATION AES
DESIGNER: RW | DRAFTER: AMK | CHECKER: AJM
APPROVED: T. HOLLAND | DATE: XX/XX/XX
STRUCTURE NO. | BRIDGE LOG NO. | STRUCTURE SHEET NO. E-10

PROJECT CONTROL DATE: XX/XX/XX DISK FILENAME: E-10.dwg XX% DESIGN

F H W A REGION	STATE	TOWN	FED. AID PROJ. NO.	PROJ. NO.	YEAR	SHEET NUMBER
1	CONN.	VARIOUS		301-163	2014	

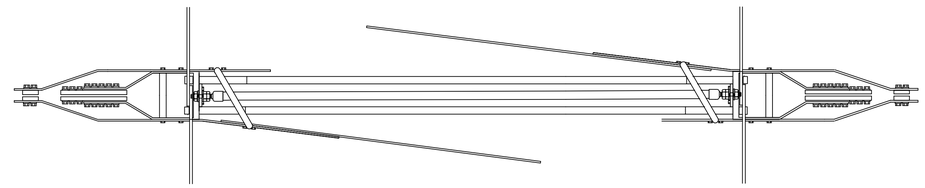

HIGH SPEED SECTION INSULATOR
ASSEMBLY HS-1A
PLAN VIEW

ASSEMBLY HS-1			
PART No.	METRO-NORTH No.	DESCRIPTION	QTY. HS-1
39	10201626	PARALLEL CLAMP 4/0 TYPE E TO 4/0 CU WIRE	4
40	10201624	PARALLEL CLAMP 4/0 TO 350 CONTACT WIRE	4
67	10100143	SADDLE W/NEOPRENE LINER	2
90	10434410	FULL TENSION DEAD END SOCKET	2
95	10445113	SUSPENSION INSULATOR 25,000 LB	1
200	10850108	1/4" STAINLESS STEEL WIRE ROPE	FT
210	10997111	4/0 TYPE H CU WIRE	FT
227	10208575	1/4" WIRE ROPE CLIP	16
255	10640295	HIGH SPEED SECTION INSULATOR ASSEMBLY	1
		RUNNER STABILIZING COMPRESSION ROD	1

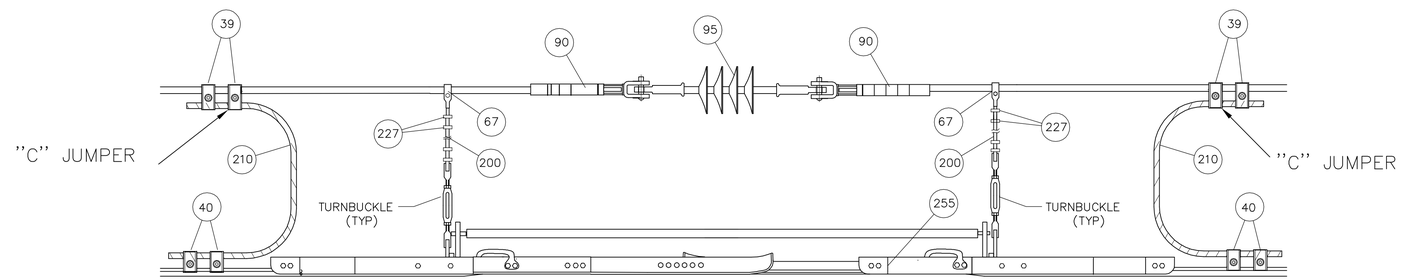

HIGH SPEED SECTION INSULATOR
ASSEMBLY HS-1A
ELEVATION VIEW

NOTES:

1. THE SECTION INSULATOR ARRANGEMENT SHOWN IS TYPICAL. ACTUAL ARRANGEMENT AND IT'S INSTALLATION WILL BE BASED ON MANUFACTURER'S RECOMMENDATIONS SUBJECT TO APPROVAL OF THE ENGINEER.
2. TURNBUCKLES SHALL FORM PART OF SECTION INSULATOR ASSEMBLY (ITEM 255)
3. LENGTH OF 1/4" S.S. WIRE ROPE WILL BE ADJUSTED TO SUIT SYSTEM HEIGHT OR THE CLEARANCE AVAILABLE UNDER THE STRUCTURE.
4. USE TINNED CONNECTORS FOR CONNECTION TO ALUMINUM CONDUCTOR.

NTS

THE INFORMATION, INCLUDING ESTIMATED QUANTITIES OF WORK SHOWN ON THESE SHEETS IS BASED ON LIMITED INVESTIGATIONS BY THE STATE AND IS IN NO WAY WARRANTED TO INDICATE THE TRUE CONDITIONS OR ACTUAL QUANTITIES OR DISTRIBUTION OF QUANTITIES OF WORK WHICH WILL BE REQUIRED.

URS CORPORATION AES
500 ENTERPRISE DRIVE
ROCKY HILL, CT 06067
1-(860)-529-8882

NO.	DATE	DESCRIPTION

REVISIONS

STATE OF CONNECTICUT
DEPARTMENT OF TRANSPORTATION

STAMFORD YARD CATENARY IMPROVEMENTS

SECTION INSULATOR ASSEMBLIES

ENGINEER: URS CORPORATION AES
DESIGNER: RW | DRAFTER: AMK | CHECKER: AJM
APPROVED: T. HOLLAND | DATE: XX/XX/XX
STRUCTURE NO. | BRIDGE LOG NO. | STRUCTURE SHEET NO. E-11

PROJECT CONTROL DATE: XX/XX/XX DISK FILENAME: E-11.dwg XX% DESIGN

F H W A REGION	STATE	TOWN	FED. AID PROJ. NO.	PROJ. NO.	YEAR	SHEET NUMBER
1	CONN.	VARIOUS		301-163	2014	

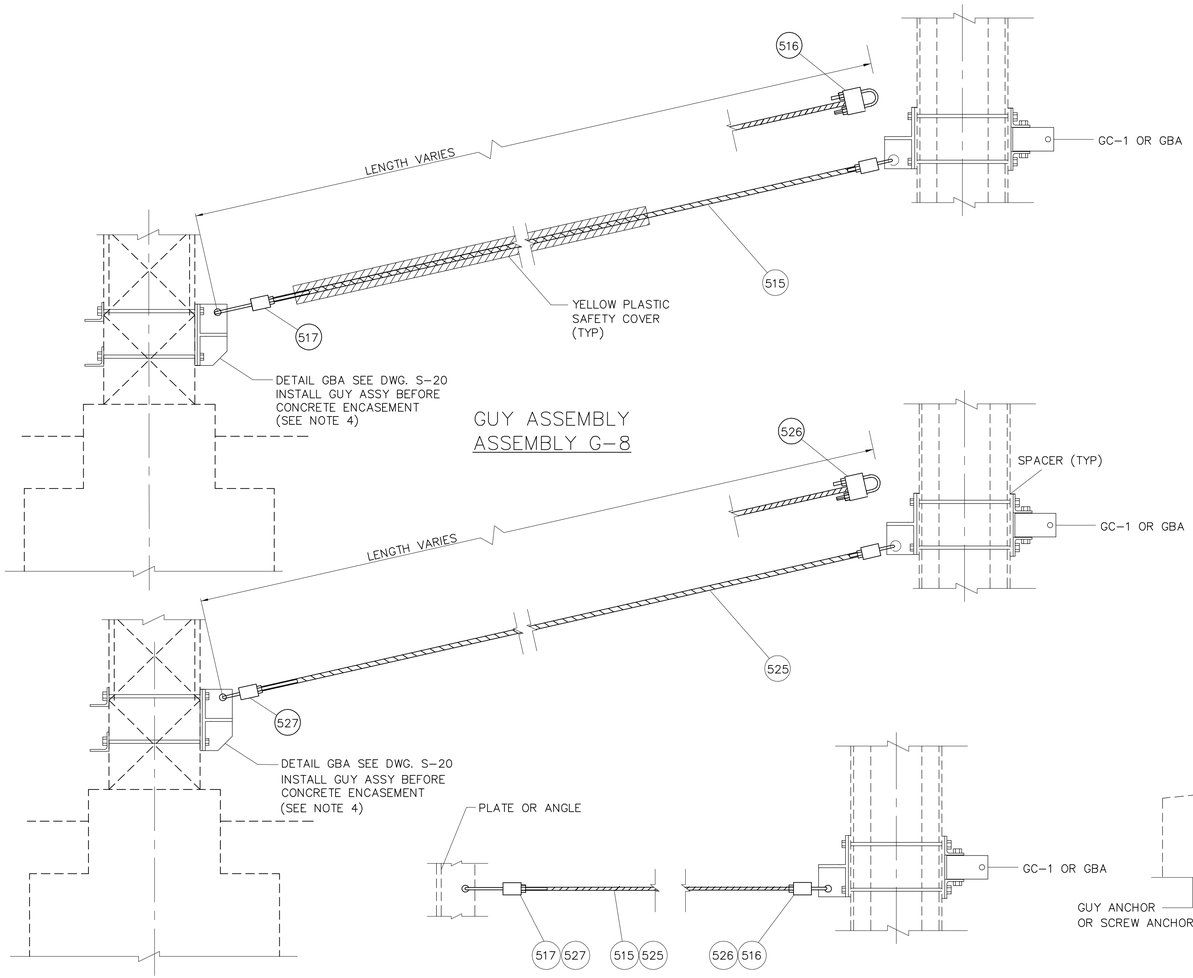

GUY ASSEMBLY
ASSEMBLY G-8

GUY ASSEMBLY
ASSEMBLY G-9

GUY WIRE ASSEMBLY
ASSEMBLY G-5 & G-7

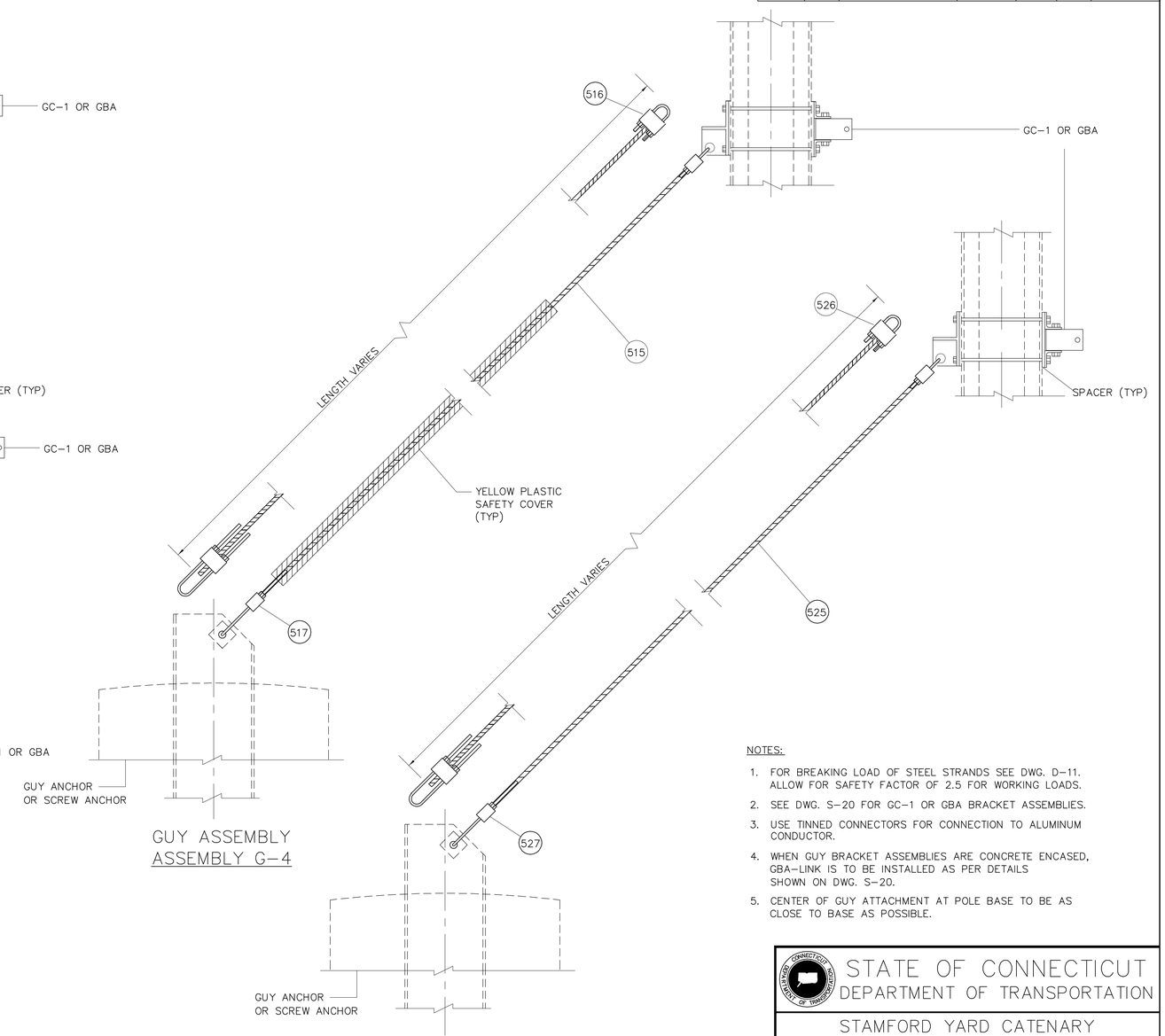

GUY ASSEMBLY
ASSEMBLY G-4

GUY ASSEMBLY
ASSEMBLY G-6

NOTES:

1. FOR BREAKING LOAD OF STEEL STRANDS SEE DWG. D-11. ALLOW FOR SAFETY FACTOR OF 2.5 FOR WORKING LOADS.
2. SEE DWG. S-20 FOR GC-1 OR GBA BRACKET ASSEMBLIES.
3. USE TINNED CONNECTORS FOR CONNECTION TO ALUMINUM CONDUCTOR.
4. WHEN GUY BRACKET ASSEMBLIES ARE CONCRETE ENCASED, GBA-LINK IS TO BE INSTALLED AS PER DETAILS SHOWN ON DWG. S-20.
5. CENTER OF GUY ATTACHMENT AT POLE BASE TO BE AS CLOSE TO BASE AS POSSIBLE.

ASSEMBLIES G-4, G-5, G-6, G-7, G-8 & G-9

PART No.	METRO-NORTH No.	DESCRIPTION	QUANTITY G-4	G-5	G-6	G-7	G-8	G-9
515		3/4"ø GALVANIZED EHS STEEL STRANDS	FT	—	—	FT	FT	—
516		3/4" NON-ADJUSTABLE GUY STRAND DEADEND GRIP ASSY (STRUCTURE SIDE)	1	—	—	1	1	—
517		3/4" ADJUSTABLE GUY STRAND DEADEND GRIP ASSY (ANCHOR SIDE)	1	—	—	1	1	—
525		1"ø GALVANIZED EHS STEEL STRANDS	—	FT	FT	—	—	FT
526		1" NON-ADJUSTABLE GUY STRAND DEADEND GRIP ASSY (STRUCTURE SIDE)	—	1	1	—	—	1
527		1" ADJUSTABLE GUY STRAND DEADEND GRIP ASSY (ANCHOR SIDE)	—	1	1	—	—	1
—	—	GC-1 OR GBA BRACKET ASSEMBLY	1	1	1	1	2	2

THE INFORMATION, INCLUDING ESTIMATED QUANTITIES OF WORK SHOWN ON THESE SHEETS IS BASED ON LIMITED INVESTIGATIONS BY THE STATE AND IS IN NO WAY WARRANTED TO INDICATE THE TRUE CONDITIONS OR ACTUAL QUANTITIES OR DISTRIBUTION OF QUANTITIES OF WORK WHICH WILL BE REQUIRED.

URS CORPORATION AES
500 ENTERPRISE DRIVE
ROCKY HILL, CT 06067
1-(860)-529-8882

NTS

NO.	DATE	DESCRIPTION

REVISIONS

STATE OF CONNECTICUT
DEPARTMENT OF TRANSPORTATION

STAMFORD YARD CATENARY IMPROVEMENTS

GUY ASSEMBLY

ENGINEER: URS CORPORATION AES
DESIGNER: RW | DRAFTER: AMK | CHECKER: AJM
APPROVED: T. HOLLAND | DATE: XX/XX/XX
STRUCTURE NO. | BRIDGE LOG NO. | STRUCTURE SHEET NO. E-12

PROJECT CONTROL DATE: XX/XX/XX DISK FILENAME: E-12.dwg XX% DESIGN

F H W A REGION	STATE	TOWN	FED. AID PROJ. NO.	PROJ. NO.	YEAR	SHEET NUMBER
1	CONN.	VARIOUS		301-163	2014	

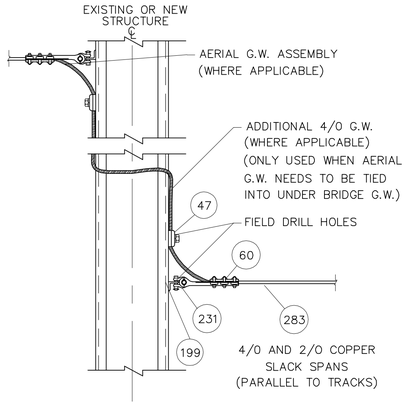

GROUND WIRE CONNECTION TO THE POLES
ASSEMBLY GRD-1

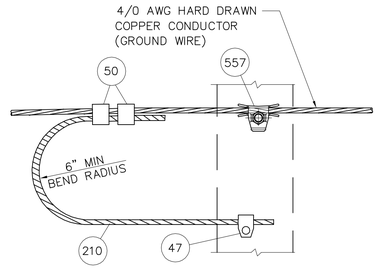

ASSEMBLY GW-1A MOUNTING DETAIL
(FOR NEW STRUCTURES)
(SEE NOTE 6)
(WHEN ONLY ONE PART 557 IS USED A GROUND BOUNDING WIRE AND CONNECTORS IS TO BE INSTALLED AS SHOWN)

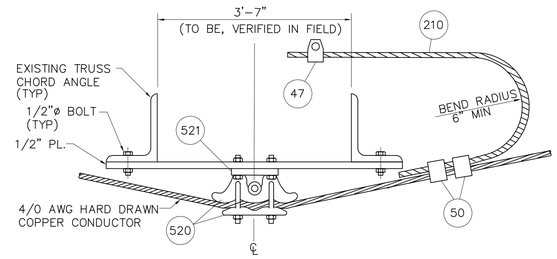

AERIAL GROUND WIRE (UNDER THE TRUSS)
THROUGH CONNECTION & BONDING TO TRUSS
ASSEMBLY GW-1B

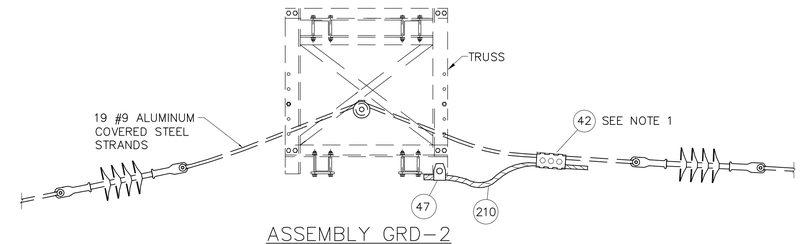

ASSEMBLY GRD-2

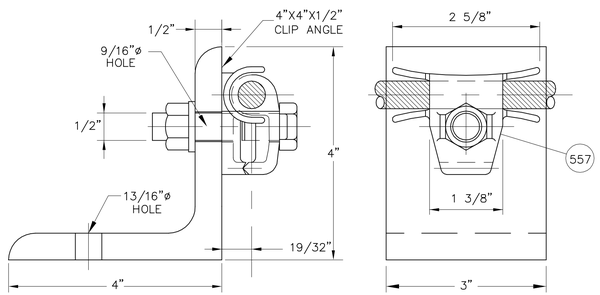

ASSEMBLY GW-1A AND CLIP ANGLE
(SEE NOTES 3, 4, 6, ALTERNATE)

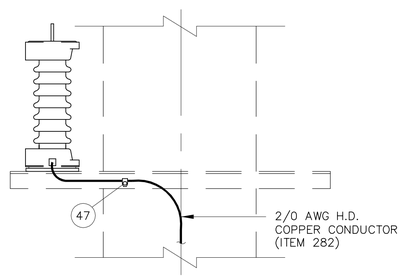

TYPICAL GROUNDING
FOR SURGE ARRESTERS

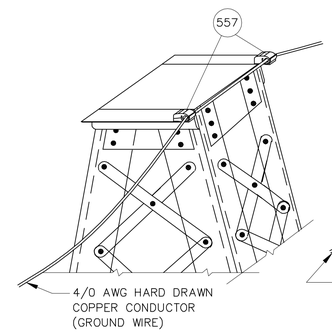

GW-1A
(SEE NOTE 5)

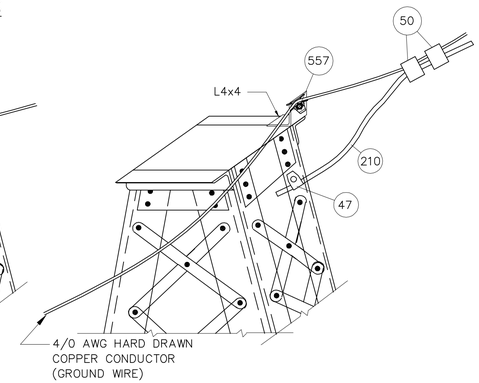

INSTALLATION GW-1A
(WITH ALTERNATE WITH CLIP ANGLE SEE NOTE 5 AND 6)
(WHEN ONLY ONE PART 557 IS USED A GROUND BOUNDING WIRE AND CONNECTORS IS TO BE INSTALLED AS SHOWN)

ASSEMBLY GW-1A MOUNTING DETAILS
(FOR EXISTING STRUCTURES)

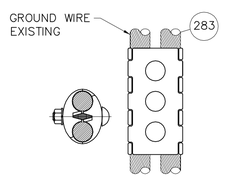

PARALLEL CLAMP
PART NO. 42

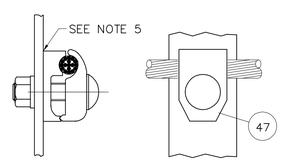

GROUND CONNECTOR
CABLE TO FLAT SURFACE
PART NO. 47

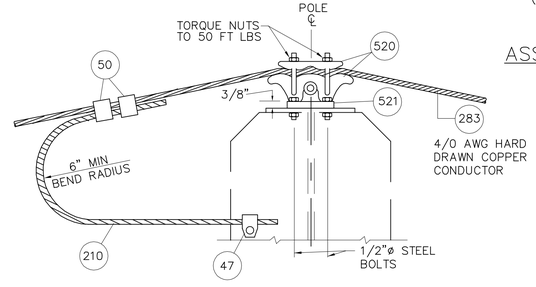

AERIAL GROUND WIRE
THROUGH CONNECTION & BONDING TO POLE
ASSEMBLY GW-1

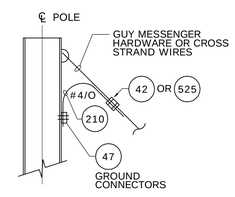

ASSEMBLY JC-2
JUMPER CONNECTION TO
WIRES OR HARDWARE

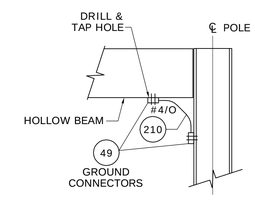

ASSEMBLY JC-1
JUMPER CONNECTION TO
BEAM OR SWITCH
SUPPORT ON STRUCTURE

NOTES:

1. USE TINNED CONNECTORS FOR CONNECTION TO ALUMINUM CONDUCTOR.
2. GROUNDING WIRE SHOWN TYPICALLY AND SHALL BE ADJUSTED IN THE FIELD AS REQUIRED.
3. THE GROUND WIRE CLAMP ASSEMBLIES SHALL BE ABLE TO SUSTAIN RADIAL LOAD OF 7450 LB AND PRODUCE SLIP STRENGTH OF 3000 LBS.
4. USE TWO GROUND WIRE CLAMPS FOR WIDE STRUCTURES AS REQUIRED.
5. BEFORE INSTALLING THE GROUND CONNECTOR AND/OR GROUND WIRE CLAMP ASSEMBLIES ON THE EXISTING STRUCTURES, REMOVE ALL PAINT AND RUST FROM THE SURFACE UNDERNEATH AND APPLY CONDUCTIVE GREASE AS REQUIRED.
6. IN CURVES, PART NO. 557 CLAMPS WILL BE INSTALLED SO THAT ANY SIDE BENDING OF THE GROUND WIRE AT THE CLAMP IS DONE AGAINIST THE LARGER FLARED SIDE PIECE OF THE CLAMP (BEARING THE CLAMP INTO THE CLIP ANGLE).

ASSEMBLIES – GRD-1, GRD-2, GW-1, GW-1A, GW-1B, JC-1 AND JC-2

PART No.	METRO-NORTH No.	DESCRIPTION	QUANTITY GRD-1	GRD-2	GW-1	GW-1A	GW-1B	JC-1	JC-2
42	10202792	UNIVERSAL PARALLEL CLAMP (TINNED)	—	1	—	—	—	—	1
47	10201629	GROUND CONNECTOR (TINNED)	1	1	1	1 *	1	—	1
49	252235	GROUNDING CONNECTOR	—	—	—	—	—	2	—
50	10434406	SERVICE CONNECTOR (SPLIT BOLT TYPE)	—	—	2	2 *	2	—	—
60	10201621	DEAD END CLAMP	1	—	—	—	—	—	—
199		3/4" x 6" FORGED EYEBOLT W/DBBL. NUT ATTACHMENT (7200 LB. WORKING LOAD)	1	—	—	—	—	—	—
210	10997111	4/0 COPPER WIRE SOFT DRAWN	—	FT	FT	FT *	—	FT	FT
231	10850265	5/8" ANCHOR SHACKLE WITH 3/4" ø PIN	1	—	—	—	—	—	—
283		#4/0 AWG, HARD DRAWN COPPER CONDUCTOR	FT	—	AS REQ'D	—	AS REQ'D	—	—
520		TRUNNION CLAMP (COPPER ALLOY), COMPLETE WITH U-BOLTS & NUTS	—	—	1	—	1	—	—
521		TOP BRACKET (MALLEABLE IRON) COMPLETE WITH 1/2" ø STEEL MOUNTING BOLTS	—	—	1	—	1	—	—
525		CONNECTOR GROOVED WIRE TO HARDWARE	—	—	—	—	—	—	1
557		GROUND WIRE CLAMP ASSEMBLY (SEE NOTE 3)	—	—	—	1	—	—	—

* FOR ASSEMBLY GW-1A(ALTERNATE)ONLY

NTS

THE INFORMATION, INCLUDING ESTIMATED QUANTITIES OF WORK SHOWN ON THESE SHEETS IS BASED ON LIMITED INVESTIGATIONS BY THE STATE AND IS IN NO WAY WARRANTED TO INDICATE THE TRUE CONDITIONS OR ACTUAL QUANTITIES OR DISTRIBUTION OF QUANTITIES OF WORK WHICH WILL BE REQUIRED.

URS CORPORATION AES
500 ENTERPRISE DRIVE
ROCKY HILL, CT 06067
1-(860)-529-8882

NO.	DATE	DESCRIPTION

REVISIONS

STATE OF CONNECTICUT
DEPARTMENT OF TRANSPORTATION

STAMFORD YARD CATENARY IMPROVEMENTS

GROUNDING ASSEMBLIES

ENGINEER: URS CORPORATION AES
DESIGNER: RW | DRAFTER: AMK | CHECKER: AJM
APPROVED: T. HOLLAND | DATE: XX/XX/XX
STRUCTURE NO. | BRIDGE LOG NO. | STRUCTURE SHEET NO. E-13

XX% DESIGN
DISK FILENAME: E-13.dwg
PROJECT CONTROL DATE: XX/XX/XX

F H W A REGION	STATE	TOWN	FED. AID PROJ. NO.	PROJ. NO.	YEAR	SHEET NUMBER
1	CONN.	VARIOUS		301-163	2014	

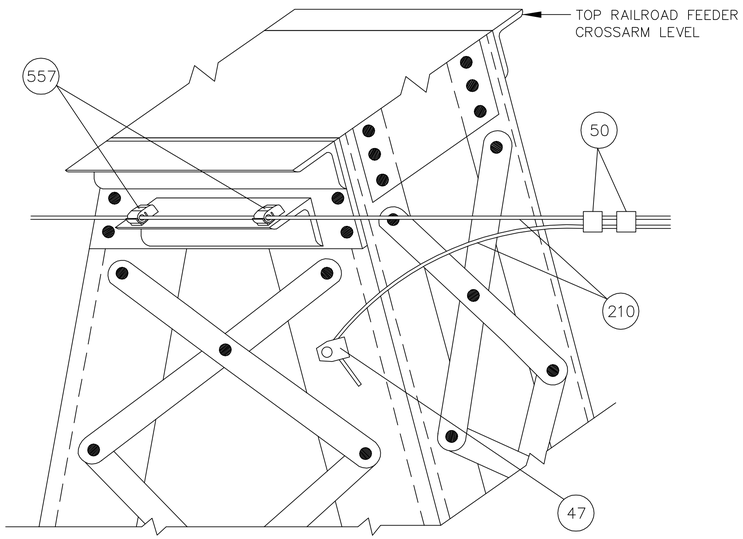

ASSEMBLY GW-1A MOUNTING DETAILS
(FOR EXISTING STRUCTURES)

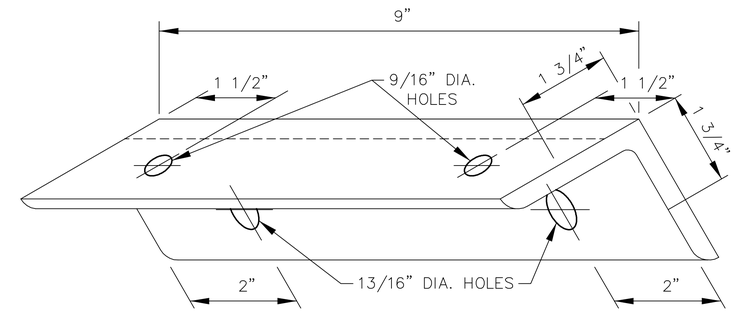

3"x3"x3/8" ANGLE – HDG

NOTES:

1. TWO GROUND WIRE CLAMPS (PART NO. 557) TO BE INSTALL AT ALL LOCATIONS.
2. POSITION THE GROUND WIRE CLAMP, SO ANY RADICAL LOAD CAUSED BY THE WIRE IS ALWAYS ACTING TOWARDS THE CLAMP BOLT.
3. ON EXISTING CATENARY STRUCTURES BEFORE INSTALLING ANGLE AND BACKING PLATE. THE SURFACES TO BE BRUSHED CLEAN TO REMOVE ANY LOOSE RUST. A JUMPER TO BE INSTALL AS SHOWN, AND THE AREA UNDER PART 47 SHOULD HAVE ALL RUST AND PAINT REMOVED AND CONDUCTIVE GREASE APPLIED.

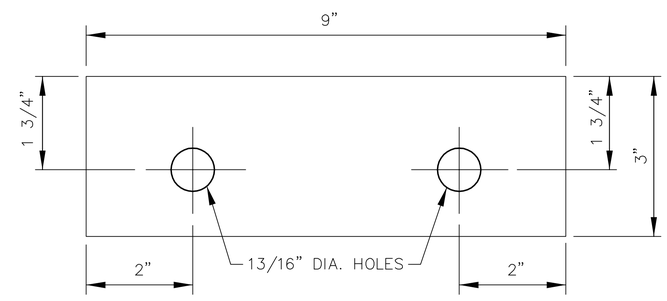

3"x9"x 1/2" BACKING PLATE – HDG
TO BE USED ON ALL EXISTING
CATENARY STRUCTURES

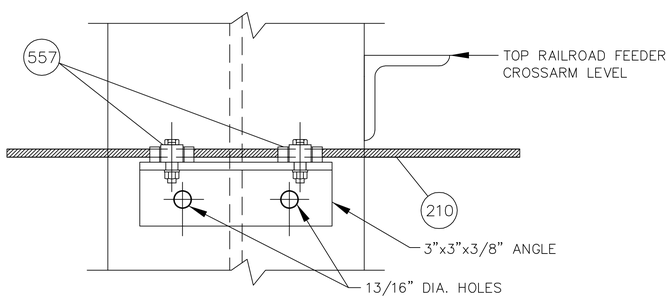

ASSEMBLY GW-1A MOUNTING DETAILS
(FOR NEW STRUCTURES)

NTS

THE INFORMATION, INCLUDING ESTIMATED QUANTITIES OF WORK SHOWN ON THESE SHEETS IS BASED ON LIMITED INVESTIGATIONS BY THE STATE AND IS IN NO WAY WARRANTED TO INDICATE THE TRUE CONDITIONS OR ACTUAL QUANTITIES OR DISTRIBUTION OF QUANTITIES OF WORK WHICH WILL BE REQUIRED.

URS CORPORATION AES
500 ENTERPRISE DRIVE
ROCKY HILL, CT 06067
1-(860)-529-8882

NO.	DATE	DESCRIPTION

REVISIONS

STATE OF CONNECTICUT
DEPARTMENT OF TRANSPORTATION

STAMFORD YARD CATENARY IMPROVEMENTS

ASSEMBLY GW-1A MOUNTING DETAIL

ENGINEER: URS CORPORATION AES
DESIGNER: RW | DRAFTER: AMK | CHECKER: AJM
APPROVED: T. HOLLAND | DATE: XX/XX/XX
STRUCTURE NO. | BRIDGE LOG NO. | STRUCTURE SHEET NO. E-13-1

PROJECT CONTROL DATE: XX/XX/XX DISK FILENAME: E-13-1.dwg XX% DESIGN

F H W A REGION	STATE	TOWN	FED. AID PROJ. NO.	PROJ. NO.	YEAR	SHEET NUMBER
1	CONN.	VARIOUS		301-163	2014	

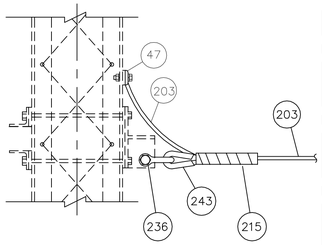

CDEA-7A (CONT.)

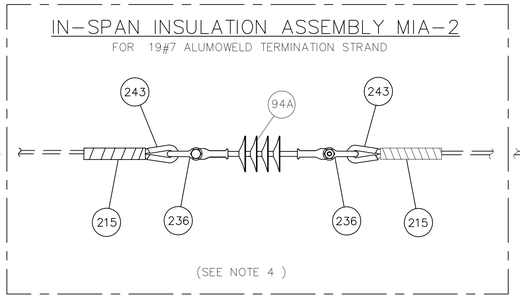

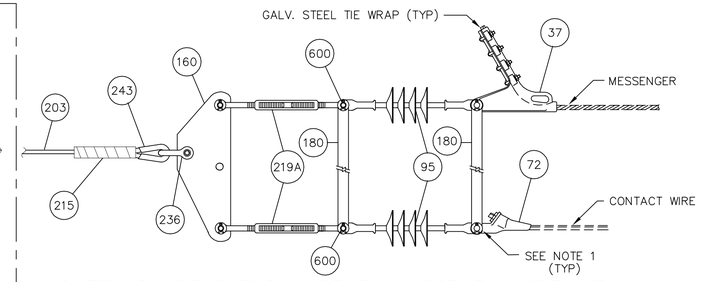

CATENARY DEAD END ASSEMBLY ASSEMBLY CDEA-7A

(FOR USE WITH FIXED TERMINATION SIMPLE CATENARY)

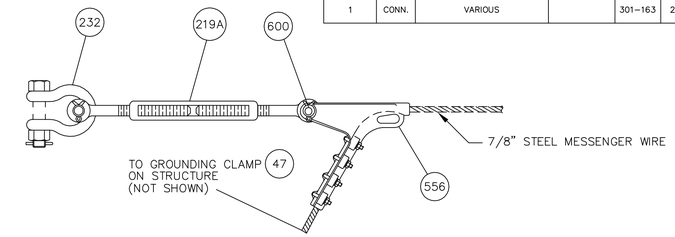

MESSENGER DEAD END ASSEMBLY MDEA-4

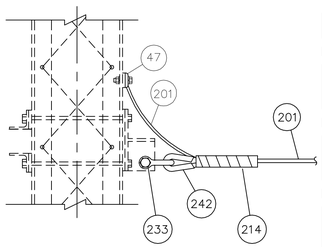

CDEA-7 (CONT.)

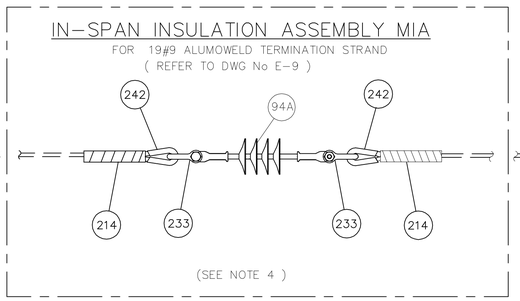

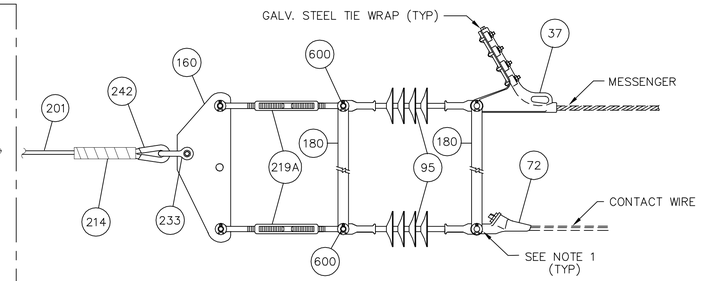

CATENARY DEAD END ASSEMBLY ASSEMBLY CDEA-7

(FOR USE WITH AUTO-TENSIONED SIMPLE CATENARY)

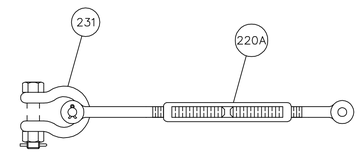

DEA-1

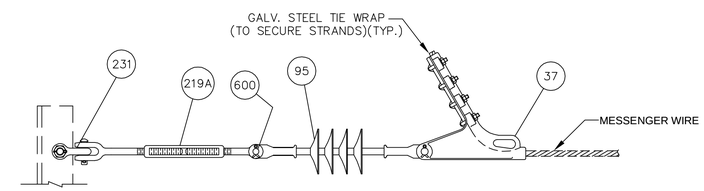

MESSENGER DEAD END ASSEMBLY MDEA-3

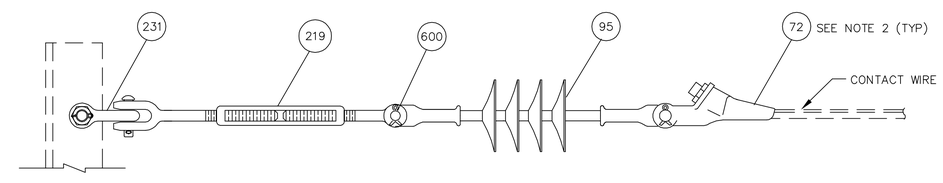

CONTACT WIRE DEAD END ASSEMBLY CDEA-3

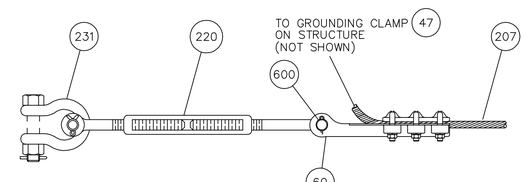

DEA-2

ASSEMBLIES CDEA-3, MDEA-3, DEA-1, DEA-2, DEA-3, MDEA-4, CDEA-7, CDEA-7A, MIA-2 & MIA

PART NO.	METRO-NORTH NO.	DESCRIPTION	QUANTITY									
			CDEA-3	MDEA-3	DEA-1	DEA-2	DEA-3	MDEA-4	CDEA-7	CDEA-7A	MIA-2	MIA
37	10202492	STRAIN CLAMP CONNECTOR	—	1	—	—	—	—	1	1	—	—
47	10201629	GROUNDING CLAMP (TINNED)	—	—	—	1	1	1	1	1	—	—
60	10201621	DEAD END CLAMP	—	—	—	1	2	—	—	—	—	—
72	10434410	DEAD END FITTING	1	—	—	—	—	—	1	1	—	—
			—	—	—	—	—	—	—	—	—	—
94A		SUSPENSION INSULATOR 50,000 LB	—	—	—	—	—	—	—	—	1	1
95	10445113	SUSPENSION INSULATOR 25,000 LB.	1	1	—	—	—	—	2	2	—	—
160	10738352	YOKE BALANCE PLATE	—	—	—	—	—	—	1	1	—	—
180	10852375	GALV. ANTI-TORSION STRAP 3/16"x 1 1/2"	—	—	—	—	—	—	2	2	—	—
201	10997000	19 #9 ALUMINUM COVERED STEEL STRANDS	—	—	—	—	—	—	FT	—	—	—
203	10997060	19 #7 ALUMINUM COVERED STEEL STRANDS	—	—	—	—	—	—	—	FT	—	—
207	10997013	7/16"ø COPPERWELD WIRE	—	—	—	FT	FT	—	—	—	—	—
214	10435500	PREFORMED BIG-GRIP DEAD END "BLACK"	—	—	—	—	—	—	2	—	—	2
215	10435525	PREFORMED BIG-GRIP DEAD END "BLACK"	—	—	—	—	—	—	—	2	2	—
220A	–	1"ø x 6" EYE/JAW TURNBUCKLE	—	1	1	1	1	1	—	—	—	—
220	–	3/4"ø x 6" EYE/JAW TURNBUCKLE	—	—	—	1	1	—	—	—	—	—
219A	–	1"x 6" JAW/JAW TURNBUCKLE	1	—	—	—	—	1	2	2	—	—
219	–	3/4"x 6" JAW/JAW TURNBUCKLE	1	—	—	—	—	—	—	—	—	—
231	10850265	5/8" ANCHOR SHACKLE W/3/4"ø PIN	1	1	1	1	1	—	—	—	—	—
232	10850260	3/4" ANCHOR SHACKLE W/7/8"ø PIN	—	—	—	—	—	1	—	—	—	—
233	10201585	7/8" CHAIN SHACKLE	—	—	—	—	—	—	2	—	—	2
236	10850252	1 1/4" CHAIN SHACKLE	—	—	—	—	—	—	—	2	2	—
242	–	3/4" THIMBLE (WITH DOUBLE EXTRA STRONG PIPE INSERT)	—	—	—	—	—	—	2	—	—	2
243	10858100	1 1/4" THIMBLE	—	—	—	—	—	—	—	2	2	—
556		STRAIN CLAMP CONNECTOR FOR 7/8" STEEL	—	—	—	—	—	1	—	—	—	—
		MESSENGER WIRE										
600		REDUCING BOLT (5/8"X4" A325)	1	1	—	1	1	1	2	2	—	—

NOTES:

1. USE EXTRA LONG PIN FOR ASSEMBLY WITH ANTI-TORSION STRAPS
2. FOR DEAD END CLAMP, ITEM 72, USE COMPRESSION SLEEVE TO SUIT CONTACT WIRE SIZE.
3. FOR SWIVEL BRACKET ASSEMBLY REFER TO STEEL DETAIL DRAWINGS.
4. IN-SPAN INSULATION MIA & MIA-2 TO BE ALLOCATED AS REQUIRED AND SHALL BE DETERMINED FROM THE LAYOUT PLAN.
5. USE TINNED CONNECTORS FOR CONNECTION TO ALUMINUM CONDUCTOR.

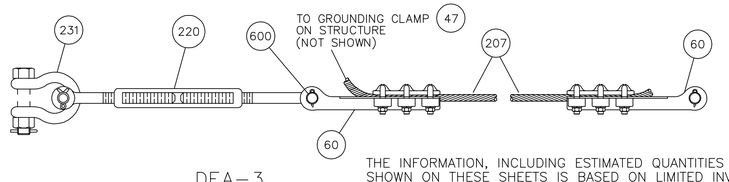

DEA-3

THE INFORMATION, INCLUDING ESTIMATED QUANTITIES OF WORK SHOWN ON THESE SHEETS IS BASED ON LIMITED INVESTIGATIONS BY THE STATE AND IS IN NO WAY WARRANTED TO INDICATE THE TRUE CONDITIONS OR ACTUAL QUANTITIES OR DISTRIBUTION OF QUANTITIES OF WORK WHICH WILL BE REQUIRED.

URS CORPORATION AES
500 ENTERPRISE DRIVE
ROCKY HILL, CT 06067
1-(860)-529-8882

NO.	DATE	DESCRIPTION

REVISIONS

STATE OF CONNECTICUT
DEPARTMENT OF TRANSPORTATION

STAMFORD YARD CATENARY IMPROVEMENTS

MISCELLANEOUS ASSEMBLIES
SHEET 1

ENGINEER: URS CORPORATION AES
DESIGNER: RW | DRAFTER: AMK | CHECKER: AJM
APPROVED: T. HOLLAND | DATE: XX/XX/XX
STRUCTURE NO. | BRIDGE LOG NO. | STRUCTURE SHEET NO. E-14

PROJECT CONTROL DATE: XX/XX/XX DISK FILENAME: E-14.dwg XX% DESIGN

F H W A REGION	STATE	TOWN	FED. AID PROJ. NO.	PROJ. NO.	YEAR	SHEET NUMBER
1	CONN.	VARIOUS		301-163	2014	

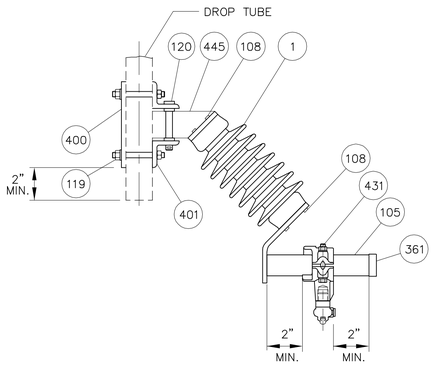

CONTACT WIRE REGISTRATION

ASSEMBLY RA18-OR

(FOR INSULATED OVERLAP)

SEE NOTE 1

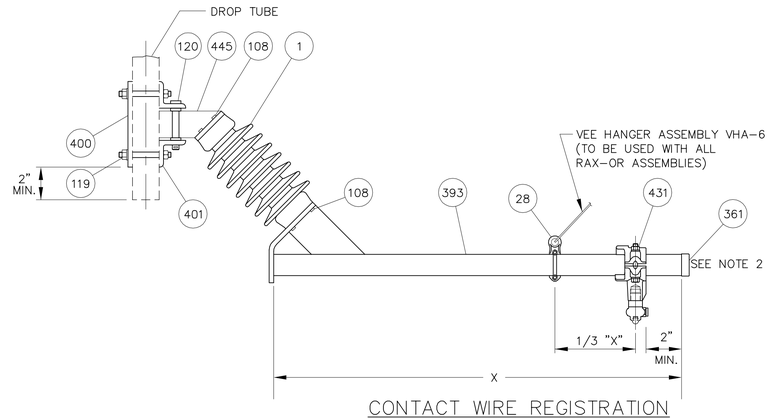

CONTACT WIRE REGISTRATION

ASSEMBLY RAX-OR

ASSEMBLY RA60-OR (X=60")

ASSEMBLY RA72-OR (X=72")

ASSEMBLY RA90-OR (X=90")

(FOR INSULATED OVERLAP)

ASSEMBLIES RA18-OR, RAX-OR

PART No.	METRO-NORTH No.	DESCRIPTION	QTY PER ASSEMBLY RA18-OR	QTY PER ASSEMBLY RAX-OR
1	10445110	CANTILEVER INSULATOR (2000 LBS)	1	1
28	10202451	PIPE EYE CLAMP 2"	——	1
431		SLIDING CONTACT WIRE CLAMP HOLDER ASSY	1	1
73	10206340	LINK DOUBLE CLEVIS 90°	——	——
95	10445113	SUSPENSION INSULATOR 25,000 LB	——	——
105	10000085	REGISTRATION TUBE ASSEMBLY 18"	1	——
108	19130912	1/2"ø x 1 1/4" BOLT, NUT AND LOCKWASHER	8	8
400	10730165	HINGED INSULATOR BRACKET BACK PLATE	1	1
119	19133562	5/8"ø x 5" BOLT, NUT AND LOCKWASHER	4	4
120	19133825	5/8"ø x 6" BOLT, A307 W/NUT AND 2 BRONZE WASHERS	1	1
199	19080120	1/2" x 3" FORGE EYEBOLT W/NUT	——	——
216		INSULATION RUBBER BOOT	——	——
227	10208575	1/4"WIRE ROPE CLIP	——	——
247	10858000	THIMBLE	——	——
254	10640260	LOW SPEED SECTION INSULATOR ASSEMBLY	——	——
255	10640295	HIGH SPEED SECTION INSULATOR ASSEMBLY	——	——
350		1/4" S.S. WIRE ROPE	——	——
361		EXTERNAL PLASTIC SEAL PLUG	1	1
393		REGISTRATION TUBE ASSEMBLY (LENGTH VARIES)	——	1
401		INSULATOR BASE SUPPORT, HINGED INSULATOR ASSY	2	2
445	10200011	HINGED INSULATOR BASE	1	1
——		VEE HANGER ASSEMBLY VHA-6	——	1

NOTES:

1. ASSEMBLY RA18-OR IS USED FOR F.T. SYSTEM OR WITHIN 600 FEET FROM MPA ON THE A.T. SYSTEM.
2. FOR RESTRICTED ELECTRICAL CLEARANCES, REPLACE PART #361 WITH PART #216 (INSULATING RUBBER BOOT).
3. USE TINNED CONNECTORS FOR CONNECTION TO ALUMINUM CONDUCTOR.
4. RAX-OR ASSEMBLIES MAYBE SHORTED AS PER LENGTH NOTED ON ERECTION DIAGRAM.

THE INFORMATION, INCLUDING ESTIMATED QUANTITIES OF WORK SHOWN ON THESE SHEETS IS BASED ON LIMITED INVESTIGATIONS BY THE STATE AND IS IN NO WAY WARRANTED TO INDICATE THE TRUE CONDITIONS OR ACTUAL QUANTITIES OR DISTRIBUTION OF QUANTITIES OF WORK WHICH WILL BE REQUIRED.

URS CORPORATION AES
500 ENTERPRISE DRIVE
ROCKY HILL, CT 06067
1-(860)-529-8882

NTS

NO.	DATE	DESCRIPTION

REVISIONS

STATE OF CONNECTICUT
DEPARTMENT OF TRANSPORTATION

STAMFORD YARD CATENARY IMPROVEMENTS

MISCELLANEOUS ASSEMBLIES
SHEET 2

ENGINEER: URS CORPORATION AES

DESIGNER: RW | DRAFTER: AMK | CHECKER: AJM

APPROVED: T. HOLLAND | DATE: XX/XX/XX

STRUCTURE NO. | BRIDGE LOG NO. | STRUCTURE SHEET NO. E-15

PROJECT CONTROL DATE: XX/XX/XX DISK FILENAME: E-15.dwg XX% DESIGN

F H W A REGION	STATE	TOWN	FED. AID PROJ. NO.	PROJ. NO.	YEAR	SHEET NUMBER
1	CONN.	VARIOUS		301-163	2014	

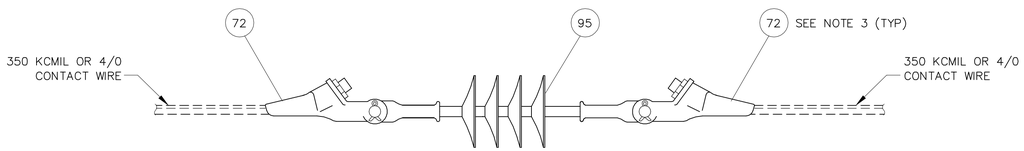

CONTACT WIRE IN-SPAN INSULATION
ASSEMBLY CIA-1

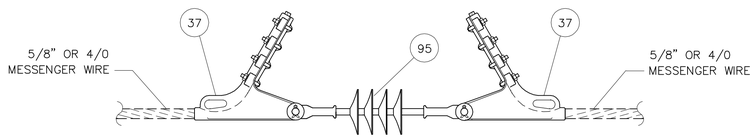

MESSENGER IN-SPAN INSULATION
ASSEMBLY - MIA-1

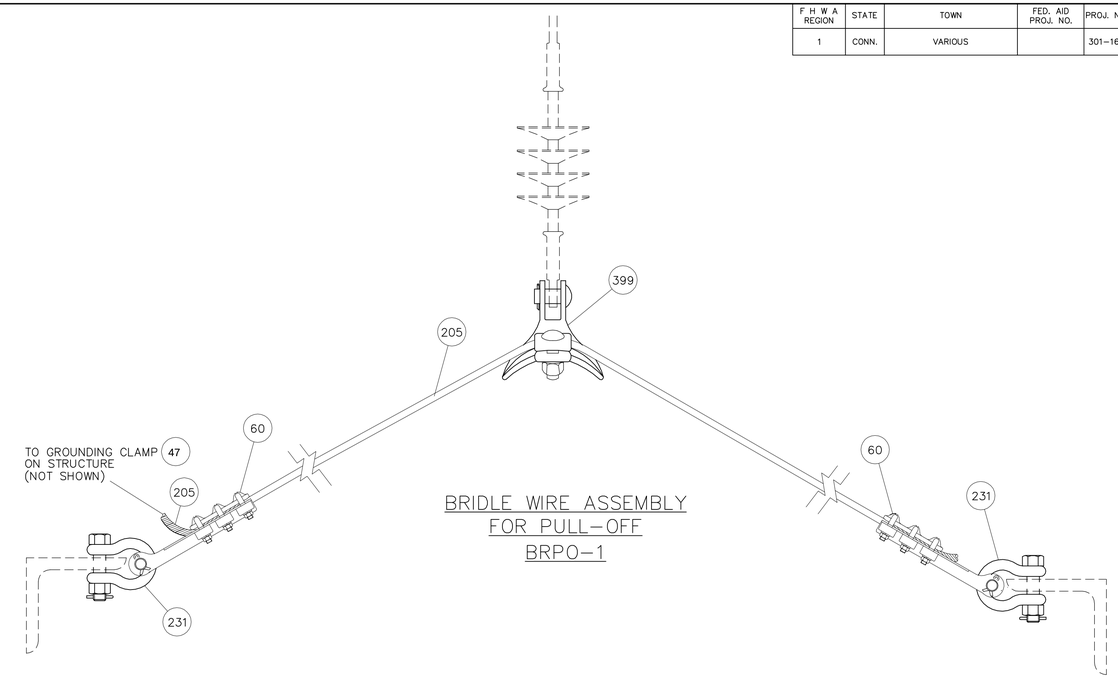

BRIDLE WIRE ASSEMBLY
FOR PULL-OFF
BRPO-1

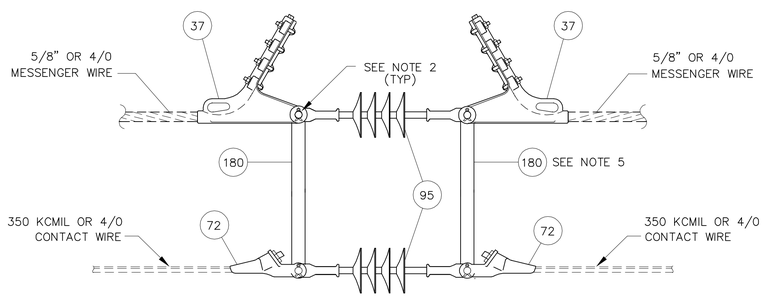

MESSENGER CONTACT IN-SPAN INSULATION
ASSEMBLY MCIA-1

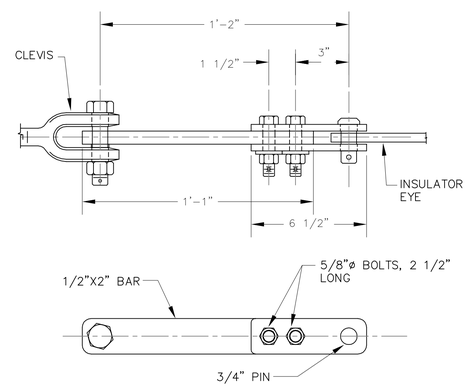

LINK EYE-CLEVIS 601

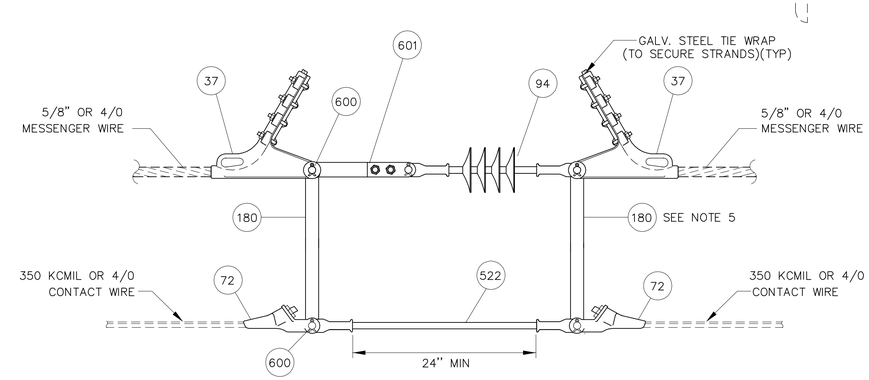

MESSENGER CONTACT IN-SPAN INSULATION
ASSEMBLY MCIA-2

NOTES:

1. THE IN-SPAN INSULATION ASSEMBLIES CIA-1, MCIA-1 AND MCIA-2 SHALL BE USED ONLY FOR NON-RIDING CONTACT WIRE.
2. USE EXTRA LONG PIN FOR ASSEMBLY WITH ANTI-TORSION STRAPS.
3. FOR DEAD END CLAMP, ITEM 72, USE COMPRESSION SLEEVE TO SUIT CONTACT WIRE SIZE.
4. FOR HANGER LENGTH SEE HANGER LENGTH DRAWING.
5. USE TINNED CONNECTORS FOR CONNECTION TO ALUMINUM CONDUCTOR.

NTS

ASSEMBLIES CIA-1, MIA-1, MCIA-1, MCIA-2 & BRPO-1

PART No.	METRO-NORTH No.	DESCRIPTION	QUANTITY				
			CIA-1	MIA-1	MCIA-1	MCIA-2	BRPO-1
37	10202492	STRAIN CLAMP CONNECTOR	—	2	2	2	—
47	10201629	GROUNDING CLAMP (TINNED)	—	—	—	—	1
60	10201621	DEAD END CLAMP	—	—	—	—	2
72	10434410	DEAD END FITTING	2	—	2	2	—
94	10445115	SUSPENSION INSULATOR 36,000 LBS	—	—	—	1	—
95	10445113	SUSPENSION INSULATOR 25,000 LBS	1	1	2	—	—
180	10852375	3/16" x 1i" GALV STEEL STRAP (ANTI TORSION)	—	—	2	2	—
205	10997035	3/8"ø STAINLESS STEEL WIRE ROPE	—	—	—	—	FT
231	10850265	5/8" ANCHOR SHACKLE WITH 3/4" ø PIN	—	—	—	—	2
		LINK TONGUE TONGUE	—	—	—	1	—
399	82860	ANGLE CLAMP #82860	—	—	—	—	1
522		25KV ROD INSULATOR, TEFLON JACK.(18,000 LBS)	—	—	—	1	—
600		REDUCING BOLT ASSEMBLY (A325 5/8" BOLT)	—	—	—	2	—
601		LINK EYE-CLEVIS	—	—	—	1	—

THE INFORMATION, INCLUDING ESTIMATED QUANTITIES OF WORK SHOWN ON THESE SHEETS IS BASED ON LIMITED INVESTIGATIONS BY THE STATE AND IS IN NO WAY WARRANTED TO INDICATE THE TRUE CONDITIONS OR ACTUAL QUANTITIES OR DISTRIBUTION OF QUANTITIES OF WORK WHICH WILL BE REQUIRED.

URS CORPORATION AES
500 ENTERPRISE DRIVE
ROCKY HILL, CT 06067
1-(860)-529-8882

NO.	DATE	DESCRIPTION

REVISIONS

STATE OF CONNECTICUT
DEPARTMENT OF TRANSPORTATION

STAMFORD YARD CATENARY IMPROVEMENTS

MISCELLANEOUS ASSEMBLIES
SHEET 3

ENGINEER: URS CORPORATION AES
DESIGNER: RW | DRAFTER: AMK | CHECKER: AJM
APPROVED: T. HOLLAND | DATE: XX/XX/XX
STRUCTURE NO. | BRIDGE LOG NO. | STRUCTURE SHEET NO. E-16

PROJECT CONTROL DATE: XX/XX/XX DISK FILENAME: E-16.dwg XX% DESIGN

F H W A REGION	STATE	TOWN	FED. AID PROJ. NO.	PROJ. NO.	YEAR	SHEET NUMBER
1	CONN.	VARIOUS		301-163	2014	

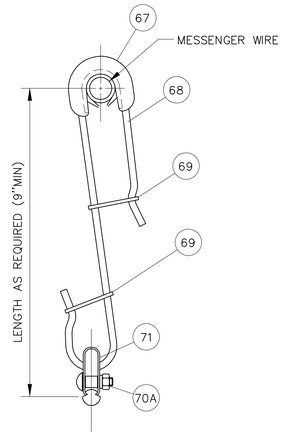

STANDARD CLIP HANGER
ASSEMBLY HA-1
(SEE NOTE 3)

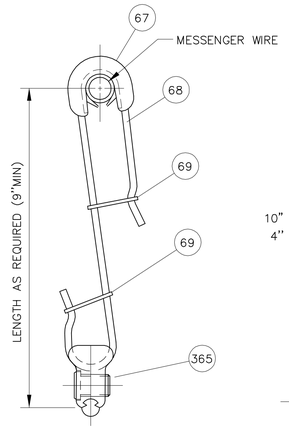

STANDARD HANGER
ASSEMBLY HA-2
(SEE NOTE 3)

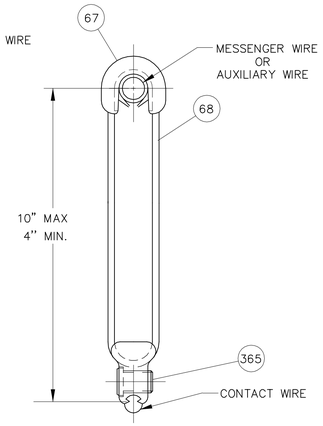

LOOP HANGER
ASSEMBLY LHA-3

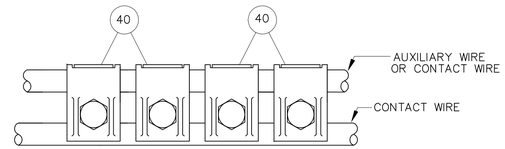

AUXILIARY CONTACT CLAMP
ASSEMBLY ACC-1

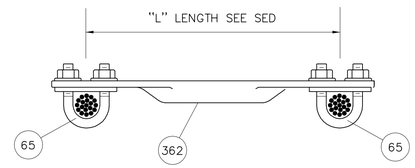

COMPRESSION MESSENGER WIRE KNUCKLE
ASSEMBLY MKA-9

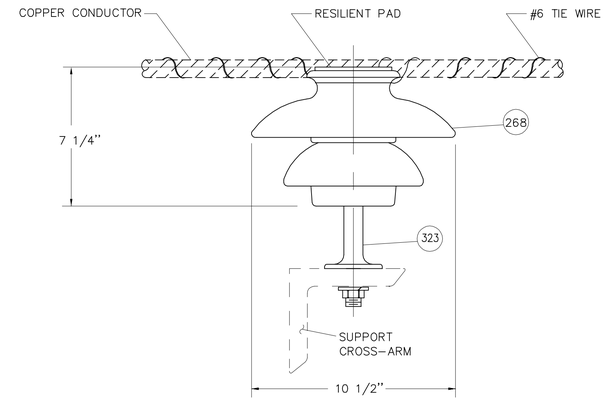

PIN INSULATOR ASSEMBLY 10B
(TYPICAL)

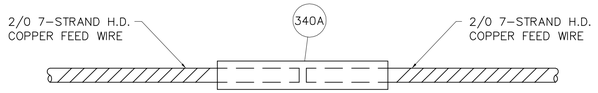

SIGNAL POWER WIRE SPLICE
ASSEMBLY SPS-1
FULL TENSION SPLICE
MINIMUM BREAKING LOAD = 5926 LBS

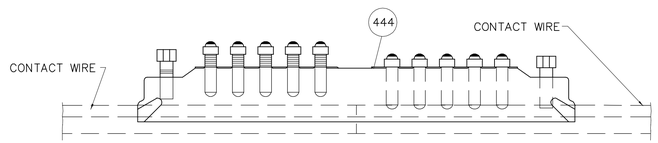

FULL TENSION SPLICE
MINIMUM BREAKING LOAD = 16410 LBS

TROLLEY WIRE SLEEVE
ASSEMBLY CWS-1

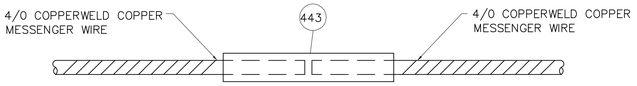

FULL TENSION SPLICE
MINIMUM BREAKING LOAD = 20730 LBS

MESSENGER WIRE SPLICE
ASSEMBLY MWS-1

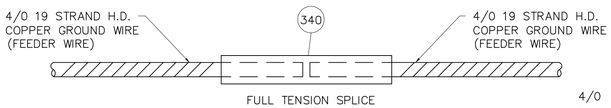

FULL TENSION SPLICE
MINIMUM BREAKING LOAD = 9617 LBS

GROUND WIRE SPLICE
ASSEMBLY GWS-1

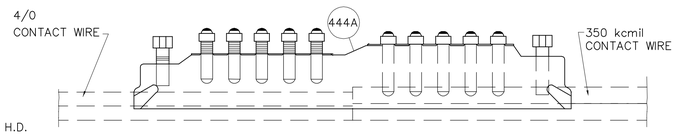

FULL TENSION SPLICE
4/0 MINIMUM BREAKING LOAD = 10820 LBS

COMPROMISE TROLLEY WIRE SPLICE
ASSEMBLY CTS-1

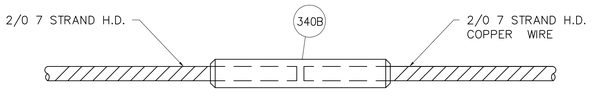

2/0 JUMPER SPLICE
ASSEMBLY FWS-1

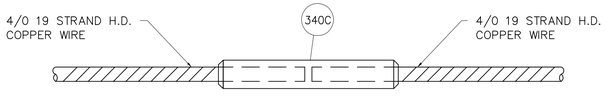

4/0 JUMPER SPLICE
ASSEMBLY FWS-2

ASSEMBLIES HA-1, HA-2, LHA-3,CWS-1,CTS-1,SPS-1,GWS-1,MWS-1,ACC-1,MKA-9 & 10B, FWS-1, FWS-2

PART No.	METRO-NORTH No.	DESCRIPTION	QTY PER ASSEMBLY												
			HA-1	HA-2	LHA-3	CWS-1	CTS-1	SPS-1	GWS-1	MWS-1	ACC-1	MKA-9	10B	FWS-1	FWS-2
40	10201624	TROLLEY CONTACT CLAMP	—	—	—	—	—	—	—	—	4	—	—	—	—
65	10100161	PRESSURE BAR ASSEMBLY	—	—	—	—	—	—	—	—	—	2	—	—	—
67	10100143	COPPER ARMOR WITH NEOPRENE LINER	1	1	1	—	—	—	—	—	—	—	—	—	—
68	10850050	3/16" STAINLESS STEEL ROD TYPE 304	AS REQ'D	AS REQ'D	AS REQ'D	—	—	—	—	—	—	—	—	—	—
69	10750166	HANGER RETAINER	2	2	—	—	—	—	—	—	—	—	—	—	—
70A		3/8" 16 UNC 1 1/8" BOLT W/NUT AND SPACER	1	—	—	—	—	—	—	—	—	—	—	—	—
71	10-434407	WIRE CLIP	1	—	—	—	—	—	—	—	—	—	—	—	—
268	10620750	35KV, PIN TYPE PORCELAIN INSULATOR	—	—	—	—	—	—	—	—	—	—	1	—	—
323	49493645	12" FORGED STEEL PIN FOR 35KV PIN INSULATOR	—	—	—	—	—	—	—	—	—	—	1	—	—
340	250905	GROUND WIRE SPLICE	—	—	—	—	—	—	1	—	—	—	—	—	—
340A		WIRE SPLICE	—	—	—	—	—	1	—	—	—	—	—	—	—
362		TUBE FOR FEEDER HANGER	—	—	—	—	—	—	—	—	—	FT	—	—	—
365		CONTACT WIRE CLAMP	—	1	1	—	—	—	—	—	—	—	—	—	—
443	10851619	MESSENGER WIRE SPLICE	—	—	—	—	—	—	—	1	—	—	—	—	—
444	10851626	TROLLEY WIRE SLEEVE 350	—	—	—	1	—	—	—	—	—	—	—	—	—
444A		COMPROMISE TROLLEY WIRE SPLICE 350 TO 4/0	—	—	—	—	1	—	—	—	—	—	—	—	—
340B		2/0 FEEDER TAIL WIRE SPLICE	—	—	—	—	—	—	—	—	—	—	—	1	—
340C		4/0 FEEDER TAIL WIRE SPLICE	—	—	—	—	—	—	—	—	—	—	—	—	1

NOTES:

1. LOOP HANGER SHALL BE UTILIZED AT TRANSITIONAL OVERLAPS.
2. USE TINNED CONNECTORS FOR CONNECTION TO ALUMINUM CONDUCTOR.
3. STANDARD CLIP HANGER HA-2 IS TO BE USED FOR ENTIRE LIMITS OF THIS PROJECT ON BOTH MAINLINE AND YARD TRACKS.

NTS

THE INFORMATION, INCLUDING ESTIMATED QUANTITIES OF WORK SHOWN ON THESE SHEETS IS BASED ON LIMITED INVESTIGATIONS BY THE STATE AND IS IN NO WAY WARRANTED TO INDICATE THE TRUE CONDITIONS OR ACTUAL QUANTITIES OR DISTRIBUTION OF QUANTITIES OF WORK WHICH WILL BE REQUIRED.

URS CORPORATION AES
500 ENTERPRISE DRIVE
ROCKY HILL, CT 06067
1-(860)-529-8882

NO.	DATE	DESCRIPTION

REVISIONS

STATE OF CONNECTICUT
DEPARTMENT OF TRANSPORTATION

STAMFORD YARD CATENARY IMPROVEMENTS

MISCELLANEOUS ASSEMBLIES
SHEET 4

ENGINEER: URS CORPORATION AES
DESIGNER: RW | DRAFTER: AMK | CHECKER: AJM
APPROVED: T. HOLLAND | DATE: XX/XX/XX
STRUCTURE NO. | BRIDGE LOG NO. | STRUCTURE SHEET NO. E-17

PROJECT CONTROL DATE: XX/XX/XX DISK FILENAME: E-17.dwg XX% DESIGN

F H W A REGION	STATE	TOWN	FED. AID PROJ. NO.	PROJ. NO.	YEAR	SHEET NUMBER
1	CONN.	VARIOUS		301-163	2014	

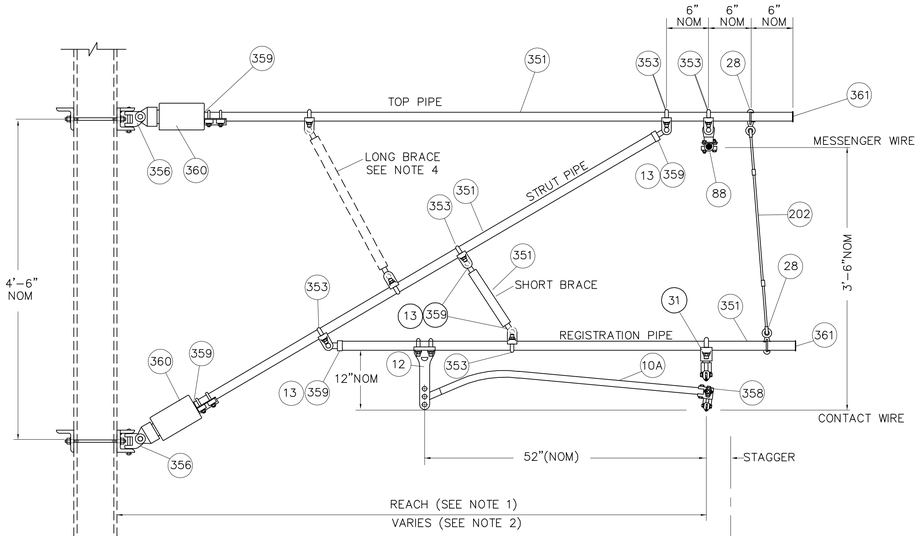

PULL-OFF SINGLE TRACK CANTILEVER
ASSEMBLY CAN-3
ASSEMBLY CAN-5
(SEE NOTE 7)

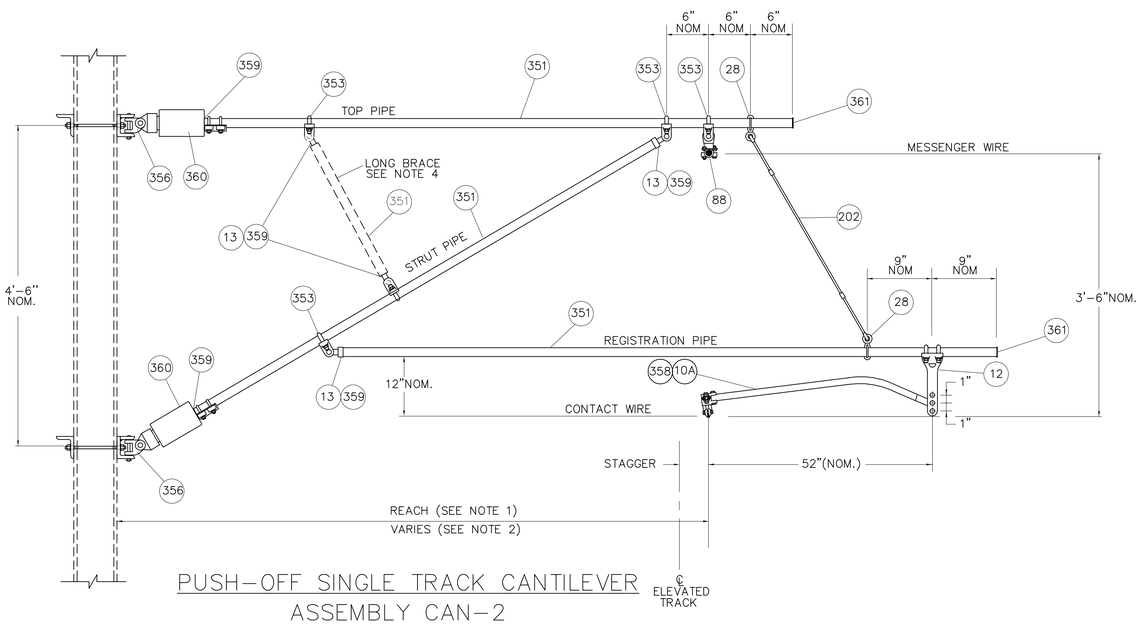

PUSH-OFF SINGLE TRACK CANTILEVER
ASSEMBLY CAN-2

ASSEMBLY CAN-2, CAN-3 AND CAN-5					
PART No.	METRO-NORTH No.	DESCRIPTION	QUANTITY		
			CAN-3	CAN-5	CAN-2
10A		STEADY ARM ASSEMBLY SCH40	1	—	1
12	10200155	ADJUSTABLE DROP BRACKET	1	—	1
13	10434459	STEADY ARM END FITTING	4	4	2
28	1020481	PIPE EYE CLAMP 2"	2	2	2
31	10436110	SLIDING CONTACT WIRE CLAMP HOLDER ASSEMBLY	—	1	—
88	10201630	SWIVEL SUSPENSION CLAMP	1	1	1
202	10850090	5/16" S.S. WIRE ROPE W/2 NICOPRESS ASSY	FT	FT	FT
351		PIPE 2" IPS SCH 80	FT	FT	FT
353	10202451	PIPE CLAMP-CLEVIS	5	5	3
356		HINGE	2	2	2
358		INT. PLASTIC SEAL PLUG	1	—	1
359		INT. PLASTIC SEAL PLUG	6	6	4
360		STRUT INSULATOR	2	2	2
361		EXTERNAL PLASTIC SEAL PLUG	2	2	2

NOTES:

1. ON TANGENT TRACK THE CANTILEVER REACH IS EQUAL TO THE DISTANCE FROM CENTERLINE OF TRACK TO FACE OF POLE PLUS THE STAGGER, IF AWAY FROM POLE, MINUS THE THE STAGGER IF TOWARD POLE. ON CURVED TRACK, THE CANTILEVER REACH SHALL ADD OR SUBTRACT THE CONTACT WIRE DISPLACEMENT DUE TO THE TRACK SUPER-ELEVATION.
2. REFER TO CATENARY LAYOUT FOR THE VALUE OF STAGGER, AND OFFSET FROM TRACK CENTERLINE TO POLE FACE.
3. REFER TO CATENARY LAYOUT FOR THE HEIGHTS OF MESSENGER AND CONTACT WIRES.
4. LONG BRACE MAY BE USED IF REQUIRED.
5. ASSEMBLY CAN-5 IS FOR OUT-OF-RUNNING CATENARY.

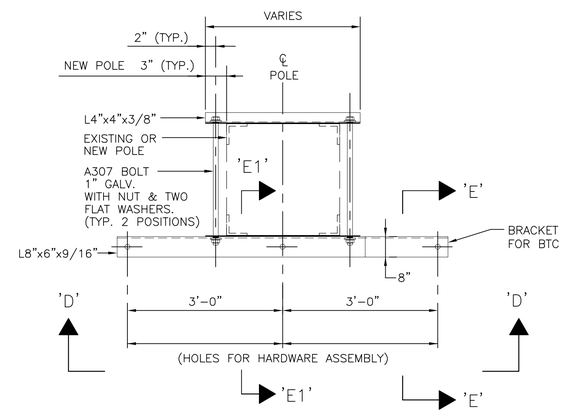

PLAN

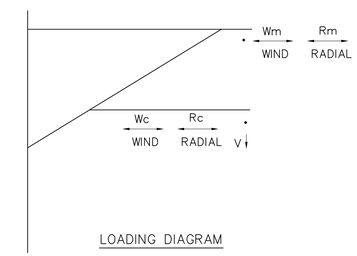

LOADING DIAGRAM

WORST CASE LOADING	
Rm	1050
Wm	350
Rc	700
Wc	276
V	1000

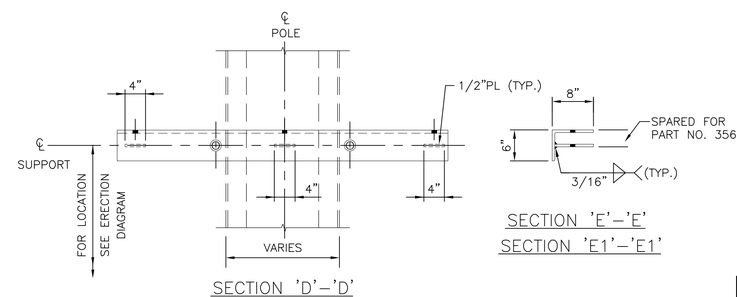

SECTION 'D'-'D'

SECTION 'E'-'E'
SECTION 'E1'-'E1'

POLE BRACKET FOR TWIN CANTILEVERS DETAIL BTC
(USE FOR ASSEMBLIES CAN-2, CAN-3, CAN-5)

Wm = WIND LOAD ON MESSENGER WIRE
Wc = WIND LOAD ON CONTACT WIRE
Rm = RADIAL LOAD ON MESSENGER WIRE
Rc = RADIAL LOAD ON CONTACT WIRE
V = VERTICAL LOAD OF CATENARY AT SUPPORT

THE INFORMATION, INCLUDING ESTIMATED QUANTITIES OF WORK SHOWN ON THESE SHEETS IS BASED ON LIMITED INVESTIGATIONS BY THE STATE AND IS IN NO WAY WARRANTED TO INDICATE THE TRUE CONDITIONS OR ACTUAL QUANTITIES OR DISTRIBUTION OF QUANTITIES OF WORK WHICH WILL BE REQUIRED.

URS CORPORATION AES
500 ENTERPRISE DRIVE
ROCKY HILL, CT 06067
1-(860)-529-8882

NO.	DATE	DESCRIPTION

REVISIONS

STATE OF CONNECTICUT
DEPARTMENT OF TRANSPORTATION

STAMFORD YARD CATENARY IMPROVEMENTS

MISCELLANEOUS ASSEMBLIES
SHEET 5

ENGINEER: URS CORPORATION AES
DESIGNER: RW | DRAFTER: AMK | CHECKER: AJM
APPROVED: T. HOLLAND | DATE: XX/XX/XX
STRUCTURE NO. | BRIDGE LOG NO. | STRUCTURE SHEET NO. E-18

PROJECT CONTROL DATE: XX/XX/XX DISK FILENAME: E-18.dwg XX% DESIGN

F H W A REGION	STATE	TOWN	FED. AID PROJ. NO.	PROJ. NO.	YEAR	SHEET NUMBER
1	CONN.	VARIOUS		301-163	2014	

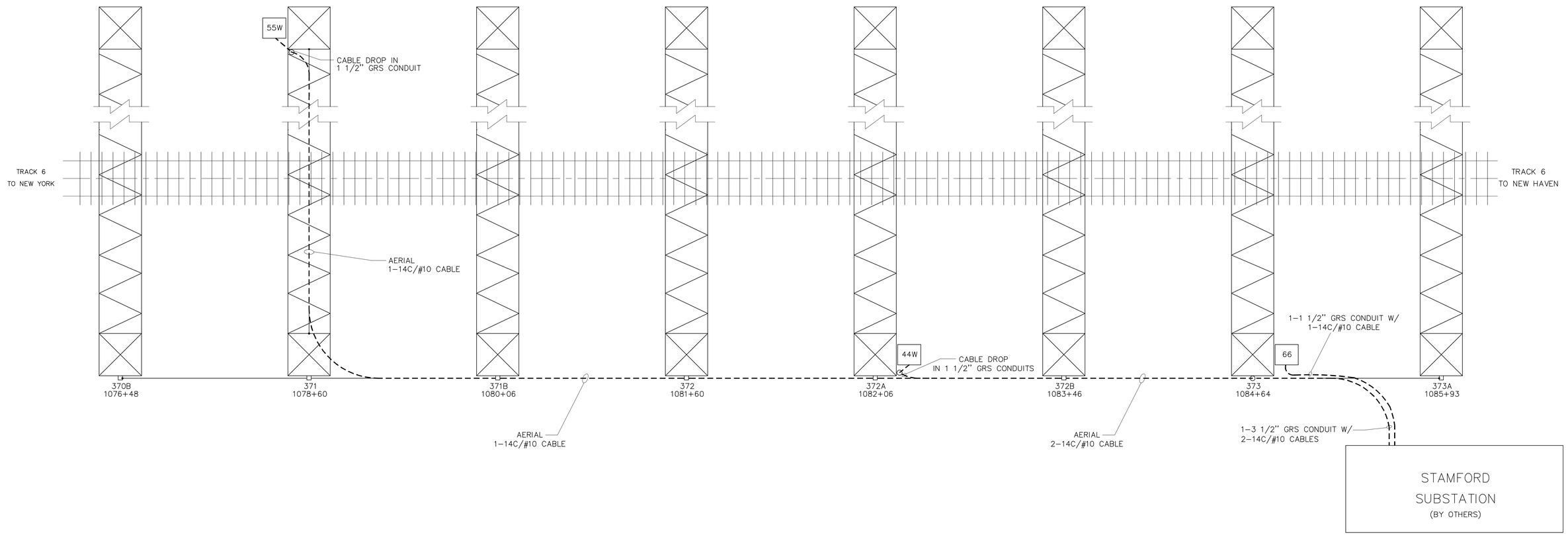

NOTES:

1. THE DRAWING SHOWS GENERAL APPROACH TO THE CONTROL CABLES LAYOUT FOR NEW MODS IN STAM AREA. THE CONTRACTOR SHALL VERIFY FIELD CONDITIONS FOR UNDERGROUND AND AERIAL CABLE INSTALLATION TO AVOID ANY CONFLICT WITH EXISTING STRUCTURES AND UNDERGROUND UTILITIES.
2. AERIAL CABLES WILL BE SUPPORTED ON EXISTING MESSENGER SUPPORT SYSTEM, WHERE AVAILABLE IN COORDINATION WITH THE ENGINEER. THE NEW MESSENGER SUPPORT SYSTEM WILL BE PROVIDED AS PER DWG XX-XX FOR LOCATIONS NOT PRESENTLY COVERED OR AS DIRECTED BY THE ENGINEER.
3. SEE DWG XX-XX, ALSO FOR INTERFACE WITH EXISTING MODs IN STAM AREA.
4. FOR CABLE AND CONDUIT SCHEDULE SEE DWG XX-XX.
5. ACTUAL LOCATION OF CABLE DROP CONDUITS AND CABLE ROUTING WILL BE A FIELD DECISION.

THE INFORMATION, INCLUDING ESTIMATED QUANTITIES OF WORK SHOWN ON THESE SHEETS IS BASED ON LIMITED INVESTIGATIONS BY THE STATE AND IS IN NO WAY WARRANTED TO INDICATE THE TRUE CONDITIONS OR ACTUAL QUANTITIES OR DISTRIBUTION OF QUANTITIES OF WORK WHICH WILL BE REQUIRED.

URS CORPORATION AES
500 ENTERPRISE DRIVE
ROCKY HILL, CT 06067
1-(860)-529-8882

NO.	DATE	DESCRIPTION

REVISIONS

STATE OF CONNECTICUT
DEPARTMENT OF TRANSPORTATION

STAMFORD YARD CATENARY IMPROVEMENTS

CONDUIT AND CABLE PLAN FOR NEW MODS – STAM

ENGINEER: URS CORPORATION AES
DESIGNER: RW | DRAFTER: AMK | CHECKER: AJM
APPROVED: T. HOLLAND | DATE: XX/XX/XX
STRUCTURE NO. | BRIDGE LOG NO. | STRUCTURE SHEET NO. E-57

PROJECT CONTROL DATE: XX/XX/XX DISK FILENAME: E-57.dwg XX% DESIGN

F H W A REGION	STATE	TOWN	FED. AID PROJ. NO.	PROJ. NO.	YEAR	SHEET NUMBER
1	CONN.	VARIOUS		301-163	2014	

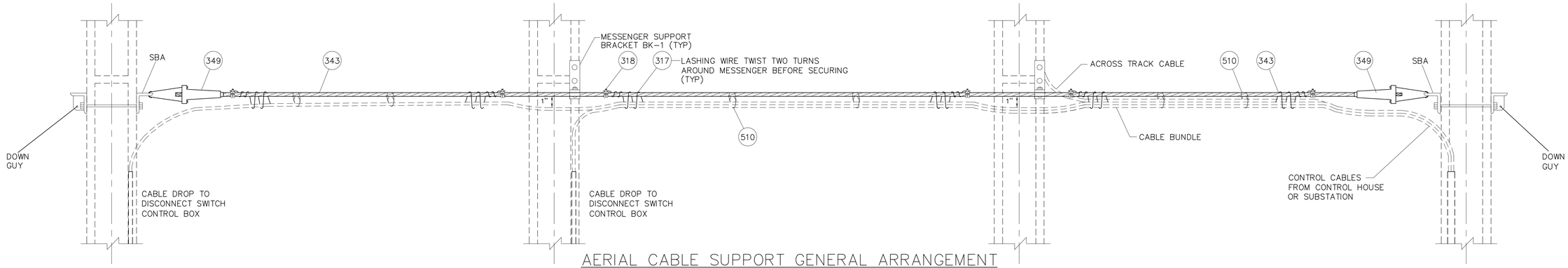

AERIAL CABLE SUPPORT GENERAL ARRANGEMENT
CABLE SUPPORT ASSEMBLY 14A (TYP)
(ALONG TRACK ON STRUCTURES)

NOTES:

1. THE ARRANGEMENTS TO SUPPORT AERIAL CABLES ON STRUCTURES AS SHOWN ARE TYPICAL. THE CONTRACTOR SHALL DEVELOP SITE SPECIFIC ARRANGEMENTS TO SUIT INTENDED REQUIREMENTS.
2. THE ALONG TRACK 7/16" GALV. STEEL WIRE WILL BE TENSIONED TO 3250 LBS AT 60° F. FOR ACROSS TRACK 7/16" GALV. STEEL WIRE THE TENSION WILL BE 2000 LBS.
3. THE AERIAL CABLE SUPPORT ARRANGEMENT FOR ACROSS TRACK CABLES MAY BE INSIDE THE STRUCTURE BOOM AS SHOWN OR ABOVE THE STRUCTURE BOOM DEPENDING ON SITE CONDITIONS AS SHOWN ON SEDS.
4. SEE DWG S-21 FOR DETAILS OF BRACKET BK1. THE QUANTITY IS AS REQUIRED.
5. CONTRACTOR TO PROVIDE A MIDSPAN SUPPORT BRACKET WITHIN TRUSS TO SUPPORT LOADED MESSENGER.

PART NO.	METRO-NORTH NO.	DESCRIPTION	QTY
317		LASHING WIRE	FT
318		LASHING WIRE CLAMP.	AS REQD
343		7/16" 7 STRAND GALV. STEEL WIRE	FT
349		STRANDVISE FOR 7/16" SUPPORT MESSENGER	2
510		GALV. STEEL WIRE RINGS TO SUPPORT CABLES	AS REQD

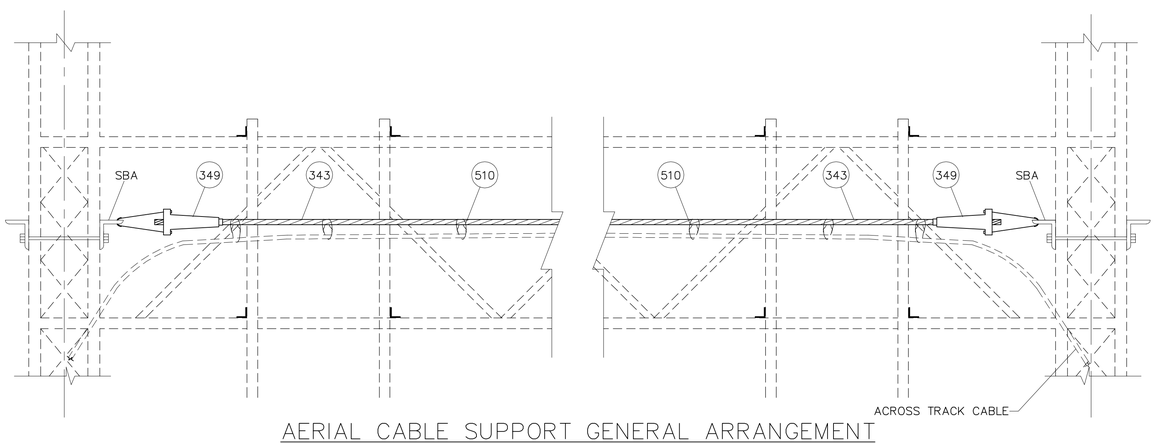

AERIAL CABLE SUPPORT GENERAL ARRANGEMENT
(ACROSS TRACK ON PORTAL TRUSS)
(SEE NOTE 5.)

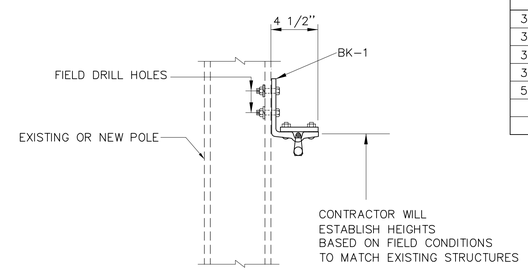

MESSENGER SUPPORT BRACKET BK1
MOUNTING ARRANGEMENT (TYP)
(SEE NOTE 4)

THE INFORMATION, INCLUDING ESTIMATED QUANTITIES OF WORK SHOWN ON THESE SHEETS IS BASED ON LIMITED INVESTIGATIONS BY THE STATE AND IS IN NO WAY WARRANTED TO INDICATE THE TRUE CONDITIONS OR ACTUAL QUANTITIES OR DISTRIBUTION OF QUANTITIES OF WORK WHICH WILL BE REQUIRED.

URS
URS CORPORATION AES
500 ENTERPRISE DRIVE
ROCKY HILL, CT 06067
1-(860)-529-8882

NO.	DATE	DESCRIPTION

REVISIONS

STATE OF CONNECTICUT
DEPARTMENT OF TRANSPORTATION

STAMFORD YARD CATENARY IMPROVEMENTS

AERIAL CABLE SUPPORT ARRANGEMENT

ENGINEER: URS CORPORATION AES
DESIGNER: RW | DRAFTER: AMK | CHECKER: AJM
APPROVED: T. HOLLAND | DATE: XX/XX/XX
STRUCTURE NO. | BRIDGE LOG NO. | STRUCTURE SHEET NO. E-60

PROJECT CONTROL DATE: XX/XX/XX DISK FILENAME: E-60.dwg XX% DESIGN

F H W A REGION	STATE	TOWN	FED. AID PROJ. NO.	PROJ. NO.	YEAR	SHEET NUMBER
1	CONN.	VARIOUS		301-163	2014	

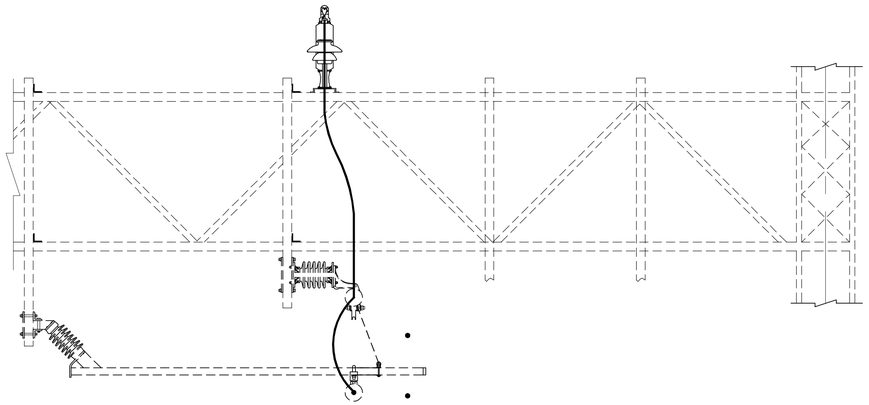

SECTION A-A

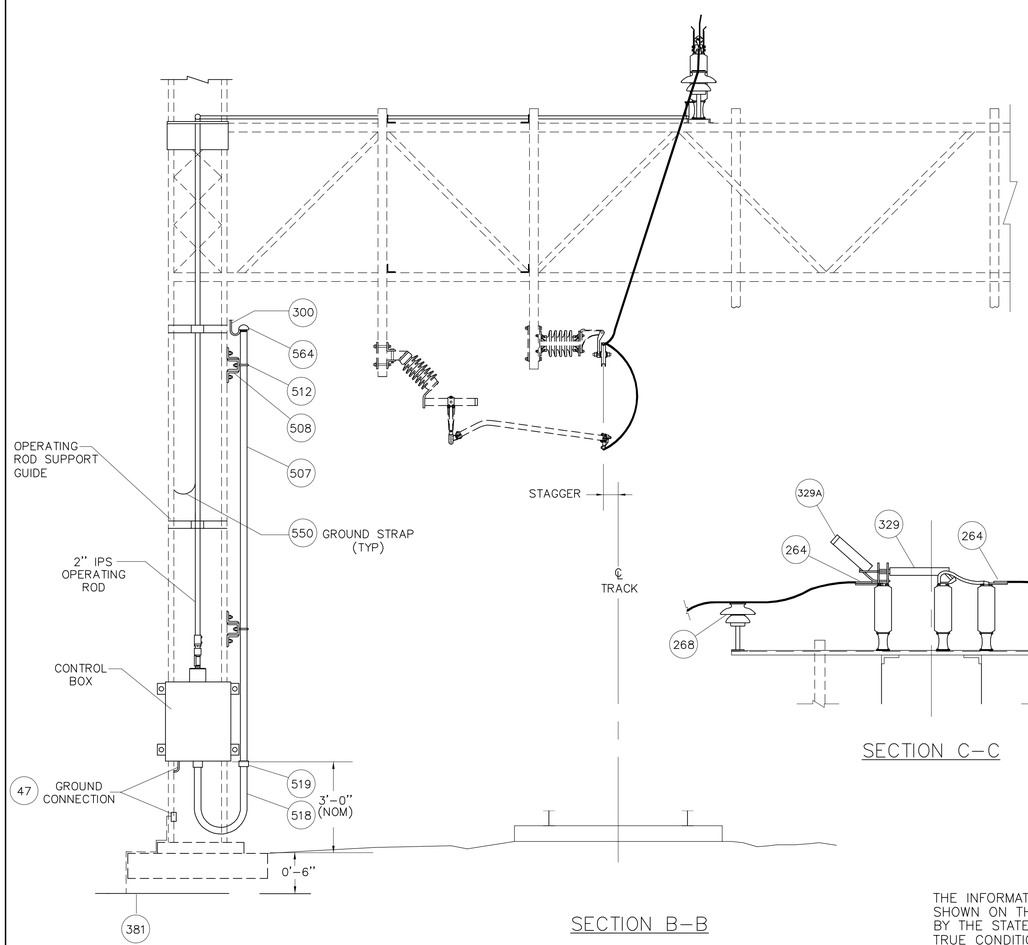

SECTION B-B

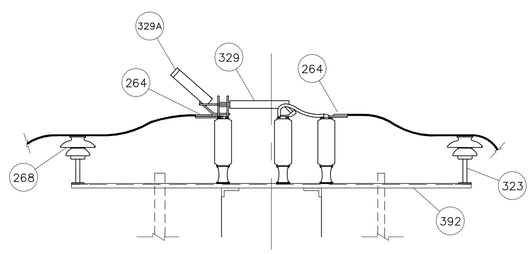

SECTION C-C

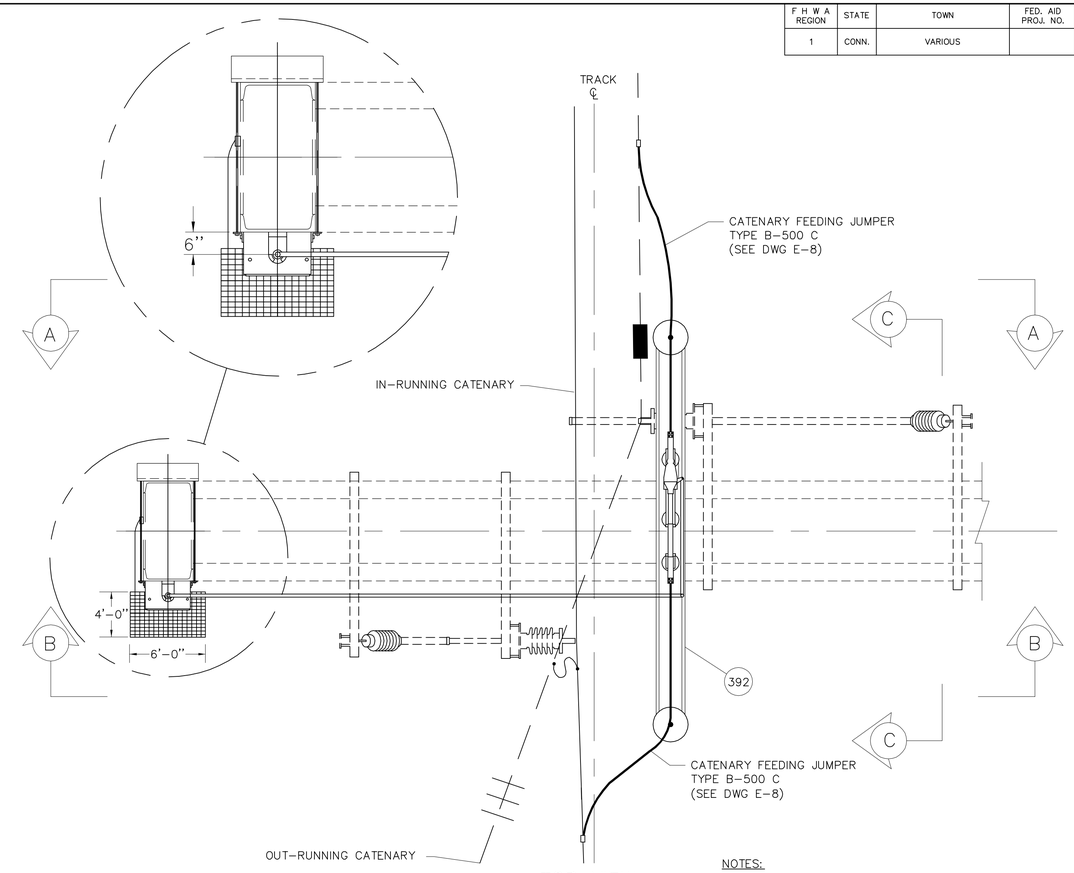

TOP VIEW

ASSEMBLY – DS-1

PART NO.	METRO-NORTH NO.	DESCRIPTION	QTY DS-1
47	10201629	GROUND CONNECTOR, CABLE TO FLAT SURFACE (TINNED)	3
329A		VACUUM CIRCUIT INTERRUPTER	–
264		4-HOLE U-BOLT TERMINAL LUG (500 KCMIL CONDUCTOR)	2
268		35KV PORCELAIN PIN INSULATOR	AS REQD
300		14C/#10 600V EPR CABLE	FT
323		12" FORGED STEEL PIN FOR 35KV PIN INSULATOR	AS REQD
329		MOTOR OPERATED DISCONNECT SWITCH	1
381		GROUND MAT	1
392		MOUNTING BRACKET	1
507		1 1/2"ø GALVANIZED RIGID STEEL CONDUIT	FT
508		CONDUIT SUPPORT ASSEMBLY FOR 1i"ø STEEL CONDUIT	AS REQD
512		2-PIECE PIPE STRAP FOR 1 1/2"ø CONDUIT	AS REQD
518		1 1/2"ø FLEXIBLE METAL CONDUITS	1
519		CONDUIT COUPLER FOR 1 1/2"ø CONDUITS	1
550		GROUND STRAP	2
564		WEATHER HEAD (1 1/2")	1
——		CATENARY FEEDING JUMPER TYPE B-500 C	2

NOTES:

1. THE QUANTITIES SHOWN ARE FOR EACH DISCONNECT SWITCH ASSEMBLY.
2. MOTOR OPERATED DISCONNECT SWITCH SHALL BE SUPPLIED COMPLETE WITH MOTOR MECHANISM, OPERATING RODS, GROUND STRAPS INCLUDING ASSOCIATED HARDWARE, SUPPORT BRACKETS REQUIRED FOR THE FUNCTIONAL EQUIPMENT, AND MOUNTING BRACKET ATTACHMENT TO TRUSS CHORDS.
3. THE CONTRACTOR SHALL DEVELOP THE OPERATING ROD MECHANISM DESIGN ON SITE SPECIFIC BASIS. CONTRACTOR SHALL OBTAIN ENGINEER'S APPROVAL FOR OPERATING ROD BEFORE INSTALLING.

THE INFORMATION, INCLUDING ESTIMATED QUANTITIES OF WORK SHOWN ON THESE SHEETS IS BASED ON LIMITED INVESTIGATIONS BY THE STATE AND IS IN NO WAY WARRANTED TO INDICATE THE TRUE CONDITIONS OR ACTUAL QUANTITIES OR DISTRIBUTION OF QUANTITIES OF WORK WHICH WILL BE REQUIRED.

URS CORPORATION AES
500 ENTERPRISE DRIVE
ROCKY HILL, CT 06067
1-(860)-529-8882

NO.	DATE	DESCRIPTION

REVISIONS

STATE OF CONNECTICUT
DEPARTMENT OF TRANSPORTATION

STAMFORD YARD CATENARY IMPROVEMENTS

DISCONNECT SWITCH AND FEEDING ARRANGEMENT (TYP.)

ENGINEER: URS CORPORATION AES
DESIGNER: RW | DRAFTER: AMK | CHECKER: AJM
APPROVED: T. HOLLAND | DATE: XX/XX/XX
STRUCTURE NO. | BRIDGE LOG NO. | STRUCTURE SHEET NO. E-103

PROJECT CONTROL DATE: XX/XX/XX DISK FILENAME: E-103.dwg XX% DESIGN

F H W A REGION	STATE	TOWN	FED. AID PROJ. NO.	PROJ. NO.	YEAR	SHEET NUMBER
1	CONN.	VARIOUS		301-163	2014	

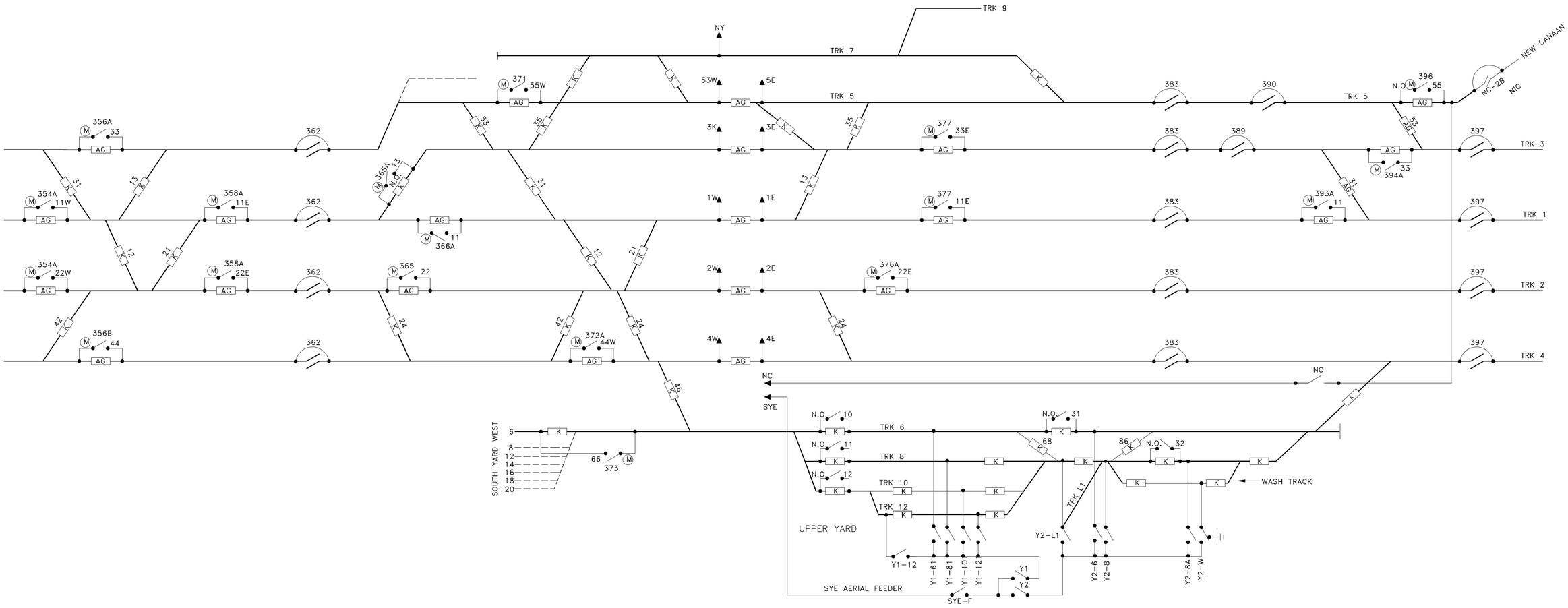

NOTE:
1. TRACKS NO. 8,12,14,16,18 & 20 ARE NOT ELECTRIFIED IN SOUTH YARD WEST.

THE INFORMATION, INCLUDING ESTIMATED QUANTITIES OF WORK SHOWN ON THESE SHEETS IS BASED ON LIMITED INVESTIGATIONS BY THE STATE AND IS IN NO WAY WARRANTED TO INDICATE THE TRUE CONDITIONS OR ACTUAL QUANTITIES OR DISTRIBUTION OF QUANTITIES OF WORK WHICH WILL BE REQUIRED.

URS CORPORATION AES
500 ENTERPRISE DRIVE
ROCKY HILL, CT 06067
1-(860)-529-8882

NO.	DATE	DESCRIPTION

REVISIONS

STATE OF CONNECTICUT
DEPARTMENT OF TRANSPORTATION

STAMFORD YARD CATENARY IMPROVEMENTS

SECTIONALIZING DIAGRAM

ENGINEER: URS CORPORATION AES
DESIGNER: RW | DRAFTER: AMK | CHECKER: AJM
APPROVED: T. HOLLAND | DATE: XX/XX/XX
STRUCTURE NO. | BRIDGE LOG NO. | STRUCTURE SHEET NO. E-140A

PROJECT CONTROL DATE: XX/XX/XX DISK FILENAME: E-140A.DWG XX% DESIGN

F H W A REGION	STATE	TOWN	FED. AID PROJ. NO.	PROJ. NO.	YEAR	SHEET NUMBER
1	CONN.	VARIOUS		301-163	2014	

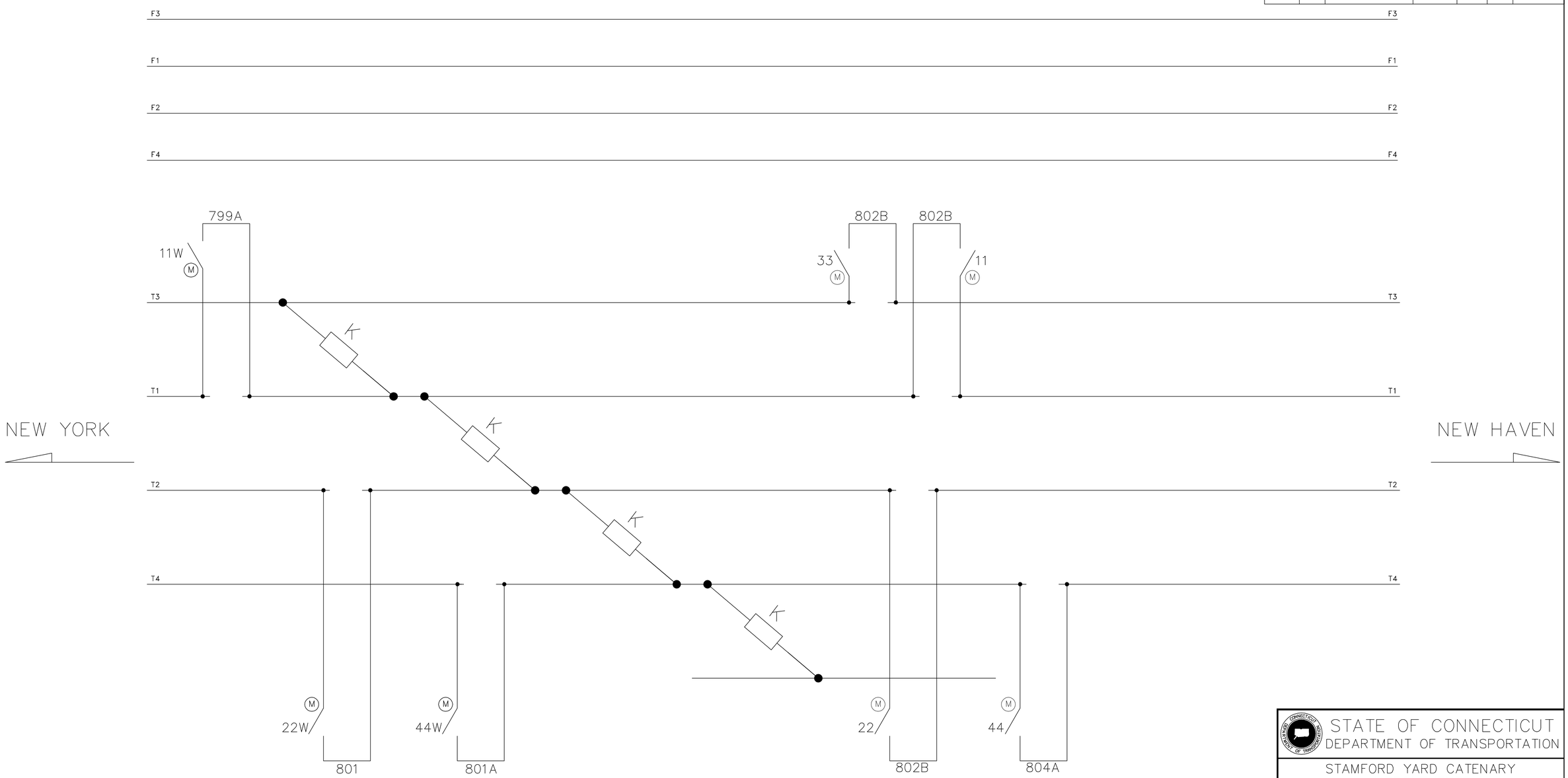

THE INFORMATION, INCLUDING ESTIMATED QUANTITIES OF WORK SHOWN ON THESE SHEETS IS BASED ON LIMITED INVESTIGATIONS BY THE STATE AND IS IN NO WAY WARRANTED TO INDICATE THE TRUE CONDITIONS OR ACTUAL QUANTITIES OR DISTRIBUTION OF QUANTITIES OF WORK WHICH WILL BE REQUIRED.

URS CORPORATION AES
500 ENTERPRISE DRIVE
ROCKY HILL, CT 06067
1-(860)-529-8882

NO.	DATE	DESCRIPTION

REVISIONS

STATE OF CONNECTICUT
DEPARTMENT OF TRANSPORTATION

STAMFORD YARD CATENARY IMPROVEMENTS

SINGLE LINE DIAGRAM –
CP 257

ENGINEER: URS CORPORATION AES
DESIGNER: RW | DRAFTER: AMK | CHECKER: AJM
APPROVED: T. HOLLAND | DATE: XX/XX/XX
STRUCTURE NO. | BRIDGE LOG NO. | STRUCTURE SHEET NO. E-161

PROJECT CONTROL DATE: XX/XX/XX DISK FILENAME: E-161.dwg XX% DESIGN

F H W A REGION	STATE	TOWN	FED. AID PROJ. NO.	PROJ. NO.	YEAR	SHEET NUMBER
1	CONN.	VARIOUS		301-163	2014	

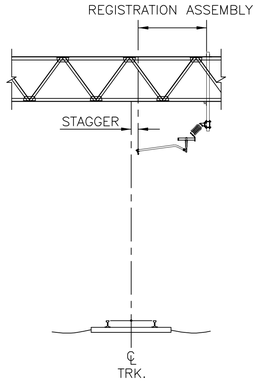

TANGENT TRACK

1. PROJECT AND MARK CENTERLINE OF TRACK ONTO BOTTOM OF TRUSS BY OPTICAL/LASER GAUGE.
2. LOCATE STEADY ARM DROP TUBE FROM THIS MARK BY SUM OF REQUIRED STAGGER AND ACTUAL DIMENSIONS OF STEADY ARM AND STEADY ARM SUPPORT ASSEMBLIES, AS SHOWN ON ERECTION DIAGRAMS.
3. DETERMINE IF STEADY ARM DROP TUBE AND ASSEMBLIES CAN BE INSTALLED AS SHOWN ON ERECTION DIAGRAMS OR INSTALL MODIFIED AS SHOWN IN DIAGRAMS AND METHODS ON THIS DRAWING.
4. LOCATE MS ASSEMBLY DROP TUBE FROM THIS MARK BY SUM OF REQUIRED STAGGER, CALCULATED SWING OUT OR IN OF MS ASSEMBLY PULLEY, AND ACTUAL DIMESIONS OF MS ASSEMBLY.
5. DETERMINE IF MS ASSEMBLY DROP TUBE AND ASSEMBLIES CAN BE INSTALLED AS SHOWN ON ERECTION DIAGRAMS OR INSTALL MODIFIED AS SHOWN IN DIAGRAMS AND METHODS ON THIS DRAWING.

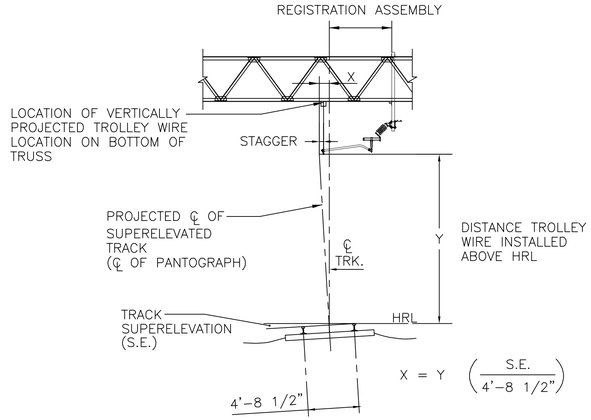

CURVED TRACK WITH MIRROR GAUGE

1. PROJECT AND MARK CENTERLINE OF TRACK ONTO BOTTOM OF TRUSS BY OPTICAL/LASER GAUGE.
2. FROM THIS MARK LOCATE VERTICALLY PROJECTED TROLLEY WIRE LOCATION ON BOTTOM OF TRUSS BY MEASUREMENT OF STAGGER AS SHOWN ON ERECTION DIAGRAMS, AND DIMENSION "X" AND THE LENGTH OF THE REGISTRATION ASSEMBLY.

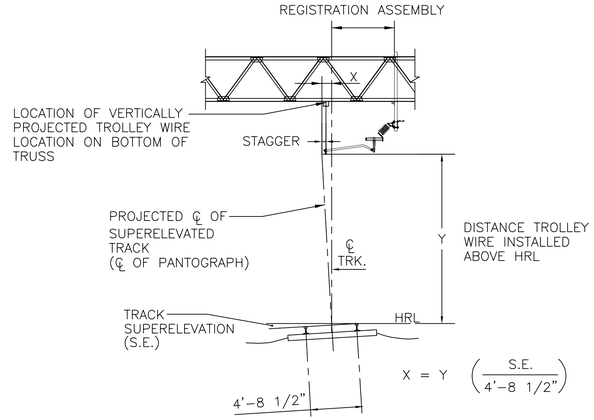

CURVED TRACK W/ PLUMB BOB

1. PROJECT AND MARK CENTERLINE OF TRACK ONTO BOTTOM OF TRUSS BY USE OF A PLUMB BOB.
2. FROM THIS MARK LOCATE VERTICALLY PROJECTED TROLLEY WIRE BY ADDING DIMENSION X MINUS STAGGER (FROM ERECTION DIAGRAM)

* 3. ±1/2" FOR SYSTEM HEIGHTS OF 1'-6" OR LESS, INCREASING TO ±2" FOR SYSTEM HEIGHTS OF 3'-0" OR GREATER.

NOTE: NEW AND OLD TRUSSES VARY IN POSITION OF CHORD ANGLES AND DIAGONAL BRACES.

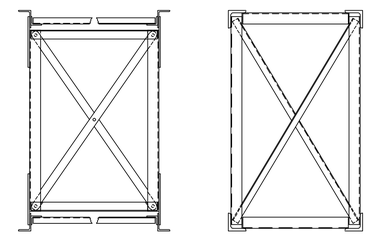

OLD TRUSS NEW TRUSS

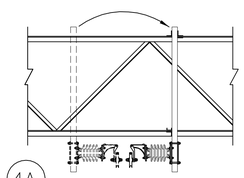

4A

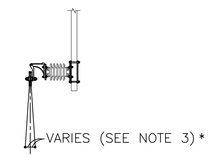

5A

PLACE DROP TUBE SUPPORT ANGLES AS PER PLANS → IF THERE IS INTERFERENCE WITH TRUSS BRACING (SEE NOTE 2) → MOVE DROP TUBE SUPPORT ANGLES TO OPPOSITE SIDE OF DROP TUBE → IF THERE STILL IS INTERFERENCE WITH TRUSS BRACING → REVERSE TOP AND/OR BOTTOM SUPPORTS

- IF THERE STILL IS INTERFERENCE WITH MESSENGER SUPPORT DROP TUBE → REVERSE MS-1 OR MS-2 → IF SHIFT NOT PERMISSIBLE → PLACE MESSENGER NOT MORE THAN ±2" OFF CENTER OF CONTACT WIRE
- IF THERE STILL IS INTERFERENCE WITH MESSENGER SUPPORT DROP TUBE → SHIFT DROP TUBE TO LEFT OR RIGHT 2 1/2" (WHICH STILL KEEPS THE DROP BRACKET WITHIN THE 5" CENTER POSITION OF THE REGISTRATION TUBE) → IF THERE STILL IS INTERFERENCE → CHANGE FROM RA-18 TO RA-R OR CHANGE FROM SA-54 TO SA-64

NOTES:

1. SEE DWG. S-13 FOR CLAMPING ARRANGEMENTS FOR DROP TUBE SUPPORT.
2. WHERE DROP TUBE SUPPORTS FALL AT GUSSET PLATES, THESE SUPPORTS MAY BE INSTALLED OVER AND AROUND THE GUSSET PLATES WITH THE DROP TUBE ANGLES, BACK PLATES, AND BACKER CHANNEL AS SHOWN. LONGER BOLTS, DEPENDING ON THE HEIGHT OF THE GUSSET PLATE MAY BE REQUIRED FOR THESE APPLICATIONS.

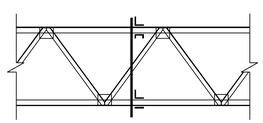

1

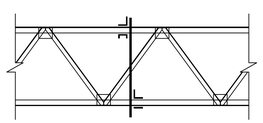

2A OR

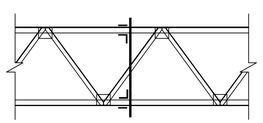

3A OR

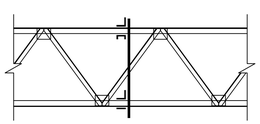

2B OR

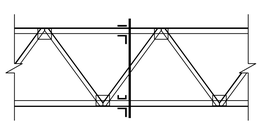

3B

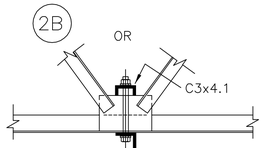

2C (SEE NOTE 2)

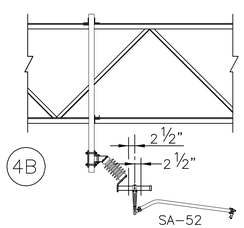

4B

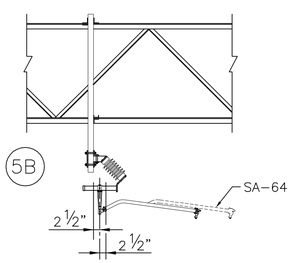

5B

SCALE: NONE

THE INFORMATION, INCLUDING ESTIMATED QUANTITIES OF WORK SHOWN ON THESE SHEETS IS BASED ON LIMITED INVESTIGATIONS BY THE STATE AND IS IN NO WAY WARRANTED TO INDICATE THE TRUE CONDITIONS OR ACTUAL QUANTITIES OR DISTRIBUTION OF QUANTITIES OF WORK WHICH WILL BE REQUIRED.

URS CORPORATION AES
500 ENTERPRISE DRIVE
ROCKY HILL, CT 06067
1-(860)-529-8882

NO.	DATE	DESCRIPTION

REVISIONS

STATE OF CONNECTICUT
DEPARTMENT OF TRANSPORTATION

STAMFORD YARD CATENARY IMPROVEMENTS

DROP TUBE PLACEMENT

ENGINEER: URS CORPORATION AES
DESIGNER: RW | DRAFTER: AMK | CHECKER: AJM
APPROVED: T. HOLLAND | DATE: XX/XX/XX
STRUCTURE NO. | BRIDGE LOG NO. | STRUCTURE SHEET NO. F-6

PROJECT CONTROL DATE: XX/XX/XX DISK FILENAME: F-6.dwg XX% DESIGN

F H W A REGION	STATE	TOWN	FED. AID PROJ. NO.	PROJ. NO.	YEAR	SHEET NUMBER
1	CONN.	VARIOUS		301-163	2014	

LIMITS OF REPOINTING AT WALL FOUNDATIONS AND INSTALLATION OF GA-4 ASSEMBLIES

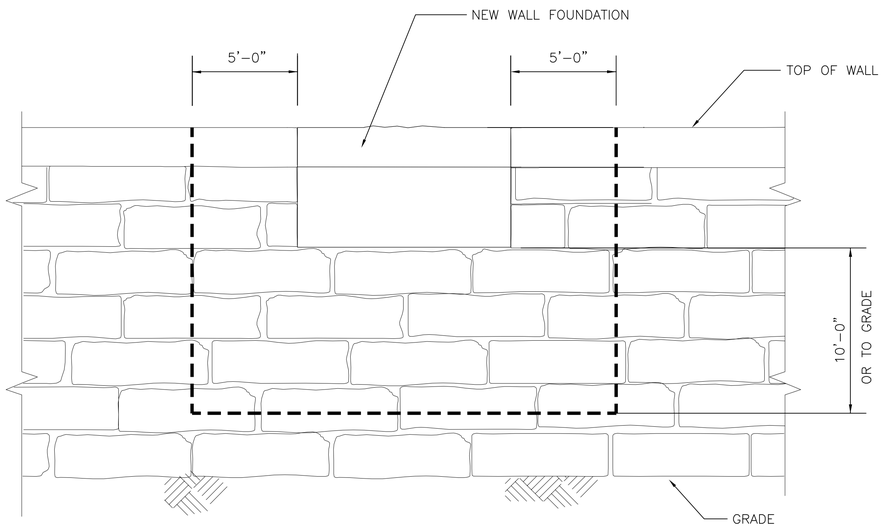

ELEVATION

REPOINTING LIMITS OF WALL FOUNDATION

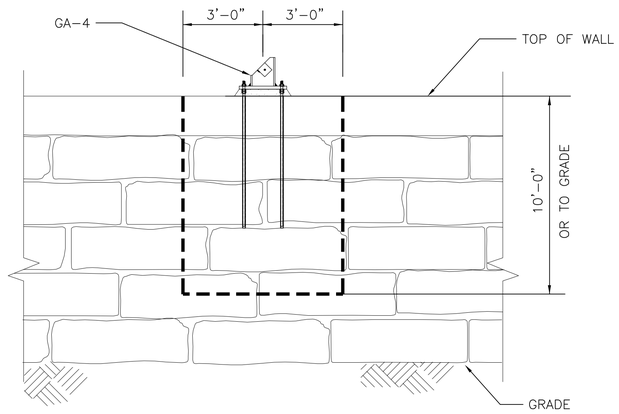

ELEVATION

REPOINTING LIMITS OF GA-4 INSTALLATION

NOTES:

1. FOR GENERAL NOTES, SEE DRAWING G-8.

THE INFORMATION, INCLUDING ESTIMATED QUANTITIES OF WORK SHOWN ON THESE SHEETS IS BASED ON LIMITED INVESTIGATIONS BY THE STATE AND IS IN NO WAY WARRANTED TO INDICATE THE TRUE CONDITIONS OR ACTUAL QUANTITIES OR DISTRIBUTION OF QUANTITIES OF WORK WHICH WILL BE REQUIRED.

SCALE: NONE

URS CORPORATION AES
500 ENTERPRISE DRIVE
ROCKY HILL, CT 06067
1-(860)-529-8882

NO.	DATE	DESCRIPTION

REVISIONS

STATE OF CONNECTICUT
DEPARTMENT OF TRANSPORTATION

STAMFORD YARD CATENARY IMPROVEMENTS

LIMITS OF REPOINTING

ENGINEER: URS CORPORATION AES

DESIGNER: RW | DRAFTER: AMK | CHECKER: AJM

APPROVED: T. HOLLAND | DATE: XX/XX/XX

STRUCTURE NO. | BRIDGE LOG NO. | STRUCTURE SHEET NO. F-12

PROJECT CONTROL DATE: XX/XX/XX DISK FILENAME: F-12.dwg XX% DESIGN

F H W A REGION	STATE	TOWN	FED. AID PROJ. NO.	PROJ. NO.	YEAR	SHEET NUMBER
1	CONN.	VARIOUS		301-163	2014	

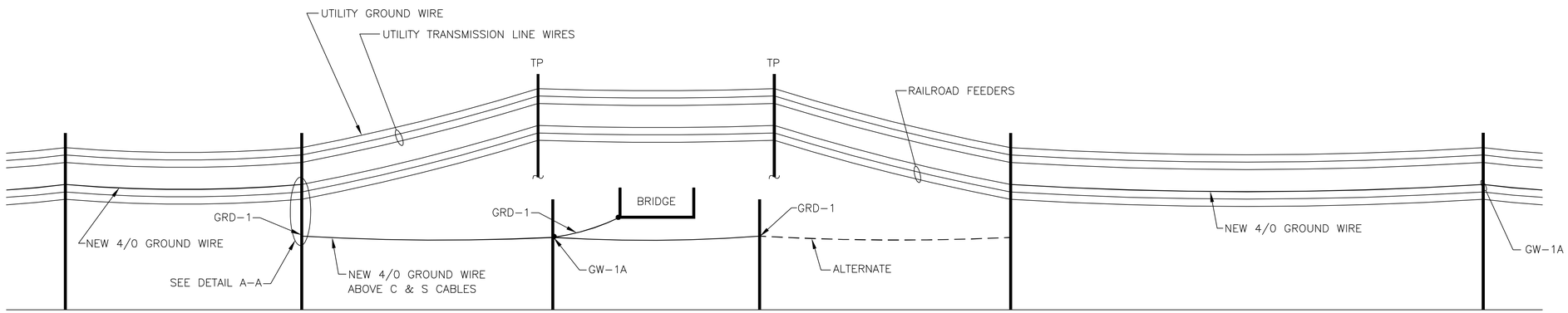

AERIAL GROUND WIRE AT TYPICAL OVERGRADE BRIDGE

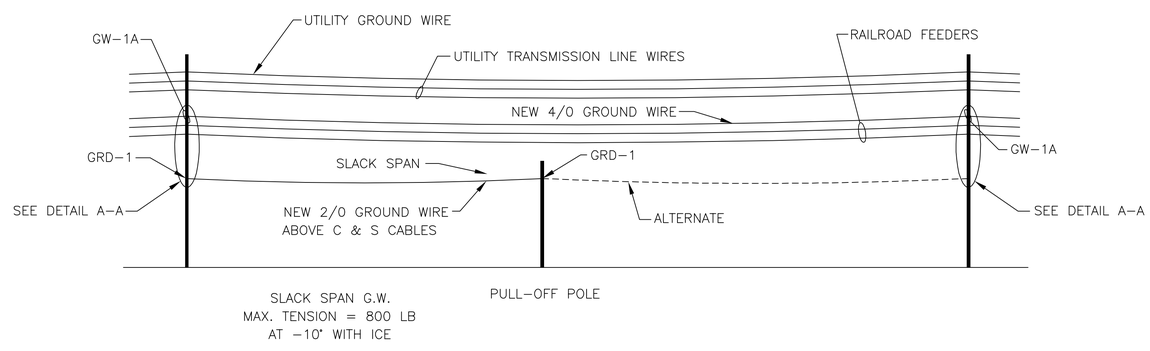

AERIAL GROUND WIRE AT TYPICAL PULL-OFF POLE

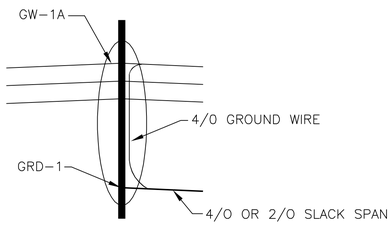

DETAIL A-A

SEE DWG. E-13 FOR ADDITIONAL INFORMATION

NO SCALE

THE INFORMATION, INCLUDING ESTIMATED QUANTITIES OF WORK SHOWN ON THESE SHEETS IS BASED ON LIMITED INVESTIGATIONS BY THE STATE AND IS IN NO WAY WARRANTED TO INDICATE THE TRUE CONDITIONS OR ACTUAL QUANTITIES OR DISTRIBUTION OF QUANTITIES OF WORK WHICH WILL BE REQUIRED.

URS CORPORATION AES
500 ENTERPRISE DRIVE
ROCKY HILL, CT 06067
1-(860)-529-8882

NO.	DATE	DESCRIPTION

REVISIONS

STATE OF CONNECTICUT
DEPARTMENT OF TRANSPORTATION

STAMFORD YARD CATENARY IMPROVEMENTS

TYPICAL GROUNDING OF EXISTING STRUCTURES
TYPICAL GROUND WIRE PROFILE

ENGINEER: URS CORPORATION AES
DESIGNER: RW | DRAFTER: AMK | CHECKER: AJM
APPROVED: T. HOLLAND | DATE: XX/XX/XX
STRUCTURE NO. | BRIDGE LOG NO. | STRUCTURE SHEET NO. F-24

PROJECT CONTROL DATE: XX/XX/XX DISK FILENAME: F-24.dwg XX% DESIGN

F H W A REGION	STATE	TOWN	FED. AID PROJ. NO.	PROJ. NO.	YEAR	SHEET NUMBER
1	CONN.	VARIOUS		301-163	2014	

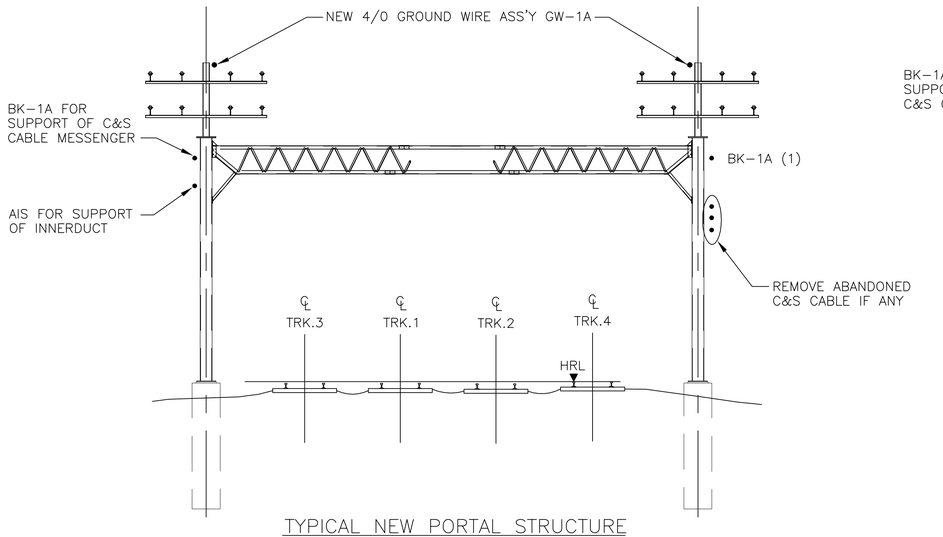

TYPICAL NEW PORTAL STRUCTURE

LOOKING EAST

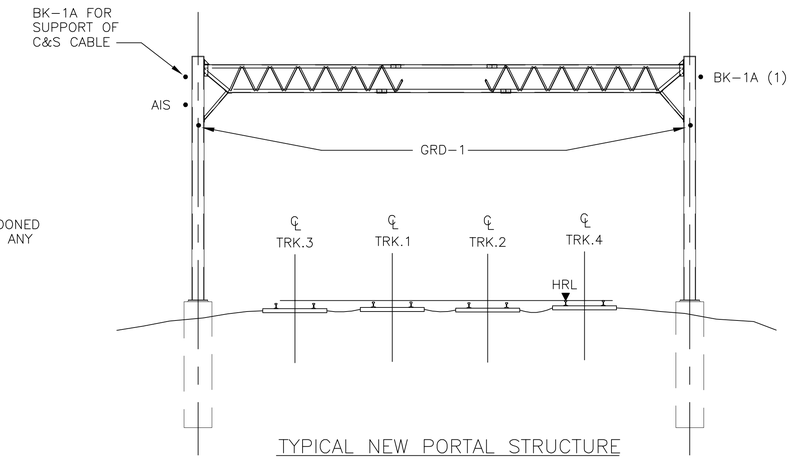

TYPICAL NEW PORTAL STRUCTURE

WITHOUT FEEDERS

LOOKING EAST

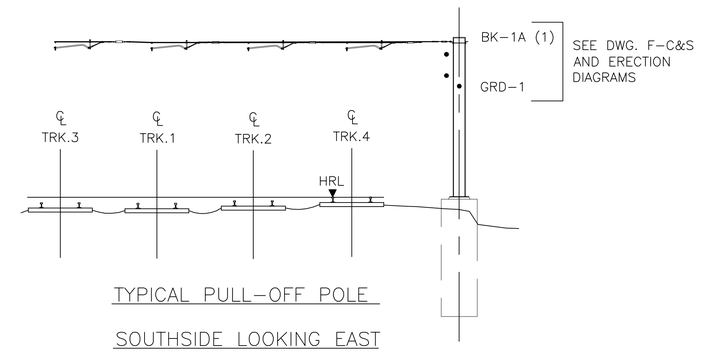

TYPICAL PULL-OFF POLE

SOUTHSIDE LOOKING EAST

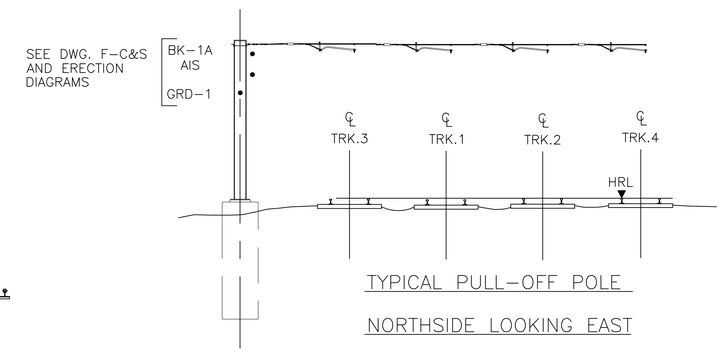

TYPICAL PULL-OFF POLE

NORTHSIDE LOOKING EAST

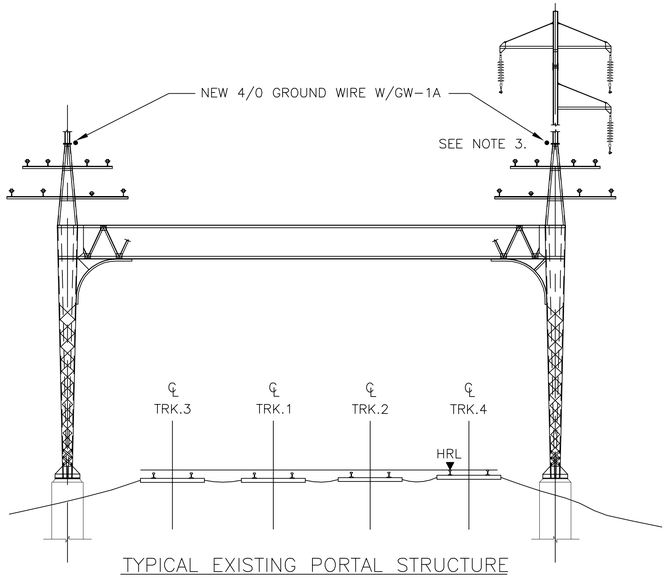

TYPICAL EXISTING PORTAL STRUCTURE

WITH OVERBUILT TRANSMISSION LINES

LOOKING EAST

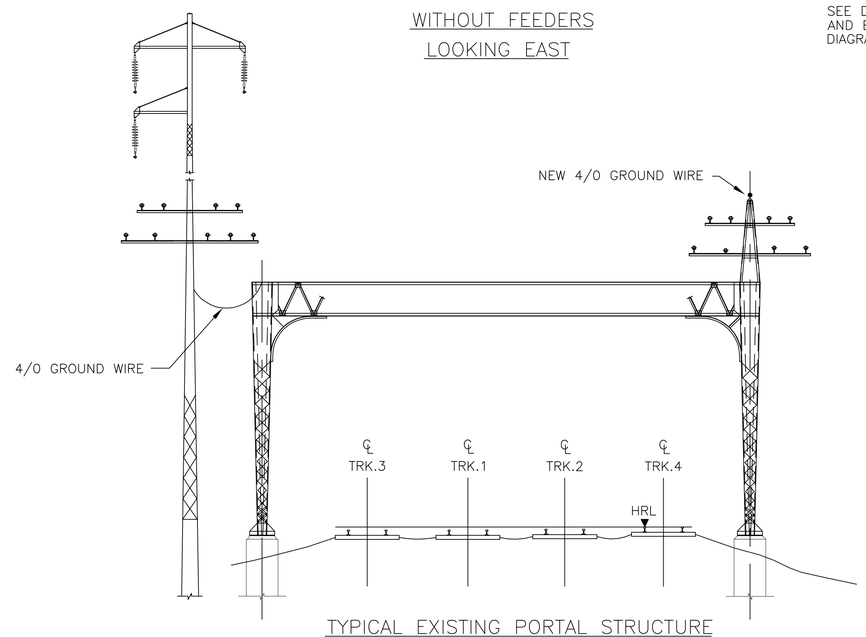

TYPICAL EXISTING PORTAL STRUCTURE

WITH SEPARATE TRANSMISSION LINES STRUCTURE

CARRYING RAILROAD FEEDERS

NOTES:

1) NEW GROUND WIRE SHALL BE TENSIONED FOR A SAG EQUAL TO ADJACENT FEEDER WIRE.
2) WHERE AN EXISTING 2/0 GROUND WIRE IS IN PLACE, IT SHALL BE REPLACED WITH A 4/0 WIRE.
3) ON STRUCTURES WITH UTILITY OVERBUILDS, THE GROUND WIRE CAN BE RELOCATED UNDER THE TOP R.R. FEEDER CROSSARM (TRACK SIDE) ONLY WHEN THERE IS NOT SAFE WORKING CLEARANCE TO THE UTILITY FEEDER.

SCALE: NONE

THE INFORMATION, INCLUDING ESTIMATED QUANTITIES OF WORK SHOWN ON THESE SHEETS IS BASED ON LIMITED INVESTIGATIONS BY THE STATE AND IS IN NO WAY WARRANTED TO INDICATE THE TRUE CONDITIONS OR ACTUAL QUANTITIES OR DISTRIBUTION OF QUANTITIES OF WORK WHICH WILL BE REQUIRED.

URS CORPORATION AES
500 ENTERPRISE DRIVE
ROCKY HILL, CT 06067
1-(860)-529-8882

NO.	DATE	DESCRIPTION

REVISIONS

STATE OF CONNECTICUT
DEPARTMENT OF TRANSPORTATION

STAMFORD YARD CATENARY IMPROVEMENTS

TYPICAL GROUND WIRE AND INNER DUCT SUPPORTS

ENGINEER: URS CORPORATION AES
DESIGNER: RW | DRAFTER: AMK | CHECKER: AJM
APPROVED: T. HOLLAND | DATE: XX/XX/XX
STRUCTURE NO. | BRIDGE LOG NO. | STRUCTURE SHEET NO. F-25

PROJECT CONTROL DATE: XX/XX/XX DISK FILENAME: F-25.dwg XX% DESIGN

F H W A REGION	STATE	TOWN	FED. AID PROJ. NO.	PROJ. NO.	YEAR	SHEET NUMBER
1	CONN.	VARIOUS		301-163	2014	

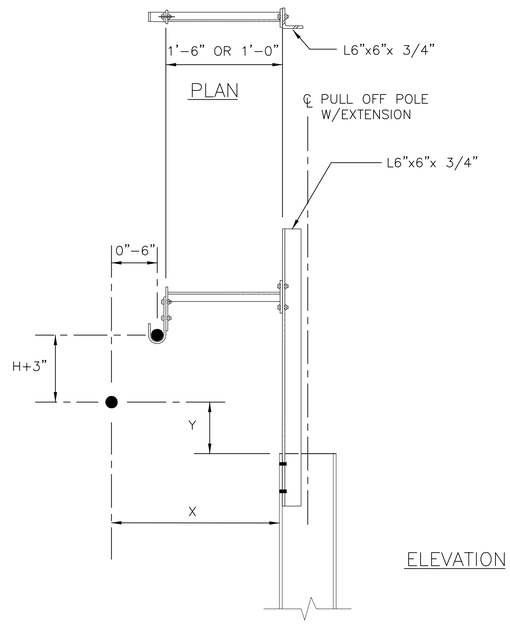

CABLE SUPPORT AT PULL OFF POLE EXTENSION

SEE DWG. S-14 FOR STEEL DETAIL

AT 60°F, WHEN Y ≥ 18" AND X ≥ 24" NO ATTACHMENT IS REQUIRED.

WHEN Y< 18" AND/OR X< 24" INSTALL POLE EXTENSION AND CABLE SUPPORT BRACKET AS NOTED BELOW.

ATTACH CABLE TO POLE OR POLE EXTENSION BY RAISING THE CABLE BY AMOUNT SHOWN IN TABLE PLUS 3" AND PULL CABLE TOWARDS POLE UP TO 6" USING PROPER CABLE BRACKET.

"H" VALUE

°F	C & S	COMM.	FIBER OPTIC
0	0"	0"	0"
10	3/4"	1 1/4"	1 1/4"
20	1 1/2"	2 1/2"	2 1/2"
30	2 1/4"	3 1/4"	3 1/4"
40	3"	5"	5"
50	3 3/4"	6 1/4"	6 1/4"
60	4 1/2"	7 1/2"	7 1/2"
70	5 1/4"	8 3/4"	8 3/4"
80	6"	10"	10"
90	6 3/4"	11 1/4"	11 1/4"
100	7 1/2"	12 1/2"	12 1/2"

REQUIREMENT FOR C&S AND FIBER OPTIC CABLE MESSENGER SUPPORT ON NEW PULL-OFF POLES

1. SINGLE CABLE MESSENGER

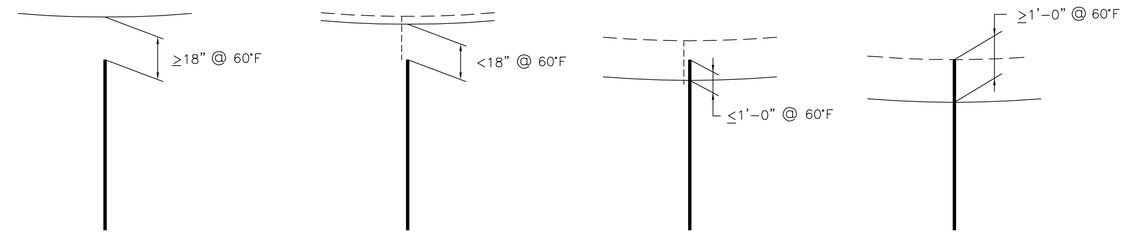

NO ATTACHMENT NEEDED

ADD POLE EXTENSION AND LIFT AND ATTACH MESSENGER 2'-0" ABOVE TOP OF POLE

LIFT MESSENGER 1'-0" AND ATTACH TO POLE EXTENSION

LIFT MESSENGER 1'-0" AND ATTACH TO POLE (BUT NOT HIGHER THAN ADJACENT STRUCTURES)

2. TWO CABLE MESSENGERS

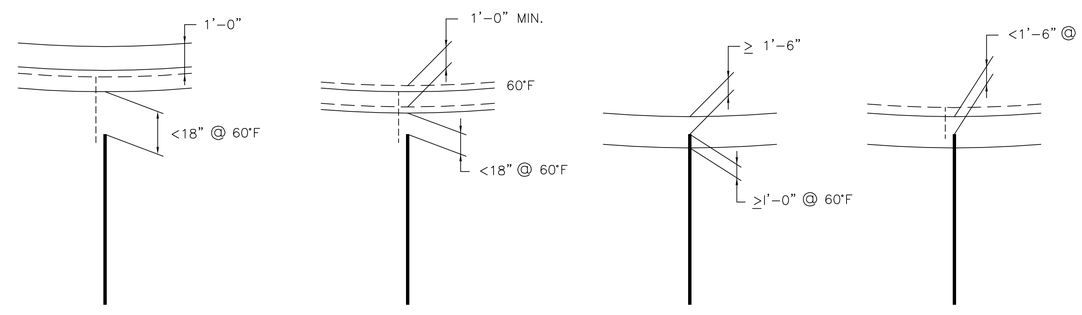

LIFT ONLY LOWER MESSENGER ON TO POLE EXTENSION IF, AFTER LIFTING, 1'-0" MINIMUM REMAINS TO NEXT CABLE

EXTEND POLE EXTENSION TO ALLOW MESSENGERS TO BE SEPERATED BY A MINIMUM OF 1'-0"

LIFT MESSENGER 1'-0" AND ATTACHED TO POLE (BUT NOT HIGHER THAN ADJACENT STRUCTURES) NO POLE EXTENSION REQUIRED

ADD POLE EXTENSION ONLY FOR UPPER MESSENGER

NOTES

1) CLEARANCES SHOWN ARE FOR 60 DEGREES F AMBIENT TEMPERATURE. CONDITIONS AND VARIATIONS WILL OCCUR THROUGHOUT THE AMBIENT TEMPERATURE RANGE. TYPICAL VALUES FOR GUIDANCE ARE GIVEN IN NOTES 2 & 3.
2) CLEARANCES AT 100 DEGREES F AMBIENT TEMPERTATURE CAN BE UP TO 12" LESS THAN SHOWN.
3) CLEARANCES AT 0 DEGREE F AMBIENT TEMPERTATURE MUST BE 12" MORE THAN SHOWN.
4) FOR PULL-OFF POLE EXTENSION SEE DWG. S-6.
5) FOR MESSENGER SUPPORT BRACKETS SEE DWG. S-14.
6) MAINTAIN A MINIMUM OF 1'-0" SEPARATION BETWEEN FIBER OPTIC DUCT AND C&S CABLES AT SUPPORT AND IN-SPAN.

SCALE: NONE

THE INFORMATION, INCLUDING ESTIMATED QUANTITIES OF WORK SHOWN ON THESE SHEETS IS BASED ON LIMITED INVESTIGATIONS BY THE STATE AND IS IN NO WAY WARRANTED TO INDICATE THE TRUE CONDITIONS OR ACTUAL QUANTITIES OR DISTRIBUTION OF QUANTITIES OF WORK WHICH WILL BE REQUIRED.

URS CORPORATION AES
500 ENTERPRISE DRIVE
ROCKY HILL, CT 06067
1-(860)-529-8882

NO.	DATE	DESCRIPTION

REVISIONS

STATE OF CONNECTICUT
DEPARTMENT OF TRANSPORTATION

STAMFORD YARD CATENARY IMPROVEMENTS

CABLE MESSENGER ATTACHMENT TO PULL-OFF POLES

ENGINEER: URS CORPORATION AES
DESIGNER: RW | DRAFTER: AMK | CHECKER: AJM
APPROVED: T. HOLLAND | DATE: XX/XX/XX
STRUCTURE NO. | BRIDGE LOG NO. | STRUCTURE SHEET NO. F-32

PROJECT CONTROL DATE: XX/XX/XX DISK FILENAME: F-32.dwg XX% DESIGN

F H W A REGION	STATE	TOWN	FED. AID PROJ. NO.	PROJ. NO.	YEAR	SHEET NUMBER
1	CONN.	VARIOUS		301-163	2014	

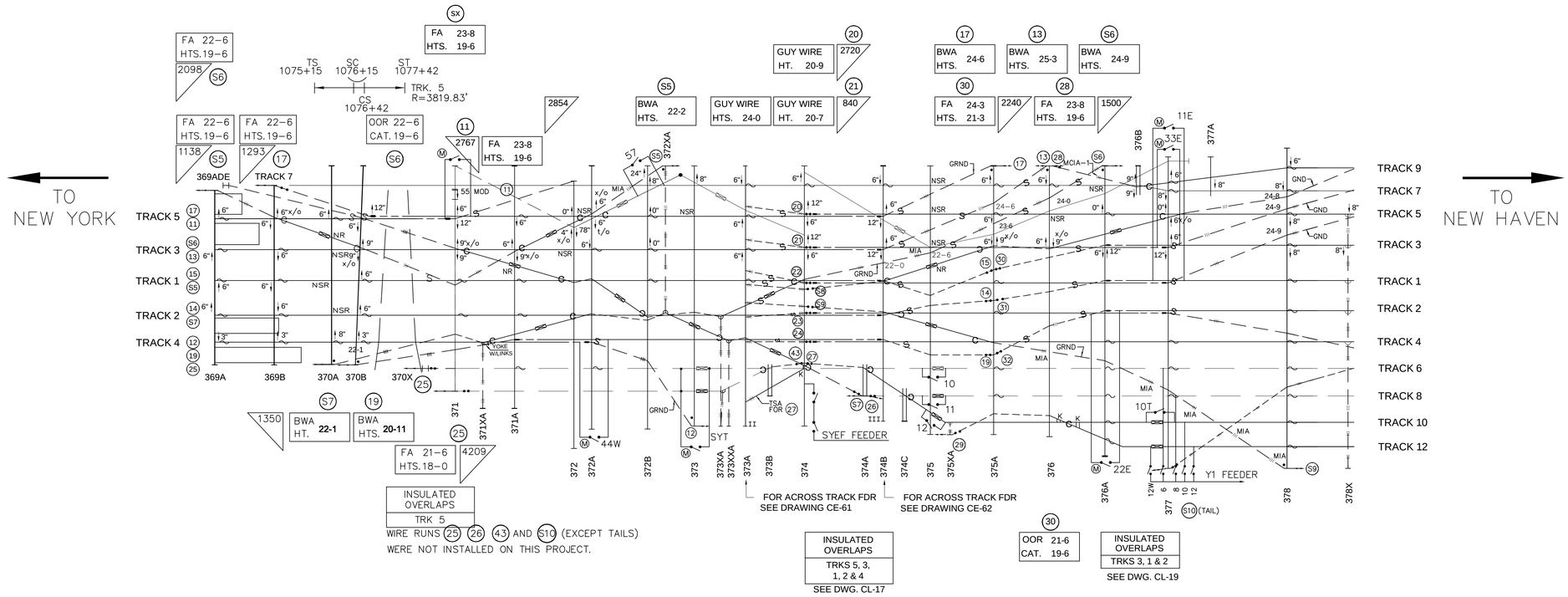

ABBREVIATION:

K	KNUCKLE
NSR	NOT SUPPORTED OR REGISTERED
NS	NOT SUPPORTED
NR	NOT REGISTERED

NOTES:

1. FOR GENERAL NOTES, SEE DRAWING X-X.
2. ALL HEIGHTS ARE ROUNDED TO THE NEAREST 1/2".
3. IN ORDER TO REDUCE THE RADIAL LOAD ON THE INSULATOR, UTILIZE TWO SUPPORT ASSEMBLIES WHERE REQUIRED.
4. THE MID-SPAN INSULATION ASSEMBLY AND POTENTIAL JUMPER ARE REQUIRED, IF VERTICAL CLEARANCE BETWEEN THE OOR WIRE AND THE ADJACENT DIFFERENT ELECTRICAL SECTION WIRE IS LESS THAN 2 FT.

SEE ERECTION DIAGRAMS FOR ALL AS BUILT WIRE HEIGHTS AND STAGGERS

THE INFORMATION, INCLUDING ESTIMATED QUANTITIES OF WORK SHOWN ON THESE SHEETS IS BASED ON LIMITED INVESTIGATIONS BY THE STATE AND IS IN NO WAY WARRANTED TO INDICATE THE TRUE CONDITIONS OR ACTUAL QUANTITIES OR DISTRIBUTION OF QUANTITIES OF WORK WHICH WILL BE REQUIRED.

URS CORPORATION AES
500 ENTERPRISE DRIVE
ROCKY HILL, CT 06067
1-(860)-529-8882

NO.	DATE	DESCRIPTION

REVISIONS

STATE OF CONNECTICUT
DEPARTMENT OF TRANSPORTATION

STAMFORD YARD CATENARY IMPROVEMENTS

CATENARY LAYOUT
STAMFORD, 369A TO 378X

ENGINEER: URS CORPORATION AES
DESIGNER: RW | DRAFTER: AMK | CHECKER: AJM
APPROVED: T. HOLLAND | DATE: XX/XX/XX
STRUCTURE NO. | BRIDGE LOG NO. | STRUCTURE SHEET NO. L-1

PROJECT CONTROL DATE: XX/XX/XX DISK FILENAME:L-1 (TRACK 7).DWG XX% DESIGN

F H W A REGION	STATE	TOWN	FED. AID PROJ. NO.	PROJ. NO.	YEAR	SHEET NUMBER
1	CONN.	VARIOUS		301-163	2014	

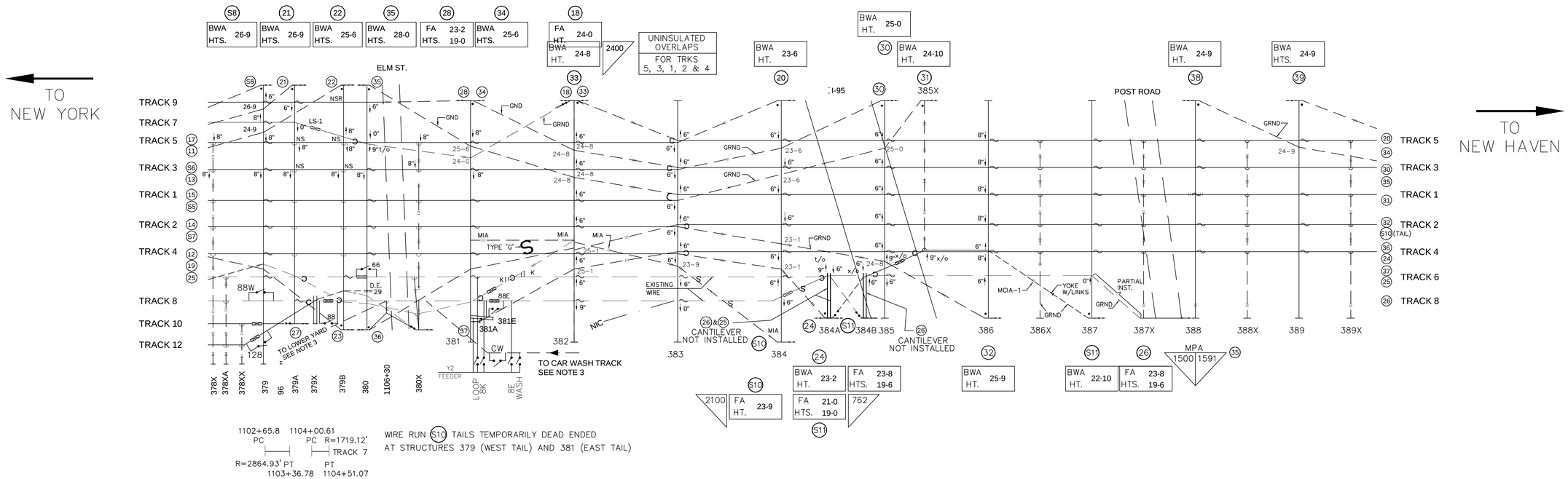

WIRE RUN (S10) TAILS TEMPORARILY DEAD ENDED AT STRUCTURES 379 (WEST TAIL) AND 381 (EAST TAIL)

WHERE CATENARY WIRE RUN FIXED ANCHORS TERMINATE AT CLIMBABLE POLES P.C.E. ASSEMBLIES WERE INSTALLED

WIRE RUNS (25) AND (26) NOT INSTALLED (EXISTING WIRE IN USE)

ABBREVIATION:

K KNUCKLE

NSR NOT SUPPORTED OR REGISTERED

NS NOT SUPPORTED

NR NOT REGISTERED

NOTES:

1. FOR GENERAL NOTES, SEE DRAWING X-X.
2. ALL HEIGHTS ARE ROUNDED TO THE NEAREST 1/2".
3. IN ORDER TO REDUCE THE RADIAL LOAD ON THE INSULATOR, UTILIZE TWO SUPPORT ASSEMBLIES WHERE REQUIRED.
4. CONTRACTOR TO TIE IN THE LOWER YARD TRACK AND CAR WASH TRACK CATENARIES.
5. THE MID-SPAN INSULATION ASSEMBLY AND POTENTIAL JUMPER ARE REQUIRED, IF VERTICAL CLEARANCE BETWEEN THE OOR WIRE AND THE ADJACENT DIFFERENT ELECTRICAL SECTION WIRE IS LESS THAN 3 FT.

SEE ERECTION DIAGRAMS FOR ALL AS BUILT WIRE HEIGHTS AND STAGGERS

THE INFORMATION, INCLUDING ESTIMATED QUANTITIES OF WORK SHOWN ON THESE SHEETS IS BASED ON LIMITED INVESTIGATIONS BY THE STATE AND IS IN NO WAY WARRANTED TO INDICATE THE TRUE CONDITIONS OR ACTUAL QUANTITIES OR DISTRIBUTION OF QUANTITIES OF WORK WHICH WILL BE REQUIRED.

URS CORPORATION AES
500 ENTERPRISE DRIVE
ROCKY HILL, CT 06067
1-(860)-529-8882

NO.	DATE	DESCRIPTION

REVISIONS

STATE OF CONNECTICUT
DEPARTMENT OF TRANSPORTATION

STAMFORD YARD CATENARY IMPROVEMENTS

CATENARY LAYOUT
STAMFORD, 378X TO 389X

ENGINEER: URS CORPORATION AES
DESIGNER: RW | DRAFTER: AMK | CHECKER: AJM
APPROVED: T. HOLLAND | DATE: XX/XX/XX
STRUCTURE NO. | BRIDGE LOG NO. | STRUCTURE SHEET NO. L-2

PROJECT CONTROL DATE: XX/XX/XX DISK FILENAME: L-2 (TRACK 7).DWG XX% DESIGN

F H W A REGION	STATE	TOWN	FED. AID PROJ. NO.	PROJ. NO.	YEAR	SHEET NUMBER
1	CONN.	VARIOUS		301–163	2014	

STAGGERS																																		
STRUCTURE NUMBER		369A	369B	370A	370B	370X	371	371XA	371A	372	372A	372B	372XA	373	373XA	373XXA	373A	373B	374	374A	374B	374C	375	375XA	375A	376	376A	376B	377	377A	378	378X	378XA
STATIONING*		1072+53	1074+03	1075+48	1076+43	1077+93	1078+61	1079+30	1080+06	1081+60	1082+06	1083+46	1083+91	1084+60	1085+31	1085+51	1085+93	1086+43	1087+40	1088+98	1089+41	1089+92	1090+60	1091+10	1092+20	1093+60	1095+01	1095+85	1096+60	1098+00	1099+60	1101+15	1101+52
SPAN (FEET)			150	145	95	150	68	69	76	154	46	140	45	69	71	20	42	50	97	158	43	51	68	50	110	140	141	84	75	140	160	155	37
VERSINE (INCHES)																								6	7								
CONTACT WIRE HT. H.R.L.	TRK. 9							—	—	—	—	—		—		—		—	—	—	—	—	—	—	—	—	—	18–1	18–0	—	18–0	—
MESSENGER WIRE HT. H.R.L.	TRK. 9							—	—	—	—	—		—		—		—	—	—	—	—	—	—	—	—	—	22–0	21–6	—	21–6	—
UNDERSIDE OF TRUSS TO H.R.L.	TRK. 9							22–9	—	—	—	—		—		—		—	—	—	—	—	—	—	—	—	—	—	26–10	—	26–2	—
CONTACT WIRE HT. H.R.L.	TRK. 7							—	—	18–3	18–1	18–0		18–0		18–0		—	18–0	—	18–0	—	—		18–0	18–0	—	18–0	18–0	18–0	18–0	—
MESSENGER WIRE HT. H.R.L.	TRK. 7							—	—	21–6	21–6	21–6		21–6		21–6		—	21–0	—	21–6	—	—		21–6	21–6	—	21–0	21–6	21–6	21–6	—
UNDERSIDE OF TRUSS TO H.R.L.	TRK. 7							—	—	25–7	26–0	26–0		26–6		24–0		—	21–11	—	24–0	—	26-0i		26–0	26-2i	26–0	—	26–10	26–6	26–2	—
CONTACT WIRE HT. H.R.L.	TRK. 5	18–0	18–0	18–0	18–0 18–9		18-0 18-9	18–0	18–0	—	18–0		—			18–0		—	18-0 19-0	—	18-0 18-9	—	—		18–0	—	18–0	—	18–0	—	18-1i	—
MESSENGER WIRE HT. H.R.L.	TRK. 5	21–6	21–0	21–6	21–0 21–6		21-0 21-6	21–6	21–6	—	21–6		—			21–6		—	20-6 21-0	—	21-0 21-6	—	—		21–6	—	21–6	—	21–0	—	21-7i	—
UNDERSIDE OF TRUSS TO H.R.L.	TRK. 5	24–0	24–0	24–0	24–0		22–9	24–0	25–7	26–0	26–0		26–6			24–0		—	21–10	—	24–0	—	26-0i		26–0	26-2i	26–0	—	26–10	—	26–2	—
CONTACT WIRE HT. H.R.L.	TRK. 3	18–0	18–0	NSR	18–0		18–0	18–0	—	18–0	18–0		—			18–0		—	18-0 19-0	—	18-0 18-9	—	—		18–0	18–0	18-0 18-9	—	18-0 18-9	—	18–0	—
MESSENGER WIRE HT. H.R.L.	TRK. 3	21–6	21–6	NSR	21–0		21–0	21–0	—	21–6	21–6		—			21–6		—	20-6 21-0	—	21-0 21-6	—	—		21–0	21–0	21-0 21-6	—	21-0 21-6	—	21–6	—
UNDERSIDE OF TRUSS TO H.R.L.	TRK. 3	24–0	24–0	24–0	24–0		22–9	24–0	25–7	26–0	26–0		26–6			24–0		—	21-8i	—	24–0	—	26-0i		26–0	26-2i	26–0	—	26–10	—	26–2	—
CONTACT WIRE HT. H.R.L.	TRK. 1	18–0	18–0	NSR	18–0																												
MESSENGER WIRE HT. H.R.L.	TRK. 1	21–6	21–6	NSR	21–6																												
UNDERSIDE OF TRUSS TO H.R.L.	TRK. 1	24–0	24–0	24–0	24–0																												
CONTACT WIRE HT. H.R.L.	TRK. 2	18–0	18–0	NSR	18–0																												
MESSENGER WIRE HT. H.R.L.	TRK. 2	21–6	21–6	NSR	21–6																												
UNDERSIDE OF TRUSS TO H.R.L.	TRK. 2	24–0	24–0	24–0	24–0																												
CONTACT WIRE HT. H.R.L.	TRK. 4	18–0	18–0	18–0	18–0																												
MESSENGER WIRE HT. H.R.L.	TRK. 4	21–6	21–6	21–6	21–6																												
UNDERSIDE OF TRUSS TO H.R.L.	TRK. 4	24–0	24–0	24–0	24–0																												
CONTACT WIRE HT. H.R.L.	WIRE S5	18–1	—	18–1	19–9	18–1	18–1	18–1																									
MESSENGER WIRE HT. H.R.L.	WIRE S5	21–6	21–7i	21–6	21–6	21–6	21–6	21–6																									
UNDERSIDE OF TRUSS TO H.R.L.	WIRE S5	24–0	24–0	24–0	22–9	24–0	25–7	26–0																									

NOTES

1. FOR GENERAL NOTES, SEE DRAWING X–X.

ABBREVIATIONS:

NSR NOT SUPPORTED OR REGISTERED

NS NOT SUPPORTED

NR NOT REGISTERED

K KNUCKLE

NOTES:

1. ALL HEIGHTS ARE ROUNDED TO THE NEAREST 1/2".
2. THE MID–SPAN INSULATION ASSEMBLY AND POTENTIAL JUMPER ARE REQUIRED, IF VERTICAL CLEARANCE BETWEEN THE OOR WIRE AND THE ADJACENT DIFFERENT ELECTRICAL SECTION WIRE IS LESS THAN 3 FT.

WHERE CATENARY WIRE RUN FIXED ANCHORS TERMINATE AT CLIMBABLE POLES P.C.E. ASSEMBLIES WERE INSTALLED

SEE ERECTION DIAGRAMS FOR ALL AS BUILT WIRE HEIGHTS AND STAGGERS

THE INFORMATION, INCLUDING ESTIMATED QUANTITIES OF WORK SHOWN ON THESE SHEETS IS BASED ON LIMITED INVESTIGATIONS BY THE STATE AND IS IN NO WAY WARRANTED TO INDICATE THE TRUE CONDITIONS OR ACTUAL QUANTITIES OR DISTRIBUTION OF QUANTITIES OF WORK WHICH WILL BE REQUIRED.

URS CORPORATION AES
500 ENTERPRISE DRIVE
ROCKY HILL, CT 06067
1-(860)-529-8882

NO.	DATE	DESCRIPTION

REVISIONS

STATE OF CONNECTICUT
DEPARTMENT OF TRANSPORTATION

STAMFORD YARD CATENARY IMPROVEMENTS

CATENARY LAYOUT
STAMFORD, 378X TO 389X

ENGINEER: URS CORPORATION AES
DESIGNER: RW | DRAFTER: AMK | CHECKER: AJM
APPROVED: T. HOLLAND | DATE: XX/XX/XX
STRUCTURE NO. | BRIDGE LOG NO. | STRUCTURE SHEET NO. L–3

PROJECT CONTROL DATE: XX/XX/XX DISK FILENAME:L-3 (TRACK 7).DWG XX% DESIGN

F H W A REGION	STATE	TOWN	FED. AID PROJ. NO.	PROJ. NO.	YEAR	SHEET NUMBER
1	CONN.	VARIOUS		301–163	2014	

																					8"	8"	8"	8"	8"	8"	8"
STAGGERS																					⊠		⊠		⊠		⊠
STRUCTURE NUMBER		378XA	378XX	379	379A	379X	379B	380	380X	381	381A	382	383	384	384A	384B	385	385X	386	386X	387	387X	388	388X	389	389X
STATIONING*		1101+52	1101+98	1102+61	1103+51	1104+10	1104+93	1105+59	1107+17	1108+60	1108+95	1111+60	1114+60	1117+60	1118+98	1120+02	1120+60	1121+75	1123+60	1125+10	1126+60	1128+10	1129+60	1131+10	1132+60	1134+10
SPAN (FEET)		37	46	63	90	59	83	66	158	143	35	265	300	300	138	104	58	115	185	150	150	150	150	150	150	150
VERSINE (INCHES)																										
CONTACT WIRE HT. H.R.L.	TRK. 9	—	—	18–0	18–0	—	—	18–0	—																	
MESSENGER WIRE HT. H.R.L.	TRK. 9	—	—	21–6	21–6	—	—	21–6	—																	
UNDERSIDE OF TRUSS TO H.R.L.	TRK. 9	—	—	25–6	26–0	—	26–0	26-1i	—																	
CONTACT WIRE HT. H.R.L.	TRK. 7	—	—	18–0	18–0	—	18–0	18–1	—																	
MESSENGER WIRE HT. H.R.L.	TRK. 7	—	—	21–6	21–6	—	21–6	21–6	—																	
UNDERSIDE OF TRUSS TO H.R.L.	TRK. 7	—	—	25–6	26–0	—	26–0	26-1i	—																	
CONTACT WIRE HT. H.R.L.	TRK. 5	—	—	18–0	—	—	—	18–0	18–0	18-0	18-0	18-0	—	—	18-0	17-8	17-7	17-6	17-4							
MESSENGER WIRE HT. H.R.L.	TRK. 5	—	—	21–6	—	—	—	21–0	21–6	21-6	21-0 21-6	21-6	—	—	21-6	21-2	21-1	21-0	20-10							
UNDERSIDE OF TRUSS TO H.R.L.	TRK. 5	—	—	25–6	26–0	—	26–0	26-1i	22-1	22-4i	22-8i	22-7	—	—	22-4	22-5	21-8	21-10	21-5i							
CONTACT WIRE HT. H.R.L.	TRK. 3	—	—	18–0	—	—	—	18–0	18–0	18-0	18-0	18-0	—	—	18-0	17-8	17-7	17-6	17-4							
MESSENGER WIRE HT. H.R.L.	TRK. 3	—	—	21–6	—	—	—	21–6	21–6	21-6	21-0 21-6	21-6	—	—	21-6	21-2	21-1	21-0	20-10							
UNDERSIDE OF TRUSS TO H.R.L.	TRK. 3	—	—	25–6	26–0	—	26–0	26-1i	22-1	22-4i	22-8i	22-7	—	—	22-4	22-5	21-8	21-10	21-5i							
CONTACT WIRE HT. H.R.L.	TRK. 1									18-0	18-0	18-0	—	—	18-0	17-8	17-7	17-6	17-4							
MESSENGER WIRE HT. H.R.L.	TRK. 1									21-6	21-0 21-6	21-6	—	—	21-6	21-2	21-1	22-0	20-10							
UNDERSIDE OF TRUSS TO H.R.L.	TRK. 1									22-4i	22-8i	22-7	—	—	22-4	22-5	21-8	21-10	21-5i							
CONTACT WIRE HT. H.R.L.	TRK. 2									18-0	18-0	18-0	—	—	18-0	17-8	17-7	17-6	17-4							
MESSENGER WIRE HT. H.R.L.	TRK. 2									21-6	21-6 21-0	21-6	—	—	21-6	21-2	21-1	21-0	20-10							
UNDERSIDE OF TRUSS TO H.R.L.	TRK. 2									22-4i	22-8i	22-7	—	—	22-4	22-5	21-8	21-10	21-5i							
CONTACT WIRE HT. H.R.L.	TRK. 4									18-0	18-0	18-0	—	—	18-0	17-8	17-7	17-6	17-4							
MESSENGER WIRE HT. H.R.L.	TRK. 4									21-6	21-6 21-0	21-6	—	—	21-6	21-2	21-1	21-0	20-10							
UNDERSIDE OF TRUSS TO H.R.L.	TRK. 4									22-4i	22-8i	22-7	—	—	22-4	22-5	21-8	21-10	21-5i							

CONTACT WIRE HT. H.R.L.	WIRE S5	
MESSENGER WIRE HT. H.R.L.	WIRE S5	
UNDERSIDE OF TRUSS TO H.R.L.	WIRE S5	

TRK. 6	17-8	18-0	18-0	18-2i	18-1	18-0	17-8	17-7
TRK. 6	21-2	21-6	21-6	22-1i	21-1	21-6	21-2	21-1
TRK. 6	22-4i	22-8i	22-7	—	—	22-4	22-5	21-8

TRK. 8	17-8	18-0	18-0	18-1i
TRK. 8	21-2	21-6	21-6	21-1i
TRK. 8	22-4i	22-8i	22-7	—

CONTACT WIRE HT. H.R.L.	WIRE S11	18-2	18-1	17-9
MESSENGER WIRE HT. H.R.L.	WIRE S11	22-1	21-7	21-3
UNDERSIDE OF TRUSS TO H.R.L.	WIRE S11	—	22-4	22-5

CONTACT WIRE HT. H.R.L.	WIRE S10	18-9
MESSENGER WIRE HT. H.R.L.	WIRE S10	21-9
UNDERSIDE OF TRUSS TO H.R.L.	WIRE S10	22-4i

NOTES

1. FOR GENERAL NOTES, SEE DRAWING X–X.

ABBREVIATIONS:

NSR NOT SUPPORTED OR REGISTERED

NS NOT SUPPORTED

NR NOT REGISTERED

K KNUCKLE

NOTES:

1. ALL HEIGHTS ARE ROUNDED TO THE NEAREST 1/2".
2. THE MID–SPAN INSULATION ASSEMBLY AND POTENTIAL JUMPER ARE REQUIRED, IF VERTICAL CLEARANCE BETWEEN THE OOR WIRE AND THE ADJACENT DIFFERENT ELECTRICAL SECTION WIRE IS LESS THAN 3 FT.

WHERE CATENARY WIRE RUN FIXED ANCHORS TERMINATE AT CLIMBABLE POLES P.C.E. ASSEMBLIES WERE INSTALLED

SEE ERECTION DIAGRAMS FOR ALL AS BUILT WIRE HEIGHTS AND STAGGERS

THE INFORMATION, INCLUDING ESTIMATED QUANTITIES OF WORK SHOWN ON THESE SHEETS IS BASED ON LIMITED INVESTIGATIONS BY THE STATE AND IS IN NO WAY WARRANTED TO INDICATE THE TRUE CONDITIONS OR ACTUAL QUANTITIES OR DISTRIBUTION OF QUANTITIES OF WORK WHICH WILL BE REQUIRED.

URS CORPORATION AES
500 ENTERPRISE DRIVE
ROCKY HILL, CT 06067
1-(860)-529-8882

NO.	DATE	DESCRIPTION

REVISIONS

STATE OF CONNECTICUT
DEPARTMENT OF TRANSPORTATION

STAMFORD YARD CATENARY IMPROVEMENTS

CATENARY LAYOUT
STAMFORD, 378XA TO 389X

ENGINEER: URS CORPORATION AES

DESIGNER: RW | DRAFTER: AMK | CHECKER: AJM

APPROVED: T. HOLLAND | DATE: XX/XX/XX

STRUCTURE NO. | BRIDGE LOG NO. | STRUCTURE SHEET NO. L–4

PROJECT CONTROL DATE: XX/XX/XX DISK FILENAME:L-4 (TRACK 7).DWG XX% DESIGN

F H W A REGION	STATE	TOWN	FED. AID PROJ. NO.	PROJ. NO.	YEAR	SHEET NUMBER
1	CONN.	VARIOUS		301-163	2014	

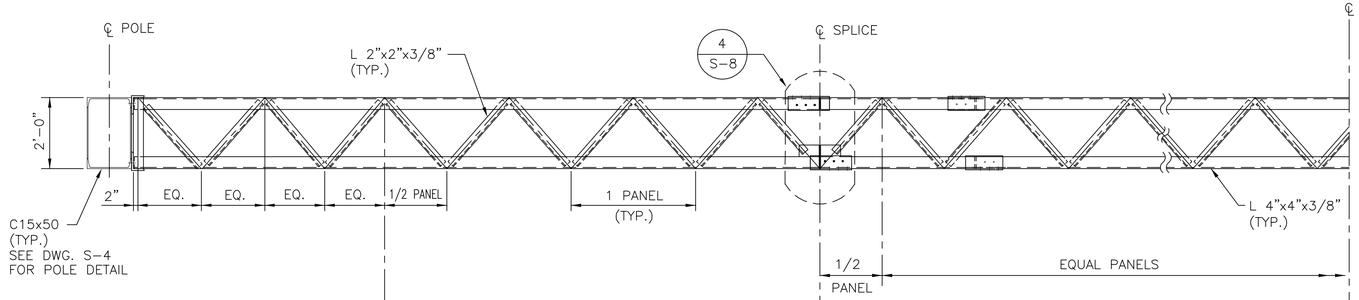

TOP CHORD PLAN

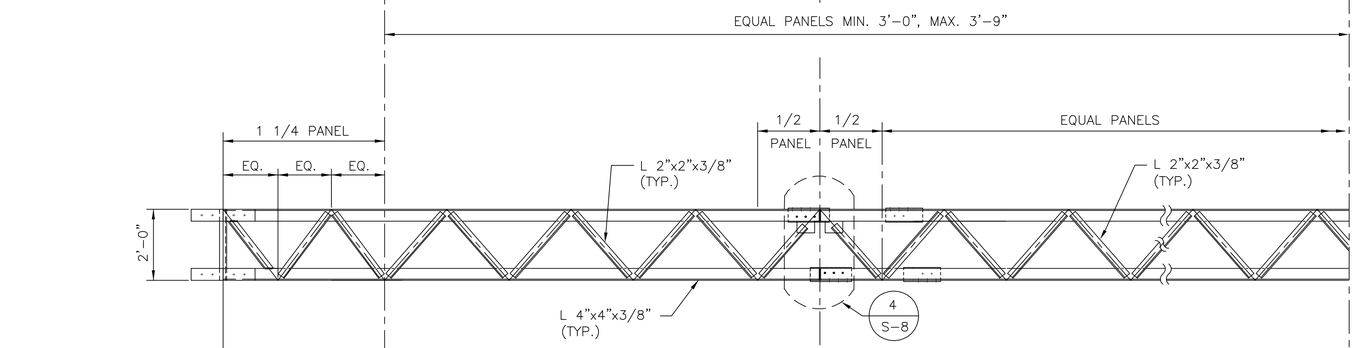

BOTTOM CHORD PLAN

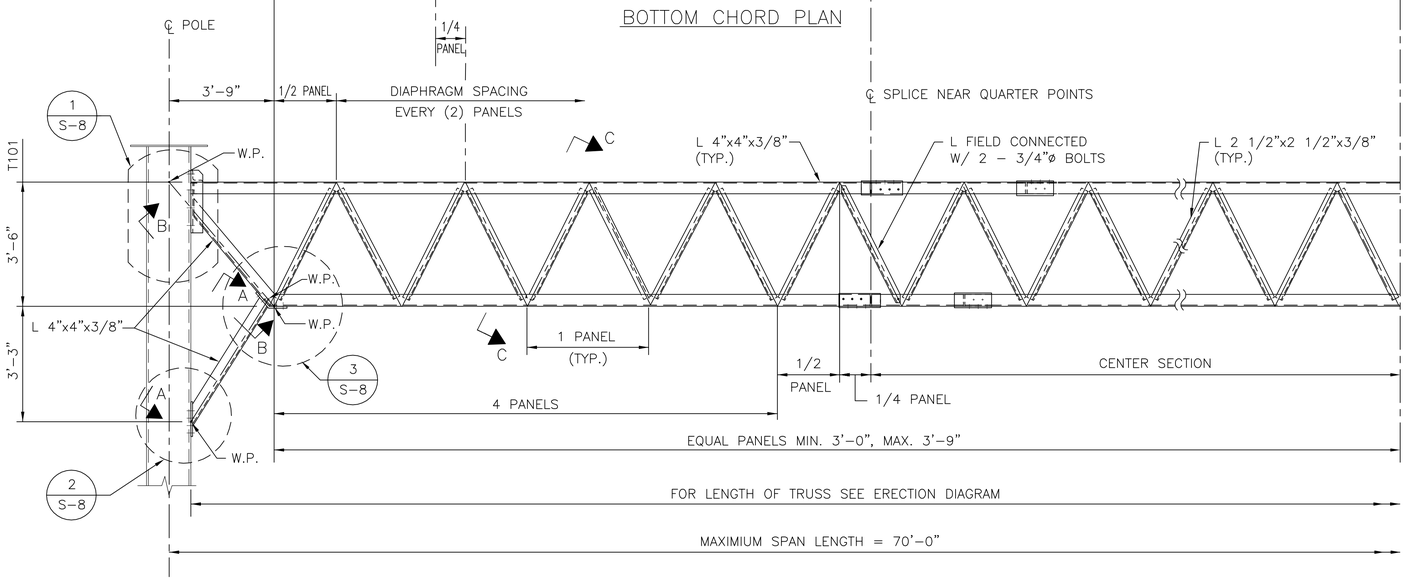

ELEVATION

TRUSS T101

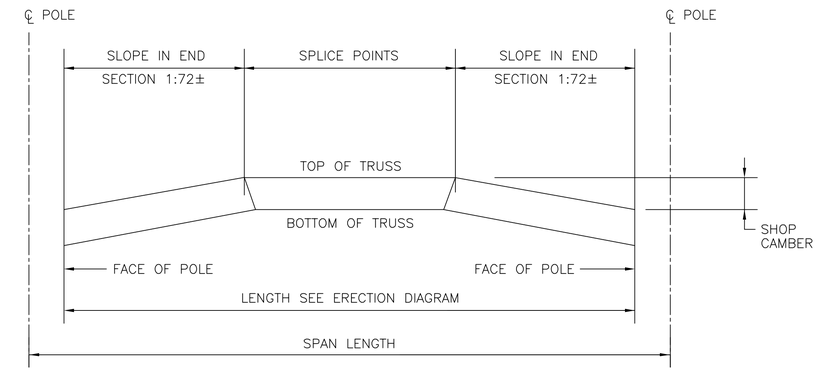

CAMBER DIAGRAM

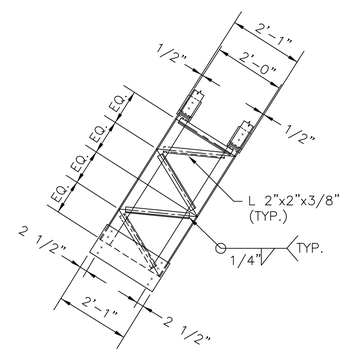

SECT. A - A

(KNEE BRACE)

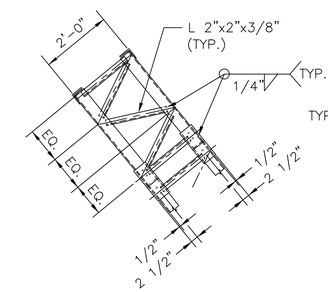

SECT. B - B

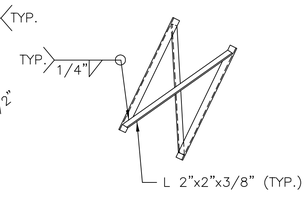

SECT. C - C

(DIAPHRAGM DETAIL)

NOTES

1. FOR GENERAL NOTES, SEE DWG. G-8.
2. INCLINE ALL DIAPHRAGMS TOWARDS THE CENTER LINE OF TRUSS.
3. ALL CONNECTIONS EXCEPT FIELD SPLICES ARE DESIGNED TO BE WELDED. ALTERNATIVELY THE FABRICATOR MAY CHOOSE TO SUBSTITUTE BOLTED CONNECTION FOR HIS CONVENIENCE.

THE INFORMATION, INCLUDING ESTIMATED QUANTITIES OF WORK SHOWN ON THESE SHEETS IS BASED ON LIMITED INVESTIGATIONS BY THE STATE AND IS IN NO WAY WARRANTED TO INDICATE THE TRUE CONDITIONS OR ACTUAL QUANTITIES OR DISTRIBUTION OF QUANTITIES OF WORK WHICH WILL BE REQUIRED.

SCALE: NONE

URS CORPORATION AES
500 ENTERPRISE DRIVE
ROCKY HILL, CT 06067
1-(860)-529-8882

NO.	DATE	DESCRIPTION

REVISIONS

STATE OF CONNECTICUT
DEPARTMENT OF TRANSPORTATION

STAMFORD YARD CATENARY IMPROVEMENTS

STEEL DETAILS - TRUSS T101

ENGINEER: URS CORPORATION AES

DESIGNER: RW | DRAFTER: AMK | CHECKER: AJM

APPROVED: T. HOLLAND | DATE: XX/XX/XX

STRUCTURE NO. | BRIDGE LOG NO. | STRUCTURE SHEET NO. S-1

PROJECT CONTROL DATE: XX/XX/XX DISK FILENAME: S-1.dwg XX% DESIGN

F H W A REGION	STATE	TOWN	FED. AID PROJ. NO.	PROJ. NO.	YEAR	SHEET NUMBER
1	CONN.	VARIOUS		301-163	2014	

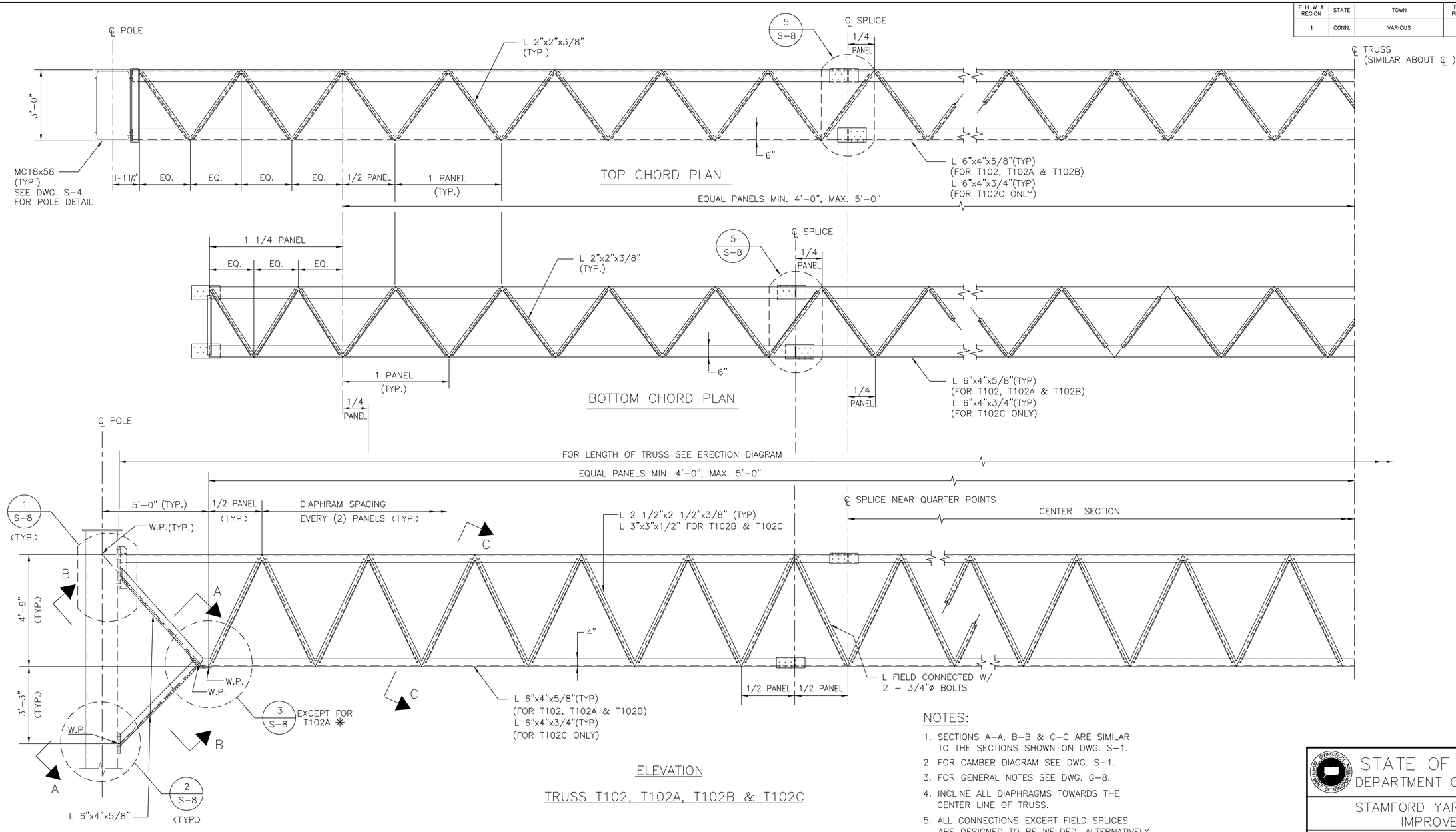

ELEVATION

TRUSS T102, T102A, T102B & T102C

NOTES:

1. SECTIONS A-A, B-B & C-C ARE SIMILAR TO THE SECTIONS SHOWN ON DWG. S-1.
2. FOR CAMBER DIAGRAM SEE DWG. S-1.
3. FOR GENERAL NOTES SEE DWG. G-8.
4. INCLINE ALL DIAPHRAGMS TOWARDS THE CENTER LINE OF TRUSS.
5. ALL CONNECTIONS EXCEPT FIELD SPLICES ARE DESIGNED TO BE WELDED. ALTERNATIVELY THE FABRICATOR MAY CHOOSE TO SUBSTITUTE BOLTED CONNECTION FOR HIS CONVENIENCE.

SCALE: NONE

THE INFORMATION, INCLUDING ESTIMATED QUANTITIES OF WORK SHOWN ON THESE SHEETS IS BASED ON LIMITED INVESTIGATIONS BY THE STATE AND IS IN NO WAY WARRANTED TO INDICATE THE TRUE CONDITIONS OR ACTUAL QUANTITIES OR DISTRIBUTION OF QUANTITIES OF WORK WHICH WILL BE REQUIRED.

URS CORPORATION AES
500 ENTERPRISE DRIVE
ROCKY HILL, CT 06067
1-(860)-529-8882

NO.	DATE	DESCRIPTION

REVISIONS

STATE OF CONNECTICUT
DEPARTMENT OF TRANSPORTATION

STAMFORD YARD CATENARY IMPROVEMENTS

STEEL DETAILS
TRUSS T102, T102A, T102B & T102C

ENGINEER: URS CORPORATION AES
DESIGNER: RW | DRAFTER: AMK | CHECKER: AJM
APPROVED: T. HOLLAND | DATE: XX/XX/XX
STRUCTURE NO. | BRIDGE LOG NO. | STRUCTURE SHEET NO. S-2

PROJECT CONTROL DATE: XX/XX/XX DISK FILENAME: S-2.dwg XX% DESIGN

F H W A REGION	STATE	TOWN	FED. AID PROJ. NO.	PROJ. NO.	YEAR	SHEET NUMBER
1	CONN.	VARIOUS		301-163	2014	

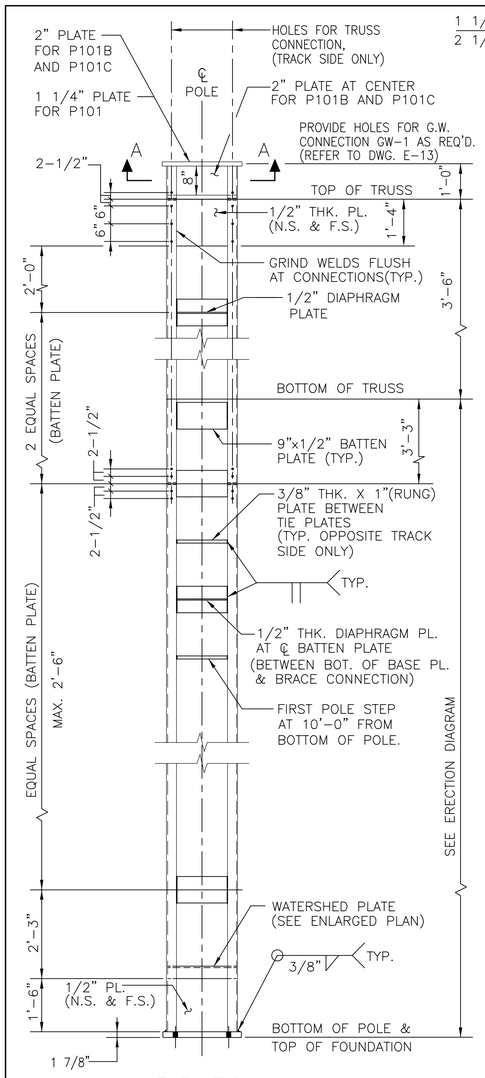

ELEVATION
POLE P101 AND P101B

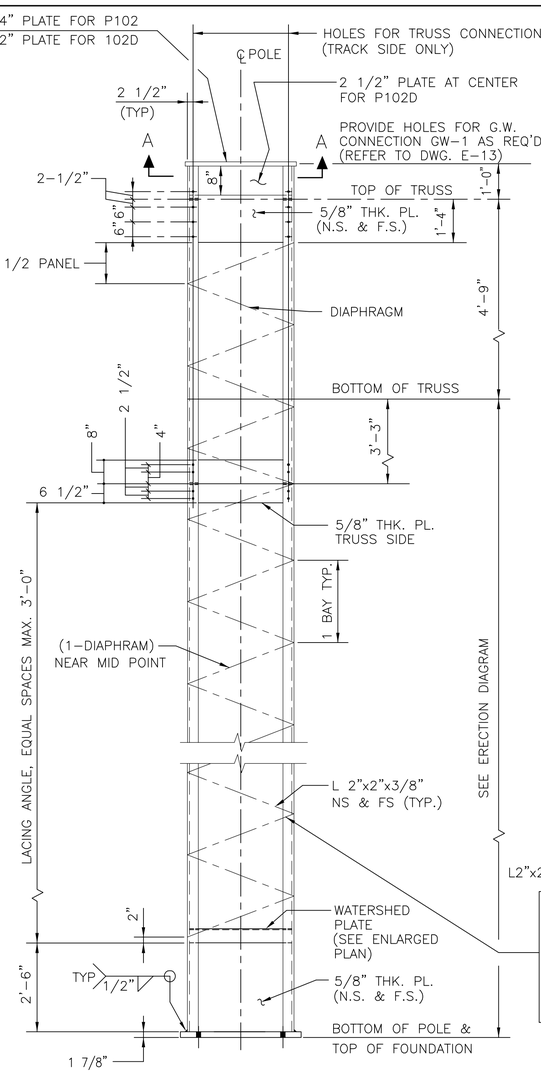

ELEVATION
POLE P102 AND P102D

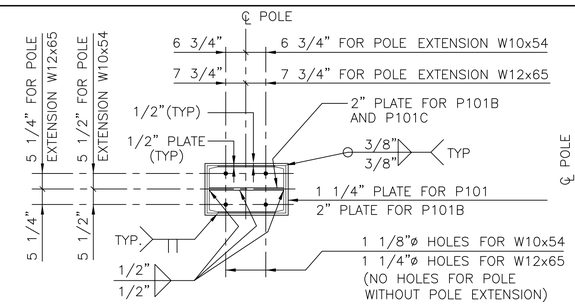

SECTION A-A
FOR MK POLE P101, P101B AND P101C

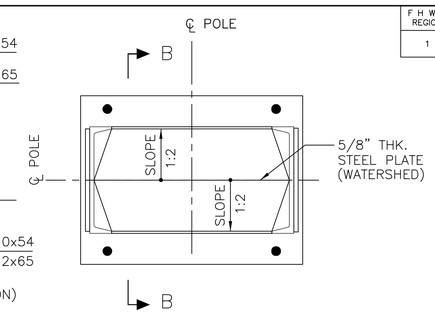

PLAN - POLE WATERSHED

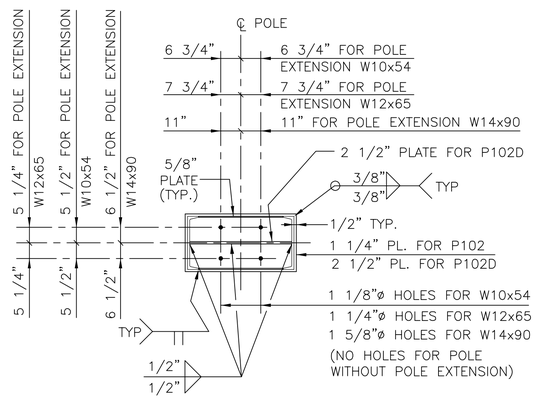

SECTION A-A
FOR MK POLE P102 AND P102D

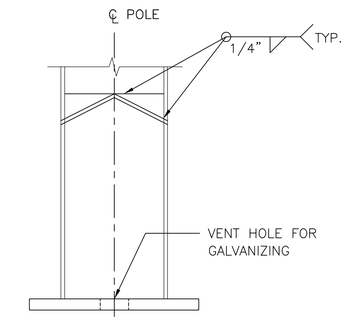

SECTION B - B

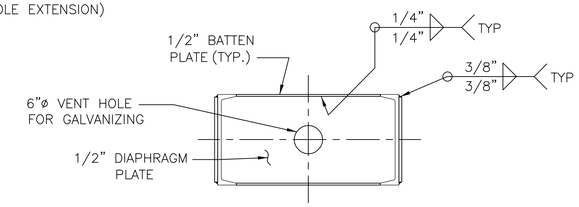

DIAPHRAGM DETAIL
FOR P101, P101B

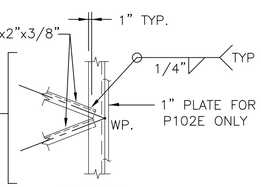

TYPICAL

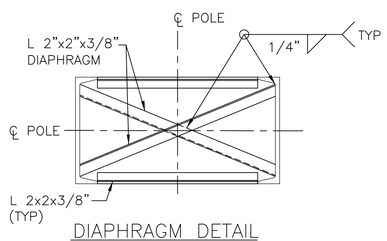

DIAPHRAGM DETAIL
FOR P102 AND P102D

NOTES:

1.FOR GENERAL NOTES, SEE DWG G-8.

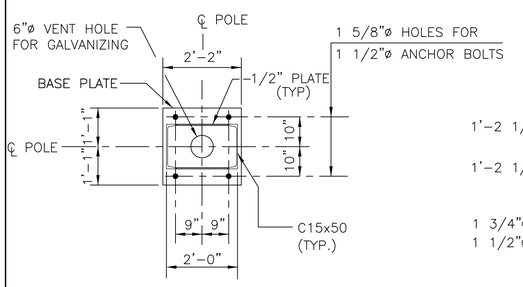

PLAN - BASE PLATE
POLE P101 AND 101B

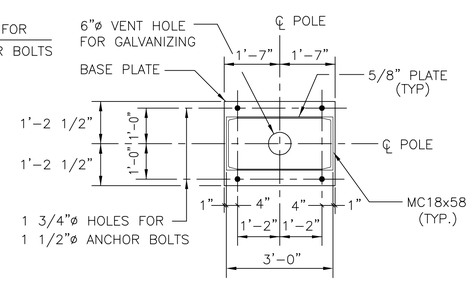

PLAN - BASE PLATE
POLE P102 AND 102D

THE INFORMATION, INCLUDING ESTIMATED QUANTITIES OF WORK SHOWN ON THESE SHEETS IS BASED ON LIMITED INVESTIGATIONS BY THE STATE AND IS IN NO WAY WARRANTED TO INDICATE THE TRUE CONDITIONS OR ACTUAL QUANTITIES OR DISTRIBUTION OF QUANTITIES OF WORK WHICH WILL BE REQUIRED.

URS CORPORATION AES
500 ENTERPRISE DRIVE
ROCKY HILL, CT 06067
1-(860)-529-8882

NO.	DATE	DESCRIPTION

REVISIONS

SCALE: NONE

STATE OF CONNECTICUT
DEPARTMENT OF TRANSPORTATION

STAMFORD YARD CATENARY IMPROVEMENTS

STEEL DETAILS - POLES

ENGINEER: URS CORPORATION AES
DESIGNER: RW | DRAFTER: AMK | CHECKER: AJM
APPROVED: T. HOLLAND | DATE: XX/XX/XX
STRUCTURE NO. | BRIDGE LOG NO. | STRUCTURE SHEET NO. S-4

XX% DESIGN
DISK FILENAME: S-4.dwg
PROJECT CONTROL DATE: XX/XX/XX

F H W A REGION	STATE	TOWN	FED. AID PROJ. NO.	PROJ. NO.	YEAR	SHEET NUMBER
1	CONN.	VARIOUS		301-163	2014	

POLE TYPE	POLE SIZE	A	B	C	D	H	T
P107	W14X90	9"	8 3/4"	2 1/4"	1 5/8"	1 1/2"	2 1/4"
P107A	W14X90	9"	8 3/4"	2 1/4"	1 5/8"	1 1/2"	2 1/2"

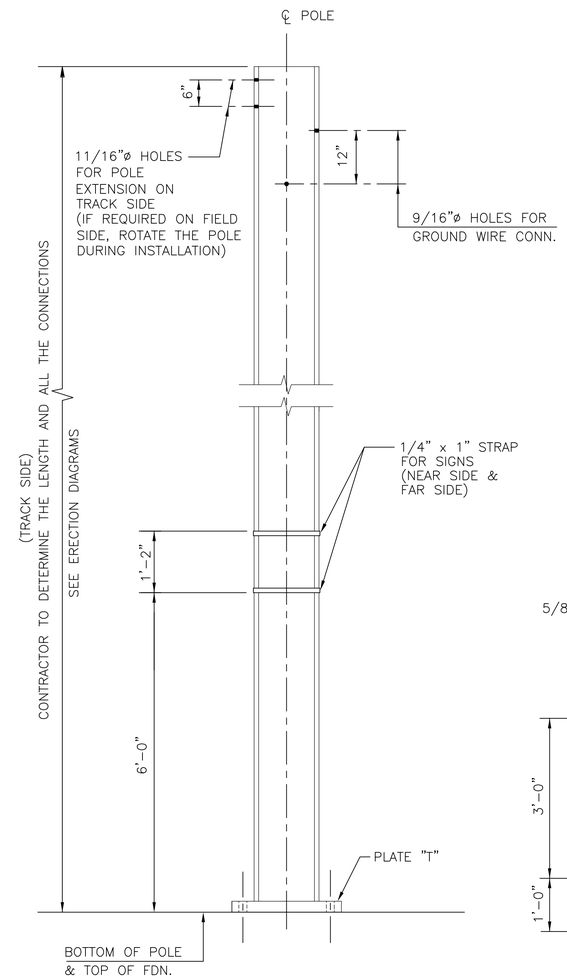

ELEVATION
PULL-OFF POLE P107

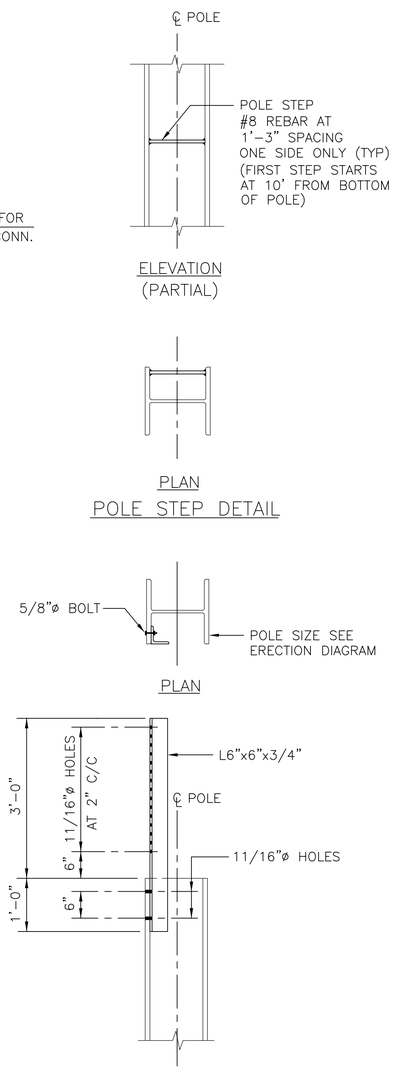

POLE STEP DETAIL

ELEVATION
NOTE: WORK WITH DWG. S-14

POLE EXTENSION DETAIL PE-P
(TO SUPPORT C&S AND FIBER OPTIC CABLES AT PULL-OFF POLE LOCATIONS)

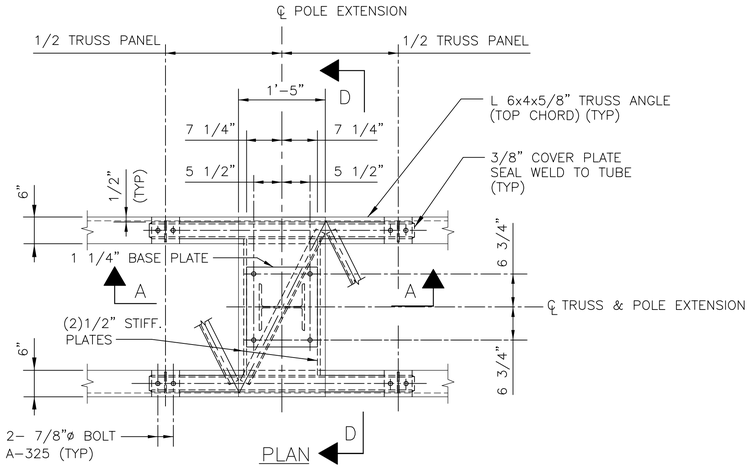

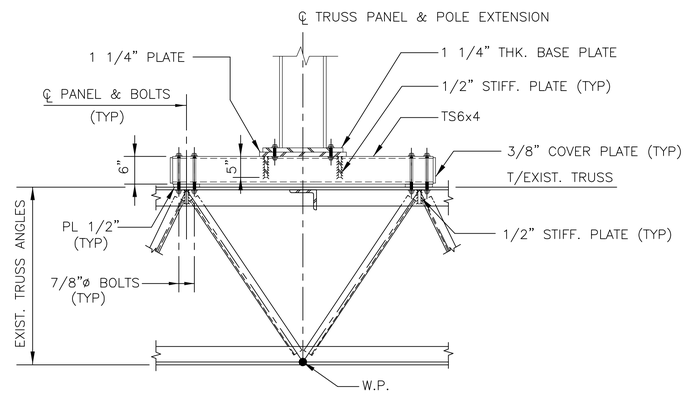

SECTION A-A

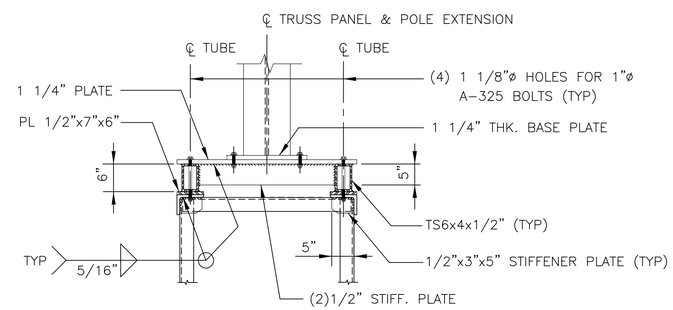

SECTION D-D
CONNECTION DETAILS FOR POLE EXTENSION PE-CD

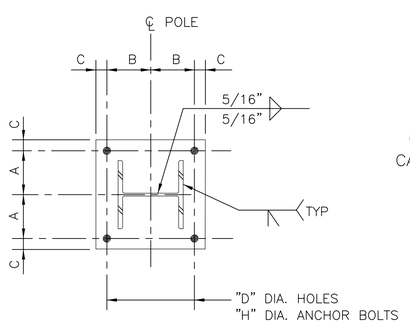

PLAN
BASE PLATE DETAIL

NOTES:

1. FOR GENERAL NOTES SEE DWG. G-8.
2. FOR CROSS ARM AND GROUND WIRE CONNECTION SEE ERECTION DIAGRAMS.
3. IF LOCATION OF PE-CD SPANS OVER TRUSS SPLICE, SHIMS ARE TO BE INSTALLED TO RAISE THE PE-CD ASSEMBLY ABOVE THE SPLICE. (USE 4x6x1/2" TS FOR SHIMS).

THE INFORMATION, INCLUDING ESTIMATED QUANTITIES OF WORK SHOWN ON THESE SHEETS IS BASED ON LIMITED INVESTIGATIONS BY THE STATE AND IS IN NO WAY WARRANTED TO INDICATE THE TRUE CONDITIONS OR ACTUAL QUANTITIES OR DISTRIBUTION OF QUANTITIES OF WORK WHICH WILL BE REQUIRED.

SCALE: NONE

URS CORPORATION AES
500 ENTERPRISE DRIVE
ROCKY HILL, CT 06067
1-(860)-529-8882

NO.	DATE	DESCRIPTION

REVISIONS

STATE OF CONNECTICUT
DEPARTMENT OF TRANSPORTATION

STAMFORD YARD CATENARY IMPROVEMENTS

STEEL DETAILS - PULL-OFF POLE

ENGINEER: URS CORPORATION AES
DESIGNER: | DRAFTER: AMK | CHECKER: AJM
APPROVED: T. HOLLAND | DATE: XX/XX/XX
STRUCTURE NO. | BRIDGE LOG NO. | STRUCTURE SHEET NO. S-6

PROJECT CONTROL DATE: XX/XX/XX | DISK FILENAME: S-6.dwg | XX% DESIGN

F H W A REGION	STATE	TOWN	FED. AID PROJ. NO.	PROJ. NO.	YEAR	SHEET NUMBER
1	CONN.	VARIOUS		301-163	2014	

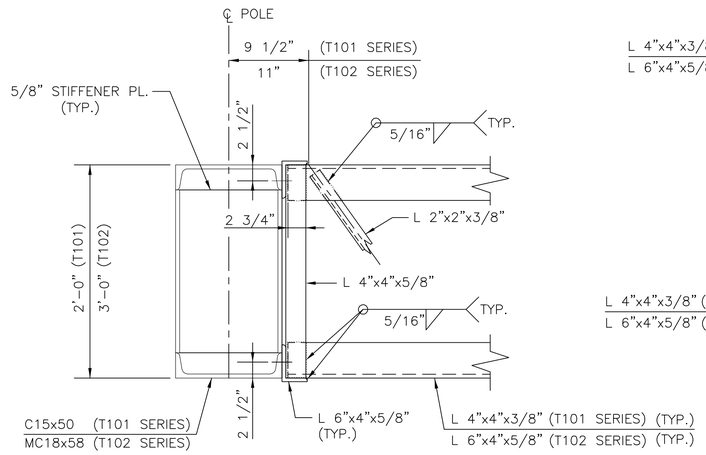

PLAN

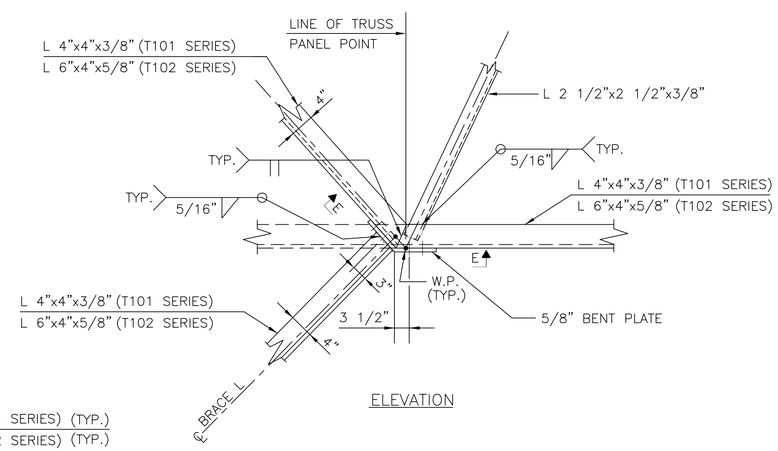

ELEVATION

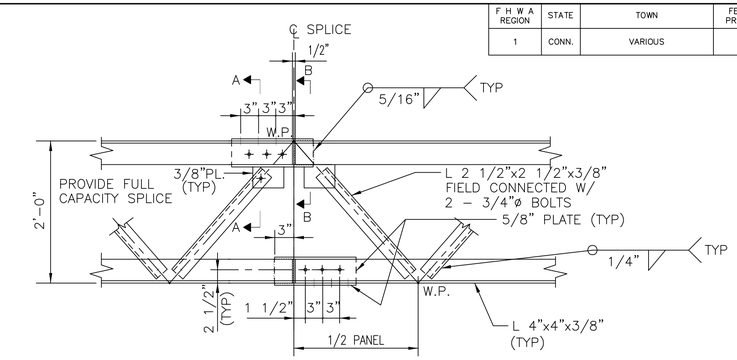

PLAN

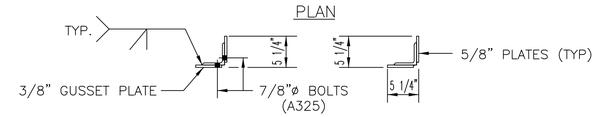

SECTION A–A SECTION B–B

DETAIL 4 (BOTTOM CHORD SHOWN, TOP CHORD SIMILAR)

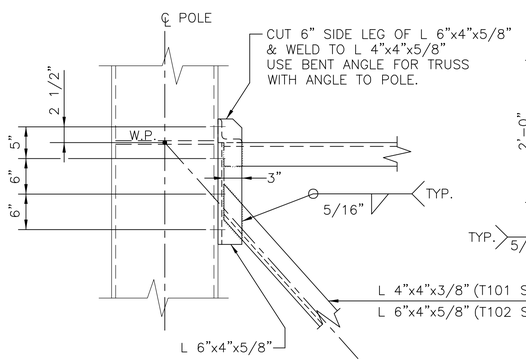

ELEVATION

DETAIL 1

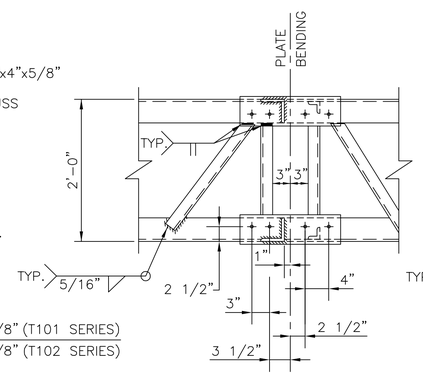

SECTION E–E FOR T101 SERIES

DETAIL 3

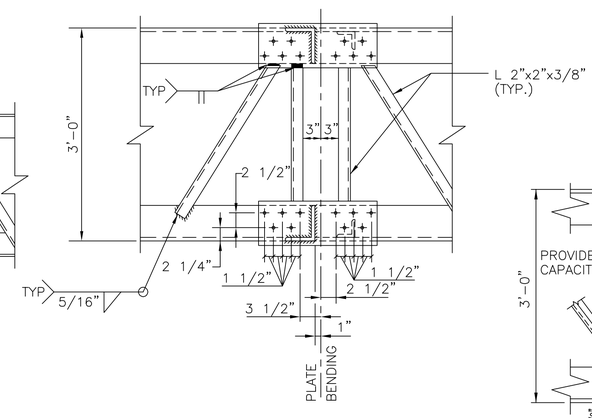

SECTION E–E FOR T102 SERIES

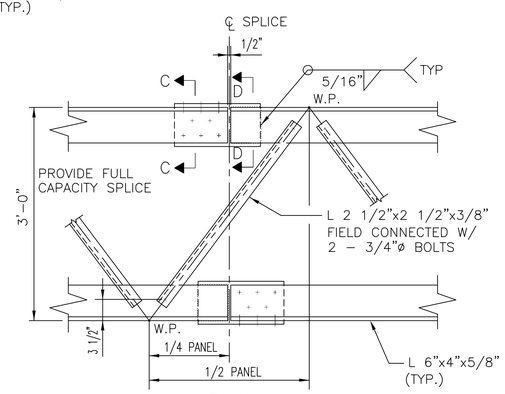

PLAN

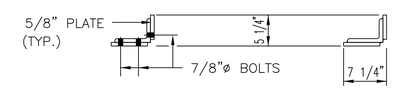

SECTION C–C SECTION D–D

DETAIL 5

(BOTTOM CHORD SHOWN TOP CHORD SIMILAR)

NOTES:

1. FOR GENERAL NOTES SEE DWG. G–8.
2. ALL CONNECTIONS EXCEPT FIELD SPLICES ARE DESIGNED TO BE WELDED. ALTERNATIVELY, THE FABRICATOR MAY CHOOSE TO SUBSTITUTE BOLTED CONNECTIONS FOR HIS CONVENIENCE.

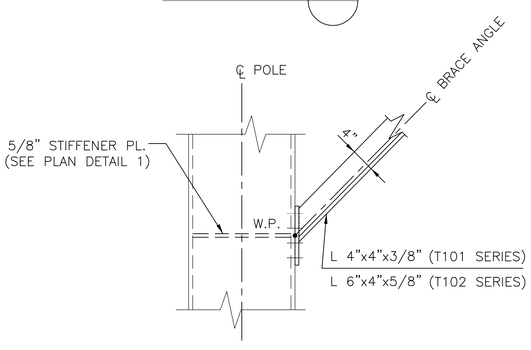

ELEVATION

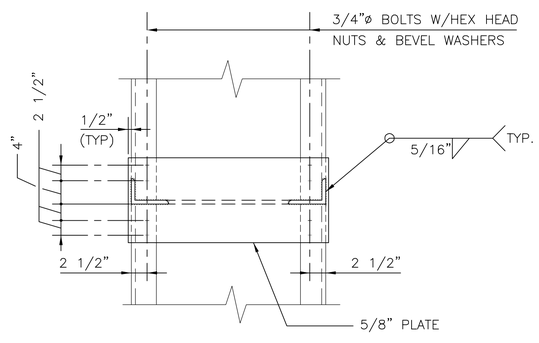

FRONT ELEVATION

DETAIL 2

THE INFORMATION, INCLUDING ESTIMATED QUANTITIES OF WORK SHOWN ON THESE SHEETS IS BASED ON LIMITED INVESTIGATIONS BY THE STATE AND IS IN NO WAY WARRANTED TO INDICATE THE TRUE CONDITIONS OR ACTUAL QUANTITIES OR DISTRIBUTION OF QUANTITIES OF WORK WHICH WILL BE REQUIRED.

SCALE: NONE

URS CORPORATION AES
500 ENTERPRISE DRIVE
ROCKY HILL, CT 06067
1-(860)-529-8882

NO.	DATE	DESCRIPTION

REVISIONS

STATE OF CONNECTICUT
DEPARTMENT OF TRANSPORTATION

STAMFORD YARD CATENARY IMPROVEMENTS

STEEL DETAILS – TRUSS DETAILS

ENGINEER: URS CORPORATION AES
DESIGNER: RW | DRAFTER: AMK | CHECKER: AJM
APPROVED: T. HOLLAND | DATE: XX/XX/XX
STRUCTURE NO. | BRIDGE LOG NO. | STRUCTURE SHEET NO. S–8

PROJECT CONTROL DATE: XX/XX/XX DISK FILENAME: S–8.dwg XX% DESIGN

F H W A REGION	STATE	TOWN	FED. AID PROJ. NO.	PROJ. NO.	YEAR	SHEET NUMBER
1	CONN.	VARIOUS		301-163	2014	

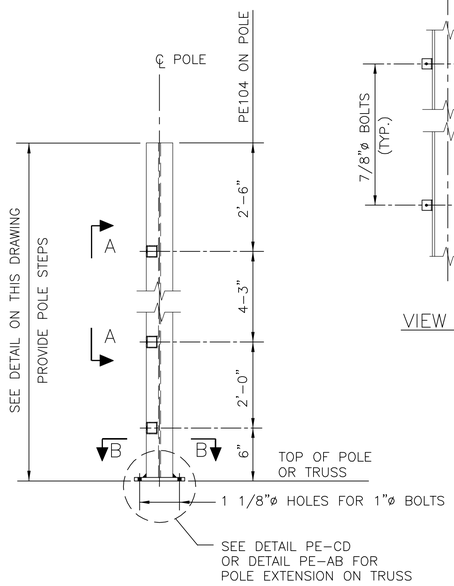

ELEVATION

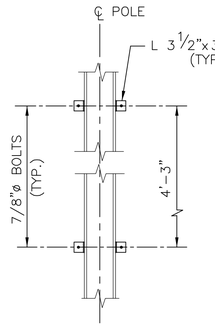

VIEW A-A

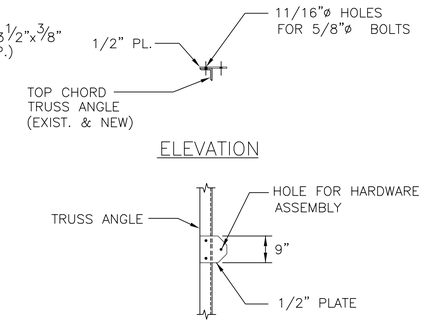

PLAN

JDD-1

JUMPER WIRE DEAD END DETAIL

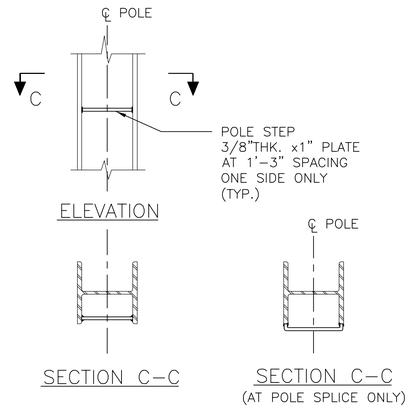

POLE STEP DETAIL

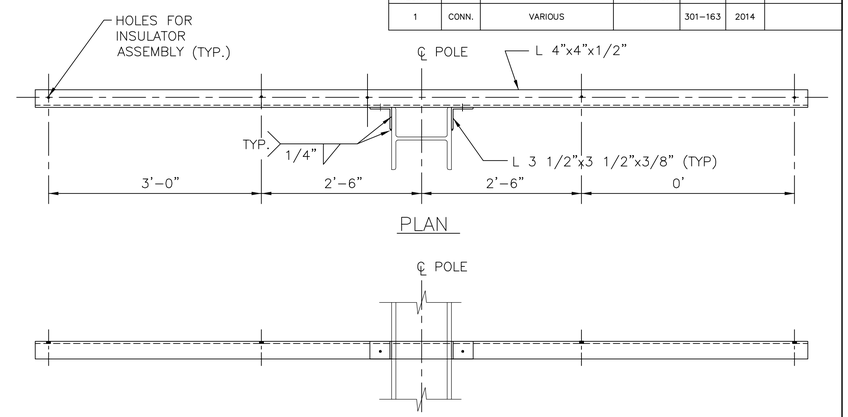

ELEVATION (LOOKING EAST)

CROSS ARM MK CA-4

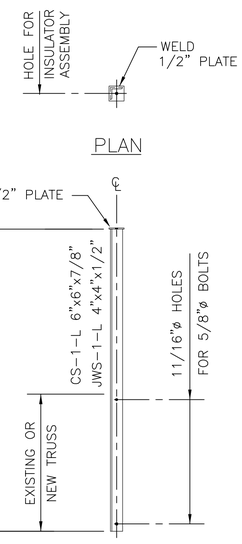

ELEVATION

JUMPER WIRE SUPPORT JWS-1

C & S CABLE SUPPORT CS-1

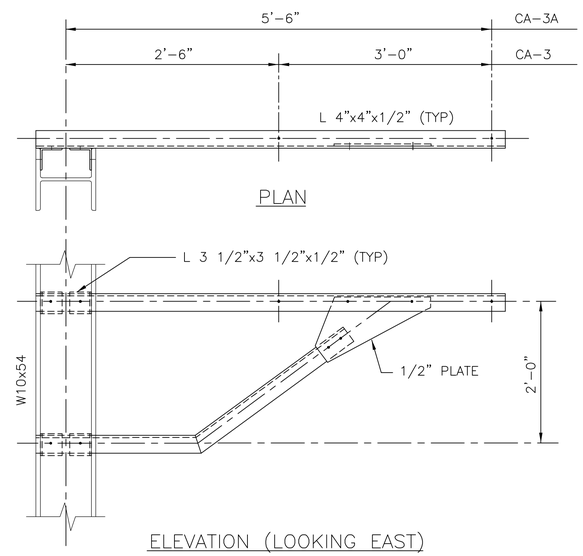

ELEVATION (LOOKING EAST)

CROSS ARM CA-3 & CA-3A

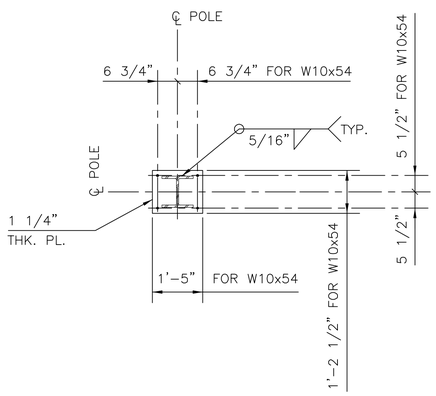

SECTION B-B

POLE EXTENSION MK PE104

NOTES:

1. FOR GENERAL NOTES SEE DWG. G-8.

SCALE: NONE

THE INFORMATION, INCLUDING ESTIMATED QUANTITIES OF WORK SHOWN ON THESE SHEETS IS BASED ON LIMITED INVESTIGATIONS BY THE STATE AND IS IN NO WAY WARRANTED TO INDICATE THE TRUE CONDITIONS OR ACTUAL QUANTITIES OR DISTRIBUTION OF QUANTITIES OF WORK WHICH WILL BE REQUIRED.

URS CORPORATION AES
500 ENTERPRISE DRIVE
ROCKY HILL, CT 06067
1-(860)-529-8882

NO.	DATE	DESCRIPTION

REVISIONS

STATE OF CONNECTICUT
DEPARTMENT OF TRANSPORTATION

STAMFORD YARD CATENARY IMPROVEMENTS

STEEL DETAILS
FEEDER SUPPORT POLE - SHEET 1

ENGINEER: URS CORPORATION AES
DESIGNER: RW | DRAFTER: AMK | CHECKER: AJM
APPROVED: T. HOLLAND | DATE: XX/XX/XX
STRUCTURE NO. | BRIDGE LOG NO. | STRUCTURE SHEET NO. S-9

PROJECT CONTROL DATE: XX/XX/XX DISK FILENAME: S-9.dwg XX% DESIGN

F H W A REGION	STATE	TOWN	FED. AID PROJ. NO.	PROJ. NO.	YEAR	SHEET NUMBER
1	CONN.	VARIOUS		301-163	2014	

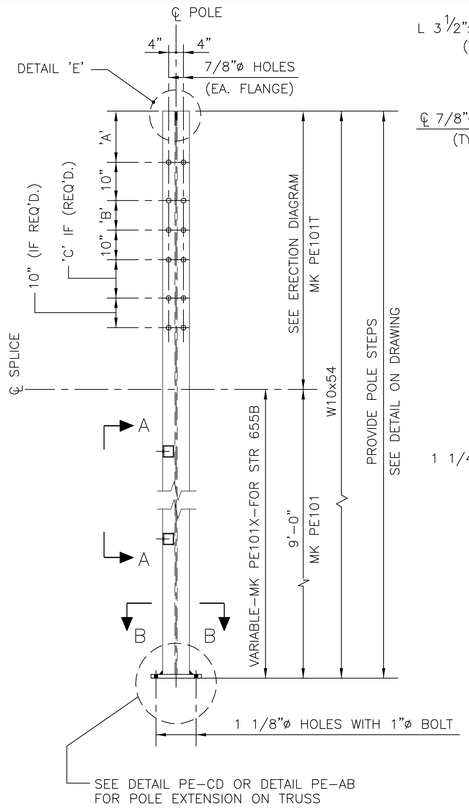

ELEVATION

POLE EXTENSION MK PE101 & PE101T

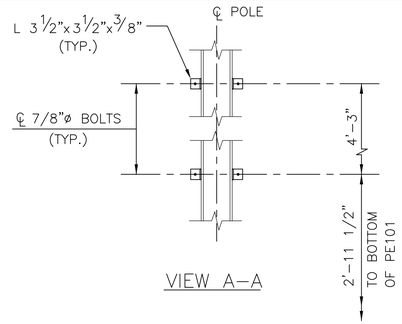

VIEW A-A

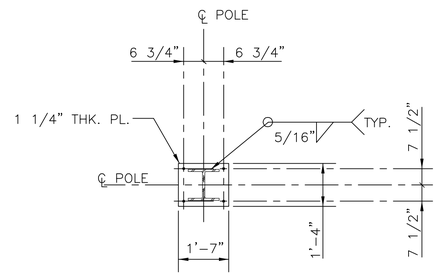

SECTION B-B

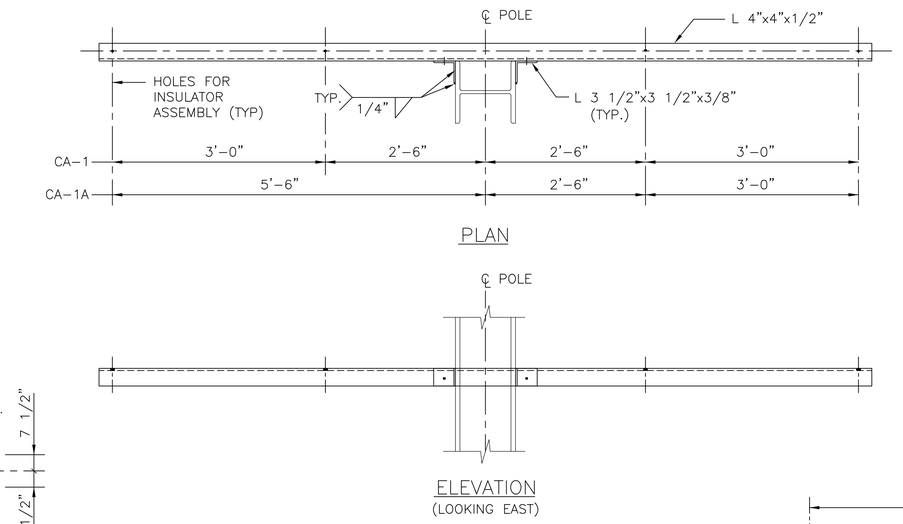

PLAN

ELEVATION
(LOOKING EAST)

CROSS ARM CA-1 & CA-1A

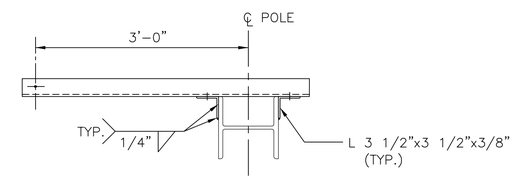

PLAN

SHOWN FOR WF SECTION. SIMILAR FOR EXISTING
BUILT UP SECTION – DRILL HOLES INSTEAD OF WELDING

CROSS ARM CA-2
(FOR ADDITIONAL INFORMATION SEE CROSS ARM CA-1)

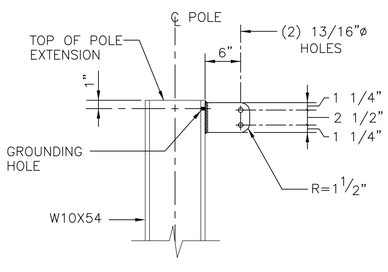

ELEVATION

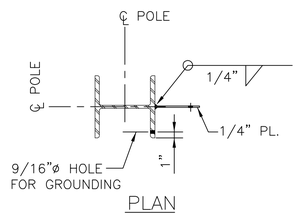

PLAN

DETAIL 'E'

SHIELD WIRE/OPGW VANG & GROUNDING HOLE

NOTE:

1. VANG SHALL BE PLACED ON THE COLUMN FLANGE TO ALLOW THE SHIELD WIRE OR OPGW ASSEMBLY TO SWING AWAY FROM THE COLUMN.
2. GROUNDING HOLE SHALL BE DRILLED ON THE SAME FLANGE AS THE VANG.
3. FOR LOCATION OF VANG SEE ERECTION DIAGRAMS.

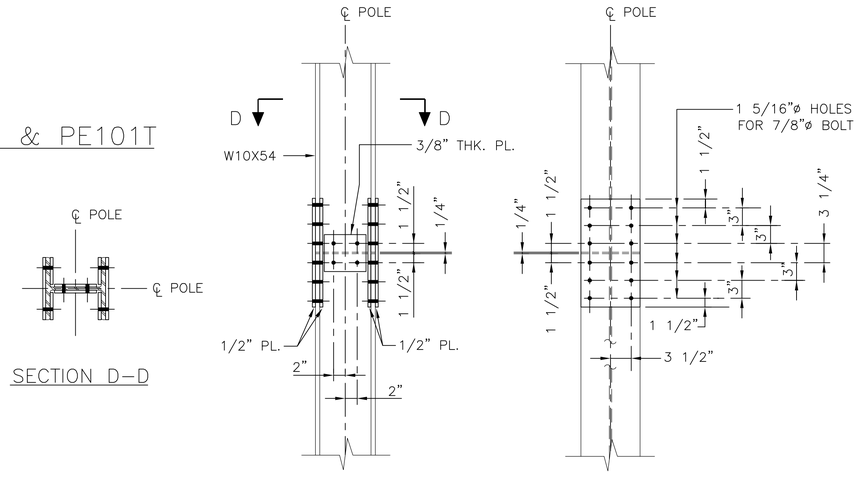

ELEVATION

SIDE VIEW

POLE SPLICE DETAIL

SECTION D-D

NOTES:

1. FOR GENERAL NOTES, SEE DWG. G-8.

SCALE: NONE

THE INFORMATION, INCLUDING ESTIMATED QUANTITIES OF WORK SHOWN ON THESE SHEETS IS BASED ON LIMITED INVESTIGATIONS BY THE STATE AND IS IN NO WAY WARRANTED TO INDICATE THE TRUE CONDITIONS OR ACTUAL QUANTITIES OR DISTRIBUTION OF QUANTITIES OF WORK WHICH WILL BE REQUIRED.

URS CORPORATION AES
500 ENTERPRISE DRIVE
ROCKY HILL, CT 06067
1-(860)-529-8882

NO.	DATE	DESCRIPTION

REVISIONS

STATE OF CONNECTICUT
DEPARTMENT OF TRANSPORTATION

STAMFORD YARD CATENARY IMPROVEMENTS

STEEL DETAILS
FEEDER SUPPORT POLE – SHEET 2

ENGINEER: URS CORPORATION AES
DESIGNER: RW | DRAFTER: AMK | CHECKER: AJM
APPROVED: T. HOLLAND | DATE: XX/XX/XX
STRUCTURE NO. | BRIDGE LOG NO. | STRUCTURE SHEET NO. S-10

PROJECT CONTROL DATE: XX/XX/XX DISK FILENAME: S-10.dwg XX% DESIGN

F H W A REGION	STATE	TOWN	FED. AID PROJ. NO.	PROJ. NO.	YEAR	SHEET NUMBER
1	CONN.	VARIOUS		301-163	2014	

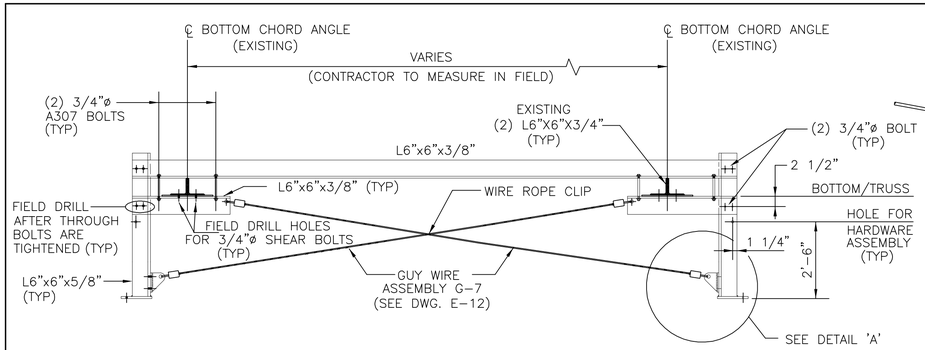

ELEVATION
(CROSS SECTION)

TAIL AND CATENARY DEAD END SUPPORT DETAIL CDS-1 (FOR STR. 374)

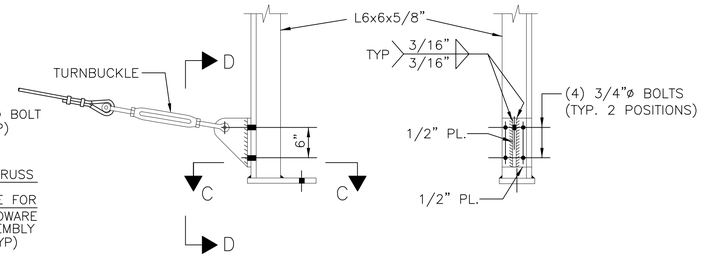

DETAIL A

VIEW D-D

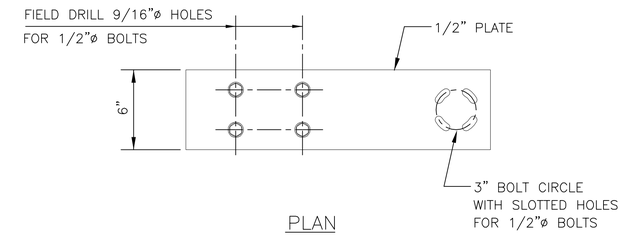

PLAN

DETAIL JS
(SUPPORT FOR MS-9 AT STR. 530, 577 AND 580)

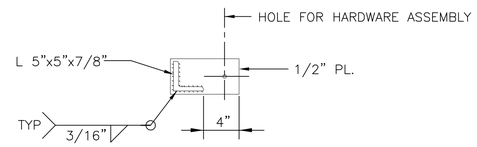

SECTION C-C

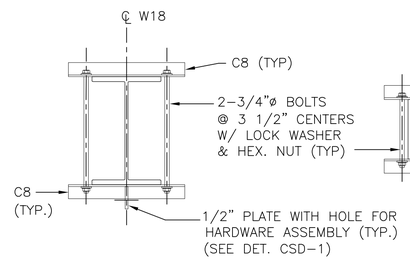

DETAIL CSD-1A
(FOR W18)

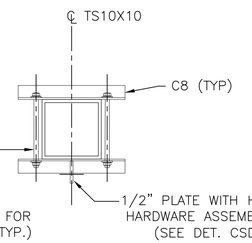

DETAIL CSD-1A
(FOR TS10X10)

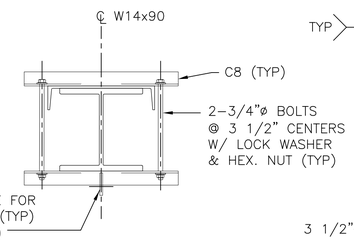

DETAIL CSD-1A FOR CB-1
(MC18X42.7 + W14X90)

CATENARY SUPPORT DETAIL MK CSD-1A
(FOR MS-4 SUPPORT UNDER BEAM)

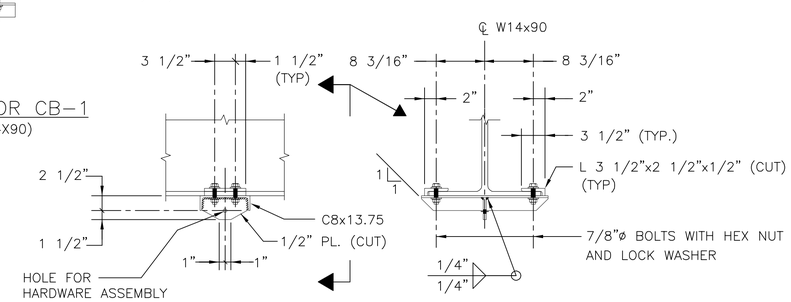

ELEVATION

SECTION

CATENARY SUPPORT DETAIL MK CSD-1A
ALTERNATE (FOR SAG BRACE INTERFERENCE)

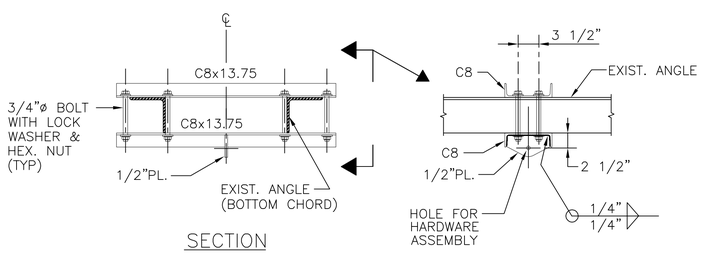

SECTION

CATENARY SUPPORT DETAIL MK CSD-1
(FOR MS-4 SUPPORT UNDER TRUSS)

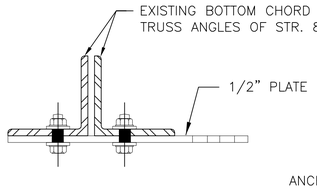

ELEVATION

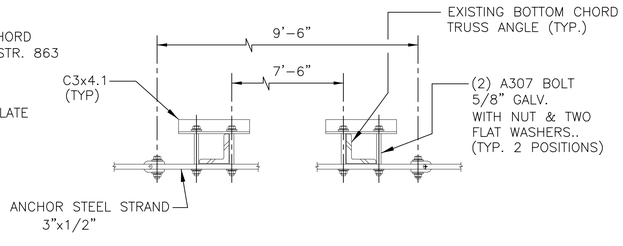

ANCHOR BRIDGE ASSEMBLY SUPPORT
DETAIL ABAS

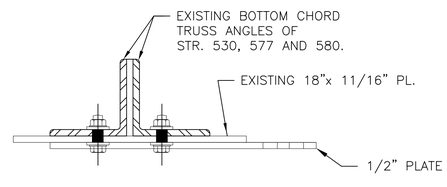

ELEVATION

NOTES:

1. FOR GENERAL NOTES, SEE DRAWING G-8.

THE INFORMATION, INCLUDING ESTIMATED QUANTITIES OF WORK SHOWN ON THESE SHEETS IS BASED ON LIMITED INVESTIGATIONS BY THE STATE AND IS IN NO WAY WARRANTED TO INDICATE THE TRUE CONDITIONS OR ACTUAL QUANTITIES OR DISTRIBUTION OF QUANTITIES OF WORK WHICH WILL BE REQUIRED.

SCALE: NONE

URS CORPORATION AES
500 ENTERPRISE DRIVE
ROCKY HILL, CT 06067
1-(860)-529-8882

NO.	DATE	DESCRIPTION

REVISIONS

STATE OF CONNECTICUT
DEPARTMENT OF TRANSPORTATION

STAMFORD YARD CATENARY IMPROVEMENTS

STEEL DETAILS
MISCELLANEOUS DETAILS

ENGINEER: URS CORPORATION AES
DESIGNER: RW | DRAFTER: AMK | CHECKER: AJM
APPROVED: T. HOLLAND | DATE: XX/XX/XX
STRUCTURE NO. | BRIDGE LOG NO. | STRUCTURE SHEET NO. S-11

PROJECT CONTROL DATE: XX/XX/XX DISK FILENAME: S-11.dwg XX% DESIGN

F H W A REGION	STATE	TOWN	FED. AID PROJ. NO.	PROJ. NO.	YEAR	SHEET NUMBER
1	CONN.	VARIOUS		301-163	2014	

GUIDE TUBE SUPPORT BRACKETS

GTSB-1

FOR USE AT ENCASED FOUNDATIONS

NOTES FOR GTSB-1 & GTSB-2:

1. CONTRACTOR TO VERIFY DIMENSIONS FOR ACTUAL FIELD CONDITIONS.
2. SEE DWG S-20 FOR ADDITIONAL INFORMATION.
3. SEE DWG. E-9 FOR BALANCE WEIGHT DETAILS.
4. STACK SHIMS TO CLEAR LACING BARS AND RIVETS. SEE DWG. S-20 FOR SHIM DETAIL

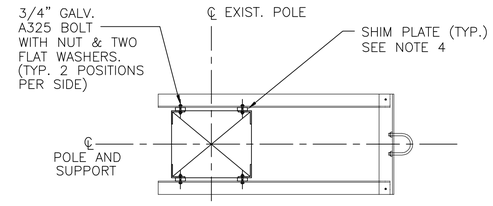

SECTION B-B

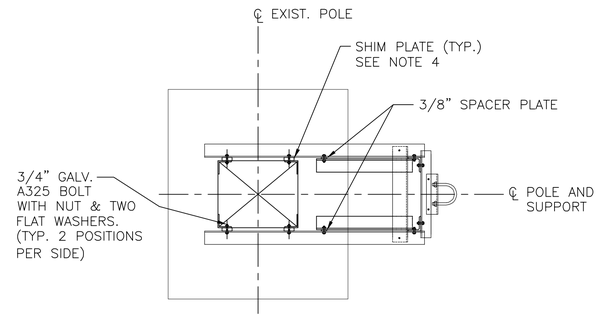

SECTION A-A

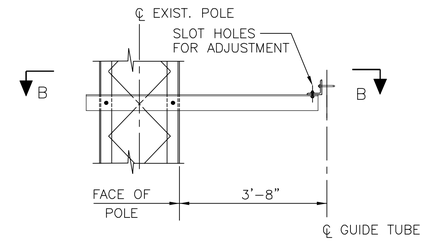

ELEVATION

UPPER GUIDE TUBE SUPPORT BRACKET

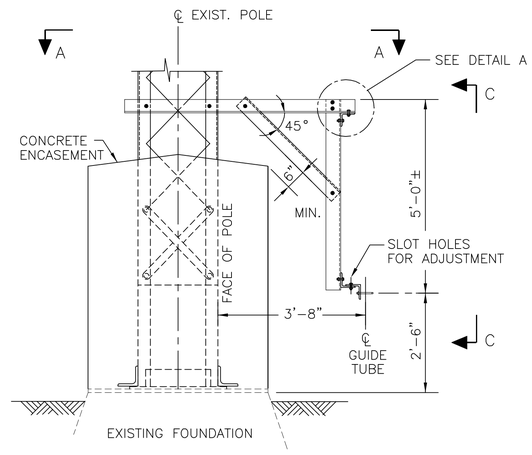

ELEVATION

LOWER GUIDE TUBE SUPPORT BRACKET

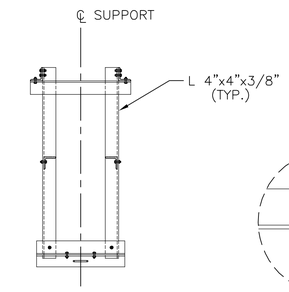

SECTION C-C

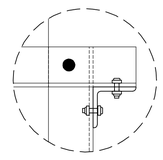

DETAIL A

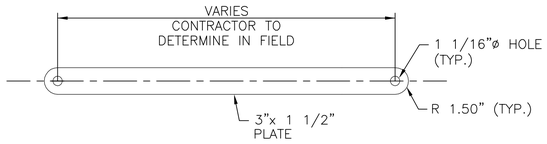

GTSB-2 EXTENSION LINK

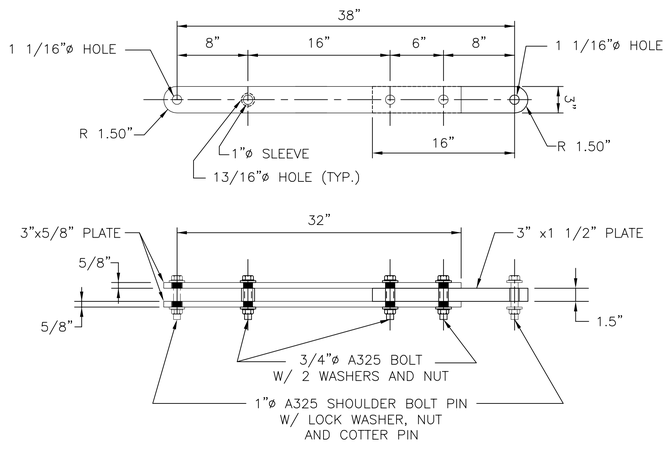

GTSB-1 EXTENSION LINK

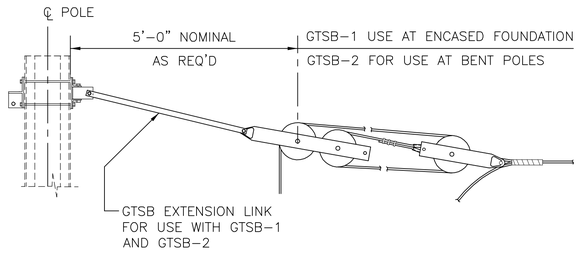

GTSB EXTENSION LINK INSTALLATION DETAIL

THE INFORMATION, INCLUDING ESTIMATED QUANTITIES OF WORK SHOWN ON THESE SHEETS IS BASED ON LIMITED INVESTIGATIONS BY THE STATE AND IS IN NO WAY WARRANTED TO INDICATE THE TRUE CONDITIONS OR ACTUAL QUANTITIES OR DISTRIBUTION OF QUANTITIES OF WORK WHICH WILL BE REQUIRED.

SCALE: NONE

URS CORPORATION AES
500 ENTERPRISE DRIVE
ROCKY HILL, CT 06067
1-(860)-529-8882

NO.	DATE	DESCRIPTION

REVISIONS

STATE OF CONNECTICUT
DEPARTMENT OF TRANSPORTATION

STAMFORD YARD CATENARY IMPROVEMENTS

STEEL DETAILS – SPECIAL DETAILS GTSB-1

ENGINEER: URS CORPORATION AES
DESIGNER: WJS | DRAFTER: AMK | CHECKER: AJM
APPROVED: T. HOLLAND | DATE: XX/XX/XX
STRUCTURE NO. | BRIDGE LOG NO. | STRUCTURE SHEET NO. S-12

PROJECT CONTROL DATE: XX/XX/XX DISK FILENAME: S-12.dwg XX% DESIGN

F H W A REGION	STATE	TOWN	FED. AID PROJ. NO.	PROJ. NO.	YEAR	SHEET NUMBER
1	CONN.	VARIOUS		301-163	2014	

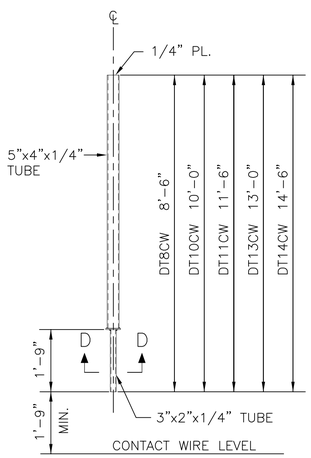

CONTACT WIRE SUPPORT

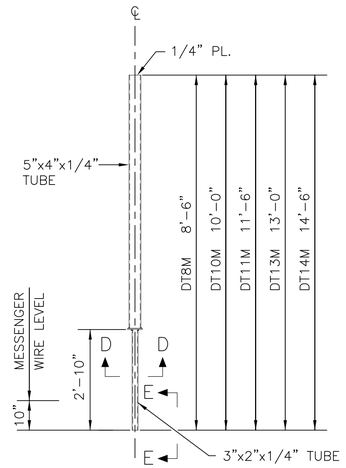

MESSENGER SUPPORT

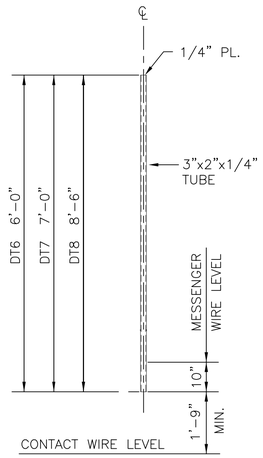

MESSENGER & CONTACT WIRE SUPPORT

DROP TUBE ELEVATIONS

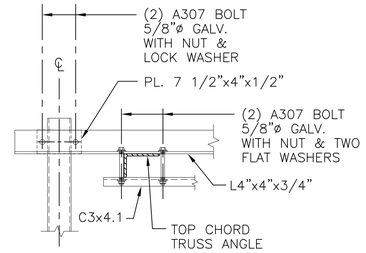

DETAIL 'B'

(TYPICAL FOR ALL DROP TUBE SUPPORT ASSEMBLIES)

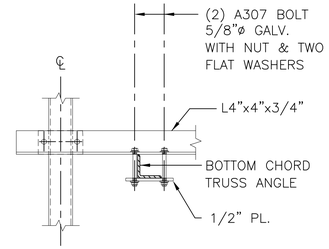

DETAIL 'C'

(TYPICAL FOR ALL DROP TUBE SUPPORT ASSEMBLIES)

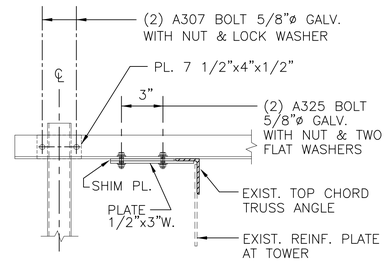

ALTERNATE DETAIL 'B'

(DROP TUBE SUPPORT FOR EXIST. TOP CHORD TRUSS ANGLE WITH REINFORCING PLATE)

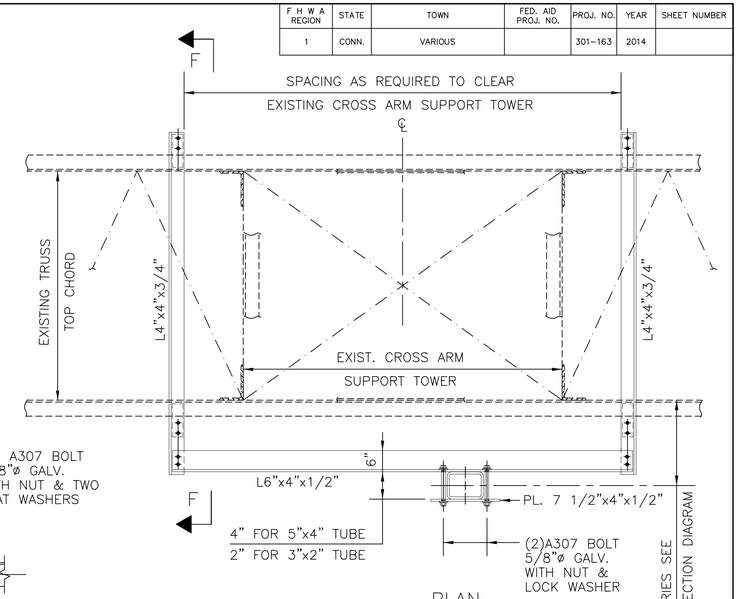

PLAN

(DROP TUBE SUPPORT AT TOP CHORD WITH IN EXISTING CROSS ARM SUPPORT TOWER)

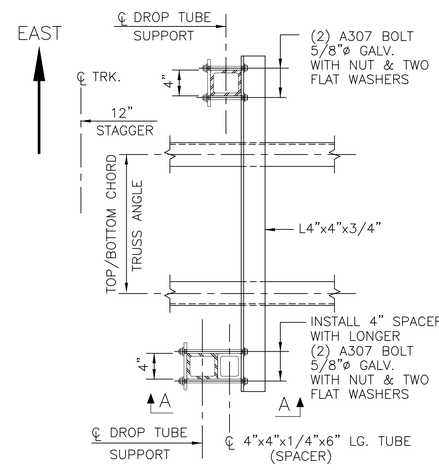

PLAN

(TYPICAL DROP TUBE SUPPORT WITH SPACER)

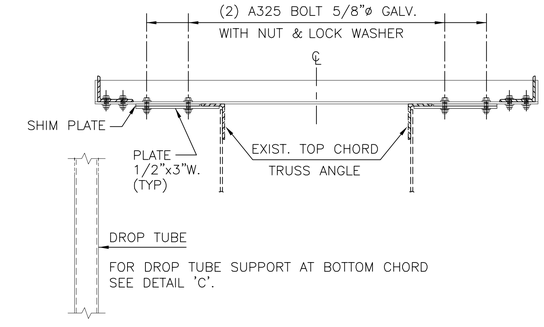

SECTION F–F

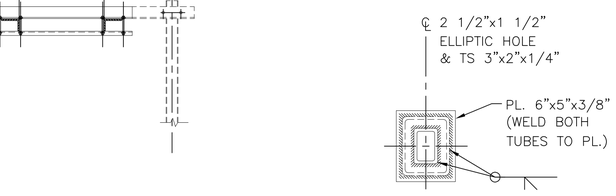

SECTION D–D

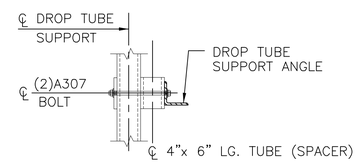

SECTION A–A

DROP TUBE SUPPORTS W/SPACER

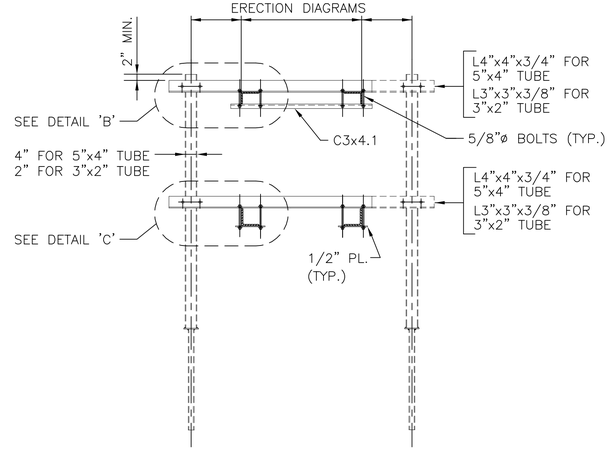

ELEVATION

(NEW TRUSS ANGLE PROJECTED INSIDE)

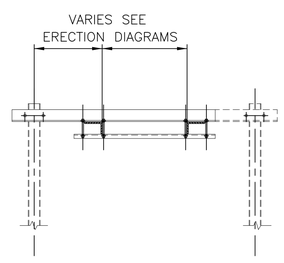

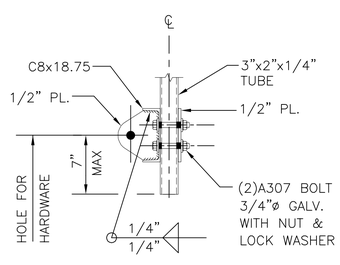

VIEW 'E'

(FOR MS–4 ONLY)

SUPPORT SHOWN FOR ONE SIDE FOR BOTH SIDES USE SIMILAR DETAIL ON OTHER SIDE

DROP TUBE SUPPORTS

NOTES:

1. FOR GENERAL NOTES SEE DRAWING G–8.
2. UNSYMMETRICAL DROP TUBE SUPPORTS SHALL BE DRILLED SO THAT THEY MAY BE USED ON EITHER SIDE OF DROP TUBE.
3. VENT HOLES SHALL BE PROVIDED FOR GALVANIZING OF CLOSED TUBES.

THE INFORMATION, INCLUDING ESTIMATED QUANTITIES OF WORK SHOWN ON THESE SHEETS IS BASED ON LIMITED INVESTIGATIONS BY THE STATE AND IS IN NO WAY WARRANTED TO INDICATE THE TRUE CONDITIONS OR ACTUAL QUANTITIES OR DISTRIBUTION OF QUANTITIES OF WORK WHICH WILL BE REQUIRED.

URS CORPORATION AES
500 ENTERPRISE DRIVE
ROCKY HILL, CT 06067
1-(860)-529-8882

NO.	DATE	DESCRIPTION

REVISIONS

SCALE: NONE

STATE OF CONNECTICUT
DEPARTMENT OF TRANSPORTATION

STAMFORD YARD CATENARY IMPROVEMENTS

STEEL DETAILS –
DROP TUBE SUPPORTS – SHEET 1

ENGINEER: URS CORPORATION AES
DESIGNER: RW | DRAFTER: AMK | CHECKER: AJM
APPROVED: T. HOLLAND | DATE: XX/XX/XX
STRUCTURE NO. | BRIDGE LOG NO. | STRUCTURE SHEET NO. S–13

PROJECT CONTROL DATE: XX/XX/XX DISK FILENAME: S–13.dwg XX% DESIGN

F H W A REGION	STATE	TOWN	FED. AID PROJ. NO.	PROJ. NO.	YEAR	SHEET NUMBER
1	CONN.	VARIOUS		301-163	2014	

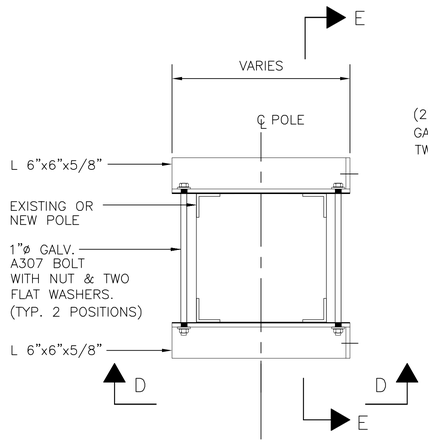

PLAN

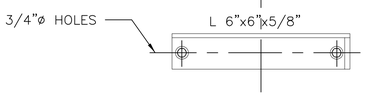

SECTION D-D

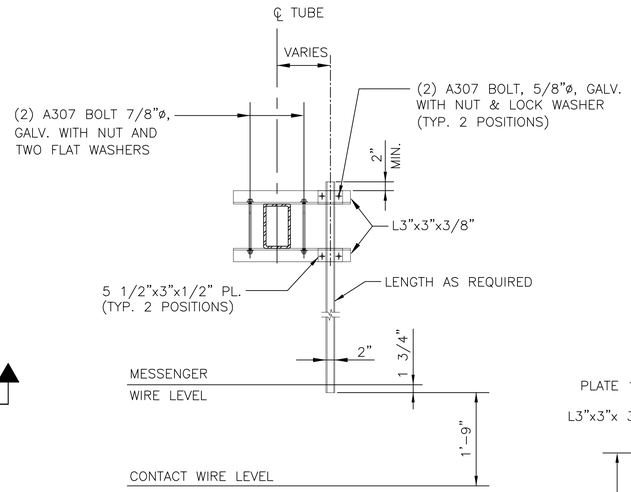

DROP TUBE SUPPORT MK DTS-2

(FOR BRIDGE FACE STRUCTURES)
FOR MARK & LENGTH OF TUBE, SEE DWG. S-13

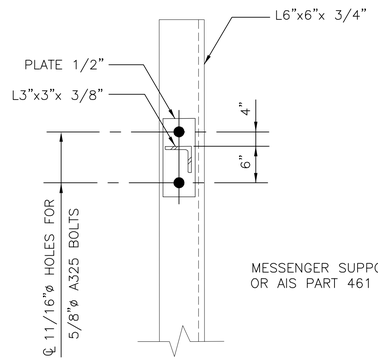

SECTION A-A

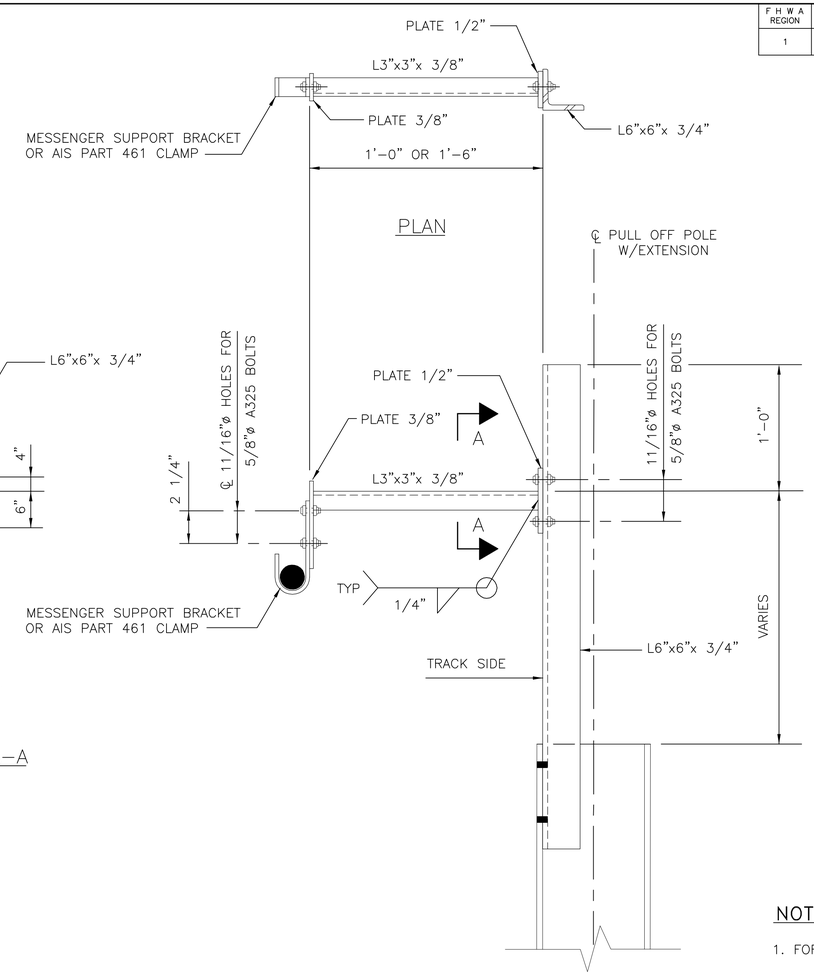

ELEVATION

CABLE SUPPORT AT PULL OFF POLE EXTENSION

REFER TO F-32 FOR DIMENSIONS

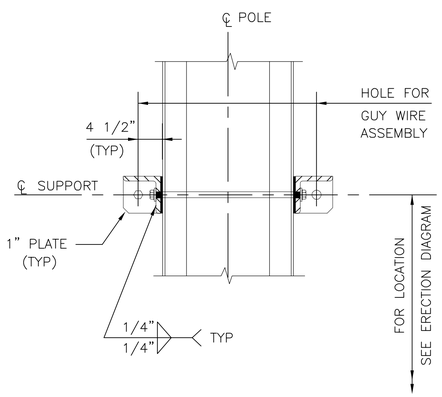

SECTION E-E

SPAN WIRE BRACKET ASSEMBLY DETAIL SBA-1

(USE FOR GUY ASSEMBLIES)

NOTES:

1. FOR GENERAL NOTES, SEE DRAWING G-8.
2. UNSYMMETRICAL DROP TUBE SUPPORTS SHALL BE DRILLED, SO THAT THEY MAY BE USED ON EITHER SIDE OF DROP TUBE.

SCALE: NONE

THE INFORMATION, INCLUDING ESTIMATED QUANTITIES OF WORK SHOWN ON THESE SHEETS IS BASED ON LIMITED INVESTIGATIONS BY THE STATE AND IS IN NO WAY WARRANTED TO INDICATE THE TRUE CONDITIONS OR ACTUAL QUANTITIES OR DISTRIBUTION OF QUANTITIES OF WORK WHICH WILL BE REQUIRED.

URS CORPORATION AES
500 ENTERPRISE DRIVE
ROCKY HILL, CT 06067
1-(860)-529-8882

NO.	DATE	DESCRIPTION

REVISIONS

STATE OF CONNECTICUT
DEPARTMENT OF TRANSPORTATION

STAMFORD YARD CATENARY IMPROVEMENTS

STEEL DETAILS – DROP TUBE SUPPORTS – SHEET 2

ENGINEER: URS CORPORATION AES
DESIGNER: RW | DRAFTER: AMK | CHECKER: AJM
APPROVED: T. HOLLAND | DATE: XX/XX/XX
STRUCTURE NO. | BRIDGE LOG NO. | STRUCTURE SHEET NO. S-14

PROJECT CONTROL DATE: XX/XX/XX DISK FILENAME: S-14.dwg XX% DESIGN

F H W A REGION	STATE	TOWN	FED. AID PROJ. NO.	PROJ. NO.	YEAR	SHEET NUMBER
1	CONN.	VARIOUS		301-163	2014	

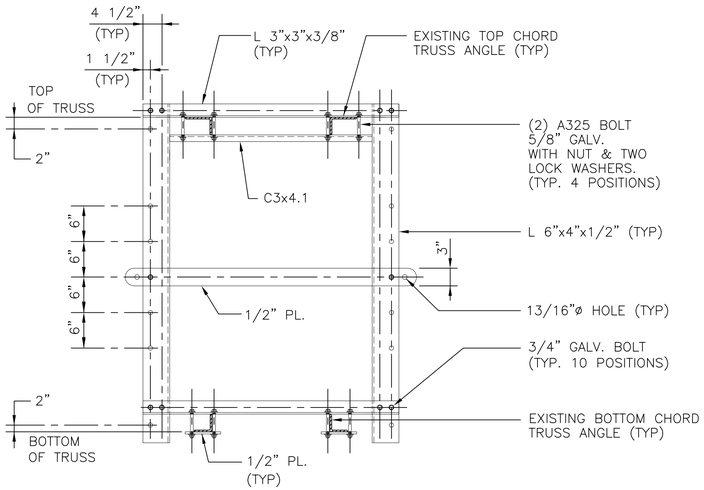

MIDPOINT ANCHOR ASSEMBLY SUPPORT DETAIL MPAS

(EXISTING TRUSS ANGLE PROJECTED OUTSIDE – AS SHOWN
NEW TRUSS ANGLE PROJECTED INSIDE – SIMILAR DETAIL)

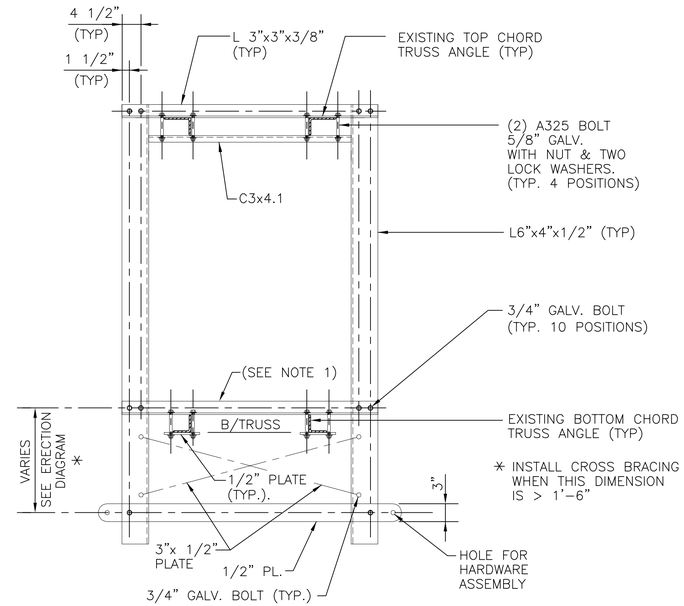

MIDPOINT ANCHOR ASSEMBLY SUPPORT DETAIL MPAS (MOD)

(EXISTING TRUSS ANGLE PROJECTED OUTSIDE – AS SHOWN
NEW TRUSS ANGLE PROJECTED INSIDE – SIMILAR DETAIL)

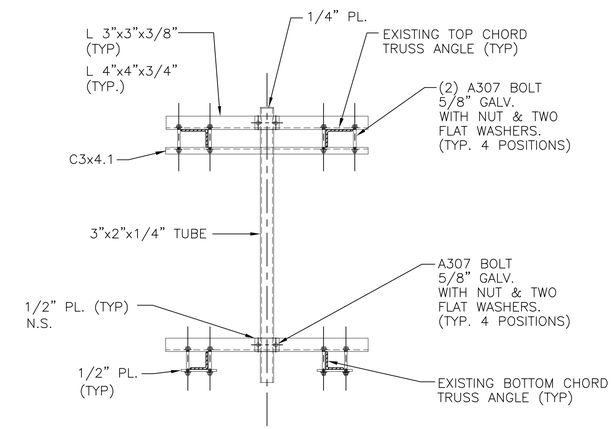

CENTER DROP TUBE SUPPORT ASSEMBLY DETAIL DBA

(EXISTING TRUSS ANGLE PROJECTED OUTSIDE – AS SHOWN
NEW TRUSS ANGLE PROJECTED INSIDE – SIMILAR DETAIL)

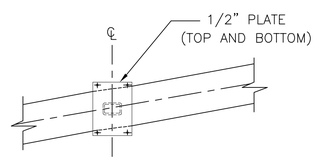

PLAN

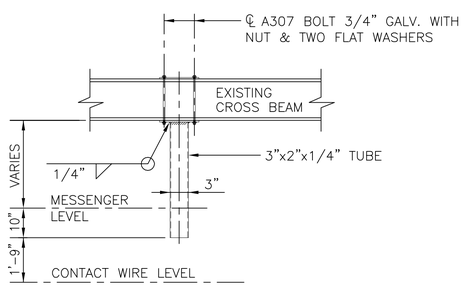

ELEVATION

CATENARY SUPPORT DETAIL CSD-1B

(SIMILAR FOR NEW CROSS BEAM)

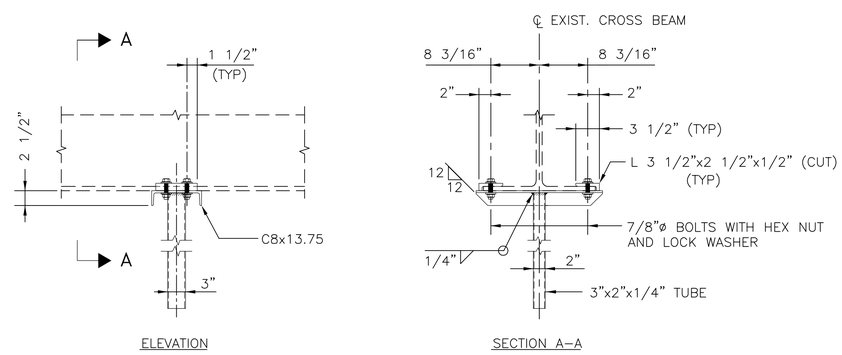

ELEVATION SECTION A–A

CATENARY SUPPORT DETAIL MK CSD-1BA
ALTERNATE (FOR SAG BRACE INTERFERENCE)

(FOR ADDITIONAL INFORMATION SEE DETAIL CSD-1B)

NOTES:

1. WHEN GUSSET PLATES INTERFERE WITH STANDARD MPAS (MOD) INSTALLATION, THE BOTTOM SUPPORT MAY BE INSTALLED ON THE BOTTOM OF THE TRUSS CHORDS AND A C3x4.1 BACKER CHANNEL INSTALLED ON TOP OF THE TRUSS CHORD GUSSET PLATES.
2. FOR GENERAL NOTES SEE DRAWING G-8.

SCALE: NONE

THE INFORMATION, INCLUDING ESTIMATED QUANTITIES OF WORK SHOWN ON THESE SHEETS IS BASED ON LIMITED INVESTIGATIONS BY THE STATE AND IS IN NO WAY WARRANTED TO INDICATE THE TRUE CONDITIONS OR ACTUAL QUANTITIES OR DISTRIBUTION OF QUANTITIES OF WORK WHICH WILL BE REQUIRED.

URS CORPORATION AES
500 ENTERPRISE DRIVE
ROCKY HILL, CT 06067
1-(860)-529-8882

NO.	DATE	DESCRIPTION

REVISIONS

STATE OF CONNECTICUT
DEPARTMENT OF TRANSPORTATION

STAMFORD YARD CATENARY IMPROVEMENTS

STEEL DETAILS –
DROP TUBE SUPPORTS – SHEET 3

ENGINEER: URS CORPORATION AES
DESIGNER: RW | DRAFTER: AMK | CHECKER: AJM
APPROVED: T. HOLLAND | DATE: XX/XX/XX
STRUCTURE NO. | BRIDGE LOG NO. | STRUCTURE SHEET NO. S-15

PROJECT CONTROL DATE: XX/XX/XX DISK FILENAME: S-15.dwg XX% DESIGN

F H W A REGION	STATE	TOWN	FED. AID PROJ. NO.	PROJ. NO.	YEAR	SHEET NUMBER
1	CONN.	VARIOUS		301-163	2014	

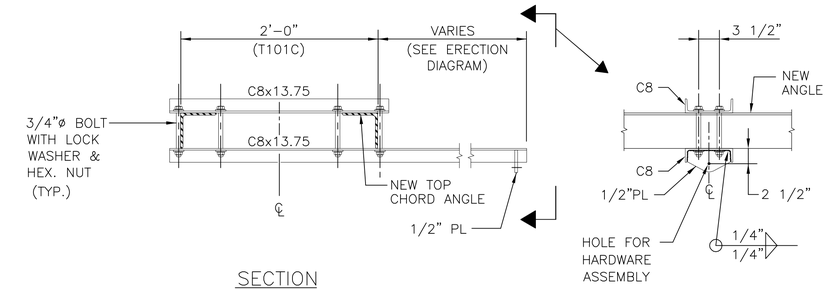

SECTION

CATENARY SUPPORT DETAIL MK CSD-1 (MOD.)

(FOR MS-4 SUPPORT ABOVE TRUSS)

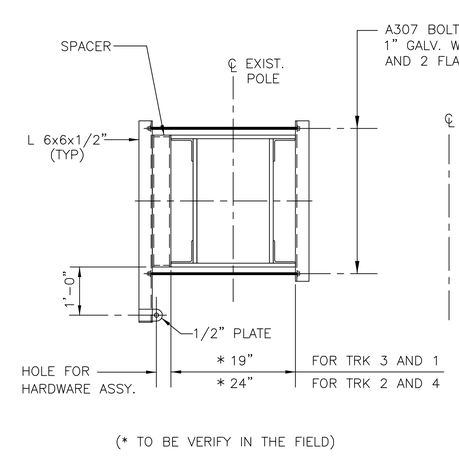

PLAN

SBA-2 SPAN WIRE BRACKET DETAIL

(NTS)

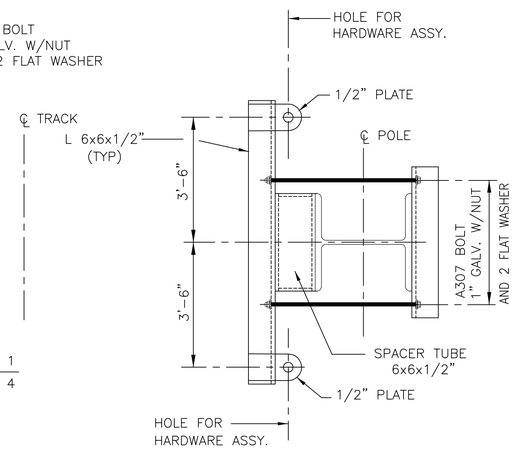

PLAN

SBA-3 SPAN WIRE BRACKET DETAIL

(NTS)

NOTES:

1. FOR GENERAL NOTES SEE DRAWING G-8.
2. CONTRACTOR TO FIELD VERIFY BETWEEN FLANGE DISTANCE OF W36 FOR FABRICATION OF BACKER CHANNEL C12x30

THE INFORMATION, INCLUDING ESTIMATED QUANTITIES OF WORK SHOWN ON THESE SHEETS IS BASED ON LIMITED INVESTIGATIONS BY THE STATE AND IS IN NO WAY WARRANTED TO INDICATE THE TRUE CONDITIONS OR ACTUAL QUANTITIES OR DISTRIBUTION OF QUANTITIES OF WORK WHICH WILL BE REQUIRED.

SCALE: NTS

URS CORPORATION AES
500 ENTERPRISE DRIVE
ROCKY HILL, CT 06067
1-(860)-529-8882

NO.	DATE	DESCRIPTION

REVISIONS

STATE OF CONNECTICUT
DEPARTMENT OF TRANSPORTATION

STAMFORD YARD CATENARY IMPROVEMENTS

SPECIAL STEEL DETAILS – DROP TUBE SUPPORTS, SHEET 4

ENGINEER: URS CORPORATION AES

DESIGNER: RW | DRAFTER: AMK | CHECKER: AJM

APPROVED: T. HOLLAND | DATE: XX/XX/XX

STRUCTURE NO. | BRIDGE LOG NO. | STRUCTURE SHEET NO. S-16

PROJECT CONTROL DATE: XX/XX/XX DISK FILENAME: S-16.dwg XX% DESIGN

F H W A REGION	STATE	TOWN	FED. AID PROJ. NO.	PROJ. NO.	YEAR	SHEET NUMBER
1	CONN.	VARIOUS		301-163	2014	

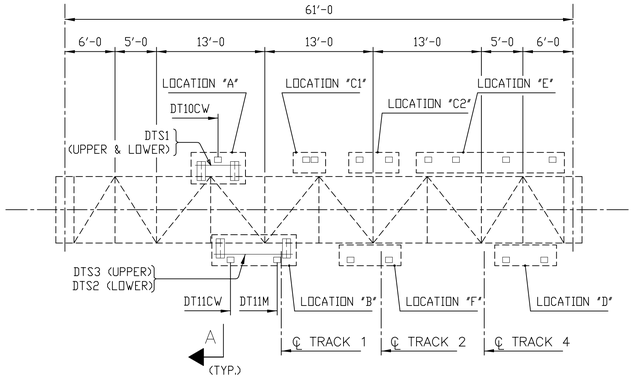

PARTIAL PLAN – EXISTING ANCHOR TRUSS
(TYPICAL DROP TUBE SUPPORT ARRANGEMENT SHOWN)
DROP TUBE SUPPORT FOR THE ANCHOR TRUSS STRUCTURE XXX

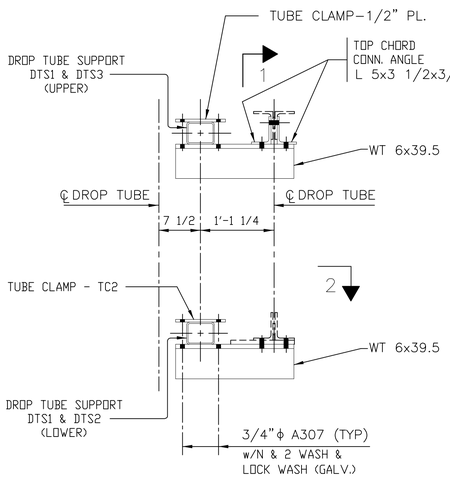

SECTION A

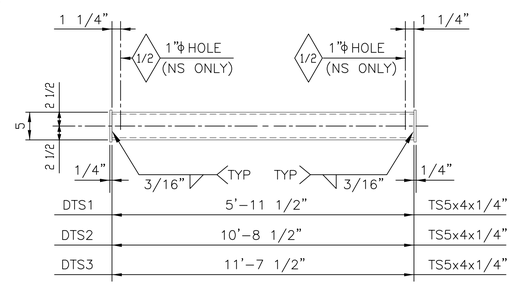

DROP TUBE SUPPORT

NOTES:

1. FOR GENERAL NOTES, SEE DRAWING G-8.

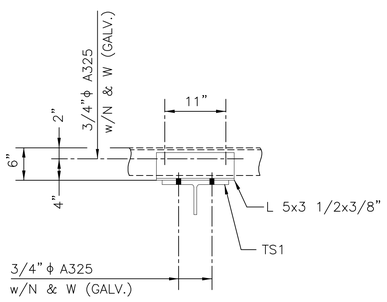

SECTION 1

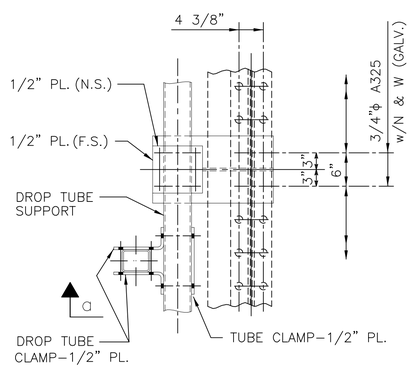

SECTION 2

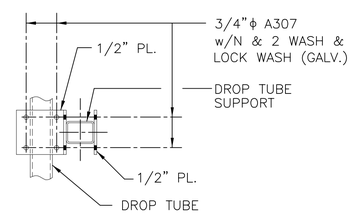

SECTION a

THE INFORMATION, INCLUDING ESTIMATED QUANTITIES OF WORK SHOWN ON THESE SHEETS IS BASED ON LIMITED INVESTIGATIONS BY THE STATE AND IS IN NO WAY WARRANTED TO INDICATE THE TRUE CONDITIONS OR ACTUAL QUANTITIES OR DISTRIBUTION OF QUANTITIES OF WORK WHICH WILL BE REQUIRED.

URS CORPORATION AES
500 ENTERPRISE DRIVE
ROCKY HILL, CT 06067
1-(860)-529-8882

NO.	DATE	DESCRIPTION

REVISIONS

STATE OF CONNECTICUT
DEPARTMENT OF TRANSPORTATION

STAMFORD YARD CATENARY IMPROVEMENTS

STEEL DETAILS –
DROP TUBE SUPPORTS, SHEET 6

ENGINEER: URS CORPORATION AES
DESIGNER: RW | DRAFTER: AMK | CHECKER: AJM
APPROVED: T. HOLLAND | DATE: XX/XX/XX
STRUCTURE NO. | BRIDGE LOG NO. | STRUCTURE SHEET NO. S-18

PROJECT CONTROL DATE: XX/XX/XX DISK FILENAME: S-18.dwg XX% DESIGN

F H W A REGION	STATE	TOWN	FED. AID PROJ. NO.	PROJ. NO.	YEAR	SHEET NUMBER
1	CONN.	VARIOUS		301-163	2014	

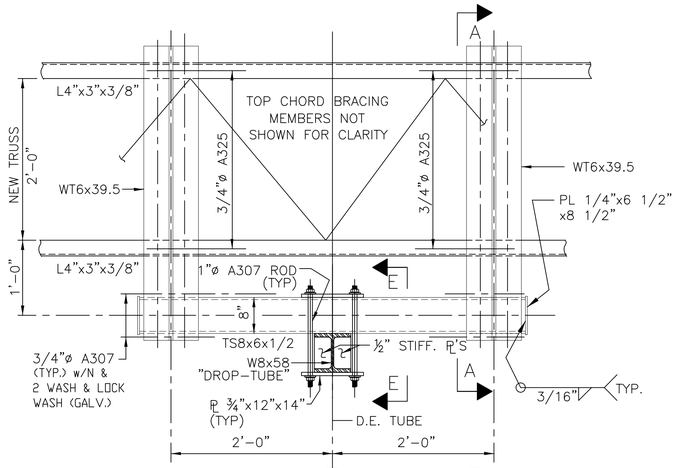

PLAN

TRUSS TOP CHORD – E.D. 801A (NEW)
MK MCDS

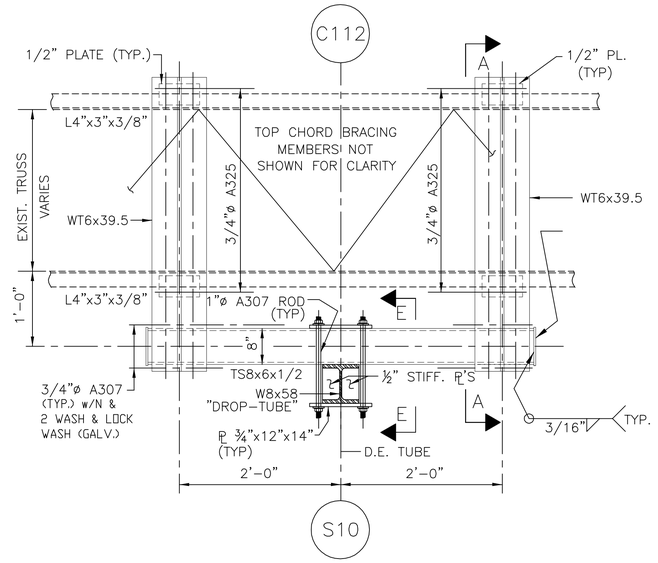

PLAN

TRUSS TOP CHORD
EXIST. E.D. 804 (SHOWN)
E.D. 805 & E.D.812 (SIMILAR)
MK MCDS

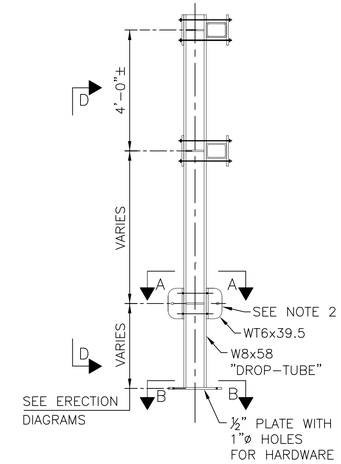

SECTION AT DROP-TUBE

SECTION E-E

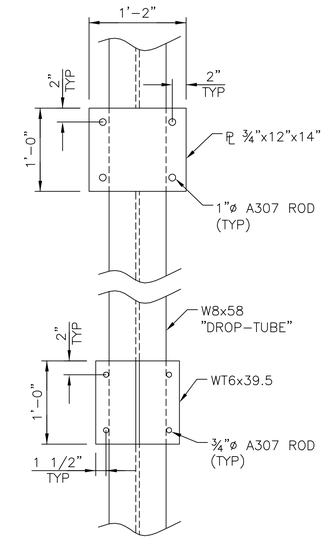

SECTION D-D

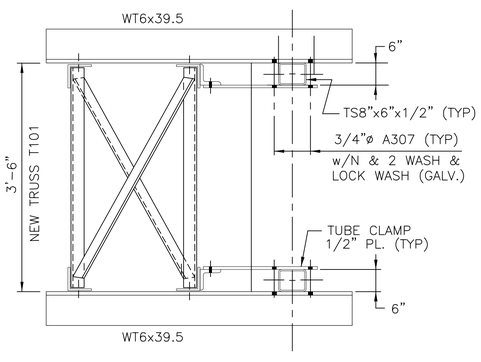

SECTION A-A

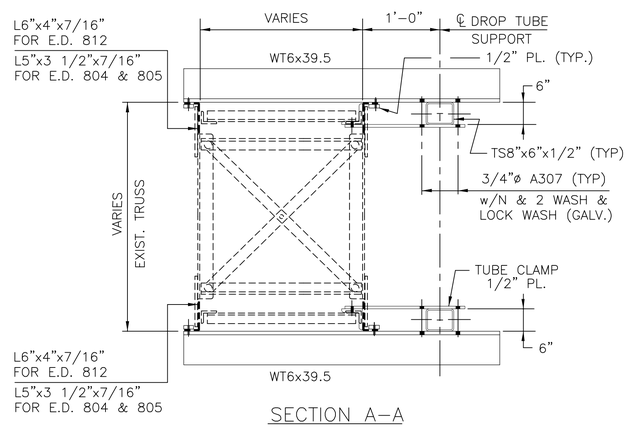

SECTION A-A

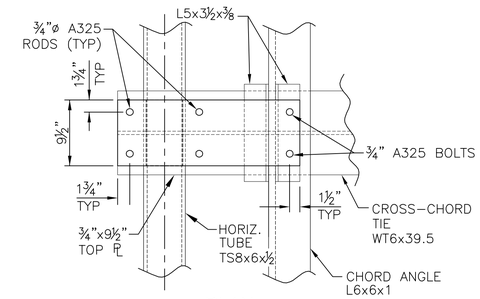

PLAN

NOTES:

1. FOR GENERAL NOTES, SEE DRAWING G-8.
2. REFER TO ERECTION DIAGRAM AND/OR PROFILE TO DETERMINE IF DEAD END IS REQUIRED.

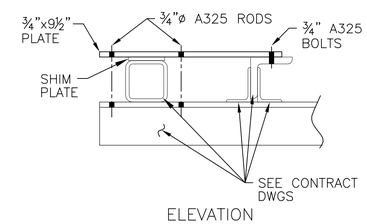

ELEVATION

DETAIL 1

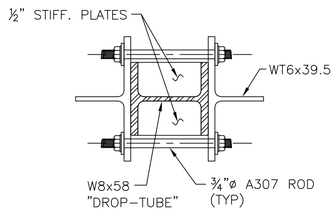

SECTION A-A

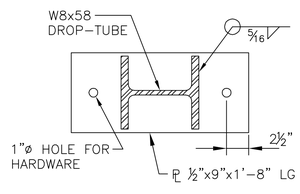

SECTION B-B

THE INFORMATION, INCLUDING ESTIMATED QUANTITIES OF WORK SHOWN ON THESE SHEETS IS BASED ON LIMITED INVESTIGATIONS BY THE STATE AND IS IN NO WAY WARRANTED TO INDICATE THE TRUE CONDITIONS OR ACTUAL QUANTITIES OR DISTRIBUTION OF QUANTITIES OF WORK WHICH WILL BE REQUIRED.

SCALE: NTS

URS CORPORATION AES
500 ENTERPRISE DRIVE
ROCKY HILL, CT 06067
1-(860)-529-8882

NO.	DATE	DESCRIPTION

REVISIONS

STATE OF CONNECTICUT
DEPARTMENT OF TRANSPORTATION

STAMFORD YARD CATENARY IMPROVEMENTS

STEEL DETAILS –
DROP TUBE SUPPORTS – SHEET 7

ENGINEER: URS CORPORATION AES
DESIGNER: RW | DRAFTER: AMK | CHECKER: AJM
APPROVED: T. HOLLAND | DATE: XX/XX/XX
STRUCTURE NO. | BRIDGE LOG NO. | STRUCTURE SHEET NO. S-19

PROJECT CONTROL DATE: XX/XX/XX DISK FILENAME: S-19.dwg XX% DESIGN

F H W A REGION	STATE	TOWN	FED. AID PROJ. NO.	PROJ. NO.	YEAR	SHEET NUMBER
1	CONN.	VARIOUS		301-163	2014	

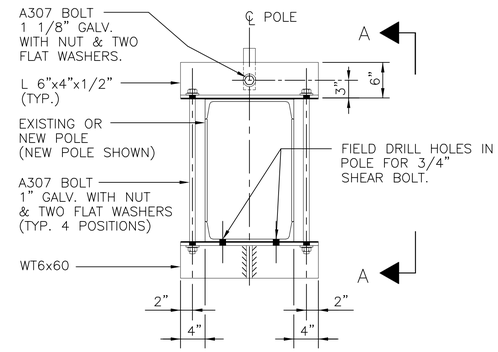

PLAN

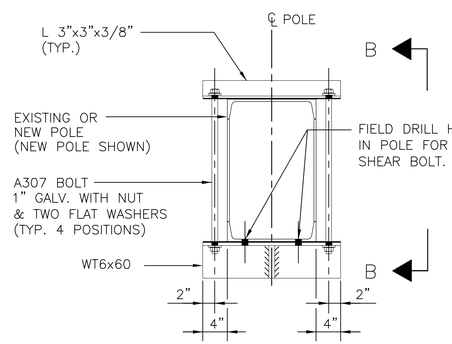

PLAN

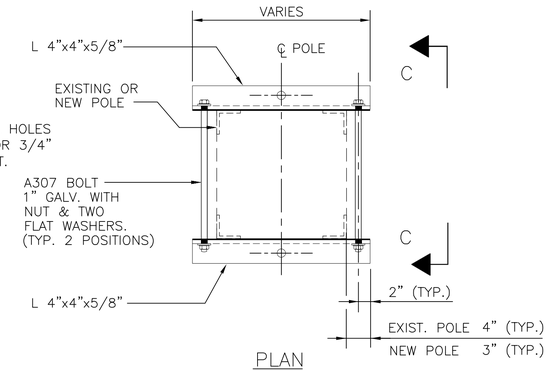

PLAN

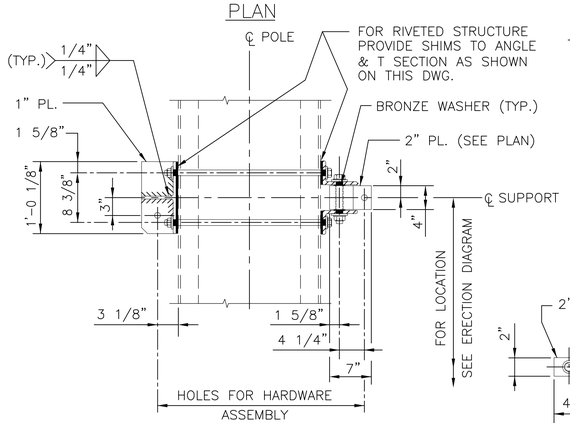

SECTION A–A
(SEE NOTE 3)

SWIVEL BRACKET ASSEMBLY GC–1
(PART NO. 159, REF. DWG. NO. E–12)
(USE FOR ASSEMBLIES BWA, CDEA–7 & G–5)
(SHOWN FOR NEW BUILT UP POLE
SIMILAR FOR NEW WF POLE)

SWIVEL BRACKET ASSEMBLY GC–2
(INSTEAD OF WT6, PROVIDE 2" PLATE & L 6"x4"x1/2
ON BOTH SIDES TO RECEIVE DEAD ENDS ON BOTH SIDES)

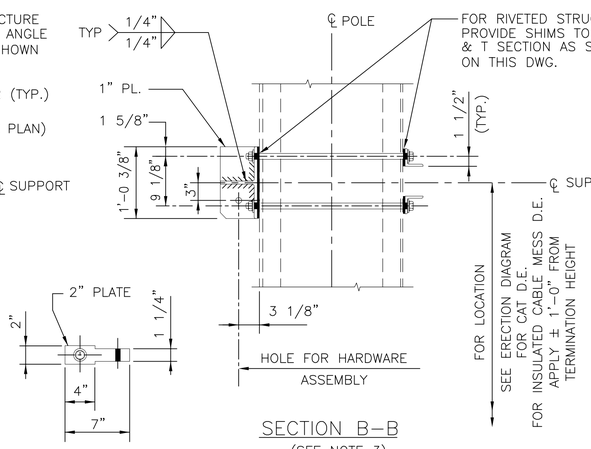

SECTION B–B
(SEE NOTE 3)

GUY BRACKET ASSEMBLY DETAIL GBA
(AS SHOWN)

GUY BRACKET ASSEMBLY DETAIL GBA–1
(WT6x60 BOTH SIDES, OMIT L & PROVIDE THREE
HOLES IN OUTSTANDING LEG)
(USE FOR ASSEMBLIES CDEA–4, CDEA–5, G–7 & G–5)
(SHOWN FOR POLE P101 & P102
SIMILAR FOR PULL–OFF POLE)

GUY BRACKET ASSEMBLY DETAIL GBA–2
(PROVIDE WT6x60 BOTH SIDES TO RECEIVE GUY ASSEMBLIES)

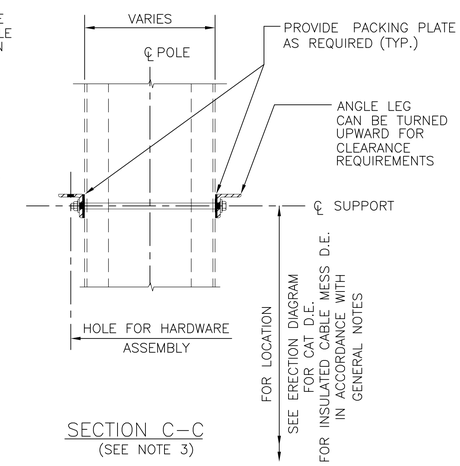

SECTION C–C
(SEE NOTE 3)

SPAN WIRE BRACKET
ASSEMBLY DETAIL SBA
(USE FOR ASSEMBLIES DEA–1,
MESSENGER & CONTACT WIRE D.E.)

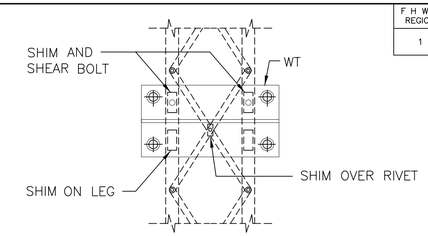

WT OVER MIDDLE RIVET

–INSTALL SHIMS (SEE SHIM DETAIL) 4 LOCATIONS ON LEGS.
–INSTALL SHIM ON MIDDLE RIVET.
–DRILL EXISTING STEEL ANGLE AND INSTALL 2 SHEAR BOLTS ABOVE WT WEB.

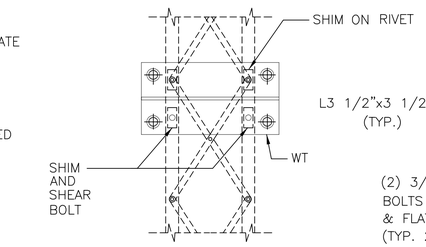

WT OVER LEG RIVETS

–INSTALL SHIMS (SEE SHIM DETAIL) 2 LOCATIONS ON LEGS.
–INSTALL SHIMS ON 2 LOCATIONS ON LEGS.
–DRILL EXISTING STEEL ANGLE AND INSTALL 2 SHEAR BOLTS BELOW WT WEB.

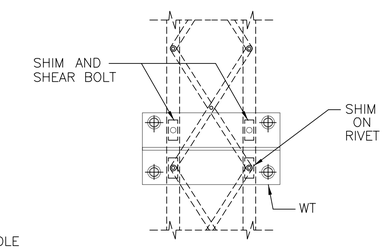

WT OVER LEG RIVETS

–INSTALL SHIMS (SEE SHIM DETAIL) 2 LOCATIONS ON LEGS.
–INSTALL SHIMS ON 2 LOCATIONS ON LEGS.
–DRILL EXISTING STEEL ANGLE AND INSTALL 2 SHEAR BOLTS ABOVE WT WEB.

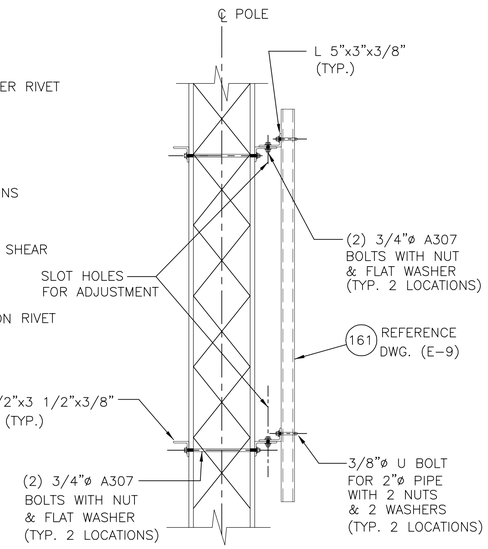

ELEVATION

SUPPORT FOR GUIDE TUBE
OF BALANCE WEIGHT

(P101 SHOWN, USE SIMILAR DETAIL
FOR OTHER SECTIONS)

NOTES:

1. FOR GENERAL NOTES, SEE DRAWING G–8.
2. CONTRACTOR TO VERIFY RIVET HEAD SIZE FOR DIAMETER OF HOLE IN SHIM.
3. THE GC, GBA, GBA–1 AND SBA ASSEMBLIES MAY BE MOVED BETWEEN 3" UP OR 6" DOWN FOR BETTER ATTACHMENT POSITIONING AROUND THE RIVET HEADS AND LACING BARS, AND PLACING SHIMS.

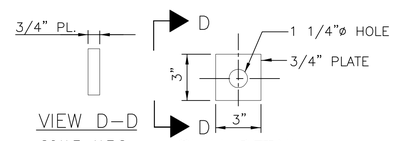

VIEW D–D
SCALE: N.T.S.

SHIM DETAIL
(FOR STRAIGHT POLE)
(SEE NOTE 2)

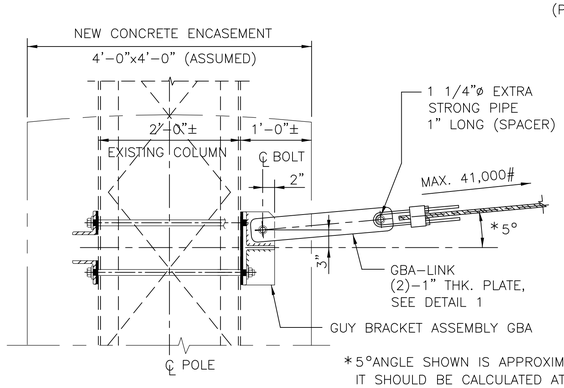

GBA–LINK
(FOR USE W/CONCRETE ENCASED GBA'S)

*5°ANGLE SHOWN IS APPROXIMATE,
IT SHOULD BE CALCULATED AT
EACH LOCATION.
(WORK WITH DWG. E–12)

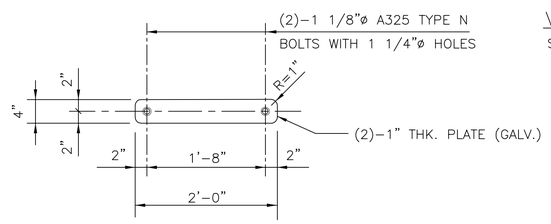

DETAIL 1 (GBA–LINK)

THE INFORMATION, INCLUDING ESTIMATED QUANTITIES OF WORK SHOWN ON THESE SHEETS IS BASED ON LIMITED INVESTIGATIONS BY THE STATE AND IS IN NO WAY WARRANTED TO INDICATE THE TRUE CONDITIONS OR ACTUAL QUANTITIES OR DISTRIBUTION OF QUANTITIES OF WORK WHICH WILL BE REQUIRED.

SCALE: 1" = 1'-0"

URS CORPORATION AES
500 ENTERPRISE DRIVE
ROCKY HILL, CT 06067
1-(860)-529-8882

NO.	DATE	DESCRIPTION

REVISIONS

STATE OF CONNECTICUT
DEPARTMENT OF TRANSPORTATION

STAMFORD YARD CATENARY
IMPROVEMENTS

STEEL DETAILS –
BRACKET ASSEMBLIES

ENGINEER: URS CORPORATION AES
DESIGNER: RW | DRAFTER: AMK | CHECKER: AJM
APPROVED: T. HOLLAND | DATE: XX/XX/XX
STRUCTURE NO. | BRIDGE LOG NO. | STRUCTURE SHEET NO. S–20

PROJECT CONTROL DATE: XX/XX/XX DISK FILENAME: S–20.dwg XX% DESIGN

F H W A REGION	STATE	TOWN	FED. AID PROJ. NO.	PROJ. NO.	YEAR	SHEET NUMBER
1	CONN.	VARIOUS		301-163	2014	

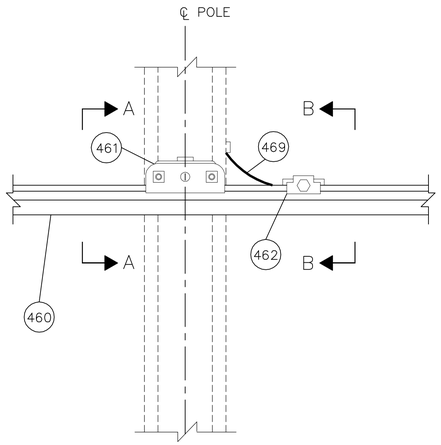

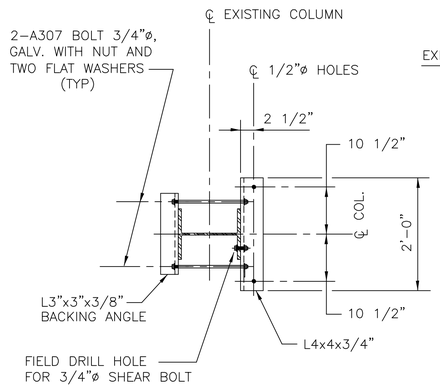

DETAIL TYPE "D"

(DROP TUBE CLAMP ARRANGEMENT)

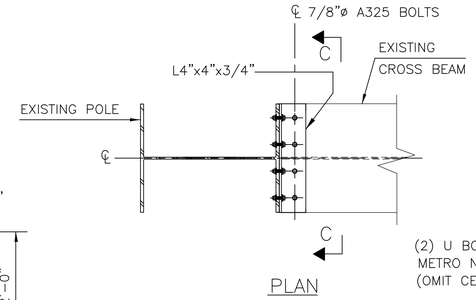

PLAN

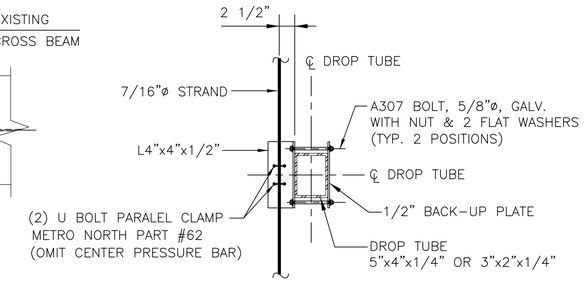

SECTION D-D

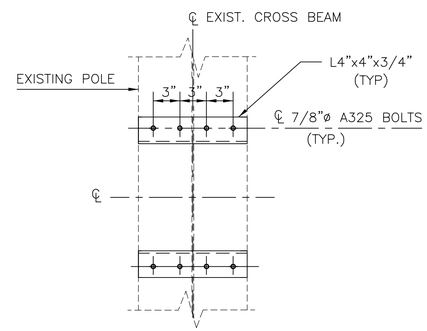

SECTION C-C

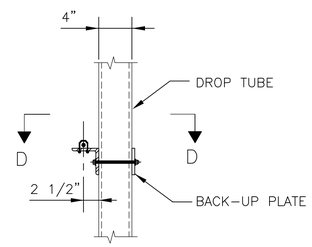

ELEVATION

AERIAL INNERDUCT SUPPORT MK AIS
GENERAL ARRANGEMENT SUPPORT FOR FIBER OPTIC CABLES
(ALONG TRACK ON NEW STRUCTURES)

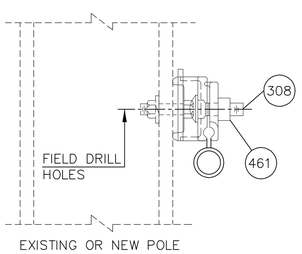

VIEW A-A

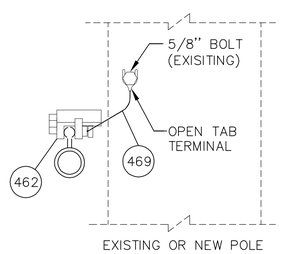

VIEW B-B

DETAIL TYPE "E"

DETAIL TYPE "F"

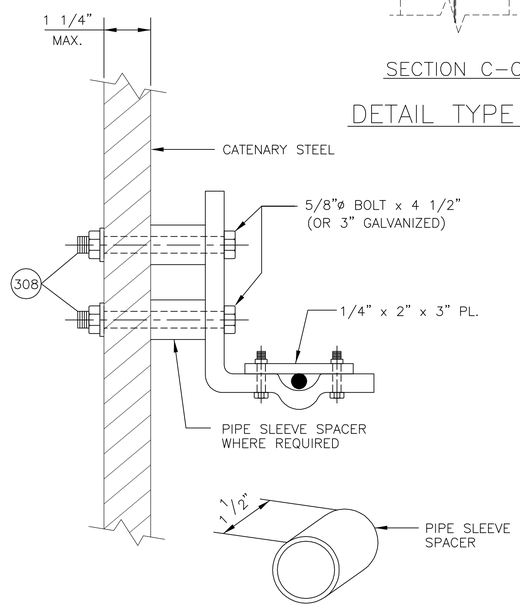

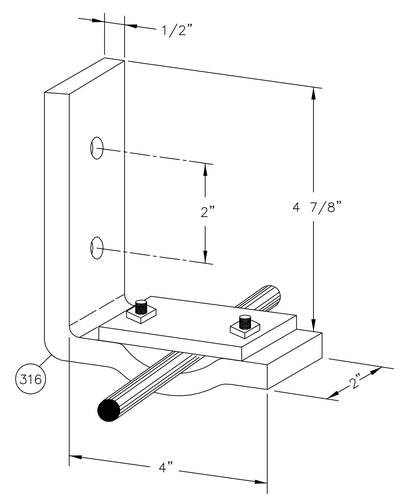

MESSENGER HANGER BRACKET MK BK-1

(FOR SINGLE MESSENGER ON NEW OR EXISTING POLE)

SCALE: NONE

PART NO.	MNRR NO.	DESCRIPTION	QUANTITY AIS	QUANTITY BK-1
308		5/8"∅ BOLT WITH WASHER AND NUT	2	2
460		1-1/4" FIGURE 8 AERIAL INNERDUCT WITH 3/8" 10M EHS GALVANIZED MESSENGER	EXISTING	———
461		MESSENGER SUPPORT BRACKET AIS	1	———
462		MESSENGER PIERCING GROUNDING CLAMP	1	———
469		#6 AWG BARE SOLID GROUND WIRE	AS REQUIRED	———
316		MESSENGER SUPPORT BRACKET	———	1

NOTES:

1. FOR GENERAL NOTES, SEE DRAWING G-8.
2. FOR ALLOCATION OF THE MESSENGER SUPPORT BRACKETS SEE ERECTION DIAGRAMS.
3. FOR ALLOCATION OF THE DETAILS TYPE "D","E" & "F" SEE ERECTION DIAGRAMS.

THE INFORMATION, INCLUDING ESTIMATED QUANTITIES OF WORK SHOWN ON THESE SHEETS IS BASED ON LIMITED INVESTIGATIONS BY THE STATE AND IS IN NO WAY WARRANTED TO INDICATE THE TRUE CONDITIONS OR ACTUAL QUANTITIES OR DISTRIBUTION OF QUANTITIES OF WORK WHICH WILL BE REQUIRED.

URS CORPORATION AES
500 ENTERPRISE DRIVE
ROCKY HILL, CT 06067
1-(860)-529-8882

NO.	DATE	DESCRIPTION

REVISIONS

STATE OF CONNECTICUT
DEPARTMENT OF TRANSPORTATION

STAMFORD YARD CATENARY IMPROVEMENTS

STEEL DETAILS – CABLE SUPPORT DETAILS

ENGINEER: URS CORPORATION AES
DESIGNER: RW | DRAFTER: AMK | CHECKER: AJM
APPROVED: T. HOLLAND | DATE: XX/XX/XX
STRUCTURE NO. | BRIDGE LOG NO. | STRUCTURE SHEET NO. S-21

PROJECT CONTROL DATE: XX/XX/XX DISK FILENAME: S-21.dwg XX% DESIGN

F H W A REGION	STATE	TOWN	FED. AID PROJ. NO.	PROJ. NO.	YEAR	SHEET NUMBER
1	CONN.	VARIOUS		301-163	2014	

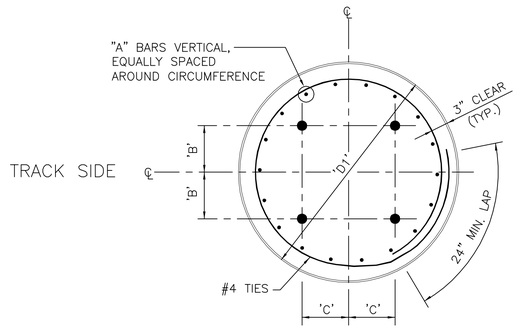

PLAN

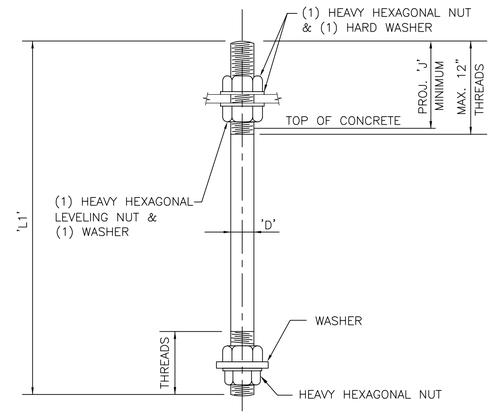

ANCHOR BOLT DETAIL

NOTES:

1. FOR GENERAL NOTES, SEE DRAWING G-8.
2. IN ORDER TO CLEAR EXISTING OVERHEAD WIRES AND THE PROXIMITY OF TRACKS DURING INSTALLATION OF FOUNDATIONS, IT MAY BE NECESSARY TO PROVIDE A FIELD SPLICE WITH FULL PENETRATION BUTT WELD FOR MORE THAN 10 FEET OF SHELL LENGTH.

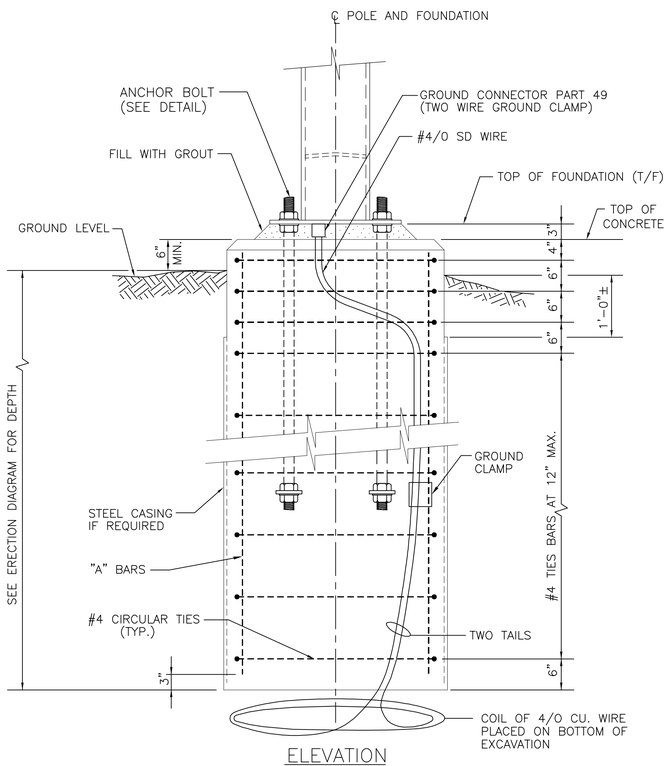

ELEVATION

FOUNDATION TYPES A, B & F

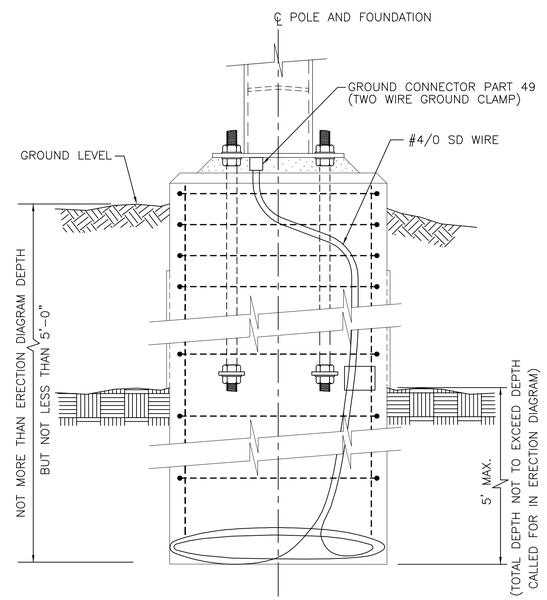

ELEVATION

FOUNDATION TYPES A , B & F WITH ROCK SOCKET

(FOR ADDITIONAL INFORMATION SEE OTHER ELEVATIONS ON THIS SHEET)

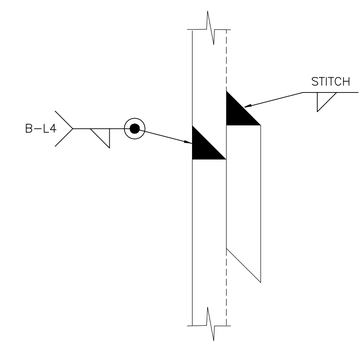

TYPICAL SHELL FIELD SPLICE

FOUNDATION SCHEDULE		
FOUNDATION TYPE	SIZE 'D1'	REINFORCEMENT "A" BAR
A	3'-6"ø	16#9
B	4'-6"ø	16#9
F	3'-0"ø	13#9
Ba	4'-6"ø	19#9
Fa	3'-0"ø	20#9

ANCHOR BOLT SCHEDULE					
FOUNDATION TYPE	'L1'	'B'	'C'	'J'	'D'
A & RA	4'-6"	9"	10"	6 1/2"	1 1/2"ø
B,Ba & RB	5'-6"	1'-2"	1'-0"	7"	1 1/2"ø
F,Fa & RF	4'-6"	9"	8 3/4"	6 1/2"	1 1/2"ø

THE INFORMATION, INCLUDING ESTIMATED QUANTITIES OF WORK SHOWN ON THESE SHEETS IS BASED ON LIMITED INVESTIGATIONS BY THE STATE AND IS IN NO WAY WARRANTED TO INDICATE THE TRUE CONDITIONS OR ACTUAL QUANTITIES OR DISTRIBUTION OF QUANTITIES OF WORK WHICH WILL BE REQUIRED.

SCALE: NONE

URS CORPORATION AES
500 ENTERPRISE DRIVE
ROCKY HILL, CT 06067
1-(860)-529-8882

NO.	DATE	DESCRIPTION

REVISIONS

STATE OF CONNECTICUT
DEPARTMENT OF TRANSPORTATION

STAMFORD YARD CATENARY IMPROVEMENTS

FOUNDATION TYPES – A, B, D AND F

ENGINEER: URS CORPORATION AES
DESIGNER: JZO/TH | DRAFTER: AMK | CHECKER: AJM
APPROVED: T. HOLLAND | DATE: XX/XX/XX
STRUCTURE NO. | BRIDGE LOG NO. | STRUCTURE SHEET NO. S-22

PROJECT CONTROL DATE: XX/XX/XX DISK FILENAME: S-22.dwg XX% DESIGN

F H W A REGION	STATE	TOWN	FED. AID PROJ. NO.	PROJ. NO.	YEAR	SHEET NUMBER
1	CONN.	VARIOUS		301-163	2014	

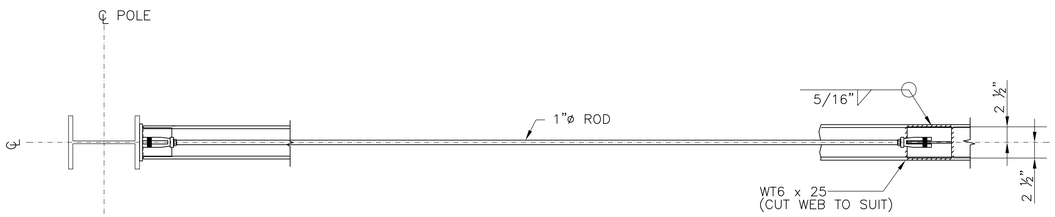

PLAN
(TS OMITTED FOR CLARITY)

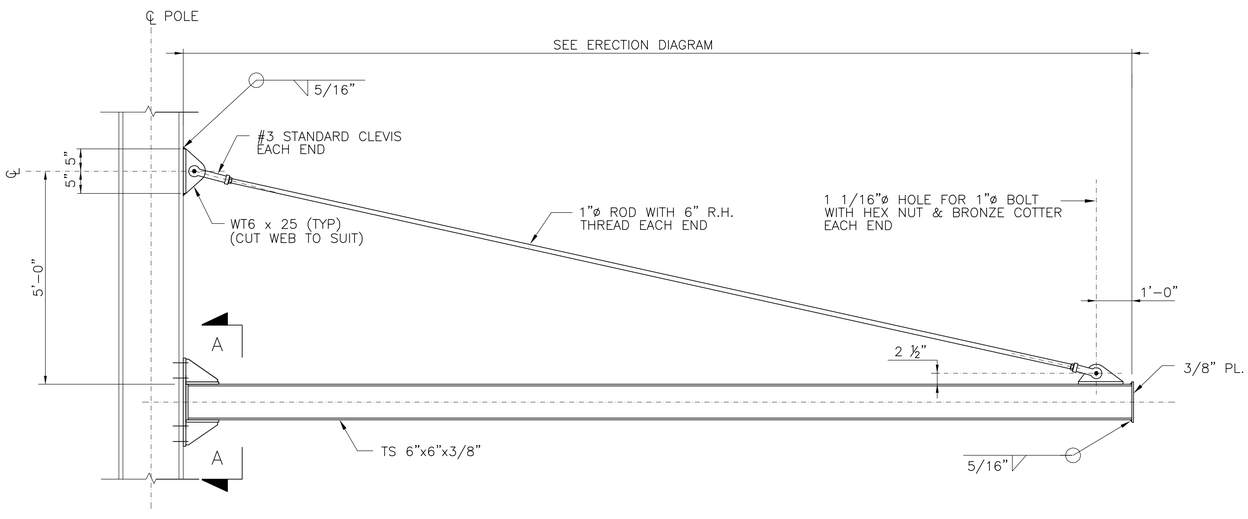

ELEVATION

CANTILEVER BRACKET BR-1

SCALE: N.T.S.

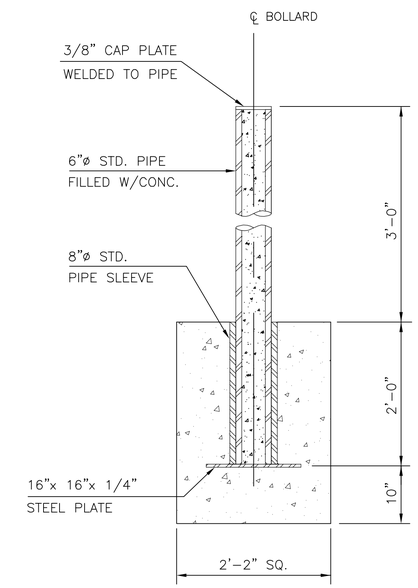

BOLLARD MK BP-1

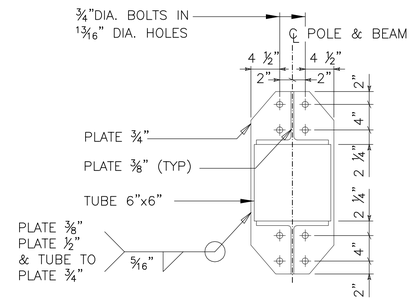

SECTION "A-A"

NOTES:

1. FOR GENERAL NOTES, SEE DRAWING G-8.

THE INFORMATION, INCLUDING ESTIMATED QUANTITIES OF WORK SHOWN ON THESE SHEETS IS BASED ON LIMITED INVESTIGATIONS BY THE STATE AND IS IN NO WAY WARRANTED TO INDICATE THE TRUE CONDITIONS OR ACTUAL QUANTITIES OR DISTRIBUTION OF QUANTITIES OF WORK WHICH WILL BE REQUIRED.

SCALE: NONE

URS CORPORATION AES
500 ENTERPRISE DRIVE
ROCKY HILL, CT 06067
1-(860)-529-8882

NO.	DATE	DESCRIPTION

REVISIONS

STATE OF CONNECTICUT
DEPARTMENT OF TRANSPORTATION

STAMFORD YARD CATENARY IMPROVEMENTS

STEEL DETAILS
BR-1 AND BOLLARD

ENGINEER: URS CORPORATION AES
DESIGNER: RW | DRAFTER: AMK | CHECKER: AJM
APPROVED: T. HOLLAND | DATE: XX/XX/XX
STRUCTURE NO. | BRIDGE LOG NO. | STRUCTURE SHEET NO. S-25

PROJECT CONTROL DATE: XX/XX/XX DISK FILENAME: S-25.dwg XX% DESIGN

F H W A REGION	STATE	TOWN	FED. AID PROJ. NO.	PROJ. NO.	YEAR	SHEET NUMBER
1	CONN.	VARIOUS		301-163	2014	

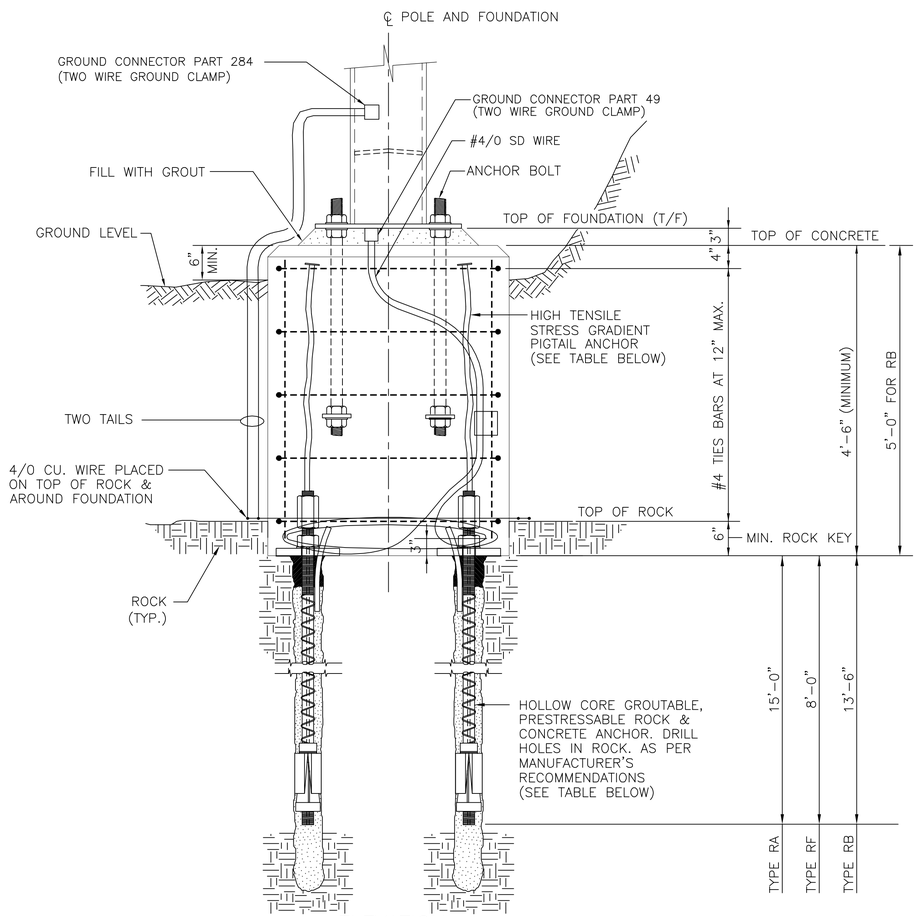

ELEVATION

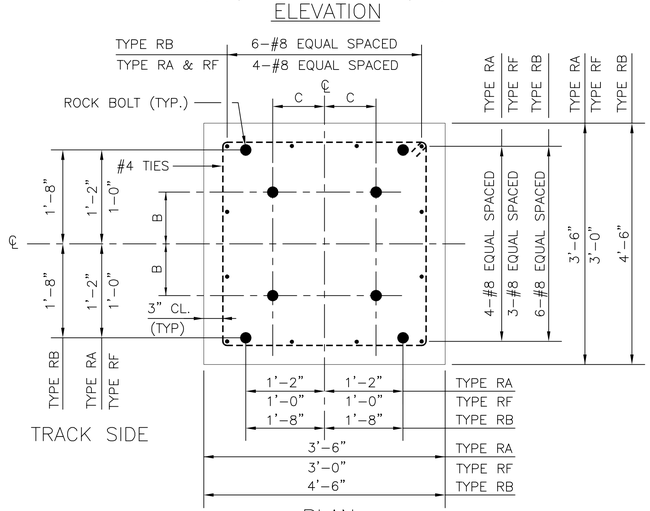

TRACK SIDE

PLAN

FOUNDATION TYPE RA, RB & RF WITH ROCK ANCHORS

NOTES:

1. FOR ANCHOR BOLT DETAIL, SEE DRAWING S-22.
2. FOR GENERAL NOTES, SEE DRAWING G-8.

ROCK & CONCRETE HOLLOW CORE ANCHOR SCHEDULE			PIGTAIL ANCHOR SCHEDULE	
FOUNDATION TYPE	DIAMETER	ULTIMATE STRENGTH OF EACH BOLT	DIAMETER	ULTIMATE STRENGTH OF EACH BOLT
RA	1 3/8"ø	138,000 #	1 3/8"ø	130,000 #
RF	1"ø	66,000 #	1"ø	72,700 #
RB	2"ø	300,000 #	2"ø	279,000 #
GRA	1 3/8"ø	138,000 #		

THE INFORMATION, INCLUDING ESTIMATED QUANTITIES OF WORK SHOWN ON THESE SHEETS IS BASED ON LIMITED INVESTIGATIONS BY THE STATE AND IS IN NO WAY WARRANTED TO INDICATE THE TRUE CONDITIONS OR ACTUAL QUANTITIES OR DISTRIBUTION OF QUANTITIES OF WORK WHICH WILL BE REQUIRED.

SCALE: NONE

URS CORPORATION AES
500 ENTERPRISE DRIVE
ROCKY HILL, CT 06067
1-(860)-529-8882

NO.	DATE	DESCRIPTION

REVISIONS

STATE OF CONNECTICUT
DEPARTMENT OF TRANSPORTATION

STAMFORD YARD CATENARY IMPROVEMENTS

FOUNDATION W/ ROCK ANCHORS

ENGINEER: URS CORPORATION AES
DESIGNER: RW | DRAFTER: AMK | CHECKER: AJM
APPROVED: T. HOLLAND | DATE: XX/XX/XX
STRUCTURE NO. | BRIDGE LOG NO. | STRUCTURE SHEET NO. S-26

PROJECT CONTROL DATE: XX/XX/XX DISK FILENAME: S-26.dwg XX% DESIGN

F H W A REGION	STATE	TOWN	FED. AID PROJ. NO.	PROJ. NO.	YEAR	SHEET NUMBER
1	CONN.	VARIOUS		301-163	2014	

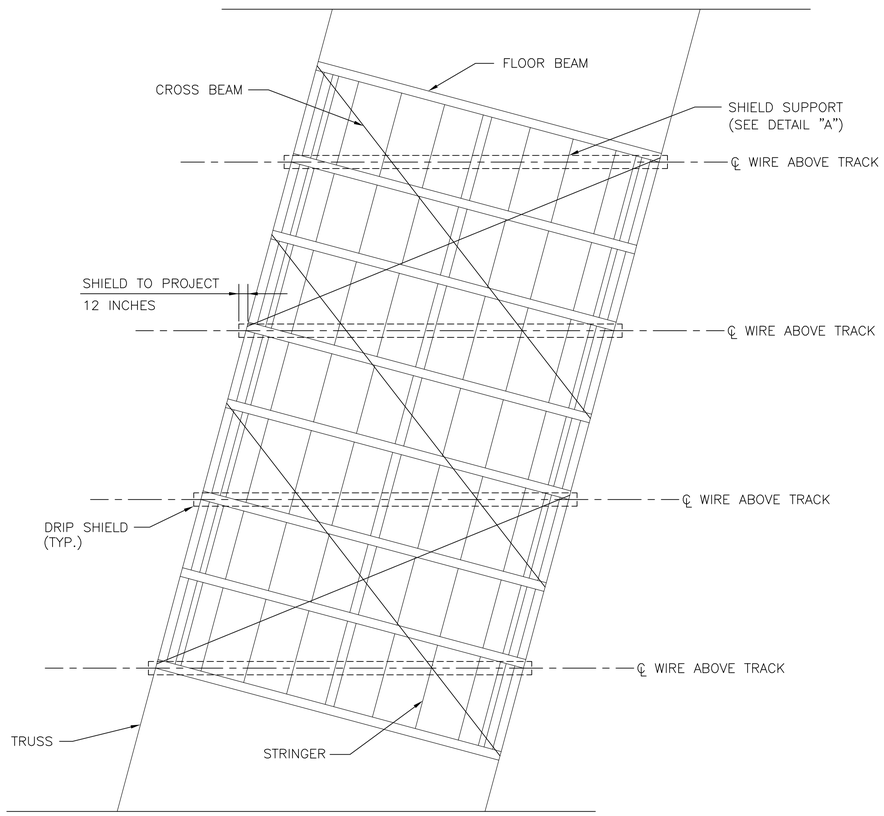

BRIDGE FLOOR PLAN SHOWING
LOCATION OF DRIP SHIELD
(TYPICAL)

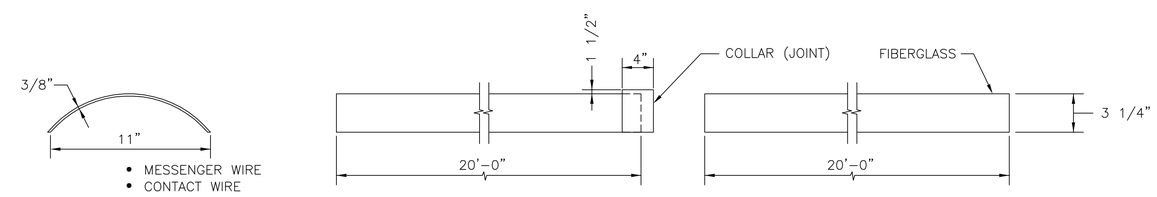

DETAIL OF DRIP SHIELD

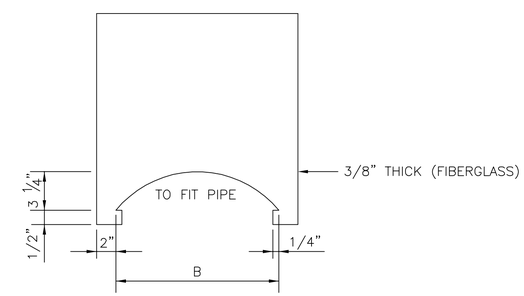

TYPICAL DETAIL OF DRIP SHIELD SUPPORT

THE NUMBER, SPACING, HEIGHT AND SHAPE
SHALL BE ADAPTED TO THE INDIVIDUAL BRIDGES.

NOTES:

1. FOR GENERAL NOTES, SEE DRAWING G-8.
2. 7" ELECTRICAL CLEARANCE SHALL BE PROVIDED BETWEEN SHIELD AND MESSENGER/CONTACT WIRE OR UNDERBRIDGE SUPPORT.

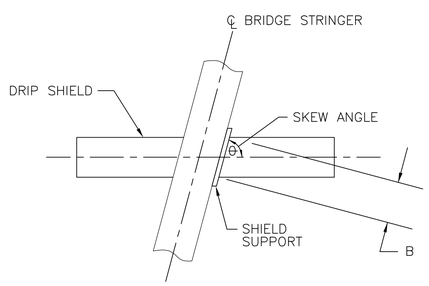

DETAIL "A"

DIMENSION B TO BE DETERMINED BY CONTRACTOR
BASED UPON REQUIRED SKEW ANGLE.

THE INFORMATION, INCLUDING ESTIMATED QUANTITIES OF WORK SHOWN ON THESE SHEETS IS BASED ON LIMITED INVESTIGATIONS BY THE STATE AND IS IN NO WAY WARRANTED TO INDICATE THE TRUE CONDITIONS OR ACTUAL QUANTITIES OR DISTRIBUTION OF QUANTITIES OF WORK WHICH WILL BE REQUIRED.

SCALE: NONE

URS CORPORATION AES
500 ENTERPRISE DRIVE
ROCKY HILL, CT 06067
1-(860)-529-8882

NO.	DATE	DESCRIPTION

REVISIONS

STATE OF CONNECTICUT
DEPARTMENT OF TRANSPORTATION

STAMFORD YARD CATENARY IMPROVEMENTS

CATENARY SYSTEM DRIP SHIELDS

ENGINEER: URS CORPORATION AES
DESIGNER: RW | DRAFTER: AMK | CHECKER: AJM
APPROVED: T. HOLLAND | DATE: XX/XX/XX
STRUCTURE NO. | BRIDGE LOG NO. | STRUCTURE SHEET NO. S-28

PROJECT CONTROL DATE: XX/XX/XX DISK FILENAME: S-28.dwg XX% DESIGN

F H W A REGION	STATE	TOWN	FED. AID PROJ. NO.	PROJ. NO.	YEAR	SHEET NUMBER
1	CONN.	VARIOUS		301-163	2014	

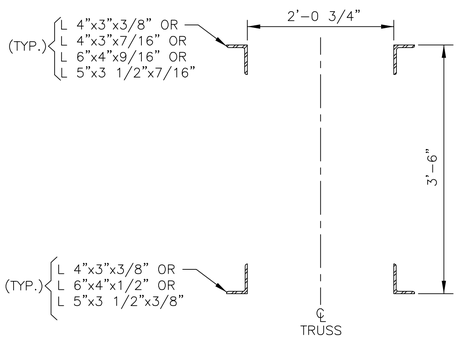

CROSS SECTION OF EXISTING SHORT TRUSS

EXISTING STRS: 532 TO 538, 540 TO 562, 574, 582 TO 598, 600 TO 629, 634 TO 639, 791 TO 798

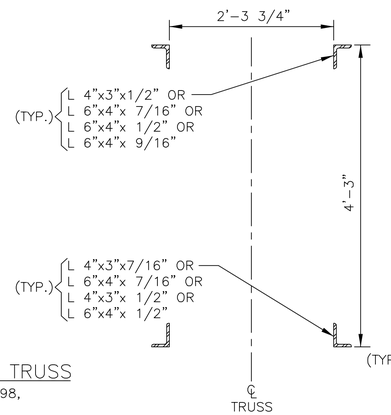

CROSS SECTION OF EXISTING LONG TRUSS

539, 563 TO 573, 599, 630 TO 632, 799 TO 801, 819 TO 842, 844 TO 848, 850 TO 856, 858 TO 860

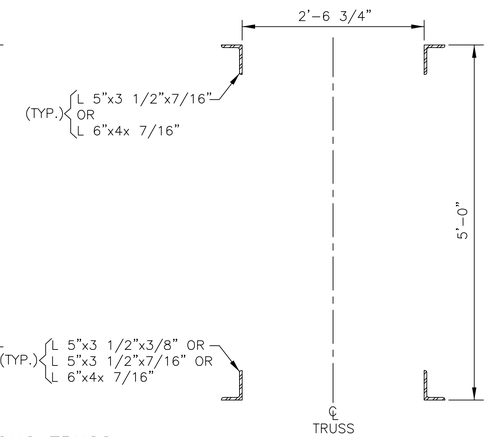

CROSS SECTION OF EXISTING LONG DEEP TRUSS

804,818,843,849

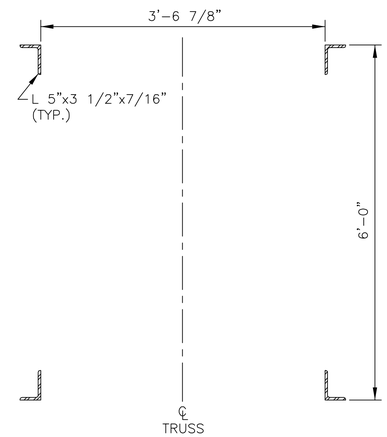

CROSS SECTION OF EXISTING LONG DEEP TRUSS

805-811, 813, 815-817

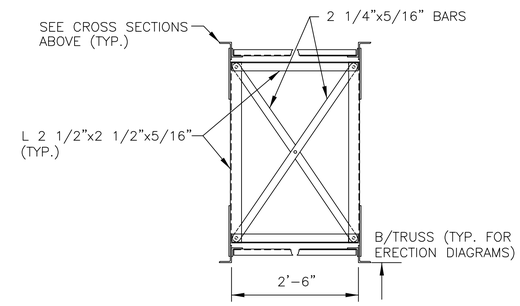

TYPICAL SECTION THRU. EXISTING TRUSS

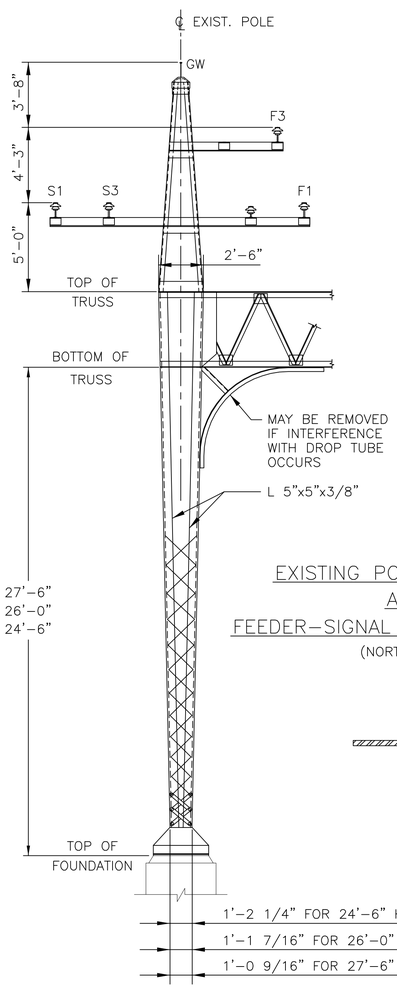

EXISTING POLE ELEVATION AND FEEDER-SIGNAL WIRE ORIENTATION

(NORTH SIDE)

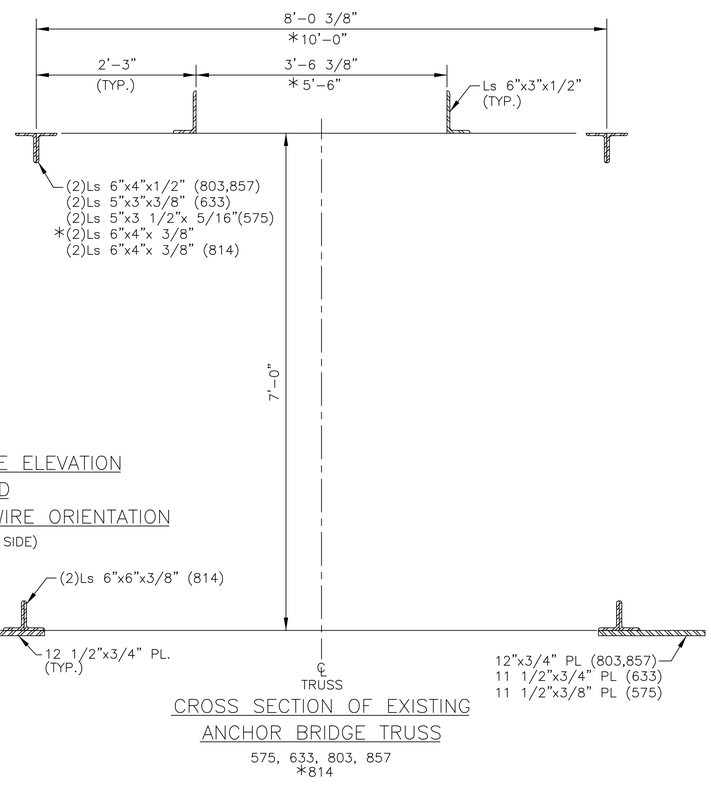

CROSS SECTION OF EXISTING ANCHOR BRIDGE TRUSS

575, 633, 803, 857
*814

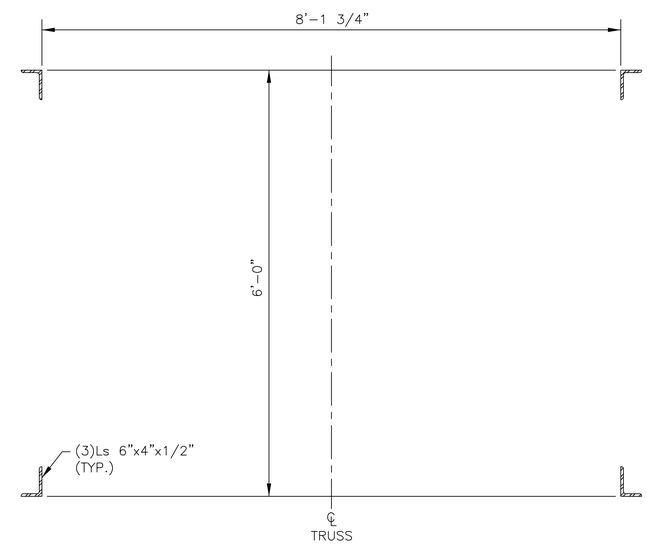

CROSS SECTION OF EXISTING TRUSS

812

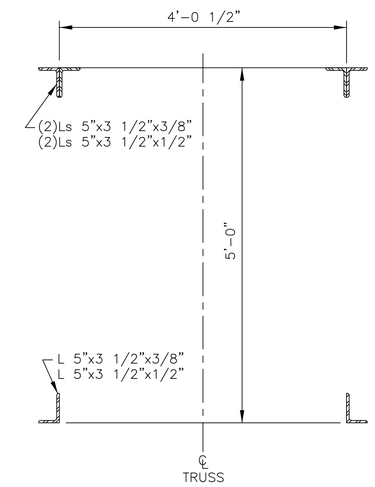

CROSS SECTION OF EXISTING TRUSS

531, 576, 581, 861

SCALE: NONE

NOTES:

1. FOR GENERAL NOTES, SEE DWG. G-8.
2. MEASUREMENTS TO BE FIELD VERIFIED.
3. TRUSS 802 REQUIRED FIELD MEASURING.

THE INFORMATION, INCLUDING ESTIMATED QUANTITIES OF WORK SHOWN ON THESE SHEETS IS BASED ON LIMITED INVESTIGATIONS BY THE STATE AND IS IN NO WAY WARRANTED TO INDICATE THE TRUE CONDITIONS OR ACTUAL QUANTITIES OR DISTRIBUTION OF QUANTITIES OF WORK WHICH WILL BE REQUIRED.

URS CORPORATION AES
500 ENTERPRISE DRIVE
ROCKY HILL, CT 06067
1-(860)-529-8882

NO.	DATE	DESCRIPTION

REVISIONS

STATE OF CONNECTICUT
DEPARTMENT OF TRANSPORTATION

STAMFORD YARD CATENARY IMPROVEMENTS

EXISTING STRUCTURES

ENGINEER: URS CORPORATION AES
DESIGNER: RW | DRAFTER: AMK | CHECKER: AJM
APPROVED: T. HOLLAND | DATE: XX/XX/XX
STRUCTURE NO. | BRIDGE LOG NO. | STRUCTURE SHEET NO. S-42

PROJECT CONTROL DATE: XX/XX/XX DISK FILENAME: S-42.dwg XX% DESIGN

F.H.W.A. REGION	STATE	TOWN	FED. AID PROJ. NO.	PROJ. NO.	YEAR	SHEET NUMBER
1	CONN.	VARIOUS	CT-05-0109	301-0145	2013	

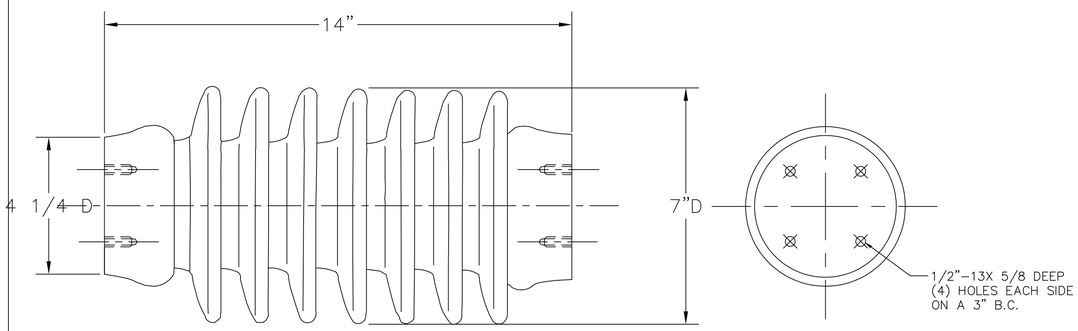

MECHANICAL VALUES
CANTILEVER STRENGTH: 2,000 LBS.
TENSION STRENGTH: 10,000 LBS.
COMPRESSION STRENGTH: 10,000 LBS

ELECTRICAL VALUES
RATING: 23 KV
TEST VOLTAGE (RMS TO GROUND): 15 KV
LEAKAGE DISTANCE: 24 IN.
DRY ARCING DISTANCE: 10.5 IN

MATERIAL:
BODY-VITRIFIED PORCELAIN
GLAZED: LIGHT GRAY
BASE-MALLEABLE IRON, ASTM A536
GALVANIZED TO ASTM A153

Metro-North Commuter Railroad

DRAWING TITLE:
CANTILEVER INSULATOR
(2000 LBS)

METRO-NORTH NO. 10-445110

STANDARD COMPONENTS

URS CORPORATION AES
500 ENTERPRISE DRIVE
ROCKY HILL, CT 06067
1-(860)-529-8882

ENGINEER: –
DESIGNER: – DRAFTER: VY CHECKER: VY
APPROVED: URE
PART NO. 1

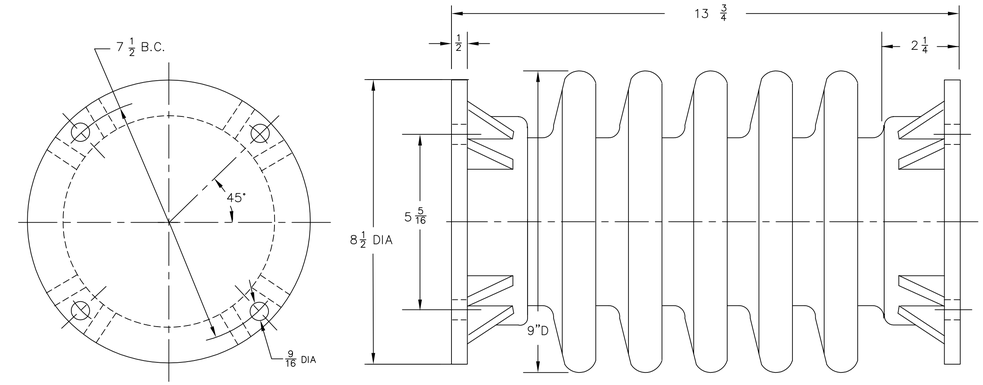

MATERIAL
BODY – VITRIFIED PORCELAIN
GLAZED: LIGHT GRAY

FLANGES – MALLEABLE IRON, ASTM A536
HOT DIP GALVANIZED TO ASTM A153

MECHANICAL VALUES
CANTILEVER STRENGTH: 4,000 LBS
TENSION STRENGTH: 20,000LBS
COMPRESSION STRENGTH: 20,000LBS

ELECTRICAL VALUES
RATING: 23 KV
TEST VOLTAGE (RMS TO GROUND): 15 KV
LEAKAGE DISTANCE: 24 IN
DRY ARCING DISTANCE: 10.5 IN

Metro-North Commuter Railroad

DRAWING TITLE:
CANTILEVER INSULATOR
(4000 LBS)

METRO-NORTH NO. 10445110

STANDARD COMPONENTS

URS CORPORATION AES
500 ENTERPRISE DRIVE
ROCKY HILL, CT 06067
1-(860)-529-8882

ENGINEER
DESIGNER DRAFTER VY CHECKER VY
APPROVED URE
PART NO. 3

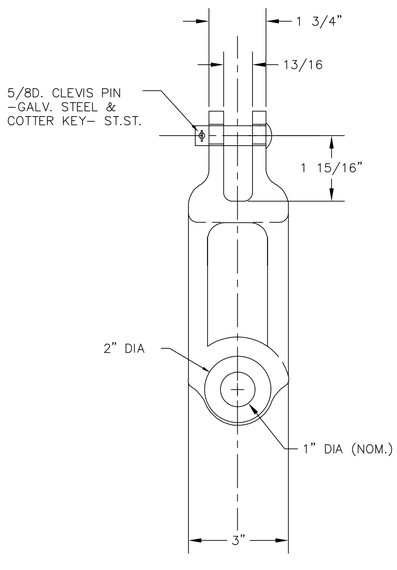

NOTE: THIS PART OF PART #6.

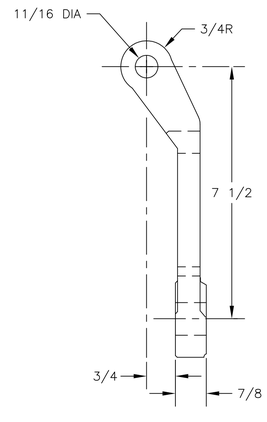

MATERIAL
ALUMINUM BRONZE, ASTM B-30, B-148
ALLOY 955 T.S. 90,000 PSI

Metro-North Commuter Railroad

DRAWING TITLE:
PULLEY HOLDER

METRO-NORTH NO. 10-739102

STANDARD COMPONENTS

URS CORPORATION AES
500 ENTERPRISE DRIVE
ROCKY HILL, CT 06067
1-(860)-529-8882

ENGINEER:
DESIGNER: DRAFTER: VY CHECKER: VY
APPROVED: URE
PART NO. 6

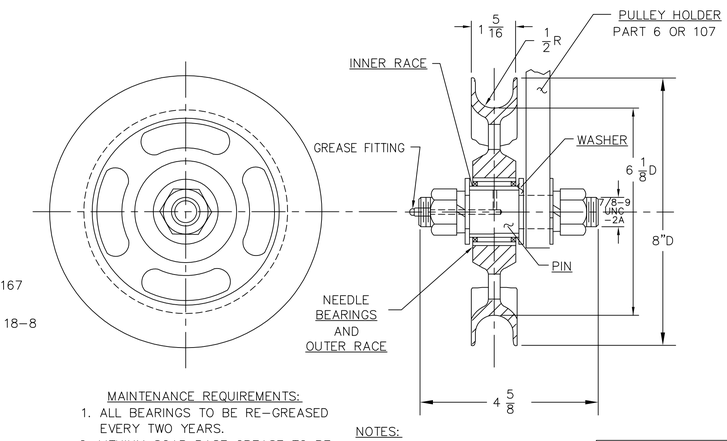

MATERIAL:
PIN-ST STEEL # 303, ASTM A167
JAM NUTS, FLAT WASHERS
& LOCKWASHERS-ST STEEL # 18-8
INNER AND OUTER RACE
BEARING STEEL
PULLEY BRONZE ALLOY
ASTM B-30 (C95500)
ASTM B-148 (C95500)
SPEC BANK 819-81
MODES:
18A, 175H, 18D, 74C
GREASE FITTING
1/4-28 TAPER TH'D, STRAIGHT
GREASE FITTIND 33/64 O.L.

MAINTENANCE REQUIREMENTS:
1. ALL BEARINGS TO BE RE-GREASED EVERY TWO YEARS.
2. LITHIUM SOAP BASE GREASE TO BE USED FOR ABOVE OPERATION.

NOTES:
1. DOUBLESEALED BEARING WITH SEAL CAP TURNED OUT
2. MIN RADIAL LOAD: 4,950 LBS.
3. TORQUE 7/8-9 JAM NUTS TO 120 FT/LBS

Metro-North Commuter Railroad

DRAWING TITLE:
PULLEY

METRO-NORTH NO. 10-739102

STANDARD COMPONENTS

URS CORPORATION AES
500 ENTERPRISE DRIVE
ROCKY HILL, CT 06067
1-(860)-529-8882

ENGINEER:
DESIGNER: DRAFTER: VY CHECKER: VY
APPROVED: URE
PART NO. 7

PROJECT CONTROL DATE: 09/13/13 DISK FILENAME: SC-1.dwg 100% DESIGN

F H W A REGION	STATE	TOWN	FED. AID PROJ. NO.	PROJ. NO.	YEAR	SHEET NUMBER
1	CONN.	VARIOUS	CT-05-0109	301-0145	2013	

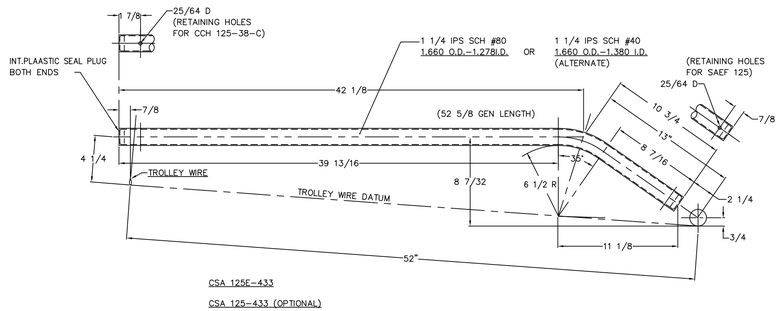

CSA 125E-433

CSA 125-433 (OPTIONAL)

NOTES:
1. RETAINING HOLES ON BOTH ENDS MUST HAVE PRECISE RADIAL ALIGNMENT.
2. PART 10 INCLUDES END FITTINGS PARTS 13 AND 15.
3. WHEN SCHEDULE 40 PIPE IS USED, THE STEADY ARM SHALL BE IDENTIFIED WITH A 2" WIDE STRIPE OF RED PAINT AROUND THE CIRCUMFERENCE AND ALSO HANDMARKED "SCH 40".

MATERIAL
STEEL PIPE ASTM A106 GRADE 'B'

FINISH
GALVANIZED TO ASTM A153

Metro-North Commuter Railroad

DRAWING TITLE:

STEADY ARM-52"

METRO-NORTH NO. 10100171

STANDARD COMPONENTS

URS CORPORATION AES
500 ENTERPRISE DRIVE
ROCKY HILL, CT 06067
1-(860)-529-8882

ENGINEER: –
DESIGNER: – DRAFTER: VY CHECKER: VY
APPROVED: URE
PART NO. 10

PREFORMED SPIRAL WRAP LINE GUARD

302 STAINLESS STEEL STRAND
FOR 4/0, 19 STRAND MESSENGER
COPPERWELD TYPE E

L: 4'-0"

Metro-North Commuter Railroad

DRAWING TITLE:

PREFORMED LINE GUARD

METRO-NORTH NO. 10435750

STANDARD COMPONENTS

URS CORPORATION AES
500 ENTERPRISE DRIVE
ROCKY HILL, CT 06067
1-(860)-529-8882

ENGINEER: –
DESIGNER: – DRAFTER: VY CHECKER: VY
APPROVED: URE
PART NO. 9

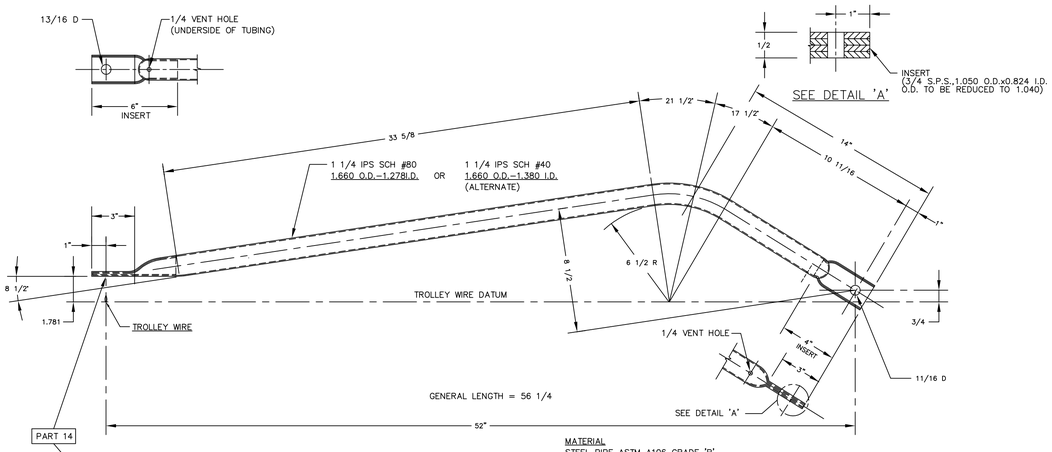

MATERIAL
ALUMINUM BRONZE
ASTM B30; ALLOY 954

T.S. (MIN.) 75,000 PSI
BOLTS, NUTS AND L'WASHERS
SILICON BRONZE

MATERIAL
STEEL PIPE ASTM A106 GRADE 'B'
FINISH
GALVANIZED TO ASTM A153
NOTES:
1. RETAINING HOLES OF BOTH ENDS MUST HAVE PRECISE RADIAL ALIGNMENT.
2. TRIMMED ENDS OF TUBING WILL BE COATED WITH THE COLD GALVANIZING COMPOUND Z.R.C. (95% ZINC).
3. WHEN SCHEDULE 40 PIPE IS USED, THE STEADY ARM SHALL BE IDENTIFIED WITH A 2" WIDE STRIPE OF RED PAINT AROUND THE CIRCUMFERENCE AND ALSO HANDMARKED "SCH 40".

Metro-North Commuter Railroad

DRAWING TITLE:

STEADY ARM COUPLING
WITH SWIVEL CONTACT WIRE CLAMP

METRO-NORTH NO. 10100142

STANDARD COMPONENTS

URS CORPORATION AES
500 ENTERPRISE DRIVE
ROCKY HILL, CT 06067
1-(860)-529-8882

ENGINEER: –
DESIGNER: – DRAFTER: VY CHECKER: VY
APPROVED: URE
PART NO. 8

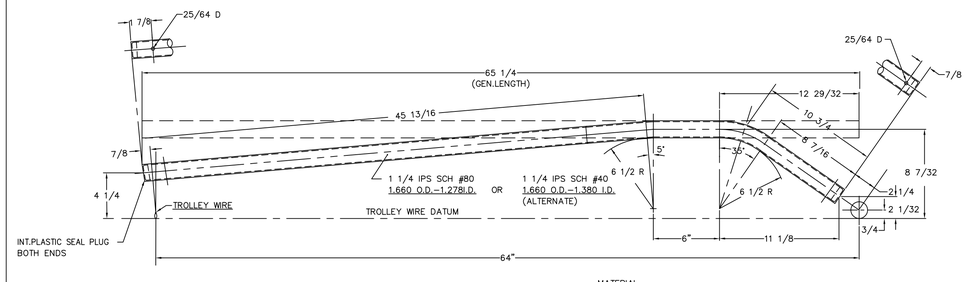

CSA 125E-533

CSA 125-533 (OPTIONAL)

MATERIAL
STEEL PIPE ASTM A106 GRADE 'B'

FINISH
GALVANIZED TO ASTM A153

NOTES:
1. RETAINING HOLES ON BOTH ENDS MUST HAVE PRECISE RADIAL ALIGNMENT.
2. PART 11 INCLUDES PARTS 13 AND 15.
3. WHEN SCHEDULE 40 PIPE IS USED, THE STEADY ARM SHALL BE IDENTIFIED WITH A 2" WIDE STRIPE OF RED PAINT AROUND THE CIRCUMFERENCE AND ALSO HANDMARKED "SCH 40".

Metro-North Commuter Railroad

DRAWING TITLE:

STEADY ARM 64"

METRO-NORTH NO. 10100175

STANDARD COMPONENTS

URS CORPORATION AES
500 ENTERPRISE DRIVE
ROCKY HILL, CT 06067
1-(860)-529-8882

ENGINEER: –
DESIGNER: – DRAFTER: VY CHECKER: VY
APPROVED: URE
PART NO. 11

PROJECT CONTROL DATE: 09/13/13 DISK FILENAME: SC-2.dwg 100% DESIGN

F.H.W.A. REGION	STATE	TOWN	FED. AID PROJ. NO.	PROJ. NO.	YEAR	SHEET NUMBER
1	CONN.	VARIOUS	CT-05-0109	301-0145	2013	

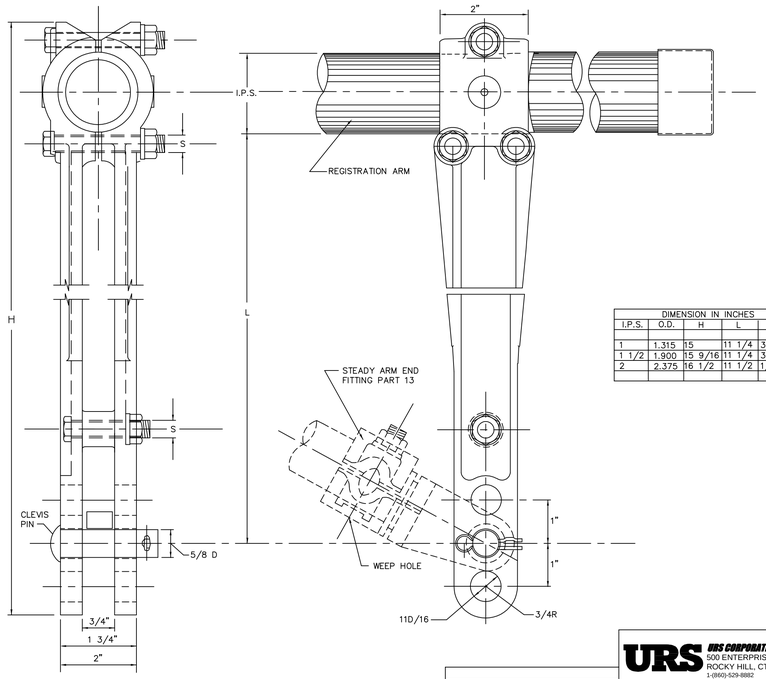

DIMENSION IN INCHES				
I.P.S.	O.D.	H	L	S
1	1.315	15	11 1/4	3/8-16
1 1/2	1.900	15 9/16	11 1/4	3/8-16
2	2.375	16 1/2	11 1/2	1/2-13

MATERIAL
NICKEL ALUMINUM BRONZE

ASTM B30, ALLOY 955
CU 81; FE4;N14 AL11
T.S.(MIN.)90,000 PSI
Y.S.(MIN.)40,000 PSI

BOLTS, NUTS AND LOCK WASHERS-SILICON BRONZE

CLEVIS PIN-GAL. STEEL AND COTTER KEY-ST. STEEL

Metro-North Commuter Railroad

DRAWING TITLE:

ADJUSTABLE DROP BRACKET

METRO-NORTH NO. 10200155

STANDARD COMPONENTS

URS CORPORATION AES
500 ENTERPRISE DRIVE
ROCKY HILL, CT 06067
1-(860)-529-8882

ENGINEER: -
DESIGNER: - DRAFTER: ASLAM CHECKER: VY
APPROVED: URE
PART NO. 12

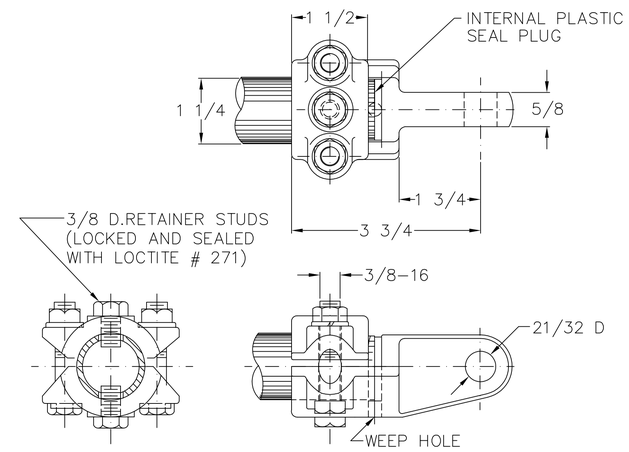

MATERIAL
ALUMINUM BRONZE
ASTM B30, ALLOY 954
CU86; FE4; AL10
T.S.(MIN.) 75,000 PSI
Y.S.(MIN.) 30,000 PSI
BOLTS, NUTS AND L.WASHERS-
-SILICON BRONZE

I.P.S.	DIMENSIONS IN INCHES		
	O.D.	B	L
3/4	1.050	1 3/8	3 1/2
1	1.315	1 3/8	3 1/2
1 1/4	1.660	1 3/4	3 3/4
1 1/2	1.900	1 7/8	3 7/8

Metro-North Commuter Railroad

DRAWING TITLE:

STEADY ARM END FITTING

METRO-NORTH NO. 10434459

STANDARD COMPONENTS

URS CORPORATION AES
500 ENTERPRISE DRIVE
ROCKY HILL, CT 06067
1-(860)-529-8882

ENGINEER: -
DESIGNER: - DRAFTER: AB CHECKER: VY
APPROVED: URE
PART NO. 13

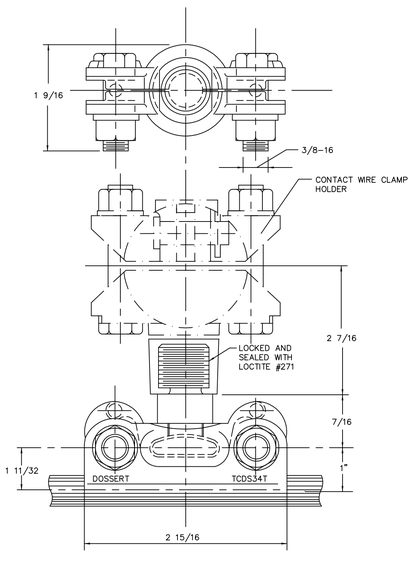

MATERIAL
ALUMINUM BRONZE
ASTM B30, ALLOY 954
CU86; FE4, AL10
T.S.(MIN.)75,000 PSI
Y.S.(MIN.)30,000 PSI

BOLTS, NUTS AND
L.WASHERS-SILICON BRONZE

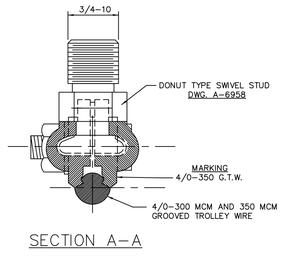

SECTION A-A

Metro-North Commuter Railroad

DRAWING TITLE:

SWIVEL CONTACT WIRE CLAMP

METRO-NORTH NO. 10202490

STANDARD COMPONENTS

URS CORPORATION AES
500 ENTERPRISE DRIVE
ROCKY HILL, CT 06067
1-(860)-529-8882

ENGINEER: -
DESIGNER: - DRAFTER:ASLAM CHECKER: VY
APPROVED: URE
PART NO. 14

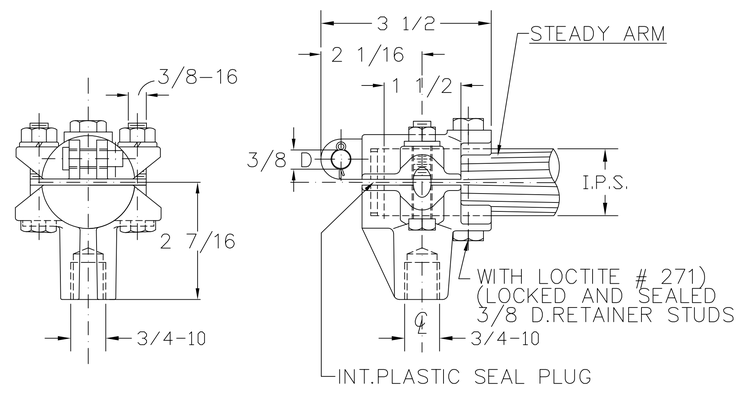

DIM. IN INCHES		
I.P.S.	O.D.	A
3/4	1.050	1 1/2
1	1.315	1 1/2
1 1/4	1.660	2 7/16
1 1/2	1.900	2 7/16
2	2.375	2 7/8

MATERIAL
ALUMINUM BRONZE
ASTM B30, ALLOY 954
CU86; FE4; AL10
T.S.(MIN.)75,000 PSI
Y.S.(MIN) 30,000 PSI
BOLTS, NUTS AND
L.WASHERS-SILICON
BRONZE
CLEVIS PIN-GALV.STEEL
COTTER KEY-ST.STEEL

Metro-North Commuter Railroad

DRAWING TITLE:

CONTACT WIRE CLAMP HOLDER

METRO-NORTH NO. 10202489

STANDARD COMPONENTS

URS CORPORATION AES
500 ENTERPRISE DRIVE
ROCKY HILL, CT 06067
1-(860)-529-8882

ENGINEER: -
DESIGNER: - DRAFTER: AB CHECKER: VY
APPROVED: URE
PART NO. 15

PROJECT CONTROL DATE: 09/13/13 DISK FILENAME: SC-3.dwg 100% DESIGN

F H W A REGION	STATE	TOWN	FED. AID PROJ. NO.	PROJ. NO.	YEAR	SHEET NUMBER
1	CONN.	VARIOUS	CT-05-0109	301-0145	2013	

WIRE RANGE
MIN. 0.570D } STRANDED
MAX 0.850D } OR SOLID

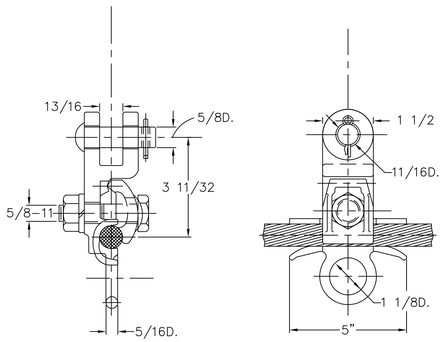

MATERIAL
ALUMINUM BRONZE
ASTM B30, ALLOY 954
Y.S. (MIN.) 30,000 PSI
FINISH
ELECTRO-TIN PLATED (OPTIONAL)
BOLT, NUT AND L.WASHER-SILICON BRONZE
CLEVIS PIN-GALV. STEEL
COTTER KEY-ST.STEEL #304

Metro-North Commuter Railroad

DRAWING TITLE:
SUSPENSION CLAMP
METRO-NORTH NO. 10201662

URS CORPORATION AES
500 ENTERPRISE DRIVE
ROCKY HILL, CT 06067
1-(860)-529-8882

STANDARD COMPONENTS
ENGINEER: –
DESIGNER: – DRAFTER: AB CHECKER: VY
APPROVED: URE
PART NO. 17

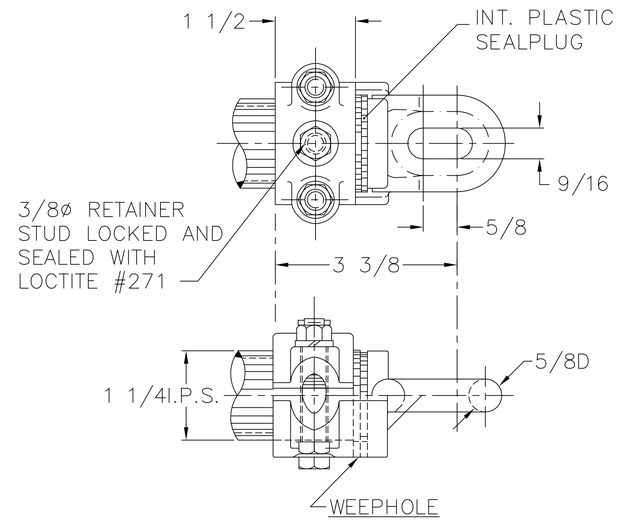

MATERIAL
ALUMINUM BRONZE
ASTM B30, ALLOY 954
CU86; FE4; ALIO
T.S. (MIN.) 75,000 PSI
Y.S. (MIN.) 30,000 PSI
BOLTS, NUTS AND L.WASHERS-
-SILICONBRONZE.

Metro-North Commuter Railroad

DRAWING TITLE:
CROSS SPAN STEADY ARM COMP WITH END FITTING CLAMP
METRO-NORTH NO. 10100172

URS CORPORATION AES
500 ENTERPRISE DRIVE
ROCKY HILL, CT 06067
1-(860)-529-8882

STANDARD COMPONENTS
ENGINEER: –
DESIGNER: – DRAFTER: VY CHECKER: VY
APPROVED: URE
PART NO. 22

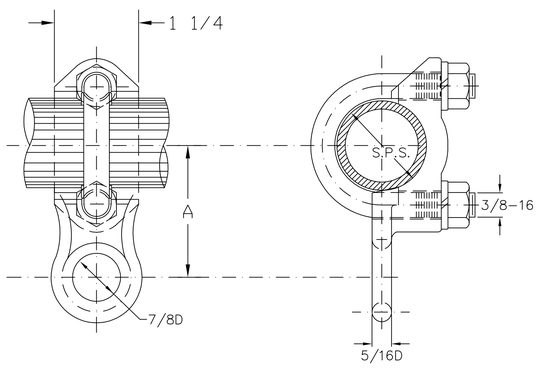

DIM. IN INCHES		
S.P.S.	O.D.	A
1	1.315	2 3/16
1 1/4	1.660	2 3/8
1 1/2	1.900	2 1/2
2	2.375	2 3/4
2 1/2	2.875	3

MATERIAL
ALUMINUM BRONZE
ASTM B30, ALLOY 954
CU86; FE4; ALID
T.S. (MIN.) 75,000 PSI
Y.S. (MIN.) 30,000 PSI

U-BOLT, NUTS AND
L.WASHERS-SILICON
BRONZE

Metro-North Commuter Railroad

DRAWING TITLE:
PIPE EYE CLAMP
METRO-NORTH NO. 10202451

URS CORPORATION AES
500 ENTERPRISE DRIVE
ROCKY HILL, CT 06067
1-(860)-529-8882

STANDARD COMPONENTS
ENGINEER: –
DESIGNER: – DRAFTER: AB CHECKER: VY
APPROVED: URE
PART NO. 28

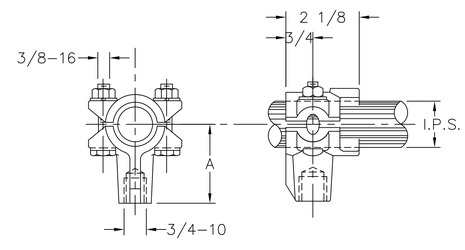

DIM. IN INCHES		
I.P.S.	O.D.	A
3/4	1.050	1 1/2
1	1.315	1 1/2
1 1/4	1.660	2 7/16
1 1/2	1.900	2 7/16
2	2.375	2 7/8

MATERIAL
ALUMINUM BRONZE
ASTM B30, ALLOY 954
CU86; FE4; ALIO
T.S. (MIN.) 75,000 PSI
Y.S. (MIN.) 30,000 PSI
BOLTS, NUTS AND L'WASHERS
-SILICON BRONZE

Metro-North Commuter Railroad

DRAWING TITLE:
SLIDING CONTACT WIRE CLAMP HOLDER ASSEMBLY
METRO-NORTH NO. 10436110

URS CORPORATION AES
500 ENTERPRISE DRIVE
ROCKY HILL, CT 06067
1-(860)-529-8882

STANDARD COMPONENTS
ENGINEER: –
DESIGNER: – DRAFTER: AB CHECKER: VY
APPROVED: URE
PART NO. 31

PROJECT CONTROL DATE: 09/13/13 DISK FILENAME: SC-4.dwg 100% DESIGN

F H W A REGION	STATE	TOWN	FED. AID PROJ. NO.	PROJ. NO.	YEAR	SHEET NUMBER
1	CONN.	VARIOUS	CT-05-0109	301-0145	2013	

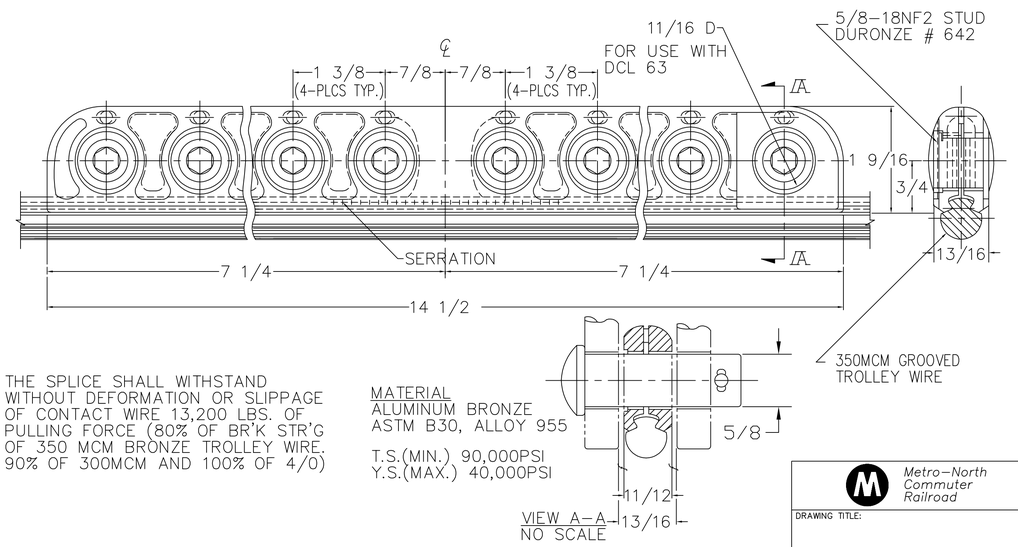

THE SPLICE SHALL WITHSTAND WITHOUT DEFORMATION OR SLIPPAGE OF CONTACT WIRE 13,200 LBS. OF PULLING FORCE (80% OF BR'K STR'G OF 350 MCM BRONZE TROLLEY WIRE. 90% OF 300MCM AND 100% OF 4/0)

MATERIAL
ALUMINUM BRONZE
ASTM B30, ALLOY 955

T.S.(MIN.) 90,000PSI
Y.S.(MAX.) 40,000PSI

VIEW A-A
NO SCALE

Metro-North Commuter Railroad

DRAWING TITLE:

CLAMP FOR TROLLEY WIRE

METRO-NORTH NO. 10202613

STANDARD COMPONENTS

URS CORPORATION AES
500 ENTERPRISE DRIVE
ROCKY HILL, CT 06067
1-(860)-529-8882

ENGINEER: –
DESIGNER: – DRAFTER: AB CHECKER: VY
APPROVED: URE
PART NO. 38

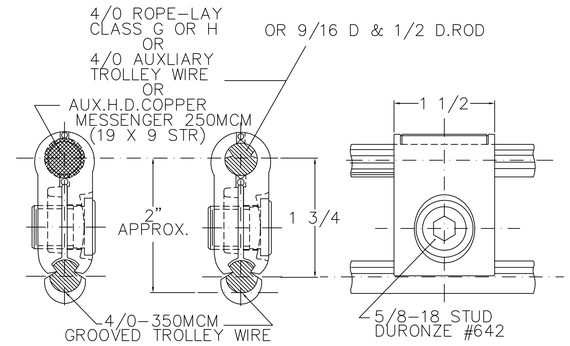

MATERIAL
COPPER ALLOY 113-D1
(MIN.YIELD STRENGTH 17,000 PSI)

Metro-North Commuter Railroad

DRAWING TITLE:

TROLLEY CONTACT CLAMP

METRO-NORTH NO. 10201624

STANDARD COMPONENTS

URS CORPORATION AES
500 ENTERPRISE DRIVE
ROCKY HILL, CT 06067
1-(860)-529-8882

ENGINEER: –
DESIGNER: – DRAFTER: AB CHECKER: VY
APPROVED: URE
PART NO. 40

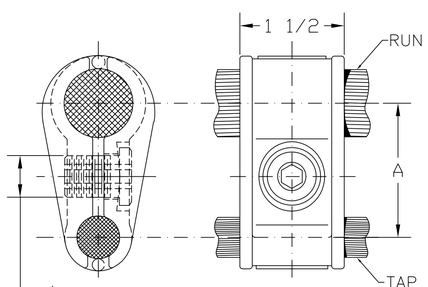

CABLE SIZE		A IN INCH
RUN	TAP	
750 MCM CU	7/16 DIA.6 X 19 IWRC	2
750 MCM CU	4/0 FLEXIBLE ROPE LAY WIRE 37 X 7 X .0286 (.601D)	2
750MCM	5/8 COPPERWELD COPPER	2
750 MCM CU	300MCM FLEX. CLASS "J" CABLE (.716 DIA)	2
750 MCM CU	500MCM CU (.814 D)	3
750 MCM CU	500MCM FLEX CLASS "H"(.923 D)	3

MATERIAL
COPPER ALLOY 113-D1
(MIN.YIELD STRENGTH 17,000 PSI)

Metro-North Commuter Railroad

DRAWING TITLE:

PARALLEL CLAMP

METRO-NORTH NO. 10201623

STANDARD COMPONENTS

URS CORPORATION AES
500 ENTERPRISE DRIVE
ROCKY HILL, CT 06067
1-(860)-529-8882

ENGINEER: –
DESIGNER: – DRAFTER: AB CHECKER: VY
APPROVED: URE
PART NO. 41

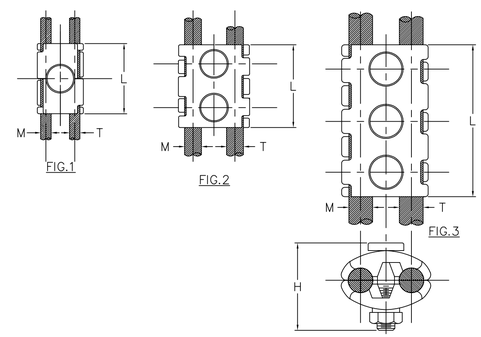

MATERIAL:
CAST COPPER ALLOY 113-D2
BOLTS, NUTS, AND LOCKWASHERS

CONDUCTOR RANGE FOR EITHER POSITION		FIG NO	DIMENSIONS IN INCHES M	T	H	L	BOLT SIZE
#6 SOL	1/0 STR	1	.373	.162	1 3/4	2	3/8
#6 SOL	2/0 STR	2	.419	.162	1 13/16	2	3/8
#4 SOL	4/0 STR	2	.528	.204	1 15/16	2 1/4	3/8
#2 SOL	300MCM	2	.630	.257	2 3/16	2 1/2	3/8
4/0 STR	500MCM	3	.812	.528	2 13/16	4 3/8	1/2
300 STR	800MCM	3	1.031	.630	3 5/16	4 1/2	1/2
500 STR	1000MCM	3	1.152	.812	3 9/16	4 5/8	1/2

Metro-North Commuter Railroad

DRAWING TITLE:

PARALLEL CLAMP

METRO-NORTH NO. 10202847

STANDARD COMPONENTS

URS CORPORATION AES
500 ENTERPRISE DRIVE
ROCKY HILL, CT 06067
1-(860)-529-8882

ENGINEER: –
DESIGNER: – DRAFTER: AB CHECKER: VY
APPROVED: URE
PART NO. 43, 42

PROJECT CONTROL DATE: 09/13/13 DISK FILENAME: SC-5.dwg 100% DESIGN

F H W A REGION	STATE	TOWN	FED. AID PROJ. NO.	PROJ. NO.	YEAR	SHEET NUMBER
1	CONN.	VARIOUS	CT-05-0109	301-0145	2013	

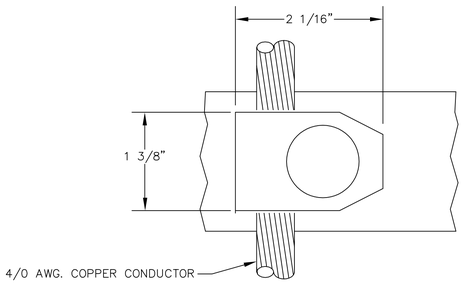

SPECIFICATIONS	
CLAMP BODY	COPPER ALLOY 113-D2
NUT	HIGH STRENGTH STEEL, HOT DIP GALVANIZED
LOCKWASHER	HIGH STRENGTH STEEL, HOT DIP GALVANIZED
RIVET BOLT (½"ø)	HIGH STRENGTH STEEL, HOT DIP GALVANIZED
COPPER CONDUCTOR RANGE	2/0 AWG TO 250 KCMIL

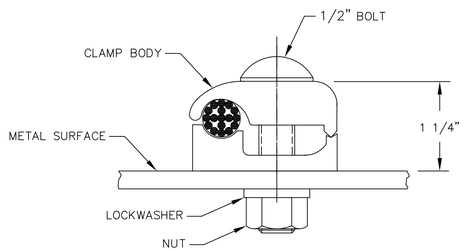

Metro-North Commuter Railroad

DRAWING TITLE:

GROUND CONNECTOR

METRO-NORTH NO. 10-201629

URS CORPORATION AES
500 ENTERPRISE DRIVE
ROCKY HILL, CT 06067
1-(860)-529-8882

ELECTRIFICATION STANDARDS

ENGINEER: – SDB

DESIGNER: MS DRAFTER: HJ CHECKER: JCD

APPROVED: SDB

PART NO. 47

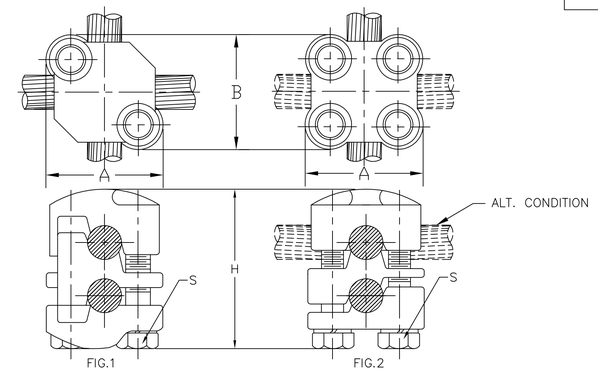

MATERIAL:
CAST COPPER ALLOY 113-D1

BOLTS & LOCKWASHERS – EVERDUR

CABLE RANGE				FIG NO	DIMENSIONS IN INCHES			
RUN		TAP						
MIN	MAX	MIN	MAX		A	B	H	S
6 STR	2 STR	6 STR	2 STR	1	1 21/64	1 21/64	1 21/64	5/16
1 STR	4/0 STR	6 STR	2 STR	1	1 9/16	1 29/64	1 5/16	5/16
1 STR	4/0 STR	1 STR	4/0 STR	1	1 3/4	1 3/4	2 3/8	3/8
250MCM	500MCM	6 STR	2 STR	1	1 7/8	1 3/4	2 3/32	5/16
250MCM	500MCM	1 STR	4/0 STR	1	2 1/16	1 15/16	2 3/4	3/8
250MCM	500MCM	250MCM	500MCM	2	2 1/16	2 1/16	3	3/8
500MCM	1000MCM	6 STR	2 STR	1	2 3/8	2 1/4	2 13/16	3/8
500MCM	1000MCM	1 STR	4/0 STR	1	2 3/8	2 1/4	3 1/4	3/8
500MCM	1000MCM	250MCM	500MCM	2	2 3/8	2 1/4	3 9/16	3/8
500MCM	1000MCM	500MCM	1000MCM	2	2 3/8	2 3/8	3 7/8	3/8

Metro-North Commuter Railroad

DRAWING TITLE:

CROSS CLAMP

METRO-NORTH NO. 10201600

URS CORPORATION AES
500 ENTERPRISE DRIVE
ROCKY HILL, CT 06067
1-(860)-529-8882

STANDARD COMPONENTS

ENGINEER: –

DESIGNER: – DRAFTER: AB CHECKER: VY

APPROVED: URE

PART NO. 46

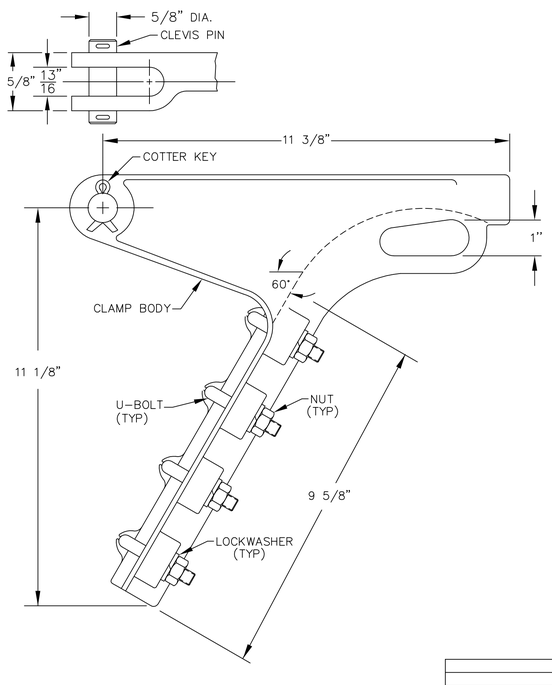

SPECIFICATIONS	
CLAMP BODY	HIGH STRENGTH ALUMINUM BRONZE ALLOY
U-BOLT	HIGH STRENGTH STEEL, HOT DIP GALVANIZED
NUT	HIGH STRENGTH STEEL, HOT DIP GALVANIZED
LOCKWASHER	HIGH STRENGTH STEEL, HOT DIP GALVANIZED
⅝"ø CLEVIS PIN	HIGH STRENGTH STEEL, HOT DIP GALVANIZED
COTTER KEY	STAINLESS STEEL
MIN YIELD STRENGTH	40,000 LBS
CONDUCTOR RANGE	4/0 AWG. (.528"ø)MIN. 500 KCMIL (.814"ø)MAX.

Metro-North Commuter Railroad

DRAWING TITLE:

STRAIN CLAMP

METRO-NORTH NO. 10-202492

URS CORPORATION AES
500 ENTERPRISE DRIVE
ROCKY HILL, CT 06067
1-(860)-529-8882

ELECTRIFICATION STANDARDS

ENGINEER: SDB

DESIGNER: MS DRAFTER: HJ CHECKER: JCD

APPROVED: SDB

PART NO. 37

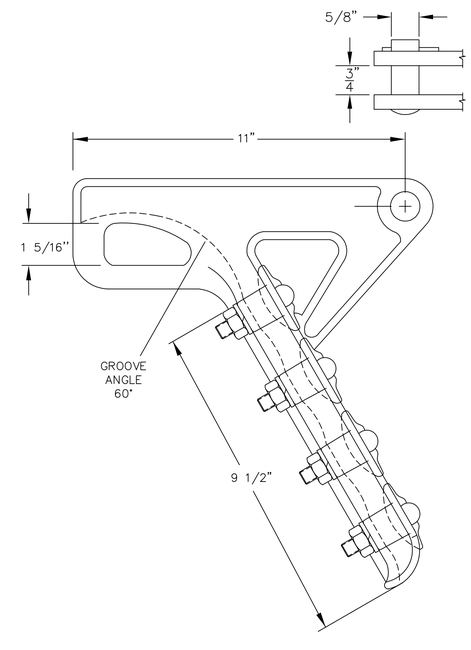

SPECIFICATIONS	
CLAMP BODY	HIGH STRENGTH ALUMINUM BRONZE ALLOY
KEEPER	ELECTRICAL BRONZE
HARDWARE	GALVANIZED STEEL
SOCKET AND CLEVIS	DUCTILE IRON, GALVANIZED
COTTER PIN	#302 STAINLESS STEEL
ULTIMATE BODY STRENGTH	25,000 LBS
CLAMPING RANGE	1/0 SOL (.30"ø)MIN. 350-19 STR. (.68"ø)MAX.

Metro-North Commuter Railroad

DRAWING TITLE:

STRAIN CLAMP

METRO-NORTH NO. 10-202492

URS CORPORATION AES
500 ENTERPRISE DRIVE
ROCKY HILL, CT 06067
1-(860)-529-8882

ELECTRIFICATION STANDARDS

ENGINEER: SDB

DESIGNER: MS DRAFTER: HJ CHECKER: JCD

APPROVED: SDB

PART NO. 37A

PROJECT CONTROL DATE: 09/13/13 DISK FILENAME: SC-6.dwg 100% DESIGN

F H W A REGION	STATE	TOWN	FED. AID PROJ. NO.	PROJ. NO.	YEAR	SHEET NUMBER
1	CONN.	VARIOUS	CT-05-0109	301-0145	2013	

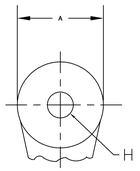

FIG. 1

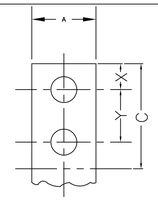

FIG. 2

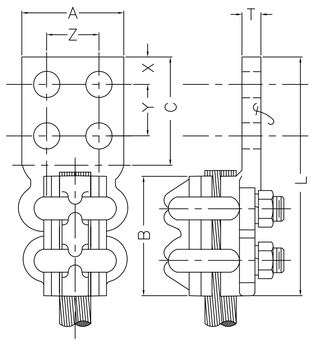

FIG. 3

SHEET 1 OF 2

CABLE RANGE		FIG	DIMENSIONS IN INCHES									U-BOLT
MIN*	MAX*	NO	A	B	C	H	L	T	X	Y	Z	DIA
6	2/0	1	1 1/4	2 1/2	–	7/16	3 7/8	5/16	–	–	–	5/16
6	2/0	2	1 1/4	2 1/2	1 7/8	7/16	4 1/2	5/16	7/16	1	–	5/16
6	2/0	2	1 1/2	2 1/2	3	9/16	5 3/4	5/16	5/8	1 3/4	–	5/16
1	4/0	1	1 1/2	2 5/8	–	9/16	4 1/4	5/16	–	–	–	3/8
1	4/0	2	1 1/4	2 5/8	2 1/8	7/16	4 7/8	5/16	1/2	1 1/8	–	3/8
1	4/0	2	1 1/2	2 5/8	3	9/16	5 7/8	5/16	5/8	1 3/4	–	3/8
1	4/0	3	3	2 5/8	3	9/16	5 7/8	5/16	5/8	1 3/4	1 3/4	3/8
1/0	300	1	1 1/2	2 3/4	–	9/16	4 3/4	3/8	–	–	–	3/8
1/0	300	2	1 5/8	2 3/4	2 5/8	9/16	5 1/2	3/8	5/8	1 3/8	–	3/8
1/0	300	3	2	2 3/4	2	7/16	4 7/8	3/8	1/2	1	1	3/8
1/0	300	2	1 1/2	2 3/4	3	9/16	6	3/8	5/8	1 3/4	–	3/8
1/0	300	3	3	2 3/4	3	9/16	6	3/8	5/8	1 3/4	1 3/4	3/8
1/0	300	3	4	2 3/4	4	–	6 7/8	3/8	–	–	–	3/8
1/0	300	3	3	2 3/4	3	9/16	6	3/8	5/8	1 1/4	1 3/4	3/8
1/0	300	3	4	2 3/4	4	11/16	7	3/8	23/32	2 9/16	2 9/16	3/8
48	500	1	1 1/2	3	–	9/16	5 1/4	3/8	–	–	–	3/8
300	500	2	1 3/4	3	2 3/4	9/16	5 7/8	3/8	11/16	1 3/8	–	3/8
300	500	3	2 1/4	3	2 1/4	7/16	5 3/8	3/8	9/16	1 1/8	1 1/8	3/8

MATERIAL
CAST COPPER ALLOY # 113 D-1
U-BOLTS, NUTS, & L'WASHERS-EVERDUR

* SIZES ABOVE 4/0 ARE
MCM RATINGS.

Metro-North Commuter Railroad

DRAWING TITLE:
U-BOLT TERMINAL LUG FOR
750 KCMIL SOFT DRAWN
COPPER CONDUCTOR

METRO-NORTH NO. 10726375

STANDARD COMPONENTS

URS CORPORATION AES
500 ENTERPRISE DRIVE
ROCKY HILL, CT 06067
1-(860)-529-8882

ENGINEER: –
DESIGNER: DRAFTER: VY CHECKER: VY
APPROVED: URE
PART NO. 48

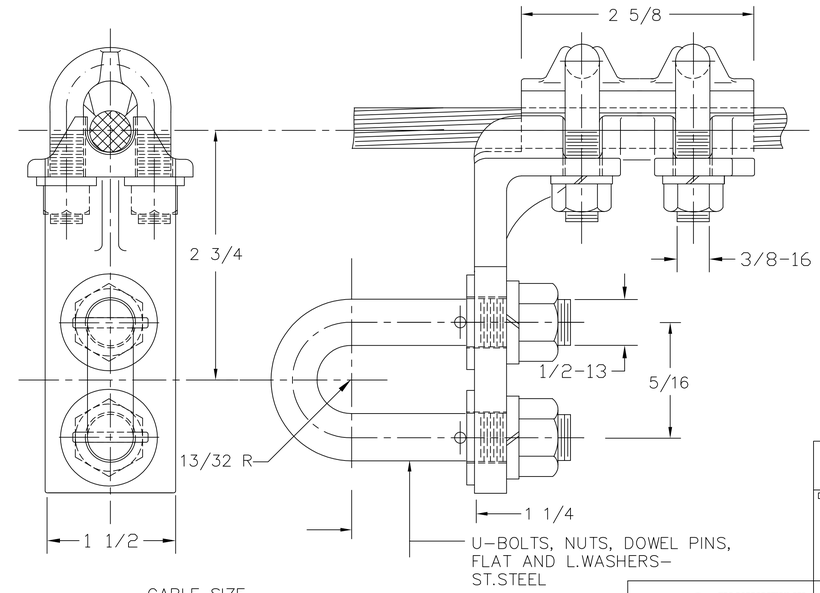

MATERIAL
ALUMINUM BRONZE
ASTMB30,ALLOY 955
CU81;FE4;ALII
T.S.(MIN)90,000 PSI
Y.S.(MIN)40,000 PSI
U-BOLTS, NUTS AND
L.WASHERS-SILICON
BRONZE

CABLE SIZE
7/16 DIA.C.W.CABLE

Metro-North Commuter Railroad

DRAWING TITLE:
SPAN WIRE LOOP CLAMP

METRO-NORTH NO. 10201627

STANDARD COMPONENTS

URS CORPORATION AES
500 ENTERPRISE DRIVE
ROCKY HILL, CT 06067
1-(860)-529-8882

ENGINEER: –
DESIGNER: – DRAFTER: AB CHECKER: VY
APPROVED: URE
PART NO. 54

PROOFLOAD-24,5000 LBS.

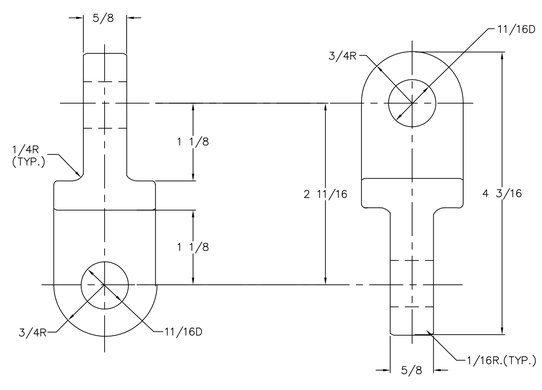

MATERIAL
ALUMINUM BRONZE
ASTM B30. ALLOY 955
T.S. (MIN.) 90,000 PSI
Y.S. (MIN.) 40,000 PSI

Metro-North Commuter Railroad

DRAWING TITLE:
LINK TONGUE TO TONGUE, 90°

METRO-NORTH NO. 10855291

STANDARD COMPONENTS

URS CORPORATION AES
500 ENTERPRISE DRIVE
ROCKY HILL, CT 06067
1-(860)-529-8882

ENGINEER: –
DESIGNER: – DRAFTER: AB CHECKER: VY
APPROVED: URE
PART NO. 58

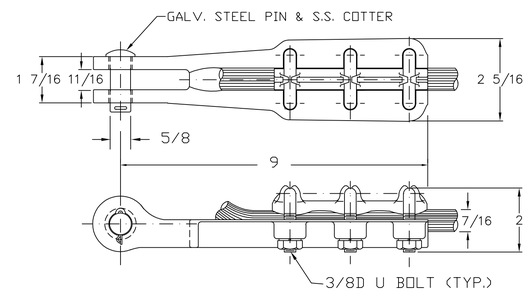

MATERIAL
ALUMINUM BRONZE
(MIN LENGTH STRENGTH 30,000 PSI)
U-BOLTS, NUTS AND
L.WASHERS – SILICONE BRONZE

Metro-North Commuter Railroad

DRAWING TITLE:
DEAD END CLAMP

METRO-NORTH NO. 10201621

STANDARD COMPONENTS

URS CORPORATION AES
500 ENTERPRISE DRIVE
ROCKY HILL, CT 06067
1-(860)-529-8882

ENGINEER: –
DESIGNER: – DRAFTER: AB CHECKER: VY
APPROVED: URE
PART NO. 60

PROJECT CONTROL DATE: 09/13/13 DISK FILENAME: SC-7.dwg 100% DESIGN

F H W A REGION	STATE	TOWN	FED. AID PROJ. NO.	PROJ. NO.	YEAR	SHEET NUMBER
1	CONN.	VARIOUS	CT-05-0109	301-0145	2013	

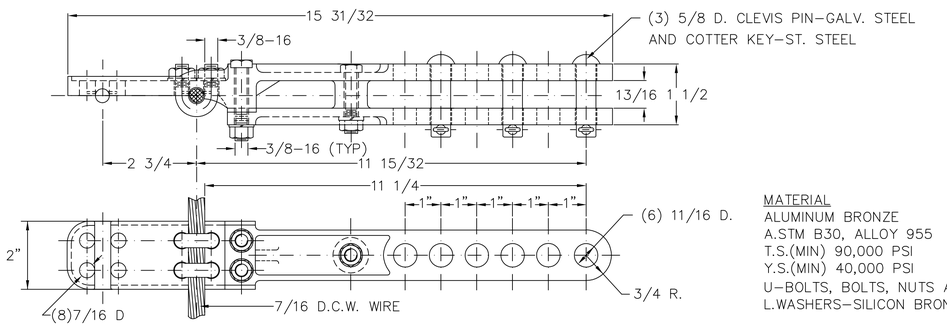

MATERIAL
ALUMINUM BRONZE
A.STM B30, ALLOY 955
T.S.(MIN) 90,000 PSI
Y.S.(MIN) 40,000 PSI
U-BOLTS, BOLTS, NUTS AND
L.WASHERS-SILICON BRONZE

Metro-North Commuter Railroad

DRAWING TITLE:

DROP BRACKET

METRO-NORTH NO. 10200150

STANDARD COMPONENTS

URS CORPORATION AES
500 ENTERPRISE DRIVE
ROCKY HILL, CT 06067
1-(860)-529-8882

ENGINEER: –
DESIGNER: – DRAFTER: AB CHECKER: VY
APPROVED: URE
PART NO. 61A

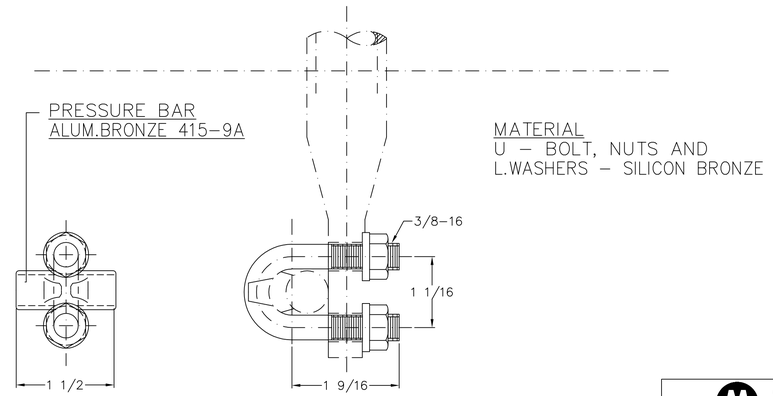

MATERIAL
U - BOLT, NUTS AND
L.WASHERS - SILICON BRONZE

Metro-North Commuter Railroad

DRAWING TITLE:

PRESSURE BAR ASSEMBLY

METRO-NORTH NO. 10100161

STANDARD COMPONENTS

URS CORPORATION AES
500 ENTERPRISE DRIVE
ROCKY HILL, CT 06067
1-(860)-529-8882

ENGINEER: –
DESIGNER: – DRAFTER: AB CHECKER: VY
APPROVED: URE
PART NO. 65

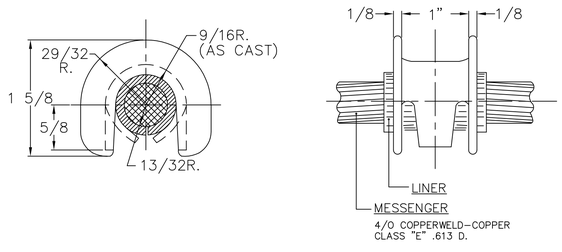

MATERIAL
PURE COPPER (ETP)

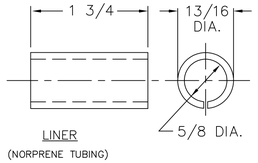

LINER
(NORPRENE TUBING)

Metro-North Commuter Railroad

DRAWING TITLE:

COPPER ARMOR WITH
NEOPRENE LINER

METRO-NORTH NO. 10100143

STANDARD COMPONENTS

URS CORPORATION AES
500 ENTERPRISE DRIVE
ROCKY HILL, CT 06067
1-(860)-529-8882

ENGINEER: –
DESIGNER: – DRAFTER: VY CHECKER: VY
APPROVED: URE
PART NO. 67

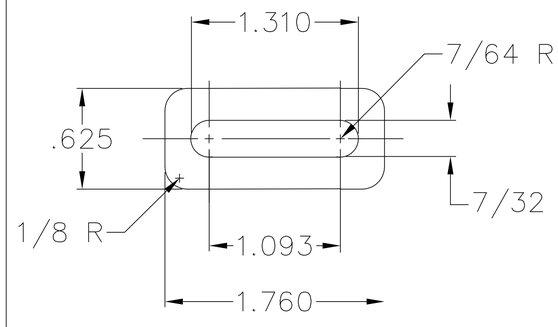

MATERIAL
STAINLESS STEEL
ASTM A276; ALLOY 304

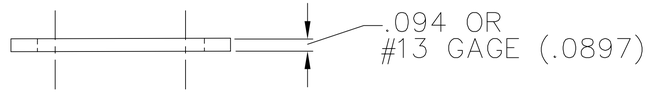

Metro-North Commuter Railroad

DRAWING TITLE:

HANGER KEEPER

METRO-NORTH NO. 10750166

STANDARD COMPONENTS

URS CORPORATION AES
500 ENTERPRISE DRIVE
ROCKY HILL, CT 06067
1-(860)-529-8882

ENGINEER: –
DESIGNER: – DRAFTER: AB CHECKER: VY
APPROVED: URE
PART NO. 69

PROJECT CONTROL DATE: 09/13/13 DISK FILENAME: SC-8.dwg 100% DESIGN

F H W A REGION	STATE	TOWN	FED. AID PROJ. NO.	PROJ. NO.	YEAR	SHEET NUMBER
1	CONN.	VARIOUS	CT-05-0109	301-0145	2013	

MATERIAL
ALUMINUM BRONZE
CLEVIS PIN – GALVANIZED STEEL
COTTER KEY – STAINLESS STEEL
COMPRESSION SLEEVE – STAINLESS STEEL

WIRE SIZE
350 KCMIL GROOVED TROLLEY WIRE (PART 72)
4/0 " " (PART 524)

NOTE:
DEAD END FITTING SHALL WITHSTAND FULL BREAKING STRENGTH THE GROOVED TROLLEY WIRE.

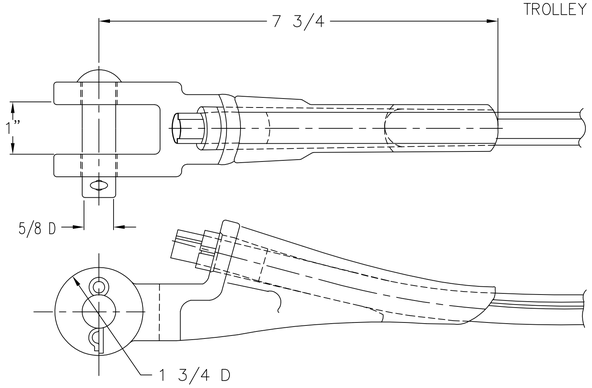

Metro–North Commuter Railroad

DRAWING TITLE:

DEAD END FITTING

METRO–NORTH NO. 10434410

STANDARD COMPONENTS

URS CORPORATION AES
500 ENTERPRISE DRIVE
ROCKY HILL, CT 06067
1-(860)-529-8882

ENGINEER: –
DESIGNER: – DRAFTER: AB CHECKER: VY
APPROVED: URE
PART NO. 72/524

PROOFLOAD–24,500 LBS

WORKING LOAD: 16,500 LBS

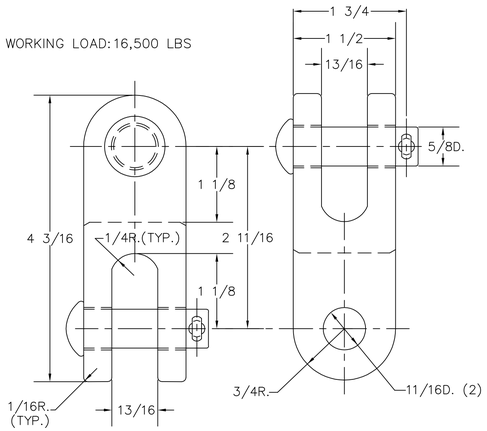

MATERIAL:
ALUMINUM BRONZE
ASTM B30, ALLOY 955
T.S. (MIN.) 90,000 PSI
Y.S. (MIN.) 40,000 PSI

CLEVISPINS–GALV. STEEL
COTTER KEY–ST. STEEL

Metro–North Commuter Railroad

DRAWING TITLE:

LINK DOUBLE CLEVIS 90°

METRO–NORTH NO. 10206318

STANDARD COMPONENTS

URS CORPORATION AES
500 ENTERPRISE DRIVE
ROCKY HILL, CT 06067
1-(860)-529-8882

ENGINEER: –
DESIGNER: – DRAFTER: AB CHECKER: VY
APPROVED: URE
PART NO. 73

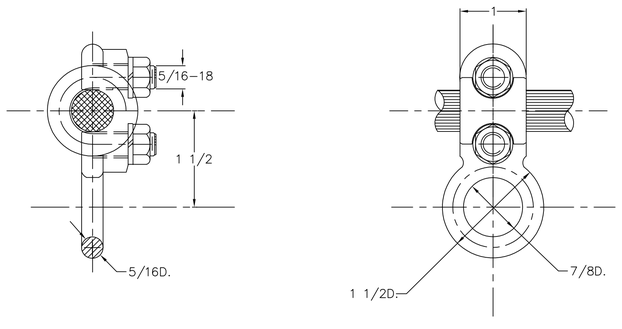

CABLE SIZE
.613DIA. C.W.

MATERIAL:
ALUMINUM BRONZE
ASTM B30, ALLOY 954
T.S. (MIN.) 75,000 PSI
Y.S. (MIN.) 30,000 PSI
U–BOLTS, NUTS & LWASHERS
–SILICONE BRONZE

Metro–North Commuter Railroad

DRAWING TITLE:

MESSENGER HANGER CLAMP

METRO–NORTH NO. 10202452

STANDARD COMPONENTS

URS CORPORATION AES
500 ENTERPRISE DRIVE
ROCKY HILL, CT 06067
1-(860)-529-8882

ENGINEER: –
DESIGNER: – DRAFTER: AB CHECKER: VY
APPROVED: URE
PART NO. 79

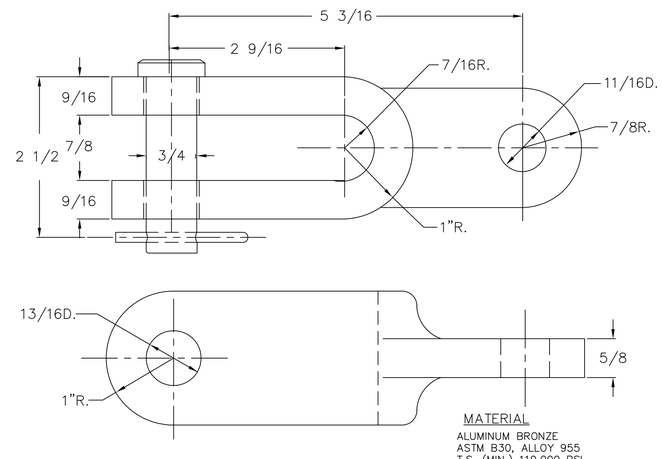

MATERIAL
ALUMINUM BRONZE
ASTM B30, ALLOY 955
T.S. (MIN.) 110,000 PSI
Y.S. (MIN.) 60,000 PSI

CLEVIS PIN–GALV. STEEL
COTTER KEY–ST. STEEL

Metro–North Commuter Railroad

DRAWING TITLE:

LINK CLEVIS TONGUE, 90°

METRO–NORTH NO. 10206350

STANDARD COMPONENTS

URS CORPORATION AES
500 ENTERPRISE DRIVE
ROCKY HILL, CT 06067
1-(860)-529-8882

ENGINEER: –
DESIGNER: – DRAFTER: AB CHECKER: VY
APPROVED: URE
PART NO. 85

PROJECT CONTROL DATE: 09/13/13 DISK FILENAME: SC-9.dwg 100% DESIGN

F.H.W.A. REGION	STATE	TOWN	FED. AID PROJ. NO.	PROJ. NO.	YEAR	SHEET NUMBER
1	CONN.	VARIOUS	CT-05-0109	301-0145	2013	

PROOFLOAD–24,5000 LBS

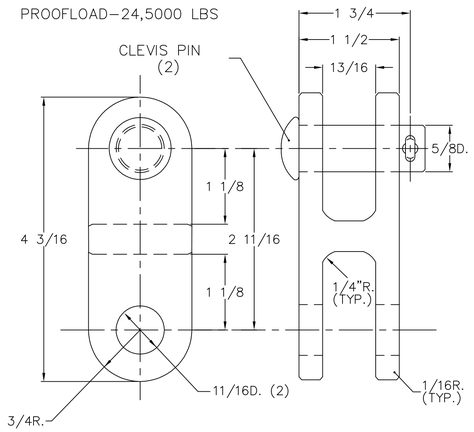

MATERIAL
ALUMINUM BRONZE
ASTM B30, ALLOY 955
J.S. (MIN.) 90,000 PSI
Y.S. (MIN.) 40,000 PSI
CLEVISPIN–GALV. STEEL
COTTER KEY–ST. STEEL

Metro–North Commuter Railroad

DRAWING TITLE:

LINK CLEVIS WITH 2 PINS

METRO–NORTH NO. 10206310

URS CORPORATION AES
500 ENTERPRISE DRIVE
ROCKY HILL, CT 06067
1-(860)-529-8882

STANDARD COMPONENTS

ENGINEER: –
DESIGNER: – DRAFTER: AB CHECKER: VY
APPROVED: URE
PART NO. 86

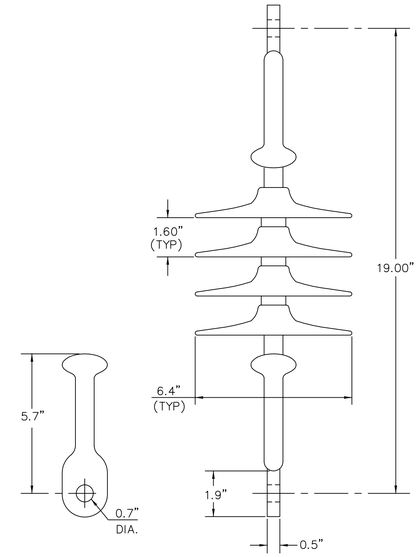

SPECIFICATIONS	
NUMBER OF SHEDS	4
END FITTINGS	STEEL, HOT DIP GALVANIZED
WEIGHT ESTIMATE	5.5 LBS
ø TO GROUND VOLTAGE	22 KV
60 Hz DRY FLASHOVER VOLTAGE	108 KV (MIN)
60 Hz WET FLASHOVER VOLTAGE	91 KV (MIN)
MINIMUM DRY ARC DISTANCE	12"
MINIMUM LEAKAGE DISTANCE	28"
SPECIFIED MECHANICAL LOAD	25,000 LBS
MAXIMUM DESIGN LOAD	12,500 LBS
TEST LOAD	12,500 LBS

NOTE: BOTH END FITTINGS SHALL BE WITHIN ±1° OF THE RESPECTIVE CENTER LINES.

MATERIAL
CORE – FIBERGLASS REINFORCED EPOXY
SHEATH & SHEDS – SILICONE RUBBER–COLOR: LUSTERLESS MED.GRAY
END FITTINGS – DUCTILE IRON ASTM A536–80
GALVANIZED TO ASTM A153

Metro–North Commuter Railroad

DRAWING TITLE:

SUSPENSION INSULATOR

METRO–NORTH NO. 10–445113

URS CORPORATION AES
500 ENTERPRISE DRIVE
ROCKY HILL, CT 06067
1-(860)-529-8882

ELECTRIFICATION STANDARDS

ENGINEER: SDB
DESIGNER: MS DRAFTER: HJ CHECKER: JCD
APPROVED: SDB
PART NO. 95

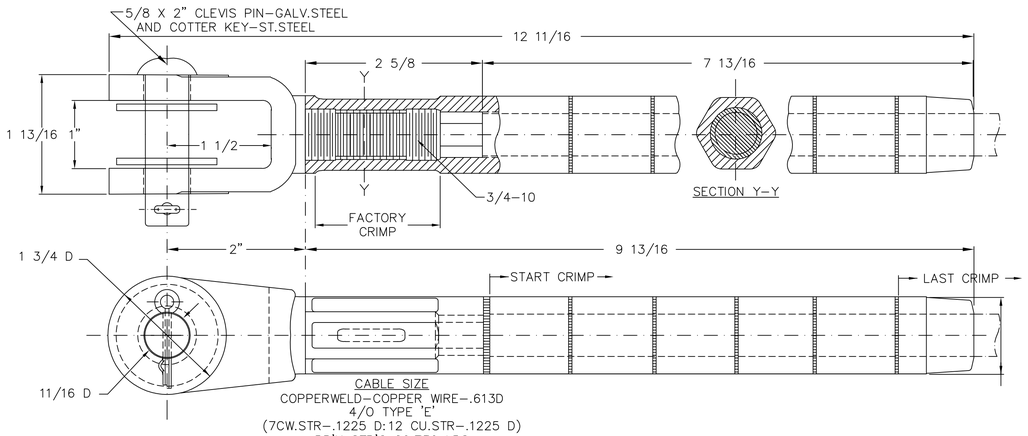

CABLE SIZE
COPPERWELD–COPPER WIRE–.613D
4/O TYPE 'E'
(7CW.STR–.1225 D:12 CU.STR–.1225 D)
BR'K STR'G 20,730 LBS
OR
COPPERWELD WIRE–.613D
5/8(7 CW STR No4–.2043 D)
BR'K STR'G 22,300 LBS

DEAD END SOCKET ASSEMBLY SHALL WITHSTAND WITHOUT DEFORMATION OR SLIPPAGE OF WIRE 20,000 LBS. PULLING FORCE (95% OF BR'K STR'G OF 4/O TYPE 'E' WIRE)

MATERIAL
ALUM.BRONZE & DRAWN COPPER TUBE

Metro–North Commuter Railroad

DRAWING TITLE:

FULL TENSION DEAD END SOCKET

METRO–NORTH NO. 10434410

URS CORPORATION AES
500 ENTERPRISE DRIVE
ROCKY HILL, CT 06067
1-(860)-529-8882

STANDARD COMPONENTS

ENGINEER: –
DESIGNER: – DRAFTER: VY CHECKER: VY
APPROVED: URE
PART NO. 90

MECHANICAL RATING

TENSION (WORKING LOAD) — 18,000 LBS
PROOF LOAD — 18,000 LBS
ULTIMATE LOAD — 36,000 LBS (MINIMUM)

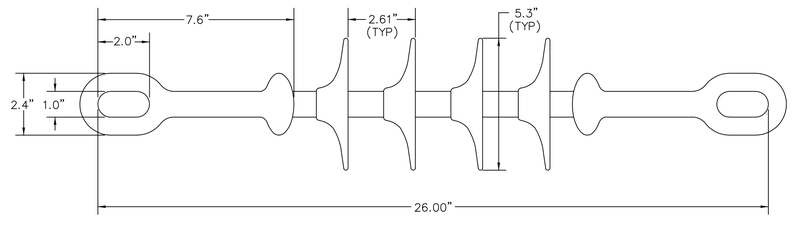

K.V. RATING

ø TO GROUND VOLTAGE — 22 KV
LEAKAGE DISTANCE — 26 IN
DRY FLASHOVER — 129 KV
WET FLASHOVER — 112 KV
BIL — 190 KV

MATERIAL
CORE – FIBERGLASS REINFORCED EPOXY
SHEATH & SHEDS – SILICONE RUBBER–COLOR: LUSTERLESS MED.GRAY
END FITTINGS – DUCTILE IRON ASTM A536–80
GALVANIZED TO ASTM A153

Metro–North Commuter Railroad

DRAWING TITLE:

SUSPENSION INSULATOR
(36,000 LBS)

METRO–NORTH NO. 10445115

URS CORPORATION AES
500 ENTERPRISE DRIVE
ROCKY HILL, CT 06067
1-(860)-529-8882

STANDARD COMPONENTS

ENGINEER: –
DESIGNER: – DRAFTER: AB CHECKER: VY
APPROVED: URE
PART NO. 94

PROJECT CONTROL DATE: 09/13/13 DISK FILENAME: SC–10.dwg 100% DESIGN

F H W A REGION	STATE	TOWN	FED. AID PROJ. NO.	PROJ. NO.	YEAR	SHEET NUMBER
1	CONN.	VARIOUS	CT-05-0109	301-0145	2013	

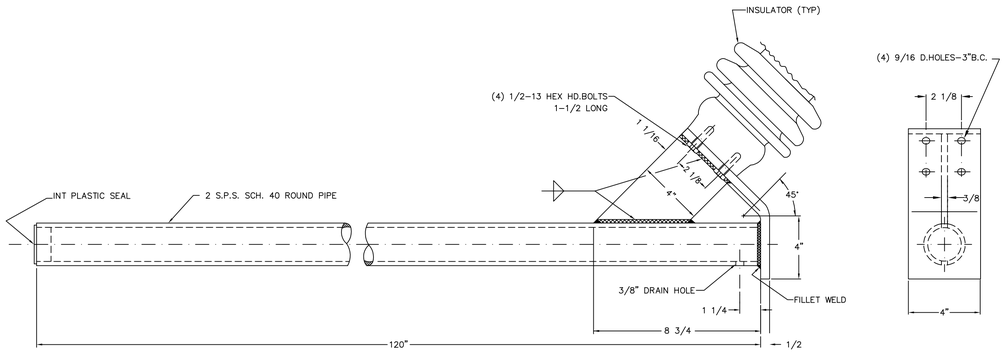

MATERIAL
CARBON STEEL ASTM A36

FINISH
GALVANIZED TO ASTM A123

Metro-North Commuter Railroad

DRAWING TITLE:

REGISTRATION TUBE 120"
WITH PIPE CAP

METRO-NORTH NO. 10858170

STANDARD COMPONENTS

URS CORPORATION AES
500 ENTERPRISE DRIVE
ROCKY HILL, CT 06067
1-(860)-529-8882

ENGINEER: –
DESIGNER: – DRAFTER: AB CHECKER: VY
APPROVED: URE
PART NO. 104

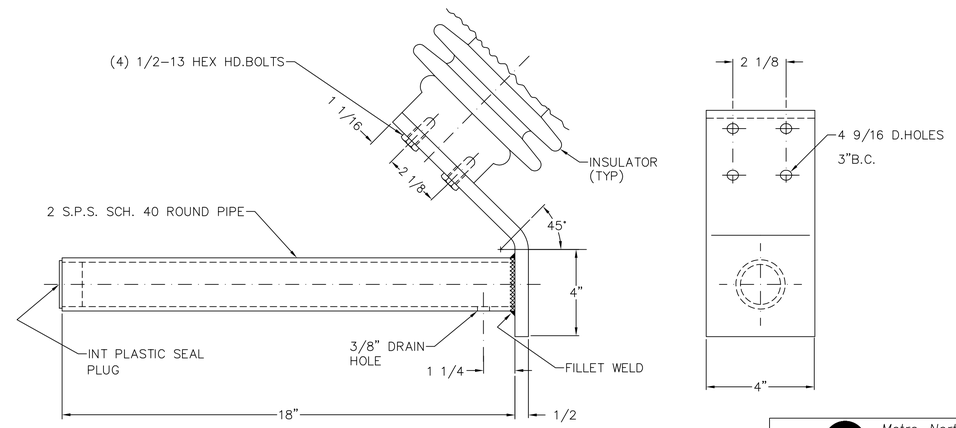

MATERIAL
CARBON STEEL ASTM A36

FINISH
GALVANIZED TO ASTM A123

Metro-North Commuter Railroad

DRAWING TITLE:

REGISTATION TUBE 18"
WITH PIPE CAP

METRO-NORTH NO. 1000085

STANDARD COMPONENTS

URS CORPORATION AES
500 ENTERPRISE DRIVE
ROCKY HILL, CT 06067
1-(860)-529-8882

ENGINEER: –
DESIGNER: – DRAFTER: AB CHECKER: VY
APPROVED: URE
PART NO. 105

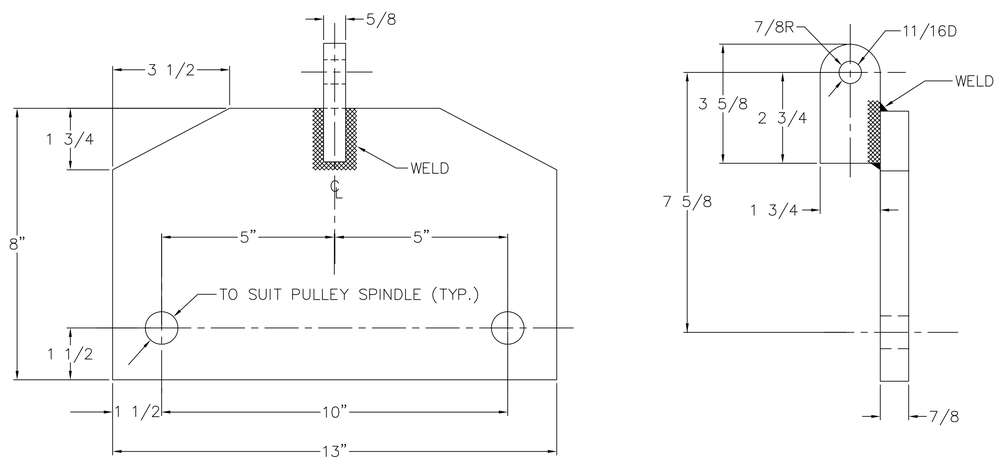

ALL CORNERS AND EDGES ARE
ROUNDED TO 1/32 R.

TOLERANCE: ± 1/64 EXCEPT AS NOTED

NOTE: #107 INCLUDES 2 PULLEY(#6)

MATERIAL
CARBON STEEL
ASTM A108

FINISH
GALVANIZED TO ASTM A123

Metro-North Commuter Railroad

DRAWING TITLE:

DOUBLE PULLEY PLATE ASSEMBLY

METRO-NORTH NO. 10730150

STANDARD COMPONENTS

URS CORPORATION AES
500 ENTERPRISE DRIVE
ROCKY HILL, CT 06067
1-(860)-529-8882

ENGINEER: –
DESIGNER: – DRAFTER: AB CHECKER: VY
APPROVED: URE
PART NO. 107

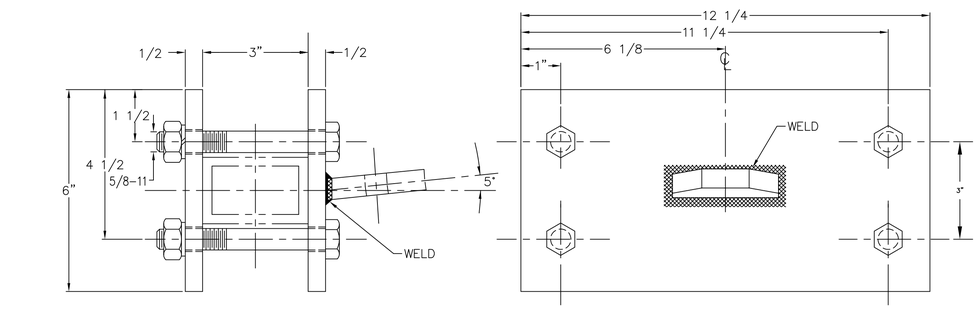

MATERIAL
CARBON STEEL ASTM A108

FINISH
GALV. TO ASTM A123

HARDWARE – GALV STL

(4) 5/8-11 X 5" HEX HD. BOLTS, GRADE 5

(4) 5/8-11 HEX NUTS

(4) 5/8 L'WASHERS

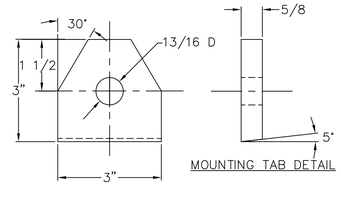

MOUNTING TAB DETAIL

Metro-North Commuter Railroad

DRAWING TITLE:

MOUNTING BRACKET

METRO-NORTH NO. 10735190

STANDARD COMPONENTS

URS CORPORATION AES
500 ENTERPRISE DRIVE
ROCKY HILL, CT 06067
1-(860)-529-8882

ENGINEER: –
DESIGNER: – DRAFTER: VY CHECKER: VY
APPROVED: URE
PART NO. 109

PROJECT CONTROL DATE: 09/13/13 DISK FILENAME: SC-11.dwg 100% DESIGN

F H W A REGION	STATE	TOWN	FED. AID PROJ. NO.	PROJ. NO.	YEAR	SHEET NUMBER
1	CONN.	VARIOUS	CT-05-0109	301-0145	2013	

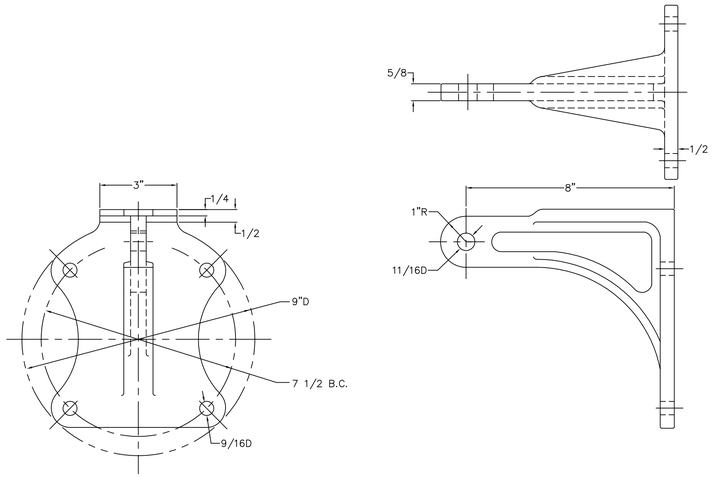

MATERIAL
ALUM. BRONZE
ALLOY 955 ASTM B-30, B-148
T.S. 90,000 P.S.I.

MOUNTING HARDWARE
ASTM A449 GALV. TO ASTM A-153
T.S. 120,000 P.S.I.

Metro-North Commuter Railroad

DRAWING TITLE:

PULLEY BRACKET

METRO-NORTH NO. 10200166

STANDARD COMPONENTS

URS CORPORATION AES
500 ENTERPRISE DRIVE
ROCKY HILL, CT 06067
1-(860)-529-8882

ENGINEER: –
DESIGNER: – DRAFTER: AB CHECKER: VY
APPROVED: URE
PART NO. 113

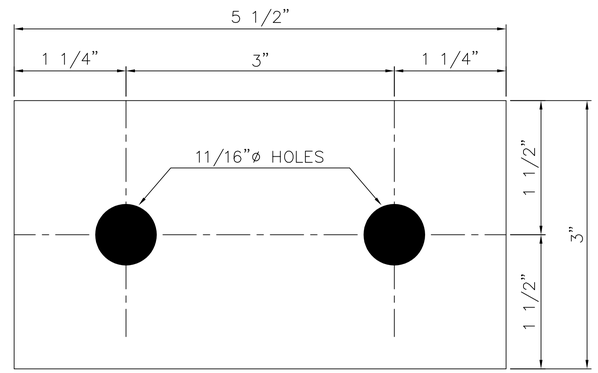

PL. 1/2" x 3" x 5 1/2"

MATERIAL
CARBON STEEL ASTM A36

FINISH
GALVANIZED TO ASTM A123

Metro-North Commuter Railroad

DRAWING TITLE:

1/2 PL 3" X 5 1/2

METRO-NORTH NO. 10200200

STANDARD COMPONENTS

URS CORPORATION AES
500 ENTERPRISE DRIVE
ROCKY HILL, CT 06067
1-(860)-529-8882

ENGINEER: –
DESIGNER: – DRAFTER: AB CHECKER: VY
APPROVED: URE
PART NO. 131

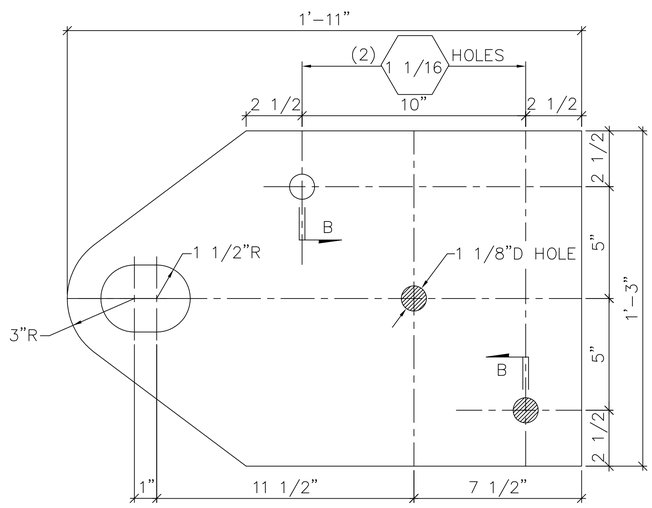

BOTTOM PLATE
(1" x 15" x 1'-10")

NOTE: PARTS 150 AND 150B ARE ORDERED AS ASSEMBLY 10.118219, CONSISTING OF 1 #150B AND 65 #150.

PIN-1"DIA. x 1 1/4"
TAPER EXPOSED (1/2")
TO 3/4" DIA.

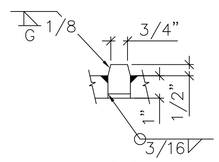

SECTION "B"
TYPICAL (2) LOCATIONS
EACH CENTER PLATE
& (2) EACH BOTTOM PLATE

MATERIAL
CARBON STEEL ASTM A36

FINISH
GALVANIZED TO ASTM A123

Metro-North Commuter Railroad

DRAWING TITLE:

BALANCE WEIGHT PLATE 15 X 23 X 1

METRO-NORTH NO. 10730330

STANDARD COMPONENTS

URS CORPORATION AES
500 ENTERPRISE DRIVE
ROCKY HILL, CT 06067
1-(860)-529-8882

ENGINEER: –
DESIGNER: – DRAFTER: AB CHECKER: VY
APPROVED: URE
PART NO. 150

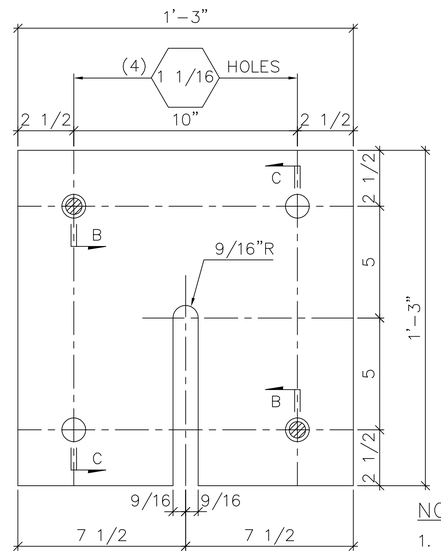

CENTER PLATE
(1" x 15" x 1'-3")

PIN-1"DIA. x 1 1/4"
TAPER EXPOSED (1/2")
TO 3/4" DIA.

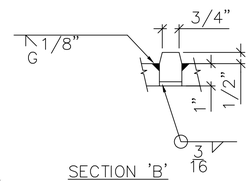

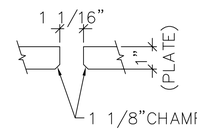

SECTION 'C'
TYPICAL (2) LOCATIONS
EACH CENTER PLATE
& (2) EACH BOTTOM PLATE

SECTION 'B'
TYPICAL (2) LOCATIONS
EACH CENTER PLATE
& (2) EACH BOTTOM PLATE

MATERIAL
CARBON STEEL ASTM A36

FINISH
GALVANIZED TO ASTM A123

NOTES

1. PLATES TO BE FLAT AFTER CUTTING TO PERMIT STACKING

Metro-North Commuter Railroad

DRAWING TITLE:

BALANCE WEIGHT PLATE 15 X 15 X 1

METRO-NORTH NO. 10730335

STANDARD COMPONENTS

URS CORPORATION AES
500 ENTERPRISE DRIVE
ROCKY HILL, CT 06067
1-(860)-529-8882

ENGINEER: –
DESIGNER: – DRAFTER: AB CHECKER: VY
APPROVED: URE
PART NO. 151

PROJECT CONTROL DATE: 09/13/13 DISK FILENAME: SC-12.dwg 100% DESIGN

F.H.W.A. REGION	STATE	TOWN	FED. AID PROJ. NO.	PROJ. NO.	YEAR	SHEET NUMBER
1	CONN.	VARIOUS	CT-05-0109	301-0145	2013	

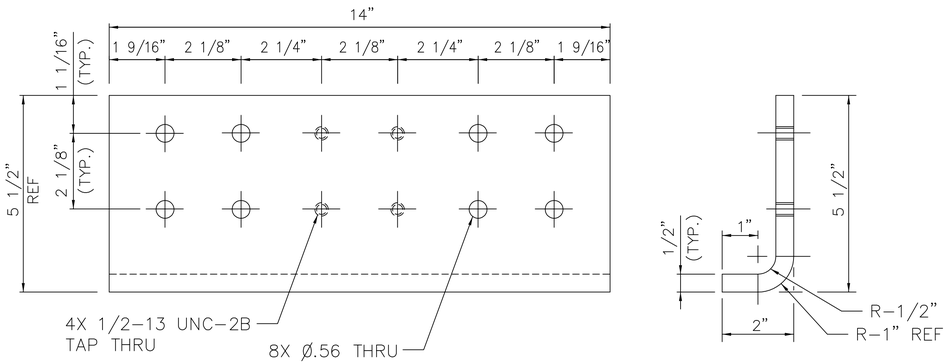

MATERIAL:
CARBON STEEL ASTM A36
GALVANIZED PER ASTM 123/153
WEIGHT: 12.9 LBS/EA

Metro-North Commuter Railroad

DRAWING TITLE:

DOUBLE INSULATOR ADAPTOR PLATE

METRO-NORTH NO.XXXXXX

URS CORPORATION AES
500 ENTERPRISE DRIVE
ROCKY HILL, CT 06067
1-(860)-529-8882

STANDARD COMPONENTS

ENGINEER: –
DESIGNER: – DRAFTER: HV CHECKER: JL
APPROVED: XXX
PART NO. XXX

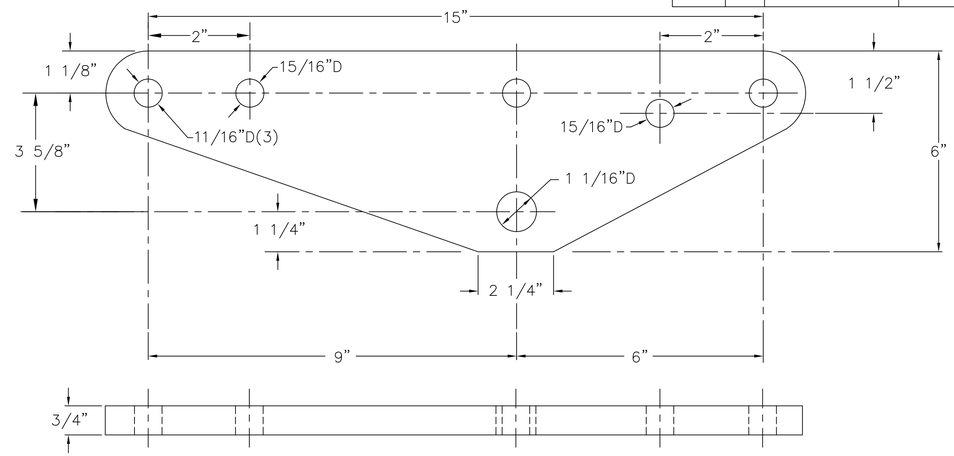

MATERIAL
CARBON STEEL ASTM A36
FINISH
GALVANIZED TO ASTM A123

Metro-North Commuter Railroad

DRAWING TITLE:

YOKE BALANCE PLATE

METRO-NORTH NO. 10738352

URS CORPORATION AES
500 ENTERPRISE DRIVE
ROCKY HILL, CT 06067
1-(860)-529-8882

STANDARD COMPONENTS

ENGINEER: –
DESIGNER: – DRAFTER: AB CHECKER: VY
APPROVED: URE
PART NO.160

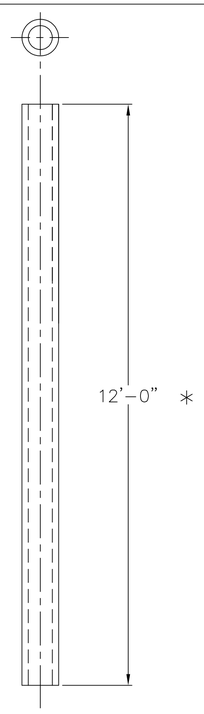

* 12' NOMINAL LENGTH, LONGER GUIDE TUBES WILL BE REQUIRED FOR TENSION LENGTH IN EXCESS OF 3200 ft.

MATERIAL
STEEL PIPE ASTM SCH 80

FINISH
GALVANIZED TO ASTM A123

Metro-North Commuter Railroad

DRAWING TITLE:

BALANCE WEIGHT GUIDE TUBE

METRO-NORTH NO. 10728000

URS CORPORATION AES
500 ENTERPRISE DRIVE
ROCKY HILL, CT 06067
1-(860)-529-8882

STANDARD COMPONENTS

ENGINEER: –
DESIGNER: – DRAFTER: AB CHECKER: VY
APPROVED: URE
PART NO. 161

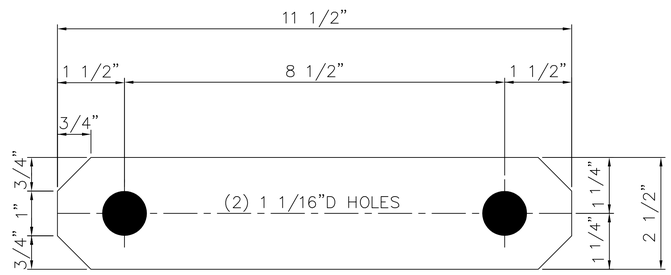

MATERIAL
CARBON STEEL ASTM A36

FINISH
GALVANIZED TO ASTM A123

Metro-North Commuter Railroad

DRAWING TITLE:

DOUBLE LINK 5/8 X 2 1/2 X 11 1/2

METRO-NORTH NO. 10726355

URS CORPORATION AES
500 ENTERPRISE DRIVE
ROCKY HILL, CT 06067
1-(860)-529-8882

STANDARD COMPONENTS

ENGINEER: –
DESIGNER: – DRAFTER: VY CHECKER: VY
APPROVED: URE
PART NO. 179

PROJECT CONTROL DATE: 09/13/13 DISK FILENAME: SC-13.dwg 100% DESIGN

F H W A REGION	STATE	TOWN	FED. AID PROJ. NO.	PROJ. NO.	YEAR	SHEET NUMBER
1	CONN.	VARIOUS	CT-05-0109	301-0145	2013	

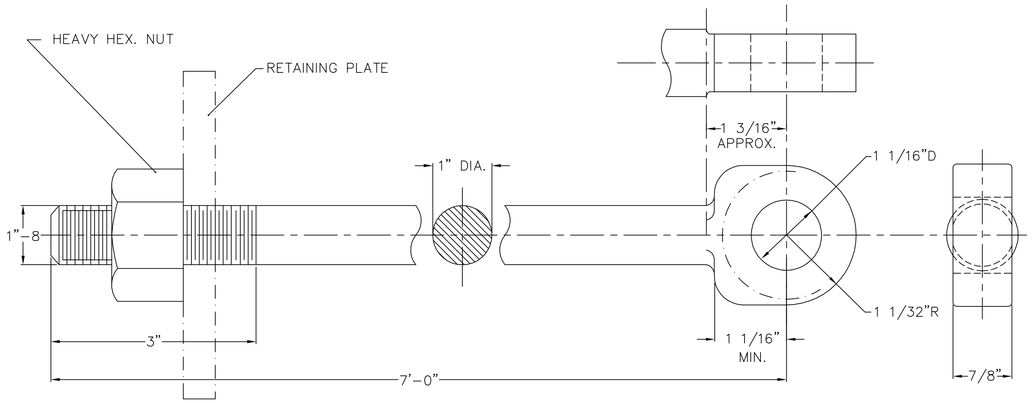

MATERIAL
CARBON STEEL ALLOY #1020, ASTM A36

FINISH
GALVANIZED TO ASTM A153

Metro-North Commuter Railroad

DRAWING TITLE:

WEIGHT SUPPORT 1" THIMBLE EYE ROD WITH NET

METRO-NORTH NO. 10850060

URS CORPORATION AES
500 ENTERPRISE DRIVE
ROCKY HILL, CT 06067
1-(860)-529-8882

STANDARD COMPONENTS

ENGINEER: –
DESIGNER: – DRAFTER: VY CHECKER: VY
APPROVED: URE
PART NO. 213

#214 (10435500) FOR 19/9 ALUMOWELD MESSENGER
#215 (10435525) FOR 19/7 ALUMOWELD MESSENGER

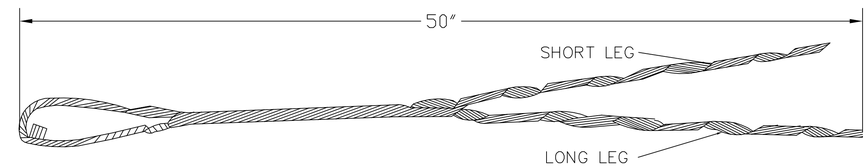

CONDUCTOR SIZE: .571–.591 DIA
RATED HOLDING STRENGTH: 34,290 LBS

MATERIAL:
C-COAT GALVANIZED STEEL WIRE

NOTE: THIS GRIP MUST BE USED WITH THE APPROPRIATE SIZE GALV. THIMBLE.

Metro-North Commuter Railroad

DRAWING TITLE:

PREFORMED BIG GRIP DEAD END

METRO-NORTH NOS. 10435500 & 10435525

URS CORPORATION AES
500 ENTERPRISE DRIVE
ROCKY HILL, CT 06067
1-(860)-529-8882

STANDARD COMPONENTS

ENGINEER: –
DESIGNER: – DRAFTER: AB CHECKER: VY
APPROVED: URE
PART NO. 214/215

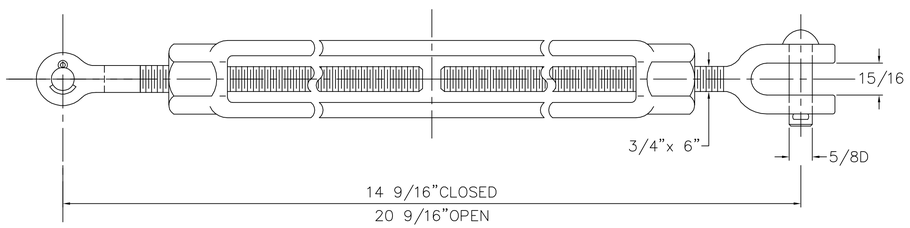

MATERIAL
FORGED ALLOY STEEL GALVANIZED

CLEVIS PIN
H.S. GALV. STEEL

COTTER KEY
STAINLESS STEEL

Metro-North Commuter Railroad

DRAWING TITLE:

EYE/JAW TURNBUCKLE 3/4 X 6

METRO-NORTH NO. 10754369

URS CORPORATION AES
500 ENTERPRISE DRIVE
ROCKY HILL, CT 06067
1-(860)-529-8882

STANDARD COMPONENTS

ENGINEER: –
DESIGNER: – DRAFTER: VY CHECKER: VY
APPROVED: URE
PART NO. 219

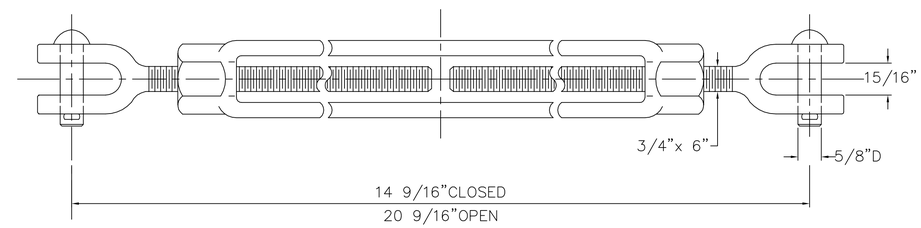

MATERIAL
FORGED ALLOY STEEL GALVANIZED

CLEVIS PIN
H.S. GALV. STEEL

COTTER KEY
STAINLESS STEEL

Metro-North Commuter Railroad

DRAWING TITLE:

JAW/JAW TURNBUCKLE 3/4"

METRO-NORTH NO. 10860100

URS CORPORATION AES
500 ENTERPRISE DRIVE
ROCKY HILL, CT 06067
1-(860)-529-8882

STANDARD COMNETENTS

ENGINEER: –
DESIGNER: – DRAFTER: VY CHECKER: VY
APPROVED: URE
PART NO. 220

PROJECT CONTROL DATE: 09/13/13 DISK FILENAME: SC-14.dwg 100% DESIGN

F H W A REGION	STATE	TOWN	FED. AID PROJ. NO.	PROJ. NO.	YEAR	SHEET NUMBER
1	CONN.	VARIOUS	CT-05-0109	301-0145	2013	

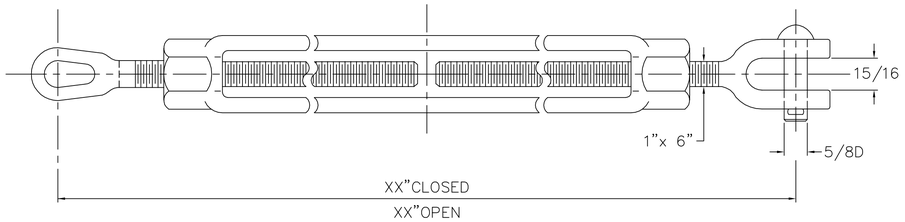

MATERIAL
FORGED ALLOY STEEL GALVANIZED

CLEVIS PIN
H.S. GALV. STEEL

COTTER KEY
STAINLESS STEEL

Metro-North Commuter Railroad

DRAWING TITLE:

EYE/JAW TURNBUCKLE 1 X 6

METRO-NORTH NO. XXXXXXXX

URS CORPORATION AES
500 ENTERPRISE DRIVE
ROCKY HILL, CT 06067
1-(860)-529-8882

STANDARD COMPONENTS

ENGINEER: –
DESIGNER: – DRAFTER: VY CHECKER: VY
APPROVED: URE
PART NO. 219A

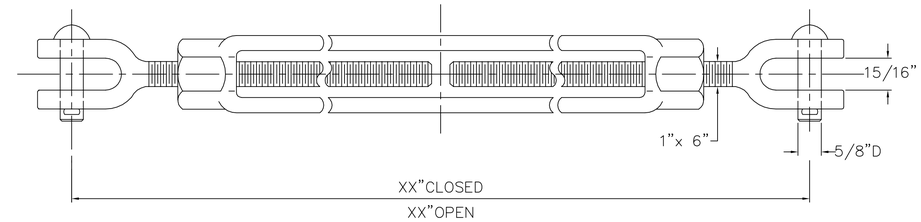

MATERIAL
FORGED ALLOY STEEL GALVANIZED

CLEVIS PIN
H.S. GALV. STEEL

COTTER KEY
STAINLESS STEEL

Metro-North Commuter Railroad

DRAWING TITLE:

JAW/JAW TURNBUCKLE 1"

METRO-NORTH NO. XXXXXXXX

URS CORPORATION AES
500 ENTERPRISE DRIVE
ROCKY HILL, CT 06067
1-(860)-529-8882

STANDARD COMPONENTS

ENGINEER: –
DESIGNER: – DRAFTER: AB CHECKER: VY
APPROVED: URE
PART NO. 220A

PROJECT CONTROL DATE: 09/13/13 DISK FILENAME: SC-14A.dwg 100% DESIGN

F H W A REGION	STATE	TOWN	FED. AID PROJ. NO.	PROJ. NO.	YEAR	SHEET NUMBER
1	CONN.	VARIOUS	CT-05-0109	301-0145	2013	

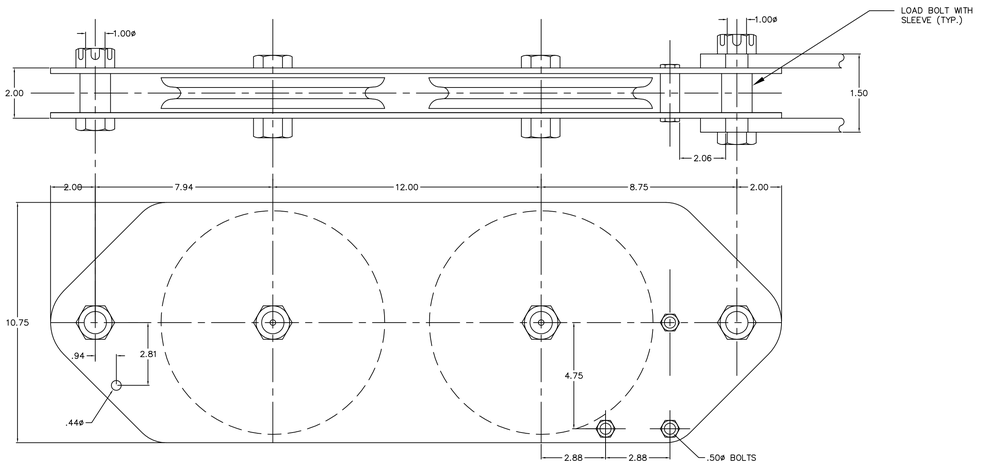

NOTE:
1. 10ø BRONZE SHEAVE FITTED W/ SEALED TAPERED ROLLER BEARINGS.
2. SHEAVE PIN EQUIPPED W/ LUBRICATION FITTING.
3. LOAD BOLT FITTED W/ COTTER PIN.
4. PROVIDE .62" THICK LINK PLATES TO ATTACH TO LOAD BOLT.
5. SHEAVE HARDNESS TO BE BHN 190 MIN.
6. SHEAVE GROOVE TO ACCEPT .50ø S.S. 6x37 IWRC WIRE ROPE.
7. CARBON STEEL ASTM A36 GALVANIZED TO ASTM A123.

Metro-North Commuter Railroad

DRAWING TITLE:

DOUBLE PULLEY ASSEMBLY

METRO-NORTH NO. 10738925

STANDARD COMPONENTS

URS CORPORATION AES
500 ENTERPRISE DRIVE
ROCKY HILL, CT 06067
1-(860)-529-8882

ENGINEER: –
DESIGNER: – DRAFTER: AB CHECKER: VY
APPROVED: URE
PART NO. 225

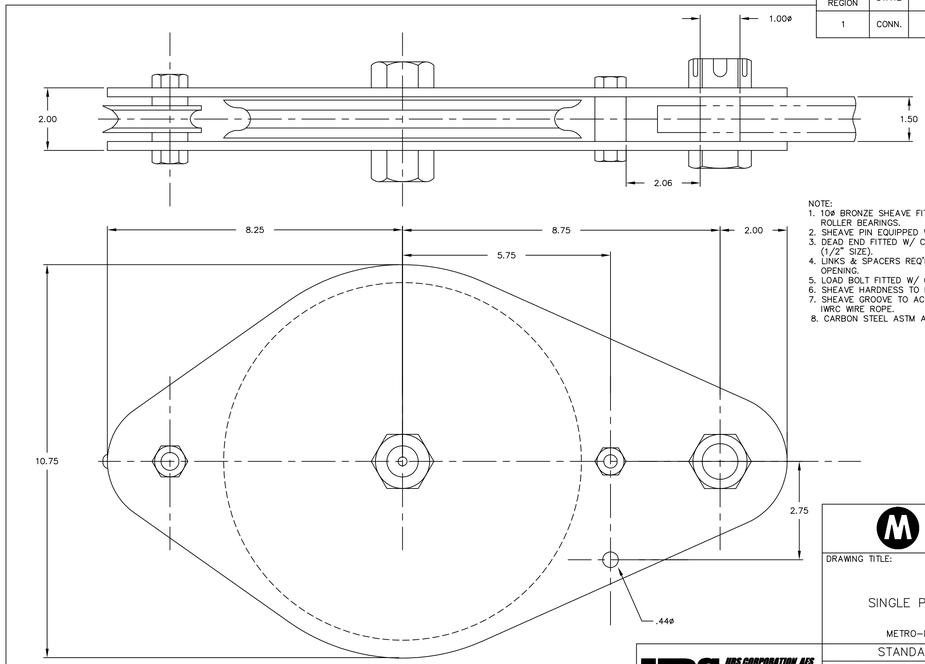

NOTE:
1. 10ø BRONZE SHEAVE FITTED W/ SEALED TAPERED ROLLER BEARINGS.
2. SHEAVE PIN EQUIPPED W/ LUBRICATION FITTING.
3. DEAD END FITTED W/ CROSBY G-411 THIMBLE (1/2" SIZE).
4. LINKS & SPACERS REQ'D TO CENTER IN 1.50" OPENING.
5. LOAD BOLT FITTED W/ COTTER PIN.
6. SHEAVE HARDNESS TO BE BHN 190 MIN.
7. SHEAVE GROOVE TO ACCEPT .50ø S.S. 6x37 IWRC WIRE ROPE.
8. CARBON STEEL ASTM A36 GALVANIZED TO ASTM A123.

Metro-North Commuter Railroad

DRAWING TITLE:

SINGLE PULLEY ASSEMBLY

METRO-NORTH NO. 1073890

STANDARD COMPONENTS

URS CORPORATION AES
500 ENTERPRISE DRIVE
ROCKY HILL, CT 06067
1-(860)-529-8882

ENGINEER: –
DESIGNER: – DRAFTER: AB CHECKER: VY
APPROVED: URE
PART NO. 228

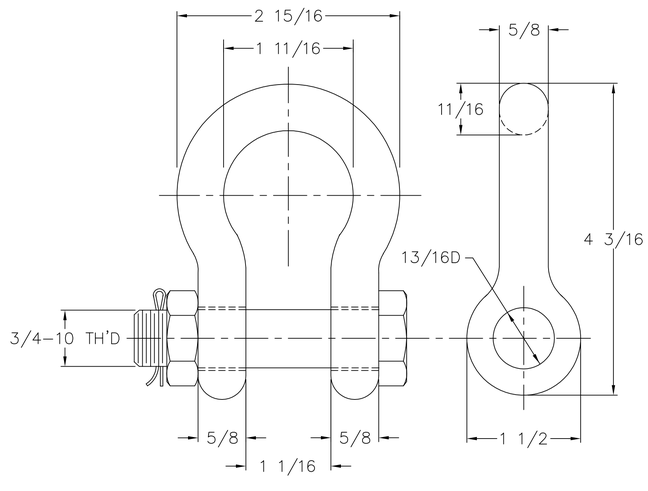

MATERIAL
BODY, NUT & BOLT-FORGED
ALLOY STL-GALV.
COTTER PIN-ST. STEEL

LOADS
SAFE WORKING LOAD-11,020 LBS
PROOF LOAD------24,200 LBS
ULTIMATE LOAD----55,100 LBS

Metro-North Commuter Railroad

DRAWING TITLE:

5/8 ANCHOR SHACKLE WITH 3/4" PIN

METRO-NORTH NO. 10850255

STANDARD COMPONENTS

URS CORPORATION AES
500 ENTERPRISE DRIVE
ROCKY HILL, CT 06067
1-(860)-529-8882

ENGINEER: –
DESIGNER: – DRAFTER: VY CHECKER: VY
APPROVED: URE
PART NO. 231

PROJECT CONTROL DATE: 09/13/13 DISK FILENAME: SC-15.dwg 100% DESIGN

F H W A REGION	STATE	TOWN	FED. AID PROJ. NO.	PROJ. NO.	YEAR	SHEET NUMBER
1	CONN.	VARIOUS	CT-05-0109	301-0145	2013	

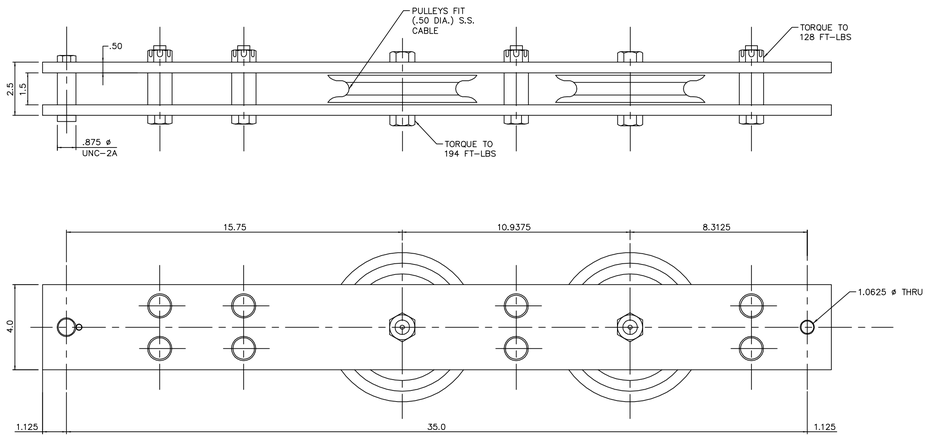

Metro-North Commuter Railroad

DRAWING TITLE:

DOUBLE PULLEY ASSEMBLY

METRO-NORTH NO. XXXXXXXX

URS CORPORATION AES
500 ENTERPRISE DRIVE
ROCKY HILL, CT 06067
1-(860)-529-8882

STANDARD COMPONENTS

ENGINEER: –

DESIGNER: – DRAFTER: XXX CHECKER: XXX

APPROVED: XXX

PART NO. XXX

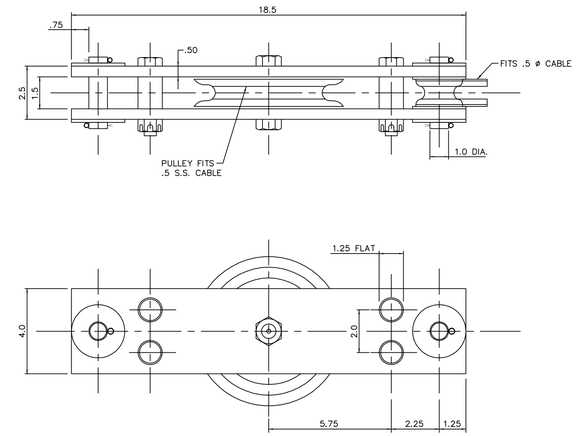

Metro-North Commuter Railroad

DRAWING TITLE:

SINGLE PULLEY ASSEMBLY

METRO-NORTH NO. XXXXXXXX

URS CORPORATION AES
500 ENTERPRISE DRIVE
ROCKY HILL, CT 06067
1-(860)-529-8882

STANDARD COMPONENTS

ENGINEER: –

DESIGNER: – DRAFTER: XXX CHECKER: XXX

APPROVED: XXX

PART NO. XXX

PROJECT CONTROL DATE: 09/13/13 DISK FILENAME: SC-15A.dwg 100% DESIGN

F H W A REGION	STATE	TOWN	FED. AID PROJ. NO.	PROJ. NO.	YEAR	SHEET NUMBER
1	CONN.	VARIOUS	CT-05-0109	301-0145	2013	

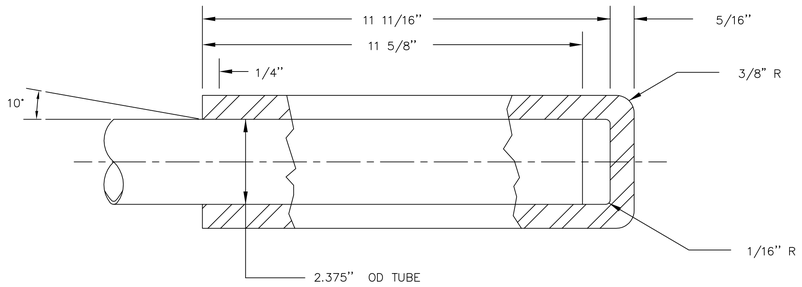

MATERIAL

NEOPRENE TYPE W OR WRT
FOR 17 kv SERVICE

Metro-North Commuter Railroad

DRAWING TITLE:

SAFETY BOOT

METRO-NORTH NO. XXXXXXXXXXXXX

URS CORPORATION AES
500 ENTERPRISE DRIVE
ROCKY HILL, CT 06067
1-(860)-529-8882

STANDARD COMPONENTS

ENGINEER: –
DESIGNER: – DRAFTER: JHM CHECKER:
APPROVED: URE
PART NO. 216

SPECIFICATIONS

STIRRUP BODY	SILICON BRONZE
STIRRUP CONDUCTOR	COPPER ROD TIN PLATED
STIRRUP RANGE	4/0 AWG TO 250 KCMIL
HOT LINE CONNECTOR EYE BOLT	SILICON BRONZE
HOT LINE CONNECTOR BODY	SILICON BRONZE

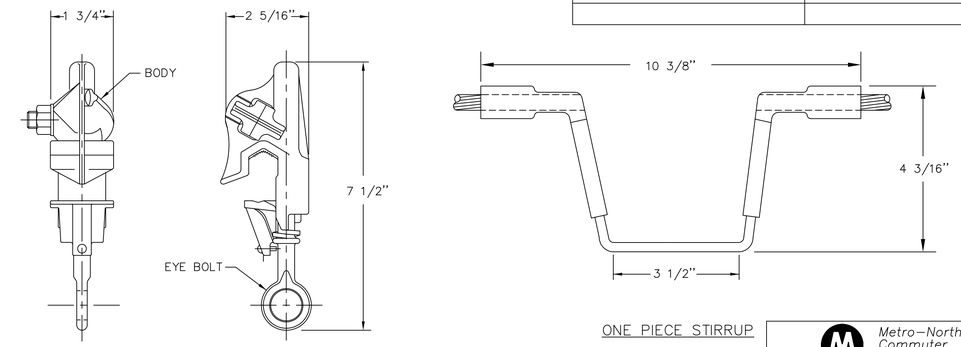

ONE PIECE STIRRUP

Metro-North Commuter Railroad

DRAWING TITLE:

STIRRUP AND CONNECTOR

METRO-NORTH NO. XX-XXXXXX

URS CORPORATION AES
500 ENTERPRISE DRIVE
ROCKY HILL, CT 06067
1-(860)-529-8882

ELECTRIFICATION STANDARDS

ENGINEER: SDB
DESIGNER: JEM DRAFTER: BDC CHECKER: SDB
APPROVED: SDB
PART NO. 260

PROJECT CONTROL DATE: 09/13/13 DISK FILENAME: SC-16.dwg 100% DESIGN

F H W A REGION	STATE	TOWN	FED. AID PROJ. NO.	PROJ. NO.	YEAR	SHEET NUMBER
1	CONN.	VARIOUS	CT-05-0109	301-0145	2013	

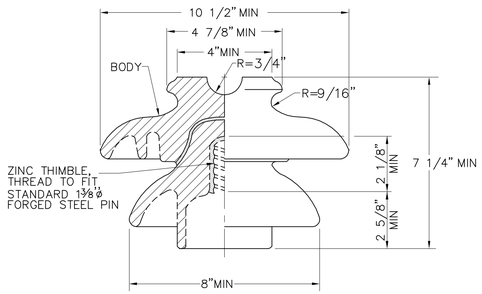

SPECIFICATIONS	
BODY	PORCELAIN
TYPICAL APPLICATION VOLTAGE	35 KV
ANSI CLASS	56-3
WEIGHT PER 100 LB	1,500 LB
POSITIVE IMPULSE VOLTAGE	200 KV (MIN)
NEGATIVE IMPULSE VOLTAGE	265 KV (MIN)
60 Hz DRY FLASHOVER	125 KV (MIN)
60 Hz WET FLASHOVER	80 KV (MIN)
60 Hz PUNCTURE VOLTAGE	165 KV
MINIMUM DRY ARC DISTANCE	9½"
MINIMUM LEAKAGE DISTANCE	21"
MAXIMUM CANTILEVER LOAD	3,000 LB
MATERIAL	HIGH DENSITY PORCELAIN
GLAZING COLOR	#70 LIGHT GRAY (ANSI Z55.1)

Metro-North Commuter Railroad

DRAWING TITLE:

35KV PIN INSULATOR

METRO-NORTH NO. 10-620750

URS CORPORATION AES
500 ENTERPRISE DRIVE
ROCKY HILL, CT 06067
1-(860)-529-8882

ELECTRIFICATION STANDARDS

ENGINEER: SDB
DESIGNER: MS DRAFTER: HJ CHECKER: JCD
APPROVED: SDB
PART NO. 268

SPECIFICATIONS	
CLAMP BODY	BRONZE
ULTIMATE STRENGTH	25,000 LBS.
U-BOLT	BRONZE
NUT	BRONZE
LOCKWASHER	BRONZE
5/8"ø CLEVIS PIN	HIGH STRENGTH STEEL, HOT DIP GALVANIZED
COTTER KEY	STAINLESS STEEL
CLAMPING RANGE	1/2" ø TO 1"ø CONDUCTOR

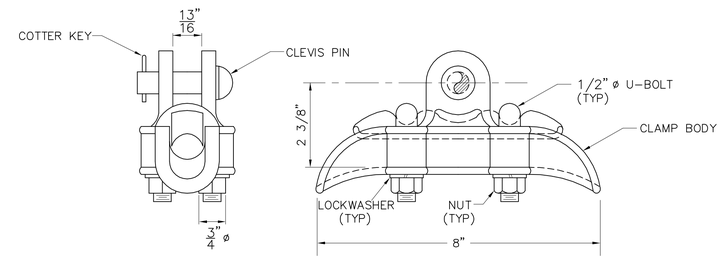

Metro-North Commuter Railroad

DRAWING TITLE:

SUSPENSION CLAMP

METRO-NORTH NO. 49-213345

URS CORPORATION AES
500 ENTERPRISE DRIVE
ROCKY HILL, CT 06067
1-(860)-529-8882

ELECTRIFICATION STANDARDS

ENGINEER SDB
DESIGNER MS DRAFTER HJ CHECKER JCD
APPROVED SDB
PART NO. 269

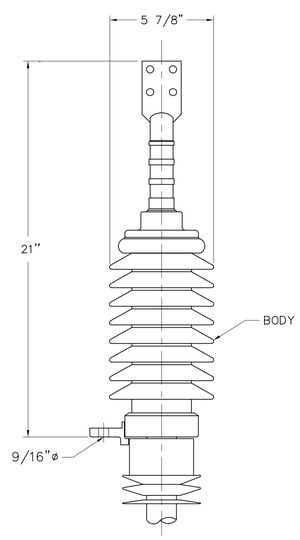

SPECIFICATIONS	
BODY	PORCELAIN INSULATOR
VOLTAGE RATING	35 KV
BIL RATING	200 KV
60HZ DRY FLASHOVER VOLTAGE	90 KV (MIN.)
60HZ WET FLASHOVER VOLTAGE	80 KV (MIN.)
MINIMUM LEAKAGE DISTANCE	27"
MINIMUM CORONA EXTINCTION VOLTAGE	30 KV (MIN.)
WEIGHT ESTIMATE	13 LBS

NOTE: THE CURRENT RATING SHALL MATCH 750 KCMIL, 35 KV 133% INSULATION CABLE.

Metro-North Commuter Railroad

DRAWING TITLE:

35KV PORCELAIN CABLE TERMINATOR

METRO-NORTH NO. XX-XXXXXX

URS CORPORATION AES
500 ENTERPRISE DRIVE
ROCKY HILL, CT 06067
1-(860)-529-8882

ELECTRIFICATION STANDARDS

ENGINEER: SDB
DESIGNER: MS DRAFTER: HJ CHECKER: JCD
APPROVED: SDB
PART NO. 266

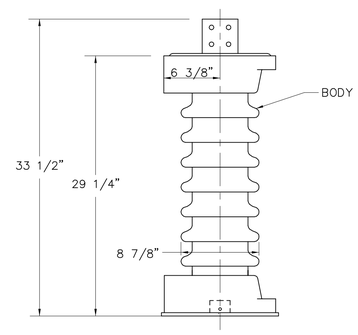

SPECIFICATIONS	
BODY	PORCELAIN
RATING	27 KV
DISCHARGE CURRENT	10 KA
BIL	200 KV CREST
60 HZ VOLTAGE WITHSTAND	95 KV RMS (1 MIN DRY)
60 HZ VOLTAGE WITHSTAND	80 KV RMS (10 SEC WET)
60 HZ SPARKOVER	40 KV (MIN)
MAX SWITCHING SURGE SPARKOVER	73 KV CREST
RMS SYMMETRICAL AMPERES	40,000 A
CANTILEVER STRENGTH	5800 FT-LBS

Metro-North Commuter Railroad

DRAWING TITLE:

27 KV SURGE ARRESTER

METRO-NORTH NO. XX-XXXXXX

URS CORPORATION AES
500 ENTERPRISE DRIVE
ROCKY HILL, CT 06067
1-(860)-529-8882

ELECTRIFICATION STANDARDS

ENGINEER: SDB
DESIGNER: MS DRAFTER: HJ CHECKER: JCD
APPROVED: SDB
PART NO. 267

PROJECT CONTROL DATE: 09/13/13 DISK FILENAME: SC-17.dwg 100% DESIGN

F H W A REGION	STATE	TOWN	FED. AID PROJ. NO.	PROJ. NO.	YEAR	SHEET NUMBER
1	CONN.	VARIOUS	CT-05-0109	301-0145	2013	

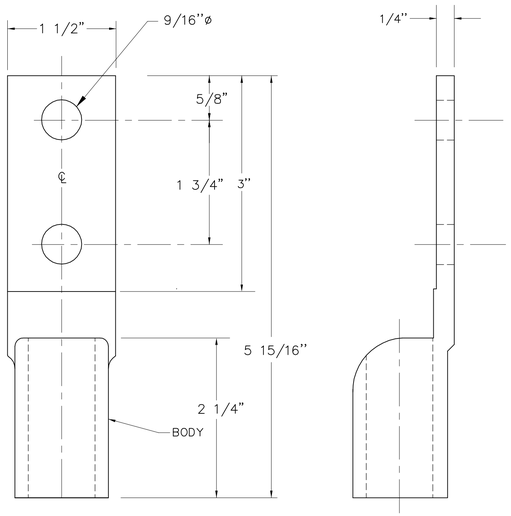

SPECIFICATIONS	
BODY	COPPER ALLOY – 113-D2
CONDUCTOR SIZE	500 KCMIL COPPER

Metro-North Commuter Railroad

DRAWING TITLE:

COMPRESSION TERMINAL

METRO-NORTH NO. XX-XXXXXX

URS CORPORATION AES
500 ENTERPRISE DRIVE
ROCKY HILL, CT 06067
1-(860)-529-8882

ELECTRIFICATION STANDARDS

ENGINEER: SDB
DESIGNER: MS DRAFTER: HJ CHECKER: JCD
APPROVED: SDB
PART NO. 320

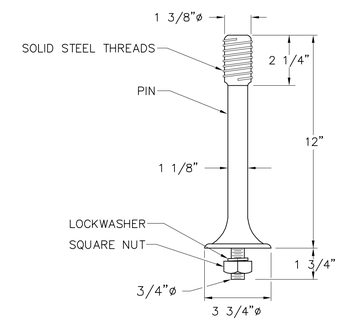

SPECIFICATIONS	
PIN	FORGED STEEL
LOCKWASHER	HIGH STRENGTH STEEL, HOT DIP GALVANIZED
SQUARE NUT	HIGH STRENGTH STEEL, HOT DIP GALVANIZED

NOTES:
1. EACH PIN SHALL BE FORGED FROM A SINGLE PIECE OF STEEL.
2. THE PIN SHALL BE HOT DIPPED GALVANIZED.
3. THE PITCH OF THE SOLID THREADS WILL MATCH INSULATOR REQUIREMENTS.

Metro-North Commuter Railroad

DRAWING TITLE:

FORGED STEEL PIN FOR 35 KV PIN INSULATOR

METRO-NORTH NO. 49-493645

URS CORPORATION AES
500 ENTERPRISE DRIVE
ROCKY HILL, CT 06067
1-(860)-529-8882

ELECTRIFICATION STANDARDS

ENGINEER SDB
DESIGNER MS DRAFTER HJ CHECKER JCD
APPROVED SDB
PART NO. 323

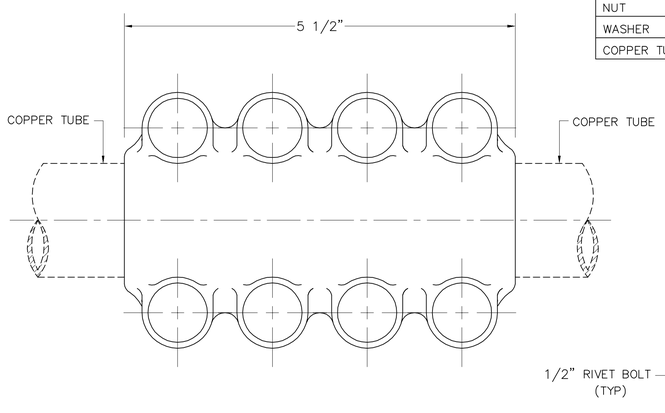

SPECIFICATIONS	
BODY	HIGH STRENGTH BRONZE
TENSILE STRENGTH	35,000 LBS
RIVET BOLT (1/2"ø)	SILICON BRONZE
NUT	SILICON BRONZE
WASHER	SILICON BRONZE
COPPER TUBE	1 1/4" I.D.

Metro-North Commuter Railroad

DRAWING TITLE:

STRAIGHT COUPLER FOR TUBE TO TUBE

METRO-NORTH NO. NON-STOCK

URS CORPORATION AES
500 ENTERPRISE DRIVE
ROCKY HILL, CT 06067
1-(860)-529-8882

ELECTRIFICATION STANDARDS

ENGINEER: SDB
DESIGNER: MS DRAFTER: HJ CHECKER: JCD
APPROVED: SDB
PART NO. 296

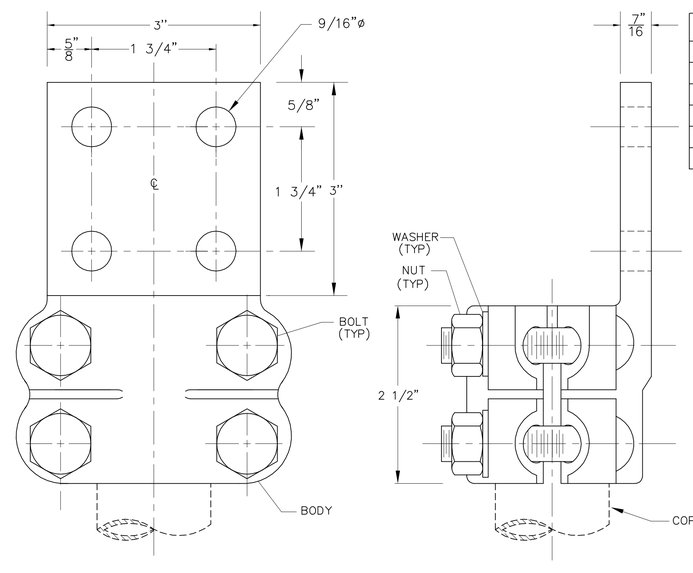

SPECIFICATIONS	
BODY	HIGH STRENGTH BRONZE
TENSILE STRENGTH	35,000 LBS
BOLT	SILICON BRONZE
NUT	SILICON BRONZE
WASHER	SILICON BRONZE
COPPER TUBE	1 1/4" I.D.

Metro-North Commuter Railroad

DRAWING TITLE:

TERMINAL LUG TUBE TO 4-HOLE NEMA PAD

METRO-NORTH NO. NON-STOCK

URS CORPORATION AES
500 ENTERPRISE DRIVE
ROCKY HILL, CT 06067
1-(860)-529-8882

ELECTRIFICATION STANDARDS

ENGINEER: SDB
DESIGNER: MS DRAFTER: HJ CHECKER: JCD
APPROVED: SDB
PART NO. 297

PROJECT CONTROL DATE: 09/13/13 DISK FILENAME: SC-18.dwg 100% DESIGN

F H W A REGION	STATE	TOWN	FED. AID PROJ. NO.	PROJ. NO.	YEAR	SHEET NUMBER
1	CONN.	VARIOUS	CT-05-0109	301-0145	2013	

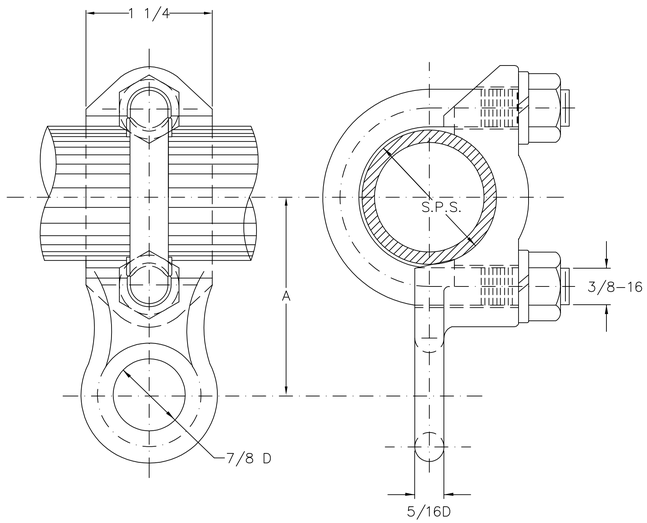

DIM. IN INCHES		
S.P.S.	D.D.	A
1	1.315	2 3/16
1 1/4	1.660	2 3/8
1 1/2	1.900	2 1/2
2	2.375	2 3/4
2 1/2	2.875	3

MATERIAL
ALUMINUM BRONZE
ASTM B30, ALLOY 954
CU86; FE4; ALID
T.S. (MIN.) 75,000 PSI
Y.S. (MIN.) 30,000 PSI

U-BOLT, NUTS AND
L.WASHERS-SILICON
BRONZE

Metro-North Commuter Railroad

DRAWING TITLE:

PIPE EYE CLAMP

METRO-NORTH NO. 10202451

URS CORPORATION AES
500 ENTERPRISE DRIVE
ROCKY HILL, CT 06067
1-(860)-529-8882

STANDARD COMPONENTS

ENGINEER: –
DESIGNER: – DRAFTER: AB CHECKER: VY
APPROVED: URE
PART NO. 353

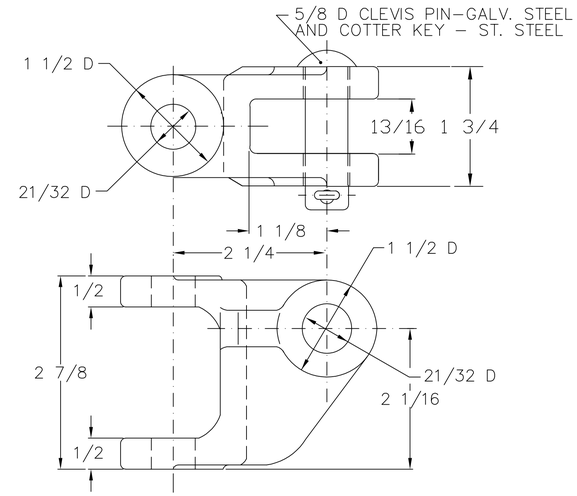

MATERIAL
ALUMINUM BRONZE
ASTM B30, ALLOY 955
CU 81; FE4; N14; ALII
T.S. (MIN) 90,000 PSI
Y.S. (MIN) 40,000 PSI

Metro-North Commuter Railroad

DRAWING TITLE:

HINGE

METRO-NORTH NO. XXXXXXXXXXXXX

URS CORPORATION AES
500 ENTERPRISE DRIVE
ROCKY HILL, CT 06067
1-(860)-529-8882

STANDARD COMPONENTS

ENGINEER: –
DESIGNER: – DRAFTER: AB CHECKER: VY
APPROVED: URE
PART NO. 356

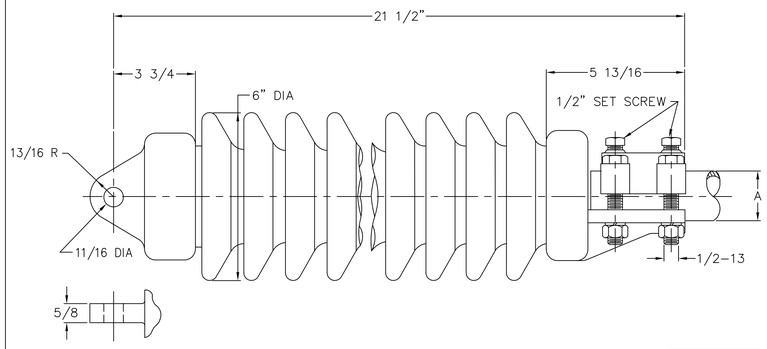

MATERIAL

BODY-
VITRIFIED PORCELAIN
GLAZED: LIGHT GREY

END FITTINGS-
ALUMINUM BRONZE
ALLOY 955

MECHANICAL VALUES-
TENSION - 25,000 LBS
COMPRESSION - 13,000 LBS
BENDING MOMENT - 23,000 IN-LBS
ACTING SIMULTANEOUSLY

ELECTRICAL VALUES-
RATING: 23 KV
TEST VOLTAGE (RMS TO GROUND):
13.3 KV
CREEPAGE DISTANCE 27" (MIN)
DRY FLASHOVER 155 KV (MIN)
WET FLASHOVER 90 KV (MIN)
BIL 235 KV (MIN)

PIPE SIZE-A
1 1/2 SPS
2" SPS
2 1/2 SPS

Metro-North Commuter Railroad

DRAWING TITLE:

STRUT INSULATOR

METRO-NORTH NO. XXXXXXXXXXXXX

URS CORPORATION AES
500 ENTERPRISE DRIVE
ROCKY HILL, CT 06067
1-(860)-529-8882

STANDARD COMPONENTS

ENGINEER: –
DESIGNER: – DRAFTER: AB CHECKER: VY
APPROVED: URE
PART NO. 360

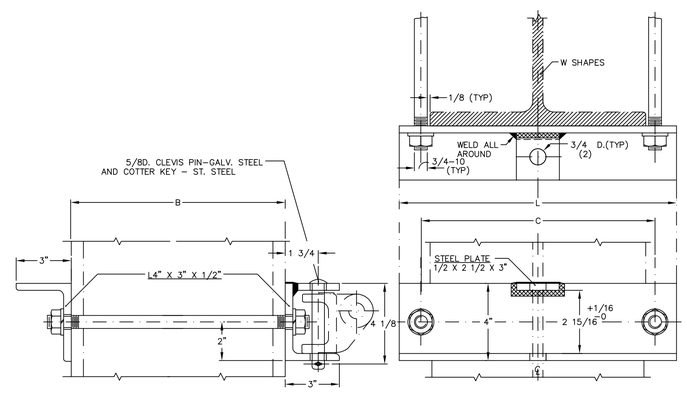

W SHAPES DESIGNATION	DIMENSIONS IN INCHES		
	B	C	L
W 10 X 33	9.75	10 3/4	13 3/4
W 10 X 39	9.94	10 15/16	13 15/16
W 10 X 49	10.00	11"	14"
W 10 X 60	10.25	11 1/4	14 1/4
W 10 X 100	11.12	12 1/8	15 1/8
W 12 X 58	12.25	11 1/8	13 1/8
W 14 X 90	14.02	15 5/8	17 5/8
W 14 X 145	14.78	16 9/16	19 9/16
HP 10 X 42	9.72	11 1/8	13 1/8

MATERIAL - ANGLES - STRUCTURAL STEEL ASTM A36
(GALVANIZED TO ASTM A123)

HARDWARE - CARBON STEEL 1018 ASTM A108
(GALVANIZED TO ASTM A153)

Metro-North Commuter Railroad

DRAWING TITLE:

HINGE MOUNT

METRO-NORTH NO. XXXXXXXXXXXXX

URS CORPORATION AES
500 ENTERPRISE DRIVE
ROCKY HILL, CT 06067
1-(860)-529-8882

STANDARD COMPONENTS

ENGINEER: –
DESIGNER: – DRAFTER: AB CHECKER:
APPROVED: URE
PART NO. 357

PROJECT CONTROL DATE: 09/13/13 DISK FILENAME: SC-19.dwg 100% DESIGN

F H W A REGION	STATE	TOWN	FED. AID PROJ. NO.	PROJ. NO.	YEAR	SHEET NUMBER
1	CONN.	VARIOUS	CT-05-0109	301-0145	2013	

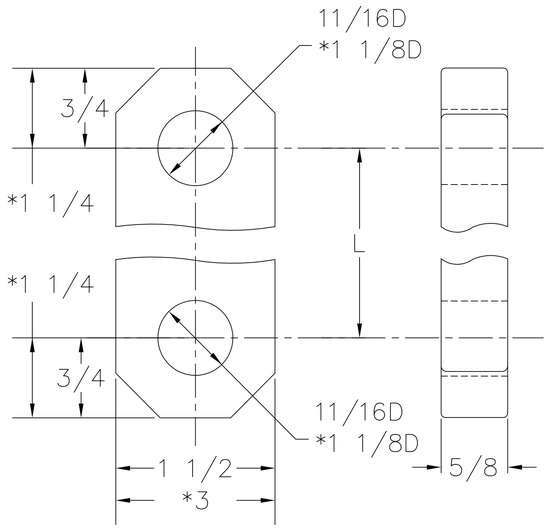

MATERIAL
COLD ROLLED STEEL 1018

FINISH
GALVANIZED TO ASTM 153

NOTE: DIMENSION "L" TO FIT FIELD REQUIREMENT("L"=19")
* WHEN "L"=26"

Metro-North Commuter Railroad

DRAWING TITLE:
LINK TONGUE / TONGUE

METRO-NORTH NO. XXXXXXXXXXXXX

STANDARD COMPONENTS

URS CORPORATION AES
500 ENTERPRISE DRIVE
ROCKY HILL, CT 06067
1-(860)-529-8882

ENGINEER: –
DESIGNER: – DRAFTER: AB CHECKER: VY
APPROVED: URE
PART NO. 364

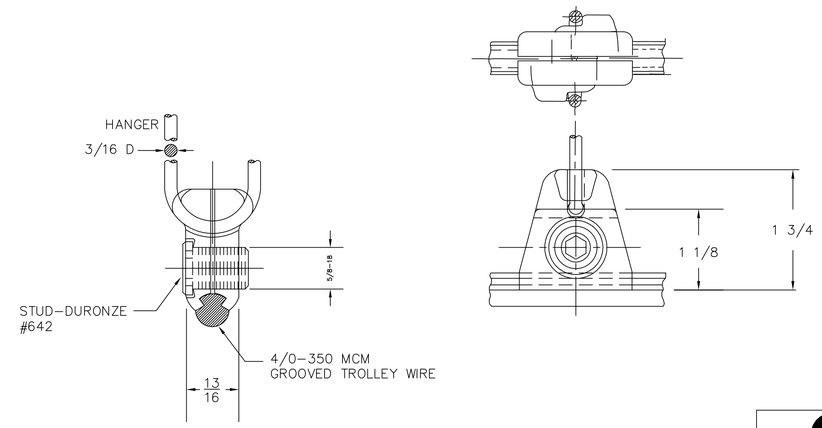

MATERIAL
ALUMINUM BRONZE, ALLOY 954
(MIN YIELD STRENGTH-30,000 PSI)

Metro-North Commuter Railroad

DRAWING TITLE:
TROLLEY WIRE CLAMP
BOLTED

METRO-NORTH NO. 10208500

ELECTRIFICATION STANDARDS

URS CORPORATION AES
500 ENTERPRISE DRIVE
ROCKY HILL, CT 06067
1-(860)-529-8882

ENGINEER: –
DESIGNER: – DRAFTER: VY CHECKER: VY
APPROVED: URE
PART NO. 365

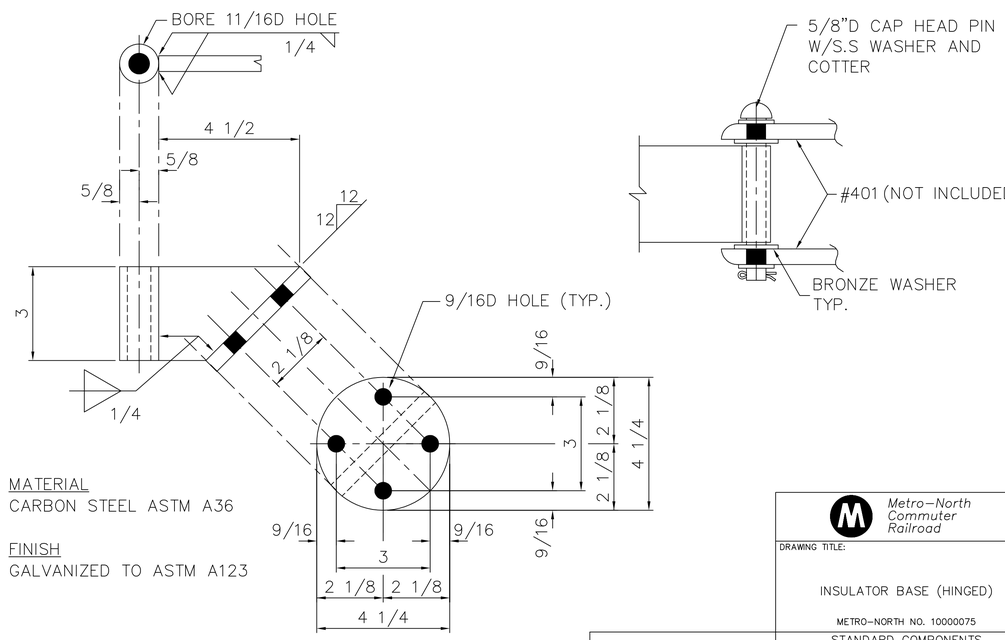

MATERIAL
CARBON STEEL ASTM A36

FINISH
GALVANIZED TO ASTM A123

Metro-North Commuter Railroad

DRAWING TITLE:
INSULATOR BASE (HINGED)

METRO-NORTH NO. 10000075

STANDARD COMPONENTS

URS CORPORATION AES
500 ENTERPRISE DRIVE
ROCKY HILL, CT 06067
1-(860)-529-8882

ENGINEER: –
DESIGNER: – DRAFTER: VY CHECKER: VY
APPROVED: URE
PART NO. 112

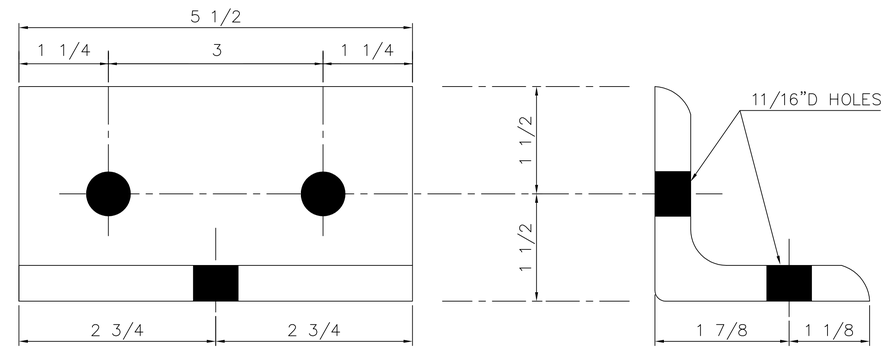

A L3 x 3 x 1/2 x 0'-5 1/2"

MATERIAL
CARBON STEEL ASTM A36

FINISH
GALVANIZED TO ASTM A123

Metro-North Commuter Railroad

DRAWING TITLE:
INSULATOR BASE SUPPORT (HINGED)

METRO-NORTH NO. 10854750

STANDARD COMPONENTS

URS CORPORATION AES
500 ENTERPRISE DRIVE
ROCKY HILL, CT 06067
1-(860)-529-8882

ENGINEER: –
DESIGNER: – DRAFTER: VY CHECKER: VY
APPROVED: URE
PART NO. 401

PROJECT CONTROL DATE: 09/13/13 DISK FILENAME: SC-20.dwg 100% DESIGN

F.H.W.A. REGION	STATE	TOWN	FED. AID PROJ. NO.	PROJ. NO.	YEAR	SHEET NUMBER
1	CONN.	VARIOUS	CT-05-0109	301-0145	2013	

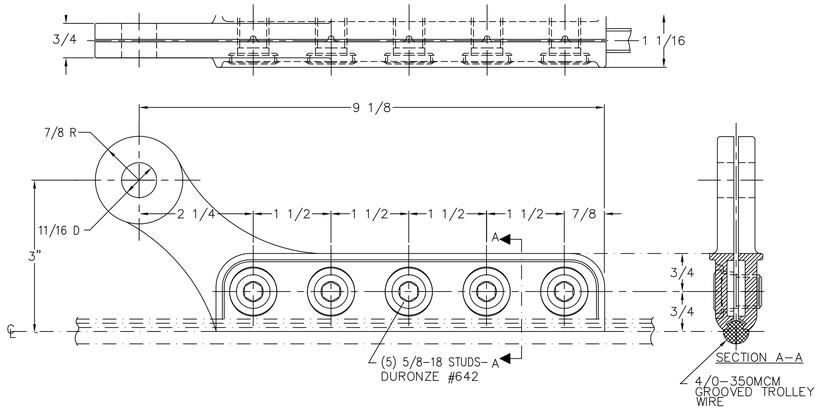

MATERIAL
ALUMINUM BRONZE
ALLOY 954

Metro-North Commuter Railroad

DRAWING TITLE:

AUXILIARY TROLLEY WIRE CLAMP

METRO-NORTH NO. 10434406

STANDARD COMPONENTS

URS CORPORATION AES
500 ENTERPRISE DRIVE
ROCKY HILL, CT 06067
1-(860)-529-8882

ENGINEER: –
DESIGNER: – DRAFTER: VY CHECKER: VY
APPROVED: URE
PART NO. 523

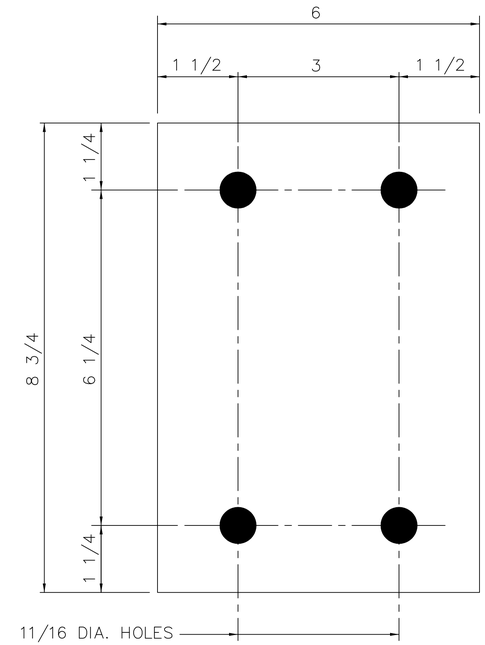

PL 1/2 x 6 x 8 3/4

MATERIAL
CARBON STEEL ASTM A108

FINISH
GALVANIZED TO ASTM A123

Metro-North Commuter Railroad

DRAWING TITLE:

HINGED INSULATOR
BRACKET BACK PLATE

METRO-NORTH NO. 10730187

STANDARD COMPONENTS

URS CORPORATION AES
500 ENTERPRISE DRIVE
ROCKY HILL, CT 06067
1-(860)-529-8882

ENGINEER: –
DESIGNER: – DRAFTER: AB CHECKER: VY
APPROVED: URE
PART NO. 400

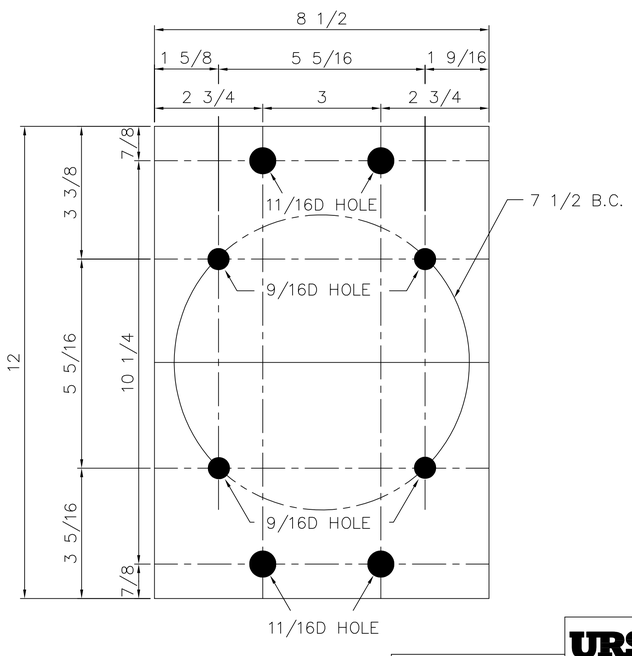

PL 1/2 x 8 1/2 x 12

MATERIAL
CARBON STEEL ASTM A108

FINISH
GALVANIZED TO ASTM A123

Metro-North Commuter Railroad

DRAWING TITLE:

FRONT PLATE MESSENGER
INSULATOR SUPPORT

METRO-NORTH NO. 10730187

STANDARD COMPONENTS

URS CORPORATION AES
500 ENTERPRISE DRIVE
ROCKY HILL, CT 06067
1-(860)-529-8882

ENGINEER: –
DESIGNER: – DRAFTER: AB CHECKER: VY
APPROVED: URE
PART NO. 441

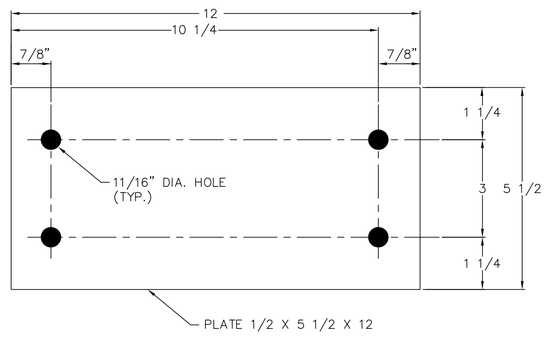

MATERIAL
CARBON STEEL ASTM A108

FINISH
GALVANIZED TO ASTM A123

Metro-North Commuter Railroad

DRAWING TITLE:

MESSENGER SUPPORT BRACKET

METRO-NORTH NO. 10730168

STANDARD COMPONENTS

URS CORPORATION AES
500 ENTERPRISE DRIVE
ROCKY HILL, CT 06067
1-(860)-529-8882

ENGINEER: –
DESIGNER: – DRAFTER: AB CHECKER: VY
APPROVED: URE
PART NO. 442

PROJECT CONTROL DATE: 09/13/13 DISK FILENAME: SC-21.dwg 100% DESIGN

F.H.W.A. REGION	STATE	TOWN	FED. AID PROJ. NO.	PROJ. NO.	YEAR	SHEET NUMBER
1	CONN.	VARIOUS	CT-05-0109	301-0145	2013	

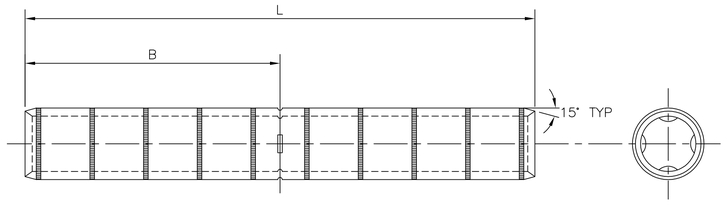

MATERIAL
PURE COPPER TUBING
ELECTRICAL CONDUCTIVITY – 98% I.A.C.S.

BARREL LINED WITH BERYLUUM
COPPER PARTICLES

CONDUCTOR		DIM. IN INCHES		DIE INDEX
SIZE	STR.	B	L	
4/0 STR.	7, 12, 19	3 9/16"	7 1/8"	168

Metro-North Commuter Railroad

DRAWING TITLE:

GROUND WIRE SPLICE

METRO-NORTH NO. 02-350905

ELECTRIFICATION STANDARDS

URS CORPORATION AES
500 ENTERPRISE DRIVE
ROCKY HILL, CT 06067
1-(860)-529-8882

ENGINEER: –
DESIGNER: – DRAFTER: EB CHECKER: YMC
APPROVED: URE
PART NO. 340

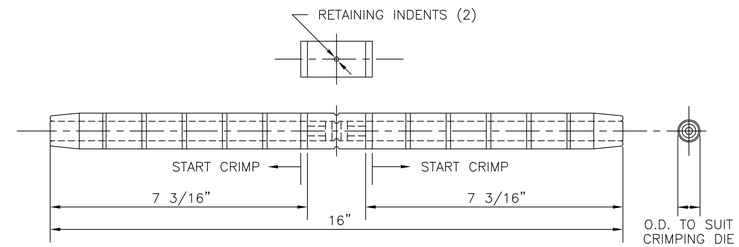

CABLE SIZE
COPPERWELD – COPPER WIRE – .613D
4/0 TYPE "E"
(7CW. STR – .1225D.
12CU. STR – .1225D.)
BR'K STR'G 20,730 LBS
OR
COPPERWELD WIRE – 613D.
5/8 (7CW STR. No.4 – .2043D.)
BR'K STR'G 22,300 LBS.

HIGH TENSION SPLICE WILL WITHSTAND WITHOUT DEFORMATION OR SLIPPAGE OF WIRE 20,000 LBS. PULLING FORCE (95% OF BR'K STRENGTH OF 4/0 TYPE TYPE "E" WIRE)

MATERIAL
DRAWN COPPER TUBE

Metro-North Commuter Railroad

DRAWING TITLE:

MESSENGER WIRE SPLICE

METRO-NORTH NO. 10-851619

ELECTRIFICATION STANDARDS

URS CORPORATION AES
500 ENTERPRISE DRIVE
ROCKY HILL, CT 06067
1-(860)-529-8882

ENGINEER: –
DESIGNER: – DRAFTER: EB CHECKER: YMC
APPROVED: URE
PART NO. 443

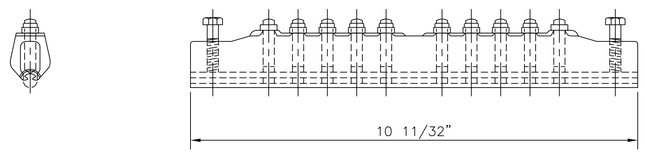

FITS 336.4 MCM AND 350 MCM TROLLEY WIRE

APPLICATION DATA
1. RATED STRENGTH – BREAKS WIRE

Metro-North Commuter Railroad

DRAWING TITLE:

TROLLEY WIRE SPLICE

METRO-NORTH NO. 10-851626

ELECTRIFICATION STANDARDS

URS CORPORATION AES
500 ENTERPRISE DRIVE
ROCKY HILL, CT 06067
1-(860)-529-8882

ENGINEER: –
DESIGNER: – DRAFTER: EB CHECKER: YMC
APPROVED: URE
PART NO. 444

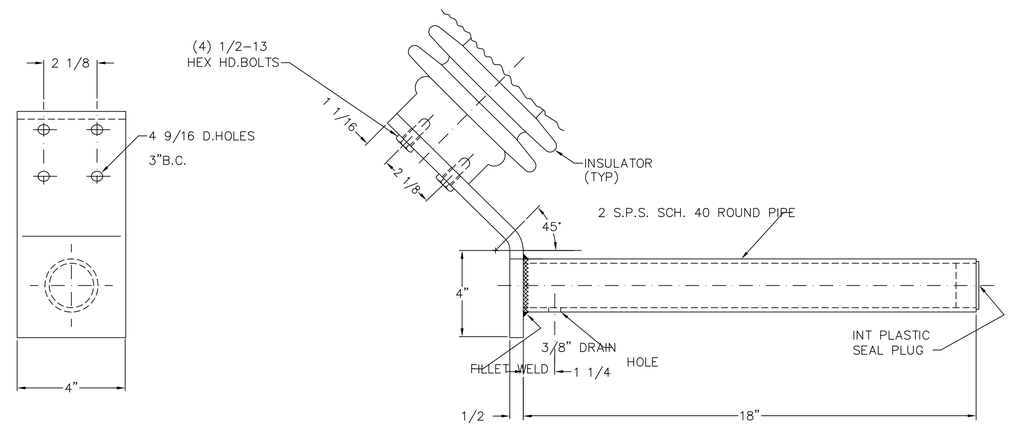

MATERIAL
CARBON STEEL ASTM A36

FINISH
GALVANIZED TO ASTM A123

Metro-North Commuter Railroad

DRAWING TITLE:

REGISTATION TUBE 18" WITH PIPE CAP

METRO-NORTH NO. 1000085

STANDARD COMPONENTS

URS CORPORATION AES
500 ENTERPRISE DRIVE
ROCKY HILL, CT 06067
1-(860)-529-8882

ENGINEER: –
DESIGNER: – DRAFTER: AB CHECKER: VY
APPROVED: URE
PART NO. 573

PROJECT CONTROL DATE: 09/13/13 DISK FILENAME: SC-22.dwg 100% DESIGN