CONNECTICUT DEPARTMENT OF TRANSPORTATION

Plans For

INSTALLATION OF CANOPY

Town(s)/City of

METRO-NORTH RAILROAD STATION IN BRIDGEPORT

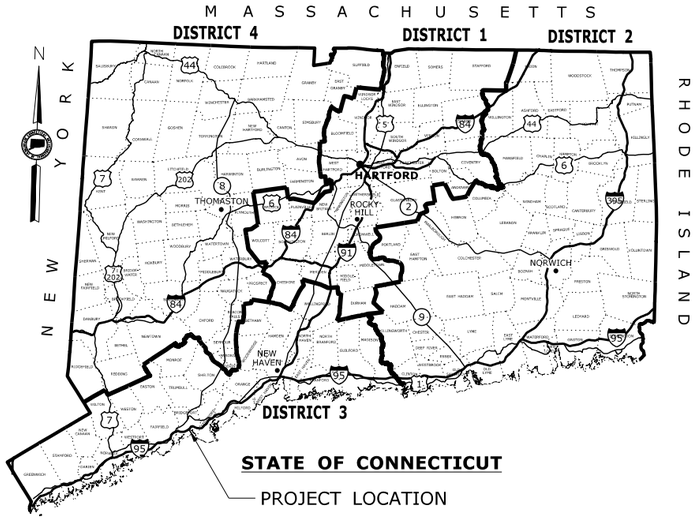

F.A.P. #	MAINTENANCE RESPONSIBILITY	PROJECT #
N.A.	STATE	301-155

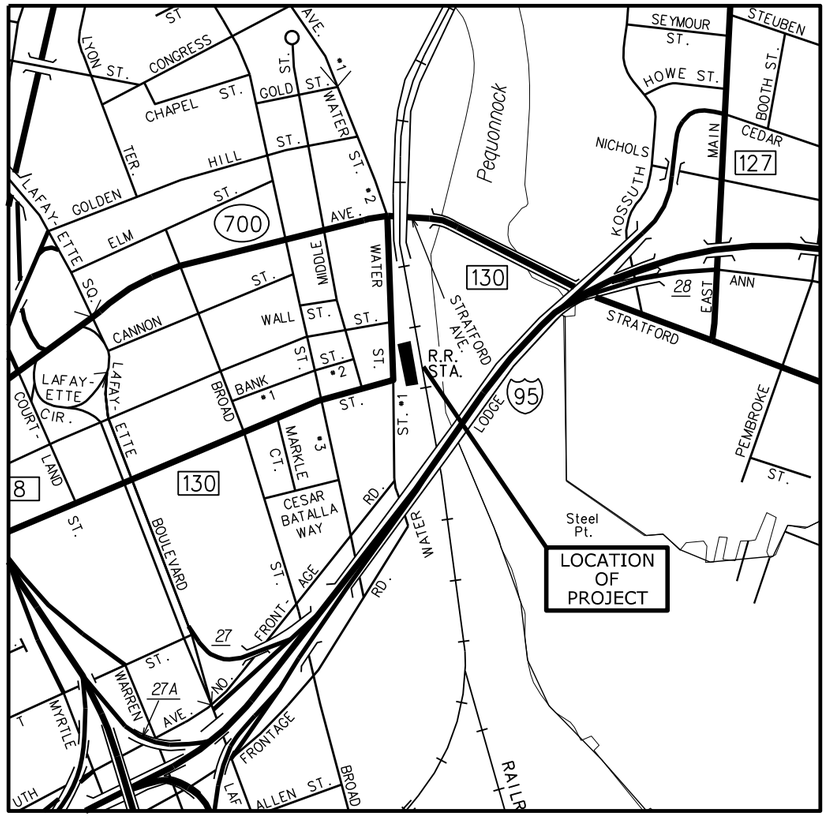

LOCATION PLAN

NOT TO SCALE

GENERAL NOTES:

1. CONSTRUCTION SPECIFICATIONS:
   Connecticut Department of Transportation, Standard Specifications for Roads, Bridges and Incidental Construction, Form 816, dated 2004; Supplemental Specifications, dated July 2014; and Special Provisions
2. 400 FOOT GRID BASED ON CONNECTICUT COORDINATE SYSTEM SYSTEM N.A.D. 1927
3. VERTICAL DATUM BASED ON NGVD OF 1929

DISCLAIMER

IT IS THE RESPONSIBILITY OF EACH BIDDER AND ALL OTHER INTERESTED PARTIES TO OBTAIN ALL BIDDING RELATED INFORMATION AND DOCUMENTS FROM OFFICAL SOURCES WITHIN THE DEPARTMENT.

PERSONS AND/OR ENTITIES WHICH REPRODUCE AND/OR MAKE SUCH INFORMATION AVAILABLE BY ANY MEANS ARE NOT AUTHORIZED BY THE DEPARTMENT TO DO SO AND MAY BE LIABLE FOR CLAIMS RESULTING FROM THE DISSEMINATION OF UNOFFICAL, INCOMPLETE AND/OR INACCURATE INFORMATION.

LIST OF SUBSETS

SUBSET NO.	SUBSET TITLE	*SUBSET SHEET COUNT
01	GENERAL	2
02	REVISIONS	2
03	CIVIL	7
04	STRUCTURES	60
05	ARCHITECTURAL	46
06	ELECTRICAL	30
07	ENVIROMENTAL	-
08	CTDOT_Highway_STD	-
09	CTDOT_Traffic_STD	-

*THE INITIAL SUBSET SHEET COUNT DOES NOT INCLUDE ADDENDUMS AND CHANGE ORDERS

LIST OF DRAWINGS
SUBSET 01 - GENERAL

DRAWING TITLE	DRAWING NO.
TITLE SHEET	G-1
DETAILED ESTIMATE SHEET	DES-1

STANDARD CONVENTIONS

North Arrow W/No. Coor.
Grid Arrow
Chain Link Fence
Riprap
Edge Of Road
Limit Of Marsh
Rustic Fence
Hedge Row
Concrete Pavement
Stone Wall
Pipe Fence
Tree Line
Dirt Road
Ledge Outcrop
Board Fence
Shrub
B.C.L.C.
Inland Wetland Limits
Water Edge
Evergreen Tree
Granite Curb
Deciduous Tree
Gulde Rail
STATE LINE
Stream
Retaining Wall
Concrete Median Barrier
Power Line
Ditch
Highway Line
Bit. Walk
Swamp
TOWN LINE
Street Line
Conc. Sidewalk
Building
Property Line
Railroad Tracks
Transmission Tower
Lot Line
Easement Line

THE DESIGN APPEARS TO CONFORM TO APPLICABLE CRITERIA. APPROVAL IS NOT TO BE CONSTRUED TO MEAN THAT ALL ASPECTS OF THE DESIGN HAVE BEEN PERSONALLY CHECKED BY THE UNDERSIGNED.

SUBMITTED BY: TRANSPORTATION PRINCIPAL ENGINEER - JAYANTHA MATHER

APPROVAL RECOMMENDED BY: MANAGER OF - EUGENE J. COLONESE

APPROVED BY: TRANSPORTATION ENGINEERING ADMINISTRATOR - JAMES H. NORMAN P.E.

Plans For
INSTALLATION OF CANOPY

Town(s)/City
METRO-NORTH RAILROAD STATION IN BRIDGEPORT

STATE PROJECT NO.
301-155

DRAWING NO.
G-1

SHEET NO.
01.01

ITEM NUMBER	0020801A	0020903A	0063680A	0063521A	0063522A	0063999A	0090025A	0090044A	0090075A		1004126A	1006004A	1010004A	1011174A	1011178A	1011240A	1011443A		2010014	2023154A	2023184A	2030004A	2103064A		5209074A		6019634A	6019644A	6010004	6012014	6013074A	6020064	6029114A	6029364A	6033264A		7029864A		9808644A	9709074A	9710014A	9712004A	9750044A	9770014	9780024	9792034A	9801014A	
ITEM	ASBESTOS ABATEMENT	LEAD COMPLIANCE FOR MISCELLANEOUS EXTERIOR TASKS	TACTILE WEARING STRIP	RAIL FACILITY UPGRADE SITE NO. 1	RAIL FACILITY UPGRADE SITE NO. 2	ARCHITECTURAL SALVAGE	DEMOLITION	REPAIR FOUNDATION WITH REINFORCED CONCRETE	GUY ASSEMBLIES		WATER TRANSPORTATION FOR RESCUE OPERATIONS	CONSTRUCTION ACCESS	ENVIRONMENTAL HEALTH AND SAFETY	CONTROLLED MATERIALS HANDLING	SECURING, CONSTRUCTION AND DISMANTLING A WASTE STOCKPILE AND TREATMENT AREA	DISPOSAL OF CONTAMINATED TIMBER PILES	HANDLING AND DISPOSAL OF REGULATED ITEMS		CLEARING AND GRUBBING	DISPOSAL OF CONTROLLED MATERIALS	MANAGEMENT OF REUSABLE CONTROLLED MATERIAL	STRUCTURE EXCAVATION - EARTH (COMPLETE)	TURBIDITY CONTROL CURTAINS		REPLACE JOINT SEAL		REPAIR CONCRETE PLATFORM	REPLACE CONCOURSE CANTILEVER SLAB	CLASS "A" CONCRETE	CLASS "F" CONCRETE	LATEX MODIFIED TOPPING	DEFORMED STEEL BARS - EPOXY COATED	DRILLING HOLES AND GROUTING ANCHOR BOLTS	DRILLING AND GROUTING REINFORCING BARS	BRIDGE PLATE STORAGE RACK		REMOVAL OF EXISTING TIMBER PILES		CONSTRUCTION FIELD OFFICE, LARGE	TRAFFICPERSON (UNIFORM FLAGGER)	MAINTENANCE AND PROTECTION OF TRAFFIC	MAINTENANCE PEDESTRIAN ACCESS	MOBILIZATION AND PROJECT CLOSEOUT	TRAFFIC CONE	TRAFFIC DRUM	CONSTRUCTION BARRICADES TYPE III	CONSTRUCTION STAKING	
UNIT	LS	LS	LF	LS	LS	LS	LS	EA	EA		DAYS	LS	LS	CY	LS	TON	LS		LS	TON	CY	CY	LF		LF		EA	LS	CY	CY	SY	LB	EA	LF	LS		EA		MO	HR	LS	LS	LS	EA	EA	EA	LS	
BRIDGEPORT	LS	LS	1363	LS	LS	LS	LS	5	1		130	LS	LS	-	LS	-	LS		LS	-	-	40	300		352		43	LS	10	10	1556	500	100	390	LS		60		24	588	LS	LS	LS	10	10	9	LS	
SUBTOTAL																																															
UNASSIGNED																																															
TOTAL	LS	LS	1363	LS	LS	LS	LS	5	1		130	LS	LS	-	LS	-	-		LS	-	-	40	300		352		43	LS	10	10	1556	500	100	390	LS		60		24	588	LS	LS	LS	10	10	9	LS	

ITEM NUMBER	1220011A
ITEM	CONSTRUCTION SIGNS - TYPE III REFLECTIVE SHEETING
UNIT	SF
	340
SUBTOTAL	
UNASSIGNED	
TOTAL	340

P = FEDERAL AID PARTICIPATING
NP= FEDERAL AID NON PARTICIPATING
=FOR INTERNAL USE ONLY
NOT A LEGAL DEFINITION

REV.	DATE	REVISION DESCRIPTION	SHEET NO.

THE INFORMATION, INCLUDING ESTIMATED QUANTITIES OF WORK, SHOWN ON THESE SHEETS IS BASED ON LIMITED INVESTIGATIONS BY THE STATE AND IS IN NO WAY WARRANTED TO INDICATE THE CONDITIONS OF ACTUAL QUANTITIES OF WORK WHICH WILL BE REQUIRED.

PLOTTED: 4/1/2014

DESIGNER/DRAFTER: J. MENDEZ
CHECKED BY: D. GRIFFIN
SCALE AS NOTED

STATE OF CONNECTICUT
DEPARTMENT OF TRANSPORTATION

FILENAME: ...\301155_01_02_DES.dgn

LOCHNER
H.W. LOCHNER, INC
2110 Silas Deane Highway
Rocky Hill, CT 06067

APPROVED BY: DATE:

PROJECT TITLE:
INSTALLATION OF CANOPY AT BRIDGEPORT STATION

TOWN: **BRIDGEPORT**

DRAWING TITLE: **DETAILED ESTIMATE SHEET**

PROJECT NO. **301-155**
DRAWING NO. **DES-1**
SHEET NO. **01.02**

02- REVISIONS

INDEX OF DRAWINGS

DRAWING NUMBER	DRAWING TITLE	DRAWING NUMBER	DRAWING TITLE
REV - 1	INDEX OF DRAWINGS		
REV - 2	REVISION SHEET		

DESIGNED BY:
CONSULTANT COMPANY NAME

REV.	DATE	REVISION DESCRIPTION	SHEET NO.
-	-	-	-
-	-	-	-
-	-	-	-
-	-	-	-
-	-	-	-
-	-	-	-

THE INFORMATION, INCLUDING ESTIMATED QUANTITIES OF WORK, SHOWN ON THESE SHEETS IS BASED ON LIMITED INVESTIGATIONS BY THE STATE AND IS IN NO WAY WARRANTED TO INDICATE THE CONDITIONS OF ACTUAL QUANTITIES OF WORK WHICH WILL BE REQUIRED.

PLOTTED: 3/31/2014

DESIGNER/DRAFTER: B. HAMAN

CHECKED BY: D. GRIFFIN

SCALE AS NOTED

STATE OF CONNECTICUT
DEPARTMENT OF TRANSPORTATION

FILENAME: ...\301155_02_01_title_sheet.dgn

LOCHNER
H.W. LOCHNER, INC
2110 Silas Deane Highway
Rocky Hill, CT 06067

APPROVED BY: DATE:

PROJECT TITLE:
INSTALLATION OF CANOPY
AT
BRIDGEPORT STATION

TOWN: BRIDGEPORT

DRAWING TITLE: INDEX OF DRAWINGS

PROJECT NO. 301-155

DRAWING NO. REV-1

SHEET NO. 02.01

REV. No.	SHEET No.	DATE mm/dd/yy	NEW	REV.	DEL.	DESCRIPTION	BY

REV. No.	SHEET No.	DATE mm/dd/yy	NEW	REV.	DEL.	DESCRIPTION	BY

REV. No.	SHEET No.	DATE mm/dd/yy	NEW	REV.	DEL.	DESCRIPTION	BY

REV.	DATE	REVISION DESCRIPTION	SHEET NO.

THE INFORMATION, INCLUDING ESTIMATED QUANTITIES OF WORK, SHOWN ON THESE SHEETS IS BASED ON LIMITED INVESTIGATIONS BY THE STATE AND IS IN NO WAY WARRANTED TO INDICATE THE CONDITIONS OF ACTUAL QUANTITIES OF WORK WHICH WILL BE REQUIRED.

Plotted Date: 10/7/2011

DESIGNER/DRAFTER: A.MOROTN

CHECKED BY: B.BYRNE

STATE OF CONNECTICUT
DEPARTMENT OF TRANSPORTATION

Filename: ...\New..Revision..Sheet.dgn

SIGNATURE BLOCK:

PROJECT TITLE:

INSTALLATION OF CANOPY AT BRIDGEPORT STATION

TOWN: **BRIDGEPORT**

DRAWING TITLE: **REVISION SHEET**

PROJECT NO. **301-155**

DRAWING NO. **REV-1**

SHEET NO. **02.02**

03 - CIVIL
INDEX OF DRAWINGS

DRAWING NUMBER	DRAWING TITLE	DRAWING NUMBER	DRAWING TITLE
CIVIL - 1	INDEX OF DRAWINGS		
CIVIL - 2	ABBREVIATIONS		
CIVIL - 3	SITE PLAN I		
CIVIL - 4	SITE PLAN II		
CIVIL - 5	PEDESTRIAN STAGING STAGE 1		
CIVIL - 6	PEDESTRIAN STAGING STAGE 2		
CIVIL - 7	PEDESTRIAN STAGING STAGE 3		

DESIGNED BY:
CONSULTANT COMPANY NAME

REV.	DATE	REVISION DESCRIPTION	SHEET NO.
-	-	-	-
-	-	-	-
-	-	-	-
-	-	-	-
-	-	-	-
-	-	-	-

THE INFORMATION, INCLUDING ESTIMATED QUANTITIES OF WORK, SHOWN ON THESE SHEETS IS BASED ON LIMITED INVESTIGATIONS BY THE STATE AND IS IN NO WAY WARRANTED TO INDICATE THE CONDITIONS OF ACTUAL QUANTITIES OF WORK WHICH WILL BE REQUIRED.

PLOTTED: 3/26/2014

DESIGNER/DRAFTER: C. VERGE
CHECKED BY: R. TALBOT
SCALE AS NOTED

STATE OF CONNECTICUT
DEPARTMENT OF TRANSPORTATION

FILENAME: ...\301155_03_01_TITLE_SHEET.dgn

LOCHNER
H.W. LOCHNER, INC
2110 Silas Deane Highway
Rocky Hill, CT 06067

APPROVED BY: DATE:

PROJECT TITLE:
INSTALLATION OF CANOPY AT BRIDGEPORT STATION

TOWN: **BRIDGEPORT**

DRAWING TITLE: **INDEX OF DRAWINGS**

PROJECT NO. **301-155**
DRAWING NO. **CIVIL-1**
SHEET NO. **03.01**

LIST OF ABBREVIATIONS

ABAN.	ABANDON
ABUT	ABUTMENT
ACC.	ACCESS
ACCMP	ASPHALT COATED CORRUGATED METAL PIPE
ADD'L	ADDITIONAL
ADT	AVERAGE DAILY TRAFFIC
AH	AHEAD
AHRP	ALUMINUM HELICAL RIBBED PIPE
A/C	AIR CONDITIONER
ALT	ALTERNATIVE
ANCH.	ANCHORAGE
APPROX.	APPROXIMATE
AVG	AVERAGE
B (BOT)	BOTTOM
℄	BASELINE
BCLC	BITUMINOUS CONCRETE LIP CURB
BCPC	BITUMINOUS CONCRETE PARK CURB
BIT.	BITUMINOUS
BK	BACK
BLDG.	BUILDING
BM	BENCH MARK
BR.	BRIDGE
BRG	BEARING
C	CUT SLOPE
℄	CENTERLINE
C&S	COMMUNICATIONS AND SIGNALS
CADD	COMPUTER AIDED DRAFTING AND DESIGN
CAP	CORRUGATED ALUMINUM PIPE
CB	CATCH BASIN
CBL	CABLE
CC	CONCRETE CURBING
C.I.J.B.	CAST IRON JUNCTION BOX
CIP	CAST IRON PIPE
C-I-P	CAST-IN-PLACE
CLF	CHAIN LINK FENCE
CLR	CLEARANCE
CMP	CORRUGATED METAL PIPE
CMU	CONCRETE MASONRY UNIT
CONC.	CONCRETE
CONN (CT)	CONNECTICUT
CONNDOT	CONNECTICUT DEPARTMENT OF TRANSPORTATION
CONST.	CONSTRUCTION
CONTR	CONTRACTION
COORD.	COORDINATE
COV	COVER
CNH	CITY OF NEW HAVEN
CSPP	CORRUGATED STRUCTURAL PLATE PIPE
DBL	DOUBLE
DDHV	DESIGN DIRECTIONAL HOURLY VOLUME
DESC.	DESCRIPTION
DET	DETOUR
DG	DOUBLE GRATE
DI	DROP INLET
DIA	DIAMETER
DR.	DRIVE
DSD	DECISION SIGHT DISTANCE
DWG.	DRAWING
E	EASTING
EA.	EACH
EB	EASTBOUND
ECL	EROSION CONTROL LINING
EF	EACH FACE
EL	ELEVATION
E.L.	EASEMENT LINE
ELEC. (E)	ELECTRICAL
EOP	EDGE OF PAVEMENT
EQ	EQUAL
EQN	EQUATION
E.R.	EDGE OF EXISTING ROAD
EST	ESTIMATE
EXIST	EXISTING
EXP	EXPANSION
F	FILL SLOPE

FF	FAR FACE
FHWA	FEDERAL HIGHWAY ADMINISTRATION
FL	FLOW LINE
FND.	FOUNDATION
GALV	GALVANIZED
GG	GAS GATE
GIR	GIRDER
GR	GRAVEL
GRAN.	GRANITE
GRT	GRATE
GSC	GRANITE STONE CURBING
GV	GATE VALVE
GW	GUY WIRE
HDR	HEADER
HEX	HEXAGONAL
HH	HAND HOLE
H.L.	HIGHWAY LINE
HOR.	HORIZONTAL
HP	HIGH POINT
HYD	HYDRANT
I-95	INTERSTATE ROUTE 95
INT	INTERSECTION
INV	INVERT
IP	IRON PIN
ISD	INTERSECTION SIGHT DISTANCE
JB	JUNCTION BOX
JT	JOINT
LOC	LOCATION
LONG.	LONGITUDINAL
LP	LOW POINT
L.S.	LUMP SUM
LT	LEFT
LVC	LENGTH OF VERTICAL CURVE
m	METER
MAX	MAXIMUM
MBR	METAL BEAM RAIL
MCE	METAL CULVERT END
MH	MANHOLE
MIN.	MINIMUM
MISC.	MISCELLANEOUS
MOD	MODIFIED / MODIFY
MON	MONUMENT
MPT	MAINTENANCE AND PROTECTION OF TRAFFIC
N	NORTHING
N.A.	NON-ACCESS
NB	NORTHBOUND
NF	NEAR FACE
N/F	NOW OR FORMERLY
NO.	NUMBER
N.T.S.	NOT TO SCALE
OC	ON CENTER
P.A.G.	POINT OF APPLIED GRADE
PAVT.	PAVEMENT
PB	PULL BOX
PC	POINT OF CURVATURE
PCBC	PRECAST CONCRETE BARRIER CURB
PCC	POINT OF COMPOUND CURVATURE
PCTC	PRECAST CONCRETE TRANSITION CURB
PE	CORRUGATED POLYETHYLENE PIPE (TYPE S)
PECE	POLYETHYLENE CULVERT END
PERF	PERFORATED
PERV	PERVIOUS
P.G.L.	PROFILE GRADE LINE
PHS	PHASE
PHV	PEAK HOURLY VOLUME
PI	POINT OF INTERSECTION
P.L.	PROPERTY LINE
POC	POINT ON CURVATURE
POT	POINT ON TANGENT
PPC	PRECAST PRESTRESSED CONCRETE
PRC	POINT OF REVERSE CURVATURE
PREV	PREVIOUS
PROJ.	PROJECT

PROP.	PROPOSED
PT	POINT OF TANGENCY
P/T	POST-TENSIONING
PVC	POINT OF VERTICAL CURVATURE
PVI	POINT OF VERTICAL INTERSECTION
PVRC	POINT OF VERTICAL REVERSE CURVATURE
PVT	POINT OF VERTICAL TANGENCY
R	RADIUS
RAN. STONE	RANDOM STONE
RCCE	REINFORCED CONCRETE CULVERT END
RCP	REINFORCED CONCRETE PIPE
RD.	ROAD
RDWY	ROADWAY
RECONST.	RECONSTRUCT
REHAB.	REHABILITATION
REINF.	REINFORCED
RELOC.	RELOCATED
REM.	REMOVE
RET. WALL	RETAINING WALL
REV.	REVISION
RMC	RIGID METAL CONDUIT
ROT	ROTATE
R.O.W.	RIGHT OF WAY
RPW	ROADWAY PARAPET WALL
RR	RAILROAD
R.R.	RIPRAP
RT	RIGHT
RTE.	ROUTE
SAN (S)	SANITARY SEWER
SB	SOUTHBOUND
SCS	SEDIMENTATION CONTROL SYSTEM
SD	SIGHT DISTANCE
SHLDR	SHOULDER
SHT.	SHEET
S.L.	STREET LINE
SMH	SANITARY MANHOLE
SP	SLOTTED PIPE
SPA	SPACES
SPEC	SPECIFICATIONS
SSD	STOPPING SIGHT DISTANCE
ST.	STREET
STA	STATION
STD.	STANDARD
STG	STAGE
STP	STATE PROJECT NUMBER
STR.	STRUCTURE
STY	STORY
T	TOP
TBD	TO BE DETERMINED
TCD	TEMPORARY CHECK DAM
TEL. (T)	TELEPHONE
TEMP	TEMPORARY
TF	TOP OF FRAME
T.L.	TAKING LINE
TPCBC	TEMPORARY PRECAST CONCRETE BARRIER CURB
TRANS	TRANSITION
TRNVS	TRANSVERSAL
TYP.	TYPICAL
U-DRAIN	UNDERDRAIN
UON	UNLESS OTHERWISE NOTED
UTIL. POLE (UP)	UTILITY POLE
VCP	VITRIFIED CLAY PIPE
VEH.	VEHICLES
VERT.	VERTICAL
W/	WITH
WB	WESTBOUND
WF	WIRE FENCE
WG	WATER GATE
W.L.	WATER LINE
W/O	WITHOUT
WP	WORKING POINT
WW	WINGWALL
WWF	WELDED WIRE FABRIC
YR	YEAR

REV.	DATE	REVISION DESCRIPTION	SHEET NO.
-	-	-	-
-	-	-	-
-	-	-	-
-	-	-	-
-	-	-	-
-	-	-	-

THE INFORMATION, INCLUDING ESTIMATED QUANTITIES OF WORK, SHOWN ON THESE SHEETS IS BASED ON LIMITED INVESTIGATIONS BY THE STATE AND IS IN NO WAY WARRANTED TO INDICATE THE CONDITIONS OF ACTUAL QUANTITIES OF WORK WHICH WILL BE REQUIRED.

PLOTTED: 3/26/2014

DESIGNER/DRAFTER: C. VERGE

CHECKED BY: R. TALBOT

NOT TO SCALE

STATE OF CONNECTICUT
DEPARTMENT OF TRANSPORTATION

FILENAME: ...\301155-03-02-ABREVIATIONS.dgn

LOCHNER
H.W. LOCHNER, INC
2110 Silas Deane Highway
Rocky Hill, CT 06067

APPROVED BY: DATE:

PROJECT TITLE:
INSTALLATION OF CANOPY AT BRIDGEPORT STATION

TOWN: BRIDGEPORT

DRAWING TITLE: ABBREVIATIONS

PROJECT NO. 301-155

DRAWING NO. CIVIL-2

SHEET NO. 03.02

Border Version: 10/1/09

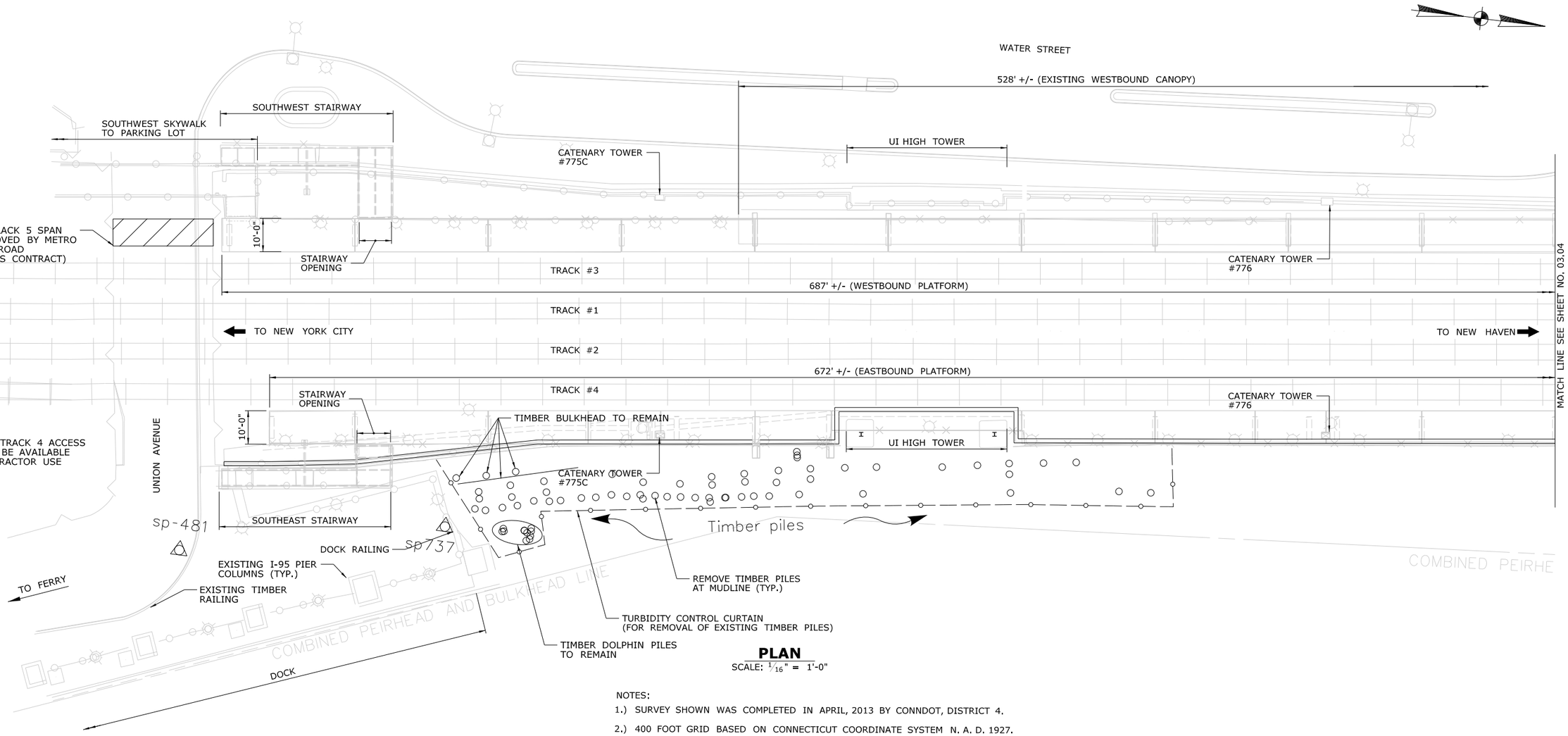

PLAN
SCALE: 1/16" = 1'-0"

NOTES:

1.) SURVEY SHOWN WAS COMPLETED IN APRIL, 2013 BY CONNDOT, DISTRICT 4.

2.) 400 FOOT GRID BASED ON CONNECTICUT COORDINATE SYSTEM N. A. D. 1927.

3.) VERTICAL DATUM BASED ON NGVD 1929.

4.) PROPERTY LINES, RR ROW LINE, RR CENTERLINE AND THE COMBINED PIERHEAD AND BULKHEAD LINE SHOWN ARE AS DEPICTED ON DISTRICT 3 SURVEY PLAN ENTITLED "bprrada2.dgn."

5.) THE TURBIDITY CONTROL CURTAIN SHALL BE INSTALLED PRIOR TO REMOVING THE EXISTING TIMBER PILES.

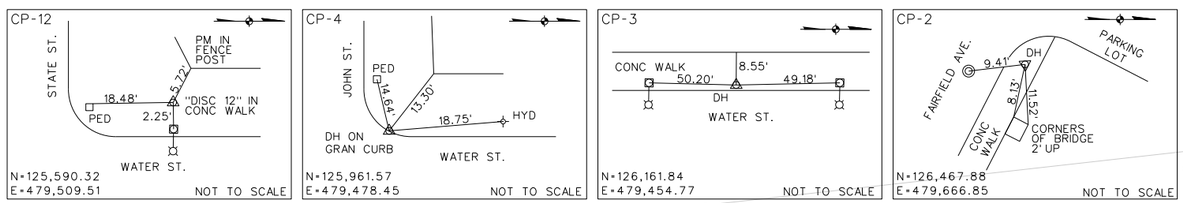

APPROXIMATE LIMIT OF EXCLUSIONARY ZONE
(SEE NOTICE TO CONTRACTOR - THREATENED SPECIES

REV.	DATE	REVISION DESCRIPTION	SHEET NO.
-	-	-	-
-	-	-	-
-	-	-	-
-	-	-	-
-	-	-	-
-	-	-	-

THE INFORMATION, INCLUDING ESTIMATED QUANTITIES OF WORK, SHOWN ON THESE SHEETS IS BASED ON LIMITED INVESTIGATIONS BY THE STATE AND IS IN NO WAY WARRANTED TO INDICATE THE CONDITIONS OF ACTUAL QUANTITIES OF WORK WHICH WILL BE REQUIRED.

PLOTTED: 4/1/2014

DESIGNER/DRAFTER: C. VERGE
CHECKED BY: R. TALBOT
SCALE AS NOTED

STATE OF CONNECTICUT
DEPARTMENT OF TRANSPORTATION

FILENAME: ...\301155-03-0X-CIVIL-SITE-PLAN.dgn

LOCHNER
H.W. LOCHNER, INC
2110 Silas Deane Highway
Rocky Hill, CT 06067
APPROVED BY: DATE:

PROJECT TITLE:
INSTALLATION OF CANOPY AT BRIDGEPORT STATION

TOWN: **BRIDGEPORT**
DRAWING TITLE: **SITE PLAN I**

PROJECT NO. **301-155**
DRAWING NO. **CIVIL-3**
SHEET NO. **03.03**

Border Version: 10/1/09

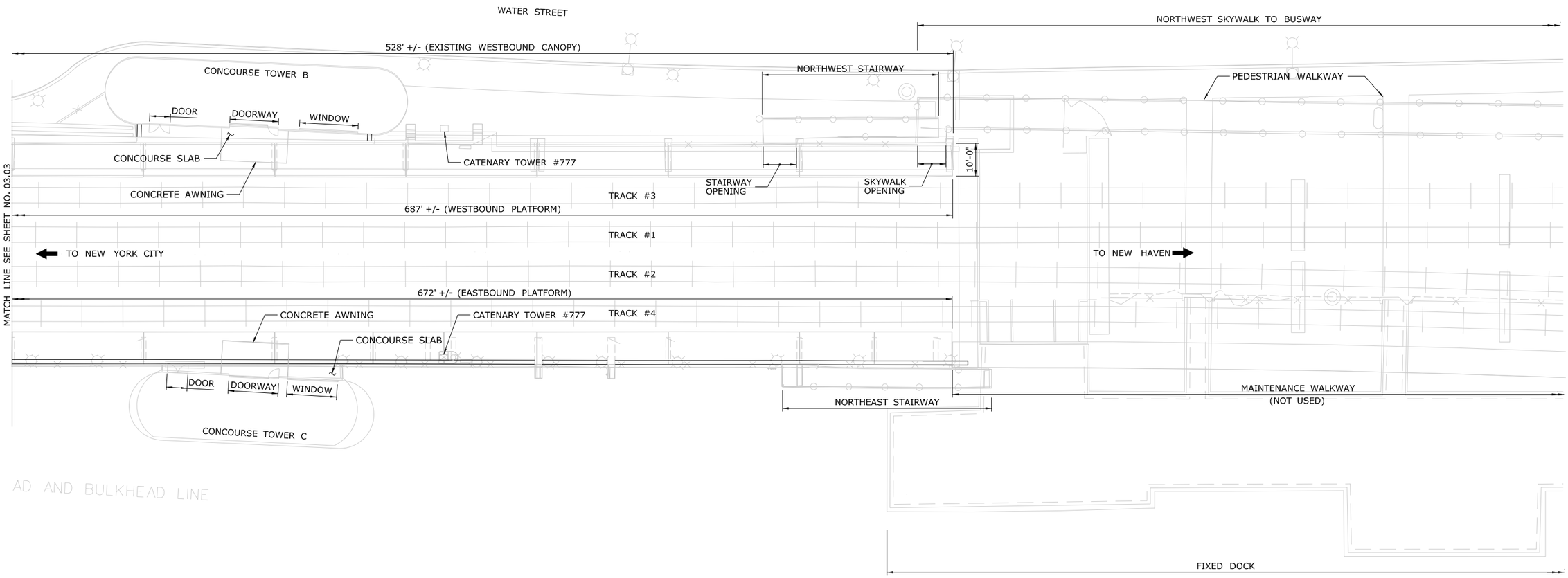

PLAN
SCALE: $\frac{1}{16}$" = 1'-0"

REV.	DATE	REVISION DESCRIPTION	SHEET NO.
-	-	-	-
-	-	-	-
-	-	-	-
-	-	-	-
-	-	-	-
-	-	-	-

THE INFORMATION, INCLUDING ESTIMATED QUANTITIES OF WORK, SHOWN ON THESE SHEETS IS BASED ON LIMITED INVESTIGATIONS BY THE STATE AND IS IN NO WAY WARRANTED TO INDICATE THE CONDITIONS OF ACTUAL QUANTITIES OF WORK WHICH WILL BE REQUIRED.

PLOTTED: 4/1/2014

DESIGNER/DRAFTER: C. VERGE
CHECKED BY: R. TALBOT
SCALE AS NOTED

STATE OF CONNECTICUT
DEPARTMENT OF TRANSPORTATION

FILENAME: ...\301155-03-0X-CIVIL-SITE-PLAN.dgn

LOCHNER
H.W. LOCHNER, INC
2110 Silas Deane Highway
Rocky Hill, CT 06067

APPROVED BY: DATE:

PROJECT TITLE:
INSTALLATION OF CANOPY AT BRIDGEPORT STATION

TOWN: **BRIDGEPORT**

DRAWING TITLE: **SITE PLAN II**

PROJECT NO. **301-155**
DRAWING NO. **CIVIL-4**
SHEET NO. **03.04**

Border Version: 10/1/09

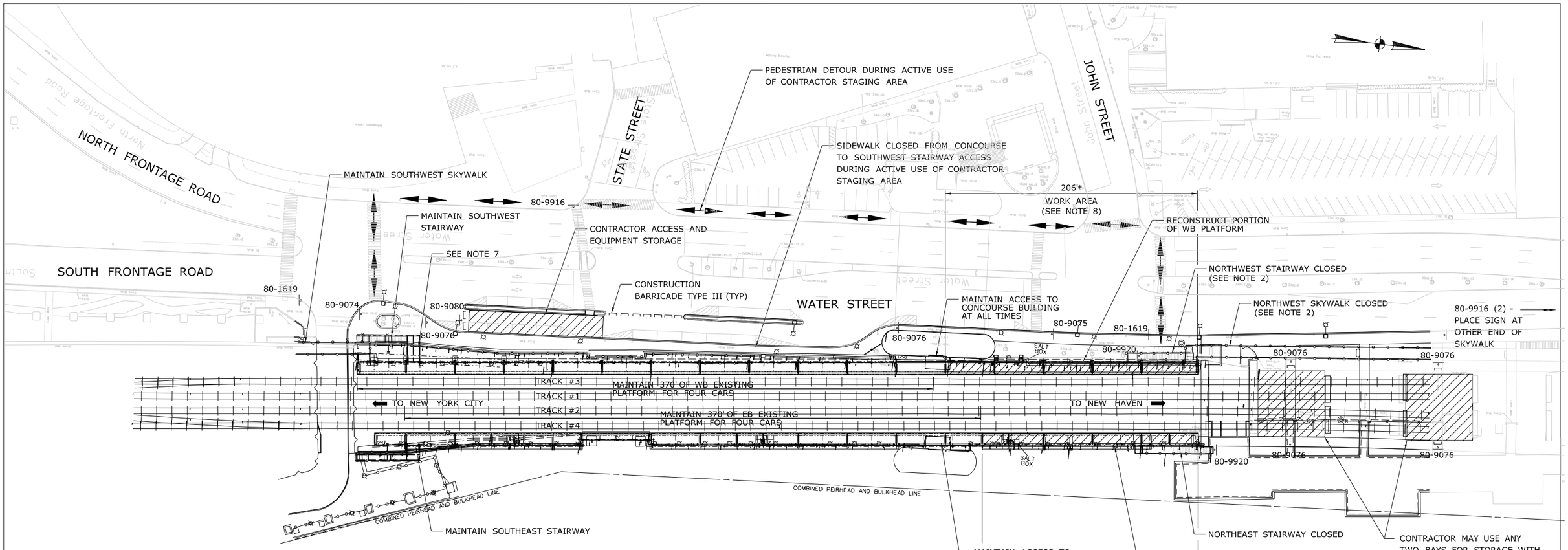

LEGEND

- CONSTRUCTION OR STAGING AREA THIS STAGE
- WORK PREVIOUSLY COMPLETED

SIGN LEGEND

80-1619: CONSTRUCTION AHEAD — SIDEWALK USE RESTRICTED — STATE LIABILITY LIMITED — GENERAL STATUTES SEC. 13a-149, 13a-149 — DEPARTMENT OF TRANSPORTATION

80-9074: SIDEWALK CLOSED AHEAD ← CROSS HERE

80-9075: SIDEWALK CLOSED AHEAD → CROSS HERE

80-9076: SIDEWALK CLOSED

80-9080: ROAD CLOSED

80-9916: CROSSWALK CLOSED

80-9920: STAIRS CLOSED

80-9916 (2): SKYWALK CLOSED

NOTES:

1. ACCESS TO AND FROM THE CONCOURSE BUILDINGS MUST BE MAINTAINED AT ALL TIMES FOR ADA ACCESS.
2. ONE STAIRCASE EXIT ON EACH PLATFORM MUST ALSO BE MAINTAINED AT ALL TIMES DURING OFF-PEAK HOURS AND ALL STAIRCASES & SKYWALKS DURING PEAK HOURS.
3. THE LIMITS SHOWN ALLOW FOR A FOUR CAR TRAIN SET TO HAVE ACCESS TO THE PLATFORM (370' +/-) DURING OPERATING HOURS.
4. ALL SIGNING ON LOCAL ROAD SIDEWALKS SHALL BE IN PLACE PRIOR TO CLOSING ANY PORTION OF THE PLATFORMS. ANY DETOURS AFFECTING ACCESS TO THE STATION MUST HAVE AN ADVANCED TWO-WEEK NOTICE POSTED TO NOTIFY COMMUTERS.
5. SEE STRUCTURE STAGING PLANS FOR ADDITIONAL INFORMATION REGARDING LAYDOWN AREAS AND CRANE ACCESS.
6. CONSTRUCTION SIGNS SHALL BE COVERED DURING PEAK TIMES WHEN ACCESS IS OPEN.
7. THE CONTRACTOR MAY UTILIZE THE EXISTING GATE TO ACCESS BEHIND THE PLATFORM AREA. CONSTRUCTION BARRICADES SHOULD BE USED TO KEEP THE AREA BLOCKED OFF WHEN IN USE. OTHERWISE THE GATE SHALL BE LOCKED WHEN NOT ACTIVELY BEING USED.
8. WORK ZONE SHOWN FOR PLATFORM RESURFACING HOWEVER SIMILAR PEDESTRIAN STAGING SHALL BE USED WHEN OTHER CANOPY RELATED WORK IS DONE IN THESE ZONES.

STAGE 1

- EASTBOUND AND WESTBOUND PLATFORM WORK SHALL NOT HAPPEN AT THE SAME TIME.
- DAYTIME OFF-PEAK WORK WILL BE FROM 9:00 A.M. TO 4:00 P.M. OR IN ACCORDANCE WITH METRO-NORTH LIMITATIONS
- NIGHT TIME WORK WILL BE FROM 10:00 P.M. TO 4:00 A.M. OR IN ACCORDANCE WITH METRO-NORTH LIMITATIONS

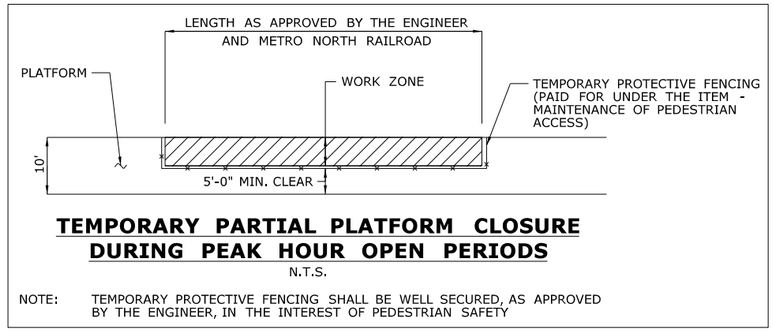

TEMPORARY PARTIAL PLATFORM CLOSURE DURING PEAK HOUR OPEN PERIODS

N.T.S.

NOTE: TEMPORARY PROTECTIVE FENCING SHALL BE WELL SECURED, AS APPROVED BY THE ENGINEER, IN THE INTEREST OF PEDESTRIAN SAFETY

REV.	DATE	REVISION DESCRIPTION	SHEET NO.
-	-	-	-
-	-	-	-
-	-	-	-
-	-	-	-
-	-	-	-
-	-	-	-

THE INFORMATION, INCLUDING ESTIMATED QUANTITIES OF WORK, SHOWN ON THESE SHEETS IS BASED ON LIMITED INVESTIGATIONS BY THE STATE AND IS IN NO WAY WARRANTED TO INDICATE THE CONDITIONS OF ACTUAL QUANTITIES OF WORK WHICH WILL BE REQUIRED.

PLOTTED: 3/26/2014

DESIGNER/DRAFTER: C. VERGE
CHECKED BY: R. TALBOT
SCALE IN FEET 0 40 80
SCALE 1"=40'

STATE OF CONNECTICUT
DEPARTMENT OF TRANSPORTATION

FILENAME: ...\301155-03-0X-CIVIL-MOT-PLAN1.dgn

LOCHNER
H.W. LOCHNER, INC
2110 Silas Deane Highway
Rocky Hill, CT 06067

APPROVED BY: B.BYRNE
DATE:

PROJECT TITLE:
INSTALLATION OF CANOPY AT BRIDGEPORT STATION

TOWN: **BRIDGEPORT**

DRAWING TITLE: **PEDESTRIAN STAGING STAGE 1**

PROJECT NO. **301-155**
DRAWING NO. **CIVIL-5**
SHEET NO. **03.05**

Border Version: 10/1/09

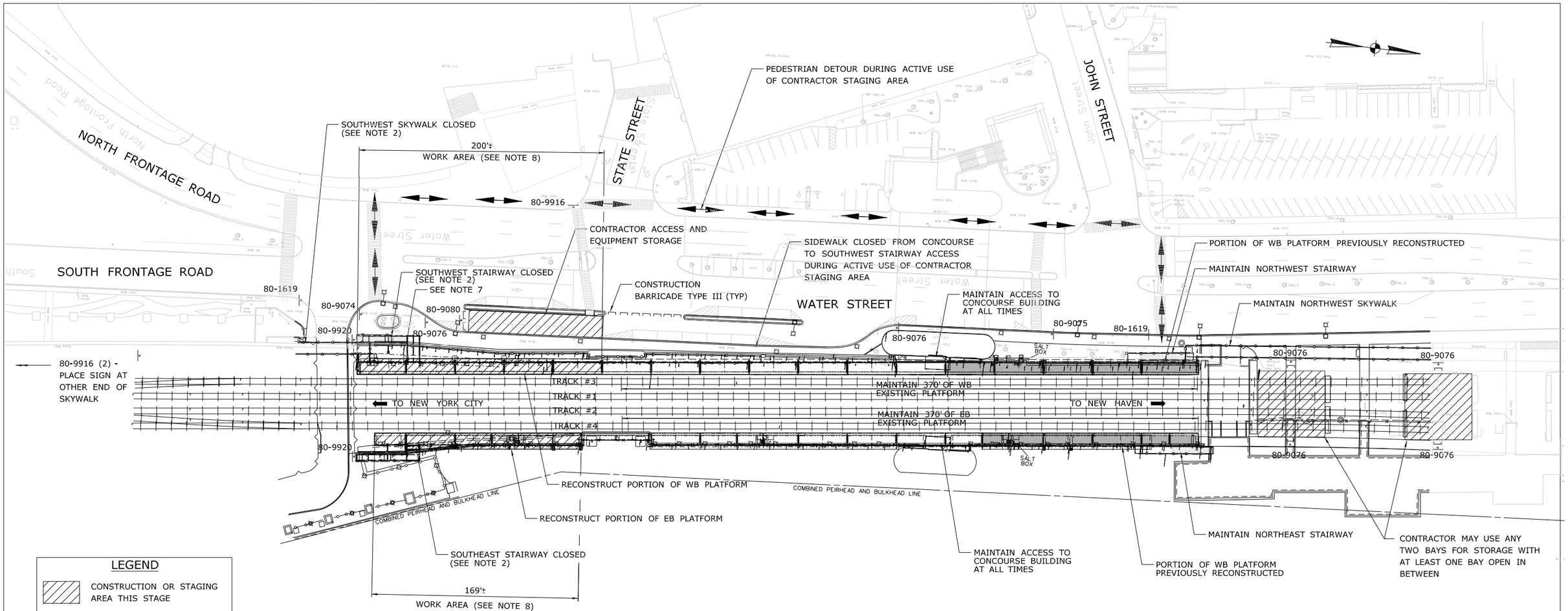

LEGEND

- CONSTRUCTION OR STAGING AREA THIS STAGE
- WORK PREVIOUSLY COMPLETED

SIGN LEGEND

80-1619 — CONSTRUCTION AHEAD; SIDEWALK USE RESTRICTED STATE LIABILITY LIMITED; GENERAL STATUTES REC. 52-557n, 13a-149 CONSIDERED BY TRANSPORTATION

80-9074 — SIDEWALK CLOSED AHEAD ← CROSS HERE

80-9075 — SIDEWALK CLOSED AHEAD → CROSS HERE

80-9076 — SIDEWALK CLOSED

80-9080 — ROAD CLOSED

80-9916 — CROSSWALK CLOSED

80-9920 — STAIRS CLOSED

80-9916 (2) — SKYWALK CLOSED

NOTES:

1. ACCESS TO AND FROM THE CONCOURSE BUILDINGS MUST BE MAINTAINED AT ALL TIMES FOR ADA ACCESS.
2. ONE STAIRCASE EXIT ON EACH PLATFORM MUST ALSO BE MAINTAINED AT ALL TIMES DURING OFF-PEAK HOURS AND ALL STAIRCASES & SKYWALKS DURING PEAK HOURS.
3. THE LIMITS SHOWN ALLOW FOR A FOUR CAR TRAIN SET TO HAVE ACCESS TO THE PLATFORM DURING OPERATING HOURS.
4. ALL SIGNING ON LOCAL ROAD SIDEWALKS SHALL BE IN PLACE PRIOR TO CLOSING ANY PORTION OF THE PLATFORMS. ANY DETOURS AFFECTING ACCESS TO THE STATION MUST HAVE AN ADVANCED TWO-WEEK NOTICE POSTED TO NOTIFY COMMUTERS.
5. SEE STRUCTURE STAGING PLANS FOR ADDITIONAL INFORMATION REGARDING LAYDOWN AREAS AND CRANE ACCESS.
6. CONSTRUCTION SIGNS SHALL BE COVERED DURING PEAK TIMES WHEN ACCESS IS OPEN.
7. THE CONTRACTOR MAY UTILIZE THE EXISTING GATE TO ACCESS BEHIND THE PLATFORM AREA. CONSTRUCTION BARRICADES SHOULD BE USED TO KEEP THE AREA BLOCKED OFF WHEN IN USE. OTHERWISE THE GATE SHALL BE LOCKED WHEN NOT ACTIVELY BEING USED.
8. WORK ZONE SHOWN FOR PLATFORM RESURFACING HOWEVER SIMILAR PEDESTRIAN STAGING SHALL BE USED WHEN OTHER CANOPY RELATED WORK IS DONE IN THESE ZONES.

STAGE 2

- EASTBOUND AND WESTBOUND PLATFORM WORK SHALL NOT HAPPEN AT THE SAME TIME.
- DAYTIME OFF-PEAK WORK WILL BE FROM 9:00 A.M. TO 4:00 P.M. OR IN ACCORDANCE WITH METRO-NORTH LIMITATIONS
- NIGHT TIME WORK WILL BE FROM 10:00 P.M. TO 4:00 A.M. OR IN ACCORDANCE WITH METRO-NORTH LIMITATIONS

REV.	DATE	REVISION DESCRIPTION	SHEET NO.
-	-	-	-
-	-	-	-
-	-	-	-
-	-	-	-
-	-	-	-
-	-	-	-

THE INFORMATION, INCLUDING ESTIMATED QUANTITIES OF WORK, SHOWN ON THESE SHEETS IS BASED ON LIMITED INVESTIGATIONS BY THE STATE AND IS IN NO WAY WARRANTED TO INDICATE THE CONDITIONS OF ACTUAL QUANTITIES OF WORK WHICH WILL BE REQUIRED.

PLOTTED: 3/26/2014

DESIGNER/DRAFTER: C. VERGE
CHECKED BY: R. TALBOT
SCALE IN FEET 0 40 80
SCALE 1"=40'

STATE OF CONNECTICUT
DEPARTMENT OF TRANSPORTATION

FILENAME: ...\301155_03_0X_CIVIL_MOT_PLAN2.dgn

LOCHNER
H.W. LOCHNER, INC
2110 Silas Deane Highway
Rocky Hill, CT 06067

APPROVED BY: B.BYRNE
DATE:

PROJECT TITLE:
INSTALLATION OF CANOPY AT BRIDGEPORT STATION

TOWN: BRIDGEPORT

DRAWING TITLE: PEDESTRIAN STAGING STAGE 2

PROJECT NO. 301-155
DRAWING NO. CIVIL-6
SHEET NO. 03.06

Border Version: 10/1/09

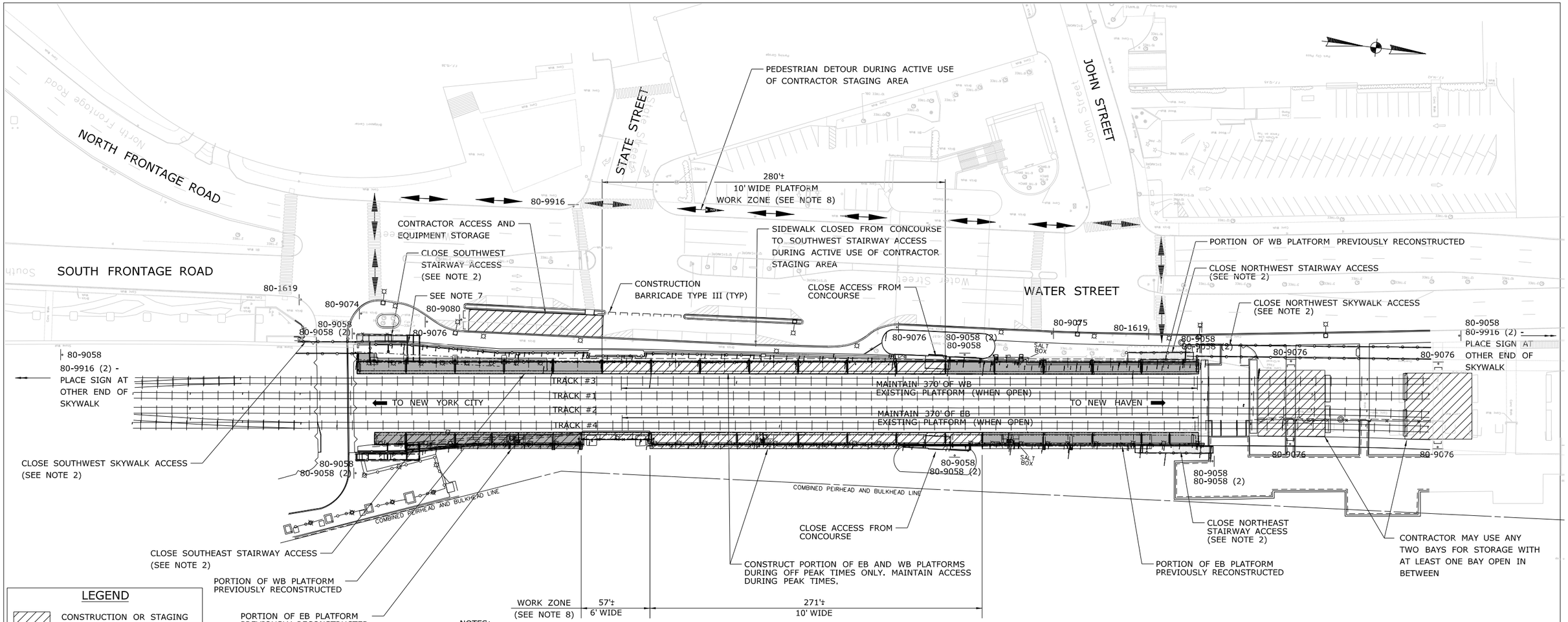

LEGEND

- CONSTRUCTION OR STAGING AREA THIS STAGE
- WORK PREVIOUSLY COMPLETED

SIGN LEGEND

80-1619: CONSTRUCTION AHEAD — SIDEWALK USE RESTRICTED STATE LIABILITY LIMITED GENERAL STATUTES SEC. 13a-95, 13a-96 CONSIGNEE OF TRANSPORTATION	80-9074: SIDEWALK CLOSED AHEAD ← CROSS HERE	80-9058: EB PLATFORM CLOSED USE WB PLATFORM FOR BOTH DIRECTIONS
80-9075: SIDEWALK CLOSED AHEAD → CROSS HERE	80-9076: SIDEWALK CLOSED	80-9058 (2): WB PLATFORM CLOSED USE EB PLATFORM FOR BOTH DIRECTIONS
80-9080: ROAD CLOSED	80-9916: CROSSWALK CLOSED	
80-9920: STAIRS CLOSED	80-9916 (2): SKYWALK CLOSED	

NOTES:

1. ACCESS TO AND FROM THE CONCOURSE BUILDINGS MUST BE MAINTAINED AT ALL TIMES FOR ADA ACCESS WHEN PLATFORMS ARE OPEN.
2. ONE STAIRCASE EXIT ON EACH PLATFORM MUST ALSO BE MAINTAINED AT ALL TIMES DURING OFF-PEAK HOURS AND ALL STAIRCASES & SKYWALKS DURING PEAK HOURS.
3. THE LIMITS SHOWN ARE OFF PEAK CLOSURES ONLY. THE CONTRACTOR SHALL COORDINATE HIS WORK SUCH THAT THE ENTIRE PLATFORM IS FULLY OPEN FOR USE DURING PEAK TIMES.
4. ALL SIGNING ON LOCAL ROAD SIDEWALKS SHALL BE IN PLACE PRIOR TO CLOSING ANY PORTION OF THE PLATFORMS. ANY DETOURS AFFECTING ACCESS TO THE STATION MUST HAVE AN ADVANCED TWO-WEEK NOTICE POSTED TO NOTIFY COMMUTERS.
5. SEE STRUCTURE STAGING PLANS FOR ADDITIONAL INFORMATION REGARDING LAYDOWN AREAS AND CRANE ACCESS.
6. CONSTRUCTION SIGNS SHALL BE COVERED DURING PEAK TIMES WHEN ACCESS IS OPEN.
7. THE CONTRACTOR MAY UTILIZE THE EXISTING GATE TO ACCESS BEHIND THE PLATFORM AREA. CONSTRUCTION BARRICADES SHOULD BE USED TO KEEP THE AREA BLOCKED OFF WHEN IN USE. OTHERWISE THE GATE SHALL BE LOCKED WHEN NOT ACTIVELY BEING USED.
8. WORK ZONE SHOWN FOR PLATFORM RESURFACING HOWEVER SIMILAR PEDESTRIAN STAGING SHALL BE USED WHEN OTHER CANOPY RELATED WORK IS DONE IN THESE ZONES.

STAGE 3

- EASTBOUND AND WESTBOUND PLATFORM WORK SHALL NOT HAPPEN AT THE SAME TIME.
- WORK WILL BE DONE DURING WEEKEND NIGHT TIME OPERATION (9:00 P.M. TO 4:00 A.M.) OR IN ACCORDANCE WITH METRO-NORTH LIMITATIONS WITH TRAINS RUNNING "LEFT-HANDED" AND ENTIRE PLATFORM SHUT DOWN.

REV.	DATE	REVISION DESCRIPTION	SHEET NO.
-	-	-	-
-	-	-	-
-	-	-	-
-	-	-	-
-	-	-	-
-	-	-	-

THE INFORMATION, INCLUDING ESTIMATED QUANTITIES OF WORK, SHOWN ON THESE SHEETS IS BASED ON LIMITED INVESTIGATIONS BY THE STATE AND IS IN NO WAY WARRANTED TO INDICATE THE CONDITIONS OF ACTUAL QUANTITIES OF WORK WHICH WILL BE REQUIRED.

PLOTTED: 3/26/2014

DESIGNER/DRAFTER: C. VERGE
CHECKED BY: R. TALBOT
SCALE IN FEET 0 40 80
SCALE 1"=40'

STATE OF CONNECTICUT
DEPARTMENT OF TRANSPORTATION

FILENAME: ...\301155_03_0X_CIVIL_MOT_PLAN3.dgn

LOCHNER
H.W. LOCHNER, INC
2110 Silas Deane Highway
Rocky Hill, CT 06067

APPROVED BY: B.BYRNE
DATE:

PROJECT TITLE:
INSTALLATION OF CANOPY AT BRIDGEPORT STATION

TOWN: **BRIDGEPORT**

DRAWING TITLE: **PEDESTRIAN STAGING STAGE 3**

PROJECT NO. **301-155**
DRAWING NO. **CIVIL-7**
SHEET NO. **03.07**

Border Version: 10/1/09

04 - STRUCTURAL

INDEX OF DRAWINGS

DRAWING NUMBER	DRAWING TITLE	DRAWING NUMBER	DRAWING TITLE
S - 1	INDEX OF DRAWINGS	S - 31	WESTBOUND CANOPY SECTIONS V
S - 2	STRUCTURAL NOTES	S - 32	WESTBOUND CANOPY SECTIONS VI
S - 3	EASTBOUND CANOPY FRAMING PLAN I	S - 33	WESTBOUND CANOPY SECTIONS VII
S - 4	EASTBOUND CANOPY FRAMING PLAN II	S - 34	EASTBOUND CANOPY DETAILS I
S - 5	EASTBOUND CANOPY FRAMING PLAN III	S - 35	EASTBOUND CANOPY DETAILS II
S - 6	EASTBOUND CANOPY FRAMING PLAN IV	S - 36	EASTBOUND CANOPY DETAILS III
S - 7	EASTBOUND CANOPY FRAMING PLAN V	S - 37	EASTBOUND CANOPY DETAILS IV
S - 8	EASTBOUND CANOPY FRAMING PLAN VI	S - 38	EASTBOUND CANOPY DETAILS V
S - 9	WESTBOUND CANOPY FRAMING PLAN I	S - 39	EASTBOUND CANOPY DETAILS VI
S - 10	WESTBOUND CANOPY FRAMING PLAN II	S - 40	EASTBOUND CANOPY DETAILS VII
S - 11	WESTBOUND CANOPY FRAMING PLAN III	S - 41	WESTBOUND CANOPY DETAILS I
S - 12	WESTBOUND CANOPY FRAMING PLAN IV	S - 42	WESTBOUND CANOPY DETAILS II
S - 13	WESTBOUND CANOPY FRAMING PLAN V	S - 43	WESTBOUND CANOPY DETAILS III
S - 14	WESTBOUND CANOPY FRAMING PLAN VI	S - 44	WESTBOUND CANOPY DETAILS IV
S - 15	EASTBOUND CANOPY SECTIONS I	S - 45	WESTBOUND CANOPY DETAILS V
S - 16	EASTBOUND CANOPY SECTIONS II	S - 46	WESTBOUND CANOPY DETAILS VI
S - 17	EASTBOUND CANOPY SECTIONS III	S - 47	MISCELLANEOUS DETAILS
S - 18	EASTBOUND CANOPY SECTIONS IV	S - 48	EASTBOUND PLATFORM REHABILITATION PLAN
S - 19	EASTBOUND CANOPY SECTIONS V	S - 49	WESTBOUND PLATFORM REHABILITATION PLAN
S - 20	EASTBOUND CANOPY SECTIONS VI	S - 50	PLATFORM REHABILITATION DETAILS
S - 21	EASTBOUND CANOPY SECTIONS VII	S - 51	TACTILE WARNING STRIP DETAILS
S - 22	EASTBOUND CANOPY SECTIONS VIII	S - 52	EASTBOUND CONCOURSE SLAB REPLACEMENT I
S - 23	EASTBOUND CANOPY SECTIONS IX	S - 53	EASTBOUND CONCOURSE SLAB REPLACEMENT II
S - 24	EASTBOUND CANOPY SECTIONS X	S - 54	WESTBOUND CONCOURSE SLAB REPLACEMENT I
S - 25	EASTBOUND CANOPY SECTIONS XI	S - 55	WESTBOUND CONCOURSE SLAB REPLACEMENT II
S - 26	EASTBOUND CANOPY SECTIONS XII	S - 56	GUY WIRE DETAILS I
S - 27	WESTBOUND CANOPY SECTIONS I	S - 57	GUY WIRE DETAILS II
S - 28	WESTBOUND CANOPY SECTIONS II	S - 58	CONSTRUCTION CLEARANCES
S - 29	WESTBOUND CANOPY SECTIONS III	S - 59	STAGING PLAN I
S - 30	WESTBOUND CANOPY SECTIONS IV	S - 60	STAGING PLAN II

LEGEND:

AISC	AMERICAN INSTITUTE OF STEEL CONSTRUCTION
ARCH.	ARCHITECTURAL
ASTM	AMERICAN SOCIETY OF TESTING AND MATERIALS
ATR	ABOVE TOP OF RAIL
BETW.	BETWEEN
BFB	BOTTOM OF FLOOR BEAM ELEVATION
BOT.	BOTTOM
BOS	BOTTOM OF STEEL ELEVATION
BW	BOTH WAYS
C.C.	CENTER TO CENTER
CL	CENTERLINE
CMU	CONCRETE MASONRY UNIT
CONC.	CONCRETE
CONT.	CONTINUOUS
CT	CATENARY TOWER
CTSK	COUNTERSINK
DIA.	DIAMETER
DWG.	DRAWING
CIP	CAST-IN-PLACE CONCRETE
DNS	DECK NOT SHOWN FOR CLARITY
EA.	EACH
EF	EACH FACE
ELEC	ELECTRIC OR ELECTRICAL
EQS	EQUALLY SPACED
EW	EACH WAY
FP	FALL PROTECTION STANCHION
HSS	AISC DESIGNATION FOR "HOLLOW STRUCTURAL SHAPE"
HWY	HIGHWAY
INT.	INTERMEDIATE
MIN.	MINIMUM
NTS	NOT TO SCALE
O.C.	ON CENTER
PL	PLATE
SC	SLIP CRITICAL CONNECTION
SPA.	SPACING
STA.	STATION
S.S.	STAINLESS STEEL
T	TOP
T&B	TOP AND BOTTOM
TGB	TOP OF GRADE BEAM ELEVATION
TOC	TOP OF CONCRETE ELEVATION
TOP	TOP OF PEDESTAL ELEVATION
TOS	TOP OF STEEL ELEVATION
TOW	TOP OF WALL ELEVATION
TT	TRANSMISSION TOWER
TYP.	TYPICAL
U.O.N	UNLESS OTHERWISE NOTED
V.I.F.	VERIFY IN FIELD
W.P.	WORKING POINT

SYMBOLS & NOTATIONS

SECTION MARK — X / S-XX

DETAIL MARK — X / S-XX

TYPICAL DESIGNATION — X / S-XX

ELEVATION MARK — X / S-XX

DESIGNED BY:
CONSULTANT COMPANY NAME

REV.	DATE	REVISION DESCRIPTION	SHEET NO.
-	-	-	-
-	-	-	-
-	-	-	-
-	-	-	-
-	-	-	-
-	-	-	-

THE INFORMATION, INCLUDING ESTIMATED QUANTITIES OF WORK, SHOWN ON THESE SHEETS IS BASED ON LIMITED INVESTIGATIONS BY THE STATE AND IS IN NO WAY WARRANTED TO INDICATE THE CONDITIONS OF ACTUAL QUANTITIES OF WORK WHICH WILL BE REQUIRED.

PLOTTED: 3/31/2014

DESIGNER/DRAFTER: B. HAMAN
CHECKED BY: D. GRIFFIN
SCALE AS NOTED

STATE OF CONNECTICUT
DEPARTMENT OF TRANSPORTATION

FILENAME: ...\301155_04_01_TITLE_SHEET.dgn

LOCHNER
H.W. LOCHNER, INC
2110 Silas Deane Highway
Rocky Hill, CT 06067

APPROVED BY: BEB
DATE: 4/2/2014

PROJECT TITLE:
INSTALLATION OF CANOPY AT BRIDGEPORT STATION

TOWN: **BRIDGEPORT**

DRAWING TITLE: **INDEX OF DRAWINGS**

PROJECT NO. **301-155**
DRAWING NO. **S-1**
SHEET NO. **04.01**

GENERAL STRUCTURAL NOTES

1. ALL WORK SHALL BE PERFORMED IN STRICT ACCORDANCE WITH THE RECOMMENDATIONS OF THE CONNECTICUT DEPARTMENT OF TRANSPORTATION, THE IBC 2012 BUILDING CODE, OSHA, AREMA (LATEST EDITION) AND AGENCIES HAVING JURISDICTION OVER ANY PORTION OF WORK SPECIFIED IN THESE DOCUMENTS.
2. CONTRACTOR'S PERSONNEL SHALL ATTEND METRO-NORTH ROADWAY WORKERS PROCEDURE TRAINING AT OWN EXPENSE.
3. EXISTING UTILITIES SHOWN ON THESE DRAWINGS HAVE BEEN DETERMINED BY STANDARD SURVEYING METHODS AND AVAILABLE RECORDS. THE LOCATIONS SHOWN FOR THESE UTILITIES ARE APPROXIMATE AND MAY BE INCOMPLETE. THE CONTRACTOR SHALL BE RESPONSIBLE FOR VERIFYING UTILITIES, SURVEY AND OBTAINING ANY PERMITS REQUIRED.
4. THROUGHOUT THEIR OPERATIONS THE CONTRACTOR SHALL MAINTAIN PROPER DRAINAGE ALONG THE RAILROAD, INCLUDING DEWATERING, AS DETERMINED BY THE ENGINEER.
5. THE CONTRACTOR SHALL BE RESPONSIBLE FOR PROVIDING ALL POWER AND OTHER UTILITIES NECESSARY TO PERFORM THE WORK. NO POWER OR OTHER UTILITY SERVICES WILL BE PROVIDED.
6. THE CONTRACTOR SHALL NOTIFY THE ENGINEER OF ANY DISCREPANCIES BETWEEN THE EXISTING CONDITIONS AND THE CONTRACT DOCUMENTS. FAILURE TO NOTIFY THE ENGINEER WILL NOT RELIEVE THE CONTRACTOR OF THEIR RESPONSIBILITY TO PERFORM THE WORK AS INTENDED BY THE CONTRACT DOCUMENTS. THE CONTRACTOR SHALL CORRECT ANY AND ALL WORK AS A RESULT FROM SUCH FAILURE TO COORDINATE DISCREPANCIES TO THE SATISFACTION OF THE ENGINEER AT NO ADDITIONAL COST TO CONNDOT.
7. CONSTRUCTION STAGING SHOWN IN THESE CONTRACT DOCUMENTS ARE CONCEPTUAL SUGGESTIONS ONLY. THE CONTRACTOR SHALL SUBMIT A DETAILED CONSTRUCTION STAGING PLAN TO THE ENGINEER FOR APPROVAL PRIOR TO THE START OF WORK. THE CONTRACTOR IS RESPONSIBLE TO OBTAIN ANY PERMITS FOR THE WORK.
8. THE CONTRACTOR SHALL TAKE MEASURES TO WORK SAFELY ON AN ACTIVE RAILROAD. ALL CONTRACTOR PERSONNEL WORKING ON METRO-NORTH'S R.O.W. SHALL MEET METRO-NORTH'S REQUIREMENTS FOR WORK ADJACENT TO AND AFFECTING AN ACTIVE RAILROAD AND BE GIVEN METRO-NORTH SAFETY TRAINING.
9. THE CONTRACTOR SHALL SUBMIT A WORKPLAN FOR METRO-NORTH APPROVAL, SHOWING A DETAILED WORK SCHEDULE AND ALL EQUIPMENT TO BE USED ON METRO-NORTH'S R.O.W.
10. THE CONTRACTOR SHALL PROTECT FROM DAMAGE ALL MONUMENTS, SURVEY POINTS AND BENCH MARKS NOT DESIGNATED FOR REMOVAL AND SHALL ESTABLISH OFFSET POINTS AS REQUIRED FOR HIS WORK.
11. THE DIMENSIONS SHOWN ON THE PLANS MAY VARY FROM THE EXISTING DIMENSIONS IN THE FIELD. IT IS, THEREFORE, IMPERATIVE THAT THE CONTRACTOR, PRIOR TO COMMENCEMENT OF WORK, TAKE EXACT MEASUREMENTS TO VERIFY ALL ELEVATIONS AND DIMENSIONS SHOWN ON THE PLANS AS WELL AS OBTAIN OTHER NECESSARY DIMENSIONS FOR THE PURPOSE OF PREPARING SHOP AND OTHER WORKING DRAWINGS. SHOP DRAWINGS AND ANY OTHER DRAWINGS PREPARED BY THE CONTRACTOR SHALL INCLUDE A STATEMENT CERTIFYING THAT THOSE DRAWINGS HAVE BEEN PREPARED IN ACCORDANCE WITH THE FIELD-MEASURED DIMENSIONS. IT IS THE CONTRACTOR'S RESPONSIBILITY TO OBTAIN THE SERVICES OF A SURVEYOR, LICENSED IN THE STATE OF CONNECTICUT, TO VERIFY THE INFORMATION PRESENTED IN THESE CONTRACT DOCUMENT AND TO COMPLETE THE REQUIRED CONSTRUCTION LAYOUTS.
12. UNLESS OTHERWISE NOTED ON THE PLANS AND SPECIFICATIONS, ALL FACILITIES SHALL REMAIN IN PLACE AND IN SERVICE DURING DEMOLITION/CONSTRUCTION. THE CONTRACTOR SHALL PROTECT, PRESERVE, INCORPORATE AND TEMPORARILY RELOCATE IF REQUIRED AND SUPPORT ALL EXISTING FACILITIES, STRUCTURES, UTILITIES AND ANY OTHER ITEMS TO REMAIN, SUBJECT TO THE APPROVAL OF THE ENGINEER. THE CONTRACTOR IS TO REPAIR OR REPLACE ANY ITEM DAMAGED DURING THE COURSE OF WORK TO THE SATISFACTION AND APPROVAL OF THE ENGINEER AT NO ADDITIONAL COST TO THE STATE.
13. THE CONTRACTOR SHALL PROVIDE AND MAINTAIN SAFEGUARDS NECESSARY TO PROTECT PERSONS AND PROPERTY FROM INJURY OR DAMAGE DURING PERFORMANCE OF THE WORK. OSHA, STATE AND OTHER MUNICIPAL CODES SHALL BE FOLLOWED.
14. A RAILROAD FLAGMAN SHALL BE ON DUTY AT THE JOB SITE AT TIMES WHILE CONSTRUCTION WORK IS BEING PERFORMED WHEN THE RAILROAD DEEMS IT NECESSARY. THE NUMBER OF FLAGMAN TO BE PROVIDED WILL BE DETERMINED BY THE RAILROAD.
15. INTERRUPTION OF TRAIN OPERATIONS DURING CONSTRUCTION WILL NOT BE PERMITTED UNLESS NOTED IN THESE CONTRACT DOCUMENTS OR IF GRANTED SPECIAL PERIODS OF TRACK OUTAGE IN ADVANCE. THE CONTRACTOR SHALL SCHEDULE AND PERFORM THE WORK IN AN APPROVED MANNER THAT DOES NOT INTERFERE WITH TRAIN OPERATIONS.
16. ACCESS TO THE WORK SITE AND STORAGE OF MATERIALS AND EQUIPMENT ON THE WORK SITE OR AS SHOWN IN THE DESIGNATED STAGING AREAS SHALL BE APPROVED BY THE ENGINEER.
17. THE CONTRACTOR SHALL KEEP ADJACENT STREETS, STAGING AREA AND TRACK ACCESS AREAS CLEAN OF DIRT AND DEBRIS AND WILL BE RESPONSIBLE FOR ALL MAINTENANCE AND CLEANING OF THESE AREAS DURING THE COURSE OF THE PROJECT.
18. METRO-NORTH SHALL INSPECT ANY "HIGH RAIL" EQUIPMENT PROPOSED TO BE USED BY THE CONTRACTOR. ANY EQUIPMENT DEEMED UNSATISFACTORY BY METRO-NORTH SHALL BE REMOVED FROM THE SITE.
19. THE CONTRACTOR IS MADE AWARE THAT ELECTRIC TRACTION POWER LINES (CATENARY) ARE ABOVE THE TRACK IN THE WORK SITE. MINIMUM CLEARANCE OF 10 FEET TO THESE WIRES DURING CONSTRUCTION MUST BE MAINTAINED.
20. EXISTING STATION VIADUCT AND CONCOURSE BUILDING PLANS ARE AVAILABLE UPON REQUEST FROM CONNECTICUT DEPARTMENT OF TRANSPORTATION, OFFICE OF RAIL.
21. CONTRACTOR IS RESPONSIBLE TO ERECT AND MAINTAIN TEMPORARY BRACING AND/OR SHORING TO ENSURE ALIGNMENT AND STABILITY OF STRUCTURE DURING ERECTION. BRACING AND SHORING DETAILS SHALL BE SUBMITTED FOR APPROVAL, AT THE SAME TIME THAT STEEL ERECTION PROCEDURES ARE SUBMITTED FOR REVIEW.
22. CONTRACTOR IS RESPONSIBLE TO INSTALL TEMPORARY BARRICADES AND GUIDE RAIL SYSTEMS TO PROTECT THE TRAVELING PUBLIC. CONTRACTOR SHALL DESIGN, FABRICATE, INSTALL, REMOVE, AND REINSTALL ALL TEMPORARY GUIDE RAIL AND BARRICADES ON A DAILY BASIS IF REQUIRED TO PROTECT THE PUBLIC AND PERFORM THE WORK. DESIGN LOADS AND DETAILS TO CONFORM TO ALL OSHA REQUIREMENTS.

DESIGN AND CONSTRUCTION STANDARDS:

1. DESIGN CODES: STRUCTURAL DESIGN COMPLIES WITH THE LATEST EDITIONS OF THE FOLLOWING CODES:

   IBC 2012 BUILDING CODE
   AMERICAN CONCRETE INSTITUTE ACI-318-11
   AMERICAN INSTITUTE OF STEEL CONSTRUCTION (AISC) 14TH EDITION
   AMERICAN SOCIETY OF CIVIL ENGINEERS, MINIMUM DESIGN LOADS FOR BUILDINGS AND OTHER STRUCTURES, (ASCE 7-10)
   AMERICAN WELDING SOCIETY (AWS):
   - D1.1-2010 STRUCTURAL WELDING CODE - STEEL
   - D1.2-2008 STRUCTURAL WELDING CODE - ALUMINUM
   - D1.3-2008 STRUCTURAL WELDING CODE - SHEET STEEL
   - D1.4-2011 STRUCTURAL WELDING CODE - REINFORCEMENT
   - D1.5-2010 BRIDGE WELDING CODE

   AMERICAN RAILWAY ENGINEERING AND MAINTENANCE OF WAY ASSOCIATION (AREMA) MANUAL OF RAILWAY ENGINEERING, 2012
   AMERICANS WITH DISABILITIES ACT, ACCESSIBILITY GUIDELINES (ADAAG)
   MTA METRO-NORTH RAILROAD STATION STANDARDS AND GUIDELINES
   AMERICAN SOCIETY FOR TESTING AND MATERIALS (ASTM)

2. DESIGN LOADING:

RAMP AND STAIRS LIVE LOAD	= 100 PSF
PLATFORM LIVE LOAD	= 100 PSF
ROOF LIVE LOAD (SNOW LOAD)	= 28 PSF
CONCOURSE ROOF DRIFT	= 36 PSF
MISC MECHANICAL ELECTRICAL LOAD	= 5 PSF
WIND	= ASCE 7-10
SEISMIC ANALYSIS	= IBC 2012

CONCRETE:

1. ALL CAST-IN-PLACE CONCRETE SHALL HAVE A 28 DAY MINIMUM COMPRESSIVE STRENGTH OF f'_c = 4,400 PSI FOR CLASS "F" CONCRETE AND f'_c = 3,300 PSI FOR CLASS "A" CONCRETE
2. ALL STEEL REINFORCEMENT SHALL BE EPOXY COATED DEFORMED BARS, CONFORMING TO ASTM A615 GRADE 60.
3. ANCHOR BOLTS, DRAIN PIPES, PIPE SLEEVES, ELECTRICAL CONDUITS AND EMBEDDED PARTS SHALL BE IN POSITION BEFORE CONCRETE IS PLACED.
4. ALL SPLICES IN REINFORCEMENTS SHALL COMPLY WITH THE REQUIREMENTS OF ACI-318-11. ALL LAP SPLICES OF REINFORCEMENT SHALL BE AS SHOWN ON DRAWINGS PER ACI.
5. SHIFT OR BEND BARS TO CLEAR ANCHOR BOLTS, DRAINS, PIPE SLEEVES AND EMBEDDED PARTS.
6. GROUT SHALL BE 5000 PSI, NON-SHRINK CEMENTITIOUS TYPE.
7. FOR ANCHOR BOLTS SEE STRUCTURAL STEEL NOTE 12.
8. EXPANSION AND CONTROL JOINTS IN CONCRETE STRUCTURES OTHER THAN SHOWN ON THE PLANS WILL NOT BE PERMITTED UNLESS APPROVED BY THE ENGINEER. ALL EXISTING CONTROL AND EXPANSION JOINTS SHALL BE MAINTAINED.
9. EXPOSED CONCRETE CORNERS SHALL BE CHAMFERED $\frac{3}{4}$", UNLESS NOTED OTHERWISE.
10. FOR DETAILS OF ALL EMBEDDED ITEMS AND OPENING, SEE ARCHITECTURAL AND ELECTRICAL DRAWINGS.
11. ANCHOR BOLTS SHALL BE LOCATED AND SET PLUMB TO WITHIN $\frac{1}{16}$" AND HELD RIGIDLY IN PLACE BY MEANS OF A TEMPLATE.
12. FORMWORK - ALL ACCESSORIES SUCH AS SLAB BOLSTER, CHAIR AND SPACER IN CONTACT WITH EXPOSED SURFACES SHALL HAVE PLASTIC COATED TIPS.
13. THE CONTRACTOR MUST SUBMIT A CONCRETE PLACEMENT PROCEDURE PLAN FOR REVIEW AND APPROVAL. ANY CONCRETE POUR THAT WOULD REQUIRE GREATER THAN 15 FEET OF CHUTE WILL HAVE TO BE PUMPED UNLESS APPROVED BY THE ENGINEER. CONCRETE SHALL NOT BE DROPPED MORE THAN 4 FEET.
14. THE TOP SURFACE OF THE EAST AND WEST PLATFORM DECK SHALL BE PREPARED AND RESURFACED WITH STIRLING LLOYD BRIDGEMASTER WEARING COURSE (OR APPROVED EQUAL).
15. CORE DRILL ALL HOLES INTO AND/OR THROUGH THE EXISTING CONCRETE PLATFORM DECK FOR ANCHORS, CONDUIT, PENETRATIONS, ETC. DRILLING THROUGH DECK WILL NOT BE ALLOWED.

STRUCTURAL STEEL:

1. THE FABRICATOR SHALL BE AN AISC CERTIFIED FABRICATOR (SIMPLE BUILDINGS).
2. ALL STRUCTURAL STEEL SHALL BE IN ACCORDANCE WITH THE FOLLOWING:

FOR HSS SHAPES:	ASTM A500, GRADE B (F_y = 46 KSI; F_u = 58KSI)
FOR HP SHAPES:	ASTM A572, GRADE 50 (F_y = 50 KSI; F_u = 65KSI)
FOR W SHAPES:	ASTM A992.
FOR M, S, C, MC AND L SHAPES:	ASTM A36.
STRUCTURAL PLATES AND BARS:	ASTM A36.

3. DESIGN, FABRICATION AND ERECTION OF STRUCTURAL STEEL SHALL BE IN ACCORDANCE WITH THE AISC SPECIFICATIONS, AISC CODE OF STANDARD PRACTICE AND THE CONTRACT DOCUMENTS.
4. ALL WELDING MUST BE CONTINUOUS TO PREVENT WATER INFILTRATION. PROVIDE $\frac{1}{2}$" DIA. WEEP HOLES ALONG THE UNDERSIDE OF HSS MEMBERS EVERY 10' O.C., OR MINIMUM OF 1 HOLE FOR SHORTER LENGTHS, AT ITS LOW POINT.
5. SIZES AND LOCATIONS OF PIPE SLEEVES, CONDUITS AND OTHER OPENINGS IN SLABS OR FLOORS NOT SHOWN ON STRUCTURAL DRAWINGS SHALL BE ESTABLISHED FROM THE DESIGN DRAWINGS OF THE OTHER DISCIPLINES. DIMENSIONS AND LOCATIONS OF STRUCTURAL MEMBERS AND EMBEDDED ITEMS REQUIRED FOR PENETRATIONS AND SUPPORT SHALL BE COORDINATED AND VERIFIED WITH EQUIPMENT MANUFACTURERS AND APPROVED SHOP DRAWINGS PRIOR TO ERECTION.
6. WHEN FIELD WELDING IS PERMITTED, THE SHOP COAT OF PAINT SHALL BE OMITTED FOR A DISTANCE OF 3" BACK FROM THE WELDING EDGE. FIELD WELDING SHALL BE MINIMIZED.
7. GROUT UNDER BASE PLATE SHALL BE 1" MINIMUM, UNLESS NOTED OTHERWISE.
8. FOR FIELD PAINTING - STRUCTURAL STEEL SURFACE, INCLUDING BOLTS AND WELD, SHALL BE GIVEN ONE COAT OF PRIMER IN ACCORDANCE WITH THE PROCEDURES AS SPECIFIED IN THE AISC MANUAL AND CONTRACT DOCUMENTS. PRIMER TO BE APPLIED ONLY AFTER CONNECTION IS COMPLETED, UNLESS NOTED OTHERWISE. PRIMER SHALL BE COMPATIBLE WITH PAINT SYSTEM.
9. NO FIELD CUTTING IS ALLOWED WITH A WELDING TORCH, UNLESS APPROVED BY THE ENGINEER.
10. BOLTS SHALL NOT BE REUSED. BOLTS AND UNPAINTED STEEL IN A JOINT SHALL BE PAINTED WITH PRIMER IMMEDIATELY AFTER A CONNECTION IS TESTED AND ACCEPTED.
11. UNLESS SPECIFIED OTHERWISE ALL BOLTS SHALL BE $\frac{3}{4}$" DIAMETER SLIP CRITICAL A325 GALVANIZED BOLTS IN STANDARD HOLES. "N" DESIGNATION REFERS TO BEARING TYPE CONNECTIONS.
12. ALL CAST-IN-PLACE AND DRILLED IN ANCHOR BOLTS SHALL BE F_y = 55 KSI GALVANIZED STEEL AND CONFORM TO ASTM F1554. THE HEAVY HEX NUTS SHALL CONFORM TO ASTM A563A. WASHERS SHALL CONFORM TO ASTM F436.
13. WHERE FILLET WELD SIZES ARE NOT SHOWN ON DRAWING, MINIMUM SIZE OF FILLET WELD SHALL BE PROVIDED AS FOLLOWS:

    MINIMUM FILLET WELD SIZE FOR PRE-QUALIFIED JOINTS

BASE METAL THICKNESS*	WELD SIZE
$T \leq \frac{1}{4}$"	$\frac{1}{8}$"
$\frac{1}{4} < T \leq \frac{1}{2}$"	$\frac{3}{16}$"
$\frac{1}{2} < T \leq \frac{3}{4}$"	$\frac{1}{4}$"
$\frac{3}{4}$" $< T$	$\frac{5}{16}$"

FOR LOW HYDROGEN PROCESS, FOR NON-LOW HYDROGEN PROCESS USING PREHEAT AND INTER-PASS *TEMPERATURE PER AWS 4.2.2, T = THICKNESS OF THINNER PART JOINED; OTHERWISE T = THICKNESS OF THICKER PART JOINED

14. ALL EDGES OF PLATES TO BE ROUNDED (CHAMFERED) TO A MINIMUM RADIUS OF $\frac{1}{16}$TH INCH.
15. METAL ROOF DECK AND FLOOR DECK TO BE DESIGNED FOR ALL LOADS SPECIFIED ABOVE AND SHALL PROVIDE MINIMUM LATERAL BRACING (DIAPHRAGM) LOAD OF 100 POUNDS PER LINEAR FOOT. DECK SHALL CONFORM TO METAL ROOF DECK SPECIFICATION AND STEEL DECK INSTITUTE DESIGN MANUAL.
16. A $\frac{1}{16}$TH INCH CLOSURE PLATE SHALL BE WELDED TO THE ENDS OF ALL OPEN TUBE SECTIONS.
17. WHERE OVERSIZED HOLES ARE SPECIFIED USE HARDENED WASHERS UNDER BOLT HEAD AND NUT.
18. STRUCTURAL FRAMING SYSTEM HAS BEEN DEVELOPED BASED ON THE USE OF A 3" DEEP CELLULAR ROOF DECK. CONTRACTOR IS RESPONSIBLE TO ADJUST THE FRAMING SYSTEM AS REQUIRED TO SUIT ACTUAL ROOF DECK THICKNESS PROVIDED.
19. ALL STRUCTURAL STEEL SHALL BE PRIMED AND PAINTED IN ACCORDANCE WITH CSI SPECIFICATIONS, UNLESS NOTED OTHERWISE.

REV.	DATE	REVISION DESCRIPTION	SHEET NO.
-	-	-	-
-	-	-	-
-	-	-	-
-	-	-	-
-	-	-	-
-	-	-	-

THE INFORMATION, INCLUDING ESTIMATED QUANTITIES OF WORK, SHOWN ON THESE SHEETS IS BASED ON LIMITED INVESTIGATIONS BY THE STATE AND IS IN NO WAY WARRANTED TO INDICATE THE CONDITIONS OF ACTUAL QUANTITIES OF WORK WHICH WILL BE REQUIRED.

PLOTTED: 3/31/2014

DESIGNER/DRAFTER: B. HAMAN
CHECKED BY: D. GRIFFIN
SCALE AS NOTED

STATE OF CONNECTICUT
DEPARTMENT OF TRANSPORTATION

FILENAME: ...\301155_04_02_STRUCTURAL_NOTES.DGN

LOCHNER
H.W. LOCHNER, INC
2110 Silas Deane Highway
Rocky Hill, CT 06067

APPROVED BY: BEB
DATE: 4/2/2014

PROJECT TITLE:
INSTALLATION OF CANOPY AT BRIDGEPORT STATION

TOWN: **BRIDGEPORT**

DRAWING TITLE: **STRUCTURAL NOTES**

PROJECT NO. **301-155**
DRAWING NO. **S-2**
SHEET NO. **04.02**

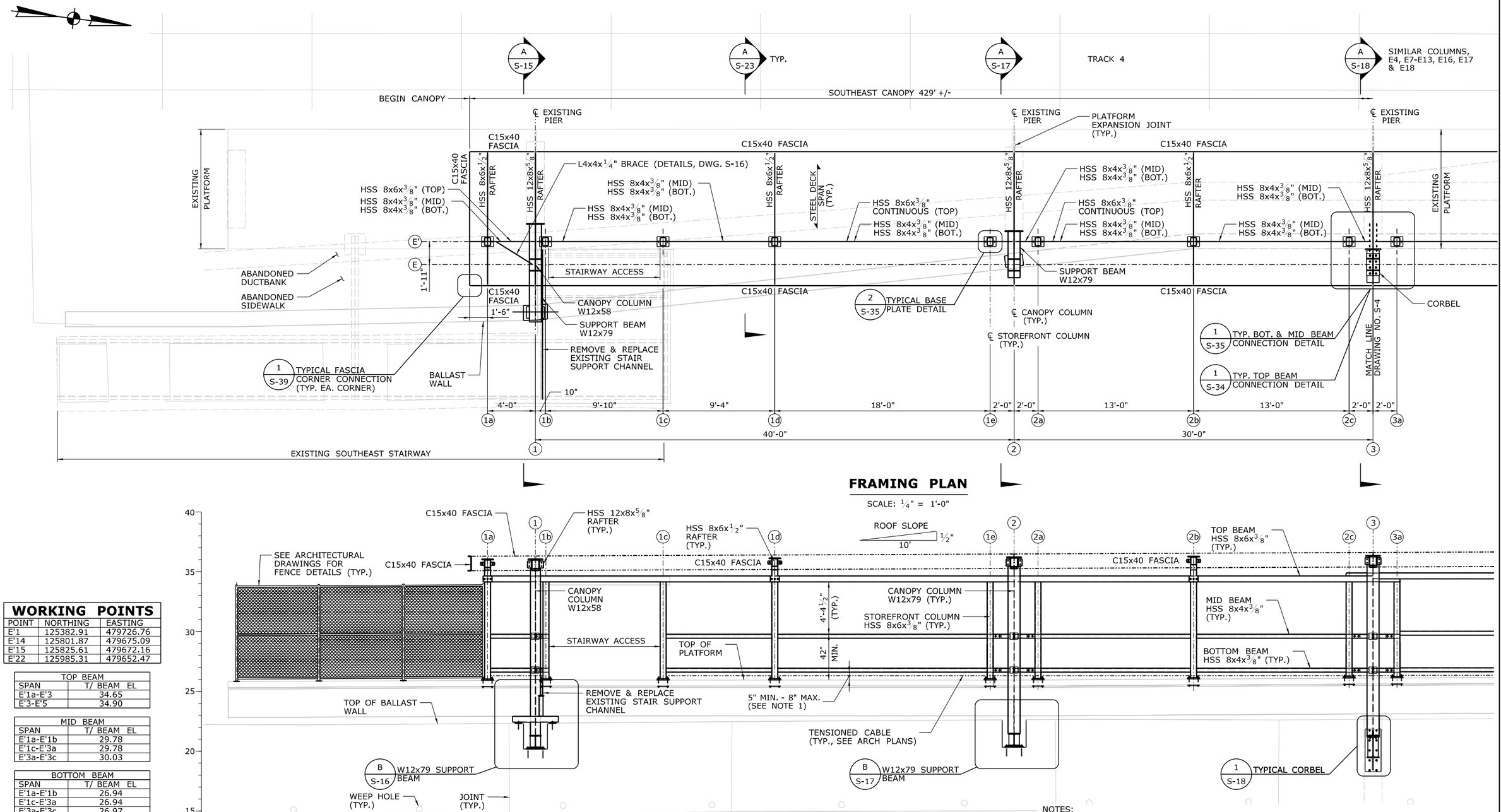

FRAMING PLAN

SCALE: 1/4" = 1'-0"

ELEVATION

(LOOKING WEST)

SCALE: 1/4" = 1'-0"

WORKING POINTS

POINT	NORTHING	EASTING
E'1	125382.91	479726.76
E'14	125801.87	479675.09
E'15	125825.61	479672.16
E'22	125985.31	479652.47

TOP BEAM	
SPAN	T/ BEAM EL
E'1a-E'3	34.65
E'3-E'5	34.90

MID BEAM	
SPAN	T/ BEAM EL
E'1a-E'1b	29.78
E'1c-E'3a	29.78
E'3a-E'3c	30.03

BOTTOM BEAM	
SPAN	T/ BEAM EL
E'1a-E'1b	26.94
E'1c-E'3a	26.94
E'3a-E'3c	26.97

PLATFORM	
LOCATION	T/ PLATFORM EL
E'1	25.93
E'2	25.94
E'3	26.11

NOTES:

1. DIMENSION VARIES TO ACCOMMODATE PLATFORM SLOPE.
2. WORKING POINTS AND TOP OF PLATFORM ELEVATION POINTS ARE LOCATED AT THE INTERSECTION OF COLUMN LINES AND LINE E'.
3. ASSUMED TOP OF PLATFORM ELEVATION(S) SHOWN ARE BASED ON LIMITED SURVEY. CONTRACTOR SHALL CONFIRM ELEVATION(S) PRIOR TO CREATING SHOP DRAWINGS AND PROVIDE ELEVATIONS THAT VARY GREATER THAN 1/4" FROM THOSE SHOWN IN THESE PLANS.

REV.	DATE	REVISION DESCRIPTION	SHEET NO.

THE INFORMATION, INCLUDING ESTIMATED QUANTITIES OF WORK, SHOWN ON THESE SHEETS IS BASED ON LIMITED INVESTIGATIONS BY THE STATE AND IS IN NO WAY WARRANTED TO INDICATE THE CONDITIONS OF ACTUAL QUANTITIES OF WORK WHICH WILL BE REQUIRED.

PLOTTED: 3/31/2014

DESIGNER/DRAFTER: B. HAMAN
CHECKED BY: D. GRIFFIN
SCALE AS NOTED

STATE OF CONNECTICUT
DEPARTMENT OF TRANSPORTATION

FILENAME: ...\301155_04_04_EB_PLAN_FRAMING.dgn

LOCHNER
H.W. LOCHNER, INC
2110 Silas Deane Highway
Rocky Hill, CT 06067

APPROVED BY: BEB
DATE: 4/2/2014

PROJECT TITLE:
INSTALLATION OF CANOPY AT BRIDGEPORT STATION

TOWN: **BRIDGEPORT**

PROJECT NO. **301-155**

DRAWING NO. **S-3**

DRAWING TITLE: **EASTBOUND CANOPY FRAMING PLAN I**

SHEET NO. **04.03**

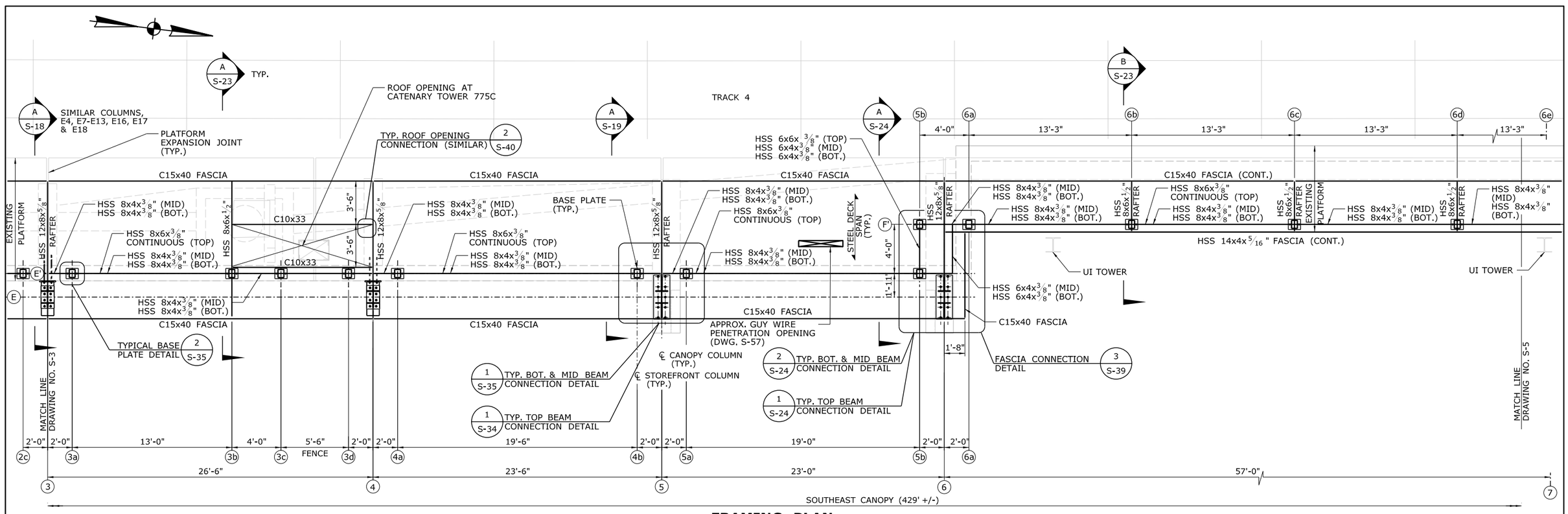

FRAMING PLAN

SCALE: 1/4" = 1'-0"

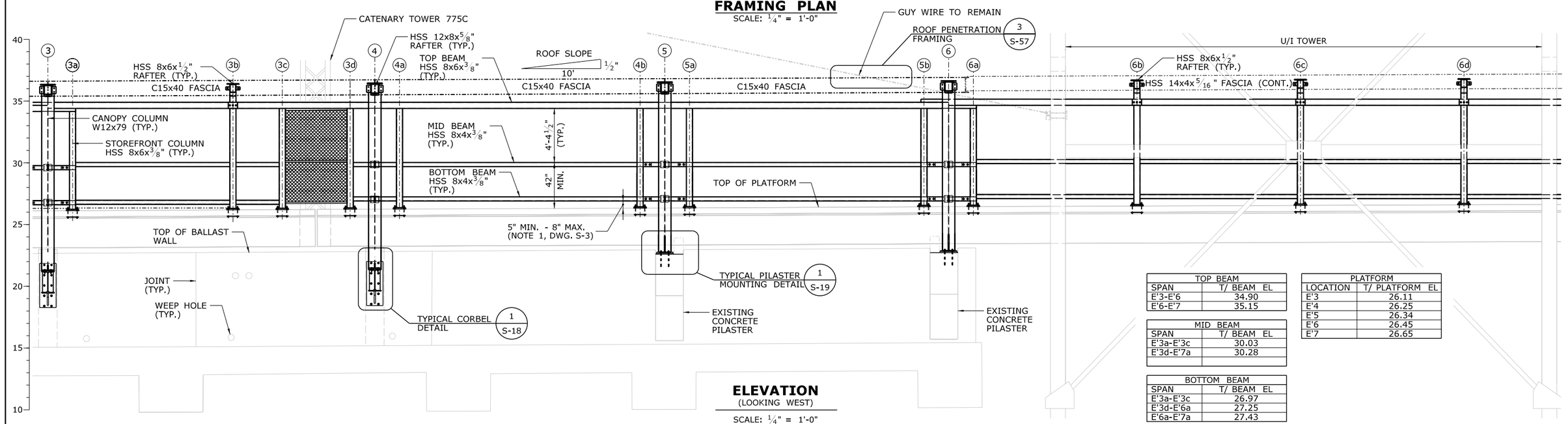

ELEVATION

(LOOKING WEST)

SCALE: 1/4" = 1'-0"

TOP BEAM	
SPAN	T/ BEAM EL
E'3-E'6	34.90
E'6-E'7	35.15

MID BEAM	
SPAN	T/ BEAM EL
E'3a-E'3c	30.03
E'3d-E'7a	30.28

BOTTOM BEAM	
SPAN	T/ BEAM EL
E'3a-E'3c	26.97
E'3d-E'6a	27.25
E'6a-E'7a	27.43

PLATFORM	
LOCATION	T/ PLATFORM EL
E'3	26.11
E'4	26.25
E'5	26.34
E'6	26.45
E'7	26.65

REV.	DATE	REVISION DESCRIPTION	SHEET NO.
-	-	-	-
-	-	-	-
-	-	-	-
-	-	-	-
-	-	-	-
-	-	-	-

THE INFORMATION, INCLUDING ESTIMATED QUANTITIES OF WORK, SHOWN ON THESE SHEETS IS BASED ON LIMITED INVESTIGATIONS BY THE STATE AND IS IN NO WAY WARRANTED TO INDICATE THE CONDITIONS OF ACTUAL QUANTITIES OF WORK WHICH WILL BE REQUIRED.

PLOTTED: 3/31/2014

DESIGNER/DRAFTER: B. HAMAN
CHECKED BY: D. GRIFFIN
SCALE AS NOTED

STATE OF CONNECTICUT
DEPARTMENT OF TRANSPORTATION

FILENAME: ...\301155_04_04_EB_PLAN_FRAMING.dgn

LOCHNER
H.W. LOCHNER, INC
2110 Silas Deane Highway
Rocky Hill, CT 06067

APPROVED BY: BEB
DATE: 4/2/2014

PROJECT TITLE:
INSTALLATION OF CANOPY AT BRIDGEPORT STATION

TOWN: **BRIDGEPORT**

DRAWING TITLE: **EASTBOUND CANOPY FRAMING PLAN II**

PROJECT NO. **301-155**
DRAWING NO. **S-4**
SHEET NO. **04.04**

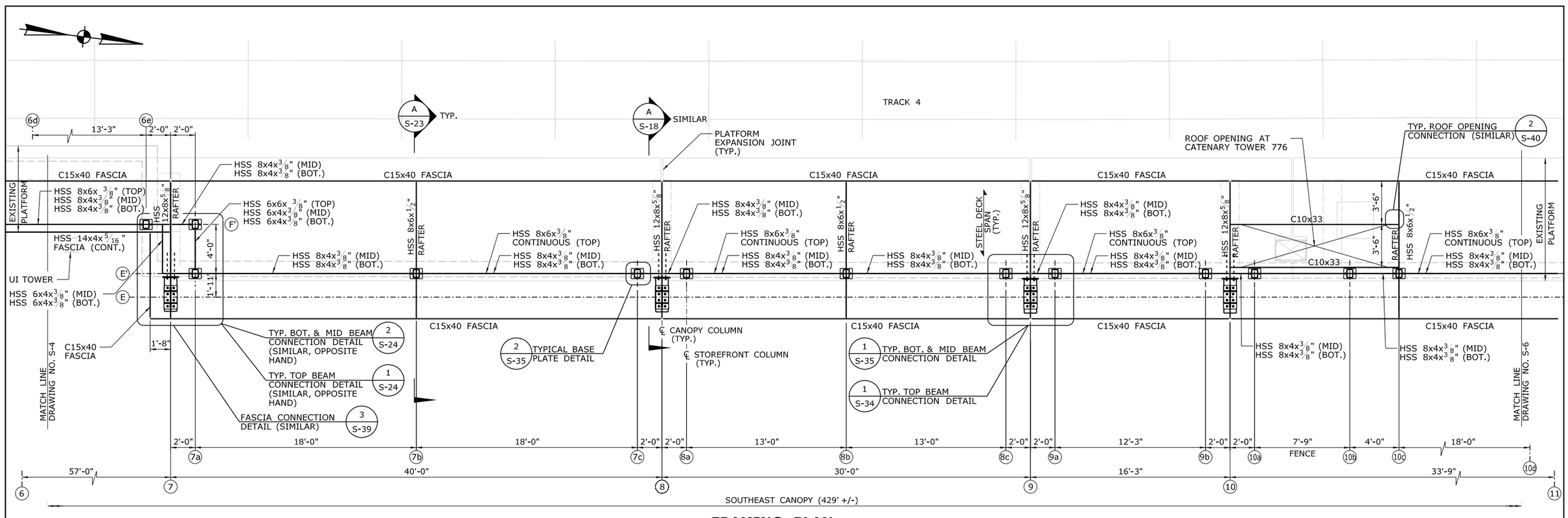

FRAMING PLAN

SCALE: 1/4" = 1'-0"

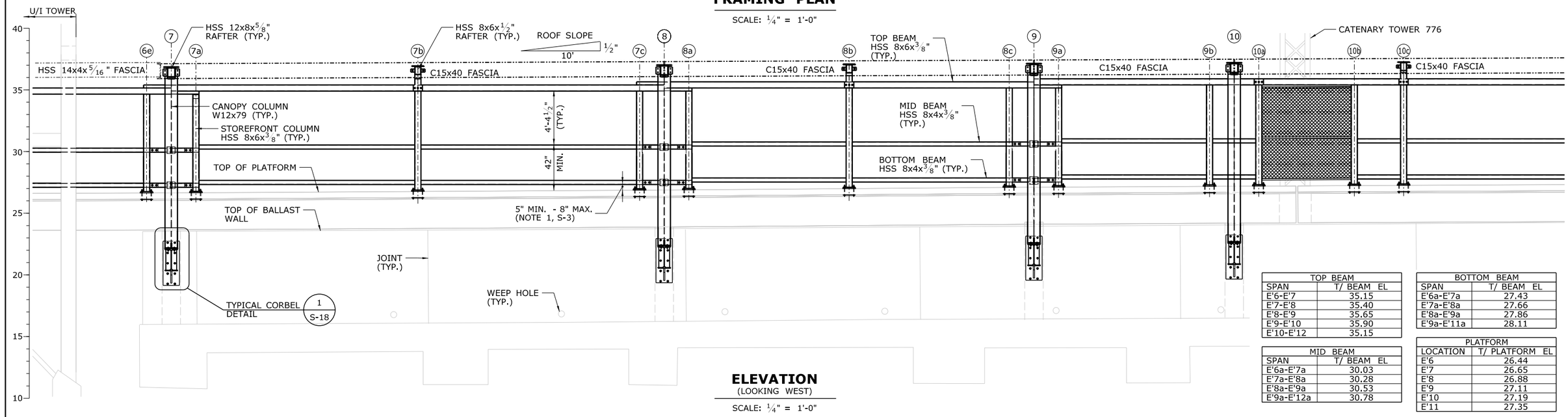

ELEVATION

(LOOKING WEST)

SCALE: 1/4" = 1'-0"

TOP BEAM	
SPAN	T/ BEAM EL
E'6-E'7	35.15
E'7-E'8	35.40
E'8-E'9	35.65
E'9-E'10	35.90
E'10-E'12	35.15

MID BEAM	
SPAN	T/ BEAM EL
E'6a-E'7a	30.03
E'7a-E'8a	30.28
E'8a-E'9a	30.53
E'9a-E'12a	30.78

BOTTOM BEAM	
SPAN	T/ BEAM EL
E'6a-E'7a	27.43
E'7a-E'8a	27.66
E'8a-E'9a	27.86
E'9a-E'11a	28.11

PLATFORM	
LOCATION	T/ PLATFORM EL
E'6	26.44
E'7	26.65
E'8	26.88
E'9	27.11
E'10	27.19
E'11	27.35

REV.	DATE	REVISION DESCRIPTION	SHEET NO.
-	-	-	-
-	-	-	-
-	-	-	-
-	-	-	-
-	-	-	-
-	-	-	-

THE INFORMATION, INCLUDING ESTIMATED QUANTITIES OF WORK, SHOWN ON THESE SHEETS IS BASED ON LIMITED INVESTIGATIONS BY THE STATE AND IS IN NO WAY WARRANTED TO INDICATE THE CONDITIONS OF ACTUAL QUANTITIES OF WORK WHICH WILL BE REQUIRED.

PLOTTED: 3/31/2014

DESIGNER/DRAFTER: B. HAMAN
CHECKED BY: D. GRIFFIN
SCALE AS NOTED

STATE OF CONNECTICUT
DEPARTMENT OF TRANSPORTATION

FILENAME: ...\301155_04_04_EB_PLAN_FRAMING.dgn

LOCHNER
H.W. LOCHNER, INC
2110 Silas Deane Highway
Rocky Hill, CT 06067

APPROVED BY: BEB
DATE: 4/2/2014

PROJECT TITLE:
INSTALLATION OF CANOPY AT BRIDGEPORT STATION

TOWN: **BRIDGEPORT**

DRAWING TITLE:
EASTBOUND CANOPY FRAMING PLAN III

PROJECT NO. **301-155**
DRAWING NO. **S-5**
SHEET NO. **04.05**

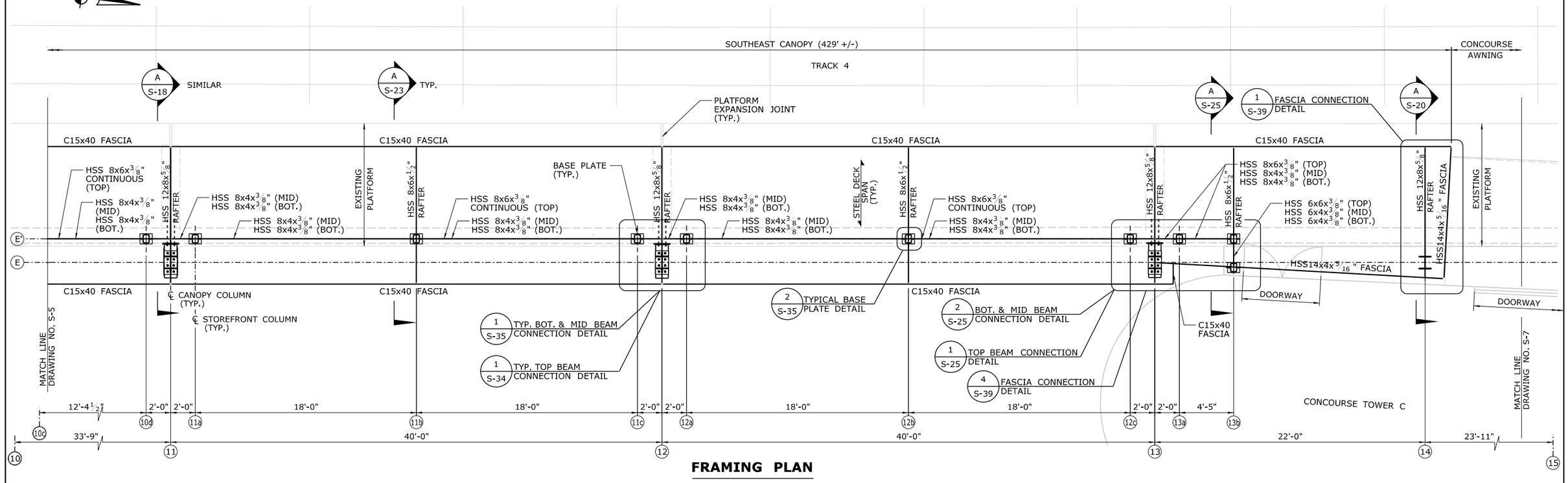

FRAMING PLAN

SCALE: 1/4" = 1'-0"

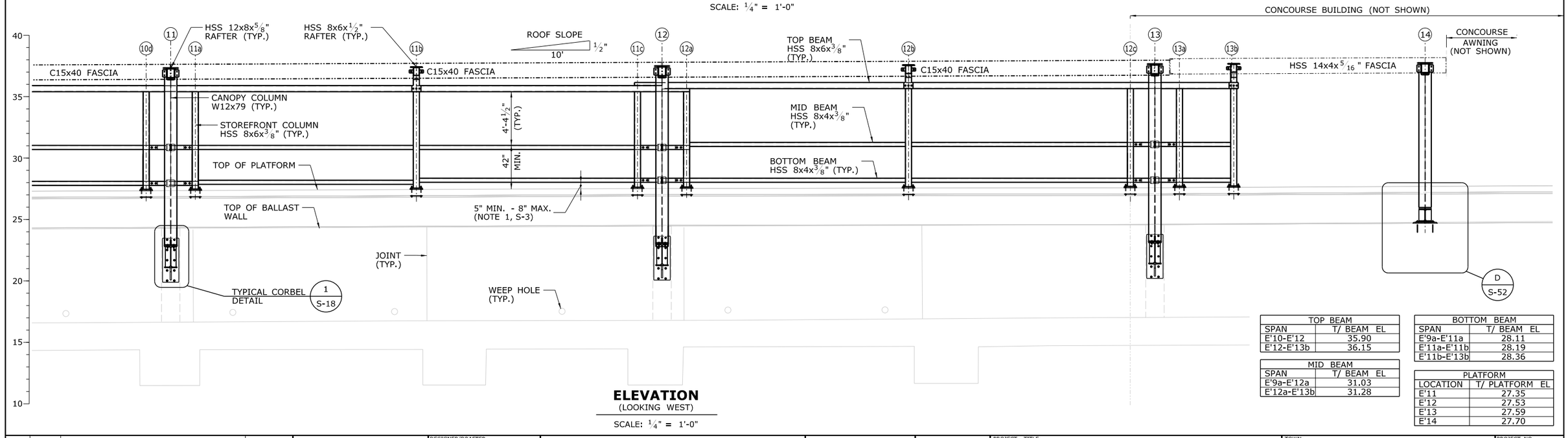

ELEVATION

(LOOKING WEST)

SCALE: 1/4" = 1'-0"

TOP BEAM	
SPAN	T/ BEAM EL
E'10-E'12	35.90
E'12-E'13b	36.15

MID BEAM	
SPAN	T/ BEAM EL
E'9a-E'12a	31.03
E'12a-E'13b	31.28

BOTTOM BEAM	
SPAN	T/ BEAM EL
E'9a-E'11a	28.11
E'11a-E'11b	28.19
E'11b-E'13b	28.36

PLATFORM	
LOCATION	T/ PLATFORM EL
E'11	27.35
E'12	27.53
E'13	27.59
E'14	27.70

REV.	DATE	REVISION DESCRIPTION	SHEET NO.
-	-	-	-
-	-	-	-
-	-	-	-
-	-	-	-
-	-	-	-
-	-	-	-

THE INFORMATION, INCLUDING ESTIMATED QUANTITIES OF WORK, SHOWN ON THESE SHEETS IS BASED ON LIMITED INVESTIGATIONS BY THE STATE AND IS IN NO WAY WARRANTED TO INDICATE THE CONDITIONS OF ACTUAL QUANTITIES OF WORK WHICH WILL BE REQUIRED.

PLOTTED: 3/31/2014

DESIGNER/DRAFTER: B. HAMAN
CHECKED BY: D. GRIFFIN
SCALE AS NOTED

STATE OF CONNECTICUT
DEPARTMENT OF TRANSPORTATION

FILENAME: ...\301155_04_04_EB_PLAN_FRAMING.dgn

LOCHNER
H.W. LOCHNER, INC
2110 Silas Deane Highway
Rocky Hill, CT 06067

APPROVED BY: BEB
DATE: 4/2/2014

PROJECT TITLE:
INSTALLATION OF CANOPY AT BRIDGEPORT STATION

TOWN: **BRIDGEPORT**

DRAWING TITLE:
EASTBOUND CANOPY FRAMING PLAN IV

PROJECT NO. **301-155**
DRAWING NO. **S-6**
SHEET NO. **04.06**

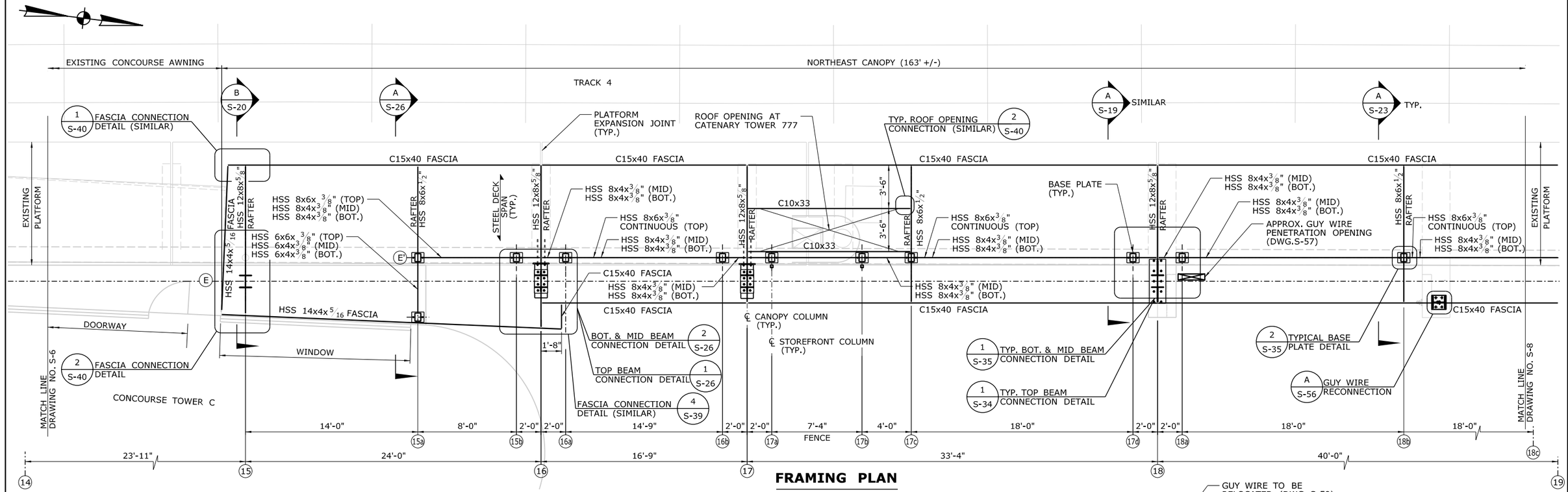

FRAMING PLAN

SCALE: 1/4" = 1'-0"

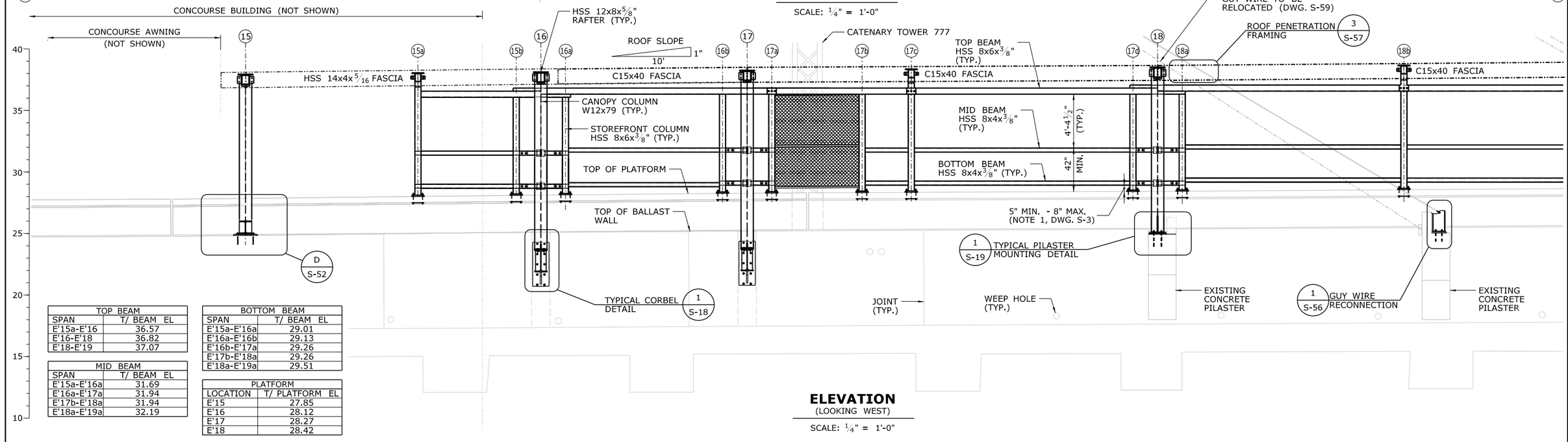

ELEVATION

(LOOKING WEST)

SCALE: 1/4" = 1'-0"

TOP BEAM	
SPAN	T/ BEAM EL
E'15a-E'16	36.57
E'16-E'18	36.82
E'18-E'19	37.07

MID BEAM	
SPAN	T/ BEAM EL
E'15a-E'16a	31.69
E'16a-E'17a	31.94
E'17b-E'18a	31.94
E'18a-E'19a	32.19

BOTTOM BEAM	
SPAN	T/ BEAM EL
E'15a-E'16a	29.01
E'16a-E'16b	29.13
E'16b-E'17a	29.26
E'17b-E'18a	29.26
E'18a-E'19a	29.51

PLATFORM	
LOCATION	T/ PLATFORM EL
E'15	27.85
E'16	28.12
E'17	28.27
E'18	28.42

REV.	DATE	REVISION DESCRIPTION	SHEET NO.
-	-	-	-
-	-	-	-
-	-	-	-
-	-	-	-
-	-	-	-
-	-	-	-

THE INFORMATION, INCLUDING ESTIMATED QUANTITIES OF WORK, SHOWN ON THESE SHEETS IS BASED ON LIMITED INVESTIGATIONS BY THE STATE AND IS IN NO WAY WARRANTED TO INDICATE THE CONDITIONS OF ACTUAL QUANTITIES OF WORK WHICH WILL BE REQUIRED.

PLOTTED: 3/31/2014

DESIGNER/DRAFTER: B. HAMAN
CHECKED BY: D. GRIFFIN
SCALE AS NOTED

STATE OF CONNECTICUT
DEPARTMENT OF TRANSPORTATION

FILENAME: ...\301155_04_04_EB_PLAN_FRAMING.dgn

LOCHNER
H.W. LOCHNER, INC
2110 Silas Deane Highway
Rocky Hill, CT 06067

APPROVED BY: BEB
DATE: 4/2/2014

PROJECT TITLE:
INSTALLATION OF CANOPY AT BRIDGEPORT STATION

TOWN: **BRIDGEPORT**

DRAWING TITLE: **EASTBOUND CANOPY FRAMING PLAN V**

PROJECT NO. **301-155**
DRAWING NO. **S-7**
SHEET NO. **04.07**

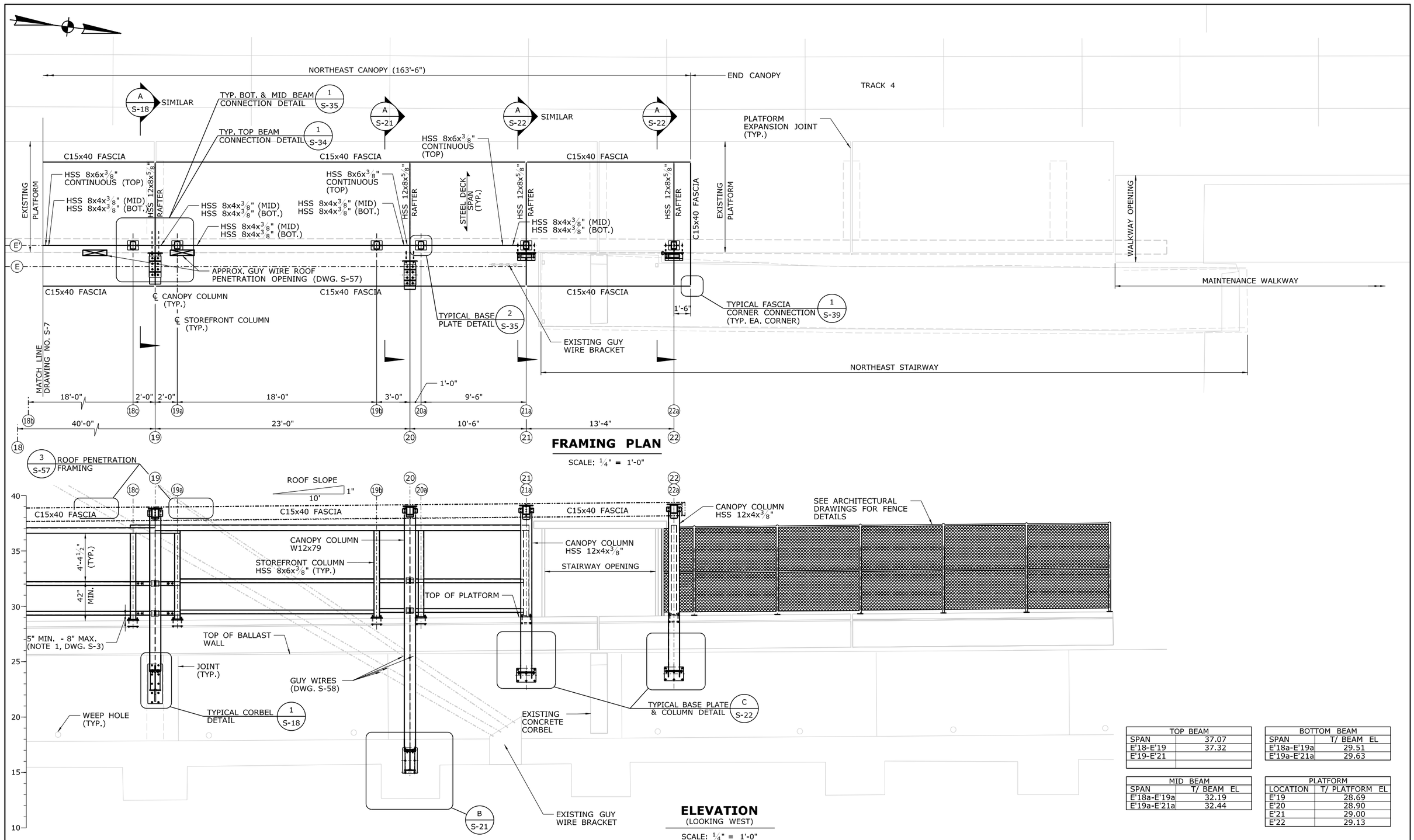

FRAMING PLAN

SCALE: 1/4" = 1'-0"

ELEVATION

(LOOKING WEST)

SCALE: 1/4" = 1'-0"

TOP BEAM	
SPAN	37.07
E'18-E'19	37.32
E'19-E'21	

BOTTOM BEAM	
SPAN	T/ BEAM EL
E'18a-E'19a	29.51
E'19a-E'21a	29.63

MID BEAM	
SPAN	T/ BEAM EL
E'18a-E'19a	32.19
E'19a-E'21a	32.44

PLATFORM	
LOCATION	T/ PLATFORM EL
E'19	28.69
E'20	28.90
E'21	29.00
E'22	29.13

REV.	DATE	REVISION DESCRIPTION	SHEET NO.

THE INFORMATION, INCLUDING ESTIMATED QUANTITIES OF WORK, SHOWN ON THESE SHEETS IS BASED ON LIMITED INVESTIGATIONS BY THE STATE AND IS IN NO WAY WARRANTED TO INDICATE THE CONDITIONS OF ACTUAL QUANTITIES OF WORK WHICH WILL BE REQUIRED.

PLOTTED: 3/31/2014

DESIGNER/DRAFTER: B. HAMAN
CHECKED BY: D. GRIFFIN
SCALE AS NOTED

STATE OF CONNECTICUT
DEPARTMENT OF TRANSPORTATION

FILENAME: ...\301155_04_04_EB_PLAN_FRAMING.dgn

LOCHNER
H.W. LOCHNER, INC
2110 Silas Deane Highway
Rocky Hill, CT 06067

APPROVED BY: BEB
DATE: 4/2/2014

PROJECT TITLE:
INSTALLATION OF CANOPY AT BRIDGEPORT STATION

TOWN: **BRIDGEPORT**

DRAWING TITLE:
EASTBOUND CANOPY FRAMING PLAN VI

PROJECT NO. **301-155**
DRAWING NO. **S-8**
SHEET NO. **04.08**

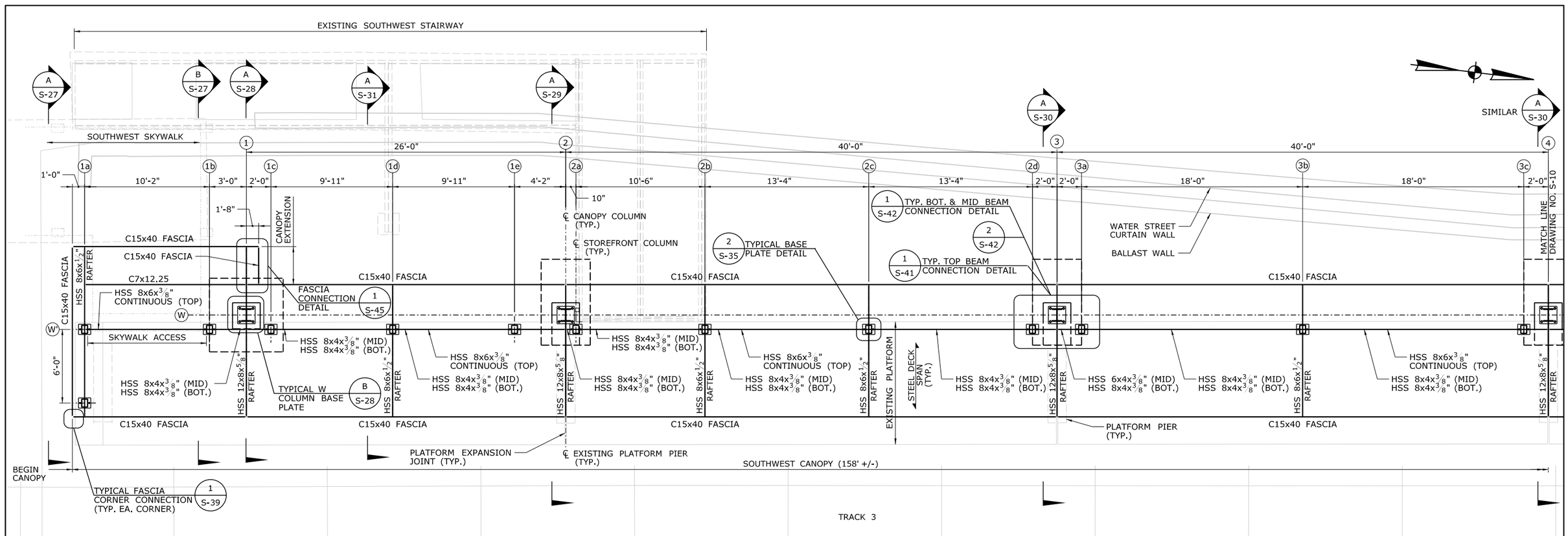

FRAMING PLAN

SCALE: 1/4" = 1'-0"

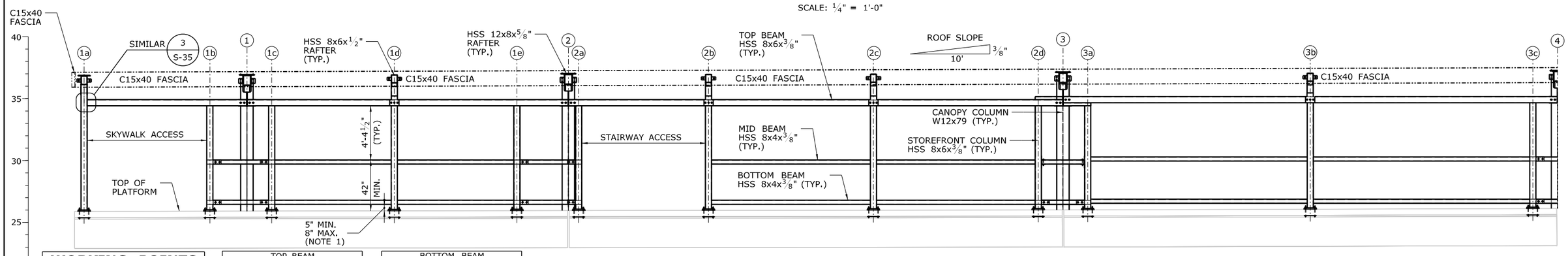

ELEVATION

(LOOKING WEST)

SCALE: 1/4" = 1'-0"

WORKING POINTS

POINT	NORTHING	EASTING
W'1	125348.99	479664.009
W'5	125493.90	479646.139
W'12	125771.79	479611.868
W'13	125811.49	479606.972
W'18	126015.70	479581.787

TOP BEAM	
SPAN	T/ BEAM EL
W'1a-W'3	34.93
W'3-W'6	35.18

MID BEAM	
SPAN	T/ BEAM EL
W'1a-W'3	30.06
W'3-W'6	30.31

BOTTOM BEAM	
SPAN	T/ BEAM EL
W'1b-W'2a	26.79
W'2b-W'3a	26.88
W'3a-W'4a	26.96

PLATFORM	
LOCATION	T/ PLATFORM EL
W'1	25.91
W'2	25.96
W'3	26.02

NOTES:

1. DIMENSION VARIES TO ACCOMMODATE PLATFORM SLOPE.
2. WORKING POINTS AND TOP OF PLATFORM ELEVATION POINTS ARE LOCATED AT THE INTERSECTION OF COLUMN LINES AND LINE W'.
3. ASSUMED TOP OF PLATFORM ELEVATION(S) SHOWN ARE BASED ON LIMITED SURVEY. CONTRACTOR SHALL CONFIRM ELEVATION(S) PRIOR TO CREATING SHOP DRAWINGS AND PROVIDE ELEVATIONS THAT VARY GREATER THAN 1/4" FROM THOSE SHOWN IN THESE PLANS.

REV.	DATE	REVISION DESCRIPTION	SHEET NO.

THE INFORMATION, INCLUDING ESTIMATED QUANTITIES OF WORK, SHOWN ON THESE SHEETS IS BASED ON LIMITED INVESTIGATIONS BY THE STATE AND IS IN NO WAY WARRANTED TO INDICATE THE CONDITIONS OF ACTUAL QUANTITIES OF WORK WHICH WILL BE REQUIRED.

PLOTTED: 3/31/2014

DESIGNER/DRAFTER: B. HAMAN
CHECKED BY: D. GRIFFIN
SCALE AS NOTED

STATE OF CONNECTICUT
DEPARTMENT OF TRANSPORTATION

FILENAME: ...\301155_04_10_WB_PLAN_FRAMING.dgn

LOCHNER
H.W. LOCHNER, INC
2110 Silas Deane Highway
Rocky Hill, CT 06067

APPROVED BY: BEB
DATE: 4/2/2014

PROJECT TITLE:
INSTALLATION OF CANOPY AT BRIDGEPORT STATION

TOWN: **BRIDGEPORT**

DRAWING TITLE: **WESTBOUND CANOPY FRAMING PLAN I**

PROJECT NO. **301-155**
DRAWING NO. **S-9**
SHEET NO. **04.09**

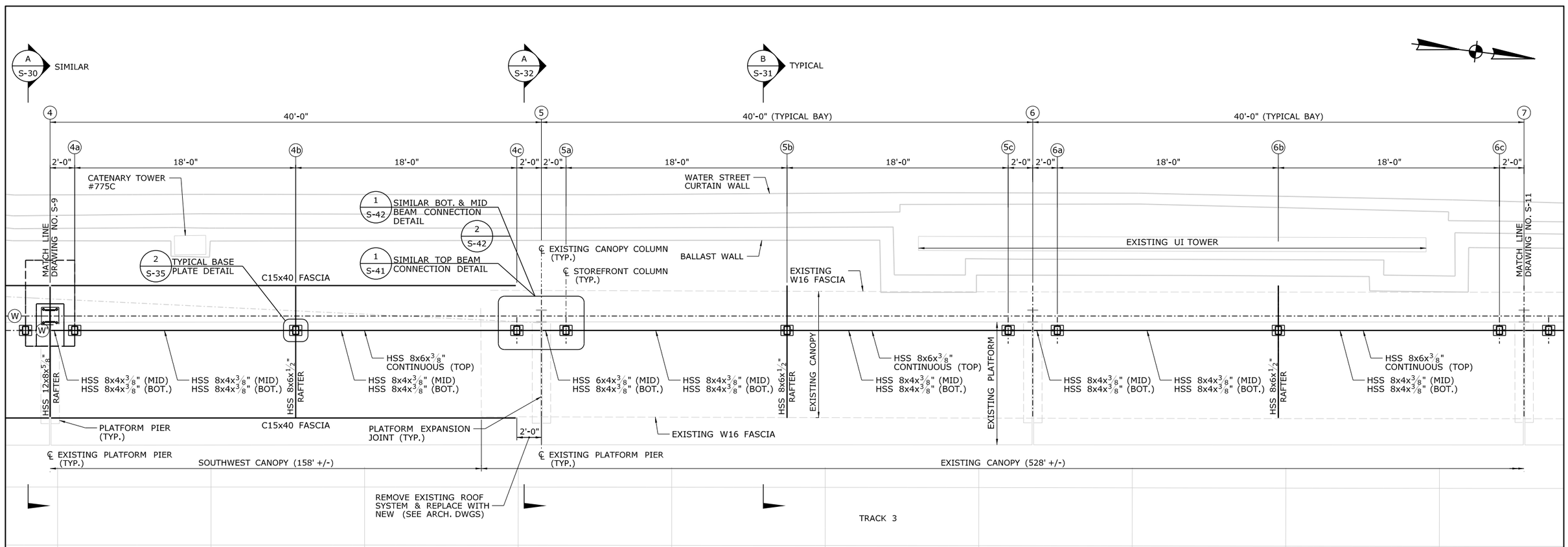

FRAMING PLAN

SCALE: 1/4" = 1'-0"

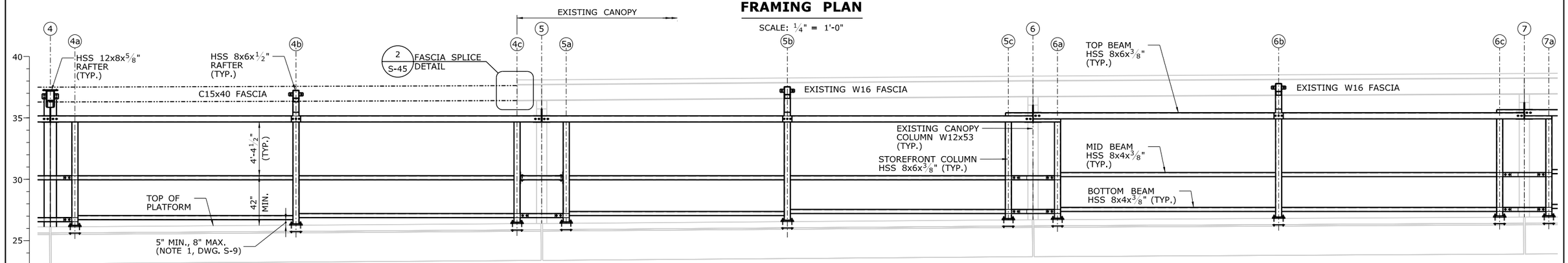

TOP BEAM	
SPAN	T/ BEAM EL
W'3-W'6	35.17
W'6-W'7	35.42
W'7-W'9	35.67

MID BEAM	
SPAN	T/ BEAM EL
W'3-W'6	30.55
W'6-W'7	30.71
W'7-W'9	30.96

BOTTOM BEAM	
SPAN	T/ BEAM EL
W'4a-W'4b	27.30
W'4b-W'5a	27.47
W'5a-W'5b	27.63
W'5b-W'6a	27.80
W'6a-W'7a	28.13

PLATFORM	
LOCATION	T/ PLATFORM EL
W'4	26.14
W'5	26.42
W'6	26.73
W'7	26.95

ELEVATION

(LOOKING WEST)

SCALE: 1/4" = 1'-0"

REV.	DATE	REVISION DESCRIPTION	SHEET NO.

THE INFORMATION, INCLUDING ESTIMATED QUANTITIES OF WORK, SHOWN ON THESE SHEETS IS BASED ON LIMITED INVESTIGATIONS BY THE STATE AND IS IN NO WAY WARRANTED TO INDICATE THE CONDITIONS OF ACTUAL QUANTITIES OF WORK WHICH WILL BE REQUIRED.

PLOTTED: 3/31/2014

DESIGNER/DRAFTER: B. HAMAN
CHECKED BY: D. GRIFFIN
SCALE AS NOTED

STATE OF CONNECTICUT
DEPARTMENT OF TRANSPORTATION

FILENAME: ...\301155_04_10_WB_PLAN_FRAMING.dgn

LOCHNER
H.W. LOCHNER, INC
2110 Silas Deane Highway
Rocky Hill, CT 06067

APPROVED BY: BEB
DATE: 4/2/2014

PROJECT TITLE:
INSTALLATION OF CANOPY AT BRIDGEPORT STATION

TOWN: **BRIDGEPORT**

DRAWING TITLE:
WESTBOUND CANOPY FRAMING PLAN II

PROJECT NO. **301-155**
DRAWING NO. **S-10**
SHEET NO. **04.10**

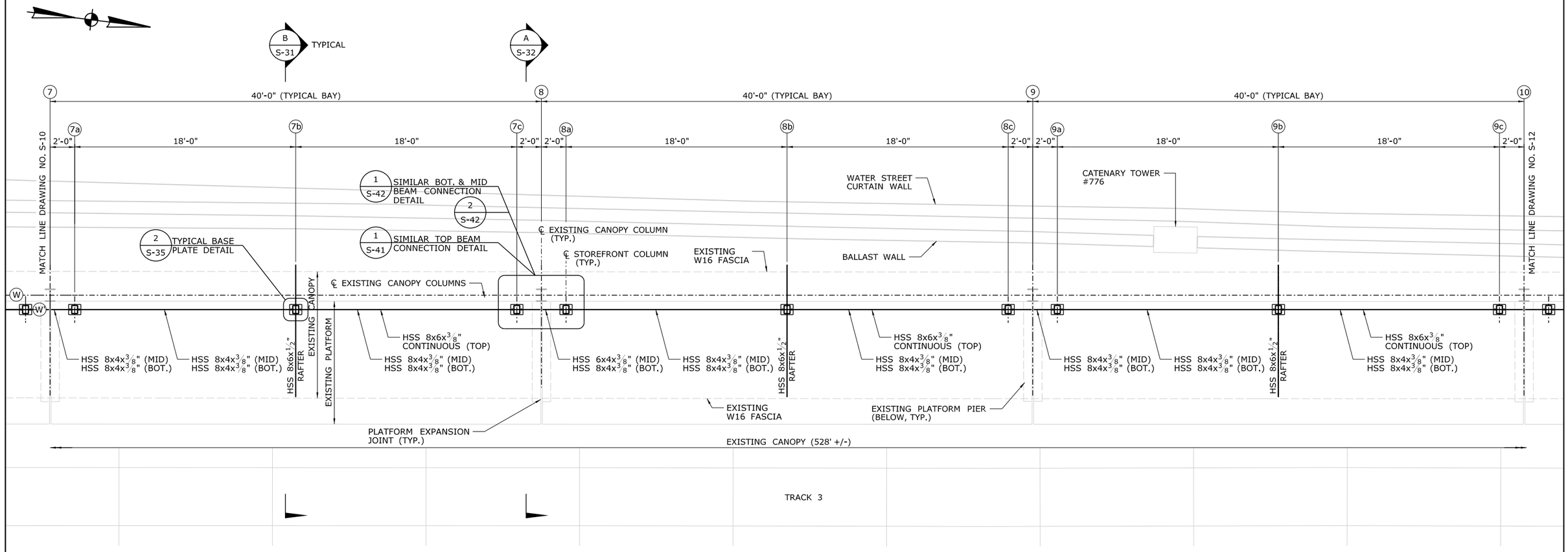

FRAMING PLAN

SCALE: 1/4" = 1'-0"

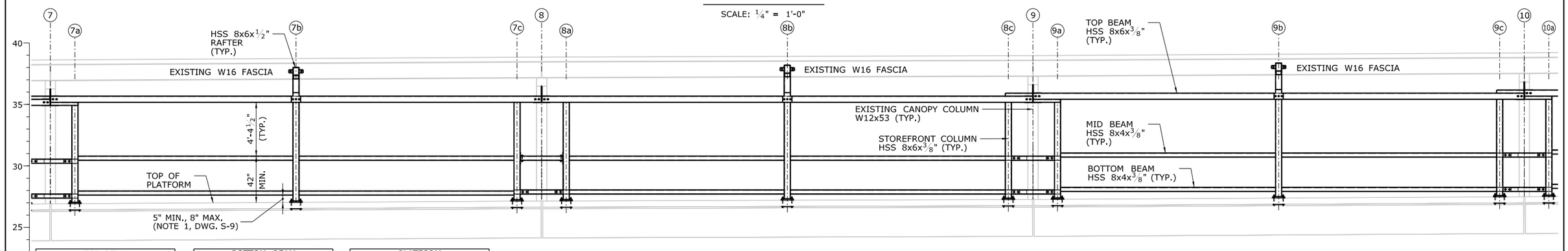

TOP BEAM	
SPAN	T/ BEAM EL
W'7-W'9	35.67
W'9-W'10	35.92
W'10-W'11	36.17

MID BEAM	
SPAN	T/ BEAM EL
W'7-W'9	30.80
W'9-W'10	31.05
W'10-W'11	31.30

BOTTOM BEAM	
SPAN	T/ BEAM EL
W'7a-W'7c	27.97
W'7c-W'9a	28.05
W'9a-W'10a	28.26
W'10a-W'11a	28.51

PLATFORM	
LOCATION	T/ PLATFORM EL
W'7	26.95
W'8	27.18
W'9	27.31
W'10	27.54

ELEVATION

(LOOKING EAST)

SCALE: 1/4" = 1'-0"

REV.	DATE	REVISION DESCRIPTION	SHEET NO.
-	-	-	-
-	-	-	-
-	-	-	-
-	-	-	-
-	-	-	-
-	-	-	-

THE INFORMATION, INCLUDING ESTIMATED QUANTITIES OF WORK, SHOWN ON THESE SHEETS IS BASED ON LIMITED INVESTIGATIONS BY THE STATE AND IS IN NO WAY WARRANTED TO INDICATE THE CONDITIONS OF ACTUAL QUANTITIES OF WORK WHICH WILL BE REQUIRED.

PLOTTED: 3/31/2014

DESIGNER/DRAFTER: B. HAMAN
CHECKED BY: D. GRIFFIN
SCALE AS NOTED

STATE OF CONNECTICUT
DEPARTMENT OF TRANSPORTATION

FILENAME: ...\301155_04_10_WB_PLAN_FRAMING.dgn

LOCHNER
H.W. LOCHNER, INC
2110 Silas Deane Highway
Rocky Hill, CT 06067

APPROVED BY: BEB
DATE: 4/2/2014

PROJECT TITLE:
INSTALLATION OF CANOPY AT BRIDGEPORT STATION

TOWN: **BRIDGEPORT**

DRAWING TITLE: **WESTBOUND CANOPY FRAMING PLAN III**

PROJECT NO. **301-155**
DRAWING NO. **S-11**
SHEET NO. **04.11**

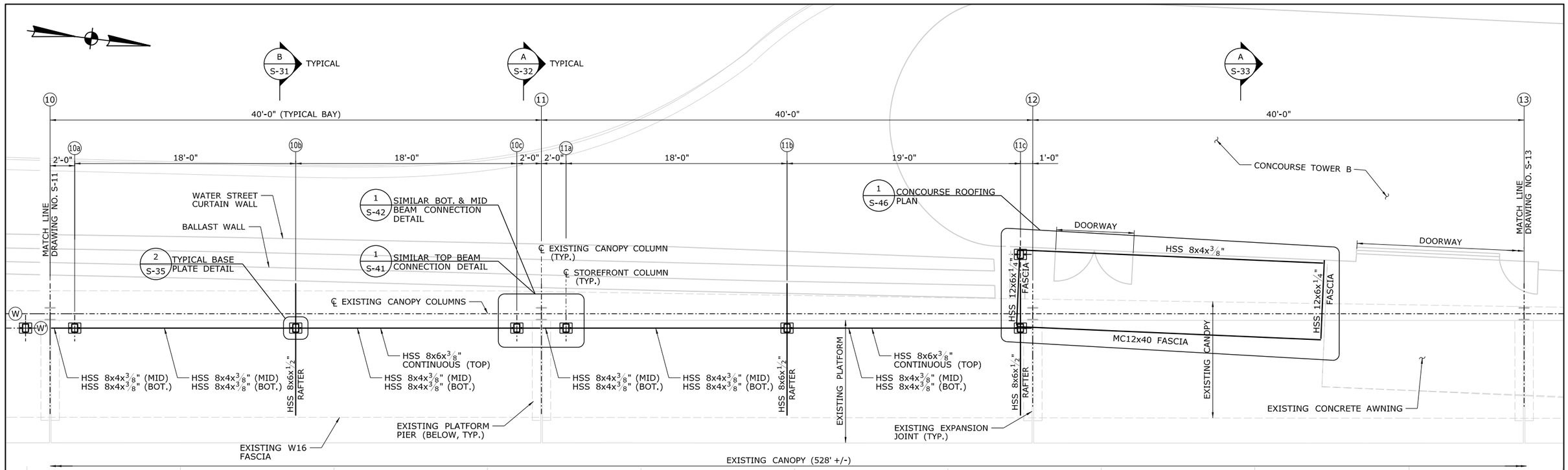

TRACK 3

FRAMING PLAN

SCALE: 1/4" = 1'-0"

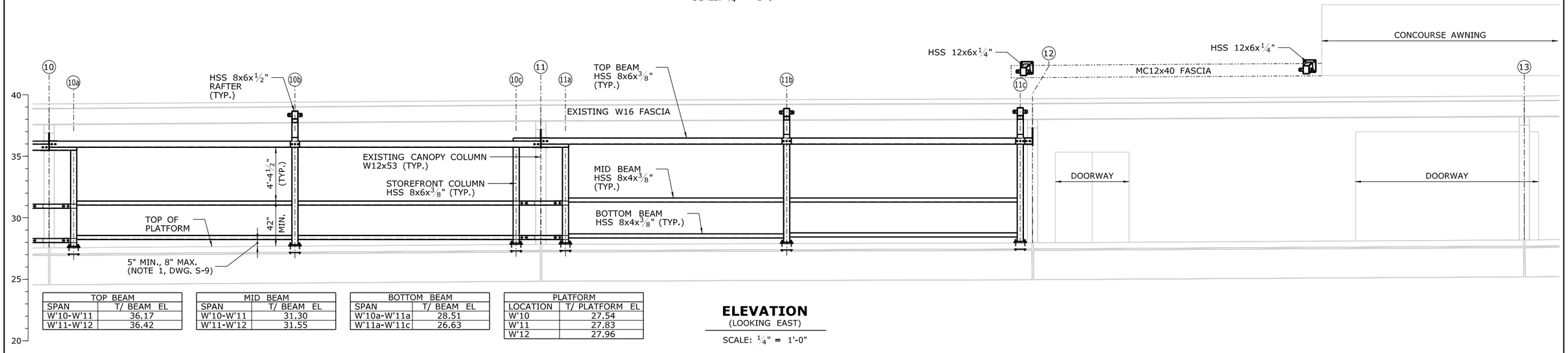

TOP BEAM	
SPAN	T/ BEAM EL
W'10-W'11	36.17
W'11-W'12	36.42

MID BEAM	
SPAN	T/ BEAM EL
W'10-W'11	31.30
W'11-W'12	31.55

BOTTOM BEAM	
SPAN	T/ BEAM EL
W'10a-W'11a	28.51
W'11a-W'11c	26.63

PLATFORM	
LOCATION	T/ PLATFORM EL
W'10	27.54
W'11	27.83
W'12	27.96

ELEVATION

(LOOKING EAST)

SCALE: 1/4" = 1'-0"

REV.	DATE	REVISION DESCRIPTION	SHEET NO.
-	-	-	-
-	-	-	-
-	-	-	-
-	-	-	-
-	-	-	-
-	-	-	-

THE INFORMATION, INCLUDING ESTIMATED QUANTITIES OF WORK, SHOWN ON THESE SHEETS IS BASED ON LIMITED INVESTIGATIONS BY THE STATE AND IS IN NO WAY WARRANTED TO INDICATE THE CONDITIONS OF ACTUAL QUANTITIES OF WORK WHICH WILL BE REQUIRED.

PLOTTED: 3/31/2014

DESIGNER/DRAFTER: B. HAMAN
CHECKED BY: D. GRIFFIN
SCALE AS NOTED

STATE OF CONNECTICUT
DEPARTMENT OF TRANSPORTATION

FILENAME: ...\301155_04_10_WB_PLAN_FRAMING.dgn

LOCHNER
H.W. LOCHNER, INC
2110 Silas Deane Highway
Rocky Hill, CT 06067

APPROVED BY: BEB
DATE: 4/2/2014

PROJECT TITLE:
INSTALLATION OF CANOPY AT BRIDGEPORT STATION

TOWN: **BRIDGEPORT**

DRAWING TITLE: **WESTBOUND CANOPY FRAMING PLAN IV**

PROJECT NO. **301-155**
DRAWING NO. **S-12**
SHEET NO. **04.12**

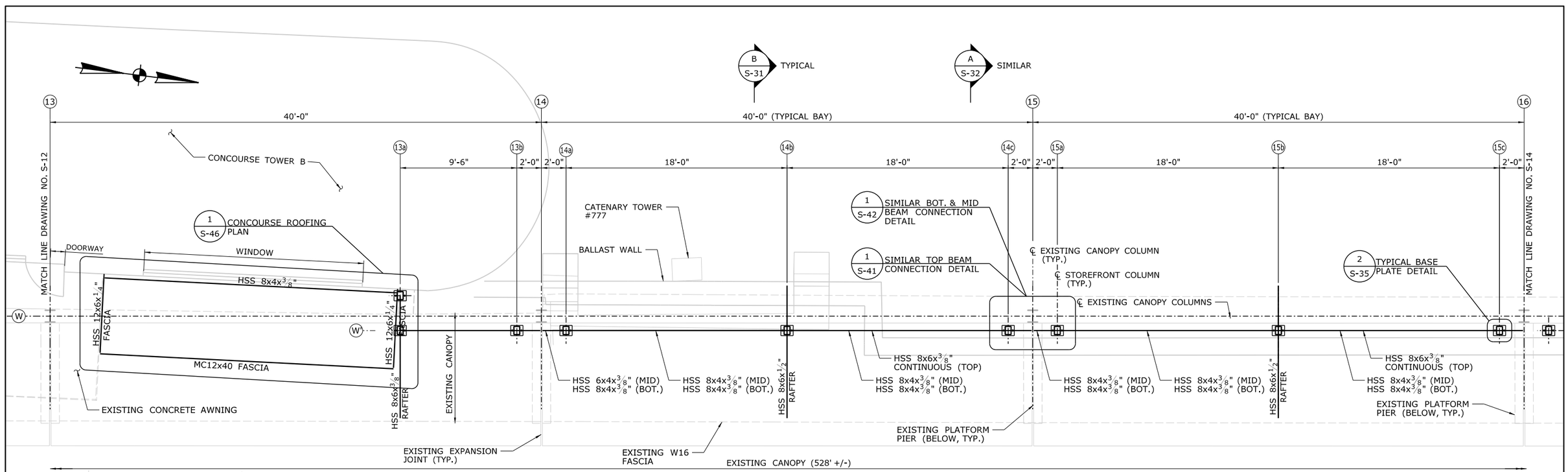

FRAMING PLAN

SCALE: 1/4" = 1'-0"

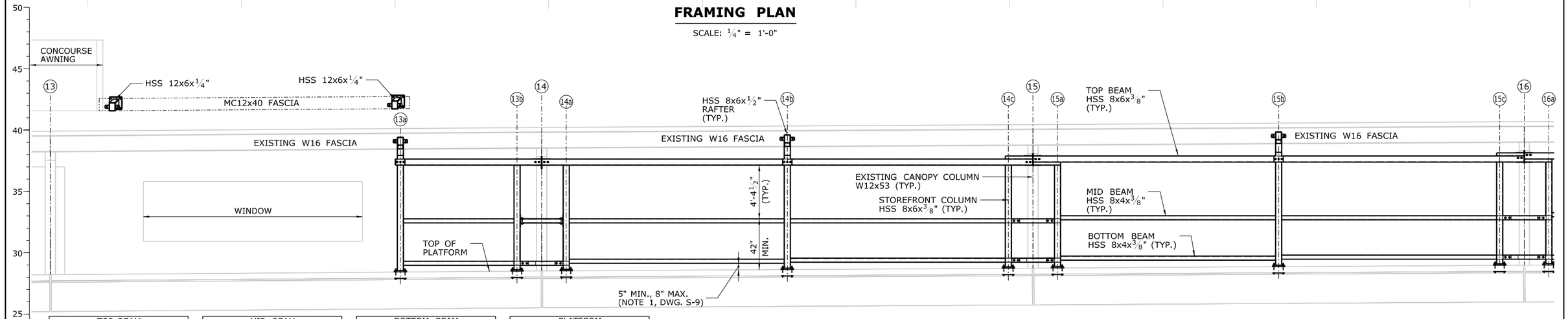

TOP BEAM	
SPAN	T/ BEAM EL
W'13a-W'15	37.64
W'15-W'16	37.89
W'16-W'18	38.14

MID BEAM	
SPAN	T/ BEAM EL
W'13a-W'15a	32.77
W'15a-W'16a	33.02

BOTTOM BEAM	
SPAN	T/ BEAM EL
W'13a-W'14a	29.31
W'14a-W'14b	29.48
W'14b-W'15a	29.56
W'15a-W'15b	29.73
W'15b-W'16b	29.82

PLATFORM	
LOCATION	T/ PLATFORM EL
W'13	28.20
W'14	28.51
W'15	28.75
W'16	29.00

ELEVATION

(LOOKING EAST)

SCALE: 1/4" = 1'-0"

REV.	DATE	REVISION DESCRIPTION	SHEET NO.

THE INFORMATION, INCLUDING ESTIMATED QUANTITIES OF WORK, SHOWN ON THESE SHEETS IS BASED ON LIMITED INVESTIGATIONS BY THE STATE AND IS IN NO WAY WARRANTED TO INDICATE THE CONDITIONS OF ACTUAL QUANTITIES OF WORK WHICH WILL BE REQUIRED.

PLOTTED: 3/31/2014

DESIGNER/DRAFTER: B. HAMAN
CHECKED BY: D. GRIFFIN
SCALE AS NOTED

STATE OF CONNECTICUT
DEPARTMENT OF TRANSPORTATION

FILENAME: ...\301155_04_10_WB_PLAN_FRAMING.dgn

LOCHNER
H.W. LOCHNER, INC
2110 Silas Deane Highway
Rocky Hill, CT 06067

APPROVED BY: BEB
DATE: 4/2/2014

PROJECT TITLE:
INSTALLATION OF CANOPY AT BRIDGEPORT STATION

TOWN: **BRIDGEPORT**

DRAWING TITLE: **WESTBOUND CANOPY FRAMING PLAN V**

PROJECT NO. **301-155**
DRAWING NO. **S-13**
SHEET NO. **04.13**

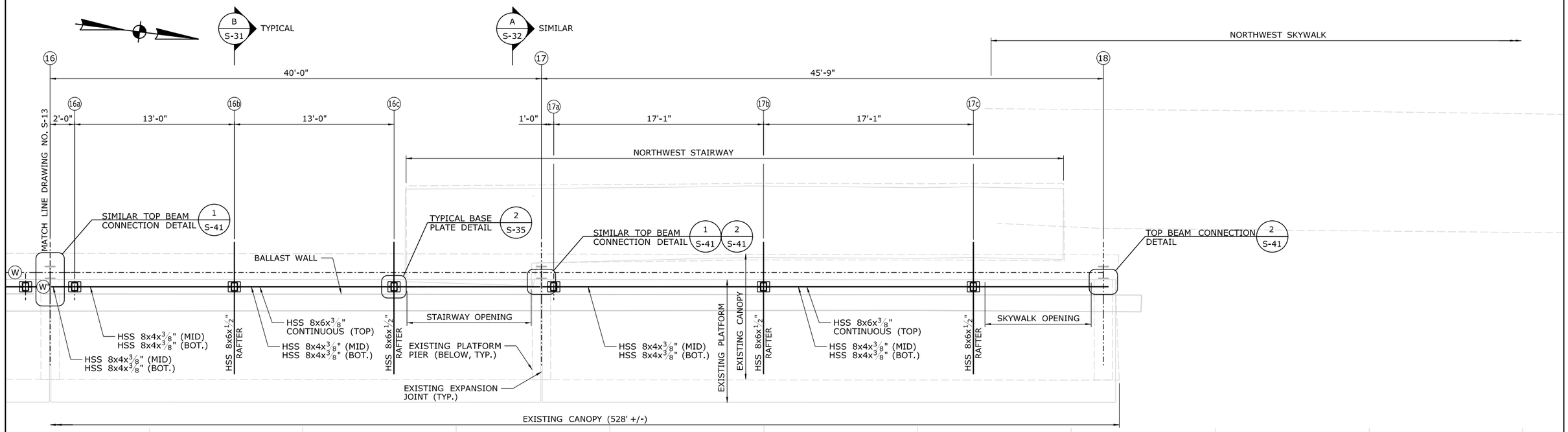

TRACK 3

FRAMING PLAN

SCALE: 1/4" = 1'-0"

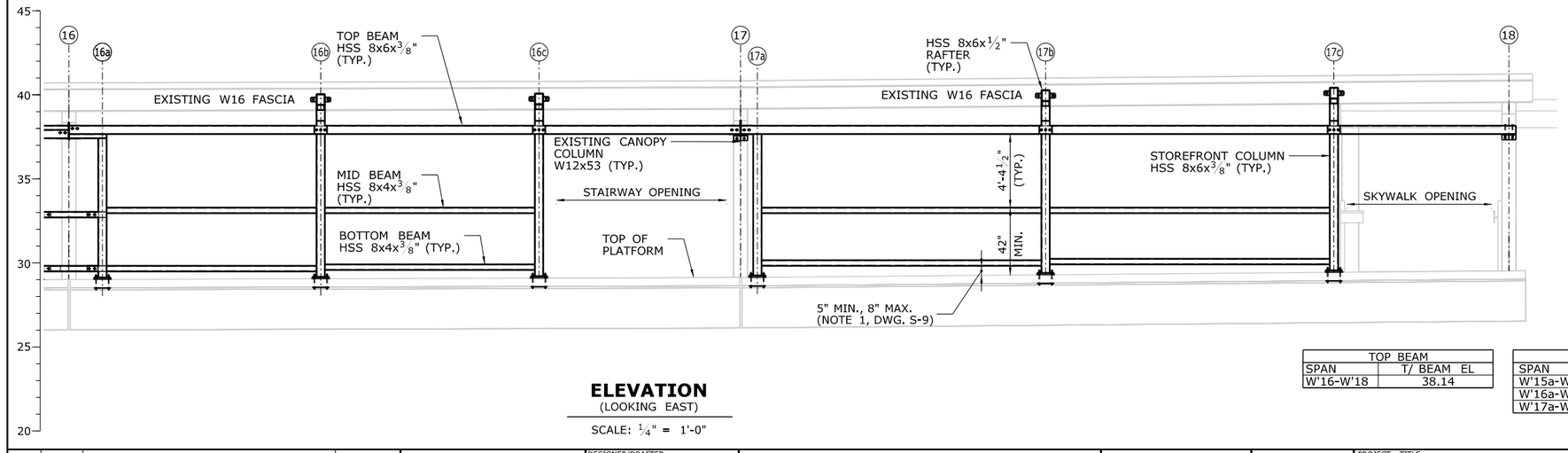

ELEVATION

(LOOKING EAST)

SCALE: 1/4" = 1'-0"

TOP BEAM	
SPAN	T/ BEAM EL
W'16-W'18	38.14

MID BEAM	
SPAN	T/ BEAM EL
W'15a-W'16a	32.77
W'16a-W'16c	33.02
W'17a-W'17c	33.02

BOTTOM BEAM	
SPAN	T/ BEAM EL
W'15b-W'16b	29.82
W'16b-W'16c	29.90
W'17a-W'17b	30.15
W'17B-W17c	30.24

PLATFORM	
LOCATION	T/ PLATFORM EL
W'16	29.00
W'17	29.13
W'18	29.54

REV.	DATE	REVISION DESCRIPTION	SHEET NO.

THE INFORMATION, INCLUDING ESTIMATED QUANTITIES OF WORK, SHOWN ON THESE SHEETS IS BASED ON LIMITED INVESTIGATIONS BY THE STATE AND IS IN NO WAY WARRANTED TO INDICATE THE CONDITIONS OF ACTUAL QUANTITIES OF WORK WHICH WILL BE REQUIRED.

PLOTTED: 3/31/2014

DESIGNER/DRAFTER: B. HAMAN
CHECKED BY: D. GRIFFIN
SCALE AS NOTED

STATE OF CONNECTICUT
DEPARTMENT OF TRANSPORTATION

FILENAME: ...\301155_04_10_WB_PLAN_FRAMING.dgn

LOCHNER
H.W. LOCHNER, INC
2110 Silas Deane Highway
Rocky Hill, CT 06067

APPROVED BY: BEB
DATE: 4/2/2014

PROJECT TITLE:
INSTALLATION OF CANOPY AT BRIDGEPORT STATION

TOWN: **BRIDGEPORT**

DRAWING TITLE: **WESTBOUND CANOPY FRAMING PLAN VI**

PROJECT NO. 301-155
DRAWING NO. S-14
SHEET NO. 04.14

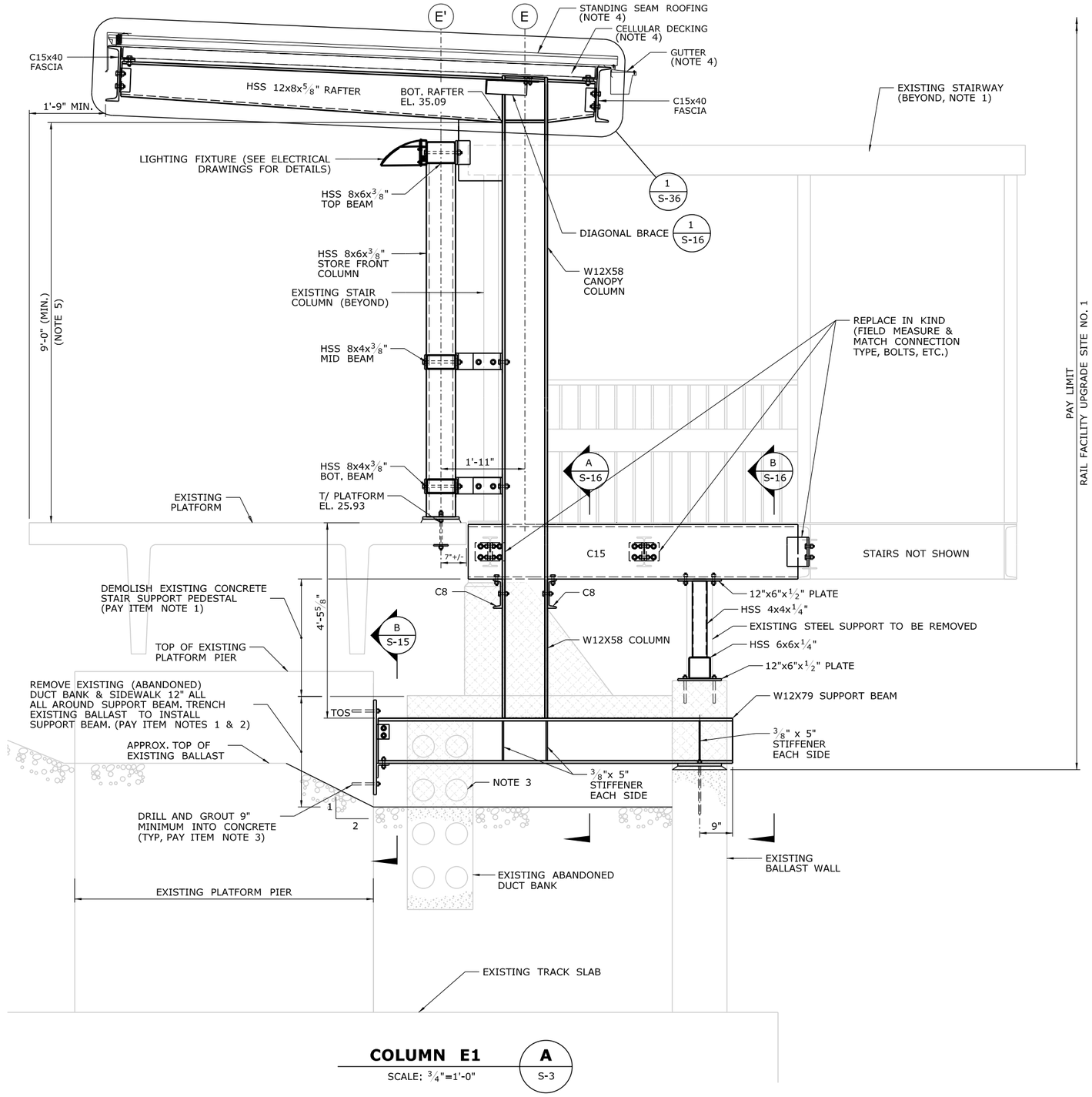

COLUMN E1 — A / S-3

SCALE: 3/4"=1'-0"

PAY LIMIT
RAIL FACILITY UPGRADE SITE NO. 1

NOTES:

1. STAIRWAY TO REMAIN OPEN AT ALL TIMES. CONTRACTOR TO PROVIDE TEMPORARY SUPPORT OF STAIRWAY AND PLATFORM. SUBMIT DETAILS AND STAMPED CALCULATIONS OF TEMPORARY SUPPORT SYSTEM FOR APPROVAL.
2. PROVIDE 2" MINIMUM DEPTH SAW CUT ON EACH FACE OF CONCRETE AROUND PERIMETER OF REMOVAL AREA. APPLY 1/4" (MIN) OF EPOXY REPAIR GROUT TO ALL EXPOSED SURFACES.
3. OPEN EXPOSED ABANDONED DUCTS TO BE FILLED WITH A CONCRETE PLUG THAT EXTENDS 9" INTO THE EXISTING DUCTS.
4. SEE. ARCH. DWGS. FOR STANDING SEAM ROOFING, CELLULAR DECKING, FLASHING AND GUTTER DETAILS.
5. ASSUMED TOP OF PLATFORM ELEVATION(S) SHOWN ARE BASED ON LIMITED SURVEY. CONTRACTOR SHALL CONFIRM ELEVATION(S) PRIOR TO CREATING SHOP DRAWINGS AND PROVIDE ELEVATIONS TO THE ENGINEER THAT VARY GREATER THAN 1/4" FROM THOSE SHOWN IN THESE PLANS. CONTRACTOR SHALL ADJUST THE BOTTOM OF RAFTER ELEVATION(S) AS REQUIRED TO MAINTAIN MINIMUM CLEARANCES AND CONSTANT ROOF SLOPE BASED ON THE VERIFIED SURVEYED PLATFORM ELEVATION(S).

PAY ITEM NOTES:

1. PARTIAL REMOVAL OF EXISTING CONCRETE SIDEWALK, STAIR PEDESTAL, DUCTBANK AND BALLAST WALL PAID UNDER ITEM "DEMOLITION"
2. EXISTING BALLAST TRENCH EXCAVATION PAID UNDER ITEM "STRUCTURE EXCAVATION EARTH - COMPLETE".
3. ANCHOR RODS, ANCHOR DRILLING AND GROUTING PAID UNDER ITEM "DRILLING HOLES AND GROUTING ANCHOR BOLTS".
4. REMOVAL OF PLYWOOD AND TIMBER BARRIER ON STAIRWELL LANDING PAID UNDER ITEM "DEMOLITION".
5. PROTECT PEDESTRIANS DURING STAIRWELL RECONSTRUCTION AND PROVIDE TEMPORARY FENCING AS REQUIRED UNDER "MAINTENANCE PEDESTRIAN ACCESS".

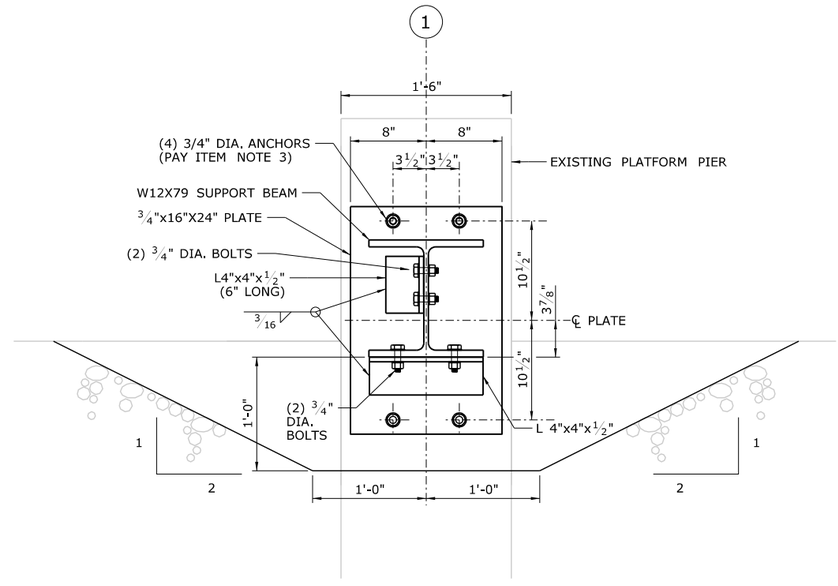

SUPPORT BEAM PIER CONNECTION — B / S-15, S-17

SCALE: 1 1/2"=1'-0"

REV.	DATE	REVISION DESCRIPTION	SHEET NO.

THE INFORMATION, INCLUDING ESTIMATED QUANTITIES OF WORK, SHOWN ON THESE SHEETS IS BASED ON LIMITED INVESTIGATIONS BY THE STATE AND IS IN NO WAY WARRANTED TO INDICATE THE CONDITIONS OF ACTUAL QUANTITIES OF WORK WHICH WILL BE REQUIRED.

PLOTTED: 3/31/2014

DESIGNER/DRAFTER: B. HAMAN
CHECKED BY: D. GRIFFIN
SCALE AS NOTED

STATE OF CONNECTICUT
DEPARTMENT OF TRANSPORTATION

FILENAME: ...\301155_04_16_EB_SECTIONS.dgn

LOCHNER
H.W. LOCHNER, INC
2110 Silas Deane Highway
Rocky Hill, CT 06067

APPROVED BY: BEB
DATE: 4/2/2014

PROJECT TITLE:
INSTALLATION OF CANOPY AT BRIDGEPORT STATION

TOWN: **BRIDGEPORT**

DRAWING TITLE: **EASTBOUND CANOPY SECTIONS I**

PROJECT NO. **301-155**
DRAWING NO. **S-15**
SHEET NO. **04.15**

PAY ITEM NOTES:

1. PARTIAL REMOVAL OF EXISTING CONCRETE SIDEWALK, STAIR PEDESTAL, DUCTBANK AND BALLAST WALL PAID UNDER ITEM "DEMOLITION"
2. EXISTING BALLAST TRENCH EXCAVATION PAID UNDER ITEM "STRUCTURE EXCAVATION EARTH - COMPLETE".
3. ANCHOR RODS, ANCHOR DRILLING AND GROUTING PAID UNDER ITEM "DRILLING HOLES AND GROUTING ANCHOR BOLTS".
4. REMOVAL OF PLYWOOD AND TIMBER BARRIER ON STAIRWELL LANDING PAID UNDER ITEM "DEMOLITION".
5. PROTECT PEDESTRIANS DURING STAIRWELL RECONSTRUCTION AND PROVIDE TEMPORARY FENCING AS REQUIRED UNDER "MAINTENANCE PEDESTRIAN ACCESS".

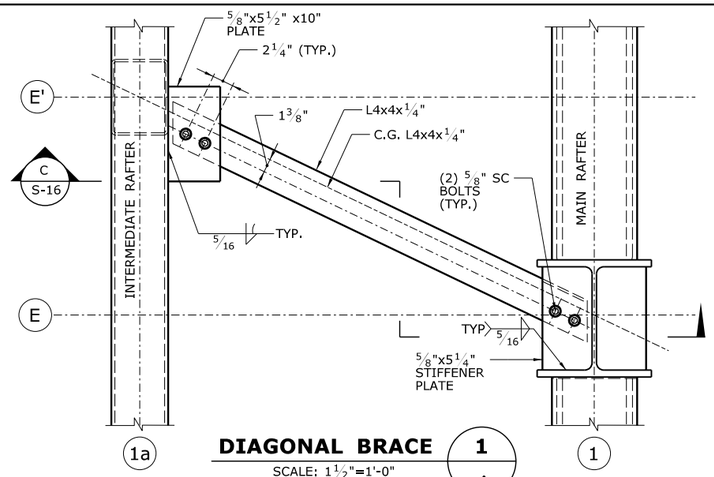

DIAGONAL BRACE 1

SCALE: 1 1/2"=1'-0"

S-3, S-15

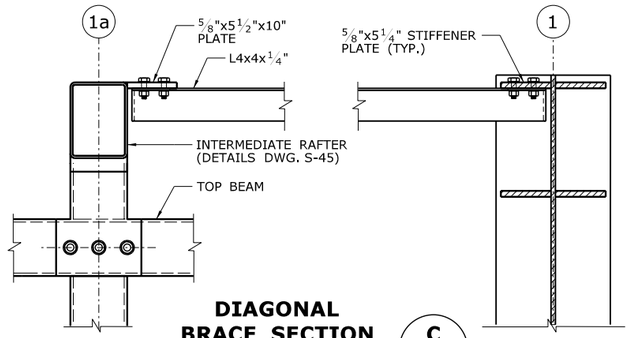

DIAGONAL BRACE SECTION C

SCALE: 1 1/2"=1'-0"

S-16

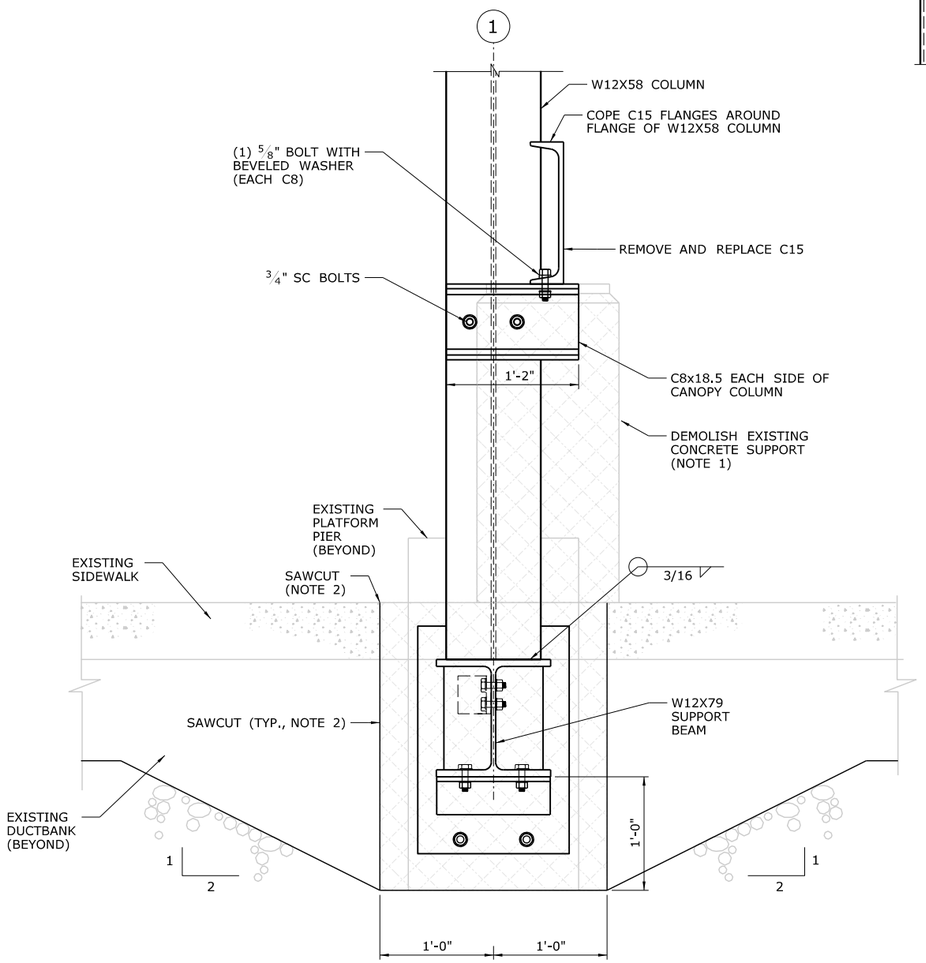

SUPPORT BEAM DETAIL COLUMN E1 A

SCALE: 1 1/2"=1'-0"

S-15

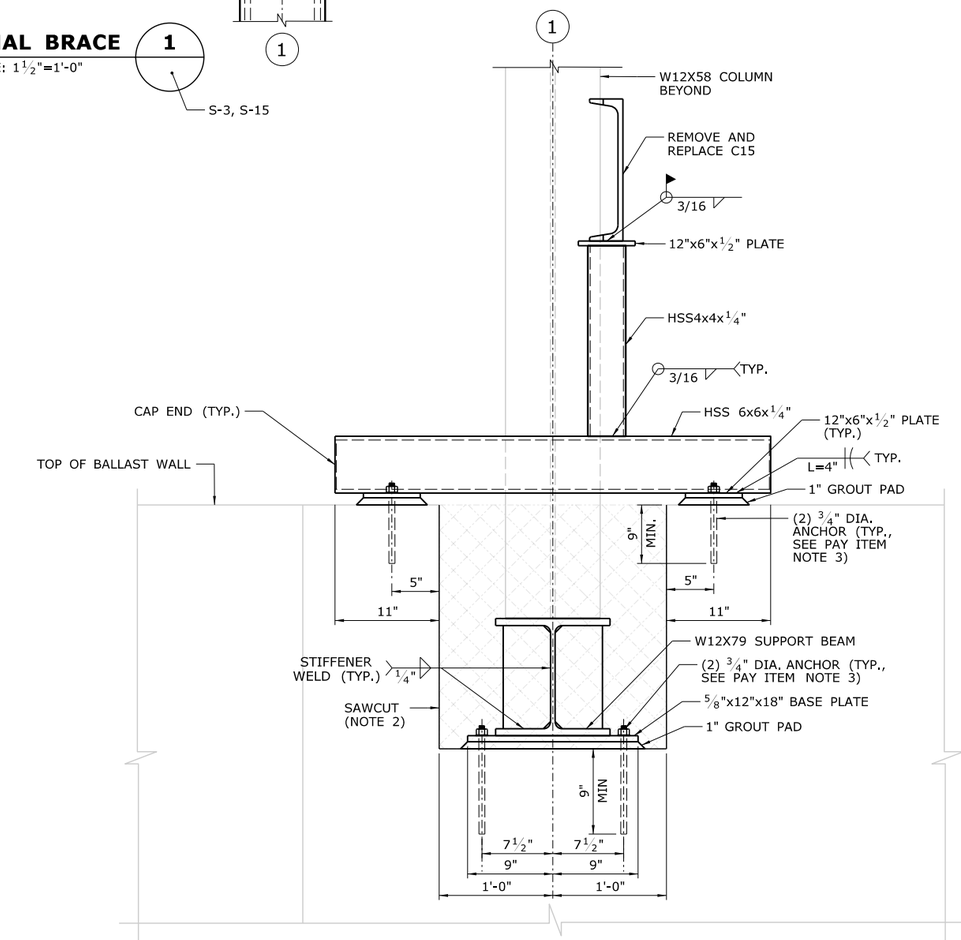

SUPPORT BEAM DETAIL COLUMN E1 B

SCALE: 1 1/2"=1'-0"

S-3, S-15

REV.	DATE	REVISION DESCRIPTION	SHEET NO.

THE INFORMATION, INCLUDING ESTIMATED QUANTITIES OF WORK, SHOWN ON THESE SHEETS IS BASED ON LIMITED INVESTIGATIONS BY THE STATE AND IS IN NO WAY WARRANTED TO INDICATE THE CONDITIONS OF ACTUAL QUANTITIES OF WORK WHICH WILL BE REQUIRED.

PLOTTED: 3/31/2014

DESIGNER/DRAFTER: B. HAMAN
CHECKED BY: D. GRIFFIN
SCALE AS NOTED

STATE OF CONNECTICUT
DEPARTMENT OF TRANSPORTATION

FILENAME: ...\301155_04_16_EB_SECTIONS.dgn

LOCHNER
H.W. LOCHNER, INC
2110 Silas Deane Highway
Rocky Hill, CT 06067

APPROVED BY: BEB
DATE: 4/2/2014

PROJECT TITLE:
INSTALLATION OF CANOPY AT BRIDGEPORT STATION

TOWN: **BRIDGEPORT**

DRAWING TITLE: **EASTBOUND CANOPY SECTIONS II**

PROJECT NO. **301-155**
DRAWING NO. **S-16**
SHEET NO. **04.16**

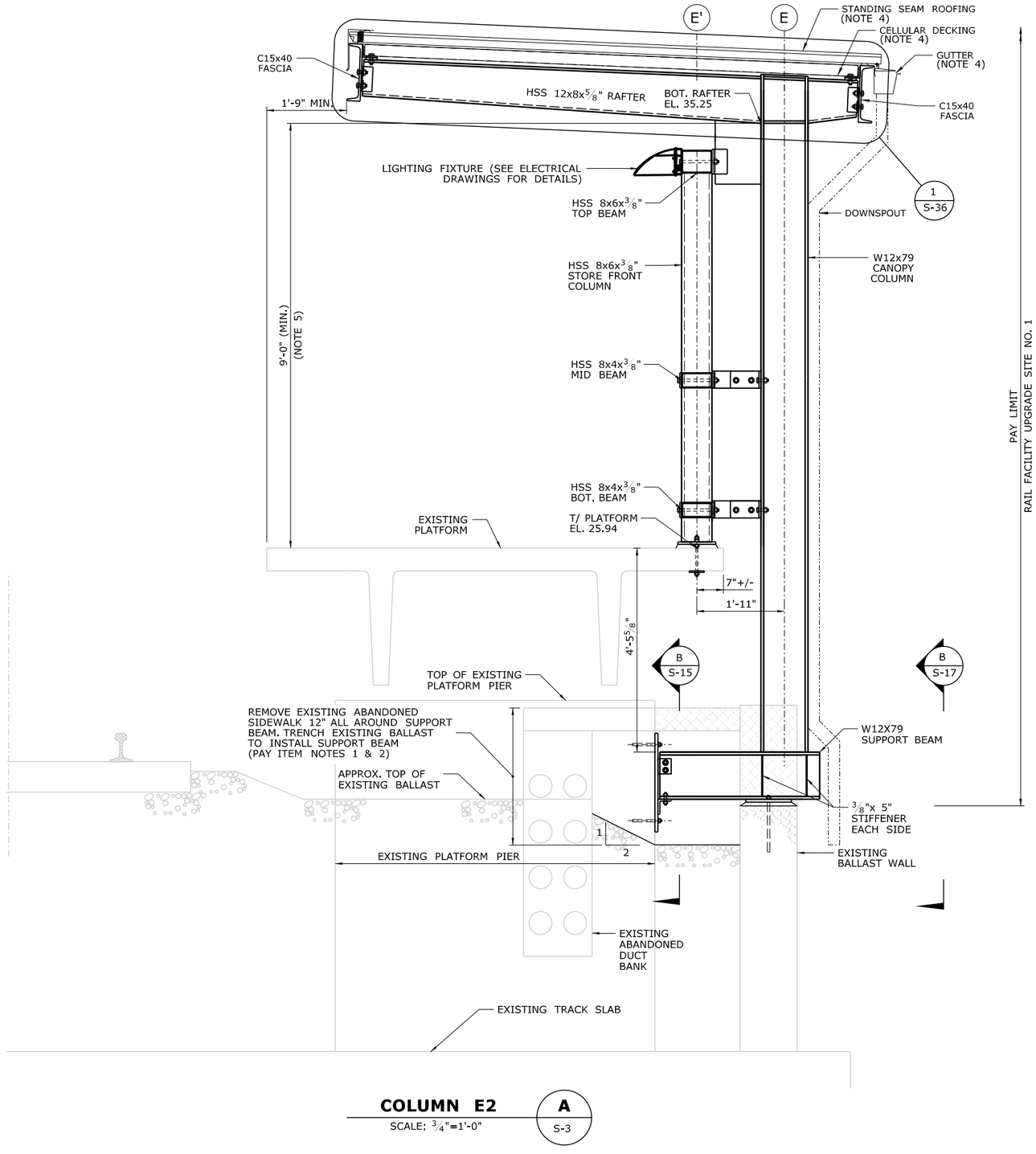

COLUMN E2 — A / S-3

SCALE: 3/4"=1'-0"

NOTES:

1. STAIRWAY TO REMAIN OPEN AT ALL TIMES. CONTRACTOR TO PROVIDE TEMPORARY SUPPORT OF STAIRWAY AND PLATFORM. SUBMIT DETAILS AND STAMPED CALCULATIONS OF TEMPORARY SUPPORT SYSTEM FOR APPROVAL.
2. PROVIDE 2" MINIMUM DEPTH SAW CUT ON EACH FACE OF CONCRETE AROUND PERIMETER OF REMOVAL AREA. APPLY 1/4" (MIN) OF EPOXY REPAIR GROUT TO ALL EXPOSED SURFACES.
3. OPEN EXPOSED ABANDONED DUCTS TO BE FILLED WITH A CONCRETE PLUG THAT EXTENDS 9" INTO THE EXISTING DUCTS.
4. SEE. ARCH. DWGS. FOR STANDING SEAM ROOFING, CELLULAR DECKING, FLASHING AND GUTTER DETAILS.
5. ASSUMED TOP OF PLATFORM ELEVATION(S) SHOWN ARE BASED ON LIMITED SURVEY. CONTRACTOR SHALL CONFIRM ELEVATION(S) PRIOR TO CREATING SHOP DRAWINGS AND PROVIDE ELEVATIONS TO THE ENGINEER THAT VARY GREATER THAN 1/4" FROM THOSE SHOWN IN THESE PLANS. CONTRACTOR SHALL ADJUST THE BOTTOM OF RAFTER ELEVATION(S) AS REQUIRED TO MAINTAIN MINIMUM CLEARANCES AND CONSTANT ROOF SLOPE BASED ON THE VERIFIED SURVEYED PLATFORM ELEVATION(S).

PAY ITEM NOTES:

1. PARTIAL REMOVAL OF EXISTING CONCRETE SIDEWALK, STAIR PEDESTAL, DUCTBANK AND BALLAST WALL PAID UNDER ITEM "DEMOLITION"
2. EXISTING BALLAST TRENCH EXCAVATION PAID UNDER ITEM "STRUCTURE EXCAVATION EARTH - COMPLETE".
3. ANCHOR RODS, ANCHOR DRILLING AND GROUTING PAID UNDER ITEM "DRILLING HOLES AND GROUTING ANCHOR BOLTS".

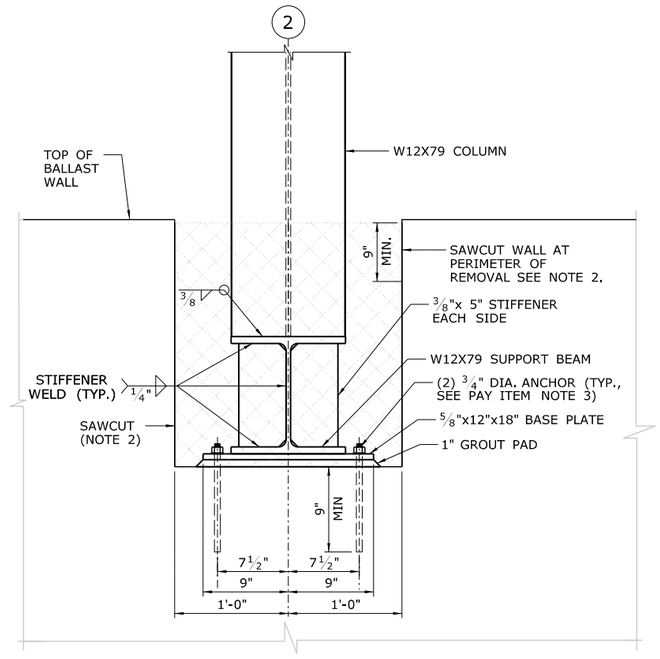

SUPPORT BEAM DETAIL — B / S-17

SCALE: 1 1/2"=1'-0"

REV.	DATE	REVISION DESCRIPTION	SHEET NO.

THE INFORMATION, INCLUDING ESTIMATED QUANTITIES OF WORK, SHOWN ON THESE SHEETS IS BASED ON LIMITED INVESTIGATIONS BY THE STATE AND IS IN NO WAY WARRANTED TO INDICATE THE CONDITIONS OF ACTUAL QUANTITIES OF WORK WHICH WILL BE REQUIRED.

PLOTTED: 3/31/2014

DESIGNER/DRAFTER: B. HAMAN
CHECKED BY: D. GRIFFIN
SCALE AS NOTED

STATE OF CONNECTICUT
DEPARTMENT OF TRANSPORTATION

FILENAME: ...\301155_04_16_EB_SECTIONS.dgn

LOCHNER
H.W. LOCHNER, INC
2110 Silas Deane Highway
Rocky Hill, CT 06067

APPROVED BY: BEB
DATE: 4/2/2014

PROJECT TITLE:
INSTALLATION OF CANOPY AT BRIDGEPORT STATION

TOWN: **BRIDGEPORT**

DRAWING TITLE: **EASTBOUND CANOPY SECTIONS III**

PROJECT NO. **301-155**
DRAWING NO. **S-17**
SHEET NO. **04.17**

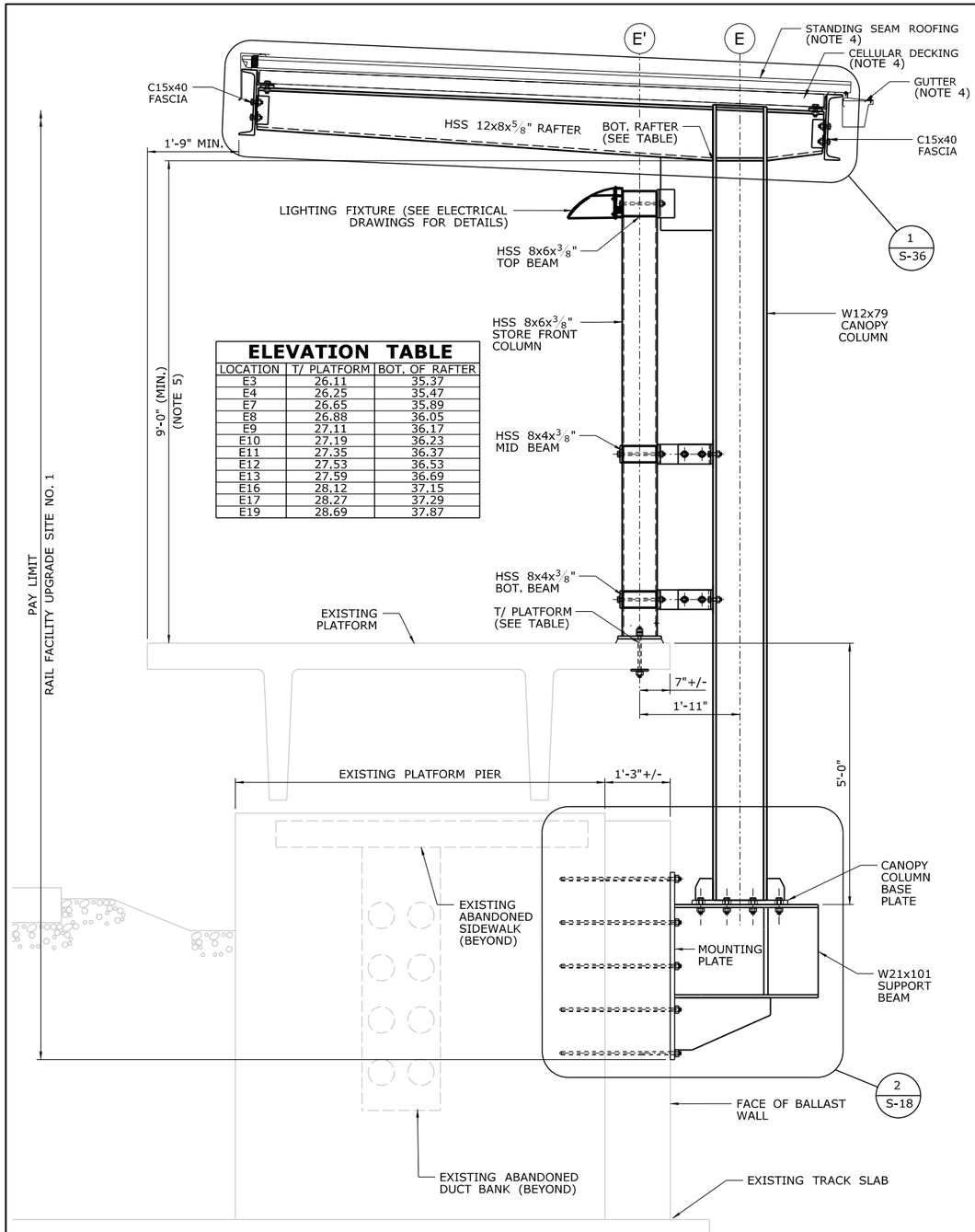

ELEVATION TABLE		
LOCATION	T/ PLATFORM	BOT. OF RAFTER
E3	26.11	35.37
E4	26.25	35.47
E7	26.65	35.89
E8	26.88	36.05
E9	27.11	36.17
E10	27.19	36.23
E11	27.35	36.37
E12	27.53	36.53
E13	27.59	36.69
E16	28.12	37.15
E17	28.27	37.29
E19	28.69	37.87

SECTION AT COLUMN E3

A

SIMILAR E4, E7, E8, E9, E10, E11, E12, E13, E16, E17, E19

SCALE: 3/4"=1'-0"

S-3
S-4 (SIMILAR)
S-5 (SIMILAR)
S-6 (SIMILAR)
S-7 (SIMILAR)
S-8 (SIMILAR)

NOTES:

1. CONTRACTOR TO VERIFY FACE OF BALLAST WALL IS WITHIN 90° +/-3° OF PIER ALIGNMENT. CONTRACTOR TO ADJUST DRILL ALIGNMENT AS NEEDED TO ACHIEVE 5 1/2" MINIMUM EDGE DISTANCE.
2. CONTRACTOR TO VERIFY ALIGNMENT BETWEEN THE FACE OF THE BALLAST WALL AND PLATFORM PRIOR TO FABRICATION OF COMPONENTS. COLUMN MAY BE ROTATED UP TO 5° TO ACCOUNT FOR MISALIGNMENT BETWEEN BALLAST WALL AND PLATFORM. ENGINEER TO BE IMMEDIATELY NOTIFIED OF ANY MISALIGNMENTS GREATER THAN 5° .
3. DIMENSION BETWEEN CENTERLINE OF COLUMN AND BALLAST WALL VARIES. FIELD DRILL HOLES IN TOP OF W21 BEAM TO ENSURE PROPER FIT UP.
4. SEE ARCH. DWGS. FOR STANDING SEAM ROOFING, CELLULAR DECKING, FLASHING AND GUTTER DETAILS.
5. ASSUMED TOP OF PLATFORM ELEVATION(S) SHOWN ARE BASED ON LIMITED SURVEY. CONTRACTOR SHALL CONFIRM ELEVATION(S) PRIOR TO CREATING SHOP DRAWINGS AND PROVIDE ELEVATIONS TO THE ENGINEER THAT VARY GREATER THAN 1/4" FROM THOSE SHOWN IN THESE PLANS. CONTRACTOR SHALL ADJUST THE BOTTOM OF RAFTER ELEVATION(S) AS REQUIRED TO MAINTAIN MINIMUM CLEARANCES AND CONSTANT ROOF SLOPE BASED ON THE VERIFIED SURVEYED PLATFORM ELEVATION(S).

PAY ITEM NOTES:

1. ANCHOR RODS, ANCHOR DRILLING AND GROUTING PAID UNDER ITEM "DRILLING HOLES AND GROUTING ANCHOR BOLTS".

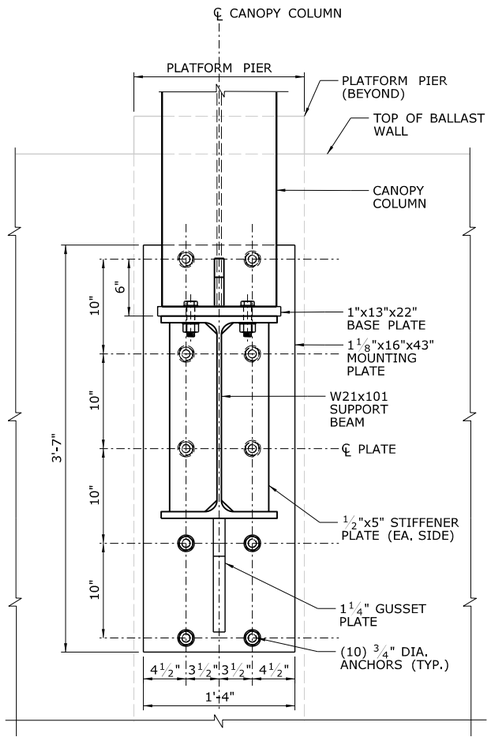

TYPICAL CANOPY COLUMN CORBEL DETAIL

1

SCALE: 1 1/2"=1'-0"

S-3, S-4, S-5, S-6, S-7, S-8

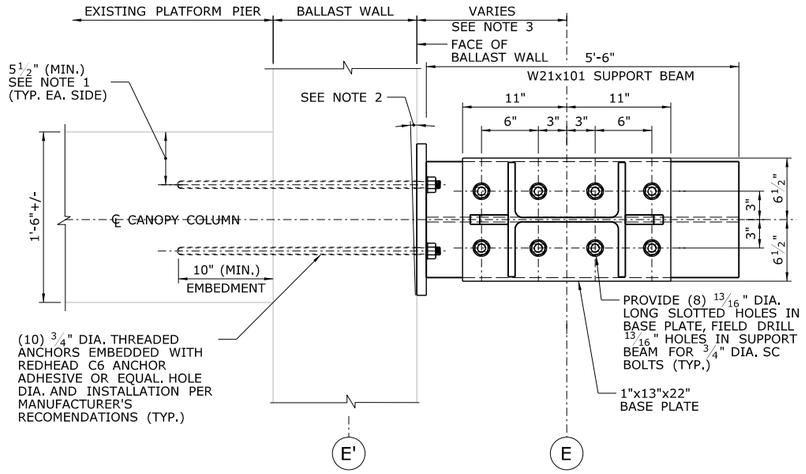

CANOPY COLUMN BASE PLATE & CORBEL

B

S-18

SCALE: 1 1/2"=1'-0"

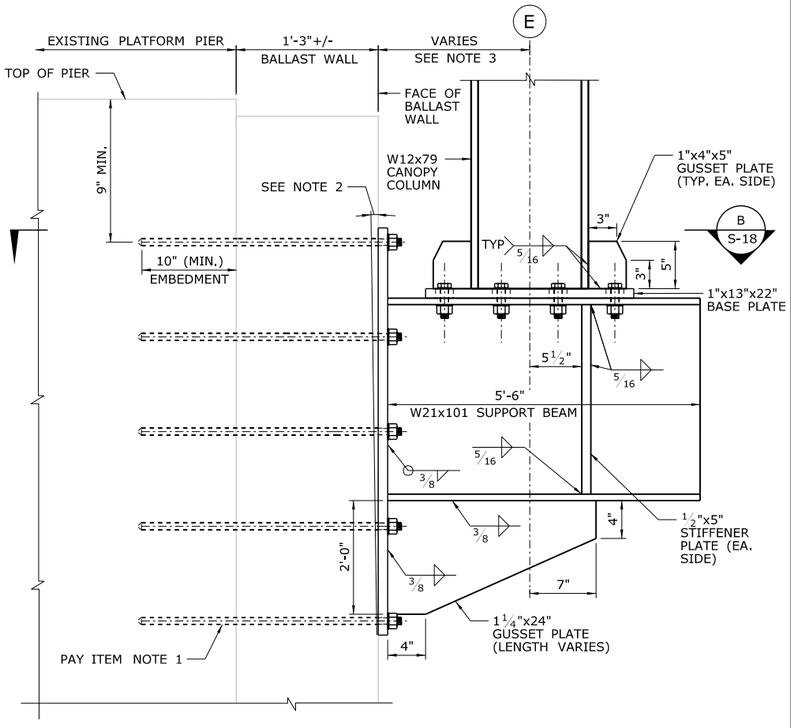

TYPICAL CANOPY COLUMN CORBEL DETAIL

2

SCALE: 1 1/2"=1'-0"

S-18

REV.	DATE	REVISION DESCRIPTION	SHEET NO.

THE INFORMATION, INCLUDING ESTIMATED QUANTITIES OF WORK, SHOWN ON THESE SHEETS IS BASED ON LIMITED INVESTIGATIONS BY THE STATE AND IS IN NO WAY WARRANTED TO INDICATE THE CONDITIONS OF ACTUAL QUANTITIES OF WORK WHICH WILL BE REQUIRED.

PLOTTED: 3/31/2014

DESIGNER/DRAFTER: B. HAMAN
CHECKED BY: D. GRIFFIN
SCALE AS NOTED

STATE OF CONNECTICUT
DEPARTMENT OF TRANSPORTATION

FILENAME: ...\301155_04_16_EB_SECTIONS.dgn

LOCHNER
H.W. LOCHNER, INC
2110 Silas Deane Highway
Rocky Hill, CT 06067

APPROVED BY: BEB
DATE: 4/2/2014

PROJECT TITLE:
INSTALLATION OF CANOPY AT BRIDGEPORT STATION

TOWN: **BRIDGEPORT**

DRAWING TITLE: **EASTBOUND CANOPY SECTIONS IV**

PROJECT NO. 301-155
DRAWING NO. S-18
SHEET NO. 04.18

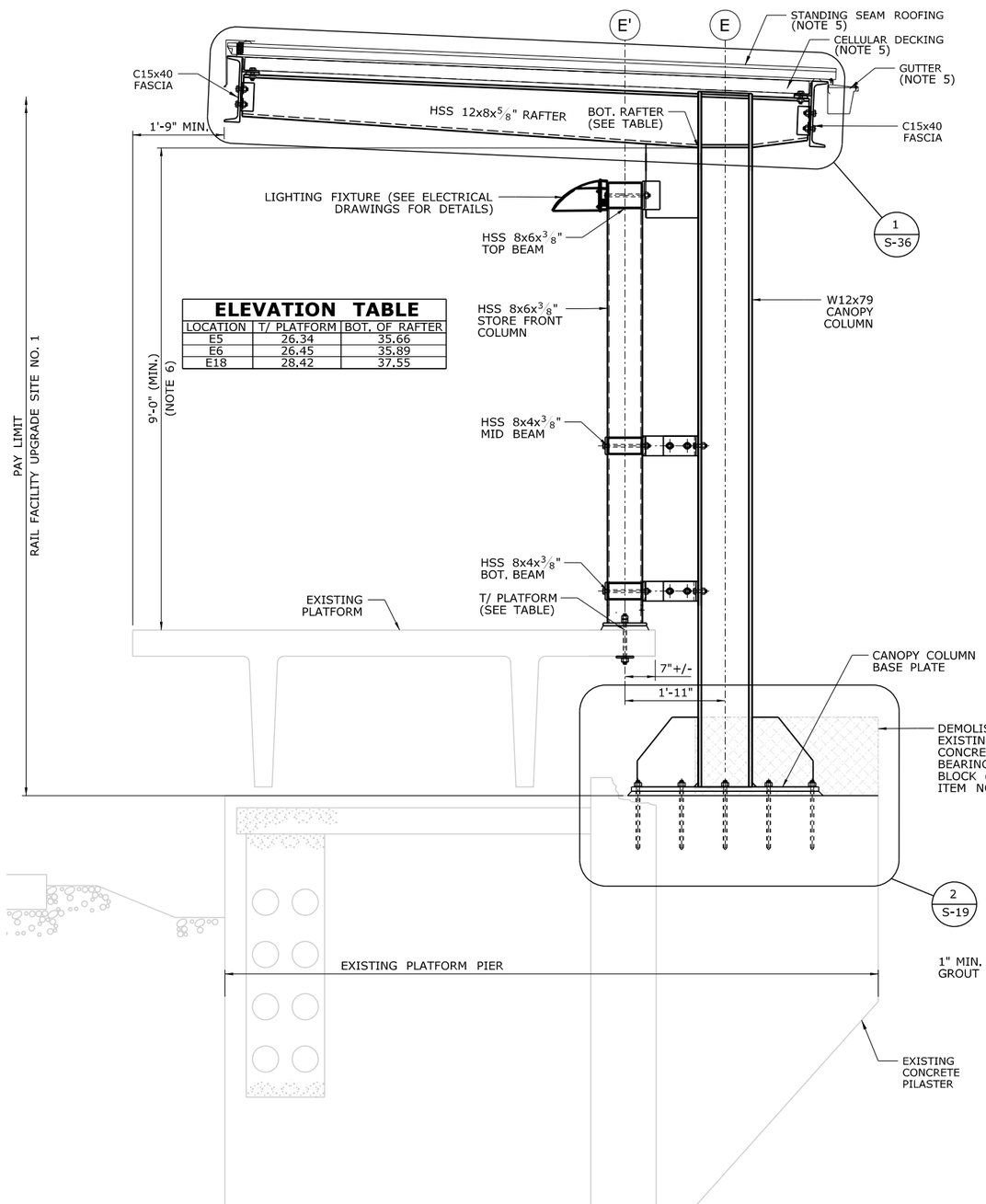

ELEVATION TABLE		
LOCATION	T/ PLATFORM	BOT. OF RAFTER
E5	26.34	35.66
E6	26.45	35.89
E18	28.42	37.55

NOTES:

1. DEMOLISH RAISED TOP PORTION OF EXISTING CONCRETE PILASTER FLUSH WITH LOWER TOP SURFACE. REMOVE ALL DETERIORATED, CRACKED, BROKEN CONCRETE ON LOWER TOP SURFACE OF CONCRETE CORBEL.
2. CLEAN AND PROTECT EXPOSED REINFORCEMENT BELOW TOP OF LOWER SURFACE.
3. PROVIDE CLASS 'A' CONCRETE TOP WEARING SURFACE IF GROUT PAD THICKNESS IS ESTIMATED TO EXCEED 2" THICKNESS.
4. ANCHOR EMBEDMENT DEPTH SHALL BE MEASURED FROM BOTTOM OF REPAIRED SURFACE, OR BOTTOM OF GROUT PAD.
5. SEE. ARCH. DWGS. FOR STANDING SEAM ROOFING, CELLULAR DECKING, FLASHING AND GUTTER DETAILS.
6. ASSUMED TOP OF PLATFORM ELEVATION(S) SHOWN ARE BASED ON LIMITED SURVEY. CONTRACTOR SHALL CONFIRM ELEVATION(S) PRIOR TO CREATING SHOP DRAWINGS AND PROVIDE ELEVATIONS TO THE ENGINEER THAT VARY GREATER THAN 1/4" FROM THOSE SHOWN IN THESE PLANS. CONTRACTOR SHALL ADJUST THE BOTTOM OF RAFTER ELEVATION(S) AS REQUIRED TO MAINTAIN MINIMUM CLEARANCES AND CONSTANT ROOF SLOPE BASED ON THE VERIFIED SURVEYED PLATFORM ELEVATION(S).

PAY ITEM NOTES:

1. PARTIAL REMOVAL OF EXISTING CONCRETE PAID UNDER ITEM "DEMOLITION".
2. ANCHOR RODS, ANCHOR DRILLING AND GROUTING PAID UNDER ITEM "DRILLING HOLES AND GROUTING ANCHOR BOLTS".

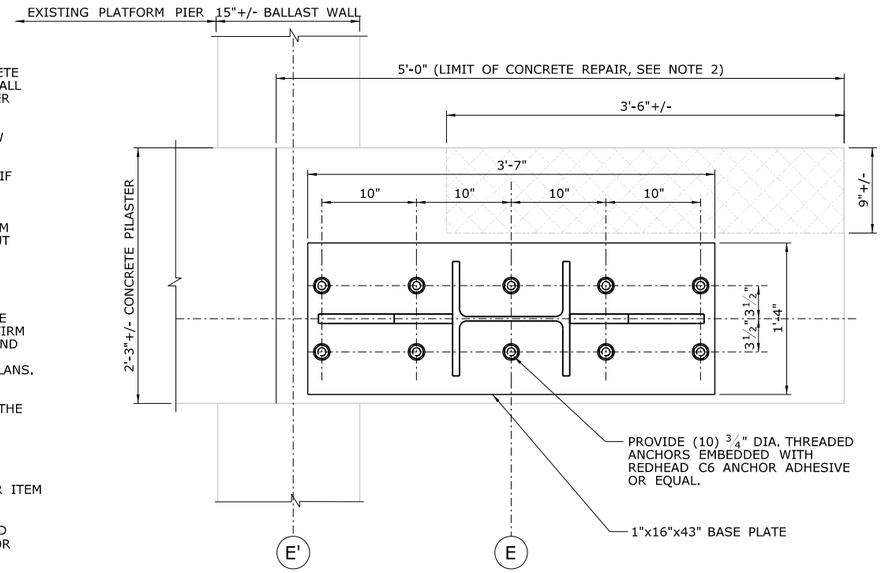

CANOPY COLUMN BASE PLATE & CORBEL — B / S-19

SIMILAR E6 & E19

SCALE: 1 1/2"=1'-0"

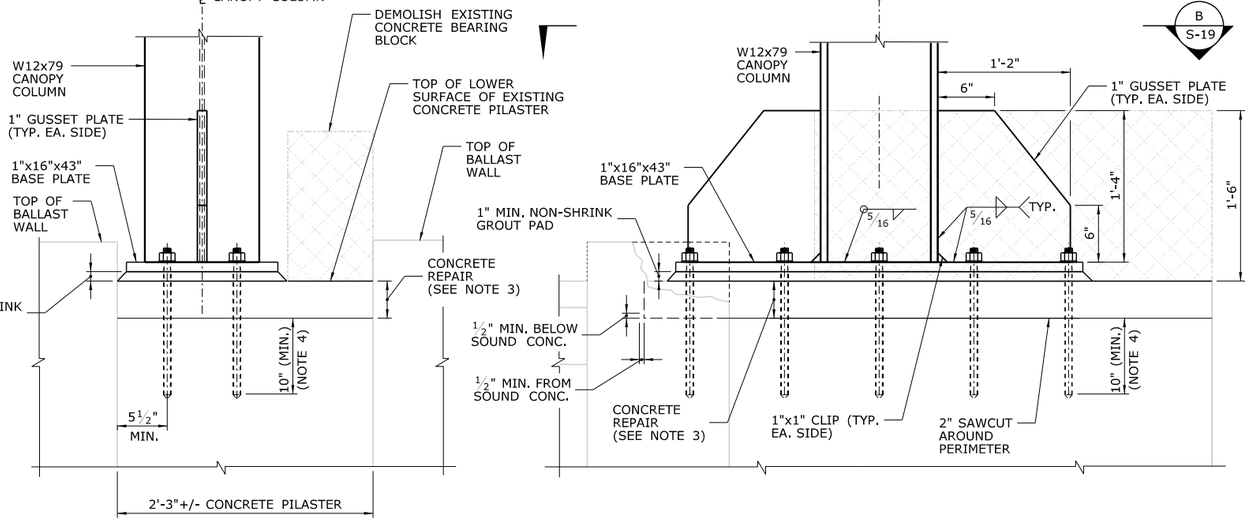

SECTION AT COLUMN E5 — A / S-4, S-7 (SIMILAR)

SIMILAR COLUMNS E6 & E18

SCALE: 3/4"=1'-0"

CANOPY COLUMN DETAIL 1 — S-4, S-7 (SIMILAR)

SIMILAR COLUMNS E6 & E18

SCALE: 1 1/2"=1'-0"

CANOPY COLUMN DETAIL 2 — S-19, S-24

SIMILAR COLUMNS E6 & E18

SCALE: 1 1/2"=1'-0"

REV.	DATE	REVISION DESCRIPTION	SHEET NO.

THE INFORMATION, INCLUDING ESTIMATED QUANTITIES OF WORK, SHOWN ON THESE SHEETS IS BASED ON LIMITED INVESTIGATIONS BY THE STATE AND IS IN NO WAY WARRANTED TO INDICATE THE CONDITIONS OF ACTUAL QUANTITIES OF WORK WHICH WILL BE REQUIRED.

PLOTTED: 3/31/2014

DESIGNER/DRAFTER: B. HAMAN
CHECKED BY: D. GRIFFIN
SCALE AS NOTED

STATE OF CONNECTICUT
DEPARTMENT OF TRANSPORTATION

FILENAME: ...\301155_04_16_EB_SECTIONS.dgn

LOCHNER
H.W. LOCHNER, INC
2110 Silas Deane Highway
Rocky Hill, CT 06067

APPROVED BY: BEB
DATE: 4/2/2014

PROJECT TITLE:
INSTALLATION OF CANOPY AT BRIDGEPORT STATION

TOWN: **BRIDGEPORT**

DRAWING TITLE: **EASTBOUND CANOPY SECTIONS V**

PROJECT NO. **301-155**
DRAWING NO. **S-19**
SHEET NO. **04.19**

NOTES:

1. PROVIDE $\frac{1}{2}$" DIA. VENT HOLE AT LOW END OF RAFTER(S).
2. SEE. ARCH. DWGS. FOR STANDING SEAM ROOFING, CELLULAR DECKING, FLASHING AND GUTTER DETAILS.
3. PROVIDE WASHER UNDER BOLT HEAD AND NUT AT ALL HSS THROUGH BOLT CONNECTIONS.
4. PROVIDE CLOSURE PLATES AT ENDS OF ALL HSS TUBES.
5. SEE DWG. S-40 FOR RAFTER AND FASCIA DETAILS AT CONCOURSE.
6. ASSUMED TOP OF PLATFORM ELEVATION(S) SHOWN ARE BASED ON LIMITED SURVEY. CONTRACTOR SHALL CONFIRM ELEVATION(S) PRIOR TO CREATING SHOP DRAWINGS AND PROVIDE ELEVATIONS TO THE ENGINEER THAT VARY GREATER THAN $\frac{1}{4}$" FROM THOSE SHOWN IN THESE PLANS. CONTRACTOR SHALL ADJUST THE BOTTOM OF RAFTER ELEVATION(S) AS REQUIRED TO MAINTAIN MINIMUM CLEARANCES AND CONSTANT ROOF SLOPE BASED ON THE VERIFIED SURVEYED PLATFORM ELEVATION(S).

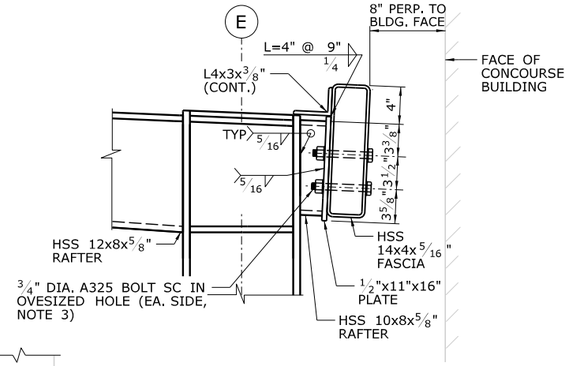

RAFTER TO FASCIA ASSEMBLY AT E14 — 1 / S-20

SCALE: $1\frac{1}{2}$" = 1'-0"

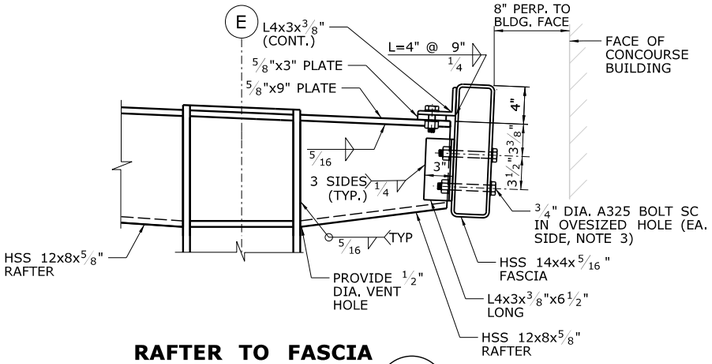

RAFTER TO FASCIA ASSEMBLY AT E15 — 2 / S-20

SCALE: $1\frac{1}{2}$" = 1'-0"

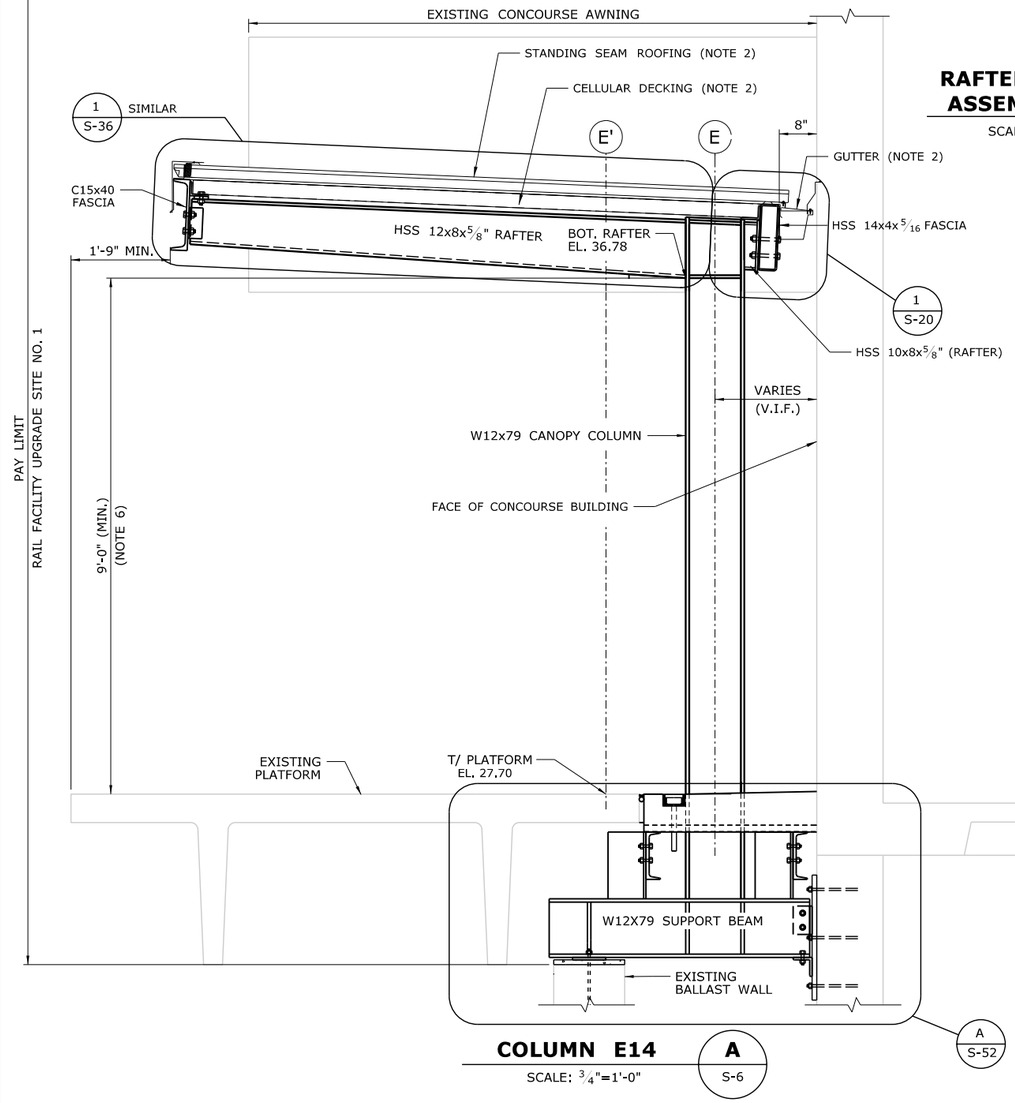

COLUMN E14 — A / S-6

SCALE: $\frac{3}{4}$"=1'-0"

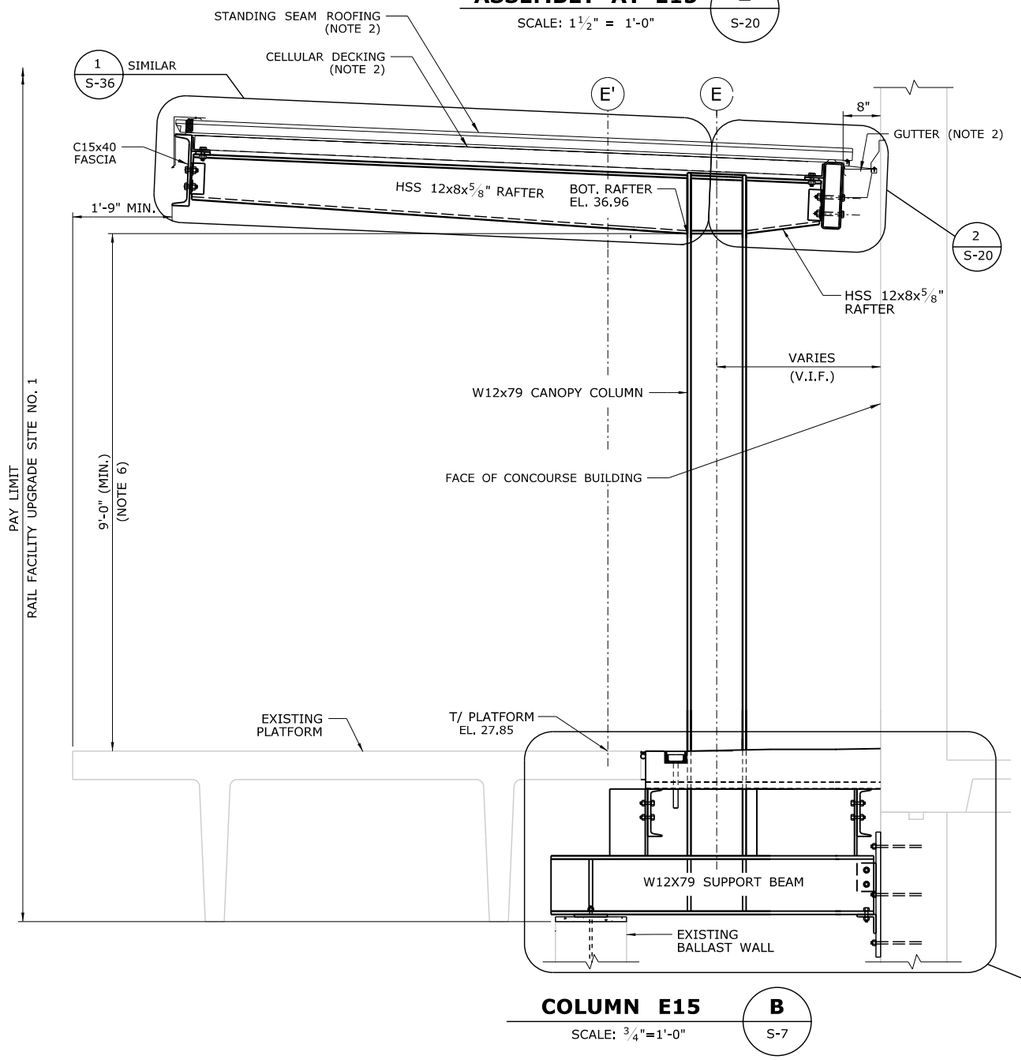

COLUMN E15 — B / S-7

SCALE: $\frac{3}{4}$"=1'-0"

REV.	DATE	REVISION DESCRIPTION	SHEET NO.

THE INFORMATION, INCLUDING ESTIMATED QUANTITIES OF WORK, SHOWN ON THESE SHEETS IS BASED ON LIMITED INVESTIGATIONS BY THE STATE AND IS IN NO WAY WARRANTED TO INDICATE THE CONDITIONS OF ACTUAL QUANTITIES OF WORK WHICH WILL BE REQUIRED.

PLOTTED: 3/31/2014

DESIGNER/DRAFTER: B. HAMAN
CHECKED BY: D. GRIFFIN
SCALE AS NOTED

STATE OF CONNECTICUT
DEPARTMENT OF TRANSPORTATION

FILENAME: ...\301155_04_16_EB_SECTIONS.dgn

LOCHNER
H.W. LOCHNER, INC
2110 Silas Deane Highway
Rocky Hill, CT 06067

APPROVED BY: BEB
DATE: 4/2/2014

PROJECT TITLE:
INSTALLATION OF CANOPY AT BRIDGEPORT STATION

TOWN: **BRIDGEPORT**

DRAWING TITLE: **EASTBOUND CANOPY SECTIONS VI**

PROJECT NO. **301-155**
DRAWING NO. **S-20**
SHEET NO. **04.20**

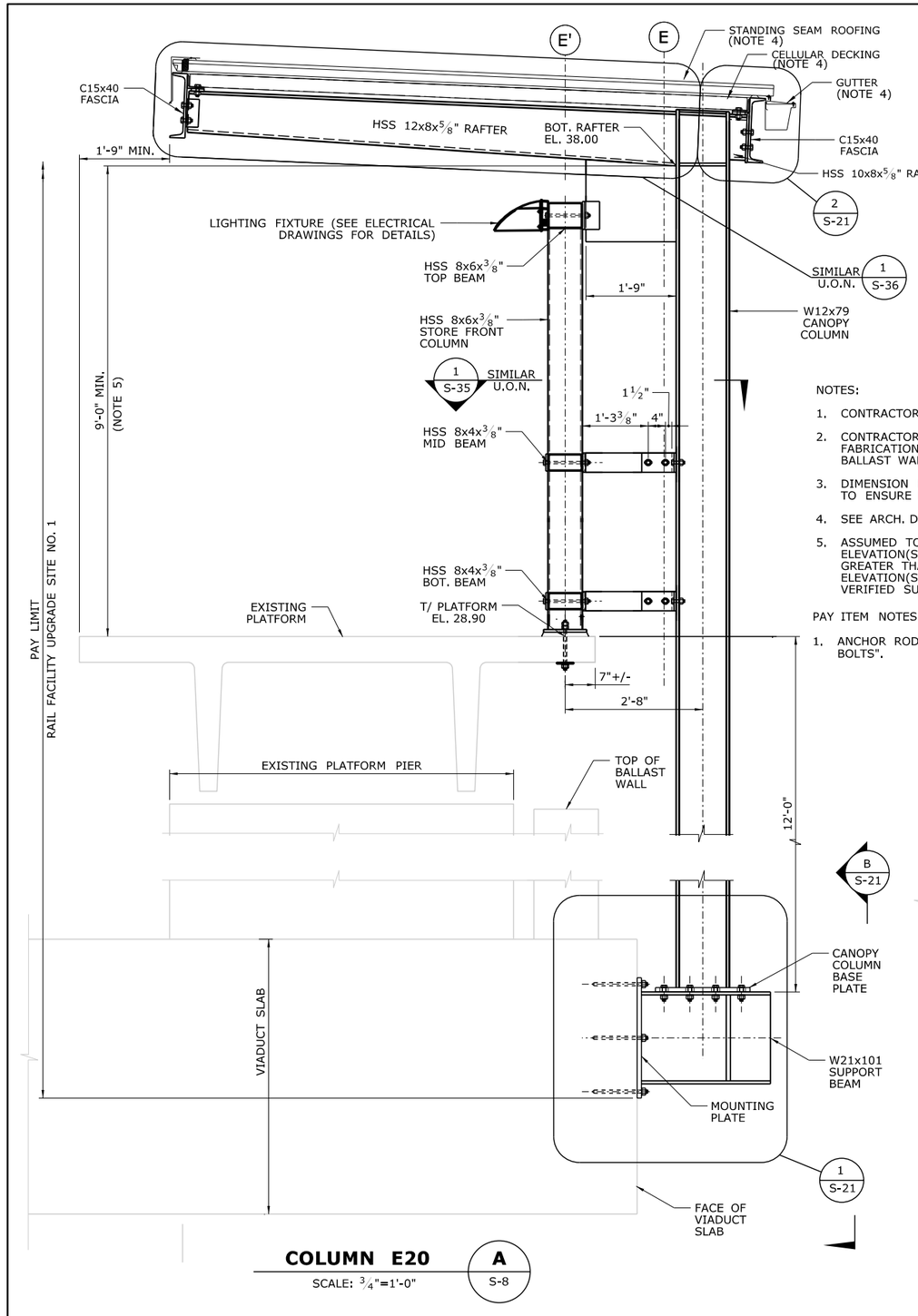

COLUMN E20

SCALE: 3/4"=1'-0" — A / S-8

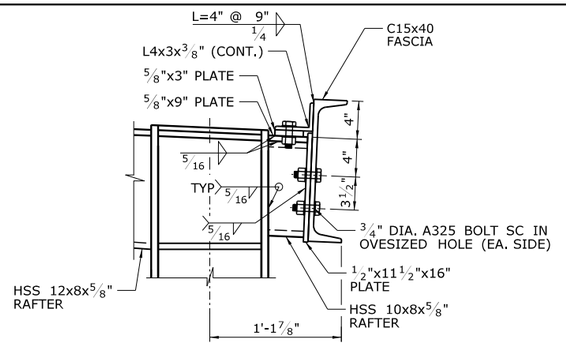

RAFTER TO FASCIA ASSEMBLY AT E20

SCALE: 1 1/2"=1'-0" — 2 / S-21

NOTES:

1. CONTRACTOR TO VERIFY FACE OF BALLAST WALL IS WITHIN 90° +/-3° OF PIER ALIGNMENT.
2. CONTRACTOR TO VERIFY ALIGNMENT BETWEEN THE FACE OF THE BALLAST WALL AND PLATFORM PRIOR TO FABRICATION OF COMPONENTS. COLUMN MAY BE ROTATED UP TO 5° TO ACCOUNT FOR MISALIGNMENT BETWEEN BALLAST WALL AND PLATFORM. ENGINEER TO BE IMMEDIATELY NOTIFIED OF ANY MISALIGNMENTS GREATER THAN 5° .
3. DIMENSION BETWEEN CENTERLINE OF COLUMN AND BALLAST WALL VARIES. FIELD DRILL HOLES IN TOP OF W21 BEAM TO ENSURE PROPER FIT UP.
4. SEE ARCH. DWGS. FOR STANDING SEAM ROOFING, CELLULAR DECKING, FLASHING AND GUTTER DETAILS.
5. ASSUMED TOP OF PLATFORM ELEVATION(S) SHOWN ARE BASED ON LIMITED SURVEY. CONTRACTOR SHALL CONFIRM ELEVATION(S) PRIOR TO CREATING SHOP DRAWINGS AND PROVIDE ELEVATIONS TO THE ENGINEER THAT VARY GREATER THAN 1/4" FROM THOSE SHOWN IN THESE PLANS, CONTRACTOR SHALL ADJUST THE BOTTOM OF RAFTER ELEVATION(S) AS REQUIRED TO MAINTAIN MINIMUM CLEARANCES AND CONSTANT ROOF SLOPE BASED ON THE VERIFIED SURVEYED PLATFORM ELEVATION(S).

PAY ITEM NOTES:

1. ANCHOR RODS, ANCHOR DRILLING AND GROUTING PAID UNDER ITEM "DRILLING HOLES AND GROUTING ANCHOR BOLTS".

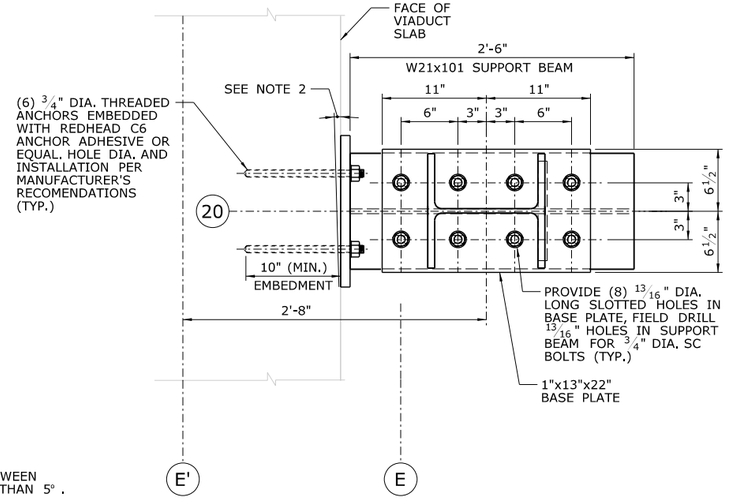

CANOPY COLUMN BASE PLATE & CORBEL

SCALE: 1 1/2"=1'-0" — C / S-21

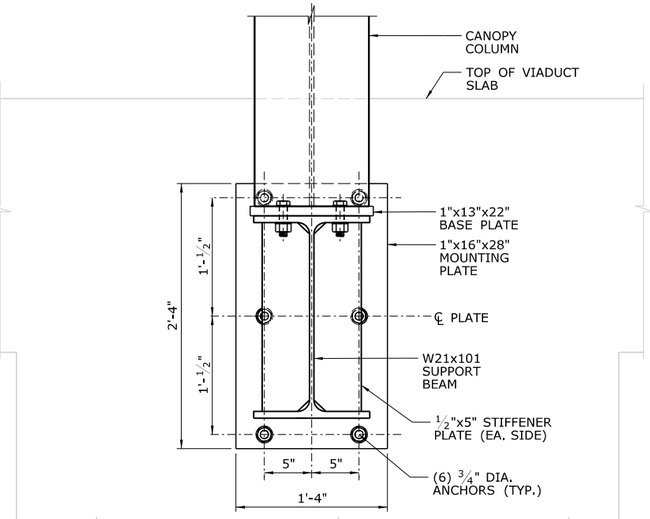

TYPICAL CANOPY COLUMN CORBEL DETAIL

SCALE: 1 1/2"=1'-0" — B / S-8, S-21

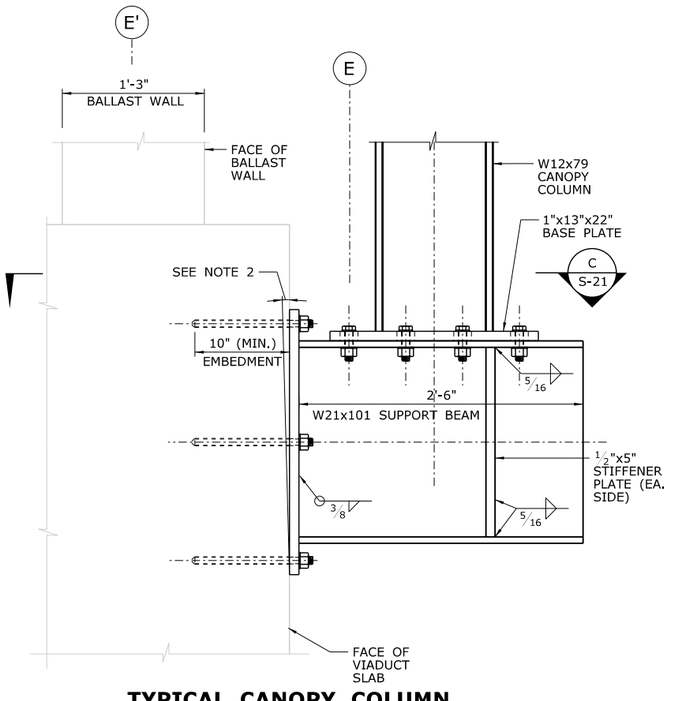

TYPICAL CANOPY COLUMN CORBEL DETAIL

SCALE: 1 1/2"=1'-0" — 1 / S-21

REV.	DATE	REVISION DESCRIPTION	SHEET NO.

THE INFORMATION, INCLUDING ESTIMATED QUANTITIES OF WORK, SHOWN ON THESE SHEETS IS BASED ON LIMITED INVESTIGATIONS BY THE STATE AND IS IN NO WAY WARRANTED TO INDICATE THE CONDITIONS OF ACTUAL QUANTITIES OF WORK WHICH WILL BE REQUIRED.

PLOTTED: 3/31/2014

DESIGNER/DRAFTER: B. HAMAN
CHECKED BY: D. GRIFFIN
SCALE AS NOTED

STATE OF CONNECTICUT
DEPARTMENT OF TRANSPORTATION

FILENAME: ...\301155_04_16_EB_SECTIONS.dgn

LOCHNER
H.W. LOCHNER, INC
2110 Silas Deane Highway
Rocky Hill, CT 06067

APPROVED BY: BEB
DATE: 4/2/2014

PROJECT TITLE:
INSTALLATION OF CANOPY AT BRIDGEPORT STATION

TOWN: **BRIDGEPORT**

DRAWING TITLE: **EASTBOUND CANOPY SECTIONS VII**

PROJECT NO. 301-155
DRAWING NO. S-21
SHEET NO. 04.21

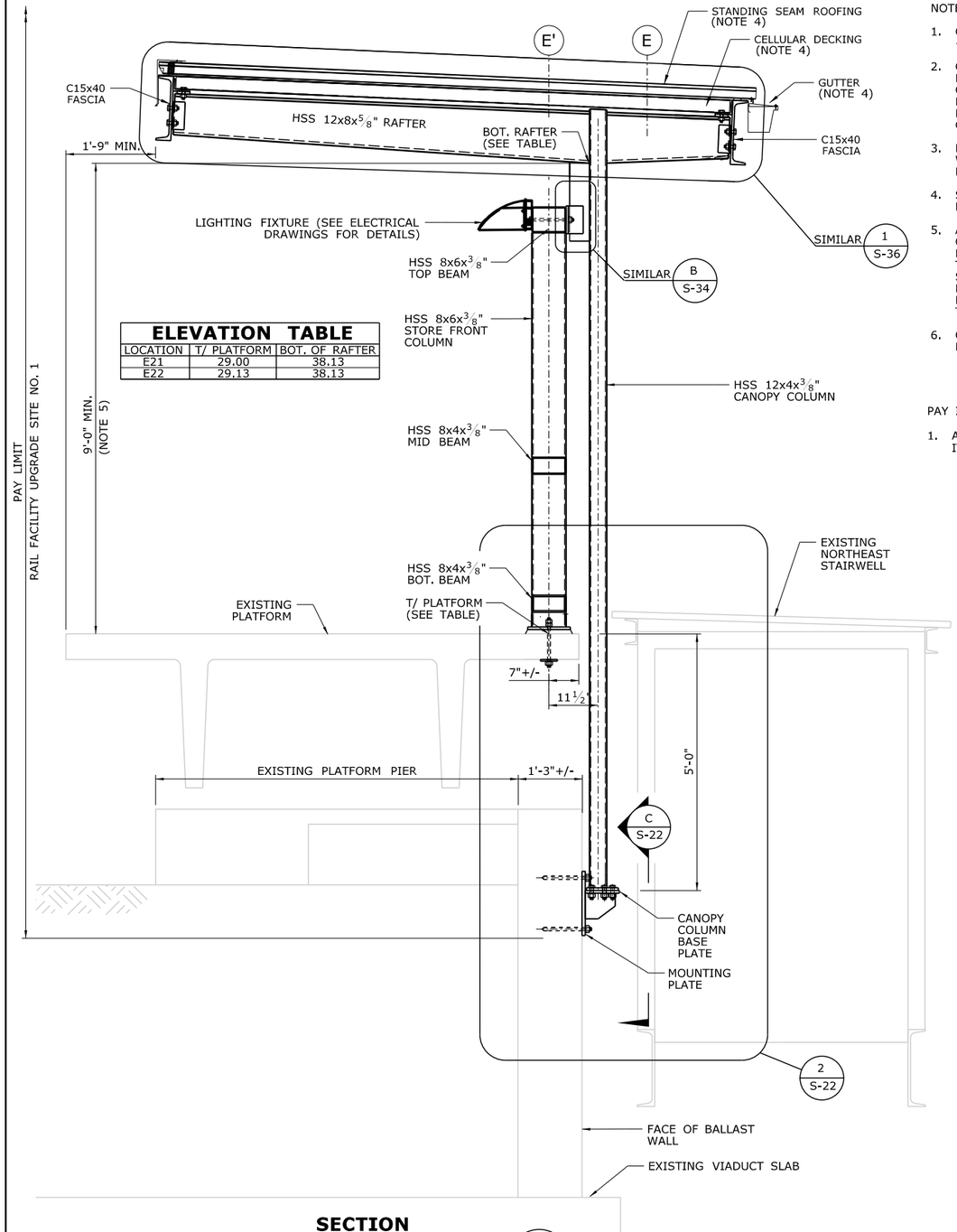

ELEVATION TABLE		
LOCATION	T/ PLATFORM	BOT. OF RAFTER
E21	29.00	38.13
E22	29.13	38.13

SECTION AT COLUMN E22 — A / S-8

COLUMN E21 SIMILAR

SCALE: 3/4"=1'-0"

NOTES:

1. CONTRACTOR TO VERIFY FACE OF BALLAST WALL IS WITHIN 90° +/-3° OF PIER ALIGNMENT.
2. CONTRACTOR TO VERIFY ALIGNMENT BETWEEN THE FACE OF THE BALLAST WALL AND PLATFORM PRIOR TO FABRICATION OF COMPONENTS. COLUMN MAY BE ROTATED UP TO 5° TO ACCOUNT FOR MISALIGNMENT BETWEEN BALLAST WALL AND PLATFORM. ENGINEER TO BE IMMEDIATELY NOTIFIED OF ANY MISALIGNMENTS GREATER THAN 5° .
3. DIMENSION BETWEEN CENTERLINE OF COLUMN AND BALLAST WALL VARIES. FIELD DRILL HOLES IN TOP OF W21 BEAM TO ENSURE PROPER FIT UP.
4. SEE ARCH. DWGS. FOR STANDING SEAM ROOFING, CELLULAR DECKING, FLASHING AND GUTTER DETAILS.
5. ASSUMED TOP OF PLATFORM ELEVATION(S) SHOWN ARE BASED ON LIMITED SURVEY. CONTRACTOR SHALL CONFIRM ELEVATION(S) PRIOR TO CREATING SHOP DRAWINGS AND PROVIDE ELEVATIONS TO THE ENGINEER THAT VARY GREATER THAN 1/4" FROM THOSE SHOWN IN THESE PLANS. CONTRACTOR SHALL ADJUST THE BOTTOM OF RAFTER ELEVATION(S) AS REQUIRED TO MAINTAIN MINIMUM CLEARANCES AND CONSTANT ROOF SLOPE BASED ON THE VERIFIED SURVEYED PLATFORM ELEVATION(S).
6. CONTRACTOR MAY AT HIS OPTION SUBMIT DETAILS FOR A FULL MOMENT CONNECTION SPLICE DETAIL FOR APPROVAL.

PAY ITEM NOTES:

1. ANCHOR RODS, ANCHOR DRILLING AND GROUTING PAID UNDER ITEM "DRILLING HOLES AND GROUTING ANCHOR BOLTS".

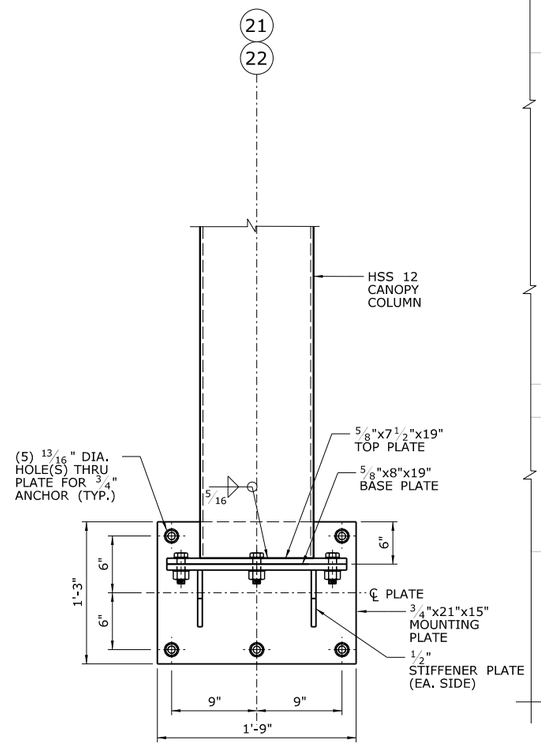

TYPICAL CANOPY COLUMN BASE PLATE & CORBEL DETAIL — C / S-8, S-22

SCALE: 1 1/2"=1'-0"

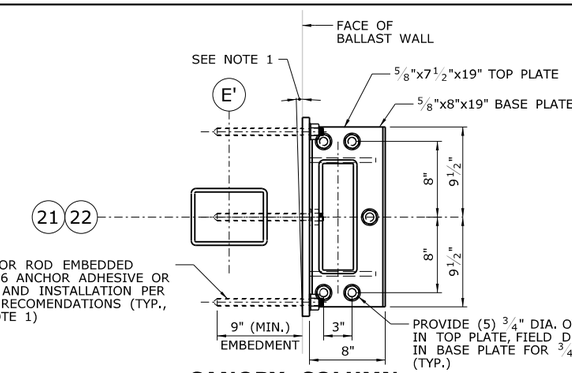

CANOPY COLUMN BASE PLATE & CORBEL — B / S-22

SCALE: 1 1/2"=1'-0"

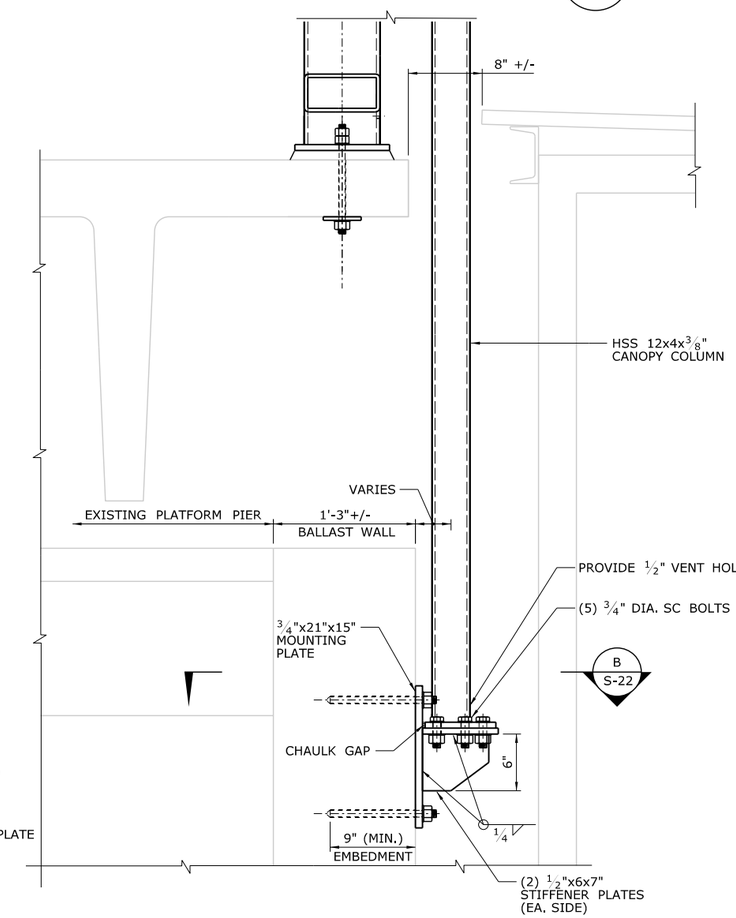

TYPICAL CANOPY COLUMN CORBEL DETAIL — 2 / S-22

SCALE: 1 1/2"=1'-0"

REV.	DATE	REVISION DESCRIPTION	SHEET NO.

THE INFORMATION, INCLUDING ESTIMATED QUANTITIES OF WORK, SHOWN ON THESE SHEETS IS BASED ON LIMITED INVESTIGATIONS BY THE STATE AND IS IN NO WAY WARRANTED TO INDICATE THE CONDITIONS OF ACTUAL QUANTITIES OF WORK WHICH WILL BE REQUIRED.

PLOTTED: 3/31/2014

DESIGNER/DRAFTER: B. HAMAN
CHECKED BY: D. GRIFFIN
SCALE AS NOTED

STATE OF CONNECTICUT
DEPARTMENT OF TRANSPORTATION

FILENAME: ...\301155_04_16_EB_SECTIONS.dgn

LOCHNER
H.W. LOCHNER, INC
2110 Silas Deane Highway
Rocky Hill, CT 06067

APPROVED BY: BEB
DATE: 4/2/2014

PROJECT TITLE:
INSTALLATION OF CANOPY AT BRIDGEPORT STATION

TOWN: **BRIDGEPORT**

DRAWING TITLE: **EASTBOUND CANOPY SECTIONS VIII**

PROJECT NO. **301-155**
DRAWING NO. **S-22**
SHEET NO. **04.22**

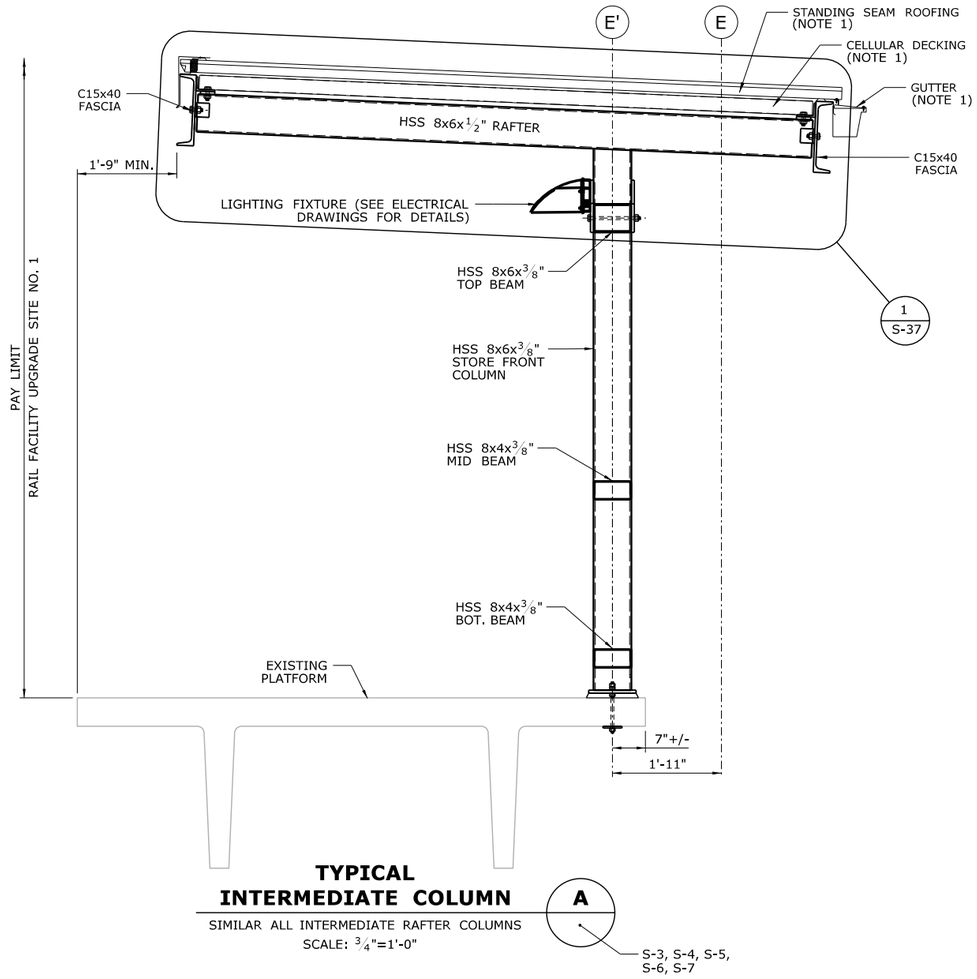

TYPICAL INTERMEDIATE COLUMN — **A**

SIMILAR ALL INTERMEDIATE RAFTER COLUMNS
SCALE: 3/4"=1'-0"

S-3, S-4, S-5, S-6, S-7

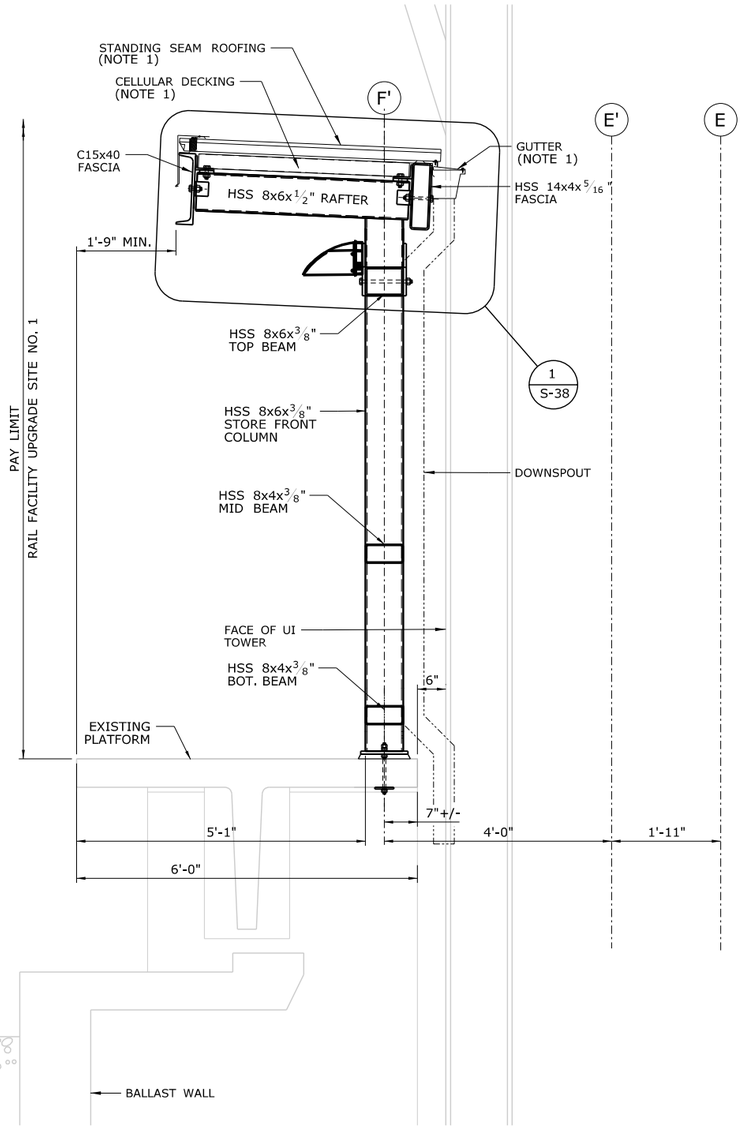

TYPICAL INTERMEDIATE COLUMN AT UI PLATFORM — **B**

TYP. COLUMNS E6b, E6c & E6d
SCALE: 3/4"=1'-0"

S-4

NOTES:

1. SEE. ARCH. DWGS. FOR STANDING SEAM ROOFING, CELLULAR DECKING, FLASHING AND GUTTER DETAILS.

ELEVATION(S).

PAY ITEM NOTES:

1. ANCHOR RODS, ANCHOR DRILLING AND GROUTING PAID

REV.	DATE	REVISION DESCRIPTION	SHEET NO.

THE INFORMATION, INCLUDING ESTIMATED QUANTITIES OF WORK, SHOWN ON THESE SHEETS IS BASED ON LIMITED INVESTIGATIONS BY THE STATE AND IS IN NO WAY WARRANTED TO INDICATE THE CONDITIONS OF ACTUAL QUANTITIES OF WORK WHICH WILL BE REQUIRED.

PLOTTED: 3/31/2014

DESIGNER/DRAFTER: B. HAMAN
CHECKED BY: D. GRIFFIN
SCALE AS NOTED

STATE OF CONNECTICUT
DEPARTMENT OF TRANSPORTATION

FILENAME: ...\301155_04_16_EB_SECTIONS.dgn

LOCHNER
H.W. LOCHNER, INC
2110 Silas Deane Highway
Rocky Hill, CT 06067

APPROVED BY: BEB
DATE: 4/2/2014

PROJECT TITLE:
INSTALLATION OF CANOPY AT BRIDGEPORT STATION

TOWN: **BRIDGEPORT**

DRAWING TITLE: **EASTBOUND CANOPY SECTIONS IX**

PROJECT NO. **301-155**
DRAWING NO. **S-23**
SHEET NO. **04.23**

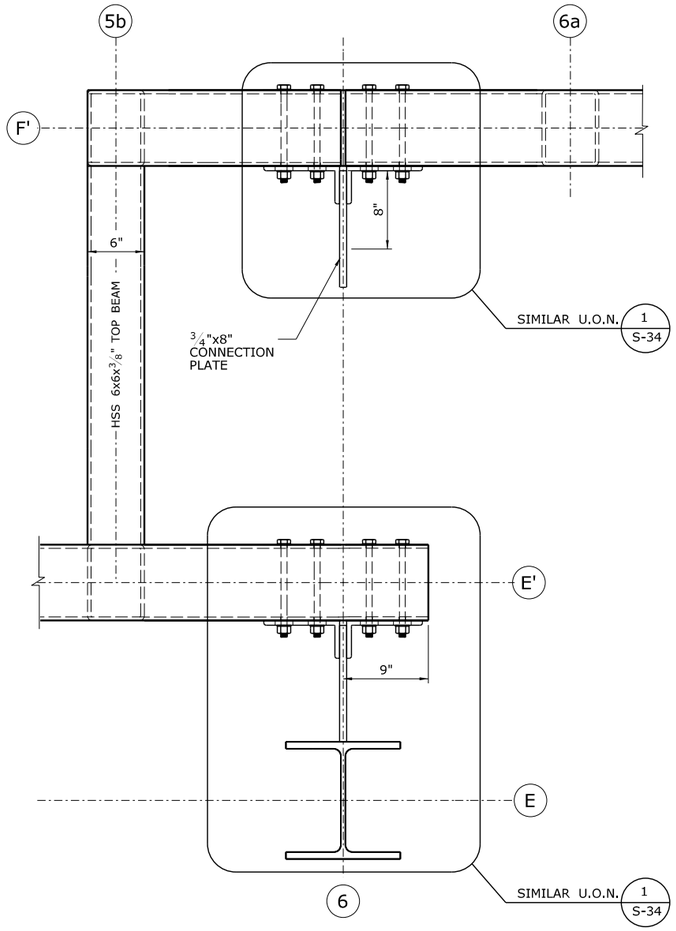

TOP BEAM CONNECTION DETAIL 1

MID AND BOTTOM BEAMS NOT SHOWN
(COLUMNS E7, E'6e & E'7a SIMILAR, OPPOSITE HAND)
SCALE: 1" = 1'-0"

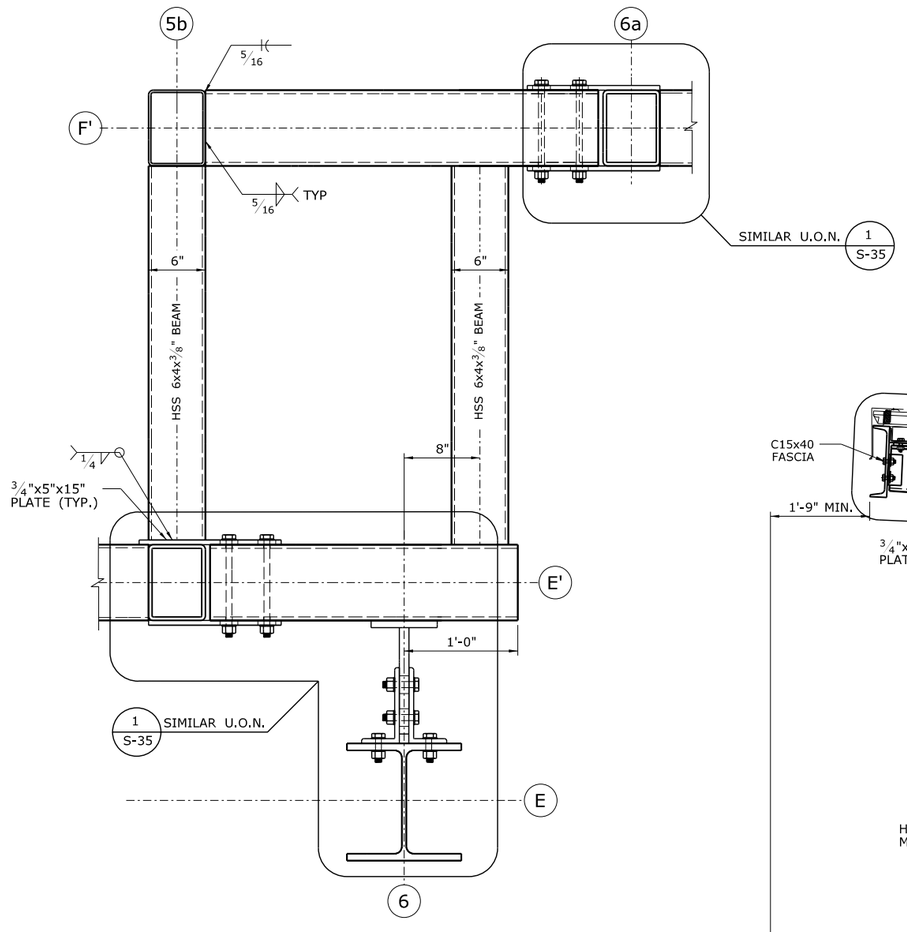

MID & BOTTOM BEAM CONNECTION DETAIL 2

(COLUMNS E7, E'6e & E'7a SIMILAR, OPPOSITE HAND)
SCALE: 1" = 1'-0"

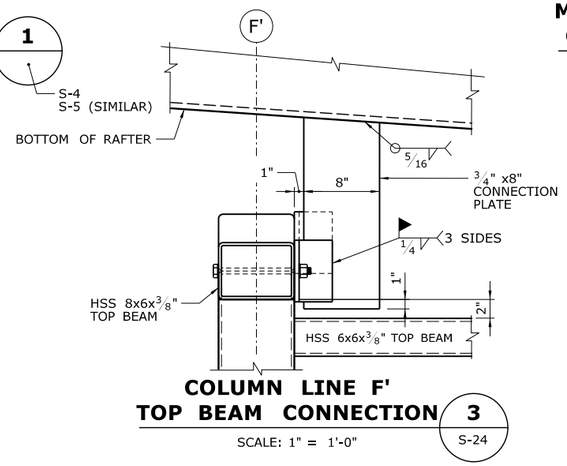

COLUMN LINE F' TOP BEAM CONNECTION 3 S-24

SCALE: 1" = 1'-0"

NOTES:

1. SEE. ARCH. DWGS. FOR STANDING SEAM ROOFING, CELLULAR DECKING, FLASHING AND GUTTER DETAILS.
2. PROVIDE CLOSURE PLATE AT ALL EXPOSED ENDS OF ALL HORIZONTAL BEAMS.

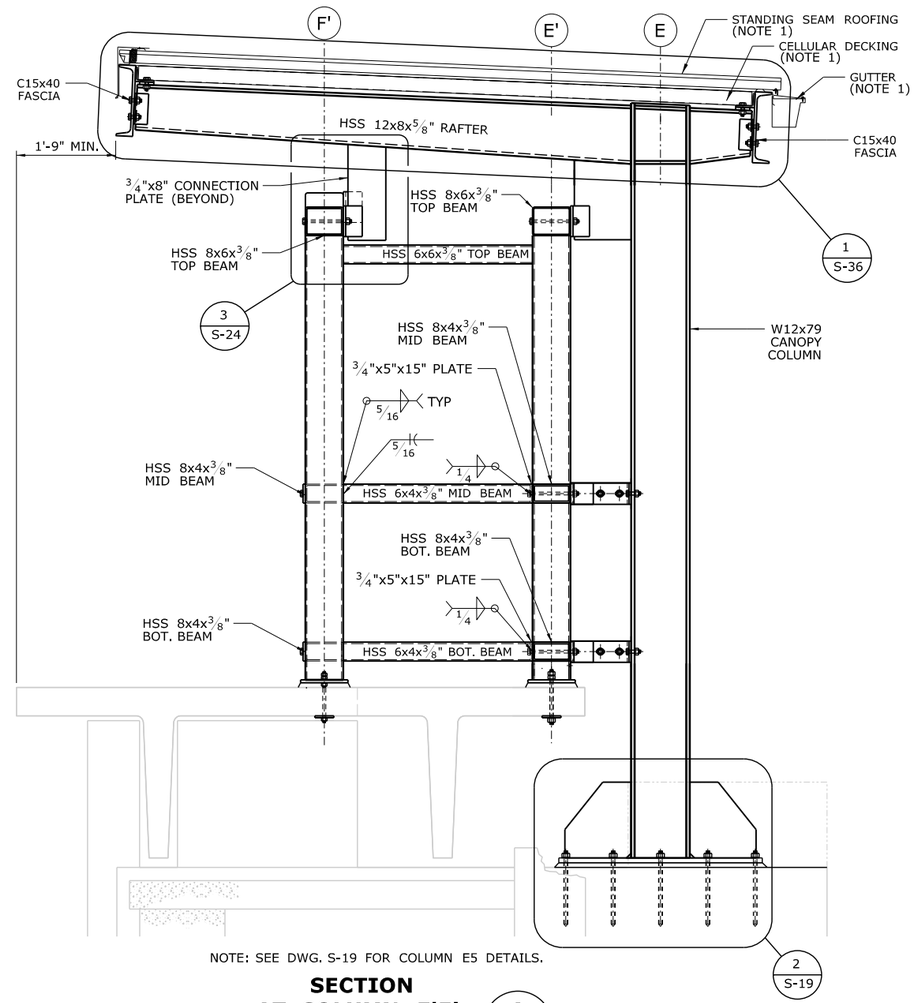

NOTE: SEE DWG. S-19 FOR COLUMN E5 DETAILS.

SECTION AT COLUMN E'5b A S-4

SCALE: 3/4"=1'-0"

REV.	DATE	REVISION DESCRIPTION	SHEET NO.

THE INFORMATION, INCLUDING ESTIMATED QUANTITIES OF WORK, SHOWN ON THESE SHEETS IS BASED ON LIMITED INVESTIGATIONS BY THE STATE AND IS IN NO WAY WARRANTED TO INDICATE THE CONDITIONS OF ACTUAL QUANTITIES OF WORK WHICH WILL BE REQUIRED.

PLOTTED: 3/31/2014

DESIGNER/DRAFTER: B. HAMAN
CHECKED BY: D. GRIFFIN
SCALE AS NOTED

STATE OF CONNECTICUT
DEPARTMENT OF TRANSPORTATION

FILENAME: ...\301155_04_16_EB_SECTIONS.dgn

LOCHNER
H.W. LOCHNER, INC
2110 Silas Deane Highway
Rocky Hill, CT 06067

APPROVED BY: BEB
DATE: 4/2/2014

PROJECT TITLE:
INSTALLATION OF CANOPY AT BRIDGEPORT STATION

TOWN: **BRIDGEPORT**
PROJECT NO. **301-155**
DRAWING NO. **S-24**
DRAWING TITLE: **EASTBOUND CANOPY SECTION X**
SHEET NO. **04.24**

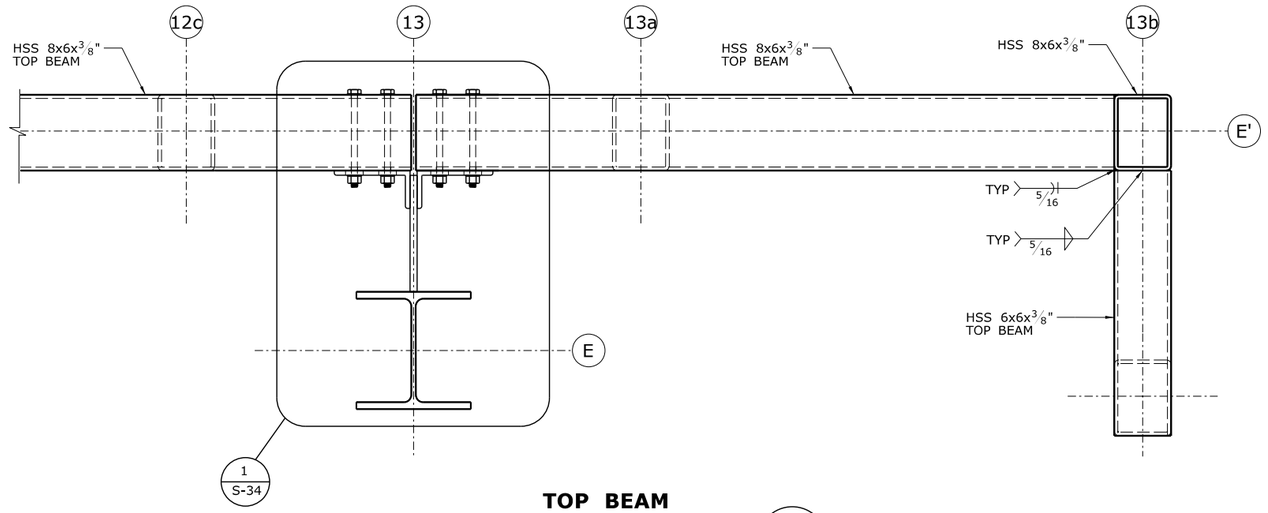

TOP BEAM CONNECTION DETAIL 1

MID AND BOTTOM BEAMS NOT SHOWN
SCALE: 1" = 1'-0"

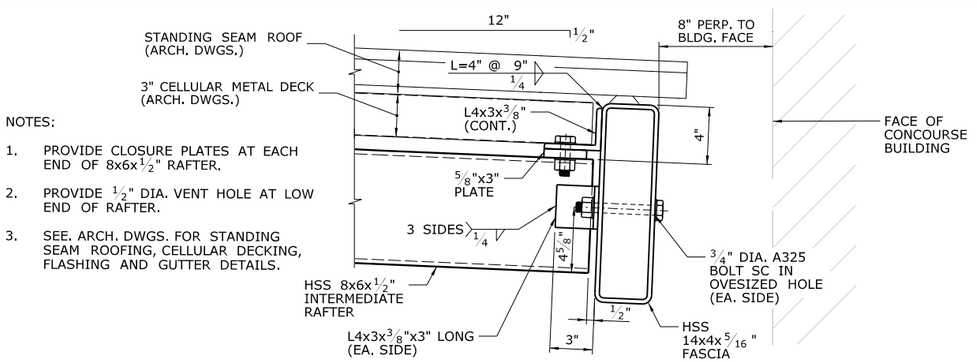

NOTES:

1. PROVIDE CLOSURE PLATES AT EACH END OF 8x6x1/2" RAFTER.
2. PROVIDE 1/2" DIA. VENT HOLE AT LOW END OF RAFTER.
3. SEE. ARCH. DWGS. FOR STANDING SEAM ROOFING, CELLULAR DECKING, FLASHING AND GUTTER DETAILS.

INTERMEDIATE RAFTER TO FASCIA ASSEMBLY 3

S-25, S-26

SCALE: 1" = 1'-0"

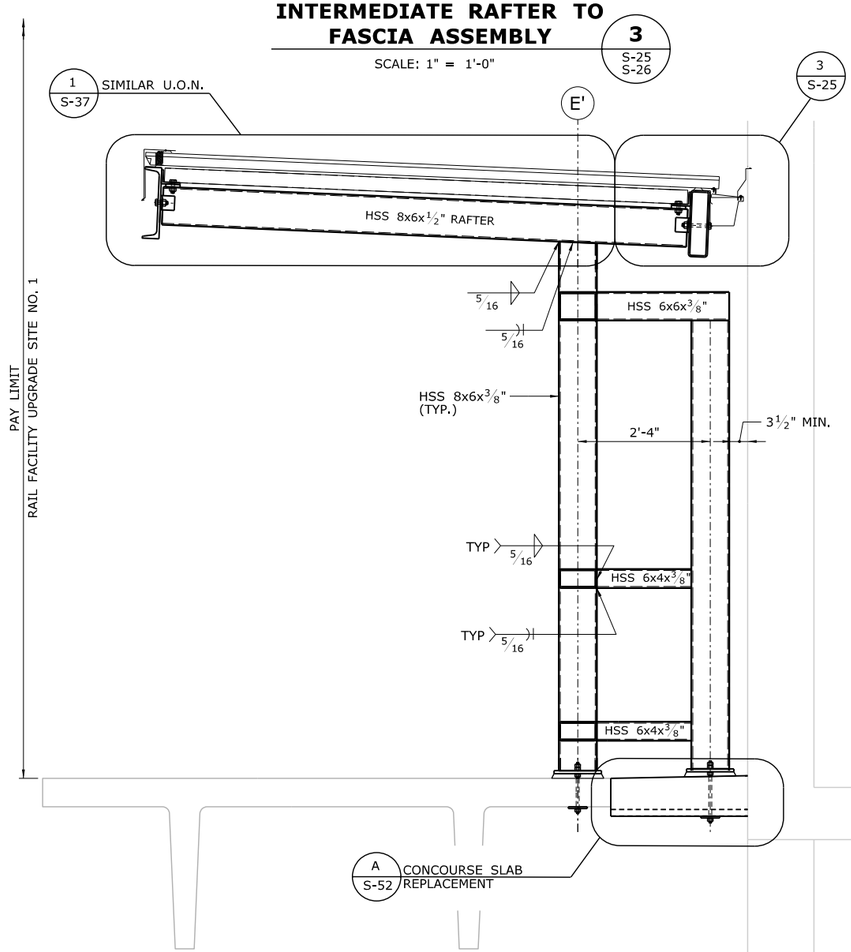

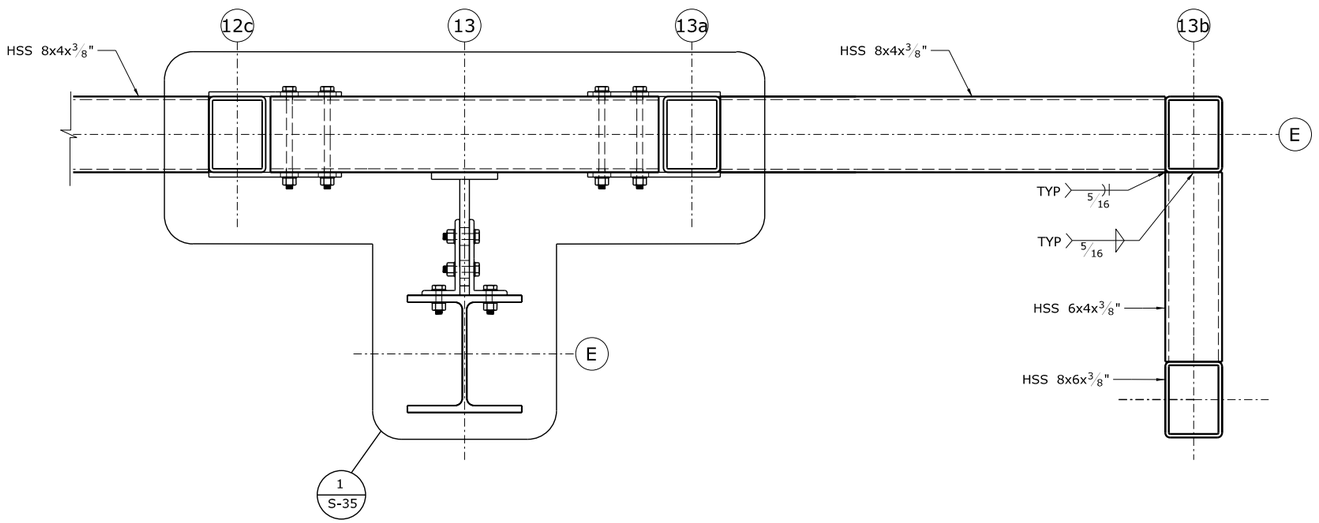

MID & BOTTOM BEAM CONNECTION DETAIL 2

SCALE: 1" = 1'-0"

COLUMN E'13b A

SCALE: 3/4"=1'-0"

REV.	DATE	REVISION DESCRIPTION	SHEET NO.

THE INFORMATION, INCLUDING ESTIMATED QUANTITIES OF WORK, SHOWN ON THESE SHEETS IS BASED ON LIMITED INVESTIGATIONS BY THE STATE AND IS IN NO WAY WARRANTED TO INDICATE THE CONDITIONS OF ACTUAL QUANTITIES OF WORK WHICH WILL BE REQUIRED.

PLOTTED: 3/31/2014

DESIGNER/DRAFTER: B. HAMAN
CHECKED BY: D. GRIFFIN
SCALE AS NOTED

STATE OF CONNECTICUT
DEPARTMENT OF TRANSPORTATION

FILENAME: ...\301155_04_16_EB_SECTIONS.dgn

LOCHNER
H.W. LOCHNER, INC
2110 Silas Deane Highway
Rocky Hill, CT 06067

APPROVED BY: BEB
DATE: 4/2/2014

PROJECT TITLE:
INSTALLATION OF CANOPY AT BRIDGEPORT STATION

TOWN: **BRIDGEPORT**

DRAWING TITLE: **EASTBOUND CANOPY SECTIONS XI**

PROJECT NO. **301-155**
DRAWING NO. **S-25**
SHEET NO. **04.25**

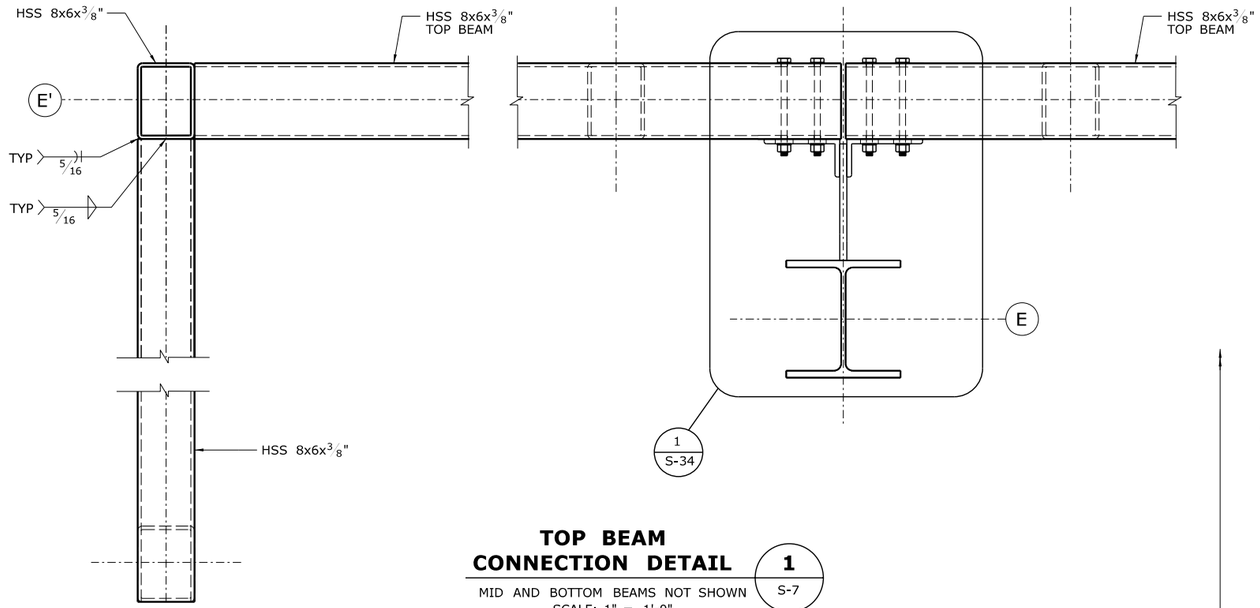

TOP BEAM CONNECTION DETAIL 1

MID AND BOTTOM BEAMS NOT SHOWN
SCALE: 1" = 1'-0"

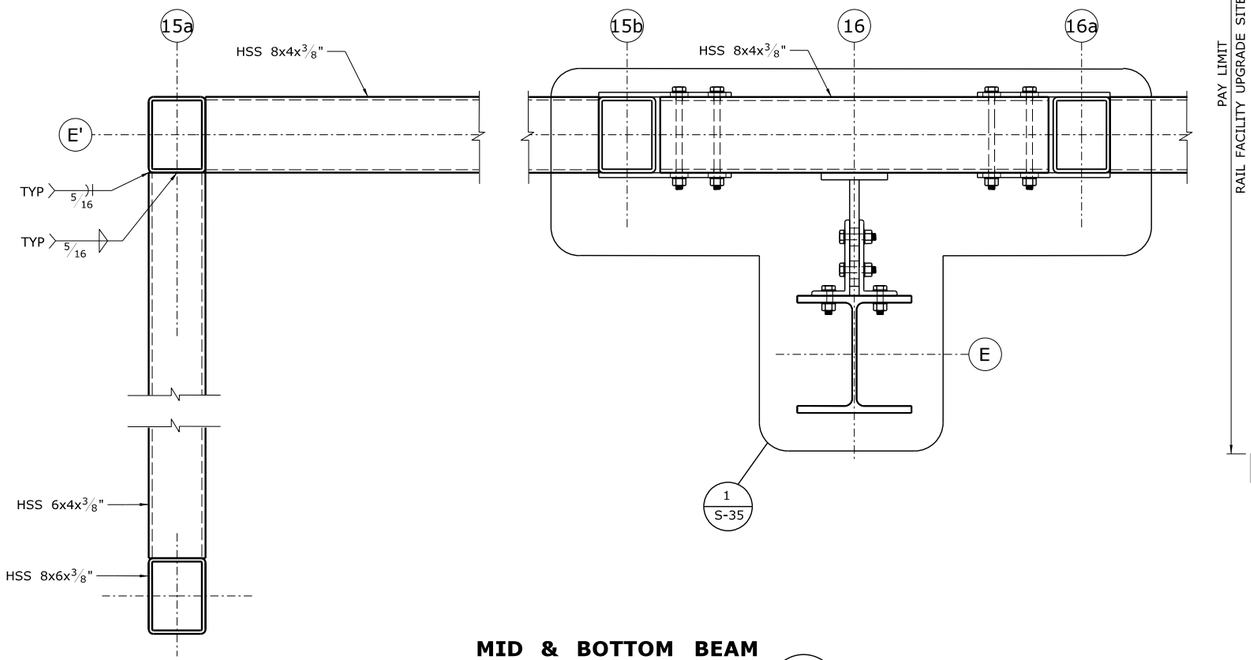

MID & BOTTOM BEAM CONNECTION DETAIL 2

SCALE: 1" = 1'-0"

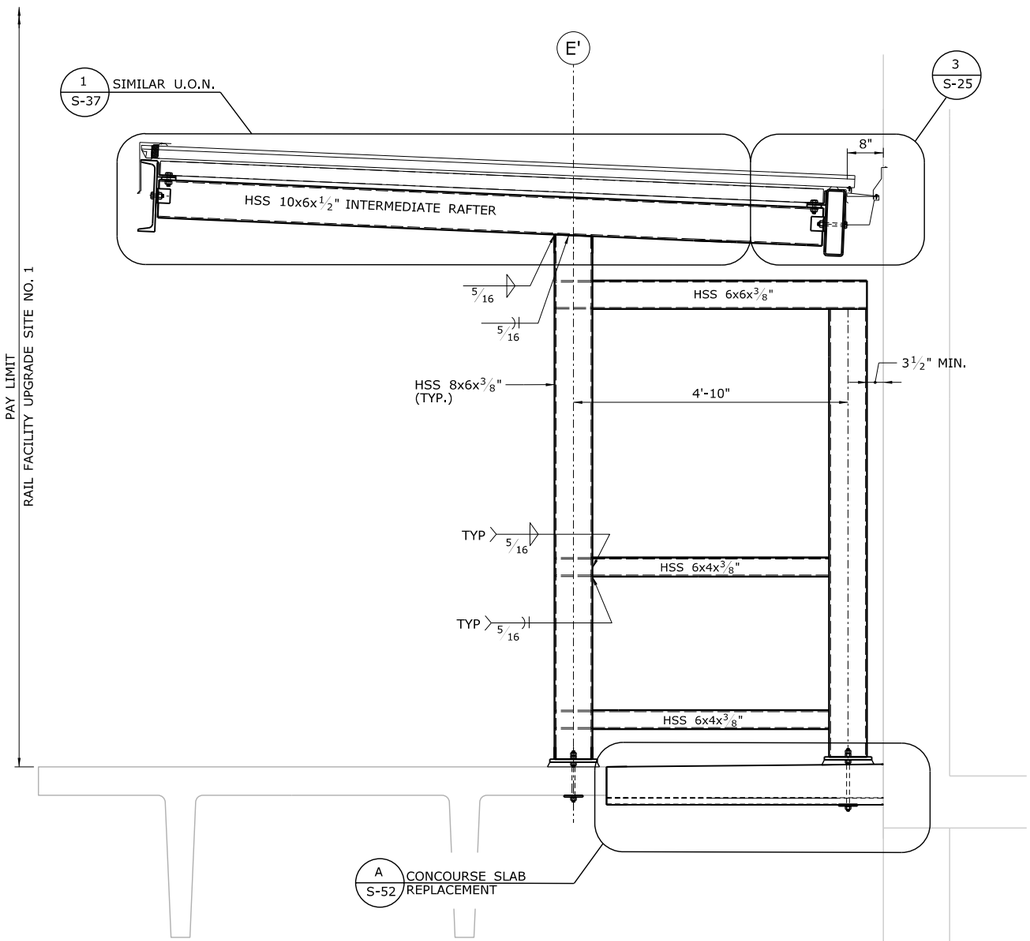

COLUMN E'15a A

SCALE: 3/4"=1'-0"

REV.	DATE	REVISION DESCRIPTION	SHEET NO.

THE INFORMATION, INCLUDING ESTIMATED QUANTITIES OF WORK, SHOWN ON THESE SHEETS IS BASED ON LIMITED INVESTIGATIONS BY THE STATE AND IS IN NO WAY WARRANTED TO INDICATE THE CONDITIONS OF ACTUAL QUANTITIES OF WORK WHICH WILL BE REQUIRED.

PLOTTED: 3/31/2014

DESIGNER/DRAFTER: B. HAMAN
CHECKED BY: D. GRIFFIN
SCALE AS NOTED

STATE OF CONNECTICUT
DEPARTMENT OF TRANSPORTATION

FILENAME: ...\301155_04_16_EB_SECTIONS.dgn

LOCHNER
H.W. LOCHNER, INC
2110 Silas Deane Highway
Rocky Hill, CT 06067

APPROVED BY: BEB
DATE: 4/2/2014

PROJECT TITLE:
INSTALLATION OF CANOPY AT BRIDGEPORT STATION

TOWN: **BRIDGEPORT**

DRAWING TITLE: **EASTBOUND CANOPY SECTIONS XII**

PROJECT NO. **301-155**
DRAWING NO. **S-26**
SHEET NO. **04.26**

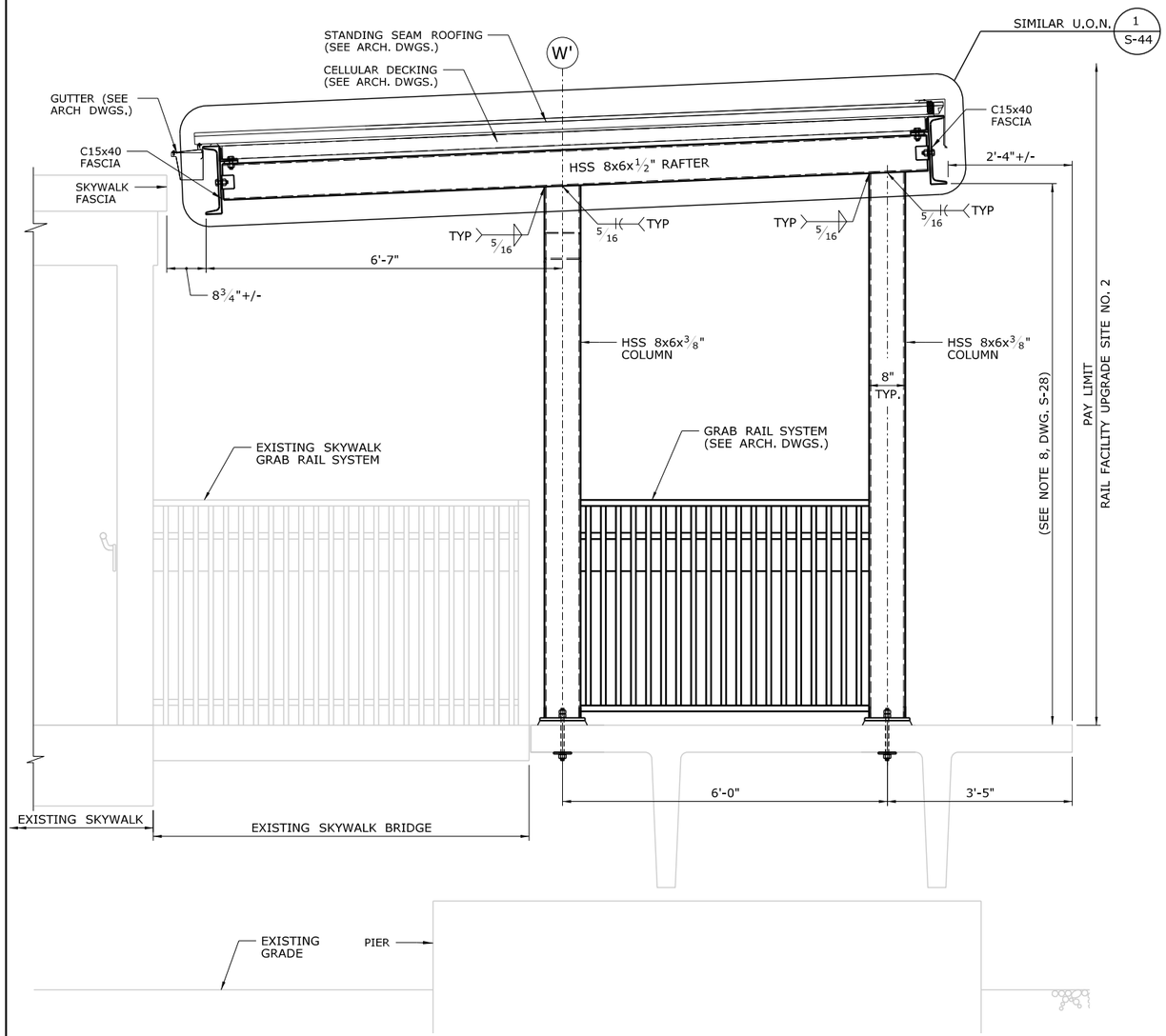

COLUMN W'1a (A) — SCALE: 3/4"=1'-0" — S-9

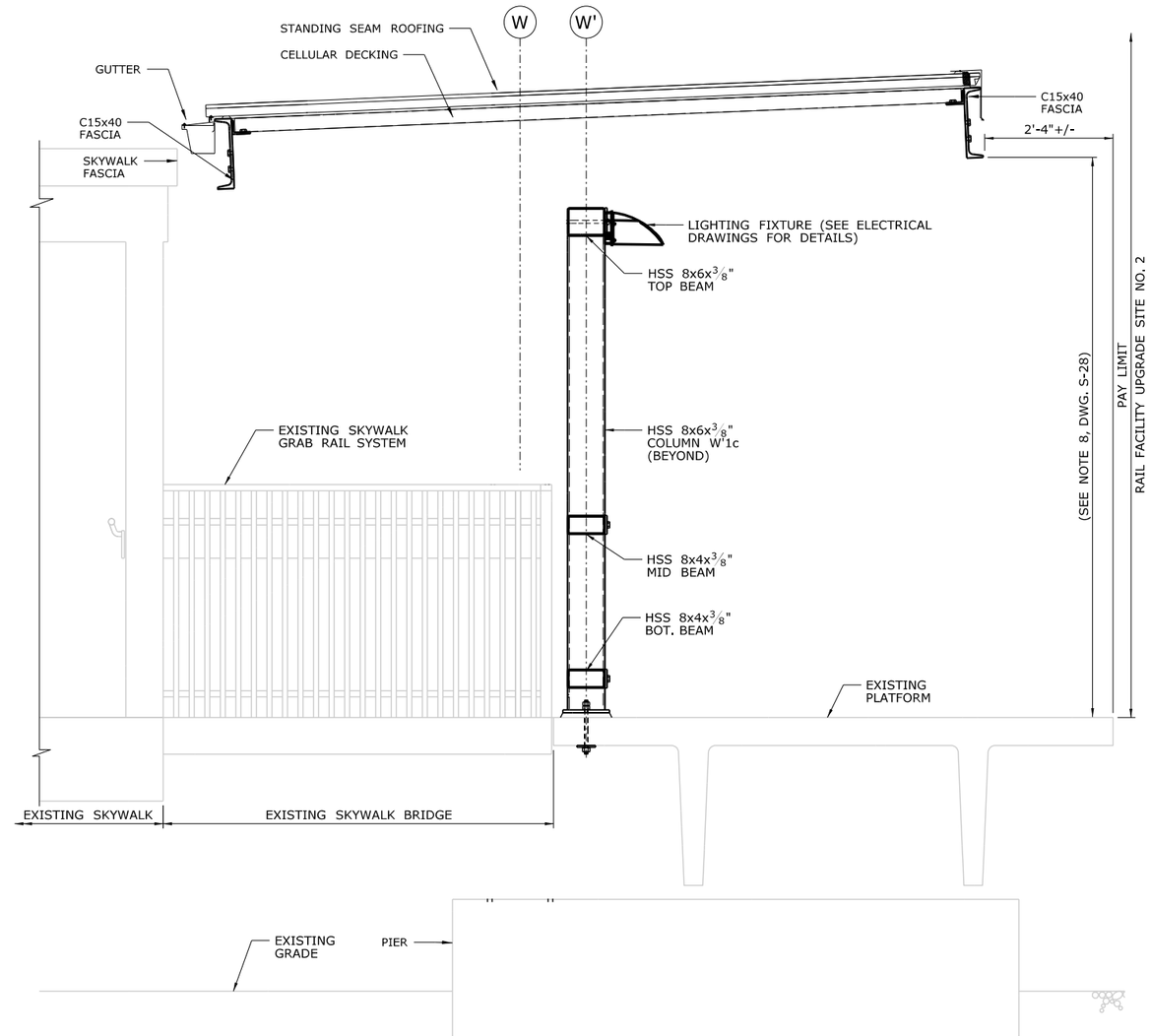

COLUMN W'1b (B) — SCALE: 3/4"=1'-0" — S-9

REV.	DATE	REVISION DESCRIPTION	SHEET NO.

THE INFORMATION, INCLUDING ESTIMATED QUANTITIES OF WORK, SHOWN ON THESE SHEETS IS BASED ON LIMITED INVESTIGATIONS BY THE STATE AND IS IN NO WAY WARRANTED TO INDICATE THE CONDITIONS OF ACTUAL QUANTITIES OF WORK WHICH WILL BE REQUIRED.

PLOTTED: 3/31/2014

DESIGNER/DRAFTER: B. HAMAN
CHECKED BY: D. GRIFFIN
SCALE AS NOTED

STATE OF CONNECTICUT
DEPARTMENT OF TRANSPORTATION

FILENAME: ...\301155_04_25_WB_SECTIONS.dgn

LOCHNER
H.W. LOCHNER, INC
2110 Silas Deane Highway
Rocky Hill, CT 06067

APPROVED BY: BEB
DATE: 4/2/2014

PROJECT TITLE:
INSTALLATION OF CANOPY AT BRIDGEPORT STATION

TOWN: **BRIDGEPORT**

DRAWING TITLE: **WESTBOUND CANOPY SECTIONS I**

PROJECT NO. **301-155**
DRAWING NO. **S-27**
SHEET NO. **04.27**

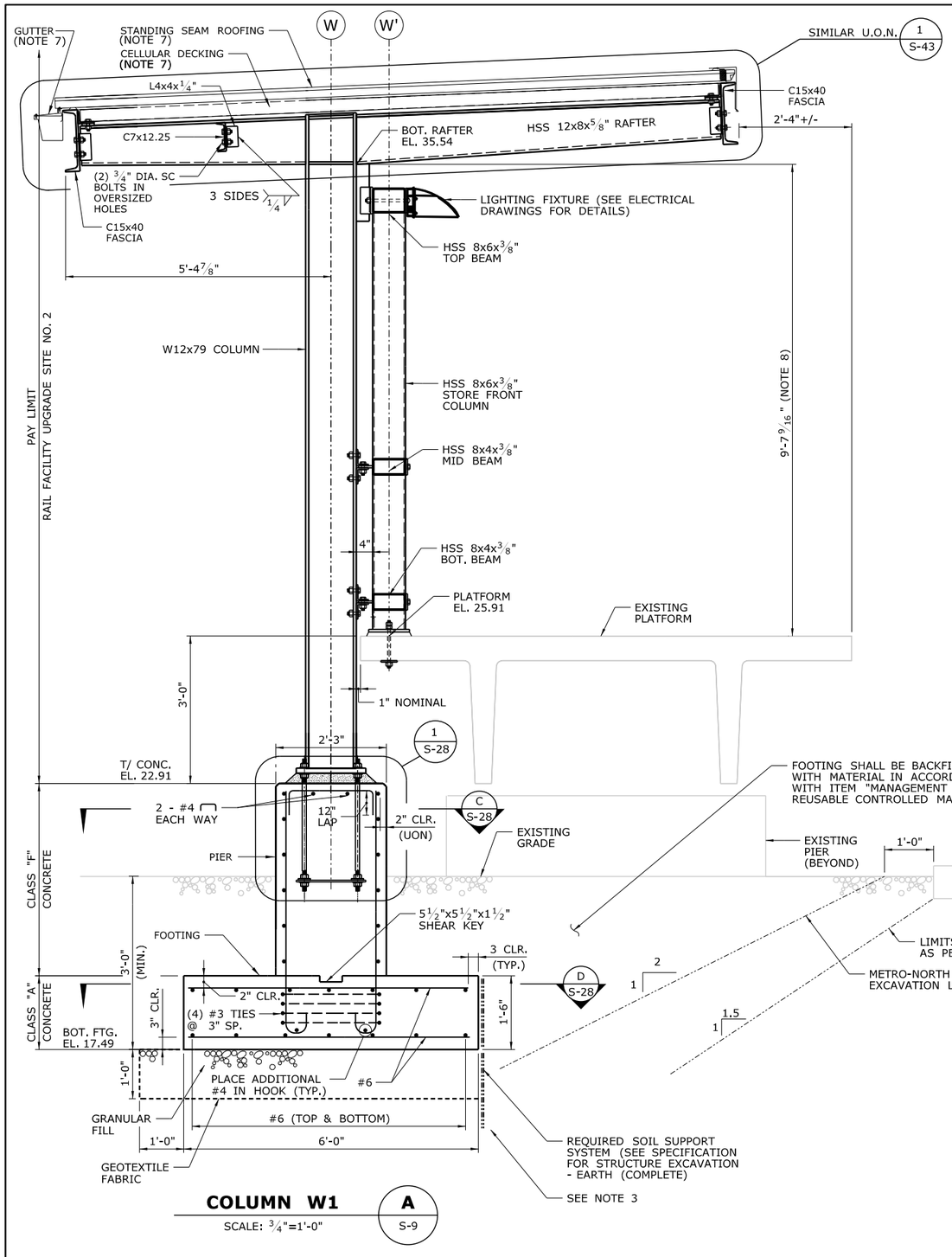

COLUMN W1
SCALE: 3/4"=1'-0"
A S-9

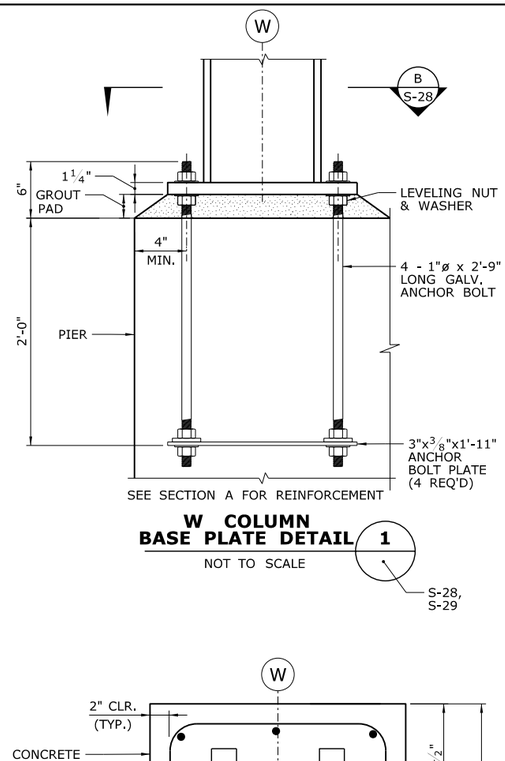

W COLUMN BASE PLATE DETAIL 1
NOT TO SCALE
S-28, S-29

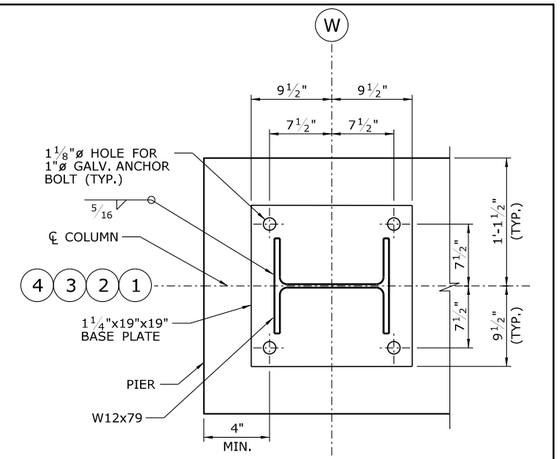

W COLUMN BASE PLATE SECTION B
NOT TO SCALE
S-9 S-28

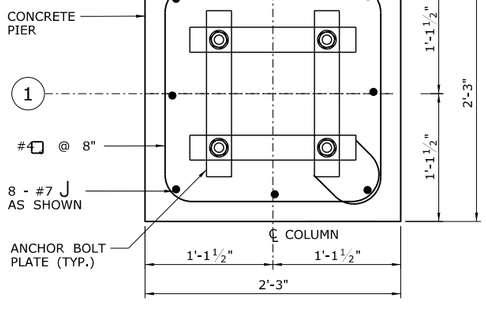

COLUMN W1 PIER REINFORCEMENT C
SCALE: 3/4"=1'-0"
S-28

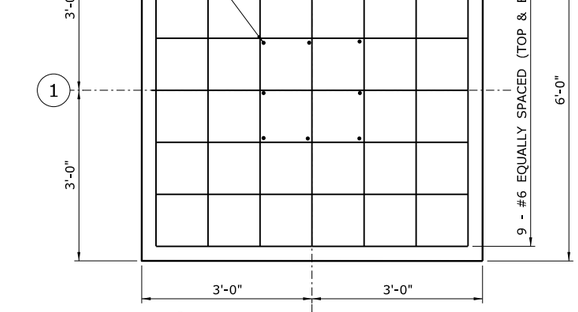

COLUMN W1 SPREAD FOOTING PLAN D
SCALE: 3/4"=1'-0"
S-28

NOTES:

1. ALL REINFORCEMENT TO BE EPOXY COATED.
2. THE CONTRACTOR SHALL REQUEST THE ENGINEER'S INSPECTION AND APPROVAL OF THE FOUNDATION SUBGRADE BEFORE PLACING CONCRETE FOR FOOTINGS. THE SUBGRADE SHALL NOT BE DISTURBED UNLESS THE ENGINEER DETERMINES THAT THERE IS DERELICT OR ORGANIC MATERIAL. IF DERELICT OR ORGANIC MATERIAL IS FOUND, THE SOIL SHALL BE REMOVED TO A LEVEL 12" BELOW THE UNSUITABLE MATERIAL AND BACKFILLED AND COMPACTED WITH GRANULAR FILL, OR AS DIRECTED BY THE ENGINEER.
3. LOCATION AND EXISTENCE OF EXISTING ABANDONED TRACK GIRDERS IS UNKNOWN. IF ENCONTERED REMOVE TRACK GIRDER 6" FROM NEW CONCRETE. IF TRACK GIRDER IS ENCOUNTERED IN EXISTING PIER DRILL DOWEL HOLES THRU THE TRACK GIRDER. PAID FOR IN ACCORDANCE WITH "DEMOLITION".
4. HAND DIGGING IN BALLAST IS ANTICIPATED AT ALL FOOTINGS.
5. EXCAVATION SHALL BE PAID IN ACCORDANCE WITH "STRUCTURE EXCAVATION - EARTH (COMPLETE)".
6. GEOTEXTILE SHALL BE INCIDENTAL TO "GRANULAR FILL".
7. SEE ARCH. DWGS. FOR STANDING SEAM ROOFING, CELLULAR DECKING, FLASHING AND GUTTER DETAILS.
8. ASSUMED TOP OF PLATFORM ELEVATION(S) SHOWN ARE BASED ON LIMITED SURVEY. CONTRACTOR SHALL CONFIRM ELEVATION(S) PRIOR TO CREATING SHOP DRAWINGS AND PROVIDE ELEVATIONS TO THE ENGINEER THAT VARY GREATER THAN 1/4" FROM THOSE SHOWN IN THESE PLANS. CONTRACTOR SHALL ADJUST THE BOTTOM OF RAFTER ELEVATION(S) AS REQUIRED TO MAINTAIN MINIMUM CLEARANCES AND CONSTANT ROOF SLOPE BASED ON THE VERIFIED SURVEYED PLATFORM ELEVATION(S).

REV.	DATE	REVISION DESCRIPTION	SHEET NO.

THE INFORMATION, INCLUDING ESTIMATED QUANTITIES OF WORK, SHOWN ON THESE SHEETS IS BASED ON LIMITED INVESTIGATIONS BY THE STATE AND IS IN NO WAY WARRANTED TO INDICATE THE CONDITIONS OF ACTUAL QUANTITIES OF WORK WHICH WILL BE REQUIRED.

PLOTTED: 3/31/2014

DESIGNER/DRAFTER: B. HAMAN
CHECKED BY: D. GRIFFIN
SCALE AS NOTED

STATE OF CONNECTICUT
DEPARTMENT OF TRANSPORTATION

FILENAME: ...\301155_04_25_WB_SECTIONS.dgn

LOCHNER
H.W. LOCHNER, INC
2110 Silas Deane Highway
Rocky Hill, CT 06067

APPROVED BY: BEB
DATE: 4/2/2014

PROJECT TITLE:
INSTALLATION OF CANOPY AT BRIDGEPORT STATION

TOWN: **BRIDGEPORT**
PROJECT NO. **301-155**
DRAWING NO. **S-28**
DRAWING TITLE: **WESTBOUND CANOPY SECTIONS II**
SHEET NO. **04.28**

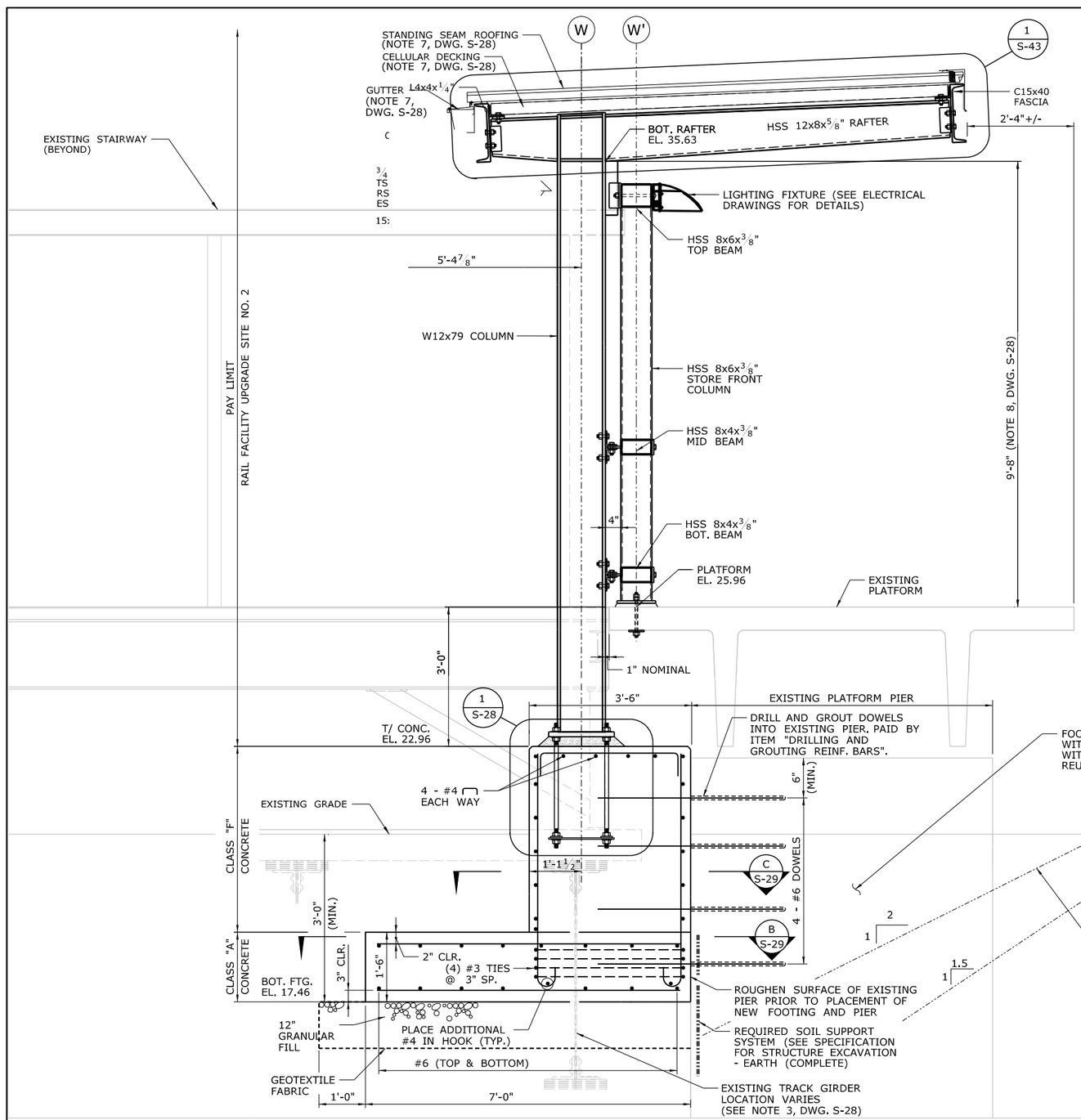

COLUMN W2
SCALE: 3/4"=1'-0"
A
S-9

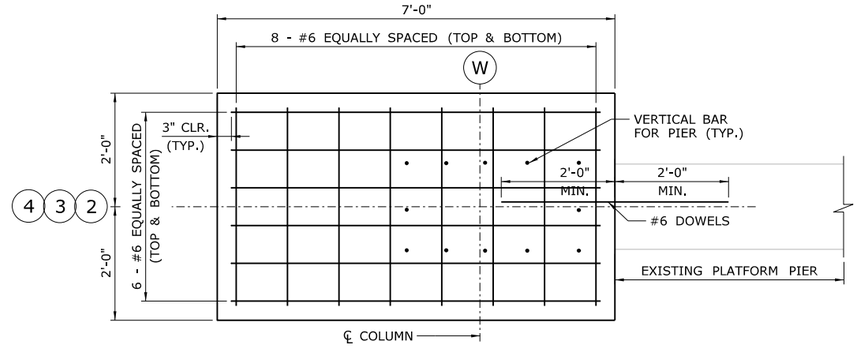

PLAN
COLUMN W2, W3, W4
SPREAD FOOTING
SCALE: 3/4"=1'-0"
B
S-29
S-30

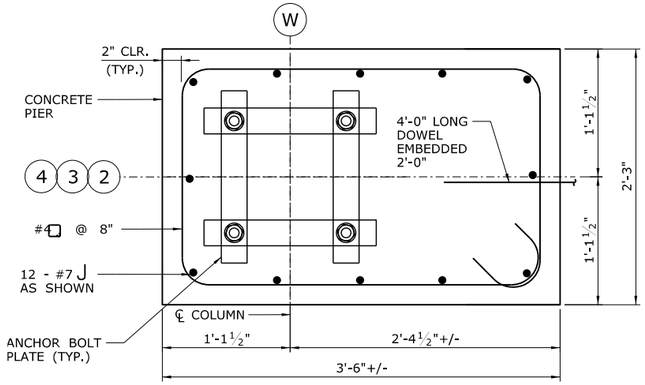

COLUMN W2, W3, W4
PIER REINFORCEMENT
NOT TO SCALE
C
S-29
S-30

NOTE:

1. SEE NOTES DWG. S-28.

REV.	DATE	REVISION DESCRIPTION	SHEET NO.

THE INFORMATION, INCLUDING ESTIMATED QUANTITIES OF WORK, SHOWN ON THESE SHEETS IS BASED ON LIMITED INVESTIGATIONS BY THE STATE AND IS IN NO WAY WARRANTED TO INDICATE THE CONDITIONS OF ACTUAL QUANTITIES OF WORK WHICH WILL BE REQUIRED.

PLOTTED: 3/31/2014

DESIGNER/DRAFTER: B. HAMAN
CHECKED BY: D. GRIFFIN
SCALE AS NOTED

STATE OF CONNECTICUT
DEPARTMENT OF TRANSPORTATION

FILENAME: ...\301155_04_25_WB_SECTIONS.dgn

LOCHNER
H.W. LOCHNER, INC
2110 Silas Deane Highway
Rocky Hill, CT 06067

APPROVED BY: BEB
DATE: 4/2/2014

PROJECT TITLE:
INSTALLATION OF CANOPY AT BRIDGEPORT STATION

TOWN: **BRIDGEPORT**
PROJECT NO. **301-155**
DRAWING TITLE: **WESTBOUND CANOPY SECTIONS III**
DRAWING NO. **S-29**
SHEET NO. **04.29**

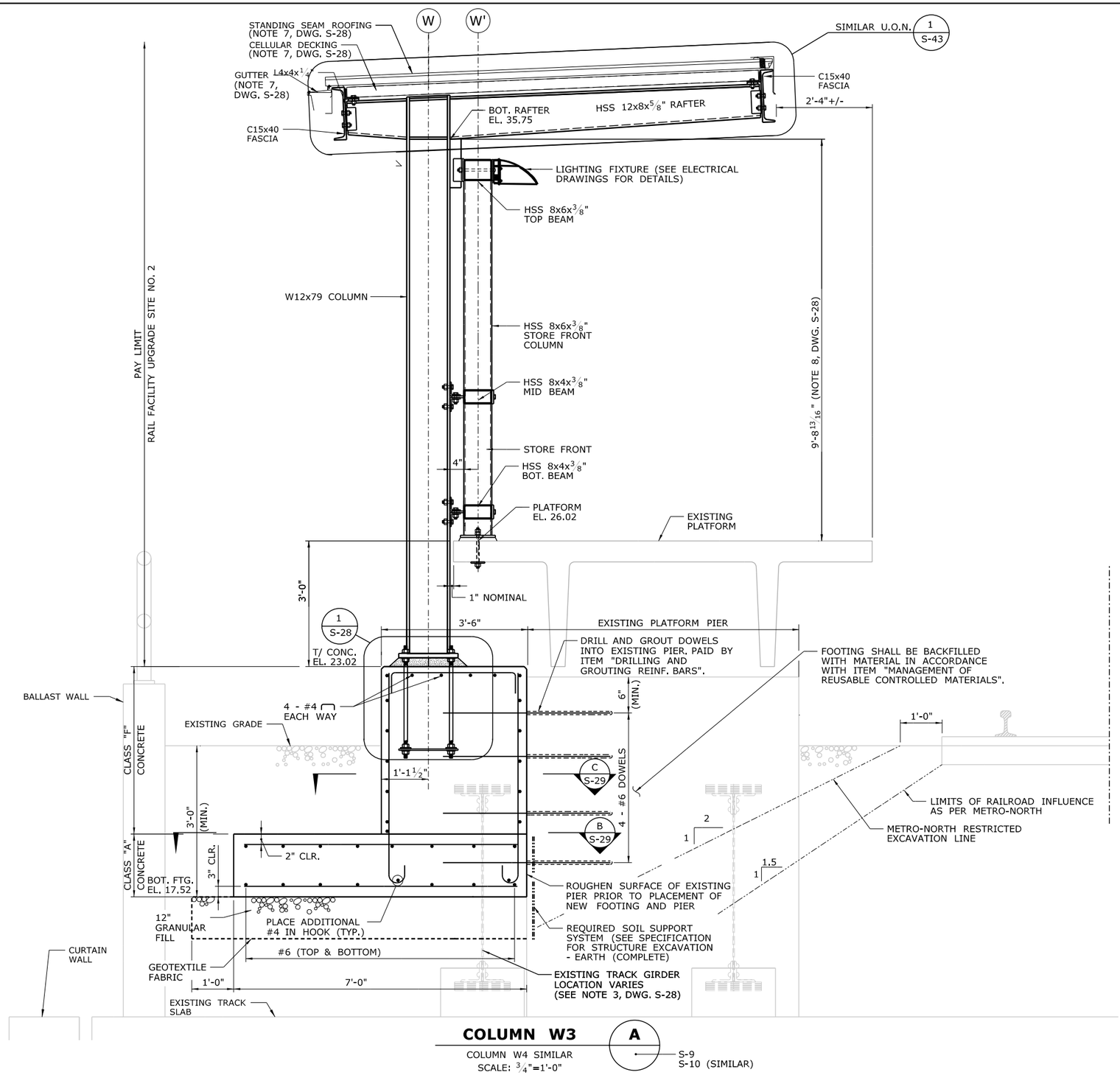

COLUMN W3

A

COLUMN W4 SIMILAR
SCALE: 3/4"=1'-0"

S-9
S-10 (SIMILAR)

NOTE:

1. SEE NOTES DWG. S-28.

REV.	DATE	REVISION DESCRIPTION	SHEET NO.

THE INFORMATION, INCLUDING ESTIMATED QUANTITIES OF WORK, SHOWN ON THESE SHEETS IS BASED ON LIMITED INVESTIGATIONS BY THE STATE AND IS IN NO WAY WARRANTED TO INDICATE THE CONDITIONS OF ACTUAL QUANTITIES OF WORK WHICH WILL BE REQUIRED.

PLOTTED: 3/31/2014

DESIGNER/DRAFTER: B. HAMAN
CHECKED BY: D. GRIFFIN
SCALE AS NOTED

STATE OF CONNECTICUT
DEPARTMENT OF TRANSPORTATION

FILENAME: ...\301155_04_25_WB_SECTIONS.dgn

LOCHNER
H.W. LOCHNER, INC
2110 Silas Deane Highway
Rocky Hill, CT 06067

APPROVED BY: BEB
DATE: 4/2/2014

PROJECT TITLE:
INSTALLATION OF CANOPY AT BRIDGEPORT STATION

TOWN: **BRIDGEPORT**

DRAWING TITLE: **WESTBOUND CANOPY SECTIONS IV**

PROJECT NO. **301-155**
DRAWING NO. **S-30**
SHEET NO. **04.30**

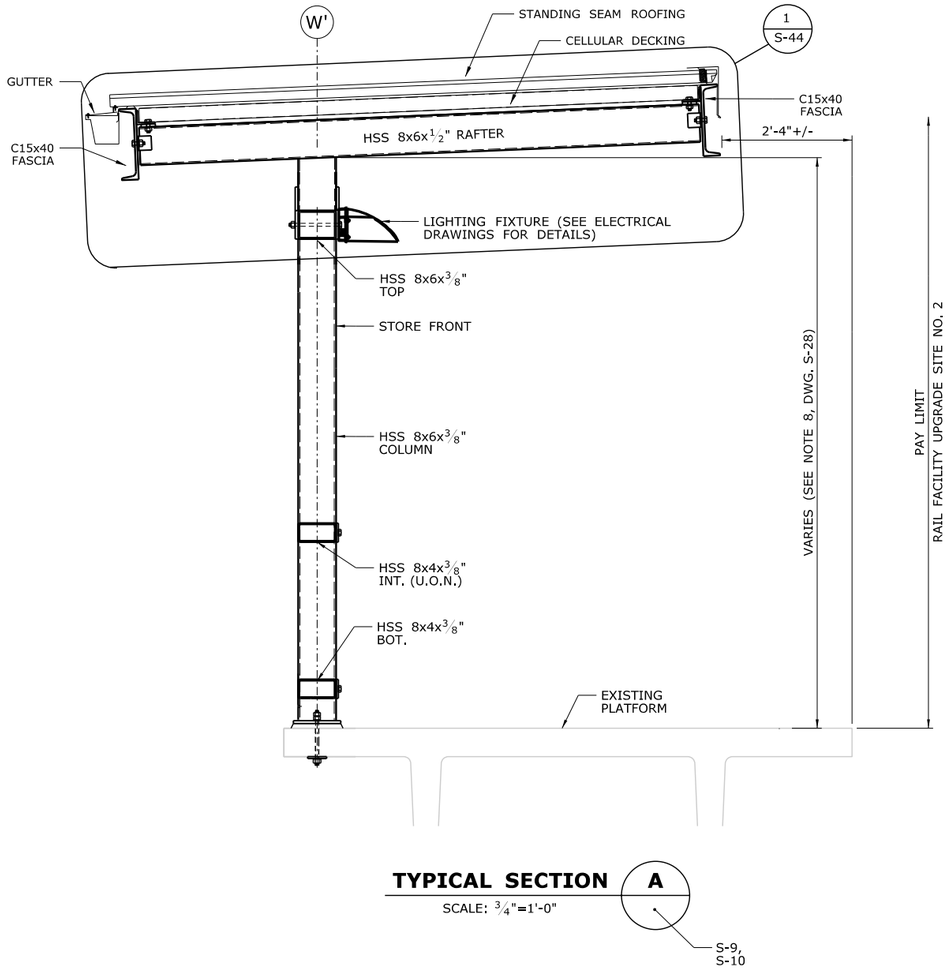

TYPICAL SECTION A

SCALE: 3/4"=1'-0"

S-9, S-10

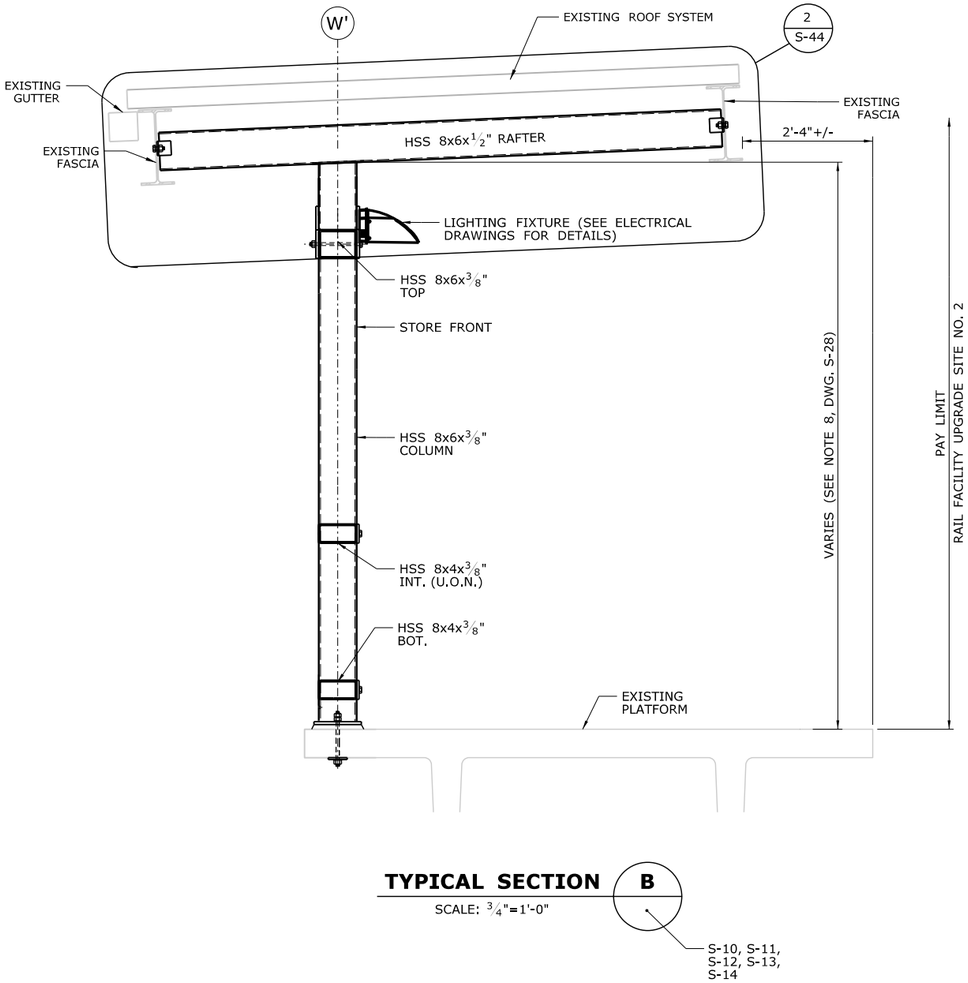

TYPICAL SECTION B

SCALE: 3/4"=1'-0"

S-10, S-11, S-12, S-13, S-14

THE INFORMATION, INCLUDING ESTIMATED QUANTITIES OF WORK, SHOWN ON THESE SHEETS IS BASED ON LIMITED INVESTIGATIONS BY THE STATE AND IS IN NO WAY WARRANTED TO INDICATE THE CONDITIONS OF ACTUAL QUANTITIES OF WORK WHICH WILL BE REQUIRED.

B. HAMAN

D. GRIFFIN

STATE OF CONNECTICUT
DEPARTMENT OF TRANSPORTATION

LOCHNER
H.W. LOCHNER, INC
2110 Silas Deane Highway
Rocky Hill, CT 06067

APPROVED BY: BEB
DATE: 4/2/2014

INSTALLATION OF CANOPY AT BRIDGEPORT STATION

BRIDGEPORT

WESTBOUND CANOPY SECTIONS V

301-155

S-31

04.31

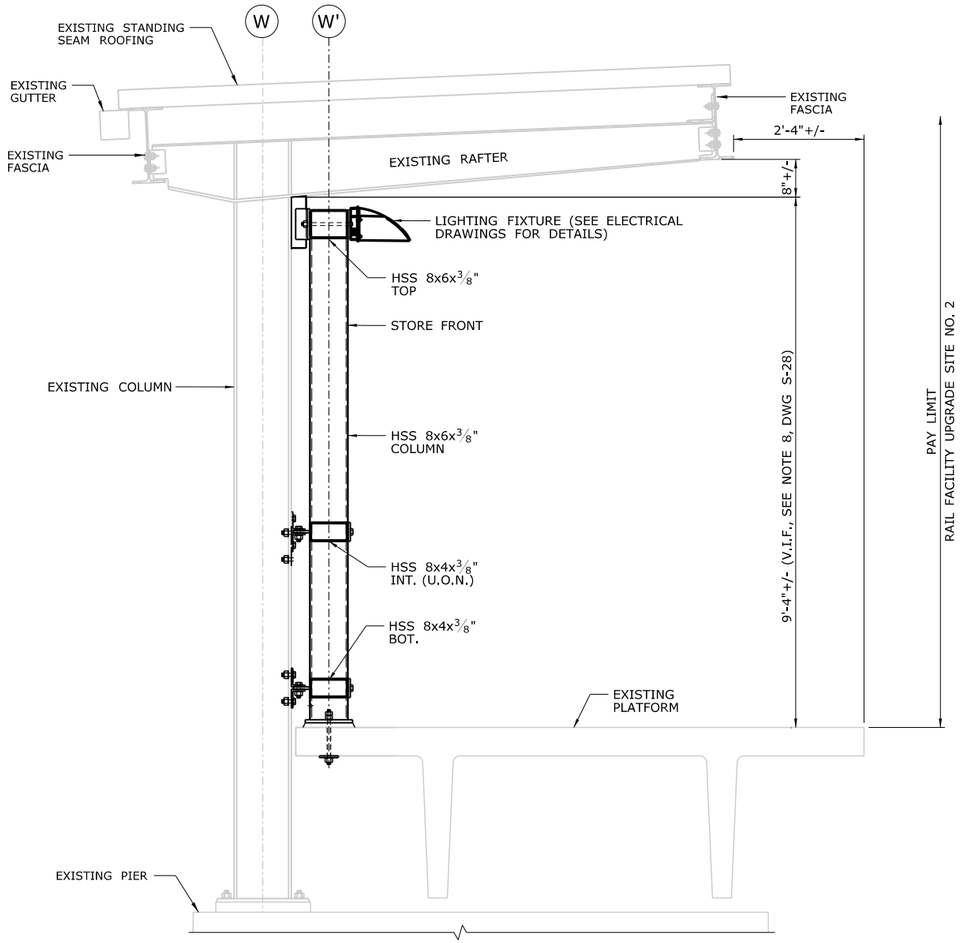

TYPICAL SECTION A

SCALE: 3/4"=1'-0"

S-10, S-11, S-12, S-13, S-14

				THE INFORMATION, INCLUDING ESTIMATED QUANTITIES OF WORK, SHOWN ON THESE SHEETS IS BASED ON LIMITED INVESTIGATIONS BY THE STATE AND IS IN NO WAY WARRANTED TO INDICATE THE CONDITIONS OF ACTUAL QUANTITIES OF WORK WHICH WILL BE REQUIRED.	B. HAMAN D. GRIFFIN	STATE OF CONNECTICUT DEPARTMENT OF TRANSPORTATION	LOCHNER H.W. LOCHNER, INC 2110 Silas Deane Highway Rocky Hill, CT 06067 APPROVED BY: BEB DATE: 4/2/2014	INSTALLATION OF CANOPY AT BRIDGEPORT STATION	BRIDGEPORT WESTBOUND CANOPY SECTIONS VI	301-155 S-32 04.32

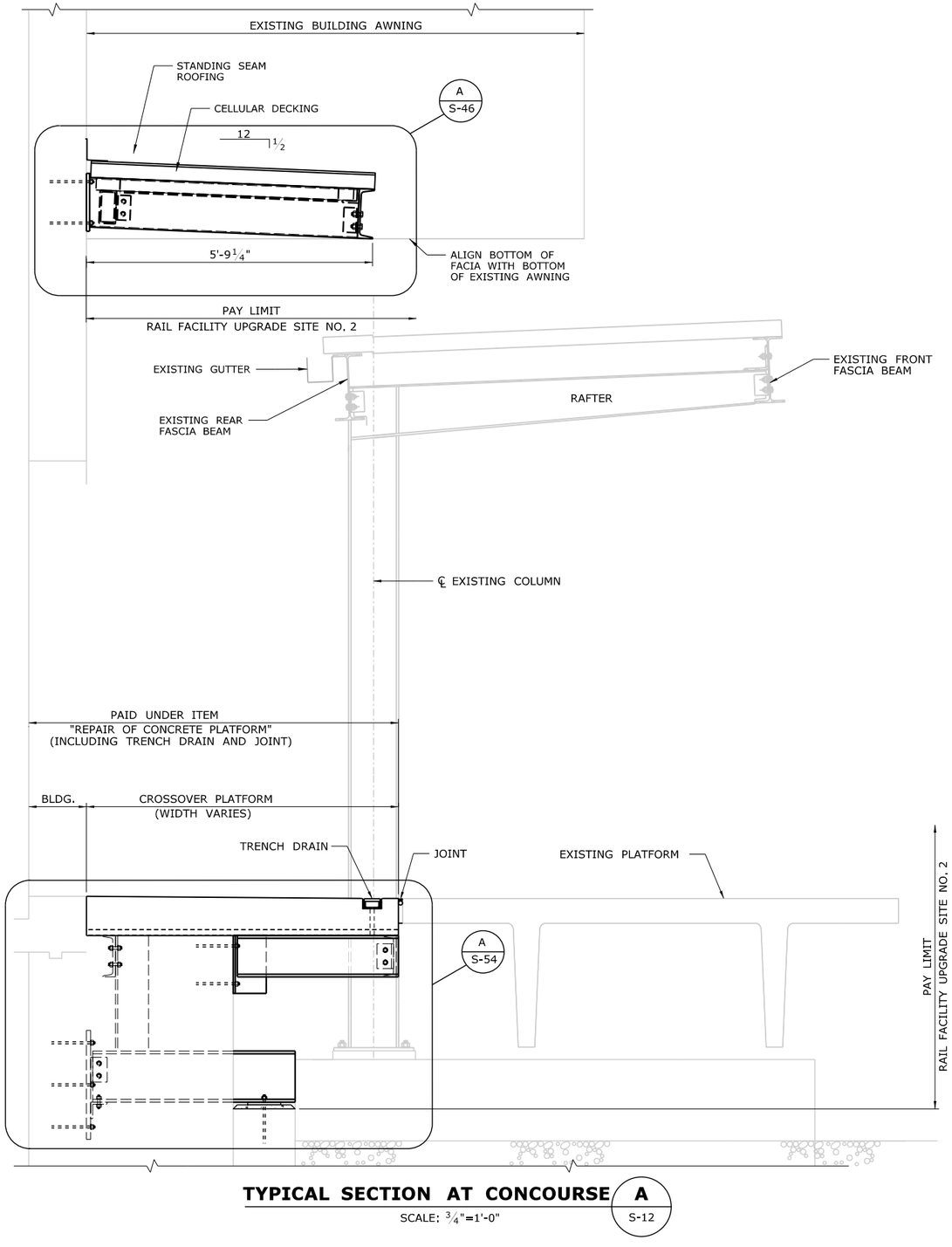

TYPICAL SECTION AT CONCOURSE A

SCALE: 3/4"=1'-0"

S-12

REV.	DATE	REVISION DESCRIPTION	SHEET NO.

THE INFORMATION, INCLUDING ESTIMATED QUANTITIES OF WORK, SHOWN ON THESE SHEETS IS BASED ON LIMITED INVESTIGATIONS BY THE STATE AND IS IN NO WAY WARRANTED TO INDICATE THE CONDITIONS OF ACTUAL QUANTITIES OF WORK WHICH WILL BE REQUIRED.

PLOTTED: 3/31/2014

DESIGNER/DRAFTER: B. HAMAN
CHECKED BY: D. GRIFFIN
SCALE AS NOTED

STATE OF CONNECTICUT
DEPARTMENT OF TRANSPORTATION

FILENAME: ...\301155_04_25_WB_SECTIONS.dgn

LOCHNER
H.W. LOCHNER, INC
2110 Silas Deane Highway
Rocky Hill, CT 06067

APPROVED BY: BEB
DATE: 4/2/2014

PROJECT TITLE:
INSTALLATION OF CANOPY AT BRIDGEPORT STATION

TOWN: **BRIDGEPORT**

DRAWING TITLE: **WESTBOUND CANOPY SECTIONS VII**

PROJECT NO. **301-155**
DRAWING NO. **S-33**
SHEET NO. **04.33**

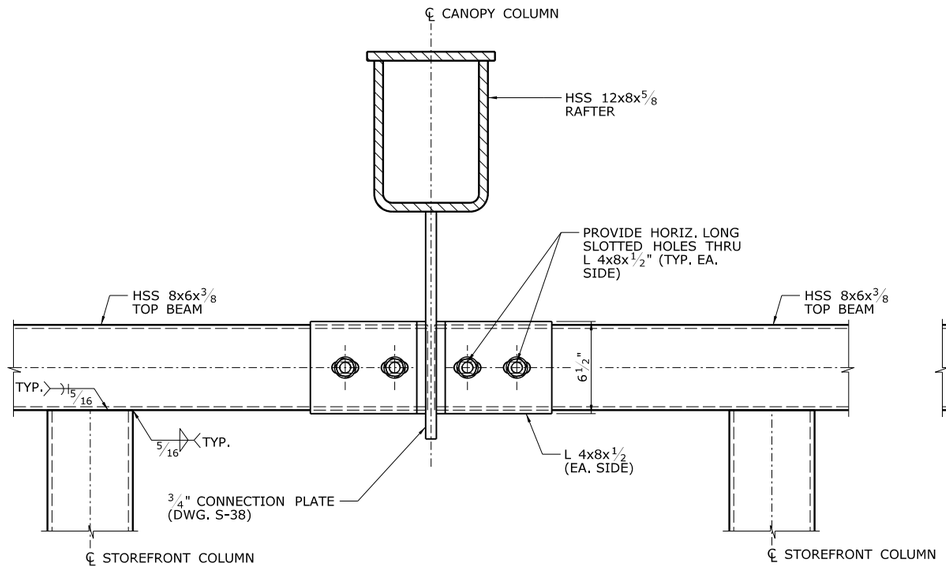

TYPICAL TOP BEAM STRAIGHT CONNECTION (A)

SCALE: 1" = 1'-0"

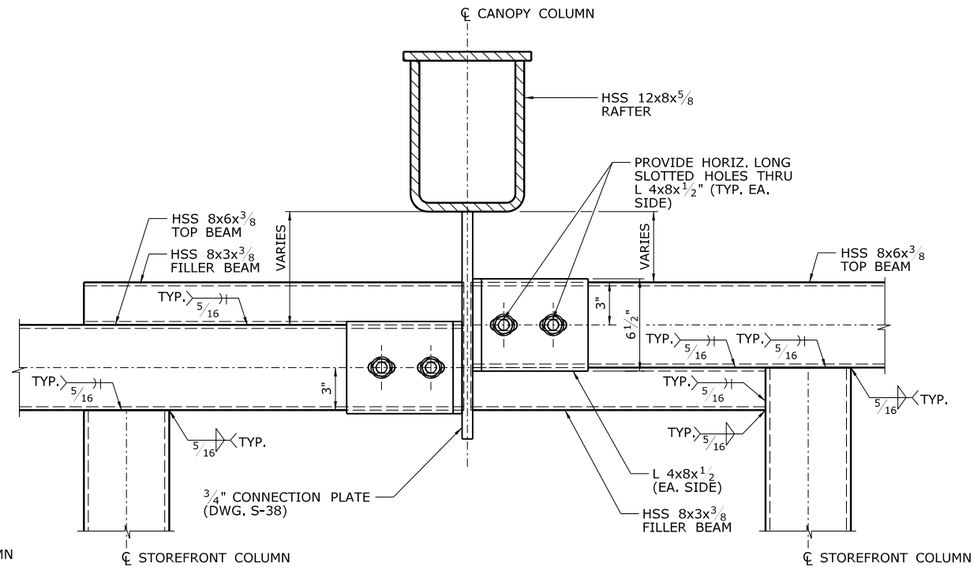

TYPICAL TOP BEAM STEPPED CONNECTION (A')

SCALE: 1" = 1'-0"

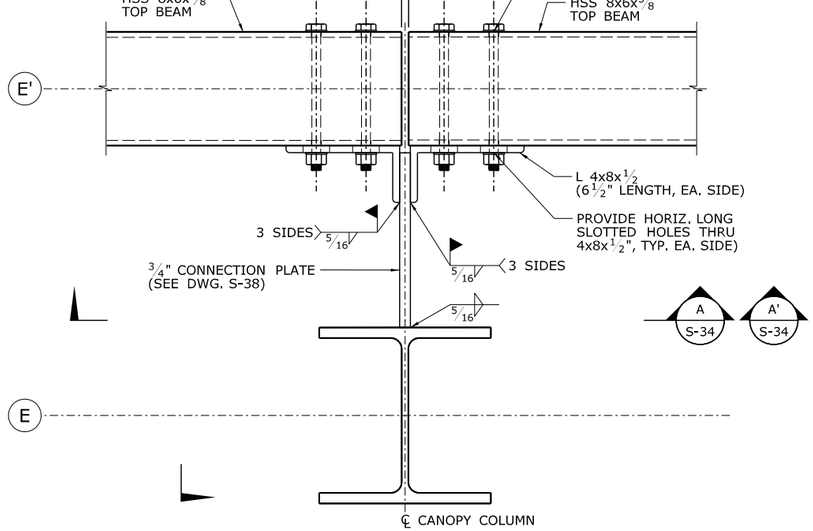

TYPICAL TOP BEAM CONNECTION DETAIL (1)

SCALE: 1" = 1'-0"

S-3, S-4, S-5, S-6, S-7, S-8, S-25, S-26, S-24 (SIMILAR)

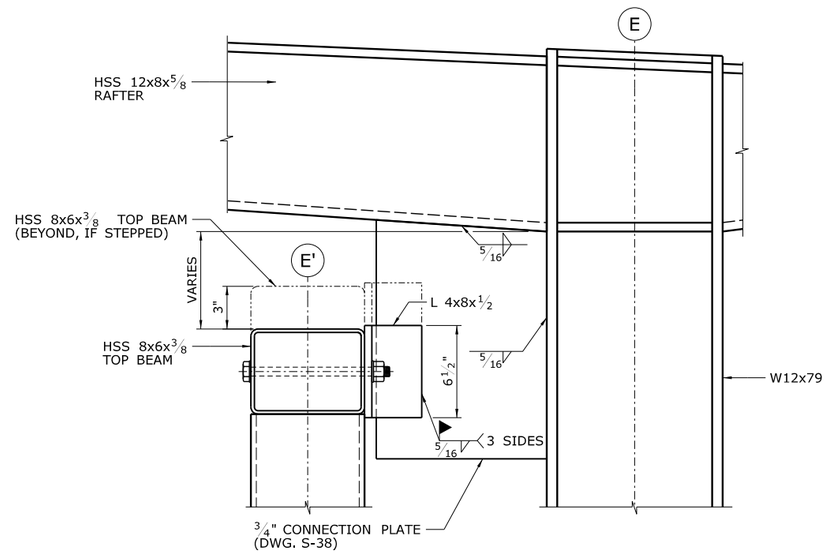

TYPICAL TOP BEAM CONNECTION (B)

SCALE: 1" = 1'-0"

NOTES:

1. PROVIDE CLOSURE PLATES AT OPEN ENDS OF ALL TOP AND FILLER BEAMS.
2. GRIND WELD SMOOTH BETWEEN TOP BEAM AND FILLER BEAM (EACH FACE).
3. PROVIDE WASHER UNDER BOLT HEAD AND NUT AT ALL HSS THROUGH BOLTS.

REV.	DATE	REVISION DESCRIPTION	SHEET NO.

THE INFORMATION, INCLUDING ESTIMATED QUANTITIES OF WORK, SHOWN ON THESE SHEETS IS BASED ON LIMITED INVESTIGATIONS BY THE STATE AND IS IN NO WAY WARRANTED TO INDICATE THE CONDITIONS OF ACTUAL QUANTITIES OF WORK WHICH WILL BE REQUIRED.

PLOTTED: 3/31/2014

DESIGNER/DRAFTER: B. HAMAN
CHECKED BY: D. GRIFFIN
SCALE AS NOTED

STATE OF CONNECTICUT
DEPARTMENT OF TRANSPORTATION

FILENAME: ...\301155_04_32_EB_DETAILS_CANOPY.dgn

LOCHNER
H.W. LOCHNER, INC
2110 Silas Deane Highway
Rocky Hill, CT 06067

APPROVED BY: BEB
DATE: 4/2/2014

PROJECT TITLE:
INSTALLATION OF CANOPY AT BRIDGEPORT STATION

TOWN: **BRIDGEPORT**

DRAWING TITLE: **EASTBOUND CANOPY DETAILS I**

PROJECT NO. **301-155**
DRAWING NO. **S-34**
SHEET NO. **04.34**

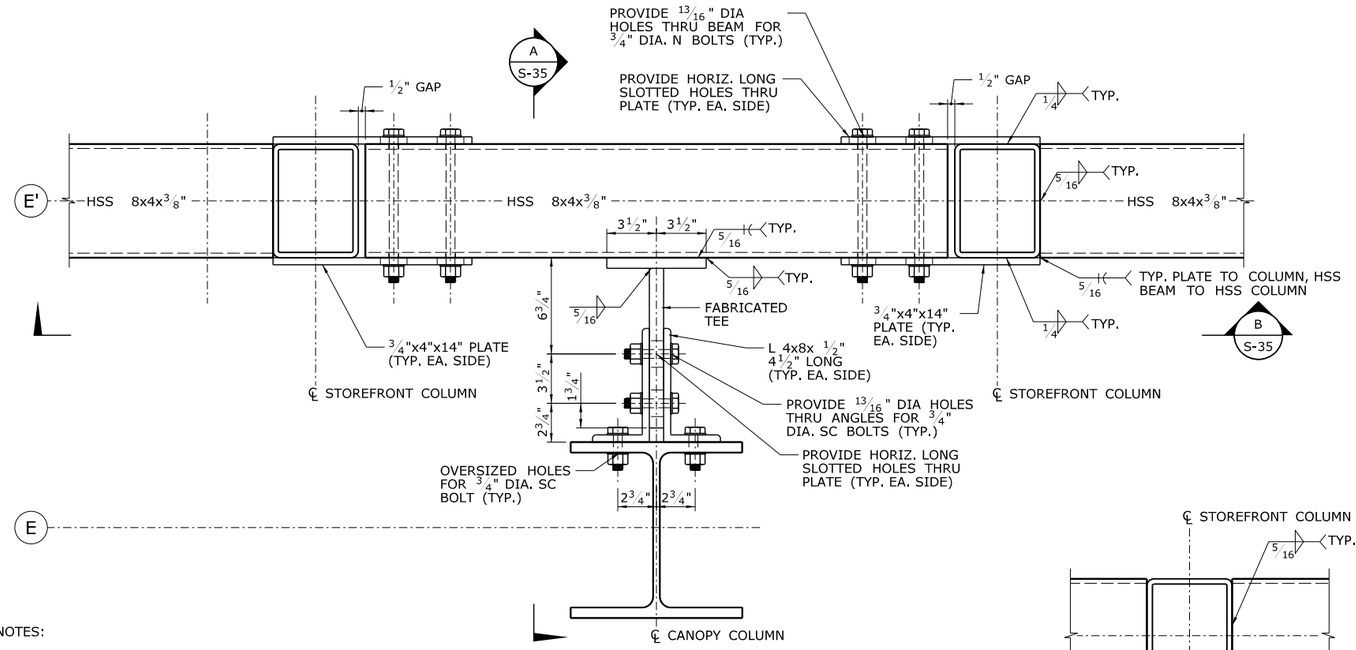

NOTES:

1. PROVIDE CLOSURE PLATES AT OPEN END OF ALL BOTTOM AND MID BEAMS.

TYPICAL BOTTOM AND MID BEAM CONNECTION 1

SCALE: 1" = 1'-0"

S-3, S-4, S-5, S-6, S-7, S-8, S-25, S-26, S-42, S-21 (SIMILAR), S-24 (SIMILAR)

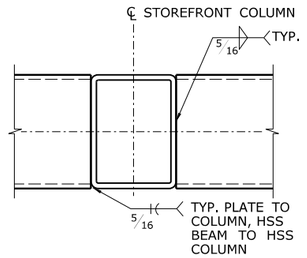

TYPICAL BOTTOM & MID BEAM TO INTERMEDIATE COLUMN CONNECTION 3

SCALE: 1" = 1'-0"

S-35
S-9 (SIMILAR)

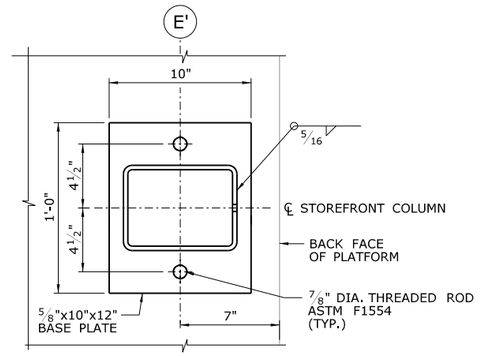

TYPICAL STOREFRONT COLUMN BASE PLATE 2

SCALE: 1" = 1'-0"

S-3, S-4, S-5, S-6, S-7, S-8, S-9, S-10, S-11, S-12, S-13, S-14

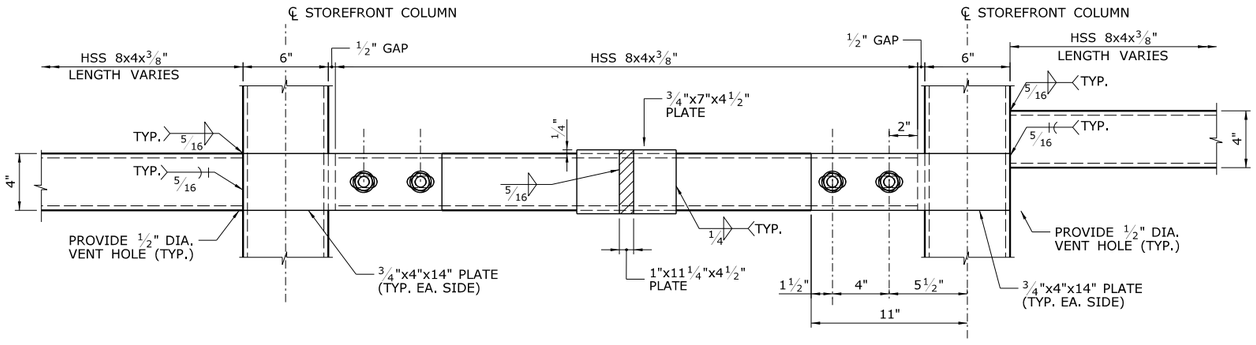

TYPICAL BOTTOM AND MID BEAM CONNECTION B

SCALE: 1" = 1'-0"

S-35

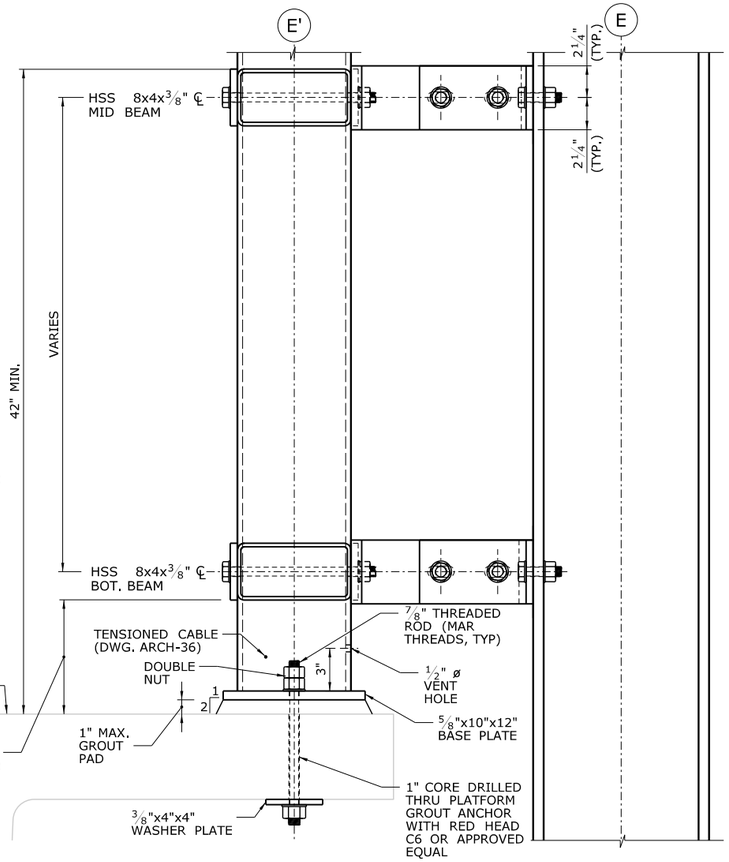

TYPICAL BOTTOM AND MID BEAM CONNECTION A

SCALE: 1" = 1'-0"

S-35

REV.	DATE	REVISION DESCRIPTION	SHEET NO.
-	-	-	-
-	-	-	-
-	-	-	-
-	-	-	-
-	-	-	-
-	-	-	-

THE INFORMATION, INCLUDING ESTIMATED QUANTITIES OF WORK, SHOWN ON THESE SHEETS IS BASED ON LIMITED INVESTIGATIONS BY THE STATE AND IS IN NO WAY WARRANTED TO INDICATE THE CONDITIONS OF ACTUAL QUANTITIES OF WORK WHICH WILL BE REQUIRED.

PLOTTED: 3/31/2014

DESIGNER/DRAFTER: B. HAMAN
CHECKED BY: D. GRIFFIN
SCALE AS NOTED

STATE OF CONNECTICUT
DEPARTMENT OF TRANSPORTATION

FILENAME: ...\301155_04_32_EB_DETAILS_CANOPY.dgn

LOCHNER
H.W. LOCHNER, INC
2110 Silas Deane Highway
Rocky Hill, CT 06067

APPROVED BY: BEB
DATE: 4/2/2014

PROJECT TITLE:
INSTALLATION OF CANOPY AT BRIDGEPORT STATION

TOWN: BRIDGEPORT

DRAWING TITLE: EASTBOUND CANOPY DETAILS II

PROJECT NO. 301-155
DRAWING NO. S-35
SHEET NO. 04.35

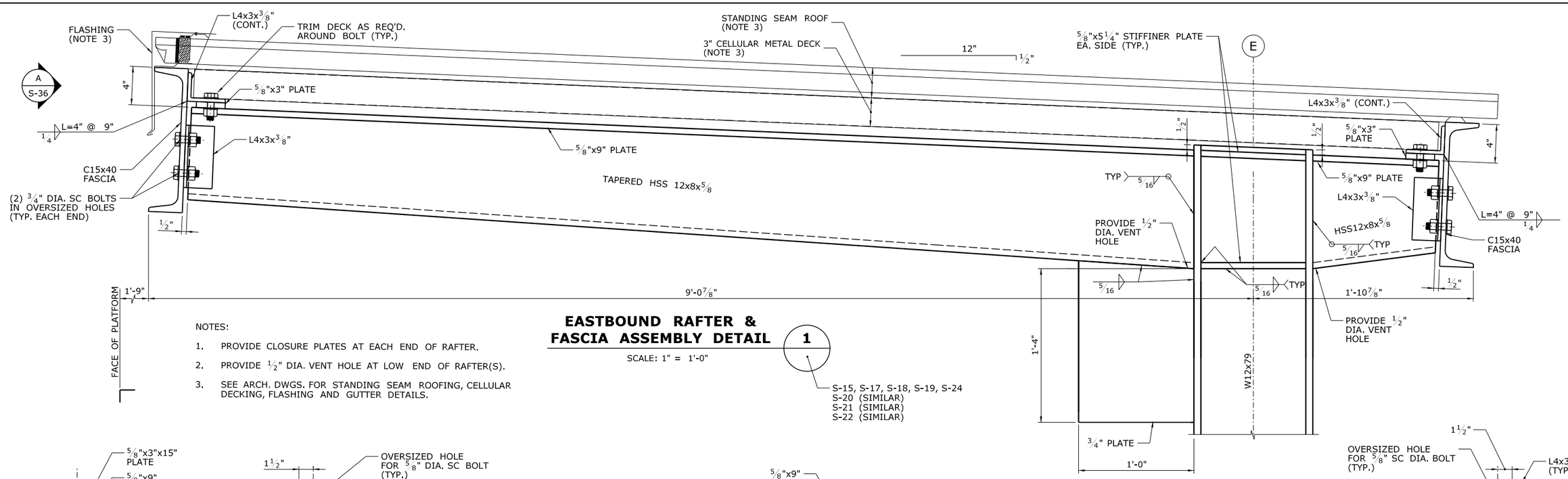

NOTES:

1. PROVIDE CLOSURE PLATES AT EACH END OF RAFTER.
2. PROVIDE 1/2" DIA. VENT HOLE AT LOW END OF RAFTER(S).
3. SEE ARCH. DWGS. FOR STANDING SEAM ROOFING, CELLULAR DECKING, FLASHING AND GUTTER DETAILS.

EASTBOUND RAFTER & FASCIA ASSEMBLY DETAIL 1

SCALE: 1" = 1'-0"

S-15, S-17, S-18, S-19, S-24
S-20 (SIMILAR)
S-21 (SIMILAR)
S-22 (SIMILAR)

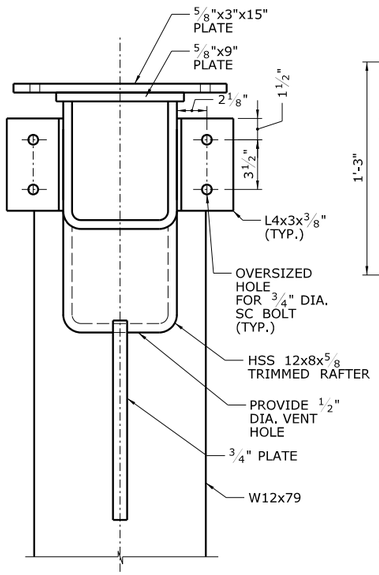

FLASHING, FASCIA, METAL DECK & STANDING SEAM ROOF NOT SHOWN

RAFTER ELEVATION A

SCALE: 1" = 1'-0"

S-36

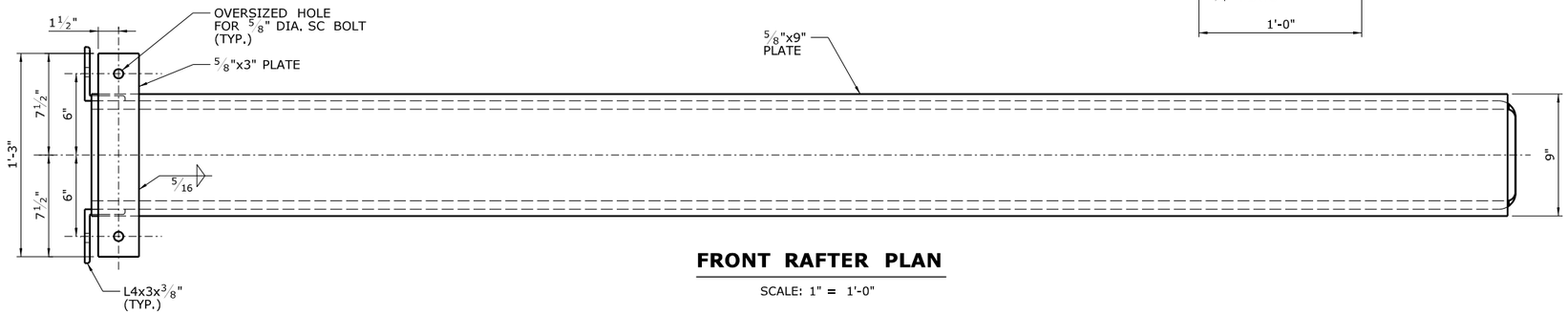

FRONT RAFTER PLAN

SCALE: 1" = 1'-0"

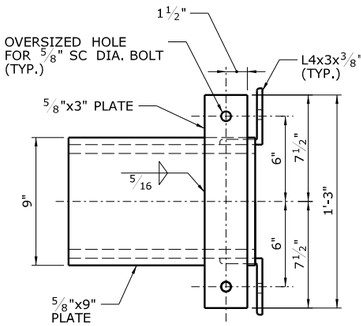

BACK RAFTER PLAN

SCALE: 1" = 1'-0"

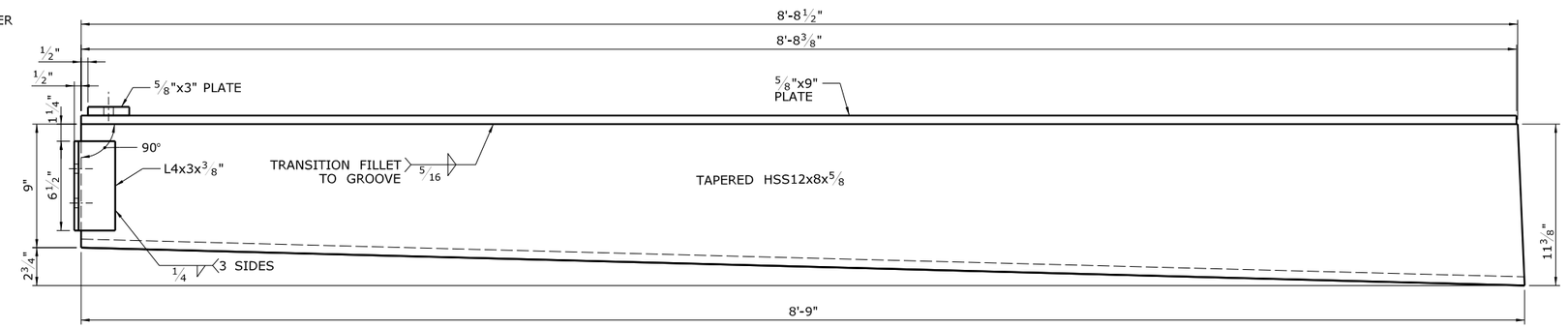

FRONT RAFTER

SCALE: 1" = 1'-0"

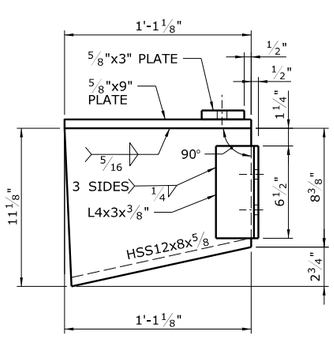

BACK RAFTER

SCALE: 1" = 1'-0"

REV.	DATE	REVISION DESCRIPTION	SHEET NO.

THE INFORMATION, INCLUDING ESTIMATED QUANTITIES OF WORK, SHOWN ON THESE SHEETS IS BASED ON LIMITED INVESTIGATIONS BY THE STATE AND IS IN NO WAY WARRANTED TO INDICATE THE CONDITIONS OF ACTUAL QUANTITIES OF WORK WHICH WILL BE REQUIRED.

PLOTTED: 3/31/2014

DESIGNER/DRAFTER: B. HAMAN
CHECKED BY: D. GRIFFIN
SCALE AS NOTED

STATE OF CONNECTICUT
DEPARTMENT OF TRANSPORTATION

FILENAME: ...\301155_04_32_EB_DETAILS_CANOPY.dgn

LOCHNER
H.W. LOCHNER, INC
2110 Silas Deane Highway
Rocky Hill, CT 06067

APPROVED BY: BEB
DATE: 4/2/2014

PROJECT TITLE:
INSTALLATION OF CANOPY AT BRIDGEPORT STATION

TOWN: **BRIDGEPORT**

DRAWING TITLE: **EASTBOUND CANOPY DETAILS III**

PROJECT NO. **301-155**
DRAWING NO. **S-36**
SHEET NO. **04.36**

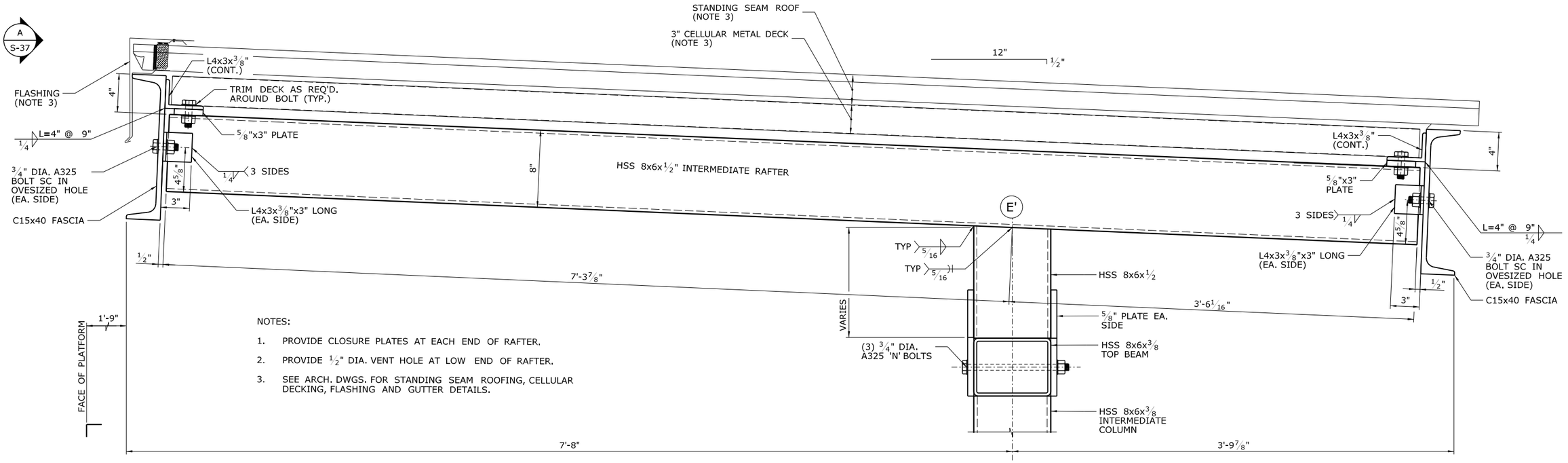

NOTES:

1. PROVIDE CLOSURE PLATES AT EACH END OF RAFTER.
2. PROVIDE 1/2" DIA. VENT HOLE AT LOW END OF RAFTER.
3. SEE ARCH. DWGS. FOR STANDING SEAM ROOFING, CELLULAR DECKING, FLASHING AND GUTTER DETAILS.

TYPICAL EASTBOUND INTERMEDIATE RAFTER & FASCIA ASSEMBLY

SCALE: 1" = 1'-0"

1

S-23
S-25 (SIMILAR)
S-26 (SIMILAR)

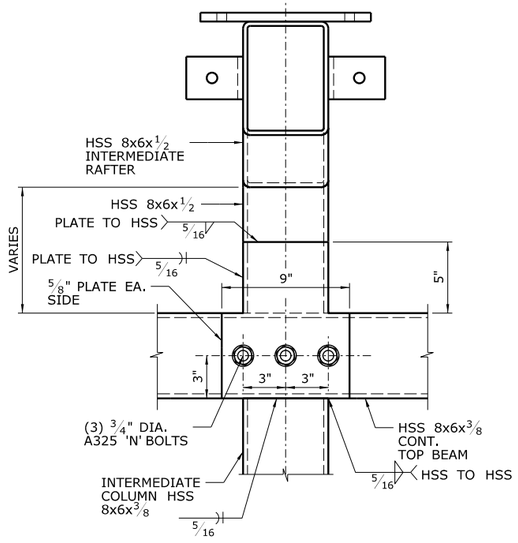

FASCIA, METAL DECK & STANDING SEAM ROOF NOT SHOWN

RAFTER ELEVATION A

SCALE: 1" = 1'-0"

S-37

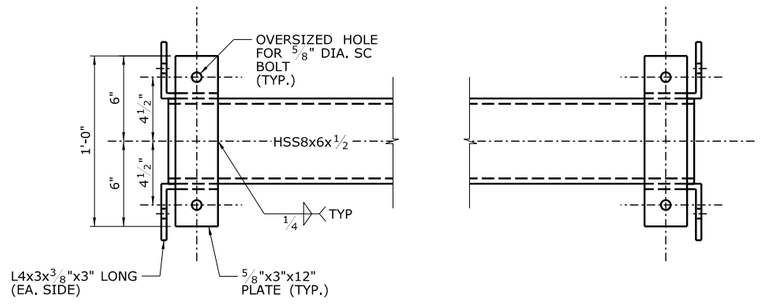

INTERMEDIATE RAFTER PLAN

SCALE: 1" = 1'-0"

REV.	DATE	REVISION DESCRIPTION	SHEET NO.

THE INFORMATION, INCLUDING ESTIMATED QUANTITIES OF WORK, SHOWN ON THESE SHEETS IS BASED ON LIMITED INVESTIGATIONS BY THE STATE AND IS IN NO WAY WARRANTED TO INDICATE THE CONDITIONS OF ACTUAL QUANTITIES OF WORK WHICH WILL BE REQUIRED.

PLOTTED: 3/31/2014

DESIGNER/DRAFTER: B. HAMAN
CHECKED BY: D. GRIFFIN
SCALE AS NOTED

STATE OF CONNECTICUT
DEPARTMENT OF TRANSPORTATION

FILENAME: ...\301155_04_32_EB_DETAILS_CANOPY.dgn

LOCHNER
H.W. LOCHNER, INC
2110 Silas Deane Highway
Rocky Hill, CT 06067

APPROVED BY: BEB
DATE: 2/4/2014

PROJECT TITLE:
INSTALLATION OF CANOPY AT BRIDGEPORT STATION

TOWN: BRIDGEPORT
DRAWING TITLE: EASTBOUND CANOPY DETAILS IV

PROJECT NO. 301-155
DRAWING NO. S-37
SHEET NO. 04.37

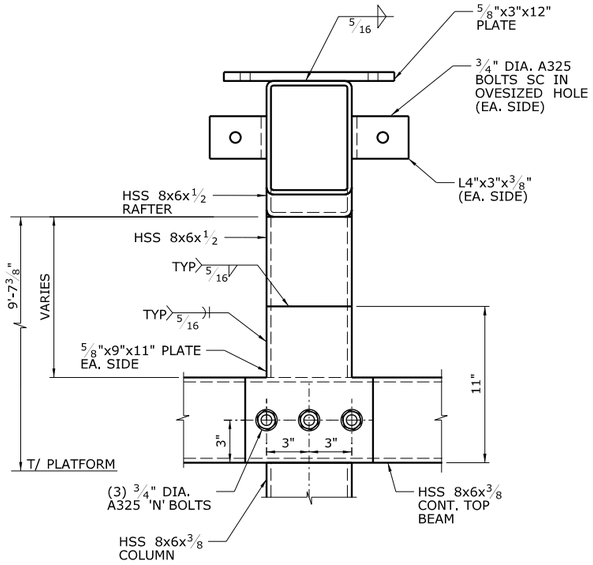

FASCIA, METAL DECK & STANDING SEAM ROOF NOT SHOWN

RAFTER ELEVATION A / S-38

SCALE: 1" = 1'-0"

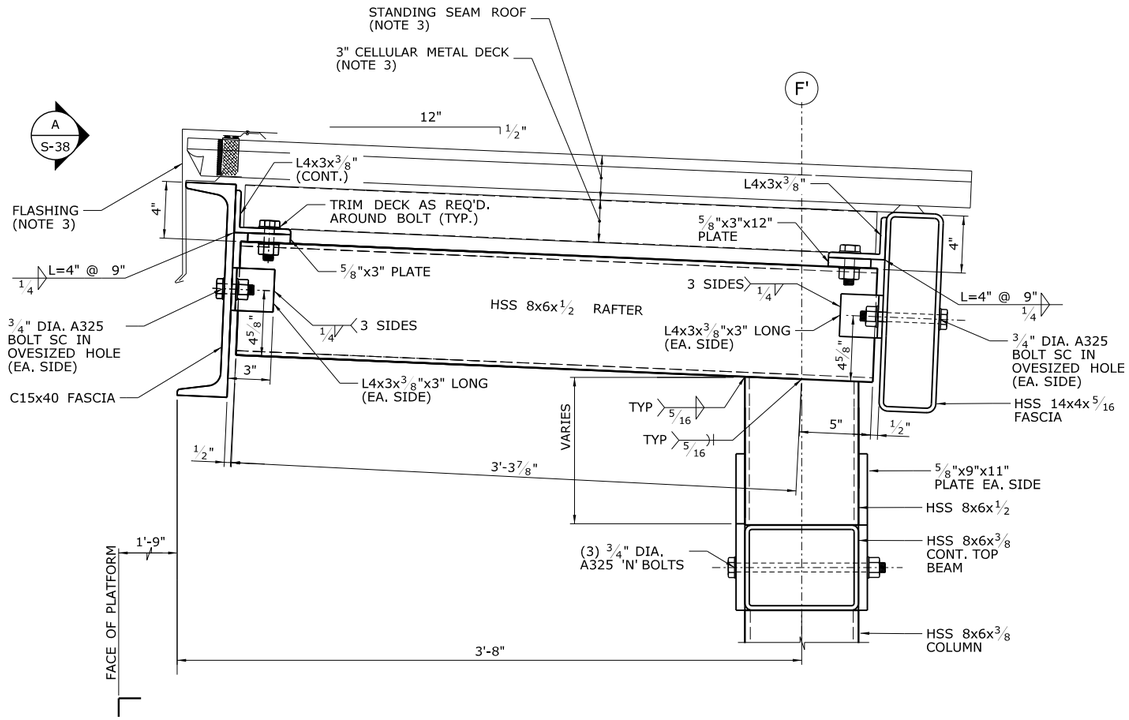

EASTBOUND COLUMN LINE F' RAFTER & FASCIA ASSEMBLY 1 / S-23

SCALE: 1" = 1'-0"

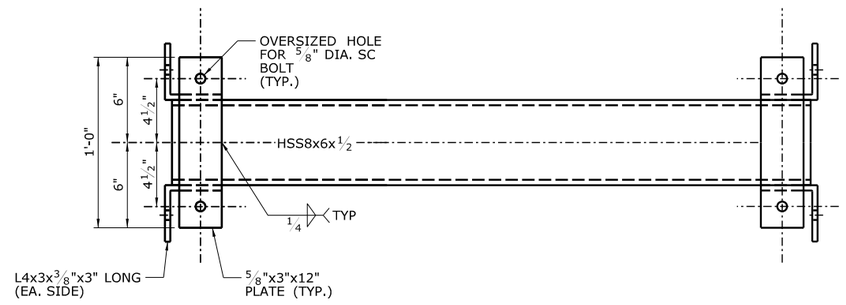

RAFTER PLAN

SCALE: 1" = 1'-0"

NOTES:

1. PROVIDE CLOSURE PLATES AT EACH END OF RAFTER.
2. PROVIDE 1/2" DIA. VENT HOLE AT LOW END OF RAFTER.
3. SEE ARCH. DWGS. FOR STANDING SEAM ROOFING, CELLULAR DECKING, FLASHING AND GUTTER DETAILS.

REV.	DATE	REVISION DESCRIPTION	SHEET NO.

THE INFORMATION, INCLUDING ESTIMATED QUANTITIES OF WORK, SHOWN ON THESE SHEETS IS BASED ON LIMITED INVESTIGATIONS BY THE STATE AND IS IN NO WAY WARRANTED TO INDICATE THE CONDITIONS OF ACTUAL QUANTITIES OF WORK WHICH WILL BE REQUIRED.

PLOTTED: 3/31/2014

DESIGNER/DRAFTER: B. HAMAN
CHECKED BY: D. GRIFFIN
SCALE AS NOTED

STATE OF CONNECTICUT
DEPARTMENT OF TRANSPORTATION

FILENAME: ...\301155_04_32_EB_DETAILS_CANOPY.dgn

LOCHNER
H.W. LOCHNER, INC
2110 Silas Deane Highway
Rocky Hill, CT 06067

APPROVED BY: BEB
DATE: 4/2/2014

PROJECT TITLE:
INSTALLATION OF CANOPY AT BRIDGEPORT STATION

TOWN: **BRIDGEPORT**

DRAWING TITLE: **EASTBOUND CANOPY DETAILS V**

PROJECT NO. **301-155**
DRAWING NO. **S-38**
SHEET NO. **04.38**

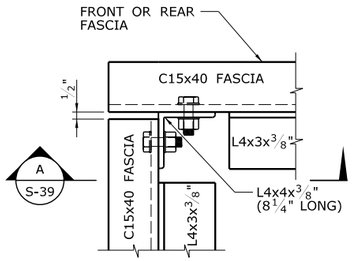

TYPICAL FASCIA CORNER CONNECTION — 1 — S-39

SCALE: 1" = 1'-0"

S-3, S-4, S-5, S-6, S-7, S-8, S-9

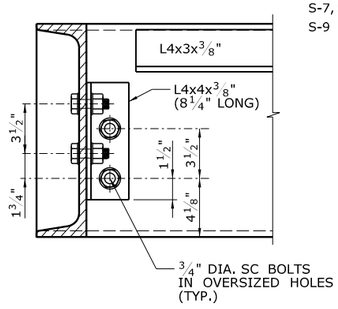

TYPICAL SECTION CORNER CONNECTION — A — S-39

SCALE: 1" = 1'-0"

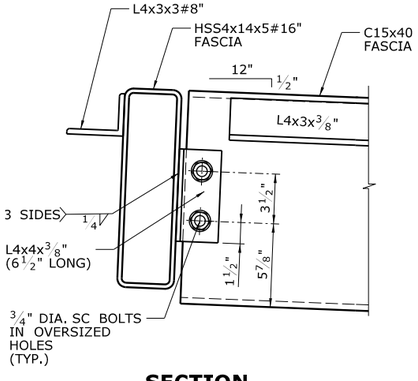

SECTION CORNER CONNECTION — B — S-39

SCALE: 1" = 1'-0"

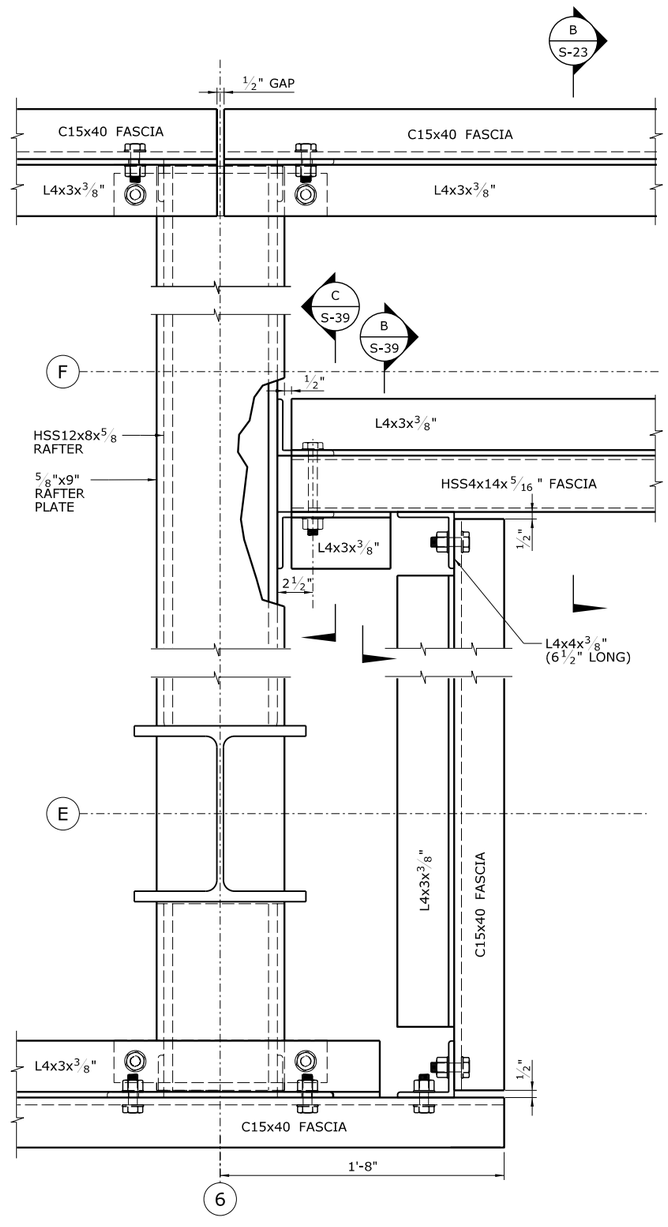

MISC. CONNECTIONS & RAFTER DETAILS SIMILAR TO MAIN RAFTER DETAILS U.O.N.

COLUMN E6 - FASCIA DETAILS — 3 — S-4, S-5

COLUMN E7 SIMILAR (OPPOSITE HAND)

SCALE: 1" = 1'-0"

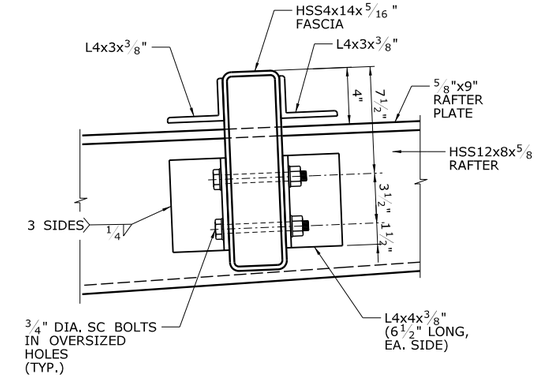

FASCIA TO RAFTER CONNECTION — C — S-39

SCALE: 1" = 1'-0"

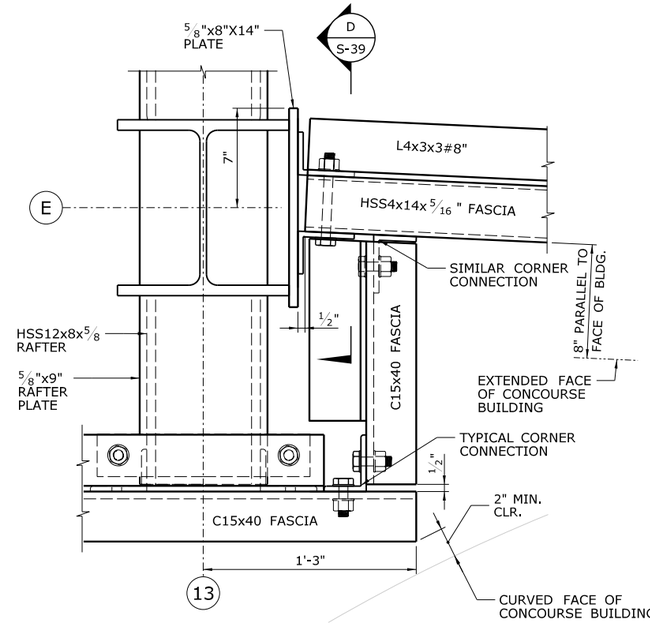

MISC. CONNECTIONS & RAFTER DETAILS SIMILAR TO MAIN RAFTER DETAILS U.O.N.

COLUMN E13 - FASCIA DETAILS — 4 — S-6, S-7

SCALE: 1" = 1'-0"

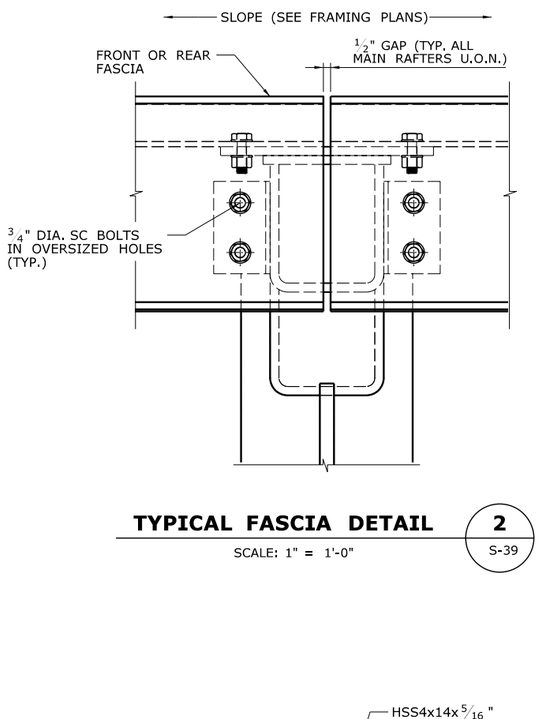

TYPICAL FASCIA DETAIL — 2 — S-39

SCALE: 1" = 1'-0"

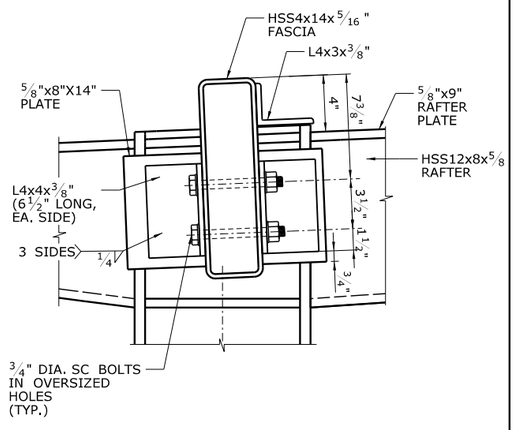

FASCIA TO COLUMN CONNECTION — D — S-39

SCALE: 1" = 1'-0"

REV.	DATE	REVISION DESCRIPTION	SHEET NO.

PLOTTED: 3/31/2014

THE INFORMATION, INCLUDING ESTIMATED QUANTITIES OF WORK, SHOWN ON THESE SHEETS IS BASED ON LIMITED INVESTIGATIONS BY THE STATE AND IS IN NO WAY WARRANTED TO INDICATE THE CONDITIONS OF ACTUAL QUANTITIES OF WORK WHICH WILL BE REQUIRED.

DESIGNER/DRAFTER: B. HAMAN
CHECKED BY: D. GRIFFIN
SCALE AS NOTED

STATE OF CONNECTICUT
DEPARTMENT OF TRANSPORTATION

FILENAME: ...\301155_04_32_EB_DETAILS_CANOPY.dgn

LOCHNER
H.W. LOCHNER, INC
2110 Silas Deane Highway
Rocky Hill, CT 06067

APPROVED BY: BEB
DATE: 4/2/2014

PROJECT TITLE:
INSTALLATION OF CANOPY AT BRIDGEPORT STATION

TOWN: **BRIDGEPORT**

DRAWING TITLE: **EASTBOUND CANOPY DETAILS VI**

PROJECT NO. 301-155
DRAWING NO. S-39
SHEET NO. 04.39

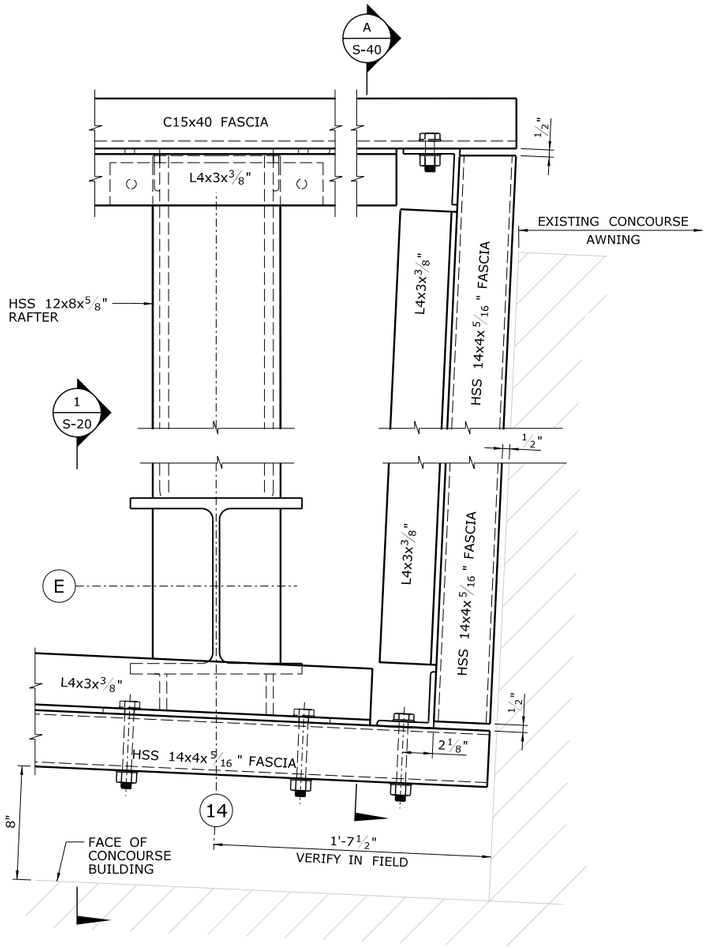

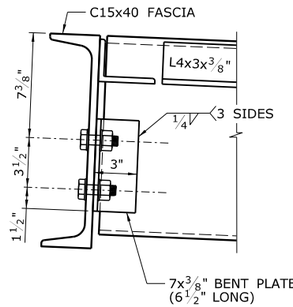

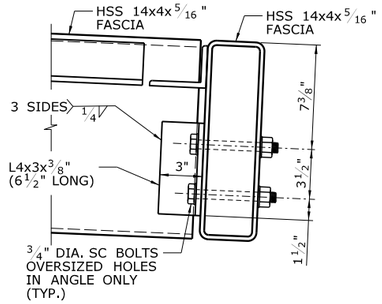

FASCIA CONNECTION A

SCALE: 1" = 1'-0"

S-40

NOTES:

1. MISC. CONNECTIONS & RAFTER DETAILS SIMILAR TO MAIN RAFTER DETAILS U.O.N.
2. PROVIDE CLOSURE PLATES AT OPEN ENDS OF ALL HSS FASCIAS.
3. PROVIDE WASHERS UNDER BOLT HEADS AND NUTS AT ALL HSS THROUGH BOLT CONNECTIONS.
4. FASCIAS ALONG FACE OF CONCOURSE BUILDING AND CONCOURSE AWNING AT COLUMN LINE 15 SIMILAR (OPPOSITE HAND).

COLUMN E14 - FASCIA DETAILS 1

SCALE: 1" = 1'-0"

S-6
S-7 (SIMILAR)

REV.	DATE	REVISION DESCRIPTION	SHEET NO.

THE INFORMATION, INCLUDING ESTIMATED QUANTITIES OF WORK, SHOWN ON THESE SHEETS IS BASED ON LIMITED INVESTIGATIONS BY THE STATE AND IS IN NO WAY WARRANTED TO INDICATE THE CONDITIONS OF ACTUAL QUANTITIES OF WORK WHICH WILL BE REQUIRED.

PLOTTED: 3/31/2014

DESIGNER/DRAFTER: B. HAMAN
CHECKED BY: D. GRIFFIN
SCALE AS NOTED

STATE OF CONNECTICUT
DEPARTMENT OF TRANSPORTATION

FILENAME: ...\301155-04-32-EB-DETAILS-FASCIA.dgn

LOCHNER
H.W. LOCHNER, INC
2110 Silas Deane Highway
Rocky Hill, CT 06067

APPROVED BY: BEB
DATE: 4/2/2014

PROJECT TITLE:
INSTALLATION OF CANOPY AT BRIDGEPORT STATION

TOWN: **BRIDGEPORT**

DRAWING TITLE: **EASTBOUND CANOPY DETAILS VII**

PROJECT NO. **301-155**
DRAWING NO. **S-40**
SHEET NO. **04.40**

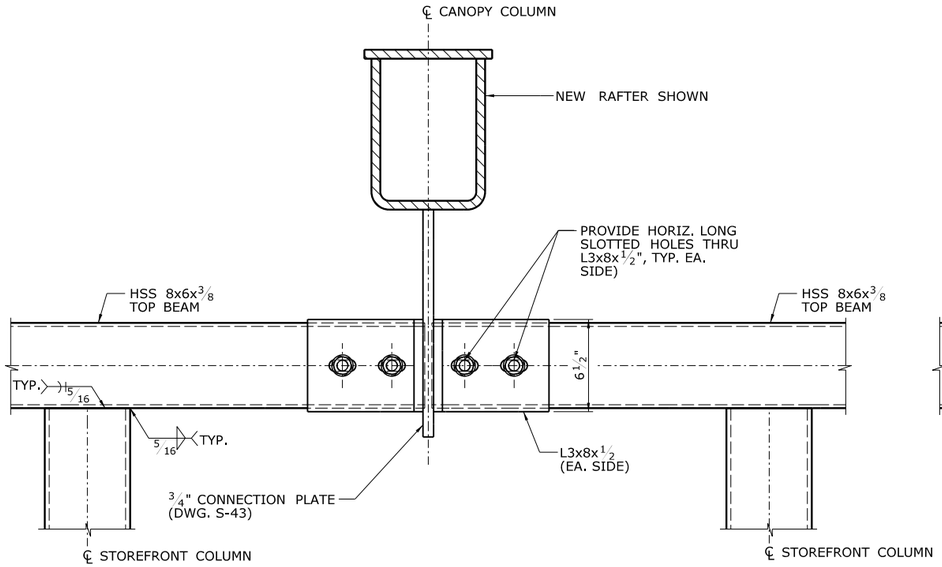

TYPICAL TOP BEAM STRAIGHT CONNECTION — A / S-41

SCALE: 1" = 1'-0"

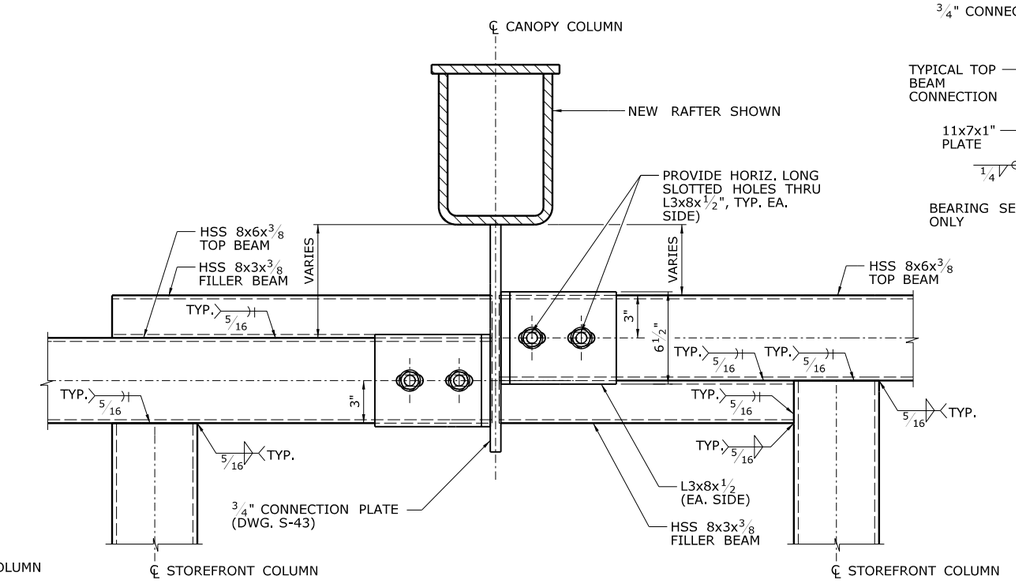

TYPICAL TOP BEAM STEPPED CONNECTION — A' / S-41

SCALE: 1" = 1'-0"

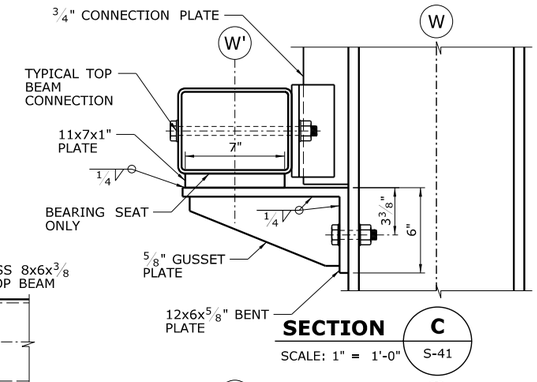

SECTION — C / S-41

SCALE: 1" = 1'-0"

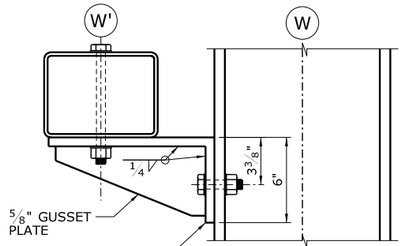

SECTION — D / S-41

SCALE: 1" = 1'-0"

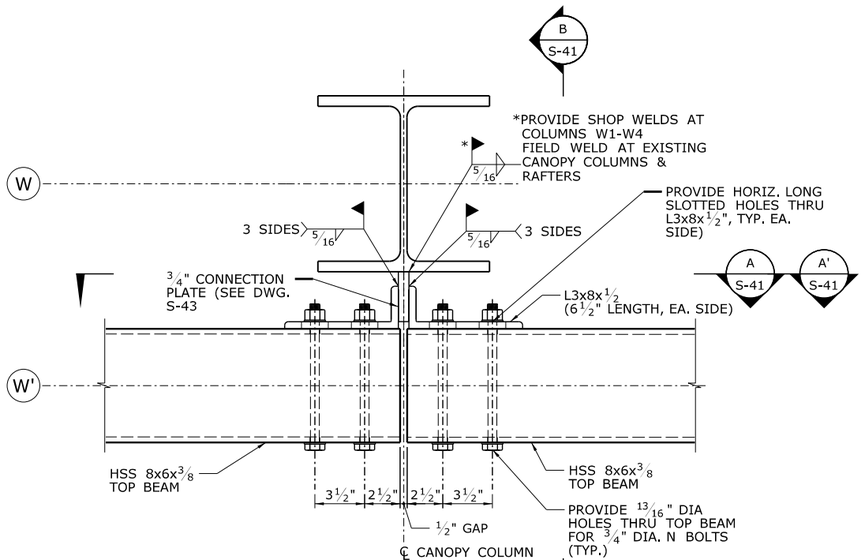

TYPICAL TOP BEAM CONNECTION DETAIL — 1

SCALE: 1" = 1'-0"

S-9, S-10, S-11, S-12, S-13, S-14

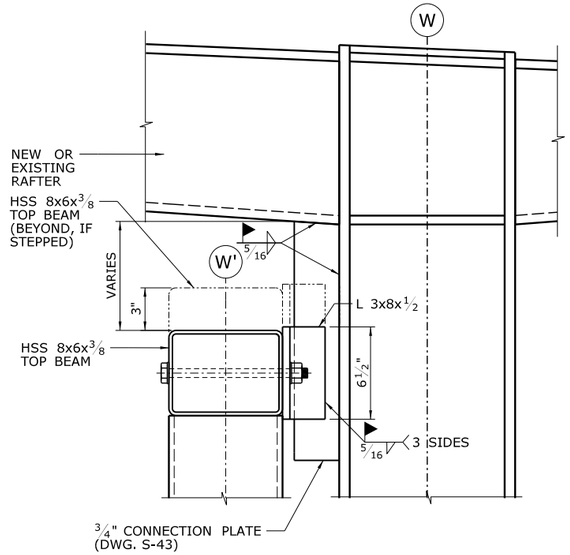

TYPICAL TOP BEAM CONNECTION — B / S-41

SCALE: 1" = 1'-0"

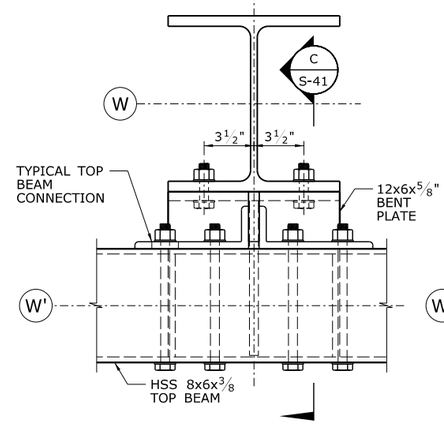

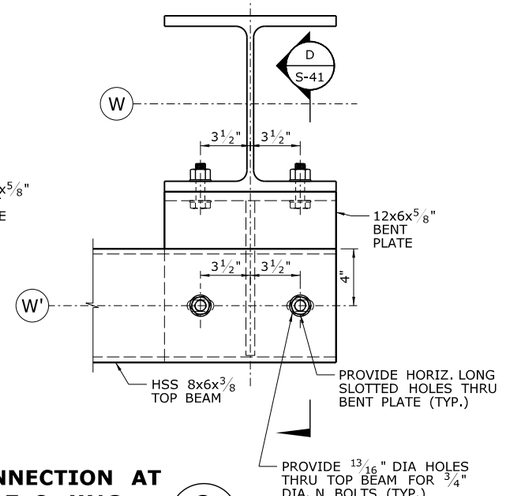

TOP BEAM CONNECTION AT COLUMN W17 & W18 — 2 / S-14

SCALE: 1" = 1'-0"

NOTES:

1. PROVIDE CLOSURE PLATES AT OPEN ENDS OF ALL TOP AND FILLER BEAMS.
2. GRIND WELD SMOOTH BETWEEN TOP BEAM AND FILLER BEAM (EACH FACE).
3. PROVIDE WASHER UNDER BOLT HEAD AND NUT AT ALL HSS THROUGH BOLTS.

REV.	DATE	REVISION DESCRIPTION	SHEET NO.
-	-	-	-
-	-	-	-
-	-	-	-
-	-	-	-
-	-	-	-
-	-	-	-

THE INFORMATION, INCLUDING ESTIMATED QUANTITIES OF WORK, SHOWN ON THESE SHEETS IS BASED ON LIMITED INVESTIGATIONS BY THE STATE AND IS IN NO WAY WARRANTED TO INDICATE THE CONDITIONS OF ACTUAL QUANTITIES OF WORK WHICH WILL BE REQUIRED.

PLOTTED: 3/31/2014

DESIGNER/DRAFTER: B. HAMAN
CHECKED BY: D. GRIFFIN
SCALE AS NOTED

STATE OF CONNECTICUT
DEPARTMENT OF TRANSPORTATION

FILENAME: ...\301155_04_35_WB_DETAILS_CANOPY.dgn

LOCHNER
H.W. LOCHNER, INC
2110 Silas Deane Highway
Rocky Hill, CT 06067

APPROVED BY: BEB
DATE: 4/2/2014

PROJECT TITLE:
AT
BRIDGEPORT STATION

TOWN: BRIDGEPORT

DRAWING TITLE: WESTBOUND CANOPY DETAILS I

PROJECT NO. 301-155
DRAWING NO. S-41
SHEET NO. 04.41

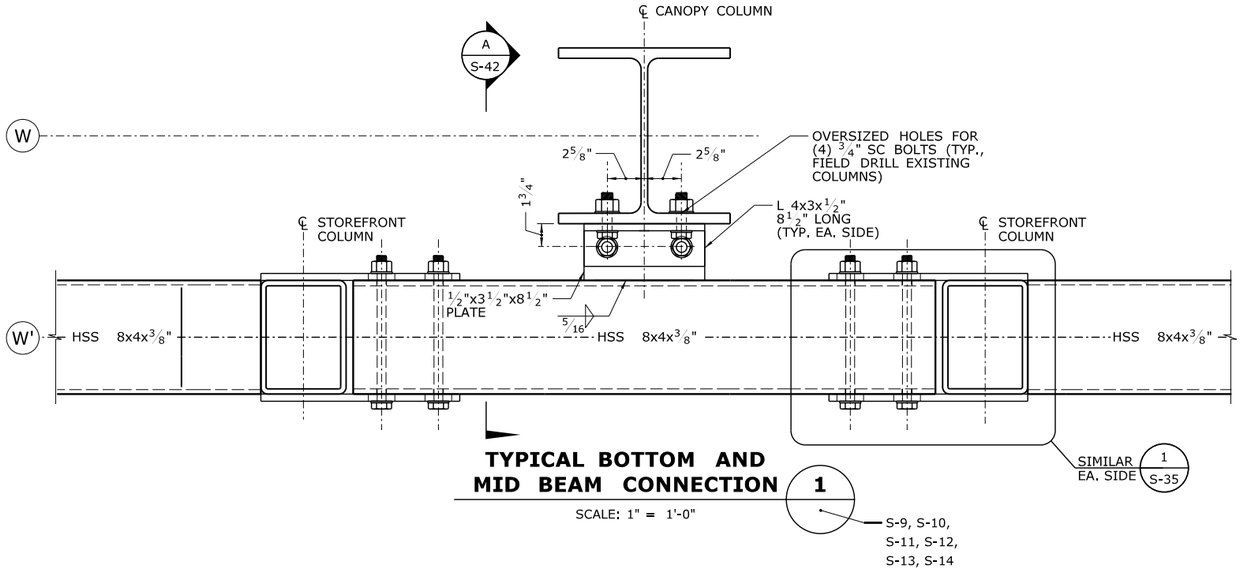

TYPICAL BOTTOM AND MID BEAM CONNECTION 1

SCALE: 1" = 1'-0"

S-9, S-10, S-11, S-12, S-13, S-14

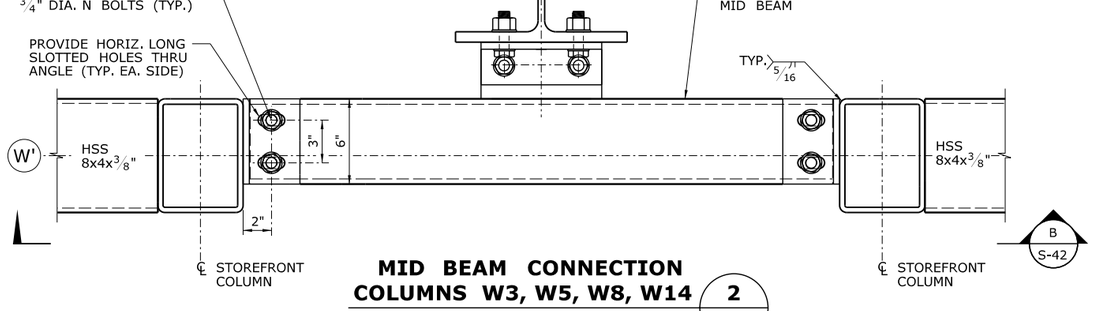

MID BEAM CONNECTION COLUMNS W3, W5, W8, W14 2

SCALE: 1" = 1'-0"

S-9, S-10, S-11, S-13

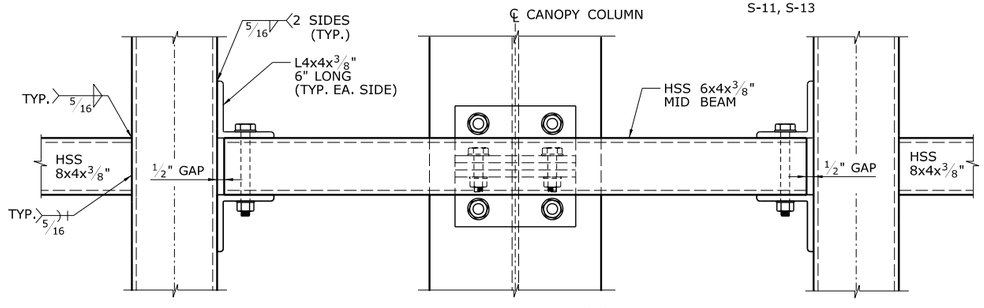

SECTION B

SCALE: 1" = 1'-0"

S-42

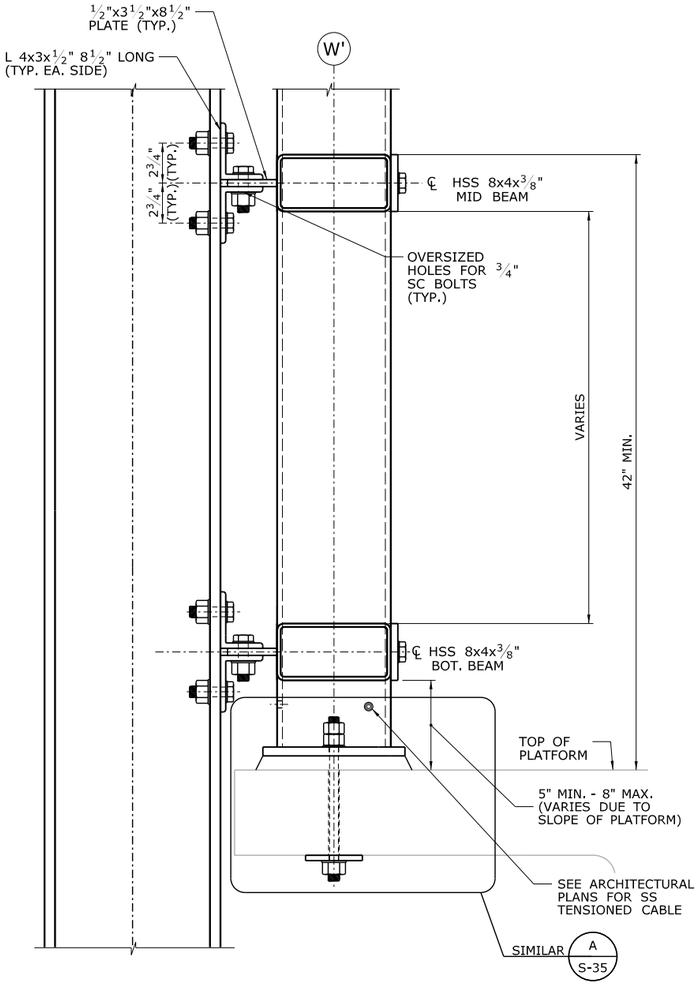

TYPICAL BOTTOM AND MID BEAM CONNECTION A

SCALE: 1" = 1'-0"

S-42

NOTES:

1. PROVIDE CLOSURE PLATES AT OPEN ENDS OF ALL MID AND BOTTOM BEAMS.
2. PROVIDE WASHER UNDER BOLT HEAD AND NUT AT ALL HSS THROUGH BOLTS.

REV.	DATE	REVISION DESCRIPTION	SHEET NO.
-	-	-	-
-	-	-	-
-	-	-	-
-	-	-	-
-	-	-	-
-	-	-	-

THE INFORMATION, INCLUDING ESTIMATED QUANTITIES OF WORK, SHOWN ON THESE SHEETS IS BASED ON LIMITED INVESTIGATIONS BY THE STATE AND IS IN NO WAY WARRANTED TO INDICATE THE CONDITIONS OF ACTUAL QUANTITIES OF WORK WHICH WILL BE REQUIRED.

PLOTTED: 3/31/2014

DESIGNER/DRAFTER: B. HAMAN
CHECKED BY: D. GRIFFIN
SCALE AS NOTED

STATE OF CONNECTICUT
DEPARTMENT OF TRANSPORTATION

FILENAME: ...\301155_04_35_WB_DETAILS_CANOPY.dgn

LOCHNER
H.W. LOCHNER, INC
2110 Silas Deane Highway
Rocky Hill, CT 06067

APPROVED BY: BEB
DATE: 4/2/2014

PROJECT TITLE:
INSTALLATION OF CANOPY AT BRIDGEPORT STATION

TOWN: **BRIDGEPORT**

DRAWING TITLE: **WESTBOUND CANOPY DETAILS II**

PROJECT NO. **301-155**
DRAWING NO. **S-42**
SHEET NO. **04.42**

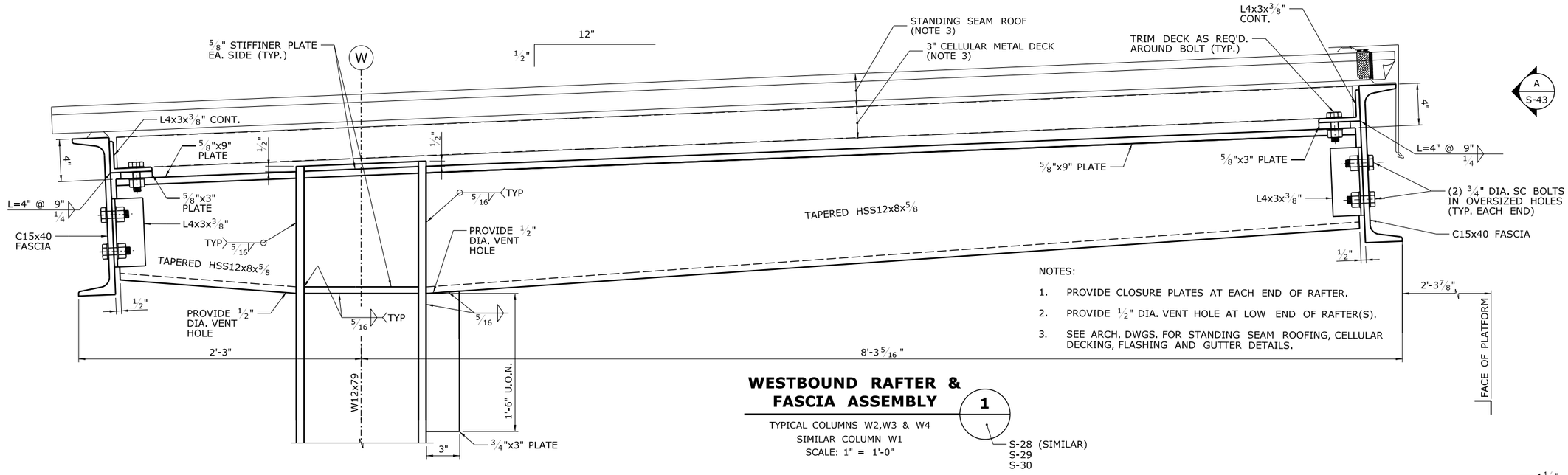

NOTES:

1. PROVIDE CLOSURE PLATES AT EACH END OF RAFTER.
2. PROVIDE 1/2" DIA. VENT HOLE AT LOW END OF RAFTER(S).
3. SEE ARCH. DWGS. FOR STANDING SEAM ROOFING, CELLULAR DECKING, FLASHING AND GUTTER DETAILS.

WESTBOUND RAFTER & FASCIA ASSEMBLY

1

TYPICAL COLUMNS W2,W3 & W4
SIMILAR COLUMN W1
SCALE: 1" = 1'-0"

S-28 (SIMILAR)
S-29
S-30

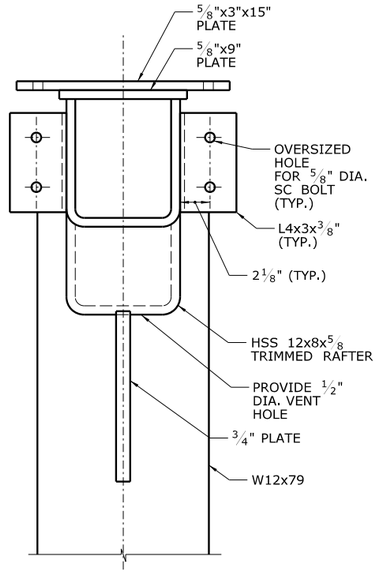

FASCIA, METAL DECK & STANDING SEAM ROOF NOT SHOWN

RAFTER ELEVATION

A
S-43

SCALE: 1" = 1'-0"

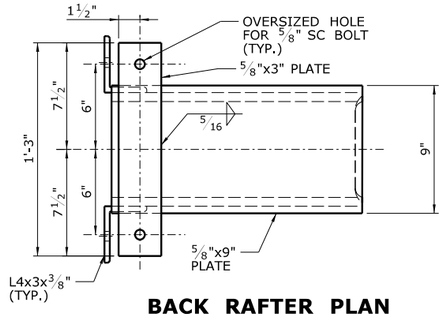

BACK RAFTER PLAN

SCALE: 1" = 1'-0"

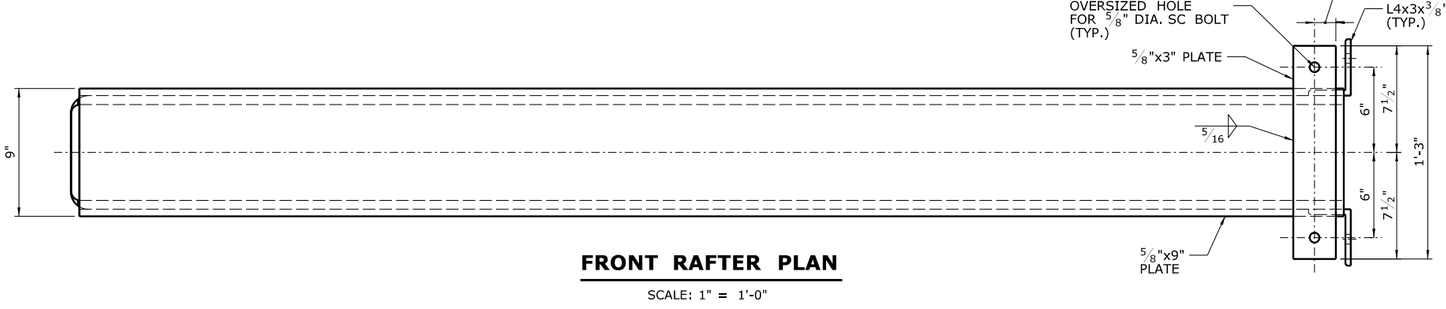

FRONT RAFTER PLAN

SCALE: 1" = 1'-0"

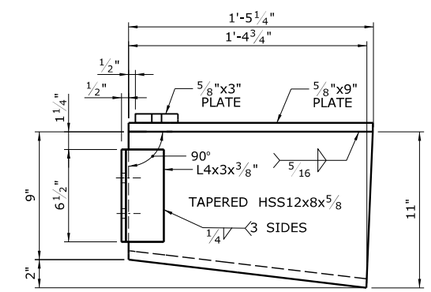

BACK RAFTER

SCALE: 1" = 1'-0"

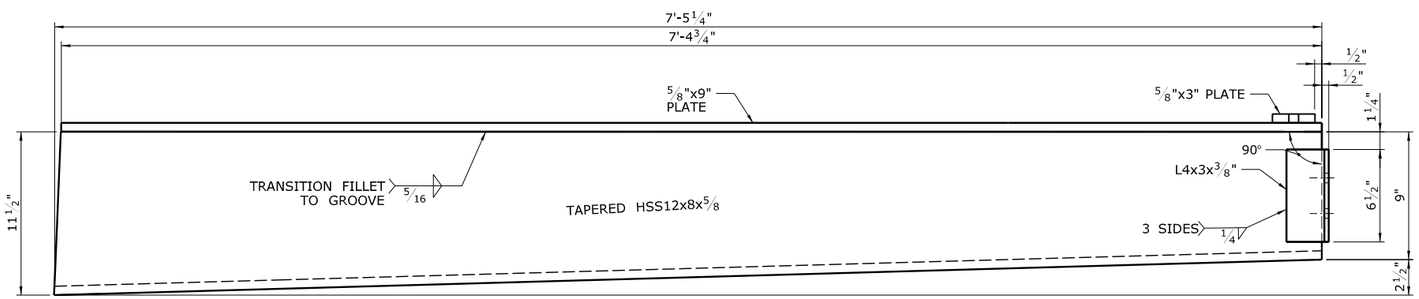

FRONT RAFTER

SCALE: 1" = 1'-0"

REV.	DATE	REVISION DESCRIPTION	SHEET NO.
-	-	-	-
-	-	-	-
-	-	-	-
-	-	-	-
-	-	-	-
-	-	-	-

THE INFORMATION, INCLUDING ESTIMATED QUANTITIES OF WORK, SHOWN ON THESE SHEETS IS BASED ON LIMITED INVESTIGATIONS BY THE STATE AND IS IN NO WAY WARRANTED TO INDICATE THE CONDITIONS OF ACTUAL QUANTITIES OF WORK WHICH WILL BE REQUIRED.

PLOTTED: 3/31/2014

DESIGNER/DRAFTER: B. HAMAN
CHECKED BY: D. GRIFFIN
SCALE AS NOTED

STATE OF CONNECTICUT
DEPARTMENT OF TRANSPORTATION

FILENAME: ...\301155_04_35_WB_DETAILS_CANOPY.dgn

LOCHNER
H.W. LOCHNER, INC
2110 Silas Deane Highway
Rocky Hill, CT 06067

APPROVED BY: BEB
DATE: 4/2/2014

PROJECT TITLE:
INSTALLATION OF CANOPY AT BRIDGEPORT STATION

TOWN: **BRIDGEPORT**

DRAWING TITLE: **WESTBOUND CANOPY DETAILS III**

PROJECT NO. **301-155**
DRAWING NO. **S-43**
SHEET NO. **04.43**

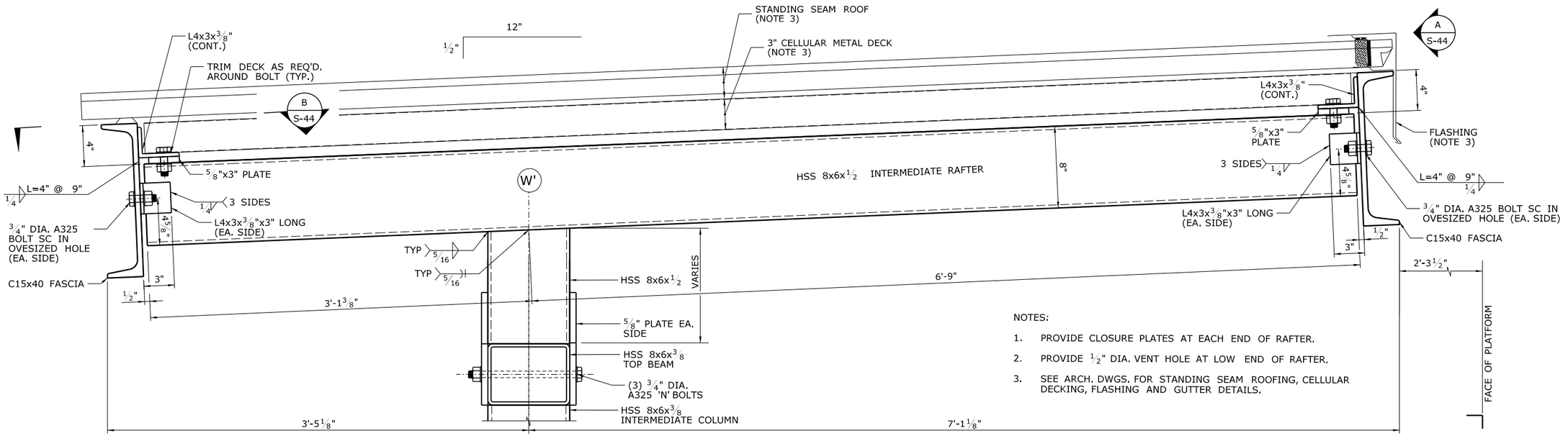

NOTES:

1. PROVIDE CLOSURE PLATES AT EACH END OF RAFTER.
2. PROVIDE 1/2" DIA. VENT HOLE AT LOW END OF RAFTER.
3. SEE ARCH. DWGS. FOR STANDING SEAM ROOFING, CELLULAR DECKING, FLASHING AND GUTTER DETAILS.

1 S-31 WESTBOUND INTERMEDIATE RAFTER & FASCIA ASSEMBLY

SCALE: 1" = 1'-0"

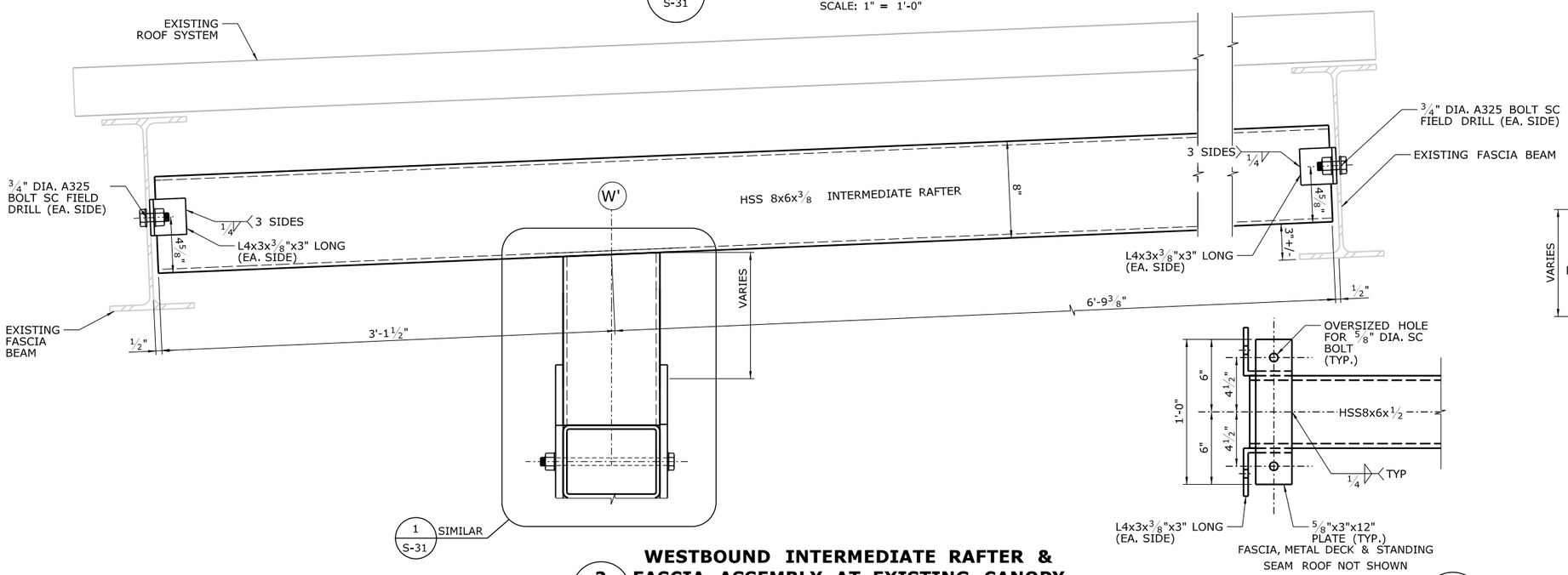

2 S-31 WESTBOUND INTERMEDIATE RAFTER & FASCIA ASSEMBLY AT EXISTING CANOPY

SCALE: 1" = 1'-0"

FASCIA, METAL DECK & STANDING SEAM ROOF NOT SHOWN

RAFTER SECTION B S-44

(TYPICAL EA. END)

SCALE: 1" = 1'-0"

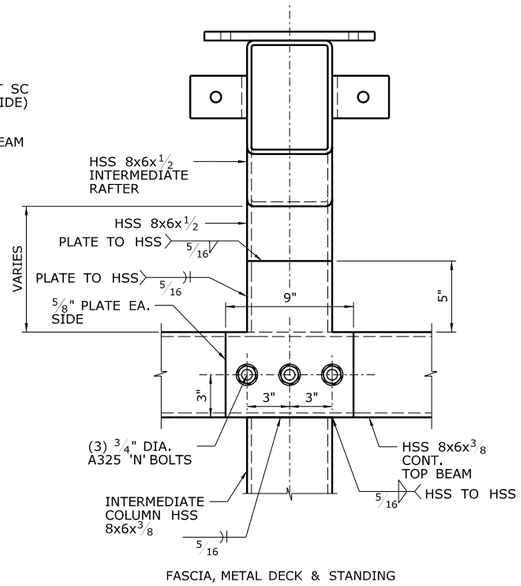

FASCIA, METAL DECK & STANDING SEAM ROOF NOT SHOWN

RAFTER ELEVATION A S-44

SCALE: 1" = 1'-0"

REV.	DATE	REVISION DESCRIPTION	SHEET NO.
-	-	-	-
-	-	-	-
-	-	-	-
-	-	-	-
-	-	-	-
-	-	-	-

THE INFORMATION, INCLUDING ESTIMATED QUANTITIES OF WORK, SHOWN ON THESE SHEETS IS BASED ON LIMITED INVESTIGATIONS BY THE STATE AND IS IN NO WAY WARRANTED TO INDICATE THE CONDITIONS OF ACTUAL QUANTITIES OF WORK WHICH WILL BE REQUIRED.

PLOTTED: 3/31/2014

DESIGNER/DRAFTER: B. HAMAN
CHECKED BY: D. GRIFFIN
SCALE AS NOTED

STATE OF CONNECTICUT
DEPARTMENT OF TRANSPORTATION

FILENAME: ...\301155_04_35_WB_DETAILS_CANOPY.dgn

LOCHNER
H.W. LOCHNER, INC
2110 Silas Deane Highway
Rocky Hill, CT 06067

APPROVED BY: BEB
DATE: 4/2/2014

PROJECT TITLE:
INSTALLATION OF CANOPY AT BRIDGEPORT STATION

TOWN: **BRIDGEPORT**

DRAWING TITLE: **WESTBOUND CANOPY DETAILS IV**

PROJECT NO. **301-155**
DRAWING NO. **S-44**
SHEET NO. **04.44**

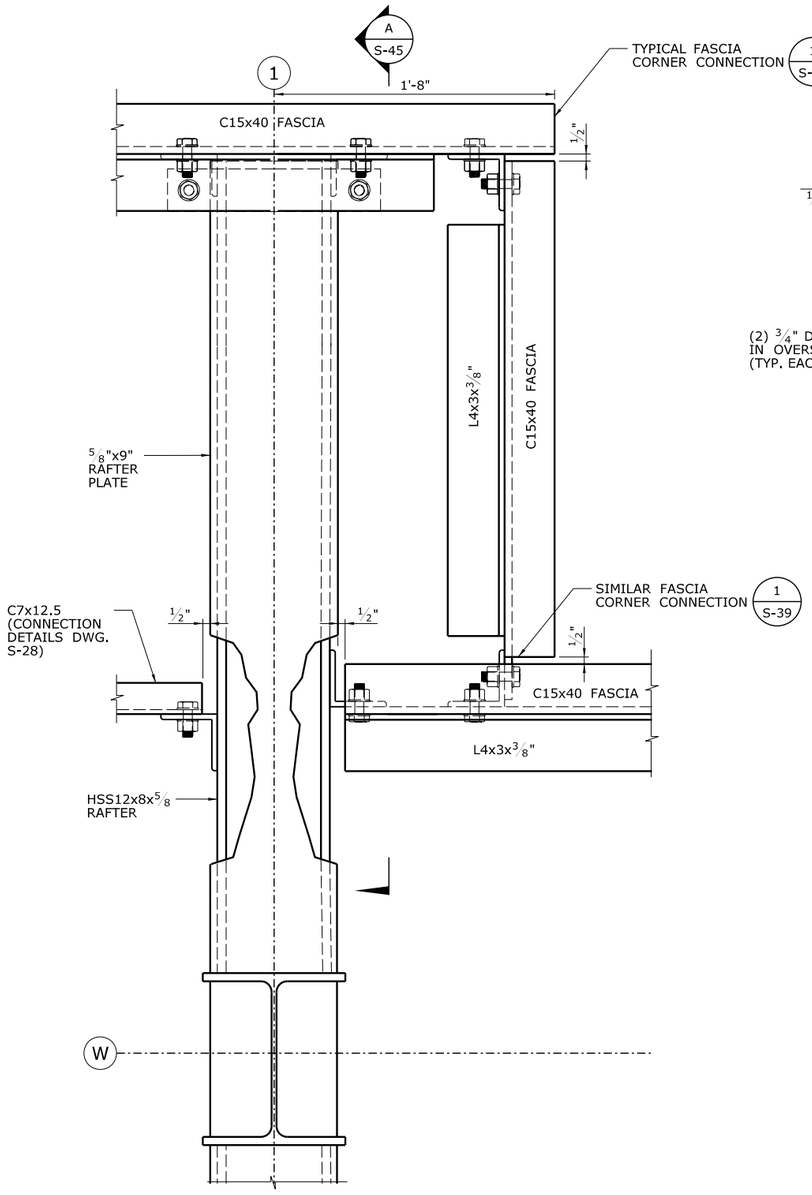

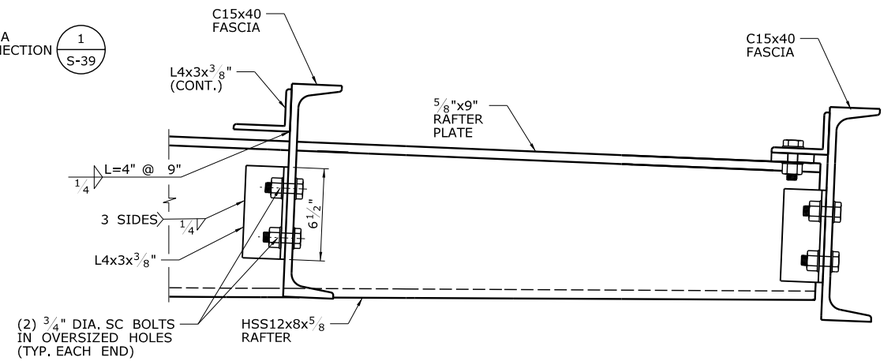

MISC. CONNECTIONS & RAFTER DETAILS SIMILAR TO MAIN RAFTER DETAILS U.O.N.

FASCIA TO RAFTER CONNECTION — A / S-45

SCALE: 1" = 1'-0"

MISC. CONNECTIONS & RAFTER DETAILS SIMILAR TO MAIN RAFTER DETAILS U.O.N.

COLUMN W1 - FASCIA DETAILS — 1 / S-9

SCALE: 1" = 1'-0"

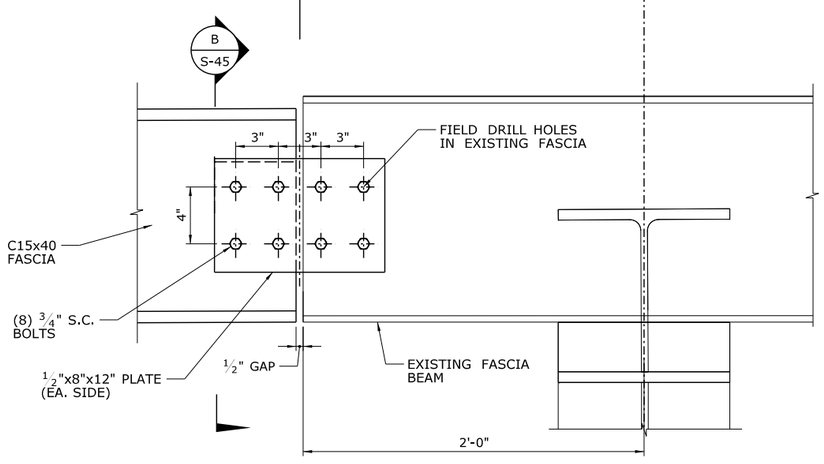

SEE ARCHITECTURAL DRAWINGS FOR ROOF SYSTEM AND FLASHING DETAILS

FASCIA SPLICE DETAIL — 2 / S-10

SCALE: 1" = 1'-0"

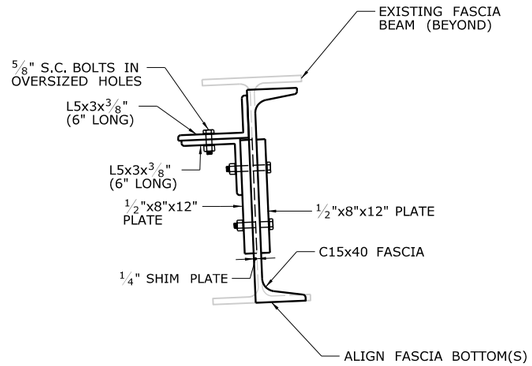

FASCIA SECTION — B / S-45

SCALE: 1" = 1'-0"

REV.	DATE	REVISION DESCRIPTION	SHEET NO.
-	-	-	-
-	-	-	-
-	-	-	-
-	-	-	-
-	-	-	-
-	-	-	-

THE INFORMATION, INCLUDING ESTIMATED QUANTITIES OF WORK, SHOWN ON THESE SHEETS IS BASED ON LIMITED INVESTIGATIONS BY THE STATE AND IS IN NO WAY WARRANTED TO INDICATE THE CONDITIONS OF ACTUAL QUANTITIES OF WORK WHICH WILL BE REQUIRED.

PLOTTED: 3/31/2014

DESIGNER/DRAFTER: B. HAMAN
CHECKED BY: D. GRIFFIN
SCALE AS NOTED

STATE OF CONNECTICUT
DEPARTMENT OF TRANSPORTATION

FILENAME: ...\301155_04_35_WB_DETAILS_CANOPY.dgn

LOCHNER
H.W. LOCHNER, INC
2110 Silas Deane Highway
Rocky Hill, CT 06067

APPROVED BY: BEB
DATE: 4/2/2014

PROJECT TITLE:
INSTALLATION OF CANOPY AT BRIDGEPORT STATION

TOWN: **BRIDGEPORT**

DRAWING TITLE: **WESTBOUND CANOPY DETAILS V**

PROJECT NO. **301-155**
DRAWING NO. **S-45**
SHEET NO. **04.45**

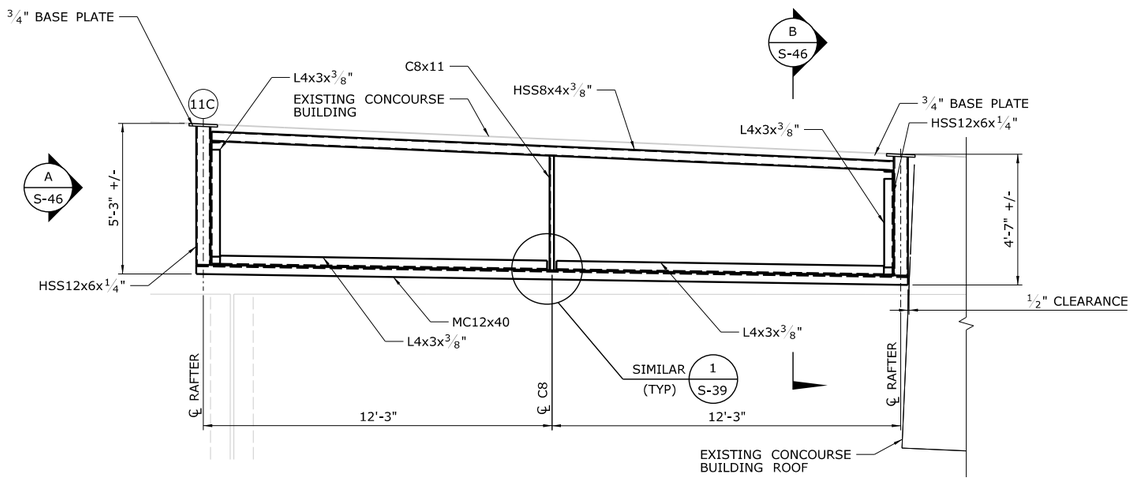

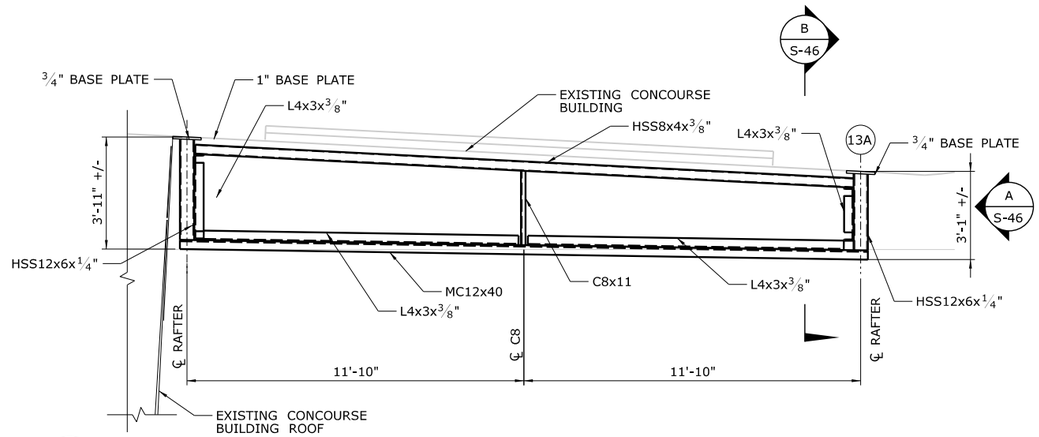

CONCOURSE ROOF FRAMING PLAN 1

SCALE: 1 1/2" = 1'-0"

S-12
S-13

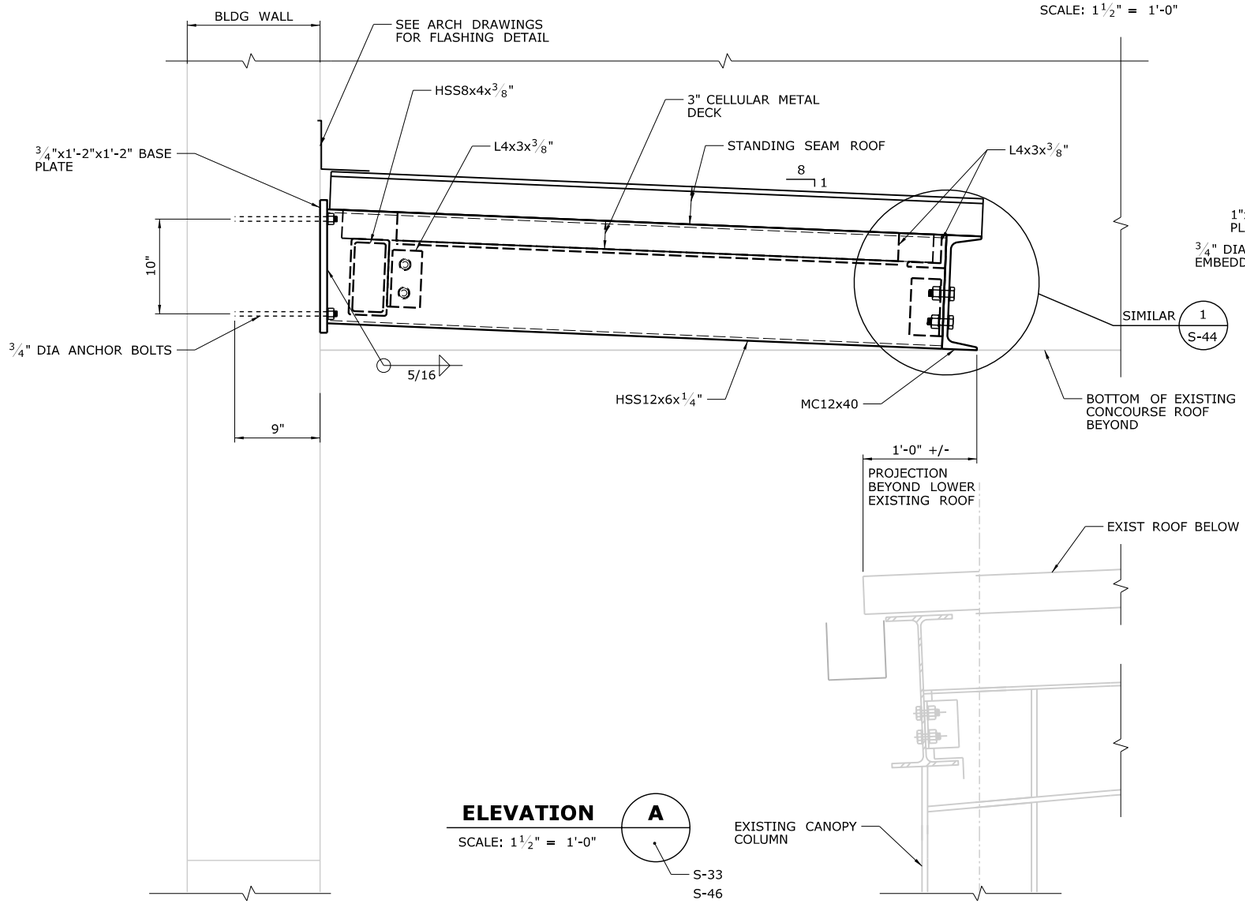

ELEVATION A

SCALE: 1 1/2" = 1'-0"

S-33
S-46

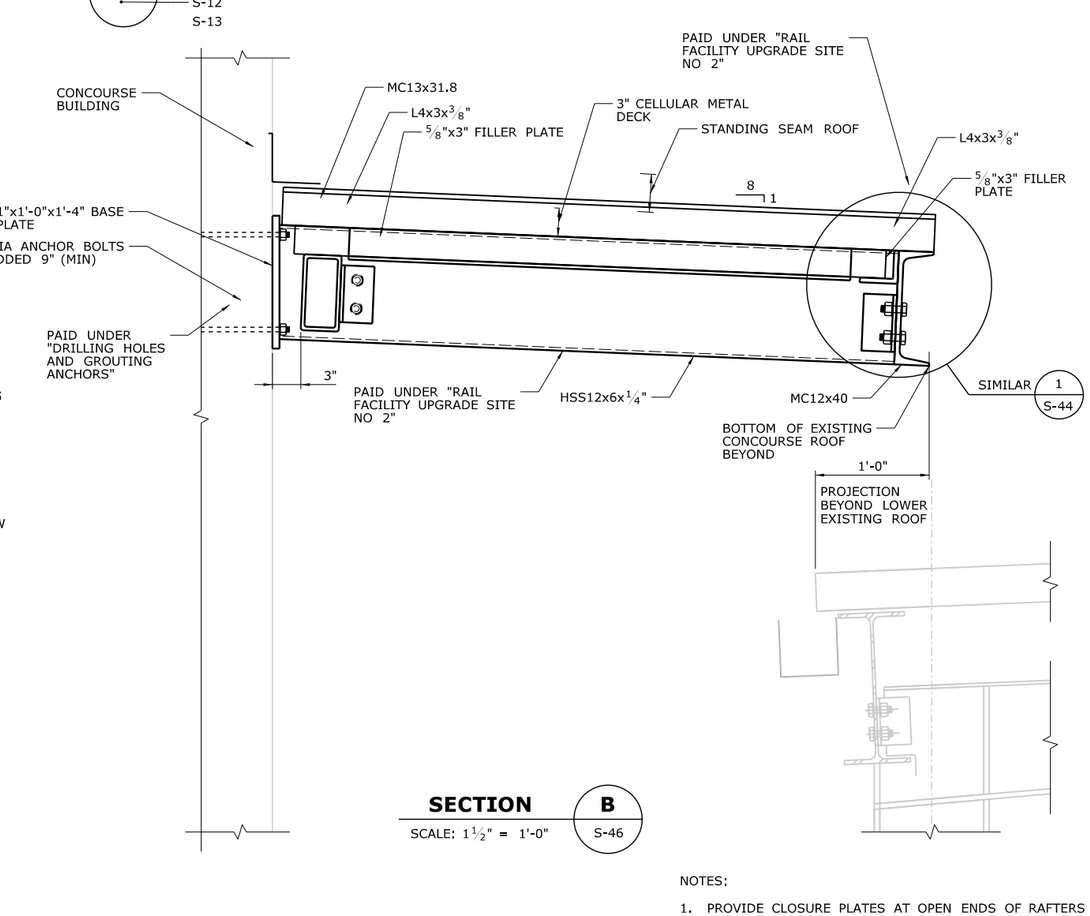

SECTION B

SCALE: 1 1/2" = 1'-0"

S-46

NOTES:

1. PROVIDE CLOSURE PLATES AT OPEN ENDS OF RAFTERS

REV.	DATE	REVISION DESCRIPTION	SHEET NO.

THE INFORMATION, INCLUDING ESTIMATED QUANTITIES OF WORK, SHOWN ON THESE SHEETS IS BASED ON LIMITED INVESTIGATIONS BY THE STATE AND IS IN NO WAY WARRANTED TO INDICATE THE CONDITIONS OF ACTUAL QUANTITIES OF WORK WHICH WILL BE REQUIRED.

PLOTTED: 3/31/2014

DESIGNER/DRAFTER: J. MENDEZ
CHECKED BY: D. GRIFFIN
SCALE AS NOTED

STATE OF CONNECTICUT
DEPARTMENT OF TRANSPORTATION

FILENAME: ...\301155_04_48_WB_DETAILSCONCOURSE.dgn

LOCHNER
H.W. LOCHNER, INC
2110 Silas Deane Highway
Rocky Hill, CT 06067

APPROVED BY: BEB
DATE: 4/2/2014

PROJECT TITLE:
INSTALLATION OF CANOPY AT BRIDGEPORT STATION

TOWN: **BRIDGEPORT**
PROJECT NO. **301-155**
DRAWING TITLE: **WESTBOUND CANOPY DETAILS VI**
DRAWING NO. **S-46**
SHEET NO. **04.46**

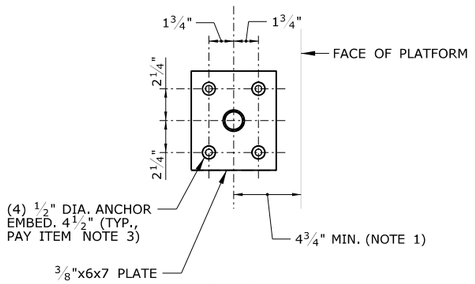

PLAN

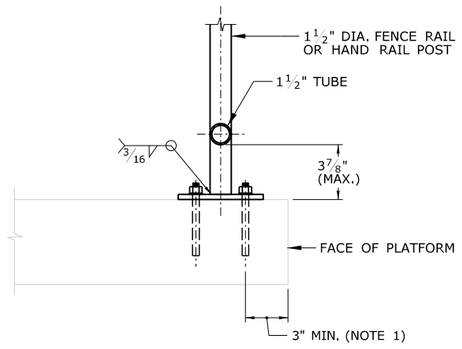

ELEVATION

NOTES:

1. OBTAIN ENGINEER'S APPROVAL IF EDGE DISTANCE IS LESS THAN 3".

FENCE / RAIL POST CONNECTION DETAIL — 1 / S-47

SCALE: 1" = 1'-0"

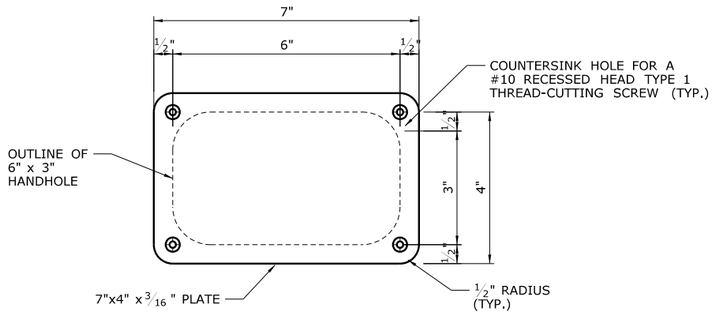

HANDHOLE COVER PLATE PLAN

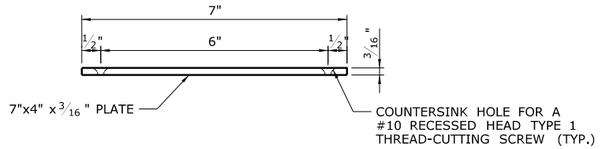

HANDHOLE COVER PLATE ELEVATION

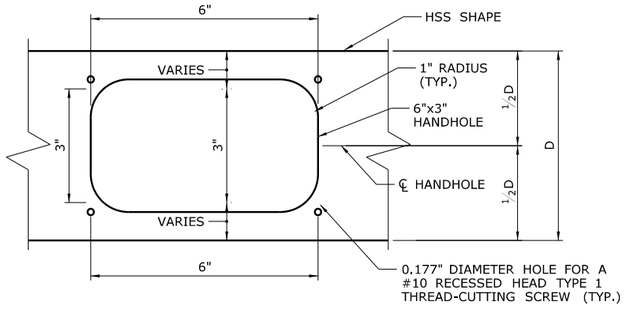

HANDHOLE PLAN

HANDHOLE DETAILS — 2 / S-47

NOT TO SCALE

REV.	DATE	REVISION DESCRIPTION	SHEET NO.
-	-	-	-
-	-	-	-
-	-	-	-
-	-	-	-
-	-	-	-
-	-	-	-

THE INFORMATION, INCLUDING ESTIMATED QUANTITIES OF WORK, SHOWN ON THESE SHEETS IS BASED ON LIMITED INVESTIGATIONS BY THE STATE AND IS IN NO WAY WARRANTED TO INDICATE THE CONDITIONS OF ACTUAL QUANTITIES OF WORK WHICH WILL BE REQUIRED.

PLOTTED: 3/31/2014

DESIGNER/DRAFTER: B. HAMAN
CHECKED BY: D. GRIFFIN
SCALE AS NOTED

STATE OF CONNECTICUT
DEPARTMENT OF TRANSPORTATION

FILENAME: ...\301155_04_49_DETAILS_MISC.dgn

LOCHNER
H.W. LOCHNER, INC
2110 Silas Deane Highway
Rocky Hill, CT 06067

APPROVED BY: DATE:

PROJECT TITLE:
INSTALLATION OF CANOPY AT BRIDGEPORT STATION

TOWN: **BRIDGEPORT**

DRAWING TITLE: **MISCELLANEOUS DETAILS**

PROJECT NO. **301-155**
DRAWING NO. **S-47**
SHEET NO. **04.47**

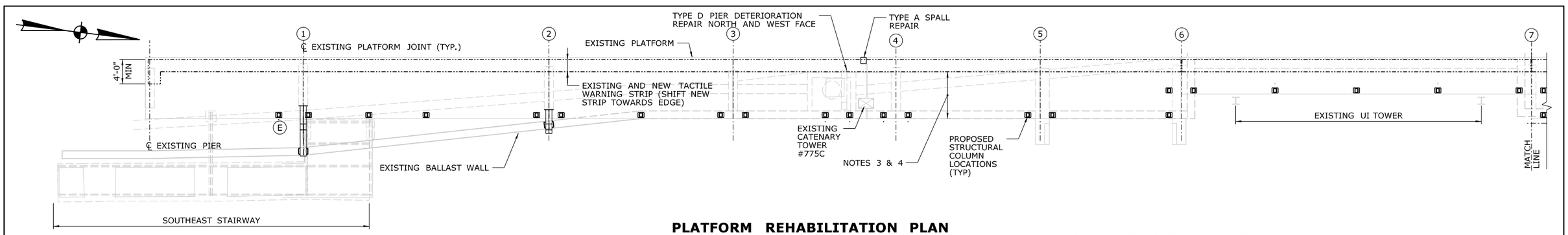

PLATFORM REHABILITATION PLAN

SCALE: 1/4" = 1'-0"

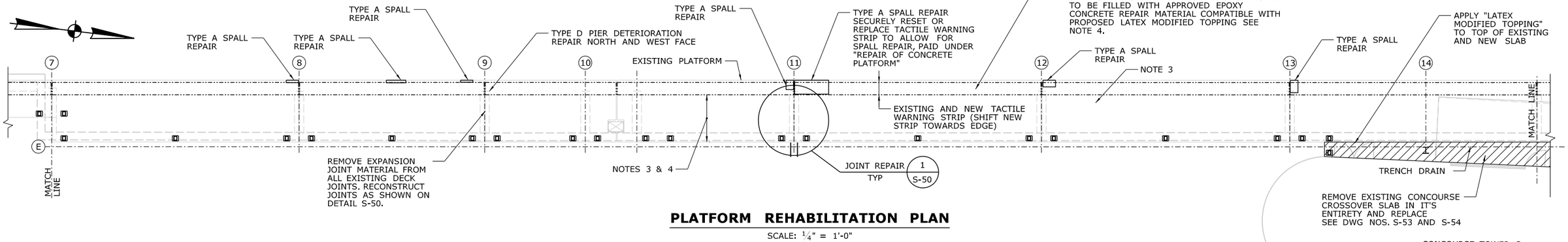

PLATFORM REHABILITATION PLAN

SCALE: 1/4" = 1'-0"

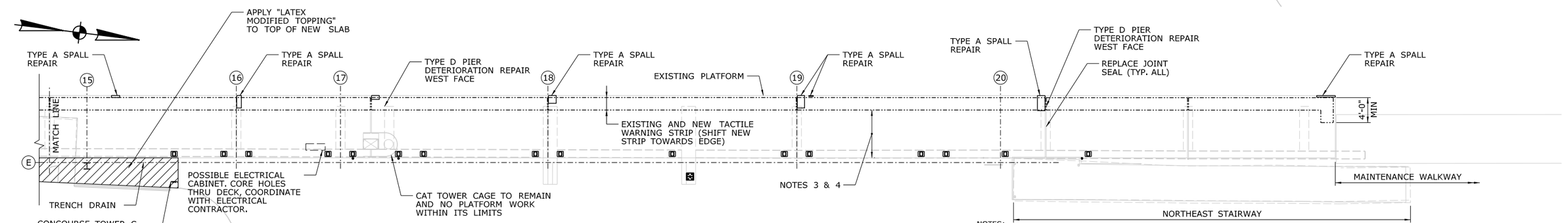

PLATFORM REHABILITATION PLAN

SCALE: 1/4" = 1'-0"

SUGGESTED CONSTRUCTION SEQUENCE:

1. PERFORM PLATFORM SPALL REPAIRS UNDER "REPAIR OF CONCRETE PLATFORM".
2. REPAIR PIER DETERIORATION UNDER "REPAIR FOUNDATION WITH REINFORCED CONCRETE".
3. REPLACE CONCOURSE CROSSOVER SLAB UNDER "REPLACE CONCOURSE CANTILEVER SLAB".
4. INSTALL NEW CANOPIES AND STOREFRONTS.
5. REMOVE AND REPLACE TACTILE WARNING STRIP TILES UNDER "TACTILE WARNING STRIP".
6. REPAIR ALL HOLES IN PLATFORM AS PER "ARCHITECTURAL SALVAGE".
7. RESURFACE PLATFORM AND APPLY TOPPING TO CONCOURSE CROSSOVER SLAB UNDER "LATEX MODIFIED TOPPING".
8. SAW CUT OUT AND PLACE NEW PLATFORM JOINTS UNDER "REPLACE JOINT SEAL".
9. APPLY "WATCH THE GAP" STENCILING AS PART OF THE MAJOR LUMP SUM ITEM "RAIL FACILITY UPGRADE".
10. INSTALL BRIDGE PLATE STORAGE RACKS AND BENCHES. SET OTHER MISCELLANEOUS PLATFORM MOUNTED AMENITIES.

NOTES:

1. SEE DWG S-50 FOR TABLE OF QUANTITIES AND REPAIR DETAILS. SPALL REPAIRS TO BE PAID FOR UNDER "REPAIR OF CONCRETE PLATFORM".
2. ALL SPALL REPAIRS SHALL BE COMPLETED PRIOR TO APPLYING LATEX MODIFIED TOPPING.
3. THE TOP SURFACE OF THE PLATFORM FROM THE TACTILE WARNING STRIP TO THE BACK EDGE SHALL BE COATED WITH LATEX MODIFIED TOPPING. MILL AND SAND BLAST DECK SURFACE IN ACCORDANCE WITH MANUFACTURER'S SPECIFIED REQUIREMENTS.
4. DECK SURFACE REPAIRS UNDER THE EXISTING TACTILE STRIP, MILLING, SAND BLASTING AND DECK COATING TO BE PAID FOR UNDER ITEM "LATEX MODIFIED TOPPING".
5. TEMPORARILY REMOVE TENSIONED WIRE ROPE UNDER LOWER HSS WIND SCREEN BEAM TO ALLOW MILLING, SAND BLASTING AND FINISHING OF DECK.
6. PROVIDE SECURE BARRICADES TO PROTECT PEDESTRIANS DURING MILLING AND SAND BLASTING OPERATIONS. PAID UNDER "MAINTENANCE PEDESTRIAN ACCESS".
7. SEE DRAWING S-51 FOR TACTILE WARNING STRIP DETAILS.
8. CONTRACTOR TO DESIGN, FABRICATE, AND INSTALL TEMPORARY SHORING AS REQUIRED DURING RECONSTRUCTION OF PIERS.

REV.	DATE	REVISION DESCRIPTION	SHEET NO.
-	-	-	-
-	-	-	-
-	-	-	-
-	-	-	-
-	-	-	-
-	-	-	-

THE INFORMATION, INCLUDING ESTIMATED QUANTITIES OF WORK, SHOWN ON THESE SHEETS IS BASED ON LIMITED INVESTIGATIONS BY THE STATE AND IS IN NO WAY WARRANTED TO INDICATE THE CONDITIONS OF ACTUAL QUANTITIES OF WORK WHICH WILL BE REQUIRED.

PLOTTED: 3/31/2014

DESIGNER/DRAFTER: B. HAMAN
CHECKED BY: D. GRIFFIN
SCALE AS NOTED

STATE OF CONNECTICUT
DEPARTMENT OF TRANSPORTATION

FILENAME: ...\301155_04_43_EB_PLAN_REHAB.dgn

LOCHNER
H.W. LOCHNER, INC
2110 Silas Deane Highway
Rocky Hill, CT 06067

APPROVED BY: BEB
DATE: 4/2/2014

PROJECT TITLE:
INSTALLATION OF CANOPY AT BRIDGEPORT STATION

TOWN: **BRIDGEPORT**

DRAWING TITLE:
EASTBOUND PLATFORM REHABILITATION PLAN

PROJECT NO. **301-155**
DRAWING NO. **S-48**
SHEET NO. **04.48**

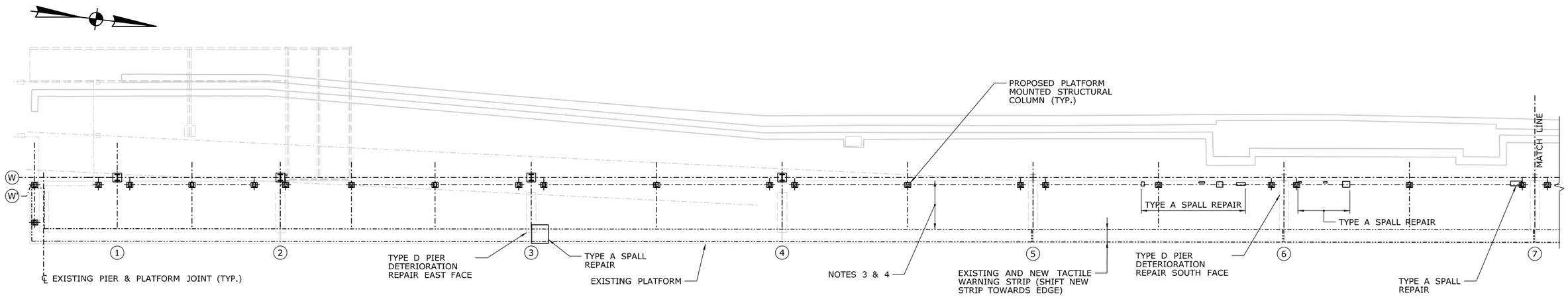

PLATFORM REHABILITATION PLAN

SCALE: 1/4" = 1'-0"

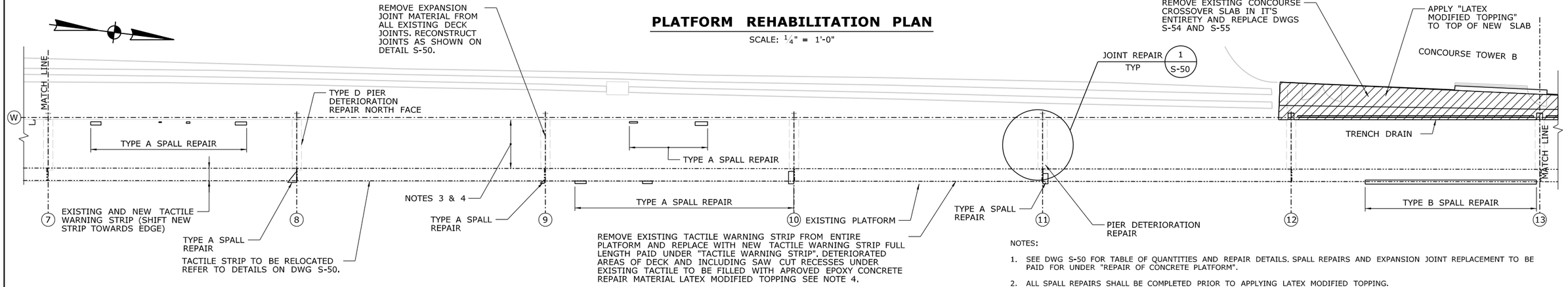

PLATFORM REHABILITATION PLAN

SCALE: 1/4" = 1'-0"

NOTES:

1. SEE DWG S-50 FOR TABLE OF QUANTITIES AND REPAIR DETAILS. SPALL REPAIRS AND EXPANSION JOINT REPLACEMENT TO BE PAID FOR UNDER "REPAIR OF CONCRETE PLATFORM".
2. ALL SPALL REPAIRS SHALL BE COMPLETED PRIOR TO APPLYING LATEX MODIFIED TOPPING.
3. THE TOP SURFACE OF THE PLATFORM FROM THE TACTILE WARNING STRIP TO THE BACK EDGE SHALL BE COATED WITH LATEX MODIFIED TOPPING. MILL AND SAND BLAST DECK SURFACE IN ACCORDANCE WITH MANUFACTURER'S SPECIFIED REQUIREMENTS.
4. DECK SURFACE REPAIRS UNDER THE EXISTING TACTILE STRIP, MILLING, SAND BLASTING AND DECK COATING TO BE PAID FOR UNDER ITEM "LATEX MODIFIED TOPPING".
5. TEMPORARILY REMOVE TENSIONED WIRE ROPE UNDER LOWER HSS WIND SCREEN BEAM TO ALLOW MILLING, SAND BLASTING AND FINISHING OF DECK.
6. PROVIDE SECURE BARRICADES TO PROTECT PEDESTRIANS DURING MILLING AND SAND BLASTING OPERATIONS PAID UNDER "MAINTENANCE PEDESTRIAN ACCESS".
7. SEE DWG S-51 FOR TACTILE WARNING STRIP DETAILS.
8. SEE DWG S-48 FOR SUGGESTED CONSTRUCTION SEQUENCE.

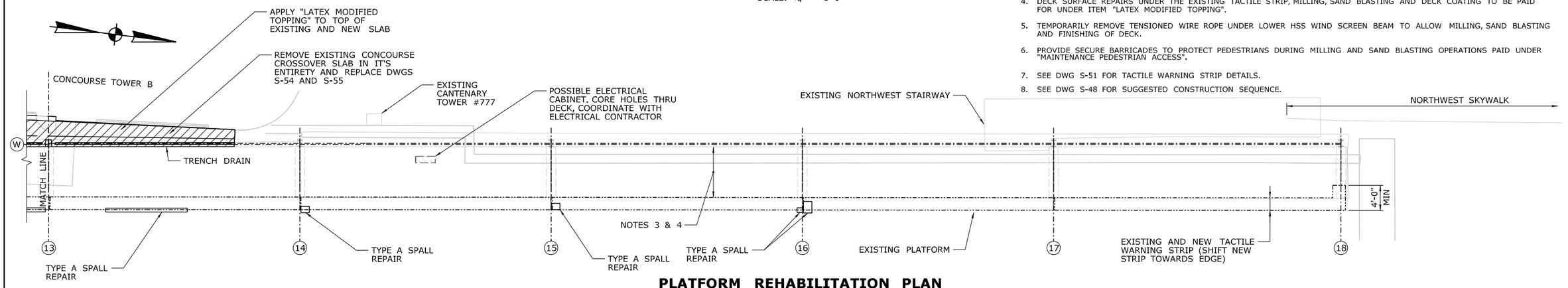

PLATFORM REHABILITATION PLAN

SCALE: 1/4" = 1'-0"

REV.	DATE	REVISION DESCRIPTION	SHEET NO.

THE INFORMATION, INCLUDING ESTIMATED QUANTITIES OF WORK, SHOWN ON THESE SHEETS IS BASED ON LIMITED INVESTIGATIONS BY THE STATE AND IS IN NO WAY WARRANTED TO INDICATE THE CONDITIONS OF ACTUAL QUANTITIES OF WORK WHICH WILL BE REQUIRED.

PLOTTED: 3/31/2014

DESIGNER/DRAFTER: B. HAMAN
CHECKED BY: D. GRIFFIN
SCALE AS NOTED

STATE OF CONNECTICUT
DEPARTMENT OF TRANSPORTATION

FILENAME: ...\301155_04_44_WB_PLAN_REHAB.dgn

LOCHNER
H.W. LOCHNER, INC
2110 Silas Deane Highway
Rocky Hill, CT 06067

APPROVED BY: BEB
DATE: 4/2/2014

PROJECT TITLE:
INSTALLATION OF CANOPY AT BRIDGEPORT STATION

TOWN: **BRIDGEPORT**

DRAWING TITLE: **WESTBOUND PLATFORM REHABILITATION PLAN**

PROJECT NO. **301-155**
DRAWING NO. **S-49**
SHEET NO. **04.49**

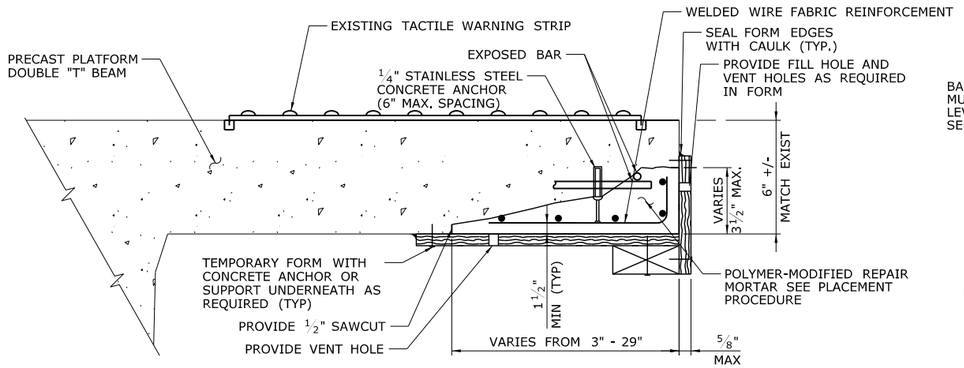

TYPE A REPAIR DETAIL

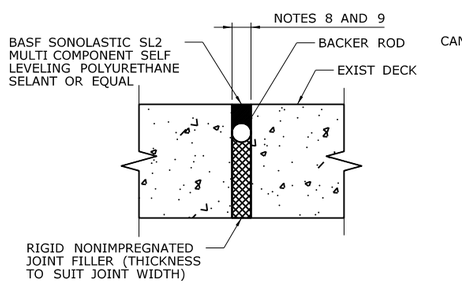

EXPANSION JOINT RECONSTRUCTION DETAIL 1

NOT TO SCALE

S-48
S-49

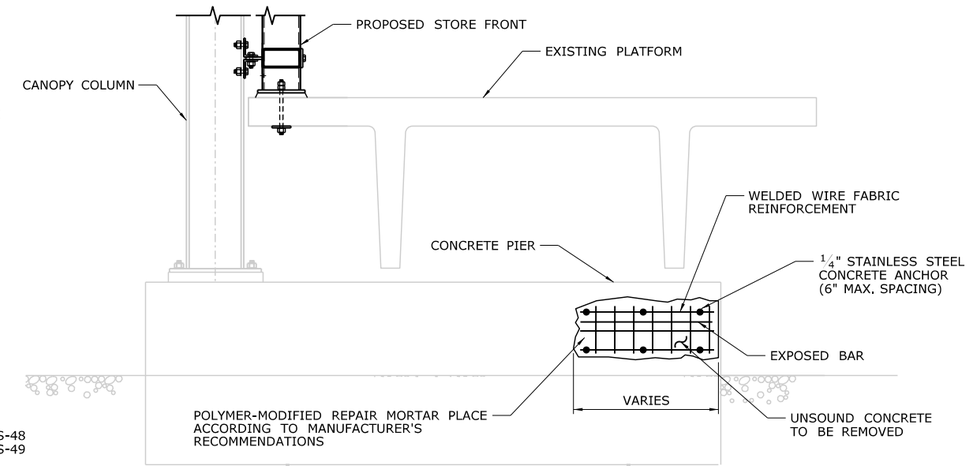

TYPE D PIER DETERIORATION REPAIR DETAIL

NOT TO SCALE
SIDE FACE REPAIR SHOWN FRONT FACE SIMILAR

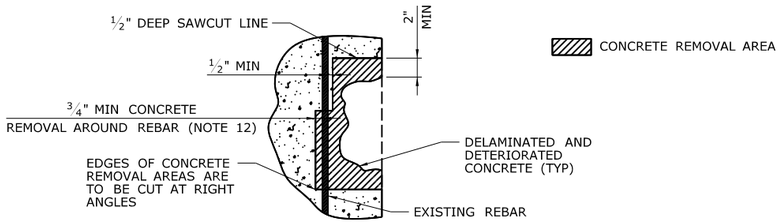

SPALLING REPAIR TYPICAL CONCRETE REMOVAL DETAIL

NOT TO SCALE

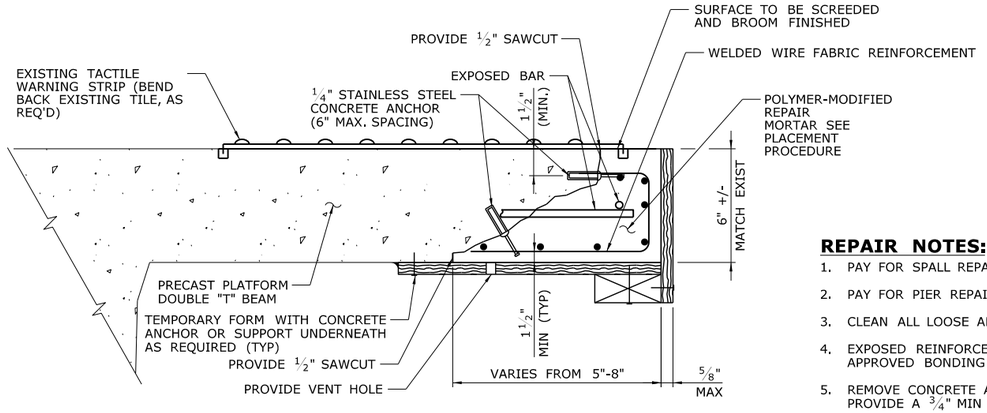

TYPE B REPAIR DETAIL

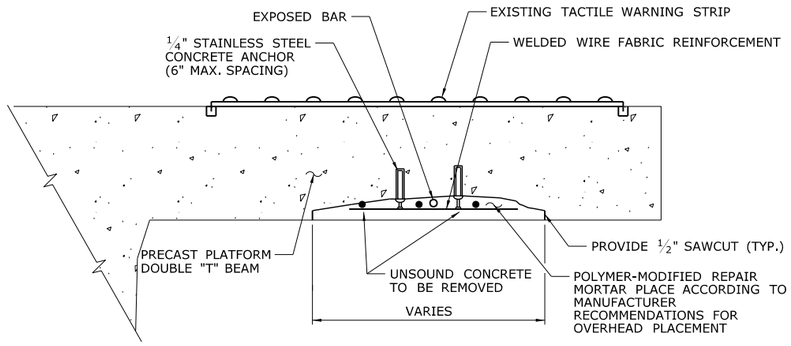

TYPE C REPAIR DETAIL

(NOT SHOWN IN PLAN LOCATIONS, USE AT DISCRETION OF ENGINEER)

CONCRETE SPALL REPAIR DETAILS

NOT TO SCALE

REPAIR NOTES:

1. PAY FOR SPALL REPAIRS ON PLATFORM UNDER ITEM "REPAIR OF CONCRETE PLATFORM".
2. PAY FOR PIER REPAIR UNDER ITEM "REPAIR FOUNDATION WITH REINFORCED CONCRETE".
3. CLEAN ALL LOOSE AND UNSOUND CONCRETE FROM THE REPAIR AREA.
4. EXPOSED REINFORCEMENT IS TO BE CLEANED USING WIRE BRUSH AND COATED WITH APPROVED BONDING AGENT.
5. REMOVE CONCRETE AROUND ENTIRE PERIMETER OF EXPOSED REINFORCEMENT TO PROVIDE A ¾" MIN GAP BEHIND AND AROUND ALL BARS.
6. WELDED WIRE FABRIC SHALL BE 2 x 2 - W1.4 x W1.4 WELDED WIRE FABRIC.
7. WELDED WIRE FABRIC SHALL BE WIRED TO CONCRETE ANCHORS WITH TIE WIRE.
8. FIELD VERIFY JOINT WIDTH AT BOTTOM OF SLAB.
9. SAWCUT/REMOVE TOPPING AS REQUIRED TO PROVIDE CONSTANT JOINT WIDTH THROUGH DEPTH OF SLAB.
10. INSTALL SEALANT IN ACCORDANCE WITH MANUFACTURER'S REQUIREMENTS.
11. VERIFY SEALANT IS COMPATIBLE WITH DECK TOPPING MATERIAL.
12. IF ANY OUTER REINFORCEMENT (STIRRUPS, TIES, ETC) IS OR BECOMES EXPOSED DURING PATCHING, THE CONCRETE SHALL BE REMOVED ¾" (MIN) ALL AROUND THAT REINFORCEMENT. IF INNER REINFORCEMENT (MAIN REINFORCEMENT) IS HEAVILY CORRODED THEN CONCRETE SHALL ALSO BE REMOVED ¾" (MIN) AROUND IT.
13. APPLY AN EPOXY BONDING COMPOUND BETWEEN THE EXISTING AND THE NEW CONCRETE.

PLACEMENT PROCEDURE:

1. SUBSTRATE SHALL BE CLEAN, SOUND AND LAITANCE-FREE PRIOR TO REPAIRING.
2. FIT FORM, PROVIDE VENT HOLES AND CHIP SPOT FOR POURING. APPLY RELEASE AGENT TO FORM, OR USE PLASTIC LINED PLYWOOD.
3. ANCHOR FORM AND SEAL PERIMETER WITH BEAD OF CAULK.
4. FILL WITH WATER TO CHECK FOR WATER TIGHTNESS AND TO PROVIDE SATURATED SURFACE DRY (SSD) SUBSTRATE. LET DRAIN TO NO FREE STANDING WATER.
5. MIX AND PLACE THE POLYMER-MODIFIED REPAIR MORTAR AS PER THE MANUFACTURER'S DIRECTIONS.
6. VIBRATE FORM WHILE POURING THE POLYMER-MODIFIED REPAIR MORTAR.
7. VENT HOLES TO BE CAPPED WHEN STEADY FLOW IS EVIDENT.
8. STRIP FORM WHEN APPROPRIATE PER MANUFACTURER'S RECOMMENDATIONS.
9. DRY PACK ANCHOR FORM ANCHOR HOLES WITH NON-SHRINK GROUT.

PLATFORM CONCRETE REPAIR

	LOCATION	TYPE OF REPAIR	NUMBER OF SPALLS	AREA OF SPALLS (SQ FT)
EASTBOUND PLATFORM	BETWEEN COL 3 & 4	A	1	1.0
	PIER BETWEEN COL 3 & 4	D	1	2.3
	BETWEEN COL 7 & 8	A	1	0.8
	BETWEEN COL 8 & 9	A	2	2.0
	PIER AT COL 9	D	1	0.7
	BETWEEN COL 10 & 11	A	1	1.8
	BETWEEN COL 11 & 12	A	1	5.5
	BETWEEN COL 12 & 13	A	1	2.2
	BETWEEN COL 13 & 14	A	1	2.5
	BETWEEN COL 15 & 16	A	1	0.5
	BETWEEN COL 16 & 17	A	1	1.5
	BETWEEN COL 17 & 18	A	1	1.0
	PIER BETWEEN COL 17 & 18	D	1	2.0
	BETWEEN COL 18 & 19	A	1	2.1
	BETWEEN COL 19 & 20	A	2	2.4
WESTBOUND PLATFORM	PIER BETWEEN COL 20 & NORTH END OF PLATFORM	D	1	2.5
	BETWEEN COL 20 & NORTH END OF PLATFORM	A	2	4.1
	PIER AT COL 3	D	1	7.3
	BETWEEN COL 3 & 4	A	1	2.5
	BETWEEN COL 5 & 6	A	4	3.0
	PIER AT COL 6	D	1	10.0
	BETWEEN COL 6 & 7	A	5	2.7
	BETWEEN COL 7 & 8	A	6	3.2
	PIER AT COL 8	D	1	6.0
	BETWEEN COL 9 & 10	A	5	4.8
	PIER AT COL 11	D	1	4.2
	BETWEEN COL 11 & 12	A	1	1.4
	BETWEEN COL 12 & 13	B	3	17.8
	BETWEEN COL 13 & 14	A	1	8.1
	BETWEEN COL 14 & 15	A	1	1.3
	BETWEEN COL 15 & 16	A	2	2.0
	BETWEEN COL 16 & 17	A	1	2.5

REV.	DATE	REVISION DESCRIPTION	SHEET NO.

THE INFORMATION, INCLUDING ESTIMATED QUANTITIES OF WORK, SHOWN ON THESE SHEETS IS BASED ON LIMITED INVESTIGATIONS BY THE STATE AND IS IN NO WAY WARRANTED TO INDICATE THE CONDITIONS OF ACTUAL QUANTITIES OF WORK WHICH WILL BE REQUIRED.

PLOTTED: 3/31/2014

DESIGNER/DRAFTER: J. MENDEZ
CHECKED BY: D. GRIFFIN
SCALE AS NOTED

STATE OF CONNECTICUT
DEPARTMENT OF TRANSPORTATION

FILENAME: ...\301155_04_45_DETAILS_REHAB.dgn

LOCHNER
H.W. LOCHNER, INC
2110 Silas Deane Highway
Rocky Hill, CT 06067

APPROVED BY: BEB
DATE: 4/2/2014

PROJECT TITLE:
INSTALLATION OF CANOPY AT BRIDGEPORT STATION

TOWN: BRIDGEPORT
DRAWING TITLE: PLATFORM REHABILITATION DETAILS

PROJECT NO. 301-155
DRAWING NO. S-50
SHEET NO. 04.50

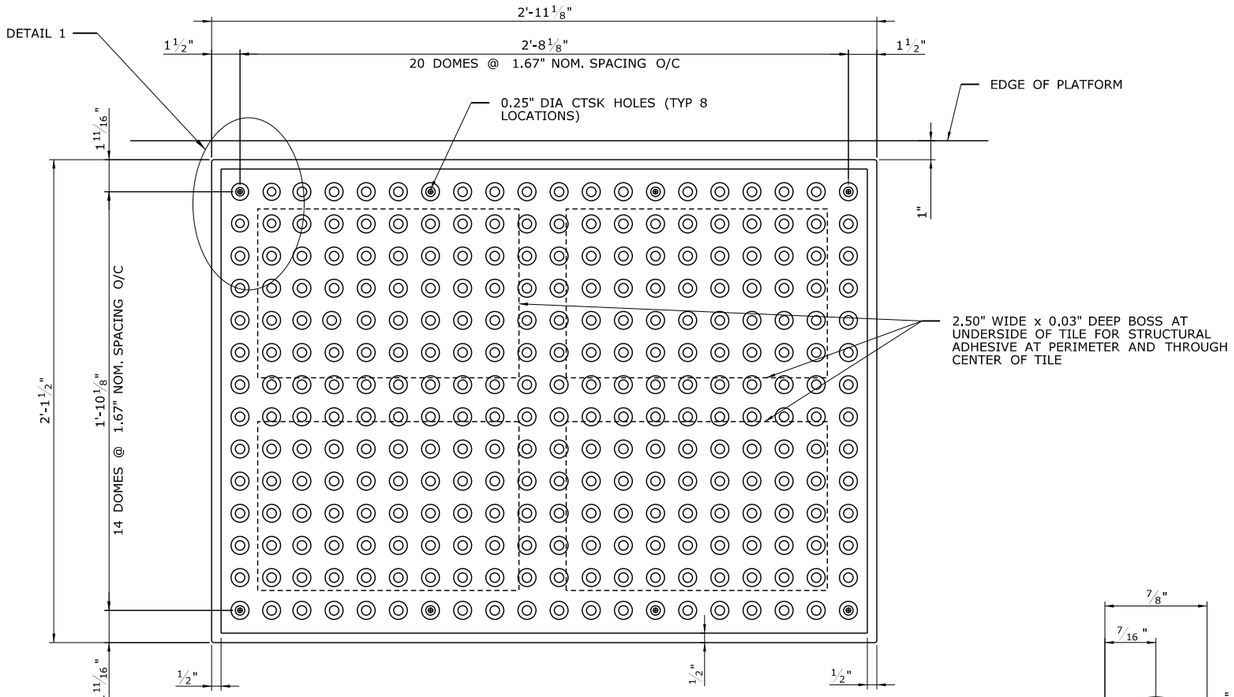

PLAN - TILE

SCALE: 3"=1'-0"

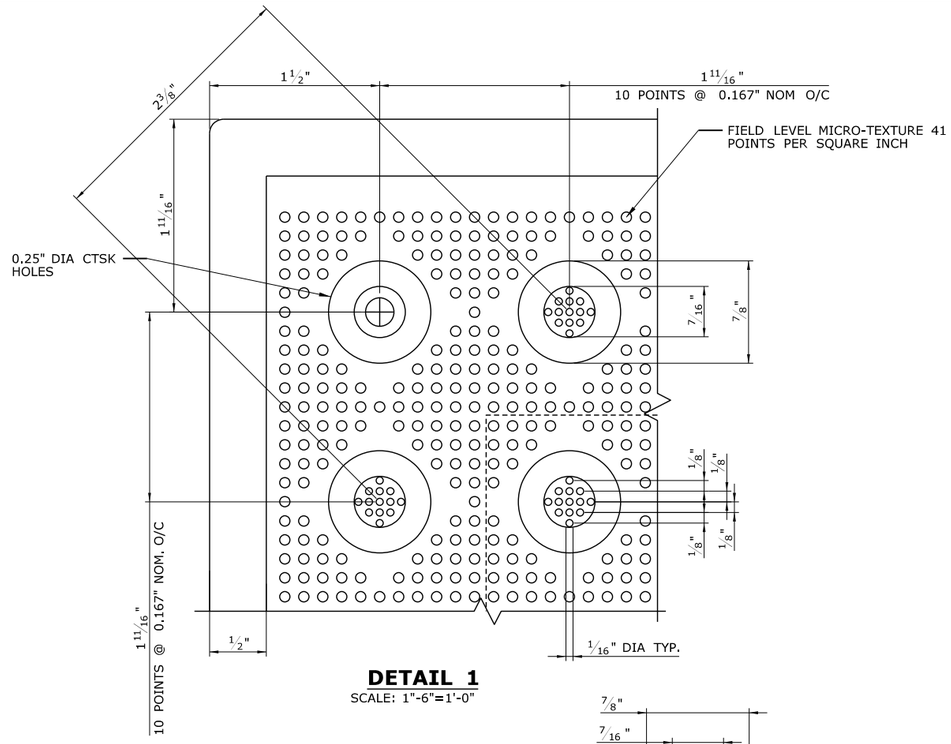

DETAIL 1

SCALE: 1"-6"=1'-0"

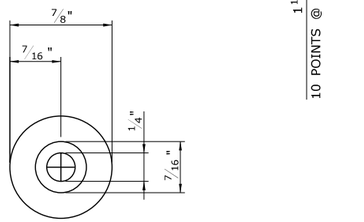

TILE PLAN

TRUNCATED DOME FASTENER LOCATION

SCALE: 1"-6"=1'-0"

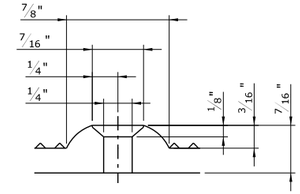

TILE SECTION

TRUNCATED DOME FASTENER LOCATION

SCALE: 1"-6"=1'-0"

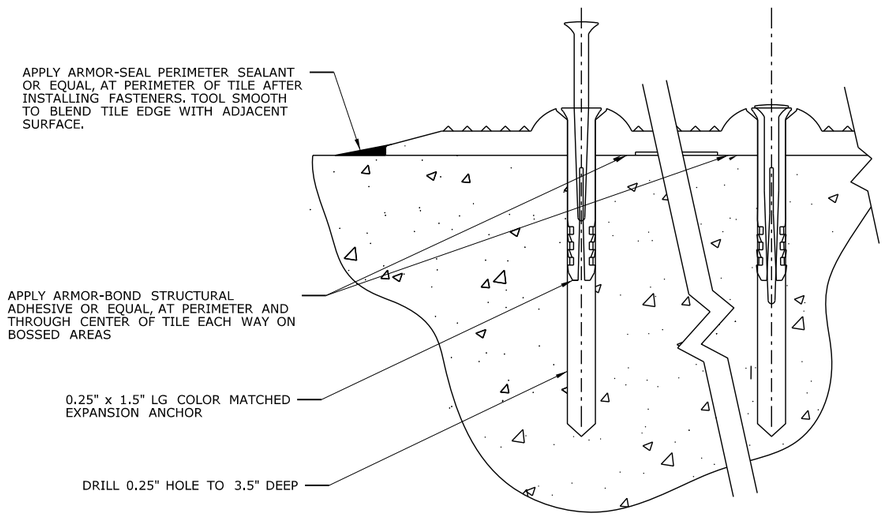

INSTALLATION DETAIL AT TILE PERIMETER

NTS

NOTES:

1. CONTRACTOR SHALL COORDINATE PLACEMENT OF TILE WITH RESURFACING OPERATION TO ENSURE THAT SURFACES MATCH UP IN ACCORDANCE WITH ALL CODES AND REGULATIONS.
2. SUBMIT WRITTEN REPLACEMENT PROCEDURE WITH TILE SHOP DRAWINGS.

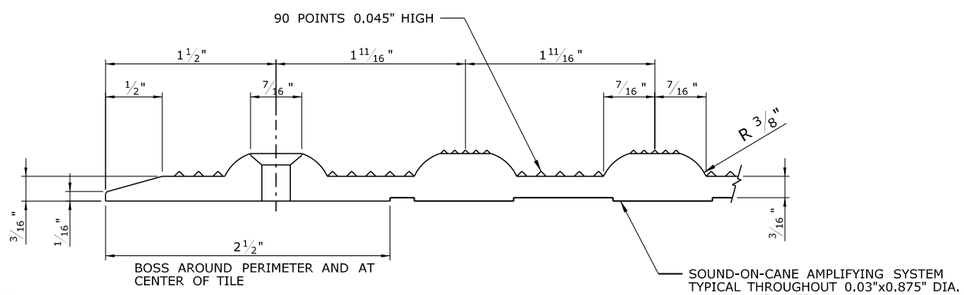

SECTION A-A

SCALE: 1"-6"=1'-0"

REV.	DATE	REVISION DESCRIPTION	SHEET NO.
-	-	-	-
-	-	-	-
-	-	-	-
-	-	-	-
-	-	-	-
-	-	-	-

THE INFORMATION, INCLUDING ESTIMATED QUANTITIES OF WORK, SHOWN ON THESE SHEETS IS BASED ON LIMITED INVESTIGATIONS BY THE STATE AND IS IN NO WAY WARRANTED TO INDICATE THE CONDITIONS OF ACTUAL QUANTITIES OF WORK WHICH WILL BE REQUIRED.

PLOTTED: 3/31/2014

DESIGNER/DRAFTER: J. MENDEZ
CHECKED BY: D. GRIFFIN
SCALE AS NOTED

STATE OF CONNECTICUT
DEPARTMENT OF TRANSPORTATION

FILENAME: ...\301155_04_46_DETAILS_TACTILE.dgn

LOCHNER
H.W. LOCHNER, INC
2110 Silas Deane Highway
Rocky Hill, CT 06067

APPROVED BY: BEB
DATE: 4/2/2014

PROJECT TITLE:
INSTALLATION OF CANOPY AT BRIDGEPORT STATION

TOWN: **BRIDGEPORT**

DRAWING TITLE: **TACTILE WARNING STRIP DETAILS**

PROJECT NO. **301-155**
DRAWING NO. **S-51**
SHEET NO. **04.51**

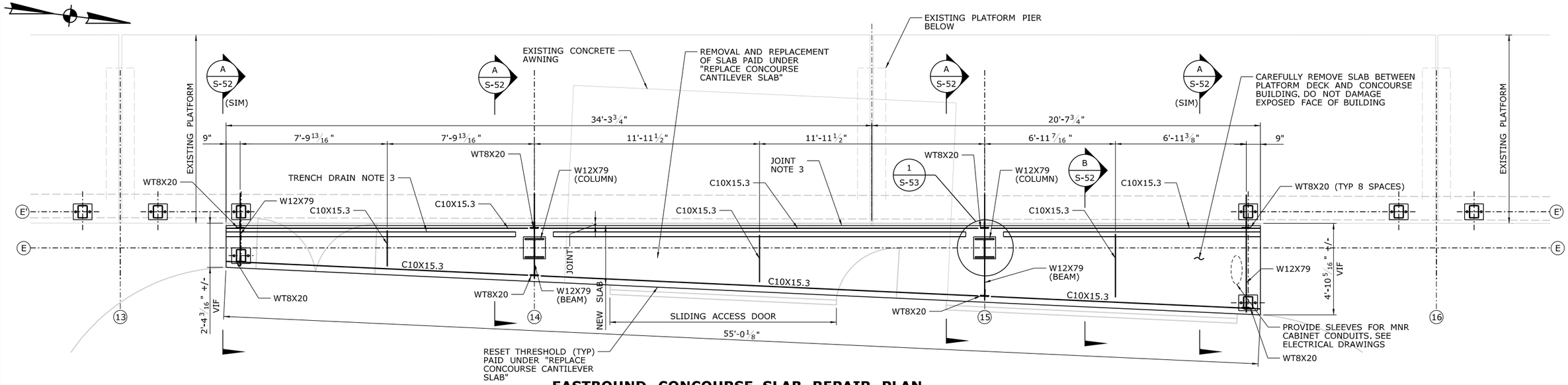

EASTBOUND CONCOURSE SLAB REPAIR PLAN

SCALE: ⅜" = 1'-0"

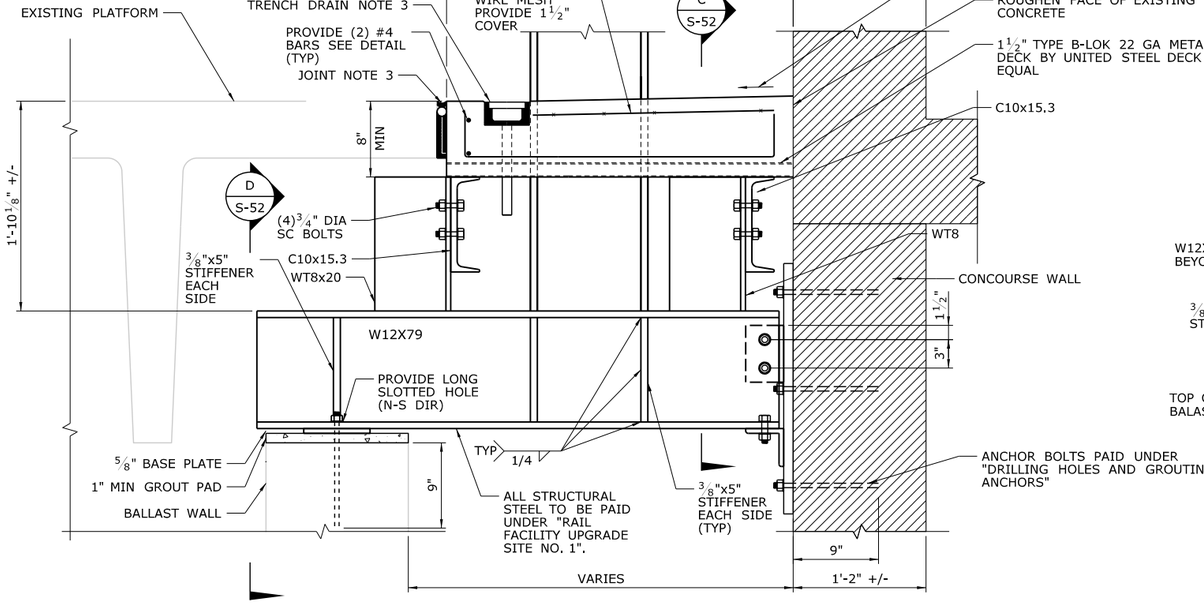

NOTE: COLUMN AND COLUMN STIFFENERS AT COLUMN LINES 14 AND 15 ONLY

SECTION A — SCALE: 1½" = 1'-0" — S-20, S-26, S-52

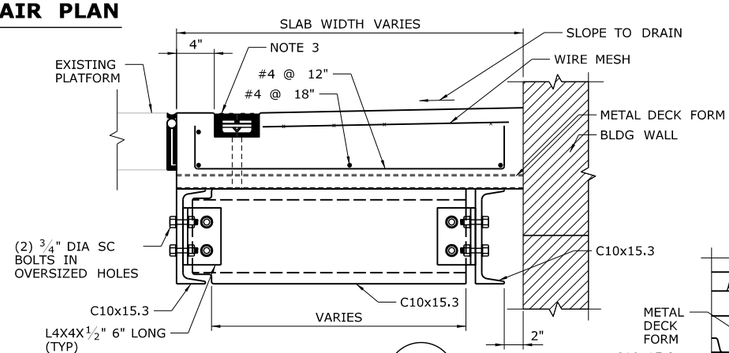

SECTION B — SCALE: 1½" = 1'-0" (TYP 3 LOCATIONS) — S-52

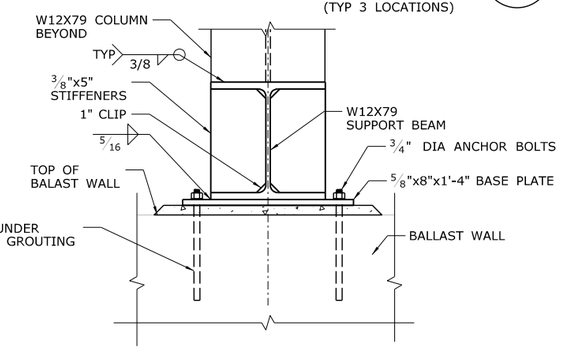

DETAIL D — SCALE: 1½" = 1'-0" — S-7, S-52

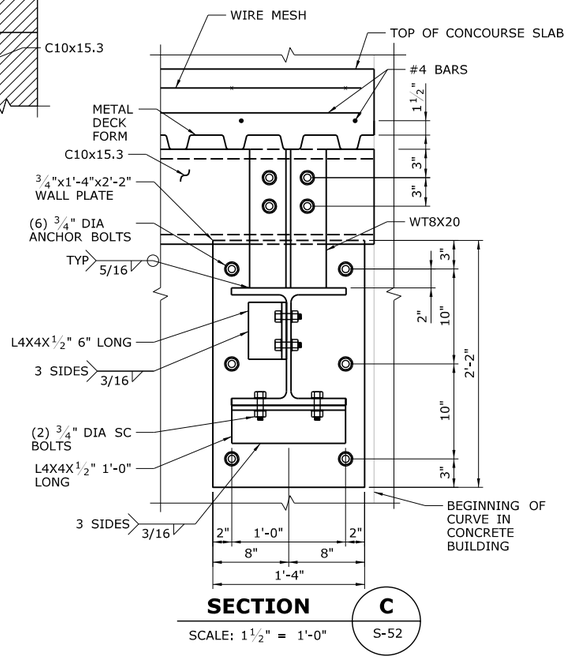

SECTION C — SCALE: 1½" = 1'-0" — S-52

NOTES:

1. SEE NOTES ON DWG S-55.

REV.	DATE	REVISION DESCRIPTION	SHEET NO.

THE INFORMATION, INCLUDING ESTIMATED QUANTITIES OF WORK, SHOWN ON THESE SHEETS IS BASED ON LIMITED INVESTIGATIONS BY THE STATE AND IS IN NO WAY WARRANTED TO INDICATE THE CONDITIONS OF ACTUAL QUANTITIES OF WORK WHICH WILL BE REQUIRED.

PLOTTED: 3/31/2014

DESIGNER/DRAFTER: J. MENDEZ
CHECKED BY: D. GRIFFIN
SCALE AS NOTED

STATE OF CONNECTICUT
DEPARTMENT OF TRANSPORTATION

FILENAME: ...\301155_04_47_EB_DETAILS_CONCOURSE.dgn

LOCHNER
H.W. LOCHNER, INC
2110 Silas Deane Highway
Rocky Hill, CT 06067

APPROVED BY: BEB
DATE: 4/2/2014

PROJECT TITLE:
INSTALLATION OF CANOPY AT BRIDGEPORT STATION

TOWN: **BRIDGEPORT**

DRAWING TITLE: **EASTBOUND CONCOURSE SLAB REPLACEMENT I**

PROJECT NO. **301-155**
DRAWING NO. **S-52**
SHEET NO. **04.52**

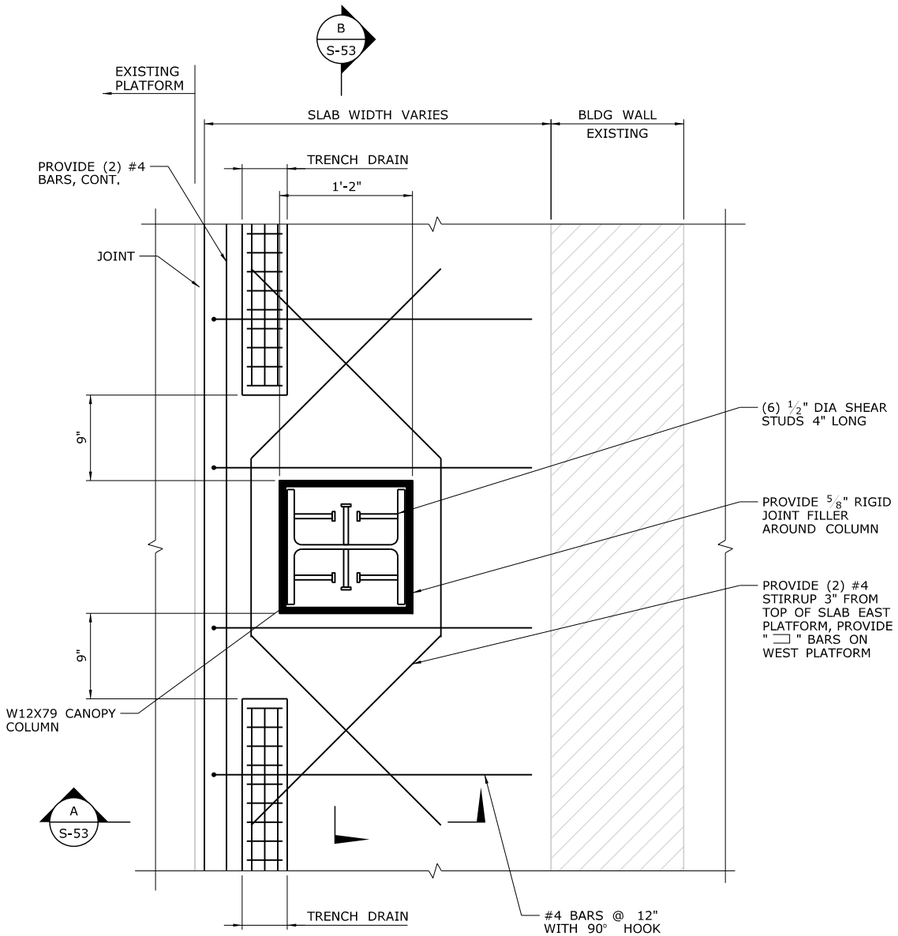

COLUMN POCKET DETAIL — 1 / S-52

SCALE: 1 1/2" = 1'-0"

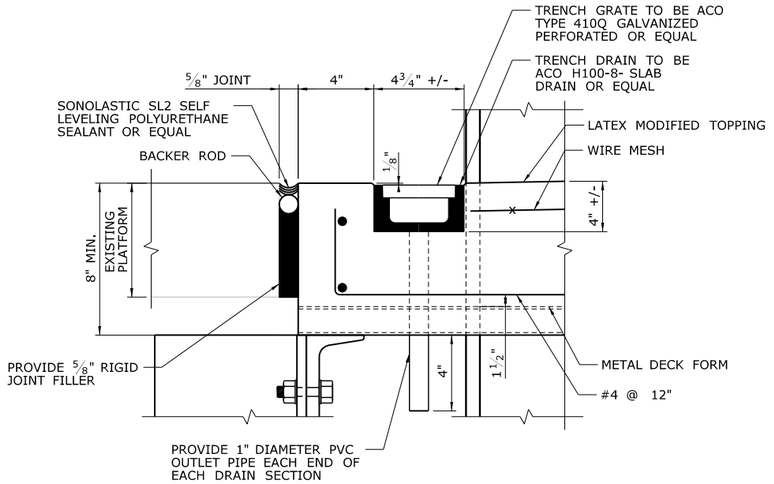

JOINT AND TRENCH DRAIN SECTION — A / S-53

SCALE: 3/4" = 1'-0"

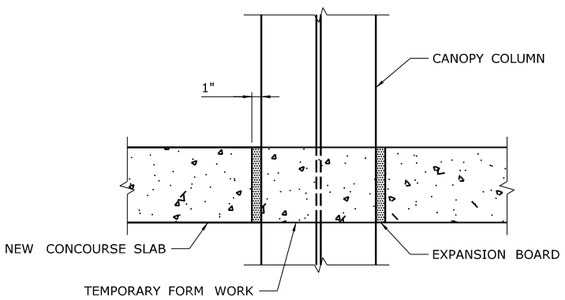

COLUMN POCKET SECTION — B / S-53

SCALE: 3/4" = 1'-0"

NOTES:

1. EXPANSION BOARD, JOINT AND TROUGH DRAIN PAID UNDER "REPLACE CONCOURSE CANTILEVER SLAB".

REV.	DATE	REVISION DESCRIPTION	SHEET NO.

THE INFORMATION, INCLUDING ESTIMATED QUANTITIES OF WORK, SHOWN ON THESE SHEETS IS BASED ON LIMITED INVESTIGATIONS BY THE STATE AND IS IN NO WAY WARRANTED TO INDICATE THE CONDITIONS OF ACTUAL QUANTITIES OF WORK WHICH WILL BE REQUIRED.

PLOTTED: 3/31/2014

DESIGNER/DRAFTER: B. HAMAN
CHECKED BY: D. GRIFFIN
SCALE AS NOTED

STATE OF CONNECTICUT
DEPARTMENT OF TRANSPORTATION

FILENAME: ...\301155_04_47_EB_DETAILS_CONCOURSE.dgn

LOCHNER
H.W. LOCHNER, INC
2110 Silas Deane Highway
Rocky Hill, CT 06067

APPROVED BY: BEB
DATE: 4/2/2014

PROJECT TITLE:
INSTALLATION OF CANOPY AT BRIDGEPORT STATION

TOWN: **BRIDGEPORT**

DRAWING TITLE: **EASTBOUND CONCOURSE SLAB REPLACEMENT II**

PROJECT NO. **301-155**
DRAWING NO. **S-53**
SHEET NO. **04.53**

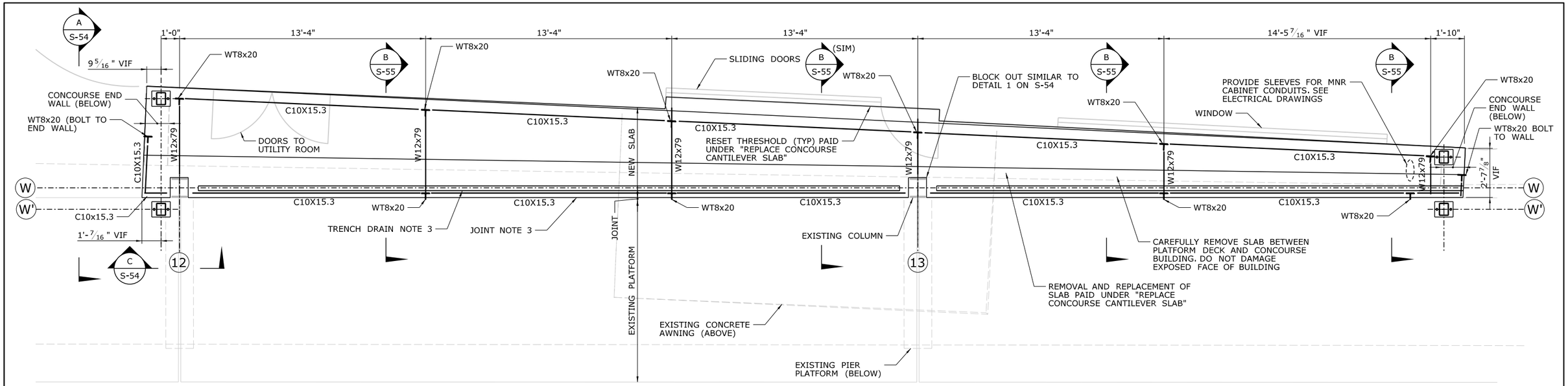

WESTBOUND CONCOURSE SLAB REPAIR PLAN

SCALE: 3/8" = 1'-0"

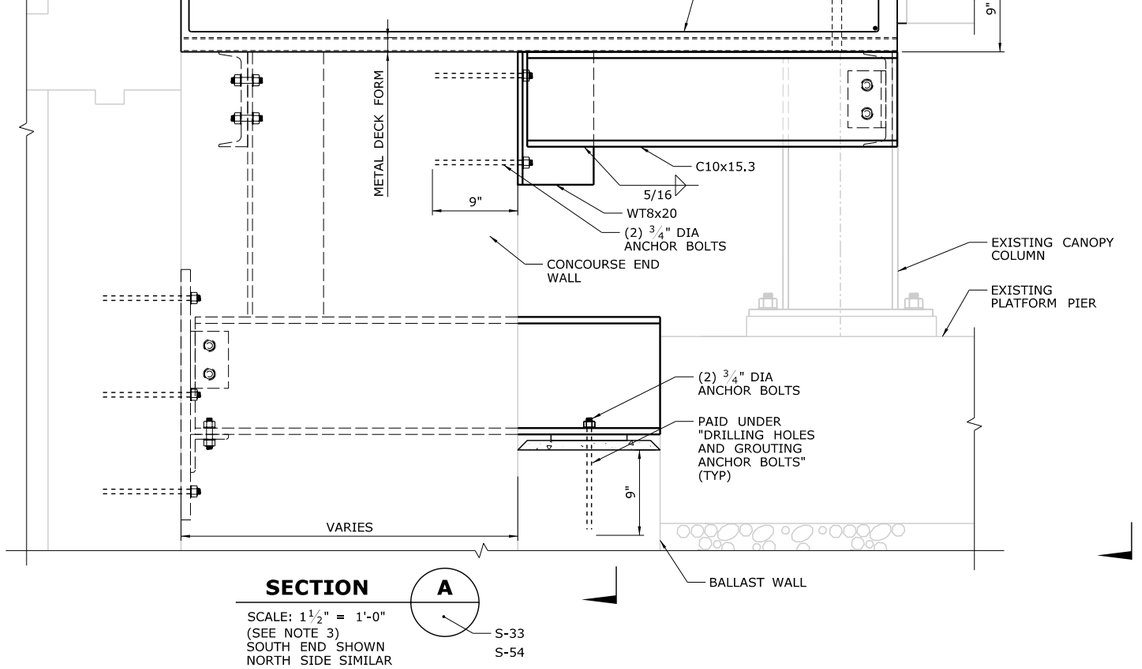

SECTION A

SCALE: 1 1/2" = 1'-0"
(SEE NOTE 3)
SOUTH END SHOWN
NORTH SIDE SIMILAR

S-33
S-54

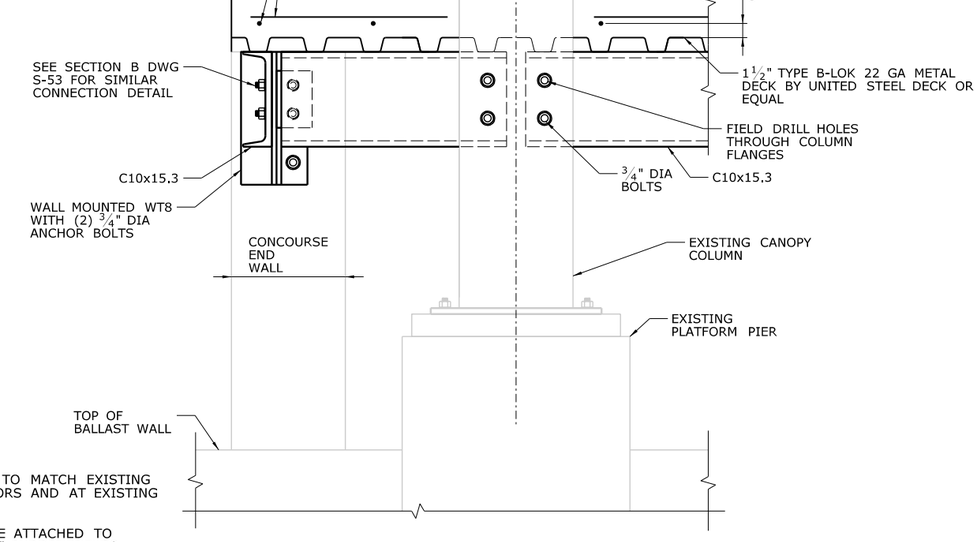

SECTION C

SCALE: 1 1/2" = 1'-0"
(SEE NOTE 3)

S-54

NOTES:

1. DECK ELEVATIONS TO MATCH EXISTING ELEVATION AT DOORS AND AT EXISTING PLATFORM DECK.
2. METAL DECK TO BE ATTACHED TO C10x15.3 WITH 3/4" PUDDLE WELDS SPACED AT 2'-0" CENTERS, MINIMUM.
3. SEE DWG S-52 EASTBOUND CONCOURSE SLAB REPLACEMENT I FOR DETAILS NOT SHOWN.
4. SEE ADDITIONAL NOTES ON DWG S-56.

REV.	DATE	REVISION DESCRIPTION	SHEET NO.

THE INFORMATION, INCLUDING ESTIMATED QUANTITIES OF WORK, SHOWN ON THESE SHEETS IS BASED ON LIMITED INVESTIGATIONS BY THE STATE AND IS IN NO WAY WARRANTED TO INDICATE THE CONDITIONS OF ACTUAL QUANTITIES OF WORK WHICH WILL BE REQUIRED.

PLOTTED: 3/31/2014

DESIGNER/DRAFTER: J. MENDEZ
CHECKED BY: D. GRIFFIN
SCALE AS NOTED

STATE OF CONNECTICUT
DEPARTMENT OF TRANSPORTATION

FILENAME: ...\301155_04_48_WB_DETAILSCONCOURSE.dgn

LOCHNER
H.W. LOCHNER, INC
2110 Silas Deane Highway
Rocky Hill, CT 06067

APPROVED BY: BEB
DATE: 4/2/2014

PROJECT TITLE:
INSTALLATION OF CANOPY AT BRIDGEPORT STATION

TOWN: **BRIDGEPORT**
DRAWING TITLE: **WESTBOUND CONCOURSE SLAB REPLACEMENT I**

PROJECT NO. **301-155**
DRAWING NO. **S-54**
SHEET NO. **04.54**

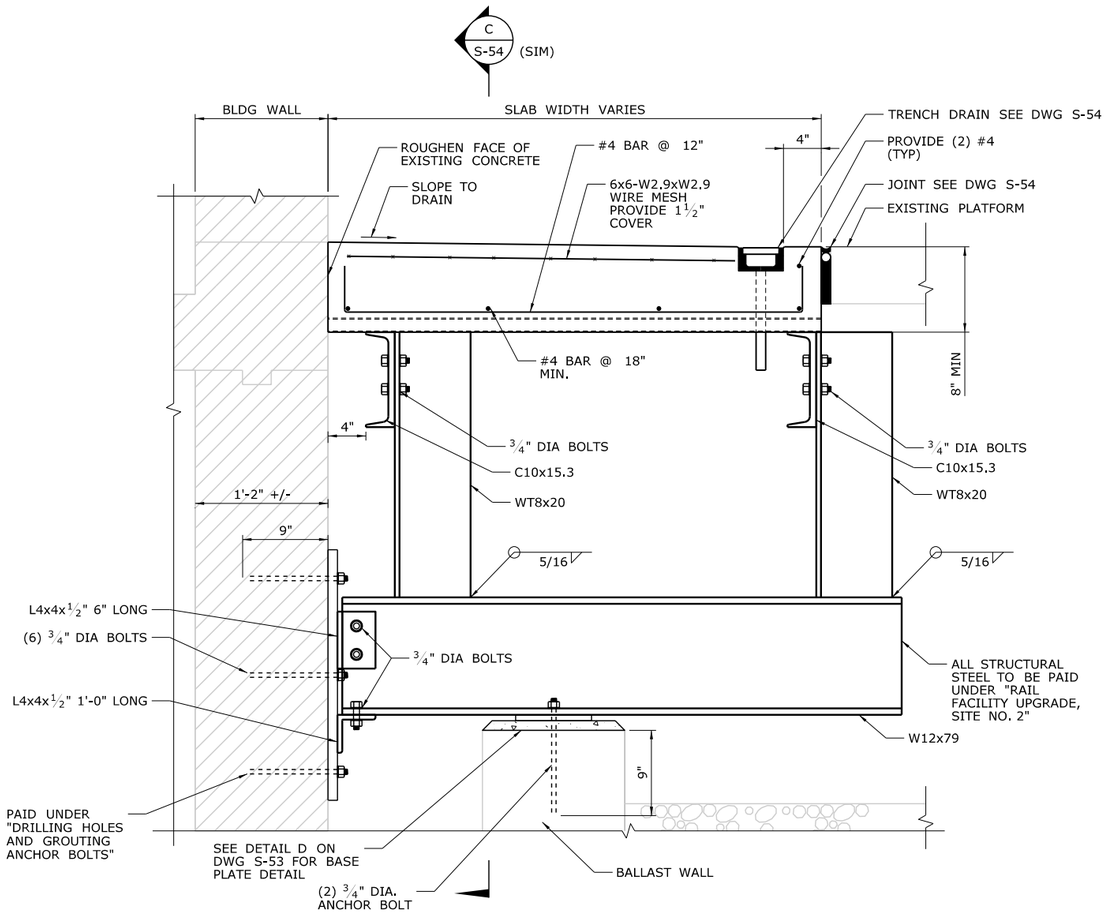

SECTION B
SCALE: 1½" = 1'-0"
(SEE NOTE 8)
S-54

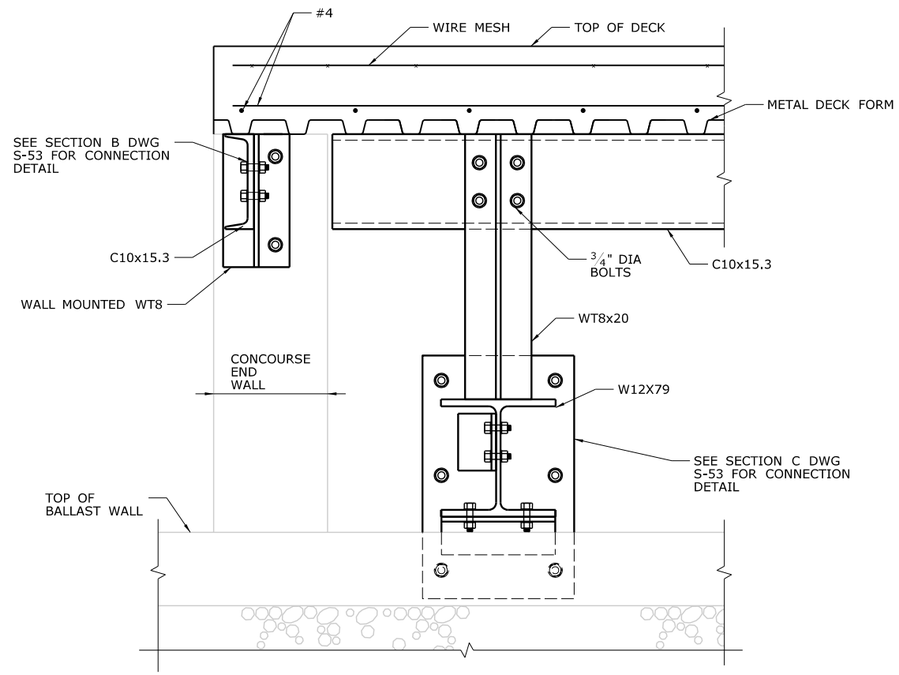

SECTION D
SCALE: 1½" = 1'-0"
(SEE NOTE 8)
S-54

WORK SEQUENCE NOTES:

APPLIES TO EASTBOUND AND WESTBOUND CONCOURSE SLABS

1. ALL WORK AT CONCOURSE TO OCCUR DURING OFF PEAK OVERNIGHT HOURS.
2. CONTRACTOR SHALL CONSTRUCT PORTABLE TEMPORARY BRIDGE AT CONCOURSE TO SPAN BETWEEN CONCOURSE BUILDING AND EXISTING DOUBLE "T" DECK SLAB. COST INCLUDED IN "MAINTENANCE PEDESTRIAN ACCESS".
3. WITH PRIOR AUTHORIZATION FROM METRO-NORTH, AND PROPER NOTIFICATION OF THE PUBLIC, THE CONTRACTOR SHALL DEMOLISH CONCOURSE SLAB TO LIMITS SPECIFIED ON PLANS.
4. REMOVAL OF THE TEMPORARY BRIDGE TO BE COORDINATED WITH AND APPROVED BY METRO-NORTH.
5. ELECTRONIC CONCOURSE DOORS TO BE DISABLED WHILE TEMPORARY BRIDGE IS IN PLACE, IF THE TEMPORARY BRIDGE IS REMOVED TO PERFORM ANY WORK, BARRIER SHALL BE PLACED INSIDE CONCOURSE BUILDING TO BLOCK DOOR.
6. SEE GENERAL NOTE 23 FOR INSTALLATION AND CONSTRUCTION OF TEMPORARY BARRIERS AND GUIDE RAIL.
7. DURING OVERNIGHT OPERATIONS OR OTHER APPROVED TIMES, SET STEEL AND METAL DECK FORMS. PROTECT PEDESTRIANS AT ALL TIMES IF STATION IS ACTIVE.
8. DURING APPROVED TIME WHEN TEMPORARY BRIDGE IS REMOVED, POUR SLAB. RESET TEMPORARY BRIDGE.
9. AFTER SLAB IS CURED, REMOVE TEMPORARY BRIDGE, RESET THRESHOLDS AND ACTIVATE ELECTRONIC DOOR SENSORS.
10. THE CONTRACTOR SHALL WORK WITH THE ENGINEER AND MNR TO MINIMIZE THE DURATION OF WORK AT THE CONCOURSE SLAB AND TO DO WORK IN WARMER MONTHS FOR COMMUTER COMFORT WHEN THE DOORS REMAIN OPEN.

NOTES:

1. DECK ELEVATIONS TO MATCH EXISTING ELEVATION AT DOORS AND AT EXISTING PLATFORM DECK.
2. METAL DECK TO BE ATTACHED TO C10x15.3 WITH ¾" PUDDLE WELDS SPACED AT 2'-0" CENTERS, MINIMUM.
3. SEE DRAWING S-53 FOR TRENCH DRAIN AND JOINT DETAIL.
4. PROTECT TOP OF PEDESTRIAN UNDERPASS FROM FALLING DEBRIS.
5. FIELD MEASURE PRIOR TO SUBMITTING SHOP DRAWINGS.
6. SEE DWG S-52 EASTBOUND CONCOURSE SLAB REPLACEMENT I FOR DETAILS NOT SHOWN.
7. PROVIDE TEMPORARY BRIDGE WITH HANDRAILS FOR PEDESTRIAN ACCESS TO CONCOURSE. PAID UNDER "MAINTENANCE PEDESTRIAN ACCESS".
8. CONSTRUCTION MAY BE STAGED. SUBMIT WORK PLAN AND PROCESS TO ENGINEER FOR REVIEW.

REV.	DATE	REVISION DESCRIPTION	SHEET NO.

THE INFORMATION, INCLUDING ESTIMATED QUANTITIES OF WORK, SHOWN ON THESE SHEETS IS BASED ON LIMITED INVESTIGATIONS BY THE STATE AND IS IN NO WAY WARRANTED TO INDICATE THE CONDITIONS OF ACTUAL QUANTITIES OF WORK WHICH WILL BE REQUIRED.

PLOTTED: 3/31/2014

DESIGNER/DRAFTER: J. MENDEZ
CHECKED BY: D. GRIFFIN
SCALE AS NOTED

STATE OF CONNECTICUT
DEPARTMENT OF TRANSPORTATION

FILENAME: ...\301155_04_48_WB_DETAILSCONCOURSE.dgn

LOCHNER
H.W. LOCHNER, INC
2110 Silas Deane Highway
Rocky Hill, CT 06067

APPROVED BY: BEB
DATE: 4/2/2014

PROJECT TITLE:
INSTALLATION OF CANOPY AT BRIDGEPORT STATION

TOWN: **BRIDGEPORT**

DRAWING TITLE:
WESTBOUND CONCOURSE SLAB REPLACEMENT II

PROJECT NO. **301-155**
DRAWING NO. **S-55**
SHEET NO. **04.55**

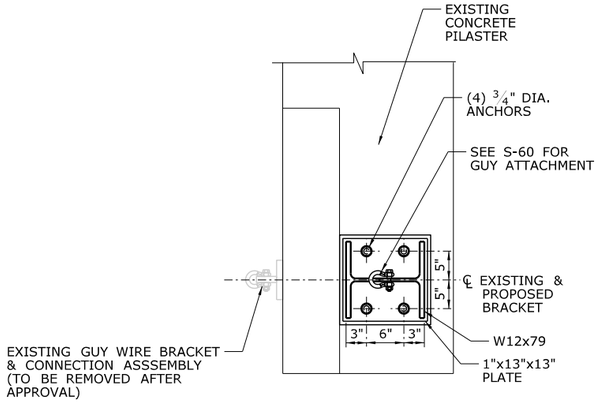

GUY WIRE RECONNECTION SECTION A

NOT TO SCALE

S-7
S-56

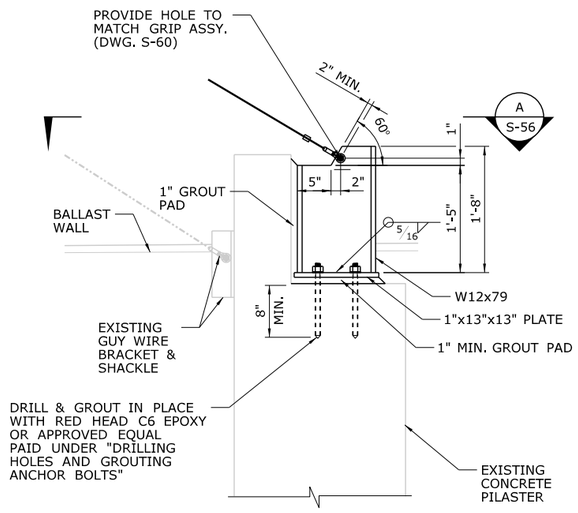

NOTE: SEE DWG. S-60 FOR SEQUENCE OF WORK.

GUY WIRE RECONNECTION DETAIL 1

NOT TO SCALE

S-7
S-56

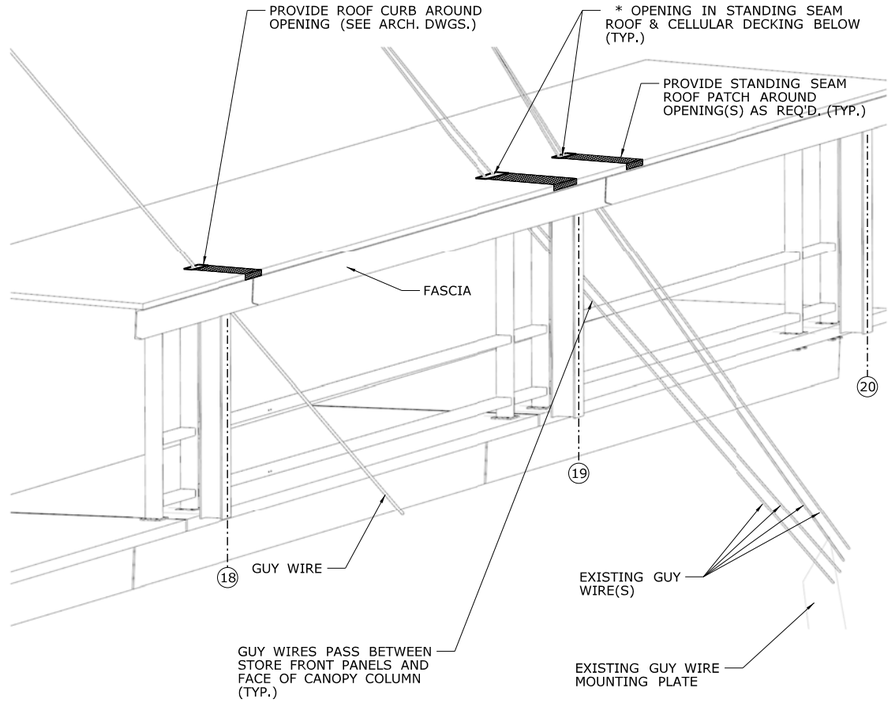

* - PROVIDE MIN. 3" CLEAR BETWEEN ROOF OPENING AND GUY WIRE(S)

GUY WIRE ROOF PENETRATION PLAN

NOT TO SCALE

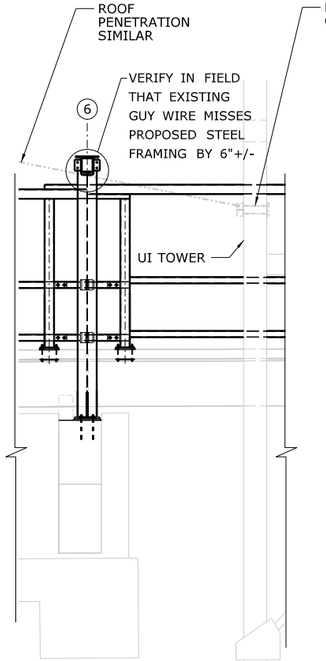

COLUMN E6 ELEVATION

SCALE: 1/4" = 1'-0"

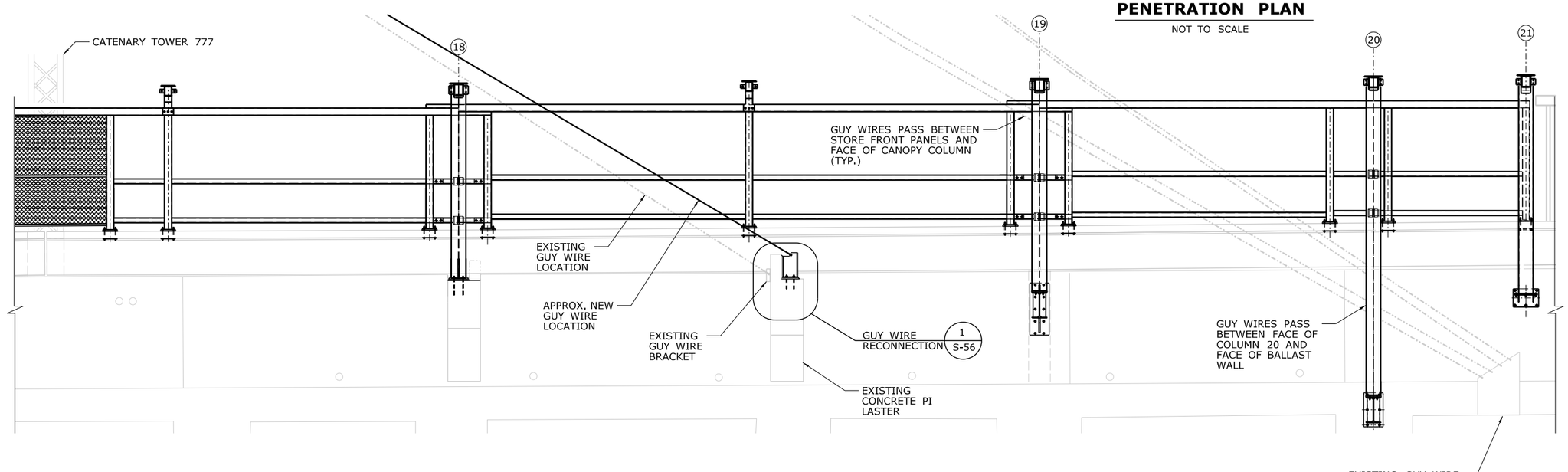

ELEVATION

(LOOKING WEST)
SCALE: 1/4" = 1'-0"

REV.	DATE	REVISION DESCRIPTION	SHEET NO.

THE INFORMATION, INCLUDING ESTIMATED QUANTITIES OF WORK, SHOWN ON THESE SHEETS IS BASED ON LIMITED INVESTIGATIONS BY THE STATE AND IS IN NO WAY WARRANTED TO INDICATE THE CONDITIONS OF ACTUAL QUANTITIES OF WORK WHICH WILL BE REQUIRED.

PLOTTED: 3/31/2014

DESIGNER/DRAFTER: B. HAMAN
CHECKED BY: D. GRIFFIN
SCALE AS NOTED

STATE OF CONNECTICUT
DEPARTMENT OF TRANSPORTATION

FILENAME: ...\301155_04_50_DETAILS_GUYWIRES.dgn

LOCHNER
H.W. LOCHNER, INC
2110 Silas Deane Highway
Rocky Hill, CT 06067

APPROVED BY: BEB
DATE: 4/2/2014

PROJECT TITLE:
INSTALLATION OF CANOPY AT BRIDGEPORT STATION

TOWN: **BRIDGEPORT**

DRAWING TITLE: **GUY WIRE DETAILS I**

PROJECT NO. **301-155**
DRAWING NO. **S-56**
SHEET NO. **04.56**

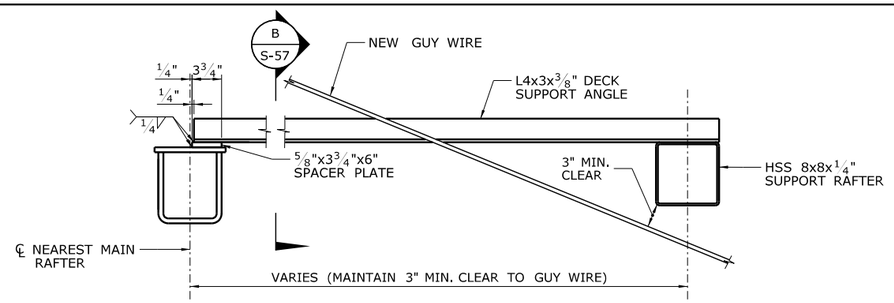

TYPICAL ROOF FRAMING DETAILS AROUND OPENINGS — 3 / S-57

NOT TO SCALE

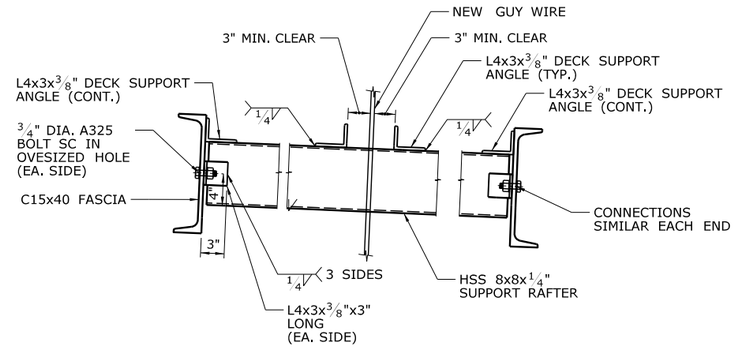

SECTION B — B / S-57

NOT TO SCALE

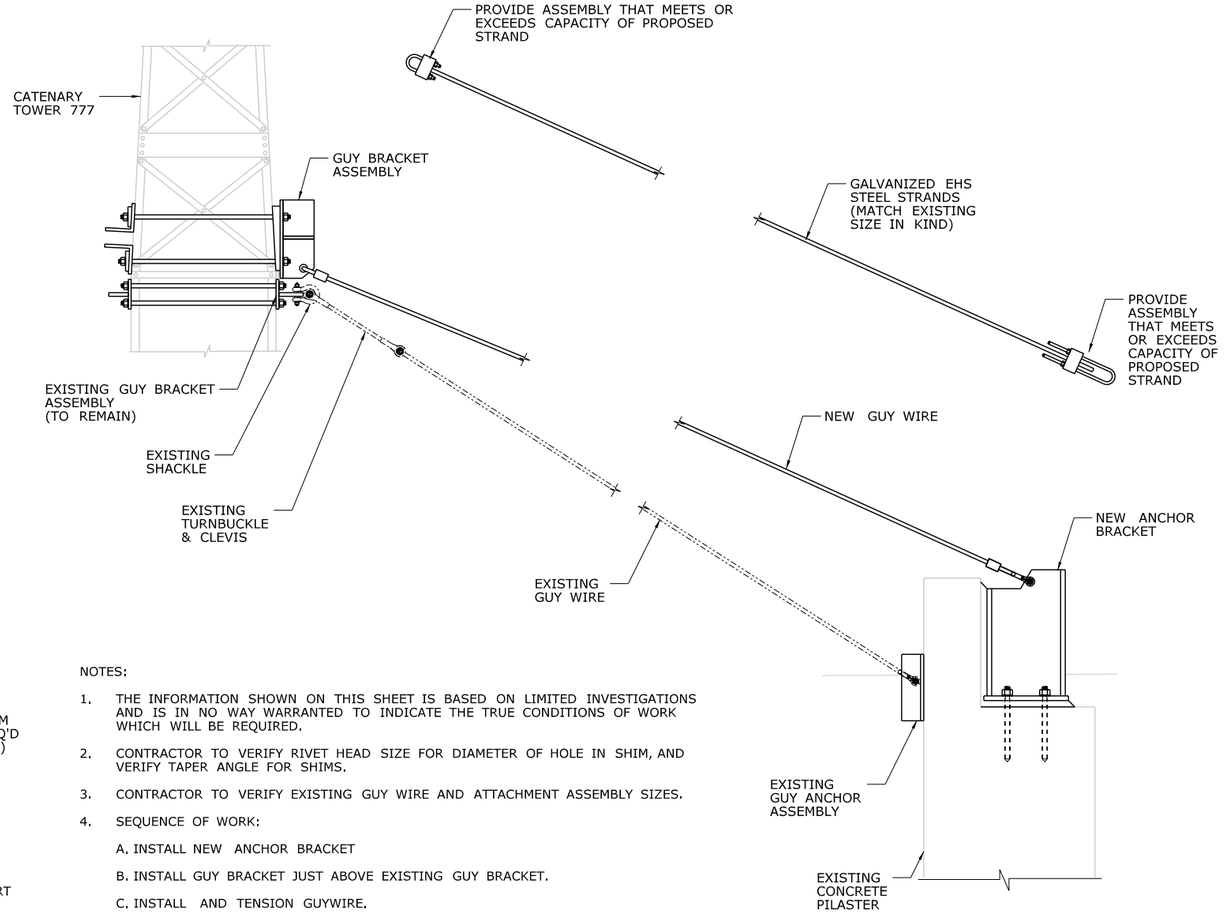

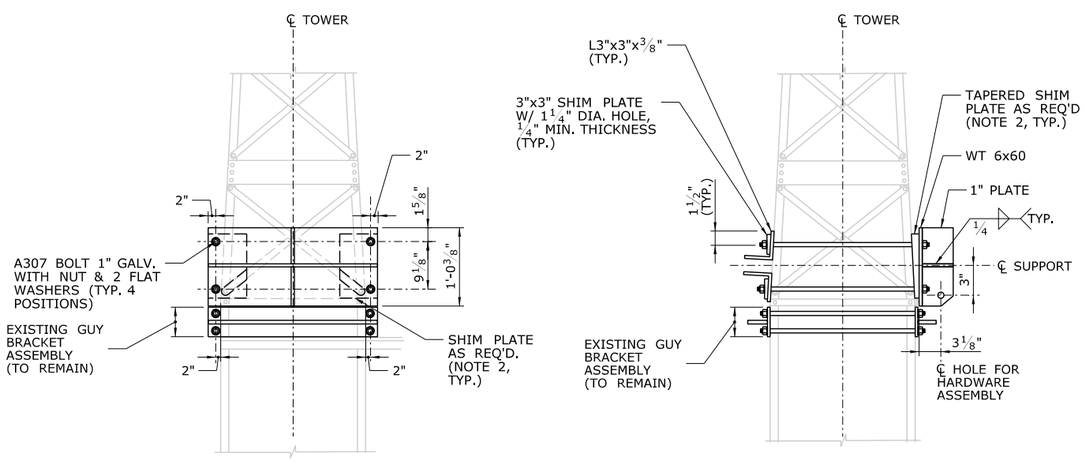

GUY BRACKET DETAILS — 2 / S-57

NOT TO SCALE

NOTES:

1. THE INFORMATION SHOWN ON THIS SHEET IS BASED ON LIMITED INVESTIGATIONS AND IS IN NO WAY WARRANTED TO INDICATE THE TRUE CONDITIONS OF WORK WHICH WILL BE REQUIRED.
2. CONTRACTOR TO VERIFY RIVET HEAD SIZE FOR DIAMETER OF HOLE IN SHIM, AND VERIFY TAPER ANGLE FOR SHIMS.
3. CONTRACTOR TO VERIFY EXISTING GUY WIRE AND ATTACHMENT ASSEMBLY SIZES.
4. SEQUENCE OF WORK:
   - A. INSTALL NEW ANCHOR BRACKET
   - B. INSTALL GUY BRACKET JUST ABOVE EXISTING GUY BRACKET.
   - C. INSTALL AND TENSION GUYWIRE.
   - D. RECEIVE APPROVAL FROM METRO-NORTH
   - E. REMOVE EXISTING GUY WIRE, TURNBUCKLES, SHACKLES AND ANCHOR ASSEMBLY.
5. SEE SPECIAL PROVISION #0090075A - GUY ASSEMBLIES. ALL WORK TO FIELD MEASURE, FABRICATE AND INSTALL ASSEMBLIES AND BRACKETS, TO REMOVE AND DISPOSE OF EXISTING GUY ASSEMBLIES AND ALL RELATED WORK NOT OTHERWISE INDICATED SHALL BE PAID UNDER "GUY ASSEMBLIES".
6. WORK TO FIELD MEASURE AND VERIFY AND TO INSTALL AND REMOVE GUY WIRES WILL REQUIRE OUTAGE FROM METRO-NORTH. ALL WORK IS EXPECTED TO OCCUR DURING OVERNIGHT HOURS.

GUY WIRE ASSEMBLY DETAIL — 1 / S-57

NOT TO SCALE

REV.	DATE	REVISION DESCRIPTION	SHEET NO.

THE INFORMATION, INCLUDING ESTIMATED QUANTITIES OF WORK, SHOWN ON THESE SHEETS IS BASED ON LIMITED INVESTIGATIONS BY THE STATE AND IS IN NO WAY WARRANTED TO INDICATE THE CONDITIONS OF ACTUAL QUANTITIES OF WORK WHICH WILL BE REQUIRED.

PLOTTED: 3/31/2014

DESIGNER/DRAFTER: B. HAMAN
CHECKED BY: D. GRIFFIN
SCALE AS NOTED

STATE OF CONNECTICUT
DEPARTMENT OF TRANSPORTATION

FILENAME: ...\301155_04_50_DETAILS_GUYWIRES.dgn

LOCHNER
H.W. LOCHNER, INC
2110 Silas Deane Highway
Rocky Hill, CT 06067

APPROVED BY: BEB
DATE: 4/2/2014

PROJECT TITLE:
INSTALLATION OF CANOPY AT BRIDGEPORT STATION

TOWN: **BRIDGEPORT**

DRAWING TITLE: **GUY WIRE DETAILS II**

PROJECT NO. 301-155
DRAWING NO. S-57
SHEET NO. 04.57

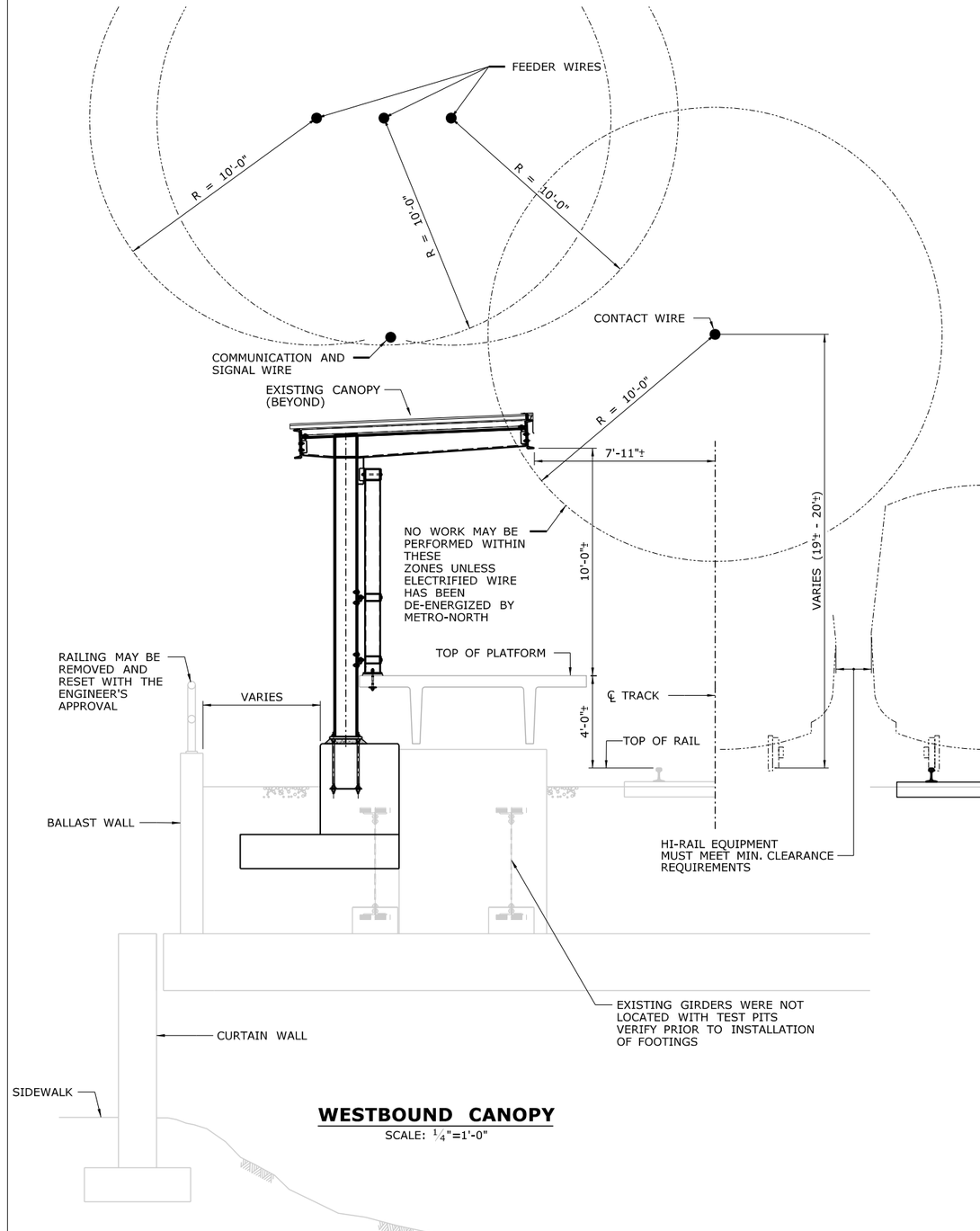

WESTBOUND CANOPY

SCALE: 1/4"=1'-0"

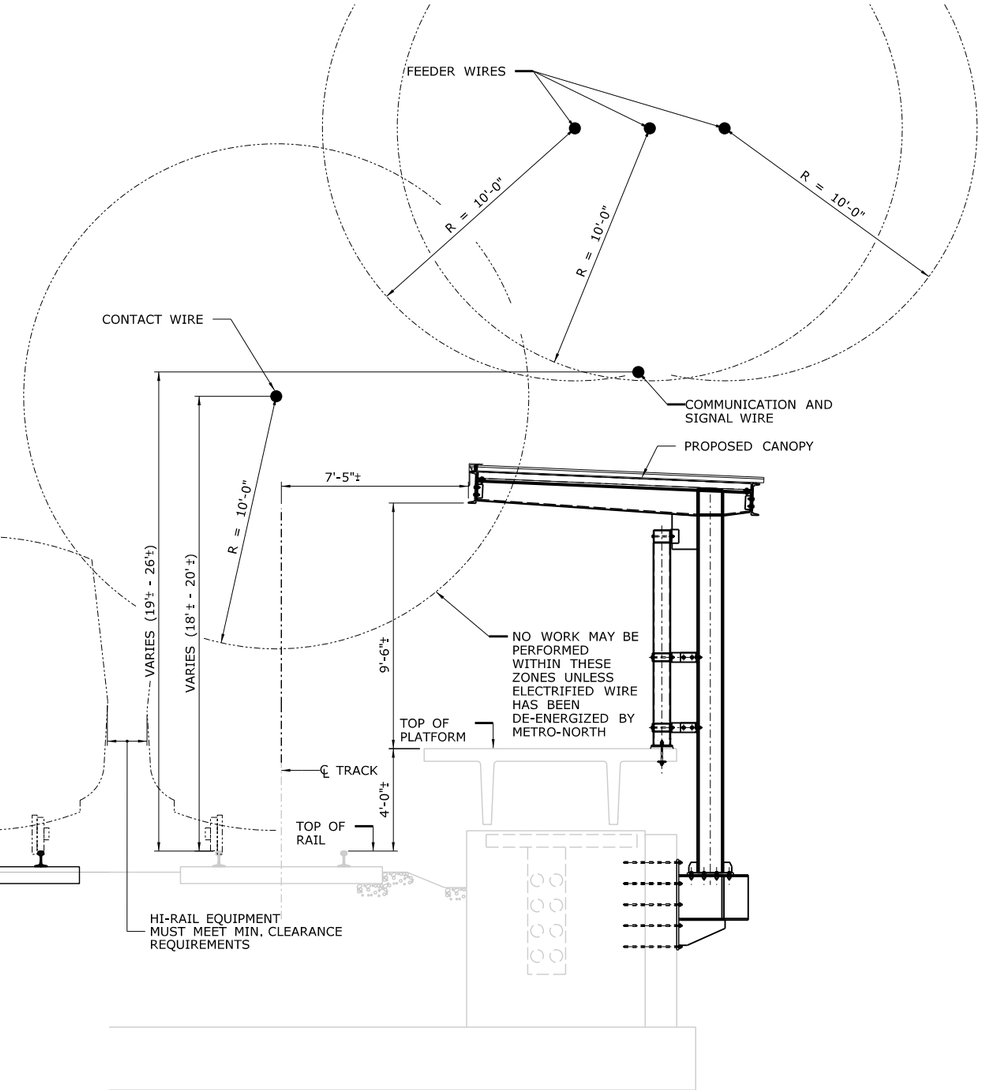

EASTBOUND CANOPY

SCALE: 1/4"=1'-0"

NOTE:
EXISTING WIRES SHOWN ON THIS DRAWING HAVE BEEN DETERMINED BY STANDARD SURVEYING METHODS AND AVAILABLE RECORDS. THE LOCATIONS SHOWN FOR THESE UTILITIES ARE APPROXIMATE AND MAY BE INCOMPLETE. THE CONTRACTOR SHALL BE RESPONSIBLE FOR VERIFYING UTILITIES, SURVEY AND OBTAINING ANY PERMITS REQUIRED.

REV.	DATE	REVISION DESCRIPTION	SHEET NO.
-	-	-	-
-	-	-	-
-	-	-	-
-	-	-	-
-	-	-	-
-	-	-	-

THE INFORMATION, INCLUDING ESTIMATED QUANTITIES OF WORK, SHOWN ON THESE SHEETS IS BASED ON LIMITED INVESTIGATIONS BY THE STATE AND IS IN NO WAY WARRANTED TO INDICATE THE CONDITIONS OF ACTUAL QUANTITIES OF WORK WHICH WILL BE REQUIRED.

PLOTTED: 3/31/2014

DESIGNER/DRAFTER: B. HAMAN
CHECKED BY: D. GRIFFIN
SCALE AS NOTED

STATE OF CONNECTICUT
DEPARTMENT OF TRANSPORTATION

FILENAME: ...\301155_04_54_CONST_CLEAR.dgn

LOCHNER
H.W. LOCHNER, INC
2110 Silas Deane Highway
Rocky Hill, CT 06067

APPROVED BY: BEB
DATE: 4/2/2014

PROJECT TITLE:
INSTALLATION OF CANOPY AT BRIDGEPORT STATION

TOWN: **BRIDGEPORT**

DRAWING TITLE: **CONSTRUCTION CLEARANCES**

PROJECT NO. **301-155**
DRAWING NO. **S-58**
SHEET NO. **04.58**

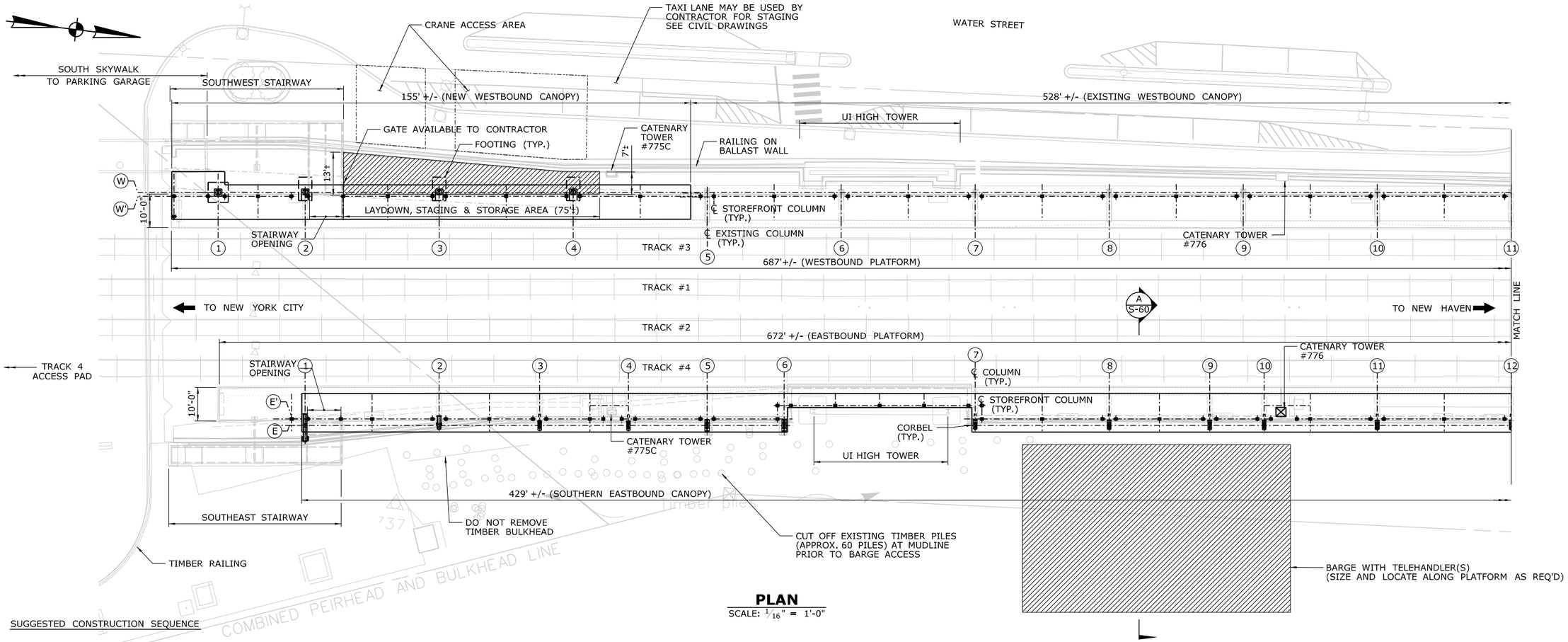

PLAN

SCALE: $\frac{1}{16}$" = 1'-0"

SUGGESTED CONSTRUCTION SEQUENCE

WESTBOUND CANOPY columns W5 to W18:

The gravel area north of the stairway located at the south end of the platform would be used as an on-site staging & lay down area. One or two portable cantilever type jib cranes would be set in the staging area to lift the materials and equipment from the staging area to the platform level.

A crane located on Water Street would move equipment and materials from the street level to the staging area. The feeder lines would need to be de-energized during crane lifts between the street and the staging and storage area.

1. Make platform surface and pier repairs and replace concourse slab.
2. Install temporary lighting. Remove all signs, light posts, and benches along the platform, as indicated in the electrical and architectural demolition plans.
3. Remove the hand rail and fence line south of the existing canopy from column line 3 to column line 4 to provide access from the staging area to the platform. Temporary fall protection must be installed daily during non construction periods. Existing fence support brackets could be utilized to support temporary fall protection.
4. Stage Platform work into zones or components that can be completed within one shift.
5. Layout the centerlines of the storefront column base plates and core anchor bolt holes through the deck.
6. Drill bolt holes in existing columns for storefront connections.
7. Install temporary rigging beams between the webs of the existing roof beams. Clamp the beams to the flanges of the roof beams with C-Clamps. Rigging beam weight is expected to be less than 125 pounds per rigging beam.
8. Use the jib crane to lift the intermediate rafters and storefront column assembly from the staging area onto a motorized hand truck or fabricated dolly located on the platform (Approximate lift weight of assembly is 4700 pounds) and move to their final location.
9. Use rigging beams to lift intermediate rafters up between existing fascia beams. Rotate up 90° out of the way.
10. Rig storefront frame assemblies into position utilizing a series of temporary rigging beams and the existing columns. Bolt base plates of storefront frame assembly to deck. Rotate intermediate rafters into position and bolt to storefront and existing fascia beams. Provide bracing and shoring as required until permanent column connections are made.
11. Repeat procedure for adjacent storefront assemblies.
12. Rig adjacent storefront frame assembly as specified above. Splice adjacent assemblies together and connect to canopy columns. Install temporary fall protection until storefront and tension cable are installed.
13. The storefronts, fencing, etc will be handled in a similar manner.
14. Replace warning strip tiles.
15. Resurface platform in stages (see civil drawings).
16. Install bridge plate storage racks and benches.

SUGGESTED CONSTRUCTION SEQUENCE

WESTBOUND CANOPY columns W1 to W4:

1. Construct footings as shown on plans. (Hand excavation is anticipated.)
2. Canopy columns and rafter assembly will be lifted from the crane located on Water Street and set on and bolted to the column foundations.
3. The storefront frame assemblies will be lifted from the crane on Water Street and set on and bolted to the platform. Provide shoring and bracing as required until the adjacent assemblies can be spliced together and permanently connected to the columns.
4. Back fascia beams will be lifted into position from the crane and bolted in place. Install temporary fall protection until storefront and tension cable are installed.

SUGGESTED CONSTRUCTION SEQUENCE

EASTBOUND CANOPY:

A barge will be brought in and placed adjacent to the viaduct wall and used as a staging and storage area. One or more telehandlers will be used to lift the components up to the platform level. Track 4 will need to be taken out of service for lifts between the barge and the platform. Work south of column line 6 will be less accessible by barge and will require equipment and material to be brought in by the track 4 access pad.

1. Relocate Metro-North guy wire at catenary tower #777.
2. Make platform surface and pier repairs and replace concourse slab.
3. Install temporary lighting. Remove all signs, light posts, and benches along the platform, as indicated in the electrical and architectural demolition plans.
4. Stage Platform work into zones or components that can be completed within one shift.
5. Install the steel corbels on the water side of the viaduct wall. A temporary working platform and debris shield shall be hung from the viaduct wall to aid in this operation.
6. Remove the handrail and fence to provide access from the barge to the platform. (Temporary fall protection for passengers and pedestrians must be installed daily during non-construction periods.
7. Layout the centerlines of the storefront column base plates. Core anchor bolt holes through the deck.
8. Stage the front (track side) roof fascia beam on the deck using the telehandler.
9. Lift the shop assembled roof rafter and column from the barge up onto the steel corbels with the telehandler. Bolt the columns to the corbels.
10. Column E22 will be lifted onto the platform and moved into position using portable dollys and rigging equipment.
11. Assemble the storefront frame on the barge.
12. Lift the storefront frame into position with the telehandler. (Estimated max. weight is 7400#) and bolt to the platform deck. Provide shoring/bracing as required until permanent connections are made.
13. Lift the back (water side) roof fascia beam from the barge into position with the telehandler. Bolt to the roof rafters.
14. Install beam lifting brackets onto the roof rafters. Using a come-along to lift the front fascia roof beam into position, bolt the beam into place.
15. The metal roof deck, standing seam roof, wind screens, fencing and handrail will be transported to the platform using a hi-rail vehicle. On a nightly basis the materials proposed for use will be delivered to and staged on the platform for installation. Unused materials will be removed from the platform at the end of each shift. Canopy south of column line 6 will likely need to be stick built, similar to process for westbound platform.
16. Replace warning strip tiles.
17. Resurface platform in stages (see civil drawings).
18. Install bridge plate storage racks and benches.

REV.	DATE	REVISION DESCRIPTION	SHEET NO.
-	-	-	-
-	-	-	-
-	-	-	-
-	-	-	-
-	-	-	-
-	-	-	-

THE INFORMATION, INCLUDING ESTIMATED QUANTITIES OF WORK, SHOWN ON THESE SHEETS IS BASED ON LIMITED INVESTIGATIONS BY THE STATE AND IS IN NO WAY WARRANTED TO INDICATE THE CONDITIONS OF ACTUAL QUANTITIES OF WORK WHICH WILL BE REQUIRED.

PLOTTED: 3/31/2014

DESIGNER/DRAFTER: B. HAMAN
CHECKED BY: D. GRIFFIN
SCALE AS NOTED

STATE OF CONNECTICUT
DEPARTMENT OF TRANSPORTATION

FILENAME: ...\301155_04_55_PLAN_STAGING.dgn

LOCHNER
H.W. LOCHNER, INC
2110 Silas Deane Highway
Rocky Hill, CT 06067

APPROVED BY: BEB
DATE: 4/2/2014

PROJECT TITLE:
INSTALLATION OF CANOPY AT BRIDGEPORT STATION

TOWN: **BRIDGEPORT**

DRAWING TITLE: **STAGING PLAN I**

PROJECT NO. **301-155**
DRAWING NO. **S-59**
SHEET NO. **04.59**

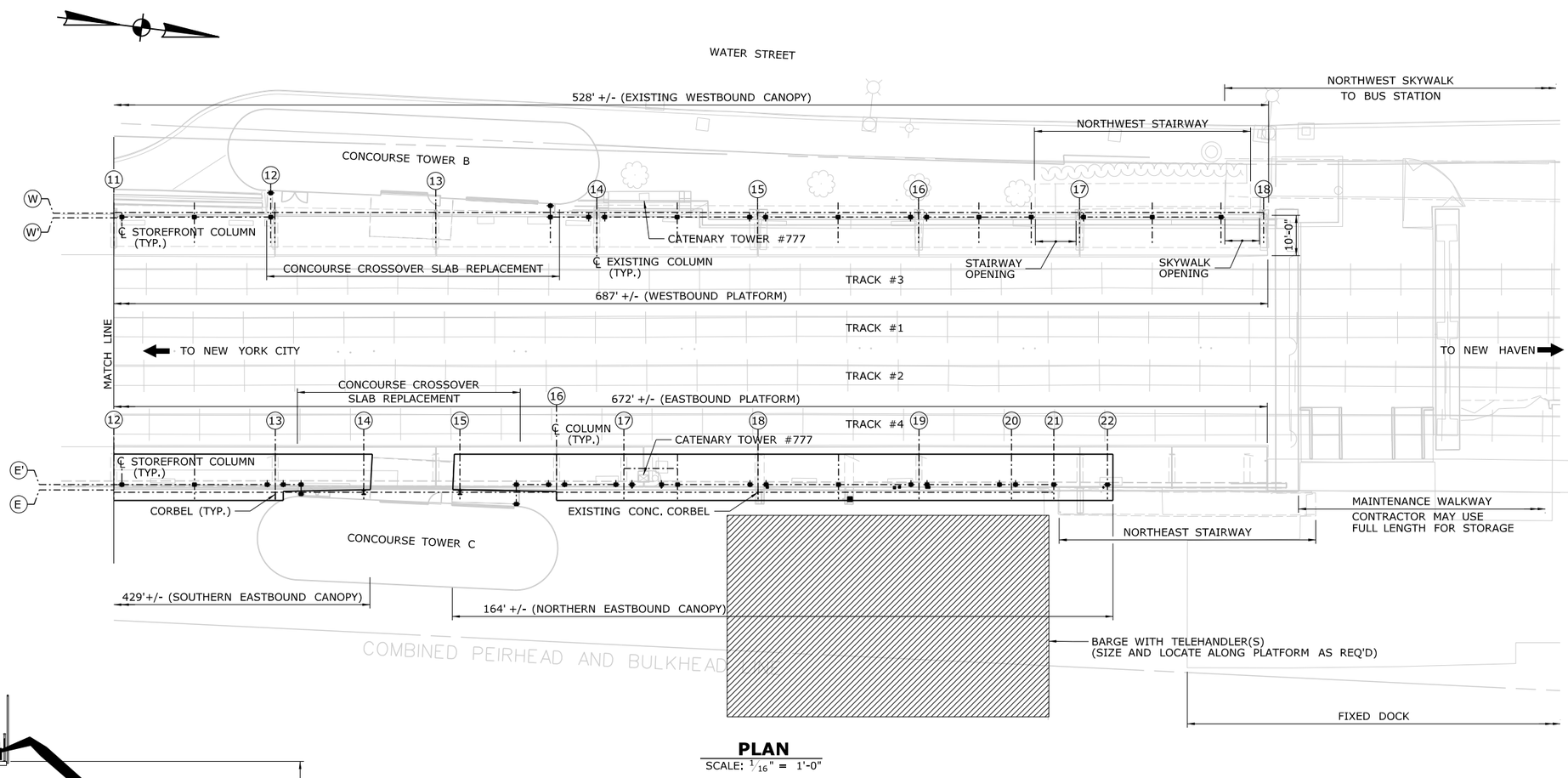

PLAN
SCALE: 1/16" = 1'-0"

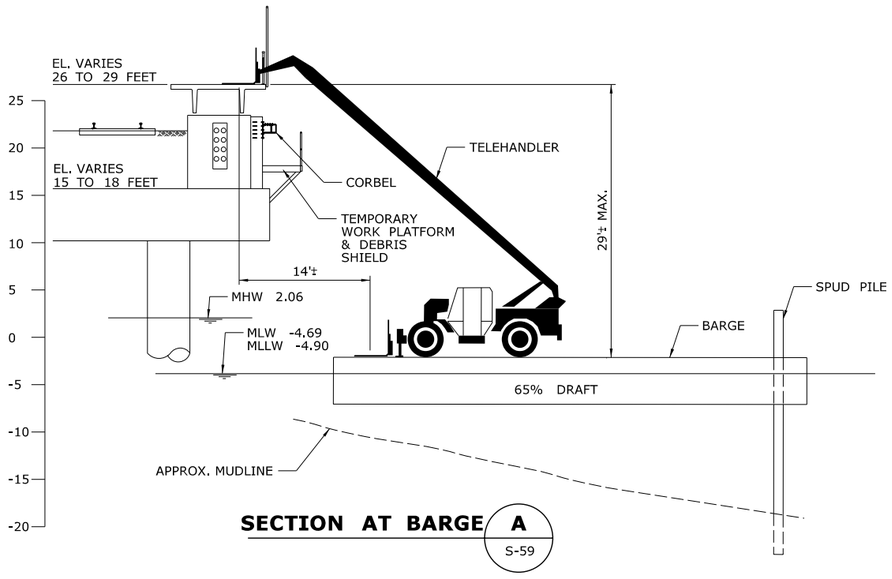

SECTION AT BARGE A
S-59

REV.	DATE	REVISION DESCRIPTION	SHEET NO.
-	-	-	-
-	-	-	-
-	-	-	-
-	-	-	-
-	-	-	-
-	-	-	-

THE INFORMATION, INCLUDING ESTIMATED QUANTITIES OF WORK, SHOWN ON THESE SHEETS IS BASED ON LIMITED INVESTIGATIONS BY THE STATE AND IS IN NO WAY WARRANTED TO INDICATE THE CONDITIONS OF ACTUAL QUANTITIES OF WORK WHICH WILL BE REQUIRED.

PLOTTED: 3/31/2014

DESIGNER/DRAFTER: B. HAMAN
CHECKED BY: D. GRIFFIN
SCALE AS NOTED

STATE OF CONNECTICUT
DEPARTMENT OF TRANSPORTATION

FILENAME: ...\301155_04_55_PLAN_STAGING.dgn

LOCHNER
H.W. LOCHNER, INC
2110 Silas Deane Highway
Rocky Hill, CT 06067

APPROVED BY: BEB
DATE: 4/2/2014

PROJECT TITLE:
INSTALLATION OF CANOPY AT BRIDGEPORT STATION

TOWN: **BRIDGEPORT**
DRAWING TITLE: **STAGING PLAN II**

PROJECT NO. **301-155**
DRAWING NO. **S-60**
SHEET NO. **04.60**

05 - ARCHITECTURAL
INDEX OF DRAWINGS

DRAWING NUMBER	DRAWING TITLE	DRAWING NUMBER	DRAWING TITLE
ARCH - 1	INDEX OF DRAWINGS	ARCH - 25	EXISTING & PROPOSED ELEVATIONS - WEST PLATFORM - PART 2
ARCH - 2	ABBREVIATIONS, NOTES & SYMBOLS	ARCH - 26	EXISTING & PROPOSED ELEVATIONS - WEST PLATFORM - PART 3
ARCH - 3	PLATFORM KEY PLAN	ARCH - 27	EXISTING & PROPOSED ELEVATIONS - WEST PLATFORM - PART 4
ARCH - 4	PLATFORM DEMO PLAN - EAST & WEST - PART 1	ARCH - 28	PROPOSED ELEVATIONS - STREET VIEW - PART 4
ARCH - 5	PLATFORM DEMO PLAN - EAST & WEST - PART 2	ARCH - 29	PROPOSED ELEVATIONS - STREET VIEW - PART 3
ARCH - 6	PLATFORM DEMO PLAN - EAST & WEST - PART 3	ARCH - 30	PROPOSED ELEVATIONS - STREET VIEW - PART 2
ARCH - 7	PLATFORM DEMO PLAN - EAST & WEST - PART 4	ARCH - 31	PROPOSED ELEVATIONS - STREET VIEW - PART 1
ARCH - 8	PLATFORM PROPOSED PLAN - EAST & WEST - PART 1	ARCH - 32	EAST PLATFORM PLAN DETAILS
ARCH - 9	PLATFORM PROPOSED PLAN - EAST & WEST - PART 2	ARCH - 33	WEST PLATFORM PLAN DETAILS
ARCH - 10	PLATFORM PROPOSED PLAN - EAST & WEST - PART 3	ARCH - 34	EAST CANOPY & PLATFORM SECTIONS
ARCH - 11	PLATFORM PROPOSED PLAN - EAST & WEST - PART 4	ARCH - 35	WEST CANOPY & PLATFORM SECTIONS
ARCH - 12	CANOPY ROOF PLAN - EAST & WEST - PART 1	ARCH - 36	WINDBREAK DETAILS
ARCH - 13	CANOPY ROOF PLAN - EAST & WEST - PART 2	ARCH - 37	GUARDRAIL & FENCE DETAILS
ARCH - 14	CANOPY ROOF PLAN - EAST & WEST - PART 3	ARCH - 38	EMERGENCY BRIDGE PLATE STORAGE DETAILS
ARCH - 15	CANOPY ROOF PLAN - EAST & WEST - PART 4	ARCH - 39	TYPICAL ROOF DETAILS 1
ARCH - 16	CANOPY REFLECTED CEILING PLAN - EAST & WEST - PART 1	ARCH - 40	TYPICAL ROOF DETAILS 2
ARCH - 17	CANOPY REFLECTED CEILING PLAN - EAST & WEST - PART 2	ARCH - 41	PLATFORM SIGNAGE PLAN - EAST & WEST - PART 1
ARCH - 18	CANOPY REFLECTED CEILING PLAN - EAST & WEST - PART 3	ARCH - 42	PLATFORM SIGNAGE PLAN - EAST & WEST - PART 2
ARCH - 19	CANOPY REFLECTED CEILING PLAN - EAST & WEST - PART 4	ARCH - 43	PLATFORM SIGNAGE PLAN - EAST & WEST - PART 3
ARCH - 20	EXISTING & PROPOSED ELEVATIONS - EAST PLATFORM - PART 4	ARCH - 44	PLATFORM SIGNAGE PLAN - EAST & WEST - PART 4
ARCH - 21	EXISTING & PROPOSED ELEVATIONS - EAST PLATFORM - PART 3	ARCH - 45	SIGNAGE SCHEDULE & DETAILS
ARCH - 22	EXISTING & PROPOSED ELEVATIONS - EAST PLATFORM - PART 2	ARCH - 46	SIGNAGE DETAILS
ARCH - 23	EXISTING & PROPOSED ELEVATIONS - EAST PLATFORM - PART 1	ARCH - 47	ADVERTISING PANEL & SPANREL PANEL DETAILS
ARCH - 24	EXISTING & PROPOSED ELEVATIONS - WEST PLATFORM - PART 1		

DESIGNED BY:
GREGG WIES & GARDNER
ARCHITECTS, LLC
151 EAST STREET
NEW HAVEN, CT 06511

REV.	DATE	REVISION DESCRIPTION	SHEET NO.
-	-	-	-
-	-	-	-
-	-	-	-
-	-	-	-
-	-	-	-
-	-	-	-

THE INFORMATION, INCLUDING ESTIMATED QUANTITIES OF WORK, SHOWN ON THESE SHEETS IS BASED ON LIMITED INVESTIGATIONS BY THE STATE AND IS IN NO WAY WARRANTED TO INDICATE THE CONDITIONS OF ACTUAL QUANTITIES OF WORK WHICH WILL BE REQUIRED.

PLOTTED: 31-Mar-14

DESIGNER/DRAFTER: J. LEON
CHECKED BY: S. GARDNER
SCALE AS NOTED

STATE OF CONNECTICUT
DEPARTMENT OF TRANSPORTATION

FILENAME: FD_MST_ARC_0301_0155_ARCH-1.DWG

GREGG WIES & GARDNER ARCHITECTS, LLC

APPROVED BY: DATE: 03/28/14

PROJECT TITLE:
INSTALLATION OF CANOPY AT BRIDGEPORT STATION

TOWN: **BRIDGEPORT**

DRAWING TITLE: **INDEX OF DRAWINGS**

PROJECT NO. **301-155**
DRAWING NO. **ARCH-1**
SHEET NO. **05.01**

G:\1224.00 Task Order - Bridgeport RR Canopies (Lochner)\1224 Drawings\FD_MST_ARC_0301_0155_ARCH-1.dwg, 3/31/2014 4:34:53 PM, jleon

Border Version: 10/1/09

ARCHITECTURAL ABBREVIATIONS

A.F.F.	ABOVE FINISHED FLOOR
ALUM.	ALUMINUM
APPROX.	APPROXIMATE
B.	BOARD
B.O.	BY OWNER
BLDG.	BUILDING
BLK.	BLOCK
BLKG.	BLOCKING
B.O.	BOTTOM OF
CJ	CONTROL JOINT
CLF	CHAIN LINK FENCE
C.L.L.	CONTRACT LIMIT LINE
CLR	CLEAR
CMU	CONCRETE MASONRY UNIT
COL.	COLUMN
CONC.	CONCRETE
CTR.	CENTER
℄	CENTER LINE
DEMO	DEMOLISH
DTL.	DETAIL
DIA	DIAMETER
DIM.	DIMENSION
DN.	DOWN
DR.	DOOR
DS	DOWN SPOUT
DWG.(S)	DRAWING(S)
EXIST.	EXISTING
EA.	EACH
EJ	EXPANSION JOINT
ELEC.	ELECTRIC
ELEV.	ELEVATION
ENCL.	ENCLOSURE
EQ	EQUAL
EQUIP.	EQUIPMENT
ETR	EXISTING TO REMAIN
F.C.	FIELD CUT
FCX	FIRE CODE X
FIN.	FINISH
FM	FIELD MEASUREMENT
FL	FLUSH
FL.	FLOOR
F.O.F.	FACE OF FINISH
FT.	FEET
G.A.	GAUGE
GALV.	GALVANIZED
G.C.	GENERAL CONTRACTOR
GL	GLASS
H OR HT	HEIGHT (HIGH)
MACH	MACHINE
MANUF.	MANUFACTURE
MAX.	MAXIMUM
MECH.	MECHANICAL
M.E.P.	MECHANICAL ELECTRICAL PLUMBING
MIN.	MINIMUM
MISC.	MISCELLANEOUS
MNRR	METRO NORTH RAILROAD
MTD.	MOUNTED
MNT'D	MOUNTED
MTL	METAL
N/A	NOT APPLICABLE
N.I.C	NOT IN CONTRACT
NOM.	NOMINAL
N.T.S.	NOT TO SCALE
O.C.	ON CENTER
OH	OPPOSITE HAND
OPP	OPPOSITE
PTD	PAINTED
QTY	QUANTITY
RCP	REFLECTED CEILING PLAN
REF.	REFERENCE
R.O.	ROUGH OPENING
R.T.U.	ROOF TOP UNIT
REQ'D	REQUIRED
SCHED.	SCHEDULE
SECT.	SECTION
SF	SQUARE FOOT
SIM.	SIMILAR
SM	SURFACE MOUNT
SPEC.	SPECIFICATION
S.S.	STAINLESS STEEL
STAG.	STAGGERED
STD.	STANDARD
STL.	STEEL
STRUCT.	STRUCTURAL
TEL	TELECOM
TH.	THICK
THK.	THICKNESS
THRU	THROUGH
T.O.	TOP OF
TYP.	TYPICAL
U.N.O.	UNLESS NOTED OTHERWISE
VERT.	VERTICAL
V.I.F.	VERIFY IN FIELD
W	WIDTH (WIDE)
W/	WITH
WD	WOOD
WM	WALL MOUNT
W/O	WITHOUT

APPLICABLE REGULATORY CODES

2005 CONNECTICUT STATE BUILDING CODE (CSBC):

INTERNATIONAL BUILDING CODE/2003 (ICC)
INTERNATIONAL EXISTING BUILDING CODE/2003 (ICC)
INTERNATIONAL PLUMBING CODE/2003 (ICC)
INTERNATIONAL MECHANICAL CODE/2003 (ICC)
NATIONAL ELECTRICAL CODE, NFPA 70/2011 (NEC)
INTERNATIONAL ENERGY CONSERVATION CODE/2009 (ICC) [2011 CT AMENDMENTS ADOPT THE 2009 EDITION]
ICC/ANSI A117.1/2003 ACCESSIBLE AND USABLE BUILDINGS AND FACILITIES (ANSI)
CONNECTICUT SUPPLEMENT/2005/STATE BUILDING CODE. 2005 CSBC.
2009 CONNECTICUT AMENDMENT/STATE BUILDING CODE
2011 CONNECTICUT AMENDMENT/STATE BUILDING CODE
2013 CONNECTICUT AMENDMENT/STATE BUILDING CODE

2005 CONNECTICUT STATE FIRE SAFETY CODE (CSFSC):

NEW CONSTRUCTION, RENOVATIONS, CHANGES OF USE:
INTERNATIONAL FIRE CODE/2003 (ICC)
CONNECTICUT SUPPLEMENT/2005/STATE FIRE SAFETY CODE. 2005 CSFSC PART III
EXISTING BUILDINGS/OCCUPANCIES:
NATIONAL FIRE PROTECTION ASSOCIATION. LIFE SAFETY CODE/2003 (NFPA 101)
CONNECTICUT SUPPLEMENT/2005/STATE FIRE SAFETY CODE. 2005 CSFSC PART IV
2009 CONNECTICUT AMENDMENT/STATE FIRE SAFETY CODE
2012 CONNECTICUT AMENDMENT/STATE FIRE SAFETY CODE (DELETED PART V)

2010 CT FIRE PREVENTION CODE (CFPC):

NATIONAL FIRE PROTECTION ASSOCIATION. UNIFORM FIRE CODE/2003. (NFPA 1)
2010 CONNECTICUT STATE FIRE PREVENTION CODE – REGULATIONS OF CT STATE AGENCIES SECTION 29-291A-1 TO 29-191A-10

GENERAL NOTES

1. ALL CONTRACT WORK SHALL CONFORM TO THE APPLICABLE CODES, ORDINANCES AND REGULATIONS.
2. ALL CONTRACT WORK SHALL CONFORM TO THE 2005 CONNECTICUT STATE BUILDING CODE (CSBC) PLUS AMENDMENTS AND THE 2005 CONNECTICUT STATE FIRE SAFETY CODE (CSFSC) AND AMENDMENTS.
3. THE TERM "BY OWNER" SHALL MEAN ITEM OR ITEMS SUPPLIED BY CONNDOT AND INSTALLED BY THE GENERAL CONTRACTOR OR HIS SUBCONTRACTORS.
4. THE TERM "N.I.C." (NOT IN CONTRACT) SHALL PERTAIN TO ITEMS THAT ARE NOT IN THE SCOPE OF THE WORK OF THE GENERAL CONTRACTOR BUT ARE BEING SHOWN TO INFORM THE GENERAL CONTRACTOR OF THE OWNER'S COMPLETE SCOPE OF WORK. CONTRACTOR COORDINATION OF THESE OVERLAPPING AND/OR ADJOINING ITEMS WILL BE REQUIRED.
5. CONTRACTOR MUST FIELD VERIFY ALL EXISTING CONDITIONS & DIMENSIONS PRIOR TO COMMENCEMENT OF ANY CONTRACT WORK. DESIGNER MUST BE NOTIFIED OF ANY CONFLICTING CONDITIONS PRIOR TO THE START OF ANY CONTRACT WORK, MATCHING OF FINISHES ARE TO BE FIELD VERIFIED BY CONTRACTOR AND ENGINEER.
6. ALL OF THE ABOVE NOTED DESIGNATIONS AND NOTATIONS ON THE FOLLOWING DRAWINGS APPLY TO WORK WITHIN THE CONFINES OF THE CONTRACT.
7. NORTH ARROW SHOWN ON DRAWINGS DENOTES "PROJECT NORTH".

ARCHITECTURAL SYMBOLS & NOTATIONS

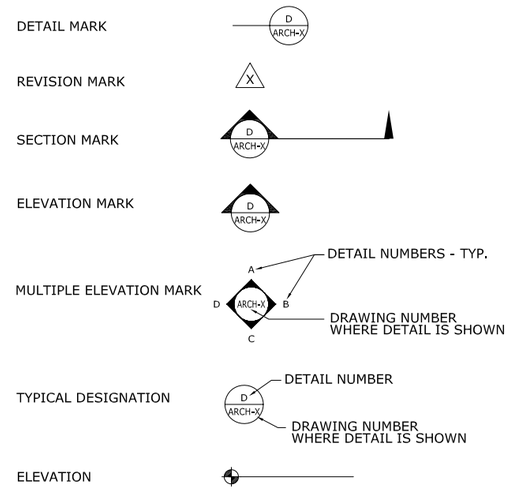

REV.	DATE	REVISION DESCRIPTION	SHEET NO.
-	-	-	-
-	-	-	-
-	-	-	-
-	-	-	-
-	-	-	-
-	-	-	-

THE INFORMATION, INCLUDING ESTIMATED QUANTITIES OF WORK, SHOWN ON THESE SHEETS IS BASED ON LIMITED INVESTIGATIONS BY THE STATE AND IS IN NO WAY WARRANTED TO INDICATE THE CONDITIONS OF ACTUAL QUANTITIES OF WORK WHICH WILL BE REQUIRED.

PLOTTED: 31-Mar-14

DESIGNER/DRAFTER: J. LEON
CHECKED BY: S. GARDNER
SCALE AS NOTED

STATE OF CONNECTICUT
DEPARTMENT OF TRANSPORTATION

FILENAME: FD_MST_ARC_0301_0155_ARCH-2.DWG

GREGG WIES & GARDNER ARCHITECTS, LLC

APPROVED BY: DATE: 03/28/14

PROJECT TITLE:
INSTALLATION OF CANOPY AT BRIDGEPORT STATION

TOWN: **BRIDGEPORT**

DRAWING TITLE: **ABREVIATIONS, NOTES & SYMBOLS**

PROJECT NO. **301-155**
DRAWING NO. **ARCH-2**
SHEET NO. **05.02**

Border Version: 10/1/09

G:\1224.00 Task Order - Bridgeport RR Canopies (Lochner)\1224 Drawings\FD_MST_ARC_0301_0155_ARCH-2.dwg, 3/31/2014 9:07:16 AM, jleon

PART 1 | PART 2 | PART 3 | PART 4

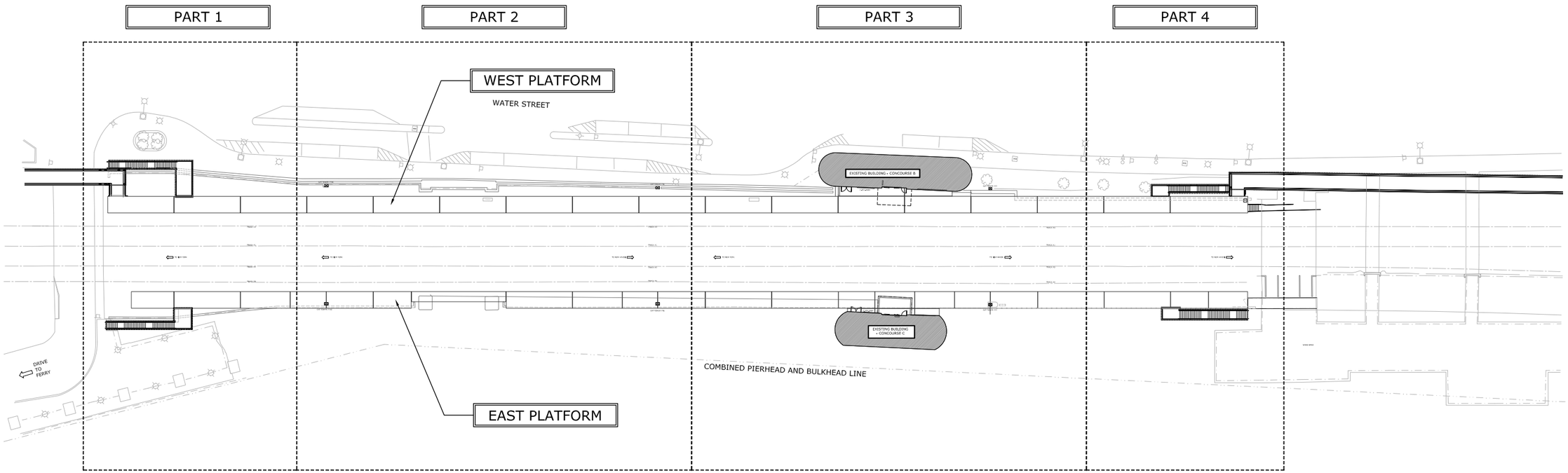

PART 1	PART 2	PART 3	PART 4
FOR DEMO CANOPY PLANS SEE: ARCH-4	FOR DEMO CANOPY PLANS SEE: ARCH-5	FOR DEMO CANOPY PLANS SEE: ARCH-6	FOR DEMO CANOPY PLANS SEE: ARCH-7
FOR PROPOSED CANOPY PLANS SEE: ARCH-8	FOR PROPOSED CANOPY PLANS SEE: ARCH-9	FOR PROPOSED CANOPY PLANS SEE: ARCH-10	FOR PROPOSED CANOPY PLANS SEE: ARCH-11
FOR CANOPY ROOF PLANS SEE: ARCH-12	FOR CANOPY ROOF PLANS SEE: ARCH-13	FOR CANOPY ROOF PLANS SEE: ARCH-14	FOR CANOPY ROOF PLANS SEE: ARCH-15
FOR CANOPY REFLECTED CEILING PLANS SEE: ARCH-16	FOR CANOPY REFLECTED CEILING PLANS SEE: ARCH-17	FOR CANOPY REFLECTED CEILING PLANS SEE: ARCH-18	FOR CANOPY REFLECTED CEILING PLANS SEE: ARCH-19
FOR EAST PLATFORM ELEVATIONS SEE: ARCH-23	FOR EAST PLATFORM ELEVATIONS SEE: ARCH-22	FOR EAST PLATFORM ELEVATIONS SEE: ARCH-21	FOR EAST PLATFORM ELEVATIONS SEE: ARCH-20
FOR WEST PLATFORM ELEVATIONS SEE: ARCH-24	FOR WEST PLATFORM ELEVATIONS SEE: ARCH-25	FOR WEST PLATFORM ELEVATIONS SEE: ARCH-26	FOR WEST PLATFORM ELEVATIONS SEE: ARCH-27
FOR STREET PLATFORM ELEVATIONS SEE: ARCH-31	FOR STREET PLATFORM ELEVATIONS SEE: ARCH-30	FOR STREET PLATFORM ELEVATIONS SEE: ARCH-29	FOR STREET PLATFORM ELEVATIONS SEE: ARCH-28
FOR SIGNAGE PLAN SEE: ARCH-41	FOR SIGNAGE PLAN SEE: ARCH-42	FOR SIGNAGE PLAN SEE: ARCH-43	FOR SIGNAGE PLAN SEE: ARCH-44

GENERAL SITE PLAN

SCALE: 1/32" = 1'-0"

CONNECTICUT COORDINATE GRID

REV.	DATE	REVISION DESCRIPTION	SHEET NO.
-	-	-	-
-	-	-	-
-	-	-	-
-	-	-	-
-	-	-	-
-	-	-	-

THE INFORMATION, INCLUDING ESTIMATED QUANTITIES OF WORK, SHOWN ON THESE SHEETS IS BASED ON LIMITED INVESTIGATIONS BY THE STATE AND IS IN NO WAY WARRANTED TO INDICATE THE CONDITIONS OF ACTUAL QUANTITIES OF WORK WHICH WILL BE REQUIRED.

PLOTTED: 28-Mar-14

DESIGNER/DRAFTER: J. LEON
CHECKED BY: S. GARDNER
SCALE AS NOTED

STATE OF CONNECTICUT
DEPARTMENT OF TRANSPORTATION

FILENAME: FD_MST_ARC_0301_0155_ARCH-3.DWG

GREGG WIES & GARDNER ARCHITECTS, LLC

APPROVED BY: DATE: 03/28/14

PROJECT TITLE:
INSTALLATION OF CANOPY AT BRIDGEPORT STATION

TOWN: **BRIDGEPORT**

DRAWING TITLE: **PLATFORM KEY PLAN**

PROJECT NO. **301-155**
DRAWING NO. **ARCH-3**
SHEET NO. **05.03**

G:\1224.00 Task Order - Bridgeport RR Canopies (Lochner)\1224 Drawings\FD_MST_ARC_0301_0155_ARCH-3.dwg, 3/28/2014 12:03:35 PM, jleon

Border Version: 10/1/09

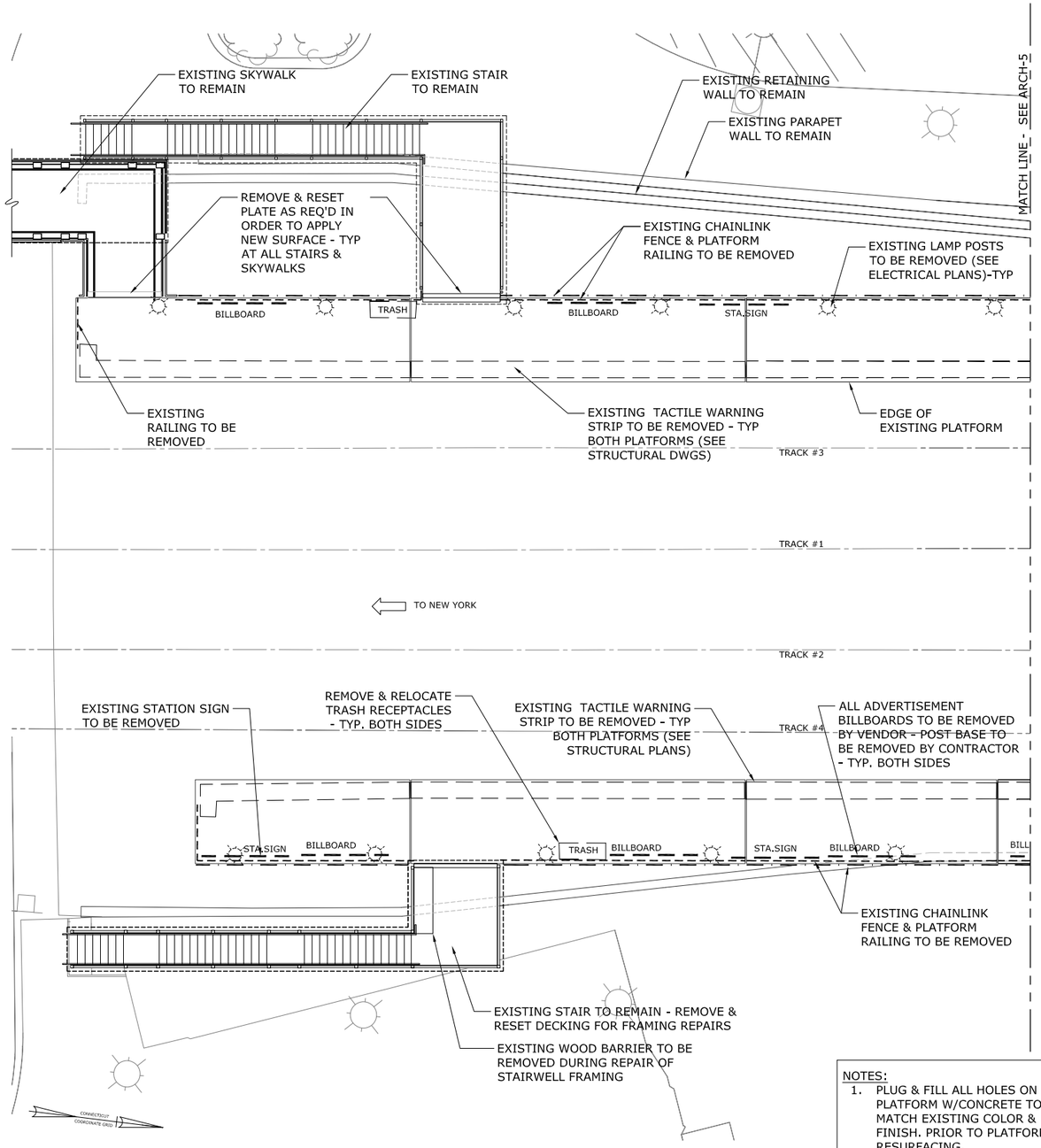

PLATFORM DEMOLITION PLAN - EAST & WEST PART 1

SCALE: 1/8" = 1'-0"

NOTES:

1. PLUG & FILL ALL HOLES ON PLATFORM W/CONCRETE TO MATCH EXISTING COLOR & FINISH. PRIOR TO PLATFORM RESURFACING.
2. REFER TO STRUCTURAL & ELECTRICAL DRAWINGS FOR ADDITIONAL INFORMATION.
3. ALL BENCHES TO BE REMOVED UNLESS OTHERWISE NOTED
4. ALL EXISTING PLATFORM RAILINGS TO BE REMOVED, UNLESS OTHERWISE NOTED.
5. REFER TO DETAILS & ENLARGED PLANS FOR ADDITIONAL SCOPE.
6. CONTRACTOR TO COORDINATE WORK WITH AMTRAK AND/OR MNRR FOR REMOVAL & RELOCATION OF PLATFORM ELEMENTS.

REV.	DATE	REVISION DESCRIPTION	SHEET NO.
-	-	-	-
-	-	-	-
-	-	-	-
-	-	-	-
-	-	-	-
-	-	-	-

THE INFORMATION, INCLUDING ESTIMATED QUANTITIES OF WORK, SHOWN ON THESE SHEETS IS BASED ON LIMITED INVESTIGATIONS BY THE STATE AND IS IN NO WAY WARRANTED TO INDICATE THE CONDITIONS OF ACTUAL QUANTITIES OF WORK WHICH WILL BE REQUIRED.

PLOTTED: 28-Mar-14

DESIGNER/DRAFTER: J. LEON
CHECKED BY: S. GARDNER
SCALE AS NOTED

STATE OF CONNECTICUT
DEPARTMENT OF TRANSPORTATION

FILENAME: FD_MST_ARC_0301_0155_ARCH-4.DWG

GREGG WIES & GARDNER ARCHITECTS, LLC

APPROVED BY: DATE: 03/28/14

PROJECT TITLE:
INSTALLATION OF CANOPY AT BRIDGEPORT STATION

TOWN: **BRIDGEPORT**

DRAWING TITLE: **PLATFORM DEMO PLAN - EAST & WEST - PART 1**

PROJECT NO. **301-155**
DRAWING NO. **ARCH-4**
SHEET NO. **05.04**

G:\1224.00 Task Order - Bridgeport RR Canopies (Lochner)\1224 Drawings\FD_MST_ARC_0301_0155_ARCH-4.dwg, 3/28/2014 11:39:13 AM, jleon

Border Version: 10/1/09

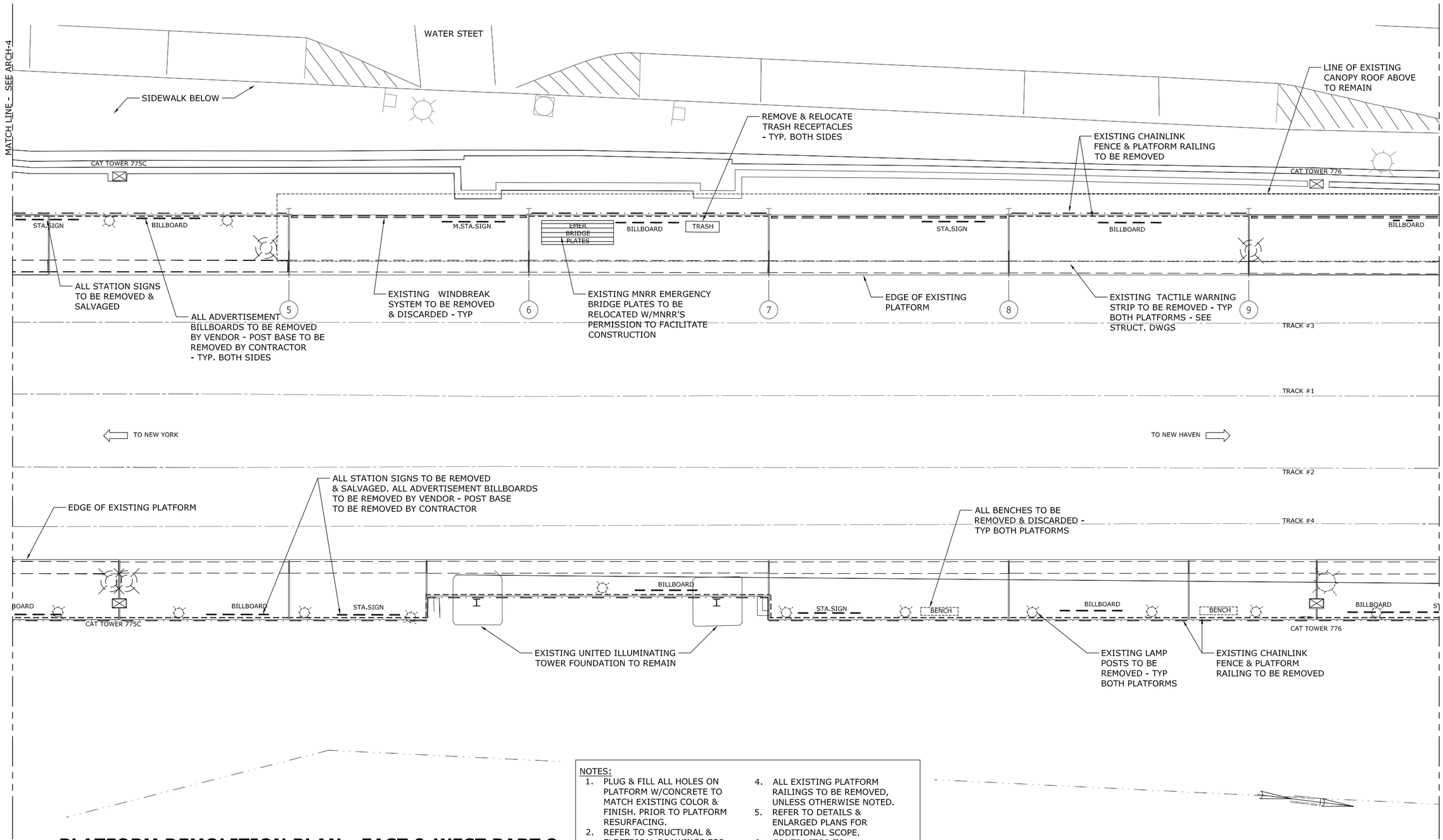

PLATFORM DEMOLITION PLAN - EAST & WEST PART 2

SCALE: 1/8" = 1'-0"

NOTES:

1. PLUG & FILL ALL HOLES ON PLATFORM W/CONCRETE TO MATCH EXISTING COLOR & FINISH. PRIOR TO PLATFORM RESURFACING.
2. REFER TO STRUCTURAL & ELECTRICAL DRAWINGS FOR ADDITIONAL INFORMATION.
3. ALL BENCHES TO BE REMOVED UNLESS OTHERWISE NOTED
4. ALL EXISTING PLATFORM RAILINGS TO BE REMOVED, UNLESS OTHERWISE NOTED.
5. REFER TO DETAILS & ENLARGED PLANS FOR ADDITIONAL SCOPE.
6. CONTRACTOR TO COORDINATE WORK WITH AMTRAK AND/OR MNRR FOR REMOVAL & RELOCATION OF PLATFORM ELEMENTS.

REV.	DATE	REVISION DESCRIPTION	SHEET NO.
-	-	-	-
-	-	-	-
-	-	-	-
-	-	-	-
-	-	-	-
-	-	-	-

THE INFORMATION, INCLUDING ESTIMATED QUANTITIES OF WORK, SHOWN ON THESE SHEETS IS BASED ON LIMITED INVESTIGATIONS BY THE STATE AND IS IN NO WAY WARRANTED TO INDICATE THE CONDITIONS OF ACTUAL QUANTITIES OF WORK WHICH WILL BE REQUIRED.

PLOTTED: 28-Mar-14

DESIGNER/DRAFTER: J. LEON
CHECKED BY: S. GARDNER
SCALE AS NOTED

STATE OF CONNECTICUT
DEPARTMENT OF TRANSPORTATION

FILENAME: FD_MST_ARC_0301_0155_ARCH-5.DWG

GREGG WIES & GARDNER ARCHITECTS, LLC

APPROVED BY: DATE: 03/28/14

PROJECT TITLE:
INSTALLATION OF CANOPY AT BRIDGEPORT STATION

TOWN: **BRIDGEPORT**

DRAWING TITLE: **PLATFORM DEMO PLAN - EAST & WEST - PART 2**

PROJECT NO. **301-155**
DRAWING NO. **ARCH-5**
SHEET NO. **05.05**

G:\1224.00 Task Order - Bridgeport RR Canopies (Lochner)\1224 Drawings\FD_MST_ARC_0301_0155_ARCH-5.dwg, 3/28/2014 11:40:03 AM, jleon

Border Version: 10/1/09

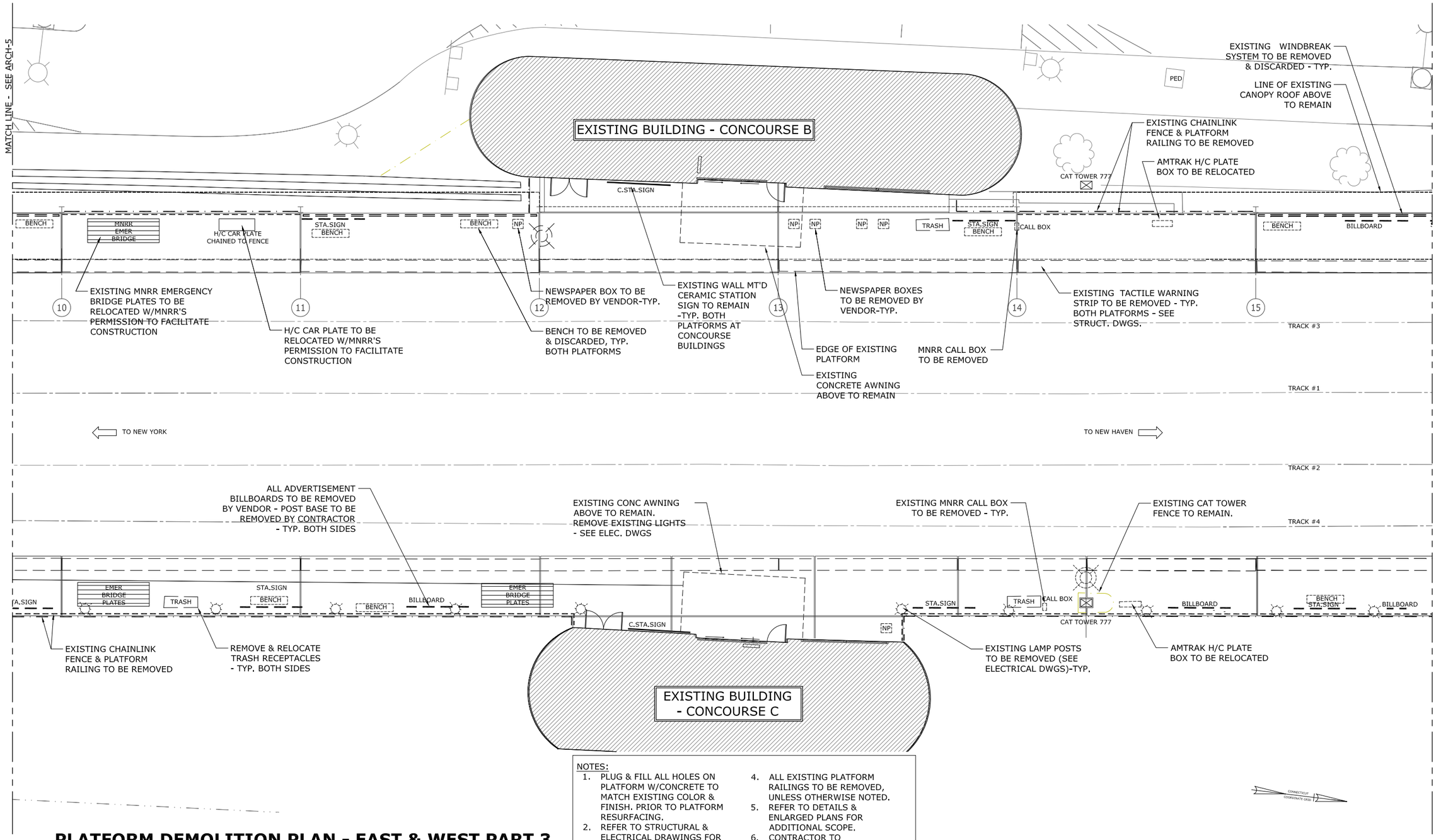

PLATFORM DEMOLITION PLAN - EAST & WEST PART 3

SCALE: 1/8" = 1'-0"

NOTES:

1. PLUG & FILL ALL HOLES ON PLATFORM W/CONCRETE TO MATCH EXISTING COLOR & FINISH. PRIOR TO PLATFORM RESURFACING.
2. REFER TO STRUCTURAL & ELECTRICAL DRAWINGS FOR ADDITIONAL INFORMATION.
3. ALL BENCHES TO BE REMOVED UNLESS OTHERWISE NOTED
4. ALL EXISTING PLATFORM RAILINGS TO BE REMOVED, UNLESS OTHERWISE NOTED.
5. REFER TO DETAILS & ENLARGED PLANS FOR ADDITIONAL SCOPE.
6. CONTRACTOR TO COORDINATE W/AMTRAK AND/OR MNRR FOR REMOVAL & RELOCATION OF PLATFORM ELEMENTS.

REV.	DATE	REVISION DESCRIPTION	SHEET NO.
-	-	-	-
-	-	-	-
-	-	-	-
-	-	-	-
-	-	-	-
-	-	-	-

THE INFORMATION, INCLUDING ESTIMATED QUANTITIES OF WORK, SHOWN ON THESE SHEETS IS BASED ON LIMITED INVESTIGATIONS BY THE STATE AND IS IN NO WAY WARRANTED TO INDICATE THE CONDITIONS OF ACTUAL QUANTITIES OF WORK WHICH WILL BE REQUIRED.

PLOTTED: 28-Mar-14

DESIGNER/DRAFTER: J. LEON
CHECKED BY: S. GARDNER
SCALE AS NOTED

STATE OF CONNECTICUT
DEPARTMENT OF TRANSPORTATION

FILENAME: FD_MST_ARC_0301_0155_ARCH-6.DWG

GREGG WIES & GARDNER ARCHITECTS, LLC

APPROVED BY: DATE: 03/28/14

PROJECT TITLE:
INSTALLATION OF CANOPY AT BRIDGEPORT STATION

TOWN: **BRIDGEPORT**

DRAWING TITLE: **PLATFORM DEMO PLAN - EAST & WEST - PART 3**

PROJECT NO. **301-155**
DRAWING NO. **ARCH-6**
SHEET NO. **05.06**

G:\1224.00 Task Order - Bridgeport RR Canopies (Lochner)\1224 Drawings\FD_MST_ARC_0301_0155_ARCH-6.dwg, 3/28/2014 11:41:15 AM, jleon

Border Version: 10/1/09

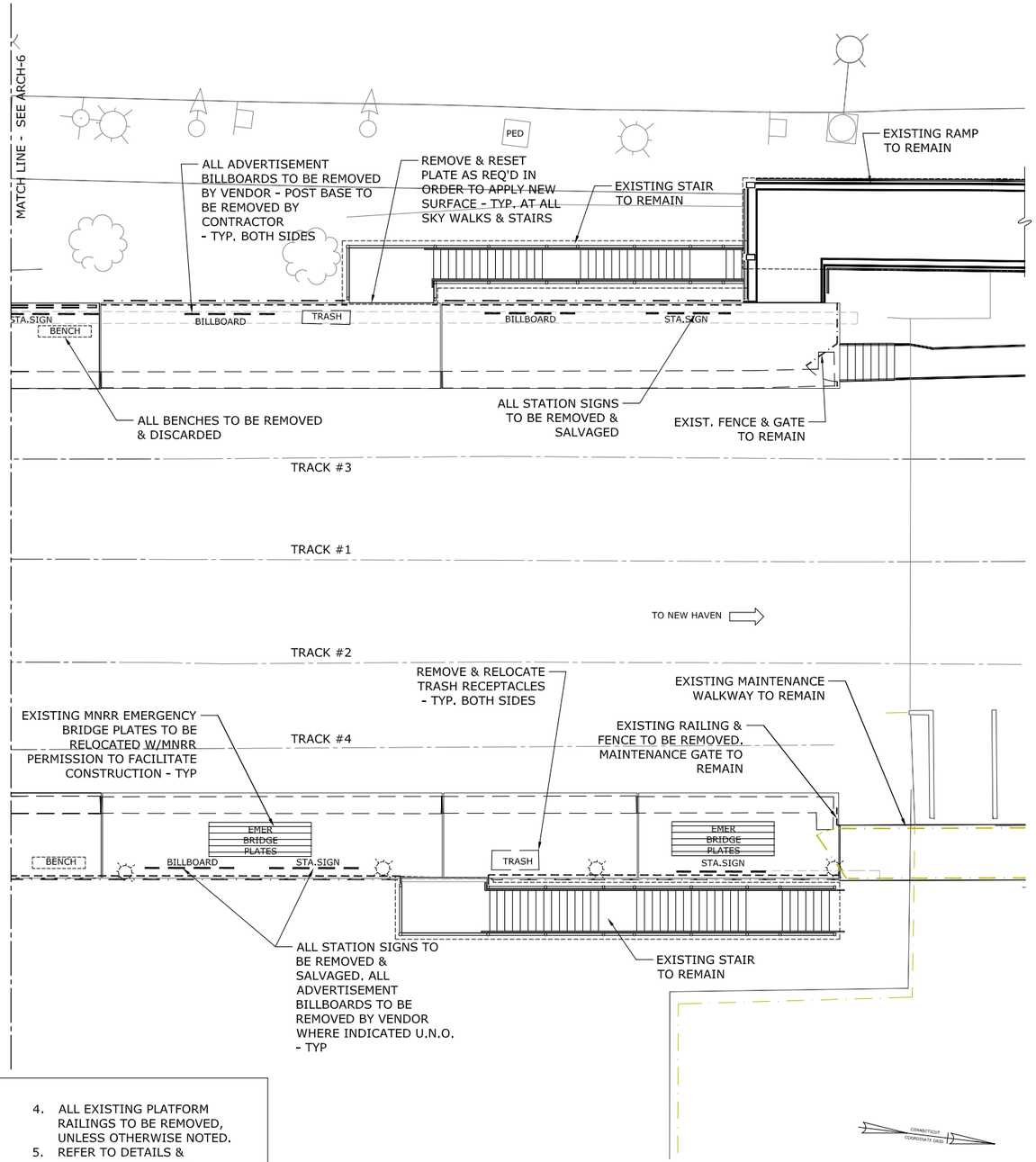

NOTES:

1. PLUG & FILL ALL HOLES ON PLATFORM W/CONCRETE TO MATCH EXISTING COLOR & FINISH. PRIOR TO PLATFORM RESURFACING.
2. REFER TO STRUCTURAL & ELECTRICAL DRAWINGS FOR ADDITIONAL INFORMATION.
3. ALL BENCHES TO BE REMOVED UNLESS OTHERWISE NOTED
4. ALL EXISTING PLATFORM RAILINGS TO BE REMOVED, UNLESS OTHERWISE NOTED.
5. REFER TO DETAILS & ENLARGED PLANS FOR ADDITIONAL SCOPE.
6. CONTRACTOR TO COORDINATE W/AMTRAK AND/OR MNRR FOR REMOVAL & RELOCATION OF PLATFORM ELEMENTS.

PLATFORM DEMOLITION PLAN - EAST & WEST PART 4

SCALE: 1/8" = 1'-0"

REV.	DATE	REVISION DESCRIPTION	SHEET NO.
-	-	-	-
-	-	-	-
-	-	-	-
-	-	-	-
-	-	-	-
-	-	-	-

THE INFORMATION, INCLUDING ESTIMATED QUANTITIES OF WORK, SHOWN ON THESE SHEETS IS BASED ON LIMITED INVESTIGATIONS BY THE STATE AND IS IN NO WAY WARRANTED TO INDICATE THE CONDITIONS OF ACTUAL QUANTITIES OF WORK WHICH WILL BE REQUIRED.

PLOTTED: 28-Mar-14

DESIGNER/DRAFTER: J. LEON
CHECKED BY: S. GARDNER
SCALE AS NOTED

STATE OF CONNECTICUT
DEPARTMENT OF TRANSPORTATION

FILENAME: FD_MST_ARC_0301_0155_ARCH-7.DWG

GREGG WIES & GARDNER ARCHITECTS, LLC

APPROVED BY: DATE: 03/28/14

PROJECT TITLE:
INSTALLATION OF CANOPY AT BRIDGEPORT STATION

TOWN: **BRIDGEPORT**

DRAWING TITLE: **PLATFORM DEMO PLAN - EAST & WEST - PART 4**

PROJECT NO. **301-155**
DRAWING NO. **ARCH-7**
SHEET NO. **05.07**

G:\12224.00 Task Order - Bridgeport RR Canopies (Lochner)\12224 Drawings\FD_MST_ARC_0301_0155_ARCH-7.dwg, 3/28/2014 11:41:56 AM, jleon

Border Version: 10/1/09

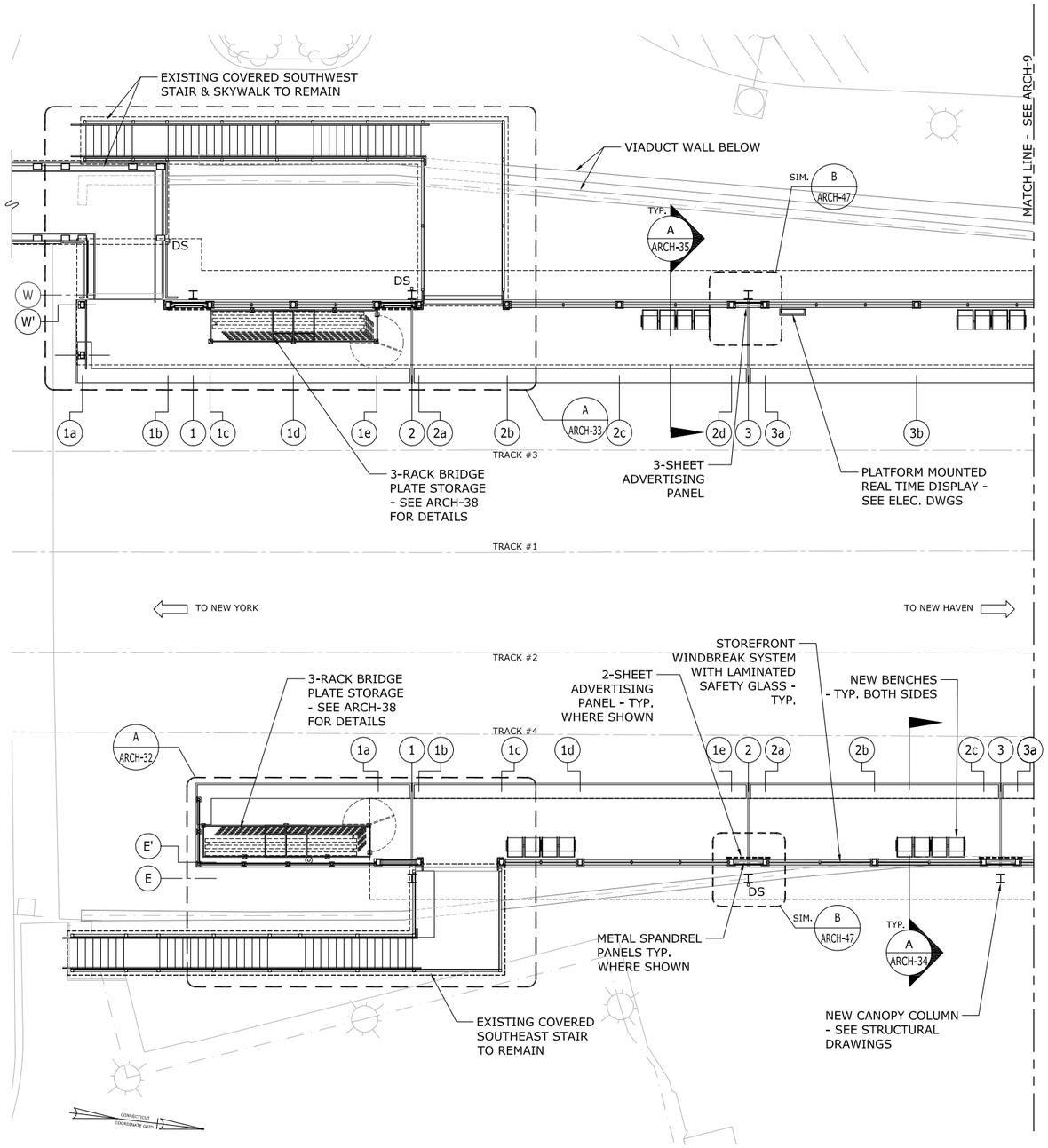

PLATFORM PROPOSED PLAN - EAST & WEST PART 1

SCALE: 1/8" = 1'-0"

NOTES:
1. REFER TO STRUCTURAL DRAWINGS FOR DOWN SPOUT ROUTES.

REV.	DATE	REVISION DESCRIPTION	SHEET NO.
-	-	-	-
-	-	-	-
-	-	-	-
-	-	-	-
-	-	-	-
-	-	-	-

THE INFORMATION, INCLUDING ESTIMATED QUANTITIES OF WORK, SHOWN ON THESE SHEETS IS BASED ON LIMITED INVESTIGATIONS BY THE STATE AND IS IN NO WAY WARRANTED TO INDICATE THE CONDITIONS OF ACTUAL QUANTITIES OF WORK WHICH WILL BE REQUIRED.

PLOTTED: 28-Mar-14

DESIGNER/DRAFTER: J. LEON
CHECKED BY: S. GARDNER
SCALE AS NOTED

STATE OF CONNECTICUT
DEPARTMENT OF TRANSPORTATION

FILENAME: FD_MST_ARC_0301_0155_ARCH-8.DWG

GREGG WIES & GARDNER ARCHITECTS, LLC

APPROVED BY: DATE: 03/28/14

PROJECT TITLE:
INSTALLATION OF CANOPY AT BRIDGEPORT STATION

TOWN: **BRIDGEPORT**

DRAWING TITLE: **PLATFORM PROP PLAN - EAST & WEST - PART 1**

PROJECT NO. **301-155**
DRAWING NO. **ARCH-8**
SHEET NO. **05.08**

G:\1224.00 Task Order - Bridgeport RR Canopies (Lochner)\1224 Drawings\FD_MST_ARC_0301_0155_ARCH-8.dwg, 3/28/2014 10:57:09 AM, jleon

Border Version: 10/1/09

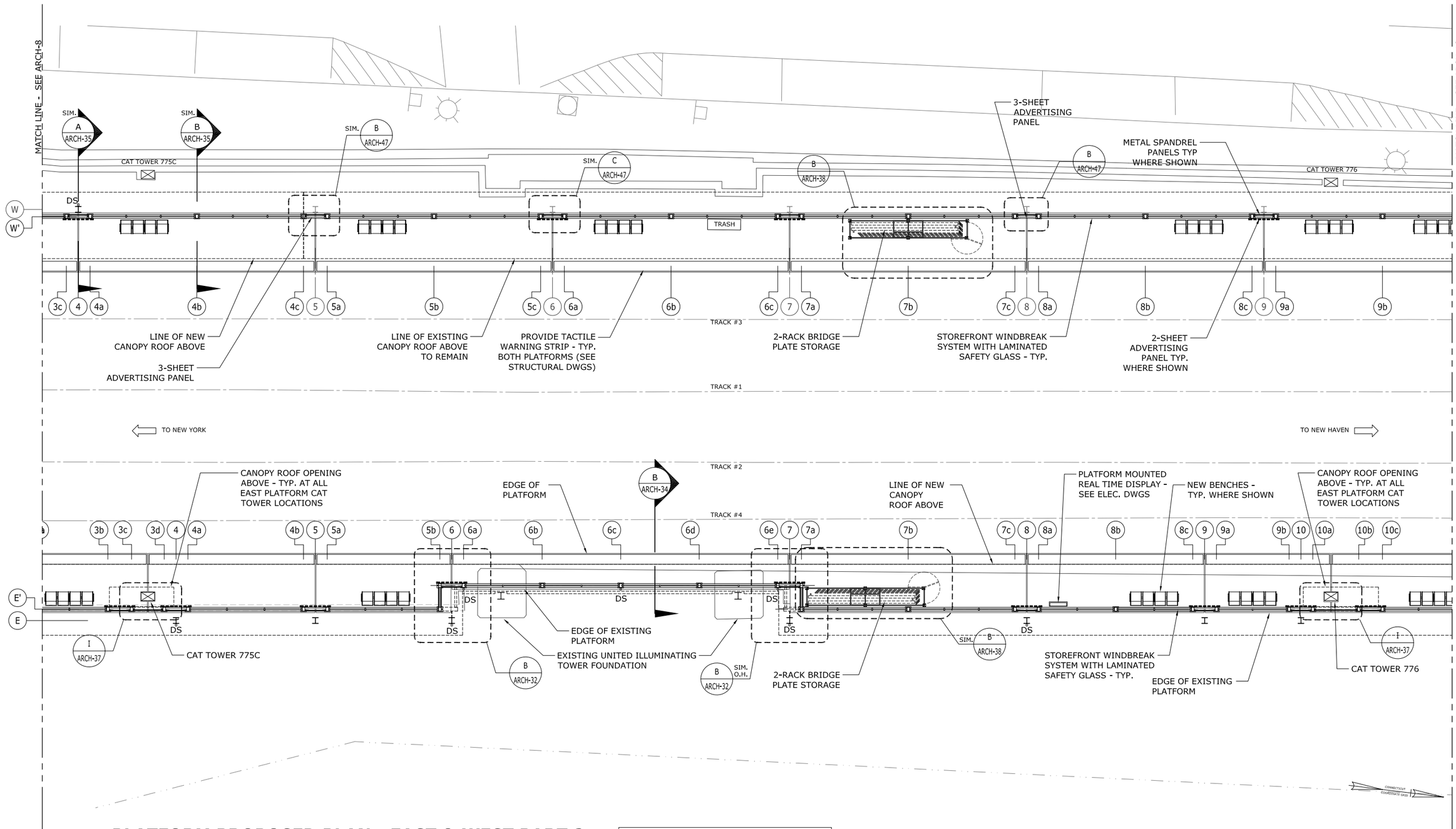

PLATFORM PROPOSED PLAN - EAST & WEST PART 2

SCALE: 1/8" = 1'-0"

NOTES:
1. REFER TO STRUCTURAL DRAWINGS FOR DOWN SPOUT ROUTES.

REV.	DATE	REVISION DESCRIPTION	SHEET NO.
-	-	-	-
-	-	-	-
-	-	-	-
-	-	-	-
-	-	-	-
-	-	-	-

THE INFORMATION, INCLUDING ESTIMATED QUANTITIES OF WORK, SHOWN ON THESE SHEETS IS BASED ON LIMITED INVESTIGATIONS BY THE STATE AND IS IN NO WAY WARRANTED TO INDICATE THE CONDITIONS OF ACTUAL QUANTITIES OF WORK WHICH WILL BE REQUIRED.

PLOTTED: 28-Mar-14

DESIGNER/DRAFTER: J. LEON
CHECKED BY: S. GARDNER
SCALE AS NOTED

STATE OF CONNECTICUT
DEPARTMENT OF TRANSPORTATION

FILENAME: FD_MST_ARC_0301_0155_ARCH-9.DWG

GREGG WIES & GARDNER ARCHITECTS, LLC

APPROVED BY: DATE: 03/28/14

PROJECT TITLE:
INSTALLATION OF CANOPY AT BRIDGEPORT STATION

TOWN: **BRIDGEPORT**

DRAWING TITLE: **PLATFORM PROP PLAN - EAST & WEST - PART 2**

PROJECT NO. **301-155**
DRAWING NO. **ARCH-9**
SHEET NO. **05.09**

G:\1224.00 Task Order - Bridgeport RR Canopies (Lochner)\1224 Drawings\FD_MST_ARC_0301_0155_ARCH-9.dwg, 3/28/2014 11:04:56 AM, jleon

Border Version: 10/1/09

MATCH LINE - SEE ARCH-9

MATCH LINE - SEE ARCH-11

WALL MOUNTED MNR BULLETIN BOARD - 24"X36" FINAL LOCATION TO BE COORDINATED WITH METRO-NORTH RAILROAD

EXISTING BUILDING - CONCOURSE B

B ARCH-33

SIM. B ARCH-47

AMTRAK BOX TO BE RESET TO AVOID NEW WINDBREAK

CAT TOWER 777

SIM. C ARCH-47

W

W'

TRASH

9c 10 10a 10b 10c 11 11a 11b 11c 12 13 E ARCH-46 13a 13b 14 14a 14b 14c 15 15a 15b

TRACK #3

LINE OF EXISTING CANOPY ROOF ABOVE TO REMAIN

PROVIDE TACTILE WARNING STRIP - TYP. BOTH PLATFORMS - SEE STRUCT. DWGS.

NEW CANOPY EXTENSION - TYP. @ BOTH SIDES OF AWNING

C ARCH-35

WALL MOUNTED REAL TIME DISPLAY PANELS - SEE ELEC. DWGS.

EXISTING CONC. AWNING TO REMAIN

MNR CABINET - SEE ELECT. DWGS

MNR BULLETIN BOARD

3-SHEET ADVERTISING PANEL

STOREFRONT WINDBREAK SYSTEM WITH LAMINATED SAFETY GLASS - TYP.

TRACK #1

TO NEW YORK

TO NEW HAVEN

EXISTING CAT TOWER CAGE TO REMAIN

TRACK #2

RELOCATE TRASH/ RECYCLING RECEPTACLES AS SHOWN - TYP. BOTH SIDES

2-SHEET ADVERTISING PANEL TYP. WHERE SHOWN

NEW BENCHES - TYP ON BOTH SIDES

TRACK #4

C ARCH-34

EXISTING CONC. AWNING TO REMAIN

WALL MOUNTED REAL TIME DISPLAY PANELS - SEE ELEC. DWGS.

C ARCH-33 SIM. O.H.

AMTRAK BOX TO BE RESET TO AVOID NEW WINDBREAK

LINE OF NEW CANOPY ROOF ABOVE

10d 11 11a 11b 11c 12 12a 12b 12c 13 13a 13b 14 15 15a 15b 16 16a 16b 17 17a 17b 17c 17d 18 18a 18b

E ARCH-34

TRASH

TRASH

E'

E

DS

DS

DS

METAL SPANDREL PANELS TYP. WHERE SHOWN

C SIM. ARCH-47

NEW CANOPY COLUMN - SEE STRUCTURAL DRAWINGS

C ARCH-32

EXISTING BUILDING - CONCOURSE C

MNR CABINET - SEE ELECT. DWGS

SIM. 1 ARCH-37

CAT TOWER 777

EDGE OF EXISTING PLATFORM

STOREFRONT WINDBREAK SYSTEM WITH LAMINATED SAFETY GLASS - TYP.

CONNECTICUT COORDINATE GRID

PLATFORM PROPOSED PLAN - EAST & WEST PART 3

SCALE: 1/8" = 1'-0"

NOTES:
1. REFER TO STRUCTURAL DRAWINGS FOR DOWN SPOUT ROUTES.

REV.	DATE	REVISION DESCRIPTION	SHEET NO.
-	-	-	-
-	-	-	-
-	-	-	-
-	-	-	-
-	-	-	-
	-	-	-

THE INFORMATION, INCLUDING ESTIMATED QUANTITIES OF WORK, SHOWN ON THESE SHEETS IS BASED ON LIMITED INVESTIGATIONS BY THE STATE AND IS IN NO WAY WARRANTED TO INDICATE THE CONDITIONS OF ACTUAL QUANTITIES OF WORK WHICH WILL BE REQUIRED.

PLOTTED: 31-Mar-14

DESIGNER/DRAFTER: J. LEON

CHECKED BY: S. GARDNER

SCALE AS NOTED

STATE OF CONNECTICUT
DEPARTMENT OF TRANSPORTATION

FILENAME: FD_MST_ARC_0301_0155_ARCH-10.DWG

GREGG WIES & GARDNER ARCHITECTS, LLC

APPROVED BY: DATE: 03/28/14

PROJECT TITLE:
INSTALLATION OF CANOPY AT BRIDGEPORT STATION

TOWN: **BRIDGEPORT**

DRAWING TITLE: **PLATFORM PROP PLAN - EAST & WEST - PART 3**

PROJECT NO. **301-155**

DRAWING NO. **ARCH-10**

SHEET NO. **05.10**

G:\1224.00 Task Order - Bridgeport RR Canopies (Lochner)\1224 Drawings\FD_MST_ARC_0301_0155_ARCH-10.dwg, 3/31/2014 4:05:39 PM, jleon

Border Version: 10/1/09

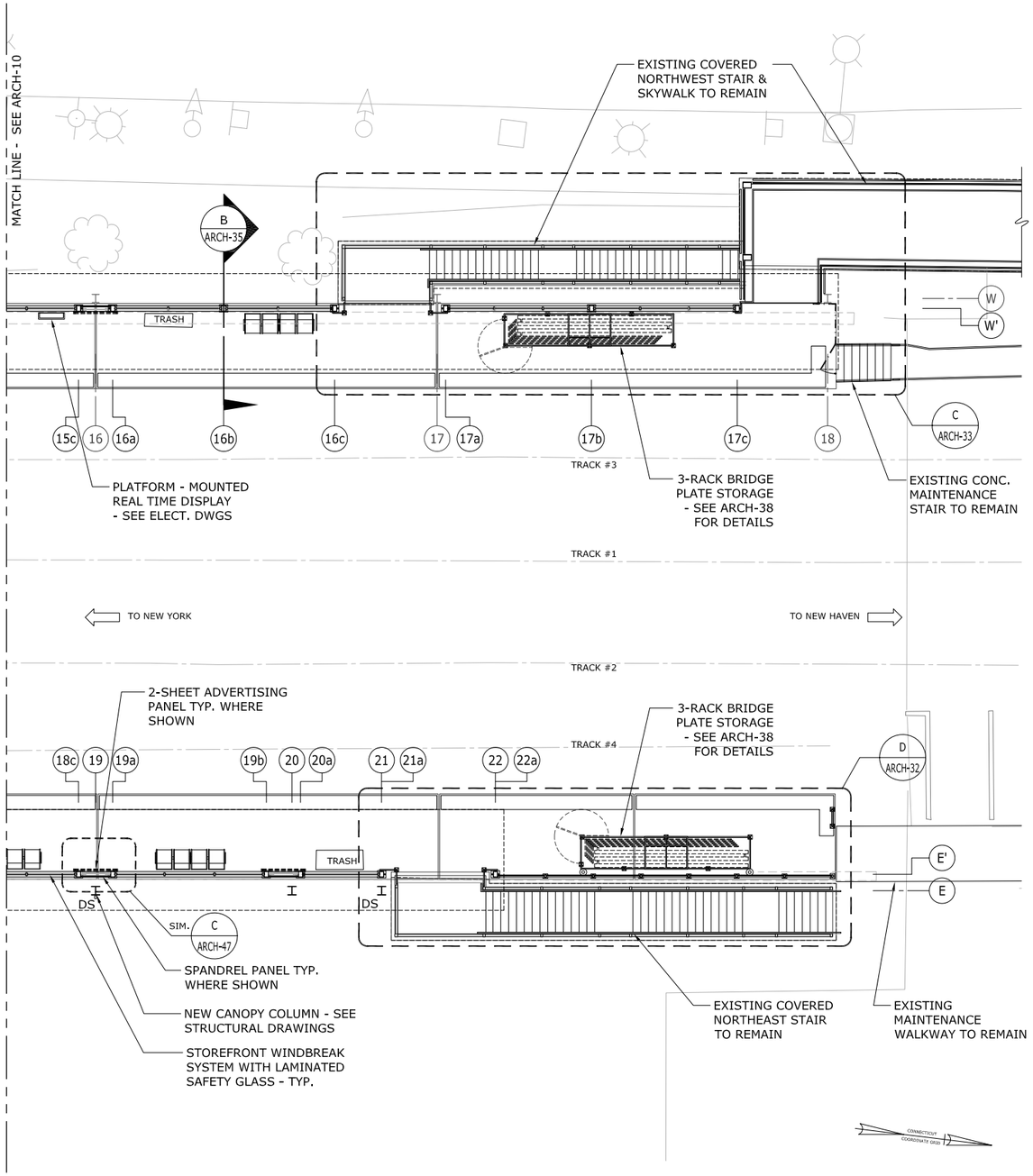

NOTES:
1. REFER TO STRUCTURAL DRAWINGS FOR DOWN SPOUT ROUTES.

PLATFORM PROPOSED PLAN - EAST & WEST PART 4

SCALE: 1/8" = 1'-0"

REV.	DATE	REVISION DESCRIPTION	SHEET NO.
-	-	-	-
-	-	-	-
-	-	-	-
-	-	-	-
-	-	-	-
-	-	-	-

THE INFORMATION, INCLUDING ESTIMATED QUANTITIES OF WORK, SHOWN ON THESE SHEETS IS BASED ON LIMITED INVESTIGATIONS BY THE STATE AND IS IN NO WAY WARRANTED TO INDICATE THE CONDITIONS OF ACTUAL QUANTITIES OF WORK WHICH WILL BE REQUIRED.

PLOTTED: 28-Mar-14

DESIGNER/DRAFTER: J. LEON
CHECKED BY: S. GARDNER
SCALE AS NOTED

STATE OF CONNECTICUT
DEPARTMENT OF TRANSPORTATION

FILENAME: FD_MST_ARC_0301_0155_ARCH-11.DWG

GREGG WIES & GARDNER ARCHITECTS, LLC

APPROVED BY: DATE: 03/28/14

PROJECT TITLE:
INSTALLATION OF CANOPY AT BRIDGEPORT STATION

TOWN: **BRIDGEPORT**

DRAWING TITLE: **PLATFORM PROP PLAN - EAST & WEST - PART 4**

PROJECT NO. **301-155**
DRAWING NO. **ARCH-11**
SHEET NO. **05.11**

G:\1224.00 Task Order - Bridgeport RR Canopies (Lochner)\1224 Drawings\FD_MST_ARC_0301_0155_ARCH-11.dwg, 3/28/2014 11:12:14 AM, jleon

Border Version: 10/1/09

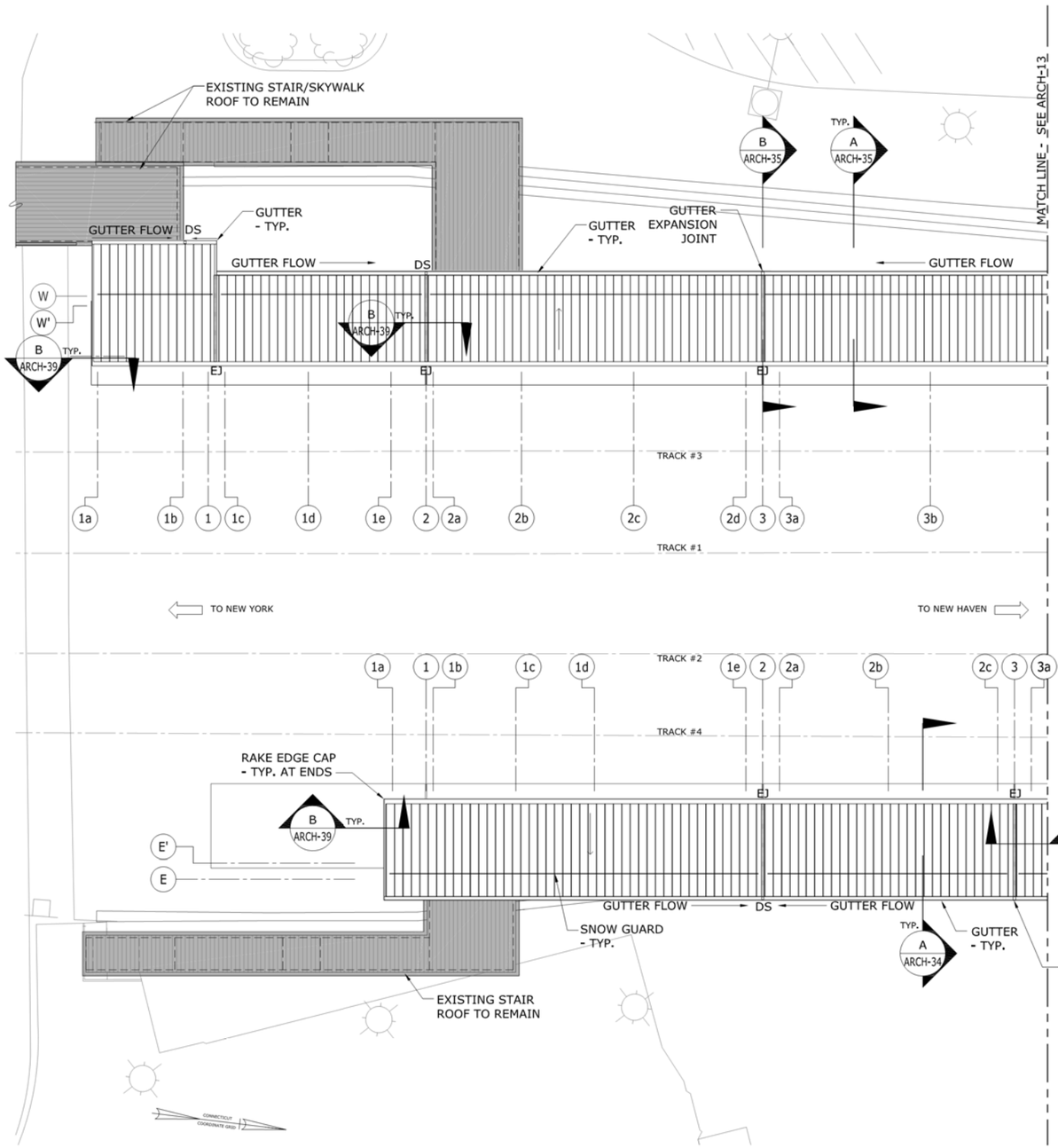

CANOPY PROPOSED ROOF PLAN - EAST & WEST PART 1

SCALE: 1/8" = 1'-0"

NOTES:
1. REFER TO STRUCTURAL DRAWINGS FOR DOWN SPOUT ROUTES.
2. COORDINATE SNOW GUARD LENGTHS WITH ROOF EXPANSION JOINTS & ALL ROOF OPENINGS

REV.	DATE	REVISION DESCRIPTION	SHEET NO.
-	-	-	-
-	-	-	-
-	-	-	-
-	-	-	-
-	-	-	-
-	-	-	-

THE INFORMATION, INCLUDING ESTIMATED QUANTITIES OF WORK, SHOWN ON THESE SHEETS IS BASED ON LIMITED INVESTIGATIONS BY THE STATE AND IS IN NO WAY WARRANTED TO INDICATE THE CONDITIONS OF ACTUAL QUANTITIES OF WORK WHICH WILL BE REQUIRED.

PLOTTED: 28-Mar-14

DESIGNER/DRAFTER: J. LEON
CHECKED BY: S. GARDNER
SCALE AS NOTED

STATE OF CONNECTICUT
DEPARTMENT OF TRANSPORTATION

FILENAME: FD_MST_ARC_0301_015S_ARCH-12.DWG

GREGG WIES & GARDNER ARCHITECTS, LLC

APPROVED BY: DATE: 03/28/14

PROJECT TITLE:
INSTALLATION OF CANOPY AT BRIDGEPORT STATION

TOWN: **BRIDGEPORT**

DRAWING TITLE: **CANOPY ROOF PLAN - EAST & WEST - PART 1**

PROJECT NO. **301-155**
DRAWING NO. **ARCH-12**
SHEET NO. **05.12**

G:\1224.00 Task Order - Bridgeport RR Canopies (Lochner)\1224 Drawings\FD_MST_ARC_0301_015S_ARCH-12.dwg, 3/28/2014 12:51:01 PM, jkeon

Border Version: 10/1/09

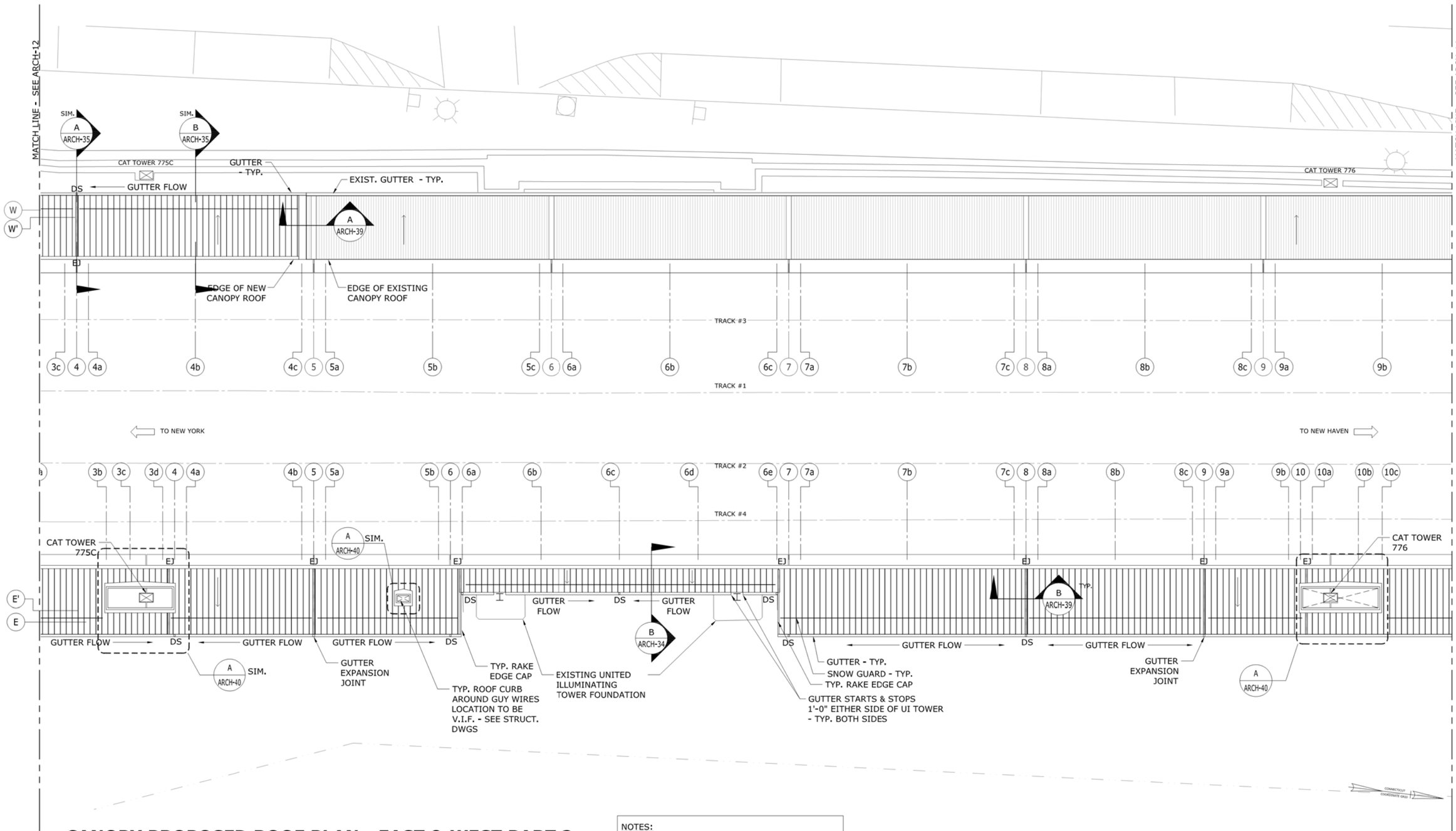

CANOPY PROPOSED ROOF PLAN - EAST & WEST PART 2

SCALE: 1/8" = 1'-0"

NOTES:
1. REFER TO STRUCTURAL DRAWINGS FOR DOWN SPOUT ROUTES.
2. COORDINATE SNOW GUARD LENGTHS WITH ROOF EXPANSION JOINTS & ALL ROOF OPENINGS

REV.	DATE	REVISION DESCRIPTION	SHEET NO.
-	-	-	-
-	-	-	-
-	-	-	-
-	-	-	-
-	-	-	-
-	-	-	-

THE INFORMATION, INCLUDING ESTIMATED QUANTITIES OF WORK, SHOWN ON THESE SHEETS IS BASED ON LIMITED INVESTIGATIONS BY THE STATE AND IS IN NO WAY WARRANTED TO INDICATE THE CONDITIONS OF ACTUAL QUANTITIES OF WORK WHICH WILL BE REQUIRED.

PLOTTED: 31-Mar-14

DESIGNER/DRAFTER: J. LEON
CHECKED BY: S. GARDNER
SCALE AS NOTED

STATE OF CONNECTICUT
DEPARTMENT OF TRANSPORTATION

FILENAME: FD_MST_ARC_0301_0155_ARCH-13.DWG

GREGG WIES & GARDNER ARCHITECTS, LLC

APPROVED BY: DATE: 03/28/14

PROJECT TITLE:
INSTALLATION OF CANOPY AT BRIDGEPORT STATION

TOWN: **BRIDGEPORT**

DRAWING TITLE: **CANOPY ROOF PLAN - EAST & WEST - PART 2**

PROJECT NO. **301-155**
DRAWING NO. **ARCH-13**
SHEET NO. **05.13**

G:\1224.00 Task Order - Bridgeport RR Canopies (Lochner)\1224 Drawings\FD_MST_ARC_0301_0155_ARCH-13.dwg, 3/31/2014 10:42:22 AM, jleon

Border Version: 10/1/09

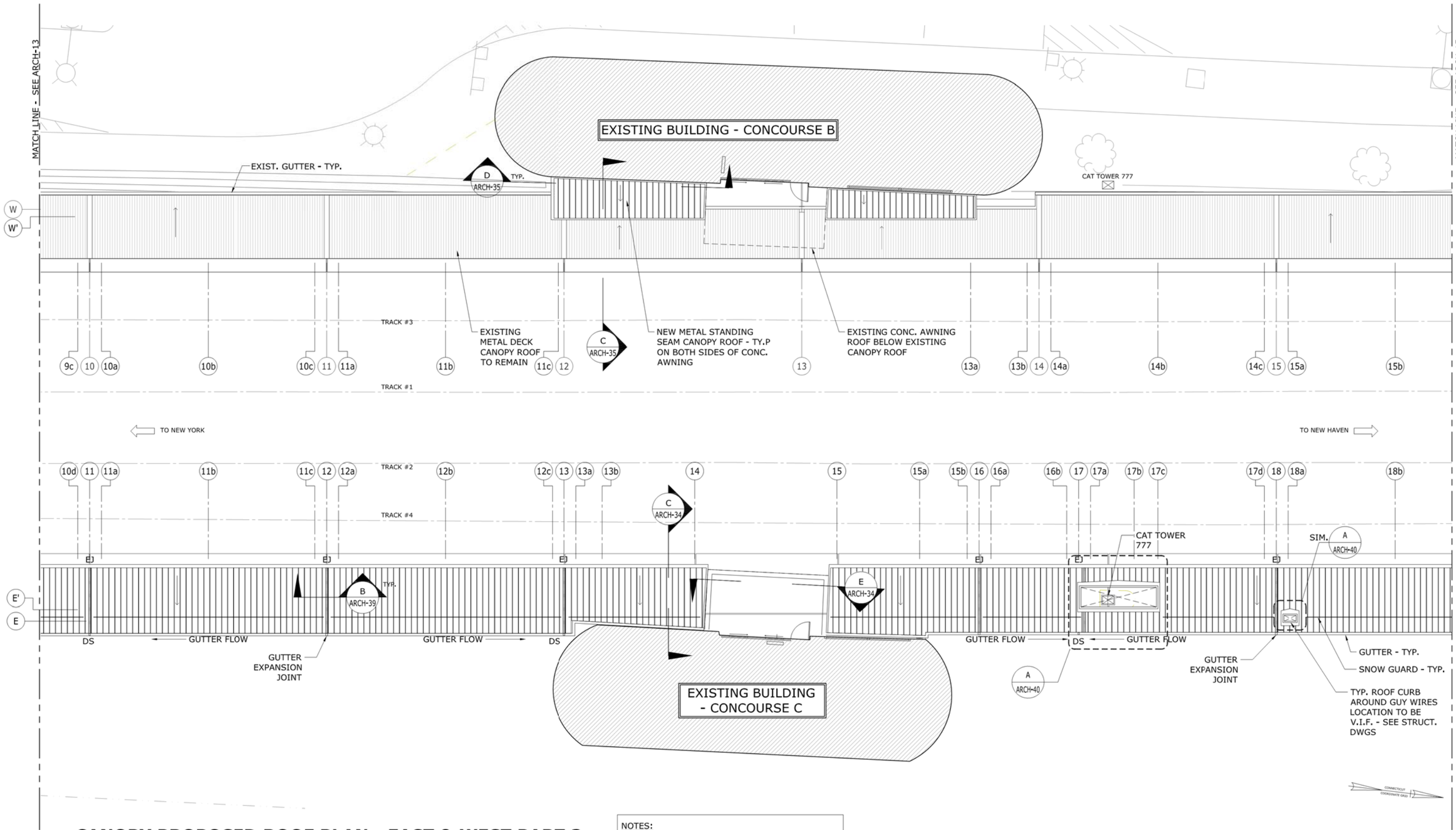

CANOPY PROPOSED ROOF PLAN - EAST & WEST PART 3

SCALE: 1/8" = 1'-0"

NOTES:
1. REFER TO STRUCTURAL DRAWINGS FOR DOWN SPOUT ROUTES.
2. COORDINATE SNOW GUARD LENGTHS WITH ROOF EXPANSION JOINTS & ALL ROOF OPENINGS

REV.	DATE	REVISION DESCRIPTION	SHEET NO.
-	-	-	-
-	-	-	-
-	-	-	-
-	-	-	-
-	-	-	-
-	-	-	-

THE INFORMATION, INCLUDING ESTIMATED QUANTITIES OF WORK, SHOWN ON THESE SHEETS IS BASED ON LIMITED INVESTIGATIONS BY THE STATE AND IS IN NO WAY WARRANTED TO INDICATE THE CONDITIONS OF ACTUAL QUANTITIES OF WORK WHICH WILL BE REQUIRED.

PLOTTED: 31-Mar-14

DESIGNER/DRAFTER: J. LEON
CHECKED BY: S. GARDNER
SCALE AS NOTED

STATE OF CONNECTICUT
DEPARTMENT OF TRANSPORTATION

FILENAME: FD_MST_ARC_0301_0155_ARCH-14.DWG

GREGG WIES & GARDNER ARCHITECTS, LLC

APPROVED BY: DATE: 03/28/14

PROJECT TITLE:
INSTALLATION OF CANOPY AT BRIDGEPORT STATION

TOWN: **BRIDGEPORT**

DRAWING TITLE: **CANOPY ROOF PLAN - EAST & WEST - PART 3**

PROJECT NO. **301-155**
DRAWING NO. **ARCH-14**
SHEET NO. **05.14**

G:\1224.00 Task Order - Bridgeport RR Canopies (Lochner)\1224 Drawings\FD_MST_ARC_0301_0155_ARCH-14.dwg, 3/31/2014 10:43:54 AM, jleon

Border Version: 10/1/09

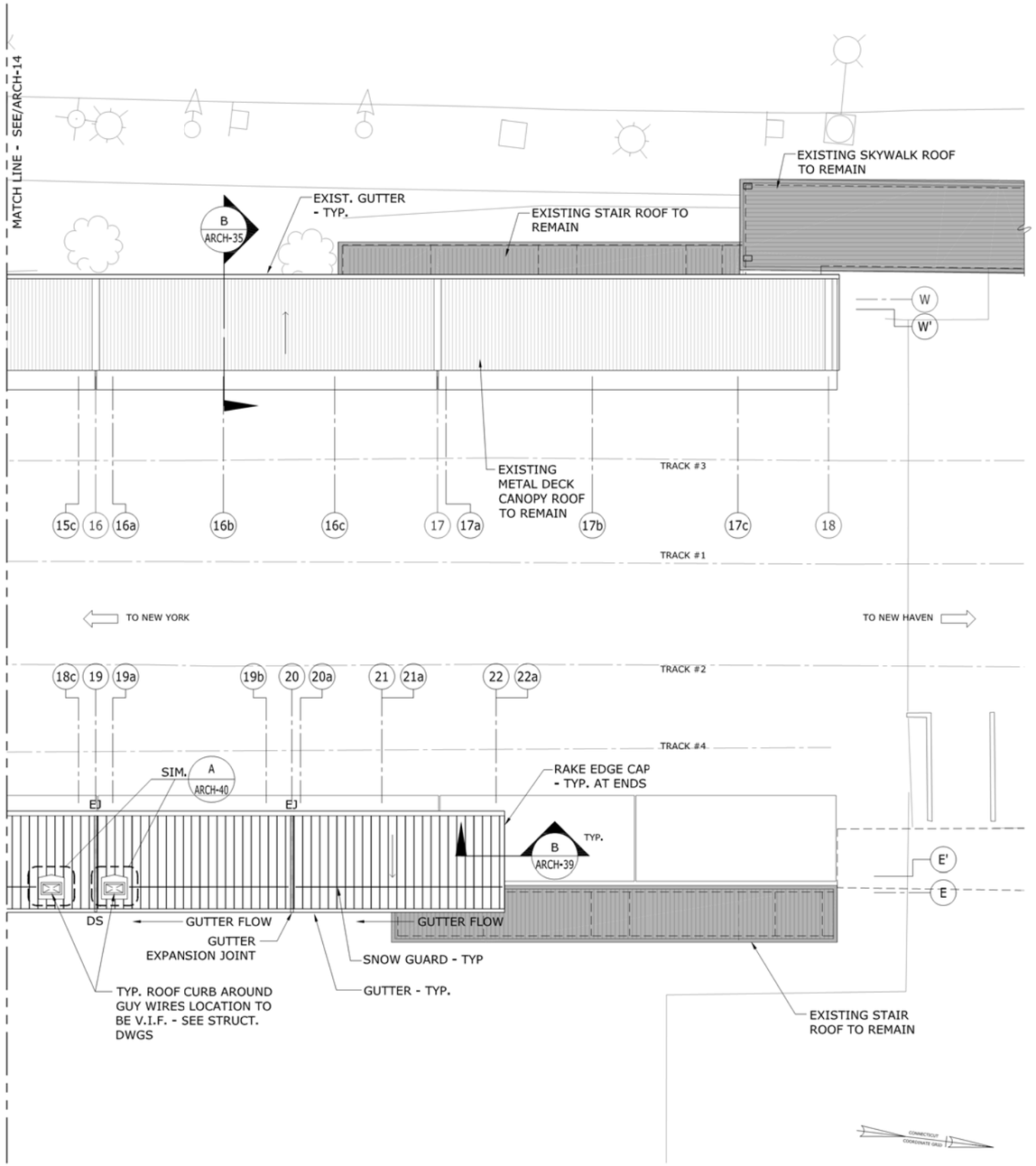

NOTES:
1. REFER TO STRUCTURAL DRAWINGS FOR DOWN SPOUT ROUTES.
2. COORDINATE SNOW GUARD LENGTHS WITH ROOF EXPANSION JOINTS & ALL ROOF OPENINGS

CANOPY PROPOSED ROOF PLAN - EAST & WEST PART 4

SCALE: 1/8" = 1'-0"

REV.	DATE	REVISION DESCRIPTION	SHEET NO.
-	-	-	-
-	-	-	-
-	-	-	-
-	-	-	-
-	-	-	-
-	-	-	-

THE INFORMATION, INCLUDING ESTIMATED QUANTITIES OF WORK, SHOWN ON THESE SHEETS IS BASED ON LIMITED INVESTIGATIONS BY THE STATE AND IS IN NO WAY WARRANTED TO INDICATE THE CONDITIONS OF ACTUAL QUANTITIES OF WORK WHICH WILL BE REQUIRED.

PLOTTED: 31-Mar-14

DESIGNER/DRAFTER: J. LEON
CHECKED BY: S. GARDNER
SCALE AS NOTED

STATE OF CONNECTICUT
DEPARTMENT OF TRANSPORTATION

FILENAME: FD_MST_ARC_0301_0155_ARCH-15.DWG

GREGG WIES & GARDNER ARCHITECTS, LLC

APPROVED BY: DATE: 03/28/14

PROJECT TITLE:
INSTALLATION OF CANOPY AT BRIDGEPORT STATION

TOWN: **BRIDGEPORT**

DRAWING TITLE: **CANOPY ROOF PLAN - EAST & WEST - PART 4**

PROJECT NO. **301-155**
DRAWING NO. **ARCH-15**
SHEET NO. **05.15**

G:\1224.00 Task Order - Bridgeport RR Canopies (Lochner)\1224 Drawings\FD_MST_ARC_0301_0155_ARCH-15.dwg, 3/31/2014 10:45:06 AM, jleon

Border Version: 10/1/09

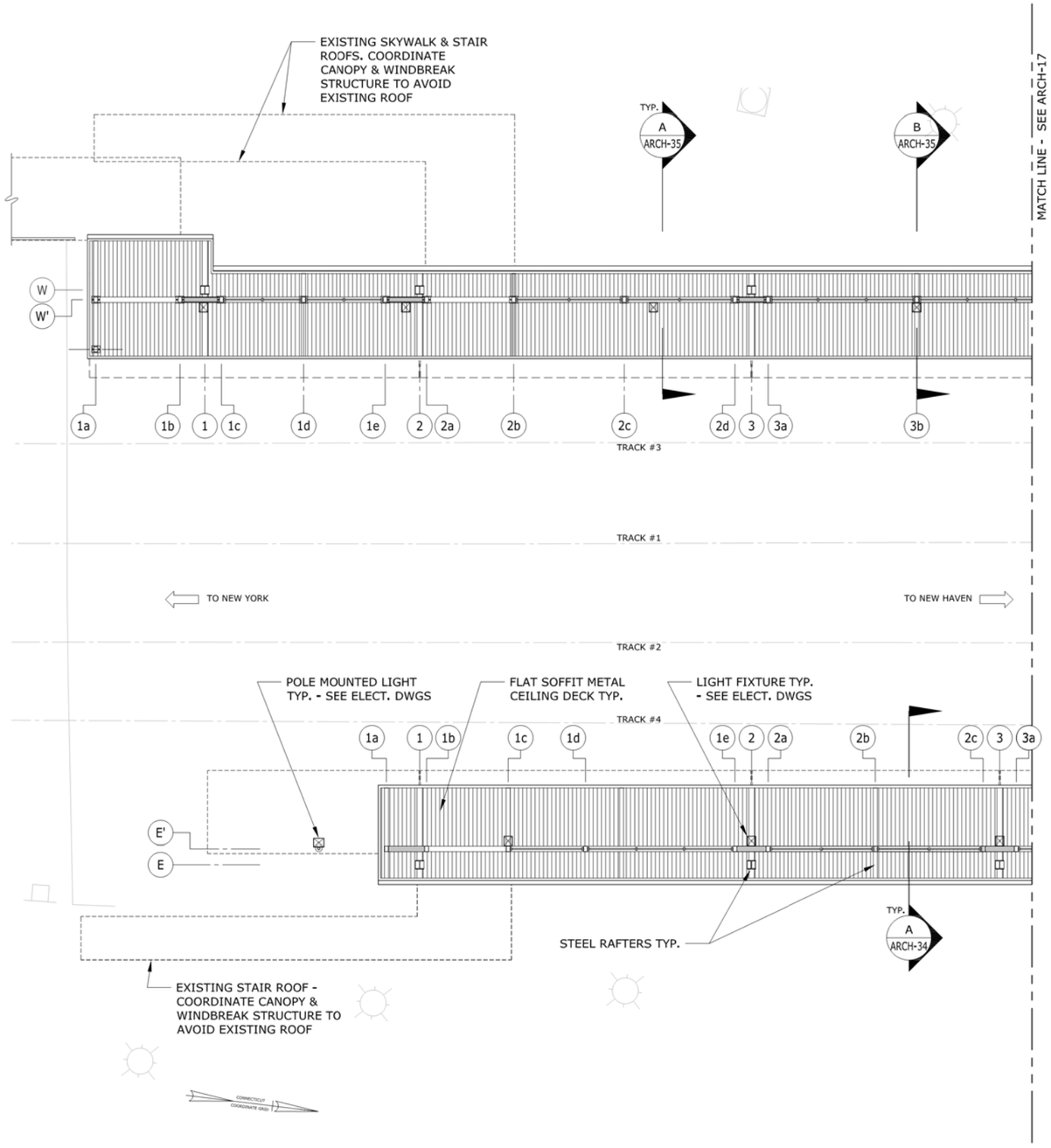

CANOPY REFLECTED CEILING PLAN - EAST & WEST PART 1

SCALE: 1/8" = 1'-0"

NOTES:
1. REFER TO ELECTRICAL DRAWINGS FOR VMS, SPEAKERS & SECURITY CAMERA LOCATIONS.

REV.	DATE	REVISION DESCRIPTION	SHEET NO.
-	-	-	-
-	-	-	-
-	-	-	-
-	-	-	-
-	-	-	-
-	-	-	-

THE INFORMATION, INCLUDING ESTIMATED QUANTITIES OF WORK, SHOWN ON THESE SHEETS IS BASED ON LIMITED INVESTIGATIONS BY THE STATE AND IS IN NO WAY WARRANTED TO INDICATE THE CONDITIONS OF ACTUAL QUANTITIES OF WORK WHICH WILL BE REQUIRED.

PLOTTED: 28-Mar-14

DESIGNER/DRAFTER: J. LEON
CHECKED BY: S. GARDNER
SCALE AS NOTED

STATE OF CONNECTICUT
DEPARTMENT OF TRANSPORTATION

FILENAME: FD_MST_ARC_0301_0155_ARCH-16.DWG

GREGG WIES & GARDNER ARCHITECTS, LLC

APPROVED BY: DATE: 03/28/14

PROJECT TITLE:
INSTALLATION OF CANOPY AT BRIDGEPORT STATION

TOWN: **BRIDGEPORT**

DRAWING TITLE: **CANOPY R.C.P. - EAST & WEST - PART 1**

PROJECT NO. **301-155**
DRAWING NO. **ARCH-16**
SHEET NO. **05.16**

G:\1224.00 Task Order - Bridgeport RR Canopies (Lochner)\1224 Drawings\FD_MST_ARC_0301_0155_ARCH-16.dwg, 3/28/2014 12:48:30 PM, jleon

Border Version: 10/1/09

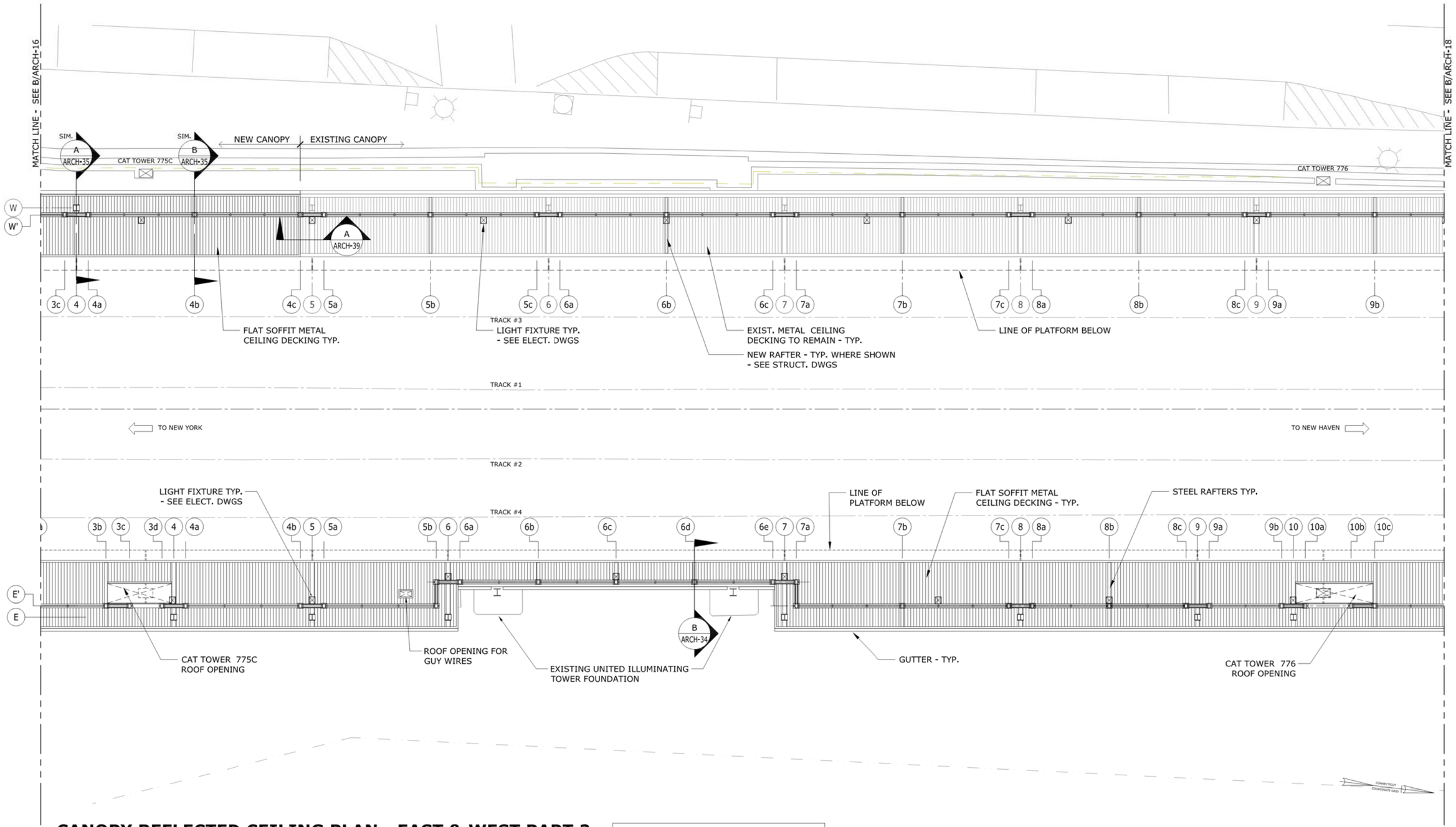

CANOPY REFLECTED CEILING PLAN - EAST & WEST PART 2

SCALE: 1/8" = 1'-0"

NOTES:
1. REFER TO ELECTRICAL DRAWINGS FOR VMS, SPEAKERS & SECURITY CAMERA LOCATIONS.

REV.	DATE	REVISION DESCRIPTION	SHEET NO.
-	-	-	-
-	-	-	-
-	-	-	-
-	-	-	-
-	-	-	-
-	-	-	-

THE INFORMATION, INCLUDING ESTIMATED QUANTITIES OF WORK, SHOWN ON THESE SHEETS IS BASED ON LIMITED INVESTIGATIONS BY THE STATE AND IS IN NO WAY WARRANTED TO INDICATE THE CONDITIONS OF ACTUAL QUANTITIES OF WORK WHICH WILL BE REQUIRED.

PLOTTED: 31-Mar-14

DESIGNER/DRAFTER: J. LEON
CHECKED BY: S. GARDNER
SCALE AS NOTED

STATE OF CONNECTICUT
DEPARTMENT OF TRANSPORTATION

FILENAME: FD_MST_ARC_0301_0155_ARCH-17.DWG

GREGG WIES & GARDNER ARCHITECTS, LLC

APPROVED BY: DATE: 03/28/14

PROJECT TITLE:
INSTALLATION OF CANOPY AT BRIDGEPORT STATION

TOWN: **BRIDGEPORT**

DRAWING TITLE: **CANOPY R.C.P. - EAST & WEST - PART 2**

PROJECT NO. **301-155**
DRAWING NO. **ARCH-17**
SHEET NO. **05.17**

G:\1224.00 Task Order - Bridgeport RR Canopies (Lochner)\1224 Drawings\FD_MST_ARC_0301_0155_ARCH-17.dwg, 3/31/2014 10:49:05 AM, jleon

Border Version: 10/1/09

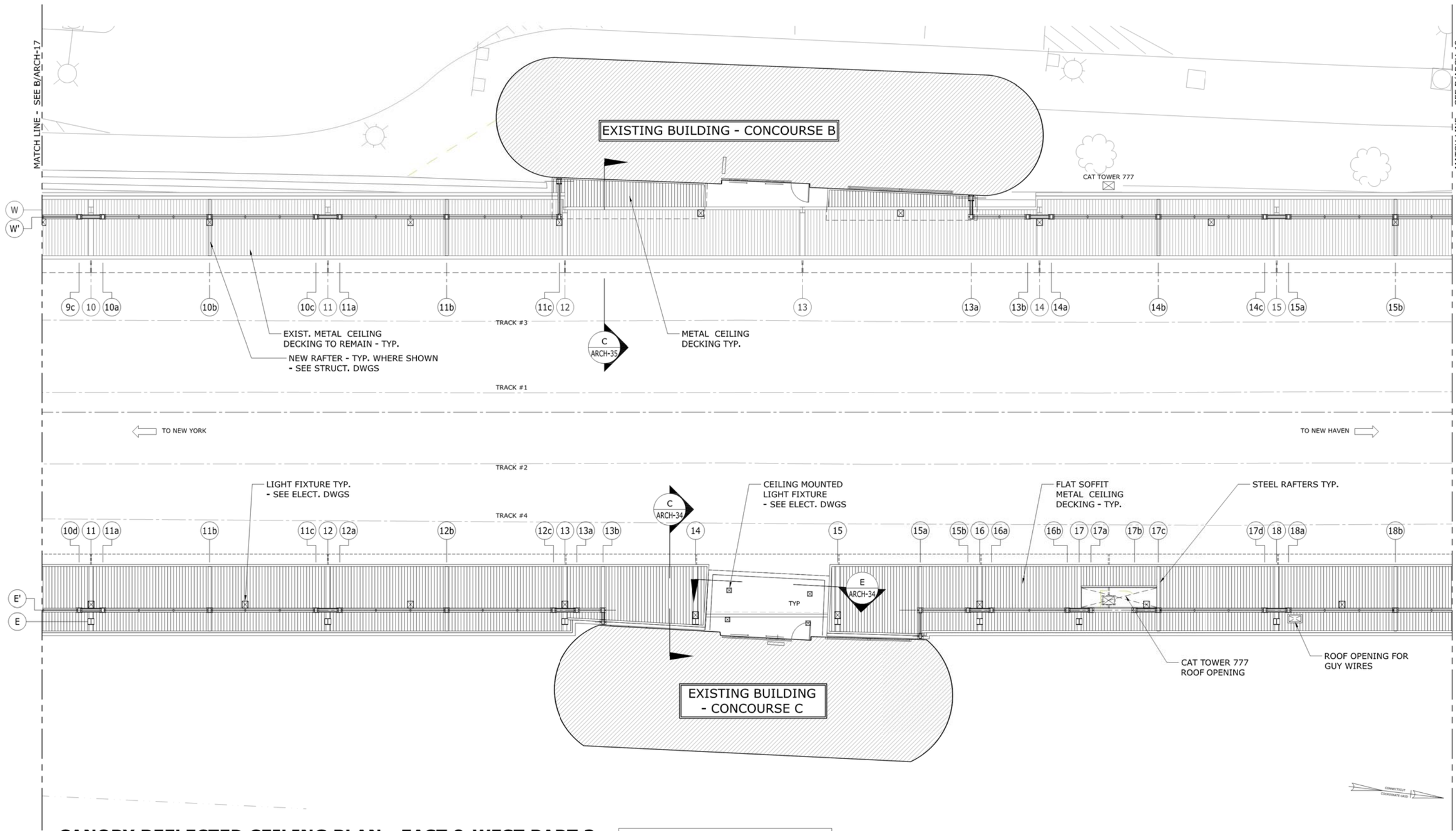

CANOPY REFLECTED CEILING PLAN - EAST & WEST PART 3

SCALE: 1/8" = 1'-0"

NOTES:
1. REFER TO ELECTRICAL DRAWINGS FOR VMS, SPEAKERS & SECURITY CAMERA LOCATIONS.

REV.	DATE	REVISION DESCRIPTION	SHEET NO.
-	-	-	-
-	-	-	-
-	-	-	-
-	-	-	-
-	-	-	-
	-	-	-

THE INFORMATION, INCLUDING ESTIMATED QUANTITIES OF WORK, SHOWN ON THESE SHEETS IS BASED ON LIMITED INVESTIGATIONS BY THE STATE AND IS IN NO WAY WARRANTED TO INDICATE THE CONDITIONS OF ACTUAL QUANTITIES OF WORK WHICH WILL BE REQUIRED.

PLOTTED: 31-Mar-14

DESIGNER/DRAFTER: J. LEON
CHECKED BY: S. GARDNER
SCALE AS NOTED

STATE OF CONNECTICUT
DEPARTMENT OF TRANSPORTATION

FILENAME: FD_MST_ARC_0301_0155_ARCH-18.DWG

GREGG WIES & GARDNER ARCHITECTS, LLC

APPROVED BY: DATE: 03/28/14

PROJECT TITLE:
INSTALLATION OF CANOPY AT BRIDGEPORT STATION

TOWN: **BRIDGEPORT**

DRAWING TITLE: **CANOPY R.C.P. - EAST & WEST - PART 3**

PROJECT NO. **301-155**
DRAWING NO. **ARCH-18**
SHEET NO. **05.18**

G:\11224.00 Task Order - Bridgeport RR Canopies (Lochner)\11224 Drawings\FD_MST_ARC_0301_0155_ARCH-18.dwg, 3/31/2014 10:47:55 AM, jleon

Border Version: 10/1/09

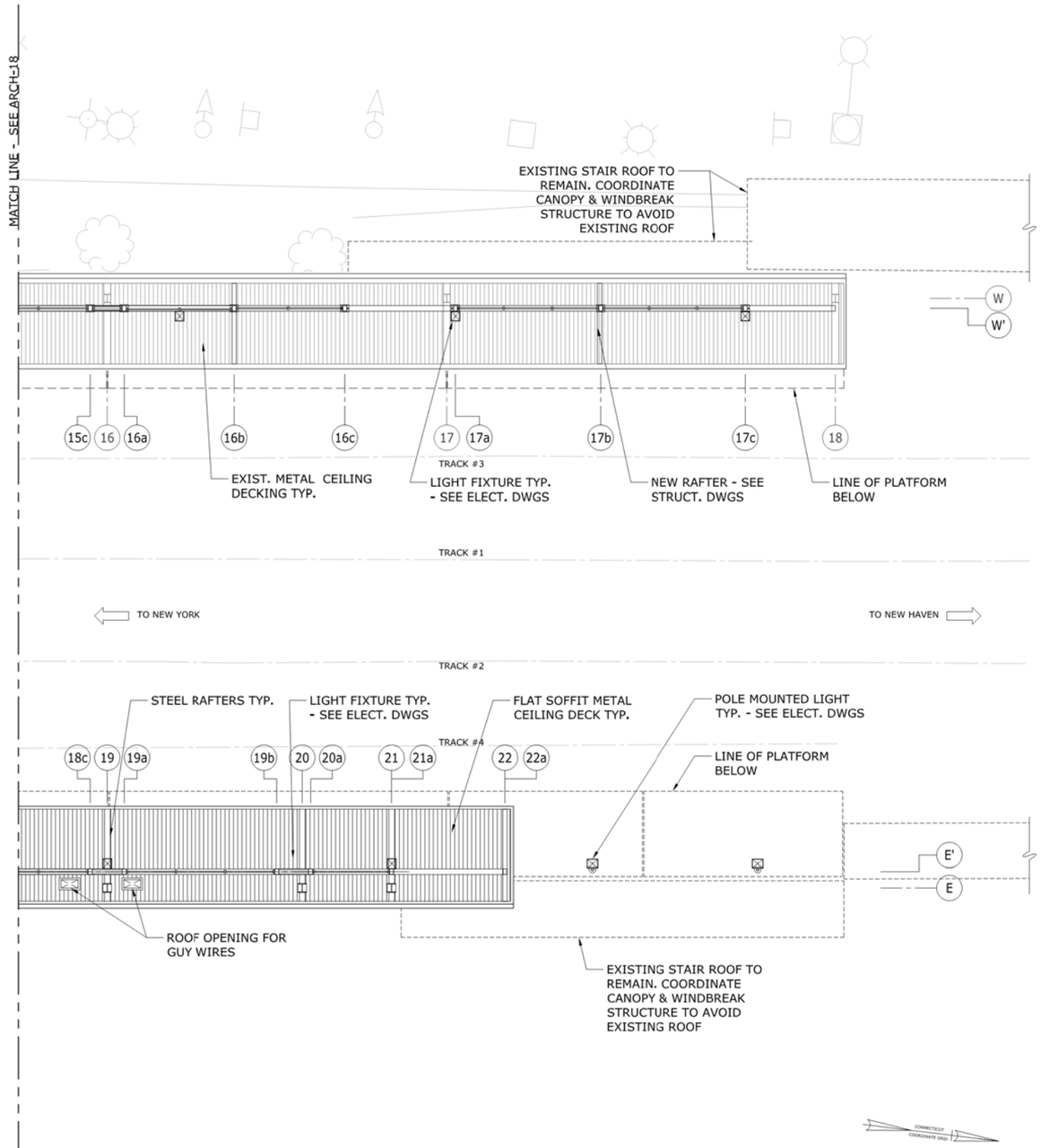

NOTES:
1. REFER TO ELECTRICAL DRAWINGS FOR VMS, SPEAKERS & SECURITY CAMERA LOCATIONS.

CANOPY REFLECTED CEILING PLAN - EAST & WEST PART 4

SCALE: 1/8" = 1'-0"

REV.	DATE	REVISION DESCRIPTION	SHEET NO.
-	-	-	-
-	-	-	-
-	-	-	-
-	-	-	-
-	-	-	-
-	-	-	-

THE INFORMATION, INCLUDING ESTIMATED QUANTITIES OF WORK, SHOWN ON THESE SHEETS IS BASED ON LIMITED INVESTIGATIONS BY THE STATE AND IS IN NO WAY WARRANTED TO INDICATE THE CONDITIONS OF ACTUAL QUANTITIES OF WORK WHICH WILL BE REQUIRED.

PLOTTED: 31-Mar-14

DESIGNER/DRAFTER: J. LEON
CHECKED BY: S. GARDNER
SCALE AS NOTED

STATE OF CONNECTICUT
DEPARTMENT OF TRANSPORTATION

FILENAME: FD_MST_ARC_0301_0155_ARCH-19.DWG

GREGG WIES & GARDNER ARCHITECTS, LLC

APPROVED BY: DATE: 03/28/14

PROJECT TITLE:
INSTALLATION OF CANOPY AT BRIDGEPORT STATION

TOWN: **BRIDGEPORT**

DRAWING TITLE: **CANOPY R.C.P. - EAST & WEST - PART 4**

PROJECT NO. **301-155**
DRAWING NO. **ARCH-19**
SHEET NO. **05.19**

G:\1224.00 Task Order - Bridgeport RR Canopies (Lochner)\1224 Drawings\FD_MST_ARC_0301_0155_ARCH-19.dwg, 3/31/2014 10:51:59 AM, jleon

Border Version: 10/1/09

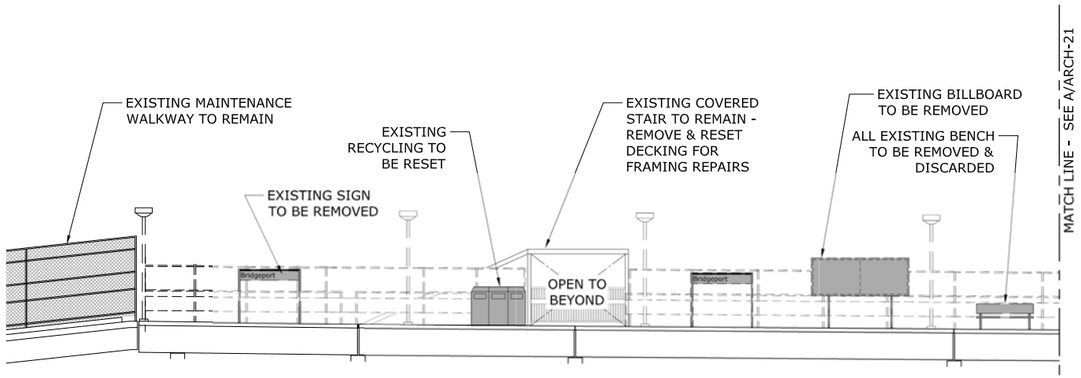

EXISTING ELEVATION AT EAST PLATFORM - PART 4 (A)

SCALE: 1/8" = 1'-0"

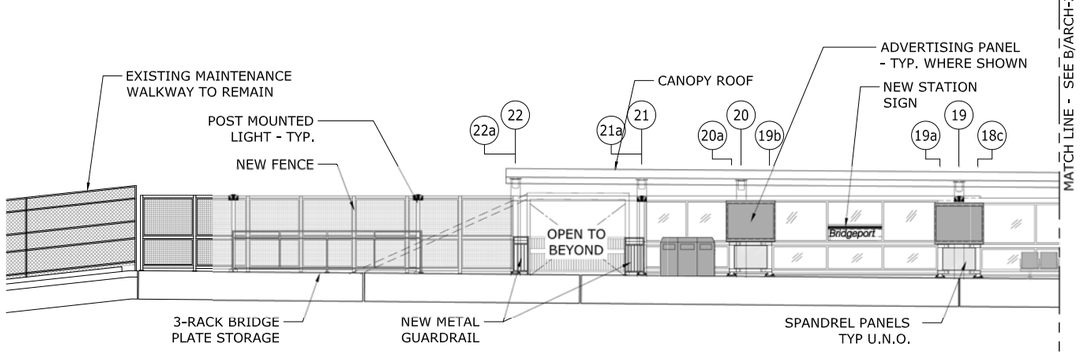

PROPOSED ELEVATION AT EAST PLATFORM - PART 4 (B)

SCALE: 1/8" = 1'-0"

REV.	DATE	REVISION DESCRIPTION	SHEET NO.
-	-	-	-
-	-	-	-
-	-	-	-
-	-	-	-
-	-	-	-
-	-	-	-

THE INFORMATION, INCLUDING ESTIMATED QUANTITIES OF WORK, SHOWN ON THESE SHEETS IS BASED ON LIMITED INVESTIGATIONS BY THE STATE AND IS IN NO WAY WARRANTED TO INDICATE THE CONDITIONS OF ACTUAL QUANTITIES OF WORK WHICH WILL BE REQUIRED.

PLOTTED: 31-Mar-14

DESIGNER/DRAFTER: J. LEON
CHECKED BY: S. GARDNER
SCALE AS NOTED

STATE OF CONNECTICUT
DEPARTMENT OF TRANSPORTATION

FILENAME: FD_MST_ARC_0301_0155_ARCH-20.DWG

GREGG WIES & GARDNER ARCHITECTS, LLC

APPROVED BY: DATE: 03/28/14

PROJECT TITLE:
INSTALLATION OF CANOPY AT BRIDGEPORT STATION

TOWN: **BRIDGEPORT**

DRAWING TITLE: **EXIST. & PROP. ELEV'S EAST PLATFORM - PART 4**

PROJECT NO. **301-155**
DRAWING NO. **ARCH-20**
SHEET NO. **05.20**

Border Version: 10/1/09

G:\1224.00 Task Order - Bridgeport RR Canopies (Lochner)\1224 Drawings\FD_MST_ARC_0301_0155_ARCH-20.dwg, 3/31/2014 9:32:01 AM, jleon

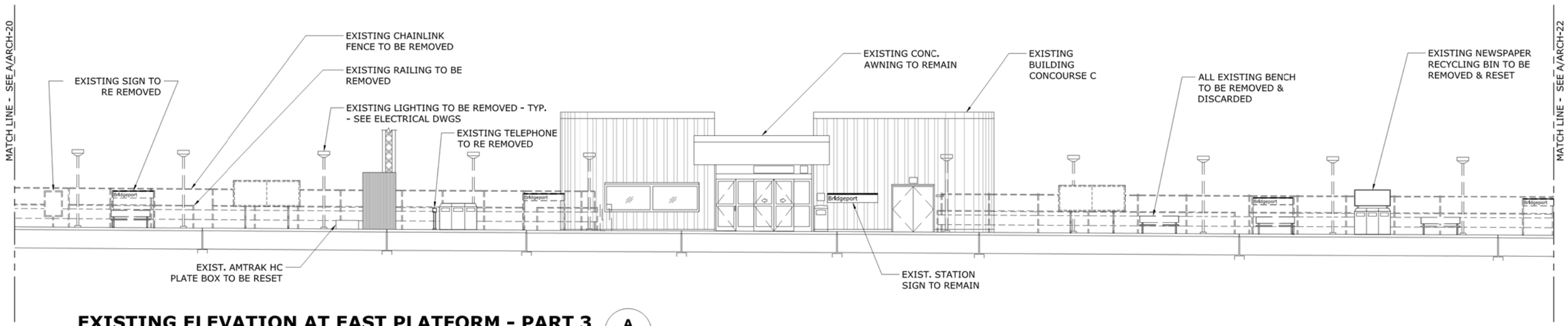

EXISTING ELEVATION AT EAST PLATFORM - PART 3 (A)

SCALE: 1/8" = 1'-0"

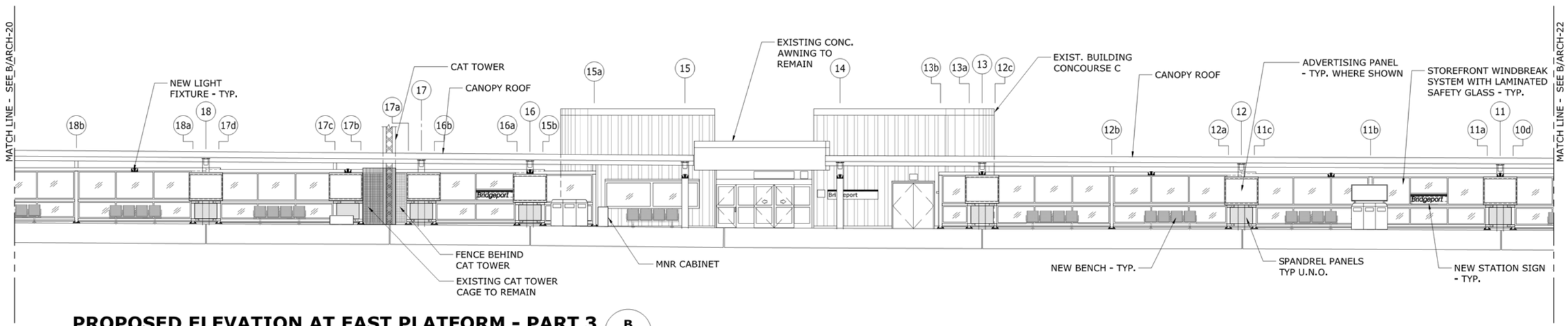

PROPOSED ELEVATION AT EAST PLATFORM - PART 3 (B)

SCALE: 1/8" = 1'-0"

REV.	DATE	REVISION DESCRIPTION	SHEET NO.
-	-	-	-
-	-	-	-
-	-	-	-
-	-	-	-
-	-	-	-
-	-	-	-

PLOTTED: 31-Mar-14

THE INFORMATION, INCLUDING ESTIMATED QUANTITIES OF WORK, SHOWN ON THESE SHEETS IS BASED ON LIMITED INVESTIGATIONS BY THE STATE AND IS IN NO WAY WARRANTED TO INDICATE THE CONDITIONS OF ACTUAL QUANTITIES OF WORK WHICH WILL BE REQUIRED.

DESIGNER/DRAFTER: J. LEON
CHECKED BY: S. GARDNER
SCALE AS NOTED

STATE OF CONNECTICUT
DEPARTMENT OF TRANSPORTATION

FILENAME: FD_MST_ARC_0301_0155_ARCH-21.DWG

GREGG WIES & GARDNER ARCHITECTS, LLC

APPROVED BY: DATE: 03/28/14

PROJECT TITLE:
INSTALLATION OF CANOPY AT BRIDGEPORT STATION

TOWN: **BRIDGEPORT**

DRAWING TITLE:
EXIST. & PROP. ELEV'S EAST PLATFORM - PART 3

PROJECT NO. **301-155**
DRAWING NO. **ARCH-21**
SHEET NO. **05.21**

Border Version: 10/1/09

G:\1224.00 Task Order - Bridgeport RR Canopies (Lochner)\1224 Drawings\FD_MST_ARC_0301_0155_ARCH-21.dwg, 3/31/2014 9:32:42 AM, jleon

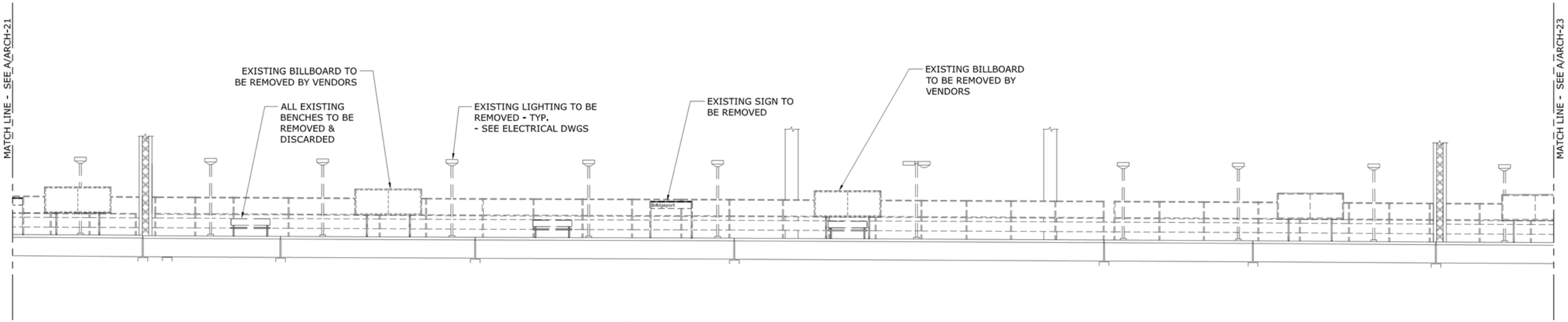

EXISTING ELEVATION AT EAST PLATFORM - PART 2 (A)

SCALE: 1/8" = 1'-0"

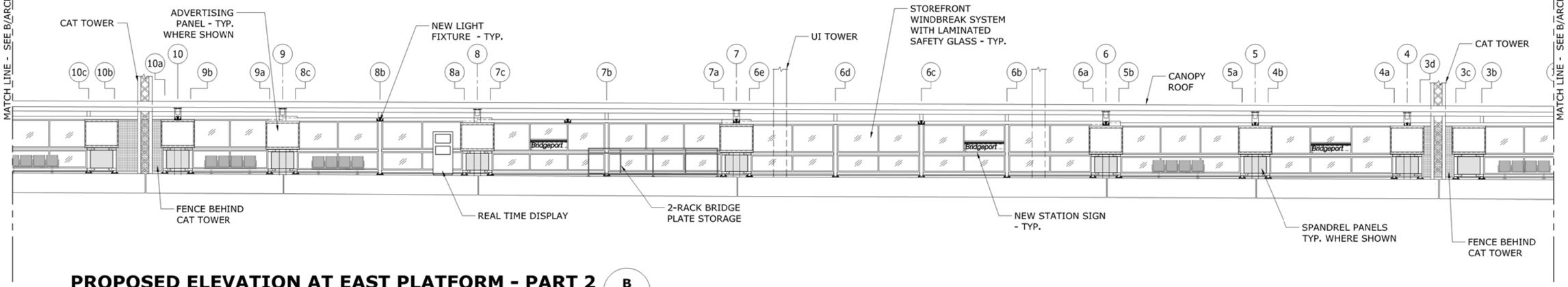

PROPOSED ELEVATION AT EAST PLATFORM - PART 2 (B)

SCALE: 1/8" = 1'-0"

REV.	DATE	REVISION DESCRIPTION	SHEET NO.
-	-	-	-
-	-	-	-
-	-	-	-
-	-	-	-
-	-	-	-
-	-	-	-

THE INFORMATION, INCLUDING ESTIMATED QUANTITIES OF WORK, SHOWN ON THESE SHEETS IS BASED ON LIMITED INVESTIGATIONS BY THE STATE AND IS IN NO WAY WARRANTED TO INDICATE THE CONDITIONS OF ACTUAL QUANTITIES OF WORK WHICH WILL BE REQUIRED.

PLOTTED: 28-Mar-14

DESIGNER/DRAFTER: J. LEON
CHECKED BY: S. GARDNER
SCALE AS NOTED

STATE OF CONNECTICUT
DEPARTMENT OF TRANSPORTATION

FILENAME: FD_MST_ARC_0301_0155_ARCH-22.DWG

GREGG WIES & GARDNER ARCHITECTS, LLC

APPROVED BY: DATE: 03/28/14

PROJECT TITLE:
INSTALLATION OF CANOPY AT BRIDGEPORT STATION

TOWN: **BRIDGEPORT**

DRAWING TITLE:
EXIST. & PROP. ELEV'S EAST PLATFORM - PART 2

PROJECT NO. **301-155**
DRAWING NO. **ARCH-22**
SHEET NO. **05.22**

G:\1224\00 Task Order - Bridgeport RR Canopies (Lochner)\1224 Drawings\FD_MST_ARC_0301_0155_ARCH-22.dwg, 3/28/2014 1:22:14 PM, jleon

Border Version: 10/1/09

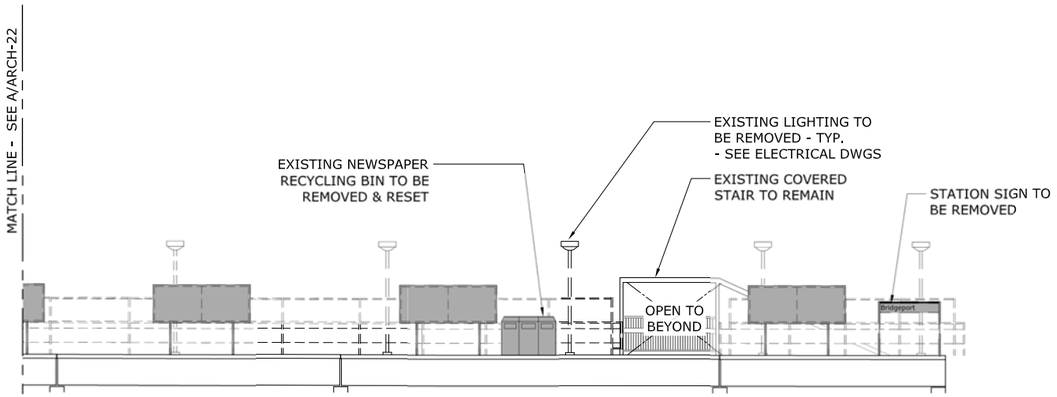

EXISTING ELEVATION AT EAST PLATFORM - PART 1

SCALE: 1/8" = 1'-0"

A

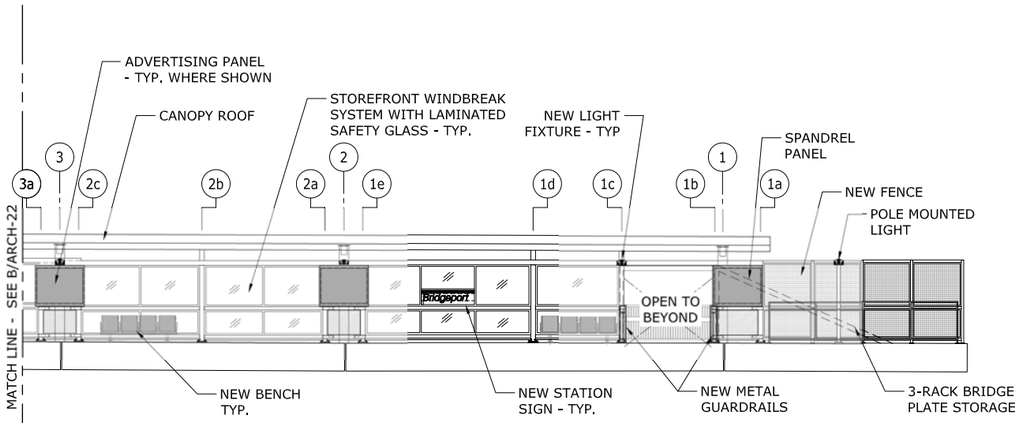

PROPOSED ELEVATION AT EAST PLATFORM - PART 1

SCALE: 1/8" = 1'-0"

B

REV.	DATE	REVISION DESCRIPTION	SHEET NO.
-	-	-	-
-	-	-	-
-	-	-	-
-	-	-	-
-	-	-	-
	-	-	-

THE INFORMATION, INCLUDING ESTIMATED QUANTITIES OF WORK, SHOWN ON THESE SHEETS IS BASED ON LIMITED INVESTIGATIONS BY THE STATE AND IS IN NO WAY WARRANTED TO INDICATE THE CONDITIONS OF ACTUAL QUANTITIES OF WORK WHICH WILL BE REQUIRED.

PLOTTED: 28-Mar-14

DESIGNER/DRAFTER: J. LEON
CHECKED BY: S. GARDNER
SCALE AS NOTED

STATE OF CONNECTICUT
DEPARTMENT OF TRANSPORTATION

FILENAME: FD_MST_ARC_0301_0155_ARCH-23.DWG

GREGG WIES & GARDNER ARCHITECTS, LLC

APPROVED BY: DATE: 03/28/14

PROJECT TITLE:
INSTALLATION OF CANOPY AT BRIDGEPORT STATION

TOWN: **BRIDGEPORT**

DRAWING TITLE: **EXIST. & PROP. ELEV'S EAST PLATFORM - PART 1**

PROJECT NO. **301-155**
DRAWING NO. **ARCH-23**
SHEET NO. **05.23**

G:\1224.00 Task Order - Bridgeport RR Canopies (Lochner)\1224 Drawings\FD_MST_ARC_0301_0155_ARCH-23.dwg, 3/28/2014 1:19:39 PM, jleon

Border Version: 10/1/09

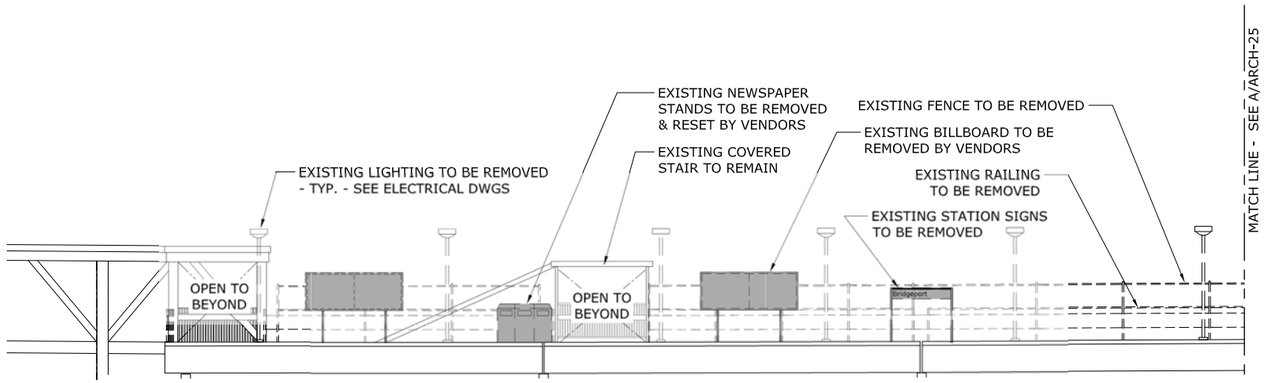

EXISTING ELEVATION AT WEST PLATFORM - PART 1

A

SCALE: 1/8" = 1'-0"

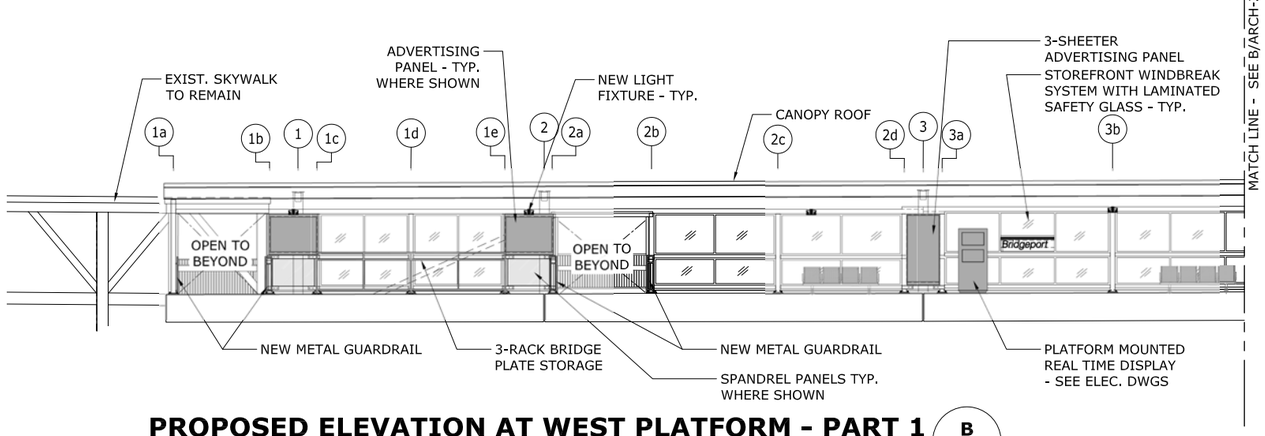

PROPOSED ELEVATION AT WEST PLATFORM - PART 1

B

SCALE: 1/8" = 1'-0"

REV.	DATE	REVISION DESCRIPTION	SHEET NO.
-	-	-	-
-	-	-	-
-	-	-	-
-	-	-	-
-	-	-	-
-	-	-	-

THE INFORMATION, INCLUDING ESTIMATED QUANTITIES OF WORK, SHOWN ON THESE SHEETS IS BASED ON LIMITED INVESTIGATIONS BY THE STATE AND IS IN NO WAY WARRANTED TO INDICATE THE CONDITIONS OF ACTUAL QUANTITIES OF WORK WHICH WILL BE REQUIRED.

PLOTTED: 28-Mar-14

DESIGNER/DRAFTER: J. LEON
CHECKED BY: S. GARDNER
SCALE AS NOTED

STATE OF CONNECTICUT
DEPARTMENT OF TRANSPORTATION

FILENAME: FD_MST_ARC_0301_0155_ARCH-24.DWG

GREGG WIES & GARDNER ARCHITECTS, LLC

APPROVED BY: DATE: 03/28/14

PROJECT TITLE:
INSTALLATION OF CANOPY AT BRIDGEPORT STATION

TOWN: **BRIDGEPORT**

DRAWING TITLE:
EXIST. & PROP. ELEV'S WEST PLATFORM - PART 4

PROJECT NO. **301-155**
DRAWING NO. **ARCH-24**
SHEET NO. **05.24**

G:\1224.00 Task Order - Bridgeport RR Canopies (Lochner)\1224 Drawings\FD_MST_ARC_0301_0155_ARCH-24.dwg, 3/28/2014 1:47:09 PM, jkron

Border Version: 10/1/09

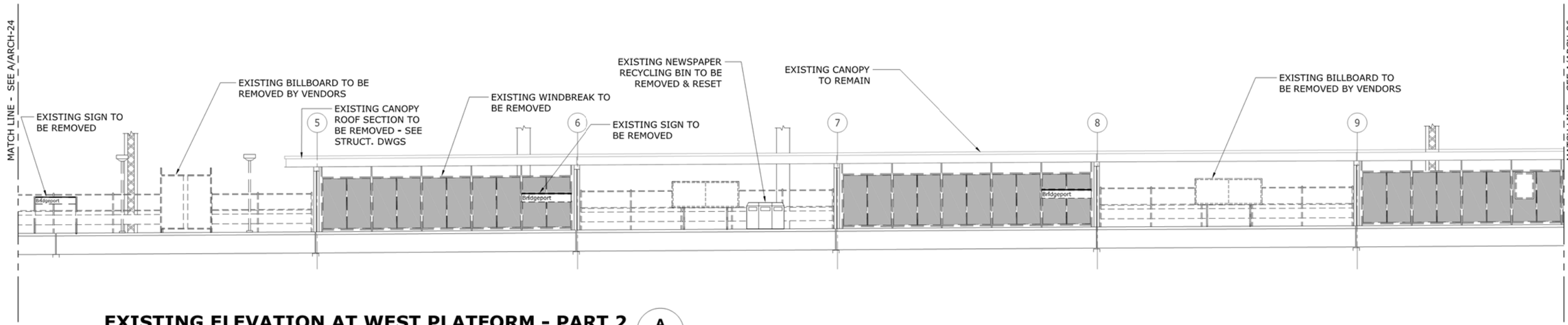

EXISTING ELEVATION AT WEST PLATFORM - PART 2 (A)

SCALE: 1/8" = 1'-0"

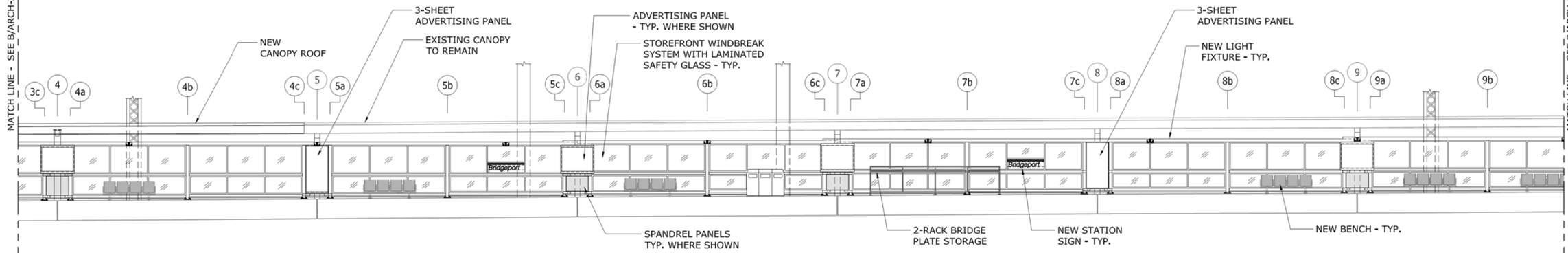

PROPOSED ELEVATION AT WEST PLATFORM - PART 2 (B)

SCALE: 1/8" = 1'-0"

REV.	DATE	REVISION DESCRIPTION	SHEET NO.
-	-	-	-
-	-	-	-
-	-	-	-
-	-	-	-
-	-	-	-
-	-	-	-

THE INFORMATION, INCLUDING ESTIMATED QUANTITIES OF WORK, SHOWN ON THESE SHEETS IS BASED ON LIMITED INVESTIGATIONS BY THE STATE AND IS IN NO WAY WARRANTED TO INDICATE THE CONDITIONS OF ACTUAL QUANTITIES OF WORK WHICH WILL BE REQUIRED.

PLOTTED: 28-Mar-14

DESIGNER/DRAFTER: J. LEON
CHECKED BY: S. GARDNER
SCALE AS NOTED

STATE OF CONNECTICUT
DEPARTMENT OF TRANSPORTATION

FILENAME: FD_MST_ARC_0301_0155_ARCH-25.DWG

GREGG WIES & GARDNER ARCHITECTS, LLC

APPROVED BY: DATE: 03/28/14

PROJECT TITLE:
INSTALLATION OF CANOPY AT BRIDGEPORT STATION

TOWN: **BRIDGEPORT**

DRAWING TITLE:
EXIST. & PROP. ELEV'S WEST PLATFORM - PART 2

PROJECT NO. **301-155**
DRAWING NO. **ARCH-25**
SHEET NO. **05.25**

G:\1224.00 Task Order - Bridgeport RR Canopies (Lochner)\1224 Drawings\FD_MST_ARC_0301_0155_ARCH-25.dwg, 3/28/2014 1:43:59 PM, jleon

Border Version: 10/1/09

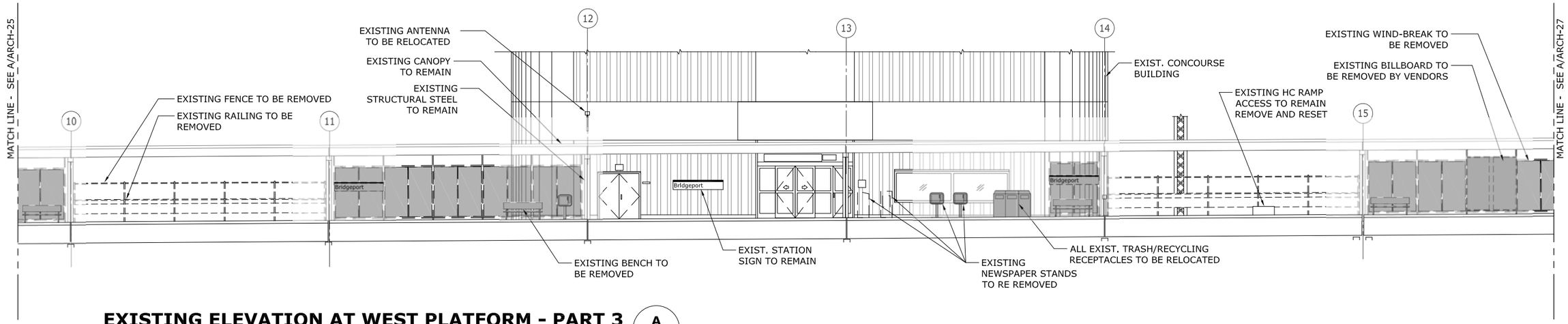

EXISTING ELEVATION AT WEST PLATFORM - PART 3 (A)

SCALE: 1/8" = 1'-0"

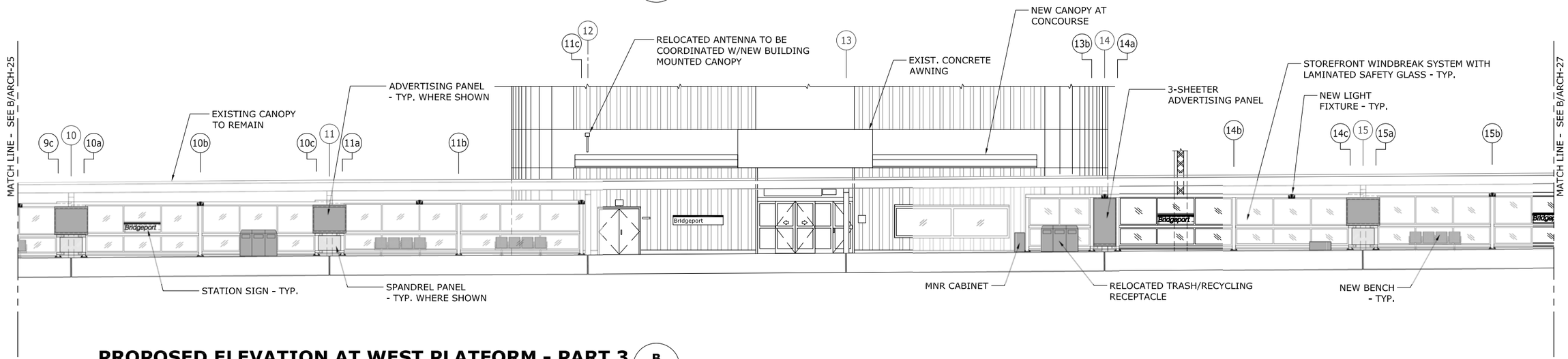

PROPOSED ELEVATION AT WEST PLATFORM - PART 3 (B)

SCALE: 1/8" = 1'-0"

REV.	DATE	REVISION DESCRIPTION	SHEET NO.
-	-	-	-
-	-	-	-
-	-	-	-
-	-	-	-
-	-	-	-
	-	-	-

THE INFORMATION, INCLUDING ESTIMATED QUANTITIES OF WORK, SHOWN ON THESE SHEETS IS BASED ON LIMITED INVESTIGATIONS BY THE STATE AND IS IN NO WAY WARRANTED TO INDICATE THE CONDITIONS OF ACTUAL QUANTITIES OF WORK WHICH WILL BE REQUIRED.

PLOTTED: 31-Mar-14

DESIGNER/DRAFTER: J. LEON
CHECKED BY: S. GARDNER
SCALE AS NOTED

STATE OF CONNECTICUT
DEPARTMENT OF TRANSPORTATION

FILENAME: FD_MST_ARC_0301_0155_ARCH-26.DWG

GREGG WIES & GARDNER ARCHITECTS, LLC

APPROVED BY: DATE: 03/28/14

PROJECT TITLE:
INSTALLATION OF CANOPY AT BRIDGEPORT STATION

TOWN: **BRIDGEPORT**

DRAWING TITLE:
EXIST. & PROP. ELEV'S WEST PLATFORM - PART 3

PROJECT NO. **301-155**
DRAWING NO. **ARCH-26**
SHEET NO. **05.26**

G:\1224.00 Task Order - Bridgeport RR Canopies (Lochner)\1224 Drawings\FD_MST_ARC_0301_0155_ARCH-26.dwg, 3/31/2014 9:33:27 AM, jleon

Border Version: 10/1/09

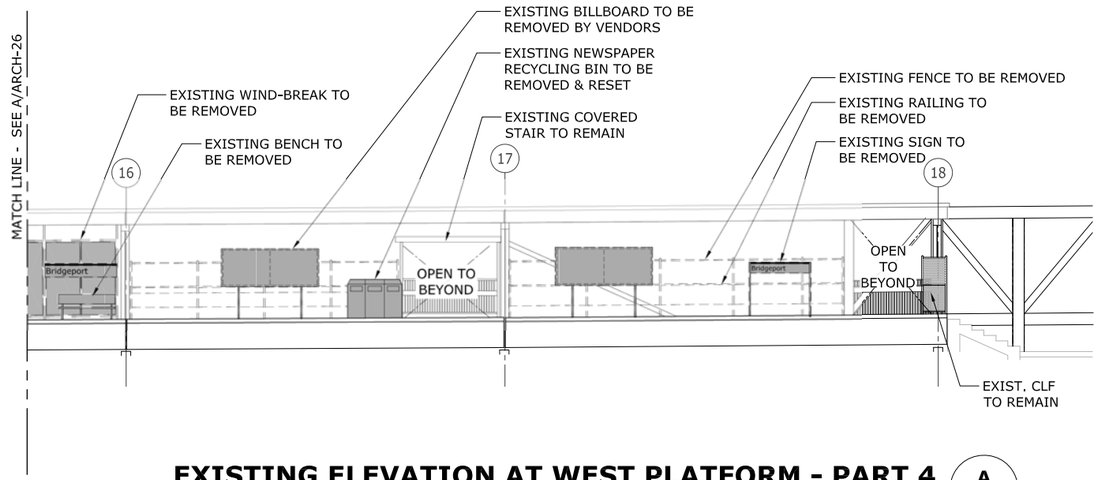

EXISTING ELEVATION AT WEST PLATFORM - PART 4

A

SCALE: 1/8" = 1'-0"

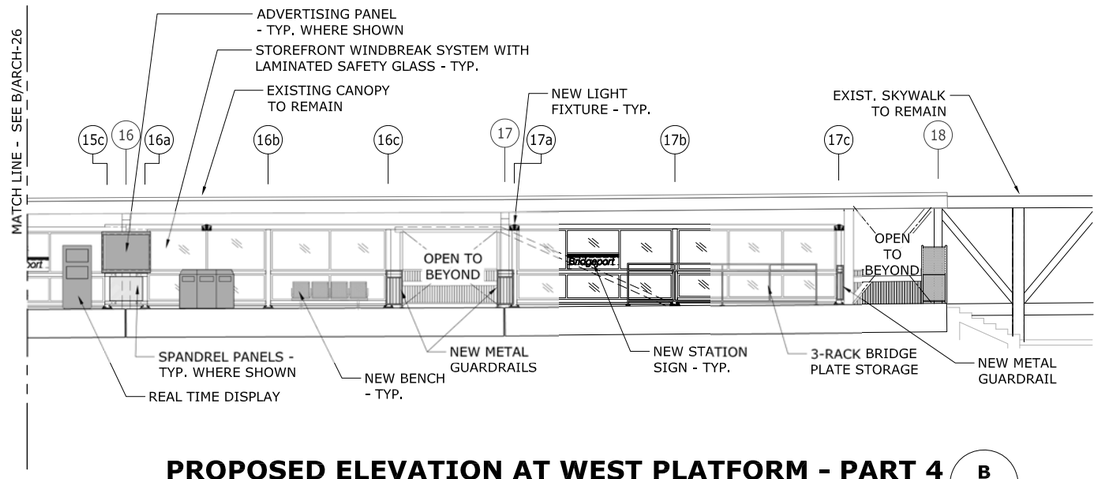

PROPOSED ELEVATION AT WEST PLATFORM - PART 4

B

SCALE: 1/8" = 1'-0"

REV.	DATE	REVISION DESCRIPTION	SHEET NO.
-	-	-	-
-	-	-	-
-	-	-	-
-	-	-	-
-	-	-	-
-	-	-	-

THE INFORMATION, INCLUDING ESTIMATED QUANTITIES OF WORK, SHOWN ON THESE SHEETS IS BASED ON LIMITED INVESTIGATIONS BY THE STATE AND IS IN NO WAY WARRANTED TO INDICATE THE CONDITIONS OF ACTUAL QUANTITIES OF WORK WHICH WILL BE REQUIRED.

PLOTTED: 31-Mar-14

DESIGNER/DRAFTER: J. LEON

CHECKED BY: S. GARDNER

SCALE AS NOTED

STATE OF CONNECTICUT
DEPARTMENT OF TRANSPORTATION

FILENAME: FD_MST_ARC_0301_0155_ARCH-27.DWG

GREGG WIES & GARDNER ARCHITECTS, LLC

APPROVED BY: DATE: 03/28/14

PROJECT TITLE:
INSTALLATION OF CANOPY AT BRIDGEPORT STATION

TOWN: **BRIDGEPORT**

DRAWING TITLE:
EXIST. & PROP. ELEV'S WEST PLATFORM - PART 4

PROJECT NO. **301-155**

DRAWING NO. **ARCH-27**

SHEET NO. **05.27**

G:\1224.00 Task Order - Bridgeport RR Canopies (Lochner)\1224 Drawings\FD_MST_ARC_0301_0155_ARCH-27.dwg, 3/31/2014 9:34:09 AM, jleon

Border Version: 10/1/09

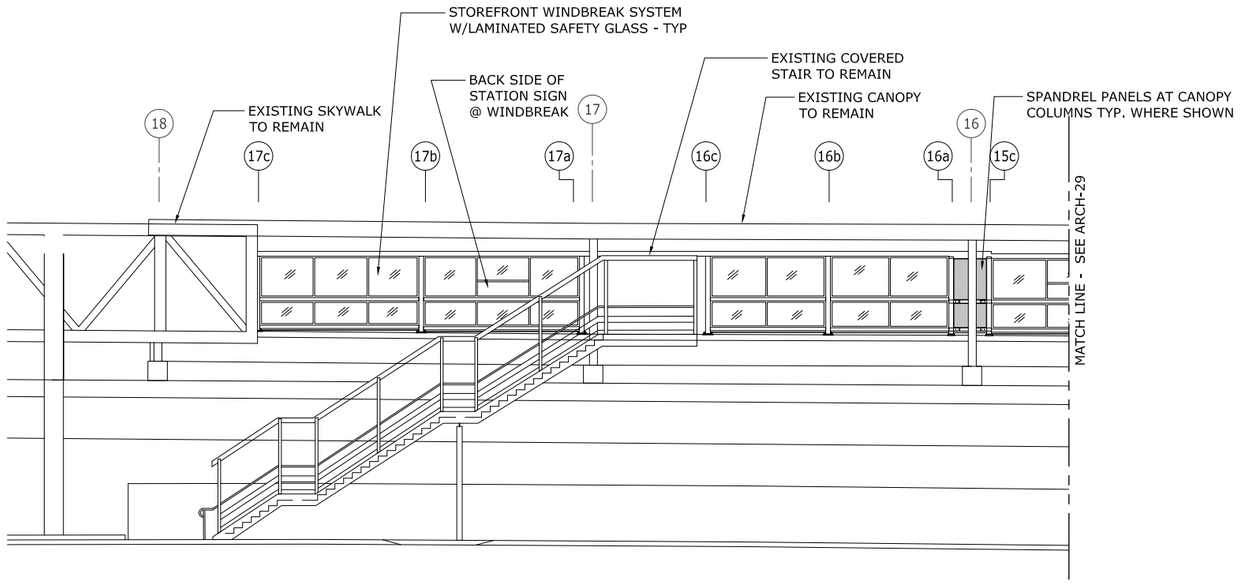

PROPOSED ELEVATION AT STREET VIEW - PART 4

SCALE: 1/8" = 1'-0"

NOTE: EXISTING SIGNAGE, STREET-SCAPING, LIGHTING, ETC. NOT SHOWN FOR CLARITY.

REV.	DATE	REVISION DESCRIPTION	SHEET NO.
-	-	-	-
-	-	-	-
-	-	-	-
-	-	-	-
-	-	-	-
-	-	-	-

THE INFORMATION, INCLUDING ESTIMATED QUANTITIES OF WORK, SHOWN ON THESE SHEETS IS BASED ON LIMITED INVESTIGATIONS BY THE STATE AND IS IN NO WAY WARRANTED TO INDICATE THE CONDITIONS OF ACTUAL QUANTITIES OF WORK WHICH WILL BE REQUIRED.

PLOTTED: 28-Mar-14

DESIGNER/DRAFTER: J. LEON
CHECKED BY: S. GARDNER
SCALE AS NOTED

STATE OF CONNECTICUT
DEPARTMENT OF TRANSPORTATION

FILENAME: FD_MST_ARC_0301_0155_ARCH-28.DWG

GREGG WIES & GARDNER ARCHITECTS, LLC

APPROVED BY: DATE: 03/28/14

PROJECT TITLE:
INSTALLATION OF CANOPY AT BRIDGEPORT STATION

TOWN: **BRIDGEPORT**

DRAWING TITLE:
PROPOSED ELEVATIONS STREET VIEW - PART 4

PROJECT NO. **301-155**
DRAWING NO. **ARCH-28**
SHEET NO. **05.28**

G:\1224.00 Task Order - Bridgeport RR Canopies (Lochner)\1224 Drawings\FD_MST_ARC_0301_0155_ARCH-28.dwg, 3/28/2014 1:08:23 PM, jleon

Border Version: 10/1/09

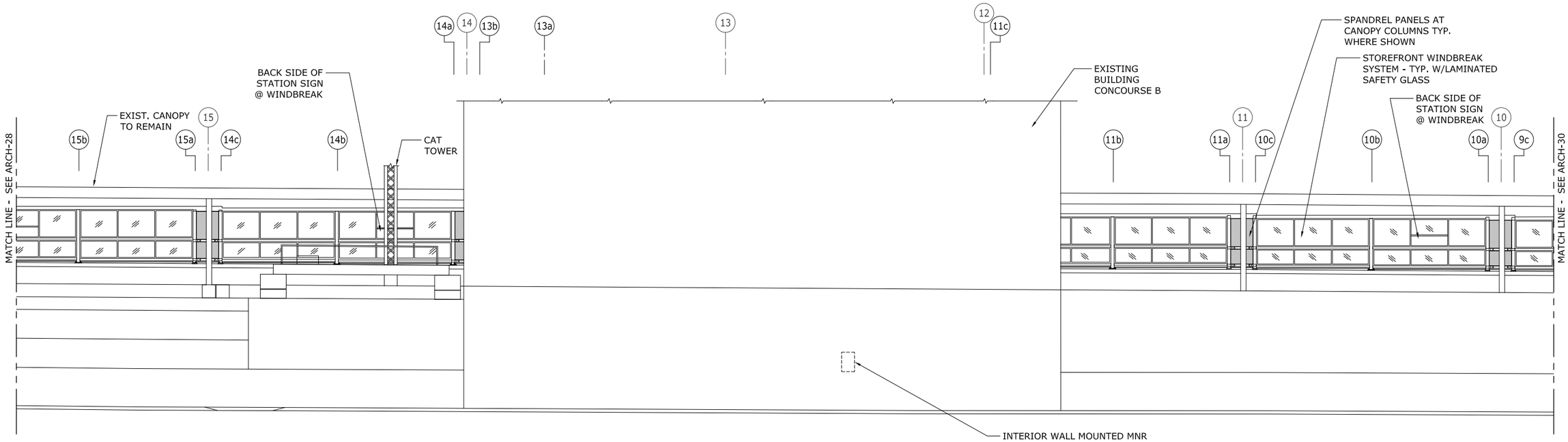

PROPOSED ELEVATION AT STREET VIEW - PART 3

SCALE: 1/8" = 1'-0"

NOTE: EXISTING SIGNAGE, STREET-SCAPING, LIGHTING, ETC. NOT SHOWN FOR CLARITY.

REV.	DATE	REVISION DESCRIPTION	SHEET NO.
-	-	-	-
-	-	-	-
-	-	-	-
-	-	-	-
-	-	-	-
-	-	-	-

THE INFORMATION, INCLUDING ESTIMATED QUANTITIES OF WORK, SHOWN ON THESE SHEETS IS BASED ON LIMITED INVESTIGATIONS BY THE STATE AND IS IN NO WAY WARRANTED TO INDICATE THE CONDITIONS OF ACTUAL QUANTITIES OF WORK WHICH WILL BE REQUIRED.

PLOTTED: 31-Mar-14

DESIGNER/DRAFTER: J. LEON

CHECKED BY: S. GARDNER

SCALE AS NOTED

STATE OF CONNECTICUT
DEPARTMENT OF TRANSPORTATION

FILENAME: FD_MST_ARC_0301_0155_ARCH-29.DWG

GREGG WIES & GARDNER ARCHITECTS, LLC

APPROVED BY: DATE: 03/28/14

PROJECT TITLE:
INSTALLATION OF CANOPY AT BRIDGEPORT STATION

TOWN: **BRIDGEPORT**

DRAWING TITLE:
PROPOSED ELEVATIONS STREET VIEW - PART 3

PROJECT NO. **301-155**

DRAWING NO. **ARCH-29**

SHEET NO. **05.29**

G:\1224.00 Task Order - Bridgeport RR Canopies (Lochner)\1224 Drawings\FD_MST_ARC_0301_0155_ARCH-29.dwg, 3/31/2014 4:06:37 PM, jleon

Border Version: 10/1/09

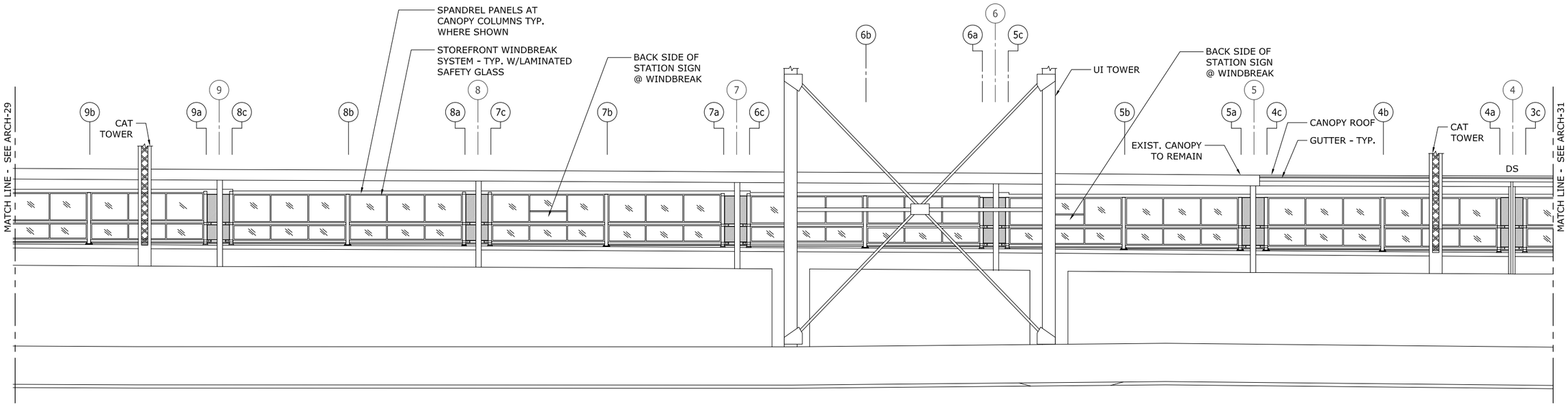

PROPOSED ELEVATION AT STREET VIEW - PART 2

SCALE: 1/8" = 1'-0"

NOTE: EXISTING SIGNAGE, STREET-SCAPING, LIGHTING, ETC. NOT SHOWN FOR CLARITY.

REV.	DATE	REVISION DESCRIPTION	SHEET NO.
-	-	-	-
-	-	-	-
-	-	-	-
-	-	-	-
-	-	-	-
-	-	-	-

THE INFORMATION, INCLUDING ESTIMATED QUANTITIES OF WORK, SHOWN ON THESE SHEETS IS BASED ON LIMITED INVESTIGATIONS BY THE STATE AND IS IN NO WAY WARRANTED TO INDICATE THE CONDITIONS OF ACTUAL QUANTITIES OF WORK WHICH WILL BE REQUIRED.

PLOTTED: 28-Mar-14

DESIGNER/DRAFTER: J. LEON

CHECKED BY: S. GARDNER

SCALE AS NOTED

STATE OF CONNECTICUT
DEPARTMENT OF TRANSPORTATION

FILENAME: FD_MST_ARC_0301_015S_ARCH-30.DWG

GREGG WIES & GARDNER ARCHITECTS, LLC

APPROVED BY: DATE: 03/28/14

PROJECT TITLE:
INSTALLATION OF CANOPY AT BRIDGEPORT STATION

TOWN: **BRIDGEPORT**

DRAWING TITLE:
PROPOSED ELEVATIONS STREET VIEW - PART 2

PROJECT NO. **301-155**

DRAWING NO. **ARCH-30**

SHEET NO. **05.30**

G:\1224.00 Task Order - Bridgeport RR Canopies (Lochner)\1224 Drawings\FD_MST_ARC_0301_015S_ARCH-30.dwg, 3/28/2014 1:06:52 PM, jleon

Border Version: 10/1/09

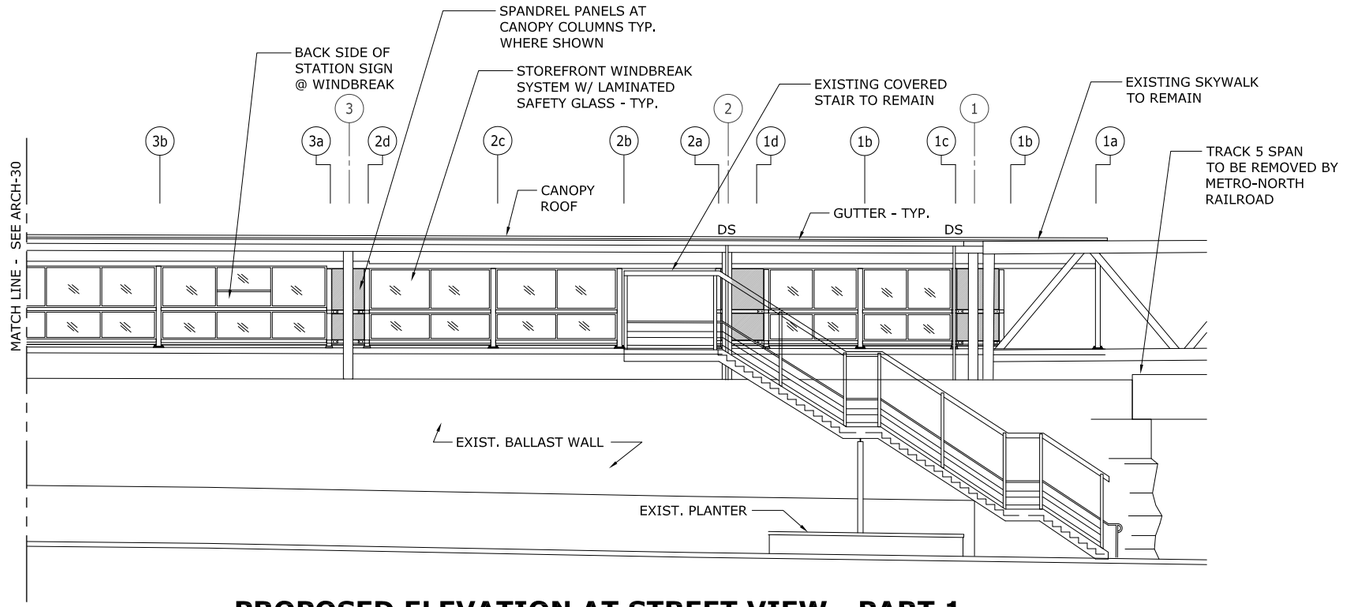

PROPOSED ELEVATION AT STREET VIEW - PART 1

SCALE: 1/8" = 1'-0"

NOTE: EXISTING SIGNAGE, STREET-SCAPING, LIGHTING, ETC. NOT SHOWN FOR CLARITY.

REV.	DATE	REVISION DESCRIPTION	SHEET NO.
-	-	-	-
-	-	-	-
-	-	-	-
-	-	-	-
-	-	-	-
-	-	-	-

THE INFORMATION, INCLUDING ESTIMATED QUANTITIES OF WORK, SHOWN ON THESE SHEETS IS BASED ON LIMITED INVESTIGATIONS BY THE STATE AND IS IN NO WAY WARRANTED TO INDICATE THE CONDITIONS OF ACTUAL QUANTITIES OF WORK WHICH WILL BE REQUIRED.

PLOTTED: 28-Mar-14

DESIGNER/DRAFTER: J. LEON
CHECKED BY: S. GARDNER
SCALE AS NOTED

STATE OF CONNECTICUT
DEPARTMENT OF TRANSPORTATION

FILENAME: FD_MST_ARC_0301_0155_ARCH-31.DWG

GREGG WIES & GARDNER ARCHITECTS, LLC

APPROVED BY: DATE: 03/28/14

PROJECT TITLE:
INSTALLATION OF CANOPY AT BRIDGEPORT STATION

TOWN: **BRIDGEPORT**

DRAWING TITLE:
PROPOSED ELEVATIONS STREET VIEW - PART 1

PROJECT NO. **301-155**
DRAWING NO. **ARCH-31**
SHEET NO. **05.31**

G:\1224.00 Task Order - Bridgeport RR Canopies (Lochner)\1224 Drawings\FD_MST_ARC_0301_0155_ARCH-31.dwg, 3/28/2014 1:06:19 PM, jleon

Border Version: 10/1/09

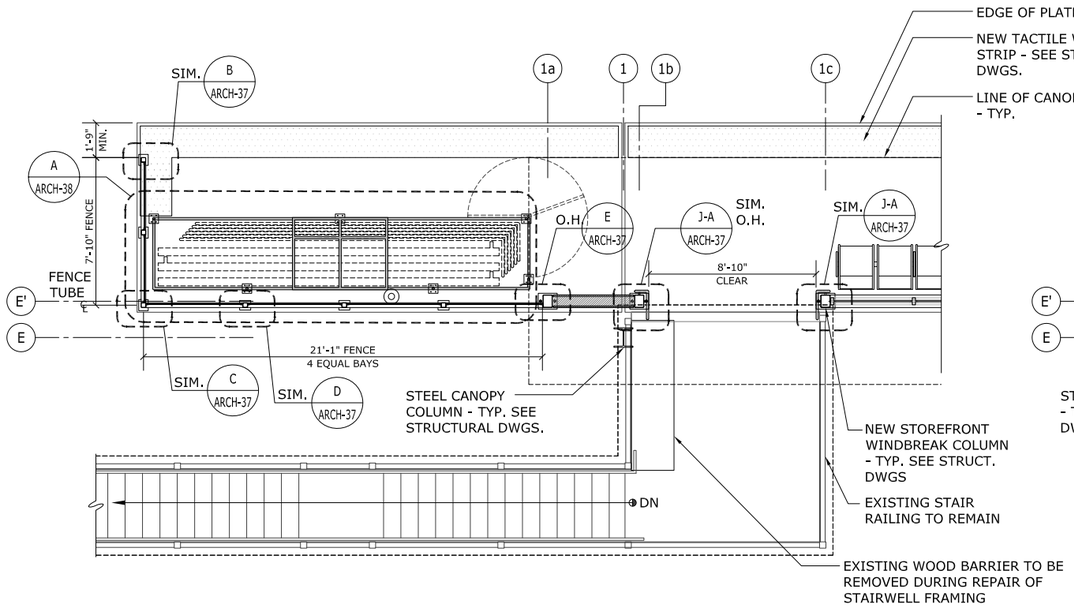

PLAN DETAIL AT SOUTHEAST STAIR

SCALE: 1/4" = 1'-0"

A ARCH-8

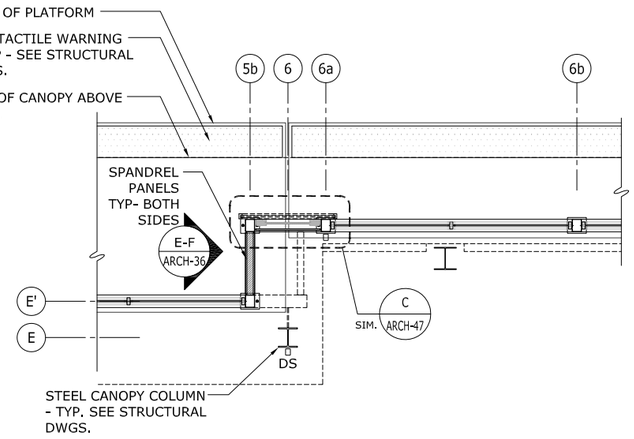

PLAN DETAIL AT U.I. TOWER

SCALE: 1/4" = 1'-0"

B ARCH-9

* SIMILAR DETAIL AT COLUMN LINE 7

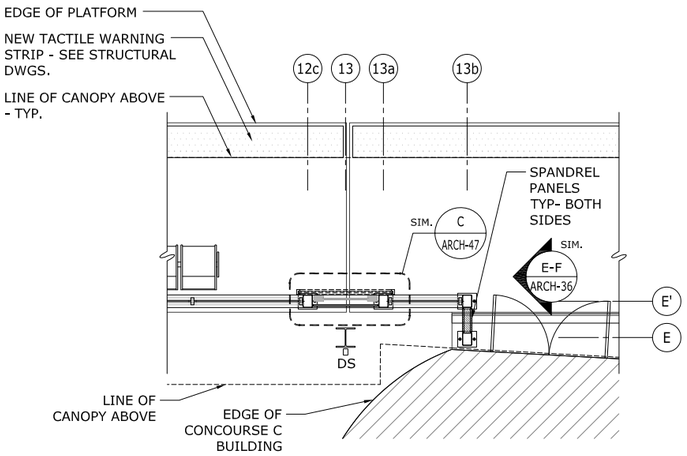

PLAN DETAIL AT BUILDING CONCOURSE C

SCALE: 1/4" = 1'-0"

C ARCH-10

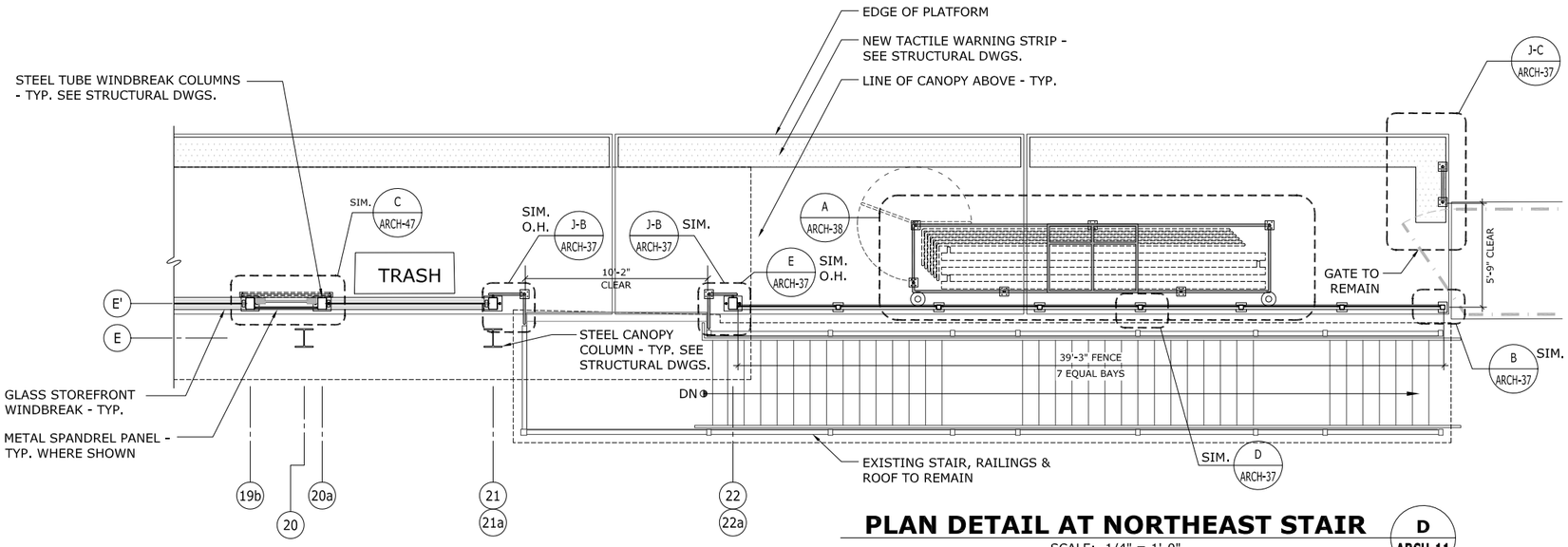

PLAN DETAIL AT NORTHEAST STAIR

SCALE: 1/4" = 1'-0"

D ARCH-11

REV.	DATE	REVISION DESCRIPTION	SHEET NO.
-	-	-	-
-	-	-	-
-	-	-	-
-	-	-	-
-	-	-	-
-	-	-	-

THE INFORMATION, INCLUDING ESTIMATED QUANTITIES OF WORK, SHOWN ON THESE SHEETS IS BASED ON LIMITED INVESTIGATIONS BY THE STATE AND IS IN NO WAY WARRANTED TO INDICATE THE CONDITIONS OF ACTUAL QUANTITIES OF WORK WHICH WILL BE REQUIRED.

PLOTTED: 28-Mar-14

DESIGNER/DRAFTER: J. LEON
CHECKED BY: S. GARDNER
SCALE AS NOTED

STATE OF CONNECTICUT
DEPARTMENT OF TRANSPORTATION

FILENAME: FD_MST_ARC_0301_0155_ARCH-32.DWG

GREGG WIES & GARDNER ARCHITECTS, LLC

APPROVED BY: DATE: 03/28/14

PROJECT TITLE:
INSTALLATION OF CANOPY AT BRIDGEPORT STATION

TOWN: **BRIDGEPORT**

DRAWING TITLE: **EAST PLATFORM PLAN DETAILS**

PROJECT NO. **301-155**
DRAWING NO. **ARCH-32**
SHEET NO. **05.32**

G:\1224.00 Task Order - Bridgeport RR Canopies (Lochner)\1224 Drawings\FD_MST_ARC_0301_0155_ARCH-32.dwg, 3/28/2014 2:00:33 PM, jkeon

Border Version: 10/1/09

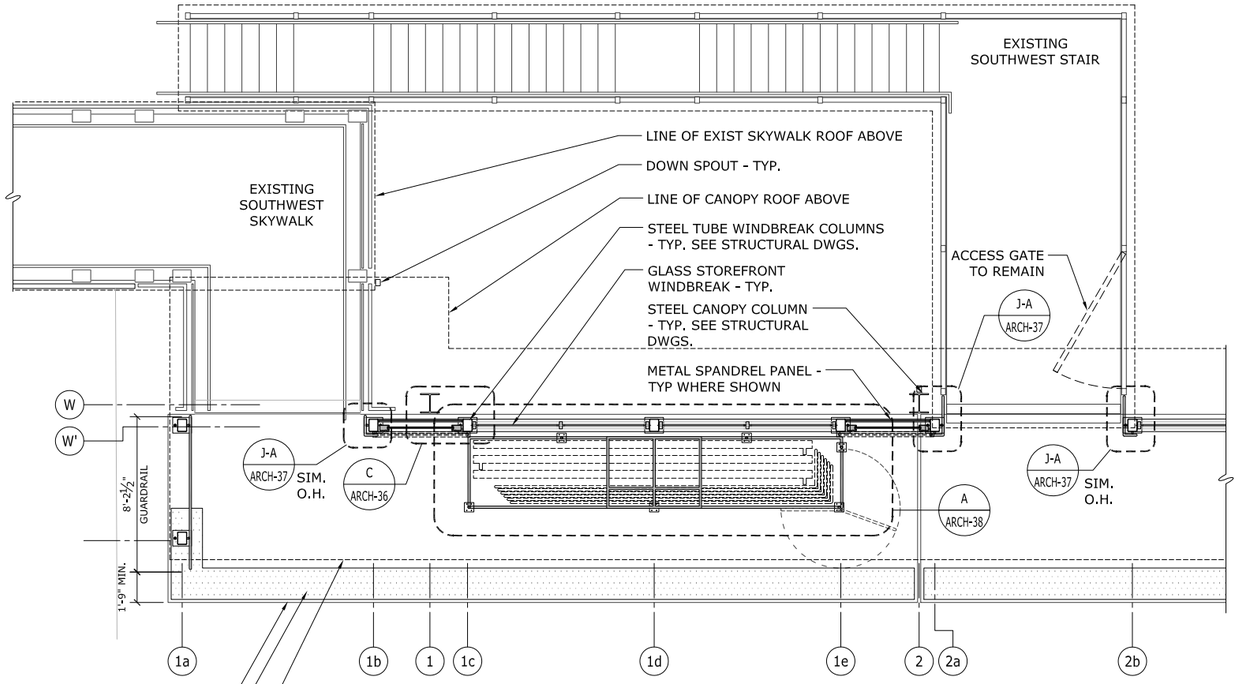

PLAN DETAIL AT SOUTHWEST STAIR & SKYWALK

SCALE: 1/4" = 1'-0"

A ARCH-8

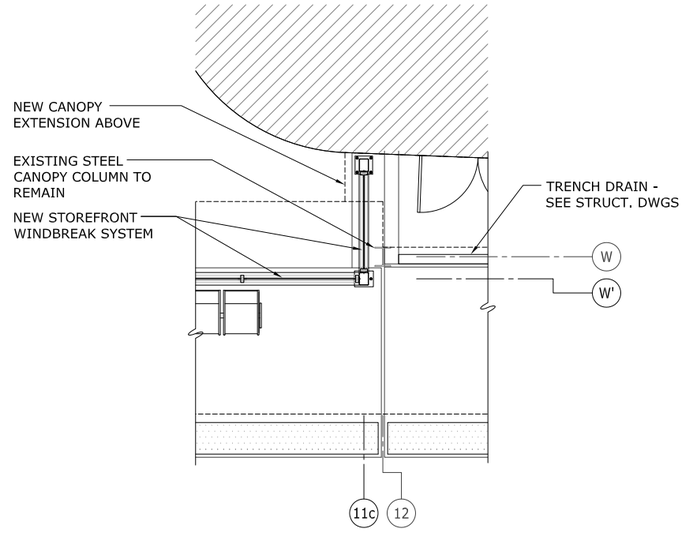

PLAN DETAIL AT BUILDING CONCOUSE B

SCALE: 1/4" = 1'-0"

B ARCH-10

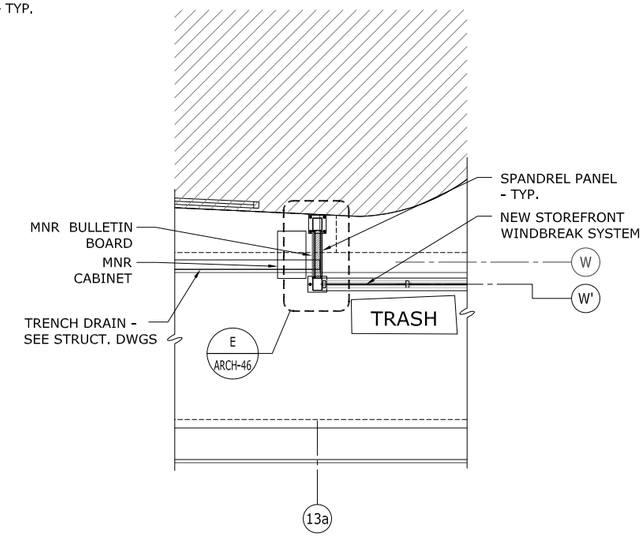

PLAN DETAIL AT BUILDING CONCOUSE B

SCALE: 1/4" = 1'-0"

D ARCH-10

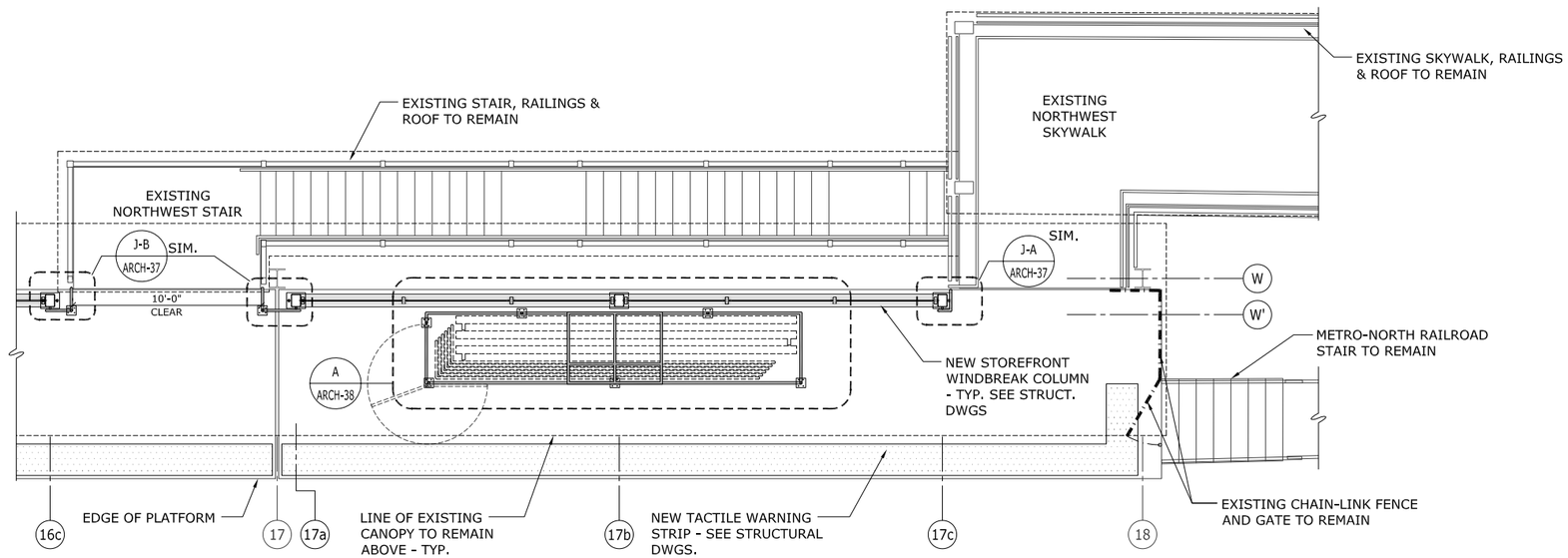

PLAN DETAIL AT NORTHWEST STAIR & SKYWALK

SCALE: 1/4" = 1'-0"

C ARCH-11

REV.	DATE	REVISION DESCRIPTION	SHEET NO.
-	-	-	-
-	-	-	-
-	-	-	-
-	-	-	-
-	-	-	-
-	-	-	-

THE INFORMATION, INCLUDING ESTIMATED QUANTITIES OF WORK, SHOWN ON THESE SHEETS IS BASED ON LIMITED INVESTIGATIONS BY THE STATE AND IS IN NO WAY WARRANTED TO INDICATE THE CONDITIONS OF ACTUAL QUANTITIES OF WORK WHICH WILL BE REQUIRED.

PLOTTED: 28-Mar-14

DESIGNER/DRAFTER: J. LEON
CHECKED BY: S. GARDNER
SCALE AS NOTED

STATE OF CONNECTICUT
DEPARTMENT OF TRANSPORTATION

FILENAME: FD_MST_ARC_0301_0155_ARCH-33.DWG

GREGG WIES & GARDNER ARCHITECTS, LLC

APPROVED BY: DATE: 03/28/14

PROJECT TITLE:
INSTALLATION OF CANOPY AT BRIDGEPORT STATION

TOWN: **BRIDGEPORT**

DRAWING TITLE: **WEST PLATFORM PLAN DETAILS**

PROJECT NO. **301-155**
DRAWING NO. **ARCH-33**
SHEET NO. **05.33**

G:\1224.00 Task Order - Bridgeport RR Canopies (Lochner)\1224 Drawings\FD_MST_ARC_0301_0155_ARCH-33.dwg, 3/28/2014 3:09:17 PM, jleon

Border Version: 10/1/09

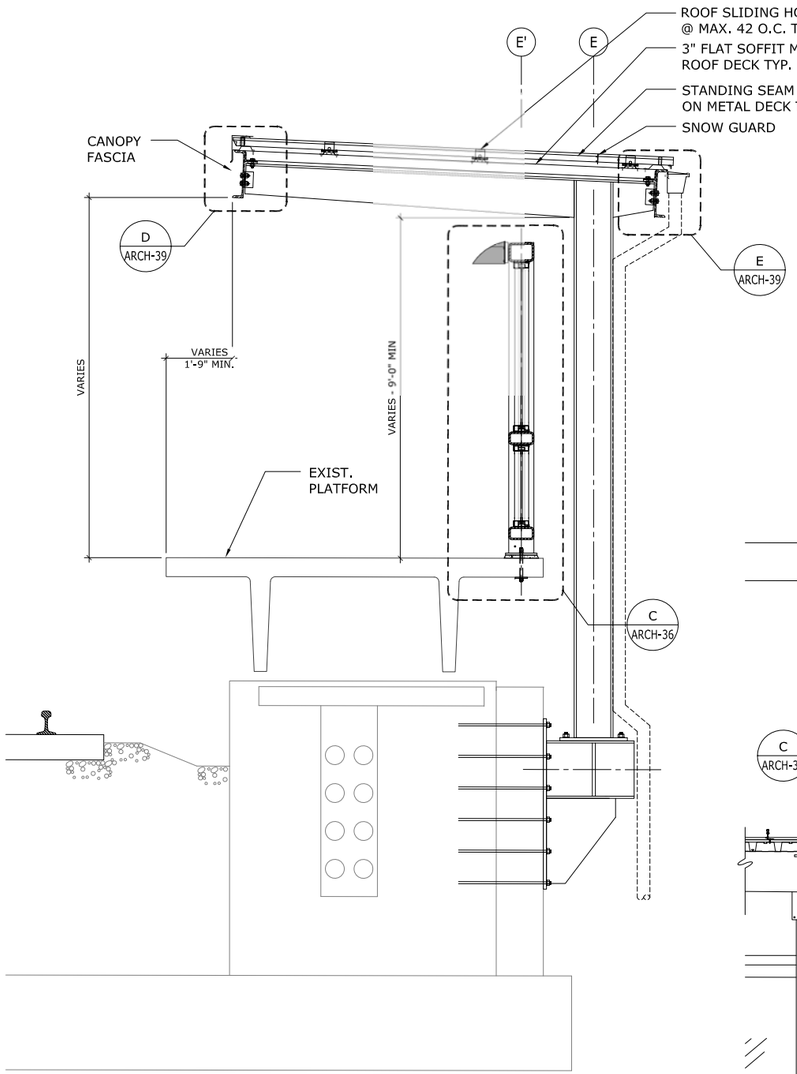

TYP. CANOPY SECTION

1/2" = 1'-0"

A ARCH-8 | A ARCH-12 | A ARCH-16

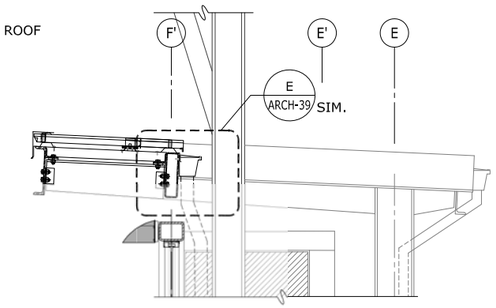

CANOPY SECTION AT UI TOWER

1/2" = 1'-0"

B ARCH-9 | B ARCH-13

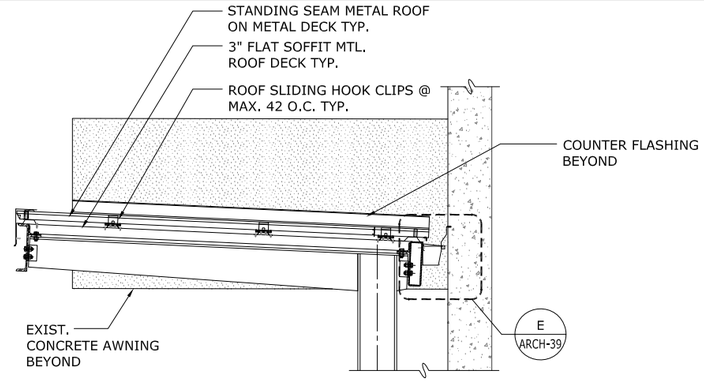

CANOPY SECTION @ CONCOURSE BUILDING

1/2" = 1'-0"

C ARCH-10 | C ARCH-14 | C ARCH-18

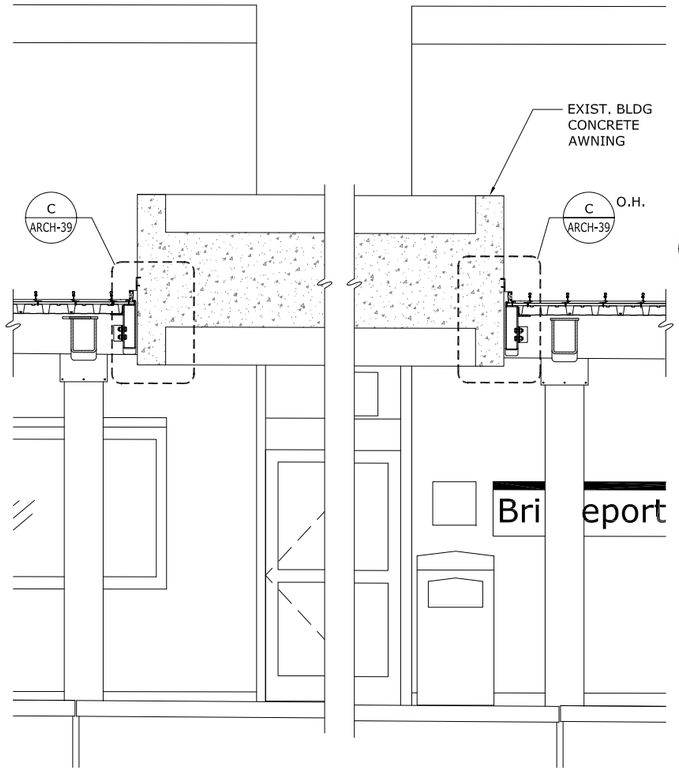

CANOPY SECTION @ EXIST. CONCRETE AWNING

1/2" = 1'-0"

E ARCH-10 | E ARCH-18

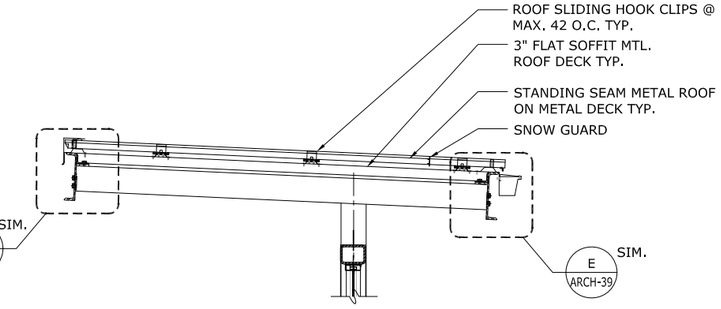

CANOPY SECTION @ WINDBREAK

1/2" = 1'-0"

D

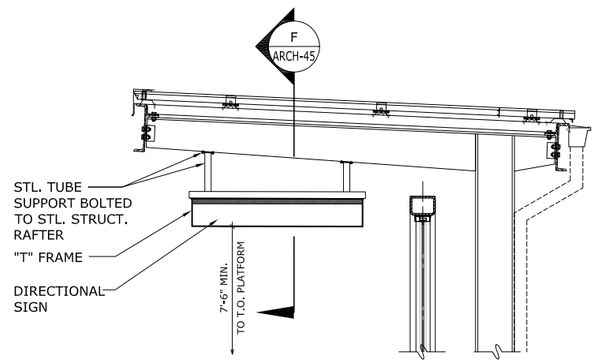

CANOPY SECTION @ WAYFINDING SIGNAGE

1/2" = 1'-0"

E

REV.	DATE	REVISION DESCRIPTION	SHEET NO.
-	-	-	-
-	-	-	-
-	-	-	-
-	-	-	-
-	-	-	-
-	-	-	-

THE INFORMATION, INCLUDING ESTIMATED QUANTITIES OF WORK, SHOWN ON THESE SHEETS IS BASED ON LIMITED INVESTIGATIONS BY THE STATE AND IS IN NO WAY WARRANTED TO INDICATE THE CONDITIONS OF ACTUAL QUANTITIES OF WORK WHICH WILL BE REQUIRED.

PLOTTED: 28-Mar-14

DESIGNER/DRAFTER: J. LEON
CHECKED BY: S. GARDNER
SCALE AS NOTED

STATE OF CONNECTICUT
DEPARTMENT OF TRANSPORTATION

FILENAME: FD_MST_ARC_0301_0155_ARCH-34.DWG

GREGG WIES & GARDNER ARCHITECTS, LLC

APPROVED BY: DATE: 03/28/14

PROJECT TITLE:
INSTALLATION OF CANOPY AT BRIDGEPORT STATION

TOWN: **BRIDGEPORT**

DRAWING TITLE: **EAST CANOPY & PLATFORM SECTIONS**

PROJECT NO. **301-155**
DRAWING NO. **ARCH-34**
SHEET NO. **05.34**

G:\1224.00 Task Order - Bridgeport RR Canopies (Lochner)\1224 Drawings\FD_MST_ARC_0301_0155_ARCH-34.dwg, 3/28/2014 2:08:38 PM, jleon

Border Version: 10/1/09

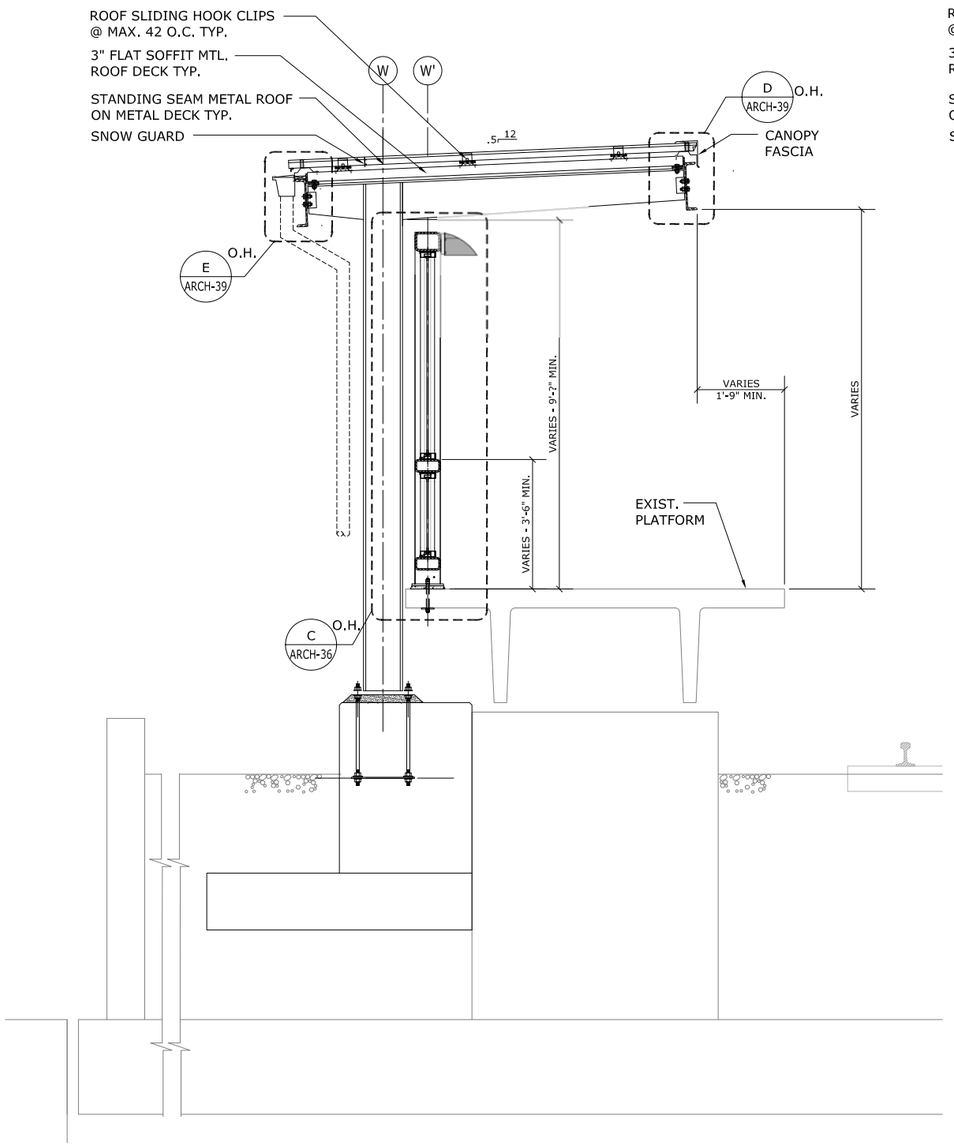

TYP. CANOPY SECTION

1/2" = 1'-0"

B ARCH-9 | B ARCH-11 | B ARCH-12 | B ARCH-16

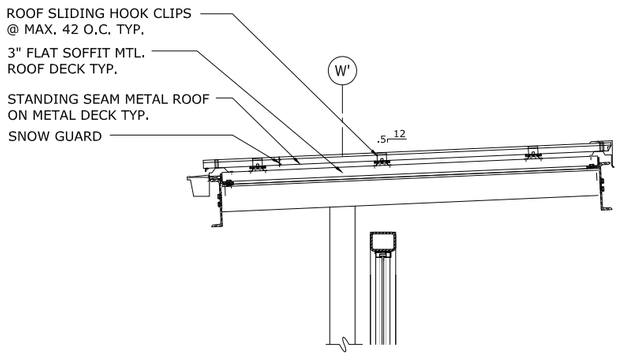

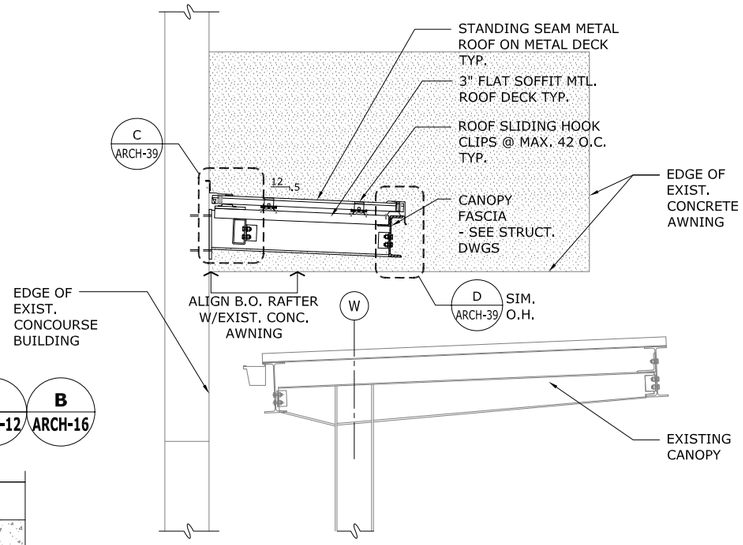

TYP. CANOPY SECTION

1/2" = 1'-0"

C ARCH-10 | C ARCH-18

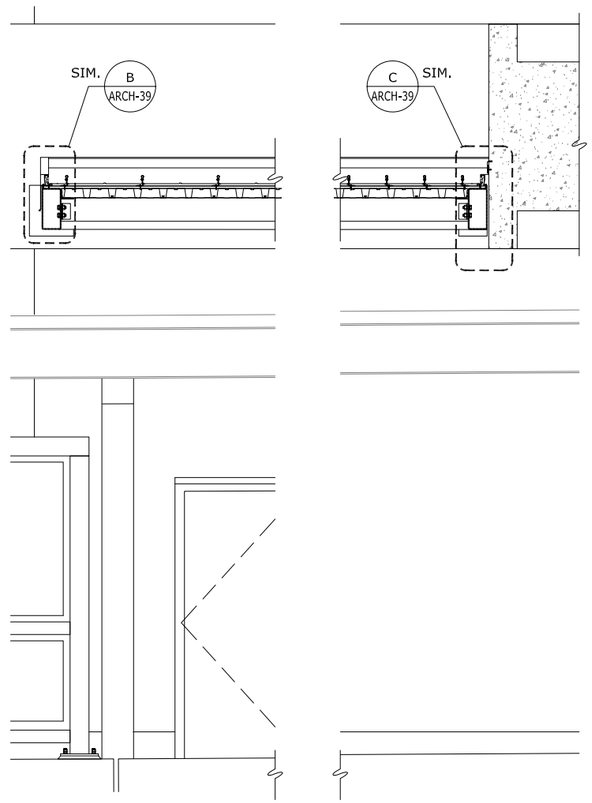

CANOPY SECTION @ EXIST. CONCRETE AWNING

1/2" = 1'-0"

D ARCH-14

TYP. CANOPY SECTION

1/2" = 1'-0"

A ARCH-8 | A ARCH-9 | A ARCH-12 | A ARCH-16

REV.	DATE	REVISION DESCRIPTION	SHEET NO.
-	-	-	-
-	-	-	-
-	-	-	-
-	-	-	-
-	-	-	-
-	-	-	-

THE INFORMATION, INCLUDING ESTIMATED QUANTITIES OF WORK, SHOWN ON THESE SHEETS IS BASED ON LIMITED INVESTIGATIONS BY THE STATE AND IS IN NO WAY WARRANTED TO INDICATE THE CONDITIONS OF ACTUAL QUANTITIES OF WORK WHICH WILL BE REQUIRED.

PLOTTED: 31-Mar-14

DESIGNER/DRAFTER: J. LEON

CHECKED BY: S. GARDNER

SCALE AS NOTED

STATE OF CONNECTICUT
DEPARTMENT OF TRANSPORTATION

FILENAME: FD_MST_ARC_0301_015S_ARCH-35.DWG

GREGG WIES & GARDNER ARCHITECTS, LLC

APPROVED BY: DATE: 03/28/14

PROJECT TITLE:
INSTALLATION OF CANOPY AT BRIDGEPORT STATION

TOWN: **BRIDGEPORT**

DRAWING TITLE: **WEST CANOPY & PLATFORM SECTIONS**

PROJECT NO. **301-155**

DRAWING NO. **ARCH-35**

SHEET NO. **05.35**

G:\1224.00 Task Order - Bridgeport RR Canopies (Lochner)\1224 Drawings\FD_MST_ARC_0301_015S_ARCH-35.dwg, 3/31/2014 9:34:50 AM, jleon

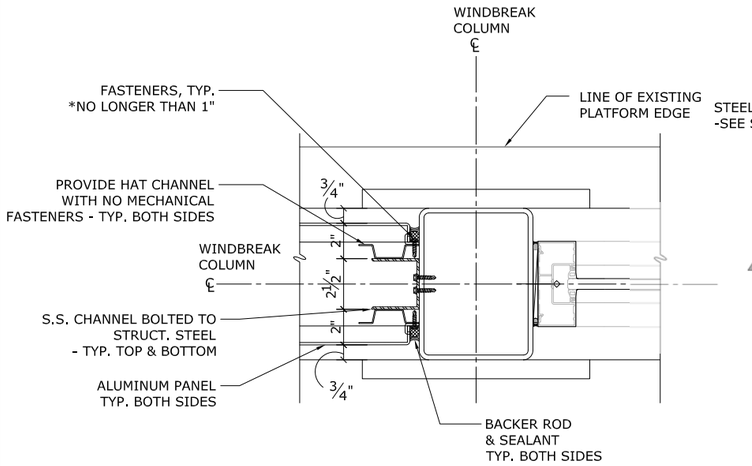

TYP. PLAN DTL. @ WINDBREAK

3"=1'-0"

B ARCH-33

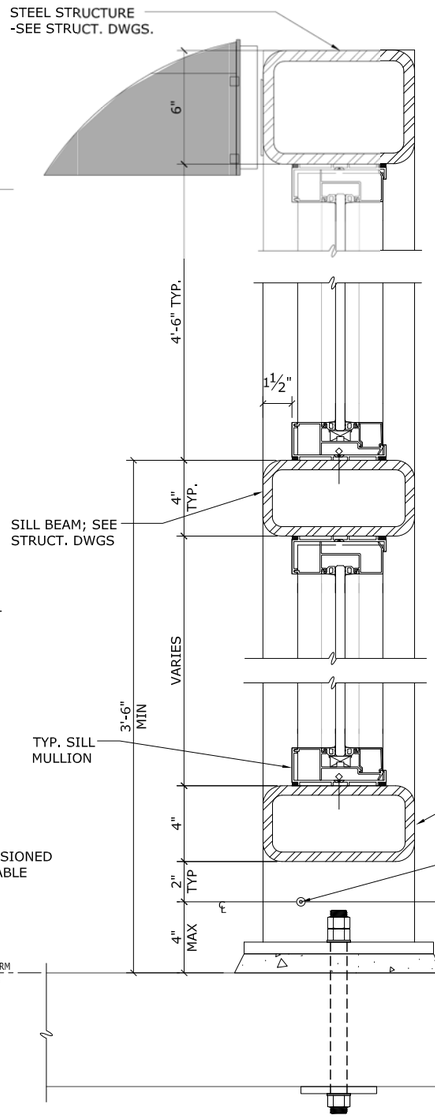

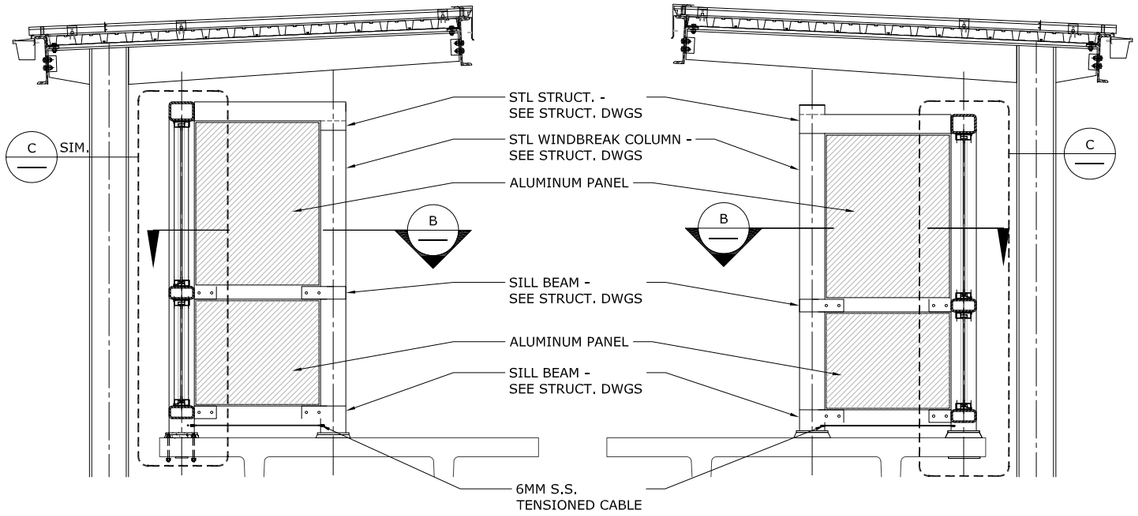

ELEVATION @ WINDBREAK

1/2" = 1'-0"

E ARCH-32

ELEVATION @ WINDBREAK

1/2" = 1'-0"

F ARCH-32

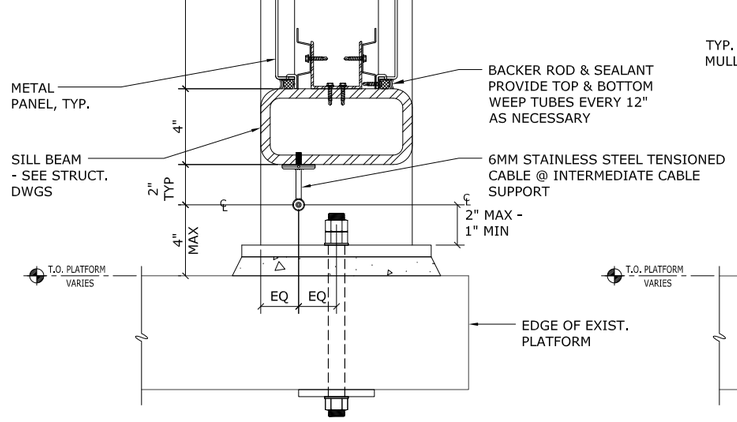

TYPICAL SECTION DETAIL @ SPANDREL PANEL

3" = 1'-0"

D

TYPICAL SECTION DETAIL @ STOREFRONT MULLION

3" = 1'-0"

C ARCH-34 C ARCH-35

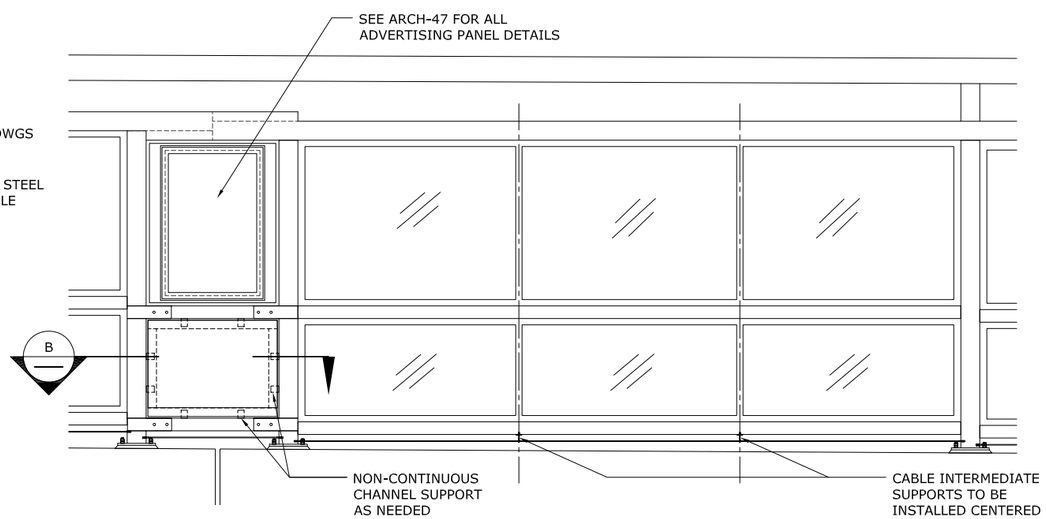

TYP. ELEVATION @ WINDBREAK

1/2" = 1'-0"

A

REV.	DATE	REVISION DESCRIPTION	SHEET NO.
-	-	-	-
-	-	-	-
-	-	-	-
-	-	-	-
-	-	-	-
-	-	-	-

THE INFORMATION, INCLUDING ESTIMATED QUANTITIES OF WORK, SHOWN ON THESE SHEETS IS BASED ON LIMITED INVESTIGATIONS BY THE STATE AND IS IN NO WAY WARRANTED TO INDICATE THE CONDITIONS OF ACTUAL QUANTITIES OF WORK WHICH WILL BE REQUIRED.

PLOTTED: 28-Mar-14

DESIGNER/DRAFTER: J. LEON
CHECKED BY: S. GARDNER
SCALE AS NOTED

STATE OF CONNECTICUT
DEPARTMENT OF TRANSPORTATION

FILENAME: FD_MST_ARC_0301_0155_ARCH-36.DWG

GREGG WIES & GARDNER ARCHITECTS, LLC

APPROVED BY:
DATE: 03/28/14

PROJECT TITLE:
INSTALLATION OF CANOPY AT BRIDGEPORT STATION

TOWN: **BRIDGEPORT**

DRAWING TITLE: **WINDBREAK DETAILS**

PROJECT NO. **301-155**
DRAWING NO. **ARCH-36**
SHEET NO. **05.36**

G:\1224.00 Task Order - Bridgeport RR Canopies (Lochner)\1224 Drawings\FD_MST_ARC_0301_0155_ARCH-36.dwg, 3/28/2014 2:49:28 PM, jleon

Border Version: 10/1/09

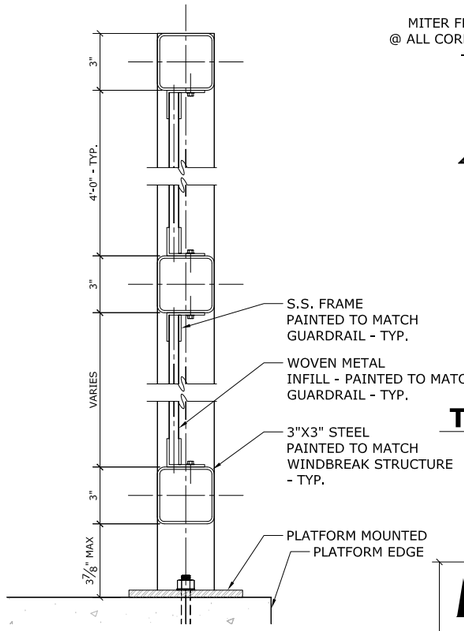

TYP. SECTION @ FENCE

A ARCH-32 | D ARCH-33

SCALE: 3" = 1'-0"

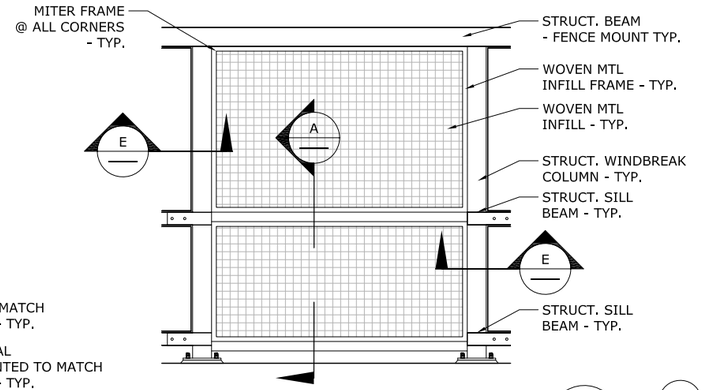

TYP FENCE ELEV. @ CAT TOWER

H

SCALE: 1/2" = 1'-0"

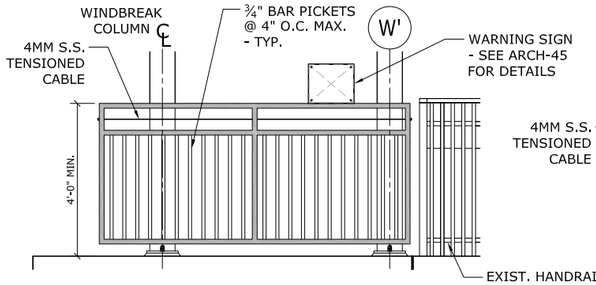

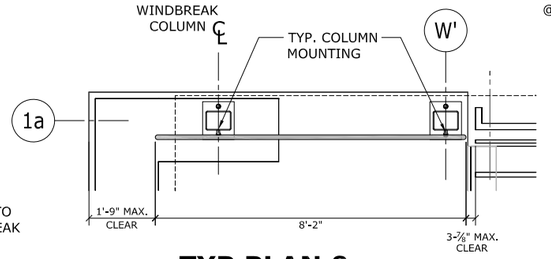

TYP PLAN & ELEV. @ GUARDRAIL

I ARCH-32

SCALE: 1/2" = 1'-0"

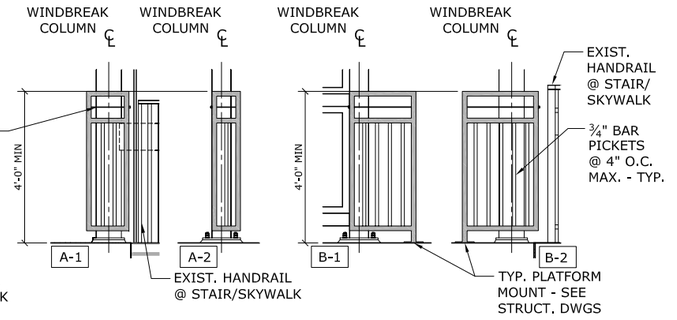

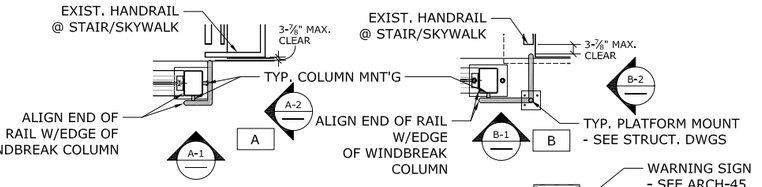

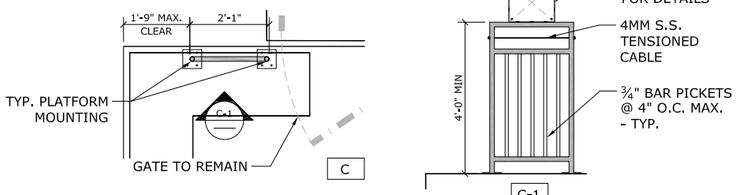

TYP PLAN & ELEVATION @ GUARDRAILS

J ARCH-32 | J ARCH-33

SCALE: 1/2" = 1'-0"

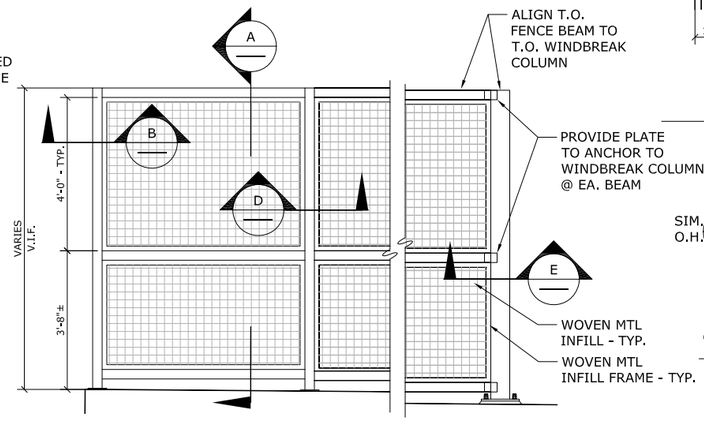

TYP. ELEVATION @ NEW FENCE

F

SCALE: 1/2" = 1'-0"

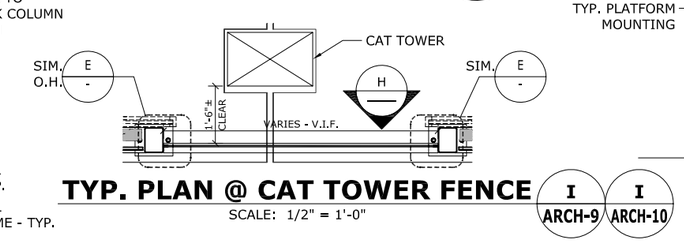

TYP. PLAN @ CAT TOWER FENCE

I ARCH-9 | I ARCH-10

SCALE: 1/2" = 1'-0"

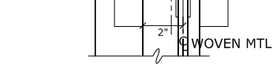

FENCE PLAN DTL @ END

B ARCH-32 | B ARCH-33

SCALE: 3" = 1'-0"

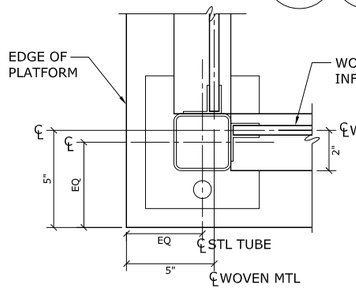

FENCE PLAN DTL @ CORNER

C ARCH-32 | C ARCH-33

SCALE: 3" = 1'-0"

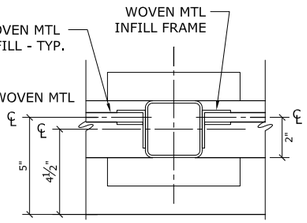

TYP. INTERMEDIATE FENCE PLAN DTL

D ARCH-32 | D ARCH-33

SCALE: 3" = 1'-0"

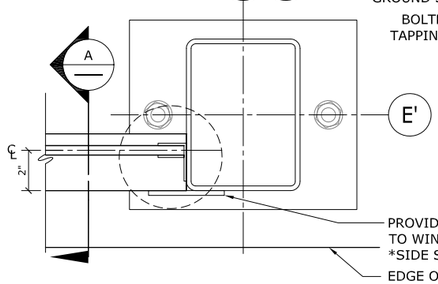

TYP. FENCE PLAN DETAIL @ COLUMN

E ARCH-32 | E ARCH-33

SCALE: 3" = 1'-0"

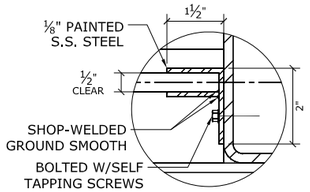

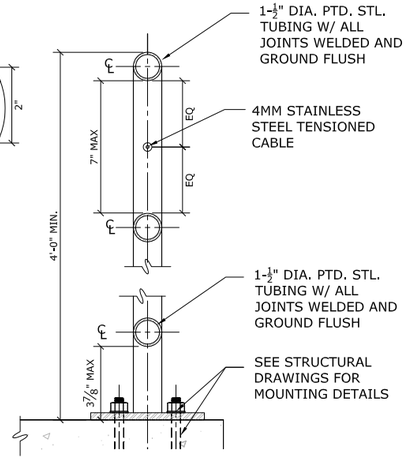

TYP. GUARDRAIL SECTION DTL @ MOUNTING

K

SCALE: 3" = 1'-0"

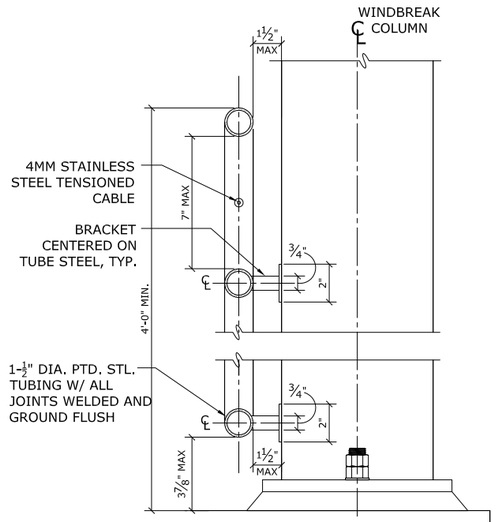

TYP. GUARDRAIL SECTION DTL @ COLUMN

L

SCALE: 3" = 1'-0"

REV.	DATE	REVISION DESCRIPTION	SHEET NO.
-	-	-	-
-	-	-	-
-	-	-	-
-	-	-	-
-	-	-	-
-	-	-	-

THE INFORMATION, INCLUDING ESTIMATED QUANTITIES OF WORK, SHOWN ON THESE SHEETS IS BASED ON LIMITED INVESTIGATIONS BY THE STATE AND IS IN NO WAY WARRANTED TO INDICATE THE CONDITIONS OF ACTUAL QUANTITIES OF WORK WHICH WILL BE REQUIRED.

PLOTTED: 31-Mar-14

DESIGNER/DRAFTER: J. LEON

CHECKED BY: S. GARDNER

SCALE AS NOTED

STATE OF CONNECTICUT
DEPARTMENT OF TRANSPORTATION

FILENAME: FD_MST_ARC_0301_0155_ARCH-37.DWG

GREGG WIES & GARDNER ARCHITECTS, LLC

APPROVED BY: DATE: 03/28/14

PROJECT TITLE:
INSTALLATION OF CANOPY AT BRIDGEPORT STATION

TOWN: **BRIDGEPORT**

DRAWING TITLE: **GUARDRAIL & FENCE DETAILS**

PROJECT NO. **301-155**

DRAWING NO. **ARCH-37**

SHEET NO. **05.37**

G:\1224.00 Task Order - Bridgeport RR Canopies (Lochner)\1224 Drawings\FD_MST_ARC_0301_0155_ARCH-37.dwg, 3/31/2014 9:36:02 AM, jleon

Border Version: 10/1/09

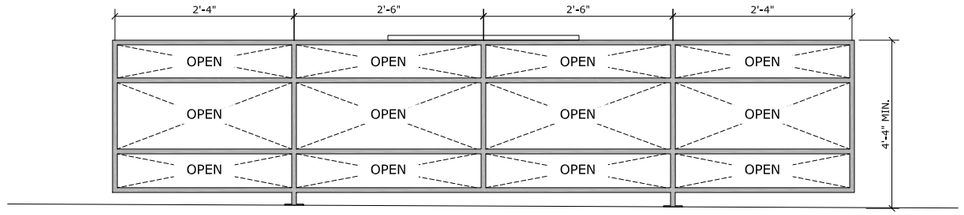

ELEVATION @ BRIDGE PLATE STORAGE (F)

SCALE: 1/2" = 1'-0"

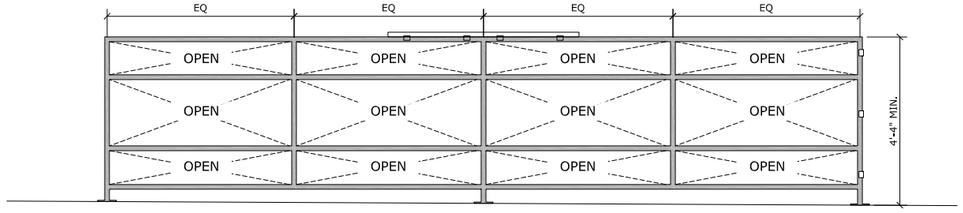

ELEVATION @ BRIDGE PLATE STORAGE (G)

SCALE: 1/2" = 1'-0"

NOTES:
1. ALL DIMENSIONS FROM CENTER LINE UNLESS OTHERWISE NOTED.

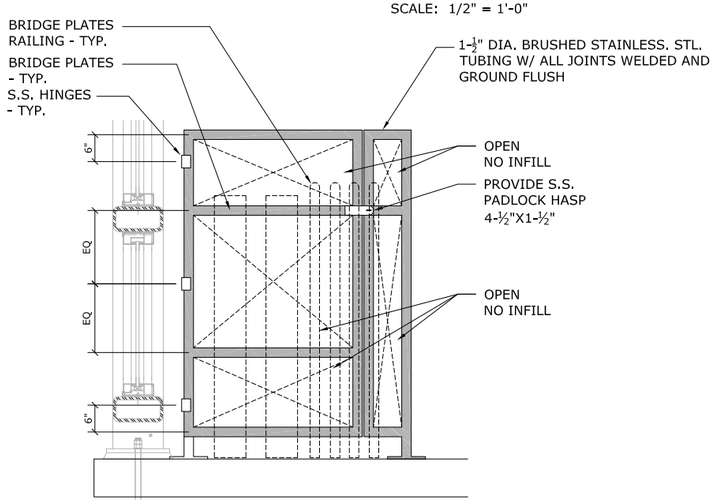

TYP. ELEVATION @ BRIDGE PLATE STORAGE (D)

SCALE: 1" = 1'-0"

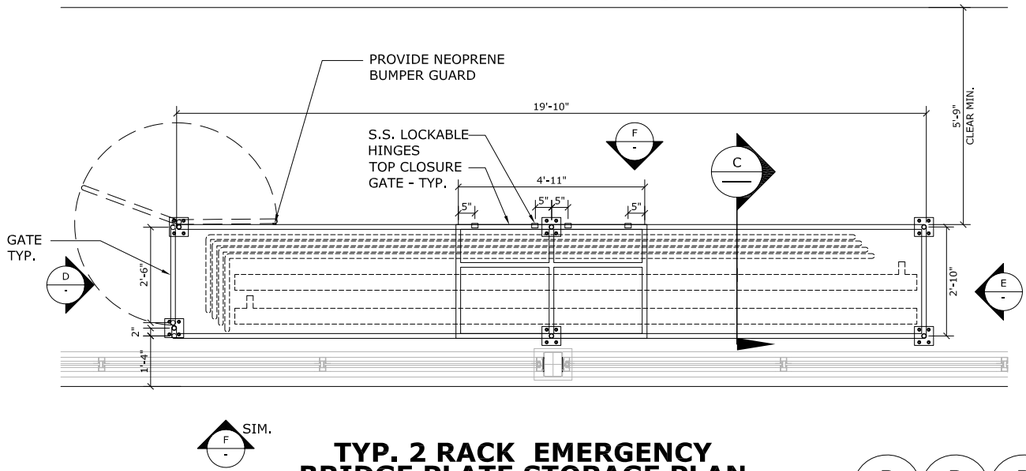

TYP. 2 RACK EMERGENCY BRIDGE PLATE STORAGE PLAN

SCALE: 1/2" = 1'-0"

B ARCH-9 | B ARCH-32 | B ARCH-33

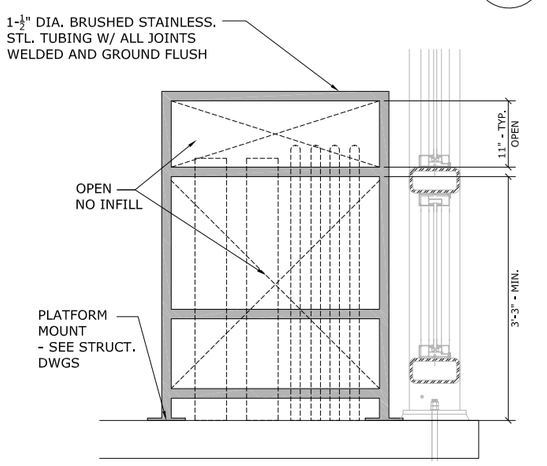

TYP. ELEVATION @ BRIDGE PLATE STORAGE (E)

SCALE: 1" = 1'-0"

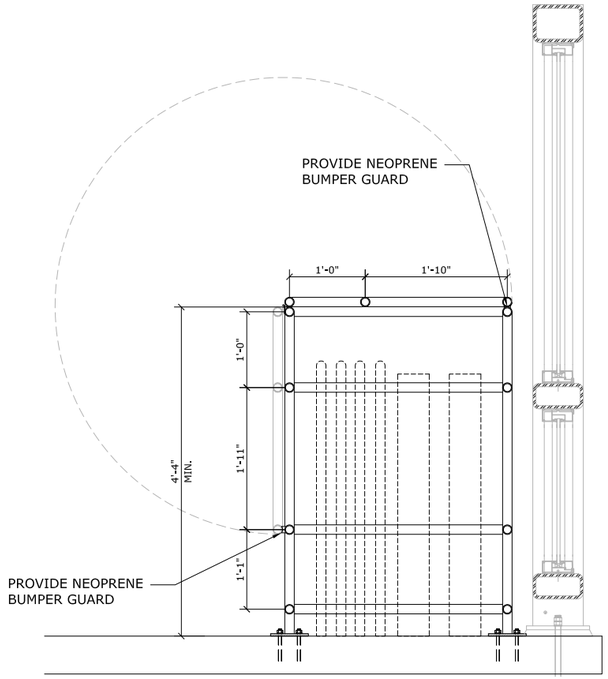

TYP. SECTION @ BRIDGE PLATE STORAGE (C)

SCALE: 1" = 1'-0"

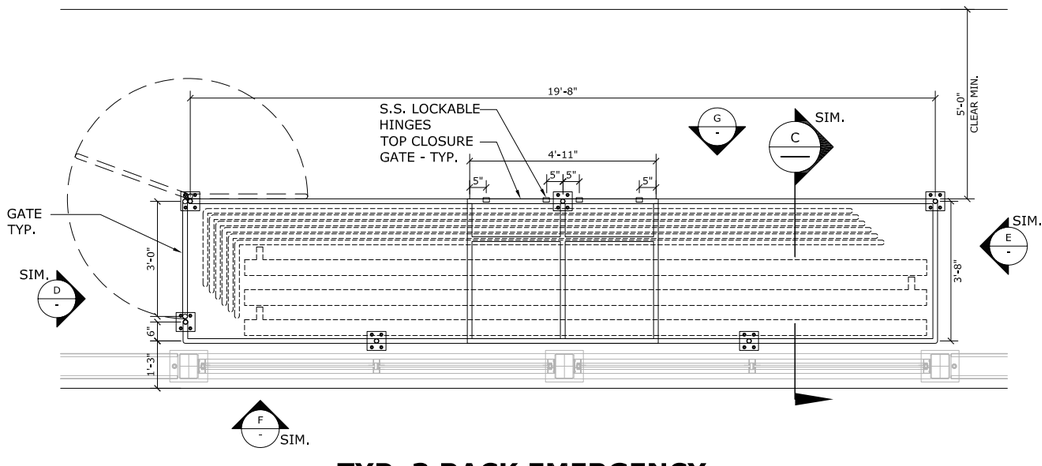

TYP. 3 RACK EMERGENCY BRIDGE PLATE STORAGE PLAN

SCALE: 1/2" = 1'-0"

A ARCH-32 | A ARCH-33

REV.	DATE	REVISION DESCRIPTION	SHEET NO.
-	-	-	-
-	-	-	-
-	-	-	-
-	-	-	-
-	-	-	-
-	-	-	-

THE INFORMATION, INCLUDING ESTIMATED QUANTITIES OF WORK, SHOWN ON THESE SHEETS IS BASED ON LIMITED INVESTIGATIONS BY THE STATE AND IS IN NO WAY WARRANTED TO INDICATE THE CONDITIONS OF ACTUAL QUANTITIES OF WORK WHICH WILL BE REQUIRED.

PLOTTED: 28-Mar-14

DESIGNER/DRAFTER: J. LEON
CHECKED BY: S. GARDNER
SCALE AS NOTED

STATE OF CONNECTICUT
DEPARTMENT OF TRANSPORTATION

FILENAME: FD_MST_ARC_0301_0155_ARCH-38.DWG

GREGG WIES & GARDNER ARCHITECTS, LLC

APPROVED BY: DATE: 02/03/14

PROJECT TITLE:
INSTALLATION OF CANOPY AT BRIDGEPORT STATION

TOWN: **BRIDGEPORT**

DRAWING TITLE: **BRIDGE PLATE STORAGE DETAILS**

PROJECT NO. **301-155**
DRAWING NO. **ARCH-38**
SHEET NO. **05.38**

G:\1224.00 Task Order - Bridgeport RR Canopies (Lochner)\1224 Drawings\FD_MST_ARC_0301_0155_ARCH-38.dwg, 3/28/2014 2:58:55 PM, jleon

Border Version: 10/1/09

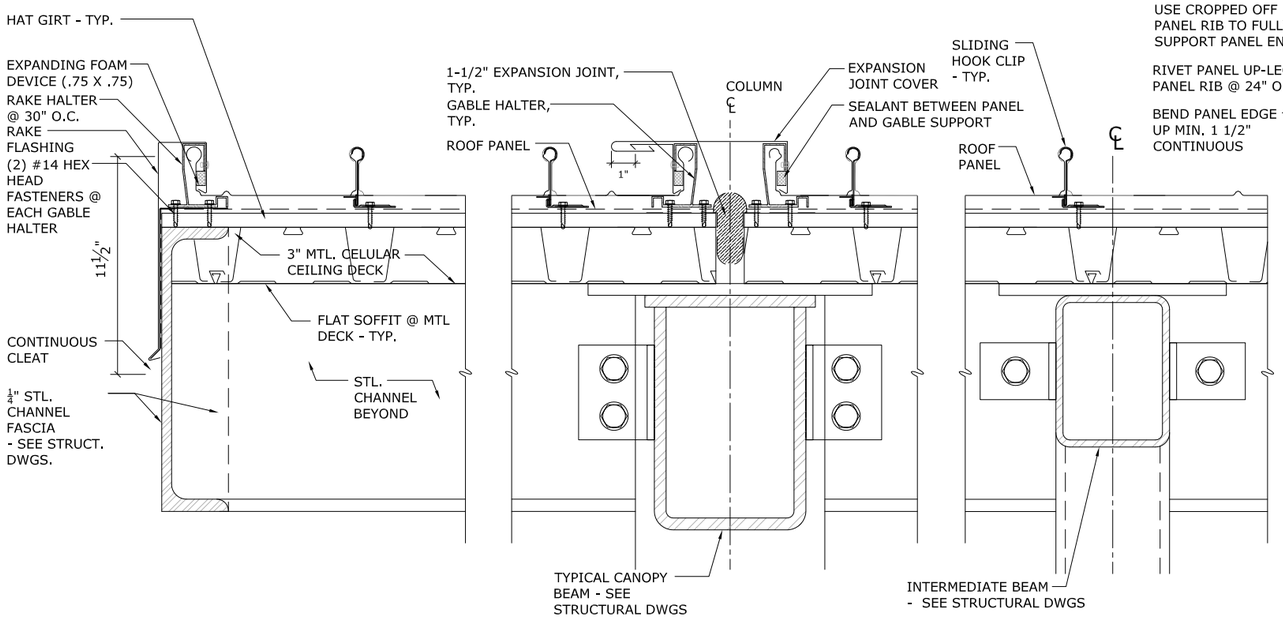

TYPICAL RAKE DETAIL

3"=1'-0"

B ARCH-12 | B ARCH-15

TYPICAL RAFTER DETAIL

3"=1'-0"

B ARCH-12 | B ARCH-13 | B ARCH-14

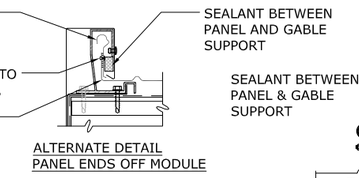

INTERMEDIATE RAFTER DETAIL

3"=1'-0"

B ARCH-12

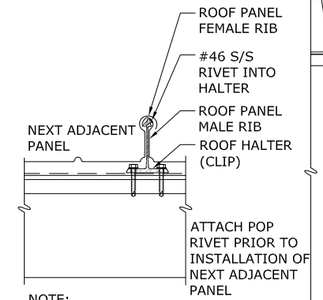

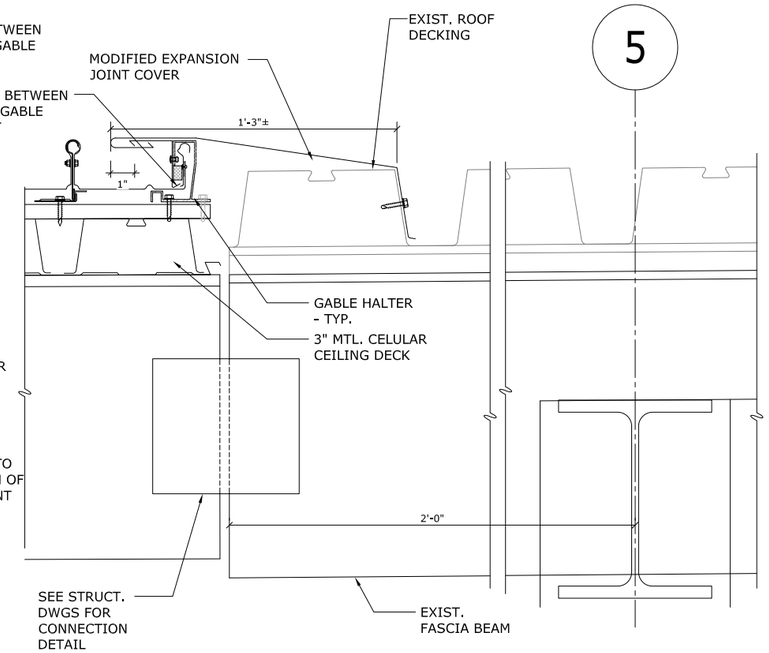

ROOF TRANSITION DETAIL AT EXISTING CANOPY

3"=1'-0"

A ARCH-13

NOTE: ALIGN STANDING SEAM WITH T.O. EXISTING METAL DECK ROOF

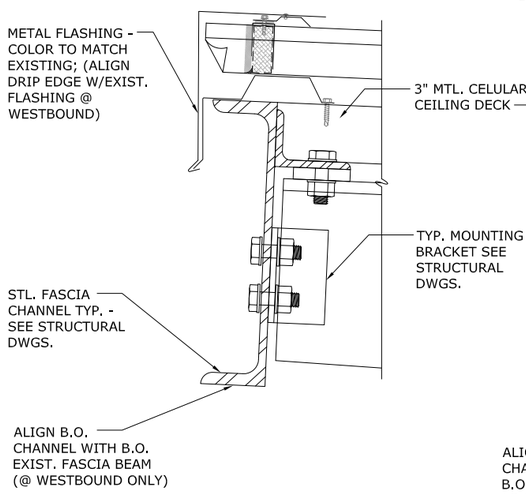

FASCIA DETAIL

3"=1'-0"

D ARCH-34 | D ARCH-35

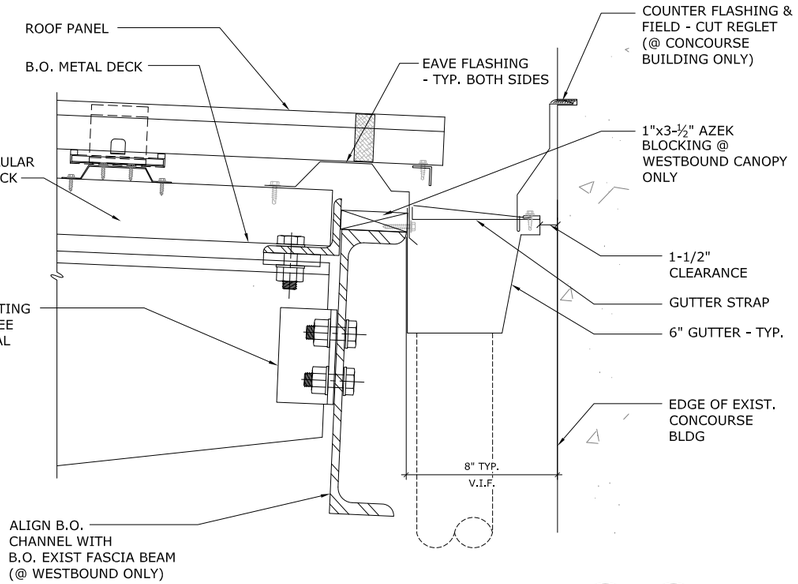

TYP. EAVE WITH GUTTER DTL

3"=1'-0"

E ARCH-34 | E ARCH-35

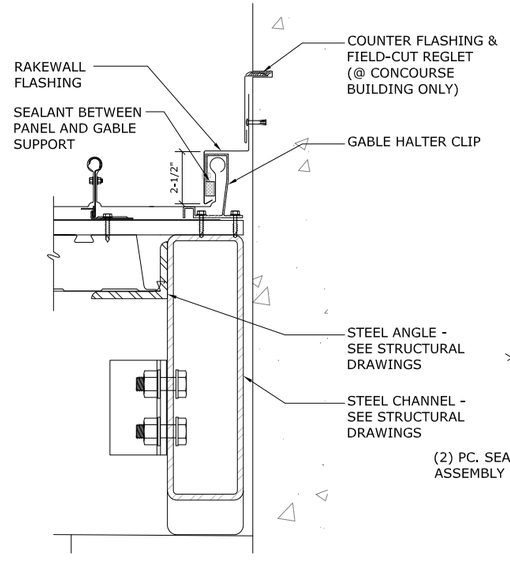

RAKEWALL DTL @ WESTBOUND CONCOURSE AWNING

3"=1'-0"

C ARCH-34 | C ARCH-35

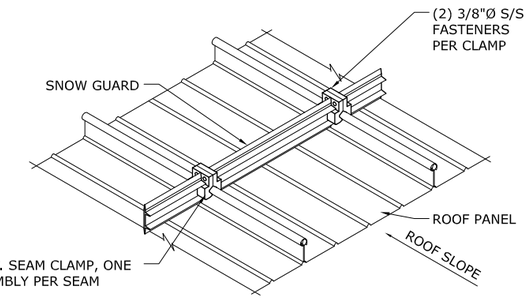

SNOW STOP DETAIL

1 1/2" = 1'-0"

F

REV.	DATE	REVISION DESCRIPTION	SHEET NO.
-	-	-	-
-	-	-	-
-	-	-	-
-	-	-	-
-	-	-	-
-	-	-	-

THE INFORMATION, INCLUDING ESTIMATED QUANTITIES OF WORK, SHOWN ON THESE SHEETS IS BASED ON LIMITED INVESTIGATIONS BY THE STATE AND IS IN NO WAY WARRANTED TO INDICATE THE CONDITIONS OF ACTUAL QUANTITIES OF WORK WHICH WILL BE REQUIRED.

PLOTTED: 28-Mar-14

DESIGNER/DRAFTER: J. LEON
CHECKED BY: S. GARDNER
SCALE AS NOTED

STATE OF CONNECTICUT
DEPARTMENT OF TRANSPORTATION

FILENAME: FD_MST_ARC_0301_0155_ARCH-39.DWG

GREGG WIES & GARDNER ARCHITECTS, LLC

APPROVED BY: DATE: 03/28/14

PROJECT TITLE:
INSTALLATION OF CANOPY AT BRIDGEPORT STATION

TOWN: **BRIDGEPORT**

DRAWING TITLE: **TYPICAL ROOF DETAILS 1**

PROJECT NO. **301-155**
DRAWING NO. **ARCH-39**
SHEET NO. **05.39**

Border Version: 10/1/09

G:\1224.00 Task Order - Bridgeport RR Canopies (Lochner)\1224 Drawings\FD_MST_ARC_0301_0155_ARCH-39.dwg, 3/28/2014 3:05:16 PM, jleon

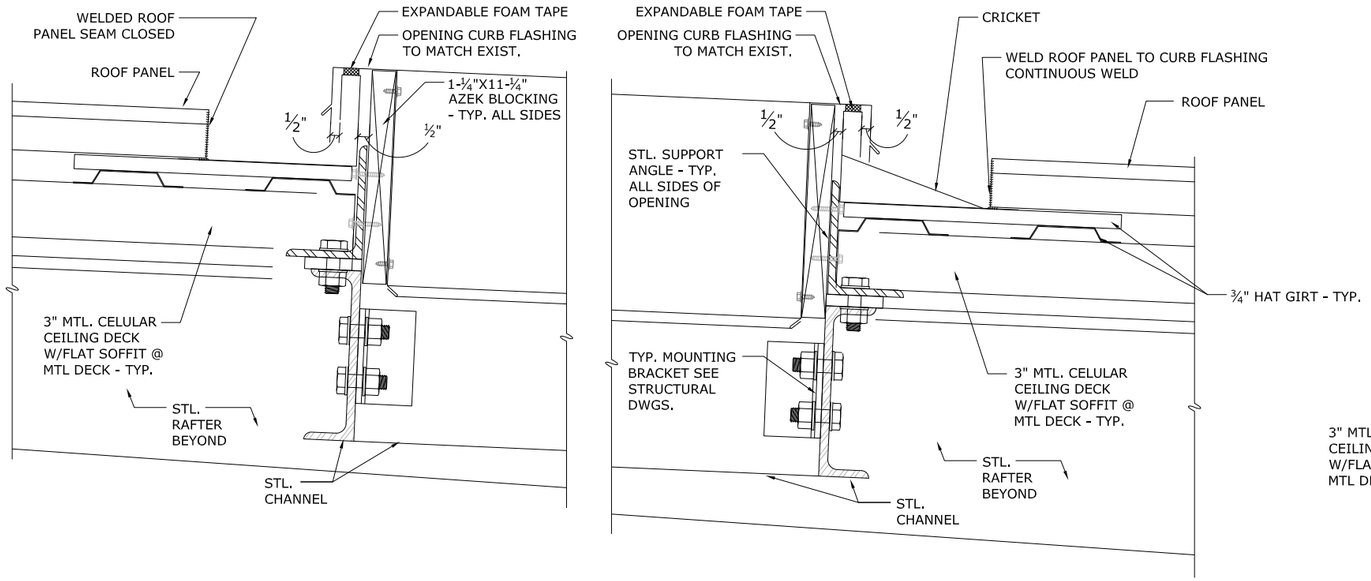

TYPICAL ROOF CURB DETAIL @ BACKPAN & APRON

3"=1'-0"

B

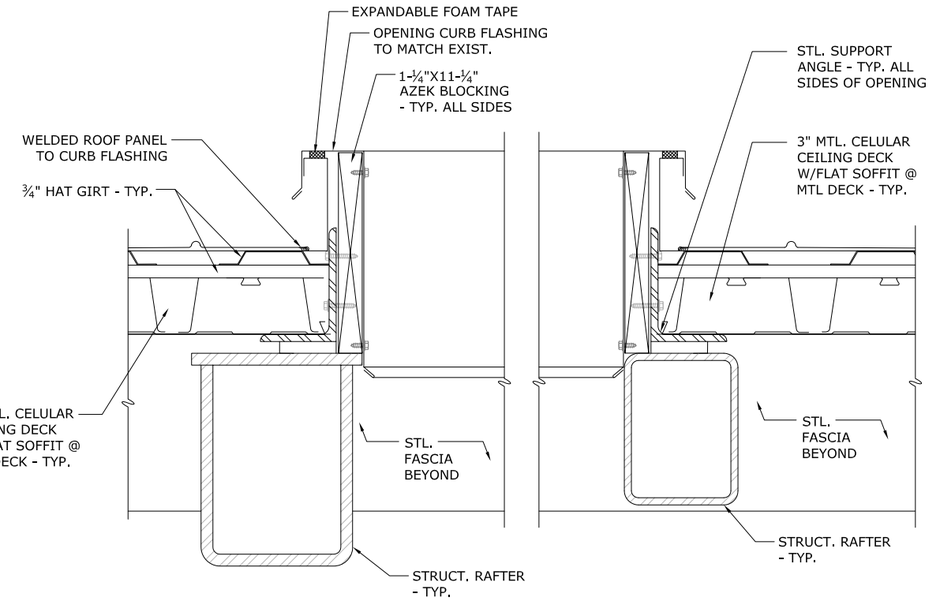

TYPICAL ROOF CURB DETAIL @ SIDEPAN

3"=1'-0"

C

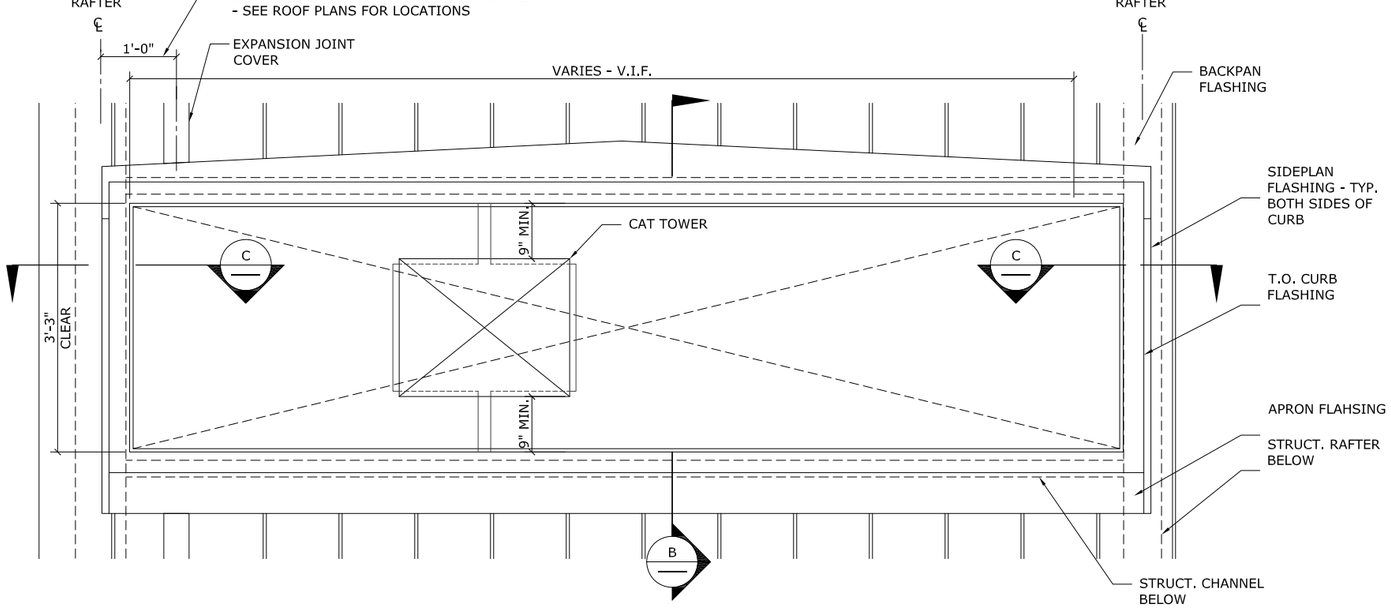

TYP. ROOF PLAN DTL @ CAT TOWER

1"=1'-0"

A ARCH-13 / A ARCH-14

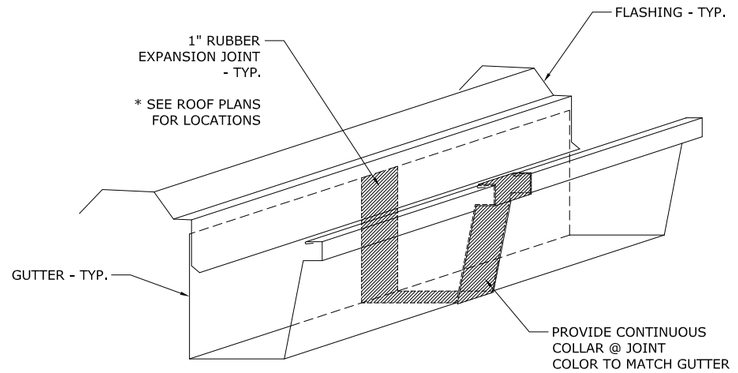

GUTTER EXPANSION JOINT

3" = 1'-0"

D

REV.	DATE	REVISION DESCRIPTION	SHEET NO.
-	-	-	-
-	-	-	-
-	-	-	-
-	-	-	-
-	-	-	-
	-	-	-

THE INFORMATION, INCLUDING ESTIMATED QUANTITIES OF WORK, SHOWN ON THESE SHEETS IS BASED ON LIMITED INVESTIGATIONS BY THE STATE AND IS IN NO WAY WARRANTED TO INDICATE THE CONDITIONS OF ACTUAL QUANTITIES OF WORK WHICH WILL BE REQUIRED.

PLOTTED: 31-Mar-14

DESIGNER/DRAFTER: J. LEON
CHECKED BY: S. GARDNER
SCALE AS NOTED

STATE OF CONNECTICUT
DEPARTMENT OF TRANSPORTATION

FILENAME: FD_MST_ARC_0301_0155_ARCH-40.DWG

GREGG WIES & GARDNER ARCHITECTS, LLC

APPROVED BY: DATE: 03/28/14

PROJECT TITLE:
INSTALLATION OF CANOPY AT BRIDGEPORT STATION

TOWN: **BRIDGEPORT**

DRAWING TITLE: **TYPICAL ROOF DETAILS**

PROJECT NO. **301-155**
DRAWING NO. **ARCH-40**
SHEET NO. **05.40**

G:\1224.00 Task Order - Bridgeport RR Canopies (Lochner)\1224 Drawings\FD_MST_ARC_0301_0155_ARCH-40.dwg, 3/31/2014 9:37:11 AM, jleon

Border Version: 10/1/09

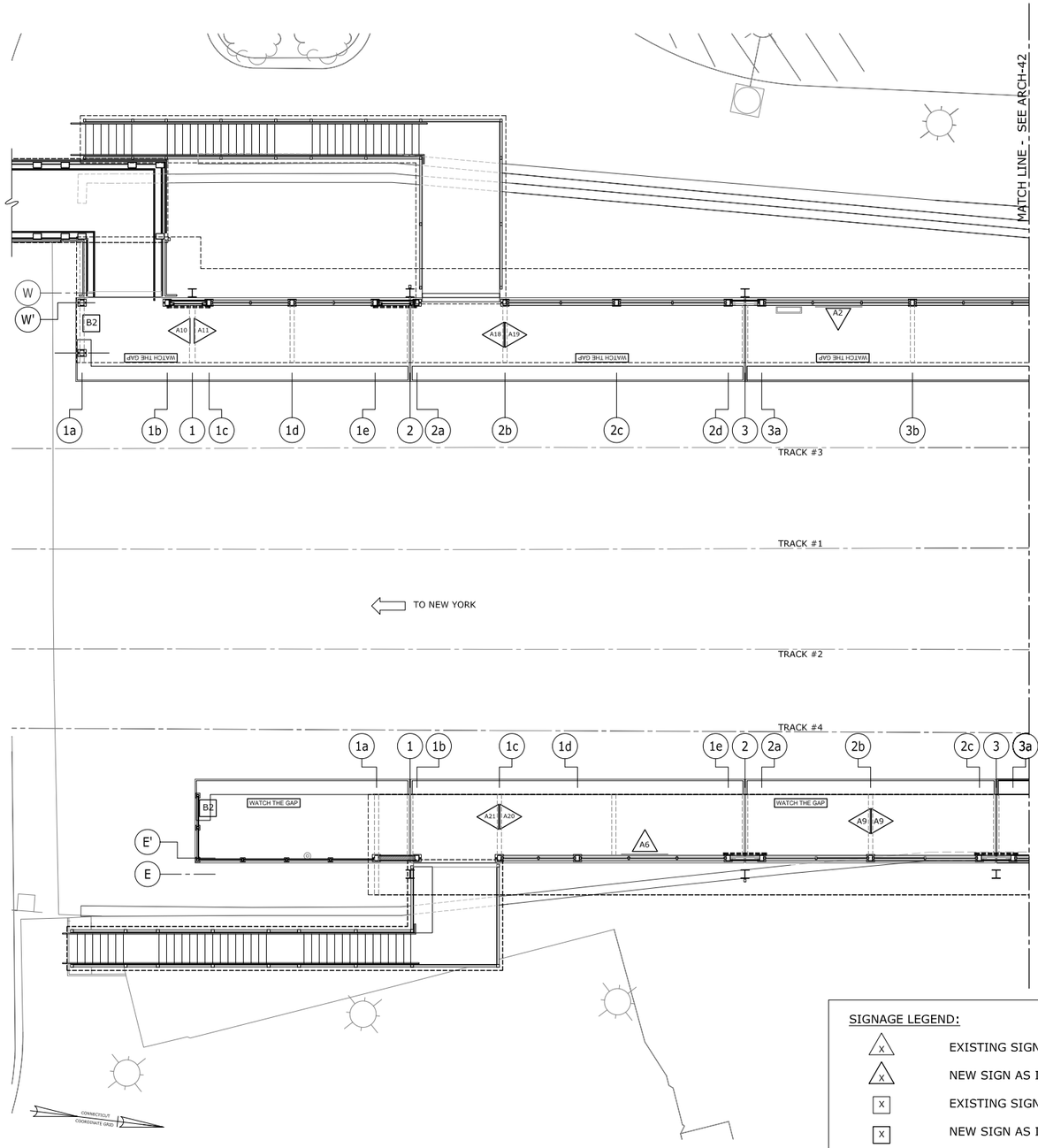

PLATFORM SIGNAGE PLAN - EAST & WEST PART 1

SCALE: 1/8" = 1'-0"

STATION SIGNAGE SCHEDULE

SIGN No.	SIZE (HxW)	NEW OR EXIST.	QTY	MOUNTING METHOD		No. OF TEXT LINES (TOTAL)	COPY MESSAGE (L TO R)	TEXT HEIGHT	NOTES
				MNT'G	DETAIL				
A1	18" x 102"	E	1	W		1	BRIDGEPORT	9"	
A2	18" x 68"	N	1	S	C/ARCH-46	1	BRIDGEPORT	9"	* ALL WIDTHS TO BE VERIFIED IN FIELD
A3	18" x 70-1/4"	N	1	S	C/ARCH-46	1	BRIDGEPORT	9"	
A4	18" x 72"	N	1	S	C/ARCH-46	1	BRIDGEPORT	9"	
A5	18" x 73-3/8"	N	1	S	C/ARCH-46	1	BRIDGEPORT	9"	
A6	18" x 74-3/4"	N	1	S	C/ARCH-46	1	BRIDGEPORT	9"	
A7	18" x 88-1/4"	N	1	S	C/ARCH-46	1	BRIDGEPORT	9"	
A8	8" X 24"	N	1	CM	F/ARCH-45	1	TRACK 3	4"	
A9	8" X 24"	N	1	CM	F/ARCH-45	1	TRACK 4	4"	
A10	8-1/2" X 48"	N	1	CM	F/ARCH-45	1	EXIT	4"	
A11	8-1/2" X 48"	N	1	CM	F/ARCH-45	1	EXIT	4"	
A12	8-1/2" X 54"	N	1	CM	F/ARCH-45	1	EXIT	4"	
A13	8-1/2" X 54"	N	2	CM	F/ARCH-45	1	EXIT	4"	
A14	8-1/2" X 54"	N	1	CM	F/ARCH-45	1	EXIT	4"	
A15	8-1/2" X 54"	N	3	CM	F/ARCH-45	1	EXIT	4"	
A16	8-1/2" X 54"	N	1	CM	F/ARCH-45	1	EXIT	4"	
A17	8-1/2" X 54"	N	2	CM	F/ARCH-45	1	EXIT	4"	
A18	8-1/2" X 36"	N	1	CM	F/ARCH-45	1	EXIT	4"	
A19	8-1/2" X 36"	N	1	CM	F/ARCH-45	1	EXIT	4"	
A20	8-1/2" X 36"	N	2	CM	F/ARCH-45	1	EXIT	4"	
A21	8-1/2" X 36"	N	2	CM	F/ARCH-45	1	EXIT	4"	
A22	8-1/2" X 36"	N	1	CM	F/ARCH-45	1	EXIT	4"	
A23	8-1/2" X 36"	N	1	CM	F/ARCH-45	1	EXIT	4"	
A24	8-1/2" X 30"	N	2	CM	F/ARCH-45	1	EXIT	4"	
A25	8-1/2" X 30"	N	2	CM	F/ARCH-45	1	EXIT	4"	
B1		E	1	F		4	* SAME AS B2	1-1/2"	
B2	12" x 14"	N	3	F/GM	G/ARCH-45	4	ALL PERSONS ARE FORBIDDEN TO ENTER OR CROSS TRACKS	1-1/2"	

SIGNAGE LEGEND:

- X — EXISTING SIGN TO REMAIN
- X — NEW SIGN AS INDICATED IN SCHEDULE
- X — EXISTING SIGN TO REMAIN
- X — NEW SIGN AS INDICATED IN SCHEDULE
- WATCH THE GAP — "WATCH THE GAP" SIGN

NOTES:

1. SEE MOUNTING DETAILS FOR ADDITIONAL INFORMATION
2. ALL SIGNS TO BE EXTRUDED ALUMINUM WITH NON-REFLECTIVE SHEET FACING & ANTI-GRAFFITI FILM OVERLAY
3. SEE METRO-NORTH STANDARD FOR ADDITIONAL SYMBOL DETAILS
4. SEE ELECTRICAL DRAWINGS FOR VARIABLE MESSAGE SIGN LOCATIONS

MOUNTING LEGEND:

CM CANOPY MOUNT
GM GUARDRAIL MOUNT
F FENCE MOUNT
W WALL MOUNT
S STOREFRONT MOUNT

REV.	DATE	REVISION DESCRIPTION	SHEET NO.
-	-	-	-
-	-	-	-
-	-	-	-
-	-	-	-
-	-	-	-
-	-	-	-

THE INFORMATION, INCLUDING ESTIMATED QUANTITIES OF WORK, SHOWN ON THESE SHEETS IS BASED ON LIMITED INVESTIGATIONS BY THE STATE AND IS IN NO WAY WARRANTED TO INDICATE THE CONDITIONS OF ACTUAL QUANTITIES OF WORK WHICH WILL BE REQUIRED.

PLOTTED: 31-Mar-14

DESIGNER/DRAFTER: J. LEON
CHECKED BY: S. GARDNER
SCALE AS NOTED

STATE OF CONNECTICUT
DEPARTMENT OF TRANSPORTATION

FILENAME: FD_MST_ARC_0301_0155_ARCH-41.DWG

GREGG WIES & GARDNER ARCHITECTS, LLC

APPROVED BY: DATE: 03/28/14

PROJECT TITLE:
INSTALLATION OF CANOPY AT BRIDGEPORT STATION

TOWN: **BRIDGEPORT**

DRAWING TITLE: **PLATFORM SIGNAGE PLAN - EAST & WEST - PART 1**

PROJECT NO. **301-155**
DRAWING NO. **ARCH-41**
SHEET NO. **05.41**

Border Version: 10/1/09

G:\1224.00 Task Order - Bridgeport RR Canopies (Lochner)\1224 Drawings\FD_MST_ARC_0301_0155_ARCH-41.dwg, 3/31/2014 10:57:33 AM, jleon

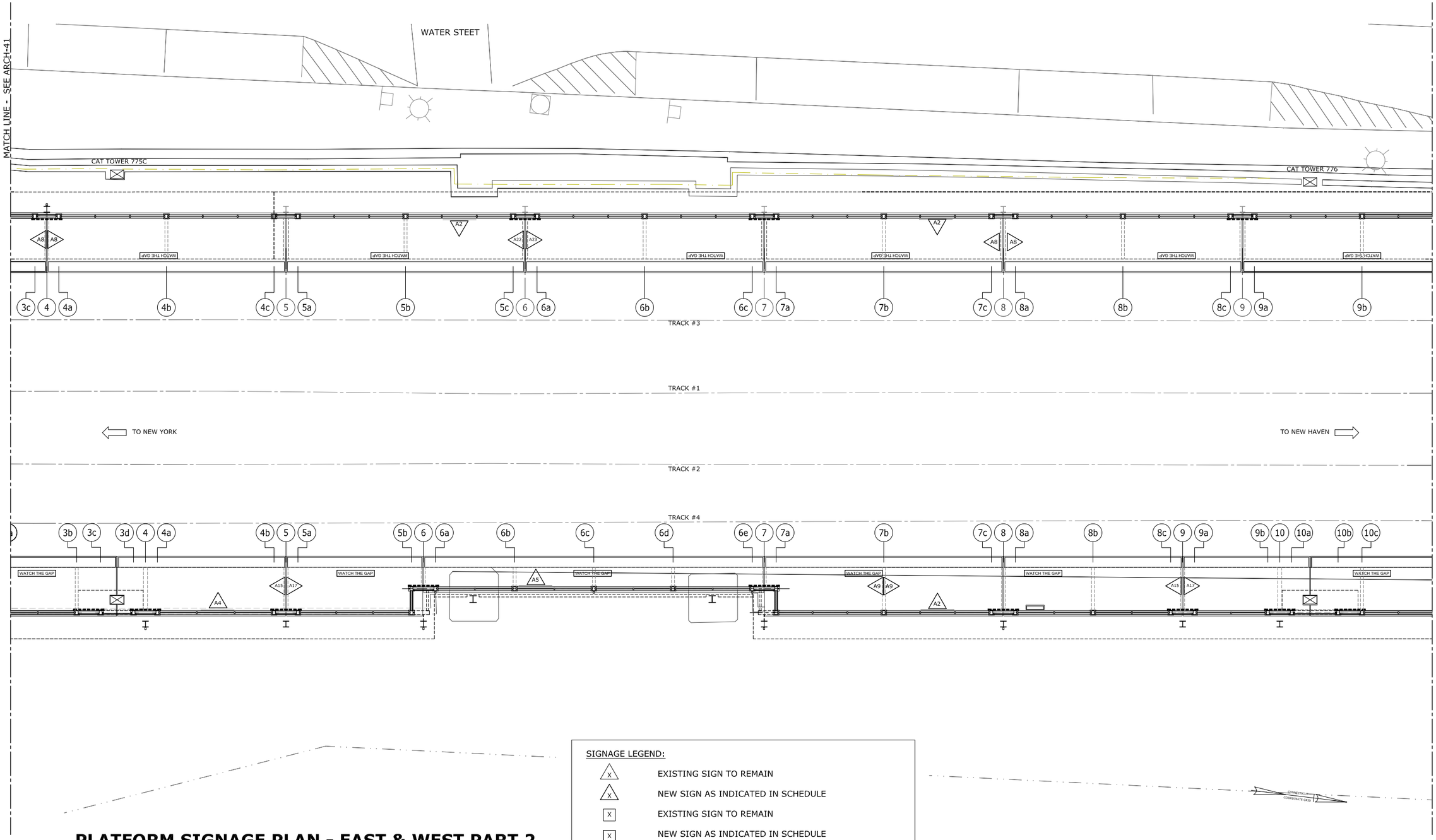

PLATFORM SIGNAGE PLAN - EAST & WEST PART 2

SCALE: 1/8" = 1'-0"

SIGNAGE LEGEND:

X	EXISTING SIGN TO REMAIN
X	NEW SIGN AS INDICATED IN SCHEDULE
X	EXISTING SIGN TO REMAIN
X	NEW SIGN AS INDICATED IN SCHEDULE
WATCH THE GAP	"WATCH THE GAP" SIGN

REV.	DATE	REVISION DESCRIPTION	SHEET NO.
-	-	-	-
-	-	-	-
-	-	-	-
-	-	-	-
-	-	-	-
-	-	-	-

THE INFORMATION, INCLUDING ESTIMATED QUANTITIES OF WORK, SHOWN ON THESE SHEETS IS BASED ON LIMITED INVESTIGATIONS BY THE STATE AND IS IN NO WAY WARRANTED TO INDICATE THE CONDITIONS OF ACTUAL QUANTITIES OF WORK WHICH WILL BE REQUIRED.

PLOTTED: 31-Mar-14

DESIGNER/DRAFTER: J. LEON
CHECKED BY: S. GARDNER
SCALE AS NOTED

STATE OF CONNECTICUT
DEPARTMENT OF TRANSPORTATION

FILENAME: FD_MST_ARC_0301_0155_ARCH-42.DWG

GREGG WIES & GARDNER ARCHITECTS, LLC

APPROVED BY: DATE: 03/28/14

PROJECT TITLE:
INSTALLATION OF CANOPY AT BRIDGEPORT STATION

TOWN: **BRIDGEPORT**

DRAWING TITLE: **PLATFORM SIGNAGE PLAN - EAST & WEST - PART 2**

PROJECT NO. **301-155**
DRAWING NO. **ARCH-42**
SHEET NO. **05.42**

G:\1224.00 Task Order - Bridgeport RR Canopies (Lochner)\1224 Drawings\FD_MST_ARC_0301_0155_ARCH-42.dwg, 3/31/2014 11:02:37 AM, jleon

Border Version: 10/1/09

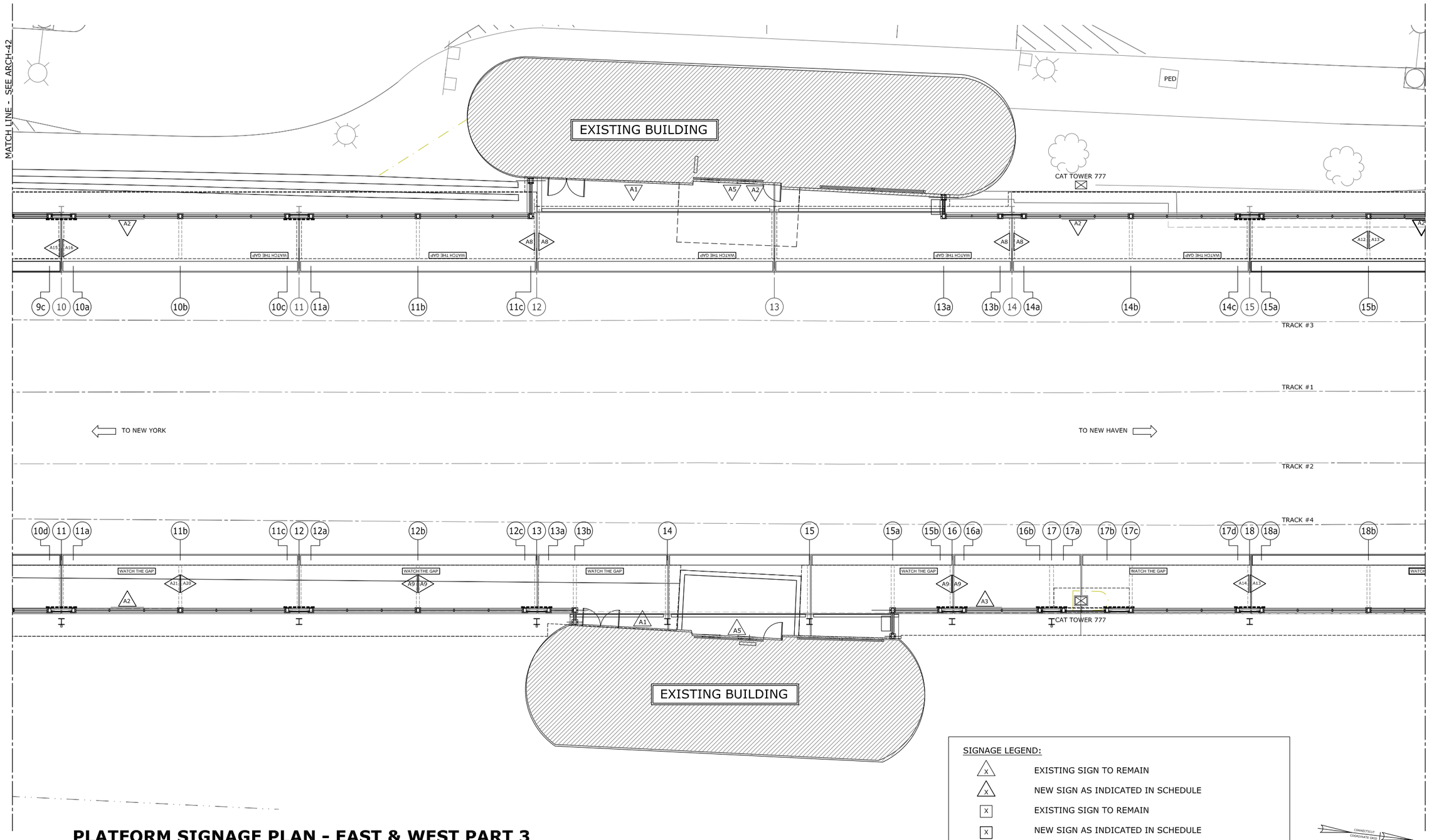

PLATFORM SIGNAGE PLAN - EAST & WEST PART 3

SCALE: 1/8" = 1'-0"

REV.	DATE	REVISION DESCRIPTION	SHEET NO.
-	-	-	-
-	-	-	-
-	-	-	-
-	-	-	-
-	-	-	-
-	-	-	-

THE INFORMATION, INCLUDING ESTIMATED QUANTITIES OF WORK, SHOWN ON THESE SHEETS IS BASED ON LIMITED INVESTIGATIONS BY THE STATE AND IS IN NO WAY WARRANTED TO INDICATE THE CONDITIONS OF ACTUAL QUANTITIES OF WORK WHICH WILL BE REQUIRED.

PLOTTED: 31-Mar-14

DESIGNER/DRAFTER: J. LEON
CHECKED BY: S. GARDNER
SCALE AS NOTED

STATE OF CONNECTICUT
DEPARTMENT OF TRANSPORTATION

FILENAME: FD_MST_ARC_0301_0155_ARCH-43.DWG

GREGG WIES & GARDNER ARCHITECTS, LLC

APPROVED BY: DATE: 03/28/14

PROJECT TITLE:
INSTALLATION OF CANOPY AT BRIDGEPORT STATION

TOWN: **BRIDGEPORT**

DRAWING TITLE: **PLATFORM SIGNAGE PLAN - EAST & WEST - PART 3**

PROJECT NO. **301-155**
DRAWING NO. **ARCH-43**
SHEET NO. **05.43**

G:\1224.00 Task Order - Bridgeport RR Canopies (Lochner)\1224 Drawings\FD_MST_ARC_0301_0155_ARCH-43.dwg, 3/31/2014 11:01:16 AM, jleon

Border Version: 10/1/09

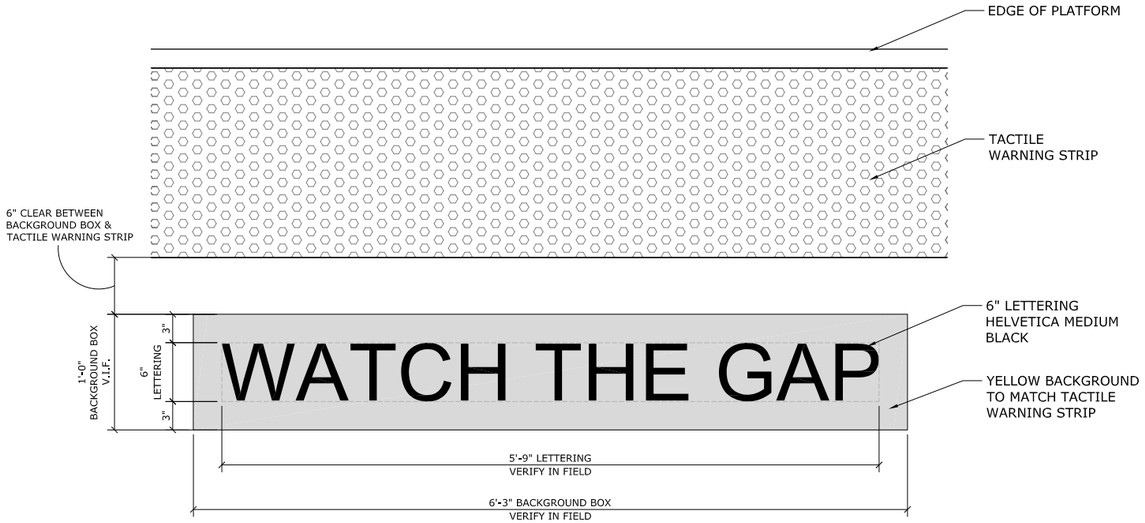

"WATCH THE GAP" SIGN DETAIL PLAN

A

SCALE: 1" = 1'-0"

NOTE:

1. "WATCH THE GAP" SIGNAGE LOCATION BASED ON NUMBER OF DOORS PER TRAIN CAR.
2. ASSUMED LOCATION COUNT: 17 SIGNS PER PLATFORM.
3. CONTRACTOR TO VERIFY COUNT & COORDINATE FINAL LOCATION WITH METRO-NORTH RAILROAD.
4. USE STIRLING LLOYD "SAFETRACK SC" PRODUCT OR APPROVED EQUAL FOR BACKGROUND & LETTERING.
5. "WATCH THE GAP" STENCIL TO BE PAID UNDER "LATEX MODIFIED TOPPING"

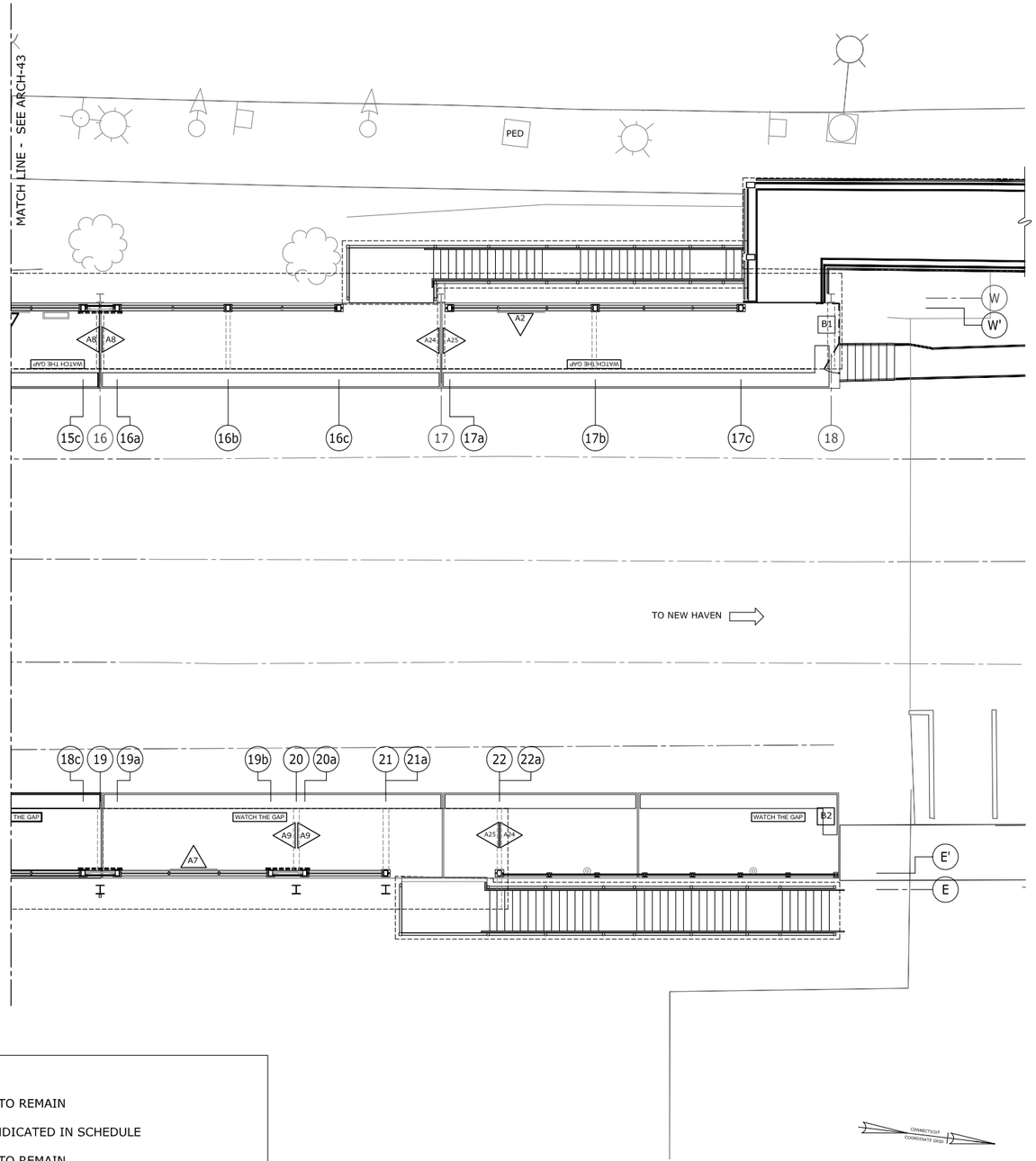

SIGNAGE LEGEND:

X	EXISTING SIGN TO REMAIN
X	NEW SIGN AS INDICATED IN SCHEDULE
X	EXISTING SIGN TO REMAIN
X	NEW SIGN AS INDICATED IN SCHEDULE
WATCH THE GAP	"WATCH THE GAP" SIGN

PLATFORM SIGNAGE PLAN - EAST & WEST PART 4

SCALE: 1/8" = 1'-0"

REV.	DATE	REVISION DESCRIPTION	SHEET NO.
-	-	-	-
-	-	-	-
-	-	-	-
-	-	-	-
-	-	-	-
-	-	-	-

THE INFORMATION, INCLUDING ESTIMATED QUANTITIES OF WORK, SHOWN ON THESE SHEETS IS BASED ON LIMITED INVESTIGATIONS BY THE STATE AND IS IN NO WAY WARRANTED TO INDICATE THE CONDITIONS OF ACTUAL QUANTITIES OF WORK WHICH WILL BE REQUIRED.

PLOTTED: 31-Mar-14

DESIGNER/DRAFTER: J. LEON
CHECKED BY: S. GARDNER
SCALE AS NOTED

STATE OF CONNECTICUT
DEPARTMENT OF TRANSPORTATION

FILENAME: FD_MST_ARC_0301_0155_ARCH-44.DWG

GREGG WIES & GARDNER ARCHITECTS, LLC

APPROVED BY: DATE: 03/28/14

PROJECT TITLE:
INSTALLATION OF CANOPY AT BRIDGEPORT STATION

TOWN: **BRIDGEPORT**

DRAWING TITLE: **PLATFORM SIGNAGE PLAN - EAST & WEST - PART 4**

PROJECT NO. **301-155**
DRAWING NO. **ARCH-44**
SHEET NO. **05.44**

Border Version: 10/1/09

G:\1224.00 Task Order - Bridgeport RR Canopies (Lochner)\1224 Drawings\FD_MST_ARC_0301_0155_ARCH-44.dwg, 3/31/2014 11:00:24 AM, jleon

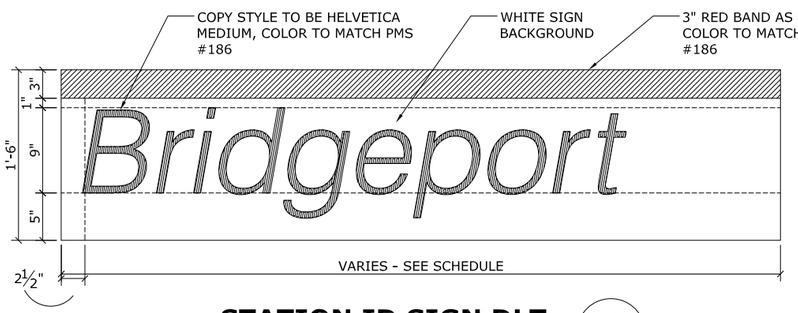

STATION ID SIGN DLT (D)
N.T.S.

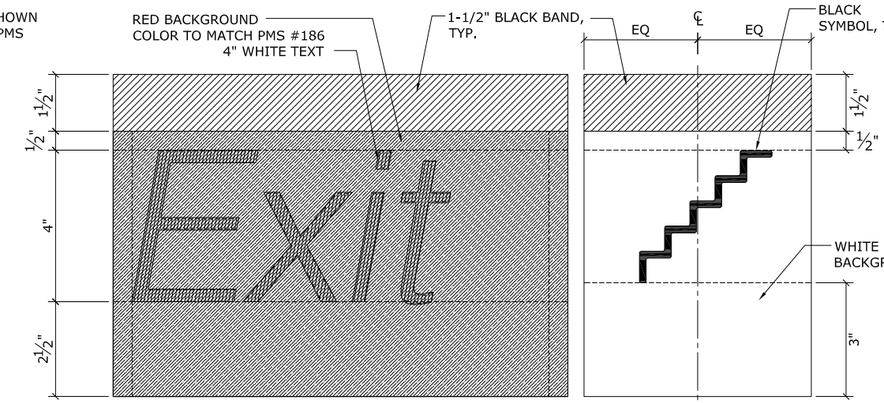

STANDARD DIRECTIONAL SIGN DTLS (C)
N.T.S.

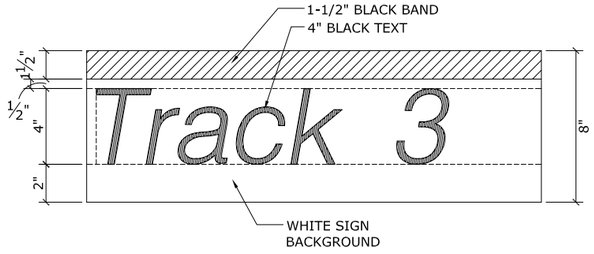

DIRECTIONAL SIGN DTL (A)
N.T.S.

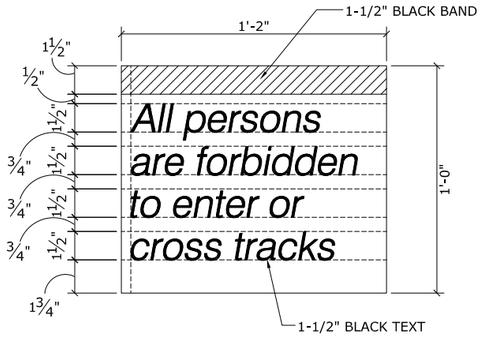

WARNING SIGN "B2" (E)
N.T.S.

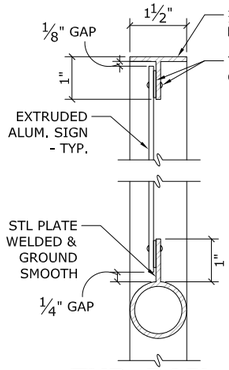

TYP. RAIL MNT'G DTL (G)
6"=1'-0"
ARCH-37

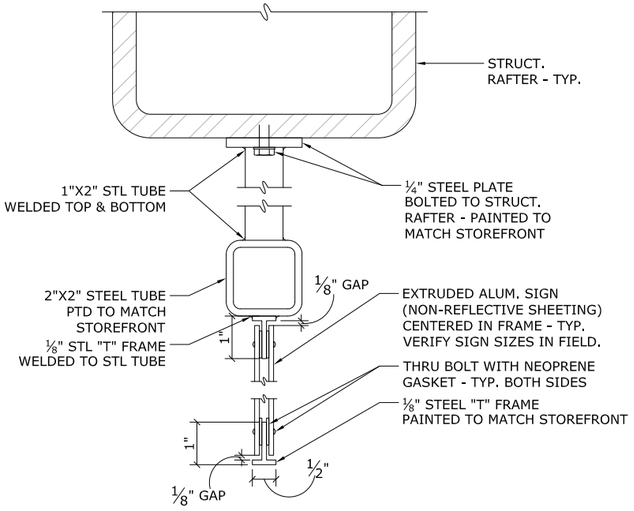

TYP. DIRECTIONAL SIGN MOUNTING DETAIL (F)
6"=1'-0"
ARCH-34

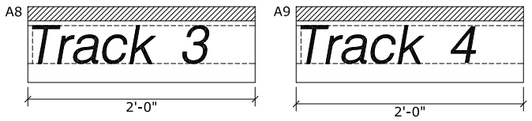

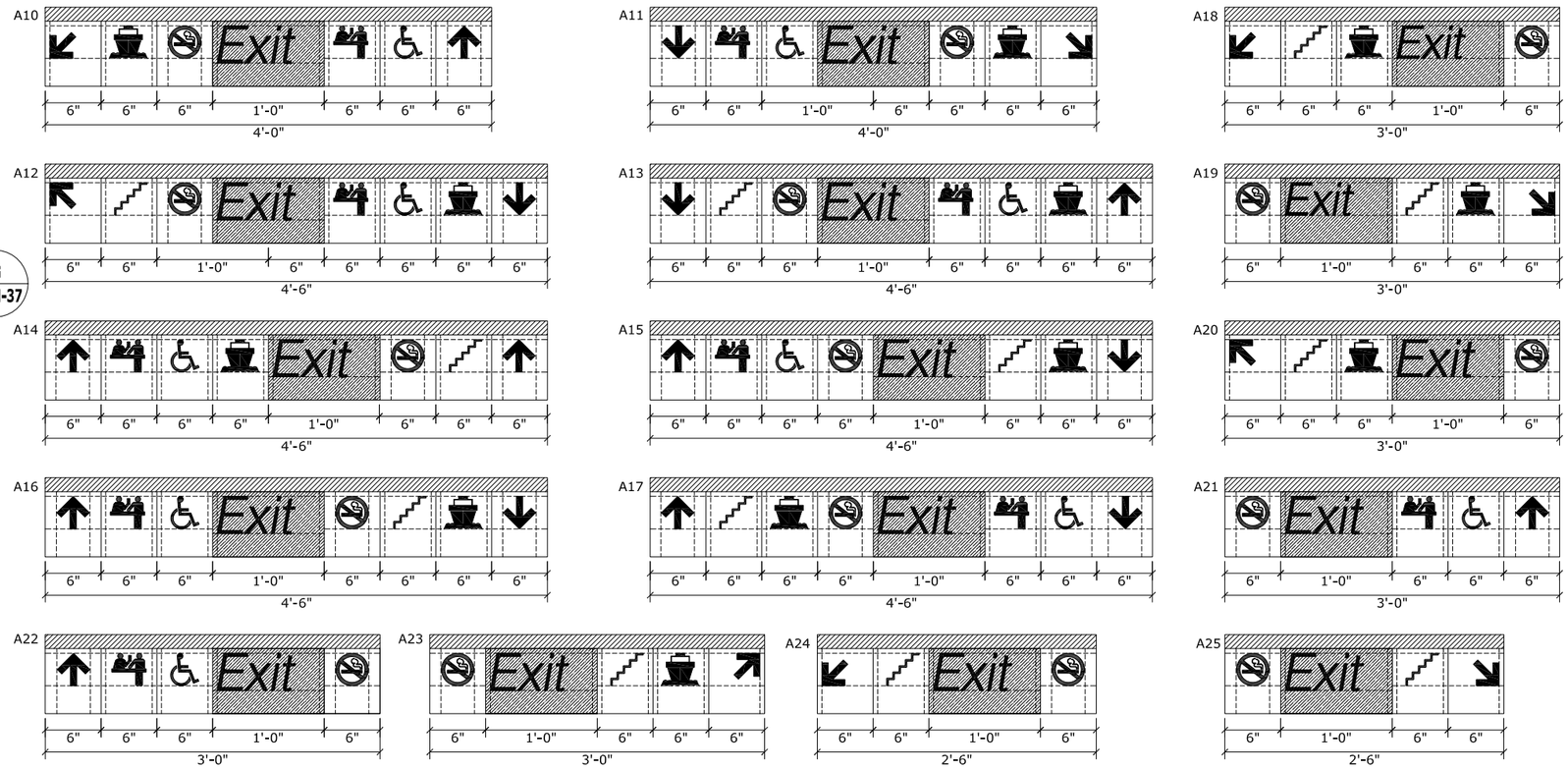

DIRECTIONAL SIGNAGE (B)
N.T.S.

REV.	DATE	REVISION DESCRIPTION	SHEET NO.
-	-	-	-
-	-	-	-
-	-	-	-
-	-	-	-
-	-	-	-
-	-	-	-

THE INFORMATION, INCLUDING ESTIMATED QUANTITIES OF WORK, SHOWN ON THESE SHEETS IS BASED ON LIMITED INVESTIGATIONS BY THE STATE AND IS IN NO WAY WARRANTED TO INDICATE THE CONDITIONS OF ACTUAL QUANTITIES OF WORK WHICH WILL BE REQUIRED.

PLOTTED: 31-Mar-14

DESIGNER/DRAFTER: J. LEON
CHECKED BY: S. GARDNER
SCALE AS NOTED

STATE OF CONNECTICUT
DEPARTMENT OF TRANSPORTATION

FILENAME: FD_MST_ARC_0301_0155_ARCH-45.DWG

GREGG WIES & GARDNER ARCHITECTS, LLC

APPROVED BY: DATE: 03/28/14

PROJECT TITLE:
INSTALLATION OF CANOPY AT BRIDGEPORT STATION

TOWN: **BRIDGEPORT**

DRAWING TITLE: **SIGNAGE SCHEDULE & DETAILS**

PROJECT NO. **301-155**
DRAWING NO. **ARCH-45**
SHEET NO. **05.45**

Border Version: 10/1/09

G:\1224.00 Task Order - Bridgeport RR Canopies (Lochner)\1224 Drawings\FD_MST_ARC_0301_0155_ARCH-45.dwg, 3/31/2014 11:03:19 AM, jleon

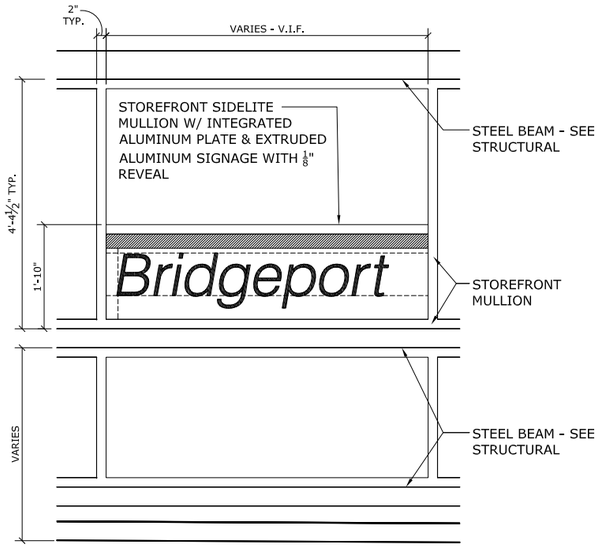

STATION SIGNAGE ELEVATION DETAIL - ARCH-46

3/4"=1'-0"

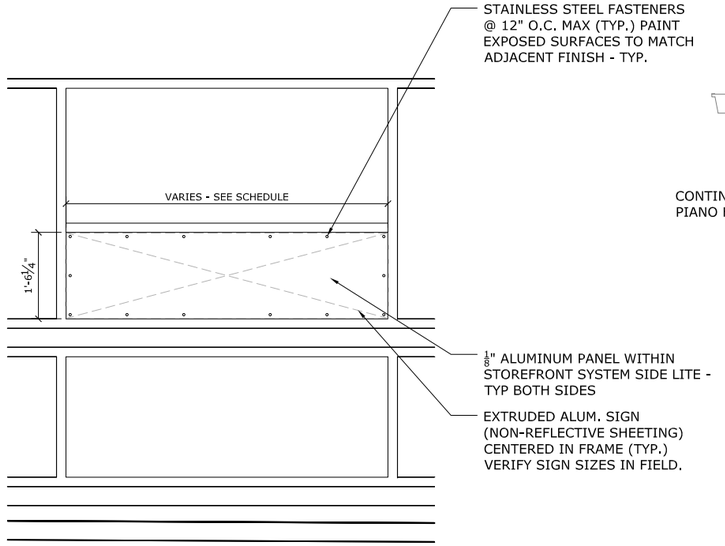

SIGNAGE MOUNTING PLATE ELEVATION DETAIL - B

3/4"=1'-0"

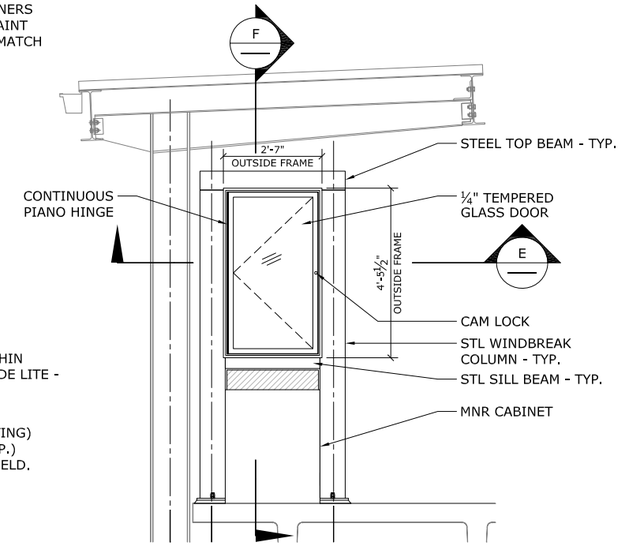

ELEVATION @ MNR BULLETIN BOARD - D

1/2"=1'-0"

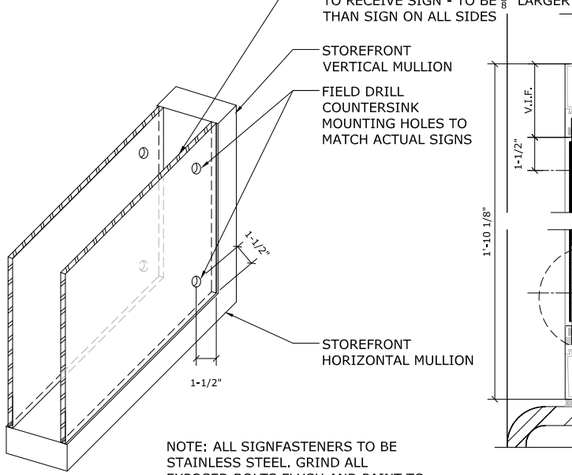

NOTE: ALL SIGNFASTENERS TO BE STAINLESS STEEL. GRIND ALL EXPOSED BOLTS FLUSH AND PAINT TO MATCH ADJACENT FINISH (TYP.)

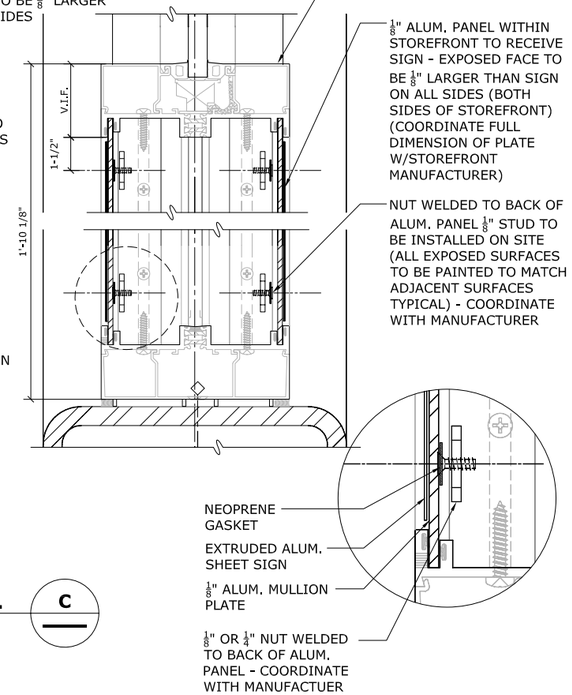

SIGNAGE MOUNTING DETAIL - C

N.T.S.

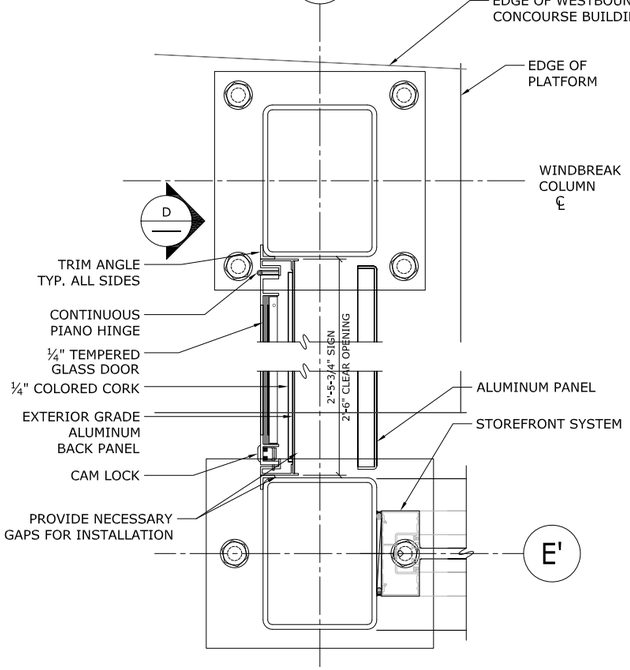

PLAN @ MNR BULLETIN BOARD - E

3"=1'-0"

ARCH-33

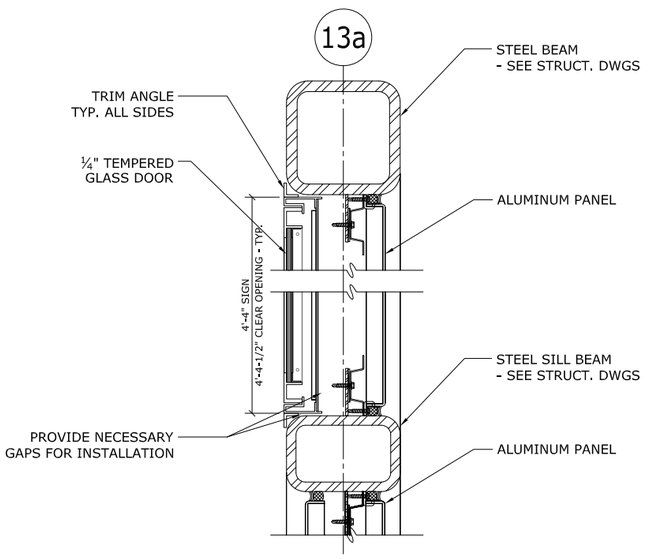

SECTION @ MNR BULLETIN BOARD - F

3"=1'-0"

REV.	DATE	REVISION DESCRIPTION	SHEET NO.
-	-	-	-
-	-	-	-
-	-	-	-
-	-	-	-
-	-	-	-
-	-	-	-
-	-	-	-

THE INFORMATION, INCLUDING ESTIMATED QUANTITIES OF WORK, SHOWN ON THESE SHEETS IS BASED ON LIMITED INVESTIGATIONS BY THE STATE AND IS IN NO WAY WARRANTED TO INDICATE THE CONDITIONS OF ACTUAL QUANTITIES OF WORK WHICH WILL BE REQUIRED.

PLOTTED: 31-Mar-14

DESIGNER/DRAFTER: J. LEON

CHECKED BY: S. GARDNER

SCALE AS NOTED

STATE OF CONNECTICUT
DEPARTMENT OF TRANSPORTATION

FILENAME: FD_MST_ARC_0301_0155_ARCH-46.DWG

GREGG WIES & GARDNER ARCHITECTS, LLC

APPROVED BY: DATE: 03/28/14

PROJECT TITLE:
INSTALLATION OF CANOPY AT BRIDGEPORT STATION

TOWN: **BRIDGEPORT**

DRAWING TITLE: **SIGNAGE DETAILS**

PROJECT NO. **301-155**

DRAWING NO. **ARCH-46**

SHEET NO. **05.46**

G:\2224.00 Task Order - Bridgeport RR Canopies (Lechner)\2224 Drawings\FD_MST_ARC_0301_0155_ARCH-46.dwg, 3/31/2014 11:07:23 AM, jleon

Border Version: 10/1/09

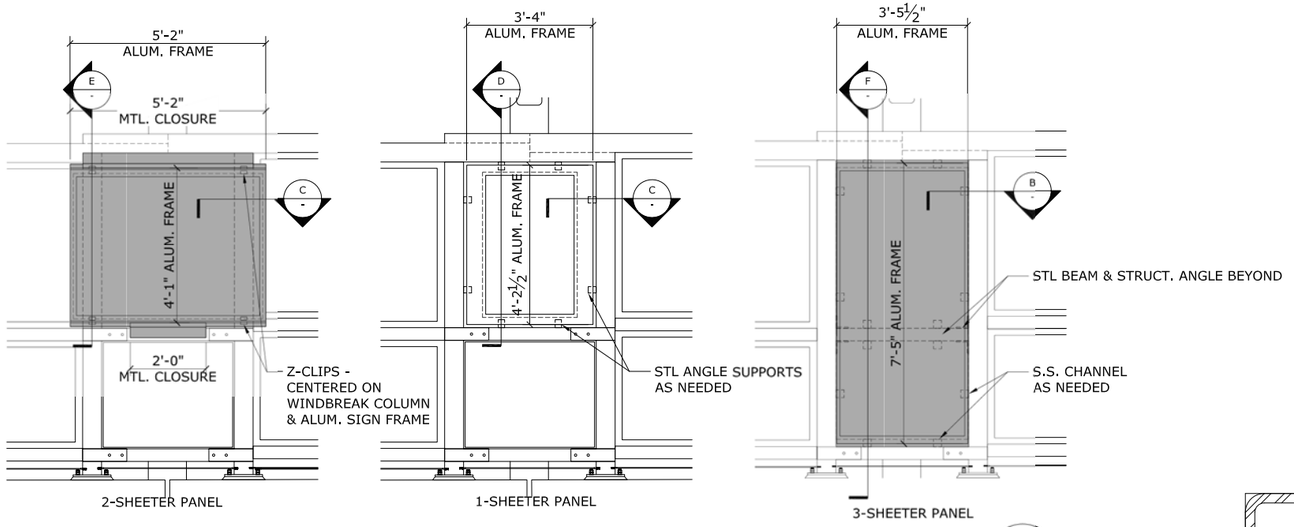

TYPICAL ELEVATION @ ADVERTISING PANELS

A

1/2" = 1'-0"

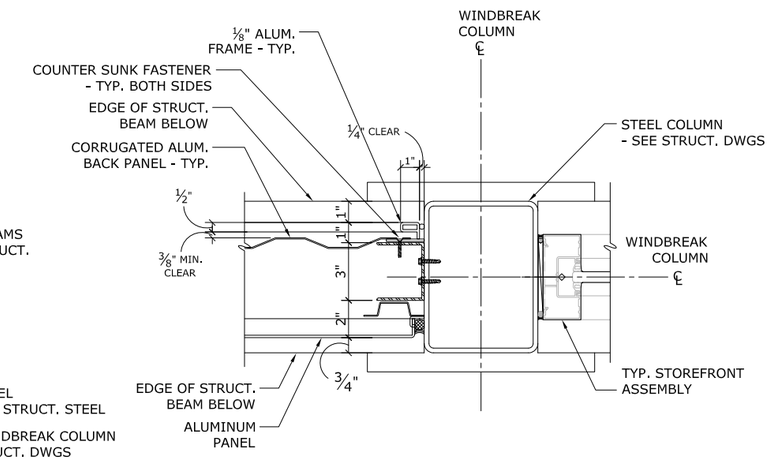

TYP. PLAN DTL @ 3-SHEETER ADVERTISING PANEL

B

ARCH-8

3"=1'-0"

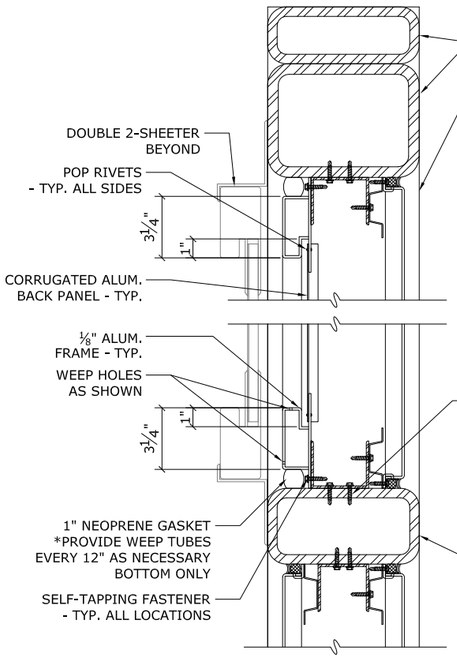

TYP. SECTION DTL @ 1-SHEETER PANEL

D

3" = 1'-0"

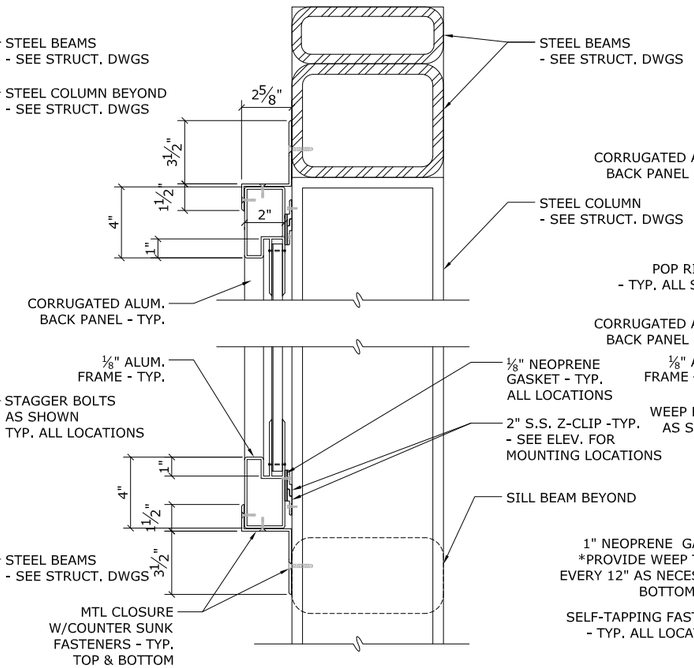

TYP. SECTION DTL @ 2-SHEETER PANEL

E

3" = 1'-0"

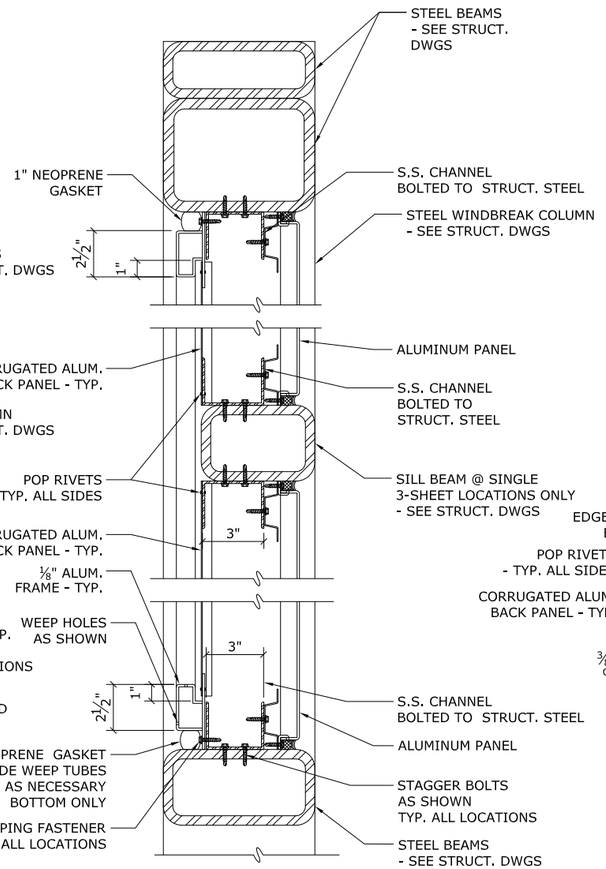

TYP. SECTION DTL @ 3-SHEETER PANEL

F

3" = 1'-0"

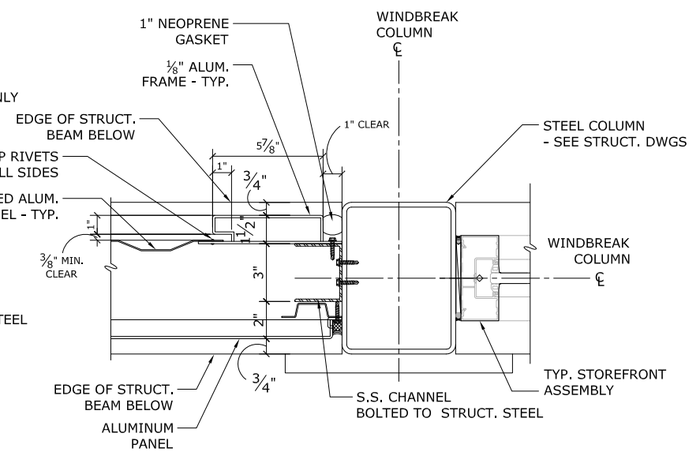

TYP. PLAN DTL @ 1-SHEETER ADVERTISING PANEL

C

ARCH-9

3"=1'-0"

REV.	DATE	REVISION DESCRIPTION	SHEET NO.
-	-	-	-
-	-	-	-
-	-	-	-
-	-	-	-
-	-	-	-
-	-	-	-

THE INFORMATION, INCLUDING ESTIMATED QUANTITIES OF WORK, SHOWN ON THESE SHEETS IS BASED ON LIMITED INVESTIGATIONS BY THE STATE AND IS IN NO WAY WARRANTED TO INDICATE THE CONDITIONS OF ACTUAL QUANTITIES OF WORK WHICH WILL BE REQUIRED.

PLOTTED: 28-Mar-14

DESIGNER/DRAFTER: J. LEON
CHECKED BY: S. GARDNER
SCALE AS NOTED

STATE OF CONNECTICUT
DEPARTMENT OF TRANSPORTATION

FILENAME: FD_MST_ARC_0301_0155_ARCH-47.DWG

GREGG WIES & GARDNER ARCHITECTS, LLC
APPROVED BY:
DATE: 03/28/14

PROJECT TITLE:
INSTALLATION OF CANOPY AT BRIDGEPORT STATION

TOWN: **BRIDGEPORT**

PROJECT NO. **301-155**

DRAWING NO. **ARCH-47**

DRAWING TITLE: **ADVERTISING PANEL & SPANREL PANEL DETAILS**

SHEET NO. **05.47**

G:\1224.00 Task Order - Bridgeport RR Canopies (Lochner)\1224 Drawings\FD_MST_ARC_0301_0155_ARCH-47.dwg, 3/28/2014 3:15:49 PM, jleon

Border Version: 10/1/09

06 - ELECTRICAL
INDEX OF DRAWINGS

DRAWING NUMBER	DRAWING TITLE	DRAWING NUMBER	DRAWING TITLE
ELE - 01	ELECTRICAL INDEX OF DRAWINGS	ELE - 21	ELECTRICAL ONE LINE DIAGRAMS AND NOTES
ELE - 02	GENERAL NOTES, LEGENDS AND ABBREVIATIONS	ELE - 22	ELECTRICAL SERVICE EQUIPMENT DETAILS
ELE - 03	PLATFORM PLAN - ELECTRICAL DEMOLITION EAST	ELE - 23	ELECTRICAL DETAILS 1
ELE - 04	PLATFORM PLAN - ELECTRICAL DEMOLITION WEST	ELE - 24	ELECTRICAL DETAILS 2
ELE - 05	STAIRWELLS - ELECTRICAL DEMOLITION	ELE - 25	ELECTRICAL DETAILS 3
ELE - 06	TEMPORARY ELECTRICAL PLAN EAST	ELE - 26	COMMUNICATIONS DETAILS
ELE - 07	TEMPORARY ELECTRICAL PLAN WEST	ELE - 27	ELECTRICAL GROUNDING DETAILS
ELE - 08	PLATFORM PLAN - ELECTRICAL EAST	ELE - 28	PANELBOARD SCHEDULES
ELE - 09	PLATFORM PLAN - ELECTRICAL WEST	ELE - 29	LIGHTING POINT TO POINT PLAN - EAST
ELE - 10	STAIRWELL PLANS - ELECTRICAL	ELE - 30	LIGHTING POINT TO POINT PLAN - WEST
ELE - 11	PLATFORM PLAN - COMMUNICATIONS EAST		
ELE - 12	PLATFORM PLAN - COMMUNICATIONS WEST		
ELE - 13	ELEVATIONS - ELECTRICAL EAST		
ELE - 14	ELEVATIONS - ELECTRICAL WEST		
ELE - 15	PLATFORM PLAN - GROUNDING PLAN EAST		
ELE - 16	PLATFORM PLAN - GROUNDING PLAN WEST		
ELE - 17	STAIRWELLS - GROUNDING PLANS		
ELE - 18	PLATFORM PLAN - SECURITY EAST		
ELE - 19	PLATFORM PLAN - SECURITY WEST		
ELE - 20	PARTIAL INTERIOR STATION PLANS - WEST		

DESIGNED BY:
MUSCO ENGINEERING ASSOC.
375 MORGAN LANE, UNIT 307
WEST HAVEN, CT 06516

REV.	DATE	REVISION DESCRIPTION	SHEET NO.
-	-	-	-
-	-	-	-
-	-	-	-
-	-	-	-
-	-	-	-
-	-	-	-
-	-	-	-

THE INFORMATION, INCLUDING ESTIMATED QUANTITIES OF WORK, SHOWN ON THESE SHEETS IS BASED ON LIMITED INVESTIGATIONS BY THE STATE AND IS IN NO WAY WARRANTED TO INDICATE THE CONDITIONS OF ACTUAL QUANTITIES OF WORK WHICH WILL BE REQUIRED.

Plotted: 28-Mar-14

DESIGNER/DRAFTER: SMK/MVM
CHECKED BY: MVM
SCALE AS NOTED

STATE OF CONNECTICUT
DEPARTMENT OF TRANSPORTATION

Filename: FD_MST_ELE_0301_0155_ELE-01.DWG

MUSCO ENGINEERING ASSOCIATES
375 Morgan Lane, Unit 307
West Haven, CT 06516
(203) 932-1301 FAX (203) 931-1550
www.muscoengineering.com

APPROVED BY: M. MUSCO DATE: 03/28/14

PROJECT TITLE:
INSTALLATION OF CANOPY
AT
BRIDGEPORT STATION

TOWN: BRIDGEPORT

DRAWING TITLE: ELECTRICAL INDEX OF DRAWINGS

PROJECT NO. 301-155
DRAWING NO. ELE-01
SHEET NO. 06.01

Border Version: 10/1/09

GENERAL NOTES:

1. ALL WORK SHALL BE NEW, UNLESS OTHERWISE NOTED.
2. ALL ELECTRICAL WORK SHALL BE INSTALLED IN ACCORDANCE WITH THE LATEST EDITION OF THE NATIONAL ELECTRICAL CODE AS ADOPTED BY THE STATE OF CONNECTICUT, CT DOT AND LOCAL CODES.
3. ADDITIONAL JUNCTION BOXES TO BE FURNISHED AND INSTALLED AS REQUIRED.
4. THE ELECTRICAL SYSTEMS SHALL BE COMPLETELY AND EFFICIENTLY GROUNDED & BONDED AS REQUIRED BY THE NATIONAL ELECTRICAL CODE, ARTICLE 250. ALL RACEWAYS SHALL CONTAIN A GREEN GROUNDING CONDUCTOR. BOND ALL CABINETS, BOXES, ENCLOSURES, CONDUITS, ETC., AS REQUIRED.
5. ELECTRICAL EQUIPMENT LOCATIONS SHALL BE COORDINATED TO AVOID CONFLICT WITH UTILITIES AND OTHER OBSTRUCTIONS. LOCATIONS SHALL BE COORDINATED IN THE FIELD, APPROVED BY OWNER AND UTILITIES PRIOR TO PROCEEDING WITH CONSTRUCTION.
6. CONTRACTOR SHALL VERIFY REQUIREMENTS WITH THE UTILITIES PRIOR TO COMMENCING WORK.
7. RECEPTACLE, LIGHT FIXTURE AND POWER ITEMS BRANCH CIRCUIT WIRING SHALL BE PROVIDED AS INDICATED ON THE DRAWINGS. THE MINIMUM WIRING SHALL BE 2#10, 1#10 GND. IN 1" CONDUIT. MINIMUM BRANCH CIRCUIT WIRING AND HOMERUNS WITH LENGTHS, LONGER THAN 140 FEET SHALL USE #8 AWG TO COMPENSATE FOR VOLTAGE DROP.
8. ALL CONDUIT RUN EXPOSED ON THIS PLATFORM PROJECT SHALL BE RIGID GALVANIZED STEEL, PVC COATED. ALL BOXES SHALL BE PVC COATED INSIDE AND OUT. CONDUIT STRAPS SHALL ALSO BE COMPLETELY PVC COATED. PVC COATING SHALL BE ONE APPROVED COLOR AND BY 'PLASTIBOND RED-HOT' OR EQUAL.
9. ALL MOUNTING HARDWARE, MACHINE SCREWS, NUTS, FLAT WASHERS. LOCKWASHERS, ETC. SHALL BE 316 STAINLESS STEEL.
10. ALL PLYWOOD FOR MOUNTING EQUIPMENT SHALL BE 3/4"TH x 6'-0" HIGH, BOTTOM TO BE 12" A.F.F. x WIDTH AS SHOWN. PLYWOOD SHALL BE FIRE RETARDANT TREATED AND ONE SIDE PAINTED WITH TWO COATS OF WHITE LAYTEX ENAMEL. ONE (1) FIRE RATED LABELS AND IDENTIFICATIONS SHALL BE FREE OF PAINT OR DEBRIS, AND CLEANED BY CONTRACTOR.
11. ANY PENETRATIONS THRU PLATFORM DECKS AND BUILDINGS SHALL BE SEALED IN A METHOD APPROVED BY MNRR & DOT.
12. USE MECHANICAL TYPE CAP FOR ALL UNUSED CONDUCTORS AND UNUSED CONDUITS. ALL CONDUITS SHALL BE SEALED WITH BUSHINGS.
13. THE CONTRACTOR SHALL BE COMPLETELY RESPONSIBLE FOR ALL COORDINATION OF ANY ITEMS REGARDING THE UTILITY COMPANIES AND METRO NORTH RAILROAD. ALL COSTS ASSOCIATED WITH THE UTILITY COMPANIES SHALL BE INCLUDED IN THE CONTRACTORS BASE BID AND SHALL BE CONSIDERED PART OF THIS PROJECT.
14. REFER TO THE METRO NORTH RAILROAD STATION STANDARDS AND GUIDELINES FOR ADDITIONAL REQUIREMENTS.

PROJECT NOTES:

1. ALL EQUIPMENT USED ON THE JOB SHALL BE NEW AND HAVE U.L. LABEL.
2. THE CONTRACTOR SHALL PROVIDE A 1/4" NYLON DRAG LINE IN EACH SPARE CONDUIT.
3. ALL EQUIPMENT USED UNDERGROUND SHALL BE NEW AND BE LISTED BY U.L. FOR UNDERGROUND USE.
4. CONTRACTOR SHALL COORDINATE BACKFILL OF ALL ELECTRICAL TRENCHES WITH 98% CLEAN DIRT OR SAND AND COMPACT TO 95% MINIMUM DENSITY WITH SITE WORK CONTRACTOR.
5. ELECTRICAL CONTRACTOR SHALL SUBMIT SHOP DRAWINGS TO ENGINEER INDICATING SITE LIGHTING DISTRIBUTION WIRING AND BALANCING.
6. PITCH CONDUIT AT A RATE OF 3" PER 100'-0".
7. REFER TO DRAWING ELE-08 TO ELE-12 FOR NUMBER OF CONDUITS AND SIZES/ TYPES OF CONDUCTORS/CABLES.
8. PULLBOXES SHALL BE SIZED FOR ALL INCOMING & OUTGOING FEEDERS.
9. REFER TO DRAWING ELE-21 & ELE-22 FOR ELECTRICAL SERVICE ONE LINE DIAGRAMS.
10. CONDUIT SHALL BE SCHEDULE 80 PVC APPROVED FOR ALL UNDERGROUND INSTALLATIONS.
11. ALL TRENCHING SHALL BE DONE IN ACCORDANCE WITH THE PLANNING AND ZONING REGULATIONS FOR THE CITY OF BRIDGEPORT, CONNECTICUT; THE DEPARTMENT OF PUBLIC WORKS, BRIDGEPORT, CONNECTICUT; THE BUILDING DEPARTMENT, BRIDGEPORT, CONNECTICUT, AND UI REQUIREMENTS.
12. ELECTRICAL CONTRACTOR TO BALANCE ALL NEW LIGHTING FIXTURE LOADS AS REQUIRED.
13. PROVIDE ALLEN WARNING TAPE 6" TO 12" MAX ABOVE ALL UNDERGROUND PIPING AS REQUIRED.
14. CONTRACTOR TO COORDINATE PULL BOX LOCATION AND QUANTITY REQUIRED WITH LOCAL AUTHORITIES.
15. CONTRACTOR SHALL BE RESPONSIBLE FOR RESTORATION OF ALL FINISHED GRADE, (GRASS, CONCRETE, PAVEMENT, ETC.) AND ALL ASSOCIATED AREAS AFFECTED BY HIS WORK, BACK TO ITS ORIGINAL CONDITION.
16. CONTRACTOR TO COORDINATE LOCATIONS OF CONDUITS AND WIRING SYSTEMS BEING RUN THROUGH STRUCTURAL COLUMNS AND TUBES. CONTRACTOR SHALL REFER TO STRUCTURAL DRAWINGS FOR COORDINATION OF PENETRATIONS THROUGH STRUCTURAL MEMBERS.
17. CONTRACTOR TO COORDINATE WITH FUSCO MANAGEMENT FOR ALL ELECTRICAL WORK BEING DONE ON PLATFORM AND INTERIOR OF CONCOURSE BUILDINGS.

	LEGEND:
M	(UI CO) UNITED ILLUMINATING COMPANY SERVICE METER
	PANELBOARD, 120/208 VOLT, 1 PHASE, 3 WIRE
	DISCONNECT SWITCH, 250V, 3P-30 AMP, NON-FUSED, UNLESS OTHERWISE NOTED
	GROUND, SIZE AS REQ'D. BY N.E.C., CONNECT TO APPROVED GROUNDING POINT
S	PUBLIC ADDRESS SYSTEM DUAL LOUDSPEAKER OUTLET BOX NEW LOCATION- (4" OCTAGONAL WITH BLANK COVER) AND RACEWAY WITH PULLWIRE BY ELECTRICAL CONTRACTOR. THE SPEAKER, BRACKETS, WIRING CONNECTIONS BY MNRR. CONFIRM MOUNTING OF SPEAKERS WITH MNRR
RR	RAILROAD TELEPHONE SYSTEM PLATFORM PEDESTAL AND ENCLOSURE WITH RAILROAD TELEPHONE INSIDE (ENCLOSURE TO BE BECO MODEL 14WP-DA-SL, TELEPHONE WITHIN ENCLOSURE TO BE STANDARD TOUCH TONE TYPE). PEDESTAL TO BE MYRMIDON CORP. MODEL 520-7702.
A	POLE LIGHTING FIXTURE AND OUTLET BOX, SUBSCRIPT "A" DENOTES FIXTURE TYPE, SEE LIGHTING FIXTURE SCHEDULE
AEM	POLE LIGHTING FIXTURE WITH EMERGENCY AND OUTLET BOX, SUBSCRIPT "AEM" DENOTES FIXTURE TYPE, SEE LIGHTING FIXTURE SCHEDULE
B	WALL MOUNTED LIGHTING FIXTURE AND OUTLET BOX, MOUNTED UNDER BRIDGE SECTION. SUBSCRIPT "B" DENOTES FIXTURE TYPE, SEE LIGHTING FIXTURE SCHEDULE
C CEM C2	LIGHTING FIXTURE AND OUTLET BOX, WITH EMERGENCY LIGHTING CIRCUIT. SUBSCRIPTS "C", "CEM", "C2" - DENOTES FIXTURE TYPE, SEE LIGHTING FIXTURE SCHEDULE
D	CEILING MOUNTED LIGHTING FIXTURE AND OUTLET BOX, WITH EMERGENCY LIGHTING CIRCUIT. SUBSCRIPT "D" DENOTES FIXTURE TYPE, SEE LIGHTING FIXTURE SCHEDULE
WP	120 VOLT, 20 AMP GFCI DUPLEX RECEPTACLE, SUBSCRIPT "WP" DENOTES WITH WEATHERPROOF IN-USE LOCKABLE COVER
P P-1	NEMA 4, CAST IRON PULLBOX FOR POWER WIRING, SUBSCRIPT "P-1" DENOTES PULLBOX NUMBER
E E-1	NEMA 4, CAST IRON PULLBOX FOR EMERGENCY LIGHTING WIRING, SUBSCRIPT "E-1" DENOTES PULLBOX NUMBER
C C-1	NEMA 4, CAST IRON PULLBOX FOR LOW VOLTAGE COMMUNICATIONS WIRING, SUBSCRIPT "C-1" DENOTES PULLBOX NUMBER
	UNDER GROUND/PLATFORM FEEDERS
	ABOVE GROUND/PLATFORM FEEDERS
G	GROUNDING SYSTEM BARE GROUND WIRE, SIZE AS INDICATED
	1"~ x 10'-0" COPPER GROUND ROD
	CIRCUIT BREAKER
C	CONTACTOR, 30AMP, 2 POLE
PE	PHOTO-ELECTRIC SENSOR
LP-3,5	HOMERUN TO PANELBOARD, HATCH MARKS DENOTE NUMBER OF CONDUCTORS WHERE MORE THAN TWO (EXCLUDING GROUND), SUBSCRIPT "LP-3,5" DENOTES PANELBOARD AND CIRCUIT NUMBER
	UTILITY POLE
	MNRR CATENARY TOWER-SHOWN FOR REFERENCE INFO ONLY
	EXISTING LIGHTING FIXTURE

	LEGEND: (CONTINUED)
VMS	VMS (VARIABLE MESSAGE SIGN) FURNISHED & COMMUNICATION WIRED BY MNRR (IF REQUIRED)
V V-1	NEMA 4, CAST IRON PULLBOX FOR MNR VMS COMMUNICATIONS WIRING SUBSCRIPT "V-1" DENOTES PULLBOX NUMBER
R R-1	NEMA 4, CAST IRON PULLBOX FOR MNR RAILROAD TELEPHONE WIRING SUBSCRIPT "R-1" DENOTES PULLBOX NUMBER
T T-1	NEMA 4, CAST IRON PULLBOX FOR MNR REAL TIME DISPLAY WIRING SUBSCRIPT "T-1" DENOTES PULLBOX NUMBER
	EXISTING MNR SECURITY CAMERA
S S-1	NEMA 4, CAST IRON PULLBOX FOR MNR SECURITY SYSTEM WIRING SUBSCRIPT "S-1" DENOTES PULLBOX NUMBER
EX	WALL MOUNTED EXIT SIGN
	20A, 120 VOLT TWIST LOCK RECEPTACLE - NEMA L5-20R

LIGHTING FIXTURE SCHEDULE

SEE LIGHTING FIXTURE NOTE 2

FIXTURE TYPE	VOLTAGE	No. OF LAMPS	LAMP TYPE	LAMP LUMENS	APPROX. WATTS	MOUNTING	MANUFACTURER	CATALOG NO.
A	120	-	LED	13686	137	POLE	BEACON	CRZ-60NB-135-4K-T5R-UNV-SF2-BB AT 700 MA WITH TYPE V LENS
AEM	120	-	LED	13686	137	POLE	BEACON	CRZ-60NB-135-4K-T5R-UNV-SF2-BB AT 700 MA WITH TYPE V LENS W/ EMERG. FEED
POLE	-	-	-	-	-	-	GENERAL STRUCTURES INC	CPA-4-4012-BLACK FINISH - 8' HEIGHT
B	120	-	LED	3970	40	CEILING	COLUMBIA	LXEM4-40LW-RFP-EU
BEM	120	-	LED	3970	40	CEILING	COLUMBIA	LXEM4-40LW-RFP-EU-ELL14
C	120	-	LED	13686	137	BEAM MTD	BEACON	TRV-D-60NB-135-T5R-UNV-BB AT 700 MA WITH TYPE V LENS
CEM	120	-	LED	13686	137	BEAM MTD	BEACON	TRV-D-60NB-135-T5R-UNV-BB AT 700 MA WITH TYPE V LENS W/ EMERG. FEED
C2	120	-	LED	2820	27	CAN. MTD	BEACON	TRV-D-24NB-27-4K-T5R-UNV-BB AT 700 MA WITH TYPE V LENS
D	120	-	LED	5388	54	CEILING	BEACON	EDR-24NB-27-4K-T5QM-UNV-BB
EX	120	-	LED	-	3.8	WALL	DUAL LITE	LN4XRWE-I-TR (EXIT SIGN)

LIGHTING FIXTURE NOTES:

1. FINISH COLOR FOR ALL FIXTURES SHALL BE COORDINATED WITH ENGINEER & DOT.
2. REFER TO CONTRACT SPECIFICATIONS SECTION 265600 EXTERIOR LIGHTING FOR PLATFORM LIGHTING FIXTURE SPECIFICATIONS.

ELECTRICAL ABBREVIATIONS

SYMBOL	DESCRIPTION	SYMBOL	DESCRIPTION
A	AMPS	JB	JUNCTION BOX
AC	ABOVE COUNTER	KCMIL	THOUSAND CIRCULAR MILLS
AFF	ABOVE FINISHED FLOOR	KVA	KILOVOLT-AMPERE
AFG	ABOVE FINISHED GRADE	KW	KILOWATT
AL	ALUMINUM	LEP	LIGHTING EMERG. PLATFORM
AM	AMMETER	LP	LIGHTING PANEL PLATFORM
ATC	AUTOMATIC TEMPERATURE CONTROL	MCB	MAIN CIRCUIT BREAKER
ATS	AUTOMATIC TRANSFER SWITCH	MDP	MAIN DISTRIBUTION PANEL
AWG	AMERICAN WIRE GAUGE	MLO	MAIN LUGS ONLY
C	CONDUIT	MNR	METRO NORTH RAILROAD
CAT.	CATALOG	MTD	MOUNTED
CB	CIRCUIT BREAKER	NEC	NATIONAL ELECTRICAL CODE
CATV	CABLE TELEVISION	NIC	NOT IN CONTRACT
CCTV	CLOSED CIRCUIT TELEVISION	NF	NON FUSED
CIR	CIRCUIT	NR	NEW TO REPLACE EXISTING
CTDOT	CONN. DEPARTMENT OF TRANSPORATION	P	POLE
CU	COPPER	PA	PUBLIC ADDRESS
DLC	DATA LINK CABINET	PH, Ø	PHASE
DP	DISTRIBUTION PANEL	PP	POWER PANEL
DISC. SW.	DISCONNECT SWITCH	RGS	RIGID GALVANIZED STEEL
EDP	EMERGENCY DIST. PANEL	RR	MNR TELEPHONE PEDESTAL
EF	EXHAUST FAN	RTD	MNR REAL TIME DISPLAY
ELP	EMERGENCY LIGHTING PEDESTAL	SEP	SERVICE ENTRANCE PEDESTAL
EM	EMERGENCY	TCM	TICKET OFFICE MACHINE
EG	EQUIPMENT GROUND	TEL	TELEPHONE
EX	EXISTING	TYP	TYPICAL
GFI	GROUND FAULT INTERRUPTER	U.G.	UNDERGROUND
GND	GROUND	U.I.	UNITED ILLUMINATING
HP	HORSE POWER	WP	WEATHER PROOF
IG	ISOLATED GROUND	XFMR	TRANSFORMER

REV.	DATE	REVISION DESCRIPTION	SHEET NO.
-	-	-	-
-	-	-	-
-	-	-	-
-	-	-	-
-	-	-	-
-	-	-	-
-	-	-	-

THE INFORMATION, INCLUDING ESTIMATED QUANTITIES OF WORK, SHOWN ON THESE SHEETS IS BASED ON LIMITED INVESTIGATIONS BY THE STATE AND IS IN NO WAY WARRANTED TO INDICATE THE CONDITIONS OF ACTUAL QUANTITIES OF WORK WHICH WILL BE REQUIRED.

Plotted: 28-Mar-14

DESIGNER/DRAFTER: SMK/MVM

CHECKED BY: MVM

SCALE AS NOTED

STATE OF CONNECTICUT
DEPARTMENT OF TRANSPORTATION

Filename: FD_MST_ELE_0301_0155_ELE-02.DWG

MUSCO ENGINEERING ASSOCIATES
375 Morgan Lane, Unit 207
West Haven, CT 06516
(203) 932-1901 FAX (203) 901-1550
www.muscoengineering.com

APPROVED BY: M. MUSCO DATE: 03/28/14

PROJECT TITLE:
INSTALLATION OF CANOPY AT BRIDGEPORT STATION

TOWN: **BRIDGEPORT**

DRAWING TITLE: **GENERAL NOTES, LEGENDS AND ABBREVIATIONS**

PROJECT NO. **301-155**

DRAWING NO. **ELE-02**

SHEET NO. **06.02**

Border Version: 10/1/09

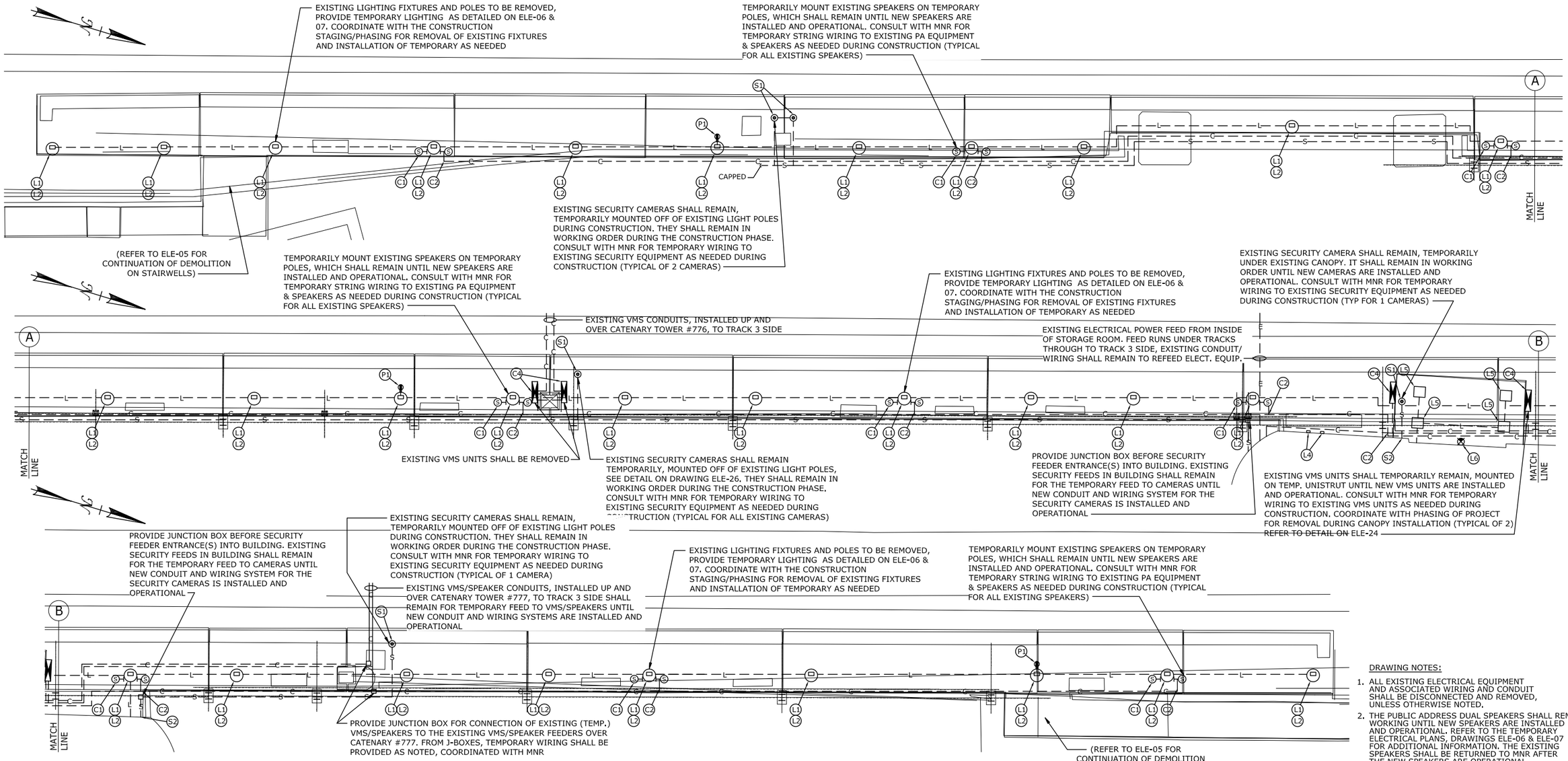

DEMOLITION LEGEND

NOTE: ALL ITEMS ON THE LEGEND BELOW SHALL BE REMOVED UNLESS NOTED OTHERWISE

- L — LIGHTING CONDUIT/WIRING
- C — COMMUNICATIONS CONDUIT/WIRING
- E — ELECTRICAL WIRING FEEDS
- S — SECURITY CAMERA WIRING
- V — VMS SYSTEM WIRING

GROUNDING/BONDING LEGEND	LIGHTING LEGEND	COMMUNICATIONS LEGEND
G1 GND. BOND TO METAL RAILING	L1 EXISTING LIGHTING FIXTURE	C1 EXISTING SPEAKER (TYP OF 2)
G2 GND. BOND TO SIGN ON PLATFORM	L2 EXISTING LIGHTING J-BOX	C2 EXISTING COMMUNICATIONS J-BOX
G3 GND. BOND TO TRASH BIN	L3 EXISTING STAIR LIGHTING	C3 SPEAKER WIRING INTO BUILDING
G4 GND. BOND TO METAL WALL	L4 EXISTING LIGHTING PHOTOCELL	C4 EXISTING VMS LOCATION
G5 GND. BOND TO METAL BENCH	L5 EXISTING UNDER CANOPY FIXTURE	C5 VMS WIRING INTO BUILDING
G6 GND. BOND TO NEWSPAPER BIN	L6 EXISTING EXIT SIGN	SECURITY LEGEND
G7 GND. BOND TO HC RAMP BOX	POWER LEGEND	S1 EXISTING SECURITY CAMERA
G8 GND. BOND TO STRUCTURAL STEEL	P1 EXISTING RECEPTACLE	S2 CAMERA WIRING INTO BUILDING

PLATFORM PLAN - ELECTRICAL DEMOLITION EAST

SCALE: 1/8" = 1'-0"

1 ELE-03

COMMUNICATIONS SYSTEM: (PLEASE NOTE)

1. THE EXISTING DLC CABINET (WEST CONCOURSE STORAGE ROOM) AND PA CABINET (MNR TICKET OFFICE) WILL BE REMOVED AS A PART OF THIS PROJECT, BUT WILL REMAIN FULLY OPERATIONAL DURING THE CONSTRUCTION PERIOD. THE TEMPORARY SPEAKERS AND VMS UNITS SHALL BE WIRED, TEMPORARILY TO THESE UNITS AS INDICATED ON DRAWINGS ELE-06 & ELE-07.

IMPORTANT! READ!
WARNING AND DISCLAIMER OF LIABILITY
UNDERGROUND UTILITIES

The user of this document Is WARNED NOT TO RELY on the purported accuracy, scale, dimension, measurement, descriptions, or elevations of any underground structure.

The underground structures depicted hereon are for Informational purposes only. The Preparer of this document DISCLAIMS ANY LIABILITY whatsoever to the user. There are no warranties or representations, expressed or implied and any use other than for Informational purposes Is excessive, unIntended and an impermissible misuse of this document.

Before Excavating Call Toll Free 1-800-922-4455 for Underground Utility Information. Please call 48 hours before service is required on jobsite.

DRAWING NOTES:

1. ALL EXISTING ELECTRICAL EQUIPMENT AND ASSOCIATED WIRING AND CONDUIT SHALL BE DISCONNECTED AND REMOVED, UNLESS OTHERWISE NOTED.
2. THE PUBLIC ADDRESS DUAL SPEAKERS SHALL REMAIN WORKING UNTIL NEW SPEAKERS ARE INSTALLED AND OPERATIONAL. REFER TO THE TEMPORARY ELECTRICAL PLANS, DRAWINGS ELE-06 & ELE-07 FOR ADDITIONAL INFORMATION. THE EXISTING SPEAKERS SHALL BE RETURNED TO MNR AFTER THE NEW SPEAKERS ARE OPERATIONAL.
3. REFER TO THE PROJECT SPECIFICATIONS FOR ADDITIONAL ELECTRICAL REQUIREMENTS.
4. TEMPORARY LIGHTING SHALL BE PROVIDED ONCE THE EXISTING LIGHTING FIXTURES ARE REMOVED. PLEASE NOTE, (THE EXISTING LIGHTING POLES WILL REMAIN FOR THE TEMPORARY LIGHTING). REFER TO THE TEMPORARY ELECTRICAL PLANS, DRAWINGS ELE-06 & ELE-07 FOR ADDITIONAL INFORMATION.
5. THE VMS SIGNS SHALL REMAIN WORKING UNTIL THE NEW VMS SIGNS ARE INSTALLED AND ARE OPERATIONAL. REFER TO THE TEMPORARY ELECTRICAL PLANS, DRAWINGS ELE-06 & ELE-07 FOR ADDITIONAL INFORMATION. THE EXISTING VMS SIGNS SHALL BE RETURNED TO MNR AFTER THE NEW VMS SIGNS ARE OPERATIONAL.
6. THE SECURITY SYSTEM SHALL REMAIN FULLY WORKING DURING THE CONSTRUCTION PERIOD. THE EXISTING CAMERAS WILL BE UTILIZED DURING THE TEMPORARY, CONSTRUCTION PHASE, AND BE RE--LOCATED AS INDICATED ON ELE-18, ELE-19 FOR FINAL LOCATION OF THIS CONTRACT.
7. ALL EXISTING MNR TELEPHONE UNITS SHALL BE REMOVED AND DISPOSED OF BY THE CONTRACTOR.

REV.	DATE	REVISION DESCRIPTION	SHEET NO.
-	-	-	-
-	-	-	-
-	-	-	-
-	-	-	-
-	-	-	-
-	-	-	-
-	-	-	-

THE INFORMATION, INCLUDING ESTIMATED QUANTITIES OF WORK, SHOWN ON THESE SHEETS IS BASED ON LIMITED INVESTIGATIONS BY THE STATE AND IS IN NO WAY WARRANTED TO INDICATE THE CONDITIONS OF ACTUAL QUANTITIES OF WORK WHICH WILL BE REQUIRED.

Plotted: 28-Mar-14

DESIGNER/DRAFTER: SMK/MVM
CHECKED BY: MVM
SCALE AS NOTED

STATE OF CONNECTICUT
DEPARTMENT OF TRANSPORTATION

Filename: FD_MST_ELE_0301_0155_ELE-03.DWG

MUSCO ENGINEERING ASSOCIATES
875 Morgan Lane, Unit 607
West Haven, CT 06516
(203) 932-1901 FAX (203) 931-1930
www.muscoengineering.com

APPROVED BY: M. MUSCO DATE: 03/28/14

PROJECT TITLE: INSTALLATION OF CANOPY AT BRIDGEPORT STATION

TOWN: BRIDGEPORT

DRAWING TITLE: PLATFORM PLAN - ELECTRICAL DEMOLITION EAST

PROJECT NO. 301-155
DRAWING NO. ELE-03
SHEET NO. 06.03

Border Version: 10/1/09

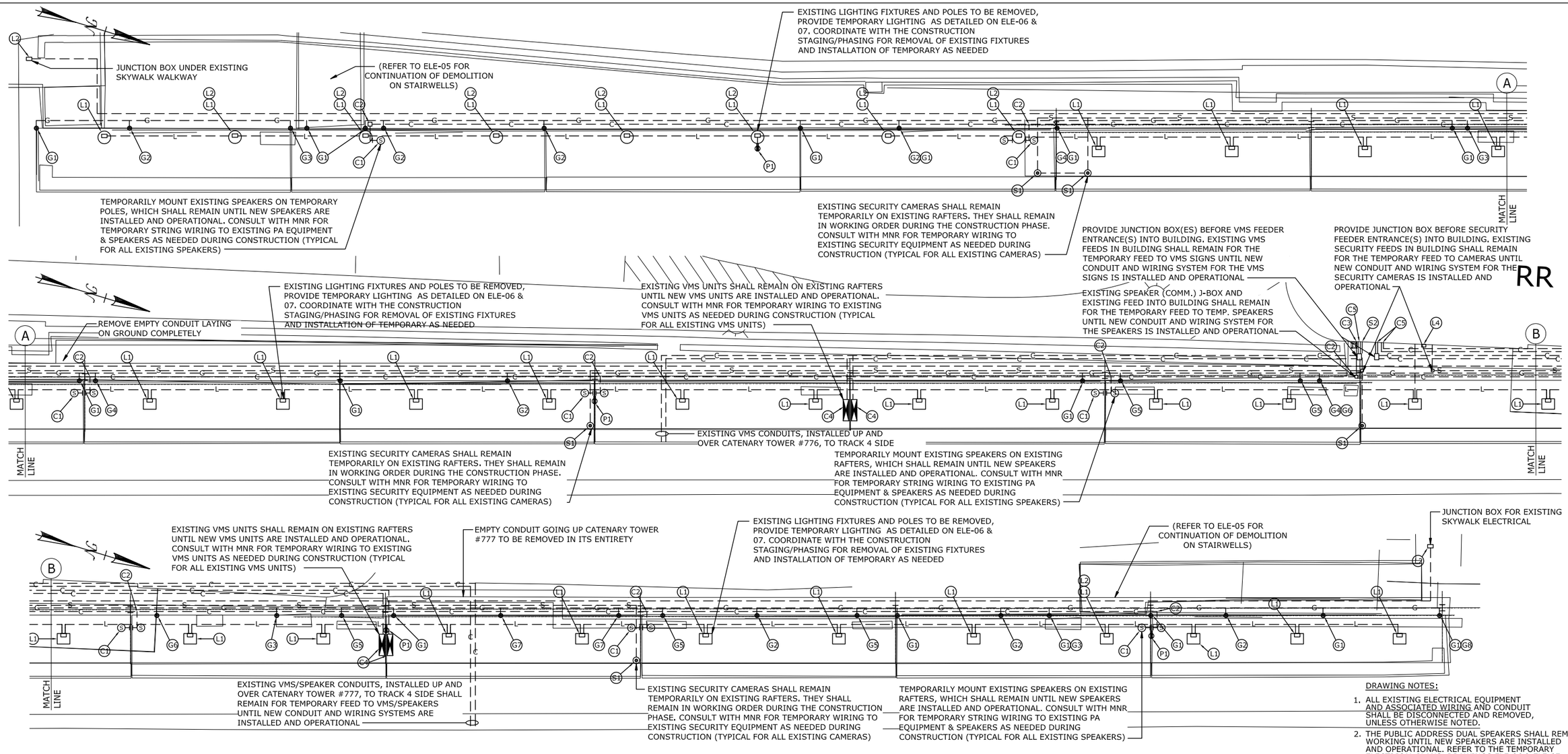

DEMOLITION LEGEND

NOTE: ALL ITEMS ON THE LEGEND BELOW SHALL BE REMOVED UNLESS NOTED OTHERWISE

- L — LIGHTING CONDUIT/WIRING
- C — COMMUNICATIONS CONDUIT/WIRING
- G — GROUNDING WIRING
- S — SECURITY CAMERA WIRING
- V — VMS SYSTEM WIRING

GROUNDING/BONDING LEGEND

- G1 GND. BOND TO METAL RAILING
- G2 GND. BOND TO SIGN ON PLATFORM
- G3 GND. BOND TO TRASH BIN
- G4 GND. BOND TO METAL WALL
- G5 GND. BOND TO METAL BENCH
- G6 GND. BOND TO NEWSPAPER BIN
- G7 GND. BOND TO HC RAMP BOX
- G8 GND. BOND TO STRUCTURAL STEEL

LIGHTING LEGEND

- L1 EXISTING LIGHTING FIXTURE
- L2 EXISTING LIGHTING J-BOX
- L3 EXISTING STAIR LIGHTING
- L4 EXISTING LIGHTING PHOTOCELL

POWER LEGEND

- P1 EXISTING RECEPTACLE

COMMUNICATIONS LEGEND

- C1 EXISTING SPEAKER (TYP OF 2)
- C2 EXISTING COMMUNICATIONS J-BOX
- C3 SPEAKER WIRING INTO BUILDING
- C4 EXISTING VMS LOCATION
- C5 VMS WIRING INTO BUILDING

SECURITY LEGEND

- S1 EXISTING SECURITY CAMERA
- S2 CAMERA WIRING INTO BUILDING

PLATFORM PLAN - ELECTRICAL DEMOLITION WEST

SCALE: 1/8" = 1'-0"

1 / ELE-04

COMMUNICATIONS SYSTEM: (PLEASE NOTE)

1. THE EXISTING DLC CABINET (WEST CONCOURSE STORAGE ROOM) AND PA CABINET (MNR TICKET OFFICE) WILL BE REMOVED AS A PART OF THIS PROJECT, BUT WILL REMAIN FULLY OPERATIONAL DURING THE CONSTRUCTION PERIOD. THE TEMPORARY SPEAKERS AND VMS UNITS SHALL BE WIRED, TEMPORARILY TO THESE UNITS AS INDICATED ON DRAWINGS ELE-06 & ELE-07.

IMPORTANT! READ!
WARNING AND DISCLAIMER OF LIABILITY
UNDERGROUND UTILITIES

The user of this document is WARNED NOT TO RELY on the purported accuracy, scale, dimension, measurement, descriptions, or elevations of any underground structure.

The underground structures depicted hereon are for informational purposes only. The Preparer of this document DISCLAIMS ANY LIABILITY whatsoever to the user. There are no warranties or representations, expressed or implied and any use other than for informational purposes is excessive, unintended and an impermissible misuse of this document.

Before Excavating Call Toll Free 1-800-922-4455 for Underground Utility Information. Please call 48 hours before service is required on jobsite.

DRAWING NOTES:

1. ALL EXISTING ELECTRICAL EQUIPMENT AND ASSOCIATED WIRING AND CONDUIT SHALL BE DISCONNECTED AND REMOVED, UNLESS OTHERWISE NOTED.
2. THE PUBLIC ADDRESS DUAL SPEAKERS SHALL REMAIN WORKING UNTIL NEW SPEAKERS ARE INSTALLED AND OPERATIONAL. REFER TO THE TEMPORARY ELECTRICAL PLANS, DRAWINGS ELE-06 & ELE-07 FOR ADDITIONAL INFORMATION. THE EXISTING SPEAKERS SHALL BE RETURNED TO MNR AFTER THE NEW SPEAKERS ARE OPERATIONAL.
3. REFER TO THE PROJECT SPECIFICATIONS FOR ADDITIONAL ELECTRICAL REQUIREMENTS.
4. TEMPORARY LIGHTING SHALL BE PROVIDED ONCE THE EXISTING LIGHTING FIXTURES ARE REMOVED. PLEASE NOTE, (THE EXISTING LIGHTING POLES WILL REMAIN FOR THE TEMPORARY LIGHTING). REFER TO THE TEMPORARY ELECTRICAL PLANS, DRAWINGS ELE-06 & ELE-07 FOR ADDITIONAL INFORMATION.
5. THE VMS SIGNS SHALL REMAIN WORKING UNTIL THE NEW VMS SIGNS ARE INSTALLED AND ARE OPERATIONAL. REFER TO THE TEMPORARY ELECTRICAL PLANS, DRAWINGS ELE-06 & ELE-07 FOR ADDITIONAL INFORMATION. THE EXISTING VMS SIGNS SHALL BE RETURNED TO MNR AFTER THE NEW VMS SIGNS ARE OPERATIONAL.
6. THE SECURITY SYSTEM SHALL REMAIN FULLY WORKING DURING THE CONSTRUCTION PERIOD. THE EXISTING CAMERAS WILL BE UTILIZED DURING THE TEMPORARY, CONSTRUCTION PHASE, AND BE RE--LOCATED AS INDICATED ON ELE-18, ELE-19 FOR FINAL LOCATION OF THIS CONTRACT.
7. ALL EXISTING MNR TELEPHONE UNITS SHALL BE REMOVED AND DISPOSED OF BY THE CONTRACTOR.

REV.	DATE	REVISION DESCRIPTION	SHEET NO.
-	-	-	-
-	-	-	-
-	-	-	-
-	-	-	-
-	-	-	-
-	-	-	-
-	-	-	-

THE INFORMATION, INCLUDING ESTIMATED QUANTITIES OF WORK, SHOWN ON THESE SHEETS IS BASED ON LIMITED INVESTIGATIONS BY THE STATE AND IS IN NO WAY WARRANTED TO INDICATE THE CONDITIONS OF ACTUAL QUANTITIES OF WORK WHICH WILL BE REQUIRED.

Plotted: 28-Mar-14

DESIGNER/DRAFTER: SMK/MVM
CHECKED BY: MVM
SCALE AS NOTED

STATE OF CONNECTICUT
DEPARTMENT OF TRANSPORTATION

Filename: FD_MST_ELE_0301_0155_ELE-04.DWG

MUSCO ENGINEERING ASSOCIATES
375 Morgan Lane, Unit 307
West Haven, CT 06516
(203) 932-1901 FAX (203) 909-1930
www.muscoengineering.com

APPROVED BY: M. MUSCO
DATE: 03/28/14

PROJECT TITLE:
INSTALLATION OF CANOPY AT BRIDGEPORT STATION

TOWN: **BRIDGEPORT**
PROJECT NO. **301-155**
DRAWING NO. **ELE-04**
DRAWING TITLE: **PLATFORM PLAN - ELECTRICAL DEMOLITION WEST**
SHEET NO. **06.04**

Border Version: 10/1/09

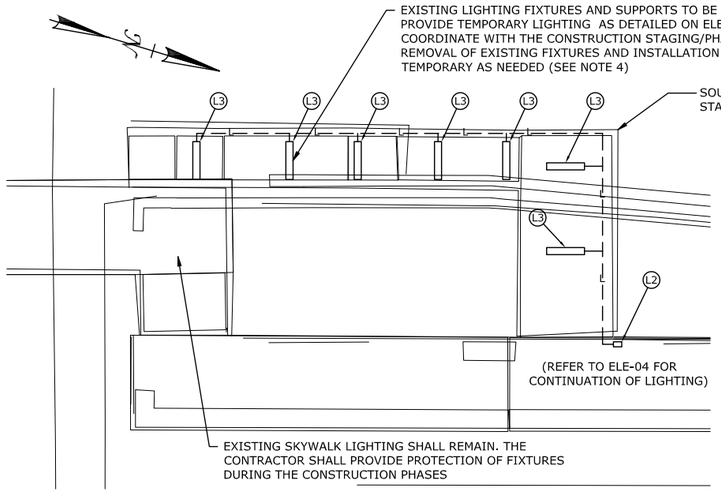

STAIRWELLS - ELECTRICAL DEMOLITION WEST 1

SCALE: 1/8" = 1'-0"

1 ELE-05

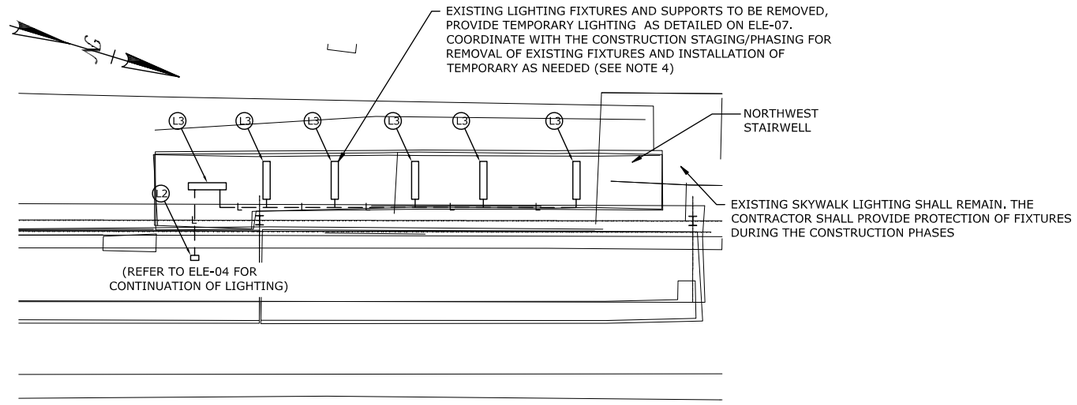

STAIRWELLS - ELECTRICAL DEMOLITION WEST 2

SCALE: 1/8" = 1'-0"

2 ELE-05

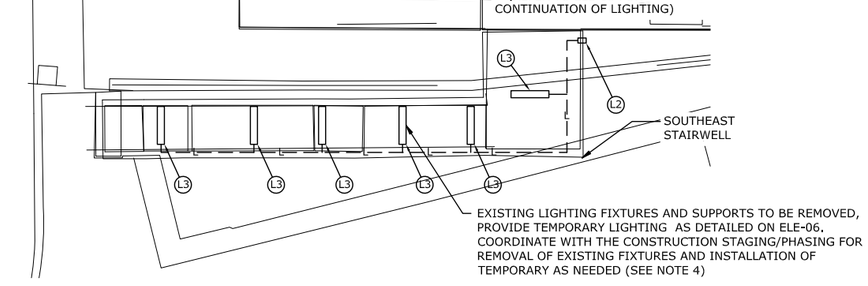

STAIRWELLS - ELECTRICAL DEMOLITION EAST 1

SCALE: 1/8" = 1'-0"

3 ELE-05

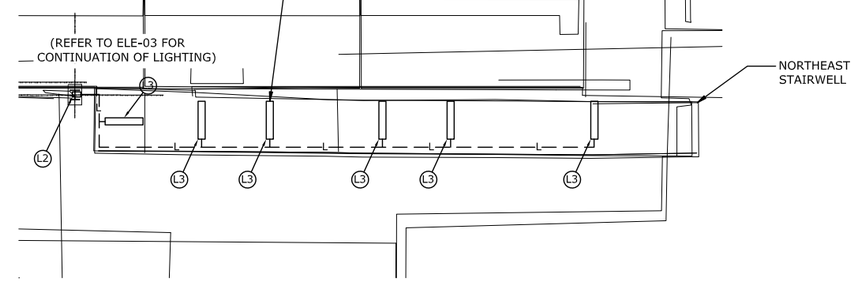

STAIRWELLS - ELECTRICAL DEMOLITION EAST 2

SCALE: 1/8" = 1'-0"

4 ELE-05

DEMOLITION LEGEND

NOTE: ALL ITEMS ON THE LEGEND BELOW SHALL BE REMOVED UNLESS NOTED OTHERWISE

—— L —— LIGHTING CONDUIT/WIRING

LIGHTING LEGEND

- (L1) EXISTING LIGHTING FIXTURE
- (L2) EXISTING LIGHTING J-BOX
- (L3) EXISTING STAIR LIGHTING

IMPORTANT! READ!
WARNING AND DISCLAIMER OF LIABILITY
UNDERGROUND UTILITIES

The user of this document is WARNED NOT TO RELY on the purported accuracy, scale, dimension, measurement, descriptions, or elevations of any underground structure.

The underground structures depicted hereon are for informational purposes only. The Preparer of this document DISCLAIMS ANY LIABILITY whatsoever to the user. There are no warrantles or representations, expressed or implied and any use other than for informational purposes is excessive, unintended and an impermissible misuse of this document.

Before Excavating Call Toll Free 1-800-922-4455 for Underground Utility Information. Please call 48 hours before service is required on jobsite.

DRAWING NOTES:

1. ALL EXISTING ELECTRICAL EQUIPMENT AND ASSOCIATED WIRING AND CONDUIT SHALL BE DISCONNECTED AND REMOVED, UNLESS OTHERWISE NOTED.
2. REFER TO THE PROJECT SPECIFICATIONS FOR ADDITIONAL ELECTRICAL REQUIREMENTS.
3. TEMPORARY LIGHTING SHALL BE PROVIDED ONCE THE EXISTING LIGHTING FIXTURES ARE REMOVED. PLEASE NOTE, (THE EXISTING LIGHTING POLES WILL REMAIN FOR THE TEMPORARY LIGHTING). REFER TO THE TEMPORARY ELECTRICAL PLANS, DRAWINGS ELE-06 & ELE-07 FOR ADDITIONAL INFORMATION.
4. THE CONTRACTOR SHALL PROVIDE ALL PATCHING, REPAIR AND TOUCH UP PAINT TO THE UNDERSIDE OF EXISTING STAIRWELLS FOR LOCATIONS OF REMOVED LIGHTING FIXTURES AND/OR NEW FIXTURE LOCATIONS AS NEEDED TO RESTORE THE CEILING TO ITS ORIGINAL CONDITION.

REV.	DATE	REVISION DESCRIPTION	SHEET NO.
-	-	-	-
-	-	-	-
-	-	-	-
-	-	-	-
-	-	-	-
-	-	-	-
-	-	-	-

THE INFORMATION, INCLUDING ESTIMATED QUANTITIES OF WORK, SHOWN ON THESE SHEETS IS BASED ON LIMITED INVESTIGATIONS BY THE STATE AND IS IN NO WAY WARRANTED TO INDICATE THE CONDITIONS OF ACTUAL QUANTITIES OF WORK WHICH WILL BE REQUIRED.

Plotted: 28-Mar-14

DESIGNER/DRAFTER: SMK/MVM

CHECKED BY: MVM

SCALE AS NOTED

STATE OF CONNECTICUT
DEPARTMENT OF TRANSPORTATION

Filename: FD_MST_ELE_0301_0155_ELE-05.DWG

MUSCO ENGINEERING ASSOCIATES
375 Morgan Lane, Unit 207
West Haven, CT 06516
(203) 652-1601 FAX (203) 691-1650
www.muscoengineering.com

APPROVED BY: M. MUSCO DATE: 03/28/14

PROJECT TITLE:
INSTALLATION OF CANOPY AT BRIDGEPORT STATION

TOWN: **BRIDGEPORT**

DRAWING TITLE: **STAIRWELLS - ELECTRICAL DEMOLITION**

PROJECT NO. **301-155**

DRAWING NO. **ELE-05**

SHEET NO. **06.05**

Border Version: 10/1/09

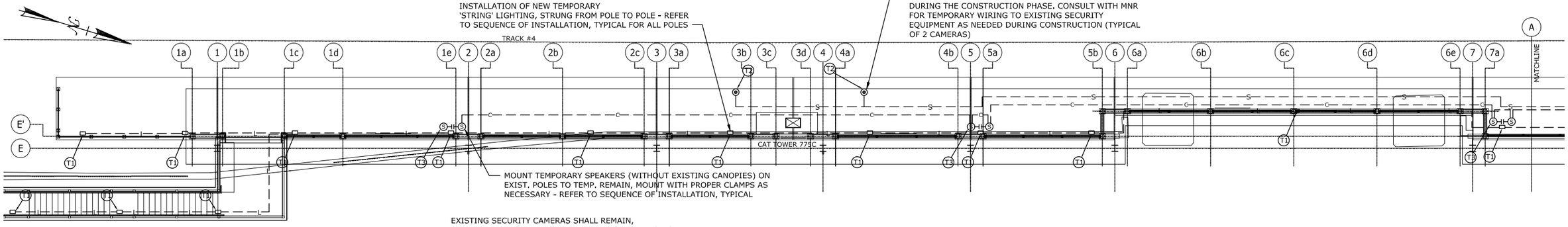

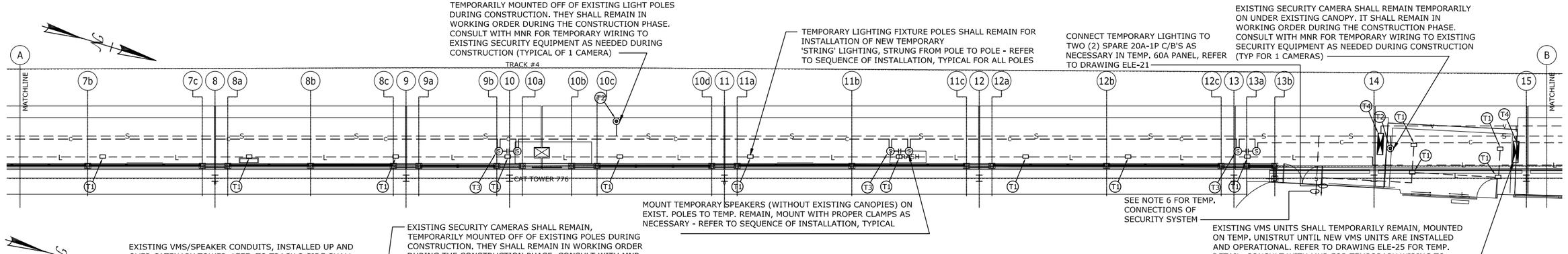

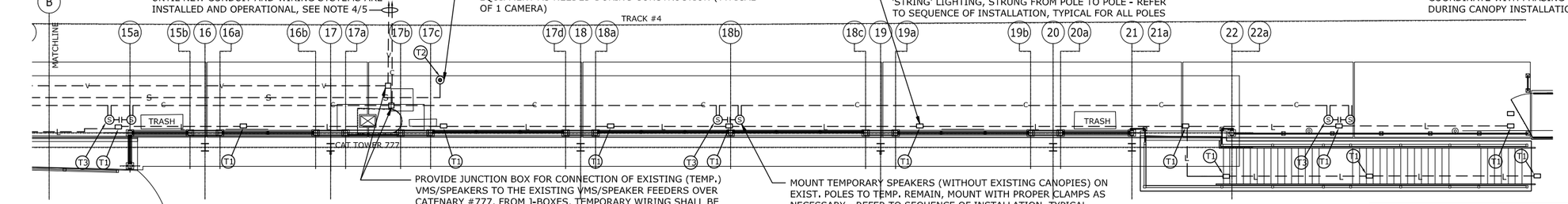

NOTES:

1. TEMPORARY LIGHTING SHALL MEET THE METRO NORTH STANDARDS AND GUIDELINES SPECIFICATIONS. FOOTCANDLE LEVELS DURING THE CONSTRUCTION PERIOD SHALL BE 15 FOOTCANDLES AVERAGE, AND MEET 10 FOOT CANDLES MINIMUM ON THE PLATFORMS AND 15 FOOT CANDLES MINIMUM AT THE STAIRS.
2. THE CONTRACTOR SHALL SUBMIT AN ENGINEERED SHOP DRAWING AND POINT TO POINT DIAGRAMS INDICATING THE LOCATIONS OF TEMPORARY LIGHTING AND THE FOOT CANDLE LEVELS REQUIRED PER MNR STANDARDS AND GUIDELINES.
3. REFER TO THE PROJECT SPECIFICATIONS REGARDING EXTERIOR LIGHTING AND TEMPORARY LIGHTING REQUIREMENTS.
4. THE TEMPORARY SPEAKERS SHALL BE CONNECTED TO THE EXISTING PA CABINET IN THE TICKET OFFICE ON THE WEST PLATFORM SIDE. EXISTING CONDUIT/WIRING RUN TO THE CABINET WITHIN THE CONCOURSE BUILDING SHALL BE REUSED WITH MNR APPROVALS. EXISTING SPEAKER FEEDS OVER CATENARY TOWER #777 TO BE USED PER MNR APPROVAL. PLEASE NOTE: THE EXISTING PA CABINET WILL BE REMOVED AS PART OF THIS PROJECT, BUT SHALL BE FULLY OPERATIONAL DURING CONSTRUCTION. CONTRACTOR SHALL COORDINATE WITH MNR FOR SWITCHOVER TO NEW DEVICES AND EQUIPMENT IN IT ROOM.
5. THE TEMPORARY VMS UNITS SHALL BE CONNECTED TO THE EXISTING DLC CABINET IN THE STORAGE ROOM. EXISTING CONDUIT/WIRING RUN TO THE CABINET WITHIN THE CONCOURSE BUILDING SHALL BE REUSED WITH MNR APPROVALS. EXISTING VMS FEEDS OVER CATENARY #777 TO BE USED PER MNR APPROVAL. PLEASE NOTE: THE EXISTING DLC CABINET WILL BE REMOVED AS PART OF THIS PROJECT, BUT SHALL BE FULLY OPERATIONAL DURING CONSTRUCTION. CONTRACTOR SHALL COORDINATE WITH MNR FOR SWITCHOVER TO NEW DEVICES AND EQUIPMENT IN IT ROOM
6. THE SECURITY CAMERAS SHALL BE CONNECTED TO THE EXISTING SECURITY CABINET AND EQUIPMENT IN THE STORAGE ROOM IN EAST CONCOURSE BUILDING. EXISTING CONDUIT/WIRING RUN WITHIN THE CONCOURSE BUILDING SHALL BE REUSED WITH MNR APPROVAL. ALL CONNECTIONS TO SECURITY EQUIPMENT SHALL BE BY MNR. EXISTING CAMERAS TO BE REUSED AND RELOCATED ON NEW STRUCTURES INDICATED ON NEW PLANS.
7. THE CONTRACTOR SHALL BE RESPONSIBLE TO REMOVE ALL TEMPORARY CONDUITS AND WIRING ONCE THE NEW SYSTEM(S) ARE OPERATIONAL.

ELECTRICAL LEGEND

NOTE: ALL ITEMS ON THE LEGEND BELOW SHALL BE REMOVED UNLESS NOTED OTHERWISE

- L — TEMPORARY LIGHTING WIRING
- C — TEMPORARY SPEAKER WIRING
- V — VMS SYSTEM WIRING
- S — SECURITY SYSTEM WIRING

LEGEND

- (T1) TEMPORARY LIGHTING FIXTURE
- (T2) TEMPORARY SECURITY CAMERA
- (T3) TEMPORARY SPEAKER
- (T4) TEMPORARY VMS UNIT

TEMPORARY ELECTRICAL PLAN - EAST

SCALE: 1/8" = 1'-0"

1 ELE-06

TEMPORARY LIGHTING SEQUENCE OF INSTALLATION:

1. AS PART OF THE DEMOLITION PROCESS, THE EXISTING LIGHTING FIXTURES SHALL BE REMOVED. THE EXISTING POLES SHALL REMAIN. EXISTING WIRING FEEDS TO THE FIXTURES/POLES SHALL BE REMOVED/CUT.
2. THE EXISTING POLES SHALL BE USED TEMPORARILY. NEW TEMPORARY LIGHTING SHALL BE INSTALLED ONTO THE EXISTING POLES, AND STRUNG FROM POLE TO POLE. TEMPORARY LIGHTING TO BE FED FROM TWO (2) SPARE 20A-1P C/B'S IN TEMPORARY 120V PANEL INSIDE STATION BUILDING.
3. AS THE NEW CANOPY IS ERECTED/CONSTRUCTED, IN THE AFFECTED AREAS: THE TEMPORARY LIGHTING SHALL BE RELOCATED TO THE NEW CANOPY STRUCTURE WITH CLAMPS/SUPPORTS TEMPORARILY UNTIL NEW POWER FEEDS ARE IN PLACE. THE EXISTING LIGHTING POLES SHALL THEN BE REMOVED IN THEIR ENTIRETY FOR CONSTRUCTION OF THE CANOPIES.

TEMPORARY SPEAKER SEQUENCE OF INSTALLATION:

1. AS PART OF THE DEMOLITION PROCESS, THE EXISTING SPEAKERS SHALL BE REMOVED FROM THEIR EXISTING MOUNTS, BUT WILL BE REUSED FOR THE TEMPORARY SPEAKER SYSTEM. EXISTING WIRING MAY BE REUSED ONLY WITH THE APPROVAL OF MNR. IF NO APPROVAL, NEW TEMPORARY WIRING SHALL BE RUN FOR THE TEMPORARY SPEAKERS.
2. THE TEMPORARY SPEAKERS SHALL BE STRUNG, SPEAKER TO SPEAKER AS INDICATED ON THE FLOOR PLANS, AND RECONNECTED TO THE PA CABINET ON THE INSIDE OF THE STATION BUILDING. MOUNT TEMP. SPEAKERS ON EXISTING LIGHT POLES AS INDICATED. FINAL TEMPORARY CONNECTIONS TO BE COORDINATED WITH MNR.
3. AS THE NEW CANOPY IS ERECTED/CONSTRUCTED, IN THE AFFECTED AREAS: THE TEMPORARY SPEAKERS SHALL BE RELOCATED TO THE NEW CANOPY STRUCTURE WITH CLAMPS/SUPPORTS TEMPORARILY UNTIL NEW FEEDS ARE IN PLACE.

TEMPORARY VMS SEQUENCE OF INSTALLATION:

1. AS PART OF THE DEMOLITION PROCESS, THE EXISTING VMS UNITS SHALL BE REMOVED, BUT WILL BE REUSED WHERE SHOWN ON PLANS FOR THE TEMPORARY VMS SYSTEM. EXISTING WIRING MAY BE REUSED ONLY WITH THE APPROVAL OF MNR. IF NO APPROVAL, NEW TEMPORARY WIRING SHALL BE RUN FOR THE TEMPORARY VMS UNITS.
2. THE TEMPORARY VMS WIRING SHALL BE STRUNG, UNIT TO UNIT AS INDICATED ON THE PLAN VIEWS, AND CONNECTED TO THE DLC CABINET ON THE INSIDE OF THE STATION BUILDING (WEST SIDE). MOUNT TEMP. VMS UNITS ON EXISTING BUILDING AWNING AS INDICATED. REFER TO DETAIL ON DRAWING ELE-25. FINAL TEMPORARY CONNECTIONS TO BE COORDINATED WITH MNR.
3. AFTER THE NEW CANOPY IS ERECTED/CONSTRUCTED IN THE AFFECTED AREAS, AND THE NEW VMS SIGNS HAVE BEEN INSTALLED AND IN WORKING ORDER, THE EXISTING, TEMPORARY VMS SIGNS SHALL BE REMOVED, SALVAGED AT THE DISCRETION OF MNR.

REV.	DATE	REVISION DESCRIPTION	SHEET NO.
-	-	-	-
-	-	-	-
-	-	-	-
-	-	-	-
-	-	-	-
-	-	-	-
-	-	-	-
-	-	-	-

THE INFORMATION, INCLUDING ESTIMATED QUANTITIES OF WORK, SHOWN ON THESE SHEETS IS BASED ON LIMITED INVESTIGATIONS BY THE STATE AND IS IN NO WAY WARRANTED TO INDICATE THE CONDITIONS OF ACTUAL QUANTITIES OF WORK WHICH WILL BE REQUIRED.

Plotted: 28-Mar-14

DESIGNER/DRAFTER: SMK/MVM

CHECKED BY: MVM

SCALE AS NOTED

STATE OF CONNECTICUT
DEPARTMENT OF TRANSPORTATION

Filename: FD_MST_ELE_0301_0155_ELE-06.DWG

MUSCO ENGINEERING ASSOCIATES
875 Morgan Lane, Unit 207
West Haven, CT 06516
(203) 932-1901 FAX (203) 931-1650
www.muscoengineering.com

APPROVED BY: M. MUSCO DATE: 03/28/14

PROJECT TITLE: INSTALLATION OF CANOPY AT BRIDGEPORT STATION

TOWN: BRIDGEPORT

DRAWING TITLE: TEMPORARY ELECTRICAL PLAN - EAST

PROJECT NO. 301-155

DRAWING NO. ELE-06

SHEET NO. 06.06

Border Version: 10/1/09

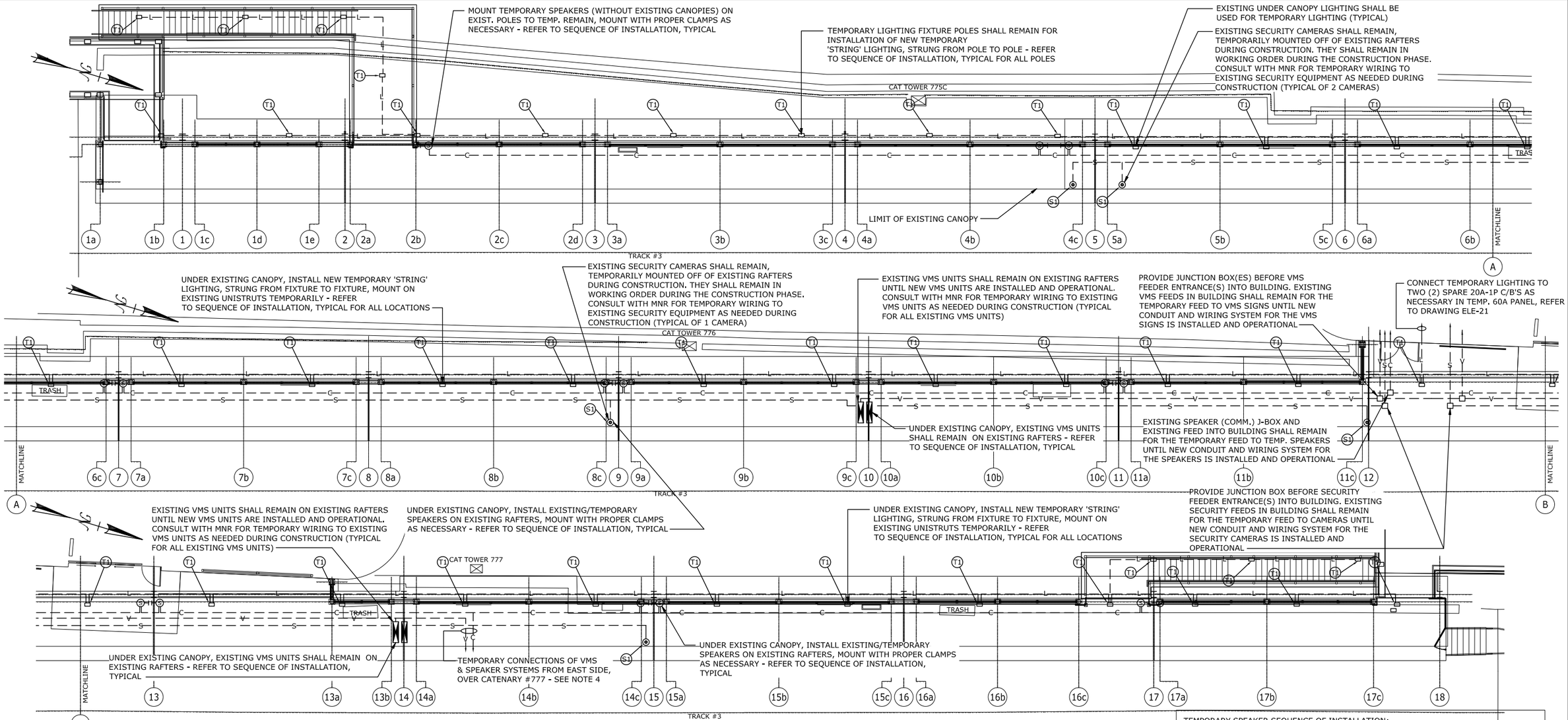

NOTES:

1. TEMPORARY LIGHTING SHALL MEET THE METRO NORTH STANDARDS AND GUIDELINES SPECIFICATIONS. FOOTCANDLE LEVELS DURING THE CONSTRUCTION PERIOD SHALL BE 15 FOOTCANDLES AVERAGE, AND MEET 10 FOOT CANDLES MINIMUM ON THE PLATFORMS AND 15 FOOT CANDLES MINIMUM AT THE STAIRS.
2. THE CONTRACTOR SHALL SUBMIT AN ENGINEERED SHOP DRAWING AND POINT TO POINT DIAGRAMS INDICATING THE LOCATIONS OF TEMPORARY LIGHTING AND THE FOOT CANDLE LEVELS REQUIRED PER MNR STANDARDS AND GUIDELINES.
3. REFER TO THE PROJECT SPECIFICATIONS REGARDING EXTERIOR LIGHTING AND TEMPORARY LIGHTING REQUIREMENTS.
4. THE TEMPORARY SPEAKERS SHALL BE CONNECTED TO THE EXISTING PA CABINET IN THE TICKET OFFICE ON THE WEST PLATFORM SIDE. EXISTING CONDUIT/WIRING RUN TO THE CABINET WITHIN THE CONCOURSE BUILDING SHALL BE REUSED WITH MNR APPROVALS. EXISTING SPEAKER FEEDS OVER CATENARY TOWER #777 TO BE USED PER MNR APPROVAL. PLEASE NOTE: THE EXISTING PA CABINET WILL BE REMOVED AS PART OF THIS PROJECT, BUT SHALL BE FULLY OPERATIONAL DURING CONSTRUCTION. CONTRACTOR SHALL COORDINATE WITH MNR FOR SWITCHOVER TO NEW DEVICES AND EQUIPMENT IN IT ROOM.
5. THE TEMPORARY VMS UNITS SHALL BE CONNECTED TO THE EXISTING DLC CABINET IN THE STORAGE ROOM. EXISTING CONDUIT/WIRING RUN TO THE CABINET WITHIN THE CONCOURSE BUILDING SHALL BE REUSED WITH MNR APPROVALS. EXISTING VMS FEEDS OVER CATENARY #777 TO BE USED PER MNR APPROVAL. PLEASE NOTE: THE EXISTING DLC CABINET WILL BE REMOVED AS PART OF THIS PROJECT, BUT SHALL BE FULLY OPERATIONAL DURING CONSTRUCTION. CONTRACTOR SHALL COORDINATE WITH MNR FOR SWITCHOVER TO NEW DEVICES AND EQUIPMENT IN IT ROOM
6. THE SECURITY CAMERAS SHALL BE CONNECTED TO THE EXISTING SECURITY CABINET AND EQUIPMENT IN THE STORAGE ROOM IN EAST CONCOURSE BUILDING. EXISTING CONDUIT/WIRING RUN WITHIN THE CONCOURSE BUILDING SHALL BE REUSED WITH MNR APPROVALS. ALL CONNECTIONS TO SECURITY EQUIPMENT SHALL BE BY MNR. EXISTING CAMERAS TO BE REUSED AND RELOCATED ON NEW STRUCTURES INDICATED ON NEW PLANS.
7. THE CONTRACTOR SHALL BE RESPONSIBLE TO REMOVE ALL TEMPORARY CONDUITS AND WIRING ONCE THE NEW SYSTEM(S) ARE OPERATIONAL.

ELECTRICAL LEGEND

NOTE: ALL ITEMS ON THE LEGEND BELOW SHALL BE REMOVED UNLESS NOTED OTHERWISE

- L — TEMPORARY LIGHTING WIRING
- C — TEMPORARY SPEAKER WIRING
- V — VMS SYSTEM WIRING
- S — SECURITY SYSTEM WIRING

LEGEND

- (T1) TEMPORARY LIGHTING FIXTURE
- (T2) TEMPORARY SECURITY CAMERA
- (T3) TEMPORARY SPEAKER
- (T4) TEMPORARY VMS UNIT

TEMPORARY ELECTRICAL PLAN - WEST

SCALE: 1/8" = 1'-0"

1 / ELE-07

TEMPORARY LIGHTING SEQUENCE OF INSTALLATION:

1. AS PART OF THE DEMOLITION PROCESS, THE EXISTING LIGHTING FIXTURES SHALL BE REMOVED, THE EXISTING POLES SHALL REMAIN, AND EXISTING UNISTRUT UNDER CANOPY FIXTURES SHALL REMAIN FOR MOUNTING PURPOSES. EXISTING WIRING FEEDS TO THE FIXTURES/POLES SHALL BE REMOVED/CUT.
2. THE EXISTING POLES/UNISTRUT SHALL BE USED TEMPORARILY. NEW TEMPORARY LIGHTING SHALL BE INSTALLED ONTO THE EXISTING POLES/UNISTRUT, AND STRUNG FROM FIXTURE TO FIXTURE. TEMPORARY LIGHTING TO BE FED FROM TWO (2) SPARE 20A-1P C/B'S IN TEMPORARY 120V PANEL INSIDE STATION BUILDING.
3. AS THE NEW CANOPY IS ERECTED/CONSTRUCTED, IN THE AFFECTED AREAS: THE TEMPORARY LIGHTING SHALL BE RELOCATED TO THE NEW CANOPY STRUCTURE WITH CLAMPS/SUPPORTS TEMPORARILY UNTIL NEW POWER FEEDS ARE IN PLACE. THE EXISTING LIGHTING POLES/UNISTRUTS SHALL THEN BE REMOVED IN THEIR ENTIRETY FOR CONSTRUCTION OF THE CANOPIES.

TEMPORARY SPEAKER SEQUENCE OF INSTALLATION:

1. AS PART OF THE DEMOLITION PROCESS, THE EXISTING SPEAKERS SHALL BE REMOVED FROM THEIR EXISTING MOUNTS, BUT WILL BE REUSED FOR THE TEMPORARY SPEAKER SYSTEM. EXISTING WIRING MAY BE REUSED ONLY WITH THE APPROVAL OF MNR. IF NO APPROVAL, NEW TEMPORARY WIRING SHALL BE RUN FOR THE TEMPORARY SPEAKERS.
2. THE TEMPORARY SPEAKERS SHALL BE STRUNG, SPEAKER TO SPEAKER AS INDICATED ON THE FLOOR PLANS, AND RECONNECTED TO THE PA CABINET ON THE INSIDE OF THE STATION BUILDING. MOUNT TEMP. SPEAKERS ON EXISTING LIGHT POLES AS INDICATED. FINAL TEMPORARY CONNECTIONS TO BE COORDINATED WITH MNR.
3. AS THE NEW CANOPY IS ERECTED/CONSTRUCTED, IN THE AFFECTED AREAS: THE TEMPORARY SPEAKERS SHALL BE RELOCATED TO THE NEW CANOPY STRUCTURE WITH CLAMPS/SUPPORTS TEMPORARILY UNTIL NEW FEEDS ARE IN PLACE.

TEMPORARY VMS SEQUENCE OF INSTALLATION:

1. AS PART OF THE DEMOLITION PROCESS, THE EXISTING VMS UNITS SHALL BE REMOVED, BUT WILL BE REUSED WHERE SHOWN ON THE PLANS FOR THE TEMPORARY VMS SYSTEM. EXISTING WIRING MAY BE REUSED ONLY WITH THE APPROVAL OF MNR. IF NO APPROVAL, NEW TEMPORARY WIRING SHALL BE RUN FOR TEMPORARY VMS UNITS.
2. THE TEMPORARY VMS WIRING SHALL BE STRUNG, UNIT TO UNIT AS INDICATED ON THE PLAN VIEWS, AND CONNECTED TO THE DLC CABINET ON THE INSIDE OF THE STATION BUILDING (WEST SIDE). TEMP. VMS UNITS TO REMAIN INSTALLED ON EXISTING RAFTER SECTIONS INDICATED. FINAL TEMPORARY CONNECTIONS TO BE COORDINATED W/MNR.
3. AFTER THE NEW CANOPY IS ERECTED/CONSTRUCTED IN THE AFFECTED AREAS, AND THE NEW VMS SIGNS HAVE BEEN INSTALLED AND IN WORKING ORDER, THE EXISTING, TEMPORARY VMS SIGNS SHALL BE REMOVED, SALVAGED AT THE DISCRETION OF MNR.

REV.	DATE	REVISION DESCRIPTION	SHEET NO.
-	-	-	-
-	-	-	-
-	-	-	-
-	-	-	-
-	-	-	-
-	-	-	-
-	-	-	-

THE INFORMATION, INCLUDING ESTIMATED QUANTITIES OF WORK, SHOWN ON THESE SHEETS IS BASED ON LIMITED INVESTIGATIONS BY THE STATE AND IS IN NO WAY WARRANTED TO INDICATE THE CONDITIONS OF ACTUAL QUANTITIES OF WORK WHICH WILL BE REQUIRED.

Plotted: 28-Mar-14

DESIGNER/DRAFTER: SMK/MVM

CHECKED BY: MVM

SCALE AS NOTED

STATE OF CONNECTICUT
DEPARTMENT OF TRANSPORTATION

MUSCO ENGINEERING ASSOCIATES
575 Morgan Lane, Unit 207
West Haven, CT 06516
(203) 932-1601 FAX (203) 931-1650
www.muscoengineering.com

APPROVED BY: M. MUSCO DATE: 03/28/14

Fflename: FD_MST_ELE_0301_0155_ELE-07.DWG

PROJECT TITLE:
INSTALLATION OF CANOPY AT BRIDGEPORT STATION

TOWN: **BRIDGEPORT**

DRAWING TITLE: **TEMPORARY ELECTRICAL PLAN - WEST**

PROJECT NO. **301-155**

DRAWING NO. **ELE-07**

SHEET NO. **06.07**

Border Version: 10/1/09

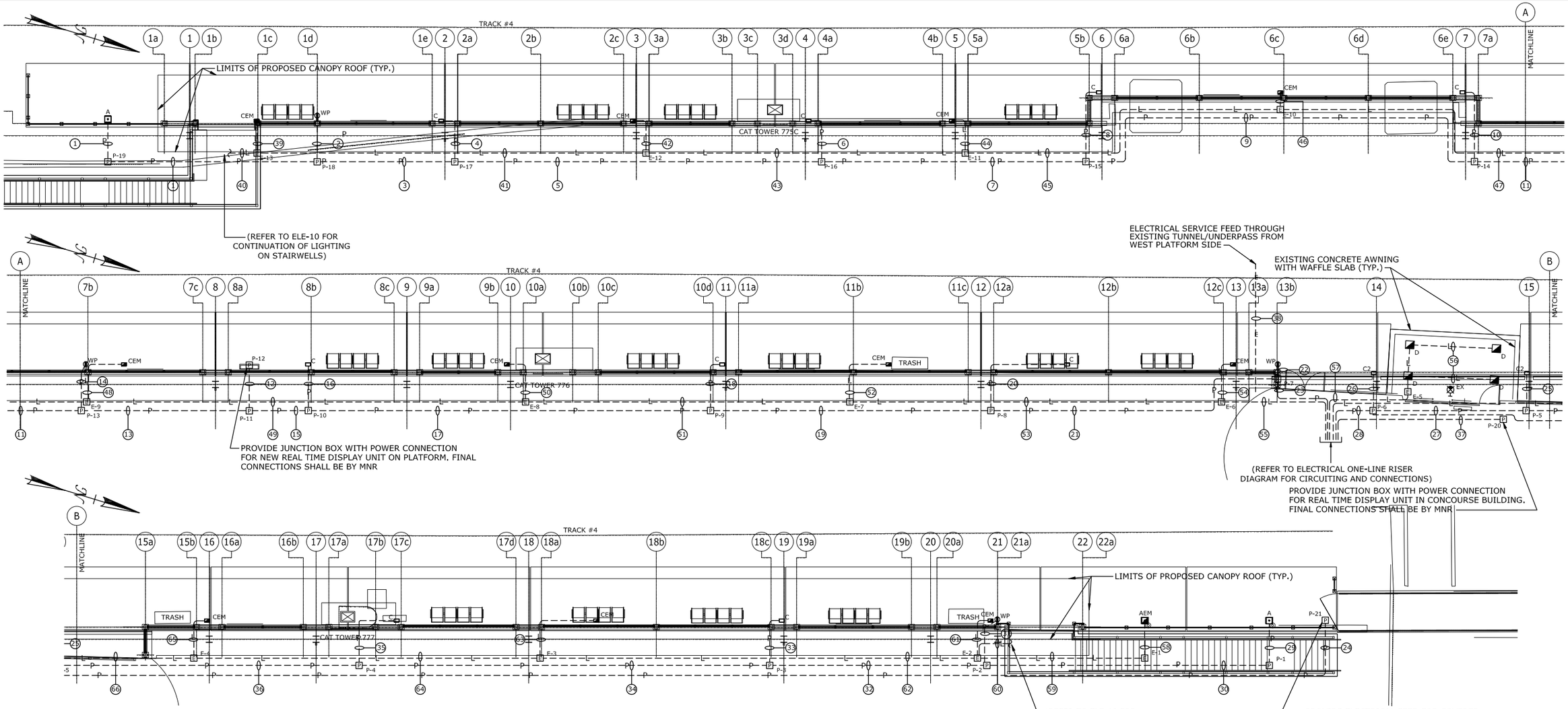

PLATFORM PLAN - ELECTRICAL EAST (1 / ELE-08)

SCALE: 1/8" = 1'-0"

ELECTRICAL NOTES:

1. REFER TO THE ELECTRICAL SPECIFICATIONS FOR ELECTRICAL REQUIREMENTS.
2. PROVIDE EXPANSION JOINTS (FITTINGS) AT THE PLATFORM EXPANSIONS TO COMPLY WITH 2011 NEC ARTICLE 300.7 (B). PROVIDE SHOP DRAWING TO ENGINEER/OWNER TO REVIEW BEFORE INSTALLATION.
3. PROVIDE ADEQUATE GROUNDING AND BONDING FOR THE NEW ELECTRICAL SYSTEM AND DEVICES AS REQUIRED BY THE 2011NEC AND MNR STANDARDS.
4. COORDINATE WITH MNR AND DOT FOR THE FINAL ELECTRICAL REQUIREMENTS NECESSARY FOR THE COMMUNICATIONS SYSTEMS.
5. ALL UNDERGROUND BURIED CONDUITS SHALL COMPLY WITH 2011 NEC TABLE 300.5.
6. CONFIRM THE EXACT LOCATION OF TELEPHONES AND PEDESTAL ENCLOSURES WITH MNR AND DOT AS NECESSARY.
7. THE CONTRACTOR SHALL COORDINATE SCHEDULING WITH THE UTILITY COMPANY TO PROVIDE ACCESS TO THE SITE FOR ENERGIZING OF THE NEW ELECTRICAL SERVICE.
8. CONTRACTOR SHALL COORDINATE PA SPEAKER MOUNTING AND ATTACHMENTS WITH METRO NORTH RAILROAD AS NECESSARY.
9. REFER TO DRAWING ELE-29 FOR POINT TO POINT DRAWING FOR EAST PLATFORM.

CONDUIT & WIRING LEGEND

ITEM	WIRE SIZE	CND. SIZE	FROM/TO (CIRCUIT)
1	2#10 + 1#10G	1"	E-18 (LP-1)
2	2#10 + 1#10G	1"	P-18 (PP-1)
3	4#10 + 2#10G	1"	FEED TO P-17
4	2#10 + 1#10G	1"	P-17 (LP-1)
5	6#10 + 3#10G	1"	FEED TO P-16
6	2#10 + 1#10G	1"	P-16 (LP-1)
7	8#10 + 4#10G	1 1/4"	FEED TO P-15
8	2#10 + 1#10G	1"	P-15 (LP-1)
9	10#10 + 5#10G	1 1/4"	FEED TO P-14
10	2#10 + 1#10G	1"	P-14 (LP-2)
11	12#10 + 6#10G	1 1/2"	FEED TO P-11
12	2#10 + 1#10G	1"	P-12 (PP-2)
13	14#10 + 7#10G	1 1/2"	FEED TO P-13
14	2#10 + 1#10G	1"	P-13 (PP-1)
15	16#10 + 8#10G	1 1/2"	FEED TO P-10
16	2#10 + 1#10G	1"	P-10 (LP-2)
17	18#10 + 9#10G	1 1/2"	FEED TO P-9
18	2#10 + 1#10G	1"	P-9 (LP-2)
19	20#10 + 10#10G	1 1/2"	FEED TO P-8
20	2#10 + 1#10G	1"	P-8 (LP-2)
21	22#10 + 11#10G	1 1/2"	FEED TO P-7
22	2#10 + 1#10G	1"	P-7 (PP-1)
23	24#10 + 12#10G	2"	FEED TO PP/LP
24	2#10 + 1#10G	1"	P-6 (LP-3)
25	2#10 + 1#10G	1"	P-5 (LP-4)
26	2#10 + 1#10G	1"	P-6 (LP-4)
27	10#10 + 5#10G	1 1/4"	FEED TO P-6
28	14#10 + 7#10G	1 1/2"	FEED TO PP/LP
29	2#10 + 1#10G	1"	P-1 (LP-5)
30	2#10 + 1#10G	1"	FEED TO P-2
31	2#10 + 1#10G	1"	P-2 (PP-3)
32	4#10 + 2#10G	1"	FEED TO P-3
33	2#10 + 1#10G	1"	P-3 (LP-5)
34	6#10 + 3#10G	1"	FEED TO P-4
35	2#10 + 1#10G	1"	P-4 (LP-5)
36	8#10 + 4#10G	1"	FEED TO P-5
37	2#10 + 1#10G	1"	TO PP (PP-4)
38	EXIST. SERVICE	N/A	CONCOURSE B
39	2#10 + 1#10G	1"	E-13 (LEP-1)
40	2#10 + 1#10G	1"	E-13 (LEP-2)
41	4#10 + 2#10G	1"	FEED TO E-12
42	2#10 + 1#10G	1"	E-12 (LEP-1)
43	6#10 + 3#10G	1"	FEED TO E-11
44	2#10 + 1#10G	1"	E-11 (LEP-1)
45	8#10 + 4#10G	1 1/4"	FEED TO E-10
46	2#10 + 1#10G	1"	E-10 (LEP-1)
47	10#10 + 5#10G	1 1/4"	FEED TO E-9
48	2#10 + 1#10G	1"	E-9 (LEP-3)
49	12#10 + 6#10G	1 1/4"	FEED TO E-8
50	2#10 + 1#10G	1"	E-8 (LEP-3)
51	14#10 + 7#10G	1 1/2"	FEED TO E-7
52	2#10 + 1#10G	1"	E-7 (LEP-3)
53	16#10 + 8#10G	1 1/2"	FEED TO E-6
54	2#10 + 1#10G	1"	E-6 (LEP-3)
55	18#10 + 9#10G	1 1/2"	FEED TO LEP
56	2#10 + 1#10G	1"	E-5 (LEP-4)
57	2#10 + 1#10G	1"	FEED TO LEP
58	2#10 + 1#10G	1"	E-1 (LEP-5)
59	2#10 + 1#10G	1"	E-2 (LEP-6)
60	2#10 + 1#10G	1"	E-2 (LEP-5)
61	2#10 + 1#10G	1"	E-2 (LEP-4)
62	6#10 + 3#10G	1"	FEED TO E-3
63	2#10 + 1#10G	1"	E-3 (LEP-5)
64	8#10 + 4#10G	1 1/4"	FEED TO E-4
65	2#10 + 1#10G	1"	E-4 (LEP-5)
66	10#10 + 5#10G	1 1/4"	FEED TO LEP

CONDUIT/WIRING SYMBOL LEGEND

----L----	LIGHTING CONDUIT/WIRING
----P----	POWER CONDUIT/WIRING

REV.	DATE	REVISION DESCRIPTION	SHEET NO.
-	-	-	-
-	-	-	-
-	-	-	-
-	-	-	-
-	-	-	-
-	-	-	-
-	-	-	-

THE INFORMATION, INCLUDING ESTIMATED QUANTITIES OF WORK, SHOWN ON THESE SHEETS IS BASED ON LIMITED INVESTIGATIONS BY THE STATE AND IS IN NO WAY WARRANTED TO INDICATE THE CONDITIONS OF ACTUAL QUANTITIES OF WORK WHICH WILL BE REQUIRED.

Plotted: 28-Mar-14

DESIGNER/DRAFTER: SMK/MVM
CHECKED BY: MVM
SCALE AS NOTED

STATE OF CONNECTICUT
DEPARTMENT OF TRANSPORTATION

Fflename: FD_MST_ELE_0301_0155_ELE-08.DWG

MUSCO ENGINEERING ASSOCIATES
375 Morgan Lane, Unit 607
West Haven, CT 06516
(203) 932-1301 FAX (203) 931-1550
www.muscoengineering.com

APPROVED BY: M. MUSCO
DATE: 03/28/14

PROJECT TITLE:
INSTALLATION OF CANOPY AT BRIDGEPORT STATION

TOWN: **BRIDGEPORT**

DRAWING TITLE: **PLATFORM PLAN - ELECTRICAL EAST**

PROJECT NO. **301-155**
DRAWING NO. **ELE-08**
SHEET NO. **06.08**

Border Version: 10/1/09

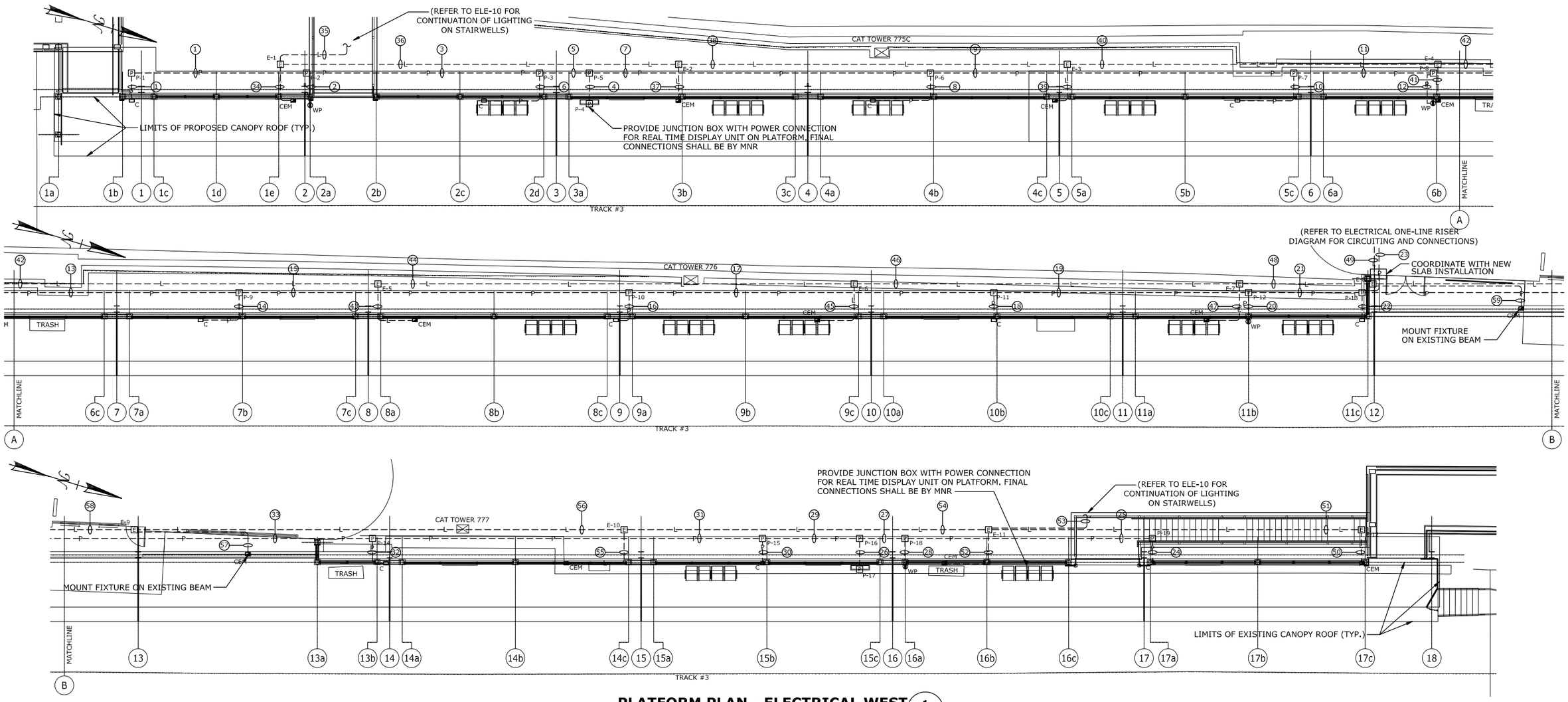

PLATFORM PLAN - ELECTRICAL WEST

SCALE: 1/8" = 1'-0"

1 ELE-09

ELECTRICAL NOTES:

1. REFER TO THE ELECTRICAL SPECIFICATIONS FOR ELECTRICAL REQUIREMENTS.
2. PROVIDE EXPANSION JOINTS (FITTINGS) AT THE PLATFORM EXPANSIONS TO COMPLY WITH 2011 NEC ARTICLE 300.7 (B). PROVIDE SHOP DRAWING TO ENGINEER/OWNER TO REVIEW BEFORE INSTALLATION.
3. PROVIDE ADEQUATE GROUNDING AND BONDING FOR THE NEW ELECTRICAL SYSTEM AND DEVICES AS REQUIRED BY THE 2011 NEC AND MNR STANDARDS.
4. COORDINATE WITH MNR AND DOT FOR THE FINAL ELECTRICAL REQUIREMENTS NECESSARY FOR THE COMMUNICATIONS SYSTEMS.
5. ALL UNDERGROUND BURIED CONDUITS SHALL COMPLY WITH 2011 NEC TABLE 300.5.
6. CONFIRM THE EXACT LOCATION OF TELEPHONES AND PEDESTAL ENCLOSURES WITH MNR AND DOT AS NECESSARY.
7. THE CONTRACTOR SHALL COORDINATE SCHEDULING WITH THE UTILITY COMPANY TO PROVIDE ACCESS TO THE SITE FOR ENERGIZING OF THE NEW ELECTRICAL SERVICE.
8. CONTRACTOR SHALL COORDINATE PA SPEAKER MOUNTING AND ATTACHMENTS WITH METRO NORTH RAILROAD AS NECESSARY.
9. REFER TO DRAWING ELE-30 FOR POINT TO POINT DRAWING FOR WEST PLATFORM.

CONDUIT & WIRING LEGEND

ITEM	WIRE SIZE	CND. SIZE	FROM/TO (CIRCUIT)
1	2#10 + 1#10G	1"	P-2 (LP-1)
2	2#10 + 1#10G	1"	P-2 (PP-1)
3	4#10 + 2#10G	1"	FEED TO P-3
4	2#10 + 1#10G	1"	P-5 (PP-2)
5	6#10 + 3#10G	1"	FEED TO P-5
6	2#10 + 1#10G	1"	P-3 (LP-1)
7	8#10 + 4#10G	1 1/4"	FEED TO P-6
8	2#10 + 1#10G	1"	P-6 (LP-1)
9	10#10 + 5#10G	1 1/4"	FEED TO P-7
10	2#10 + 1#10G	1"	P-7 (LP-1)
11	12#10 + 6#10G	1 1/2"	FEED TO P-8
12	2#10 + 1#10G	1"	P-8 (PP-1)
13	14#10 + 7#10G	1 1/2"	FEED TO P-9
14	2#10 + 1#10G	1"	P-9 (LP-2)
15	16#10 + 8#10G	1 1/2"	FEED TO P-10
16	2#10 + 1#10G	1"	P-10 (LP-2)
17	18#10 + 9#10G	1 1/2"	FEED TO P-11
18	2#10 + 1#10G	1"	P-11 (LP-2)
19	20#10 + 10#10G	1 1/2"	FEED TO P-12
20	2#10 + 1#10G	1"	P-12 (PP-1)
21	22#10 + 11#10G	1 1/2"	FEED TO P-13
22	2#10 + 1#10G	1"	P-13 (LP-2)
23	34#10 + 17#10G	2"	FEED TO LP/PP
24	2#10 + 1#10G	1"	P-19 (LP-3)
25	2#10 + 1#10G	1"	FEED TO P-18
26	2#10 + 1#10G	1"	P-16 (LP-3)
27	4#10 + 2#10G	1"	FEED TO P-16
28	2#10 + 1#10G	1"	P-18 (PP-3)
29	6#10 + 3#10G	1"	FEED TO P-15
30	2#10 + 1#10G	1"	P-15 (LP-3)
31	8#10 + 4#10G	1"	FEED TO P-14
32	2#10 + 1#10G	1"	P-14 (LP-3)
33	10#10 + 5#10G	1"	FEED TO P-13
34	2#10 + 1#10G	1"	E-1 (LEP-1)
35	2#10 + 1#10G	1"	E-1 (LEP-2)
36	4#10 + 2#10G	1"	FEED TO E-2
37	2#10 + 1#10G	1"	E-2 (LEP-1)
38	6#10 + 3#10G	1"	FEED TO E-3
39	2#10 + 1#10G	1"	E-3 (LEP-1)
40	8#10 + 4#10G	1 1/4"	FEED TO E-4
41	2#10 + 1#10G	1"	E-4 (LEP-1)
42	10#10 + 5#10G	1 1/4"	FEED TO E-5
43	2#10 + 1#10G	1"	E-5 (LEP-3)
44	12#10 + 6#10G	1 1/4"	FEED TO E-6
45	2#10 + 1#10G	1"	E-6 (LEP-3)
46	14#10 + 7#10G	1 1/4"	FEED TO E-7
47	2#10 + 1#10G	1"	E-7 (LEP-3)
48	16#10 + 8#10G	1 1/2"	FEED TO E-8
49	26#10 + 13#10G	2"	FEED TO LEP
50	2#10 + 1#10G	1"	E-12 (LEP-4)
51	2#10 + 1#10G	1"	FEED TO E-11
52	2#10 + 1#10G	1"	E-11 (LEP-4)
53	2#10 + 1#10G	1"	E-11 (LEP-5)
54	6#10 + 3#10G	1"	FEED TO E-10
55	2#10 + 1#10G	1"	E-10 (LEP-4)
56	8#10 + 4#10G	1 1/4"	FEED TO E-9
57	2#10 + 1#10G	1"	E-9 (LEP-4)
58	10#10 + 5#10G	1 1/4"	FEED TO E-8
59	2#10 + 1#10G	1"	E-8 (LEP-4)

CONDUIT/WIRING SYMBOL LEGEND

----L----	LIGHTING CONDUIT/WIRING
----P----	POWER CONDUIT/WIRING

REV.	DATE	REVISION DESCRIPTION	SHEET NO.
-	-	-	-
-	-	-	-
-	-	-	-
-	-	-	-
-	-	-	-
-	-	-	-
-	-	-	-

THE INFORMATION, INCLUDING ESTIMATED QUANTITIES OF WORK, SHOWN ON THESE SHEETS IS BASED ON LIMITED INVESTIGATIONS BY THE STATE AND IS IN NO WAY WARRANTED TO INDICATE THE CONDITIONS OF ACTUAL QUANTITIES OF WORK WHICH WILL BE REQUIRED.

Plotted: 28-Mar-14

DESIGNER/DRAFTER: SMK/MVM

CHECKED BY: MVM

SCALE AS NOTED

STATE OF CONNECTICUT
DEPARTMENT OF TRANSPORTATION

Filename: FD_MST_ELE_0301_0155_ELE-09.DWG

MUSCO ENGINEERING ASSOCIATES
575 Morgan Lane, Unit 507
West Haven, CT 06516
(203) 932-1601 FAX (203) 931-1530
www.muscoengineering.com

APPROVED BY: M. MUSCO DATE: 03/28/14

PROJECT TITLE: INSTALLATION OF CANOPY AT BRIDGEPORT STATION

TOWN: BRIDGEPORT

DRAWING TITLE: PLATFORM PLAN - ELECTRICAL WEST

PROJECT NO. 301-155

DRAWING NO. ELE-09

SHEET NO. 06.09

Border Version: 10/1/09

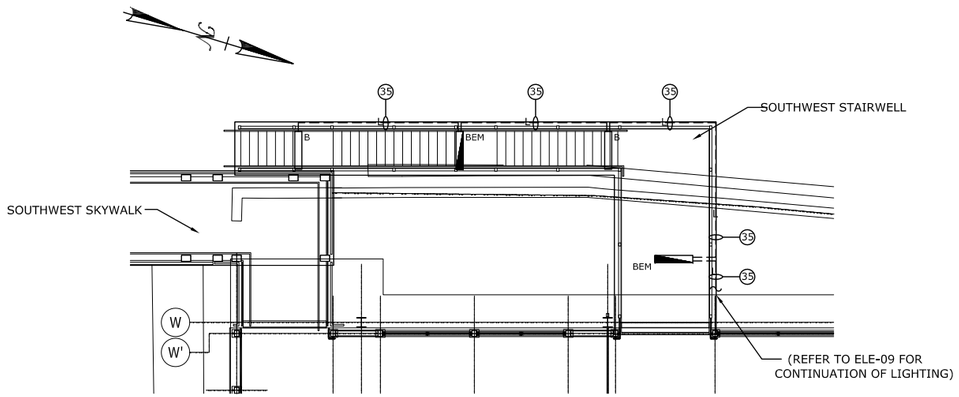

ITEM	WIRE SIZE	CND. SIZE	FROM/TO (CIRCUIT)
35	2#10 + 1#10G	1"	E-1 (LEP-2)

STAIRWELL PLAN - ELECTRICAL WEST 1 (1 / ELE-10)

SCALE: 1/8" = 1'-0"

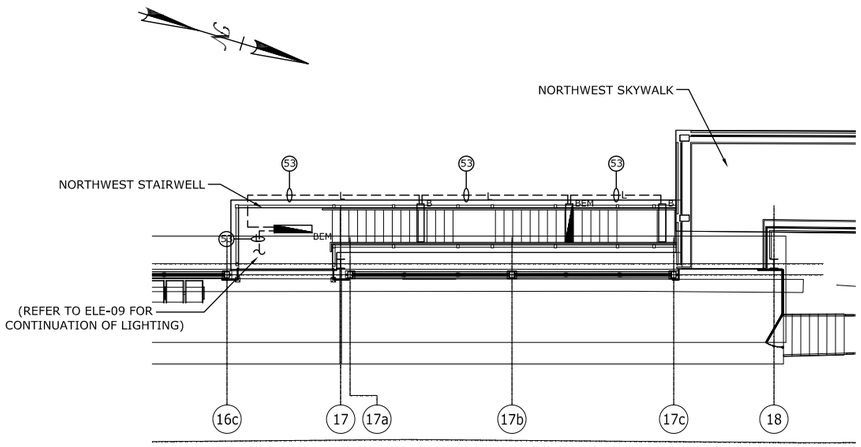

ITEM	WIRE SIZE	CND. SIZE	FROM/TO (CIRCUIT)
53	2#10 + 1#10G	1"	E-11 (LEP-5)

STAIRWELL PLAN - ELECTRICAL WEST 2 (2 / ELE-10)

SCALE: 1/8" = 1'-0"

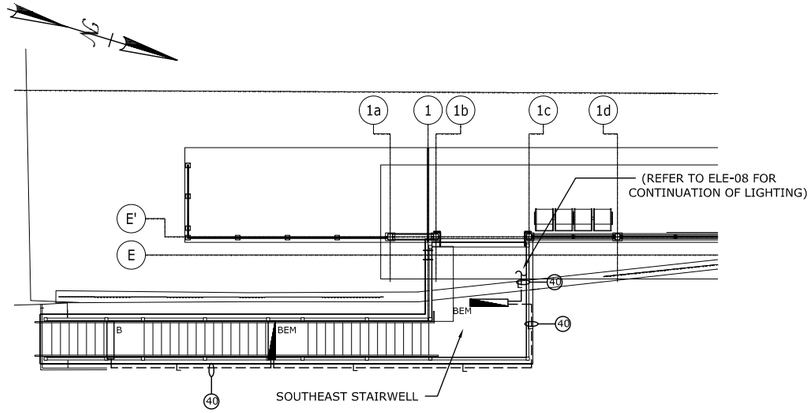

ITEM	WIRE SIZE	CND. SIZE	FROM/TO (CIRCUIT)
40	2#10 + 1#10G	1"	E-13 (LEP-2)

STAIRWELL PLAN - ELECTRICAL EAST 1 (3 / ELE-10)

SCALE: 1/8" = 1'-0"

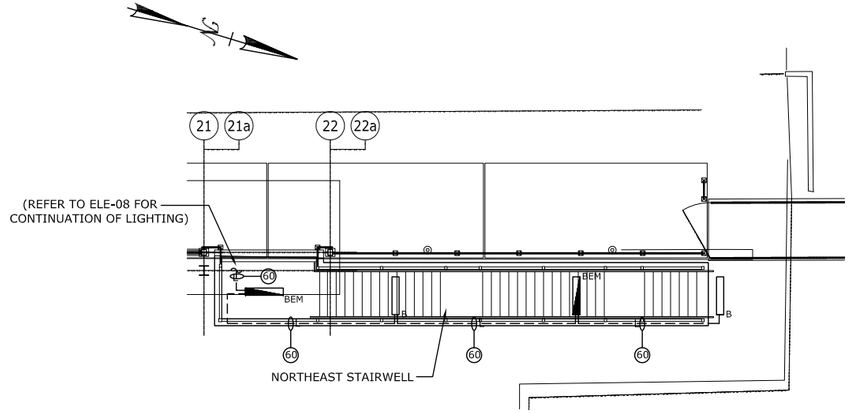

ITEM	WIRE SIZE	CND. SIZE	FROM/TO (CIRCUIT)
60	2#10 + 1#10G	1"	E-2 (LEP-6)

STAIRWELL PLAN - ELECTRICAL EAST 2 (4 / ELE-10)

SCALE: 1/8" = 1'-0"

ELECTRICAL NOTES:

1. REFER TO THE ELECTRICAL SPECIFICATIONS FOR ELECTRICAL REQUIREMENTS.
2. PROVIDE EXPANSION JOINTS (FITTINGS) AT THE PLATFORM EXPANSIONS TO COMPLY WITH 2011 NEC ARTICLE 300.7 (B). PROVIDE SHOP DRAWING TO ENGINEER/OWNER TO REVIEW BEFORE INSTALLATION.
3. PROVIDE ADEQUATE GROUNDING AND BONDING FOR THE NEW ELECTRICAL SYSTEM AND DEVICES AS REQUIRED BY THE 2011 NEC AND MNR STANDARDS.
4. COORDINATE WITH MNR AND DOT FOR THE FINAL ELECTRICAL REQUIREMENTS NECESSARY FOR THE COMMUNICATIONS SYSTEMS.
5. ALL UNDERGROUND BURIED CONDUITS SHALL COMPLY WITH 2011 NEC TABLE 300.5.

CONDUIT/WIRING SYMBOL LEGEND	
----L----	LIGHTING CONDUIT/WIRING

REV.	DATE	REVISION DESCRIPTION	SHEET NO.
-	-	-	-
-	-	-	-
-	-	-	-
-	-	-	-
-	-	-	-
-	-	-	-
-	-	-	-

THE INFORMATION, INCLUDING ESTIMATED QUANTITIES OF WORK, SHOWN ON THESE SHEETS IS BASED ON LIMITED INVESTIGATIONS BY THE STATE AND IS IN NO WAY WARRANTED TO INDICATE THE CONDITIONS OF ACTUAL QUANTITIES OF WORK WHICH WILL BE REQUIRED.

Plotted: 28-Mar-14

DESIGNER/DRAFTER: SMK/MVM

CHECKED BY: MVM

SCALE AS NOTED

STATE OF CONNECTICUT
DEPARTMENT OF TRANSPORTATION

Filename: FD_MST_ELE_0301_0155_ELE-10.DWG

MUSCO ENGINEERING ASSOCIATES
375 Morgan Lane, Unit 207
West Haven, CT 06516
(203) 932-1901 FAX: (203) 928-1950
www.muscoengineering.com

APPROVED BY: M. MUSCO DATE: 03/28/14

PROJECT TITLE:
INSTALLATION OF CANOPY AT BRIDGEPORT STATION

TOWN: **BRIDGEPORT**

DRAWING TITLE: **STAIRWELL PLANS - ELECTRICAL**

PROJECT NO. **301-155**

DRAWING NO. **ELE-10**

SHEET NO. **06.10**

Border Version: 10/1/09

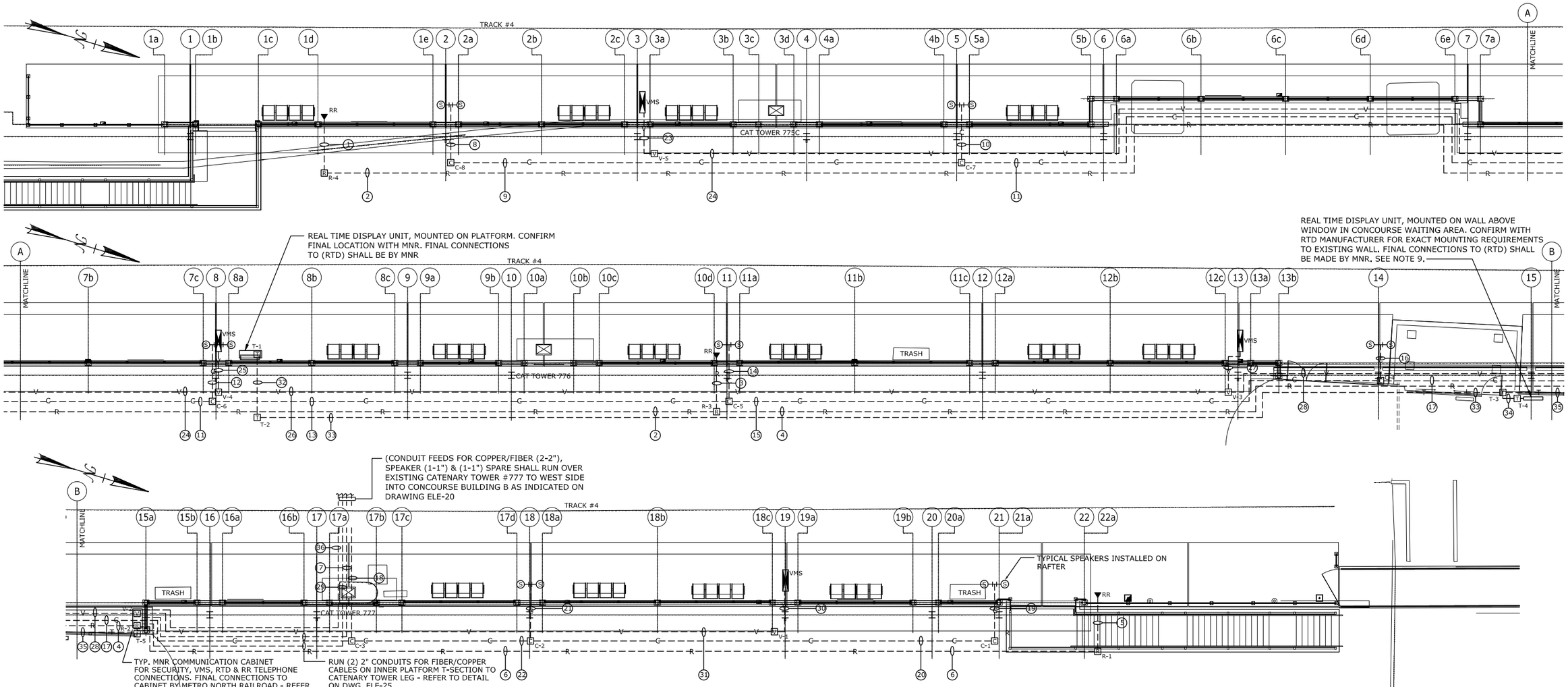

PLATFORM PLAN - COMMUNICATIONS EAST

SCALE: 1/8" = 1'-0"

1 ELE-11

ELECTRICAL NOTES:

1. REFER TO THE ELECTRICAL SPECIFICATIONS FOR ELECTRICAL REQUIREMENTS.
2. PROVIDE EXPANSION JOINTS (FITTINGS) AT THE PLATFORM EXPANSIONS TO COMPLY WITH 2011 NEC ARTICLE 300.7 (B). PROVIDE SHOP DRAWING TO ENGINEER/OWNER TO REVIEW BEFORE INSTALLATION.
3. PROVIDE ADEQUATE GROUNDING AND BONDING FOR THE NEW ELECTRICAL SYSTEM AND DEVICES AS REQUIRED BY THE 2011 NEC AND MNR STANDARDS.
4. COORDINATE WITH MNR AND DOT FOR THE FINAL ELECTRICAL REQUIREMENTS NECESSARY FOR THE COMMUNICATIONS SYSTEMS.
5. ALL UNDERGROUND BURIED CONDUITS SHALL COMPLY WITH 2011 NEC TABLE 300.5.
6. CONFIRM THE EXACT LOCATION OF TELEPHONES AND PEDESTAL ENCLOSURES WITH MNR AND DOT AS NECESSARY.
7. THE CONTRACTOR SHALL COORDINATE SCHEDULING WITH THE UTILITY COMPANY TO PROVIDE ACCESS TO THE SITE FOR ENERGIZING OF THE NEW ELECTRICAL SERVICE.
8. CONTRACTOR SHALL COORDINATE PA SPEAKER MOUNTING AND ATTACHMENTS WITH METRO NORTH RAILROAD AS NECESSARY.
9. THE EXACT HEIGHT OF REAL TIME DISPLAY UNITS SHALL BE DETERMINED BY METRO NORTH RAILROAD AND DOT CONFIRMATION. COORDINATE CONDUIT AND WIRING RUN WITH THIS HEIGHT AS NECESSARY. ALL MOUNTING HARDWARE FOR TD UNITS SHALL BE PROVIDED BY MNR AND INSTALLED BY CONTRACTOR. CONFIRM REQUIREMENTS WITH MNR.
10. REFER TO DRAWING ELE-26 FOR MNR COMMUNICATION CABINET DETAILS.

CONDUIT & WIRING LEGEND

ITEM	WIRE SIZE	CND. SIZE	FROM/TO (CIRCUIT)
1	(2) 4/C #18	1"	TO R-4
2	(2) 4/C #18	1"	FEED TO R-3
3	(2) 4/C #18	1"	TO R-3
4	(4) 4/C #18	1"	FEED TO R-2
5	(2) 4/C #18	1"	TO R-1
6	(2) 4/C #18	1"	FEED TO R-2
7	FIBER CABLE	2"	FEED TO WEST PLATFORM
8	(2)2/C #14 BY MNR	1"	TO C-8
9	(2)2/C #14 BY MNR	1"	FEED TO C-7
10	(2)2/C #14 BY MNR	1"	TO C-7
11	(4)2/C #14 BY MNR	1"	FEED TO C-6
12	(2)2/C #14 BY MNR	1"	TO C-6
13	(6)2/C #14 BY MNR	1"	FEED TO C-5
14	(2)2/C #14 BY MNR	1"	TO C-5

ITEM	WIRE SIZE	CND. SIZE	FROM/TO (CIRCUIT)
15	(8)2/C #14 BY MNR	1"	FEED TO C-4
16	(2)2/C #14 BY MNR	1"	TO C-4
17	(10)2/C #14 BY MNR	1"	FEED TO C-3
18	(14)2/C #14 BY MNR	1"	FEED TO WEST SIDE PLATFORM
19	(2)2/C #14 BY MNR	1"	TO C-1
20	(2)2/C #14 BY MNR	1"	FEED TO C-2
21	(2)2/C #14 BY MNR	1"	TO C-2
22	(4)2/C #14 BY MNR	1"	FEED TO C-3
23	VMS COMM. & POWER WIRE BY MNR	1"	TO V-5
24	VMS COMM. & POWER WIRE BY MNR	1"	FEED TO V-4
25	VMS COMM. & POWER WIRE BY MNR	1"	TO V-4
26	VMS COMM. & POWER WIRE BY MNR	1"	FEED TO V-3
27	VMS COMM. & POWER WIRE BY MNR	1"	TO V-3
28	VMS COMM. & POWER WIRE BY MNR	1"	FEED TO V-2
29	COPPER CABLE	2"	FEED TO WEST PLATFORM
30	VMS COMM. & POWER WIRE BY MNR	1"	TO V-1

ITEM	WIRE SIZE	CND. SIZE	FROM/TO (CIRCUIT)
31	VMS COMM. & POWER WIRE BY MNR	1"	FEED TO V-2
32	RTD WIRE BY MNR	1"	TO T-2
33	RTD WIRE BY MNR	1"	FEED TO T-3
34	RTD WIRE BY MNR	1"	TO T-3
35	RTD WIRE BY MNR	1"	FEED TO T-5
36	SPARE CONDUIT FROM COMMUNICATION CAB.	1"	FEED TO WEST PLATFORM

CONDUIT/WIRING SYMBOL LEGEND

----R----	RAILROAD TELEPHONE CONDUIT/WIRING
----C----	SPEAKER SYSTEM CONDUIT/WIRING
----V----	VMS SYSTEM CONDUIT/WIRING
----T----	REAL TIME DISPLAY CONDUIT/WIRING

REV.	DATE	REVISION DESCRIPTION	SHEET NO.
-	-	-	-
-	-	-	-
-	-	-	-
-	-	-	-
-	-	-	-
-	-	-	-
-	-	-	-

THE INFORMATION, INCLUDING ESTIMATED QUANTITIES OF WORK, SHOWN ON THESE SHEETS IS BASED ON LIMITED INVESTIGATIONS BY THE STATE AND IS IN NO WAY WARRANTED TO INDICATE THE CONDITIONS OF ACTUAL QUANTITIES OF WORK WHICH WILL BE REQUIRED.

Plotted: 28-Mar-14

DESIGNER/DRAFTER: SMK/MVM
CHECKED BY: MVM
SCALE AS NOTED

STATE OF CONNECTICUT
DEPARTMENT OF TRANSPORTATION

Filename: FD_MST_ELE_0301_0155_ELE-11.DWG

MUSCO ENGINEERING ASSOCIATES
375 Morgan Lane, Unit 207
West Haven, CT 06516
(203) 932-1901 FAX (203) 931-1550
www.muscoengineering.com

APPROVED BY: M. MUSCO DATE: 03/28/14

PROJECT TITLE: INSTALLATION OF CANOPY AT BRIDGEPORT STATION

TOWN: BRIDGEPORT

DRAWING TITLE: PLATFORM PLAN - COMMUNICATIONS EAST

PROJECT NO. 301-155
DRAWING NO. ELE-11
SHEET NO. 06.11

Border Version: 10/1/09

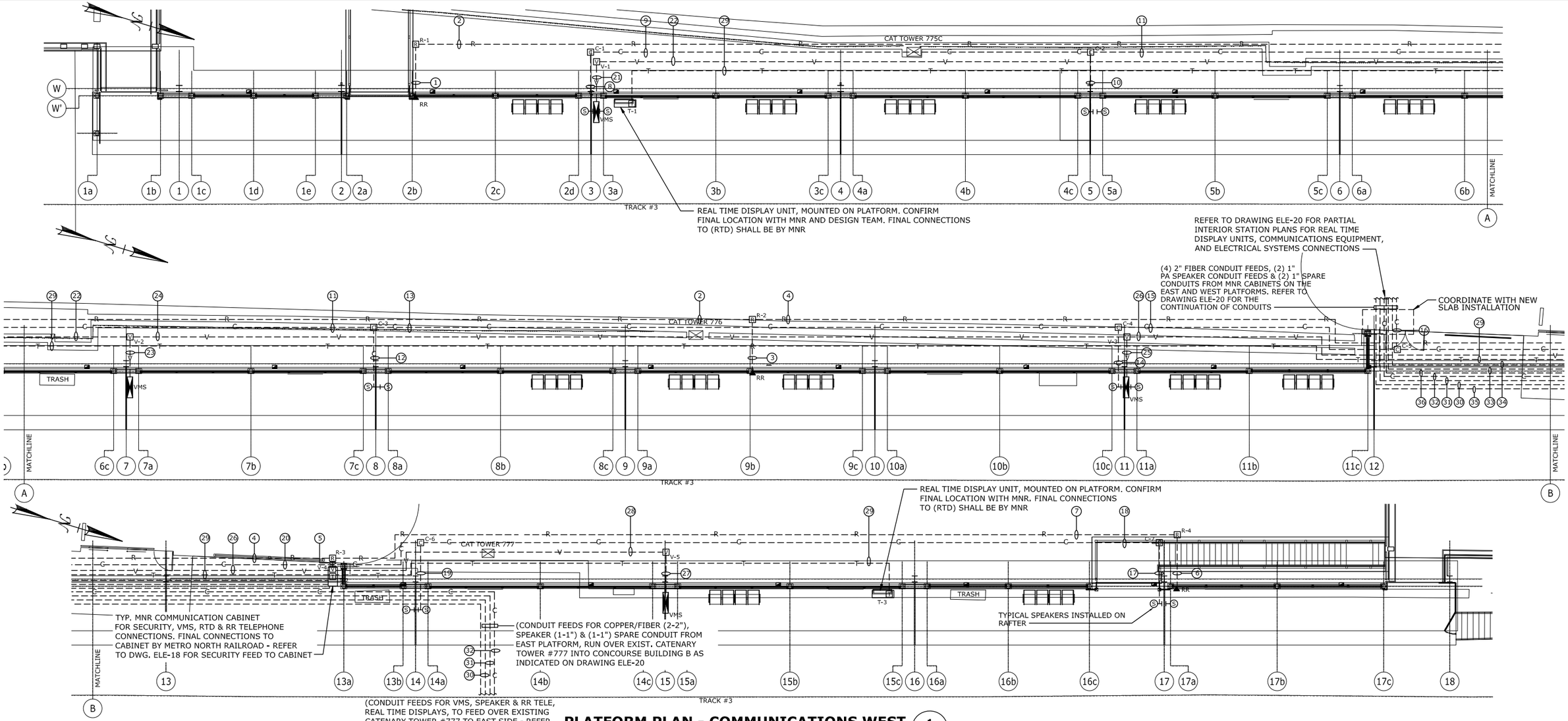

PLATFORM PLAN - COMMUNICATIONS WEST

SCALE: 1/8" = 1'-0"

1 ELE-12

ELECTRICAL NOTES:

1. REFER TO THE ELECTRICAL SPECIFICATIONS FOR ELECTRICAL REQUIREMENTS.
2. PROVIDE EXPANSION JOINTS (FITTINGS) AT THE PLATFORM EXPANSIONS TO COMPLY WITH 2011 NEC ARTICLE 300.7 (B). PROVIDE SHOP DRAWING TO ENGINEER/OWNER TO REVIEW BEFORE INSTALLATION.
3. PROVIDE ADEQUATE GROUNDING AND BONDING FOR THE NEW ELECTRICAL SYSTEM AND DEVICES AS REQUIRED BY THE 2011 NEC AND MNR STANDARDS.
4. COORDINATE WITH MNR AND DOT FOR THE FINAL ELECTRICAL REQUIREMENTS NECESSARY FOR THE COMMUNICATIONS SYSTEMS.
5. ALL UNDERGROUND BURIED CONDUITS SHALL COMPLY WITH 2011 NEC TABLE 300.5.
6. CONFIRM THE EXACT LOCATION OF TELEPHONES AND PEDESTAL ENCLOSURES WITH MNR AND DOT AS NECESSARY.
7. THE CONTRACTOR SHALL COORDINATE SCHEDULING WITH THE UTILITY COMPANY TO PROVIDE ACCESS TO THE SITE FOR ENERGIZING OF THE NEW ELECTRICAL SERVICE.
8. CONTRACTOR SHALL COORDINATE PA SPEAKER MOUNTING AND ATTACHMENTS WITH METRO NORTH RAILROAD AS NECESSARY.
9. REFER TO DRAWING ELE-26 FOR MNR COMMUNICATION CABINET DETAILS.

CONDUIT & WIRING LEGEND

ITEM	WIRE SIZE	CND. SIZE	FROM/TO (CIRCUIT)
1	(2) 4/C #18	1"	TO R-1
2	(2) 4/C #18	1"	FEED TO R-2
3	(2) 4/C #18	1"	TO R-2
4	(4) 4/C #18	1"	FEED TO R-3
5	(6) 4/C #18	1"	TO MNR CABINET
6	(2) 4/C #18	1"	TO R-4
7	(2) 4/C #18	1"	FEED TO R-3
8	(2)2/C #14 BY MNR	1"	TO C-1
9	(2)2/C #14 BY MNR	1"	FEED TO C-2
10	(2)2/C #14 BY MNR	1"	TO C-2
11	(4)2/C #14 BY MNR	1"	FEED TO C-3
12	(2)2/C #14 BY MNR	1"	TO C-3
13	(6)2/C #14 BY MNR	1"	FEED TO C-4
14	(2)2/C #14 BY MNR	1"	TO C-4

ITEM	WIRE SIZE	CND. SIZE	FROM/TO (CIRCUIT)
15	(8)2/C #14 BY MNR	1"	FEED TO C-5
16	(12)2/C #14 BY MNR	1"	FEED INSIDE CONCOURSE BLDG.
17	(2)2/C #14 BY MNR	1"	TO C-7
18	(2)2/C #14 BY MNR	1"	FEED TO C-6
19	(2)2/C #14 BY MNR	1"	TO C-6
20	(4)2/C #14 BY MNR	1"	FEED TO C-5
21	VMS COMM. & POWER WIRE BY MNR	1"	TO V-1
22	VMS COMM. & POWER WIRE BY MNR	1"	FEED TO V-2
23	VMS COMM. & POWER WIRE BY MNR	1"	TO V-2
24	VMS COMM. & POWER WIRE BY MNR	1"	FEED TO V-3
25	VMS COMM. & POWER WIRE BY MNR	1"	TO V-3
26	VMS COMM. & POWER WIRE BY MNR	1"	FEED TO V-4
27	VMS COMM. & POWER WIRE BY MNR	1"	TO V-5
28	VMS COMM. & POWER WIRE BY MNR	1"	FEED TO V-4
29	RTD WIRE BY MNR	1"	FEED TO T-2
30	FIBER CABLE FROM EAST PLATFORM CAB.	2"	TO IT ROOM

ITEM	WIRE SIZE	CND. SIZE	FROM/TO (CIRCUIT)
31	COPPER CABLE FROM EAST PLATFORM CAB.	2"	TO IT ROOM
32	(14)2/C #14 BY MNR	1"	TO IT ROOM
33	COPPER CABLE FROM WEST PLATFORM CAB.	2"	TO IT ROOM
34	FIBER CABLE FROM WEST PLATFORM CAB.	2"	TO IT ROOM
35	SPARE CONDUIT FROM EAST PLATFORM CAB.	1"	TO IT ROOM
36	SPARE CONDUIT FROM WEST PLATFORM CAB.	1"	TO IT ROOM

CONDUIT/WIRING SYMBOL LEGEND

----R----	RAILROAD TELEPHONE CONDUIT/WIRING
----C----	SPEAKER SYSTEM CONDUIT/WIRING
----V----	VMS SYSTEM CONDUIT/WIRING
----T----	REAL TIME DISPLAY CONDUIT/WIRING

REV.	DATE	REVISION DESCRIPTION	SHEET NO.
-	-	-	-
-	-	-	-
-	-	-	-
-	-	-	-
-	-	-	-
-	-	-	-
-	-	-	-

Plotted: 28-Mar-14

THE INFORMATION, INCLUDING ESTIMATED QUANTITIES OF WORK, SHOWN ON THESE SHEETS IS BASED ON LIMITED INVESTIGATIONS BY THE STATE AND IS IN NO WAY WARRANTED TO INDICATE THE CONDITIONS OF ACTUAL QUANTITIES OF WORK WHICH WILL BE REQUIRED.

DESIGNER/DRAFTER: SMK/MVM

CHECKED BY: MVM

SCALE AS NOTED

STATE OF CONNECTICUT
DEPARTMENT OF TRANSPORTATION

Filename: FD_MST_ELE_0301_0155_ELE-12.DWG

MUSCO ENGINEERING ASSOCIATES
875 Morgan Lane, Unit 807
West Haven, CT 06516
(203) 933-4071 FAX (203) 928-4930
www.muscoengineering.com

APPROVED BY: M. MUSCO DATE: 03/28/14

PROJECT TITLE:
INSTALLATION OF CANOPY AT BRIDGEPORT STATION

TOWN: **BRIDGEPORT**

DRAWING TITLE: **PLATFORM PLAN - COMMUNICATIONS WEST**

PROJECT NO. **301-155**

DRAWING NO. **ELE-12**

SHEET NO. **06.12**

Border Version: 10/1/09

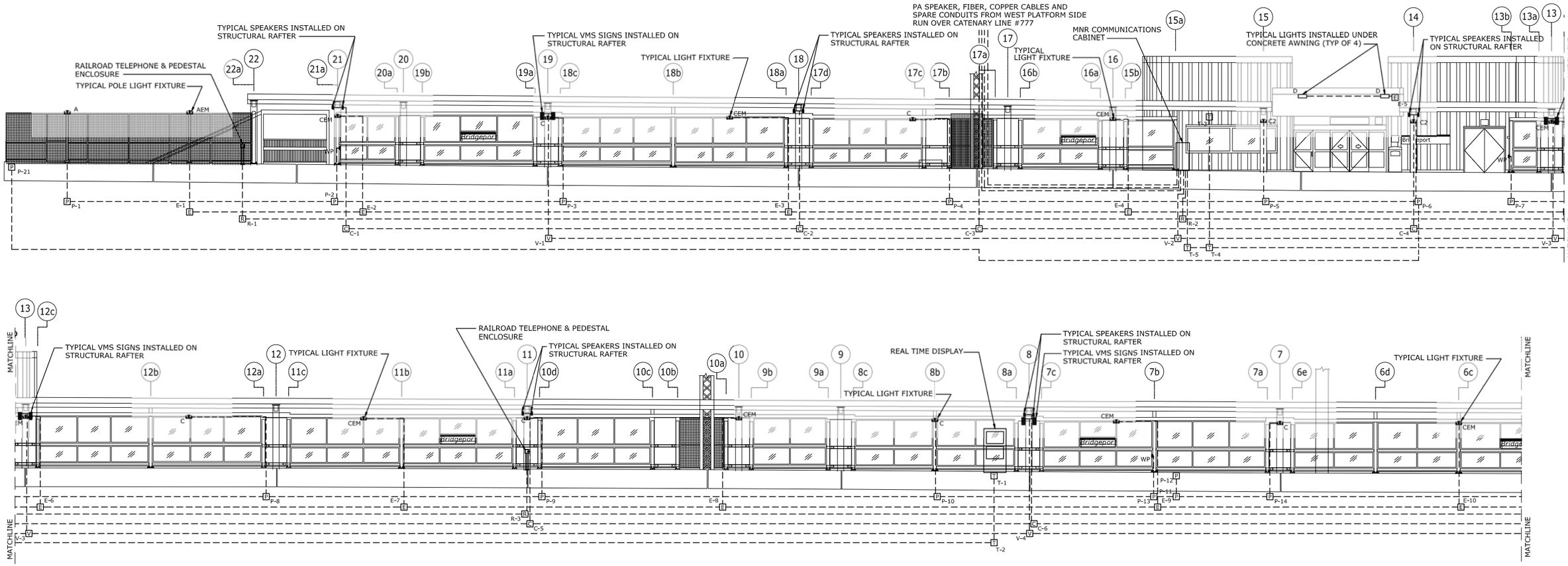

ELEVATIONS - ELECTRICAL EAST

SCALE: 1/8" = 1'-0"

1 / ELE-13

ELECTRICAL NOTES:

1. REFER TO DRAWINGS ELE-08 THROUGH ELE-12 FOR CONDUIT AND WIRING SIZES TO ALL ELECTRICAL AND COMMUNICATIONS ITEMS AND EQUIPMENT.

REV.	DATE	REVISION DESCRIPTION	SHEET NO.
-	-	-	-
-	-	-	-
-	-	-	-
-	-	-	-
-	-	-	-
-	-	-	-
-	-	-	-

THE INFORMATION, INCLUDING ESTIMATED QUANTITIES OF WORK, SHOWN ON THESE SHEETS IS BASED ON LIMITED INVESTIGATIONS BY THE STATE AND IS IN NO WAY WARRANTED TO INDICATE THE CONDITIONS OF ACTUAL QUANTITIES OF WORK WHICH WILL BE REQUIRED.

Plotted: 28-Mar-14

DESIGNER/DRAFTER: SMK/MVM

CHECKED BY: MVM

SCALE AS NOTED

STATE OF CONNECTICUT
DEPARTMENT OF TRANSPORTATION

Filename: FD_MST_ELE_0301_0155_ELE-13.DWG

MUSCO ENGINEERING ASSOCIATES
875 Morgan Lane, Unit 207
West Haven, CT 06516
(203) 932-1201 FAX (203) 931-1050
www.muscoengineering.com

APPROVED BY: M. MUSCO DATE: 03/28/14

PROJECT TITLE:
INSTALLATION OF CANOPY AT BRIDGEPORT STATION

TOWN: **BRIDGEPORT**

DRAWING TITLE: **ELEVATIONS - ELECTRICAL EAST**

PROJECT NO. **301-155**

DRAWING NO. **ELE-13**

SHEET NO. **06.13**

Border Version: 10/1/09

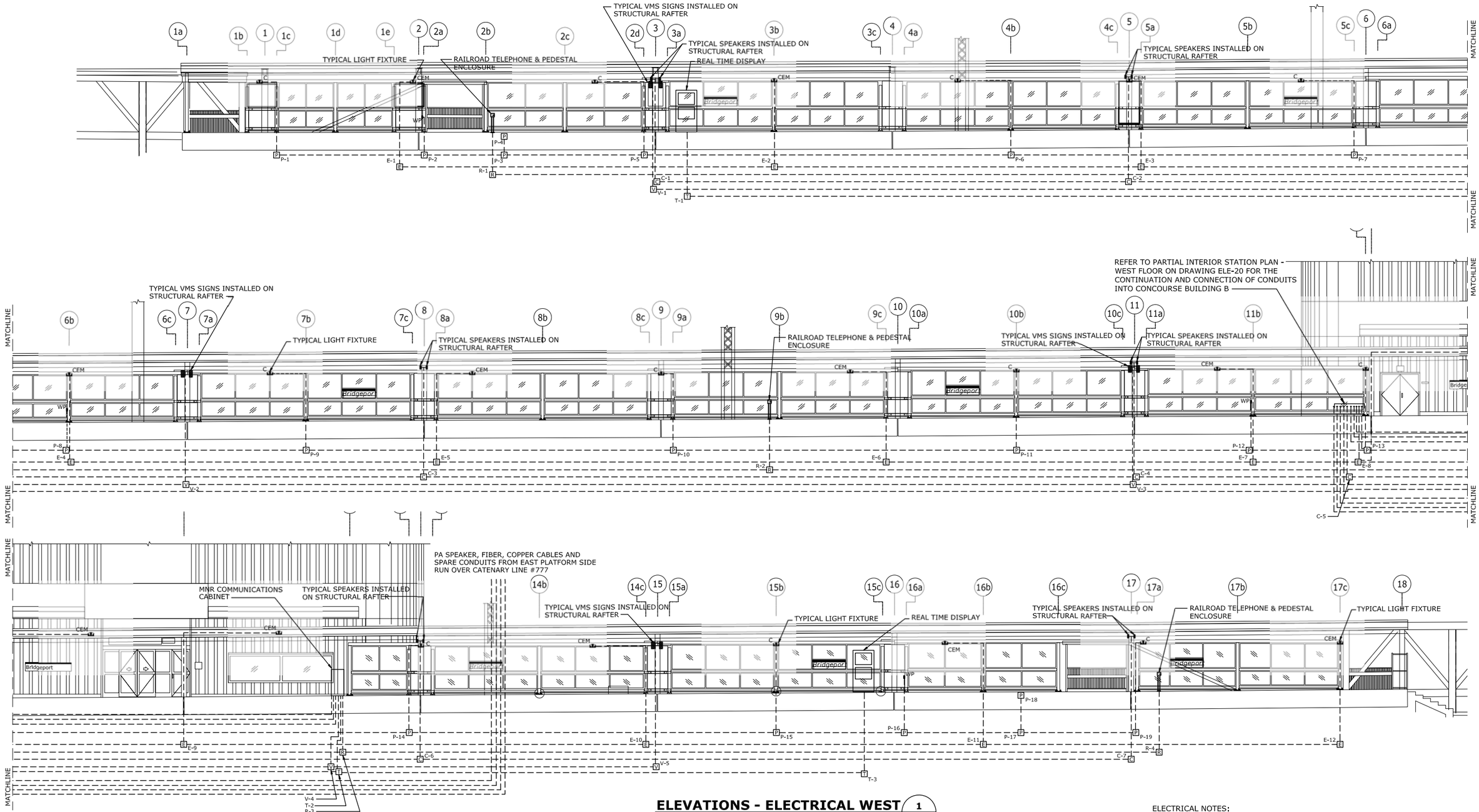

ELEVATIONS - ELECTRICAL WEST

SCALE: 1/8" = 1'-0"

1
ELE-14

ELECTRICAL NOTES:

1. REFER TO DRAWINGS ELE-08 THROUGH ELE-12 FOR CONDUIT AND WIRING SIZES TO ALL ELECTRICAL AND COMMUNICATIONS ITEMS AND EQUIPMENT.

REV.	DATE	REVISION DESCRIPTION	SHEET NO.
-	-	-	-
-	-	-	-
-	-	-	-
-	-	-	-
-	-	-	-
-	-	-	-
-	-	-	-

THE INFORMATION, INCLUDING ESTIMATED QUANTITIES OF WORK, SHOWN ON THESE SHEETS IS BASED ON LIMITED INVESTIGATIONS BY THE STATE AND IS IN NO WAY WARRANTED TO INDICATE THE CONDITIONS OF ACTUAL QUANTITIES OF WORK WHICH WILL BE REQUIRED.

Plotted: 28-Mar-14

DESIGNER/DRAFTER: SMK/MVM

CHECKED BY: MVM

SCALE AS NOTED

STATE OF CONNECTICUT
DEPARTMENT OF TRANSPORTATION

Filename: FD_MST_ELE_0301_0155_ELE-14.DWG

MUSCO ENGINEERING ASSOCIATES
375 Morgan Lane, Unit 307
West Haven, CT 06516
(203) 932-1901 FAX (203) 931-1550
www.muscoengineering.com

APPROVED BY: M. MUSCO

DATE: 03/28/14

PROJECT TITLE:
INSTALLATION OF CANOPY AT BRIDGEPORT STATION

TOWN: **BRIDGEPORT**

DRAWING TITLE: **ELEVATIONS - ELECTRICAL WEST**

PROJECT NO. **301-155**

DRAWING NO. **ELE-14**

SHEET NO. **06.14**

Border Version: 10/1/09

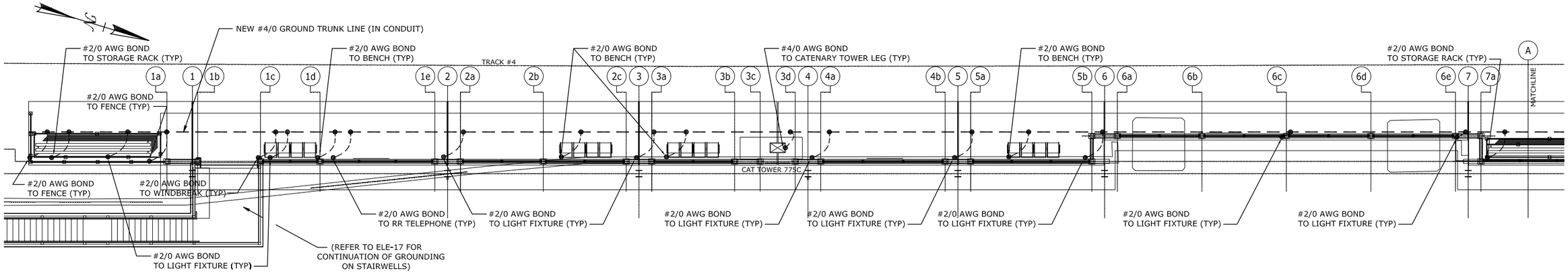

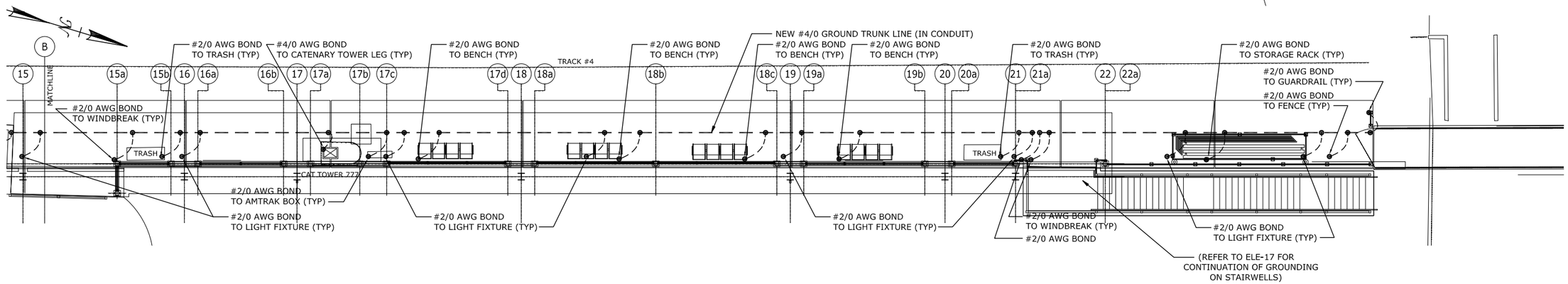

PLATFORM PLAN - GROUNDING PLAN EAST

SCALE: 1/8" = 1'-0"

1 / ELE-15

DRAWING NOTES:

1. THE EXACT LOCATION OF ALL NEW BENCHES SHALL BE COORDINATED WITH THE (ARCH) ARCHITECTURAL DRAWINGS.
2. FOR GENERAL NOTES, LEGEND AND ABBREVIATIONS, SEE DRAWING ELE-02.
3. FOR ADDITIONAL GROUNDING REQUIREMENTS, REFER TO THE SPECIFICATIONS.
4. FOR GROUNDING DETAILS, REFER TO DRAWING ELE-27.
5. ALL CABLE TO GROUND ROD CONNECTIONS SHALL BE MADE BY EXOTHERMIC WELDING.
6. #4/0 COPPER WIRE TO BE SUPPORTED FROM THE UNDERSIDE OF PLATFORM A MINIMUM OF 12" FROM THE EDGE, USE TWO HOLE STRAPS WITH 1/4" X 20" STAINLESS STEEL NUTS AND WASHERS, HILTI SYSTEMS PLATED STUDS 2'-0" O.C.
7. #2/0 BOND CONDUCTOR WITH ONE HOLE CONNECTOR LUGS AND 1/4" X 20 SILICON BRONZE MACHINE SCREWS TO BE CONNECTED TO ALL METALLIC PERMANENTLY MOUNTED FIXTURES ON PASSENGER PLATFORM SUCH AS BENCHES, RAILINGS, LIGHT STATIONS AND STRUCTURAL STEEL ACCESSIBLE TO THE PASSENGERS.
8. BOND ACROSS ALL EXPANSION JOINTS ON STRUCTURAL STEEL WITH #4/0 COPPER STRANDED AND SERVICE POST CONNECTIONS.
9. CONNECT #2/0 BOND CONDUCTOR TO #4/0 GROUND CONDUCTOR WITH SUITABLE PARALLEL CLAMP OR GX CONNECTORS.
10. GROUND ALL TEMPORARY STRUCTURES AND CONSTRUCTION EQUIPMENT.
11. REFER TO SPECIFICATIONS FOR ADDITIONAL ITEMS TO BE GROUNDED THAT MAY NOT BE INDICATED ON PLANS.
12. THE EXACT LOCATION AND QUANTITY OF NEWSPAPER BOXES/ENCLOSURES TO BE DETERMINED WITH DOT. GROUNDING MUST BE PROVIDED FOR BOXES IF INSTALLED.
13. THE EXACT LOCATIONS OF RECYCLE BOXES/ENCLOSURES TO BE DETERMINED WITH DOT. GROUNDING MUST BE PROVIDED FOR BOTH BOXES/ENCLOSURES.
14. CONTRACTOR TO PROVIDE #4/0 AWG COPPER GROUND TO CATENARY AERIAL GROUND. CONNECTION SHALL BE COORDINATED WITH METRO NORTH RAILROAD.
15. ALL GROUNDING SHALL BE REDUNDANT, AND AS DIRECTED BY THE ENGINEER.
16. ALL LIGHTING FIXTURES SHALL BE GROUNDED AS REQUIRED BY THE 2011 NEC, ARTICLE 250.
17. ALL GROUND CONNECTIONS SHALL BE MADE WITH CADWELD CONNECTIONS/WELDS PER MNR STANDARDS.
18. CONTRACTOR SHALL GROUND AND BOND ALL NEW HANDRAILS AND CHAIN LINK FENCES AS INDICATED. REFER TO DETAILS ON DRAWING ELE-27 FOR REQUIRED GROUNDING.

REV.	DATE	REVISION DESCRIPTION	SHEET NO.
-	-	-	-
-	-	-	-
-	-	-	-
-	-	-	-
-	-	-	-
-	-	-	-
-	-	-	-

THE INFORMATION, INCLUDING ESTIMATED QUANTITIES OF WORK, SHOWN ON THESE SHEETS IS BASED ON LIMITED INVESTIGATIONS BY THE STATE AND IS IN NO WAY WARRANTED TO INDICATE THE CONDITIONS OF ACTUAL QUANTITIES OF WORK WHICH WILL BE REQUIRED.

Plotted: 28-Mar-14

DESIGNER/DRAFTER: SMK/MVM

CHECKED BY: MVM

SCALE AS NOTED

STATE OF CONNECTICUT
DEPARTMENT OF TRANSPORTATION

Filename: FD_MST_ELE_0301_0155_ELE-15.DWG

MUSCO ENGINEERING ASSOCIATES
575 Morgan Lane, Unit 607
West Haven, CT 06516
(203) 932-1901 FAX (203) 931-1650
www.muscoengineering.com

APPROVED BY: M. MUSCO DATE: 03/28/14

PROJECT TITLE: INSTALLATION OF CANOPY AT BRIDGEPORT STATION

TOWN: BRIDGEPORT

DRAWING TITLE: PLATFORM PLAN - GROUNDING PLAN EAST

PROJECT NO. 301-155

DRAWING NO. ELE-15

SHEET NO. 06.15

Border Version: 10/1/09

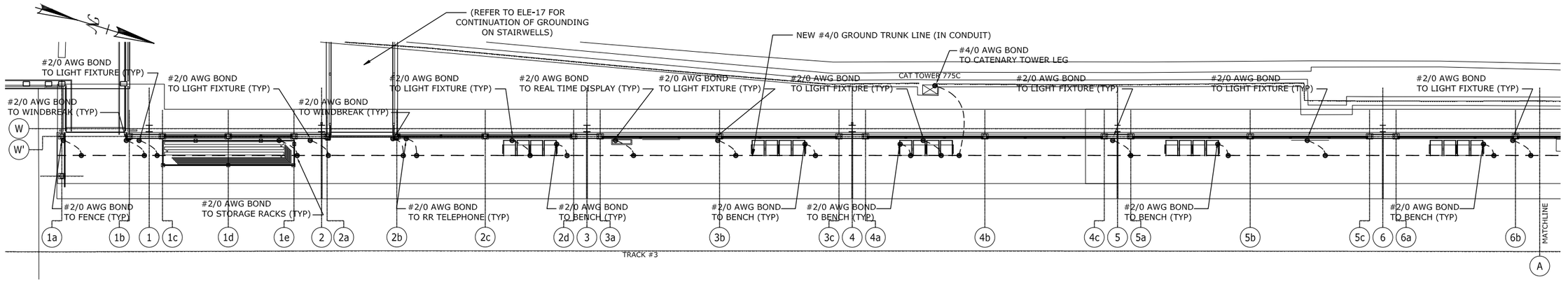

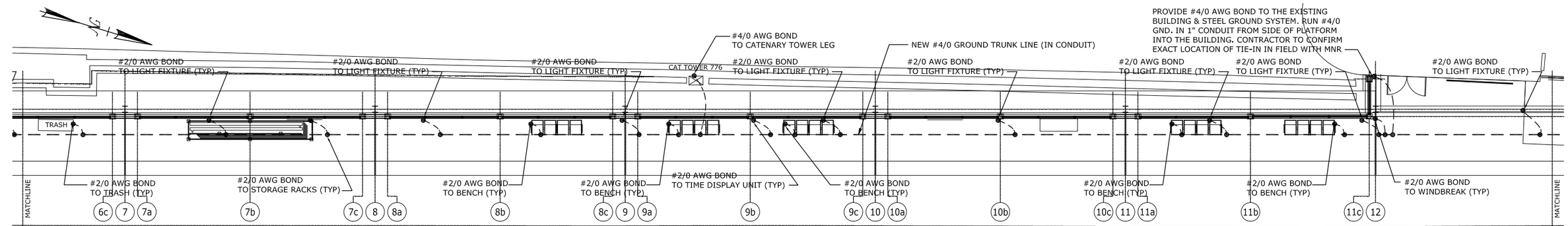

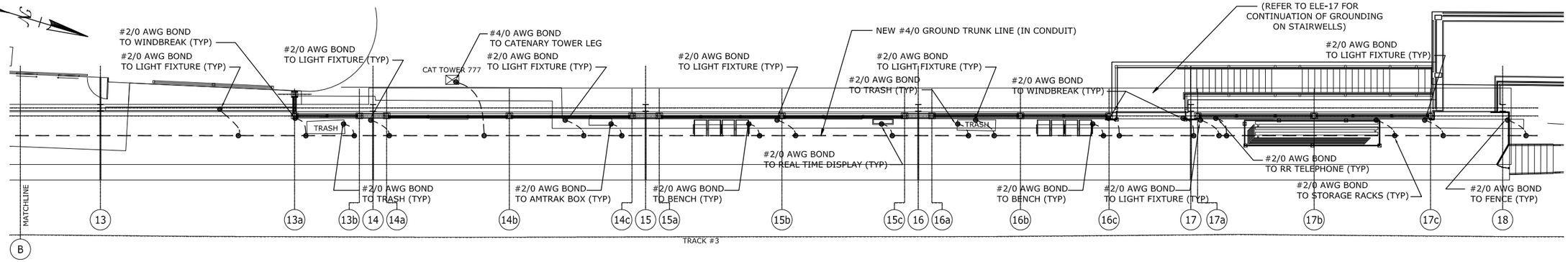

DRAWING NOTES:

1. THE EXACT LOCATION OF ALL NEW BENCHES SHALL BE COORDINATED WITH THE (ARCH) ARCHITECTURAL DRAWINGS.
2. FOR GENERAL NOTES, LEGEND AND ABBREVIATIONS, SEE DRAWING ELE-02.
3. FOR ADDITIONAL GROUNDING REQUIREMENTS, REFER TO THE SPECIFICATIONS.
4. FOR GROUNDING DETAILS, REFER TO DRAWING ELE-27.
5. ALL CABLE TO GROUND ROD CONNECTIONS SHALL BE MADE BY EXOTHERMIC WELDING.
6. #4/0 COPPER WIRE TO BE SUPPORTED FROM THE UNDERSIDE OF PLATFORM A MINIMUM OF 12" FROM THE EDGE, USE TWO HOLE STRAPS WITH 1/4" X 20" STAINLESS STEEL NUTS AND WASHERS, HILTI SYSTEMS PLATED STUDS 2'-0" O.C.
7. #2/0 BOND CONDUCTOR WITH ONE HOLE CONNECTOR LUGS AND 1/4" X 20 SILICON BRONZE MACHINE SCREWS TO BE CONNECTED TO ALL METALLIC PERMANENTLY MOUNTED FIXTURES ON PASSENGER PLATFORM SUCH AS BENCHES, RAILINGS, LIGHT STATIONS AND STRUCTURAL STEEL ACCESSIBLE TO THE PASSENGERS.
8. BOND ACROSS ALL EXPANSION JOINTS ON STRUCTURAL STEEL WITH #4/0 COPPER STRANDED AND SERVICE POST CONNECTIONS.
9. CONNECT #2/0 BOND CONDUCTOR TO #4/0 GROUND CONDUCTOR WITH SUITABLE PARALLEL CLAMP OR GX CONNECTORS.
10. GROUND ALL TEMPORARY STRUCTURES AND CONSTRUCTION EQUIPMENT.
11. REFER TO SPECIFICATIONS FOR ADDITIONAL ITEMS TO BE GROUNDED THAT MAY NOT BE INDICATED ON PLANS.
12. THE EXACT LOCATION AND QUANTITY OF NEWSPAPER BOXES/ENCLOSURES TO BE DETERMINED WITH DOT. GROUNDING MUST BE PROVIDED FOR BOXES IF INSTALLED.
13. THE EXACT LOCATIONS OF RECYCLE BOXES/ENCLOSURES TO BE DETERMINED WITH DOT. GROUNDING MUST BE PROVIDED FOR BOTH BOXES/ENCLOSURES.
14. CONTRACTOR TO PROVIDE #4/0 AWG COPPER GROUND TO CATENARY AERIAL GROUND. CONNECTION SHALL BE COORDINATED WITH METRO NORTH RAILROAD.
15. ALL GROUNDING SHALL BE REDUNDANT, AND AS DIRECTED BY THE ENGINEER.
16. ALL LIGHTING FIXTURES SHALL BE GROUNDED AS REQUIRED BY THE 2011 NEC, ARTICLE 250.
17. ALL GROUND CONNECTIONS SHALL BE MADE WITH CADWELD CONNECTIONS/WELDS PER MNR STANDARDS.
18. CONTRACTOR SHALL GROUND AND BOND ALL NEW HANDRAILS AND CHAIN LINK FENCES AS INDICATED. REFER TO DETAILS ON DRAWING ELE-27 FOR REQUIRED GROUNDING.

PLATFORM PLAN - ELECTRICAL GROUNDING PLAN WEST

SCALE: 1/8" = 1'-0"

1 / ELE-16

REV.	DATE	REVISION DESCRIPTION	SHEET NO.
-	-	-	-
-	-	-	-
-	-	-	-
-	-	-	-
-	-	-	-
-	-	-	-
-	-	-	-

THE INFORMATION, INCLUDING ESTIMATED QUANTITIES OF WORK, SHOWN ON THESE SHEETS IS BASED ON LIMITED INVESTIGATIONS BY THE STATE AND IS IN NO WAY WARRANTED TO INDICATE THE CONDITIONS OF ACTUAL QUANTITIES OF WORK WHICH WILL BE REQUIRED.

Plotted: 28-Mar-14

DESIGNER/DRAFTER: SMK/MVM

CHECKED BY: MVM

SCALE AS NOTED

STATE OF CONNECTICUT
DEPARTMENT OF TRANSPORTATION

Filename: FD_MST_ELE_0301_0155_ELE-16.DWG

MUSCO ENGINEERING ASSOCIATES
875 Morgan Lane, Unit 207
West Haven, CT 06516
(203) 932-1301 FAX (203) 931-1650
www.muscoengineering.com

APPROVED BY: M. MUSCO DATE: 03/28/14

PROJECT TITLE: INSTALLATION OF CANOPY AT BRIDGEPORT STATION

TOWN: BRIDGEPORT

DRAWING TITLE: PLATFORM PLAN - GROUNDING PLAN WEST

PROJECT NO. 301-155

DRAWING NO. ELE-16

SHEET NO. 06.16

Border Version: 10/1/09

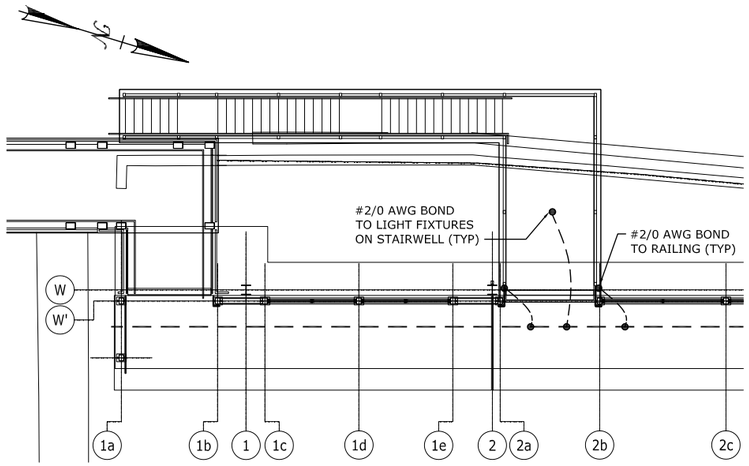

STAIRWELLS - GROUNDING PLAN WEST 1

SCALE: 1/8" = 1'-0"

1 ELE-17

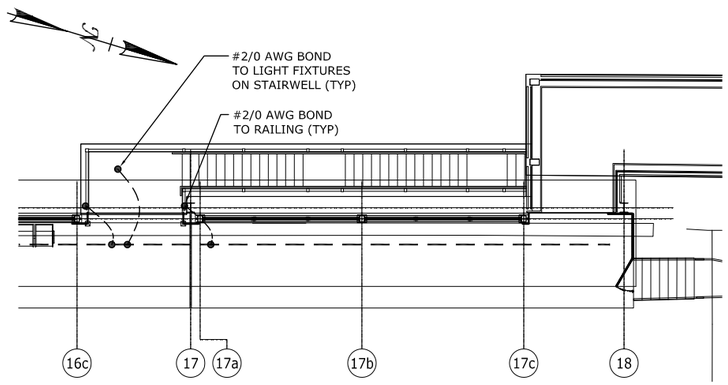

STAIRWELLS - GROUNDING PLAN WEST 2

SCALE: 1/8" = 1'-0"

2 ELE-17

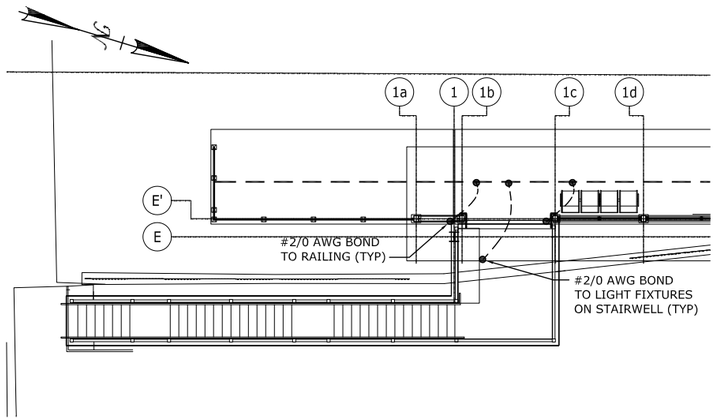

STAIRWELLS - GROUNDING PLAN EAST 1

SCALE: 1/8" = 1'-0"

3 ELE-17

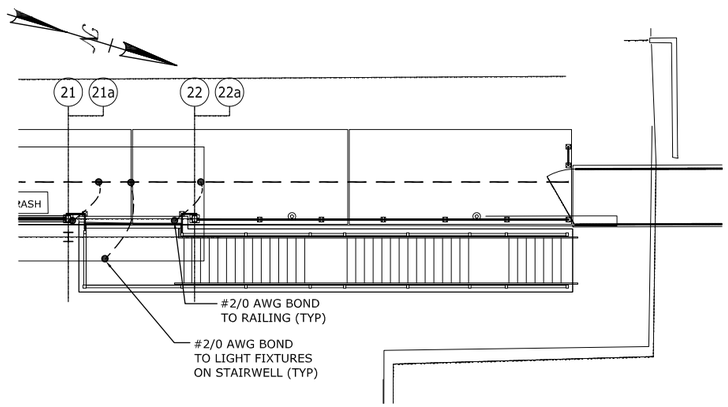

STAIRWELLS - GROUNDING PLAN EAST 2

SCALE: 1/8" = 1'-0"

4 ELE-17

DRAWING NOTES:

1. THE EXACT LOCATION OF ALL NEW BENCHES SHALL BE COORDINATED WITH THE (ARCH) ARCHITECTURAL DRAWINGS.
2. FOR GENERAL NOTES, LEGEND AND ABBREVIATIONS, SEE DRAWING ELE-02.
3. FOR ADDITIONAL GROUNDING REQUIREMENTS, REFER TO THE SPECIFICATIONS.
4. FOR GROUNDING DETAILS, REFER TO DRAWING ELE-27.
5. ALL CABLE TO GROUND ROD CONNECTIONS SHALL BE MADE BY EXOTHERMIC WELDING.
6. #4/0 COPPER WIRE TO BE SUPPORTED FROM THE UNDERSIDE OF PLATFORM A MINIMUM OF 12" FROM THE EDGE, USE TWO HOLE STRAPS WITH 1/4" X 20" STAINLESS STEEL NUTS AND WASHERS, HILTI SYSTEMS PLATED STUDS 2'-0" O.C.
7. #2/0 BOND CONDUCTOR WITH ONE HOLE CONNECTOR LUGS AND 1/4" X 20 SILICON BRONZE MACHINE SCREWS TO BE CONNECTED TO ALL METALLIC PERMANENTLY MOUNTED FIXTURES ON PASSENGER PLATFORM SUCH AS BENCHES, RAILINGS, LIGHT STATIONS AND STRUCTURAL STEEL ACCESSIBLE TO THE PASSENGERS.
8. BOND ACROSS ALL EXPANSION JOINTS ON STRUCTURAL STEEL WITH #4/0 COPPER STRANDED AND SERVICE POST CONNECTIONS.
9. CONNECT #2/0 BOND CONDUCTOR TO #4/0 GROUND CONDUCTOR WITH SUITABLE PARALLEL CLAMP OR GX CONNECTORS.
10. GROUND ALL TEMPORARY STRUCTURES AND CONSTRUCTION EQUIPMENT.
11. REFER TO SPECIFICATIONS FOR ADDITIONAL ITEMS TO BE GROUNDED THAT MAY NOT BE INDICATED ON PLANS.
12. THE EXACT LOCATION AND QUANTITY OF NEWSPAPER BOXES/ENCLOSURES TO BE DETERMINED WITH DOT. GROUNDING MUST BE PROVIDED FOR BOXES IF INSTALLED.
13. THE EXACT LOCATIONS OF RECYCLE BOXES/ENCLOSURES TO BE DETERMINED WITH DOT. GROUNDING MUST BE PROVIDED FOR BOTH BOXES/ENCLOSURES.
14. CONTRACTOR TO PROVIDE #4/0 AWG COPPER GROUND TO CATENARY AERIAL GROUND. CONNECTION SHALL BE COORDINATED WITH METRO NORTH RAILROAD.
15. ALL GROUNDING SHALL BE REDUNDANT, AND AS DIRECTED BY THE ENGINEER.
16. ALL LIGHTING FIXTURES SHALL BE GROUNDED AS REQUIRED BY THE 2011 NEC, ARTICLE 250.
17. ALL GROUND CONNECTIONS SHALL BE MADE WITH CADWELD CONNECTIONS/WELDS PER MNR STANDARDS.
18. CONTRACTOR SHALL GROUND AND BOND ALL NEW HANDRAILS AND CHAIN LINK FENCES AS INDICATED. REFER TO DETAILS ON DRAWING ELE-27 FOR REQUIRED GROUNDING.

REV.	DATE	REVISION DESCRIPTION	SHEET NO.
-	-	-	-
-	-	-	-
-	-	-	-
-	-	-	-
-	-	-	-
-	-	-	-
-	-	-	-
-	-	-	-

Plotted: 28-Mar-14

THE INFORMATION, INCLUDING ESTIMATED QUANTITIES OF WORK, SHOWN ON THESE SHEETS IS BASED ON LIMITED INVESTIGATIONS BY THE STATE AND IS IN NO WAY WARRANTED TO INDICATE THE CONDITIONS OF ACTUAL QUANTITIES OF WORK WHICH WILL BE REQUIRED.

DESIGNER/DRAFTER: SMK/MVM

CHECKED BY: MVM

SCALE AS NOTED

STATE OF CONNECTICUT
DEPARTMENT OF TRANSPORTATION

Filename: FD_MST_ELE_0301_0155_ELE-17.DWG

MUSCO ENGINEERING ASSOCIATES
376 Morgan Lane, Unit 207
West Haven, CT 06516
(203) 932-1501 FAX (203) 691-1550
www.muscoengineering.com

APPROVED BY: M. MUSCO DATE: 03/28/14

PROJECT TITLE:
INSTALLATION OF CANOPY AT BRIDGEPORT STATION

TOWN: **BRIDGEPORT**

DRAWING TITLE: **STAIRWELLS - GROUNDING PLANS**

PROJECT NO. **301-155**

DRAWING NO. **ELE-17**

SHEET NO. **06.17**

Border Version: 10/1/09

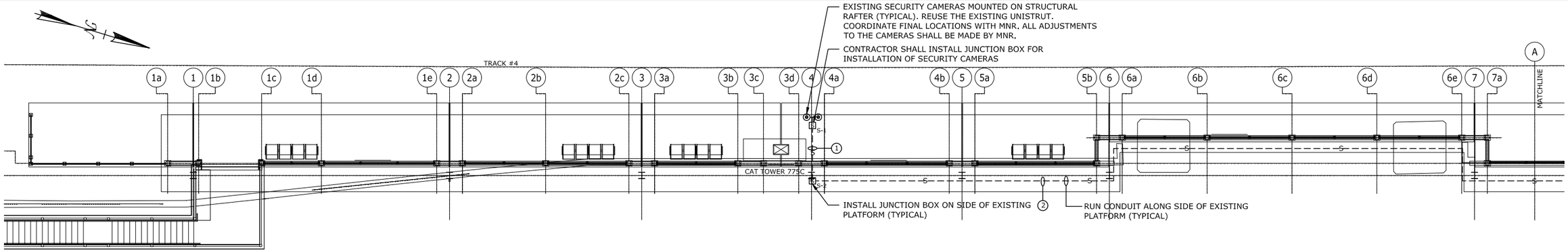

SECURITY DRAWING NOTES:

1. REFER TO THE ELECTRICAL SPECIFICATIONS FOR ELECTRICAL REQUIREMENTS.
2. PROVIDE EXPANSION JOINTS (FITTINGS) AT THE PLATFORM EXPANSIONS TO COMPLY WITH 2011 NEC ARTICLE 300.7 (B). PROVIDE SHOP DRAWING TO ENGINEER/OWNER TO REVIEW BEFORE INSTALLATION.
3. PROVIDE ADEQUATE GROUNDING AND BONDING FOR THE EXISTING SECURITY SYSTEM AND DEVICES AS REQUIRED BY THE 2011 NEC, ARTICLE 250.
4. COORDINATE WITH MNR AND DOT FOR THE FINAL ELECTRICAL REQUIREMENTS NECESSARY FOR THE SECURITY SYSTEM & EQUIPMENT.
5. CONTRACTOR SHALL COORDINATE SECURITY CAMERA MOUNTING REQUIREMENTS WITH METRO NORTH RAILROAD AS NECESSARY.
6. CONTRACTOR SHALL COORDINATE WITH METRO NORTH FOR TEMPORARY OUTAGE REQUIRED FOR SWITCH-OVER TO NEW CONDUIT/WIRING SYSTEM. A MAXIMUM OF TWO HOURS SHALL BE ALLOWED PER DAY, AND AT MNR'S DISCRETION.
7. METRO NORTH IS RESPONSIBLE FOR ALL FINAL CONNECTIONS THE SECURITY EQUIPMENT INSIDE CONCOURSE BUILDING C. CONTRACTOR SHALL COORDINATE WITH MNR FOR ANY ADDITIONAL REQUIREMENTS NEEDED FOR THE SECURITY CONDUIT/WIRING SYSTEM.
8. METRO NORTH RAILROAD SHALL BE RESPONSIBLE FOR ALL ADJUSTMENTS AND CAMERA ANGLES REQUIRED FOR THEIR SECURITY SYSTEM CAMERAS.
9. ANY ADDITIONAL WIRING FOR THE SECURITY SYSTEM SHALL BE BY MNR.
10. THE SECURITY EQUIPMENT INSIDE CONCOURSE BUILDING IS EXISTING TO REMAIN PER THIS CONTRACT. ANY ADDITIONAL EQUIPMENT OR UPGRADES WILL BE THE RESPONSIBILITY OF METRO NORTH RAILROAD.
11. THE EXISTING WIRING SHALL BE REUSED FOR THE SECURITY SYSTEM. IF WIRING IS DAMAGED DURING CONSTRUCTION BY THE CONTRACTOR, IT SHALL BE THE RESPONSIBILITY TO COORDINATE WITH MNR FOR NEW WIRING.
12. ADDITIONAL WIRING REQUIRED FOR EXTENDING AND PROVIDING THE NEW CONDUIT SYSTEM FOR THE SECURITY SYSTEM SHALL BE PROVIDED BY MNR.

PLATFORM PLAN - SECURITY EAST

SCALE: 1/8" = 1'-0"

1 ELE-18

CONDUIT & WIRING LEGEND			
ITEM	WIRE SIZE	CND. SIZE	FROM/TO (CIRCUIT)
1	WIRING BY MNR	1 1/4"	TO S-2
2	WIRING BY MNR	1 1/4"	FEED TO S-4
3	WIRING BY MNR	1 1/4"	TO S-4
4	WIRING BY MNR	1 1/4"	FEED TO S-6
5	WIRING BY MNR	1 1/4"	TO S-6
6	WIRING BY MNR	1 1/4"	FEED TO S-7
7	WIRING BY MNR	1 1/4"	FEED TO S-7
8	WIRING BY MNR	1 1/4"	TO S-9

CONDUIT/WIRING SYMBOL LEGEND	
—S—	SECURITY SYSTEM CONDUIT/WIRING

REV.	DATE	REVISION DESCRIPTION	SHEET NO.
-	-	-	-
-	-	-	-
-	-	-	-
-	-	-	-
-	-	-	-
-	-	-	-
-	-	-	-

THE INFORMATION, INCLUDING ESTIMATED QUANTITIES OF WORK, SHOWN ON THESE SHEETS IS BASED ON LIMITED INVESTIGATIONS BY THE STATE AND IS IN NO WAY WARRANTED TO INDICATE THE CONDITIONS OF ACTUAL QUANTITIES OF WORK WHICH WILL BE REQUIRED.

Plotted: 28-Mar-14

DESIGNER/DRAFTER: SMK/MVM

CHECKED BY: MVM

SCALE AS NOTED

STATE OF CONNECTICUT
DEPARTMENT OF TRANSPORTATION

Filename: FD_MST_ELE_0301_0155_ELE-18.DWG

MUSCO ENGINEERING ASSOCIATES
875 Morgan Lane, Unit 207
West Haven, CT 06516
(203) 932-1901 FAX (203) 931-1650
www.muscoengineering.com

APPROVED BY: M. MUSCO DATE: 03/28/14

PROJECT TITLE:
INSTALLATION OF CANOPY AT BRIDGEPORT STATION

TOWN: **BRIDGEPORT**

DRAWING TITLE: **PLATFORM PLAN - SECURITY EAST**

PROJECT NO. **301-155**

DRAWING NO. **ELE-18**

SHEET NO. **06.18**

Border Version: 10/1/09

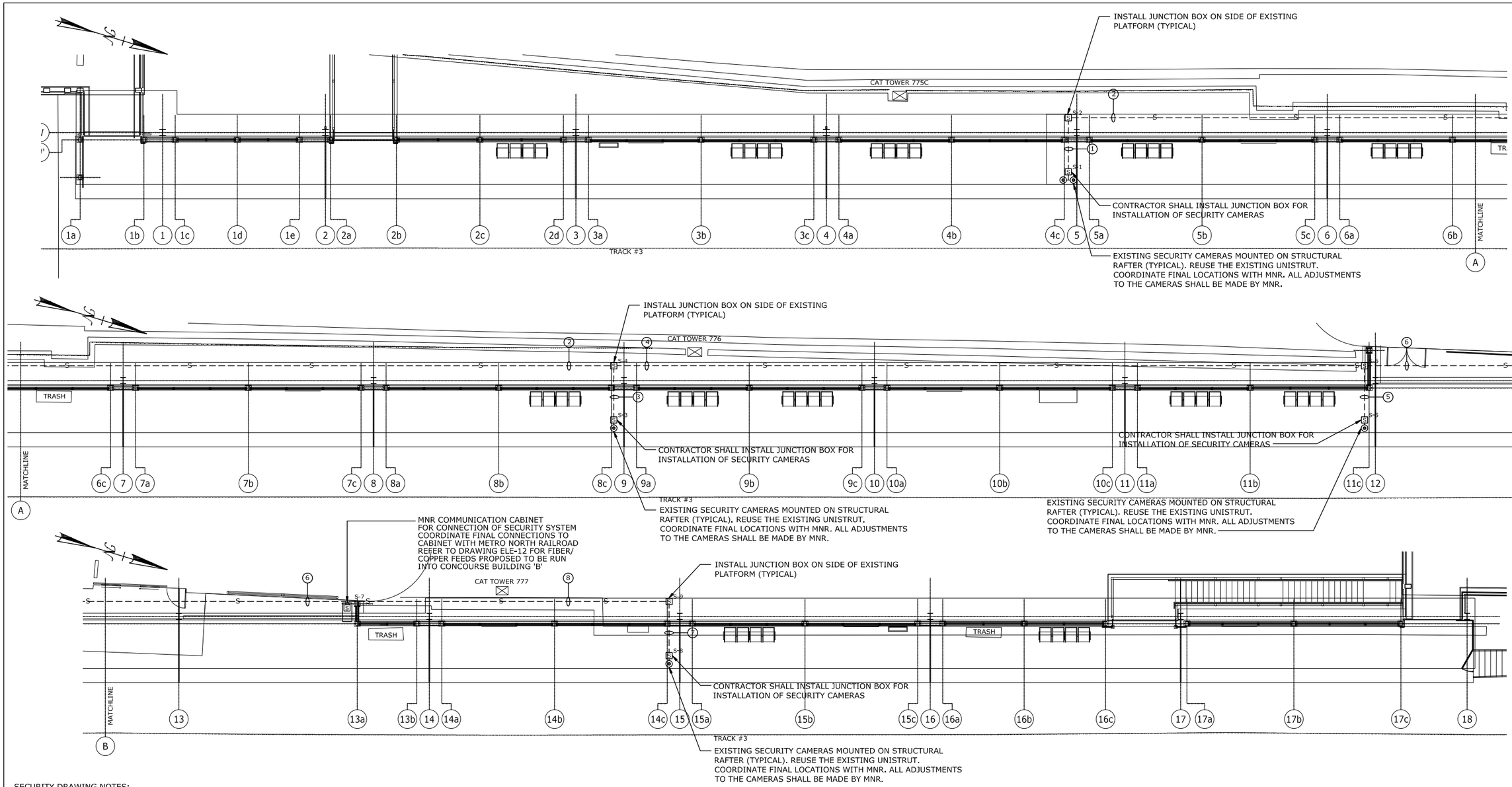

SECURITY DRAWING NOTES:

1. REFER TO THE ELECTRICAL SPECIFICATIONS FOR ELECTRICAL REQUIREMENTS.
2. PROVIDE EXPANSION JOINTS (FITTINGS) AT THE PLATFORM EXPANSIONS TO COMPLY WITH 2011 NEC ARTICLE 300.7 (B). PROVIDE SHOP DRAWING TO ENGINEER/OWNER TO REVIEW BEFORE INSTALLATION.
3. PROVIDE ADEQUATE GROUNDING AND BONDING FOR THE EXISTING SECURITY SYSTEM AND DEVICES AS REQUIRED BY THE 2011 NEC, ARTICLE 250.
4. COORDINATE WITH MNR AND DOT FOR THE FINAL ELECTRICAL REQUIREMENTS NECESSARY FOR THE RELOCATED SECURITY SYSTEM & EQUIPMENT.
5. CONTRACTOR SHALL COORDINATE SECURITY CAMERA MOUNTING REQUIREMENTS WITH METRO NORTH RAILROAD AS NECESSARY.
6. CONTRACTOR SHALL COORDINATE WITH METRO NORTH FOR TEMPORARY OUTAGE REQUIRED FOR SWITCH-OVER TO NEW CONDUIT/WIRING SYSTEM. A MAXIMUM OF TWO HOURS SHALL BE ALLOWED PER DAY, AND AT MNR'S DISCRETION.
7. METRO NORTH IS RESPONSIBLE FOR ALL FINAL CONNECTIONS THE SECURITY EQUIPMENT INSIDE CONCOURSE BUILDING B. CONTRACTOR SHALL COORDINATE WITH MNR FOR ANY ADDITIONAL REQUIREMENTS NEEDED FOR THE SECURITY CONDUIT/WIRING SYSTEM.
8. METRO NORTH RAILROAD SHALL BE RESPONSIBLE FOR ALL ADJUSTMENTS AND CAMERA ANGLES REQUIRED FOR THEIR SECURITY SYSTEM CAMERAS.
9. ANY ADDITIONAL WIRING FOR THE SECURITY SYSTEM SHALL BE BY MNR.
10. THE SECURITY EQUIPMENT INSIDE CONCOURSE BUILDING IS EXISTING TO REMAIN PER THIS CONTRACT. ANY ADDITIONAL EQUIPMENT OR UPGRADES WILL BE THE RESPONSIBILITY OF METRO NORTH RAILROAD.
11. THE EXISTING WIRING SHALL BE REUSED FOR THE SECURITY SYSTEM. IF WIRING IS DAMAGED DURING CONSTRUCTION BY THE CONTRACTOR, IT SHALL BE THE RESPONSIBILITY TO COORDINATE WITH MNR FOR NEW WIRING.
12. ADDITIONAL WIRING REQUIRED FOR EXTENDING AND PROVIDING THE NEW CONDUIT SYSTEM FOR THE SECURITY SYSTEM SHALL BE PROVIDED BY MNR.

PLATFORM PLAN -SECURITY WEST

SCALE: 1/8" = 1'-0"

1 / ELE-19

CONDUIT & WIRING LEGEND			
ITEM	WIRE SIZE	CND. SIZE	FROM/TO (CIRCUIT)
1	WIRING BY MNR	1 1/4"	TO S-2
2	WIRING BY MNR	1 1/4"	FEED TO S-4
3	WIRING BY MNR	1 1/4"	TO S-4
4	WIRING BY MNR	1 1/4"	FEED TO S-6
5	WIRING BY MNR	1 1/4"	TO S-6
6	WIRING BY MNR	1 1/4"	FEED TO S-7
7	WIRING BY MNR	1 1/4"	TO S-9
8	WIRING BY MNR	1 1/4"	FEED TO S-7

CONDUIT/WIRING SYMBOL LEGEND	
—S—	SECURITY SYSTEM CONDUIT/WIRING

REV.	DATE	REVISION DESCRIPTION	SHEET NO.
-	-	-	-
-	-	-	-
-	-	-	-
-	-	-	-
-	-	-	-
-	-	-	-
-	-	-	-

THE INFORMATION, INCLUDING ESTIMATED QUANTITIES OF WORK, SHOWN ON THESE SHEETS IS BASED ON LIMITED INVESTIGATIONS BY THE STATE AND IS IN NO WAY WARRANTED TO INDICATE THE CONDITIONS OF ACTUAL QUANTITIES OF WORK WHICH WILL BE REQUIRED.

Plotted: 28-Mar-14

DESIGNER/DRAFTER: SMK/MVM

CHECKED BY: MVM

SCALE AS NOTED

STATE OF CONNECTICUT
DEPARTMENT OF TRANSPORTATION

Filename: FD_MST_ELE_0301_0155_ELE-19.DWG

MUSCO ENGINEERING ASSOCIATES
375 Morgan Lane, Unit 207
West Haven, CT 06516
(203) 932-1901 FAX (203) 931-1550
www.muscoengineering.com

APPROVED BY: M. MUSCO DATE: 03/28/14

PROJECT TITLE:
INSTALLATION OF CANOPY AT BRIDGEPORT STATION

TOWN: **BRIDGEPORT**

DRAWING TITLE: **PLATFORM PLAN - SECURITY WEST**

PROJECT NO. **301-155**

DRAWING NO. **ELE-19**

SHEET NO. **06.19**

Border Version: 10/1/09

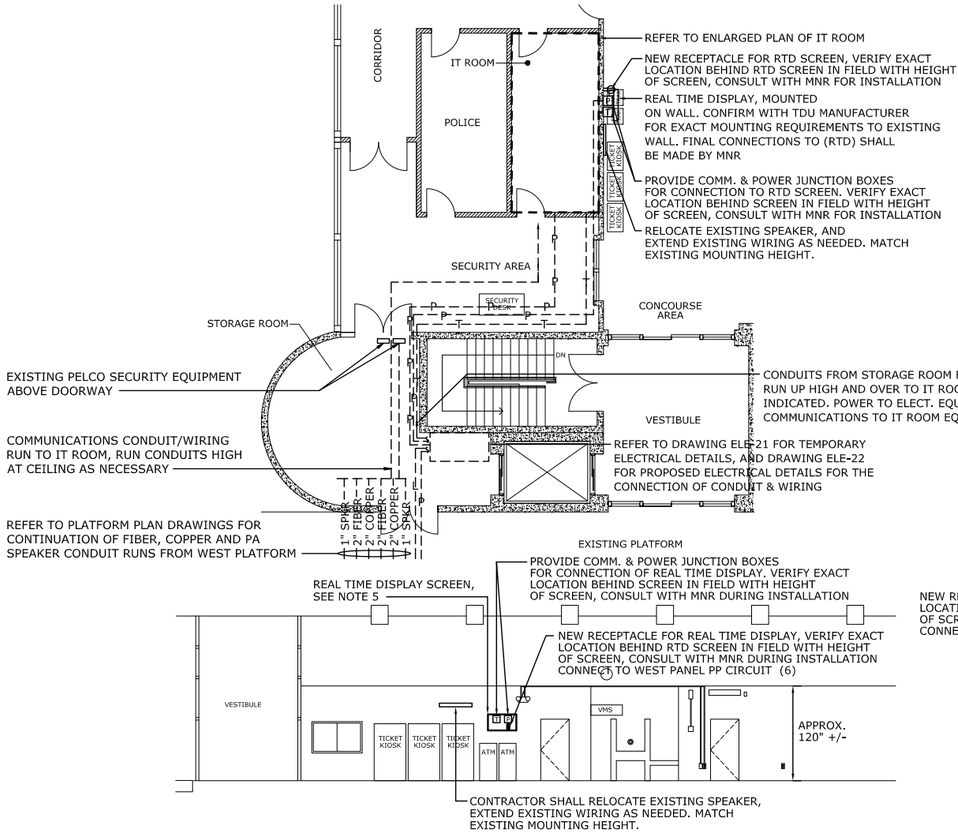

PARTIAL INTERIOR STATION PLAN - WEST CONCOURSE FLOOR

NOT TO SCALE

1 ELE-20

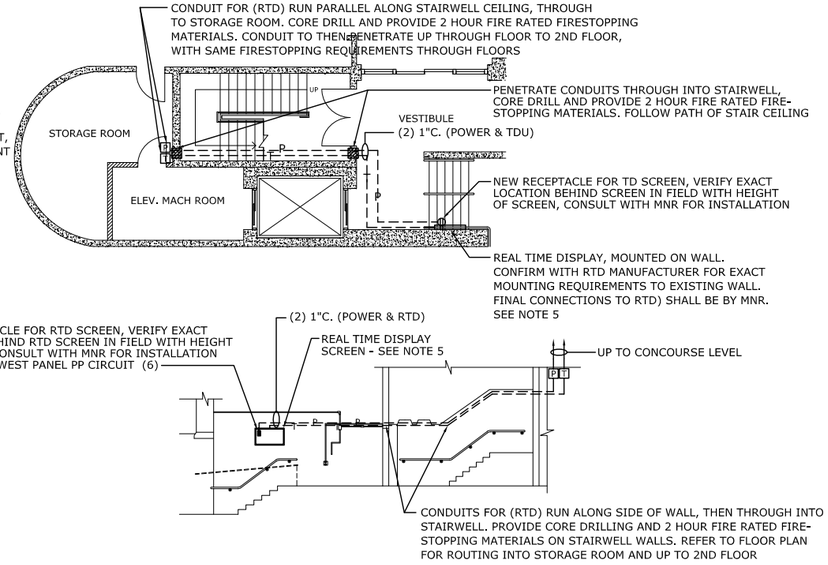

PARTIAL INTERIOR STATION PLAN - WEST GROUND FLOOR

NOT TO SCALE

2 ELE-20

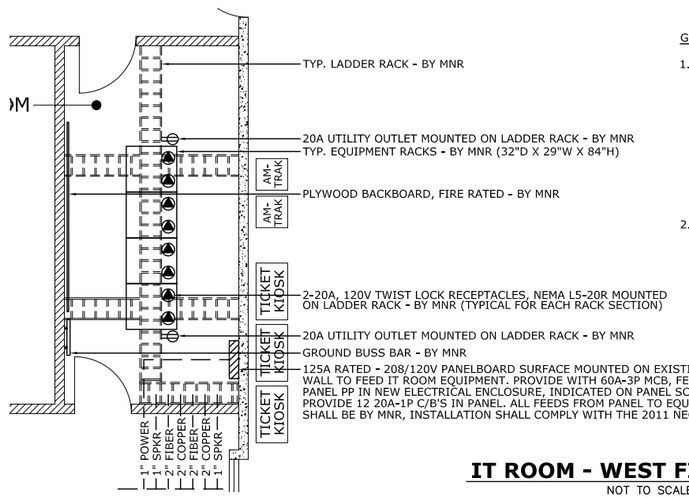

IT ROOM - WEST FIRST FLOOR

NOT TO SCALE

3 ELE-20

GENERAL NOTES:

1. THE DLC CABINET SHALL BE PROVIDED BY METRO NORTH RAILROAD AND INSTALLED IN COORDINATION WITH THE CONTRACTOR. THE CONTRACTOR SHALL COORDINATE WITH MNR FOR EXACT CONDUIT AND WIRING REQUIREMENTS NECESSARY FOR THE INSTALLATON OF NEW CABINET: THIS MAY INCLUDE THE FOLLOWING:
   - POWER CIRCUITS (20A-1P)
   - FIBER FEED CONDUITS & WIRING
   - RAILROAD TELEPHONE CONDUITS & WIRING
   - INTERCONNECTION BETWEEN DLC & PA CABINETS
   - SPARE CONDUITS FOR FUTURE DEVICES
   - STRUCTURAL PEDESTAL SUPPORTS (COORDINATE WITH MNR)
2. THE PA CABINET SHALL BE PROVIDED BY METRO NORTH RAILROAD AND INSTALLED IN COORDINATION WITH THE CONTRACTOR. THE CONTRACTOR SHALL COORDINATE WITH MNR FOR EXACT CONDUIT AND WIRING REQUIREMENTS NECESSARY FOR THE INSTALLATION OF NEW CABINET: THIS MAY INCLUDE THE FOLLOWING:
   - POWER CIRCUITS (20A-1P)
   - SPEAKER CONDUITS & WIRING
   - SPARE CONDUITS FOR FUTURE DEVICES
   - INTERCONNECTION BETWEEN PA & DLC CABINETS
3. THE TIME DISPLAY EQUIPMENT SHALL BE PROVIDED BY METRO NORTH AND INSTALLED IN COORDINATION WITH THE CONTRACTOR. THE CONTRACTOR SHALL COORDINATE WITH MNR FOR EXACT CONDUIT AND WIRING REQUIREMENTS NECESSARY FOR THE INSTALLATION OF NEW EQUIPMENT: THIS MAY INCLUDE THE FOLLOWING:
   - POWER CIRCUITS (20A-1P)
   - COMMUNICATIONS CONDUITS & WIRING (CATEGORY 5E)
   - SPARE CONDUITS FOR FUTURE DEVICES
   - INTERCONNECTIONS BETWEEN EQUIPMENT AS NECESSARY
4. COORDINATE WITH WALTER BURGER OF MNR FOR THE REQUIRED CONNECTIONS AND INTERCONNECTIONS FOR THE DLC AND PA SYSTEM.
5. COORDINATE WITH TOM MITCHELL AND FRANK STREETER OF MNR FOR THE REQUIRED CONNECTIONS, EQUIPMENT AND INTERCONNECTIONS FOR THE TIME DISPLAY UNIT SYSTEM.

CONDUIT/WIRING SYMBOL LEGEND	
----R----	RAILROAD TELEPHONE CONDUIT/WIRING
----C----	SPEAKER SYSTEM CONDUIT/WIRING
----V----	VMS SYSTEM CONDUIT/WIRING
----T----	REAL TIME DISPLAY CONDUIT/WIRING
----S----	SECURITY SYSTEM CONDUIT/WIRING
----P----	POWER SYSTEM CONDUIT/WIRING
----L----	LIGHTING SYSTEM CONDUIT/WIRING

ELECTRICAL NOTES:

1. REFER TO THE ELECTRICAL SPECIFICATIONS FOR ELECTRICAL REQUIREMENTS.
2. PROVIDE ADEQUATE GROUNDING AND BONDING FOR THE NEW ELECTRICAL SYSTEM AND DEVICES AS REQUIRED BY THE 2011 NEC.
3. COORDINATE WITH MNR AND DOT FOR THE FINAL ELECTRICAL REQUIREMENTS NECESSARY FOR THE COMMUNICATIONS SYSTEMS.
4. THE EXACT HEIGHT OF REAL TIME DISPLAYS SHALL BE DETERMINED BY METRO NORTH RAILROAD AND DOT CONFIRMATION. COORDINATE CONDUIT AND WIRING RUN WITH THIS HEIGHT AS NECESSARY. ALL MOUNTING HARDWARE FOR TD UNITS SHALL BE PROVIDED BY MNR AND INSTALLED BY CONTRACTOR. CONFIRM REQUIREMENTS WITH MNR.

REV.	DATE	REVISION DESCRIPTION	SHEET NO.
-	-	-	-
-	-	-	-
-	-	-	-
-	-	-	-
-	-	-	-
-	-	-	-
-	-	-	-

Plotted: 28-Mar-14

THE INFORMATION, INCLUDING ESTIMATED QUANTITIES OF WORK, SHOWN ON THESE SHEETS IS BASED ON LIMITED INVESTIGATIONS BY THE STATE AND IS IN NO WAY WARRANTED TO INDICATE THE CONDITIONS OF ACTUAL QUANTITIES OF WORK WHICH WILL BE REQUIRED.

DESIGNER/DRAFTER: SMK/MVM

CHECKED BY: MVM

SCALE AS NOTED

STATE OF CONNECTICUT
DEPARTMENT OF TRANSPORTATION

Filename: FD_MST_ELE_0301_0155_ELE-20.DWG

MUSCO ENGINEERING ASSOCIATES
575 Morgan Lane, Unit 607
West Haven, CT 06516
(203) 932-1201 FAX (203) 991-1550
www.muscoengineering.com

APPROVED BY: M. MUSCO DATE: 03/28/14

PROJECT TITLE:
INSTALLATION OF CANOPY AT BRIDGEPORT STATION

TOWN: **BRIDGEPORT**

DRAWING TITLE: **PARTIAL INTERIOR STATION PLANS - WEST**

PROJECT NO. **301-155**

DRAWING NO. **ELE-20**

SHEET NO. **06.20**

Border Version: 10/1/09

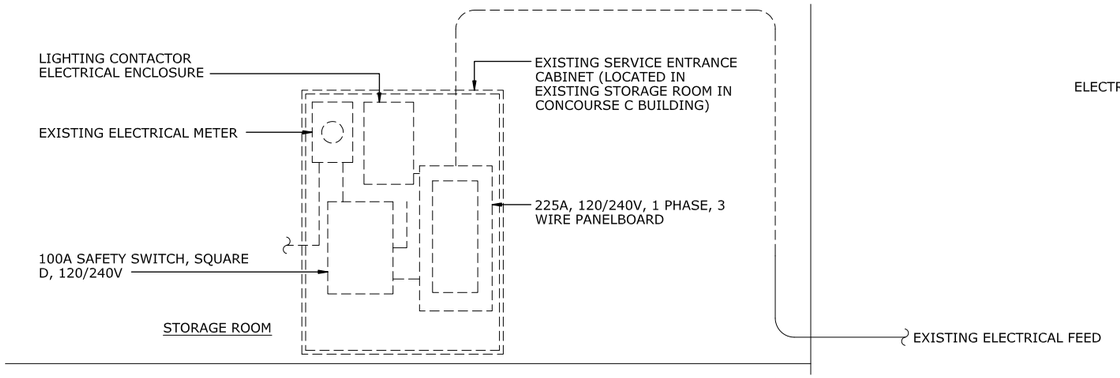

EXISTING POWER DISTRIBUTION ONE LINE DIAGRAM (EAST)

1 ELE-21

NOT TO SCALE

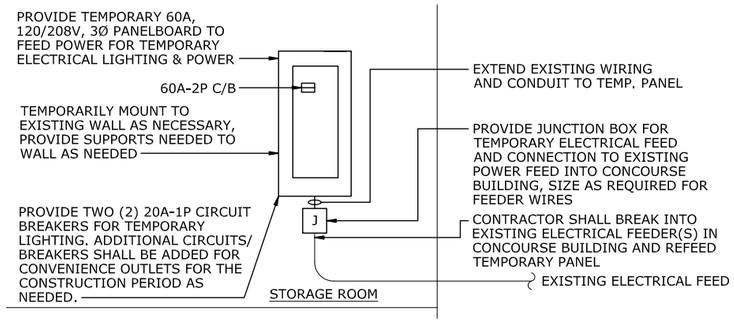

1. TEMPORARY ELECTRICAL PANEL IS INSTALLED TO FEED TEMPORARY LIGHTING AND POWER FOR THE CONSTRUCTION PERIOD. IF THERE ARE ADDITIONAL ELECTRICAL ITEMS THAT REQUIRE POWER DURING THE CONSTRUCTION, CONNECT TO TEMP. PANEL AS NEEDED WITH THE APPROPRIATE WIRING AND CIRCUIT BREAKERS.
2. THE TEMPORARY PANEL SHALL BE REMOVED ONCE THE NEW ELECTRICAL DISTRIBUTION SYSTEM IS INSTALLED, AND READY TO BE ENERGIZED WITH ALL NEW ELECTRICAL LOADS FROM THE PLATFORM WORK.
3. CONFIRM ALL ELECTRICAL INSTALLATION REQUIREMENTS WITH THE LOCAL UTILITY COMPANY AS NECESSARY.

TEMPORARY POWER DISTRIBUTION ONE LINE DIAGRAM (EAST)

2 ELE-21

NOT TO SCALE

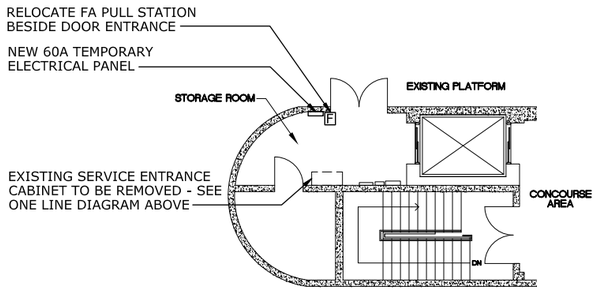

TEMPORARY POWER DISTRIBUTION PLAN (EAST)

3 ELE-21

NOT TO SCALE

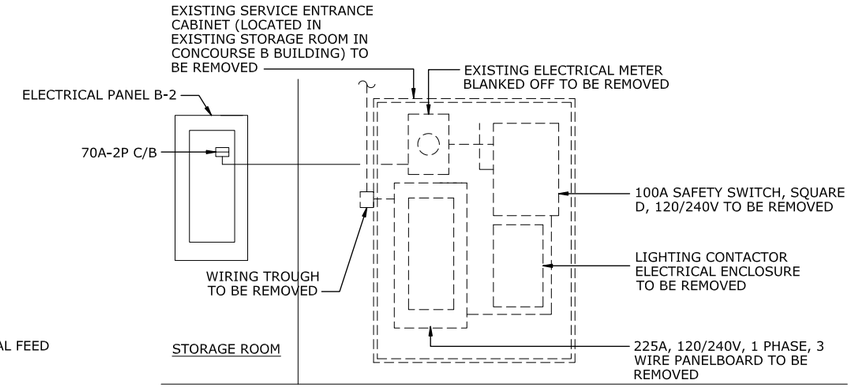

EXISTING POWER DISTRIBUTION ONE LINE DIAGRAM (WEST)

4 ELE-21

NOT TO SCALE

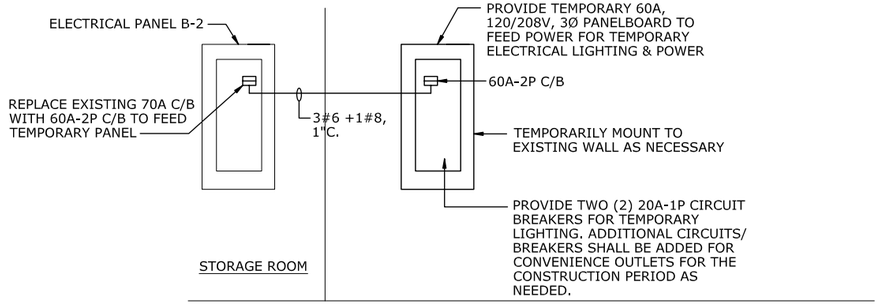

1. TEMPORARY ELECTRICAL PANEL IS INSTALLED TO FEED TEMPORARY LIGHTING AND POWER FOR THE CONSTRUCTION PERIOD. IF THERE ARE ADDITIONAL ELECTRICAL ITEMS THAT REQUIRE POWER DURING THE CONSTRUCTION, CONNECT TO TEMP. PANEL AS NEEDED WITH THE APPROPRIATE WIRING AND CIRCUIT BREAKERS.
2. THE TEMPORARY PANEL SHALL BE REMOVED ONCE THE NEW ELECTRICAL DISTRIBUTION SYSTEM IS INSTALLED, AND READY TO BE ENERGIZED WITH ALL NEW ELECTRICAL LOADS FROM THE PLATFORM WORK.
3. CONFIRM ALL ELECTRICAL INSTALLATION REQUIREMENTS WITH THE LOCAL UTILITY COMPANY AS NECESSARY.

TEMPORARY POWER DISTRIBUTION ONE LINE DIAGRAM (WEST)

5 ELE-21

NOT TO SCALE

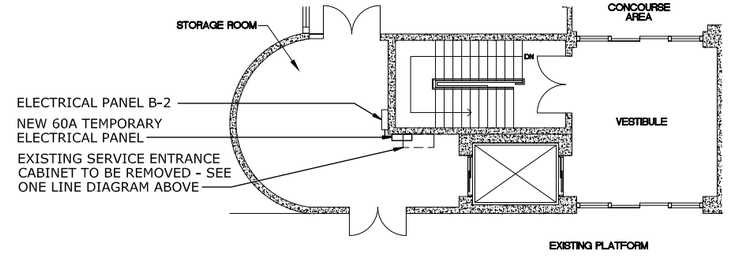

TEMPORARY POWER DISTRIBUTION PLAN (WEST)

6 ELE-21

NOT TO SCALE

ELECTRICAL NOTES:

1. REFER TO THE ELECTRICAL SPECIFICATIONS FOR ELECTRICAL REQUIREMENTS.
2. PROVIDE ADEQUATE GROUNDING AND BONDING FOR THE TEMPORARY ELECTRICAL SYSTEM AND DEVICES AS REQUIRED BY THE 2011 NEC.
3. COORDINATE WITH MNR AND DOT FOR ANY ADDITIONAL REQUIREMENTS NECESSARY FOR THE ELECTRICAL SYSTEMS.
4. REFER TO DRAWING ELE-22 FOR NEW ELECTRICAL DISTRIBUTION ONE LINE DIAGRAMS AND PLANS.

REV.	DATE	REVISION DESCRIPTION	SHEET NO.
-	-	-	-
-	-	-	-
-	-	-	-
-	-	-	-
-	-	-	-
-	-	-	-
-	-	-	-

THE INFORMATION, INCLUDING ESTIMATED QUANTITIES OF WORK, SHOWN ON THESE SHEETS IS BASED ON LIMITED INVESTIGATIONS BY THE STATE AND IS IN NO WAY WARRANTED TO INDICATE THE CONDITIONS OF ACTUAL QUANTITIES OF WORK WHICH WILL BE REQUIRED.

Plotted: 28-Mar-14

DESIGNER/DRAFTER: SMK/MVM

CHECKED BY: MVM

SCALE AS NOTED

STATE OF CONNECTICUT
DEPARTMENT OF TRANSPORTATION

Filename: FD_MST_ELE_0301_0155_ELE-21.DWG

MUSCO ENGINEERING ASSOCIATES
875 Morgan Lane, Unit 207
West Haven, CT 06516
(203) 932-1601 FAX (203) 991-1600
www.muscoengineering.com

APPROVED BY: M. MUSCO DATE: 03/28/14

PROJECT TITLE:
INSTALLATION OF CANOPY AT BRIDGEPORT STATION

TOWN: **BRIDGEPORT**

DRAWING TITLE: **ELECTRICAL ONE-LINE DIAGRAMS AND NOTES**

PROJECT NO. **301-155**

DRAWING NO. **ELE-21**

SHEET NO. **06.21**

Border Version: 10/1/09

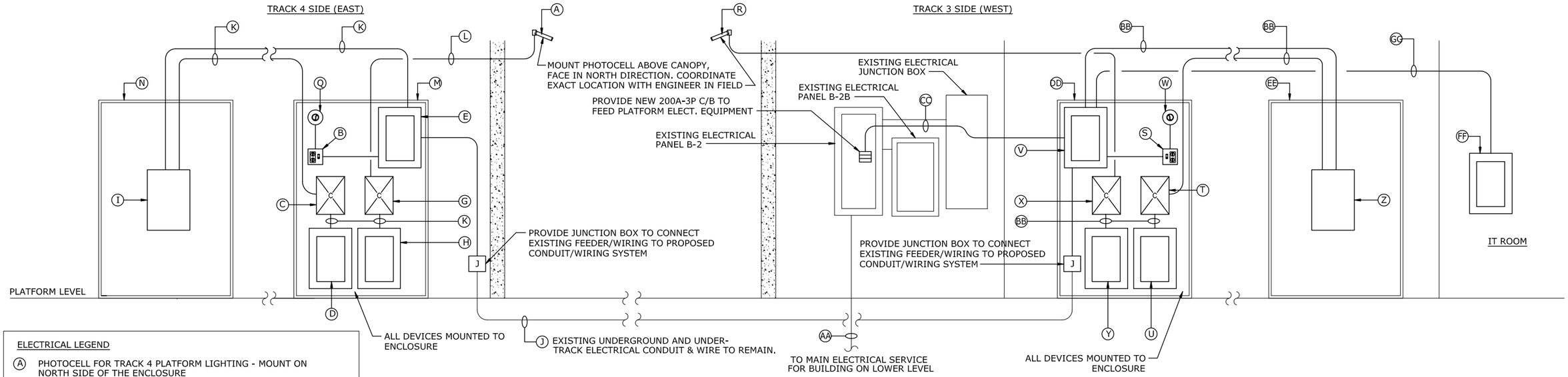

PROPOSED POWER DISTRIBUTION ONE LINE DIAGRAM

NOT TO SCALE

1 ELE-22

ELECTRICAL LEGEND

- (A) PHOTOCELL FOR TRACK 4 PLATFORM LIGHTING - MOUNT ON NORTH SIDE OF THE ENCLOSURE
- (B) CONVENIENCE OUTLET - GFCI AND TOGGLE SWITCH FOR ENCLOSURE FIXTURE - TRACK 4
- (C) LIGHTING CONTACTOR 30A-2P RATED FOR 120 VOLTS - TRACK 4
- (D) LIGHTING EMERGENCY PANEL 'LEP' 125A/12 CKT. - 120/208V, 1Ø 3W - TRACK 4
- (E) ELECTRICAL PANEL 'PP' RATED FOR 125A, WITH 125A MCB - TRACK 4
- (F) NOT USED
- (G) LIGHTING CONTACTOR 30A-2P RATED FOR 120 VOLTS - TRACK 4
- (H) LIGHTING PANEL 'LP' 125A/12 CKT. - 120/208V, 1Ø 3W - TRACK 4
- (I) EMERGENCY LIGHTING INVERTER, 2.1KS INVERTER, RATED FOR 120/208V 1Ø - TRACK 4
- (J) EXISTING UNDERGROUND AND UNDER-TRACK ELECTRICAL CONDUIT & WIRE TO REMAIN.
- (K) 2#8 + 1#8 GND., 1"C.
- (L) 2#10 + 1#10 GND., 1"C.
- (M) SERVICE ENTRANCE PEDESTAL/ENCLOSURE (SEP)
- (N) EMERGENCY LIGHTING PEDESTAL/ENCLOSURE (ELP) - TRACK 4
- (Q) 60 WATT INCANDESCENT LAMP IN SURFACE MOUNTED SOCKET
- (R) PHOTOCELL FOR TRACK 3 PLATFORM LIGHTING - MOUNT ON NORTH SIDE OF THE ENCLOSURE
- (S) CONVENIENCE OUTLET - GFCI AND TOGGLE SWITCH FOR ENCLOSURE FIXTURE - TRACK 3
- (T) LIGHTING CONTACTOR 30A-2P RATED FOR 120 VOLTS - TRACK 3
- (U) LIGHTING EMERGENCY PANEL 'LEP' 125A/12 CKT. - 120/208V, 1Ø 3W - TRACK 3
- (V) ELECTRICAL PANEL 'PP' RATED FOR 200A, WITH 200A MCB - TRACK 3
- (W) 60 WATT INCANDESCENT LAMP IN SURFACE MOUNTED SOCKET
- (X) LIGHTING CONTACTOR 30A-2P RATED FOR 120 VOLTS - TRACK 3
- (Y) LIGHTING PANEL 'LP' 125A/12 CKT. - 120/208V, 1Ø 3W - TRACK 3
- (Z) EMERGENCY LIGHTING INVERTER, 2.1KS INVERTER, RATED FOR 120/208V 1Ø - TRACK 3
- (AA) EXISTING ELECTRICAL FEED FOR PANEL B-2
- (BB) 2#8 + 1#8 GND., 1"C.
- (CC) 3#3/0 + 1#6 GND., 2"C.
- (DD) SERVICE ENTRANCE PEDESTAL/ENCLOSURE (SEP)
- (EE) EMERGENCY LIGHTING PEDESTAL/ENCLOSURE (ELP) - TRACK 3
- (FF) IT ROOM PANEL - 125A RATED PANEL, WITH 60A MCB, 120/208V 3Ø - LOCATION TO BE DETERMINED WITH MNR
- (GG) 3#6 + 1#8 GND., 1"C.

ELECTRICAL RISER NOTES:

1. ALL DEVICES INSIDE OF THE PEDESTAL/ENCLOSURES TO MOUNTED ON PLYWOOD BACKBOARD

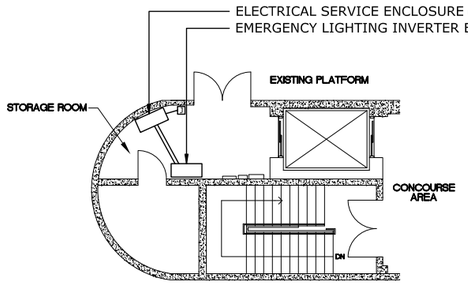

PROPOSED POWER DISTRIBUTION PLAN (EAST)

NOT TO SCALE

3 ELE-21

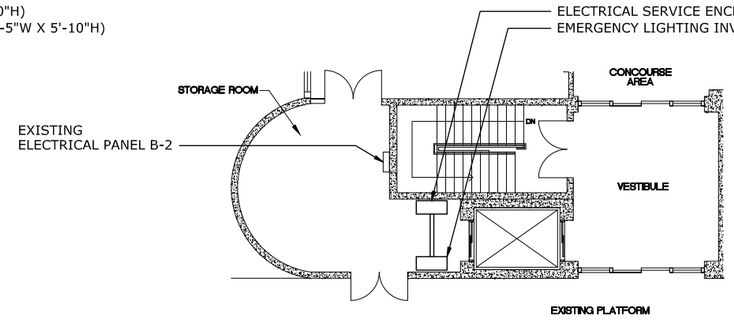

PROPOSED POWER DISTRIBUTION PLAN (WEST)

NOT TO SCALE

6 ELE-21

ELECTRICAL NOTES:

1. REFER TO THE ELECTRICAL SPECIFICATIONS FOR ELECTRICAL REQUIREMENTS.
2. PROVIDE ADEQUATE GROUNDING AND BONDING FOR THE TEMPORARY ELECTRICAL SYSTEM AND DEVICES AS REQUIRED BY THE 2011 NEC.
3. COORDINATE WITH MNR AND DOT FOR ANY ADDITIONAL REQUIREMENTS NECESSARY FOR THE ELECTRICAL SYSTEMS.
4. REFER TO DRAWING ELE-21 FOR TEMP. ELECTRICAL DISTRIBUTION ONE LINE DIAGRAMS AND PLANS.

REV.	DATE	REVISION DESCRIPTION	SHEET NO.
-	-	-	-
-	-	-	-
-	-	-	-
-	-	-	-
-	-	-	-
-	-	-	-
-	-	-	-

THE INFORMATION, INCLUDING ESTIMATED QUANTITIES OF WORK, SHOWN ON THESE SHEETS IS BASED ON LIMITED INVESTIGATIONS BY THE STATE AND IS IN NO WAY WARRANTED TO INDICATE THE CONDITIONS OF ACTUAL QUANTITIES OF WORK WHICH WILL BE REQUIRED.

Plotted: 28-Mar-14

DESIGNER/DRAFTER: SMK/MVM
CHECKED BY: MVM
SCALE AS NOTED

STATE OF CONNECTICUT
DEPARTMENT OF TRANSPORTATION

Filename: FD_MST_ELE_0301_0155_ELE-22.DWG

MUSCO ENGINEERING ASSOCIATES
375 Morgan Lane, Unit 307
West Haven, CT 06516
(203) 652-1601 FAX (203) 691-1650
www.muscoengineering.com

APPROVED BY: M. MUSCO
DATE: 03/28/14

PROJECT TITLE:
INSTALLATION OF CANOPY AT BRIDGEPORT STATION

TOWN: **BRIDGEPORT**

DRAWING TITLE: **SERVICE PEDESTAL DETAILS**

PROJECT NO. **301-155**
DRAWING NO. **ELE-22**
SHEET NO. **06.22**

Border Version: 10/1/09

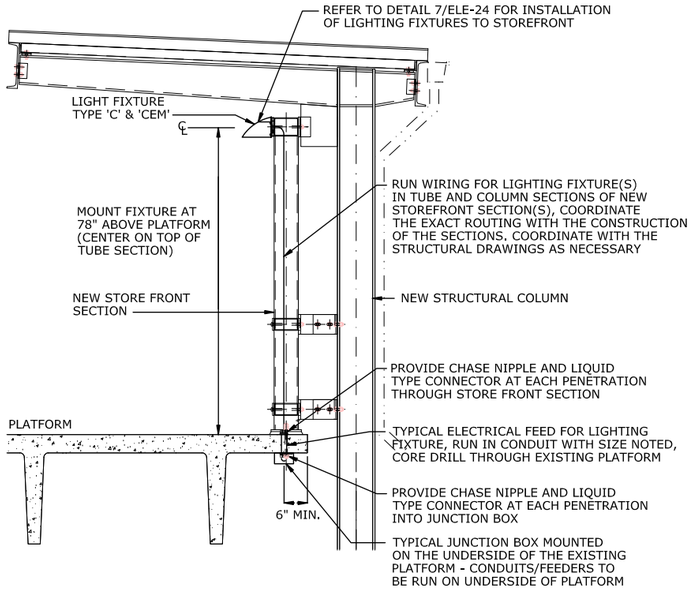

TYPICAL LIGHTING INSTALL DETAIL AT STOREFRONT

1 ELE-23

NOT TO SCALE

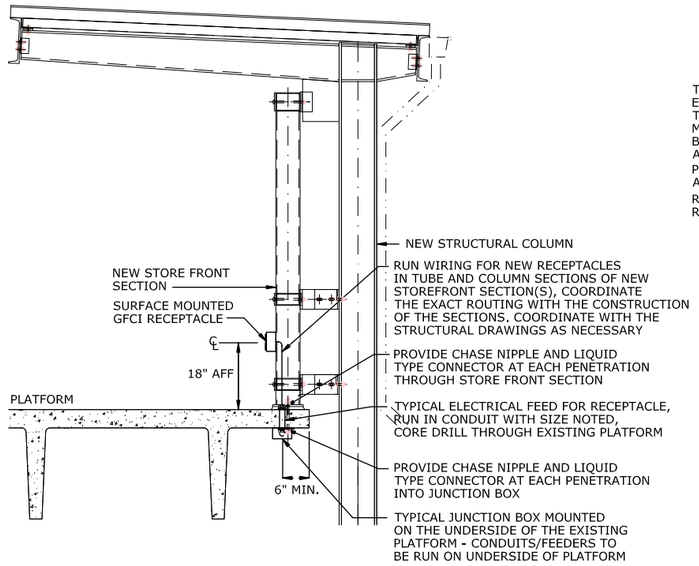

TYPICAL OUTLET INSTALL DETAIL AT STOREFRONT

2 ELE-23

NOT TO SCALE

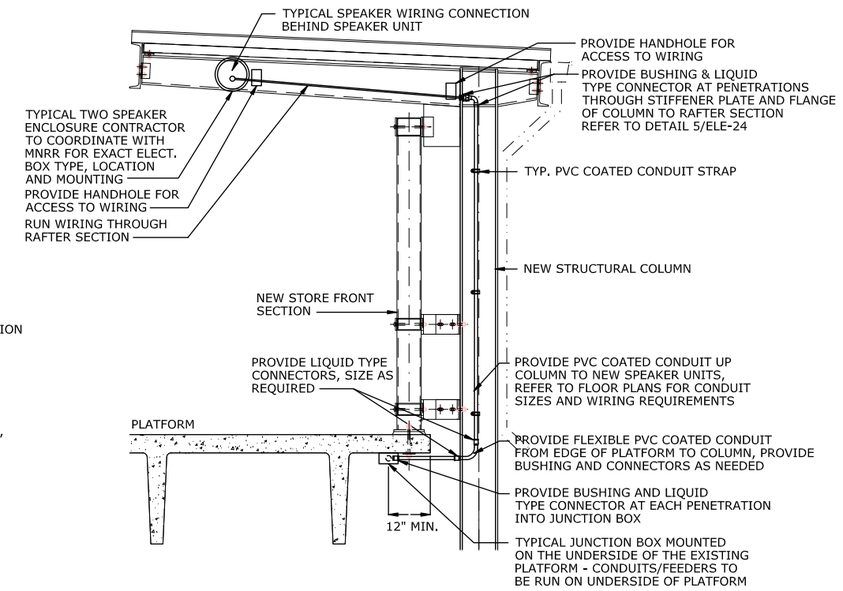

NOTE: 1. REFER TO DRAWING ELE-25 FOR DETAIL OF INSTALLATION OF SPEAKERS.
2. COORDINATE HANDHOLES WITH STRUCTURAL STEEL.

TYPICAL SPEAKER INSTALL DETAIL AT NEW RAFTER

3 ELE-23

NOT TO SCALE

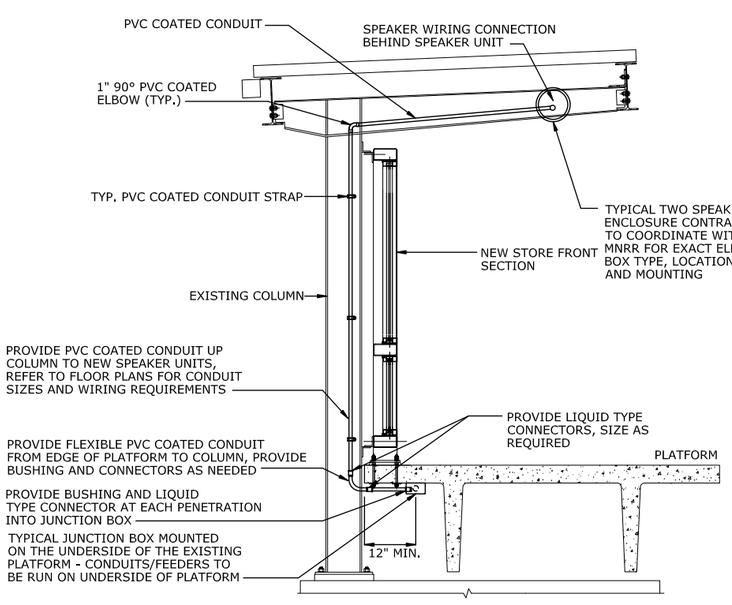

NOTE: REFER TO DRAWING ELE-25 FOR DETAIL OF INSTALLATION OF SPEAKERS.

TYPICAL SPEAKER INSTALL DETAIL AT EXIST. RAFTER

4 ELE-23

NOT TO SCALE

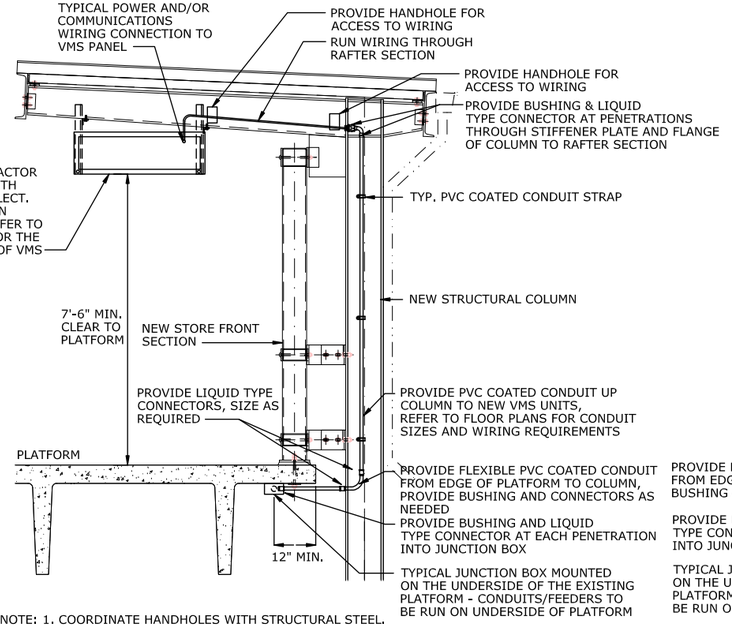

NOTE: 1. COORDINATE HANDHOLES WITH STRUCTURAL STEEL.

TYPICAL VMS INSTALL DETAIL AT NEW RAFTER

5 ELE-23

NOT TO SCALE

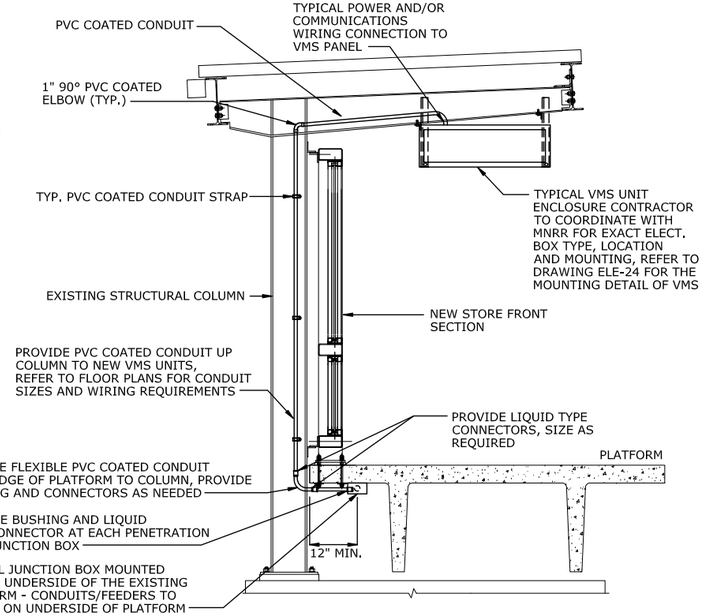

TYPICAL VMS INSTALL DETAIL AT EXIST. RAFTER

6 ELE-23

NOT TO SCALE

REV.	DATE	REVISION DESCRIPTION	SHEET NO.
-	-	-	-
-	-	-	-
-	-	-	-
-	-	-	-
-	-	-	-
-	-	-	-
-	-	-	-
-	-	-	-

THE INFORMATION, INCLUDING ESTIMATED QUANTITIES OF WORK, SHOWN ON THESE SHEETS IS BASED ON LIMITED INVESTIGATIONS BY THE STATE AND IS IN NO WAY WARRANTED TO INDICATE THE CONDITIONS OF ACTUAL QUANTITIES OF WORK WHICH WILL BE REQUIRED.

Plotted: 28-Mar-14

DESIGNER/DRAFTER: SMK/MVM

CHECKED BY: MVM

SCALE AS NOTED

STATE OF CONNECTICUT
DEPARTMENT OF TRANSPORTATION

Filename: FD_MST_ELE_0301_0155_ELE-23.DWG

MUSCO ENGINEERING ASSOCIATES
375 Morgan Lane, Unit 207
West Haven, CT 06516
(203) 932-1901 FAX (203) 901-1550
www.muscoengineering.com

APPROVED BY: M. MUSCO DATE: 03/28/14

PROJECT TITLE:
INSTALLATION OF CANOPY AT BRIDGEPORT STATION

TOWN: **BRIDGEPORT**

DRAWING TITLE: **ELECTRICAL DETAILS 1**

PROJECT NO. **301-155**

DRAWING NO. **ELE-23**

SHEET NO. **06.23**

Border Version: 10/1/09

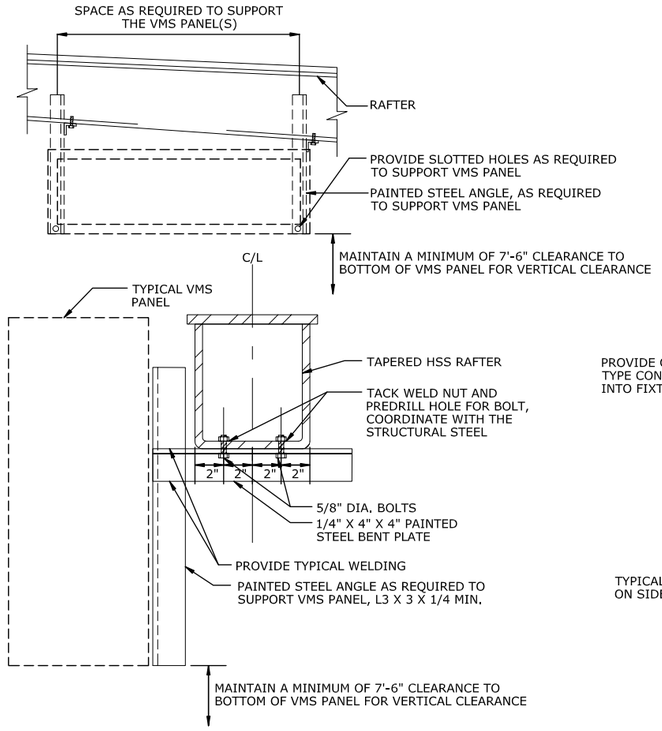

NOTE: ONE PANEL IS SHOWN ON THE DETAIL, SIMILAR ON OPPOSITE SIDE OF RAFTER.

TYPICAL VMS INSTALL DETAIL ON RAFTER 1 ELE-24

NOT TO SCALE

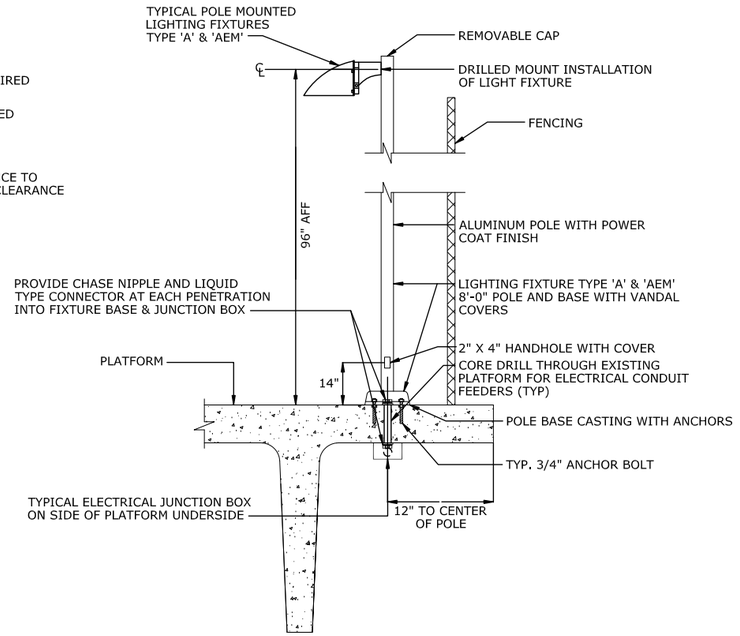

TYP POLE MOUNT LIGHTING DETAIL 2 ELE-24

NOT TO SCALE

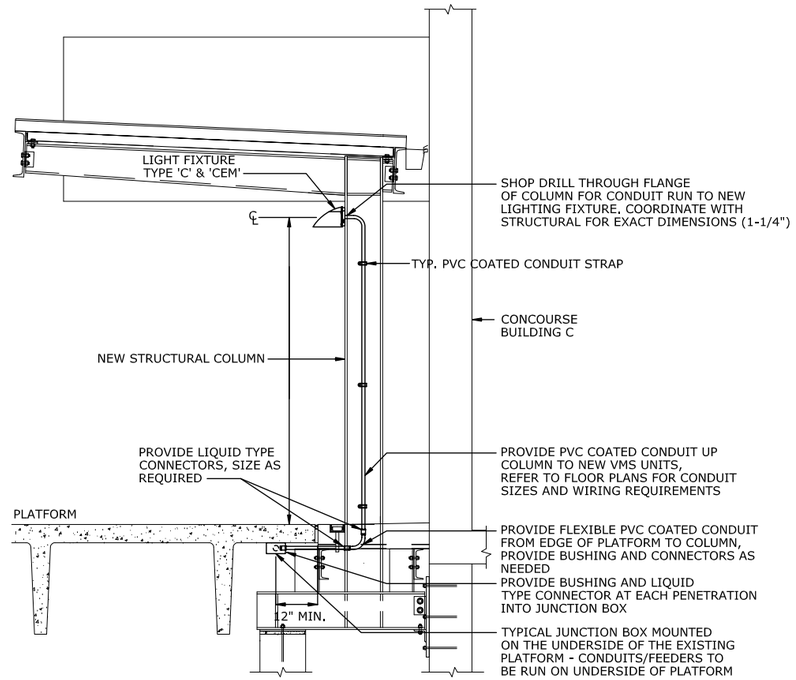

TYP LIGHTING INSTALL DETAIL AT COLUMNS 14/15 3 ELE-24

NOT TO SCALE

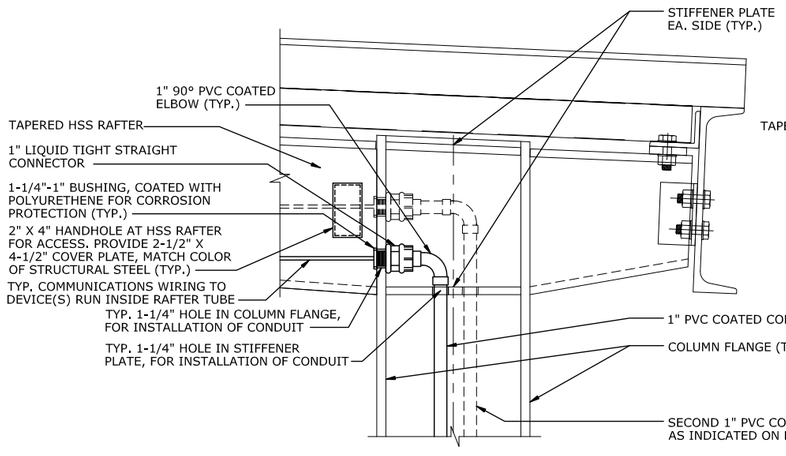

TYPICAL CONDUIT PENETRATION AT NEW RAFTER 4 ELE-24

NOT TO SCALE

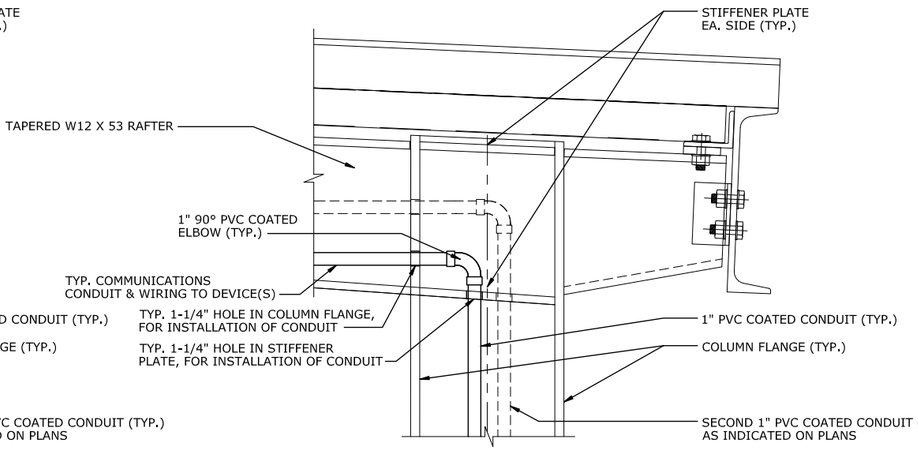

TYPICAL CONDUIT PENETRATION AT EXIST. RAFTER 5 ELE-24

NOT TO SCALE

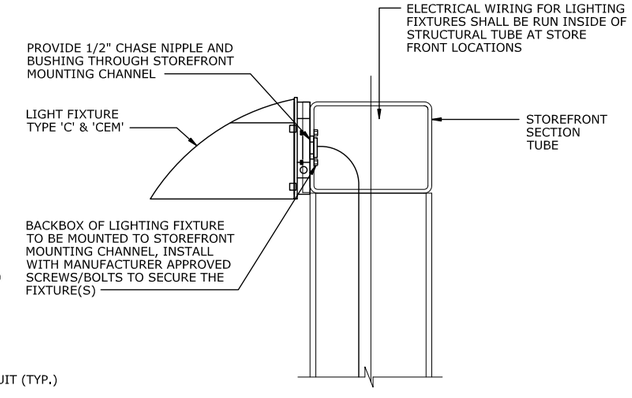

TYPICAL LIGHT FIXTURE INSTALL - STOREFRONT 6 ELE-24

NOT TO SCALE

REV.	DATE	REVISION DESCRIPTION	SHEET NO.
-	-	-	-
-	-	-	-
-	-	-	-
-	-	-	-
-	-	-	-
-	-	-	-
-	-	-	-
-	-	-	-

THE INFORMATION, INCLUDING ESTIMATED QUANTITIES OF WORK, SHOWN ON THESE SHEETS IS BASED ON LIMITED INVESTIGATIONS BY THE STATE AND IS IN NO WAY WARRANTED TO INDICATE THE CONDITIONS OF ACTUAL QUANTITIES OF WORK WHICH WILL BE REQUIRED.

Plotted: 28-Mar-14

DESIGNER/DRAFTER: SMK/MVM

CHECKED BY: MVM

SCALE AS NOTED

STATE OF CONNECTICUT
DEPARTMENT OF TRANSPORTATION

Filename: FD_MST_ELE_0301_0155_ELE-24.DWG

MUSCO ENGINEERING ASSOCIATES
375 Morgan Lane, Unit 307
West Haven, CT 06516
(203) 652-1601 FAX (203) 691-1600
www.muscoengineering.com

APPROVED BY: M. MUSCO DATE: 03/28/14

PROJECT TITLE:
INSTALLATION OF CANOPY AT BRIDGEPORT STATION

TOWN: **BRIDGEPORT**

DRAWING TITLE: **ELECTRICAL DETAILS 2**

PROJECT NO. **301-155**

DRAWING NO. **ELE-24**

SHEET NO. **06.24**

Border Version: 10/1/09

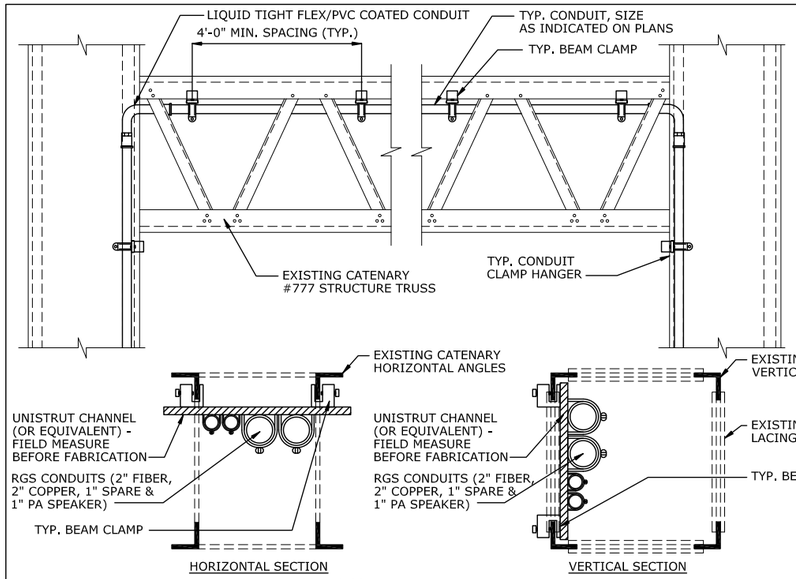

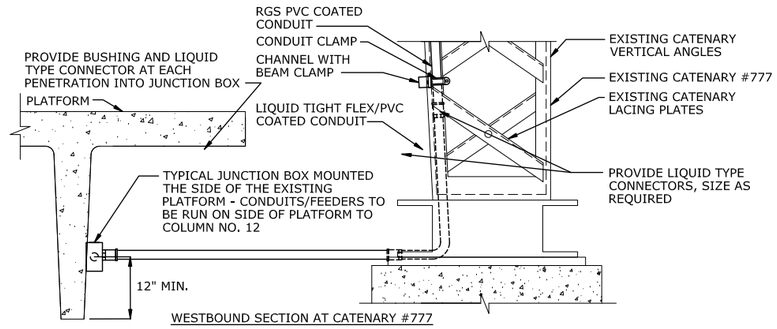

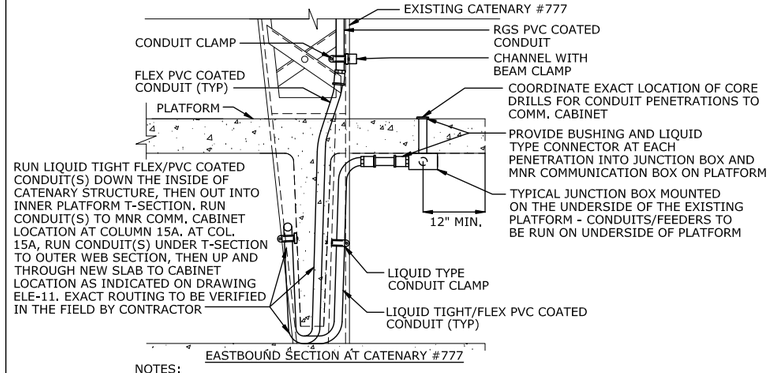

NOTES:
1. ATTACHMENT OF PIPE STRAP SUPPORTS TO LEG, FLANGE, OR DIAGONAL BRACING OF EXISTING CATENARY STRUCTURES IS PERMITTED.
2. CONTRACTOR SHALL NOT DRILL THROUGH AN PORTION OF EXIST. CATENARY STRUCTURE WITHOUT WRITTEN PERMISION OF ENGINEER, INCLUDING ACCEPTANCE FROM MNR.
3. CONTRACTOR SHALL FIELD VERIFY CUT LENGTHS OF UNISTRUT (OR EQUIVALENT) TO SITE SPECIFIC REQUIREMENTS AND PROTECT AS SPECIFIED.
4. CONTRACTOR SHALL INSTALL SPLIT DUCT CHAFING GUARDS AROUND ALL CABLES THAT COME INTO CONTACT WITH THE STRUCTURE AND SECURE WITH TY-WRAPS AT EACH END AND CENTER IF DISTANCE BETWEEN TY-WRAPS EXCEED 12".

TYPICAL CONDUIT INSTALL AT CATENARY 5 ELE-25
NOT TO SCALE

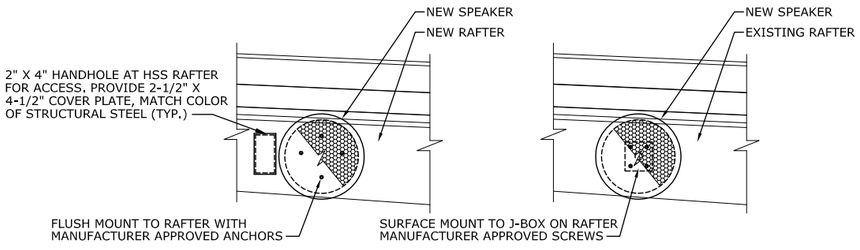

NOTES:
1. ATTACHMENT OF THE NEW SPEAKER UNITS SHALL BE COORDINATED WITH THE MANFACTURER, ATLAS SOUND LP AS NECESSARY.
2. FINAL CONNECTIONS TO SPEAKERS SHALL BE BY MNR.
3. PROVIDE HAND HOLE FOR ACCESS INSIDE OF RAFTER FOR WIRING CONNECTIONS AND MOUNTING OF SPEAKER UNITS TO RAFTER. SEE DETAIL FOR SIZE.

TYP SPEAKER INSTALL DETAIL 2 ELE-25
NOT TO SCALE

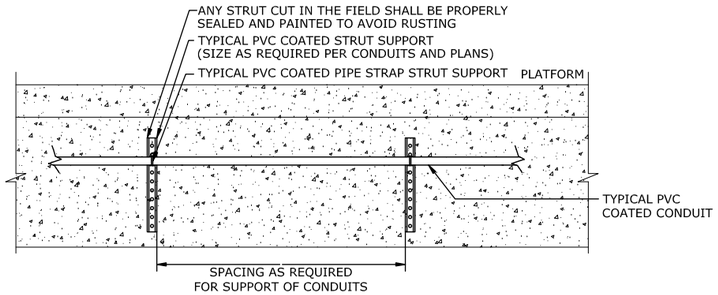

TYP SUPPORT FOR CONDUIT ON PLATFORM WEB 3 ELE-25
NOT TO SCALE

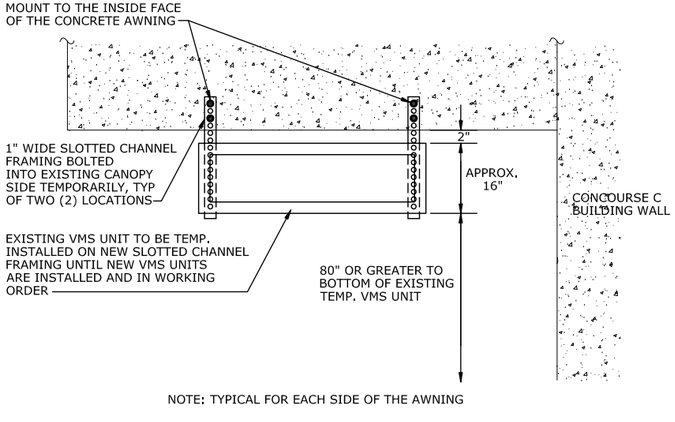

NOTE: TYPICAL FOR EACH SIDE OF THE AWNING

TEMPORARY VMS INSTALLATION - EASTBOUND AWNING CANOPY 6 ELE-25
NOT TO SCALE

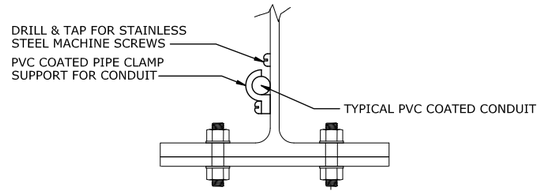

TYP SUPPORT FOR CONDUIT ON COLUMN OR BEAM 4 ELE-25
NOT TO SCALE

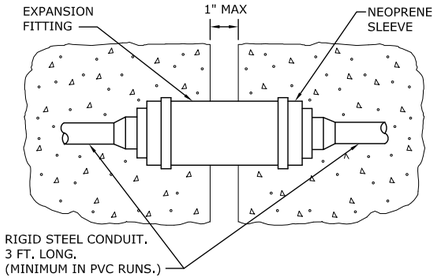

NOTES:
1. PROVIDE PLASTIBOND XJG TYPE CONDUIT EXPANSION JOINTS AS NECESSARY.
2. REFER TO STRUCTURAL PLANS FOR EXPANSIONS/JOINTS IN PLATFORMS.

EXPANSION JOINT DETAIL 5 ELE-25
NOT TO SCALE

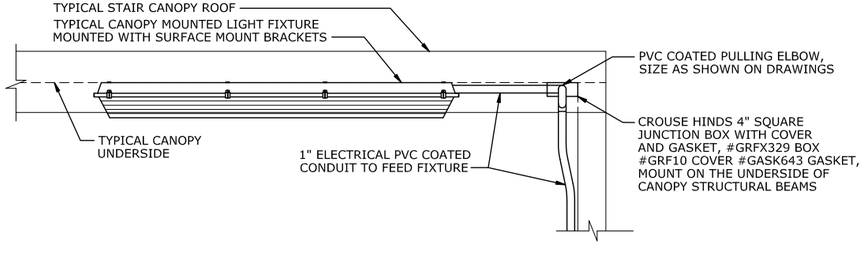

TYPICAL STAIR LIGHTING DETAIL 7 ELE-25
NOT TO SCALE

REV.	DATE	REVISION DESCRIPTION	SHEET NO.
-	-	-	-
-	-	-	-
-	-	-	-
-	-	-	-
-	-	-	-
-	-	-	-
-	-	-	-

THE INFORMATION, INCLUDING ESTIMATED QUANTITIES OF WORK, SHOWN ON THESE SHEETS IS BASED ON LIMITED INVESTIGATIONS BY THE STATE AND IS IN NO WAY WARRANTED TO INDICATE THE CONDITIONS OF ACTUAL QUANTITIES OF WORK WHICH WILL BE REQUIRED.

Plotted: 28-Mar-14

DESIGNER/DRAFTER: SMK/MVM
CHECKED BY: MVM
SCALE AS NOTED

STATE OF CONNECTICUT
DEPARTMENT OF TRANSPORTATION

Filename: FD_MST_ELE_0301_0155_ELE-25.DWG

MUSCO ENGINEERING ASSOCIATES
375 Morgan Lane, Unit 307
West Haven, CT 06516
(203) 933-1901 FAX (203) 931-1930
www.muscoengineering.com

APPROVED BY: M. MUSCO
DATE: 03/28/14

PROJECT TITLE:
INSTALLATION OF CANOPY AT BRIDGEPORT STATION

TOWN: **BRIDGEPORT**
DRAWING TITLE: **ELECTRICAL DETAILS 3**

PROJECT NO. **301-155**
DRAWING NO. **ELE-25**
SHEET NO. **06.25**

Border Version: 10/1/09

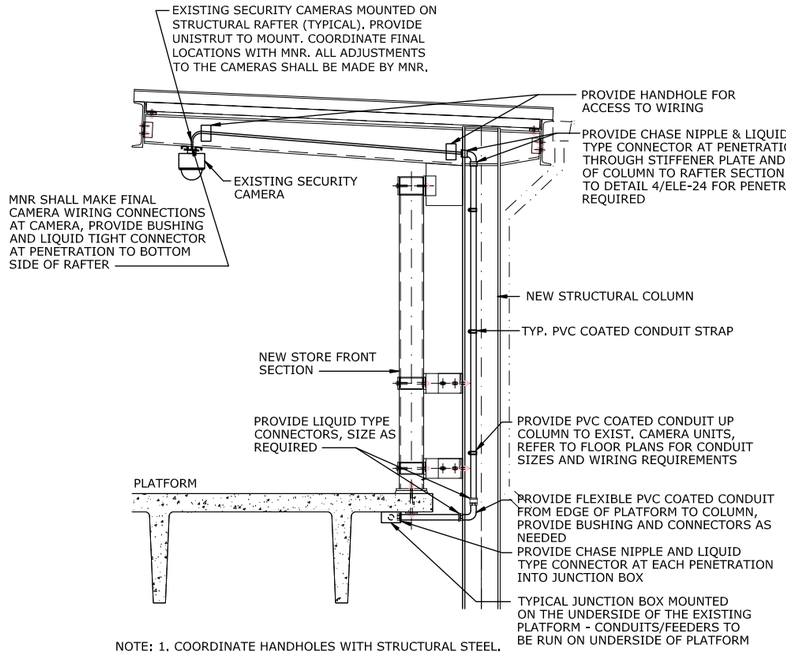

NOTE: 1. COORDINATE HANDHOLES WITH STRUCTURAL STEEL.

TYPICAL CAMERA INSTALL DETAIL AT NEW RAFTER (1 / ELE-26)

NOT TO SCALE

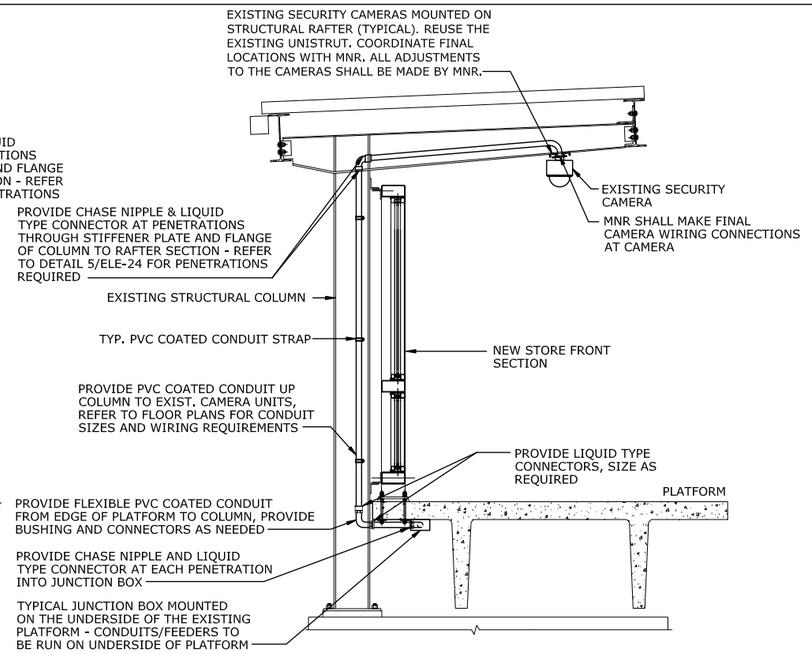

TYPICAL CAMERA INSTALL DETAIL AT EXIST. RAFTER (2 / ELE-26)

NOT TO SCALE

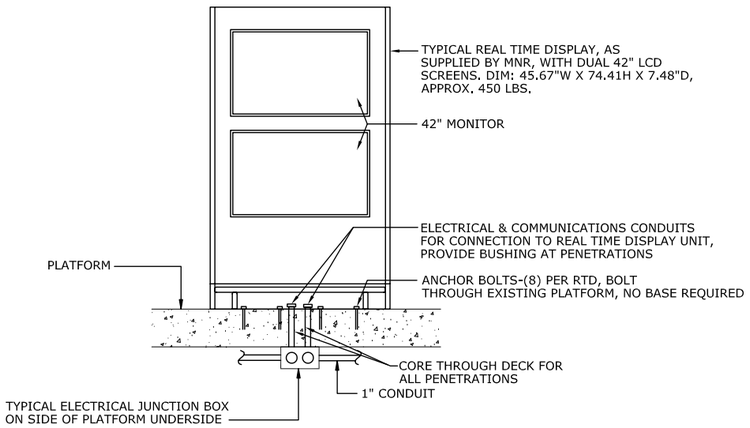

NOTE:
1. THE CONTRACTOR SHALL ALLOT FOR APPROXIMATELY 6" ADDITIONAL FROM ALL WALLS AND RAILINGS.
2. REAL TIME DISPLAYS SHALL BE PROVIDED BY MNR. COORDINATE ALL REQUIREMENTS OF THE PROVIDED RTD AS NECESSARY TO PROVIDE AN COMPLETE AND OPERATIONAL UNIT.

MNRR REAL TIME DISPLAY ELEVATION (3 / ELE-26)

NOT TO SCALE

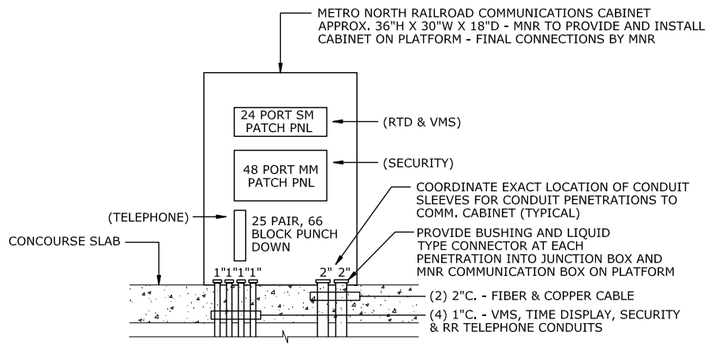

TYPICAL MNRR COMMUNICATIONS CABINET (4 / ELE-26)

NOT TO SCALE

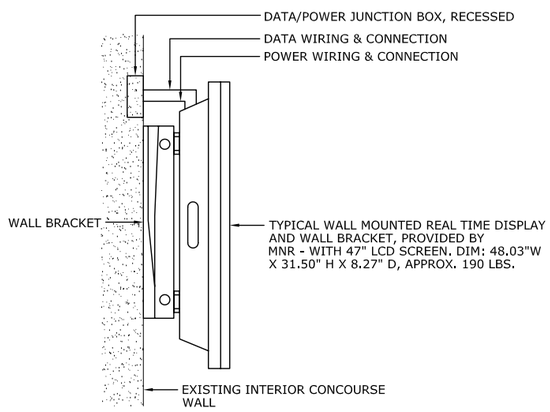

NOTE:
1. THE CONTRACTOR SHALL COORDINATE THE EXACT LOCATION AND MOUNTING REQUIREMENTS OF THE RTD LCD SCREEN WITH MNR INCLUDING ALL HARDWARE AND PENETRATIONS.
2. REAL TIME DISPLAYS SHALL BE PROVIDED BY MNR. COORDINATE ALL REQUIREMENTS OF THE PROVIDED RTD AS NECESSARY TO PROVIDE AN COMPLETE AND OPERATIONAL UNIT.

MNRR REAL TIME DISPLAY ELEVATION - WALL (5 / ELE-26)

NOT TO SCALE

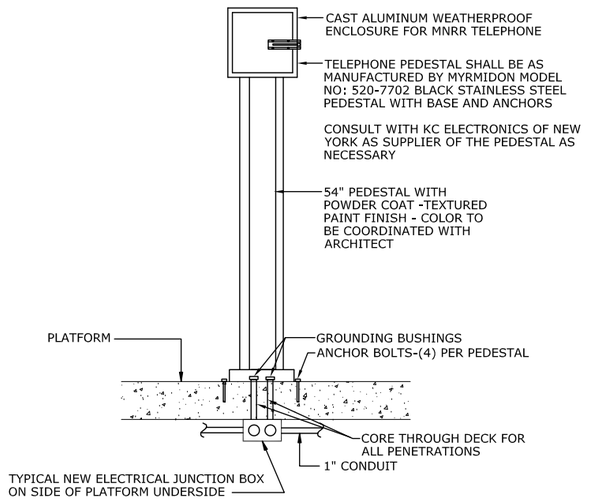

MNRR TELEPHONE/PEDESTAL ELEVATION (6 / ELE-26)

NOT TO SCALE

REV.	DATE	REVISION DESCRIPTION	SHEET NO.
-	-	-	-
-	-	-	-
-	-	-	-
-	-	-	-
-	-	-	-
-	-	-	-
-	-	-	-

THE INFORMATION, INCLUDING ESTIMATED QUANTITIES OF WORK, SHOWN ON THESE SHEETS IS BASED ON LIMITED INVESTIGATIONS BY THE STATE AND IS IN NO WAY WARRANTED TO INDICATE THE CONDITIONS OF ACTUAL QUANTITIES OF WORK WHICH WILL BE REQUIRED.

Plotted: 28-Mar-14

DESIGNER/DRAFTER: SMK/MVM

CHECKED BY: MVM

SCALE AS NOTED

STATE OF CONNECTICUT
DEPARTMENT OF TRANSPORTATION

Filename: FD_MST_ELE_0301_0155_ELE-26.DWG

MUSCO ENGINEERING ASSOCIATES
375 Morgan Lane, Unit 207
West Haven, CT 06516
(203) 932-1901 FAX (203) 931-1950
www.muscoengineering.com

APPROVED BY: M. MUSCO DATE: 03/28/14

PROJECT TITLE:
INSTALLATION OF CANOPY AT BRIDGEPORT STATION

TOWN: **BRIDGEPORT**

DRAWING TITLE: **COMMUNICATIONS DETAILS**

PROJECT NO. **301-155**

DRAWING NO. **ELE-26**

SHEET NO. **06.26**

Border Version: 10/1/09

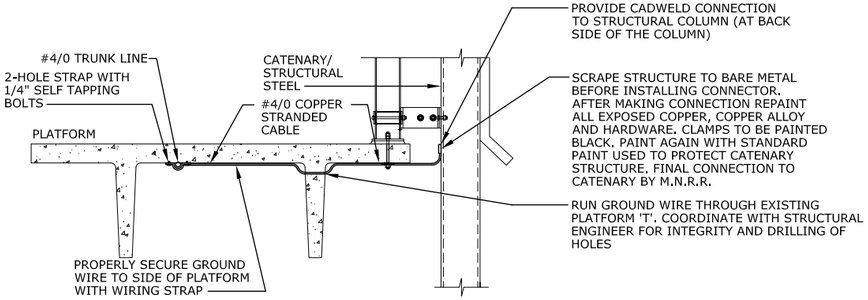

TYP. GROUND DETAIL AT STRUCTURAL STEEL 1 ELE-27

NOT TO SCALE

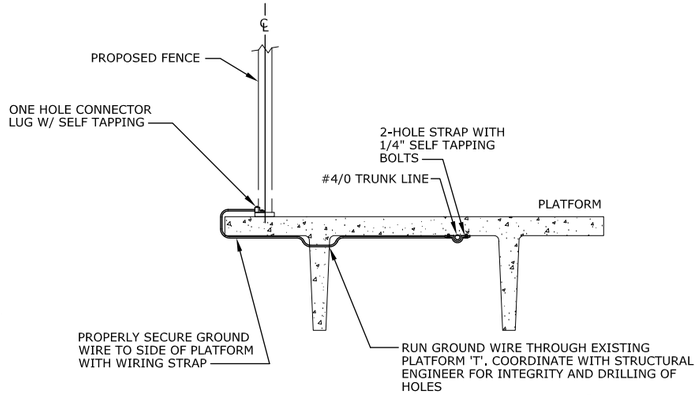

TYP. FENCE GROUND CONNECTION DETAIL 2 ELE-27

NOT TO SCALE

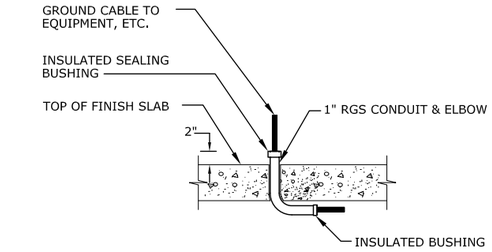

TYP. GROUND CABLE THRU SLAB DETAIL 3 ELE-27

NOT TO SCALE

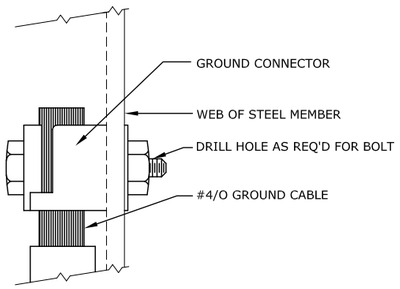

TYP. GROUND CABLE TO STEEL CONNECTION DETAIL 5 ELE-27

NOT TO SCALE

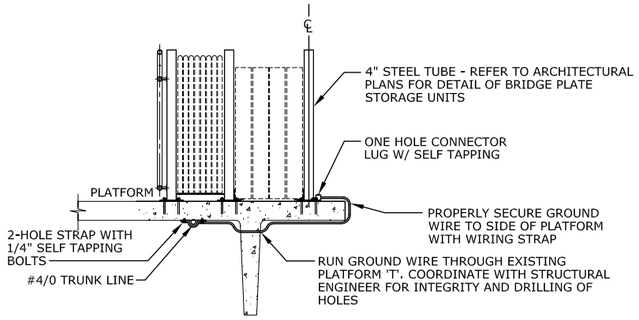

TYP. GROUND AT BRIDGEPLATE STORAGE 6 ELE-27

NOT TO SCALE

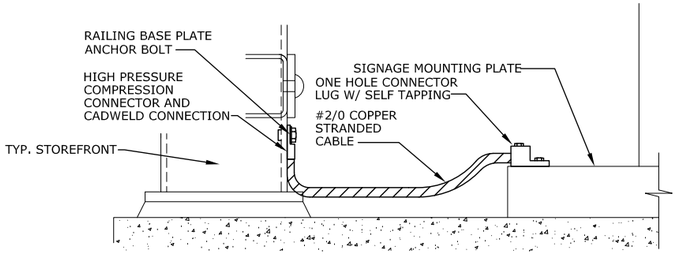

TYP. METAL SIGNAGE GROUNDING CONN. DETAIL 4 ELE-27

NOT TO SCALE

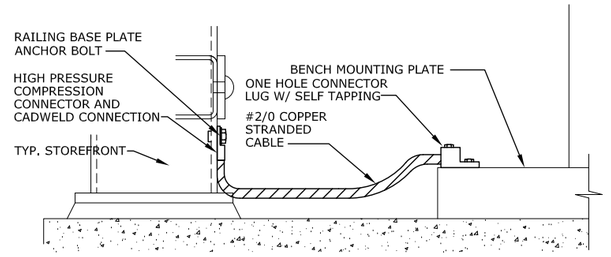

TYP. METAL BENCH GROUNDING CONN. DETAIL 7 ELE-27

NOT TO SCALE

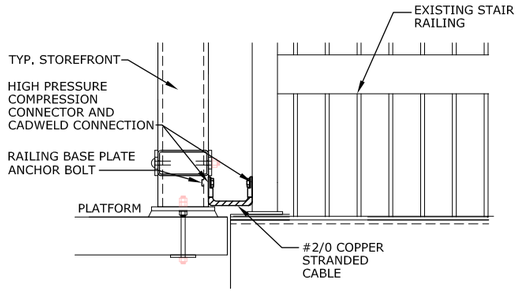

TYP. STAIR/RAIL GROUNDING DETAIL 8 ELE-27

NOT TO SCALE

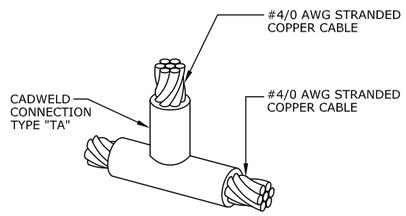

TYP. BUS TAP CONN. GROUNDING DETAIL 9 ELE-27

NOT TO SCALE

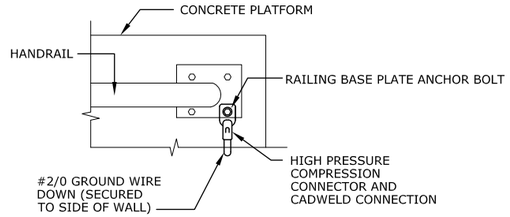

TYP. HANDRAIL GROUNDING CONN. DETAIL 10 ELE-27

NOT TO SCALE

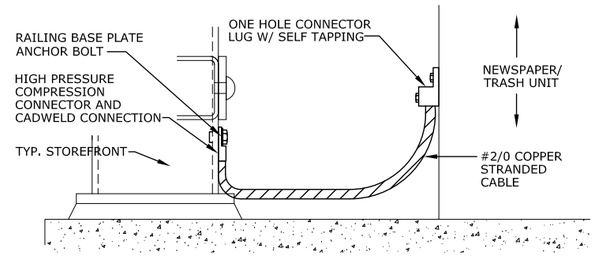

TYP. TRASH/NEWSPAPER GROUNDING CONN. DETAIL 11 ELE-27

NOT TO SCALE

REV.	DATE	REVISION DESCRIPTION	SHEET NO.
-	-	-	-
-	-	-	-
-	-	-	-
-	-	-	-
-	-	-	-
-	-	-	-
-	-	-	-

THE INFORMATION, INCLUDING ESTIMATED QUANTITIES OF WORK, SHOWN ON THESE SHEETS IS BASED ON LIMITED INVESTIGATIONS BY THE STATE AND IS IN NO WAY WARRANTED TO INDICATE THE CONDITIONS OF ACTUAL QUANTITIES OF WORK WHICH WILL BE REQUIRED.

Plotted: 28-Mar-14

DESIGNER/DRAFTER: SMK/MVM

CHECKED BY: MVM

SCALE AS NOTED

STATE OF CONNECTICUT
DEPARTMENT OF TRANSPORTATION

Filename: FD_MST_ELE_0301_0155_ELE-27.DWG

MUSCO ENGINEERING ASSOCIATES
375 Morgan Lane, Unit 207
West Haven, CT 06516
(203) 652-1601 FAX (203) 926-1650
www.muscoengineering.com

APPROVED BY: M. MUSCO DATE: 03/28/14

PROJECT TITLE:
INSTALLATION OF CANOPY AT BRIDGEPORT STATION

TOWN: **BRIDGEPORT**

DRAWING TITLE: **ELECTRICAL GROUNDING DETAILS**

PROJECT NO. **301-155**

DRAWING NO. **ELE-27**

SHEET NO. **06.27**

Border Version: 10/1/09

PANEL: "PP" TRACK 3 WEST SIDE
LOCATION: BRIDGEPORT RR STATION (SEP)
VOLTS: 120/240
PHASE: 1
WIRE: 3
SOLID NEUTRAL: YES
POLE PANEL: 24

M.C.B.: 200A
MAIN BRKR: -
MAIN BUS: 200A
A.I.C. RATING: 22,000
MOUNTING: SURFACE

CIRCUIT DESCRIPTION	CKT BRKR						CKT BRKR			CIRCUIT DESCRIPTION
	NO	TRIP	POLE	AMPS	LINE	AMPS	POLE	TRIP	NO	
RECEPTACLES- PLATFORM	1	20	1	4.5	L1	4.0	1	20	2	RECEPTACLES- REAL TIME DISPLAY (2)
RECEPTACLES- PLATFORM	3	20	1	1.5	L2	1.5	1	20	4	RECEPTACLE-(IN SEP CABINET)
SPARE	5	20	1	-	L1	4.0	1	20	6	RECEPTACLES- REAL TIME DISPLAY (2)
SPARE	7	20	1	-	L2	-	1	-	8	SPACE
LTG. PANEL "LP" VIA CONT.	9	30	2	3.0	L1	2.5	2	30	10	EM. LTG. PANEL "LEP" VIA INVERTER
|	11	-	-	1.5	L2	3.1	-	-	12	|
PANEL 'PP" TRACK 3 EAST SIDE	13	125	2	11.6	L1	-	1	20	14	SPARE
-	15	-	-	14.2	L2	-	1	20	16	SPARE
IT ROOM PANEL	17	60	3	16.0	L1	-	1	20	18	SPARE
-	19	20	1	16.0	L2	-	1	20	20	SPARE
-	21	20	1	16.0	L1	-	1	20	22	SPARE
SPARE	23	20	1	-	L2	-	1	20	24	SPARE
TOTALS (AMPERES)				L1 68.3		L2 31.1				

PANEL: "PP" TRACK 3 EAST SIDE
LOCATION: BRIDGEPORT RR STATION (SEP)
VOLTS: 120/240
PHASE: 1
WIRE: 3
SOLID NEUTRAL: YES
POLE PANEL: 24

M.C.B.: 125A MCB
MAIN BRKR: -
MAIN BUS: 125A MCB
A.I.C. RATING: 22,000
MOUNTING: SURFACE

CIRCUIT DESCRIPTION	CKT BRKR						CKT BRKR			CIRCUIT DESCRIPTION
	NO	TRIP	POLE	AMPS	LINE	AMPS	POLE	TRIP	NO	
RECEPTACLES- PLATFORM	1	20	1	4.5	L1	2.0	1	20	2	RECEPTACLES- REAL TIME DISPLAY (1)
RECEPTACLES- PLATFORM	3	20	1	1.5	L2	2.0	1	20	4	RECEPTACLES- REAL TIME DISPLAY (1)
SPACE	5	-	1	-	L1	1.5	1	20	6	RECEPTACLE-(IN SEP CABINET)
SPACE	7	-	1	-	L2	-	1	-	8	SPACE
LTG. PANEL "LP" VIA CONT.	9	30	2	5.6	L1	5.6	2	30	10	EM. LTG. PANEL "LEP" VIA INVERTER
|	11	-	-	2.3	L2	1.5	-	-	12	|
SPARE	13	20	1	-	L1	-	1	20	14	SPARE
SPARE	15	20	1	-	L2	-	1	20	16	SPARE
SPARE	17	20	1	-	L1	-	1	20	18	SPARE
SPARE	19	20	1	-	L2	-	1	20	20	SPARE
SPARE	21	20	1	-	L1	-	1	20	22	SPARE
SPARE	23	20	1	-	L2	-	1	20	24	SPARE
TOTALS (AMPERES)				L1 11.6		L2 14.2				

PANEL: "LP" TRACK 3 WEST SIDE
LOCATION: BRIDGEPORT RR STATION (SEP)
VOLTS: 120/240
PHASE: 1
WIRE: 3
SOLID NEUTRAL: YES
POLE PANEL: 12

M.L.O.: 125A
MAIN BRKR: -
MAIN BUS: 125A
A.I.C. RATING: 22,000
MOUNTING: SURFACE

CIRCUIT DESCRIPTION	CKT BRKR						CKT BRKR			CIRCUIT DESCRIPTION
	NO	TRIP	POLE	AMPS	LINE	AMPS	POLE	TRIP	NO	
(4) TYPE "C" LIGHT FIXTURE	1	20	1	1.5	L1	1.5	1	20	2	(4) TYPE "C" LIGHT FIXTURE
(4) TYPE "C" LIGHT FIXTURE	3	20	1	1.5	L2	-	1	20	4	SPARE
SPARE	5	20	1	-	L1	-	1	20	6	SPARE
SPARE	7	20	1	-	L2	-	1	20	8	SPARE
SPACE	9	-	-	-	L1	-	-	-	10	SPACE
SPACE	11	-	-	-	L2	-	-	-	12	SPACE
TOTALS (AMPERES)				L1 3.0		L2 1.5				

PANEL: "LP" TRACK 3 EAST SIDE
LOCATION: BRIDGEPORT RR STATION (SEP)
VOLTS: 120/240
PHASE: 1
WIRE: 3
SOLID NEUTRAL: YES
POLE PANEL: 12

M.L.O.: 125A
MAIN BRKR: -
MAIN BUS: 125A
A.I.C. RATING: 22,000
MOUNTING: SURFACE

CIRCUIT DESCRIPTION	CKT BRKR						CKT BRKR			CIRCUIT DESCRIPTION
	NO	TRIP	POLE	AMPS	LINE	AMPS	POLE	TRIP	NO	
(4) TYPE "C" LIGHT FIXTURE	1	20	1	1.5	L1	1.5	1	20	2	(4) TYPE "C" LIGHT FIXTURE
WALKWAY LIGHT FIXTURES	3	20	1	1.5	L2	0.8	1	20	4	(2) TYPE "C" LIGHT FIXTURE
(4) TYPE "C" LIGHT FIXTURE	5	20	1	2.6	L1	-	1	20	6	SPACE
SPARE	7	20	1	-	L2	-	1	20	8	SPARE
SPARE	9	20	1	-	L1	-	-	-	10	SPACE
SPACE	11	-	-	-	L2	-	-	-	12	SPACE
TOTALS (AMPERES)				L1 5.6		L2 2.3				

PANEL: "LEP" TRACK 3 WEST SIDE
LOCATION: BRIDGEPORT RR STATION (SEP)
VOLTS: 120/240
PHASE: 1
WIRE: 3
SOLID NEUTRAL: YES
POLE PANEL: 12

M.L.O.: 125A
MAIN BRKR: -
MAIN BUS: 125A
A.I.C. RATING: 22,000
MOUNTING: SURFACE

CIRCUIT DESCRIPTION	CKT BRKR						CKT BRKR			CIRCUIT DESCRIPTION
	NO	TRIP	POLE	AMPS	LINE	AMPS	POLE	TRIP	NO	
(4) TYPE "CEM" LT. FIXTURES	1	20	1	1.5	L1	0.5	1	20	2	(4) TYPE "B" LIGHT FIXTURES
(3) TYPE "CEM" LT. FIXTURES	3	20	1	1,2	L2	1,9	1	20	4	(5) TYPE "CEM" LT. FIXTURES
(4) TYPE "B" LIGHT FIXTURES	5	20	1	0,5	L1	-	1	20	6	SPARE
SPARE	7	20	1	-	L2	-	1	20	8	SPARE
SPARE	9	20	1	-	L1	-	1	-	10	SPACE
SPACE	11	-	1	-	L2	-	1	-	12	SPACE
TOTALS (AMPERES)				L1 2.5		L2 3.1				

PANEL: "LEP" TRACK 3 EAST SIDE
LOCATION: BRIDGEPORT RR STATION (SEP)
VOLTS: 120/240
PHASE: 1
WIRE: 3
SOLID NEUTRAL: YES
POLE PANEL: 12

M.L.O.: 125A
MAIN BRKR: -
MAIN BUS: 125A
A.I.C. RATING: 22,000
MOUNTING: SURFACE

CIRCUIT DESCRIPTION	CKT BRKR						CKT BRKR			CIRCUIT DESCRIPTION
	NO	TRIP	POLE	AMPS	LINE	AMPS	POLE	TRIP	NO	
(4) TYPE "CEM" LT. FIXTURES	1	20	1	1.5	L1	0.4	1	20	2	(3) TYPE "B" LIGHT FIXTURES
(4) TYPE "CEM" LT. FIXTURES	3	20	1	1,5	L2	0,6	1	20	4	(4) TYPE "D" LIGHT FIXTURES
(4) TYPE "CEM" LT. FIXTURES	5	20	1	2,6	L1	0,5	1	20	6	(4) TYPE "B" LIGHT FIXTURES
SPARE	7	20	1	-	L2	-	1	20	8	SPARE
SPARE	9	20	1	-	L1	-	1	-	10	SPACE
SPACE	11	-	1	-	L2	-	1	-	12	SPACE
TOTALS (AMPERES)				L1 5.6		L2 1.5				

REV.	DATE	REVISION DESCRIPTION	SHEET NO.
-	-	-	-
-	-	-	-
-	-	-	-
-	-	-	-
-	-	-	-
-	-	-	-
-	-	-	-

THE INFORMATION, INCLUDING ESTIMATED QUANTITIES OF WORK, SHOWN ON THESE SHEETS IS BASED ON LIMITED INVESTIGATIONS BY THE STATE AND IS IN NO WAY WARRANTED TO INDICATE THE CONDITIONS OF ACTUAL QUANTITIES OF WORK WHICH WILL BE REQUIRED.

Plotted: 28-Mar-14

DESIGNER/DRAFTER: SMK/MVM
CHECKED BY: MVM
SCALE AS NOTED

STATE OF CONNECTICUT
DEPARTMENT OF TRANSPORTATION

Filename: FD_MST_ELE_0301_0155_ELE-28.DWG

MUSCO ENGINEERING ASSOCIATES
375 Morgan Lane, Unit 207
West Haven, CT 06516
(203) 932-1901 FAX (203) 931-1930
www.muscoengineering.com

APPROVED BY: M. MUSCO
DATE: 03/28/14

PROJECT TITLE:
INSTALLATION OF CANOPY AT BRIDGEPORT STATION

TOWN: **BRIDGEPORT**

DRAWING TITLE: **PANELBOARD SCHEDULES**

PROJECT NO. **301-155**
DRAWING NO. **ELE-28**
SHEET NO. **06.28**

Border Version: 10/1/09

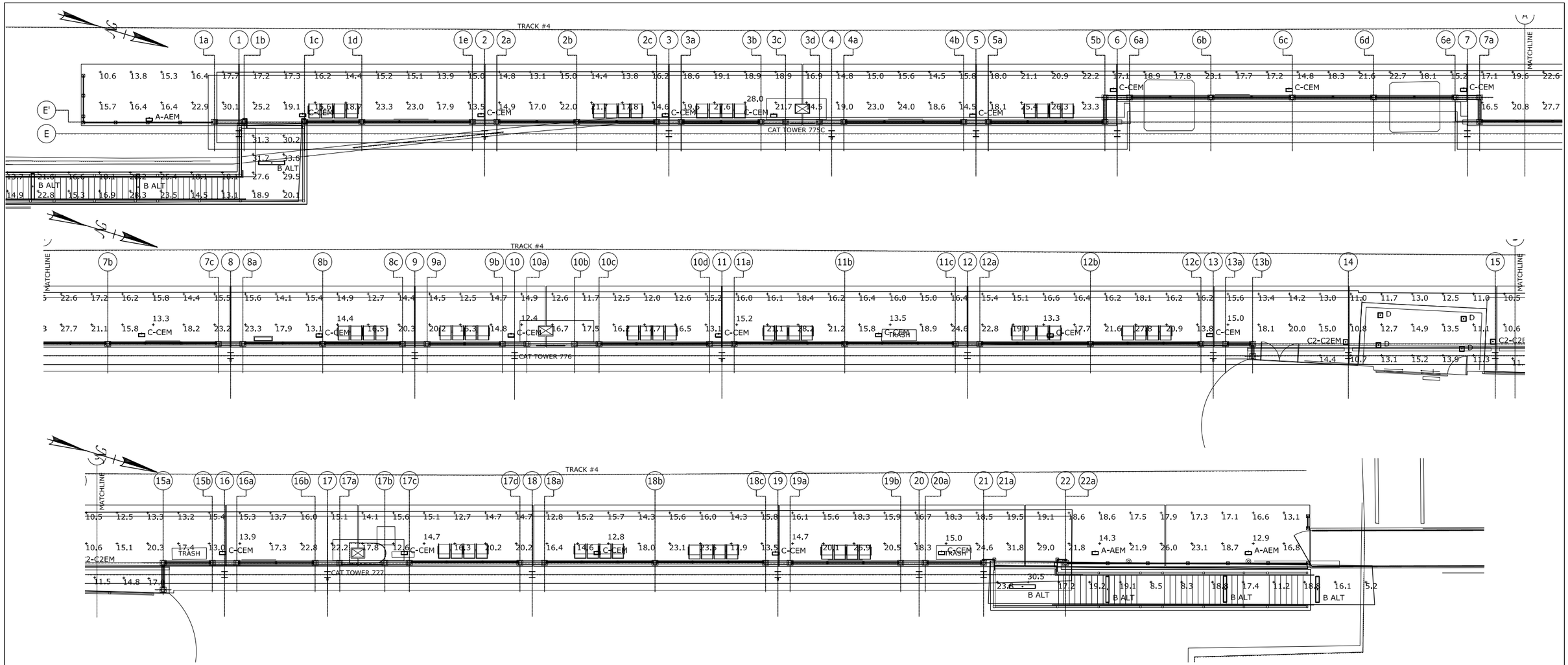

LIGHTING POINT TO POINT PLAN - EAST

SCALE: 1/8" = 1'-0"

1 ELE-29

Luminaire Schedule							
Symbol	Qty	Label	Arrangement	LLF	Description	Lum. Watts	Lum. Lumens
	3	A-AEM	SINGLE	0.900	BEACON PRODUCTS - CRZ-60NB-135-T5R AT 700 mA WITH TYPE V LENS	137.7	13686
	43	C-CEM	SINGLE	0.900	BEACON PRODUCTS - TRV-D-60NB-135-T5R 60 LEDS AT 700 mA WITH TYPE V LENS	137.7	13686
	14	B ALT	SINGLE	1.000	COLUMBIA LIGHTING - LXEM4-40LW-RFP-EU	41.6	3970
	2	C2-C2EM	SINGLE	0.900	BEACON PRODUCTS - TRV-D-24NB-27-4K-T5R-UNV-BB	27	2820
	4	D	SINGLE	0.900	BEACON PRODUCTS - EDR-24NB-27-4K-T5QM-UNV-BB	27	2775

Calculation Summary							
Label	CalcType	Units	Avg	Max	Min	Avg/Min	Max/Min
EAST SIDE PLATFORM	Illuminance	Fc	17.13	31.8	10.5	1.63	3.03
EAST SIDE PLATFORM_1	Illuminance	Fc	14.43	17.0	11.5	1.25	1.48
Stair	Illuminance	Fc	26.12	32.5	17.6	1.48	1.85
Stair_1	Illuminance	Fc	16.47	30.5	5.2	3.17	5.87
Stair_2	Illuminance	Fc	19.04	30.5	9.6	1.98	3.18
Stair_3	Illuminance	Fc	22.17	33.6	13.1	1.69	2.56
WEST SIDE PLATFORM	Illuminance	Fc	16.82	28.3	8.0	2.10	3.54

FOR REFERENCE ONLY

REV.	DATE	REVISION DESCRIPTION	SHEET NO.
-	-	-	-
-	-	-	-
-	-	-	-
-	-	-	-
-	-	-	-
-	-	-	-
-	-	-	-

THE INFORMATION, INCLUDING ESTIMATED QUANTITIES OF WORK, SHOWN ON THESE SHEETS IS BASED ON LIMITED INVESTIGATIONS BY THE STATE AND IS IN NO WAY WARRANTED TO INDICATE THE CONDITIONS OF ACTUAL QUANTITIES OF WORK WHICH WILL BE REQUIRED.

Plotted: 28-Mar-14

DESIGNER/DRAFTER: SMK/MVM

CHECKED BY: MVM

SCALE AS NOTED

STATE OF CONNECTICUT
DEPARTMENT OF TRANSPORTATION

Filename: FD_MST_ELE_0301_0155_ELE-29.DWG

MUSCO ENGINEERING ASSOCIATES
375 Morgan Lane, Unit 207
West Haven, CT 06516
(203) 665-1601 FAX (203) 665-1650
www.muscoengineering.com

APPROVED BY: M. MUSCO DATE: 03/28/14

PROJECT TITLE:
INSTALLATION OF CANOPY AT BRIDGEPORT STATION

TOWN: **BRIDGEPORT**

DRAWING TITLE: **LIGHTING POINT TO POINT PLAN - EAST**

PROJECT NO. **301-155**

DRAWING NO. **ELE-29**

SHEET NO. **06.29**

Border Version: 10/1/09

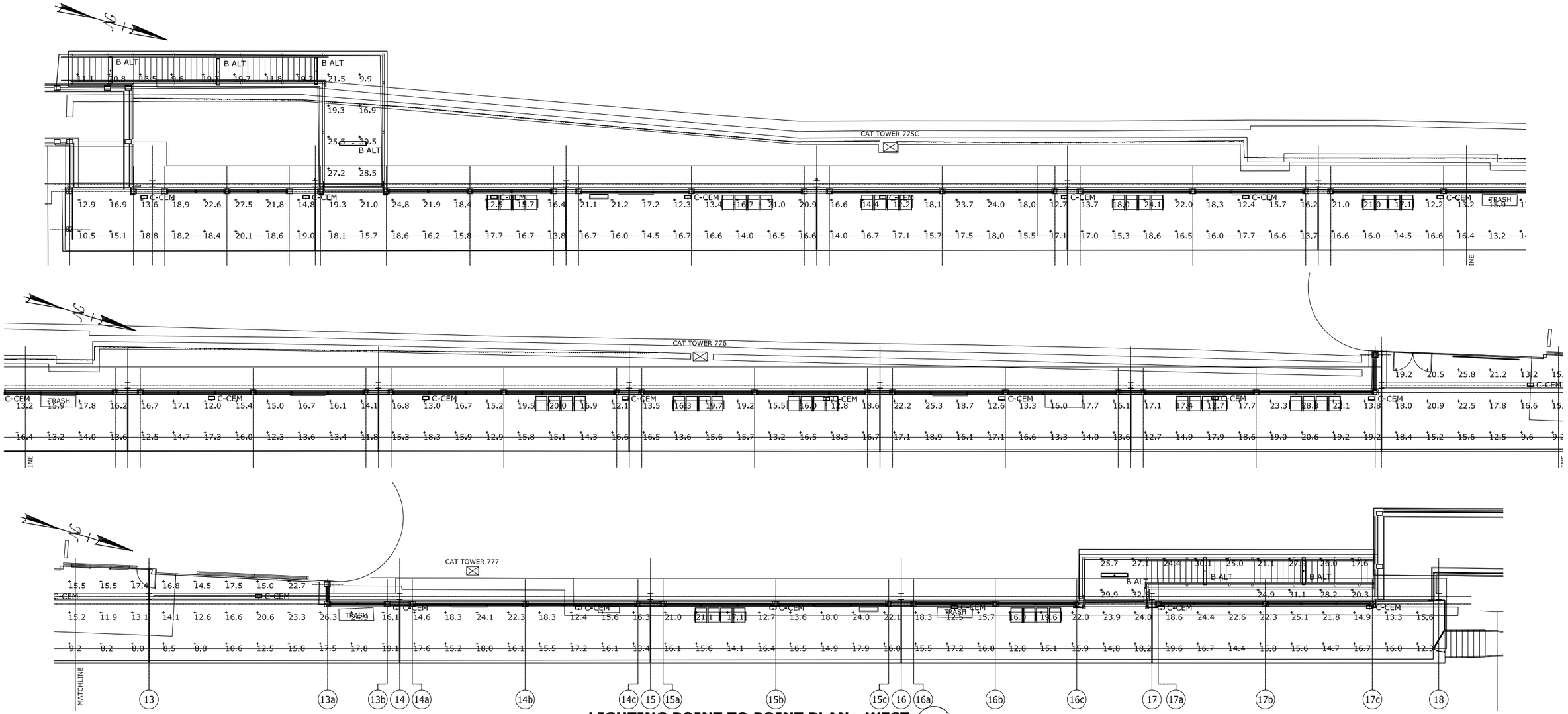

LIGHTING POINT TO POINT PLAN - WEST

SCALE: 1/8" = 1'-0"

1 / ELE-30

Luminaire Schedule							
Symbol	Qty	Label	Arrangement	LLF	Description	Lum. Watts	Lum. Lumens
	3	A-AEM	SINGLE	0.900	BEACON PRODUCTS - CRZ-60NB-135-T5R AT 700 mA WITH TYPE V LENS	137.7	13686
	43	C-CEM	SINGLE	0.900	BEACON PRODUCTS - TRV-D-60NB-135-T5R 60 LEDS AT 700 mA WITH TYPE V LENS	137.7	13686
	14	B ALT	SINGLE	1.000	COLUMBIA LIGHTING - LXEM4-40LW-RFP-EU	41.6	3970
	2	C2-C2EM	SINGLE	0.900	BEACON PRODUCTS - TRV-D-24NB-27-4K-T5R-UNV-BB	27	2820
	4	D	SINGLE	0.900	BEACON PRODUCTS - EDR-24NB-27-4K-T5QM-UNV-BB	27	2775

Calculation Summary							
Label	CalcType	Units	Avg	Max	Min	Avg/Min	Max/Min
EAST SIDE PLATFORM	Illuminance	Fc	17.13	31.8	10.5	1.63	3.03
EAST SIDE PLATFORM_1	Illuminance	Fc	14.43	17.0	11.5	1.25	1.48
Stair	Illuminance	Fc	26.12	32.5	17.6	1.48	1.85
Stair_1	Illuminance	Fc	16.47	30.5	5.2	3.17	5.87
Stair_2	Illuminance	Fc	19.04	30.5	9.6	1.98	3.18
Stair_3	Illuminance	Fc	22.17	33.6	13.1	1.69	2.56
WEST SIDE PLATFORM	Illuminance	Fc	16.82	28.3	8.0	2.10	3.54

FOR REFERENCE ONLY

REV.	DATE	REVISION DESCRIPTION	SHEET NO.
-	-	-	-
-	-	-	-
-	-	-	-
-	-	-	-
-	-	-	-
-	-	-	-
-	-	-	-

THE INFORMATION, INCLUDING ESTIMATED QUANTITIES OF WORK, SHOWN ON THESE SHEETS IS BASED ON LIMITED INVESTIGATIONS BY THE STATE AND IS IN NO WAY WARRANTED TO INDICATE THE CONDITIONS OF ACTUAL QUANTITIES OF WORK WHICH WILL BE REQUIRED.

Plotted: 28-Mar-14

DESIGNER/DRAFTER: SMK/MVM

CHECKED BY: MVM

SCALE AS NOTED

STATE OF CONNECTICUT
DEPARTMENT OF TRANSPORTATION

Filename: FD_MST_ELE_0301_0155_ELE-30.DWG

MUSCO ENGINEERING ASSOCIATES
376 Morgan Lane, Unit 207
West Haven, CT 06516
(203) 932-1201 FAX (203) 931-1550
www.muscoengineering.com

APPROVED BY: M. MUSCO DATE: 03/28/14

PROJECT TITLE:
INSTALLATION OF CANOPY AT BRIDGEPORT STATION

TOWN: **BRIDGEPORT**

DRAWING TITLE: **LIGHTING POINT TO POINT PLAN - WEST**

PROJECT NO. **301-155**

DRAWING NO. **ELE-30**

SHEET NO. **06.30**

Border Version: 10/1/09