TABLE OF CONTENTS OF SPECIAL PROVISIONS

Note: This Table of Contents has been prepared for the convenience of those using this contract with the sole express purpose of locating quickly the information contained herein; and no claims shall arise due to omissions, additions, deletions, etc., as this Table of Contents shall not be considered part of the contract.

Table of Contents

CONTRACT TIME AND LIQUIDATED DAMAGES 3
NOTICE TO CONTRACTOR – PROJECT DESCRIPTION 4
NOTICE TO CONTRACTOR – RAIL FACILITY UPGRADE (SITE NO. 1) 6
NOTICE TO CONTRACTOR – PRE-BID SITE VISIT 7
NOTICE TO CONTRACTOR – PRE-BID QUESTIONS AND ANSWERS 8
NOTICE TO CONTRACTOR – CONTRACT DRAWING NUMBERING 9
NOTICE TO CONTRACTOR – CONTRACTOR PARKING 10
NOTICE TO CONTRACTOR – SITE CLEANLINESS 11
NOTICE TO CONTRACTOR – PUBLIC UTILITY PLANS 12
NOTICE TO CONTRACTOR – VERIFICATION OF PLAN DIMENSIONS 13
AND FIELD MEASUREMENTS 13
NOTICE TO CONTRACTOR – MEASUREMENT AND PAYMENT 14
NOTICE TO CONTRACTOR – STANDARD SPECIFICATIONS 15
NOTICE TO CONTRACTOR – GENERAL REQUIREMENTS AND 16
COVENANTS OF THE CONTRACT 16
NOTICE TO CONTRACTOR – FORM 816 REFERENCES ON 17
STANDARD DRAWINGS 17
NOTICE TO CONTRACTOR – POTENTIAL FOR ASBESTOS 18
CONTAINING MATERIALS 18
NOTICE TO CONTRACTOR – OFF-SITE STAGING AND STORAGE 21
NOTICE TO CONTRACTOR – COLD WEATHER CONCRETE ACTIVITIES 22
NOTICE TO CONTRACTOR – PROJECT PHASING REQUIREMENTS 23
NOTICE TO CONTRACTOR – LIMITATION OF CONTRACTOR OPERATIONS 25
NOTICE TO CONTRACTOR – ENGINEER OCCUPANCY 26
NOTICE TO CONTRACTOR – LOCATING TRAILERS ON THE PROJECT SITE 27
NOTICE TO CONTRACTOR – EARLY SUBMITTALS 28
NOTICE TO CONTRACTOR – SUBMITTALS 30
NOTICE TO CONTRACTOR – METRO-NORTH RAILROAD SUBMITTALS 32
NOTICE TO CONTRACTOR – PRE-INSTALLATION MEETINGS 33
NOTICE TO CONTRACTOR – CLOSEOUT DOCUMENTS 34
NOTICE TO CONTRACTOR – WARRANTIES 37
NOTICE TO CONTRACTOR – SAFETY & SECURITY PLAN 38
NOTICE TO CONTRACTOR – SITE SECURITY AND ACCESS 39
NOTICE TO CONTRACTOR – WORK ON RAILROAD PROPERTY 46
NOTICE TO CONTRACTOR – CONSTRUCTION RESPONSIBILITY MATRIX 51
NOTICE TO CONTRACTOR – ROADWAY ACCESS WITHIN NOROTON 57
HEIGHTS RAILROAD STATION 57
NOTICE TO CONTRACTOR – METRO-NORTH RAILROAD FORCE 58
ACCOUNT WORK AND COORDINATION 58
NOTICE TO CONTRACTOR – ELECTRICAL POWER TO SITE 59
NOTICE TO CONTRACTOR – ELECTRIC POWER 60
NOTICE TO CONTRACTOR – COMMON WORK RESULTS FOR 61
ELECTRICAL 61
NOTICE TO CONTRACTOR – UNDERGROUND UTILITIES 63
NOTICE TO CONTRACTOR – PROTECTION OF EXISTING UTILITIES 64
NOTICE TO CONTRACTOR – USE OF STATE PROPERTY 66
NOTICE TO CONTRACTOR – CONTRACT DURATION 68
NOTICE TO CONTRACTOR – CAS CERTIFICATION FOR ABRASIVE 69
BLAST CLEANING AND COATING WORK 69
NOTICE TO CONTRACTOR – SUBMITTALS AND PROCUREMENT OF 70
MATERIALS 70
NOTICE TO CONTRACTOR – RAILROAD SPECIFICATIONS 71

NOTICE TO CONTRACTOR – UTILITY SPECIFICATIONS 72
NOTICE TO CONTRACTOR – HAZARDOUS MATERIALS 73
INVESTIGATIONS 73
NOTICE TO CONTRACTOR – SECTION 4.06 AND M.04 MIX 74
DESIGNATION EQUIVALENCY AND PG BINDER EQUIVALENCY 74
NOTICE TO CONTRACTOR – SUPERPAVE DESIGN LEVEL INFORMATION 76
SECTION 1.01 – DEFINITION OF TERMS AND PERMISSIBLE 77
ABBREVIATIONS 77
SECTION 1.02 – PROPOSAL REQUIREMENTS AND CONDITIONS 78
SECTION 1.05 – CONTROL OF THE WORK 79
SECTION 1.06 – CONTROL OF MATERIALS 97
SECTION 1.07 – LEGAL RELATIONS AND RESPONSIBILITIES 98
SECTION 1.08 – PROSECUTION AND PROGRESS 103
SECTION 4.06 BITUMINOUS CONCRETE 106
SECTION M.04 BITUMINOUS CONCRETE 130
ON-THE-JOB TRAINING (OJT) WORKFORCE DEVELOPMENT PILOT 160
SMALL CONTRACTOR AND SMALL CONTRACTOR MINORITY 164
BUSINESS ENTERPRISES (SET-ASIDE) 164
ITEM #0000190A – NON-DESTRUCTIVE UTILITY INVESTIGATION 176
ITEM #0000581A – 4” PVC DUCT BANKS – 2 DUCTS 178
ITEM #0020902A – LEAD COMPLIANCE FOR BUILDING RENOVATION 188
AND DEMOLITION 188
ITEM #0063521A – RAIL FACILITY UPGRADE (SITE NO.1) 198
ITEM #0101143A – HANDLING AND DISPOSAL OF REGULATED ITEMS 200
ITEM #0202455A – TEST PIT (ESTIMATED COST) 209
ITEM #0219005A – SEDIMENTATION CONTROL COMPOSITE FILTER 212
SOCK SYSTEM 212
ITEM #0219011A – SEDIMENT CONTROL SYSTEM AT CATCH BASIN 215
ITEM #0601106A – CONCRETE STAIR LANDING 217
ITEM #0714999A – MONITORING STRUCTURES 219
ITEM #0728020A – STONE BALLAST 222
ITEM #0901005A – BOLLARD 229
ITEM #0913069A – TEMPORARY 8’ CHAIN LINK FENCE 230
ITEM #0913984A – TEMPORARY PROTECTIVE FENCE 230
ITEM #0971001A – MAINTENANCE AND PROTECTION OF TRAFFIC 232
ITEM #1003925A – REMOVE EXISTING LUMINAIRE 239
ITEM #1003926A – REINSTALL LIGHT POLE 240
ITEM #1003997A – REMOVE POLE 241
ITEM #1005600A – LED LUMINAIRE 242
ITEM #1008183A – 3/4” PVC COATED CONDUIT 246
ITEM #1008184A – 1” PVC COATED CONDUIT 246
ITEM #1008186A – 4” PVC COATED CONDUIT 246
ITEM #1008901A – REMOVE CONDUIT 255
ITEM #1014901A – REMOVE CABLE 256
ITEM #1020037A – TEMPORARY LIGHTING 257
ITEM #1210101A – 4” WHITE EPOXY RESIN PAVEMENT MARKINGS 258
ITEM #1210105A – EPOXY RESIN PAVEMENT MARKINGS, SYMBOLS 258
AND LEGENDS 258
CSI SPECIFICATIONS 260
PERMITS AND/OR SUPPLEMENTAL TO FORM 816 AND REQUIRED PROVISIONS 486

June 22, 2016
FEDERAL AID PROJECT NO. N/A
STATE PROJECT NO. 301-170

Noroton Heights Railroad Station Platform Replacement

Town of Darien
Federal Aid Project No. N/A

The State of Connecticut, Department of Transportation, Standard Specifications for Roads, Bridges and Incidental Construction, Form 816, 2004, as revised by the Supplemental Specifications dated July 2015 (otherwise referred to collectively as "ConnDOT Form 816") is hereby made part of this contract, as modified by the Special Provisions contained herein. . The State of Connecticut Department of Transportation's "Construction Contract Bidding and Award Manual" ("Manual"), May 14, 2010 edition or latest issue, is hereby made part of this contract. If the provisions of this Manual conflict with provisions of other Department documents (not including statutes or regulations), the provisions of the Manual will govern. The Manual is available upon request from the Transportation Manager of Contracts. The Special Provisions relate in particular to the Noroton Heights Railroad Station Platform Replacement in the Town of Darien.

CONTRACT TIME AND LIQUIDATED DAMAGES

Four Hundred Ninety-Seven (497) calendar days will be allowed for completion of the work on this project and the liquidated damages charge to apply will be Two Thousand Seven Hundred Dollars ($2,700.00) per calendar day.

NOTICE TO CONTRACTOR – PROJECT DESCRIPTION

The following describes, in general terms, work to be performed by the Contractor. It is not a comprehensive description of the Contract scope.

Existing Facility

Noroton Heights Railroad Station is a mainline commuter train station located in Darien, CT. It is bound to the north and south by Heights Street and Interstate 95, respectively, and to the east and west by Noroton Avenue and Hollow Tree Ridge Road, respectively. The existing station consists of the following elements:

1. Two platforms (eastbound and westbound) that are located directly opposite each other to the south and north of the four (4) mainline tracks. The eastbound (EB) platform is serviced by Track 4 and the westbound (WB) platform is serviced by Track 3;

2. A small Station Building to the North;

3. North and south parking areas with access to the eastbound and westbound platforms;

4. A pedestrian bridge providing platform-to-platform access.

Project Scope

The Project scope consists of the following:

1. Complete replacement of all platform double tee sections with concrete/steel platform sections, along with replacement of various other platform access structures;

2. Minor modifications to the existing platform pier bents remaining;

3. Construction of new concrete pedestals supporting the new platform sections;

4. Replacement of existing platform bearings;

5. Replacement of the EB platform pedestrian shelter.

6. Installation of a temporary shelter during Stage 1 to assure that access to the eastbound platform shelter is maintained at all times during construction;

7. Replacement of all platform guardrails and handrails, including those located on stairways, ramps, and landings;

8. Other platform appurtenances:

a. The removal of, and transference to MNR, of the existing recycling centers;

b. The procurement of new recycling centers for MNR installation;

c. Removal and re-installation of platform lighting (including LED modifications), benches, and signage. The Contractor may be directed to replace some of these items in-kind depending on their physical condition;

d. The removal and relocation of the electric control panel for the EB platform.

The existing WB platform Station Building, WB platform canopy structure, and overhead pedestrian bridge will not be affected by Project construction and will remain in use upon completion of construction.

Environmental work associated with this facility may include lead abatement as indicated in the NOTICE TO CONTRACTOR – HAZARDOUS MATERIALS INVESTIGATIONS.

NOTICE TO CONTRACTOR – RAIL FACILITY UPGRADE (SITE NO. 1)

The Contractor is hereby advised that the Major Lump Sum Item (MLSI) for this contract is defined and paid under ITEM #0063521A - RAIL FACILITY UPGRADE (SITE NO. 1). In general, the MLSI includes all work required for the replacement of the eastbound and westbound platforms, various other platform access structures, and platform appurtenances, including but not limited to Architectural, Electrical and Communications work, as shown on the Contract Plans. **The detailed elements of work that constitute the MLSI are listed in ITEM #0063521A - RAIL FACILITY UPGRADE (SITE NO. 1).**

All the CSI-formatted specifications contained in the contract documents apply to the Major Lump Sum Item (MLSI).

NOTICE TO CONTRACTOR – PRE-BID SITE VISIT

A Pre-Bid Site Visit will be held at 10:00 on July 22nd, 2016 at the Noroton Heights Railroad Station in Darien, CT. Prospective bidders shall park at the stations parking lot, and place a traffic cone in front of their vehicle to notify the parking authority not to ticket the vehicle. Prospective bidders will meet in front of the station building on the North lot, and be escorted through the station to the project site.

Work for this Project involves areas that are part of the railroad right-of-way and access to the area is restricted. Therefore, all bidders are strongly encouraged to attend this Pre-Bid Site Visit. **There will be no other opportunity afforded to bidders to inspect the Project site.**

The Pre-Bid Site Visit will include a review of the project site, of the limitations of operations, and of the necessary compliance with Metro-North Railroad requirements for the Project.

All attendees must bring hard hats, safety vests, safety glasses, and safety shoes to the site visit. No one will be allowed on the site visit without wearing this safety gear.

Those planning to attend must contact Mr. Philip J. Melchionne, Contract Section, by July 18th prior to the Pre-Bid Site Visit, at DOTContracts@ct.gov for confirmation. You must provide your name, name of firm, phone number, and number of attendees.

Bidders are advised that no questions will be entertained at the site visit. All questions generated, as a result of the site visit must be submitted no later than, 4:00 pm July 25th, 2016. Questions shall be submitted via Q&A Portal (http://dot-contractsqanda.ct.gov/Default.aspx) faxed questions will no longer be accepted.

NOTICE TO CONTRACTOR – PRE-BID QUESTIONS AND ANSWERS

Questions pertaining to DOT advertised construction projects must be presented through the CTDOT Pre-Bid Q and A Website. The Department cannot guarantee that all questions will be answered prior to the bid date. **PLEASE NOTE - at 12:01 am, the day before the bid, the subject project(s) being bid will be removed from the Q and A Website, Projects Advertised Section, at which time questions can no longer be submitted through the Q and A Website. At this time, the Q and A for those projects will be considered final, unless otherwise stated and/or the bid is postponed to a future date and time to allow for further questions and answers to be posted.**

If a question needs to be asked the day before the bid date, please contact the Contracts Unit staff and email your question to dotcontracts@ct.gov immediately.

Contractors must identify their company name, contact person, contact email address and phone number when asking a question. The email address and phone number will not be made public.

The questions and answers (if any) located on the Q and A Website are hereby made part of the bid/contract solicitation documents (located on the State Contracting Portal), and resulting contract for the subject project(s). It is the bidder's responsibility to monitor, review, and become familiar with the questions and answers, as with all bid requirements and contract documents, prior to bidding. By signing the bid proposal and resulting contract, the bidder acknowledges receipt of, and agrees to the incorporation of the final list of Q and A, into the contract document.

Contractors will not be permitted to file a future claim based on lack of receipt, or knowledge of the questions and answers associated with a project. All bidding requirements and project information, including but not limited to contract plans, specifications, addenda, Q and A, Notice to Contractors, etc., are made public on the State Contracting Portal and/or the CTDOT website.

NOTICE TO CONTRACTOR – CONTRACT DRAWING NUMBERING

The sheet numbering format for the State Project No. 0301-0170 contract drawings is as follows:

The sheet numbers consist of the two digit numerical designation for the Subset Number, followed by a period and the two digit numerical designation for the Sheet Number in the Subset. For example, the sheet number 01.01 is for Subset 01, Sheet Number 01.

NOTICE TO CONTRACTOR – CONTRACTOR PARKING

The Contractor is hereby advised that there are limited areas available for employee parking adjacent to the various construction locations within and adjacent to the project limits. At no time shall parked or stored vehicles used for and by construction personnel impinge on roadway traffic operations, pedestrian access and/or access and egress to local businesses and other adjacent properties. The Contractors parking arrangements are subject to all local parking regulations. The Contractor must also conform to the requirements of the Special Provision "Article 1.07.07 – Legal Relations and Responsibilities/Public Convenience and Safety".

The Contractor must submit to the Engineer for review and approval any areas he intends to use for parking. In addition to review and approval by the Engineer, potential sites to be obtained by the Contractor from private owners must be submitted to the Town of Darien for approval. The Contractor must submit verification of approval to the Engineer prior to use.

The Contractor may be required to shuttle employees to the project site from an off-site/remote parking facility, if required, at his own expense. There will be no direct payment for employee parking under the contract.

NOTICE TO CONTRACTOR – SITE CLEANLINESS

The Contractor is hereby notified that the all areas utilized for construction activities including all onsite and offsite facilities shall be maintained so as to be free of rubbish, trash and deleterious construction debris at all times. The use of covered and secured trash receptacles is required. All receptacles will be regularly emptied and maintained.

There will be no direct payment for maintaining the site cleanliness of the construction areas under the contract.

NOTICE TO CONTRACTOR – PUBLIC UTILITY PLANS

The Contractor's attention is hereby directed to the fact that included in the plans are plan sheets furnished to the State by various utility companies affected by the proposed construction. These sheets are not intended to show all proposed work required by the utility installations to be completed by the various utility companies or municipal authorities, before, during or after the life of this contract. It may be possible that in addition to the work indicated on these plans, the utility companies and authorities may make adjustments to and/or remove installations other than those indicated on the plans or may install facilities not indicated.

NOTICE TO CONTRACTOR – VERIFICATION OF PLAN DIMENSIONS AND FIELD MEASUREMENTS

The Contractor is responsible for verifying all dimensions before any work is begun. Dimensions of the existing structures shown on the plans are for general reference only; they are not guaranteed. The Contractor shall take all field measurements necessary to assure proper fit of the finished work and shall assume full responsibility for their accuracy. When shop drawings and/or working drawings based on field measurements are submitted for approval and/or review, the field measurements shall also be submitted for reference by the reviewer.

In the field, the Contractor shall examine and verify all existing and given conditions and dimensions with those shown on the plans. If field conditions and dimensions differ from those shown on the plans, the Contractor shall use the field conditions and dimensions and make the appropriate changes to those shown on the plans as approved by the Engineer. All field conditions and dimensions shall be so noted on the drawings submitted for approval.

There shall be no claim made against the Department by the Contractor for work pertaining to modifications required by any difference between actual field conditions and those shown by the details and dimensions on the contract plans. The Contractor will be paid at the unit price bid for the actual quantities of materials used or for the work performed, as indicated by the various items in the contract.

NOTICE TO CONTRACTOR – MEASUREMENT AND PAYMENT

This Project is being bid with both lump sum and unit price items. The bid items include unit price and lump sum items which are IN ADDITION TO the Major Lump Sum Item (MLSI) of the Project. These separate items will be measured for payment on a unit price or lump sum basis (whichever is applicable) for which a separate bid price is required, at the quantities as indicated in the Bid Proposal Form. Each item to be measured is more specifically described in a corresponding Form 816 Standard Specification related to that item, or a special provision, as applicable. The MLSI of the Project is described in "Item #0063521A – Rail Facility Upgrade (Site No. 1)". Refer to "Notice to Contractor – Rail Facility Upgrade (Site No. 1)" for additional information.

Standard Form 816 Items are referenced by their standard item numbers. Refer to the applicable article of Form 816 for the requirements for this item. Special Provisions included in this Contract are referenced by their item number followed by an "A" suffix. Refer to the Special Provisions contained within this Contract for requirements for this item.

All work depicted on the Contract Plans and described in the Contract Specifications, including mobilization, is included in the MLSI of the Project, with the exception of the unit price or other lump sum items listed in the Bid Proposal Form. Any work incidental to an item which is not specifically described or included in the item, but which is required for performance and completion of the work required under the Contract, is included in the MLSI.

The items of work included and paid for under the MLSI are specifically indicated in "Notice to Contractor – Rail Facility Upgrade (Site No. 1)".

NOTICE TO CONTRACTOR – STANDARD SPECIFICATIONS

Whenever and wherever "ConnDOT Form 816," "Form 816," "Standard Specifications" are referenced herein, this shall mean and refer to "State of Connecticut, Department of Transportation, Standard Specifications for Roads, Bridges, and Incidental Construction, Form 816", including the Supplemental Specifications.

NOTICE TO CONTRACTOR – GENERAL REQUIREMENTS AND COVENANTS OF THE CONTRACT

Division I of the document entitled "State of Connecticut, Department of Transportation, Standard Specifications for Roads, Bridges, and Incidental Construction, Form 816, 2004," including the Division I Supplemental Specifications, shall collectively be known as the "General Requirements and Covenants of the Contract."

The Contractor is hereby advised of the potential for conflicts between provisions contained within Section 1.20 of the Form 816 with other Division I Sections of the Form 816. Where the aforementioned conflicts occur, Section 1.20 shall at all times govern.

NOTICE TO CONTRACTOR – FORM 816 REFERENCES ON STANDARD DRAWINGS

The Contract includes standard Connecticut Department of Transportation drawings with material and pay limit references to Form 816. For work shown on these drawings that is included under the Major Lump Sum Item (MLSI) for the Project, the Contractor shall disregard these references.

Pay limits for unit price and lump sum items, other than the MLSI, shall be in accordance with "Method of Measurement", and "Basis of Payment" of the appropriate special provision section.

NOTICE TO CONTRACTOR – POTENTIAL FOR ASBESTOS CONTAINING MATERIALS

The Contractor is hereby advised that it is the expressed intent of the Department that no materials containing asbestos of any kind or amount be installed in Department facilities as a result of any work being performed under this Contract.

For all materials that have a probability of containing asbestos, the Contractor shall provide a certification letter on the manufacturer's letterhead along with the regular submittal package to prove that asbestos is not contained in the materials. These materials will not be approved without the required manufacturer certification letter. The manufacturer certification letter shall be formatted in the following manner:

[Addressed to:] Commissioner of Transportation
Department of Transportation
P.O. Box 317546
Newington, Connecticut 06131-7546

Project Title and Number

[We] hereby certify that all materials manufactured by [Insert Manufacturer Name] are asbestos-free.

[Signature:] [Name of authorized signatory]
[Title]

The Contractor shall submit manufacturer certification letters for all materials specified in the following Contract provisions (including CSI-formatted specifications contained within a particular special provision):

1. CSI Section 07 92 00 - JOINT SEALANTS
2. CSI Section 07 92 05 - CONCRETE OVERLAY JOINT
3. CSI Section 07 92 10 – FIXED PLATFORM JOINT
4. CSI Section 07 95 10 - LONGITUDINAL JOINT SYSTEM

The above list may not be all-inclusive and does not relieve the Contractor from its responsibility to provide manufacturer certification letters that are required under other Contract provisions. Furthermore, the Department may at any time require the Contractor to submit manufacturer certification letters proving that other materials do not contain asbestos.

Failure of the Contractor to provide the required documentation will result in the immediate removal of the material from the Project by the Contractor at its expense. The Contractor shall be responsible for all costs incurred as a result of such required action, and replacements thereof, in order to complete the Project.

Any asbestos containing material that is found to have been installed as a result of work performed under this Contract will be required to be removed by the Contractor at its expense as soon as such determination is made. The Contractor shall also replace the removed material with appropriate material that is in compliance with the Contract. The Contractor is also responsible to pay for any asbestos testing charges the Department incurs in order to prove that the material contains asbestos fibers. This obligation will extend throughout the one-year warranty period after the issuance of the Certificate of Compliance.

The Contractor shall complete and sign the attached certification form assuring the Department that no asbestos-containing materials have been used in the construction of this Project. This form shall be submitted prior to the Semi-Final Inspection. The Certificate of Compliance will not be issued without this completed and signed certification form.

CONTRACTOR CERTIFICATION:
RE/ ASBESTOS CONTENT OF MATERIALS

State of Connecticut
Department of Transportation
PO Box 317546
Newington, CT 06131-7546

1. Project Number: _____

2. Project Name: _____

3. Contractor Name: _____

4. This is to certify that I have read, understood, and complied with the terms and conditions identified under the "NOTICE TO CONTRACTOR – POTENTIAL FOR ASBESTOS CONTAINING MATERIALS" included in this Contract.

   I fully understand that it is the requirement of the Connecticut Department of Transportation that only materials that do not contain asbestos of any kind or amount are to be utilized in the construction of this Project.

   I therefore certify that, to the best of my knowledge, all materials installed under this Contract are asbestos-free.

   For the one-year warranty period after the issuance of the Certificate of Compliance, I agree to remove any asbestos-containing material identified by the Connecticut Department of Transportation and reinstall an approved, non-asbestos-containing material that is in compliance with the original Contract at no additional cost to the State.

5. Date of Certificate of Compliance: _____

6. Date of the Asbestos Certification: _____

7. Signature of Authorized Party Agreeing to the Terms & Conditions Identified Herein & as Further Stated in the Contract:

_____	_____
Signature	Title
_____	_____
Printed Name	Date

NOTICE TO CONTRACTOR – OFF-SITE STAGING AND STORAGE

The Contractor is hereby advised that due to the restrictive Project Limits and the need to maintain the maximum number of parking spaces for Metro-North Railroad and ConnDOT Employees, and other operational constraints identified in the Contract, off-site staging and storage of materials and equipment will be required. Arrangement for off-site staging and storage of materials and equipment shall be the responsibility of the Contractor. The Contractor shall restrict its operations, including the need for parking for its employees, subcontractors, and the Engineer to the Project Limits depicted on the Contract plans. The Contractor shall bid the Project accordingly.

The Contractor shall coordinate with the town of Darien the availability of storage space during time of construction. Please note that the availability of the storage space is not guaranteed and the Contractor shall bid accordingly. Any storage by the Contractor in this area shall be in a locked container unit.

NOTICE TO CONTRACTOR – COLD WEATHER CONCRETE ACTIVITIES

The Contractor is hereby advised of the potential need for cold weather concrete activities. The Contractor shall strictly adhere to all required cold weather concrete procedures as specified within the Contract and conduct its activities accordingly. The Contractor shall bid the Project accordingly.

NOTICE TO CONTRACTOR – PROJECT PHASING REQUIREMENTS

The construction of the Improvements to the Noroton Heights Railroad Station shall be phased so that all Railroad station operations and facilities will continue as normal without interruption unless specifically detailed in the Contract documents. The Contractor is notified that crane operations must be scheduled during the allowable outages listed in NOTICE TO CONTRACTOR – WORK ON RAILROAD PROPERTY, to reduce the impact to railroad operations and passenger drop off.

The Contractor is responsible for developing its own phasing plan for the Engineer's approval for the Project work, based on the staging plans shown on the contract documents.

Staging and project phasing shall account for all track/catenary outages which shall be coordinated with Connecticut Department of Transportation and Metro North Railroad in accordance with NOTICE TO CONTRACTOR – WORK ON RAILROAD PROPERTY.

Although the Contractor is responsible for developing its own phasing plan, the Contractor shall comply with the milestones, and the specific number of days allowed for milestone completions, stipulated in Contract Time and Liquidated Damages.

Coordination

- The Contractor shall coordinate construction activities with Metro North Operations, Metro North Power Department, and other CTDOT construction projects.

- The Contractor shall be aware that before, during, and after the completion of the project, there are several other ongoing independent Department construction projects adjacent to the project limits. These projects include but shall not be limited to those listed in NOTICE TO CONTRACTOR - WORK ON RAILROAD PROPERTY. The Contractor shall coordinate their work with these other Department construction projects.

- Except as specifically allowed by the Contract, Metro-North operations (including yard operations of trains, track systems, power distribution, and communications) and other systems will remain active without interruption for the duration of this Contract. Refer to NOTICE TO CONTRACTOR – WORK ON RAILROAD PROPERTY for allowable track/catenary outages.

Project Schedule

- The Contractor shall structure its project CPM schedule to clearly identify the activities leading up to platform demolition and construction, pier modifications, bearing replacement, platform shelter replacement, and replacement of platform appurtenances, along with the milestones listed under CONTRACT TIME AND LIQUIDATED DAMAGES.

- The Contractor shall coordinate their schedule with work on other department projects as directed by the Engineer. Work shall also be staged to coordinate with other Department projects as directed by the Engineer.

- The Contractor shall coordinate their schedule with the Department and Metro North Railroad for track and/or catenary outages required for construction. Refer to NOTICE-TO-CONTRACTOR – WORK ON RAILROAD PROPERTY for allowable track/catenary outages.

NOTICE TO CONTRACTOR – LIMITATION OF CONTRACTOR OPERATIONS

1. In order to maintain the maximum number of parking spaces available to Railroad employees, the Contractor shall restrict its operations solely to the areas where construction activities included in this Project are shown on the Contract Plans. The Contractor shall not use station parking spaces outside of these areas for storage of equipment or materials or for the parking of the Contractor's or Subcontractor's vehicles. If parking for the Contactor's needs is not available within said area, the Contractor shall be responsible for arranging off-site parking and the shuttling of employees to and from the work area.

   The Contractor shall access the station via the locations indicated on the plans. The public entrances shall not be used.

   The Contractor is advised that other contractors may be working within the station adjacent to and concurrent with this project. The Contractor must share access and work areas with other such contractors.

   See NOTICE TO CONTRACTOR - LOCATING TRAILERS ON THE PROJECT SITE for restrictions on locating Contractor construction trailers.

2. Prior to commencing construction activities, the Contractor shall verify the location of underground, structure mounted, and overhead utilities.

The Contractor shall bid the Project accordingly.

NOTICE TO CONTRACTOR – ENGINEER OCCUPANCY

The Engineer, Department personnel, and Metro-North Railroad personnel will occupy the Project Site during the entire construction period.

The Engineer reserves the right to occupy and to place and install equipment in completed areas of the Facility, prior to Final Inspection and the issuance of the Certificate of Compliance provided that such occupancy does not interfere with completion of the Project. Such placing of equipment and partial occupancy shall not constitute acceptance of the total Project. The Contractor shall allow and cooperate with such occupancy at no additional cost to the State.

1. The Engineer shall obtain from the Contractor written approval of such occupancy. The Engineer shall determine whether such occupancy or use is possible and, if so, will make arrangements for holding a job inspection with representatives of the Department and the Contractor.

2. Based on the inspection, a "Punch List" of outstanding or unacceptable work shall be developed.

3. The Contractor shall prepare a letter to the Engineer granting occupancy. The letter granting such occupancy shall state the terms and conditions of occupancy and include the status of completion of "Punch List" items.

4. Subsequent to the receipt of the letter granting occupancy, the Engineer shall notify the Contractor in writing that fire insurance coverage has been requested, and the effective date the Contractor may cancel the fire insurance coverage normally carried on the building by it.

5. Prior to partial Engineer occupancy, all mechanical and electrical systems shall be fully operational. Required inspections and tests shall have been successfully completed. Upon occupancy the Engineer will provide operation and maintenance of mechanical and electrical systems in occupied portions of the building.

NOTICE TO CONTRACTOR – LOCATING TRAILERS ON THE PROJECT SITE

The Contractor is hereby advised that due to the limited space available within the station, and multiple construction contracts taking place in the station, the Contractor will be limited to locating Contractor office trailers and portable bathroom facilities within the limits of the Project work area. If the Contractor's requirement for trailer space cannot be accommodated within the designated area, the Contractor shall be responsible for locating Contractor office trailers off site at no expense to the Department.

The Contractor shall locate the Construction Field Office provided for use by the Department in the area indicated in the Contract Documents or as directed by the Engineer.

The Contractor shall bid the project accordingly.

NOTICE TO CONTRACTOR – EARLY SUBMITTALS

The Contractor is hereby advised that the Department has identified the potential need to order certain materials and equipment, and thereby submit certain submittals for approval early in the construction process to ensure the Project is completed within the allowable Contract Time. Submittals shall be in accordance with Form 816 Article 1.20-1.05.02. The following items have been identified as possibly requiring early ordering thereby requiring early submission of shop drawings and product data, including color selection charts and samples:

General

1. General Railroad Liability Insurance
2. Railroad safety Plan
3. Phasing Plan (Refer to NOTICE TO CONTRACTOR – PROJECT PHASING REQUIREMENTS)

Special Provisions/Contract Items

4. ITEM #0971001A - MAINTENANCE AND PROTECTION OF TRAFFIC
5. ITEM #1005600A - LED LUMINAIRE

CSI-Formatted Specifications

6. SECTION 03 41 01 – PRECAST STRUCTURAL CONCRETE
7. SECTION 03 41 05 – PLATFORM SECTION (Items: Structural steel; precast platform panels)
8. SECTION 34 82 10 – STEEL LAMINATED ELASTROMERIC BEARINGS

The following items have been identified as possibly requiring early submission for purposes of project coordination and project work scheduling:

1. Baseline Critical Path Schedule
2. Contractor's Submittal Schedule
3. Health and Safety Plan
4. Disposal of Controlled Material

Items requiring approval by Metro-North Railroad may require early submittals due to the extended review periods allowed to those agencies. Refer to NOTICE TO CONTRACTOR - METRO-NORTH RAILROAD SUBMITTALS for additional information.

The lists above are not intended to be all-inclusive and do not relieve the Contractor from coordinating the activities of its subcontractors and suppliers. The Contractor will not be permitted to perform any physical work on the Project without the approval of the required submittals. Failure to properly plan for long lead items within the Contract schedule will not be justification for additional construction time.

It is recommended that the Contractor identify early in the construction sequencing process the subcontractors and suppliers associated with long lead-time items and submit the appropriate shop drawings and supporting data, including color selection charts and samples, for review upon Notice to Proceed.

NOTICE TO CONTRACTOR – SUBMITTALS

Submittal Preparation and Processing:

The Contractor shall provide the Designer with complete submittal packages (Product Data, Shop Drawings, Samples, and Quality Assurance Submittals, as applicable) for individual elements of Project work for a concurrent review of all information. Incomplete submittal packages will be returned to the Contractor without being reviewed.

Transmittal of Submittals:

Unless otherwise stipulated, all submittals requiring review for conformance with the Contract shall be transmitted electronically to Parsons Brinckerhoff, 500 Winding Brook Drive, Glastonbury, CT 06033, Attention: Mr. Thomas Laliberte, P.E.

Electronic copies of all transmittal letters shall be sent to the Connecticut Department of Transportation Design and Construction representatives as well as Metro-North Railroad.

At the time the foregoing submission is made to the Designer, electronic copies of all submittals requiring Metro-North Railroad review for conformance with the Contract shall be routed directly to Metro-North Railroad. See NOTICE TO CONTRACTOR - METRO-NORTH RAILROAD SUBMITTALS for submittals requiring Metro-North Railroad approval.

Submittals requiring review for conformance with the Contract that shall be electronically submitted directly to the Engineer in lieu of the Designer are listed below. Electronic copies of the transmittal letters shall be sent to the Connecticut Department of Transportation Design representatives and Metro-North Railroad.

1. Concrete Mix Design Certifications.
2. Asphalt Mix Design Certifications
3. Erosion Control Plan and Materials
4. Demolition Plan
5. Disposal Plan
6. Construction Staging Plan
7. Structure Erection Plans including Erection Methods and Procedures, crane lift and rigging plans stamped by a Professional Engineer licensed in the State of Connecticut.
8. Dewatering Connection Plan
9. Maintenance and Traffic Protection Plan
10. Safety and Security Plan

Submittals requiring review for conformance with the Environmental Contract work that shall be electronically submitted directly to the Assistant District Engineer in lieu of the Designer are listed below. Electronic copies of the transmittal letters shall be sent to the Manager of Facilities and Bridges.

1. Health and Safety Plan.
2. Disposal Plan and Site.
3. Lead Abatement Plan.

Samples: Where Samples are for selection of color, pattern, texture or similar characteristics from a range of choices, submit 4 full sets of the standard and custom choices for the material or product. Where Samples illustrate assembly details, workmanship, fabrication techniques, connections, operation and similar characteristics, submit 1 sample (or set, if applicable).

The Designer will return electronic copies marked with action taken and corrections or modifications required. The Designer will return one set of samples marked with the action taken. The set of samples shall be maintained at the Project site when returned.

Maintenance Manuals and Warranties: Maintenance manuals and warranties shall be submitted both electronically and in hard copy form. Refer to NOTICE TO CONTRACTOR – CLOSEOUT DOCUMENTS for further requirements. Maintenance manuals and warranties will not be returned unless they are rejected.

NOTICE TO CONTRACTOR – METRO-NORTH RAILROAD SUBMITTALS

The submittals associated with the specifications listed below, that require Metro-North Railroad review for conformance with the Contract, shall be clearly labeled "Requires Metro-North Review" on the transmittal when submitted electronically. Hard copies of all final approved submittals shall be hand delivered or sent by mail directly to Metro-North Railroad, 52 Water Street, 3rd Floor, Bridgeport R.R. Station, Bridgeport, CT 06604-4315 Attention: Mr. David B. Willard. Review of the following submittals may take up to 60 days in accordance with CTDOT Form 816 Article 1.20-1.05.02. The Contractor shall bid the project accordingly.

Special Provisions

1. ITEM #1003926A - REINSTALL LIGHT POLE
2. ITEM #1005600A - LED LUMINAIRE
3. ITEM #1020037A - TEMPORARY LIGHTING

CSI-Formatted Specifications

4. SECTION 09 61 40 - DETECTABLE / TACTILE WARNING SURFACES
5. SECTION 10 14 00 - IDENTIFYING DEVICES
6. SECTION 13 34 19 - PRE-ENGINEERED PLATFORM SHELTERS
7. SECTION 23 82 46 - ELECTRIC UNIT HEATERS
8. SECTION 26 05 26 - GROUNDING AND BONDING FOR ELECTRICAL SYSTEMS
9. SECTION 27 51 16 - PUBLIC ADDRESS AND MASS NOTIFICATION SYSTEMS

Operation and Maintenance Manuals:

10. All Operation and Maintenance Manuals listed in NOTICE TO CONTRACTOR – CLOSEOUT DOCUMENTS.

NOTICE TO CONTRACTOR – PRE-INSTALLATION MEETINGS

The Engineer will conduct a pre-installation meeting at the Project Site before each of the following construction activities:

1. Platform selective demolition (Form 816 Article 1.20-1.08.03 – Prosecution of Work, Subsection 4 – Selective Demolition).
2. Paving HMA S0.375
3. SECTION 03 30 00 – CAST-IN-PLACE CONCRETE
4. SECTION 03 53 20 – MICROSILICA CONCRETE OVERLAY
5. SECTION 07 92 00 – JOINT SEALANTS
6. SECTION 09 61 40 – DETECTABLE/TACTILE WARNING SURFACES

The above list may not be all-inclusive and does not relieve the Contractor from its responsibility to provide pre-installation meetings that are required under other Contract provisions.

NOTICE TO CONTRACTOR – CLOSEOUT DOCUMENTS

General: The list of special provisions (including CSI-formatted specifications) in the Table below may not be all-inclusive and does not relieve the Contractor from its responsibility to provide spare parts, operation and maintenance manuals, training, and warranties that are required under other Contract provisions.

This Table will be forwarded to Mr. Richard Jankovich, Office of Rails, for concurrence prior to the Semi-Final Inspection.

Spare Parts: The Contractor shall deliver spare parts on products listed in the Table below to the Project Site, to a location(s) determined by the Engineer.

Operation and Maintenance Manuals: Operation and Maintenance Manuals shall be formatted in accordance with Form 816 Article 1.20-1.08.14. Submit 4 copies of each manual to the Designer. The Designer, Metro-North Railroad, and Mr. Richard Jankovich, Office of Rails, will review the manuals for conformance to the Contract. The manuals will be processed in accordance with Form 816 Article 1.20-1.05.02, with 3 copies being forwarded to Mr. Richard Jankovich, Office of Rails, and one copy being sent to the Engineer.

Materials and Finishes Maintenance Manual: The Contractor shall provide complete information in the materials and finishes manual on products listed in the Table below.

Equipment and Systems Maintenance Manuals: The Contractor shall provide complete information in the equipment and systems manual on products listed in the Table below.

Training: The Contractor shall provide training on products listed in the Table below. All training sessions shall be videotaped by the Contractor, with three (3) High Definition DVD copies forwarded to Mr. Richard Jankovich, Office of Rails, and one copy provided to the Engineer. The DVDs provided by the Contractor shall not be copy-protected in order to allow future copying and distribution by the Department as needed. Each DVD shall be labeled with the project name, name of the videographer, name of the Contractor, the date the video was recorded, and the location where the videotaping occurred. **Please note: The videotaping shall be performed by a professional videographer, hired by the Contractor, of established reputation who has been regularly engaged as a professional videographer for not less than three years.**

Training Instructors shall be a Manufacturer's Representative or Applications Engineer fully qualified in the operation, troubleshooting and maintenance procedures for the equipment or systems being covered. Sales Representatives or others possessing only general knowledge of the equipment or systems will not be acceptable.

The following format shall be used to schedule, perform, document and evaluate the required training sessions:

1. The Contractor shall submit a separate Training Form for each training session required by the Contract Documents. This form shall be submitted a minimum of fourteen (14) calendar days in advance of the proposed training session.
2. The Contractor shall complete the first section of the form including the proposed training session date, name of instructor(s), and proposed length (time) of the session(s). Also, attach an Agenda indicating the format of the training session and listing any handouts that will be provided.
3. During the training session, the Contractor shall have all in attendance sign in the third section of the Training Form. Attach additional pages if necessary. The Contractor shall then forward the Training Form to the Engineer.

Training sessions shall cover the following items:

1. Review of Operations and Maintenance Manuals including all system drawings
2. Overview of system components
3. System operation under normal conditions
4. System operation under abnormal conditions
5. Emergency procedures
6. Troubleshooting procedures
7. Maintenance and Repair procedures
8. Questions

The Contractor is responsible for all costs associated with travel to and from the Training Facility, lodging during the training session and tuition & materials.

Training sessions for similar items where the class membership is likely to be the same may be combined with the advance approval of the Engineer.

Warranties: Submit 4 copies of written warranties, including special warranties to the Designer. The Designer and Mr. Richard Jankovich, Office of Rails, will review the warranties for conformance to the Contract. The warranties will be processed in accordance with Form 816 Article 1.20-1.05.02, with 3 copies being forwarded to Mr. Richard Jankovich, Office of Rails, and one copy being sent to the Engineer.

The Contractor shall provide special warranties on products and installations listed in the Table below. Item specifications may include additional information that is specific to the equipment and is required to be submitted.

Special Provision (including CSI-formatted Specifications)	Special Warranties	Spare Parts	Training	Operation and Maintenance Manuals
ITEM #1005600A - LED LUMINAIRE	X			
SECTION 05 52 00 - METAL HANDRAIL AND GUARDRAIL SYSTEMS	X			X
SECTION 05 55 13 - METAL STAIR TREADS	X			
SECTION 07 62 00 - SHEET METAL FLASHING AND TRIM	X			X
SECTION 07 92 00 - JOINT SEALANTS	X		X	
SECTION 08 42 13 – ALUMINUM-FRAMED ENTRANCES	X		X	X
SECTION 08 80 00 - GLAZING	X			X
SECTION 10 14 00 - IDENTIFYING DEVICES	X		X	X
SECTION 12 93 40 - SITE FURNISHINGS	X			
SECTION 13 34 19 – PRE-ENGINEERED PLATFORM SHELTERS			X	X
SECTION 26 05 26 - GROUNDING AND BONDING FOR ELECTRICAL SYSTEMS				X
SECTION 26 05 53 - IDENTIFICATION FOR ELECTRICAL SYSTEMS				X
SECTION 26 27 26 - WIRING DEVICES				X
SECTION 26 28 16 - ENCLOSED SWITCHES AND CIRCUIT BREAKERS		X		X
SECTION 27 51 16 - PUBLIC ADDRESS AND MASS NOTIFICATION SYSTEMS		X		X

NOTICE TO CONTRACTOR – WARRANTIES

Refer to NOTICE TO CONTRACTOR - CLOSEOUT DOCUMENTS for information related to warranties.

NOTICE TO CONTRACTOR – SAFETY & SECURITY PLAN

The Contractor is advised that certain safety and security related requirements are necessary for the prosecution of this contract. The Contractor's safety supervisor should be identified and responsible for the establishment and management of and compliance with all safety and security related issues. The Contractor is required to prepare a project specific Safety and Security Plan to be maintained in the Contractor's project office. This plan should recognize all other activities being performed in the station, though not under the direct control of the Contractor, including rail operations, maintenance and other construction activity. Along with the plan, in the Contractor's project office, the Contractor shall maintain documentation of their implementation, maintenance, inspection and updating of this plan. This plan is to be updated throughout the project, as determined by the Contractor, to reflect and incorporate changes in the project.

The Contractor shall submit monthly a safety status report that will reflect the Contractor's performance and compliance with the Safety and Security Plan requirements.

At a minimum, the Contractor shall prepare and maintain a safety log, reflecting the documentation of their compliance with the plan, at the Contractor's office; perform and submit hazard analyses, as necessary; conduct QA/QC of safety and security activities; develop a safety and security training program for employees and monitor compliance. The documentation should include the following: tool box safety meetings, crane safety inspections, MSDS data, training reports, first aid reports, up-dated list of emergency numbers, documentation of regular reviews and inspections, maintenance of current certifications and inspections, training, training procedures developed, readiness audits, documentation of the monitoring and compliance with criteria of the plan, daily reports of oversight of project inspections, identification and control of work place hazards, Personal Protective Equipment (PPE), hazardous materials, drug and alcohol testing procedures, safety and security inspections, maintenance on-site of all applicable publications referenced in all safety security specifications, maintenance of a ROW training log for all employees and copies of a log of all "Tool Box" safety meetings.

Assist CTDOT in its project safety and security certification, including but not limited to testing and validation in support of the Safety and Security Certification Program (SSCP); perform construction specification conformance checklist; identify safety and security test requirements; manage integrated tests for the SSCP; manage "open items" in the SSCP; verify operational readiness; and conduct final determination of project readiness and issue safety and security certification.

The Contractor is hereby notified that no separate pay item or additional time will be granted for this item's requirements. All durations for the activities noted above shall be considered when the Contractor develops a construction schedule. Additional administrative costs for security requirements, including but not limited to: the cost of the creating and preparing a safety and security plan, training program, log creation and maintenance, hazard analyses, and other associated activities shall not be paid for separately but shall be included in the general cost of the work.

NOTICE TO CONTRACTOR – SITE SECURITY AND ACCESS

During construction, the Contractor must adhere to all station security requirements. These requirements apply to the contractor, subcontractors, material and equipment suppliers, and any other related personnel working on the project. These security procedures are outlined in this specification section.

All employees of the Contractor and its subcontractors must obtain a photo identification security badge (badge) which shall be visible at all times. The Contractor shall be responsible for all employees and subcontractor badging requirements, including producing the badges, identification photographs, application forms, plus associated data management, archiving, and oversight. The Contractor shall appoint an "Authorized Security Supervisor" (Security Supervisor) to conduct these activities. The Security Supervisor will be dealing with sensitive security information and therefore shall not be a convicted felon. The Security Supervisor shall complete and sign the Authorized Security Supervisor Application (application provided at the end of this NTC) and submit it to the Engineer for approval. The Contractor shall also provide a criminal history report for the proposed Authorized Security Supervisor that will be reviewed and approved by the Engineer and Metro-North Railroad (MNR) security personnel. The report shall be generated by a company such as "ChoicePoint" that has been providing background checks in the industry for a minimum of one year. The Authorized Security Supervisor Application, along with the required criminal history report, shall be submitted to the Engineer for approval at the time of the Project Pre-Construction meeting.

The Contractor shall arrange for the same Security Supervisor to be available throughout the project duration. The Security Supervisor will take responsibility for all badging requirements for the Contractor and all subcontractor employees and shall coordinate these requirements with MNR and CTDOT security personnel. Particular tasks required of the Security Supervisor include:

The Security Supervisor shall issue and review all employee applications for security badges (application provided at the end of this NTC). The Security Supervisor shall verify all information supplied by the applicant on the Contractor Security Badge Application in addition to verifying other physical characteristics such as height, weight, and hair/eye color as they appear on the applicant's photo identification. Once employee applications have been verified, the Security Supervisor shall create the badge and issue it to the applicant. The Security Supervisor shall be responsible for determining the duration the badge is required. Badges will be issued for the duration needed based on the approved construction schedule, or for one year, whichever is less. The Security Supervisor must maintain a database of all employees with badges, including application information, duration of badge, and current status of badge (actively being used or has been returned). This must be kept up to date, on a daily basis, and be available for immediate audit by MNR security personnel. The Security Supervisor shall provide all approved Security Badge Applications to MNR security personnel at the end of each day. Approved applications will be reviewed by MNR security personnel who will have the authority to revoke badges should it be determined necessary for any reason.

The badge shall be of plastic type, without smart chip for swipe access, shall be yellow in color and a minimum of 2" by 3" by 30 mils thick in size. The badge shall have a photo of the employee and the following information in this order:

Noroton Heights Railroad Station Platform Replacement (0301-0170)
Project Name (Coordinate with Engineer)
Photo of Employee
Name of Employee
Contractor / Subcontractors Name
Badge #
Expiration Date
The Statement "Contractor Employee" under the expiration date

The Contractor shall provide a badging unit capable of printing photo ID pictures directly onto a badge of the type and size indicated above. All text shall be a minimum of 1/8" high and employee photo shall be a minimum of 1" by 1 ¼".

The Contractor shall ensure that all employees wear their badge at all times, and that no employee is permitted to begin work until they are safety trained and have been issued badges. An outline of the photo identification badge procedure is included in this specification.

The Contactor shall be aware that access to the station, as indicated on the contract plans, will be limited to Contractor employees in passenger vehicles and two axle pick-up trucks only. All deliveries and commercial vehicles are required to enter via access points indicated on the contract plans. Delivery drivers are not required to have a badge.

The Contractor shall abide by all Safety Requirements as described in the NOTICE TO CONTRACTOR – WORK ON RAILROAD PROPERTY.

The Contractor shall abide by the following MNR/CTDOT Security Requirements:

- Obey all Federal, State, and Local laws and ordinances
- Comply with all traffic rules and regulations while on CTDOT property
- Obey all legal direction from MTA Police or other law enforcement organizations having jurisdiction on or about CTDOT property and facilities
- Comply with security rules and regulations contained in this contract and subsequent rules and regulations that may be issued from time to time.
- Pertaining to the scope of published security rules and regulations, obey direction from CTDOT/MNR security personnel who have jurisdiction at rail yards and facilities. Security personnel, including guards, have a responsibility to maintain a secure and safe work environment

- Contractors are not authorized to release security sensitive information or confidential information about construction projects without written authorization from the Engineer and MNR security personnel

The Contractor is hereby notified that no separate pay item or additional time will be granted for badging and other site security requirements. All durations for the activities noted above shall be considered when the Contractor develops a construction schedule. Additional administrative costs for security requirements, including the cost of the badging unit and supplies, shall not be paid for separately but shall be included in the general cost of the work.

Noroton Heights Railroad Station

Photo Identification Security Badge Procedure

This procedure is required to obtain a photo identification security badge for all employees involved in the construction of any of the Noroton Heights Railroad Station projects.

1. Contractor or subcontractor employee reports to the General Contractor's trailer to be processed for a photo identification security badge.
2. Proof of identification is required in the form of:
   Valid U.S. / U.S. Territory / Canadian Driver's License
   Valid Passport
   Valid Government Photo ID
3. Proof of identification will be photocopied and attached to this application.
4. Application form is completed and signed by the employee.
5. Application is reviewed, and approved by, the General Contractor's Authorized Security Supervisor.
6. Photo identification security badge is issued to the employee.
7. Photo identification security badge must worn with issued breakaway lanyard.
8. If the photo identification security badge is lost or stolen it must be immediately reported to the General Contractor and a replacement badge will be issued.
9. Photo identification security badge must be surrendered at the end of the work assignment to the General Contractor.

NOROTON HEIGHTS RAILROAD STATION
CONTRACTOR SECURITY BADGE APPLICATION

TO BE COMPLETED BY APPLICANT:

CONTRACTOR INFORMATION		
CONTRACTOR NAME	SUPERVISOR NAME	
BUSINESS ADDRESS (Number and Street)		
CITY	STATE	ZIP CODE (Last 4 digits are optional)
AREA CODE ( )	PHONE NUMBER -	

EMPLOYEE INFORMATION			
EMPLOYEE NAME (Last)	(First)	(MI)	SUFFIX (JR., DR., II)
ADDRESS (Number and Street)			
CITY	STATE	ZIP CODE (Last 4 digits are optional)	
AREA CODE ( )	PHONE NUMBER -	DATE OF BIRTH (MM/DD/YYYY)	
SIGNATURE	DATE (MM/DD/YYYY)		

TO BE COMPLETED BY AUTHORIZED SECURITY SUPERVISOR:

ACCEPTABLE PHOTO IDENTIFICATION		
☐ VALID U.S. / U.S. TERRITORY / CANADIAN'S DRIVER'S LICENSE ☐ VALID PASSPORT ☐ VALID GOVERNMENT PHOTO ID, SPECIFY _____		
IDENTIFICATION #	STATE ISSUED (IF APPLICABLE)	EXPIRATION DATE
☐ APPROVED		
BADGE # ISSUED	EFFECTIVE DATE (MM/DD/YYYY)	EXPIRATION DATE (MM/DD/YYYY)
☐ DENIED		
REASON		
SIGNATURE OF AUTHORIZED SECURITY SUPERVISOR	DATE (MM/DD/YYYY)	

NOROTON HEIGHTS RAILROAD STATION
AUTHORIZED SECURITY SUPERVISOR APPLICATION

TO BE COMPLETED BY APPLICANT:

CONTRACTOR INFORMATION		
CONTRACTOR NAME	SUPERVISOR NAME	
BUSINESS ADDRESS (Number and Street)		
CITY	STATE	ZIP CODE (Last 4 digits are optional)
AREA CODE ( )	PHONE NUMBER -	

EMPLOYEE INFORMATION			
EMPLOYEE NAME (Last)	(First)	(MI)	SUFFIX (JR., DR., II)
ADDRESS (Number and Street)		SOCIAL SECURITY NUMBER - -	
CITY	STATE	ZIP CODE (Last 4 digits are optional)	
AREA CODE ( )	PHONE NUMBER -	DATE OF BIRTH (MM/DD/YYYY)	
ARE YOU A U.S. CITIZEN? (IF NO, PROVIDE DOCUMENTATION AUTHORIZING YOU TO WORK IN THE U.S.)			
HAVE YOU EVER BEEN CONVICTED OF A FELONY? (IF YES, PLEASE EXPLAIN IN DETAIL)			

BY SIGNING BELOW, I CERTIFY THAT ALL INFORMATION PROVIDED IS TRUE AND CORRECT. PROVIDING FALSE STATEMENTS WILL BE GROUNDS FOR IMMEDIATE TERMINATION. I ALSO ACKNOWLEDGE THAT I MAY BE SUBJECT TO A BACKGROUND CHECK AND AUTHORIZE THE RELEASE OF INFORMATION FOR THAT PURPOSE.

SIGNATURE	DATE (MM/DD/YYYY)

TO BE COMPLETED BY METRO-NORTH RAILROAD SECURITY DEPARTMENT:

☐ **APPROVED**

☐ **DENIED**

REASON

SIGNATURE OF AUTHORIZED METRO-NORTH SECURITY DEPTARTMENT REPRESENTATIVE	DATE (MM/DD/YYYY)
PRINTED NAME	TITLE

Delivery Sign-In Sheet – Issued Weekly – Dated __/__/__

Full Name	Company	Photo ID # & Type	Product	Location	Plate # & State	Mon	Tue	Wed	Thu	Fri	Sat	Sun	Guard Name

NOTICE TO CONTRACTOR – WORK ON RAILROAD PROPERTY

The Contractor acknowledges that work to be accomplished under this Contract is to be performed on Railroad territory, which consists of territory operated by Metro-North Railroad. The Contractor's work must be accomplished simultaneously with ongoing daily railroad operations. Such operations include, but are not limited to, the passage of trains, storage of trains, maintenance and repair of trains, flagging, inspection, repair, construction, reconstruction, and maintenance of the railroad right-of-way and facilities.

The Contractor is advised that the Railroad controls all activity in the right-of-way, and the Department expects that these conditions may cause delays and possibly a complete suspension of construction activity. If the Contractor is delayed or suspended in the completion of the work by railroad operations, the Contractor will be entitled to a time extension for every day that he can demonstrate that the delays affected the completion date of the Contract. This extension of time will be considered non-compensable and the Contractor will not be entitled to any additional compensation for damages incurred for all direct and indirect costs including, but not limited to, all delay and impact costs, and inefficiencies.

There is a need to coordinate demolition, construction work, track outages, material stockpiling and staging areas with the following nearby projects to the Noroton Heights Railroad Station:

- 0135-0301 Replacement of MNR Bridge over Atlantic St., Elm St., East Main St.
- 0300-0149 Positive Train Control (PTC)
- 0301-0047 Stamford Railroad Station Garage Demolition/Expansion
- 0301-0157 Real-Time Information Systems (Station & Platforms)
- 0301-0176 Walk Bridge Replacement Project

The Contractor’s activities may overlap with activities of other contractors engaged in the execution of the above projects. There is a potential for limitations on track outages and extraordinary requirements for vehicular access coordination. The Contractor shall conduct his work within such limitations. This may require night work, premium time, weekend work, or multiple shifts. The Contractor is fully responsible to complete the contract work.

The Contractor shall be responsible for the coordination of the work of its various subcontractors. The Contractor shall coordinate its operations with those of the Railroad Company in carrying out railroad force account work.

The Contractor shall provide the Engineer with written notification a minimum of 14 days in advance of any work that requires a track or catenary outage or affects existing roadway circulation or parking areas within the Noroton Heights Railroad Station.

The Contractor's employees, and the employees of all subcontractors, who will be entering the jobsite within Railroad territory, must undergo an annual Railroad safety training class, of approximately one hour, offered by Metro-North Railroad. The Engineer will arrange for the

class; however, the Contractor is responsible for ensuring that all employees on the jobsite have been trained. No additional compensation will be allowed to the Contractor for employee's time for attending these classes. Refer to Form 816 Article 1.05.06.

The Contractor must make its own arrangements with the Railroad Company for the use of Railroad equipment or changes in Railroad facilities made solely to facilitate the Contractor's operations. The expense incurred by making such arrangements shall not be a part of this Contract.

The Contractor is hereby advised that Metro-North Railroad signal cable may exist within or adjacent to the project work area. The Contractor shall contact Mr. David Willard of Metro-North at (203) 337 3606, prior to any below ground excavation to assist in the identification and disposition of these cables. The signal cables are generally direct burial or in conduit, 18-72 inches below grade. Any cables or conduits which conflict with the contract work must be protected to the satisfaction of the Engineer or relocated by the Railroad prior to commencement of the work.

Contractor Requirements for Work Affecting the Railroad

The Contractor shall be governed by the General Requirements and Covenants of the Contract with the following additions:

1. All matters requiring Railroad Company approval or coordination shall be directed to:

Mr. David Willard
203-337-3606

2. In general, unless otherwise authorized by the Railroad, operations directly over or adjacent to the operating right-of-way will be performed during the following time periods:

Outage	Time*
Main line SINGLE track (Track 3) **OR** (Track 4) and catenary (including power)	Weekdays*: 12 AM to 5 AM
	Weekends*: 12 AM to 5 AM
Main line SINGLE track (Track 3) **OR** (Tracks 4) and catenary (including power)	A onetime 53-hour window during one weekend per stage (12 AM Saturday – 5 AM Monday)
Upon request at weekly MNR coordination meetings, and with the approval of MNR, adjacent (Track 1) **OR** (Track 2) outage may be granted (including power) during a SINGLE track outage, for construction activities that require it	Weekdays*: 12 AM to 5 AM
	Weekends*: 12 AM to 5 AM

*****PLEASE NOTE:

- Weekends are defined as: 12 AM Saturday to 11:59 PM Sunday
- Weekdays are defined as: 12 AM Monday to 11:59 PM Friday

3. The Contractor must submit a "work plan" to the Engineer for every track outage request. The work plan must include the reason for the outage along with the date and time, a safety assessment and identification of work hazards along with solutions to safety hazards, and a schedule of the Contractor's work.

Notes:

1. Track outages will be considered as requests are submitted.

2. While every effort is made to accommodate the Project needs, track outages cannot be guaranteed at all times. Track outages are dependent on many circumstances; including weather, availability of protective personnel, conflicts with other projects and unforeseen operating problems. Therefore, no claims may be made against Metro-North for delays due to unavailability of track and/or power outages. Further, outages are granted on the basis of what is deemed necessary for construction, not merely for the Contractor's convenience. Delays due to outage conflicts are subjected to "time only" delays.

3. The hours shown for track outages are not the actual time the tracks will be out of service. Time should be allowed for de-energizing and re-energizing power facilities.

4. Track outages requested and approved at the weekly railroad construction coordination meeting must be completed within the approved time frames. All personnel, materials, and equipment must be in the clear to allow for the safe use of the track by trains or railroad equipment by the end of the shift.

5. Unless otherwise arranged, the Contractor should expect to allow for his clearing of the track during the work shift in the event of a railroad operational emergency.

6. In the event of snow fall during the Contractor's work on a platform, the Contractor shall be responsible for removing the snow from the platform within the stage construction limits before returning the platform to service. The town shall be responsible for snow removal at all other locations of the station including any temporary structures.

Because the Contractor shall assume that the wires and rails of the Railroad will be energized at all times, the Contractor shall require all of its employees, subcontractors, and others, to sign a form similar to the following form, and furnish the Railroad with one original copy.

WARNING OF DANGER FROM ELECTRIFIED WIRES AND STRUCTURES
TO ALL PERSONS COMING NEAR ELECTRIFIED WIRES AND STRUCTURES

Notice is hereby given that contact, direct or indirect, with any of the electrified wires or structures of this Company is apt to result in serious injury or death and you are warned to avoid all such contact.

Dated

Job
AFE No.
Title

RECEIPT

I have this day received and carefully read the warning or danger from electrified wires and structures issued by you, which was attached to this receipt.

Signed _____

Occupation _____

Date _____

In the presence of

Witness _____

Job
AFE No.

NOTICE TO CONTRACTOR – CONSTRUCTION RESPONSIBILITY MATRIX

Activity	MNR Department	MNR Responsibilities	Contractor's Responsibilities
GENERAL			
Railroad Protection and Outages	Capital Projects	Provide flagmen for any work that fouls the track or has potential to foul the track including protection for hi-rail mounted equipment.	Coordinate with MNR when flagmen are needed
		Coordinate Contractor's need for track outages with operations.	Coordinate with MNR for track outages.
		Coordinate Contractor's need for power outages with Power Department.	
		Inspect Contractor's rail-mounted equipment for safety items and operations on track.	
		Provide safety training to Contractor's personnel.	
Railroad Work Coordination	Capital Projects	Coordinate removal and installation of existing station advertising signage with Outfront Media	Remove and reinstall all station signage
Power System Protect and Outages	Power	Provide A-men for any work that affects or potential to affect the Traction Power or Overhead Catenary System.	Coordinate with MNR when A-men are needed. Perform any work that affects traction power or Overhead Catenary System.
		De-energize catenary and feeder system as required for work within 10' of wires	

Activity	MNR Department	MNR Responsibilities	Contractor's Responsibilities
Final Inspection	Capital Projects	Inspect railroad related work performed by contractor once work is substantially complete.	
PLATFORM REMOVAL/REPLACEMENT, ACCESS STRUCTURE REMOVAL/REPLACEMENT			
Structural, Architectural, Civil	Structural		Install temporary fencing, platform barricades and sediment control system
		Relocate Bridge Plates and bases at Noroton Heights Station during stage construction	
		Install Bridge Plates, bases and car markers at Noroton Heights, Rowayton and Dairen stations for track outages	
			Install Temporary Precast Concrete Barrier Curb (TPCBC)
			Install temporary support system of Hollow Tree Ridge Rd stairway
		Verify installation procedure and limits	Install protection system for ballast and tracks
		Dispose of removed recycling centers (removed by contractor)	Remove existing guardrails, handrails, benches, light poles VMS/PA system and recycling centers from the existing platforms, provide MNR removed recycling centers, store VMS panels
			Remove existing platform sections and access structures
			Assemble/erect platform sections
			Form and pour concrete overlay
			Apply railroad platform waterproofing

Activity	MNR Department	MNR Responsibilities	Contractor's Responsibilities
		Apply “Watch the Gap” to platforms	
			Assemble/form/erect access structures and substructures
			Install/erect temporary shelter
			Install/erect permanent shelter
		Install new recycling centers provided by Contractor	Install platform appurtenances (Handrail/Guardrail, benches, light poles, etc.) acquire new recycling centers
		Remove bridge plates and bases	
			Install concrete sidewalk
			Remove Barrier Temporary Precast Concrete Barrier Curb
			Restore existing pavement and grass areas disturbed by construction
Electrical	Power		Run electric conduit throughout platforms, acquire all power wire
			Relocate electrical panel located in the eastbound platform shelter
			Pull power wires through conduit on platform, catenary and pedestrian overpass for VMS/PA system and platform lighting
			Perform LED modifications to existing platform light poles and canopy lighting
			Purchase speakers for PA system.
		Oversee and inspect installation of system, tie-in to the catenary	Install grounding connections throughout station

Activity	MNR Department	MNR Responsibilities	Contractor's Responsibilities
		structures	Install grounding and bonding on platforms and all necessary appurtenances (guardrail/handrail, benches, recycling centers, etc), make temporary connection to previously installed grounding system during stage construction
			Perform final connections of complete station grounding and bonding system throughout entire station except final connections to existing catenary structures
		Witness final testing of grounding and bonding	Perform final testing of Grounding and Bonding
Communications Systems	Communications	Perform disconnect of power and communication wires to PA system	
		Perform disconnect of power and communications wires to VMS system	
			Run communication conduit throughout platforms, acquire all communication wire
			Pull communication wires through conduit installed on platform, catenary and pedestrian overpass for VMS/PA system and platform lighting
		Final tie-in of power and communication wires to PA system and VMS system	
		Final tie-in of power and communication wires for VMS/PA system to existing panel	

Activity	MNR Department	MNR Responsibilities	Contractor's Responsibilities
		Perform final testing of VMS and PA system	
TVM RELOCATION			
Structural, Architectural, Civil	IT	Relocate TVMs to temporary location, anchor to slab	
		Move TVMs back to permanent platform location	
	Structural		Acquire conduits for temporary proposed power and communication conduit runs, with necessary wires.
			Install concrete slab
			Install/erect shelter for TVMs
			Remove shelter and anchorage
Electrical	Power	Run temporary conduits for power to temporary location of TVMs	
		Pull power wires through installed temporary conduit	
		Removed temporary conduit for power and wires.	
Communications Systems	Communications	Run temporary conduits for communication to temporary location of TVMs	
		Pull communication wires through installed temporary conduit	
		Remove temporary conduit for	

Activity	MNR Department	MNR Responsibilities	Contractor's Responsibilities
		communication and wires	
Electrical	Power/C&S	Perform connection to TVMs at temporary location and tie-in to existing panel	
		Disconnect temporary power and communication wires from TVMs in temporary location	
		Reconnect TVMs to existing power and communication lines on platform.	
MNR HARDLINE PLATFORM TELEPHONES			
Structural, Architectural, Civil	Structural		Place additional conduit to end of platforms for MNR phones
			Coordinate placement of telephone pole on platform with MNR, perform drilling through platform for conduit.
Communications Systems	Communications	Acquire telephones with all necessary equipment	
		Install telephones and poles	
		Pull communication wires through placed conduit	
		Perform test of system	

NOTICE TO CONTRACTOR – ROADWAY ACCESS WITHIN NOROTON HEIGHTS RAILROAD STATION

The Contractor is hereby advised that maintaining access to all existing railroad tracks, equipment, facilities, and construction sites within the Noroton Heights Railroad Station for railroad and State employees, contractors, emergency vehicles and others is hereby required. Access through the Project area shall be maintained at all times from the public entrances along Heights Rd, Hollow Tree Ridge Rd and Ledge Rd.

Temporary roadways in the Project area shall be surfaced with processed aggregate base sufficient to provide a stable driving surface. No stone ballast or miscellaneous fills shall be used to surface temporary roadways. The Contractor shall be responsible for maintaining temporary roadways in the Project area, including the filling of potholes, re-grading, snow removal and all other maintenance work required to maintain a driving surface suitable for the passage of a typical passenger vehicle. Construction and maintenance of temporary roadways shall be provided at no additional cost to the Department.

The Contractor shall repair any and all damage to the existing station roadway network and associated appurtenances located within and outside of the Project area which result from the Contractor's operations. Repairs shall be made within 24 hours of the occurrence of the damage or as directed by the Engineer. Repairs shall restore roadways to the line and grade existing at the time the Contract was awarded. Construction methods and materials shall be of like kind and quality to that used in the original construction of the roadway network. The Contractor shall make all repairs at no additional cost to the Department.

No existing or temporary roadways shall be reduced in width, relocated, or shut down without first submitting a traffic plan to the Engineer for approval. Also see NOTICE TO CONTRACTOR – WORK ON RAILROAD PROPERTY.

The Contractor shall bid the Contract accordingly.

NOTICE TO CONTRACTOR – METRO-NORTH RAILROAD FORCE ACCOUNT WORK AND COORDINATION

The Contractor is hereby notified that the following represents, in general, construction services and material to be furnished and completed by Metro-North Railroad (MNR). Refer to NOTICE TO CONTRACTOR - CONSTRUCTION RESPONSIBILITY MATRIX for a detailed listing.

1. Remove or relocate MNR owned materials and equipment, stored on the construction site, if it is in conflict with the Contractor's activities.

2. Provide flagmen as required during construction.

3. Provide work train and crew for Metro-North construction services, as required.

4. Provide Class A personnel protection, as required.

5. Make all "hot connections" to in-service railroad systems, as required.

The above list may not be all-inclusive and does not relieve the Contractor from its responsibility to coordinate work with MNR that is required under other Contract provisions.

Work performed by MNR will directly affect the Contractor's operation. Special coordination efforts by the Contractor will be required in support of MNR force account work which may be executed in multiple stages at various times and locations throughout the duration of the Project.

The Contractor shall provide MNR access to the Project site required for MNR to complete its work.

NOTICE TO CONTRACTOR – ELECTRICAL POWER TO SITE

The Contractor is hereby advised that temporary electrical power is not readily available to this Project and the use of portable generators may be required. The Contractor is advised that it may be necessary to coordinate the installation of electrical power, including temporary power, to the site early in the construction process. The station electrical distribution system is owned by the Department and operated by Metro-North Railroad. The Contractor shall coordinate this activity with the Engineer and Metro-North Railroad for work depicted on the Contract Documents. The Contractor shall bid the Project accordingly.

NOTICE TO CONTRACTOR – ELECTRIC POWER

The Contractor is hereby notified that all temporary electrical power installations must be grounded per the latest adopted National Electric Code.

Additionally, all equipment shall be grounded to a common ground.

NOTICE TO CONTRACTOR – COMMON WORK RESULTS FOR ELECTRICAL

The Contractor is hereby advised that he shall perform the electrical equipment coordination and common electrical installation requirements such as sleeves for raceways and cables, sleeve seals, and grout. All work shall be in strict conformance with the latest National Electric Code. All electrical components shall be installed per requirements of NFPA 70, NFPA 70E and other codes identified in the Contract Documents.

Description:

This specification covers all proposed electrical work as shown on the Contract Plans.

Materials:

All steel pipe sleeves shall be ASTM A53/A53M, Type E, Grade B, Schedule 80, galvanized steel, plain ends. All Sleeve Seals shall be Modular sealing device, designed for field assembly, to fill annular space between sleeve and raceway or cable. Grout: Nonmetallic, Shrinkage-Resistance Grout, ASTM C1107, factory-packaged, nonmetallic aggregate grout, noncorrosive, mixed with water to consistency suitable for application and 30-minute working time.

The Contractor must submit samples of any product used in the construction, if directed by the Engineer. Any opening in the fire rated walls due to the penetration of conduit shall be sealed with a 1 HR rated sealant. The Contractor shall submit product data and assurance submittals in accordance with NOTICE TO CONTRACTOR – POTENTIAL FOR ASBESTOS CONTAINING MATERIALS. Refer to Form 816 Article 1.06.03 and Form 816 Article 1.20-1.06.03 for additional information, for delivery, storage and handling.

Method of Measurement:

No separate measurement will be made for the work in this Section. All costs in connection therewith will be considered as follows:

- ITEM #0063521A – RAIL FACILITY UPGRADE (SITE NO. 1)
- ITEM #1003925A – REMOVE EXISTING LUMINAIRE
- ITEM #1003926A - REINSTALL LIGHT POLE
- ITEM #1003997A – REMOVE POLE
- ITEM #1005600A – LED LUMINAIRE
- ITEM #1008183A – 3/4” PVC COATED CONDUIT
    - ITEM #1008184A – 1” PVC COATED CONDUIT
    - ITEM #1008186A – 4” PVC COATED CONDUIT
- ITEM #1008901A – REMOVE CONDUIT

Basis of Payment:

The work required to be done in accordance with these specifications, will not be paid for separately but will be considered incidental to the following:

- ITEM #0063521A – RAIL FACILITY UPGRADE (SITE NO. 1)
- ITEM #1003925A – REMOVE EXISTING LUMINAIRE
- ITEM #1003926A - REINSTALL LIGHT POLE
- ITEM #1003997A – REMOVE POLE
- ITEM #1005600A – LED LUMINAIRE
- ITEM #1008183A – 3/4” PVC COATED CONDUIT
    - ITEM #1008184A – 1” PVC COATED CONDUIT
    - ITEM #1008186A – 4” PVC COATED CONDUIT
- ITEM #1008901A – REMOVE CONDUIT

NOTICE TO CONTRACTOR – UNDERGROUND UTILITIES

The work to be accomplished under this Contract is to be performed within the Noroton Heights Railroad Station. Contractor must coordinate with Call-Before-You-Dig (CBYD) for the mark out of any underground utilities within the Project limits. The Contractor is responsible for locating all utilities in locations not coordinated by CBYD, prior to performing any excavations.

Refer to NOTICE TO CONTRACTOR – PROTECTION OF EXISTING UTILITIES for additional information.

NOTICE TO CONTRACTOR – PROTECTION OF EXISTING UTILITIES

The utilities within the limits of the station are shown on the contract plans. The Contractor shall be aware that before, during, and after the completion of the project, there are several other ongoing independent projects adjacent to the project limits. These projects are as listed in NOTICE TO CONTACTOR - WORK ON RAILROAD PROPERTY. These projects may include the relocation of existing utilities and the installation of new facilities. It should be noted that the Contractor's activities may overlap the activities of the contractors engaged in the execution of the other projects, as well as the activities of State of Connecticut, Metro-North Railroad, Amtrak, and other railroad and utility company personnel.

The Contractor shall completely coordinate his operations with the affected utility companies and/or agencies, and ensure that his work is coordinated with that of the other contractors. The coordination of the work is the complete responsibility of the Contractor. When the work required under his contract is in conflict with work being carried out by another contractor or agency, it is the responsibility of the Contractor to notify the Engineer immediately of the conflict.

Existing utilities shall be maintained during construction except as specifically stated herein and/or noted on the Construction Documents and as coordinated with the utilities. The Contractor shall verify the location of underground, structure mounted and overhead utilities. Construction work within the vicinity of utilities shall be performed in accordance with current safety regulations.

The Contractor shall notify "Call Before You Dig", telephone 1-800-922-4455 for the location of public utility, in accordance with Section 16-345 of the Regulations of the Department of Utility Control. Refer to NOTICE TO CONTRACTOR – UNDERGROUND UTILITIES for additional information.

Representatives of the various utility companies shall be provided access to the work by the Contractor.

Contractors are cautioned that it is their responsibility to verify locations, conditions, and field dimensions of all existing features, as actual conditions may differ from the information shown on the Contract Documents or contained elsewhere in the specifications. Verifications may require the excavation of exploratory test pits.

The Contractor shall notify the Engineer prior to the start of work and shall be responsible for all coordination with the Department. The Contractor shall allow the Engineer complete access to the work.

The Contractor shall be liable for all damages or claims received or sustained by any persons, corporations or property in consequence of damage to the existing utilities, their appurtenances, or other facilities caused directly or indirectly by the operations of the Contractor.

Any damage to any existing private or public utility, as a result of the Contractor's operations, shall be repaired to the Utility's and the Engineer's satisfaction at no cost to the State or the Utility, including all materials, labor, etc., required to complete the repairs.

The Contractor's attention is directed to the requirements of Section 1.07.13 – "Contractor's Responsibilities for Adjacent Property, Facilities and Services".

Prior to opening an excavation, effort shall be made to determine whether underground installations, i.e., water, sanitary, gas, electric ducts, communication ducts, etc., will be encountered and, if so, where such underground installations are located. Also see the special provision/item "Non-Destructive Utility Investigation". When the excavation approaches the estimated location of such an installation, the exact location shall be determined by careful probing or hand digging, and when it is uncovered, proper supports shall be provided for the existing installation. Utility companies shall be contacted and advised of proposed work prior to the start of actual excavation, as noted above.

NOTICE TO CONTRACTOR – USE OF STATE PROPERTY

Use of State property by the Contractor for purposes other than the construction activities included in this Contract requires advance approval from the Engineer.

This applies to activities including, but not limited to: Staging and storage areas, screening/crushing operations, asphalt or concrete plants, gravel/borrow pits, and other manufacturing and/or mining operations.

The bulk storage of fuels and lubricants shall not be permitted on State property.

The storage of hazardous materials, other than those associated with the Contractor's Project related operations, shall not be permitted on State property. The Contractor shall assume sole responsibility for the proper storage, handling, management, and disposal of hazardous materials. All remedial and punitive costs incurred by the Department as a result of the Contractor's failure to properly manage hazardous materials shall be borne by the Contractor.

The Contractor is cautioned that environmental testing of the site may be required at the Contractor's expense both prior to and upon completion of the use of the State property. The Contractor shall be responsible for restoring the site and removal of all contaminants which may have been deposited at the site during its use. The Contractor must conform to the Department's Best Management Practices, environmental permit conditions and other applicable State and federal regulations. The use and restoration of the site will be at no cost to the State of Connecticut. The use of the site will be for this specific DOT Project only. In addition, approval or denial of such request shall not be used as a reason for any time extensions or claim.

For Staging and Storage Areas

The Contractor must submit all requests for the temporary use of any State property in writing to the Engineer. The following minimum information shall be included with the request(s): a description of the proposed operation or use of the site; a site plan detailing the location of the proposed operation/use, and sedimentation and erosion controls; an area plan detailing ingress and egress to the site and proximity to residential and/or occupied buildings; copies of any required environmental permits; and planned hours of operation. The submittal shall also include photo documentation (minimum of 12 each, 8"x10" color photos) showing the preconstruction condition of the site and adjacent property at the site boundaries. If the site is State property outside of the DOT right of way, authorization from other State Agencies will also be required for use of the property or site.

For Use Other than Construction Staging and Storage Areas

The Contractor must submit all requests for the temporary use of any State property in writing to the Engineer. The request(s) shall include the same information required for storage and staging areas. In addition, the Contractor will be required to provide written confirmation that the municipality in which the site is located does not object to the proposed use of the State property. The Contractor will be required to execute a license agreement with the Department for use of State property for other than staging and storage areas.

For asphalt batching or continuous mix facilities, the Contractor shall also provide a map detailing the outer most perimeter of the facility showing all structures, land use, watercourses, wetlands, and areas of environmental concern with one-third mile of the facility perimeter. No such facility will be permitted on State property where any hospital, nursing home, school, area of critical environmental concern, watercourses, or residential housing exists within one-third mile of the perimeter of the facility (P.A. 98-216).

NOTICE TO CONTRACTOR – CONTRACT DURATION

The Contractor is hereby notified that this is not to be considered an ordinary project by any means and that due to the inconvenience to the traveling public that it causes, extra manpower, equipment and workshifts may be required to complete the work in accordance within the specified contract time.

NOTICE TO CONTRACTOR – CAS CERTIFICATION FOR ABRASIVE BLAST CLEANING AND COATING WORK

This Contract requires abrasive blast cleaning and coating work be done with at least one (1) Coating Application Specialist per four (4) craft-workers. Coating Application Specialist (CAS) certification is available through the Society for Protective Coatings (SSPC). The CAS program is based on the requirements of SSPC ACS-1/NACE 13, a standard published jointly in 2008 by SSPC and NACE International (National Association of Corrosion Engineers). ACS-1 defines training and experience requirements that tradespersons must have in order to qualify to be assessed for certification. CAS QP-1 implementation requires that the CAS Level II certified applicator be on the job during abrasive blast cleaning and painting operations.

The firm proposed to perform abrasive field blast cleaning and coating on this Project must meet the requirements outlined in the special provisions under "Contractor - Subcontractor Qualifications."

When applicable, the shop painting firm proposed to perform abrasive blast cleaning and shop painting on this Project must meet the requirements outlined in the special provisions under "Qualifications of Shop Painting Firm."

NOTICE TO CONTRACTOR – SUBMITTALS AND PROCUREMENT OF MATERIALS

Upon award, the Contractor shall proceed with shop drawings, working drawings, procurement of materials, and all other submittals required to complete the work in accordance with the contract documents. The Contractor may not begin any field work until authorized by the Engineer in accordance with ARTICLE 1.03.08 – NOTICE TO PROCEED AND COMMENCEMENT OF WORK.

NOTICE TO CONTRACTOR – RAILROAD SPECIFICATIONS

The contractor is hereby notified that all railroad specifications contained elsewhere herein shall be made a part of this contract, and that the contractor shall be bound to comply with all requirements of such specifications. The requirements and conditions set forth in the subject specifications shall be binding on the contractor just as any other specification would be.

NOTICE TO CONTRACTOR – UTILITY SPECIFICATIONS

The contractor is hereby notified that all utility specifications contained elsewhere herein shall be made a part of this contract, and that the contractor shall be bound to comply with all requirements of such specifications. The requirements and conditions set forth in the subject specifications shall be binding on the contractor just as any other specification would be.

NOTICE TO CONTRACTOR – HAZARDOUS MATERIALS INVESTIGATIONS

Hazardous building materials site investigations have been conducted at the Noroton Heights Railroad Station in Darien, Connecticut where platforms are scheduled to be replaced.

The results of these investigations indicated the presence of asbestos containing materials (ACM), lead based paint (LBP) and additional hazardous or otherwise regulated items (within the proposed construction areas). However, ACM in the form of transite was only found on the advertisement billboards and they are reportedly to be removed by Metro North Railroad (MNRR).

The Contractor is hereby notified that these hazardous building materials requiring special management or disposal procedures will be encountered during various construction activities conducted within the project limits. The Contractor will be required to implement appropriate health and safety measures for all construction activities impacting these materials. These measures shall include, but are not limited to, air monitoring, engineering controls, personal protective equipment and decontamination, equipment decontamination and personnel training. WORKER HEALTH AND SAFETY PROTOCOLS WHICH ADDRESS POTENTIAL AND/OR ACTUAL RISK OF EXPOSURE TO SITE SPECIFIC HAZARDS ARE SOLELY THE RESPONSIBILITY OF THE CONTRACTOR.

The Department, as Generator, will provide an authorized representative to sign all manifests and waste profile documentation required by disposal facilities for disposal of hazardous materials.

The Sections which shall be reviewed by the Contractor include, but are not limited to, the following:

- Item No. 0020902A – Lead Compliance for Building Renovation and Demolition
- Item No. 0101143A – Handling and Disposal of Regulated Items (Estimated Cost)

The Contractor is alerted to the fact that a Department environmental consultant will be on site for abatement and related activities, to collect environmental samples (if necessary), and to observe site conditions for the State.

Information pertaining to the results of the hazardous building materials investigation discussed can be found in the documents listed below. These documents shall be available for review at the Office of Contracts, 2800 Berlin Turnpike, Newington, Connecticut.

- Pre-Renovation Investigative Survey for Hazardous Building Materials, Noroton Heights Railroad Station – Platform Replacements, Darien, Connecticut. TRC Environmental Corporation, January 2016.

NOTICE TO CONTRACTOR – SECTION 4.06 AND M.04 MIX DESIGNATION EQUIVALENCY AND PG BINDER EQUIVALENCY

Sections 4.06 and M.04 have been replaced in their entirety with the Special Provisions included as part of this contract. These Special Provisions reflect changes in mix designations for various types of hot-mix asphalt (HMA) and include the removal of mixes designed and governed by the Marshall Mix Design method. The following table is to be used to associate mix designations noted on the plans with those in the contract specifications and related documents. Mix designations on each row are equivalent and refer to a single mix, which shall be subject to the requirements of the Section 4.06 and M.04 Special Provisions for the Official Mix Designation in the leftmost column of the corresponding row in the table.

Mix Designation Equivalency Table

Official Mix Designation	Equivalent Mix Designation (a)	Equivalent Mix Designation (b)
(c)	Superpave 1.5 inch	Superpave 37.5 mm
HMA S1	Superpave 1.0 inch	Superpave 25.0 mm
HMA S0.5	Superpave 0.5 inch	Superpave 12.5 mm
HMA S0.375	Superpave 0.375 inch	Superpave 9.5 mm
HMA S0.25	Superpave 0.25 inch	Superpave 6.25 mm
(c)	Superpave #4	Superpave #4
HMA S0.5 (d)	Bituminous Concrete Class 1 **(e)**	Bituminous Concrete Class 1 **(e)**
HMA S0.375 (d)	Bituminous Concrete Class 2 where it is specificed in lifts 1.25 or thicker **(e)**	Bituminous Concrete Class 2 where it is specificed in lifts 1.25 or thicker **(e)**
HMA S0.25 (d)	Bituminous Concrete Class 2 where it is specified in lifts 1.0 inches to less than 1.25 inches **(e)**; Bituminous Concrete Class 12 **(e)**	Bituminous Concrete Class 2 where it is specified in lifts 1.0 inches to less than 1.25 inches **(e)**; Bituminous Concrete Class 12 **(e)**
HMA S1 (d)	Bituminous Concrete Class 4 **(e)**	Bituminous Concrete Class 4 **(e)**
Curb Mix	Bituminous Concrete Class 3	Bituminous Concrete Class 3

Notes

(a) This mix designation is generally included with projects where the English measurement system is used. The mix designation may contain both the English measurement system

designation and the SI (metric) measurement system designation, one of which would be in parenthesis.

(b) This mix designation is generally included with projects where the SI (metric) measurement system is used. The mix designation may contain both the English measurement system designation and the SI measurement system designation, one of which would be in parenthesis.

(c) This mix is no longer in use except by contract-specific Special Provision; if this mix is called for in the Plans but no such Special Provision is included for this contract a suitable substitute must be approved by the Engineer.

(d) Unless approved by the Engineer, the Superpave Design Level for the Official Mix Designation bituminous concrete replacing a Marshall mix called for in the plans or other contract documents shall be Design Level 2 for mixes used on mainline or shoulders of state-maintained roadways and Design Level 1 elsewhere, including but not limited to driveways or sidewalks.

(e) All mixes designed under the Marshall mix-design method are no longer covered by the 4.06 Special Provision. Wherever they appear in Contract plans and documents they shall be substituted by the "Official Mix Designation" in the same row of the Mix Designation Equivalency Table. Unless approved by the Engineer, the Superpave Design Level shall be Level 1.

PG Binder Designation Equivalency Table

Official Binder Designation	Equivalent Binder Designation	Use
PG 64S-22	PG 64-22	Hot-Mix Asphalt (HMA S* pay items and pay items using HMA S* materials)**(a),(b)**
PG 64E-22	PG 76-22	Polymer-Modified Asphalt (PMA S* pay items and pay items using HMA S* materials)**(a),(b)**

Notes

(a) Use the Mix Designation Equivalency Table above to identify the Official Mix Designation for materials using the Marshall mix design method, i.e. "Bituminous Concrete Class *."

(b) Refer to the NTC – Superpave Design Level for the Superpave Design Level to use for each mix on a project. The PG Binder Designation Equivalency Table can be used to obtain the Official Binder Designation for each mix identified in the NTC – Superpave Design Level.

NOTICE TO CONTRACTOR – SUPERPAVE DESIGN LEVEL INFORMATION

Hot-Mix Asphalt (HMA) and Polymer-Modified Asphalt (PMA) constructed according to the Superpave mix-design system are required to attain a Superpave Design Level and are required to use a Performance Graded (PG) binder. The Superpave Design Levels required for this project are listed in Table 1. The required PG binder is indicated for each mix with an "X" in the appropriate box in Table 1.

TABLE 1 – Superpave Design Level and Performance Graded (PG) Binder

Mix Designation	PG Binder		Project Wide
	PG 64S-22	PG 64E-22	Design Level
HMA S0.25	-	-	-
HMA S0.375	X	-	2
HMA S0.5	-	-	-
HMA S1	-	-	-
PMA S0.25	-	-	-
PMA S0.375	-	-	-
PMA S0.5	-	-	-
PMA S1	-	-	-

Note: Please note that PMA mix designations typically use PG 64E-22 and HMA mix designations use PG 64S-22

SECTION 1.01 – DEFINITION OF TERMS AND PERMISSIBLE ABBREVIATIONS

1.01.01--Definitions:

Delete the following term:

"**SHOP DRAWINGS:** Drawings, including . . . in the Contract."

Replace paragraph "C. Special Provisions" under "SPECIFICATIONS" with the following:

C. Special Provisions—Other Department specifications applicable to an individual project, including NOTICE TO CONTRACTORS.

SECTION 1.02 – PROPOSAL REQUIREMENTS AND CONDITIONS

Article 1.02.04 – Examination of Plans, Specifications, Special Provisions and Site Work:

Replace the third sentence of the last paragraph with: The Department cannot ensure a response to enquiries received later than ten (10) days prior to the original scheduled opening of the related bid.

SECTION 1.05 – CONTROL OF THE WORK

1.05.02--Plans, Working Drawings, and Shop Drawings:

Delete the entire subsection entitled "3. Shop Drawings:"

1.05.06--Cooperation With Utilities (including Railroads):

Add the following after the last paragraph:

"Special Requirements Regarding Work in Metro-North territory:

Description:
This section covers authority, definitions, regulatory requirements, traffic regulation and coordination of the Contractor's work schedule with the operation of train service, construction equipment and safety requirements for working within railroad right-of-way, and provisions for storage of materials and equipment and worker safety rules. Subsequent to the Engineer's Pre-Construction Meeting and prior to commencement to Contract activities, the Engineer will hold a Working on the Railroad Meeting to emphasis these Specifications.

Metro-North Commuter Railroad Company – Permission to Enter Upon Railroad Property
Permission is hereby granted to the Contractor to enter property of the State of Connecticut, under the custody and control of the Connecticut Department of Transportation (hereinafter called "ConnDOT") and managed by Metro-North Commuter Railroad Company (hereinafter called "Railroad"), a public benefit corporation and subsidiary of Metropolitan Transportation Authority (hereinafter called "MTA"). The purpose of this permission shall be solely for the purposes outlined in this Contract and under the following terms and conditions:

1. Location and Access. Permission is hereby granted to the Contractor and its subcontractor(s), if any, to enter the property within the Project Limits identified on the Contract Plans (hereinafter called the "Property").
2. Liability. The Contractor covenants and agrees to at all times indemnify, protect and save harmless MTA, Railroad, National Railroad Passenger Corporation ("AMTRAK"), Housatonic Railroad Company ("Housatonic"), Providence & Worcester Railroad Company ("P&W"), and ConnDOT from and against any and all losses, damages, detriments, suits, claims, demands, costs, and charges which MTA, Railroad, AMTRAK, Housatonic, P&W, or ConnDOT may directly or indirectly suffer, sustain, or be subjected to by or on account of Contractors entry upon, occupancy or use of the Property, or the conduct thereon of the Contractor, its subcontractors, officers, employees, agents or invitees, whether such loss or damage be suffered or sustained by MTA, Railroad, AMTRAK, Housatonic, P&W or ConnDOT directly or persons (including employees of MTA, Railroad or ConnDOT or Corporations who may seek to hold MTA, Railroad, AMTRAK, Housatonic, P&W or ConnDOT liable therefor), and whether attributable to the

fault, failure or negligence of MTA, Railroad, AMTRAK, Housatonic, P&W or ConnDOT or otherwise.

3. Consideration. The Contractor will pay to the Railroad, the sum of Zero Dollars ($0.00) for the right to enter upon the Property.
4. Terms of Permit. The Railroad reserves the right to revoke this permission at any time. Unless subsequently modified, this shall begin with notice to proceed and shall end at Contract completion at which time it shall expire automatically. Under no circumstances shall this temporary permission be construed as granting the Contractor any rights, title or interest of any kind or character in, on, or about the land or premises of MTA or Railroad thereafter. The Permittee agrees to notify the Railroad when use of the Property or work is completed.

DEFINITIONS:

Railroad - Whenever the term "Railroad" is used without further qualification, it shall be taken to mean Metro-North Railroad.

On or Adjacent to - shall be interpreted to include space on, above and below railroad right-of-way operated by Metro-North, as well as space on, above, and below adjacent property which Metro-North determines to affect the safe operations of railroad service.

The Safety Rules - All work shall be performed in accordance with rules, regulations, procedures, and safe practices on the Railroad, FRA, OSHA, NESC and all other government agencies having jurisdiction over this Project.

Authority of the Engineer - This supplements Article 1.05.01 in that all Contract work upon or affecting railroad property, right-of-way or facilities, shall also be subject to the approval of the Chief Engineer, Maintenance of Way of the Railroad or its duly authorized representative, through coordination with the Engineer.

Coordination of Work - The Contractor shall be responsible for the coordination of the work of its subcontractors with respect to the railroad property, right-of-way or facilities.

Track - The space between the rails plus not less than 4-ft outside each rail.

Horizontal Clearance Point - A point 10-ft from the centerline of a track.

Vertical Clearance Point - A point 22’-6” above the top of a running rail unless otherwise authorized by Metro-North.

Traffic Envelope - The area encompassed by the vertical and the horizontal clearance points.

Obstruction - An entering of the traffic envelope, also referred to as fouling.

Occupancy - Any use of track other than direct crossing.

Right-of-Way - The limits of railroad property on either side of tracks.

Use of Track - Obtaining permission from the proper authority at Metro-North for track occupancy.

Conductor/Flagman - A Metro-North employee qualified on the Rules of the Operating Department and qualified on the physical characteristics of the portion of the railroad involved. They are the contact employee qualified to obtain the use of track. Each conductor/flagman will have the proper flagging equipment, up-to-date Metro-North Operating Rules, Metro-North Timetables and Metro-North Safety Rules.

Groundman - Class “A” employee of Metro-North’s Power Department authorized to de-energize/re-energize and ground high-tension power lines.

Qualified Metro-North Employee - For the purpose of these instructions, a qualified employee is a Metro-North employee qualified to remove track or tracks from service.

1.0 REQUIREMENTS FOR PERFORMING WORK ON OR ADJACENT TO THE RIGHT OF WAY OF THE RAILROAD

1.1 General

1.1.1 The Contractor should note that the proposed work involves construction operations on or adjacent to property owned by ConnDOT and operated by Metro-North Railroad. In working near an operating Railroad, great care must be exercised and the Railroad's safety rules must be strictly observed.

1.1.2 If while completing the work covered by this Contract, the tracks or other facilities of the Railroad are endangered, the Contractor shall immediately do such work as directed by the Railroad through the Engineer to restore safety. Upon failure of the Contractor to carry out such orders immediately, the Railroad may take whatever steps as are necessary to restore safe conditions. The cost and expense to the Railroad of restoring safe conditions, or of any damage to the Railroad's trains, tracks or other facilities caused by the Contractor's or subcontractor's operations, shall be considered a charge against the Contractor and shall be paid for by him, or may be deducted from any monies due or that may become due him under this Contract.

1.2 Rules and Regulations

1.2.1 Railroad traffic shall be maintained at all times, and the Contractor shall conduct all of its operations on or adjacent to the Railroad right-of-way fully within the rules, regulations, and requirements of the Railroad. The Contractor shall be responsible for acquainting himself with such requirements as the Railroad may demand. The Contractor shall include in its bid any expenses occasioned by delay or interruption of its work by reason of the operation or maintenance of the Railroad facilities.

1.2.2 The Contractor shall obtain verification of the time and schedule of track occupancy from the Railroad before proceeding with any construction or demolition work on or adjacent to the Railroad right-of-way.

1.2.3 All work to be done on or adjacent to the Railroad right-of-way shall be performed by the Contractor in a manner satisfactory to the Railroad and shall be performed at such times and in such manner as not to interfere with the movement of trains or traffic upon the tracks of the Railroad. The Contractor shall use all necessary care to avoid accidents, damage, delay or interference with the Railroad's trains or property.

1.2.4 If deemed necessary by the Railroad, it may furnish or assign an inspector who will be placed on the work during the time the Contractor or any subcontractor is performing work under the Contract on Railroad property.

1.2.5 Before proceeding with any construction of demolition work on or adjacent to the Railroad's property, a pre-construction meeting shall be held at which time the Contractor shall submit for approval of the Railroad, Plans, computations, and a detailed description of its method of procedure for accomplishing the specific construction work required under this Contract, including methods of protecting Railroad traffic. Such approval shall not serve in any way to relieve the Contractor of its complete responsibility for the adequacy and safety of its methods of procedures.

1.2.6 The Contractor shall conduct its work and handle its equipment and materials so that no part of any equipment shall foul an operated track or wire line without the written permission of the Railroad.

1.2.7 Equipment shall be considered to be potentially fouling the track when located in such a position that failure of same with or without load brings the equipment within the traffic envelope. No equipment shall be placed in this position without prior approval of the Railroad.

1.2.8 Equipment of the Contractor to be used:

1.2.8.1 Equipment of the Contractor to be used adjacent to the tracks shall be in first-class condition so as to fully prevent failures of defective equipment that might cause delay in the operations of trains or damage to Railroad facilities. Its equipment shall not be placed or put into operation adjacent to tracks without first obtaining permission from the Railroad. Under no circumstances shall any equipment or materials be placed or stored within 25-ft from the near rail of a track in operation, unless approved in advance by the Metro-North representative.

1.2.8.2 High rail equipment of the Contractor to be used on the tracks shall be subject to prior approval of the Railroad. The equipment must be inspected and approved in advance at Metro-North's facility by Metro-North inspectors.

1.2.8.3 On track vehicles shall be equipped with a MNR approved tow bar and coupler. Multiple vehicles shall move in tandem and coupled when directed by Metro-North. Movement of on track vehicles shall proceed only under the direct supervision of a qualified MNR employee.

1.2.9 Materials and equipment belonging to the Contractor shall not be stored on Railroad property without first having obtained permission

from the Engineer and Railroad, and such permission will be on the condition that the Engineer and Railroad will not be liable for damage to such materials and equipment from any cause. The Contractor shall keep the tracks adjacent to the site clear of all refuse and debris that may accumulate from its operations and shall leave the Railroad property in the condition existing before the start of its operations.

1.2.10 The Contractor shall coordinate with the Engineer and the Railroad in order to determine the type of protection required to insure safety and continuity of Railroad traffic incident to the particular methods of operation and equipment to be used on the work.

1.2.11 The Railroad will require protection during all periods when the Contractor is working on, or over, the right-of-way of the Railroad, or as may be found necessary in the opinion of the Railroad. When protection is required, refer to Paragraph 1.7.

1.2.12 It shall be expressly understood that this Contract includes no work for which the Railroad is to be billed by the Contractor, and it shall be further understood that the Contractor is not to bill the Railroad for any work which he may perform, unless the Railroad gives a written request that such work be performed at its expense.

1.2.13 Upon completion of the work, and before final payment is made, the Contractor shall remove from within the limits of the Railroad's right-of-way, all machinery, equipment, surplus materials, falsework, rubbish and temporary buildings, and other property of the Contractor/sub-contractor, and shall leave the right-of-way in a condition satisfactory to the Railroad.

1.3 Railroad Protective Services: Railroad protective services will be provided in accordance with the Roadway Worker's Protective Act, Title 49, Part 214, Sub-part C. Railroad protective services will also be performed to insure safe operations of trains when construction work would, in the Railroad's opinion, be a hazard to Railroad operations.

1.4 Definition of Hazard: Metro-North has furnished the statements quoted below explaining when they consider a hazard to operations exists.

"Protective services will be required whenever the Contractor is performing work on or adjacent to the Railroad tracks or right-of-way, such as excavating, sheeting, shoring, erection and removal of forms, handling materials, using equipment which by swinging or by failure could foul the track, and when any other type of work being performed, in the opinion of the Railroad, requires such service."

1.5 Contractor Requirements for Work Affecting the Railroad

1.5.1 All matters requiring Railroad Company approval or coordination shall be directed to the Engineer or a duly authorized representative thereof, for forwarding to Metro-North Railroad.

1.5.2 Detailed plans and appurtenant data and calculations for any operation which, in the opinion of Metro-North, affect the Railroad, must be submitted to the Engineer or a duly authorized representative thereof, for forwarding to Metro-North Railroad for approval prior to commencement of the work. A Connecticut registered Professional Engineer must stamp all plans and calculations submitted.

1.5.3 Permissible Track Outages: Permissible Track Outages are identified in the NOTICE TO CONTRACTOR – WORK ON RAILROAD PROPERTY_contained within the Provisions of the Contract. The times identified are the times that the track can be removed from service. If power outages are required, the grounding of the wires will subtract approximately 30 minutes from the outage time.

1.5.4 The Contractor shall maintain a minimum of 12-in level shoulder from ends of ties to maintain lateral track support for all excavations and shall not excavate any slope steeper than 1 (vertical) on 2 (horizontal) from the edge of the shoulder. Sheeting shall be required on all excavations where the side of the excavation is intercepted by the Railroad live load influence line. The live load influence line is defined as a line originating at the bottom edge of tie and extending downward at a slope of 1 (vertical) on 1½ (horizontal). Such excavations must be designed to withstand, in addition to all common loads such as soil pressure and hydrostatic pressure, a railroad live load of Cooper E-80.

1.5.5 The Contractor shall be required to design and install protective scaffolding over the right-of-way where, at the sole discretion of the Railroad, such scaffolding is necessary to protect the Railroad from possible falling debris; paint or other materials; to protect personnel working about the right-of-way or to provide a platform for personnel, materials and/or equipment. Said scaffolding shall be designed for live load of 200 lbs./sq. ft applied uniformly over the entire structure and a 2 kips concentrated load placed anywhere on the structure. The two loads are not to be applied simultaneously for design purposes.

1.5.6 All excavation areas within or near interlocking limits shall be located by the Contractor and inspected by Metro-North Railroad for the purpose of determining conflicts with underground facilities.

Exploratory trenches, 36-in deep and 15-in wide in the form of an "H" with outside dimensions matching and outside of sheeting dimensions are to be hand dug, in areas where railroad underground installations are known to exist. These trenches are for exploratory purposes only and are to be backfilled and compacted immediately. All work outlined above must be done in the presence of a Railroad inspector.

1.5.7 Cavities adjacent to sheet piling, created by driving of sheet piling, shall be filled with sand and any distributed ballast must be restored and tampered immediately.

1.5.8 Sheet piling shall be cut off at top of tie during construction and at 36-in below bottom of tie after construction just prior to completion of back filling.

1.5.9 Plans and calculations for sheeting and scaffolding must be submitted to the Engineer for forwarding to the Railroad for approval prior to construction. A Connecticut registered Professional Engineer must stamp plans and calculations.

1.6 Requirements for Erection, Demolition and Other Rigging Operations On or Adjacent to Railroad Right-of-Way: The Contractor shall be required to furnish the following information to the Engineer or a duly authorized representative thereof, for forwarding to Metro-North Railroad for their approval prior to the start of any rigging operation over or adjacent to the Railroad right-or-way:

1.6.1 Plan view showing locations of cranes, boom length and rigging operating radii, with delivery or disposal locations shown.

1.6.2 Crane rating sheets showing crane(s) to be adequate or 150% of the lift. Crane and boom nomenclature is to be indicated.

1.6.3 Plans and computations showing weight of pick.

1.6.4 Location plan showing obstructions, indicating that the proposed swing is possible.

1.6.5 Plans showing locations and details of mats, planking or special decking as may be required by the Railroad.

1.6.6 Written statement from crane owner giving date of last crane condition and safety inspection and the results of said inspection.

1.6.7 Data sheet listing number, type, size and arrangement of slings, spreader bars or other connecting equipment. Include copies of catalog or information sheets of specialized equipment. All such equipment shall be shown adequate to safely carry 150% of the calculated loading.

1.6.8 A complete procedure is to be included, indicating the order of lifts and repositioning or rehitching of the crane or cranes.

1.6.9 Temporary support of any components or intermediate stages is to be shown.

1.6.10 A time schedule of the various stages must be shown, as well as a schedule for the entire lifting procedure.

1.6.11 A Connecticut licensed Professional Engineer must stamp all erection, demolition and rigging plans and calculations submitted to the Railroad.

1.6.12 Operations directly on or adjacent to the operating right-of-way will be performed only at times and under conditions specified by the Railroad's representative.

1.7 Ordering Protective Personnel: Metro-North will furnish protective personnel (flagmen, inspectors, maintenance personnel and similar labor) to protect the operation of train traffic during the Contractor's construction activities. Railroad protective services will also be provided in conformance with the Roadway Worker's Protective Act. There will be no charge to the Contractor for Metro-North protective personnel. It is agreed that the providing (or failure to provide) of any conductors, flagmen, groundmen or other employees shall not relieve the Contractor from liability or payment for any damage caused by its operations.

1.7.1 The Contractor must obey all instructions from Metro-North representatives on the job site promptly. Failure to follow instructions shall be deemed sufficient cause for closing the job site to the Contractor and its employees.

1.7.2 The Railroad will at its sole discretion, determine the need for and the availability of protective, support personnel. The Railroad will provide protective forces to the extent possible considering operational and maintenance priorities. The Railroad makes no guarantee that protection personnel will be available to meet the Contractor's preferred schedule. Further, no such work may actually commence until the assigned Railroad representative affirmatively advises the Contractor that the necessary protective forces are stationed and that he may proceed.

1.7.3 The assessment of the need for protective services will be based upon a Weekly Railroad Coordination Meeting. At these meetings the Contractor shall provide a Bi-weekly Schedule that will begin on the following Saturday. The furnishing of these schedules shall be in accordance with other Contract provisions. Based on that schedule the Railroad will determine the Protective Service required for the two-week period. Protective services will be reserved for the following week beginning on the Saturday and ordered for the second week of the schedule. It will be the Contractor's responsibility to perform work in accordance with its approved schedule. Variations from the approved schedule may result in

additional and unnecessary costs to the Engineer, Railroad and Contractor.

The Contractor shall base its operations on a 5-consecutive-day work week. The hours of operation during this time shall remain constant. Multiple shifts may be worked.

The Contractor must demonstrate maximum use of protective service personnel ordered. Failure to do so may cause the inability to consistently obtain services.

1.7.4 Requests to cancel construction activities and subsequently, the scheduled protective personnel will be also determined at the Weekly Railroad Coordination Meeting held on the Tuesday. At these meetings, the previously scheduled protective service for the week beginning on the following Saturday may be canceled. This will be the only time for cancellation. No ordering of Protective services for the following week will be allowed.

1.7.5 The Contractor shall be held responsible for its subcontractors and suppliers. Weather conditions are considered the only acceptable excuse for nonperformance and only on work items that have been identified and agreed to have been weather dependent when scheduled. Activities not presented on the Bi-weekly schedule at the Railroad Coordination Meeting will not be able to commence until it has been inserted into the schedule and presented at the next Protective Service Meeting.

1.7.6 Work that requires the support of Railroad personnel shall not be scheduled on the following days, unless the work is of an emergency nature:

New Year's Day
President's Day
Good Friday
Memorial Day
Independence Day
Labor Day
Thanksgiving Day
Day Following Thanksgiving Day
Christmas Eve
Christmas Day
New Year's Eve
The Saturday and Sunday preceding a Monday holiday.
The Saturday and Sunday following a Friday holiday.
The Friday and Monday preceding and following a weekend holiday.

1.8 Requirements for Requesting Track Outages

Track outages as described in the plans and specifications must be requested at the weekly Railroad Construction Coordination Meeting held on the Tuesday for the following week (Saturday through Friday) in which the outage is requested.

1.8.1 All procedures, material and equipment must be approved and on site prior to accepting the track outages request.

1.8.2 Track outages will be granted based on need for constructablity not for convenience.

1.8.3 The Contractor must demonstrate the maximum use of track outages by coordinating its activities and work so that various elements and multiple activities are performed during approved outages. Failure to consistently utilize track outages may cause the inability to gain approval of future requests for outages.

1.8.4 No new track outages may be initiated the weekend preceding or following the following holidays: Thanksgiving, Christmas, and New Year's. However, long-term continuous outages may extend through these periods.

1.9 Catenary and Transmission Systems/Power Outages

1.9.1 Catenary and Transmission Systems - The Contractor shall assume that all the wires on the Railroad Company are energized at all times and must be governed by the restrictions imposed by the Railroad with respect to such electrical circuits. Should it become necessary, in the opinion of the Railroad Engineer to de-energize any wire or wires to insure safety of operation, such wires will be de-energized by the Railroad only during such period that will not interfere with the Railroad’s operation. When the de-energizing and re-energizing of wires is deemed necessary, a representative of the Power Department of the Railroad must be on duty and present to arrange for the same. He will notify the Contractor in writing when the wires have been de-energized and also when said wires are to be re-energized.

1.9.1.1 The Contractor is advised that the overhead electrification will remain in place for the duration of the entire project, except where called for on the drawings and in the specifications.

1.9.1.2 Track rails of the Railroad are energized. Particular care must be taken to see that no contact is made between adjoining rails with any material which is a good conductor

of electricity when dry, or material of any nature when wet. Particular care is necessary when any work involving the use of chains, steel rods, cables, pipes, etc., is done. Since the Contractor shall assume the wires and rails of the Railroad will be energized at all times, the Contractor shall require all of its employees, sub-contractors, and others to sign a form similar to the form shown in the NOTICE TO CONTRACTOR – WORK ON RAILROAD PROPERTY contained within the Provisions of the Contract.

1.9.2 Power Outages

1.9.2.1 Catenary Power Outages - A catenary power outage must be scheduled concurrently with a track outage for the track and is restricted to the same periods as specified in the plans and specifications.

1.9.2.2 Metro-North Railroad Power and Signal Distribution Feeder Outages - Outages for feeders can be allowed only during off-peak hours. These outages should be requested at the weekly Railroad Construction Coordination meeting held on the Tuesday for the following week (Saturday through Friday). One set (north or south) side of Railroad of power and signal feeders must be maintained energized at all times.

NOTE: During peak (5:00 a.m. to 10:00 a.m. and 3:30 p.m. to 10:00 p.m., Monday thru Friday) hours of Railroad traffic, both sets (north and south) of power and signal feeders must be energized.

1.10 Safety for Contractor's Employees Working on or Adjacent to the Right-of-Way of the Railroad

1.10.1 Personal Protection Equipment

1.10.1.1 Approved hard hats must be worn by all Contractor employees while on the right-of-way in yard, shop facilities, and construction and/or work sites. Approved safety eyewear must be worn by all Contractor employees while on right-of-way, in yard, shop facilities and construction and/or work sites and in the operating control cab of a moving locomotive or train. Department head and Director of Safety must jointly approve any exclusion.

1.10.1.2 Metro-North Safety Engineer approved reflectorized vest or clothing must be worn by all Contractor employees while on or about tracks and right-of-way and in yards.

1.10.1.3 Other protective equipment such as goggles, face shields, safety belts, floatation vests, gloves and respirators shall be issued by the Contractor when required. Protection devices for hearing conservation may be used when determined necessary and safe to do so.

1.10.2 Possession or use of Drinking Intoxicants and Narcotics

1.10.2.1 The use of intoxicants, narcotics, marijuana, amphetamines or hallucinogens or while on duty, is prohibited and is sufficient cause for dismissal. Contract employees under medication before or while on duty, must be certain that such use will not affect the safe performance of their duties.

1.10.3 Surveying Equipment

1.10.3.1 Measuring tape must be non-metallic to avoid shunting the signal system electric circuits. This will occur when a metallic object is laid across the top of two rails of any track.

1.10.3.2 Electrically rated fiberglass elevation rods are to be used to avoid injury in the event contact is made with energized catenary or signal/communication lines. Elevations of catenary wires must be obtained by or under direct supervision of a qualified Metro-North Class ”A” groundman.

1.10.4 On or About Track

1.10.4.1 Contractor employees must walk on tracks or cross tracks only when necessary, and when accompanied by or with permission from a qualified Metro-North employee.

1.10.4.2 Contractor employees must not enter track unless it is necessary in performance of their duty.

1.10.4.3 The possession of an umbrella on or about tracks is prohibited.

1.10.4.4 Do not rest any object on shoulder while close to moving train.

1.10.4.5 Expect equipment to move on any track, in either direction, at any time. Contractor employees must look in both directions and have permission from a qualified Metro-North employee before:

a. Fouling track
b. Crossing track

c. Going between or around end of equipment or structure
d. Moving out from between or under equipment of structure
e. Getting on or off equipment
f. Performing any other applicable operation

1.10.4.6 When crossing tracks have permission from a qualified Metro-North employee. Always use approved walkways when available; otherwise take the shortest safe route after looking in both directions. If more than one track is to be crossed, stop and look before crossing each track.

1.10.4.7 When required by a conductor/flagman or other qualified Metro-North employee to vacate tracks, the Contractor employees must comply immediately.

1.10.5 Catenary Electric Systems

1.10.5.1 All overhead wires must be considered energized (LIVE) at all times except when it is known they have been de-energized and properly grounded.

1.10.5.2 Until after wires are de-energized and properly grounded, all Contractor employees must not approach within 10-ft of transmission systems wires, catenary system or signal power wires.

1.10.5.3 At the beginning of each tour of duty, the Class "A" groundman will instruct the Contractor foreman and each Contractor employee in the crew of the dangers surrounding them, calling their particular attention to any hazards to be encountered by the nature of the work to be done.

1.10.5.4 If in the opinion of the Class "A" groundman, any Contractor employee in the crew does not understand the instructions due to not having a proper knowledge of the English language, or for any other reason, such person shall not be permitted to work, or observe.

1.10.5.5 When clearances have been obtained and the wires, equipment or apparatus properly grounded, the Class "A" groundman will indicate to the Contractor foreman and the crew the location of wires, equipment or apparatus from which power has been removed and the location of the grounding devices applied. The Class "A" groundman must obtain on standard form, the signature of the Contractor foreman indicating that he and the crew have

been so instructed, and will confine their work within the limits as outlined to them by the Class "A" groundman.

1.10.5.6 When the Class "A" groundman leaves its crew for any reason, he must notify the Contractor foreman and each person in the crew to stop all work in the vicinity of the wires, personally assuring himself that all persons have moved to a safe distance away from its departure. The Class "A" groundman will obtain the signature of the Contractor foreman on standard form, that he and the crew have been informed that the Class "A" groundman is leaving the gang and they will not resume work until advised to do so on return of the Class "A" groundman.

1.10.5.7 When the clearances are to be released, the Class "A" groundman will inform the Contractor foreman and each other Contractor employee and will personally observe that all persons have moved to a safe distance from the wires, equipment or apparatus to be energized, before removing the grounding devices. He will obtain the signature of the Contractor foreman, on a standard form, stating that he and the gang have been advised that the wires, equipment or apparatus will be energized, and that they will remain at a safe distance from them until informed otherwise by the Class "A" groundman.

1.10.5.8 The Class "A" groundman will inform the Contractor foreman if any Contractor employee on the job is unsafe and will not comply with instructions. If trouble is experienced with the Contractor foreman in maintaining safe working conditions, the Class "A" groundman will immediately notify its supervisor.

1.10.6 Aerial Catenary Construction by Qualified Contractor Employees

1.10.6.1 Aerial catenary work included in this Section shall include all overhead wire work included in the portion of the Contract.

1.10.6.2 Aerial catenary work by the Contractor shall be done in accordance with the Railroad's safety rules and in accordance with the NEC.

1.10.6.3 Due to the specialty nature of the work, limited construction periods available, and high quality of work required, the aerial catenary construction included within the Contract is to be done only by qualified Contractor employees. Only Contractor employees that meet the requirements of the International Brotherhood of Electrical Worker's standards for Journeyman Lineman and who have

successfully completed a Metro-North power orientation class shall be considered for the work of this Section. The power orientation class will be given periodically and will require less than one-half day to complete. Approval for qualification shall be determined by Metro-North and that approval shall not be unreasonably withheld.

1.10.6.4 Metro-North approved Journeyman Lineman shall be issued identification as workers qualified to perform aerial catenary work. Qualified Contractor employees shall work according to the Railroad's MN-290 Electrical Operating Instructions. Qualified employees are authorized and expected to work to within 36-in of 13.5 kV energized overhead catenary. Contractor employees shall not de-energize circuits, place initial grounds, or provide protection for others.

1.10.6.5 Apprentice Lineman shall be permitted to assist qualified Journeyman Lineman and work under their direct supervision. Apprentice lineman are prohibited from coming closer than 10-ft from all overhead wires or circuits regardless of whether they have been de-energized or not.

1.10.7 Safety Program and Plan

1.10.7.1 Prior to the commencement of work the Contractor shall submit a Working on the Railroad Safety Plan that will include a Program to implement the plan to the Engineer or a duly authorized representative for forwarding to the Railroad for review of compliance with this specification. This plan is separate to the Health and Safety Plan required for other aspects of the project (i.e., lead, excavations, etc.).

1.10.7.2 Each employee of the Contractor, subcontractor or others on site shall be given an initial training session prior to being allowed to work on the project, but not on the Railroad Right of Way, at this session the following will be furnished to the employee:

a. Safety Orientation for Contract Employees Working on Metro-North Property produced by the Safety Engineer of Metro-North.
b. Safety Inspection Checklist
c. List of the applicable publications referenced in these specifications with respect to safety and where they are located for review if necessary. The list shall include, but not be limited to, such regulatory

standards and mandates, i.e., OSHA, NIOSH, DOL, NFPA, EPA, FRA, MSDS, etc.

d. Copy of the applicable corporate safety plan.

e. Copy of the project Railroad Safety Plan or other project related plans.

The employee shall sign the standard form for acknowledgement of the above-noted documents.

1.10.7.3 As soon as possible after the initial training, the employee shall also be given a one-hour training session administered by Metro-North Safety Engineer or its representative. All employees receiving this training will receive a Registered Hard Hat sticker that will identify them from the employees with initial training on the project. No Contractor employees are permitted on the Railroad right-of-way without this training.

1.10.7.4 The Contractor shall hold "TOOL BOX" safety meetings for their employees at least once a week that will be documented and attendees listed.

1.10.7.5 The Contractor personnel shall attend a monthly Metro-North Safety Meeting.

2.0 INSURANCE REQUIREMENTS – METRO-NORTH RAILROAD

2.1 Submission of Insurance: The Contractor engaged in work on the project shall be required, before the Contractor begins work on the project, to provide and to maintain in force during the course of the project, at no cost to Metro-North, insurance described in Paragraph 2.2. These insurance policies are in addition to any other forms or insurance or bonds required under the Terms of the Contract.

2.2 Insurance: The Contractor shall furnish evidence that, with respect to the operations it performs, carries Workmen's Compensation Insurance and Public Liability and Property Damage Insurance covering all the Contractor's operations in any way connected with the project, and to furnish evidence of such policy to Metro-North.

2.2.1 Contractor's Public Liability and Property Damage Insurance – The Contractor shall furnish evidence that, with respect to the operations it performs, it carries regular Contractor's Public Liability Insurance providing for a limit of not less than $2,000,000 single limit, bodily injury and/or property damage combined, for damages arising out of bodily injuries to or death of all persons in any one occurrence and for damage to or destruction of property, including the loss of use thereof, in any one occurrence.

2.2.2 Contractor's Protective Public and Property Damage Liability Insurance – The Contractor shall furnish evidence that, with respect to the operations performed by Subcontractors, it carries in its own behalf regular Contractor's Protective Public Liability Insurance providing for a limit of not less than $2,000,000, single limit, bodily injury and/or property damage combined, for damages arising out of bodily injuries to or death of all persons in any one occurrence and for damage to or destruction of property, including the loss of use thereof, in any one occurrence.

2.2.3 Railroad's Protective Public Liability Insurance – In addition to the above, the Contractor shall furnish evidence that, with respect to the operations it or any of its subcontractors perform, it has provided Railroad Protective Public Liability Insurance (AAR-AASHTO Form) in the name of the Metro-North Railroad providing for a limit of not less than $2,000,000 single limit, bodily injury and/or property damage combined, for damages arising out of bodily injuries to or death of all persons in any one occurrence for damage to or destruction of property, including the loss of use thereof, in any one occurrence. Such insurance shall be furnished with an aggregate of less than $6,000,000 for all damages as a result of more than one occurrence. The named insured shall include:

Metro-North Commuter Railroad
Metropolitan Transportation Authority of New York
Connecticut Department of Transportation
Consolidated Rail Corporation
National Railroad Passenger Corporation
Providence and Worcester Railroad Company

The insurance hereinbefore specified shall be carried until all work on the project is satisfactorily completed and formally accepted. Failure to carry or keep such insurance in force until all work is satisfactorily completed shall constitute a violation of the project Contract.

The Contractor shall furnish to Metro-North a signed copy of the policy for Contractor's Public Liability Insurance and Protective Public Liability Insurance and the original copy of the Railroad Protective Public Liability Insurance. If any work is subcontracted, the Contractor shall furnish a signed copy of the policy for Contractor's Public Liability Insurance.

This policy shall be endorsed to the effect that for the purposes of this insurance, the employees of the Railroad Company, as listed below, shall be considered the same as regular employees of the Contractor:

2.2.3.1 Any watchman, flagman and similar employee who is employed by the Railroad Company and is specifically assigned or furnished by the Railroad Company for work in connection with the Project.

2.2.3.2 Any employee of the Railroad Company while operating the work trains or other equipment while engaged in the performance of work directly involved in this Contract.

2.2.4 The insurance described in Paragraphs 2.2.1, 2.2.2 and 2.2.3 above, shall be endorsed to provide for not less than 30 days advance written notice to Metro-North of any change or cancellation of policies. Said notice shall be sent to the individual identified in the NOTICE TO CONTRACTOR – WORK ON RAILROAD PROPERTY contained within the Provisions of the Contract. Work may not proceed on Metro-North property until all insurance requirements have been met to the satisfaction of Metro-North's Engineer.

3.0 COSTS ASSOCIATED WITH THIS SPECIFICATION

3.1 There shall be no direct payment for this work, regulatory requirements, traffic regulation, administering of the specification, coordination and incidentals to fulfill the requirements of this specification. The cost thereof will be considered as included in the general cost of the work and distributed in all items.

3.2 Any work, material's supplied, inspections and protective services by Metro-North as described in the plans and specification expressly needed for the construction of the project will be compensated by the Engineer on a separate agreement."

1.05.07 -- Coordination with Work by Other Parties: is supplemented as follows:

Refer to NOTICE TO CONTRACTOR – WORK ON RAILROAD PROPERTY.

SECTION 1.06 – CONTROL OF MATERIALS

1.06.01--Source of Supply and Quality:

Delete the last paragraph: "When one manufacturer's product . . . and Materials Certificate."

1.06.08--Warranties, Guarantees and Instruction Sheets:

Delete the entire Article.

SECTION 1.07 – LEGAL RELATIONS AND RESPONSIBILITIES

Delete Article 1.07.07 in its entirety and replace it with the following:

1.07.07—Safety and Public Convenience: The Contractor shall conduct the Project work at all times in such a manner as to ensure the least possible obstruction to traffic. In a manner acceptable to the Engineer, the Contractor shall provide for the convenience and interests of the general public; the traveling public; parties residing along or adjacent to the highway or Project Site; and parties owning, occupying or using property adjacent to the Project Site, such as commuters, workers, tenants, lessors and operating agencies.

Notwithstanding any other Contract provision, the Contractor shall not close to normal pedestrian or vehicular traffic any section of road, access drive, parking lot, sidewalk, station platform, railroad track, bus stop, runway, taxiway, occupied space within a Site, or occupied space within a building, except with the written permission of the Engineer.

All equipment, materials, equipment or material storage areas, and work areas must be placed, located, and used in ways that do not create a hazard to people or property, especially in areas open to public pedestrian or vehicular traffic. All equipment and materials shall be placed or stored in such a way and in such locations as will not create a hazard to the traveling public or reduce sight lines. In an area unprotected by barriers or other means, equipment and materials must not be stored within 30 feet of any traveled way.

The Contractor must always erect barriers and warning signs between any of its work or storage areas and any area open to public, pedestrian, or vehicular traffic. Such barriers and signs must comply with all laws and regulations, including any applicable codes.

The Contractor must arrange for temporary lighting, snow and ice removal, security against vandalism and theft, and protection against excessive precipitation runoff within its Project work and storage areas, and within other areas specifically designated in the Contract.

In addition to meeting the requirements of Section 9.71, the Contractor shall take all precautions necessary and reasonable for the protection of all persons, including, but not limited to, employees of the Contractor or the Department, and for the protection of property, until the Engineer notifies the Contractor in writing that the Project or the pertinent portion of the Project has been completed to the Engineer's satisfaction.

The Contractor shall comply with the safety provisions of applicable laws, including building and construction codes and the latest edition of the CFR. The Contractor must make available for reference in its field office, throughout the duration of the Project, a copy of the latest edition and all supplements of the CFR pertaining to OSHA.

The Contractor shall make available to the Contractor's employees, subcontractors, the Engineer, and the public, all information pursuant to OSHA 29 CFR Part 1926.59 and The Hazard Communication Standard 29 CFR 1910.1200, and shall also maintain a file on each job site containing all MSDS for products in use at the Project. These MSDS shall be made available to the Engineer upon request.

The Contractor shall observe all rules and regulations of the Federal, State, and local health officials. Attention is directed to Federal, State, and local laws, rules, and regulations concerning construction safety and health standards. The Contractor shall not require any worker to work in surroundings or under conditions that are unsanitary, hazardous, or dangerous to the worker's health or safety.

Safety Plan: Before starting work on the Project, the Contractor shall submit to the Engineer a written Safety and Health Plan (hereinafter referred to as the "Plan"). The Plan shall meet or exceed the minimum requirements of this Subsection and any applicable State or Federal regulations.

The Plan shall apply to any work under the Contract whether such work is performed, by way of example and not limitation, by the Contractor's forces, subcontractors, suppliers, or fabricators.

The Plan shall be prepared by the Contractor and submitted to the Engineer for review before the actual start of work on the Project. Within ten (10) calendar days of receipt, the Engineer will determine whether or not the Plan meets the requirements of this Specification. If the Plan does not meet the requirements of this Specification, it will be returned for revision. Work on the Project may not proceed until the Engineer has accepted the Plan. Nothing herein shall be construed, however, to relieve the Contractor from responsibility for the prosecution of the Project.

The Plan shall conform to the following general format:

1. **General Introduction**.
   a. **Description.** The general introduction of the Plan shall include a statement by the Contractor describing its commitment to maintain a safe work environment for its employees, Department representatives, and the public. Implementation procedures and company policies relative to safety shall be summarized or referenced in the Plan.
      i. The Plan shall include the names, addresses, and telephone numbers of the Contractor's Project Manager, Project superintendent and/or its designee for safety oversight, all competent persons, and the traffic control coordinator. Any changes to the safety management and oversight for the Project shall be promptly communicated to all concerned.
      ii. The Plan shall provide guidelines for protecting all personnel from hazards associated with Project operations and activities.

iii. The Plan shall establish the policies and procedures that are necessary for the Project to be in compliance with the requirements of OSHA and other State and Federal regulatory agencies with jurisdiction, rules, regulations, standards, or guidelines in effect at the time the work is in progress.

b. Responsibility, Identification of Personnel, and Certifications. The Contractor is solely responsible for creating, implementing, and monitoring the Plan.

i. The Contractor shall identify and designate on-site supervisory level personnel who shall be responsible for implementing and monitoring the Plan at all times throughout the duration of the Project and shall have authority to take prompt corrective measures to eliminate hazards including the ability to stop work activities.

ii. Documentation of training provided to the on-site supervisory level personnel shall be included as part of the Plan.

iii. For any work activities wherein the Contractor has identified a competent person as defined by OSHA, that person shall be capable of identifying existing and predictable hazards and have the authority to take prompt corrective measures to eliminate the hazards, including the ability to stop work activities.

iv. Documentation of the qualifications of such competent persons identified, including any certifications received, shall be included as part of the Plan.

v. The Contractor shall further identify the qualified safety professional responsible for developing the Plan and shall provide that person's qualifications for developing the Plan which shall include, but not be limited to, education, training, certifications, and experience in developing this type of Plan.

vi. The Plan shall contain a certification executed by the qualified safety professional that developed the Plan, stating that the Plan complies with OSHA and other applicable State and Federal regulatory agencies with jurisdiction, rules, regulations, standards, or guidelines in effect at the time the work is in progress.

2. Elements of the Plan. The Plan shall address, but not be limited to, the following elements:

a. Management Safety Policy and Implementation Statement.

i. The Plan shall describe in detail the means by which the Contractor shall implement and monitor the Plan. Implementation and monitoring shall also mean that the Plan shall be a document with provision for change to update the Plan with new information on a yearly basis at a minimum and shall include new practices or procedures, changing site and environmental conditions, or other situations that could adversely affect site personnel. The Plan shall provide guidelines for protecting all personnel from hazards associated with Project operations and activities.

b. Emergency Telephone Numbers.

c. Personnel Responsibilities.

i. Management responsibilities

ii. Responsibilities of Supervisor(s)

iii. Site safety officer(s) responsibilities

iv. Employee responsibilities
v. Competent person(s) as defined by OSHA responsibilities

d. Training.
i. Regulatory
ii. Documentation
iii. Site hazard assessment -Daily employee awareness of site operations

e. Safety Rules.
i. General safety rules
ii. Personal protective equipment
iii. Housekeeping

f. Safety Checklists.
i. Project safety-planning checklist
ii. Emergency plans and procedures checklist
iii. Documentation checklist
iv. Protective materials and equipment checklist

g. Traffic Control Coordinator Inspections.
i. Responsible person
ii. Frequency
iii. Documentation of actions taken

h. Record Keeping.
i. OSHA 200 log

i. Reporting.
i. Accident(s)
ii. On site
iii. Legal notice requirement
iv. Public liability
v. Property damage
vi. Department of Labor
vii. Hazard Communications

j. Additional Procedures for Project Specific Situations as Applicable.
i. Compressed gas cylinders
ii. Confined spaces
iii. Cranes
iv. Crystalline silica (stone, masonry, concrete, and brick dust)
v. Electrical
vi. Equipment operators
vii. Fall protection
viii. Hand and power tools
ix. Hearing conservation
x. Highway safety
xi. Lead health and safety plan
xii. Lock out/tag out
xiii. Materials handling, storage, use, and disposal

xiv. Areas of environmental concern
xv. Night work
xvi. Personal protective equipment
xvii. Project entry and exit
xviii. Respiratory protection
xix. Sanitation
xx. Signs, signals, and barricades
xxi. Subcontractors
xxii. Trenching

3. **Appendix for Environmental Health and Safety Plan (HASP).** If environmental hazards are identified in the Contract, an Environmental HASP shall be included in an appendix to the Plan, or in a separate document. References to any Environmental HASP shall be included within the Plan, where appropriate.

The Plan shall be kept on the site and shall apply and be available to all workers and all other authorized persons entering the work site. Copies of all updates to the Plan shall be promptly supplied to the Engineer.

If at any time during the Project the Engineer determines that the Contractor is not complying with the requirements of this provision or the updated Plan, the Contractor shall correct such deficiencies immediately. Failure to remediate such deficiencies may result in suspension of the Contractor's operations until the deficiencies have been corrected. Suspensions ordered due to safety deficiencies will not be considered compensable or excusable delays.

The Contractor is responsible for implementation of the Plan. Pursuant to Article 1.07.10, the Contractor shall indemnify, and save harmless the State from any and all liability related to the Plan in proportion to the extent that the Contractor is held liable for same by an arbiter of competent jurisdiction.

The Contractor shall allow onto the Project site any inspector of OSHA or other legally responsible agency involved in safety and health administration upon presentation of proper credentials, without delay and without the presentation of an inspection warrant.

Article 1.07.10 - Contractor's Duty to Indemnify the State against Claims for Injury or Damage:

Add the following after the only paragraph:

"It is further understood and agreed by the parties hereto, that the Contractor shall not use the defense of Sovereign Immunity in the adjustment of claims or in the defense of any suit, including any suit between the State and the Contractor, unless requested to do so by the State."

SECTION 1.08 – PROSECUTION AND PROGRESS

1.08.03 – Prosecution of Work – Add the following:

STAGE CONSTRUCTION

The Project staging and sequence of construction is depicted in the Maintenance and Protection of Traffic Plans in the plan drawings. No change to the Project staging will be allowed without prior approval of the Engineer.

The contractor shall not be permitted to interrupt traffic for any continuous period of time until the following conditions are satisfied:

1. The Contractor provides written evidence of proper notification of all affected parties including the Town of Darien and emergency services servicing the area;

2. The Contractor has secured all of the required approvals from the Engineer;

3. The Contractor has, as much as practical, all of the required materials needed on the site or readily available for that construction which requires the interruption of traffic.

1.08.04 – Limitation of Operations – Add the following:

Refer to NOTICE TO CONTRACTOR – LIMITATION OF CONTRACTOR OPERATIONS for additional limitations.

The Contractor is advised that continuity of station operations and street traffic on adjacent local streets must be maintained throughout construction. In addition, the operation of railroad and public utilities on and adjacent to the site must not be compromised.

The Contractor shall plan and perform the Project work in such a manner and in such sequence as will cause as little interference as is practicable with vehicular, railroad, aircraft, pedestrian or other traffic. The Contractor shall cooperate with any utilities involved in or affected by the Project operations, and shall schedule its operations in accordance with Article 1.05.06.

The Contractor shall give the Engineer 14 days' advance written notice of any proposed changes in Project activities that will alter vehicular traffic patterns, causing lane shifts, temporary closure of a lane, or lane reductions, or any other alteration of railroad, aircraft, and pedestrian or other traffic patterns affecting usage of such a transportation facility by the traveling public. Additionally, the Contractor shall give the Engineer 28 days' advance written notice of any proposed changes in Project activities that will alter vehicular traffic patterns causing permanent closure of a lane, closure of a roadway, traffic stoppages, weekend traffic shifts or any detours affecting the usage of such transportation facility by the traveling public. This advance notification will allow the Department to publish news releases and provide public radio announcements to inform the public of revised traffic patterns or possible traffic delays. Failure of the Contractor to provide such timely notice will subject the Contractor to stop work orders

until such time as required notice have run from either the Contractor's giving of the relevant notice or the Department's discovery of the pertinent alteration of traffic conditions.

TIME RESTRICTIONS

In order to provide for traffic operations, as outlined in the Special Provisions "Maintenance and Protection of Traffic", the Contractor will not be permitted to perform any work that will interfere with existing traffic operations on all project roadways as follows:

On the Following State Observed Legal Holidays:

New Year's Day
Good Friday, Easter
Memorial Day
Independence Day
Labor Day
Columbus Day
Thanksgiving Day
Christmas Day

HOLLOW TREE RIDGE ROAD, HEIGHTS ROAD, LEDGE ROAD, AND NOROTON AVENUE

The Contractor will not be allowed to perform any work that will interfere with the existing number of lanes of traffic, including turning lanes, at all times. Access and egress to all adjacent properties shall be maintained at all times.

PASSENGER DROP-OFF AREA AND PARKING LOT TO THE NORTH OF TRACKS

The Contractor shall maintain and protect the existing travel way and parking spaces within the passenger drop-off area to the north of the tracks, Sunday through Saturday, between 6:00 a.m. and 10:00 p.m.

The Contractor may close the western-most entrance to the one-way drive at Heights Road and direct incoming vehicular traffic through the drop-off area exit (middle curb cut) located at Heights Road, Sunday through Saturday, between 10:00 p.m. and 6:00 a.m.

PARKING LOT TO THE SOUTH OF TRACK 4

The Contractor shall maintain a 24-foot minimum travel way between the edge of his work zone (to the south of Track 4) and the adjacent northern line of central parking spaces, Sunday through Saturday, between 6:00 a.m. and 10:00 p.m.

The Contractor may reserve specific parking spaces for truck deliveries and for the maneuvering of construction vehicles, Sunday through Saturday, between 12:00 a.m. and 6:00 a.m.

SIGHT LINE RESTRICTIONS

In accordance with Article 1.07.07 – Public Convenience and Safety, the Contractor will not be permitted to park construction vehicles, including the vehicles of its workers, nor store materials or equipment, in locations on or adjacent to roadways where the sight lines of roadway users is reduced due to such parking or storage of materials or equipment. Such restricted areas may be noted on the "Maintenance and Protection of Traffic Plans," or shall be as determined by the Engineer.

OTHER LIMITATIONS

The field installation and removal of signing patterns shall constitute interference with existing traffic operations and shall not be allowed except during the allowable periods.

The contractor is responsible to clear out any snow in the work area during the duration and at the end of the work shift. The contractor shall clear his work area accessible by the public at the inclusion of his work shift of any snow, equipment, material piles etc. The contractor is advised that he may be refused permission to work on the site during inclement weather conditions.

1.08.07 - Determination of Contract Time:

Add the following:

"The Contractor shall comply with the milestones, and the specific number of days allowed for milestone completions, stipulated in CONTRACT TIME AND LIQUIDATED DAMAGES."

SECTION 4.06 BITUMINOUS CONCRETE

Section 4.06 is being deleted in its entirety and replaced with the following:

4.06.01—Description
4.06.02—Materials
4.06.03—Construction Methods
4.06.04—Method of Measurement
4.06.05—Basis of Payment

4.06.01—Description: Work under this section shall include the production, delivery and placement of a non-segregated, smooth and dense bituminous concrete mixture brought to proper grade and cross section. This section shall also include the method and construction of longitudinal joints. The Contractor shall furnish ConnDOT with a Quality Control Plan (QCP) as described in Article 4.06.03.

The terms listed below as used in this specification are defined as:

Bituminous Concrete: A concrete material that uses a bituminous material (typically asphalt) as the binding agent and stone and sand as the principal aggregate components. Bituminous concrete may also contain any of a number of additives engineered to modify specific properties and/or behavior of the concrete material. For the purposes of this Specification, references to bituminous concrete apply to all of its sub-categories, for instance those defined on the basis of production and placement temperatures, such as hot-mix asphalt (HMA) or warm-mix asphalt (WMA), or those defined on the basis of composition, such as those containing polymer-modified asphalt (PMA).

Course: A lift or multiple lifts comprised of the same bituminous concrete mixture placed as part of the pavement structure.

Density Lot: All material placed in a single lift and as defined in Article 4.06.03.

Disintegration: Wearing away or fragmentation of the pavement. Disintegration will be evident in the following forms: Polishing, weathering-oxidizing, scaling, spalling, raveling, potholes or loss of material.

Dispute Resolution: A procedure used to resolve conflicts resulting from discrepancies between the Engineer and the Contractor's density results that may affect payment.

Hot Mix Asphalt (HMA): A bituminous concrete mixture typically produced at 325°F.

Lift: An application of a bituminous concrete mixture placed and compacted to a specified thickness in a single paver pass.

Polymer Modified Asphalt (PMA): A bituminous concrete mixture containing a polymer modified asphalt binder in accordance with contract specifications. All PMA mixtures shall incorporate a qualified warm mix technology.

Production Lot: All material placed during a continuous daily paving operation.

Quality Assurance (QA): All those planned and systematic actions necessary to provide confidence that a product or facility will perform as designed.

Quality Control (QC): The sum total of activities performed by the vendor (Producer, Manufacturer, and Contractor) to ensure that a product meets contract specification requirements.

Superpave: A bituminous concrete mix design used in mixtures designated as "S*" Where "S" indicates Superpave and * indicates the sieve related to the nominal maximum aggregate size of the mix.

Segregation: A non-uniform distribution of a bituminous concrete mixture in terms of gradation, temperature, or volumetric properties.

Warm Mix Asphalt (WMA): A bituminous concrete mixture that can be produced and placed at reduced temperatures than HMA using a qualified additive or technology.

4.06.02—Materials: All materials shall conform to the requirements of Section M.04.

1. Materials Supply: The bituminous concrete mixture must be from one source of supply and originate from one Plant unless authorized by the Engineer. Bituminous Concrete plant QCP requirements are defined in Section M.04.

2. Recycled Materials: Reclaimed Asphalt Pavement (RAP), Crushed Recycled Container Glass (CRCG), Recycled Asphalt Shingles (RAS), or crumb rubber (CR) from recycled tires may be incorporated in bituminous concrete mixtures in accordance with Section M.04 and Project Specifications. CRCG and RAS shall not be used in the surface course.

4.06.03—Construction Methods:

1. Material Documentation: All vendors producing bituminous concrete must have their truck-weighing scales, storage scales, and mixing plant automated to provide a detailed ticket.

Delivery tickets shall include the following information:

a. State of Connecticut printed on ticket.
b. Name of producer, identification of plant, and specific storage bin (silo) if used.
c. Date and time of day.

d. Mixture Designation; Mix type and level Curb mixtures for machine-placed curbing must state "curb mix only".
e. If RAP is used, the plant printouts shall include the RAP dry weight, percentage and daily moisture content.
f. If RAS is used, the plant printouts shall include the RAS dry weight and percentage daily moisture content.
g. The delivery ticket for all mixes produced with Warm Mix Technology must indicate the additive name, and the injection rate (water or additive) incorporated at the HMA plant. The delivery ticket for all mixes produced with pre-blended WMA additive must indicate the name of the WMA Technology.
h. Net weight of mixture loaded into truck (When RAP and/or RAS is used the moisture content shall be excluded from mixture net weight).
i. Gross weight (Either equal to the net weight plus the tare weight or the loaded scale weight).
j. Tare weight of truck – Daily scale weight.
k. Project number, purchase order number, name of Contractor (if Contractor other than Producer).
l. Truck number for specific identification of truck.
m. Individual aggregate, Recycled Materials, and virgin asphalt high/target/low weights. For drum plants and silo loadings, the plant printouts shall be produced at 5 minute intervals maintained by the vendor for a period of three years after the completion of the project.
n. For every mixture designation the running daily total delivered and sequential load number.

The net weight of mixture loaded into the truck must be equal to the cumulative measured weight of its components.

The Contractor must notify the Engineer immediately if, during the production day, there is a malfunction of the weighing or recording system in the automated plant or truck-weighing scales. Manually written tickets containing all required information will be allowed for one hour, but for no longer, provided that each load is weighed on State-approved scales. At the Engineer’s sole discretion, trucks may be approved to leave the plant if a State inspector is present to monitor weighing. If such a malfunction is not fixed within forty-eight hours, mixture will not be approved to leave the plant until the system is fixed to the Engineer's satisfaction. No damages will be considered should the State be unable to provide an inspector at the plant.

The State reserves the right to have an inspector present to monitor batching and /or weighing operations.

2. Transportation of Mixture: Trucks with loads of bituminous concrete being delivered to State projects must not exceed the statutory or permitted load limits referred to as gross vehicle weight (GVW). The Contractor shall furnish a list of all vehicles and allowable weights transporting mixture.

The State reserves the right to check the gross and tare weight of any delivery truck. A variation of 0.4 percent or less in the gross or tare weight shown on the delivery ticket and the certified scale weight shall be considered evidence that the weight shown on the delivery ticket is correct. If the gross or tare weight varies from that shown on the delivery ticket by more than 0.4 percent, the Engineer will recalculate the net weight. The Contractor shall take action to correct discrepancy to the satisfaction of the Engineer.

If a truck delivers mixture to the project and the ticket indicates that the truck is overweight, the load will not be rejected but a "Measured Weight Adjustment" will be taken in accordance with Article 4.06.04.

The mixture shall be transported from the mixing plant in trucks that have previously been cleaned of all foreign material and that have no gaps through which mixture might inadvertently escape. The Contractor shall take care in loading trucks uniformly so that segregation is minimized. Loaded trucks shall be tightly covered with waterproof covers acceptable to the Engineer. Mesh covers are prohibited. The front and rear of the cover must be fastened to minimize air infiltration. The Contractor shall assure that all trucks are in conformance with this specification. Trucks found not to be in conformance shall not be allowed to be loaded until re-inspected to the satisfaction of the Engineer.

Truck body coating and cleaning agents must not have a deleterious effect on the transported mixture. The use of solvents or fuel oil, in any concentration, is strictly prohibited for the coating of the inside of truck bodies. When acceptable coating or agents are applied, truck bodies shall be raised immediately prior to loading to remove any excess agent in an environmentally acceptable manner.

3. Paving Equipment: The Contractor shall have the necessary paving and compaction equipment at the project site to perform the work. All equipment shall be in good working order and any equipment that is worn, defective or inadequate for performance of the work shall be repaired or replaced by the Contractor to the satisfaction of the Engineer. During the paving operation, the use of solvents or fuel oil, in any concentration, is strictly prohibited as a release agent or cleaner on any paving equipment (i.e., rollers, pavers, transfer devices, etc.).

Refueling of equipment is prohibited in any location on the paving project where fuel might come in contact with bituminous concrete mixtures already placed or to be placed. Solvents for use in cleaning mechanical equipment or hand tools shall be stored clear of areas paved or to be paved. Before any such equipment and tools are cleaned, they shall be moved off the paved or to be paved area; and they shall not be returned for use until after they have been allowed to dry.

Pavers: Each paver shall have a receiving hopper with sufficient capacity to provide for a uniform spreading operation and a distribution system that places the mix uniformly, without segregation. The paver shall be equipped with and use a vibratory screed system with heaters or burners. The screed system shall be capable of producing a finished surface of the required evenness and texture without tearing, shoving, or gouging the mixture. Pavers with extendible

screed units as part of the system shall have auger extensions and tunnel extenders as necessary. Automatic screed controls for grade and slope shall be used at all times unless otherwise authorized by the Engineer. The controls shall automatically adjust the screed to compensate for irregularities in the preceding course or existing base. The controls shall maintain the proper transverse slope and be readily adjustable, and shall operate from a fixed or moving reference such as a grade wire or floating beam.

Rollers: All rollers shall be self-propelled and designed for compaction of bituminous concrete. Rollers types shall include steel-wheeled, pneumatic or a combination thereof and may be capable of operating in a static or dynamic mode. Rollers that operate in a dynamic mode shall have drums that use a vibratory or oscillatory system or combination of. The vibratory system achieves compaction through vertical amplitude forces. Rollers with this system shall be equipped with indicators that provide the operator with amplitude, frequency and speed settings/readouts to measure the impacts per foot during the compaction process. The oscillatory system achieves compaction through horizontal shear forces. Rollers with this system shall be equipped with frequency indicators. Rollers can operate in the dynamic mode using the oscillatory system on concrete structures such as bridges and catch basins if at the lowest frequency setting.

Pneumatic tire rollers shall be self-propelled and equipped with wide-tread compaction tires capable of exerting an average contact pressure from 60 to 90 pounds per square inch uniformly over the surface, adjusting ballast and tire inflation pressure as required. The Contractor shall furnish evidence regarding tire size; pressure and loading to confirm that the proper contact pressure is being developed and that the loading and contact pressure is uniform for all wheels.

Lighting: For paving operations, which will be performed during hours of darkness, the paving equipment shall be equipped with lighting fixtures as described below, or with approved lighting fixtures of equivalent light output characteristics. Lighting shall maximize the illumination on each task and minimize glare to passing traffic. The Contractor shall provide generators on rollers and pavers of the type, size, and wattage, to adequately furnish electric power to operate the specified lighting equipment. The lighting options and minimum number of fixtures are listed in Tables 4.06-1 and 4.06-2:

TABLE 4.06-1: Paver Lighting

Option	Fixture Configuration	Fixture Quantity	Requirement
1	Type A	3	Mount over screed area
	Type B (narrow) or Type C (spot)	2	Aim to auger and guideline
	Type B (wide) or Type C (flood)	2	Aim 25 feet behind paving machine
2	Type D Balloon	2	Mount over screed area

TABLE 4.06-2: Roller Lighting

Option	Fixture Configuration*	Fixture Quantity	Requirement
1	Type B (wide)	2	Aim 50 feet in front of and behind roller
	Type B (narrow)	2	Aim 100 feet in front of and behind roller
2	Type C (flood)	2	Aim 50 feet in front of and behind roller
	Type C (spot)	2	Aim 100 feet in front of and behind roller
3	Type D Balloon	1	Mount above the roller

*All fixtures shall be mounted above the roller.

Type A: Fluorescent fixture shall be heavy-duty industrial type. Each fixture shall have a minimum output of 8,000 lumens. The fixtures shall be mounted horizontally, and be designed for continuous row installation.

Type B: Each floodlight fixture shall have a minimum output of 18,000 lumens.

Type C: Each fixture shall have a minimum output of 19,000 lumens.

Type D: Balloon light: Each balloon light fixture shall have a minimum output of 50,000 lumens, and emit light equally in all directions.

Material Transfer Vehicle (MTV): A MTV shall be used when placing a bituminous concrete surface course as indicated in the contract documents. A surface course is defined as the total thickness of the same bituminous concrete mix that extends up to and includes the final wearing surface whether it is placed in a single or multiple lifts, and regardless of any time delays between lifts.

The MTV must be a self-propelled vehicle specifically designed for the purpose of delivering the bituminous concrete mixture from the delivery truck to the paver. The MTV must continuously remix the bituminous concrete mixture throughout the placement process.

The use of a MTV will be subject to the requirements stated in Article 1.07.05- Load Restrictions. The Engineer may limit the use of the vehicle if it is determined that the use of the MTV may damage highway components, utilities, or bridges. The Contractor shall submit to the Engineer at time of pre-construction the following information:

- The make and model of the MTV to be used.
- The individual axle weights and axle spacing for each separate piece of paving equipment (haul vehicle, MTV and paver).
- A working drawing showing the axle spacing in combination with all three pieces of equipment that will comprise the paving echelon.

4. Test Section: The Engineer may require the Contractor to place a test section whenever the requirements of this specification or Section M.04 are not met.

The Contractor shall submit the quantity of mixture to be placed and the location of the test section for review and acceptance by the Engineer. The equipment used in the construction of a passing test section shall be used throughout production.

If a test section fails to meet specifications, the Contractor shall stop production, make necessary adjustments to the job mix formula, plant operations, or procedures for placement and compaction. The Contractor shall construct test sections, as allowed by the Engineer, until all the required specifications are met. All test sections shall also be subject to removal as set forth in Article 1.06.04.

5. Transitions for Roadway Surface: Transitions shall be formed at any point on the roadway where the pavement surface deviates, vertically, from the uniform longitudinal profile as specified on the plans. Whether formed by milling or by bituminous concrete mixture, all transition lengths shall conform to the criteria below unless otherwise specified.

Permanent Transitions: A permanent transition is defined as any transition that remains as a permanent part of the work. All permanent transitions, leading and trailing ends shall meet the following length requirements:

a) Posted speed limit is greater than 35 MPH: 30 feet per inch of vertical change (thickness)
b) Posted speed limit is 35 MPH or less: 15 feet per inch of vertical change (thickness).
c) Bridge Overpass and underpass transition length will be 75 feet either
    (1) Before and after the bridge expansion joint, or
    (2) Before or after the parapet face of the overpass.

In areas where it is impractical to use the above described permanent transition lengths the use of a shorter permanent transition length may be permitted when approved by the Engineer.

Temporary Transitions: A temporary transition is defined as a transition that does not remain a permanent part of the work. All temporary transitions shall meet the following length requirements:

a) Posted speed limit is greater than 50 MPH
    (1) Leading Transitions = 15 feet per inch of vertical change (thickness)
    (2) Trailing Transitions = 6 feet per inch of vertical change (thickness)
b) Posted speed limit is 40, 45, or 50 MPH
    (1) Leading and Trailing = 4 feet per inch of vertical change (thickness)
c) Posted speed limit is 35 MPH or less
    (1) Leading and Trailing = 3 feet per inch of vertical change (thickness)

Note: Any temporary transition to be in-place over the winter shutdown period or during extended periods of inactivity (more than 14 calendar days) shall conform to the greater than 50 MPH requirements shown above.

6. Spreading and Finishing of Mixture: Prior to the placement of the bituminous concrete, the underlying base course shall be brought to the plan grade and cross section within the allowable tolerance. Immediately before placing the mixture, the area to be surfaced shall be cleaned by sweeping or by other means acceptable to the Engineer. The bituminous concrete mixture shall not be placed whenever the surface is wet or frozen. The Engineer will verify the mix temperature by means of a probe or infrared type of thermometer. A probe type thermometer, verified by the Department on an annual basis, must be used in order to reject a load of mixture based on temperatures outside the range stated in the placement QCP.

Placement: The bituminous concrete mixture shall be placed and compacted to provide a smooth, dense surface with a uniform texture and no segregation at the specified thickness and dimensions indicated in the plans and specifications.

When unforeseen weather conditions prevent further placement of the mix, the Engineer is not obligated to accept or place the bituminous concrete mixture that is in transit from the plant.

In advance of paving, traffic control requirements shall be set up daily, maintained throughout placement, and shall not be removed until all associated work including density testing is completed.

The Contractor shall inspect the newly placed pavement for defects in the mixture or placement before rolling is started. Any deviation from standard crown or section shall be immediately remedied by placing additional mixture or removing surplus mixture. Such defects shall be corrected to the satisfaction of the Engineer.

Where it is impractical due to physical limitations to operate the paving equipment, the Engineer may permit the use of other methods or equipment. Where hand spreading is permitted, the mixture shall be placed by means of suitable shovels and other tools, and in a uniformly loose layer at a thickness that will result in a completed pavement meeting the designed grade and elevation.

Placement Tolerances: Each lift of bituminous concrete placed at a uniform specified thickness shall meet the following requirements for thickness and area. Any pavement exceeding these limits shall be subject to an adjustment or removal. Lift tolerances will not relieve the Contractor from meeting the final designed grade. Lifts of specified non-uniform thickness, i.e. wedge or shim course, shall not be subject to thickness and area adjustments.

a) Thickness- Where the total thickness of the lift of mixture exceeds that shown on the plans beyond the tolerances shown in Table 4.06-3, the longitudinal limits of such variation including locations and intervals of the measurements will be documented by the Engineer for use in calculating an adjustment in accordance with Article 4.06.04.

TABLE 4.06-3: Thickness Tolerances

Mixture Designation	Lift Tolerance
S1	+/- ⅜ inch
S0.25, S0.375, S0.5	+/- ¼ inch

Where the thickness of the lift of mixture is less than that shown on the plans beyond the tolerances shown in Table 4.06-3, the Contractor, with the approval of the Engineer, shall take corrective action in accordance with this specification.

b) Area- Where the width of the lift exceeds that shown on the plans by more than the specified thickness of each lift, the longitudinal limits of such variation including locations and intervals of the measurements will be documented by the Engineer for use in calculating the adjustment in Article 4.06.04.

c) Delivered Weight of Mixture - When the delivery ticket shows that the truck exceeds the allowable gross weight for the vehicle type the quantity of tons representing the overweight amount will be documented by the Engineer for use in calculating an adjustment in accordance with Article 4.06.04.

Transverse Joints: All transverse joints shall be formed by saw-cutting a sufficient distance back from the previous run, existing bituminous concrete pavement or bituminous concrete driveways to expose the full thickness of the lift. A brush of tack coat shall be used on any cold joint immediately prior to additional bituminous concrete mixture being placed.

Tack Coat Application: Immediately before application, the area to be tacked shall be cleaned by sweeping or by other means acceptable to the Engineer. A thin uniform coating of tack coat shall be applied to the pavement immediately before overlaying and be allowed sufficient time to break (set) prior to any paving equipment or haul vehicles driving on it. All surfaces in contact with the bituminous concrete that have been in place longer than 3 calendar days shall have an application of tack coat. The tack coat shall be applied by a non-gravity pressurized spray system that results in uniform overlapping coverage at an application rate of 0.03 to 0.05 gallons per square yard for a non-milled surface and an application rate of 0.05 to 0.07 gallons per square yard for a milled surface. For areas where both milled and un-milled surfaces occur, the tack coat shall be an application rate of 0.03 to 0.05 gallons per square yard. The Engineer must approve the equipment and the method of measurement prior to use. The material for tack coat shall not be heated in excess of 160°F and shall not be further diluted.

Compaction: The Contractor shall compact the mixture to meet the density requirements as stated in Article 4.06.03 and eliminate all roller marks without displacement, shoving, cracking, or aggregate breakage.

When placing a lift with a specified thickness less than one and one-half (1 ½) inches, or a wedge course, the Contractor shall provide a minimum rolling pattern as determined by the development of a compaction curve. The procedure to be used shall be documented in the Contractor's QCP for placement and demonstrated on the first day of placement.

The use of the vibratory system on concrete structures is prohibited. When approved by the Engineer, the Contractor may operate a roller using an oscillatory system at the lowest frequency setting.

If the Engineer determines that the use of compaction equipment in the dynamic mode may damage highway components, utilities, or adjacent property, the Contractor shall provide alternate compaction equipment. The Engineer may allow the Contractor to operate rollers in the dynamic mode using the oscillatory system at the lowest frequency setting.

Rollers operating in the dynamic mode shall be shut off when changing directions.

These allowances will not relieve the Contractor from meeting pavement compaction requirements.

Surface Requirements: The pavement surface of any lift shall meet the following requirements for smoothness and uniformity. Any irregularity of the surface exceeding these requirements shall be corrected by the Contractor.

a) Smoothness- Each lift of the surface course shall not vary more than ¼ inch from a Contractor-supplied 10 foot straightedge. For all other lifts of bituminous concrete, the tolerance shall be ⅜ inch. Such tolerance will apply to all paved areas.

b) Uniformity- The paved surface of the mat and joints shall not exhibit segregation, rutting, cracking, disintegration, flushing or vary in composition as determined by the Engineer.

7. Longitudinal Joint Construction Methods: The Contractor shall use Method I- Notched Wedge Joint (see Figure 4.06-1) when constructing longitudinal joints where lift thicknesses are between 1½ and 3 inches, except for S1mixes. Method II Butt Joint (see Figure 4.06-2) shall be used for lifts less than 1½ inches or greater than 3 inches, and S1mixes. During placement of multiple lifts of bituminous concrete, the longitudinal joint shall be constructed in such a manner that it is located at least 6 inches from the joint in the lift immediately below. The joint in the final lift shall be at the centerline or at lane lines. Each longitudinal joint shall maintain a consistent offset from the centerline of the roadway along its entire length. The difference in elevation between the two faces of any completed longitudinal joint shall not exceed ¼ of an inch in any location.

Method I - Notched Wedge Joint:

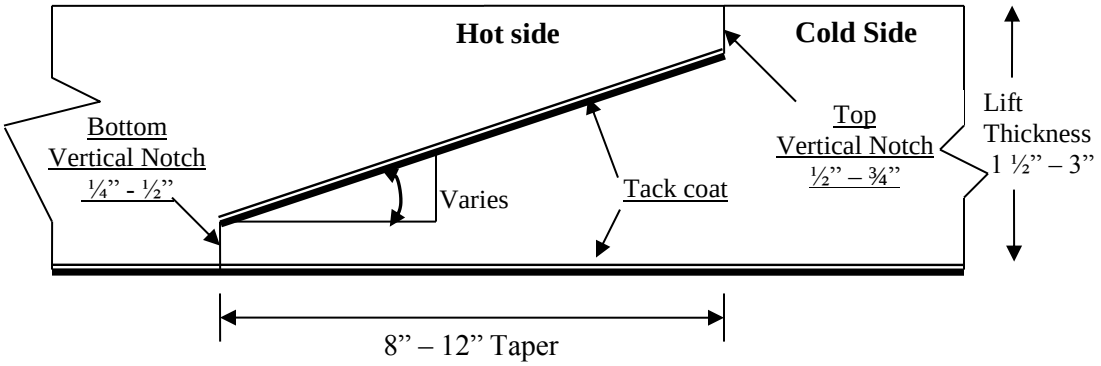

FIGURE 4.06-1: Notched Wedge Joint

A notched wedge joint shall be constructed as shown in Figure 4.06-1 using a device that is attached to the paver screed and is capable of independently adjusting the top and bottom vertical notches. The device shall have an integrated vibratory system.

The taper portion of the wedge joint must be placed over the longitudinal joint in the lift immediately below. The top vertical notch must be located at the centerline or lane line in the final lift. The requirement for paving full width "curb to curb" as described in Method II may be waived if addressed in the QC plan and approved by the Engineer.

The taper portion of the wedge joint shall be evenly compacted using equipment other than the paver or notch wedge joint device.

The taper portion of the wedge joint shall not be exposed to traffic for more than 5 calendar days.

The pavement surface under the wedge joint must have an application of tack coat material. Prior to placing the completing pass (hot side), an application of tack coat must be applied to the exposed surface of the tapered section; regardless of time elapsed between paver passes. The in-place time allowance described in Sub article 4.06.03-7 does not apply to joint construction.

Any exposed wedge joint must be located to allow for the free draining of water from the road surface.

The Engineer reserves the right to define the paving limits when using a wedge joint that will be exposed to traffic.

If Method I, Notched Wedge Joint cannot be used on lifts between 1.5 and 3 inches, Method III Butt Joint may be substituted according to the requirements below for "Method III – Butt Joint with Hot Pour Rubberized Asphalt Treatment."

<u>Method II - Butt Joint</u>:

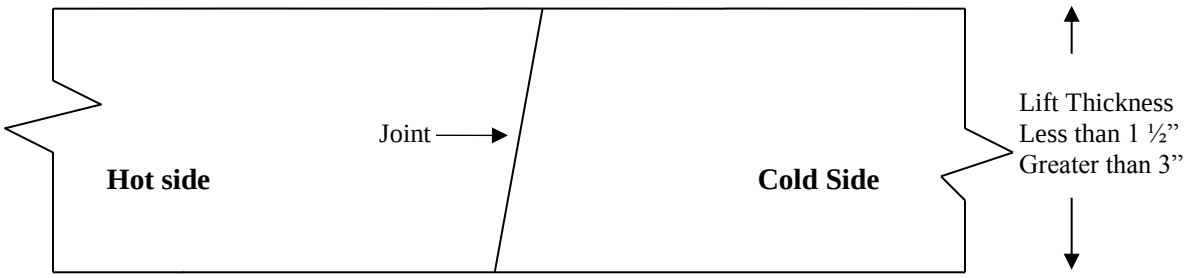

FIGURE 4.06-2: Butt Joint

When adjoining passes are placed, the Contractor shall utilize equipment that creates a near vertical edge (refer to Figure 4.06-2). The completing pass (hot side) shall have sufficient mixture so that the compacted thickness is not less than the previous pass (cold side). The end gate on the paver should be set so there is an overlap onto the cold side of the joint.

The Contractor shall not allow any butt joint to be incomplete at the end of a work shift unless otherwise allowed by the Engineer. When using this method, the Contractor is not allowed to leave a vertical edge exposed at the end of a work shift and must complete paving of the roadway full width "curb to curb."

<u>Method III- Butt Joint with Hot Poured Rubberized Asphalt Treatment</u>: If Method I Wedge Joint cannot be used due to physical constraints in certain limited locations; the contractor may submit a request in writing for approval by the Engineer, to utilize Method III Butt Joint as a substitution in those locations. There shall be no additional measurement or payment made when the Method III Butt Joint is substituted for the Method I Notched Wedge Joint. When required by the contract or approved by the Engineer, Method III (see Figure 4.06-3) shall be used.

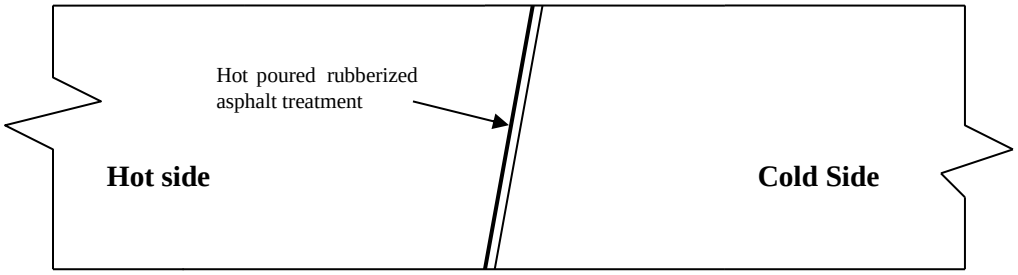

FIGURE 4.06-3: Butt Joint with Hot Poured Rubberized Asphalt Treatment

All of the requirements of Method II must be met with Method III. In addition, the longitudinal vertical edge must be treated with a rubberized joint seal material meeting the requirements of ASTM D 6690, Type 2. The joint sealant shall be placed on the face of the "cold side" of the butt joint as shown above prior to placing the "hot side" of the butt joint. The joint seal material

shall be applied in accordance with the manufacturer's recommendation so as to provide a uniform coverage and avoid excess bleeding onto the newly placed pavement.

8. Contractor Quality Control (QC) Requirements:

The Contractor shall be responsible for maintaining adequate quality control procedures throughout the production and placement operations. Therefore, the Contractor must ensure that the materials, mixture and work provided by Subcontractors, Suppliers and Producers also meet contract specification requirements.

This effort must be documented in Quality Control Plans and address the actions, inspection, or sampling and testing necessary to keep the production and placement operations in control, to determine when an operation has gone out of control and to respond to correct the situation in a timely fashion.

The Standard QCP for production shall consist of the quality control program specific to the production facility.

There are three components to the QCP for placement: a Standard QCP, a Project Summary Sheet that details project specific information, and if applicable a separate Extended Season Paving Plan as required in Section 9 "Temperature and Seasonal Requirements".

The Standard QCP for both production and placement shall be submitted to the Department for approval each calendar year and.at a minimum of 30 days prior to production or placement.

Production or placement shall not occur until all QCP components have been approved by the Engineer.

Each QCP shall include the name and qualifications of a Quality Control Manager (QCM). The QCM shall be responsible for the administration of the QCP, and any modifications that may become necessary. The QCM shall have the ability to direct all Contractor personnel on the project during paving operations. All Contractor sampling, inspection and test reports shall be reviewed and signed by the QCM prior to submittal to the Engineer. The QCPs shall also include the name and qualifications of any outside testing laboratory performing any QC functions on behalf of the Contractor.

Approval of the QCP does not relieve the Contractor of its responsibility to comply with the project specifications. The Contractor may modify the QCPs as work progresses and must document the changes in writing prior to resuming operations. These changes include but are not limited to changes in quality control procedures or personnel. The Department reserves the right to deny significant changes to the QCPs.

<u>QCP for Production:</u> Refer to Section M.04.03-1.

QCP for Placement: The Standard QCP, Project Summary Sheet, and Extended Season Paving Plan shall conform to the format provided by the Engineer. The format is available at http://www.ct.gov/dot/lib/dot/documents/dconstruction/pat/qcp_outline_hma_placement.pdf.

The Contractor shall perform all quality control sampling and testing, provide inspection, and exercise management control to ensure that bituminous concrete placement conforms to the requirements as outlined in its QCP during all phases of the work. The Contractor shall document these activities for each day of placement.

The Contractor shall submit complete field density testing and inspection records to the Engineer within 48 hours in a manner acceptable to the Engineer.

The Contractor may obtain one (1) mat core and one (1) joint core per day for process control, provided this process is detailed in the QCP. The results of these process control cores shall not be used to dispute the Department determinations from the acceptance cores. The Contractor shall submit the location of each process control core to the Engineer for approval prior to taking the core. The core holes shall be filled to the same requirements described in Sub article 4.06.03-10.

9. Temperature and Seasonal Requirements: Paving, including placement of temporary pavements, shall be divided into two seasons, "In-Season" and "Extended-Season". In-Season paving occurs from May 1 – October 14, and Extended Season paving occurs from October 15-April 30. The following requirements shall apply unless otherwise authorized or directed by the Engineer:

- Bituminous concrete mixes shall not be placed when the air or sub base temperature is below 40°F regardless of the season.
- Should paving operations be scheduled during the Extended Season, the Contractor must submit an Extended Season Paving Plan for the project that addresses minimum delivered mix temperature considering WMA, PMA or other additives, maximum paver speed, enhanced rolling patterns and the method to balance mixture delivery and placement operations. Paving during Extended Season shall not commence until the Engineer has approved the plan.

10. Density Testing of Bituminous Concrete Utilizing Core Samples: This procedure describes the frequency and the method the Contractor shall use to obtain pavement cores for acceptance from the project.

Coring shall be performed on each lift specified to a thickness of one and one-half (1 ½) inches or more. All material placed in a lift shall be compacted to the degree specified in Tables 4.06-9 and 4.06-10. The density of each core will be determined using the production lot's average maximum theoretical specific gravity (Gmm) established during the testing of the parent material at the plant. When there was no testing of the parent material or any Gmm exceeds the specified tolerances in the Department's current QA Program for Materials, the Engineer will determine

the maximum theoretical density value to be used for density calculations. Bituminous concrete HMA S1 mixes are excluded from the longitudinal joint density requirements.

The Contractor shall extract cores (4 or 6 inch diameter for S0.25, S0.375 and S0.5 mixes, 6 inch diameter for S1.0 mixtures -wet sawed) from sampling locations determined by the Engineer. The Engineer must witness the extraction and labeling of cores, as well as the filling of the core holes. The cores shall be labeled by the Contractor with the project number, lot number, and sub-lot number on the top surface of the core. When labeling the core lot number, include whether the core is from a mat lot or joint lot by using an "M" for a mat core and "J" for a joint core. For example, a core from the first sub-lot of the first mat lot shall be labeled with "Lot M1 – 1". The first number refers to the lot and the second number refers to the sub-lot. Refer to Figure 4.06-4. The side of the cores shall be labeled with the core lot number and date placed. The project inspector shall fill out a MAT-109 containing the same information to accompany the cores. The Contractor shall deliver the cores and MAT-109 to the Department's Central Testing Lab in a safe manner to ensure no damage occurs to the cores. The Contractor shall use a container approved by the Engineer. In general the container shall consist of an attached lid container made out of plastic capable of being locked shut and tamper proof. The Contractor shall use foam, bubble wrap, or another suitable material to prevent the cores from being damaged during transportation. Once the cores and MAT-109 are in the container the Engineer will secure the lid using a security seal. The security seal's identification number must be documented on the MAT-109. The Central Lab will break the security seal and take possession of the cores upon receipt.

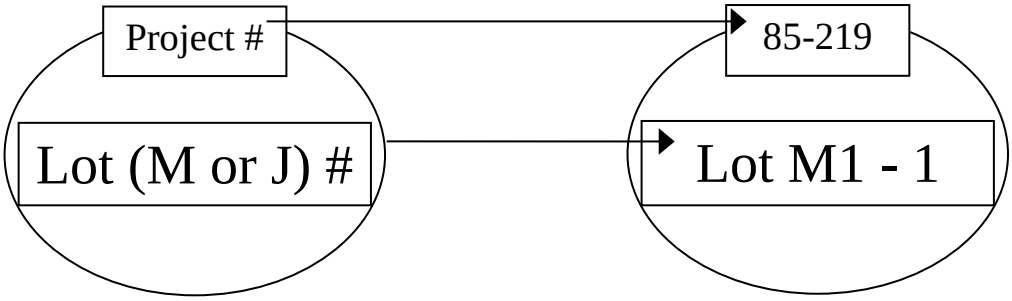

FIGURE 4.06-4: Labeling of Cores

Frequency of sampling is in accordance with the following tables:

TABLE 4.06-4: Testing Requirement for Bridge Density Lot

Length of Each Structure (Feet)	MAT – No. of Cores	JOINT - No. of cores
≤ 500'	See Table 4.06-5(A or B)	See Table 4.06-5(A or B)
501' – 1500'	3	3
1501' – 2500'	4	4
2501' and greater	5	5

All material placed on structures less than or equal to 500 feet in length shall be included as part of a standard lot as follows:

TABLE 4.06-5A: Testing requirement for Density Lots ≥ 500 Tons

Lot Type	No. of Mat Cores		No. of Joint Cores		Target Lot Size (Tons)
Lot Without Bridge[1]	4		4		2000
Lot With Bridge(s)[1][2]	4 plus	1 per structure (≤ 300')	4 plus	1 per structure (≤ 300')	2000
		2 per structure (301' – 500')		2 per structure (301' – 500')	

TABLE 4.06-5B: Testing requirement for Density Lots < 500 Tons

Lot Type	No. of Mat Cores	No. of Joint Cores	Lot Size (Tons)
Lot Without Bridge[1]	3	3	1 per lift
Lot With Bridge(s)[1][2]	3	3	1 per lift

Notes:
[1] The number of "Required Paver Passes for Full Width" shall be used to determine the sub-lot sizes within the lot. The number of paver passes for full width is determined by the contractor.
[2] If a non-bridge mat or joint core location randomly falls on a structure, the core is to be obtained on the structure in addition to the core(s) required on the structure.

A density lot will be complete when the full designed paving width of the established lot length has been completed and shall include all longitudinal joints that exist between the curb lines regardless of date(s) paved. Quantity of material placed on structures less than or equal to 500 feet long is inclusive of the standard lot. Prior to paving, the total length of the project to be paved shall be split up into lots that contain approximately 2000 tons each. Areas such as highway ramps may be combined to create one lot. In general, combined areas should be set up to target a 2000 ton lot size. One adjustment will apply for each lot. The tons shall be determined using the yield calculation in Article 4.06.04. The last lot shall be the difference between the total payable tons for the project and the sum of the previous lots.
After the compaction process has been completed, the material shall be allowed to cool sufficiently to allow the cutting and removal of the core without damage. The Contractor shall core to a depth that allows extraction so that the uppermost layer being tested for density will not be affected.

A mat core shall not be taken any closer than one foot from the edge of a paver pass. If a random number locates a core less than one foot from any edge, locate the core so that the sample is one foot from the edge.

Method I, Notched Wedge Joint cores shall be taken so that the center of the core is 5 inches from the visible joint on the hot mat side. Refer to Figure 4.06-5.

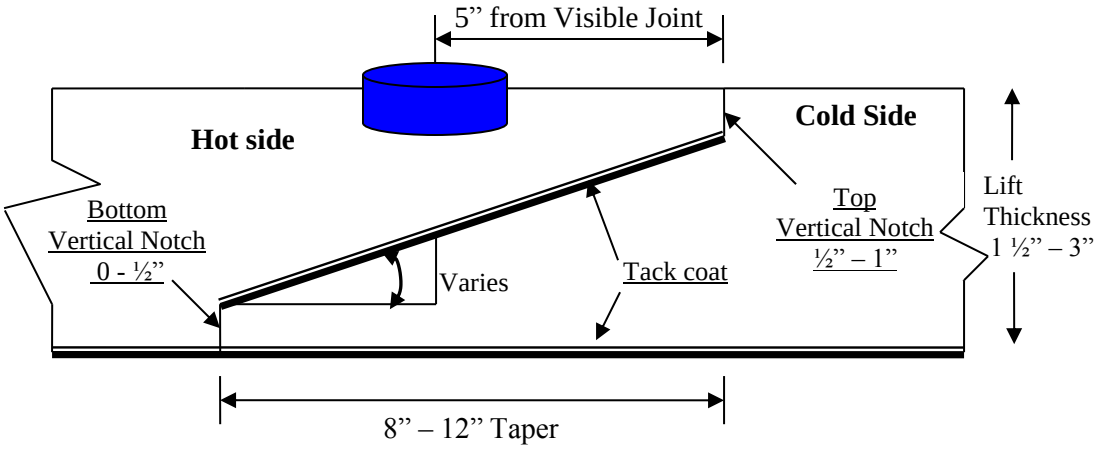

FIGURE 4.06-5: Notched Wedge Joint Cores

When Method III Butt Joint is utilized, cores shall be taken from the hot side so the edge of the core is within 1 inch of the longitudinal joint.

All cores must be cut within 5 calendar days of placement. Any core that is damaged or obviously defective while being obtained will be replaced with a new core from a location within 2 feet measured in a longitudinal direction.

Each core hole shall be filled within four hours upon core extraction. Prior to being filled, the hole shall be prepared by removing any free water and applying tack coat using a brush or other means to uniformly cover the cut surface. The core hole shall be filled using a bituminous concrete mixture at a minimum temperature of 240ºF containing the same or smaller nominal maximum aggregate size and compacted with a hand compactor or other mechanical means to the maximum compaction possible. The bituminous concrete fill shall be compacted to ⅛ inch above the finished pavement.

11. Acceptance Inspection, Sampling and Testing: Inspection, sampling, and testing to be used by the Engineer shall be performed at the minimum frequency specified in Section M.04 and stated herein.

Sampling for acceptance shall be established using ASTM D 3665, or a statistically based procedure of random sampling approved by the Engineer.

Plant Material Acceptance: The Contractor shall provide the required acceptance sampling, testing and inspection during all phases of the work in accordance with Section M.04. The Department will perform verification testing on the Contractor’s acceptance test results. Should binder content, theoretical maximum density (Gmm), or air void results exceed the specified tolerances in the Department’s current QA Program for Materials, Acceptance and Assurance Testing Policies and Procedures, the Department will investigate to determine an assignable cause. Contractor test results for a subject lot or sub lot may be replaced with the Department’s

results for the purpose of assessing adjustments. The verification procedure is included in the Department's current QA Program for Materials.

Density Acceptance: The Engineer will perform all acceptance testing on the cores in accordance with AASHTO T 331.

12. Density Dispute Resolution Process: The Contractor and Engineer will work in partnership to avoid potential conflicts and to resolve any differences that may arise during quality control or acceptance testing for density. Both parties will review their sampling and testing procedures and results and share their findings. If the Contractor disputes the Engineer's test results, the Contractor must submit in writing a request to initiate the Dispute Resolution Process within 7 calendar days of the notification of the test results. No request for dispute resolution will be allowed unless the Contractor provides quality control results within the timeframe described in Sub article 4.06.03-9 supporting its position. No request for Dispute Resolution will be allowed for a Density Lot in which any core was not taken within the required 5 calendar days of placement. Should the dispute not be resolved through evaluation of existing testing data or procedures, the Engineer may authorize the Contractor to obtain a new set of core samples per disputed lot. The core samples must be extracted no later than 14 calendar days from the date of Engineer's authorization.

The number and type (mat, joint, or structure) of the cores taken for dispute resolution must reflect the number and type of the cores taken for acceptance. The location of each core shall be randomly located within the respective original sub lot. All such core samples shall be extracted and filled using the procedure outlined in Article 4.06.03. The results from the dispute resolution cores shall be added to the results from the acceptance cores and averaged for determining the final in-place density value.

13. Corrective Work Procedures: Any portion of the completed pavement that does not meet the requirements of the specification shall be corrected at the expense of the Contractor. Any corrective courses placed as the final wearing surface shall match the specified lift thickness after compaction.

If pavement placed by the Contractor does not meet the specifications, and the Engineer requires its replacement or correction, the Contractor shall:

a) Propose a corrective procedure to the Engineer for review and approval prior to any corrective work commencing. The proposal shall include:
   - Limits of pavement to be replaced or corrected, indicating stationing or other landmarks that are readily distinguishable.
   - Proposed work schedule.
   - Construction method and sequence of operations.
   - Methods of maintenance and protection of traffic.
   - Material sources.
   - Names and telephone numbers of supervising personnel.

b) Perform all corrective work in accordance with the Contract and the approved corrective procedure.

14. Protection of the Work: The Contractor shall protect all sections of the newly finished pavement from damage that may occur as a result of the Contractor's operations for the duration of the Project. Prior to the Engineer's authorization to open the pavement to traffic, the Contractor is responsible to protect the pavement from damage.

15. Cut Bituminous Concrete Pavement: Work under this item shall consist of making a straight-line cut in the bituminous concrete pavement to the lines delineated on the plans or as directed by the Engineer. The cut shall provide a straight, clean, vertical face with no cracking, tearing or breakage along the cut edge.

4.06.04—Method of Measurement:

1. HMA S* or PMA S*: The quantity of bituminous concrete measured for payment will be determined by the documented net weight in tons accepted by the Engineer in accordance with this specification and Section M.04.

2. Adjustments: Adjustments may be applied to bituminous concrete quantities and will be measured for payment using the following formulas:

Yield Factor for Adjustment Calculation = 0.0575 Tons/SY/inch

Actual Area = [(Measured Length (ft)) x (Avg. of width measurements (ft))]

Actual Thickness (t) = Total tons delivered / [Actual Area (SY) x 0.0575 Tons/SY/inch]

a) Area: If the average width exceeds the allowable tolerance, an adjustment will be made using the following formula. The tolerance for width is equal to the specified thickness (in.) of the lift being placed.

Tons Adjusted for Area (T_A) = [(L x W_{adj})/9] x (t) x 0.0575 Tons/SY/inch = (-) Tons

Where: L = Length (ft)
(t) = Actual thickness (inches)
W_{adj} = (Designed width (ft) + tolerance /12) - Measured Width)

b) Thickness: If the actual thickness is less than the allowable tolerance, the Contractor shall submit a repair procedure to the Engineer for approval. If the actual thickness exceeds the allowable tolerance, an adjustment will be made using the following formula:

Tons Adjusted for Thickness (T_T) = A x t_{adj} x 0.0575 = (-) Tons

Where: A = Area = {[L x (Designed width + tolerance (lift thickness)/12)] / 9}
t_{adj} = Adjusted thickness = [(Dt + tolerance) - Actual thickness]
Dt = Designed thickness (inches)

c) Weight: If the quantity of bituminous concrete representing the mixture delivered to the project is in excess of the allowable gross vehicle weight (GVW) for each vehicle, an adjustment will be made using the following formula:

Tons Adjusted for Weight (T_W) = GVW – DGW= (-) Tons

Where: DGW = Delivered gross weight as shown on the delivery ticket or measured on a certified scale.

d) Mixture Adjustment: The quantity of bituminous concrete representing the production lot will be adjusted based on test results and values listed in Tables 4.06-6 and 4.06-7 , . The Department's Division of Material Testing will calculate the daily adjustment value for T_{SD}.

The adjustment values in Table 4.06-6 and 4.06-7 shall be calculated for each sub lot based on the Air Void and Liquid Binder Content test results for that sub lot. The total adjustment for each day's production (lot) will be computed using tables and the following formulas:

Tons Adjusted for Superpave Design (T_{SD}) = [($AdjAV_t$ + $AdjPB_t$) / 100] X Tons

Percent Adjustment for Air Voids = $AdjAV_t$ = [$AdjAV_1$ + $AdjAV_2$ + $AdjAV_i$ + … + $AdjAV_n$)] /n

Where: $AdjAV_t$ = Total percent air void adjustment value for the lot
$AdjAV_i$ = Adjustment value from Table 4.06-7 resulting from each sub lot or the average of the adjustment values resulting from multiple tests within a sub lot, as approved by the Engineer.
n = number of sub lots based on Table M.04.03-1

TABLE 4.06-6: Adjustment Values for Air Voids

Adjustment Value ($AdjAV_i$) (%)	**S0.25, S0.375, S0.5, S1 Air Voids (AV)**
+2.5	3.8 - 4.2
+3.125*(AV-3)	3.0 - 3.7
-3.125*(AV-5)	4.3 – 5.0
20*(AV-3)	2.3 – 2.9
-20*(AV-5)	5.1 – 5.7
-20.0	$\leq$ 2.2 or $\geq$ 5.8

Positive air void adjustment values will not be calculated for any test that fails to meet gradation or binder content tolerances of the JMF in Table M.04.03– 5.

Percent Adjustment for Liquid Binder = $AdjPB_t = [(AdjPB_1 + AdjPB_2 + AdjPB_i + \ldots + AdjPB_n)] / n$

Where: $AdjPB_t$= Total percent liquid binder adjustment value for the lot
$AdjPB_i$ = Adjustment value from Table 4.06-7 resulting from each sub lot
n = number of binder tests in a production lot

TABLE 4.06-7: Adjustment Values for Binder Content

Adjustment Value ($AdjAV_i$) (%)	**S0.25, S0.375, S0.5, S1 Pb (refer to Table M.04.02-5)**
0.0	Equal to or above the min. liquid content
- 10.0	Below the min. liquid content

e) Density Adjustment: The quantity of bituminous concrete measured for payment in a lift of pavement specified to be 1½ inches or greater may be adjusted for density. Separate density adjustments will be made for each lot and will not be combined to establish one density adjustment. If either the Mat or Joint adjustment value is "remove and replace", the density lot shall be removed and replaced (curb to curb).

No positive adjustment will be applied to a Density Lot in which any core was not taken within the required 5 calendar days of placement.

Tons Adjusted for Density (T_D) = $[\{(PA_M \times .50) + (PA_J \times .50)\} / 100]$ X Density Lot Tons

Where: T_D = Total tons adjusted for density for each lot
PA_M = Mat density percent adjustment from Table 4.06-9
PA_J = Joint density percent adjustment from Table 4.06-10

TABLE 4.06-9: Adjustment Values for Pavement Mat density

Average Core Result Percent Mat Density	**Percent Adjustment (Bridge and Non-Bridge) (1)(2)**
97.1 - 100	-1.667*(ACRPD-98.5)
94.5 – 97.0	+2.5
93.5 – 94.4	+2.5*(ACRPD-93.5)
92.0 – 93.4	0
90.0 – 91.9	-5*(92-ACRPD)
88.0 – 89.9	-10*(91-ACRPD)
87.0 – 87.9	-30
86.9 or less	Remove and Replace (curb to curb)

TABLE 4.06-10: Adjustment Values for Pavement Joint Density

Average Core Result Percent Joint Density	Percent Adjustment (Bridge and Non-Bridge) [(1)(2)]
97.1 – 100	-1.667*(ACRPD-98.5)
93.5 – 97.0	+2.5
92.0 – 93.4	+1.667*(ACRPD-92)
91.0 – 91.9	0
89.0 – 90.9	-7.5*(91-ACRPD)
88.0 – 88.9	-15*(90-ACRPD)
87.0 – 87.9	-30
86.9 or less	Remove and Replace (curb to curb)

[(1)] ACRPD = Average Core Result Percent Density
[(2)] All Percent Adjustments to be rounded to the second decimal place. For example, 1.667 is to be rounded to 1.67.

3. Transitions for Roadway Surface: The installation of permanent transitions shall be measured under the appropriate item used in the formation of the transition.

The quantity of material used for the installation of temporary transitions shall be measured for payment under the appropriate item used in the formation of the transition. The installation and removal of a bond breaker, and the removal and disposal of any temporary transition formed by milling or with bituminous concrete pavement is not measured for payment.

4. Cut Bituminous Concrete Pavement: The quantity of bituminous concrete pavement cut will be measured in accordance with Article 2.02.04.

5. Material for Tack Coat: The quantity of tack coat will be measured for payment by the number of gallons furnished and applied on the Project and approved by the Engineer. No tack coat material shall be included that is placed in excess of the tolerance described in Article 4.06.03.

Method of Measurement:

a. Container Method- Material furnished in a container will be measured to the nearest ½ gallon. The volume will be determined by either measuring the volume in the original container by a method approved by the Engineer or using a separate graduated container capable of measuring the volume to the nearest ½ gallon. The container in which the material is furnished must include the description of material, including lot number or batch number and manufacturer or product source.

b. Truck Method- The Engineer will establish a weight per gallon of the tack coat based on the density at 60ºF for the material furnished. The number of gallons furnished will be determined by weighing the material on scales furnished by and at the expense of the Contractor, or from the automated metering system on the delivery vehicle.

6. Material Transfer Vehicle (MTV): The furnishing and use of a MTV will be measured separately for payment based on the actual number of surface course tons delivered to a paver using the MTV.

4.06.05—Basis of Payment:

1. HMA S* or PMA S*: The furnishing and placing of bituminous concrete will be paid for at the Contract unit price per ton for "HMA S*" or "PMA S*".

- All costs associated with providing illumination of the work area are included in the general cost of the work.
- All costs associated with cleaning the surface to be paved, including mechanical sweeping, are included in the general cost of the work. All costs associated with constructing longitudinal joints are included in the general cost of the work.
- All costs associated with obtaining cores for acceptance testing and dispute resolution are included in the general cost of the work.

2. Bituminous Concrete Adjustment Costs: The adjustment will be calculated using the formulas shown below if all of the measured adjustments in Article 4.06.04 are not equal to zero. A positive or negative adjustment will be applied to monies due the Contractor.

Production Lot: $[T_T + T_A + T_W + (T_{MD} \text{ or } T_{SD})] \times \text{Unit Price} = \text{Est. (P)}$

Density Lot: $T_D \times \text{Unit Price} = \text{Est. (D)}$

Where: Unit Price = Contract unit price per ton per type of mixture

T_* = Total tons of each adjustment calculated in Article 4.06.04

Est. ( ) = Pay Unit represented in dollars representing incentive or disincentive.

The Bituminous Concrete Adjustment Cost item if included in the bid proposal or estimate is not to be altered in any manner by the Contractor. If the Contractor should alter the amount shown, the altered figure will be disregarded and the original estimated cost will be used for the Contract.

3. Transitions for Roadway Surface: The installation of permanent transitions shall be paid under the appropriate item used in the formation of the transition. The quantity of material used for the installation of temporary transitions shall be paid under the appropriate pay item used in the formation of the transition. The installation and removal of a bond breaker, and the removal and disposal of any temporary transition formed by milling or with bituminous concrete pavement is included in the general cost of the work.

4. The cutting of bituminous concrete pavement will be paid in accordance with Article 2.02.05.

5. Material for tack coat will be paid for at the Contract unit price per gallon for "Material for Tack Coat".

6. The Material Transfer Vehicle (MTV) will be paid at the Contract unit price per ton for a "Material Transfer Vehicle".

Pay Item*	Pay Unit*
HMA S*	ton
PMA S*	ton
Bituminous Concrete Adjustment Cost	est.
Material for Tack Coat	gal.
Material Transfer Vehicle	ton

*For contracts administered by the State of Connecticut, Department of Administrative Services, the pay items and pay units are as shown in contract award price schedule.

SECTION M.04 BITUMINOUS CONCRETE

Section M.04 is being deleted in its entirety and replaced with the following:

M.04.01—Bituminous Concrete Materials and Facilities
M.04.02—Mix Design and Job Mix Formula (JMF)
M.04.03—Production Requirements

M.04.01—Bituminous Concrete Materials and Facilities: Each source of material, and facility or plant used to produce and test bituminous concrete must be qualified on an annual basis by the Engineer. Test Procedures and Specifications referenced herein are in accordance with the latest AASHTO and ASTM Standard Test Procedures and Specifications. Such references when noted with an (M) have been modified by the Engineer and are detailed in Table M.04.03-7.

The Contractor shall submit to the Engineer all sources of coarse aggregate, fine aggregate, mineral filler, PG binder, and if applicable any additives such as but not limited to anti-strip, warm mix, and polymer modifiers. The Contractor shall submit a Safety Data Sheet (SDS) for each grade of binder, and additive to be used on the Project. The Contractor shall not change any material sources without prior approval of the Engineer.

An adequate quantity of each size aggregate, mineral filler, bitumen, and additives, shall be maintained at the bituminous concrete plant site at all times while the plant is in operation to ensure that the plant can consistently produce bituminous concrete mixtures that meet the job mix formula (JMF) as specified in Article M.04.02. The quantity of such material shall be reviewed by the Engineer on an individual plant basis and is dependent upon the plant's daily production capacity. A total quantity of any material on site that amounts to less than one day's production capacity may be cause for the job mix formula to be rejected.

1. Coarse Aggregate:

a. Requirements: The coarse aggregate shall consist of clean, hard, tough, durable fragments of crushed stone or crushed gravel of uniform quality. Aggregates from multiple sources of supply must not be mixed or stored in the same stockpile.

b. Basis of Approval: The request for approval of the source of supply shall include a washed sieve analysis in accordance with AASHTO T 27. The Gsa, Gsb, and Pw_a shall be determined in accordance with AASHTO T 85. The coarse aggregate must not contain more than 1% crusher dust, sand, soft disintegrated pieces, mud, dirt, organic and other injurious materials. When tested for abrasion using AASHTO T 96, the aggregate loss must not exceed 40%. When tested for soundness using AASHTO T 104 with a magnesium sulfate solution, the coarse aggregate must not have a loss exceeding 10% at the end of 5 cycles.

For all bituminous mixtures, materials shall also meet the coarse aggregate angularity criteria as specified in Tables M.04.02-2 thru M.04.02-4 for blended aggregates retained

on the #4 sieve when tested according to ASTM D 5821. The amount of aggregate particles of the coarse aggregate blend retained on the #4 sieve that are flat and elongated shall be determined in accordance with ASTM D 4791 and shall not exceed 10% by weight when tested to a 5:1 ratio, as shown in Tables M.04.02-2 thru M.04.02-4.

2. Fine Aggregate:

a. Requirements: The fine aggregate from each source quarry/pit deposit shall consist of clean, hard, tough, rough-surfaced and angular grains of natural sand; manufactured sand prepared from washed stone screenings; stone screenings, slag or gravel; or combinations thereof, after mechanical screening or manufactured by a process approved by the Engineer. The Contractor is prohibited from mixing two or more sources of fine aggregate on the ground for the purpose of feeding into a plant.

All fine aggregate shall meet the listed criteria shown in items #1 thru #7 of Table M.04.01-1. Table M.04.01-1 indicates the quality tests and criteria required for all fine aggregate sources. Individually approved sources of supply shall not be mixed or stored in the same stockpile. The fine aggregates must be free from injurious amounts of clay, loam, and other deleterious materials.

For Superpave mixtures, in addition to the above requirements, the fine aggregate angularity shall be determined by testing the materials passing the #8 sieve in accordance with AASHTO T 304, Method A. Qualification shall be based on the criteria listed in Tables M.04.02-2 thru M.04.02-4. The fine aggregate shall also be tested for clay content as a percentage contained in materials finer than the #8 sieve in accordance with AASHTO T 176.

TABLE M.04.01-1: Fine Aggregate Criteria by Pit/Quarry Source

Item	Title	AASHTO Protocol(s)	Criteria
1	Grading	T 27 & T 11	100% Passing 3/8 inch 95% Passing the #4 min.
2	Absorption	T 84	3% maximum
3	Plasticity limits	T 90	0 or not detectable
4	L.A. Wear	T 96	50% maximum(fine agg. particle size # 8 and above)
5	Soundness by Magnesium Sulfate	T 104	20% maximum @ 5 cycles
6	Clay Lumps and Friable Particles	T 112	3% maximum
7	Deleterious Material	As determined by the Engineer	Organic or inorganic calcite, hematite, shale, clay or clay lumps, friable materials, coal-lignite, shells, loam, mica, clinkers, or organic matter (wood, etc). -Shall not contain more than 3% by mass of any individual listed constituent and not more than 5% by mass in total of all listed constituents.
8	Petrographic Analysis	ASTM C 295	Terms defined in Section M.04.01-2c.

b. Basis of Approval: A Quality Control Plan for Fine Aggregate (QCPFA) provided by the Contractor shall be submitted for review and approval for each new source documenting how conformance to Items 1 through 7 as shown in Table M.04.01-1 is monitored. The QCPFA must be resubmitted any time the process, location or manner of how the fine aggregate (FA) is manufactured changes, or as requested by the Engineer. The QCPFA must include the locations and manufacturing processing methods. The QCPFA for any source may be suspended by the Engineer due to the production of inconsistent material.

The Contractor shall submit all test results to the Engineer for review. The Contractor shall also include a washed sieve analysis in accordance with AASHTO T 27/T 11. Any fine aggregate component or final combined product shall have 100% passing the 3/8 inch sieve and a minimum of 95% passing the # 4. The Gsa, Gsb, and Pw_a shall be determined in accordance with AASHTO T 84.

The Contractor will be notified by the Engineer if any qualified source of supply fails any portion of Table M.04.01-1. One retest will be allowed for the Contractor to make corrections and/or changes to the process. If, upon retest, the material does not meet the requirements of items 1-7, additional testing will be required in accordance with item 8.

The Contractor may provide a Petrographic analysis of the material performed by a third party acceptable to the Engineer at its' own expense. The Contractor shall submit the results of the analysis with recommended changes to the manufacturing process to the Engineer. The Contractor shall submit fine aggregate samples for testing by the Engineer after the recommended changes have been made.

The Contractor may request the use of such fine aggregate on select project(s) for certain applications of bituminous concrete pavement. Such material will be monitored for a period no less than 48 months, at no cost to the State. Terms of any evaluation and suitable application will be determined by the Engineer.

3. Mineral Filler:

a. Requirements: Mineral filler shall consist of finely divided mineral matter such as rock dust, including limestone dust, slag dust, hydrated lime, hydraulic cement, or other accepted mineral matter. At the time of use it shall be freely flowing and devoid of agglomerations. Mineral filler shall be introduced and controlled at all times during production in a manner acceptable to the Engineer.

b. Basis of Approval: The request for approval of the source of supply shall include the location, manufacturing process, handling and storage methods for the material. Mineral filler shall conform to the requirements of AASHTO M 17.

4. Performance Graded Asphalt Binder:

a. General:

i Liquid PG binders shall be uniformly mixed and blended and be free of contaminants such as fuel oils and other solvents. Binders shall be properly heated and stored to prevent damage or separation.

ii. The blending at mixing plants of PG binder from different suppliers is strictly prohibited. Contractors who blend PG binders will be classified as a supplier and will be required to certify the binder in accordance with AASHTO R 26(M). The binder shall meet the requirements of AASHTO M 332 and shall be graded or verified in accordance with AASHTO R 29. The Contractor shall submit a Certified Test Report and bill of lading representing each delivery in accordance with AASHTO R 26(M). The Certified Test Report must also indicate the binder specific gravity at 77ºF; rotational viscosity at 275ºF and 329ºF and the mixing and compaction viscosity-temperature chart for each shipment.

iii. The Contractor shall submit the name(s) of personnel responsible for receipt, inspection, and record keeping of PG binder materials. Contractor plant personnel shall document specific storage tank(s) where binder will be transferred and stored until used, and provide binder samples to the Engineer upon request. The person(s) shall assure that each shipment (tanker truck) is accompanied by a statement certifying that the transport vehicle was inspected before loading and was found acceptable for the material shipped and that the binder will be free of contamination from any residual material, along with two (2) copies of the bill of lading.

iv. Basis of Approval: The request for approval of the source of supply shall list the location where the material will be manufactured, and the handling and storage methods, along with necessary certification in accordance with AASHTO R 26(M). Only suppliers/refineries that have an approved "Quality Control Plan for Performance Graded Binders" formatted in accordance with AASHTO R 26(M) will be allowed to supply PG binders to Department projects.

b. Neat Performance Grade (PG) Binder:

i. PG binder shall be classified by the supplier as a "Neat" binder for each lot and be so labeled on each bill of lading. Neat PG binders shall be free from modification with: fillers, extenders, reinforcing agents, adhesion promoters, thermoplastic polymers, acid modification and other additives such as re-refined motor oil, and shall indicate such information on each bill of lading and certified test report.

ii. The asphalt binder shall be PG 64S-22.

c. Modified Performance Grade (PG) Binder:

Unless otherwise noted, the asphalt binder shall be Performance Grade PG 64E-22 asphalt modified solely with a Styrene-Butadiene-Styrene (SBS) polymer. The polymer modifier shall be added at either the refinery or terminal and delivered to the bituminous concrete production facility as homogenous blend. The stability of the

modified binder shall be verified in accordance with ASTM D7173 using the Dynamic Shear Rheometer (DSR). The DSR G*/sin(δ) results from the top and bottom sections of the ASTM D7173 test shall not differ by more than 10%. The results of ASTM D7173 shall be included on the Certified Test Report. The binder shall meet the requirements of AASHTO M 332 (including Appendix X1) and AASHTO R 29.

d. Warm Mix Additive or Technology:
   i. The warm mix additive or technology must be listed on the NEAUPG Qualified Warm Mix Asphalt (WMA) Technologies List at the time of bid, which may be accessed online at http://www.neaupg.uconn.edu/wma_info.html.
   ii. The warm mix additive shall be blended with the asphalt binder in accordance with the manufacturer's recommendations.
   iii. The blended binder shall meet the requirements of AASHTO M 332 and shall be graded or verified in accordance with AASHTO R 29 for the specified binder grade. The Contractor shall submit a Certified Test Report showing the results of the testing demonstrating the binder grade. In addition, it must include the grade of the virgin binder, the brand name of the warm mix additive, the manufacturer's suggested rate for the WMA additive, the water injection rate (when applicable) and the WMA Technology manufacturer's recommended mixing and compaction temperature ranges.

5. Emulsified Asphalts:

a. General:
   i. Emulsified asphalts shall be homogeneous and be free of contaminants such as fuel oils and other solvents. Emulsions shall be properly stored to prevent damage or separation.
   ii. The blending at mixing plants of emulsified asphalts from different suppliers is strictly prohibited. Contractors who blend emulsified asphalts will be classified as a supplier and will be required to certify the emulsion in accordance with AASHTO PP 71. The emulsified asphalt shall meet the requirements of AASHTO M 140(M) or AASHTO M 208 as applicable.

b. Supplier Approval:
   i. The request for approval of the source of supply shall list the location where the material is manufactured, the handling and storage methods, and certifications in accordance with AASHTO PP 71. Only suppliers that have an approved "Quality Control Plan for Emulsified Asphalt" formatted in accordance with AASHTO PP 71 will be allowed to supply emulsified asphalt to Department projects.
   ii. The supplier shall submit to the Division Chief a Certified Test Report representing each lot in accordance with AASHTO PP 71. The Certified Test Report shall include test results for each specified requirement for the grade delivered and shall also indicate the density at 60ºF. Additionally, once a month one split sample for each emulsified asphalt grade shall be submitted.

.

c. Basis of Approval

i. Each shipment of emulsified asphalt delivered to the project site shall be accompanied with the corresponding SDS and Certified Test Report listing Saybolt viscosity, residue by evaporation, penetration of residue, and weight per gallon at 60°F.

ii. Anionic emulsified asphalts shall conform to the requirements of AASHTO M-140(M). Materials used for tack coat shall not be diluted and meet grade RS-1 or RS-1H. When ambient temperatures are 80˚F and rising, grade SS-1 or SS-lH may be substituted if permitted by the Engineer.

iii. Cationic emulsified asphalt shall conform to the requirements of AASHTO M-208. Materials used for tack coat shall not be diluted and meet grade CRS-1. The settlement and demulsibility test will not be performed unless deemed necessary by the Engineer. When ambient temperatures are 80˚F and rising, grade CSS-1 or CSS-lh may be substituted if permitted by the Engineer.

6. Reclaimed Asphalt Pavement (RAP):

a. Requirements: RAP shall consist of asphalt pavement constructed with asphalt and aggregate reclaimed by cold milling or other removal techniques approved by the Engineer. For bituminous concrete mixtures containing RAP, the Contractor shall submit a JMF in accordance with Article M.04.02 to the Engineer for review.

b. Basis of Approval: The RAP material will be accepted on the basis of one of the following criteria:

i. When the source of all RAP material is from pavements previously constructed on Department projects, the Contractor shall provide a materials certificate listing the detailed locations and lengths of those pavements and that the RAP is only from those locations listed.

ii. When the RAP material source or quality is not known, the Contractor shall test the material and provide the following information along with a request for approval to the Engineer at least 30 calendar days prior to the start of the paving operation. The request shall include a material certificate stating that the RAP consists of aggregates that meet the specification requirements of sub articles M.04.01-1 through 3 and that the binder in the RAP is substantially free of solvents, tars and other contaminants. The Contractor is prohibited from using unapproved material on Department projects and shall take necessary action to prevent contamination of approved RAP stockpiles. Stockpiles of unapproved material shall remain separate from all other RAP materials at all times. The request for approval shall include the following:

1. A 50-pound sample of the RAP to be incorporated into the recycled mixture.
2. A 25-pound sample of the extracted aggregate from the RAP.
3. A statement that RAP material has been crushed to 100% passing the ½ inch sieve and remains free from contaminants such as joint compound, wood, plastic, and metals.

7. Crushed Recycled Container Glass (CRCG):

a. Requirements: The Contractor may propose to use clean and environmentally-acceptable CRCG in an amount not greater than 5% by weight of total aggregate.

b. Basis of Approval: The Contractor shall submit to the Engineer a request to use CRCG. The request shall state that the CRCG contains no more than 1% by weight of contaminants such as paper, plastic and metal and conform to the following gradation:

CRCG Grading Requirements	
Sieve Size	Percent Passing
3/8-inch	100
No. 4	35-100
No. 200	0.0-10.0

8. Joint Seal Material:

a. Requirements: Joint seal material shall be a hot-poured rubber compound intended for use in sealing joints and cracks in bituminous concrete pavements. Joint seal material must meet the requirements of ASTM D 6690 – Type 2.

9. Recycled Asphalt Shingles (RAS)

a. Requirements: RAS shall consist of processed asphalt roofing shingles from post-consumer asphalt shingles or from manufactured shingle waste. The RAS material under consideration for use in bituminous concrete mixtures must be certified as being asbestos free and shall be entirely free of whole, intact nails. The RAS material shall meet the requirements of AASHTO MP 23.

The producer shall test the RAS material to determine the asphalt content and the gradation of the RAS material. The producer shall take necessary action to prevent contamination of RAS stockpiles.

10. Plant Requirements:

a. Mixing Plant and Machinery: The mixing plant used in the preparation of the bituminous concrete shall comply with AASHTO M 156/ASTM D 995 for a Batch Plant or a Drum Dryer Mixer Plant, and be approved by the Engineer.

b. Storage Silos: For all mixes, the Contractor may use silos for short-term storage of Superpave mixtures with prior notification and approval of the Engineer. A silo must have heated cones and an unheated silo cylinder if it does not contain a separate internal heating system. Prior approval must be obtained for storage times greater than those indicated. When multiple silos are filled, the Contractor shall discharge one silo at a time. Simultaneous discharge of multiple silos is not permitted.

Type of silo cylinder	Maximum storage time for all classes (hr)	
	HMA	WMA/PMA
Open Surge	4	Mfg Recommendations
Unheated – Non-insulated	8	Mfg Recommendations
Unheated – Insulated	18	Mfg Recommendations
Heated – No inert gas	TBD by the Engineer	

c. Documentation System: The mixing plant documentation system shall include equipment for accurately proportioning the components of the mixture by weight and in the proper order, controlling the cycle sequence and timing the mixing operations. Recording equipment shall monitor the batching sequence of each component of the mixture and produce a printed record of these operations on each delivery ticket, as specified herein. Material feed controls shall be automatically or manually adjustable to provide proportions within the tolerances listed below for any batch size.

An asterisk (*) shall be automatically printed next to any individual batch weight(s) exceeding the tolerances in ASTM D 995 section 8.7.3. The entire batching and mixing interlock cut-off circuits shall interrupt and stop the automatic batching operations when an error exceeding the acceptable tolerance occurs in proportioning.

There must be provisions so that scales are not manually adjusted during the printing process. In addition, the system shall be interlocked to allow printing only when the scale has come to a complete rest. A unique printed character (m) shall automatically be printed on the truck and batch plant printout when the automatic batching sequence is interrupted or switched to auto-manual or full manual during proportioning. For each day's production, each project shall be provided a clear, legible copy of these recordings on each delivery ticket.

d. Aggregates: The Contractor shall ensure that aggregate stockpiles are managed to provide uniform gradation and particle shape, prevent segregation and cross contamination in a manner acceptable to the Engineer. For drum plants only, the Contractor shall determine the percent moisture content at a minimum, prior to production and half way through production.

e. Mixture: The dry and wet mix times shall be sufficient to provide proper coating (minimum 95% as determined by AASHTO T 195(M)) of all particles with bitumen and produce a uniform mixture.

The Contractor shall make necessary adjustments to ensure all types of bituminous concrete mixtures contain no more than 0.5% moisture throughout when tested in accordance with AASHTO T 329.

f. RAP: The Contractor shall indicate the percent of RAP, the moisture content (as a minimum determined twice daily prior to production and halfway through production), and the net dry weight of RAP added to the mixture on each delivery ticket. For each day of production, the production shall conform to the job mix formula and RAP percentage and no change shall be made without the prior approval of the Engineer.

g. Asphalt Binder: The last day of every month, a binder log shall be submitted when the monthly production for the Department exceeds 5000 tons. Blending of PG binders from different suppliers or grades at the bituminous concrete production facility is strictly prohibited.

h. Warm mix additive: For mechanically foamed WMA, the maximum water injection rate shall not exceed 2.0% water by total weight of binder and the water injection rate shall be constantly monitored during production.

i. Field Laboratory: The Contractor shall furnish the Engineer an acceptable field laboratory at the production facility to test bituminous concrete mixtures during production. The field laboratory shall have a minimum of 300 square feet, have a potable water source and drainage in accordance with the CT Department of Public Health Drinking Water Division, and be equipped with all necessary testing equipment as well as with a PC, printer, and telephone with a dedicated hard-wired phone line. In addition, the PC shall have a high speed internet connection with a minimum upstream of 384 Kbps and a functioning web browser with unrestricted access to https://ctmail.ct.gov. This equipment shall be maintained in clean and good working order at all times and be made available for use by the Engineer.

The laboratory shall be equipped with a suitable heating system capable of maintaining a minimum temperature of 65°F. It shall be clean and free of all materials and equipment not associated with the laboratory. Windows shall be installed to provide sufficient light and ventilation. During summer months adequate cooling or ventilation must be provided so the indoor air temperature shall not exceed the ambient outdoor temperature. Light fixtures and outlets shall be installed at convenient locations, and a telephone shall be within audible range of the testing area. The laboratory shall be equipped with an adequate workbench that has a suitable length, width, and sampling tables, and be approved by the Engineer.

The field laboratory testing apparatus, supplies, and safety equipment shall be capable of performing all tests in their entirety that are referenced in AASHTO R 35, *Standard Practice for Superpave Volumetric Design for Hot-Mix Asphalt (HMA)* and AASHTO M 323, *Standard Specification for Superpave Volumetric Mix Design*. In addition, the quantity of all equipment and supplies necessary to perform the tests must be sufficient to

initiate and complete the number of tests identified in Table M.04.03-2 for the quantity of mixture produced at the facility on a daily basis. The Contractor shall ensure that the Laboratory is adequately supplied at all times during the course of the project with all necessary testing materials and equipment.

The Contractor shall maintain a list of laboratory equipment used in the acceptance testing processes including but not limited to, balances, scales, manometer/vacuum gauge, thermometers, gyratory compactor, clearly showing calibration and/or inspection dates, in accordance with AASHTO R 18. The Contractor shall notify the Engineer if any modifications are made to the equipment within the field laboratory. The Contractor shall take immediate action to replace, repair, and/or recalibrate any piece of equipment that is out of calibration, malfunctioning, or not in operation.

M.04.02—Mix Design and Job Mix Formula (JMF)

1. Curb Mix:

a. Requirements: When curb mix is specified, the Contractor shall develop a bituminous concrete mix design that includes a JMF consisting of target values for gradation, binder content and air voids as shown in Table M.04.02-1. The Contractor may use RAP in 5% increments up to a maximum of 30% provided a new JMF is accepted by the Engineer.

b. Basis of Approval: The Contractor shall submit to the Engineer a request for approval of the JMF annually in accordance with one of the methods described herein. Prior to the start of any paving operations, the JMF must be accepted by the Engineer, and the Contractor must demonstrate the ability to meet the accepted JMF. Additionally, the fraction of material retained between any two consecutive sieves shall not be less than 4%.

The Contractor shall test the mixture for compliance with the submitted JMF and Table M.04.02-1. The maximum theoretical density (Gmm) will be determined by AASHTO T 209. If the mixture does not meet the requirements, the JMF shall be adjusted within the ranges shown in Table M.04.02-1 until an acceptable mixture is produced.

An accepted JMF from the previous operating season may be acceptable to the Engineer provided that there are no changes in the sources of supply for the coarse aggregate, fine aggregate, recycled material (if applicable) and the plant operation had been consistently producing acceptable mixture.

The Contractor shall not change sources of supply after a JMF has been accepted. Before a new source of supply for materials is used, a new JMF shall be submitted to the Engineer for approval.

TABLE M.04.02 – 1:
Master Ranges for Curb Mix Mixtures

Notes: (a) Compaction Parameter 50gyration N_{des}. (b) The percent passing the #200 sieve shall not exceed the percentage of bituminous asphalt binder determined by AASHTO T 164 or AASHTO T 308.		
Mix	**Curb Mix**	**Production Tolerances from JMF target**
Grade of PG Binder content %	**PG 64S-22 6.5 - 9.0**	**0.4**
Sieve Size		
# 200	3.0 – 8.0 (b)	2.0
# 50	10 - 30	4
# 30	20 - 40	5
# 8	40 - 70	6
# 4	65 - 87	7
¼"		
3/8 "	95 - 100	8
½ "	100	8
¾"		8
1"		
2"		
Additionally, the fraction of material retained between any two consecutive sieves shall not be less than 4%		
Mixture Temperature		
Binder	325°F maximum	
Aggregate	280-350° F	
Mixtures	265-325° F	
Mixture Properties		
VOIDS %	0 – 4.0 (a)	

2. Superpave Design Method – S0.25, S0.375, S0.5, and S1

a. Requirements: The Contractor or its representative shall design and submit Superpave mix designs annually for approval. The design laboratory developing the mixes shall be approved by the Engineer. The mix design shall be based on the specified Equivalent Single-Axle Loads (ESAL). Each bituminous concrete mix type must meet the requirements shown in Tables M.04.02-2 thru Table M.04.02-5 and in accordance with AASHTO M 323 and AASHTO R 35. The mix design shall include the nominal maximum aggregate size and a JMF consisting of target values for gradation and bitumen content for each bituminous concrete mix type designated for the project.

The contractor shall provide test results with supporting documentation from an AASHTO Materials Reference Laboratory (AMRL) with the use of NETTCP Certified Technicians for the following tests:

1. Aggregate consensus properties for each type & level, as specified in Table M.04.02-3 and the specific gravity data.

2. Extracted aggregates from RAP aggregate, when applicable, consensus properties for each type & level, as specified in Table M.04.02-3 and the specific gravity data.

3. New mixes shall be tested in accordance with AASHTO T 283(M) *Standard Method of Test for Resistance of Compacted Hot-Mix Asphalt (HMA) to Moisture-Induced Damage*, (TSR). The compacted specimens may be fabricated at a bituminous concrete facility and then tested at an AMRL accredited facility.

   The AASHTO T 283(M) test results, specimens, and corresponding JMF sheet (Form MAT-429s) shall be submitted by the Contractor for review.

In addition, minimum binder content values apply to all types of bituminous concrete mixtures, as stated in Table M.04.02-5. For mixtures containing RAP, the virgin production and the anticipated proportion of binder contributed by the RAP cannot be less than the total permitted binder content value for that type nor the JMF minimum binder content.

i. <u>Superpave Mixture (virgin)</u>: For bituminous concrete mixtures that contain no recycled material, the limits prescribed in Tables M.04.02-2 thru Table M.04.02-5 apply. The Contractor shall submit a JMF, on a form provided by the Engineer, with the individual fractions of the aggregate expressed as percentages of the total weight of the mix and the source(s) of all materials to the Engineer for approval. The JMF shall indicate the corrected target binder content and applicable binder correction factor (ignition oven or extractor) for each mix type by total weight of mix. The mineral filler (dust) shall be defined as that portion of blended mix that passes the #200 sieve by weight when tested in accordance with AASHTO T 30. The dust-to-effective asphalt (D/Pbe) ratio shall be between 0.6 and 1.2 by weight. The dry/wet mix times and hot bin proportions (batch plants only) for each type shall be included in the JMF.

The percentage of aggregate passing each sieve shall be plotted on a 0.45 power gradation chart and shall be submitted for all bituminous concrete mixtures. This chart shall delineate the percentage of material passing each test sieve size as defined by the JMF. The percentage of aggregate passing each standard sieve shall fall within the specified control points as shown in Tables M.04.02-2 thru Table M.04.02-5. A change in the JMF requires that a new chart be submitted.

ii. Superpave Mixtures with RAP: Use of approved RAP may be allowed with the following conditions:

- RAP amounts up to 15% may be used with no binder grade modification.
- RAP amounts up to 20% may be used provided a new JMF is approved by the Engineer. The JMF submittal shall include the grade of virgin binder added. The JMF shall be accompanied by a blending chart and supporting test results in accordance with AASHTO M 323 Appendix X1, or by test results that show the combined binder (recovered binder from the RAP, virgin binder at the mix design proportions, warm mix asphalt additive and any other modifier if used) meets the requirements of the specified binder grade.
- Two representative samples of RAP shall be obtained. Each sample shall be split and one split sample shall be tested for binder content in accordance with AASHTO T 164 and the other in accordance AASHTO T 308.

Unless approved by the Engineer, RAP material shall not be used with any other recycling option.

iii. Superpave Mixtures with RAS: Use of RAS may be allowed solely in HMA S1 mixtures with the following conditions:

- RAS amounts up to 3% may be used.
- RAS total binder replacement up to 15% may be used with no binder grade modification.
- RAS total binder replacement up to 20% may be used provided a new JMF is approved by the Engineer. The JMF submittal shall include the grade of virgin binder added. The JMF shall be accompanied by a blending chart and supporting test results in accordance to AASHTO M 323 appendix X1 or by test results that show the combined binder (recovered binder from the RAP, virgin binder at the mix design proportions, warm mix asphalt additive and any other modifier if used) meets the requirements of the specified binder grade.
- Superpave Mixtures with RAS shall meet AASHTO PP 78 design considerations. The RAS asphalt binder availability factor (F) used in AASHTO PP 78 Equation 2 shall be 0.85.

iv. Superpave Mixtures with CRCG: In addition to the requirements in M.04.02 – 2 a through c, for bituminous concrete mixtures that contain CRCG, the Contractor shall submit a materials certificate to the Engineer stating that the CRCG complies with requirements stated in Article M.04.01, as applicable. Additionally, 1% hydrated lime, or other accepted non-stripping agent, shall be added to all mixtures containing CRCG. CRCG material shall not be used with any other recycling option.

b. Basis of Approval: On an annual basis, the Contractor shall submit to the Engineer any bituminous concrete mix design, and JMF anticipated for use on Department projects. Prior to the start of any paving operations, the mix design and JMF must be approved by the Engineer. Bituminous concrete mixture supplied to the project without an approved mix design and JMF will be rejected. The following information must be included in the mix design submittal:

i. Gradation, consensus properties and specific gravities of the aggregate, RAP, and RAS.
ii. Average asphalt content of the RAP and RAS by AASHTO T 164.
iii. Source of RAP and RAS and percentage to be used.
iv. Warm mix Technology and manufacturer's recommended additive rate and tolerances.
v. TSR test report, and, if applicable, anti-strip manufacturer and recommended dosage rate.
vi. Mixing and compaction temperature ranges for the mix with and without the warm-mix technology incorporated.
vii. JMF ignition oven correction factor by AASHTO T 308.

The JMF shall be accepted if the Plant mixture and materials meet all criteria as specified in Tables M.04.02-2 thru Table M.04.02-5. If the mixture does not meet the requirements, the contractor shall adjust the JMF within the ranges shown in Tables M.04.02-2 thru Table M.04.02-5 until an acceptable mixture is produced. All equipment, tests, and computations shall conform to the latest AASHTO R 35 and AASHTO M 323.

Any JMF, once approved, shall only be acceptable for use when it is produced by the designated plant, it utilizes the same component aggregates and binder source, and it continues to meet all criteria as specified herein, and component aggregates are maintained within the tolerances shown in Table M.04.02-2.

The Contractor shall not change any component source of supply including consensus properties after a JMF has been accepted. Before a new source of materials is used, a revised JMF shall be submitted to the Engineer for approval. Any approved JMF applies only to the plant for which it was submitted. Only one mix with one JMF will be approved for production at any one time. Switching between approved JMF mixes with different component percentages or sources of supply is prohibited.

c. Mix Status: Each facility will have each type of bituminous concrete mixture evaluated based on the previous year of production, for the next construction paving season, as determined by the Engineer. Based on the rating a type of mixture receives it will determine whether the mixture can be produced without the completion of a PPT. Ratings will be provided to each bituminous concrete producer annually prior to the beginning of the paving season.

The rating criteria are based on compliance with Air Voids and Voids in Mineral Aggregate (VMA) as indicated in Table M.04.03-3: *Superpave Master Range for Bituminous Concrete Mixture Production*, and are as follows:

Criteria A: Based on Air Voids. Percentage of acceptance results with passing air voids.

Criteria B: Based on Air Voids and VMA. The percentage of acceptance results with passing VMA, and the percentage of acceptance results with passing air voids, will be averaged.

The final rating assigned will be the lower of the rating obtained with Criteria A or Criteria B.

Ratings are defined as:

"A" – Approved:
A rating of "A" is assigned to each mixture type from a production facility with a current rating of 70% passing or greater.

"PPT" – Pre-Production Trial:
Rating assigned to each mixture type from a production facility when:

1. there are no passing acceptance production results submitted to the Department from the previous year;
2. there is a source change in one or more aggregate components from the JMF on record by more than 10% by weight;
3. there is a change in RAP percentage;
4. the mixture has a rating of less than 70% from the previous season;
5. a new JMF not previously submitted.

Bituminous concrete mixtures rated with a "PPT" cannot be shipped or used on Department projects. A passing "PPT" test shall be performed with NETTCP certified personnel on that type of mixture by the bituminous concrete producer and meet all specifications (Table M.04.02-2 Table M.04.02-5) before production shipment may be resumed.
Contractors that have mix types rated as "PPT" may use one of the following methods to change the rating to an "A."

Option A: Schedule a day when a Department inspector can be at the facility to witness a passing "PPT" test or,

Option B: When the Contractor or their representative performs a "PPT" test without being witnessed by an inspector, the Contractor shall submit the test results and a split sample including 2 gyratory molds, 5,000 grams of boxed bituminous concrete for binder and gradation determination, and 5,000 grams of cooled loose bituminous concrete for Gmm determination for verification testing and approval. Passing verifications will designate the bituminous concrete type to

be on an "A" status. Failing verifications will require the contractor to submit additional trials.

Option C: When the Contractor or their representative performs a "PPT" test without being witnessed by a Department inspector, the Engineer may verify the mix in the Contractor's laboratory. Passing verifications will designate the bituminous concrete type to be an "A" status. Failing verifications will require the Contractor to submit additional trials.

When Option (A) is used and the "PPT" test meets all specifications, the "PPT" test is considered a passing test and the rating for that mix is changed to "A". When the "PPT" test is not witnessed, the "PPT" Option (B) or (C) procedure must be followed. If the "PPT" Option (B) procedure is followed, the mixtures along with the test results must be delivered to the Materials Testing Lab. The test results must meet the "C" tolerances established by the Engineer. The tolerance Table is included in the Department's current QA Program for Materials, Acceptance and Assurance Testing Policies and Procedures.

"U" – No Acceptable Mix Design on File:

Rating assigned to a type of mixture that does not have a JMF submitted, or the JMF submitted has not been approved, or is incomplete. A mix design or JMF must be submitted annually seven (7) days prior in order to obtain an "A," or "PPT" status for that mix. A "U" will be used only to designate the mix status until the mix design has been approved, and is accompanied with all supporting data as specified. Bituminous concrete mixtures rated with a "U" cannot be used on Department projects.

TABLE M.04.02– 2: Superpave Master Range for Bituminous Concrete Mixture Design Criteria

Notes: (1) Minimum Pb as specified in Table M.04.02-5. (2) Voids in Mineral Aggregates shall be computed as specified in AASHTO R 35. (3) Control point range is also defined as the master range for that mix. (4) Dust is considered to be the percent of materials passing the #200 sieve. (5) For WMA, lower minimum aggregate temperature will require Engineer's approval. (6) For WMA and PMA, the mix temperature shall meet manufacturer's recommendations.

	S0.25		**S0.375**		**S0.5**		**S1**	
Sieve	CONTROL POINTS (3)		CONTROL POINTS(3)		CONTROL POINTS(3)		CONTROL POINTS(3)	
inches	Min (%)	Max (%)	Min (%)	Max (%)	Min (%)	Max (%)	Min (%)	Max (%)
2.0	-	-	-	-	-	-	-	-
1.5	-	-	-	-	-	-	100	-
1.0	-	-	-	-	-	-	90	100
3/4	-	-	-	-	100	-	-	90
1/2	100	-	100	-	90	100	-	-
3/8	97	100	90	100	-	90	-	-
#4	-	90	-	90	-	-	-	-
#8	32	67	32	67	28	58	19	45
#16	-	-	-	-	-	-	-	-
#30	-	-	-	-	-	-	-	-
#50	-	-	-	-	-	-	-	-
#100	-	-	-	-	-	-	-	-
#200	2.0	10.0	2.0	10.0	2.0	10.0	1.0	7.0
Pb (1)	-	-	-	-	-	-	-	-
VMA (2) (%)	16.0 ± 1		16.0 ± 1		15.0 ± 1		13.0 ± 1	
VA (%)	4.0 ± 1		4.0 ± 1		4.0 ± 1		4.0 ± 1	
Gse	JMF value		JMF value		JMF value		JMF value	
Gmm	JMF ± 0.030		JMF ± 0.030		JMF ± 0.030		JMF ± 0.030	
Dust/Pbe(4)	0.6 – 1.2		0.6 – 1.2		0.6 – 1.2		0.6 – 1.2	
Agg. Temp(5)	280 – 350°F		280 – 350°F		280 – 350°F		280 – 350°F	
Mix Temp(6)	265 – 325°F		265 – 325°F		265 – 325°F		265 – 325°F	
Design TSR	≥ 80%		≥ 80%		≥ 80%		≥ 80%	
T-283 Stripping	Minimal, as determined by the Engineer							

TABLE M.04.02–3: Superpave Master Range for Consensus Properties of Combined Aggregate Structures

Notes: (1) If less than 25 % of a given layer is within 4 inches of the anticipated top surface, the layer may be considered to be below 4 inches for mixture design purposes.

Traffic Level	Design ESALs (80 kN)	Coarse Aggregate Angularity (1) ASTM D 5821	Fine Aggregate Angularity (7) AASHTO T 304	Flat and Elongated Particles ASTM D 4791	Sand Equivalent AASHTO T 176
- - - - -	(million)			> #4	- - - - -
1*	< 0.3	55/- -	40	10	40
2	0.3 to < 3.0	75/- -	40	10	40
3	≥ 3.0	95/90	45	10	45
	Design ESALs are the anticipated project traffic level expected on the design lane, projected over a 20 year period, regardless of the actual expected design life of the roadway.	Criteria presented as minimum values. 95/90 denotes that a minimum of 95% of the coarse aggregate, by mass, shall have one fractured face and that a minimum of 90% shall have two fractured faces.	Criteria presented as minimum percent air voids in loosely compacted fine aggregate passing the #8 sieve.	Criteria presented as maximum Percent by mass of flat and elongated particles of materials retained on the #4 sieve, determined at 5:1 ratio.	Criteria presented as minimum values for fine aggregate passing the #8 sieve.

*** NOTE: Level 1 for use by Towns and Municipalities ONLY.**

TABLE M.04.02– 4: Superpave Master Range for Traffic Levels and Design Volumetric Properties

Traffic Level	Design ESALs	Number of Gyrations by Superpave Gyratory Compactor			Percent Density of Gmm from HMA/WMA specimen			Voids Filled with Asphalt (VFA) Based on Nominal mix size – inch			
	(million)	Nini	Ndes	Nmax	Nini	Ndes	Nmax	0.25	0.375	0.5	1
1*	< 0.3	6	50	75	≤ 91.5	96.0	≤ 98.0	70 - 80	70 - 80	70 - 80	67 - 80
2	0.3 to < 3.0	7	75	115	≤ 90.5	96.0	≤ 98.0	65 - 78	65 - 78	65 - 78	65 - 78
3	≥ 3.0	8	100	160	≤ 90.0	96.0	≤ 98.0	73 – 76	73 - 76	65 - 75	65 - 75

*** NOTE: Level 1 for use by Towns and Municipalities ONLY.**

TABLE M.04.02– 5:
Superpave Minimum Binder Content by Mix Type and Level

Mix Type	Level	Binder Content Minimum (1)
S0.25	1*	5.6
S0.25	2	5.5
S0.25	3	5.4
S0.375	1*	5.6
S0.375	2	5.5
S0.375	3	5.4
S0.5	1*	5.0
S0.5	2	4.9
S0.5	3	4.8
S1	1*	4.6
S1	2	4.5
S1	3	4.4

*** NOTE: Level 1 for use by Towns and Municipalities ONLY.**

M.04.03— Production Requirements:

1. Standard Quality Control Plan (QCP) for Production:

The QCP for production shall describe the organization and procedures which the Contractor shall use to administer quality control. The QCP shall include the procedures used to control the production process, to determine when immediate changes to the processes are needed, and to implement the required changes. The QCP must detail the inspection, sampling and testing protocols to be used, and the frequency for each.

Control Chart(s) shall be developed and maintained for critical aspect(s) of the production process as determined by the Contractor. The control chart(s) shall identify the material property, applicable upper and lower control limits, and be updated with current test data. As a minimum, the following quality characteristics shall be included in the control charts: percent passing #4 sieve, percent passing #200 sieve, binder content, air voids, Gmm and VMA. The control chart(s) shall be used as part of the quality control system to document variability of the bituminous concrete production process. The control chart(s) shall be submitted to the Engineer the first day of each month.

The QCP shall also include the name and qualifications of a Quality Control Manager. The Quality Control Manager shall be responsible for the administration of the QCP, including compliance with the plan and any plan modifications.

The Contractor shall submit complete production testing records to the Engineer within 24 hours in a manner acceptable to the Engineer.

The QCP shall also include the name and qualifications of any outside testing laboratory performing any QC functions on behalf of the Contractor. The QCP must also include a list of sampling & testing methods and frequencies used during production, and the names of all Quality Control personnel and their duties.

Approval of the QCP does not imply any warranty by the Engineer that adherence to the plan will result in production of bituminous concrete that complies with these specifications. The Contractor shall submit any changes to the QCP as work progresses.

2. Acceptance Sampling & Testing Methods:

i. General:

Acceptance samples of mixtures shall be obtained from the hauling vehicles and tested by the Contractor at the facility during each day's production.

The Contractor shall submit all acceptance tests results to the Engineer within 24 hours or prior to the next day's production. All acceptance test specimens and supporting documentation must be retained by the Contractor. Verification testing will be performed by the Engineer in accordance with the Department's QA Program for Materials. Labeled Acceptance test specimens shall be retained at the production facilities and may be disposed of with the approval of the Engineer. All Quality Control specimens shall be clearly labeled and separated from the Acceptance specimens.

Should the Department be unable to verify the Contractor's acceptance test result(s) due to a failure of the Contractor to retain acceptance test specimens or supporting documentation, the Contractor shall review its quality control plan, determine the cause of the nonconformance and respond in writing within 24 hours to the Engineer describing the corrective action taken at the plant. In addition, the Contractor must provide supporting documentation or test results to validate the subject acceptance test result(s). The Engineer may invalidate any positive adjustments for material corresponding to the acceptance test(s). Failure of the Contractor to adequately address quality control issues at a facility may result in suspension of production for Department projects at that facility.

Contractor personnel performing acceptance sampling and testing must be present at the facility prior to, during, and until completion of production, and be certified as a NETTCP HMA Plant Technician or Interim HMA Plant Technician and be in good standing. Production of material for use on State projects must be suspended by the Contractor if such personnel are not present.

Technicians found by the Engineer to be non-compliant with NETTCP or Department policies may be removed by the Engineer from participating in the acceptance testing process for Department projects until their actions can be reviewed.

Anytime during production that testing equipment becomes inoperable, production can continue for a maximum of 1 hour. The Contractor shall obtain box sample(s) in accordance with Table M.04.03-1 to satisfy the daily acceptance testing requirement for the quantity shipped to the project. The box sample(s) shall be tested once the equipment issue has been resolved to the satisfaction of the Engineer. Production beyond 1 hour may be considered by the Engineer. Production will not be permitted beyond that day until the subject equipment issue has been resolved.

ii. Curb Mix Acceptance Sampling and Testing Procedures:

Curb Mixes shall be tested by the Contractor at a frequency of one test per every 250 tons of cumulative production, regardless of the day of production.

When these mix designs are specified, the following acceptance procedures and AASHTO test methods shall be used:

TABLE M.04.03 – 2: Curb Mix Acceptance Test Procedures

Protocol	Reference	Description
1	**AASHTO T 30(M)**	Mechanical Analysis of Extracted Aggregate
2	**AASHTO T 168**	Sampling of Bituminous Concrete
3	**AASHTO T 308**	Binder content by Ignition Oven method (adjusted for aggregate correction factor)
4	**AASHTO T 209(M)**	Theoretical Maximum Specific Gravity and Density of Bituminous Paving Mixtures
5	**AASHTO T 312**	Superpave Gyratory molds compacted to N_{des}
6	**AASHTO T 329**	Moisture Content of Hot-Mix Asphalt (HMA) by Oven Method

a. Determination of Off-Test Status:

i. The test results of AASHTO T 308 and T 30(M) will be used to determine if the mixture is within the tolerances shown in Table M.04.02-1. Curb Mixtures are considered “off test" when the test results indicate that any single value for bitumen content or gradation are not within the tolerances shown in Table M.04.02-1 for that mixture. If the mix is “off test”, the Contractor must take immediate actions to correct the deficiency and a new acceptance sample shall be tested on the same day or the following day of production.

ii. When multiple plants and silos are located at one site, mixture supplied to one project is considered as coming from one source for the purpose of applying the “off test” status.

iii. The Engineer may cease supply from the plant when test results from three consecutive samples are not within the JMF tolerances or the test results from two consecutive samples not within the master range indicated in Table M.04.02-1 regardless of production date.

b. JMF Changes

i. If a test indicates that the bitumen content or gradation are outside the tolerances, the Contractor may make a single JMF change as allowed by the Engineer prior to any additional testing. A JMF change shall include the date and name of the Engineer that allowed it. Consecutive test results outside the requirements of Table M.04.02-1 JMF tolerances may result in rejection of the mixture.

ii. Any modification to the JMF shall not exceed 50% of the JMF tolerances indicated in Table M.04.02-1 for any given component of the mixture without approval of the Engineer. When such an adjustment is made to the bitumen, the corresponding production percentage of bitumen shall be revised accordingly.

iii. Superpave Mix Acceptance Sampling and Testing Procedures:

The hauling vehicle from which samples are obtained shall be selected using stratified – random sampling based on the total estimated tons of production in accordance with ASTM D 3665, except that the first test shall be randomly taken from the first 151 tons or as directed by the Engineer. The Engineer may request a second acceptance test within the first sub lot. One acceptance test shall always be performed in the last sub-lot based on actual tons of material produced.

The number of sub lots/acceptance tests is based on the total production per day as indicated in Table M.04.03-1. Quantities of the same type/level mix per plant may be combined daily for multiple state projects to determine the number of sub lots. The Engineer may direct that additional acceptance samples be obtained to represent materials actually being delivered to the project.

The payment adjustment for air voids and liquid binder will be calculated per sub lot as described in Section 4.06.

An acceptance test shall not be performed within 150 tons of production from a previous acceptance test unless approved by the Engineer. Quality Control tests are not subject to this restriction. Unless otherwise tested, a minimum of one (1) acceptance test shall be performed for every four days of production at a facility for each type/level mix (days of production may or may not be consecutive days).

TABLE M.04.03 – 1:
Superpave Acceptance Testing Frequency per Type/Level/Plant

Daily quantity produced in tons (lot)	Number of Sub Lots/Tests
0 to 150	0, Unless requested by the Engineer
151 to 600	1
601 to 1,200	2
1,201 to 1,800	3
1,801 or greater	1 per 600 tons or portions thereof

When the Superpave mix design is specified, the following acceptance and AASHTO test procedures shall be used:

TABLE M.04.03– 3: Superpave Acceptance Testing Procedures

Protocol	Reference	Description
1	AASHTO T 168	Sampling of bituminous concrete
2	AASHTO R 47	Reducing samples to testing size
3	AASHTO T 308	Binder content by Ignition Oven method (adjusted for aggregate correction factor)
4	AASHTO T 30	Gradation of extracted aggregate for bituminous concrete mixture
5	AASHTO T 312	(1)Superpave Gyratory molds compacted to N_{des}
6	AASHTO T 166	(2)Bulk specific gravity of bituminous concrete
7	AASHTO R 35	(2)Air voids, VMA
8	AASHTO T 209(M)	Maximum specific gravity of bituminous concrete (average of two tests)
9	AASHTO T 329	Moisture content of Production bituminous concrete

Notes: **(1)** One set equals two six-inch molds. Molds to be compacted to Nmax for PPTs and to Ndes for production testing. The first sublot of the year will be compacted to N_{max}
(2) Average value of one set of six-inch molds.

If the average corrected Pb content differs by 0.3% or more from the average bituminous concrete facility production delivery ticket in five (5) consecutive tests regardless of the production date (moving average), the Contractor shall immediately investigate, determine an assignable cause and correct the issue. When two consecutive moving average differences are 0.3% or more, the Engineer may require a new aggregate correction factor.

The test specimen must be ready to be placed in an approved ignition furnace for testing in accordance with AASHTO T 308 within thirty minutes of being obtained from the hauling vehicle and the test shall start immediately after.

The Contractor shall perform moisture susceptibility (TSR) testing annually for all design levels of HMA-, WMA-, and PMA- S0.5 plant-produced mixtures, in accordance with the latest version of AASHTO T 283(M).

If any material source changes from the previous year, or during the production season, a mix design TSR as well as a production TSR is required for the new mixture. The AASHTO T 283(M) test shall be performed at an AASHTO Materials Reference Laboratory (AMRL) by NETTCP Certified Technicians. The test results and specimens shall be submitted to the Engineer for review. This shall be completed within 30 days from the start of production. Superpave mixtures that require anti-strip additives (either liquid or mineral) shall continue to meet all requirements specified herein for binder and bituminous concrete. The Contractor shall submit the name, manufacturer, percent used, technical datasheet and SDS for the anti-strip additive (if applicable) to the Engineer. In addition, compaction of samples shall be accomplished utilizing an accepted Superpave Gyratory Compactor (SGC), supplied by the Contractor. The SGC shall be located at the facility supplying mixture to the project.

a. Determination of Off-Test Status:

i. Superpave mixes shall be considered *"off test"* when any Control Point Sieve, VA, VMA, and Gmm values are outside of the limits specified in Table M.04.03-4 and the computed binder content (Pb) established by AASHTO T308 or as documented on the vehicle delivery ticket is below the minimum binder content stated in sub article M.04.02-5. Note that further testing of samples or portions of samples not initially tested for this purpose cannot be used to change the status.

ii. Any time the bituminous concrete mixture is considered Off-test:

1. The Contractor shall notify the Engineer (and project staff) when the plant is *"off test"* for a type of mixture. When multiple plants and silos are located at one site, mixture supplied to one project is considered as coming from one source for the purpose of applying the *"off test"* determination.

2. The Contractor must take immediate actions to correct the deficiency, minimize *"off test"* production to the project, and obtain an additional Process Control (PC) test after any corrective action to verify production is in conformance to the specifications. A PC test will not be used for acceptance and is solely for the use of the Contractor in its quality control process.

b. Cessation of Supply for Superpave Mixtures with no Payment Adjustment: Production of bituminous concrete shall cease for the Project from any plant that consistently fails to produce mixture that meets the JMF and volumetric properties. The quantity of Superpave mixtures shipped to the project that is "off-test" will not be adjusted for deficient mixtures.

A Contractor shall cease to supply mixture from a plant when:

1. Bituminous concrete mixture is "off test" on three (3) consecutive tests for any combination of VMA or Gmm, regardless of date of production.

2. Bituminous concrete mixture is "off test" on two (2) consecutive tests for the Control Point sieves in one day's production.

Following cessation, the Contractor shall immediately make necessary material or process corrections and run a Pre-Production Trial (PPT) for that type of mixture. Use of that type of mixture from that plant will be prohibited on the Project until the Contractor has demonstrated the ability to produce acceptable mixture from that facility. When the Contractor has a passing test and has received approval from the Engineer, the use of that mixture to the Project may resume.

c. Cessation of Supply for Superpave Mixtures with Payment Adjustment: Production of bituminous concrete shall cease for the Project from any plant that consistently fails to produce mixture that meets the Superpave minimum binder content by mix type and level listed in Table M.04.02-5. The quantity of Superpave mixtures shipped to the project that is "off-test" will be adjusted for deficient mixtures in accordance with Section 4.06.

A Contractor shall cease to supply mixture from a plant when:

1. The binder content (Pb) is below the requirements of Table M.04.02-5 on the ignition oven test result after two (2) consecutive tests, regardless of the date of production.

2. The air voids (VA) is outside the requirements of Table M.04.03-4 after three (3) consecutive tests, regardless of the date of production.

Following cessation, the Contractor shall immediately make necessary material or process corrections and run a Pre-Production Trial (PPT) for that type of mixture. Use of that type of mixture from that plant will be prohibited on the Project until the Contractor has demonstrated the ability to produce acceptable mixture from that facility. When the Contractor has a passing test and has received approval from the Engineer, the use of that mixture to the Project may resume.

d. JMF Changes for Superpave Mixture Production: It is understood that a JMF change is effective from the time it was submitted forward and is not retroactive to the previous test or tests. JMF changes are permitted to allow for trends in aggregate and mix properties but every effort shall be employed by the Contractor to minimize this to ensure a uniform

and dense pavement. A revised JMF submittal shall include the date and name of the Engineer that allowed it.

JMF changes are only permitted prior to or after a production shift for all bituminous-concrete types of mixtures and only when they:

i. Are requested in writing and pre-approved by the Engineer.
ii. Are based on a minimum of a two test trend.
iii. Are documented with a promptly submitted revised JMF on the form provided by the Engineer.
iv. A revised JMF submittal shall include the date and name of the Engineer that allowed it.

No change will be made on any aggregate or RAP consensus property or specific gravity unless the test is performed at an AASHTO Materials Reference Laboratory (AMRL) by NETTCP Certified Technicians.

A JMF change shall be submitted every time the plant target RAP and/or bin percentage deviates by more than 5% and/or the plant target binder content deviates by more than 0.15% from the active JMF.

TABLE M.04.03– 4: Superpave Master Range for Bituminous Concrete Mixture Production

Notes: (1) 300°F minimum after October 15. (2) Minimum Pb as specified in Table M.04.02-5 (3) Control point range is also defined as the master range for that mix. (4) JMF tolerances shall be defined as the limits for production compliance. VA & Pb payment is subject to adjustments, as defined in sub-article 4.06.04 - 2. (5) For WMA, lower minimum aggregate temperature will require Engineer's approval. (6) For WMA and/or polymer modified asphalt, the mix temperature shall meet manufacturer's recommendations. In addition, for WMA, the maximum mix temperature shall not exceed 325°F once the WMA technology is incorporated.

	S0.25		**S0.375**		**S0.5**		**S1**		**Tolerances**
Sieve	CONTROL POINTS (4)		CONTROL POINTS (4)		CONTROL POINTS (4)		CONTROL POINTS (4)		**From JMF Targets** (4)
inches	Min(%)	Max(%)	Min(%)	Max(%)	Min(%)	Max(%)	Min(%)	Max(%)	±Tol
1.5	-	-	-	-	-	-	100	-	
1.0	-	-	-	-	-	-	90	100	
3/4	-	-	-	-	100	-	-	90	
1/2	100	-	100	-	90	100	-	-	
3/8	97	100	90	100	-	90	-	-	
#4	-	90	-	90	-	-	-	-	
#8	32	67	32	67	28	58	19	45	
#16	-	-	-	-	-	-	-	-	
#200	2.0	10.0	2.0	10.0	2.0	10.0	1.0	7.0	
Pb(2)	-	-	-	-	-	-	-	-	note (2)
VMA (%)	16.0		16.0		15.0		13.0		1.0
VA (%)	4.0		4.0		4.0		4.0		1.0
Gmm	JMF value		JMF value		JMF value		JMF value		0.030
Agg. Temp (5)	280 – 350F		280 – 350F		280 – 350F		280 – 350F		
Mix Temp (6)	265 – 325 F (1)		265 – 325 F (1)		265 – 325 F (1)		265 – 325 F (1)		
Prod. TSR	N/A		N/A		≥80%		N/A		
T-283 Stripping	N/A		N/A		Minimal as determined by the Engineer		N/A		

TABLE M.04.03– 5:
JMF Tolerances for Application of Positive Adjustments

Notes: (1) Only for S1 mixes.
(2) Only for S0.5 and S1 mixes.

Sieve	Tolerances From JMF Targets
inches	±Tol
3/4	9 (1)
1/2	9 (1)
3/8	9 (2)
#4	8
#8	7
#16	6
#200	3
Pb	0.4

TABLE M.04.03– 6:
Superpave Master Range for Traffic Levels and Design Volumetric Properties

Traffic Level	Design ESALs (million)	Number of Gyrations by Superpave Gyratory Compactor	
		Nini	Ndes
1*	< 0.3	6	50
2	0.3 to < 3.0	7	75
3	≥3.0	8	100

* NOTE: Level 1 for use by Towns and Municipalities ONLY.

TABLE M.04.03-7:
Modifications to Standard AASHTO and ASTM Test Specifications and Procedures

AASHTO Standard Specification	
Reference	**Modification**
M 140	Emulsified Asphalt grade RS-1H shall meet all the requirements of the emulsified asphalt grade RS-1 except for the penetration requirement of the residue that will change from 100 to 200 penetration units (0.1 mm) to 40 to 90 penetration units (0.1 mm).
AASHTO Standard Method of Test	
Reference	**Modification**
T 30	Section 7.2 thru 7.4 Samples are not routinely washed for production testing
T 168	Samples are taken at one point in the pile. Samples from a hauling vehicle are taken from only one point instead of three as specified. Selection of Samples: Sampling is equally important as the testing, and the sampler shall use every precaution to obtain samples that are truly representative of the bituminous mixture. Box Samples: In order to enhance the rate of processing samples taken in the field by construction or maintenance personnel the samples will be tested in the order received and data processed to be determine conformance to material specifications and to prioritize inspections by laboratory personnel.
T 195	Section 4.3 only one truck load of mixture is sampled. Samples are taken from opposite sides of the load.
T 209	Section 7.2 The average of two bowls is used proportionally in order to satisfy minimum mass requirements. 8.3 Omit Pycnometer method.
T 283	When foaming technology is used, the material used for the fabrication of the specimens shall be cooled to room temperature, and then reheated to the manufactures recommended compaction temperature prior to fabrication of the specimens.
T 331	6.1 Cores are dried to a constant mass prior to testing using a core-dry machine.

AASHTO Standard Recommended Practices	
Reference	**Modification**
R 26	Quality Control Plans must be formatted in accordance with AASHTO R 26, certifying suppliers of performance-graded asphalt binders, Section 9.0, Suppliers Quality Control Plan, and "NEAUPG Model PGAB QC Plan." 1. The Department requires that all laboratory technician(s) responsible for testing PG-binders be certified or Interim Qualified by the New England Transportation Technician Certification Program (NETTCP) as a PG Asphalt Binder Lab Technician. 2. Sampling of asphalt binders should be done under the supervision of qualified technician. NECTP "Manual of Practice," Chapter 2 Page 2-4 (Key Issues 1-8). 3. A copy of the Manual of Practice for testing asphalt binders in accordance with the Superpave PG Grading system shall be in the testing laboratory. 4. All laboratories testing binders for the Department are required to be accredited by the AASHTO Materials Reference Laboratory (AMRL). 5. Sources interested in being approved to supply PG-binders to the Department by use of an "in-line blending system," must record properties of blended material, and additives used. 6. Each source of supply of PG-binder must indicate that the binders contain no additives used to modify or enhance their performance properties. Binders that are manufactured using additives, modifiers, extenders etc., shall disclose the type of additive, percentage and any handling specifications/limitations required. 7. All AASHTO M 320 references shall be replaced with AASHTO M 332. 8. Each year, in April and September, the supplier shall submit test results for two BBR testing at two different temperatures in accordance with AASHTO R 29. Suppliers shall provide AASHTO M 332 testing results and split samples at a minimum of once per lot.

ON-THE-JOB TRAINING (OJT) WORKFORCE DEVELOPMENT PILOT

Description

To provide construction industry related job opportunities to minorities, women and economically disadvantaged individuals; and to increase the likelihood of a diverse and inclusive workforce on Connecticut Department of Transportation (ConnDOT) projects.

All contractors (existing and newcomers) will be automatically placed in the Workforce Development Pilot. Standard OJT requirements typically associated with individual projects will no longer be applied at the project level for new projects. Instead, these requirements will be applicable on an annual basis for each contractor performing work on ConnDOT projects.

The OJT Workforce Development Pilot will allow a contractor to train employees on Federal, State and privately funded projects located in Connecticut. However, contractors should give priority to training employees on ConnDOT Federal-Aid funded projects.

Funding

The Department will establish an OJT fund annually from which contractors may bill the Department directly for eligible trainee hours. The funds for payment of trainee hours on federal-aid projects will be allocated from the ½ of 1% provided for OJT funding, and will be based on hours trained, not to exceed a maximum of $25,000.00 per year; per contractor.

Minorities and Women

Developing, training and upgrading of minorities, women and economically disadvantaged individuals toward journeyperson level status is the primary objective of this special training provision. Accordingly, the Contractor shall make every effort to enroll minority, women and economically disadvantaged individuals as trainees to the extent that such persons are available within a reasonable area of recruitment. This training commitment is not intended, and shall not be used, to discriminate against any applicant for training whether a member of a minority group or not.

Assigning Training Goals

The Department, through the OJT Program Coordinator, will assign training goals for a calendar year based on the contractor's past two year's activities and the contractor's anticipated upcoming year's activity with the Department. At the beginning of each year, all contractors eligible will be contacted by the Department to determine the number of trainees that will be assigned for the upcoming calendar year. At that time, the Contractor shall enter into an agreement with the Department to provide a self-imposed on-the-job training program for the calendar year. This agreement will include a specific number of annual training goals agreed to by both parties. The number of training assignments may range from one (1) to six (6) per

contractor per calendar year. Each January, a summary of the trainees required and the OJT Workforce Development Pilot package will be sent to participating contractors. The number of trainees assigned to each contractor in the summary will increase proportionately not to exceed 6, as shown in the following table. This package will also be provided to contractors as they become newly eligible for the OJT Workforce Development Pilot throughout the remainder of the year. Projects awarded after September 30 will be included in the following year's Program.

The dollar thresholds for training assignments are as follows:

$4.5 – 8 million=	1 trainee
$ 9 – 15 million=	2 trainees
$16 – 23 million=	3 trainees
$24 – 30 million=	4 trainees
$31 – 40 million=	5 trainees
$41 – and above=	6 trainees

Training Classifications

Preference shall be given to providing training in the following skilled work classifications. However, the classifications established are not all-inclusive:

Equipment Operators	Electricians
Laborers	Painters
Carpenters	Iron / Reinforcing Steel Workers
Concrete Finishers	Mechanics
Pipe Layers	Welders

The Department has on file common training classifications and their respective training requirements; that may be used by the contractors. Contractors shall submit new classifications for specific job functions that their employees are performing. The Department will review and recommend for acceptance the new classifications proposed by contractors, if applicable. New classifications shall meet the following requirements:

Proposed training classifications are reasonable and realistic based on the job skill classification needs, and the number of training hours specified in the training classification is consistent with common practices and provides enough time for the trainee to obtain journeyman level status.

Where feasible, 25% percent of apprentices or trainees in each occupation shall be in their first year of apprenticeship or training. The number of trainees shall be distributed among the work classifications on the basis of the contractor's needs and the availability of journeymen in the various classifications within a reasonable area of recruitment.

No employee shall be employed as a trainee in any classification in which they have successfully completed a training course leading to journeyman level status or in which they have been employed as a journeyman.

Records and Reports

The Contractor shall maintain enrollment in the program and submit all required reports documenting company compliance under these contract requirements. These documents and any other information shall be submitted to the OJT Program Coordinator as requested.

Upon the trainee's completion and graduation from the program, the Contractor shall provide each trainee with a certification Certificate showing the type and length of training satisfactorily completed.

Trainee Interviews

In order to determine the continued effectiveness of the OJT Program in Connecticut, the department will periodically conduct personal interviews with current trainees and may survey recent graduates of the program. This enables the OJT Program Coordinator to modify and improve the program as necessary. Trainee interviews are generally conducted at the job site to ensure that the trainees' work and training is consistent with the approved training program.

Trainee Wages

Contractors shall compensate trainees on a graduating pay scale based upon a percentage of the prevailing minimum journeyman wages (Davis-Bacon Act). Minimum pay shall be as follows:

60 percent	of the journeyman wage for the first half of the training period
75 percent	of the journeyman wage for the third quarter of the training period
90 percent	of the journeyman wage for the last quarter of the training period

In no case, will the trainee be paid less than the prevailing rate for general laborer as shown in the contract wage decision (must be approved by the Department of Labor).

Achieving or Failing to Meet Training Goals

The Contractor will be credited for each trainee currently enrolled or who becomes enrolled in the approved training program and providing they receive the required training under the specific training program. Trainees will be allowed to be transferred between projects if required by the Contractor's schedule and workload. The OJT Program Coordinator must be notified of transfers within five (5) days of the transfer or reassignments by e-mail (Phylisha.Coles@ct.gov).

Where a contractor does not or cannot achieve its annual training goal with female or minority trainees, they must produce adequate Good Faith Efforts documentation. Good Faith Efforts are those designed to achieve equal opportunity through positive, aggressive, and continuous result-oriented measures. 23 CFR § 230.409(g) (4). Contractors should request minorities and females from unions when minorities and females are under-represented in the contractor's workforce.

Whenever a contractor requests ConnDOT approval of someone other than a minority or female, the contractor must submit documented evidence of its Good Faith Efforts to fill that position with a minority or female. When a non-minority male is accepted, a contractor must continue to attempt to meet its remaining annual training goals with females and minorities.

Where a contractor has neither attained its goal nor submitted adequate Good Faith Efforts documentation, ConnDOT will issue a letter of non-compliance. Within thirty (30) days of receiving the letter of non-compliance, the contractor must submit a written Corrective Action Plan (CAP) outlining the steps that it will take to remedy the non-compliance. The CAP must be approved by ConnDOT. Failure to comply with the CAP may result in your firm being found non-responsive for future projects.

Measurement and Payment

Optional reimbursement will be made to the contractor for providing the required training under this special provision on ConnDOT Federal-Aid funded projects only.

Contractor will be reimbursed at $0.80 for each hour of training given to an employee in accordance with an approved training or apprenticeship program. This reimbursement will be made even though the Contractor receives additional training program funds from other sources, provided such other source does not specifically prohibit the contractor from receiving other reimbursement.

Reimbursement for training is made annually or upon the trainees completion and not on a monthly basis. No payment shall be made to the Contractor if either the failure to provide the required training, or the failure to hire the trainee as a journeyperson, is caused by the Contractor.

Program reimbursements will be made directly to the prime contractor on an annual basis. To request reimbursement, prime contractors must complete the Voucher for OJT Workforce Development Pilot Hourly Reimbursement for each trainee in the OJT Program. This form is included in the OJT Workforce Development Pilot package and is available on the Department's web site at:

www.ct.gov/dot

The completed form must be submitted to the Office of Contract Compliance for approval. The form is due on the 15th day of January for each trainee currently enrolled and for hours worked on ConnDOT Federal-Aid funded projects only.

SMALL CONTRACTOR AND SMALL CONTRACTOR MINORITY BUSINESS ENTERPRISES (SET-ASIDE)

March, 2001

NOTE: Certain of the requirements and procedures stated in this "Special Provision" are applicable prior to the execution of the Contract.

I. GENERAL

A. The Contractor shall cooperate with the Connecticut Department of Transportation (CONNDOT) in implementing the required contract obligations concerning "Small Contractor" and "Small Contractor Minority Business Enterprise" use on this Contract in accordance with Section 4a-60g of the Connecticut General Statutes as revised. References, throughout this "Special Provision", to "Small Contractors" are also implied references to "Small Contractor Minority Business Enterprises" as both relate to Section IIA of these provisions. The Contractor shall also cooperate with CONNDOT in reviewing the Contractor's activities relating to this provision. This "Special Provision" is in addition to all other equal opportunity employment requirements of this Contract.

B. For the purpose of this "Special Provision", the "Small Contractor(s)" and "Minority Business Enterprise(s)" named to satisfy the set-aside requirement must be certified by the Department of Administrative Services, Business Connections/ Set-Aside Unit [(860) 713-5236 www.das.state.ct.us/busopp.htm] as a "Small Contractor" and "Minority Business Enterprises" as defined by Section 4a-60g Subsections (1) and (3) of the Connecticut General Statutes as revised and is subject to approval by CONNDOT to do the work for which it is nominated pursuant to the criteria stipulated in Section IIC-3.

C. Contractors who allow work which they have designated for "Small Contractor" participation in the pre-award submission required under Section IIC to be performed by other than the approved "Small Contractor" organization and prior to concurrence by CONNDOT, will not be paid for the value of the work performed by organizations other than the "Small Contractor" designated.

D. If the Contractor is unable to achieve the specified contract goals for "Small Contractor" participation, the Contractor shall submit written documentation to CONNDOT's Manager of Construction Operations indicating his/her good faith efforts to satisfy goal requirements. Documentation is to include but not be limited to the following:

1. A detailed statement of the efforts made to select additional subcontract opportunities for work to be performed by each "Small Contractor" in order to increase the likelihood of achieving the stated goal.

2. A detailed statement, including documentation of the efforts made to contact and solicit contracts with each "Small Contractor", including the names, addresses, dates and telephone numbers of each "Small Contractor" contacted, and a description of the information provided to each "Small Contractor" regarding the scope of services and anticipated time schedule of items proposed to be subcontracted and the nature of response from firms contacted.

3. For each "Small Contractor" that placed a subcontract quotation which the Contractor considered not to be acceptable, provide a detailed statement of the reasons for this conclusion.

4. Documents to support contacts made with CONNDOT requesting assistance in satisfying the contract specified or adjusted "Small Contractor" dollar requirements.

5. Document other special efforts undertaken by the Contractor to meet the defined goal.

E. Failure of the Contractor to have at least the specified dollar amount of this contract performed by "Small Contractor" as required in Section IIA of this "Special Provision" will result in the reduction in contract payment to the Contractor by an amount equivalent to that determined by subtracting from the specific dollar amount required in Section IIA, the dollar payments for the work actually performed by each "Small Contractor". The deficiency in "Small Contractor" achievement, will therefore, be deducted from the final contract payment. However, in instances where the Contractor can adequately document or substantiate its good faith efforts made to meet the specified or adjusted dollar amount to the satisfaction of CONNDOT, no reduction in payments will be imposed.

F. All records must be retained for a period of three (3) years following completion of the contract and shall be available at reasonable times and places for inspection by authorized representatives of CONNDOT.

G. Nothing contained herein, is intended to relieve any contractor or subcontractor or material supplier or manufacturer from compliance with all applicable Federal and State legislation or provisions concerning equal employment opportunity, affirmative action, nondiscrimination and related subjects during the term of this Contract.

II. **SPECIFIC REQUIREMENTS**

In order to increase the participation of "Small Contractors", CONNDOT requires the following:

A. Not less than ___12.0___ (%) percent of the **final** value of this Contract shall be subcontracted to and performed by, and/or supplied by, manufactured by and paid to "Small Contractors" and/or "Small Contractors Minority Business Enterprises".

If the above percentage is zero (0%) AND an asterisk (*) has been entered in the adjacent brackets [ ], this Contract is 100% solely set-aside for participation by "Small Contractors" and/or "Small Contractors Minority Business Enterprises".

B. The Contractor shall assure that each "Small Contractor" will have an equitable opportunity to compete under this "Special Provision", particularly by arranging solicitations, time for the preparation of Quotes, Scope of Work, and Delivery Schedules so as to facilitate the participation of each "Small Contractor".

C. The Contractor shall provide to CONNDOT's Manager of Contracts within Seven (7) days after the bid opening the following items:

1. An affidavit (Exhibit I) completed by each named "Small Contractor" subcontractor listing a description of the work and indicating the dollar amount of all contract(s) and/or subcontract(s) that have been awarded to him/her for the current State Fiscal Year (July 1 - June 30) does not exceed the Fiscal Year limit of $10,000,000.00.

2. A certification of work to be subcontracted (Exhibit II) signed by both the Contractor and the "Small Contractor" listing the work items and the dollar value of the items that the nominated "Small Contractor" is to perform on the project to achieve the minimum percentage indicated in Section IIA above.

3. A certification of past experience (Exhibit III) indicating the scope of work the nominated "Small Contractor" has performed on all projects, public and private, for the past two (2) years.

4. In instances where a change from the originally approved named "Small Contractor" (see Section IB) is proposed, the Contractor is required to submit, in a reasonable and expeditious manner, a revised submission, comprised of the documentation required in Section IIC, Paragraphs 1, 2 and 3 and Section E together with documentation to substantiate and

justify the change, (i.e., documentation to provide a basis for the change) to CONNDOT's Manager of Construction Operations for its review and approval prior to the implementation of the change. The Contractor must demonstrate that the originally named "Small Contractor" is unable to perform in conformity to specifications, or unwilling to perform, or is in default of its contract, or is overextended on other jobs. The Contractor's ability to negotiate a more advantageous contract with another "Small Contractor" is not a valid basis for change. Documentation shall include a letter of release from the originally named "Small Contractor" indicating the reason(s) for the release.

D. After the Contractor signs the Contract, the Contractor will be required to meet with CONNDOT's Manager of Construction Operations or his/her designee to review the following:

1. What is expected with respect to the "Small Contractor" set aside requirements.

2. Failure to comply with and meet the requirement can and will result in monetary deductions from payment.

3. Each quarter after the start of the "Small Contractor" the Contractor shall submit a report to CONNDOT's Manager of Construction Operations indicating the work done by, and the dollars paid to each "Small Contractor" to date.

4. What is required when a request to sublet to a "Small Contractor" is submitted.

E. The Contractor shall submit to CONNDOT's Manager of Construction Operations all requests for subcontractor approvals on standard forms provided by the Department.

If the request for approval is for a "Small Contractor" subcontractor for the purpose of meeting the contract required "Small Contractor" percentage stipulated in Section IIA, a copy of the legal contract between the Contractor and the "Small Contractor" subcontractor must also be submitted at the same time. Any subsequent amendments or modifications of the contract between the Contractor and the "Small Contractor" subcontractor must also be submitted to CONNDOT's Manager of Construction Operations with an explanation of the change(s). The contract must show items of work to be performed, unit prices and, if a partial item, the work involved by both parties.

In addition, the following documents are to be attached:

(1) A statement explaining any method or arrangement for renting equipment. If rental is from a Contractor, a copy of Rental Agreement must be submitted.

(2) A statement addressing any special arrangements for manpower.

(3) A statement addressing who will purchase material.

F. Contractors subcontracting with a "Small Contractor" to perform work or services as required by this "Special Provision" shall not terminate such firms without advising CONNDOT, in writing, and providing adequate documentation to substantiate the reasons for termination if the designated "Small Contractor" firm has not started or completed the work or the services for which it has been contracted to perform.

G. Material Suppliers or Manufacturers

If the Contractor elects to utilize a "Small Contractor" supplier or manufacturer to satisfy a portion or all of the specified dollar requirements, the Contractor must provide the Department with:

1. An executed Affidavit Small Contractor (Set-Aside) Connecticut Department of Transportation Affidavit Supplier or Manufacturer (sample attached), and

2. Substantiation of payments made to the supplier or manufacturer for materials used on the project.

Brokers and packagers shall not be regarded as material Suppliers or manufacturer.

H. Non-Manufacturing or Non-Supplier "Small Contractor" Credit

Contractors may count towards its "Small Contractor" goals the following expenditures with "Small Contractor" firms that are not manufacturers or suppliers:

1. Reasonable fees or commissions charged for providing a bona fide service such as professional, technical, consultant or managerial services and assistance in the procurement of essential personnel, facilities, equipment, material or supplies necessary for the performance of the contract provided that the fee or commission is determined by the Department of Transportation to be reasonable and consistent with fees customarily allowed for similar services.

2. The fees charged for delivery of materials and supplies required on a job site (but not the cost of the materials and supplies themselves) when the hauler, trucker, or delivery service is not also the manufacturer of or a regular dealer in the materials and supplies, provided that the fee is determined by the Department of Transportation to be reasonable and not excessive as compared with fees customarily allowed for similar services.

3. The fees or commissions charged for providing any bonds or insurance specifically required for the performance of the Contract, provided that the fee or commission is determined by the Department of Transportation to be reasonable and not excessive as compared with fees customarily allowed for similar services.

III. **BROKERING**

For the purpose of this "Special Provision", a "Broker" is one who acts as an agent for others in negotiating contracts, purchases, sales, etc., in return for a fee or commission. Brokering of work by a "Small Contractor" is not allowed and is a contract violation.

IV. **PRE-AWARD WAIVERS:**

If the Contractor's submission of the "Small Contractor" listing, as required by Section IIC indicates that it is unable, by subcontracting to obtain commitments which at least equal the amount required by Section IIA, it may request, in writing, a waiver of up to 50% of the amount required by Section IIA. To obtain such a waiver, the Contractor must submit a completed "Application for Waiver of Small Contractor Minority Business Enterprise Goals" to CONNDOT's Manager of Contracts which must also contain the following documentation:

1. Information described in Section ID.

2. For each "Small Contractor" contacted but unavailable, a statement from each "Small Contractor" confirming its unavailability.

Upon receipt of the submission requesting a waiver, the CONNDOT's Manager of Contracts shall submit the documentation to the Director of the Office of Contract Compliance who shall review it for completeness. After completion of the Director of Contract Compliance's review, she/he should write a narrative of his/her findings of the application for a waiver, which is to include his/her recommendation. The Director of Contract Compliance shall submit the written narrative to the Chairperson of the DBE Screening Committee at least five (5) working days before the scheduled meeting. The Contractor shall be invited to attend the meeting and present his/her position. The DBE Screening Committee shall render a decision on the waiver request within five (5)

working days after the meeting. The DBE Screening Committee's decision shall be final. Waiver applications are available from the CONNDOT Manager of Contracts.

EXHIBIT I Mar. 01

SMALL CONTRACTOR/*MINORITY BUSINESS ENTERPRISE
(* Delete if not Applicable)
SET-ASIDE PROGRAM
(QUALIFICATION AFFIDAVIT)

PROJECT(s) _____
(INCLUDING TOWN & DESCRIPTION)

STATE OF _____CONNECTICUT_____

COUNTY OF_____

I_____,ACTING IN BEHALF
NAME OF PARTY SIGNING AFFIDAVIT
OF_____,DO HEREBY CERTIFY
PERSON FIRM OR ORGANIZATION
AND AFFIRM THAT THE INFORMATION SET FORTH BELOW IS TRUE AND ACCURATE TO THE BEST OF MY KNOWLEDGE. AS OF THIS DATE_____THE LIST OF SMALL CONTRACTOR SET-ASIDE PROGRAM - CONTRACTS AND/OR SUBCONTRACTS AWARDED DURING THE CURRENT FISCAL YEAR (JULY 1 - JUNE 30) 20_____ IS AS FOLLOWS:

Col. 1 TOWN AND PROJECT NUMBER	Col. 2 STATE AGENCY WHICH AWARDED CONTRACT	Col. 3 CONTRACT AMOUNT AWARDED UNDER THIS PROGRAM	Col. 4 AMOUNT OF WORK SUBCONTRACTED FROM OTHER FIRMS UNDER THIS PROGRAM	Col. 5 TOTAL AMOUNT OF ALL WORK UNDER THIS PROGRAM Col. 3 Plus Col. 4
	TOTALS	$	$	$

_____
NAME OF PERSON, FIRM OR ORGANIZATION

(FIRM SEAL)

_____
SIGNATURE & TITLE OF OFFICIAL

SWORN TO AND SUBSCRIBED BEFORE ME BY_____

WHO IS PERSONALLY KNOWN TO ME, THIS_____DAY OF_____, 20_____

_____
(NOTARY PUBLIC)

MY COMMISSION EXPIRES_____SEAL

PLEASE NOTE THAT ALL THE WORK AWARDED OR SUBCONTRACTED TO YOUR FIRM UNDER THE SET-ASIDE PROGRAM IN A FISCAL YEAR (JULY 1-JUNE 30) INCLUDING THIS PROJECT, CANNOT BE MORE THAN $10,000,000.00

Mar.01

EXHIBIT II

DEPARTMENT OF TRANSPORTATION
CONTRACT DIVISION
2800 BERLIN TURNPIKE
NEWINGTON, CT 06111

CERTIFICATION OF WORK TO BE SUBCONTRACTED
NOMINATED SMALL CONTRACTOR/*MINORITY BUSINESS ENTERPRISE

* Delete if not applicable

PLEASE INCLUDE A COPY OF CERTIFICATION LETTER

CONTRACTOR_____

ADDRESS_____

TOWN_____PROJECT NO._____

DESCRIPTION OF PROJECT_____

_____

CONTRACT BID AMOUNT $_____

DATE_____

Listed below is the Nominated Small Contractor/Minority Business Enterprise for the above project and the requested data:

Name, Address & Tel No. of the Nominated Firm	ITEM(s)NUMBER(s) and Description of the Item(s) to be performed by and paid to the Subcontractor	Quantities (indicate if partial)	Prime's Bid Amount For Item	Dollar Amount Subcontracted	Small Business Set-Aside Dollar Requirement

Signed By _____
Small Contractor/*Minority Business Enterprise
(Subcontractor)

Signed By_____
Contractor

Title_____

EXHIBIT III

Mar.01

CERTIFICATION
PAST CONSTRUCTION EXPERIENCE

SMALL CONTRACTOR / * MINORITY BUSINESS ENTERPRISES

* Delete if not applicable

PLEASE LIST ALL CONSTRUCTION PROJECTS YOUR ORGANIZATION HAS WORKED ON IN THE PAST TWO FISCAL YEARS

PROJECT LOCATION NUMBER AND DESCRIPTION APPLICABLE	CONTRACT AMOUNT	IF WORK PERFORMED AS PRIME GIVE OWNERS NAME IF WORK PERFORMED AS SUBCONTRACTOR GIVE CONTRACTORS NAME	START DATE	ACTUAL OR ESTIMATED COMPLETION DATE	NAME AND PHONE OF OWNER OR PRIME CONTRACTOR AS

SIGNED BY: _____

SMALL BUSINESS CONTRACTOR
*MINORITY BUSINESS ENTERPRISES

D.O.T. PROJECT NO. _____

* Delete if not applicable

MARCH, 2001

SMALL CONTRACTOR/SMALL CONTRACTOR MINORITY BUSINESS ENTERPRISE (MBE) (SET-ASIDE) CONNECTICUT DEPARTMENT OF TRANSPORTATION AFFIDAVIT – SUPPLIER OR MANUFACTURER

This affidavit must be completed by the State Contractor's designated Small Contractor/ Small Contractor Minority Business Enterprise (MBE), notarized and attached to the contractor's request to utilize a Small Contractor/Small Contractor Minority Business Enterprise (MBE) supplier or manufacturer as a credit towards its Small Contractor/Small Contractor Minority Business Enterprise (MBE) contract requirement; failure to do so will result in not receiving credit towards the contract Small Contractor/Small Contractor Minority Business Enterprise (MBE) requirement.

State Project No. _____
Federal Aid Project No. _____
Description of Project _____

I, _____, acting in behalf of _____
(Name of person signing Affidavit) (Small Contractor/Small Contractor MBE contractor person,
_____ of which I am the_____ affirm that _____
firm, association or certify and corporation) (Title of Person) (Small
_____is a certified Small Contractor/Small
Contractor/Small Contractor MBE person, firm, association or corporation)
Contractor Minority Business Enterprise, as defined by Section 4a-60g of the Connecticut General Statutes, as revised.

I further certify and affirm that _____
(Small Contractor/Small Contractor MBE person, firm, association or corporation)
will assume the actual and contractual responsibility for the provision of the materials and/or supplies sought by _____. If a manufacturer, I produce goods from raw
(State Contractor)
materials or substantially alter them before resale, or if a supplier, I perform a commercially useful function in the supply process.

I understand that false statements made herein are punishable at Law (Sec. 53a-157, CGS, as revised).

_____
(Name of Small Contractor/Small Contractor MBE person, firm, association or corporation)

_____
(Signature and Title of Official making the Affidavit)

Subscribed and sworn to before me, the _____ day of _____ 200____.

_____
Notary Public (Commissioner of the Superior Court)

My Commission Expires _____

CERTIFICATE OF CORPORATION

I, _____, certify that I am the _____ (Official) of the Corporation named in the foregoing instrument; that I have been duly authorized to affix the seal of the Corporation to such papers as require the seal; that _____, who signed said instrument on behalf of the Corporation, was then _____ of said corporation; that said instrument was duly signed for and in behalf of said Corporation by authority of its governing body and is within the scope of its corporation powers.

_____

(Signature of Person Certifying) (Date)

(Corporate Seal)

ITEM #0000190A – NON-DESTRUCTIVE UTILITY INVESTIGATION

Description:

This item shall consist of investigating and locating utilities using non-destructive methods, using the services of a professional utility locating company in accordance with this specification. This item shall include the field survey/location, field paint/stake marking, and color marking on 40-scale plans provided by the Designer.

Equipment and Materials:

General: The Contractor shall provide all necessary equipment and materials needed to identify underground utilities through the use of non-destructive methods such as ground penetrating radar, magnetic or electrical detectors, and other such scanning methods.

Construction:

General: The locations of utilities present shall first be reviewed on the plans and in the field, reconciling all surface evidence of utilities (such as gate valves, manholes, handholes, etc) with what is depicted on the plans. The professional utility location company shall use this information to conduct the non-destructive locating, using the method appropriate to the utility being investigated. Types of utilities which will require locating shall include, but not be limited to, gas lines, water lines, sewer lines, drainage lines, electrical conduits/wires/cables/ductbanks and fiber optic cables, including related structures such as valves, handholes and manholes. In addition to the above, all areas subject to excavation or subsurface work for the Project shall be investigated for the presence of subsurface utilities whether or not the presence of existing utilities are indicated on the plans.

Marking and Labeling: All located utilities shall be tagged, marked, or labeled in the field using standard industrial/engineering/construction methods such as spray paint, stakes, vertical markers, labels, ribbons, identification tapes etc.

Marking Plans: All located utilities shall be marked on 40-scale contract plans provided by the Designer. The colors, patterns and/or symbols shall comply with current industrial/engineering/construction design standards. The limits of this work will correspond to the limit of work shown on the contract plans.

Coordination of Work: This work will be performed within the Noroton Heights Railroad Station Platform Replacement project limits which consist of the territory operated by Metro-North Railroad. The work must be accomplished simultaneously with ongoing daily railroad operations. The Contactor shall coordinate the professional utility locating Subcontractor's

activities with the Designer and Metro-North Railroad. Refer to the General Requirements of the Contract.

Method of Measurement:

Utility investigation shall not be measured for payment. Utility investigation shall include all work as specified in this Special Provision.

Basis of Payment:

Payment will be made at the contract lump sum price for non-destructive utility investigation, performed by a professional utility location company hired by the Contractor, and accepted by the Designer. This price shall be full compensation for furnishing all labor, equipment, tools and incidentals necessary to complete this item.

Pay Item	Pay Unit
Non-Destructive Utility Investigation	L.S.

ITEM #0000581A – 4" PVC DUCT BANKS – 2 DUCTS

Description:

Scope

A. This Section specifies the furnishing, installation, connection, and site-specific detailed design of concrete-encased duct banks, direct buried conduits, and pre-cast concrete manholes and handholes as indicated on the Plans.

B. The Contractor shall perform additional underground exploratory investigations as indicated on the Plans (i.e., test pits, utility detection services, etc.) to determine a clear path/space for all new underground duct banks, manholes, and handholes. Revisions are to be made to the relevant Plans by the Contractor based on the underground exploratory investigations. These alterations are to be submitted to the designer, along with the accompanying duct bank profile and detail drawings, for approval prior to proceeding with the work in the field.

Related Sections

Related requirements are included in, but not limited to, the following:

A. Special Provision "26 05 20 - for "No. 10 Single Conductor"

B. "Trenching and Backfilling"

References

A. All work furnished under this Section shall be in accordance with the latest applicable standards of AASHTO, ASTM, NEMA, and National Electrical Code with regard to material, design, construction and testing, except for any specific variations provided in this Section. The standards applicable shall include, but not be limited to, the following:

Organization	Number	Title
AASHTO	M199	Reinforced Concrete Manhole Sections
AASHTO	HS20-44	Live Loads for Highway Bridges
ANSI	C80.1	Rigid Galvanized Steel Conduit
ASTM	A48	Gray Iron Casting
ASTM	A438	Transverse Bending Test
ASTM	C136	Coarse Aggregates
ASTM	C150	Portland Cement
ASTM	C827	Early Volume Change of Cementitious Mixtures
NEMA	TC-6	Polyvinyl Chloride (PVC) Plastic Utility Ducts for Underground Installations

Submittals

The Contractor shall submit the following:

A. Catalog data on metallic and non-metallic conduit, all conduit couplings and fittings, manhole and handhole inserts, cable support material, waterproofing sealer, concrete curing compound, and concrete dye additive.

B. Shop drawings of pre-cast manholes and handholes which show all accessories including layout of cable supports. The Contractor shall not commence the installation of the pre-cast manholes and handholes until the drawings are approved by the designer.

C. Conduit Stub-Up Plans: Include for all locations where conduit transitions from below-grade to above-grade, such as at substation floor penetrations, switchgear, catenary feeder pole, and negative returns at impedance bonds.

D. Detailed plan and profile installation drawings for duct banks, conduits, manholes, and handholes for the work shown on the Plans.

Materials:

Pre-cast Manholes and Handholes

A. Manholes/handholes may be constructed monolithically or in sections. All manholes and handholes shall be watertight as practicable. Splices in manholes and handholes shall be suitable for submersible use. If the manhole is constructed in sections, the joint between sections shall be made watertight with an approved gasket or with an approved epoxy mortar grout.

B. Manhole and handhole access openings shall be centered in the roof slab and duct bank knockouts shall be centered in the walls, unless otherwise noted. This shall be constructed in size and shape to accommodate the cast iron cover and frame as shown on the Plans.

C. Manholes and handholes shall include duct bank knockouts, riser conduit knockouts, a sump with galvanized grate and a minimum depth of two inches, a ground rod, 7/8-inch minimum diameter galvanized steel pulling irons (8 per manhole, 4 per handhole), cable racks, and cast iron cover with lifting hooks and/or finger holes.

D. Size: Minimum inside dimensions of manholes/handholes shall be as indicated on the Plans.

E. Design Loads: Manhole and handhole design loads shall consist of live loads, live load impact, dead load, soil loads, hydrostatic loads and any other expected loads that may occur.

1. Live loads shall be for HS-20 for manholes, and handholes that will be installed a distance of nine (9) feet or greater from the centerline of track or Cooper E-80 for manholes and handholes situated less than nine (9) feet from centerline of track.

2. Impact loading shall be 30 percent of the live loads.

3. Soil loads shall consist of an earth cover over manhole from zero (0) feet minimum to five (5) feet maximum. Average unit weight of earth shall be assumed to be 100 lbs. per cubic feet.

4. Hydrostatic loading shall be a hydrostatic head of nine (9) feet above base of manhole.

F. The final production shop drawings shall be approved and signed by a Civil or Structural designer registered in the State of Connecticut.

G. Concrete: Cement for concrete shall be Portland cement, meeting the requirements of ASTM C150, Type I or Type II. Concrete shall be thoroughly cured and shall attain a compressive strength of at least 3,000 psi before delivery, and 4,000 before installation. The proportions of materials for concrete shall be as follows:

1. Minimum number of sacks of cement per cu. yard of concrete = 7.
2. Maximum size of coarse aggregate = ¾ inches.
3. Maximum slump = 4 inches.

H. Concrete reinforcing bars (if required) shall be in accordance with the provisions of the Contract Documents.

I. Exterior surfaces of manholes/handholes shall be waterproofed with two coats of waterproofing sealer. The sealer shall be applied when the man-holes/handholes are manufactured and touched up in the field as required to repair damage during shipping and to seal field penetrations. The sealer shall be applied in accordance with the manufacturer's recommendations.

J. Ground rods shall be in accordance with "SECTION 26 05 26 - GROUNDING AND BONDING FOR ELECTRICAL SYSTEMS".

Manhole and Handhole Frames and Covers:

A. Handhole frames and covers shall be as indicated on the Plans. Manhole frames and covers shall be cast from gray iron in accordance with the applicable requirements of ASTM A48, Class 30. Inscription on manhole covers shall be as indicated on the Plans. All frames and covers shall be rated "heavy duty" or stronger. All castings shall, at a minimum, be able to withstand AASHTO HS-20 traffic loading. The transverse bending test shall be considered the primary test for qualification and shall be conducted in accordance with the requirements of ASTM A-438.

B. Cleaning and Inspection:

1. All castings which have passed the required tests shall be thoroughly cleaned, inside and out, without the aid of acid or other liquid, and shall be subjected to careful inspection and hammer tests.

2. The castings shall be of the dimensions indicated on the Plans and shall be free from sand or blowholes and cold shuts. No plugging or stopping of holes will be allowed. Casting lines and excess materials shall be ground smooth.

Manhole/Handhole Cable Supports

A. Cable racks shall be surface-mounted with stainless steel bolts to ½ inch stainless steel anchor inserts and installed vertically, approximately two feet apart on each wall, without blocking any duct bank openings for the new or future duct banks.

1. The exact locations and quantity of cable racks depend upon the exact locations of the pre-cast duct bank knockouts in each style of manhole/handhole and shall be subject to approval by the Engineer.

2. Cable racks shall be heavy duty non-metallic UL listed glass reinforced polymer, Underground Devices Inc. or approved equal. The cable racks shall consist of:

a. A 36 inch long stanchion that shall be attached to the manhole/handhole wall in accordance with the manufacturer's recommendations and shall incorporate recessed bolt mounting holes and multiple arm mounting holes that are four (4) inches apart.

b. Adjustable arms that lock into the stanchion. Holes or slots shall be provided in the arms for cable wire ties. Cable rack arm lengths

shall be appropriate for the manhole/handhole size and amount of cable being installed.

B. The Contractor shall furnish manhole/handhole hardware, as specified hereinafter, or approved equal. Drop-in anchors shall have a 1/2-13 thread, a rated pullout working capacity of at least 2100 pounds and shall be made from either 303 or 316 stainless steel. A 316 stainless steel 1/2-13 hex head cap screw and a 316 stainless steel flat washer shall be used with each drop-in anchor.

Waterproofing

A. Sealer for waterproofing exterior surfaces of manholes/handholes shall be a mineral colloid type asphalt emulsion, as manufactured by Hunt Process Company "Aqua Shield 124," or approved equal.

Aggregate Base

A. Aggregate bases for manholes, handholes and pull boxes shall be No. 6 Crushed Stone. Each manhole shall have a twelve (12) inch minimum deep base. Each handhole and pull box shall have eight (8) inch minimum deep base.

Grout

A. Non-shrinking, non-metallic grout shall be in accordance with ASTM C150 premixed compound capable of minimum compression strength of 4,000 pounds per square inch (psi).

B. Water shall be clean and free from deleterious substances.

C. Non-metallic non-shrinking grout shall be factory pre-mixed requiring only water addition in the field.

D. Shrinkage, if any, shall be in accordance with ASTM C827.

Underground Duct Work

A. All underground duct work shall be schedule 80 PVC unless noted otherwise. All stub-up conduit sweeps shall be large radius (48 inches minimum) Rigid Galvanized Steel (RGS) unless noted otherwise.

B. Duct sizes shall be as indicated on the Plans.

C. Reinforcement is required continuously for entire run of ductbank.

D. Concrete Encasement: Concrete encasement for these duct banks shall contain not less than 6½ sacks of Class "C" concrete and shall have a compressive

strength at age 28 days of not less than 3000 psi. The maximum size of aggregate shall be ½ inch. The concrete shall be dyed a "Red" color with an approved concrete additive. Sump shall be between four (4) and six (6) inches. Forming material is not required during the construction of duct banks. The contractor shall use any means deemed acceptable by the Engineer to construct the duct bank to the dimensions and grades as shown on the plans. Trench forming will be considered an acceptable method.

E. Conduits: PVC and RGS conduits and fittings shall be as specified herein. Asbestos cement conduit or fittings are prohibited.

F. Separators: Conduit separators or spacers shall be non-metallic and of the type recommended by the conduit manufacturer.

Direct Buried Conduits

A. Direct buried conduits shall be PVC Schedule 80 complete with couplings and fittings.

B. All direct buried PVC conduit shall be capped with 3 inches of concrete and have warning tape above it.

Backfill

A. Backfill material shall be in accordance with applicable parts of the Contract Documents and approved by the Engineer.

Marker

A. Duct markers shall be located at the ends of all conduit runs except at structures, at approximately every 200 feet along the conduit run, and at each change in direction of the conduit run. Markers shall be placed approximately 2 feet to the right of the conduit when facing the longitudinal axis of the run and in the direction of the electrical load. Markers shall be made of Class "C" concrete and shall have a compressive strength at age 28 days of not less than 3000 psi. Markers shall be a 6 inch square or round section by 2 feet long. The top edges of the marker shall have a 1/2 inch chamfer all around. The letter "D" with two arrows shall be impressed or cast on top of the marker. One arrow shall be located below the letter and shall point toward the ducts. The second arrow shall be located adjacent to the letter and shall point in a direction parallel to the ducts. The letter and the arrows shall be V shaped and shall have a width of stroke at least 1/4 inch at the top, and depth of 1/4 inch. The top of the markers shall be flush with the adjacent elevation of the paved or unpaved areas. Where the duct

bank changes direction, the arrow located adjacent to the letter shall be cast or impressed with an angle in the arrow approximately the same as the angular change of the run. Marker tape shall be Greenlee No. 435, or approved equal.

Construction Methods:

Excavation and Backfill

A. Excavation and backfill shall be performed in accordance with the Contract Documents and approved by the Engineer.

Installation of Pre-cast Manholes and Handholes

A. The Contractor shall install pre-cast concrete manholes/handholes as indicated on the Plans and as approved by the designer.

B. Prior to burial and installation, field-apply two (2) coats of concrete sealer to exterior surfaces of the manhole/handhole around the duct bank penetrations, conduit penetrations, frame, and field joints. Sealer shall be applied in accordance with the manufacturer's recommendations and must be of high quality to prevent water entry.

C. Manhole/handhole cover and frame shall be installed as shown on the approved shop drawings. Cover frame shall be adjusted level and flush with finished grade.

D. Weld manhole/handhole identification names to each cover. The identification names shall be recommended by the Contractor and approved by the Engineer prior to procuring manholes and handholes.

E. Install a ground rod in each manhole and handhole so that eight inches of the ground rod protrudes above the concrete floor and seal around ground rod with grout finished to match floor. Bond ground rod to metallic cable supports, rigid steel conduit terminations and other metallic components with #4/0 AWG bare copper cable..

Installation of Conduits and Duct Banks

A. Conduits shall be installed as shown on the Plans. Duct bank configuration may be adapted to route obstructions such as underground utilities per the designer's approval; such adaptations may include rotating and fanning out of ducts.

B. Conduits: Minimum depth of conduits from final grade to top of duct bank shall be 18 inches when not under track and 54 inches when located under track. Contractor shall coordinate installation of conduits with the designer.

C. The manufacturer's directions shall be followed in placing all conduits, fittings, supports and spacers, and in compensating for temperature effects.

D. Spacers shall be placed at not greater than five (5) feet intervals on center. Use of metallic spacers will not be permitted. Spacer system shall be designed to support duct bank longitudinal reinforcing bars. Unless noted otherwise on the Plans, install one (1) #5 longitudinal reinforcement bar through the spacers at each of the four outer corners of the duct bank, providing a minimum of one (1) inch of concrete cover over the bars. The ductbank and spacing details shall be as shown on the Plans.

E. For concrete-encased duct banks, the concrete shall completely encase the duct bank without disturbing its vertical or horizontal alignment or damaging the conduits.

F. The exposed surface of duct encasement concrete shall be floated smooth after placement, and an approved curing compound shall be applied in conformance with the concrete manufacturer's recommendations.

G. Conduit terminations at manholes and handholes shall be fitted with end bells. The Contractor shall seal around all duct bank openings in the manhole and handhole walls with non-shrink grout and waterproofing sealer as approved by the designer.

H. At all stages of the work, the Contractor shall exercise care to prevent foreign materials from entering the ducts.

I. Following installation, each conduit shall be thoroughly cleaned and then tested by the successful pulling of a brush and mandrel approved by the Engineer. The mandrel shall be not less than ¼ inch smaller than the inside nominal diameter of the conduit. The Contractor shall give the Engineer 24 hours notice prior to witness the cleaning and testing.

J. A 1/8-inch nylon pull rope shall be installed in each conduit run and secured at each end.

K. Marker tape shall be furnished in a continuous length without splices and installed in one conduit of each duct run. The tape shall be secured at each end inside the manhole and handhole.

L. All conduit terminations shall be plugged using approved removable plugs.

M. Warning tape is to be installed in the fill over all duct banks at a depth of approximately one (1) foot below finished grade. This tape shall be over the longitudinal centerline of the duct banks and shall have appropriate language

written on the tape that warns of the presence of cable duct banks below the tape and to not proceed with any excavation in the area.

N. Pulling tension of cable shall not exceed the cable manufacturer's recommendations.

O. Connections to Manholes/Handholes: Duct bank envelopes connecting to manholes and handholes shall be flared to have an enlarged cross-section at the manhole/handhole opening dimensions by no less than twelve (12) inches in each direction. The perimeter of the duct bank opening in the manhole/handhole shall be flared toward the inside or keyed to provide for a positive interlock between the duct bank and the wall of the manhole/handhole. Vibrators shall be used when this portion of the envelope is poured to assure a seal between the envelope and the wall of the manhole/handhole.

P. Partially Completed Duct banks: During construction, wherever a construction joint is necessary in a duct bank, without exception always prevent debris such as mud, sand, and dirt from entering ducts by providing suitable conduit plugs. Fit concrete envelope of a partially completed duct bank with reinforcing steel extending a minimum of twenty-four (24) inches back into the envelope and a minimum of twenty-four (24) inches beyond the end of the envelope. Provide one No. 5 bar in each corner, three (3) inches from the edge of the envelope. Secure corner bars with two No. 3 ties, spaced approximately four (4) inches apart. Restrain reinforcing assembly from moving during concrete pouring.

Q. Conduit Plugs and Pull Rope: New conduit indicated as being unused or empty shall be provided with plugs on each end. Plugs shall contain a weephole or screen to allow water drainage. Provide a plastic pull rope having thirty-six (36) inches of slack at each end of unused or empty conduits.

R. Duct bank and conduits shall slope down toward the manhole and handhole wall entry to allow ingress of water into the manhole/handhole and prevent collection of water inside the conduit.

Method of Measurement:

A. Conduit and Duct Banks will be measured on a per "linear foot" basis. Measurement shall not occur until the task is complete, backfilled, proofed and pull-strings installed.

B. Manholes and Handholes will be measured on a per "each" basis completely installed, fully connected to the incoming/outgoing duct banks and ready for the installation of cable.

Basis of Payment:

A. Conduit and Duct Banks will be paid for at the Contract unit price bid. This price shall be full compensation for all labor, equipment, materials and tools required to perform this work. Associated surface restoration shall be included in this price.

B. Manholes and Handholes will be paid for at the Contract unit price bid. This price shall be full compensation for all labor, equipment, materials and tools required to perform this work. Associated surface restoration, excluding pavement and sidewalks, shall be included in this price.

C. Trench Excavation, Rock-in-Trench Excavation, No. 6 Crushed Stone, and Suitable Backfill Material shall be paid separately under the applicable Items.

Pay Item	Pay Unit
4” PVC Duct Banks – 2 Ducts	L.F.

ITEM #0020902A – LEAD COMPLIANCE FOR BUILDING RENOVATION AND DEMOLITION

Description:

Work under this item shall include activities impacting various materials containing or covered by lead paint and associated work by persons who are knowledgeable, qualified, and trained in the removal, treatment and handling of lead contaminated materials, including the transportation and disposal of non-hazardous lead construction and demolition solid waste containing or contaminated with lead, the recycling of metallic components covered with lead paint, and the subsequent cleaning of the affected environment. Lead paint includes paint found to contain **any** detectable amount of lead by Atomic Absorption Spectrophotometry (AAS) or X-Ray Fluorescence (XRF).

All activities shall be performed in accordance with, but not limited to, the current revision of the OSHA Lead in Construction Regulations (29 CFR 1926.62), the USEPA RCRA Hazardous Waste Regulations (40 CFR Parts 260 through 274), and the CTDEEP Hazardous Waste Regulations (22a-209-1 and 22a-449(c).

The lead paint activity shall include the demolition/renovation, removal and/or disposal of building components coated with lead painted surfaces as identified on the Contract Plans and Specifications.

Deviations from these Specifications require the written approval of the Engineer.

Materials:

All materials shall be delivered to the job site in the original packages, containers, or bundles bearing the name of the manufacturer, the brand name and product technical description.

No damaged or deteriorating materials shall be used. If material becomes contaminated with lead, the material shall be decontaminated or disposed of as lead-containing waste material. The cost to decontaminate and dispose of this material shall be at the expense of the Contractor.

Fire retardant polyethylene sheet shall be in roll size to minimize the frequency of joints, with factory label indicating four (4) or six (6) mil thickness.

Six (6) mil polyethylene disposable bags shall have pre-printed OSHA/EPA/DOT labels and shall be transparent.

Tape (or equivalent) capable of sealing joints in adjacent polyethylene sheets and for the attachment of polyethylene sheets to finished or unfinished surfaces must be capable of adhering under both dry and wet conditions.

The cleaning agent detergent shall be lead specific, such as TriSodium Phosphate (TSP).

Any chemical stripper and chemical neutralizer to be utilized shall be compatible with the substrate as well as with each other.

Labels and warning signs shall conform to OSHA 29 CFR 1926.62, USEPA 40 CFR 260 through 274 and USDOT 49 CFR 172 as appropriate.

Any planking, bracing, shoring, barricades and/or temporary sheet piling, necessary to appropriately perform work activities shall conform to all applicable federal, state and local regulations.

Air filtration devices and vacuum units shall be equipped with HEPA filters.

Construction Methods:

(1) Pre-Abatement Submittals and Notices

A. Prior to the start of **any** work that will generate hazardous lead waste above conditionally exempt small quantities, the Contractor shall obtain from the Engineer a temporary EPA Hazardous Waste Generators ID number, in accordance with Item #0101143A – Handling and Disposal of Regulated Items, unless otherwise directed by the Engineer.

B. Fifteen (15) working days prior to beginning work that impacts lead paint, the Contractor shall submit the following to the Engineer:

1. Copies of all employee certificates, dated within the previous twelve (12) months, relating to OSHA lead awareness and hazard communication training and training in the use of lead-safe work practices.

2. Documentation from the Contractor, typed on company letterhead and signed by the Contractor, certifying that all employees listed therein have received the following:

    a. medical monitoring within the previous twelve (12) months, as required in 29 CFR 1926.62;
    b. biological monitoring within the previous six (6) months, as required in 29 CFR 1926.62;
    c. respirator fit testing within the previous twelve (12) months, as required in 29 CFR 1910.134 (for those who don a tight-fitting face piece respirator).

3. Copies of state-approved certificates for the proposed non-hazardous construction and demolition (C&D) lead debris disposal facility and any concrete/wood or scrap metal recycling facilities.

No activity shall commence until a copy of all required submittals have been received and found acceptable to the Engineer. Those employees added to the Contractor's original list will be allowed to perform work only upon submittal of all required paperwork to, and review by, the Engineer.

Contractor shall provide the Engineer with a minimum of 48 hours notice in advance of scheduling, changing or canceling work activities.

(2) Lead Abatement Provisions

(a) General Requirements:

All employees of the Contractor who perform work impacting lead paint shall be properly trained to perform such duties.

All labor, materials, tools, equipment, services, testing, insurance (with specific coverage for work on lead), and incidentals which are necessary or required to perform the work in accordance with applicable governmental regulations, industry standards and codes, and these Specifications shall be provided by the Contractor. The Contractor shall be prepared to work all shifts and weekends throughout the course of this project.

Prior to beginning work, the Engineer and Contractor shall perform a visual survey of each work area and review conditions at the site for safety reasons. In addition, the Contractor shall instruct all workers in all aspects of personnel protection, work procedures, emergency evacuation procedures and use of equipment including procedures unique to this project.

The Contractor shall:

Shutdown and isolate heating, cooling, and ventilating air systems to prevent contamination and particulate dispersal to the other areas of the building.

Shut down and lock out electrical power, including all receptacles and light fixtures, when feasible. The use or isolation of electrical power will be coordinated with all other ongoing uses of electrical power at the site.

Coordinate all power and fire alarm isolation with the appropriate representatives.

When necessary, provide temporary power and adequate lighting and ensure safe installation of electrical equipment, including ground fault protection and power cables, in compliance with applicable electrical codes and OSHA requirements. The Contractor is responsible for proper connection and installation of electrical wiring.

Ladders and/or scaffolds to be utilized throughout this project shall be in compliance with OSHA requirements, and of adequate length, strength and sufficient quantity to support the scope of

work. Use of ladders/scaffolds shall be in conformance with OSHA 29 CFR 1926 Subpart L and X requirements.

Work performed at heights exceeding six feet (6') shall be performed in accordance with the OSHA Fall Protection Standard 29 CFR 1926 Subpart M including the use of fall arrest systems as applicable.

Electrical service may not be available at the site. Costs for supplying electrical service shall be the responsibility of the Contractor.

Water service may not be available at the site. The Contractor shall supply sufficient water for each shift to operate the wash facility/decontamination shower units in addition to the water needed at the work area.

Data for random lead testing conducted on surfaces throughout the buildings as well as hazardous waste characterization results are available from the Engineer for informational purposes only. Under no circumstances shall this information be the sole means used by the Contractor for determining the extent of lead painted materials. The Contractor shall be responsible for verification of all field conditions affecting performance of the work as described in these Specifications in accordance with OSHA, USEPA, USDOT and CTDEEP standards. Compliance with the applicable requirements is solely the responsibility of the Contractor.

Activity impacting lead painted surfaces shall be performed in a manner which minimizes the spread of lead dust contamination and generation of airborne lead.

The Engineer will provide a Project Monitor to oversee the activities of the Contractor. No activity impacting lead paint shall be performed until the Project Monitor is on-site. Environmental sampling, including ambient air sampling, TCLP waste stream sampling and/or dust wipe sampling, shall be conducted throughout the project as deemed necessary.

(b) Set-Up

The Contractor shall prepare a Regulated Area as follows:

In all areas where airborne exposures may exceed the OSHA PEL, post warning signs meeting the requirements of OSHA 29 CFR 1926.62 at each regulated area.

In addition, signs shall be posted at all approaches to regulated areas so that an employee may read the sign and take the necessary protective steps before entering the area. These signs shall read:

WARNING
LEAD WORK AREA
POISON
NO SMOKING OR EATING

Establish a Regulated Area, through the use of appropriate barrier tape, etc. and control unauthorized access into the area throughout the lead paint related activity.

Implement appropriate engineering controls such as critical barriers, poly drop cloths, negative pressure, local exhaust ventilation, wet dust suppression methods, etc. to prevent the spread of lead contamination from the Regulated Area.

For exterior work areas, the Contractor shall use a High Efficiency Particulate Air (HEPA) filtered vacuum dust collection system to remove any visible existing paint chips from the ground to a distance of 20' out from the base of the exterior surface scheduled for lead paint activity prior to commencement of work and extend a 6 mil polyethylene sheet drop cloth on the ground adjacent to the exterior surface scheduled for lead paint activity to contain debris/contamination.

The Contractor shall provide handwash facilities in compliance with 29 CFR 1926.51(f) and 29 CFR 1926.62 regardless of airborne lead exposure. This wash facility will consist, at least, of potable water, towels, soap, and a HEPA vacuum.

If air monitoring data by the Contractor or Project Monitor shows that employee exposure to airborne lead exceeds the OSHA PEL (50 $\mu g/m^3$), shower rooms must be utilized. The Shower Room shall be of sufficient capacity to accommodate the number of workers. One shower stall shall be provided for each eight (8) workers. Showers shall be equipped with hot and cold or warm running water through the use of electric hot water heaters supplied by the Contractor. Shower water shall be collected and filtered using best available technology and dumped down an approved sanitary drain. Shower stalls and plumbing shall include sufficient hose length and drain system or an acceptable alternate.

(c) Personal Protection:

The Contractor shall initially determine if any employee performing construction tasks impacting lead paint may be exposed to lead at or above the OSHA Action Level of 30 micrograms per cubic meter (30 $\mu g/m^3$). Assessments shall be based on initial air monitoring results as well as other relevant information. The Contractor may rely on historical air monitoring data obtained within the past 12 months under workplace conditions closely resembling the process, type of material, control methods, work practices and environmental conditions used and prevailing in the Contractors current operations to satisfy the exposure assessment requirements. Monitoring shall continue as specified in the OSHA standard until a negative exposure assessment is developed.

Until a negative exposure assessment is developed for the required tasks impacting lead paint, the Contractor shall ensure that all workers and authorized person entering the Regulated Area wear protective clothing and respirators in accordance with OSHA 29 CFR 1926.62. Protective clothing shall include impervious coveralls with elastic wrists and ankles, head covering, gloves and foot coverings. Sufficient quantities shall be provided to last throughout the duration of the

project.

Protective clothing provided by the Contractor and used during chemical removal operations shall be impervious to caustic materials. Gloves provided by the Contractor and used during chemical removal shall be of neoprene composition with glove extenders.

Respiratory protective equipment shall be provided and selection shall conform to 30 CFR Part 11, 29 CFR Part 1910.134, and 29 CFR Part 1926.62. A formal respiratory protection program must be implemented in accordance with 29 CFR Part 1926.62 and Part 1910.134.

(d) Lead Abatement Procedures

Ensure that the Competent Person is on the job at all times.

Do not begin abatement work until authorized by the Engineer, following a pre-abatement visual inspection by the Project Monitor.

The Contractor shall ensure proper entry and exit procedures for workers and authorized persons who enter and leave the Regulated Area. All workers and authorized persons shall leave the Regulated Area and proceed directly to the wash or shower facilities where they will HEPA vacuum gross debris from work suit, remove and dispose of work suit, wash and dry face and hands, and vacuum clothes. Do not remove lead chips or dust by blowing or shaking of clothing. Wash water shall be collected, filtered, and disposed of in accordance with federal, state and local water discharge standards.

No one shall eat, drink, smoke, chew gum or tobacco, or apply cosmetics while in the Regulated Area.

The following details the extent of each phase of operation designated for this project. Phase areas may be combined or divided at the direction of the Engineer. Proceed through the sequencing of the work phases under the direction of the Engineer.

<u>Phase 1 – Non-metallic Components To Be Impacted</u>

- **Lead paint was NOT identified on any non-metallic components on the Eastbound or Westbound platforms. The Engineer has characterized the projected non-metallic waste stream as non-hazardous construction and demolition (C&D) solid waste. Building structures waste stream characterized as non-hazardous shall be disposed of as non-hazardous construction and demolition (C&D) solid waste at an approved CTDEEP Solid Waste landfill.**

<u>Phase 2 – Metal Components To Be Impacted</u>

- **Lead paint has been identified on handrails on both the Eastbound and Westbound platforms. All demolition work impacting those materials shall be conducted within**

an established lead control (regulated) area with a remote handwash facility/decontamination system in accordance with OSHA Lead in Construction Standards. Engineering controls and work practices shall be utilized to prevent the spread of lead dust and debris beyond the work area and limit the generation of airborne lead. All steel and metal generated from the demolition of the structure shall be segregated and recycled as scrap metal at an approved facility. The recycling of scrap metal (regardless of lead paint concentration) is exempt from USEPA RCRA and CTDEEP Hazardous Waste Regulation.

The Contractor shall conduct exposure assessments for the tasks required which impact lead paint in accordance with OSHA 29 CFR 1926.62(d) and shall implement appropriate personal protective equipment until negative exposure assessments are developed.

Utilize appropriate engineering controls (e.g. wet methods) as directed by 29 CFR 1926.62 to control lead emissions and contamination.

Properly contain wastes containing lead paint for appropriate transport/disposal.

Stop all work in the regulated area and take steps to decontaminate non-work areas and eliminate causes of such contamination should lead contamination be discovered in areas outside of the regulated area.

Special Requirements:

1. Demolition:

    a. Demolish in a manner which minimizes the spread of lead contamination and generation of lead dust.

    b. Implement dust suppression controls, such as misters, local exhausts ventilation, etc. to minimize the generation of airborne lead dust.

    c. Segregate work areas from non-work areas through the use or barrier tape, poly criticals, etc.

    d. Clean up immediately after renovation/demolition has been completed

(e) Prohibited Removal Methods:

The use of heat guns in excess of 700 degrees Fahrenheit to remove lead paint is prohibited.

The use of sand, steel grit, water, air, CO_2, baking soda, or any other blasting media to remove lead or lead paint without the use of a HEPA ventilated contained negative pressure enclosure is prohibited.

Power tool assisted grinding, sanding, cutting, or wire brushing of lead paint without the use of cowled HEPA vacuum dust collection systems is prohibited.

Lead paint burning, busting of rivets painted with lead paint, welding of materials painted with lead paint, and torch cutting of materials painted with lead paint is prohibited. Where cutting, welding, busting, or torch cutting of materials is required, pre-remove the lead paint in the area affected.

Use of chemical strippers containing Methylene Chloride is prohibited.

Compressed air shall not be utilized to remove lead paint.

(f) Air Monitoring Requirements

1. The Contractor shall:

    a. Provide air monitoring equipment including sample filter cassettes of the type and quantity required to properly monitor operations and personnel exposure surveillance throughout the duration of the project.

    b. Conduct initial exposure monitoring to determine if any employee performing construction tasks impacting lead paint may be exposed to lead at or above the OSHA Action Level of 30 micrograms per cubic meter. Monitoring shall continue as specified in the OSHA standard until a negative exposure assessment is developed.

    c. Conduct personnel exposure assessment air sampling, as necessary, to assure that workers are using appropriate respiratory protection in accordance with OSHA Standard 1926.62. Documentation of air sampling results must be recorded at the work site within twenty-four (24) hours and shall be available for review until the job is complete.

2. The Project Monitor will:

    a. Collect air samples in accordance with the current revision of the NIOSH 7082 or 7702 Method of Air Sampling for Airborne Lead while overseeing the activities of the Contractor. Frequency and duration of the air sampling during abatement will be representative of the actual conditions at the site. The size and configuration of the project will be a factor in the number of samples required to monitor the activities and shall be determined by the Project Monitor.

As determined by AAS, XRF, or equivalent analysis, if air samples collected outside of the Regulated Area during abatement activities indicate airborne lead concentrations greater than original background levels or greater than 30 ug/m^3, whichever is larger, an examination of the

Regulated Area perimeter shall be conducted and the integrity of barriers shall be restored. Cleanup of surfaces outside the Regulated Area using HEPA vacuum equipment or wet cleaning techniques shall be done prior to resuming abatement activities.

Abatement outside the initial designated work area(s) will not be paid for by the Engineer. The Contractor will be responsible for all costs incurred from these abatement activities.

(g) Clean-up and Visual Inspection:

Remove and containerize all lead waste material and visible accumulations of debris, paint chips and associated items.

During clean up the Contractor shall utilize rags and sponges wetted with lead-specific detergent and water as well as HEPA filtered vacuum equipment.

The Engineer will conduct a visual inspection of the work areas in order to document that all surfaces have been maintained as free as practicable of accumulations of lead in accordance with OSHA 29 CFR 1926.62(h). If visible accumulations of waste, debris, lead paint chips or dust are found in the work area, the Contractor shall repeat the cleaning, at the Contractor's expense, until the area is in compliance. The visual inspection will detect incomplete work, damage caused by the abatement activity, and inadequate clean up of the work site.

(h) Post-Abatement Work Area Deregulation:

Following the visual inspection, (and clearance testing if appropriate,) any engineering controls implemented may be removed and the Work Area deregulated.

A final visual inspection of the work area shall be conducted by the Competent Person and the Project Monitor to ensure that all visible accumulations of suspect materials have been removed and that no equipment or materials associated with the abatement project remain.

The Contractor shall restore all work areas and auxiliary areas utilized during work to conditions equal to or better than original. Any damage caused during the performance of the work activity shall be repaired by the Contractor at no additional expense to the Engineer.

(I) Waste Disposal/Recycling:

Non-metallic building debris waste materials tested and found to be non-hazardous Construction and Demolition (C&D) solid waste shall be disposed of properly at a CTDEEP approved Solid Waste landfill.

Metallic debris shall be segregated and recycled as scrap metal at an approved metal recycling facility. The Contractor shall submit to the Engineer all documentation necessary to demonstrate the selected recycling facility is able to accept lead-painted scrap metal.

Concrete, brick, etc. coated with any amount of lead paint cannot be crushed, recycled or buried on-site to minimize waste disposal unless tested and found to meet the CT RSR standards as "clean fill". Only CTDEEP defined "clean fill" can be recycled on-site or sent to a recycling facility.

(j) Project Closeout Data:

1. Provide the Engineer, within thirty (30) days of completion of the project site work, a compliance package; which shall include, but not be limited to, the following:

    a. Competent persons (supervisor) job log;
    b. OSHA-compliant personnel air sampling data;
    c. Completed waste shipment papers for non-hazardous lead construction and demolition (C&D) solid waste and/or concrete/wood/scrap metal recycling.

Method of Measurement:

No measurement will be made for the work in this Section. The completed work shall be paid as a lump sum.

Basis of Payment:

The lump sum price bid for this item shall include: services, materials, equipment, insurance, all permits, notifications, submittals, personal air sampling, personal protection equipment, temporary enclosures, incidentals, fees and labor incidental to activities impacting lead removal, treatment and handling of lead contaminated materials, and the transport and disposal of any non-hazardous lead construction and demolition (C&D) solid waste.

Final payment for lead abatement will not be made until all project closeout data submittals have been completed and provided to the Engineer. Once the completed package has been received in its entirety and accepted by the Engineer, final payment will be made to the Contractor.

Pay Item	**Pay Unit**
Lead Compliance for Building Renovation	Lump Sum

ITEM #0063521A – RAIL FACILITY UPGRADE (SITE NO.1)

Description:

Under this item, the Contractor shall complete the elements of work (architectural, structural, and communications) that make up the Major Lump Sum Item (MLSI), as depicted in this specification, the NOTICE TO CONTRACTOR – RAIL FACILITY UPGRADE (SITE NO. 1), the Contract Plans, and the CSI-formatted specifications. Refer to Form 816 Article 1.20 - 1.02.04 for additional information in this regard.

All the CSI-formatted specifications contained in the contract documents apply to the Major Lump Sum Item (MLSI).

The following elements of work constitute the MLSI:

- Removal and salvage of existing architectural elements, including platform benches, platform recycling bins, station signage, existing metal guard rail and handrails with associated hardware and connections, bridge plates, and existing lighting.

- Demolition of existing eastbound and westbound railroad concrete double-tee platforms, concrete ramps and stairs (full/partial), and temporary concrete double-tee platform.

- Modifications to existing platform piers, including concrete patching, crack repair, and bearing pedestals.

- New eastbound and westbound railroad platform sections, including bearings, structural steel and fasteners, precast platform panels, microsilica concrete overlay, platform waterproofing, detectable/tactile warning surfaces, joints, and rub rail.

- New stairways and ramps, including supporting substructure elements.

- Installation of architectural elements, including site furnishings, permanent shelter, temporary shelters, guard rail, hand rails, stair treads, joint sealants, and station door.

- Electrical work, including removing/replacing conduit, VMS, and PA speakers; removing and replacing light poles with LED retrofit; relocation of eastbound panel; and installation of unit heater in the station building.

Structure excavation, compacted structural fill, dewatering, excavate handling/disposal, and other related items of work associated with constructing the above MLSI elements items are not part of the MLSI.

Any work incidental to another bid item which is not specifically described or included in the bid item, but which is required for performance and completion of the work required under the Contract, shall be considered to be included under this item.

Materials:

All materials shall be as required by the Contract Plans and as described in the CSI-formatted Specifications that make up this MLSI.

Construction Methods:

All methods of construction shall conform to the requirements stipulated in the CSI-formatted Specifications that make up the MLSI.

Method of Measurement:

This item will be paid for at the contract lump sum price for "Rail Facility Upgrade (Site No. 1)" complete.

Basis of Payment:

This item will be paid for at the contract lump sum price for "Rail Facility Upgrade (Site No. 1)", which price shall include all administrative and procedural requirements, material, equipment, labor, and work incidental thereto.

Pay Item	**Pay Unit**
Rail Facility Upgrade (Site No. 1)	L.S.

ITEM #0101143A – HANDLING AND DISPOSAL OF REGULATED ITEMS

Description:

Work under this item shall include the management (handling and disposal) of regulated items and all associated work by persons who are employed by a CTDEEP permitted Spill Contractor and trained/certified in accordance with OSHA Hazard Communication regulations. Regulated items include hazardous and other materials and wastes, the disposal of which is restricted by Federal and/or State laws and regulations, and which may be a component of equipment or other items located on-site. Regulated items include those listed herein, or additional similar items identified on site by the Engineer. Work under this item does not include asbestos containing materials, lead paint, contaminated or hazardous soils.

Activities shall be performed in accordance with, but not limited to, the current revision of the USEPA & CTDEEP Hazardous Waste Regulations (40 CFR 260-282, 22a-209 and 22a-449(c)), USEPA PCB Regulations (40 CFR 761), USEPA Protection of Stratospheric Ozone (40 CFR 82), OSHA Hazard Communication (29 CFR 1910.1200), OSHA Hazardous Waste & Emergency Response Regulations (29 CFR 1910.120), USDOT Hazardous Materials Regulation (49 CFR 171-180), OSHA, RCRA, CERCLA, CAA, TSCA, and all other laws and regulations.

The work activities include the removal, handling, packing, labeling, transport, manifesting, and recycling or disposal of various regulated items at the Project site prior to beginning planned demolition activities.

The Contractor is solely responsible for verifying actual locations and quantities of the items with hazardous/regulated material/waste constituents and for their proper handling and disposal. The recycling or proper disposal, as appropriate, of all regulated items shall be completed prior to the initiation of any demolition activities.

Materials:

All materials shall be suitable for the management of regulated items and shall meet all applicable federal, state and local regulations. Such materials include, but are not limited to, proper containers, packing materials, labels, signs, shipping papers, personnel protective equipment (PPE) and spill kits.

Construction Methods:

(1) Allowable Disposal/Recycling Facilities

Disposal facilities for RCRA-hazardous, TSCA-hazardous, Connecticut Regulated, and Universal wastes shall be chosen from among those listed below. No other facility shall be used for these types of wastes without the written approval of the Engineer.

Advanced Disposal Services
Greentree Landfill
635 Toby Road
Kersey, PA 15846
Phone: (814) 265-1744 Fax: (814) 265-8745
MSW, C&D, asbestos, PCB remediation waste <50 ppm, petroleum contaminated soils, nonhazardous solid wastes

Allied Waste Niagara Falls Landfill, LLC
5600 Niagara Falls Blvd.
Niagara, NY 14304
Phone: (716) 285-3344 Fax: (716) 285-3398
Non-hazardous waste, industrial solid waste, municipal sewage treatment sludge, contaminated soil & debris, asbestos waste, C&D debris, industrial process sludge

American Lamp Recycling, LLC
26 Industrial Way
Wappingers Falls, NY 12590
Phone: (845) 896-0058 Fax: (845) 896-1520
Mercury containing device, universal waste

Bridgeport United Recycling, Inc.
50 Cross Street
Bridgeport, CT 06610
Phone: (203) 334-1666 Fax: (203) 334-1439
RCRA & CRW waste oil, fuel, wastewater

Clean Earth of Carteret
24 Middlesex Ave..,
Carteret, NJ 07008
Phone: (732) 541-8909 Fax: (732) 541-8505
Concrete, brick, block, street sweepings, stone, rock, asphalt and petroleum contaminated soil

Clean Earth of Philadelphia, Inc.
3201 South 61 St.,
Philadelphia, PA 19153
Phone: (215) 724-5520 Fax: (215) 724-2939
Petroleum contaminated soil

Clean Earth of North Jersey, Inc. (aka CENJ)
115 Jacobus Ave,
South Kearny, NJ 07105
Phone: (973) 344-4004 Fax: (973) 344-8652
RCRA liquid and solid, asbestos

Clean Earth of Southeast Pennsylvania, Inc.
7 Steel Road,
Morrisville, PA 19067
Phone: (215) 428-1700 Fax: (215) 428-1704
Petroleum contaminated soil

Clean Harbors Environmental Services, Inc.
2247 South Hwy. 71,
Kimball, NE 69145
Phone: (308) 235-1012 Fax: (308) 235-4307
RCRA liquid, solid & sludge

Clean Harbors Environmental Services, Inc.
Cleveland Facility
2900 Rockefeller Ave.,
Cleveland, OH 44115
Phone: (216) 429-2401 Fax: (216) 883-1918
RCRA liquid: aqueous organic & inorganic wastewater

Clean Harbors of Baltimore, Inc.
1910 Russell St,
Baltimore, MD 21230
Phone: (410) 244-8200 Fax: (410) 752-2647
RCRA liquid: aqueous organic & inorganic wastewater

Clean Harbors of Braintree, Inc.
1 Hill Avenue,
Braintree, MA 02184
Phone: (781) 380-7134 Fax: (781) 380-7193
RCRA & TSCA liquid & solid

Clean Harbors of Connecticut, Inc.
51 Broderick Road,
Bristol, CT 06010
Phone: (860) 583-8917 Fax: (860) 583-1740
RCRA & CRW liquid

Clean Harbors of Woburn
(Murphy's Waste Oil Services, Inc.)
252 Salem Street,
Woburn, MA 01801
Phone: (781) 935-9066 Fax: (781) 935-8615
RCRA liquid: oil, oil/water mixtures; CRW oil filters, oily soil & debris, F001/F002 contaminated oils, antifreeze

Colonie Landfill (Waste Connections, Inc.)
1319 Louden Rd,
Cohoes, New York 12047
Phone: (518) 783-2827 Fax: (518) 786-7331
Non-haz. wastes, special wastes, contaminated soil

Cranston Sanitary Landfill
1690 Pontiac Ave.
Cranston, RI 02920
Phone: (413) 552-3688 Fax: (413) 552-3330
Urban fill, contaminated soil, C & D debris, incineration ash (wood & coal), street sweeping and catch basin cleanings

Cumberland County Landfill
(aka Community Refuse Services
Managed by Interstate Waste Services)
135 Vaughn Road,
Shippensburg, PA 17257
Phone: (717) 729-2060 Fax: (717) 423-6822
Municipal solid waste, non-hazardous waste

Cycle Chem (aka General Chemical Corp.)
217 South First Street,
Elizabeth, NJ 07206
Phone: (908) 355-5800 Fax: (908) 355-0562
RCRA, TSCA liquid and solid

Envirite of PA
730 Vogelsong Road,
York, PA 17404
Phone: (717) 846-1900 Fax: (717) 854-6757
RCRA hazardous wastes

Environmental Quality Company:
Wayne Disposal Facility
(aka EQ Michigan Disposal Waste Treatment Plant and Wayne Disposal Inc. Site #2)
49350 North I-94 Service Drive
Belleville, MI 48111
Phone: (734) 697-2200 Fax: (734) 699-3499
RCRA & TSCA liquid and solid

Environmental Quality Detroit Inc.
1923 Frederick Street,
Detroit MI 48211
Phone: (734) 329-8017 Fax: (313) 923-3375
RCRA & CRW liquid wastewater

Environmental Soil Management of New York, LLC (ESMI of New York)
304 Towpath Road,
Fort Edward, NY 12828
Phone: (518) 747-5500 Fax: (518) 747-1181
Petroleum contaminated soil

Environmental Soil Management of NH
67 International Dr.,
Loudon, NH 03307
Phone: (603) 783-0228 Fax: (603) 783-0104
Petroleum contaminated soil

EnviroSafe Corporation Northeast (formerly Jones Environmental Services, soon to be Triumvirate)
263 Howard Street,
Lowell, MA 01852
Phone: (978) 453-7772 Fax: (978) 453-7775
RCRA & TSCA liquid and solid

Hazelton Creek Properties, LLC*
(Hazelton Mine Reclamation Project)
280 South Church St.,
Hazelton, PA 18201
Phone: (570) 574-1010 Fax: (570) 457-3395
Fresh, brackish or marine dredge material, coal ash, cement kiln dust, lime kiln dust, co-gen ash, regulated fill
*Please note that if this facility is to be used, each bin letter will require an additional 10 day (or more) waiting period on top of the 15 day lab period designated in the specs to allow for PADEP review.

Heritage Hazardous Waste Landfill (Heritage Environmental Services, LLC)
4370 W County Rd 1275 N
Roachdale, IN 46172
Phone:(765) 435-2704 Fax: (315) 687-3898
Hazardous Wastes, Asbestos

Manchester Landfill
311 Olcutt St.,
Manchester, CT 06040
Phone: (860) 647-3248 Fax: (860) 647-3238
Municipal solid waste, non-hazardous waste, contaminated soil

Moretown Landfill
(Managed by Interstate Waste Services)
187 Palisades Park,
Waterbury, VT 05676
Phone: (802) 244-1100 x226
Fax: (802) 244-5133
Municipal solid waste, non-hazardous waste

Mostoller Landfill
(Managed by Interstate Waste Services)
7095 Glades Pike,
Summerset, PA 15501
Phone: (717) 729-2060 Fax: (814) 444-0127
Municipal solid waste, C&D debris, residual waste, sewage sludge, incinerator ash, asbestos

Northampton Landfill
(Operated by Solid Waste Solutions, LLC)
170 Glendale Road,
Florence, MA 01062
Phone: (413) 498-0099 Fax: (413) 498-0267
Municipal solid waste, non-hazardous waste, contaminated soil

Northeast Lamp Recycling, Inc.
250 Main Street,
East Windsor, CT 06088
Phone: (860) 292-1992 Fax: (860) 292-1114
CRW solid waste, mercury containing devices & universal waste

Northland Environmental, LLC
(aka PSC Environmental Systems)
275 Allens Ave.,
Providence RI 02905
Phone: (401) 781-6340 Fax: (401) 781-9710
RCRA liquid and solid

Ontario County Landfill
(Managed by Casella Waste)
3555 Post Farm Road,
Stanley, NY 14561
Phone: (585) 526-4420 Fax: (585) 526-5459
Municipal solid waste, non-hazardous waste solid, special wastes including asbestos, ash from boilers/incinerators, contaminated soil, demo debris

Paradise Heating Oil, Inc.
Quimby Street,
Ossining, NY 10562
Phone: (631) 926-2576 Fax: (718) 294-2226
CRW waste oil liquid

Republic Environmental Systems (aka Philip Services Corporation (PSC) Republic)
2869 Sandstone Dr.,
Hatfield PA 19440
Phone: (215) 822-8995 Fax: (215) 997-1293
RCRA & TSCA industrial solid & sludge, aqueous waste, contaminated soil, PCB waste, oil & petroleum waste, organic waste

Soil Safe, Inc.
378 Route 130, Logan Township,
Bridgeport NJ 08085
Phone: (410) 872-3990 x1120
Fax: (410) 872-9082
Soil contaminated with petroleum or metals, some industrial waste solids

The Southbridge Recycling & Disposal Park
165 Barefoot Rd.
Southbridge, MA 01550
Phone: (508) 765-9723, (603) 235-3597
Fax: (508) 765-6812
MSW, non-hazardous C & D waste, contaminated soil for cover

Stablex Canada, Inc.
760 Industrial Blvd.
Blainville Quebec J7C 3V4
Phone: (450) 430-9230 Fax: (450) 430-4642
RCRA liquid and solid, industrial wastes

Ted Ondrick Company, LLC
58 Industrial Road,
Chicopee, MA 01020
Phone: (413) 592-2566 Fax: (413) 592-7451
Petroleum contaminated soil

Tradebe Treatment & Recycling
136 Gracey Ave.
Meriden, CT 06451
Phone: (203) 238-8114 Fax: (203) 238-6772
RCRA, CRW wastewater, oil, hazardous waste fuels, hazardous and non-hazardous waste water

Tunnel Hill Reclamation
2500 Township Road, 205 Route 2
New Lexington, OH 43764
Phone: (914) 713-0203 Fax: (914) 713-0672
Municipal solid waste, non-hazardous waste, contaminated soils

Upton Site Remediation, LLC
(formerly Upton Landfill)
Maple Avenue,
Upton, MA 01568
Phone: (413) 522-3688 Fax: (413) 522-3330
Contaminated soil for use as cover material under MADEP COMM-97 policy

Waste Management
RCI Fitchburg Landfill
Fitchburg Princeton Road,
Westminister, MA 01473
Phone: (978) 355-6821 Fax: (978) 355-6317
Solid: MSW, non-hazardous waste, C&D, contaminated soil for use as cover material under MADEP COMM-97 policy

Waste Management of NH

TLR III Refuse Disposal Facility
90 Rochester Neck Road, PO Box 7065
Rochester, NH 03839

Phone: (603) 330-2197 Fax: (603) 330-2130
Solid: MSW, C&D, PCB remediation waste (<50ppm), virgin petroleum contaminated soil, CRW solid waste

The category of material accepted by each facility listed above is for informational purposes only. The Contractor shall verify facility acceptance of each type of regulated item.

(2) Submittals

Thirty (30) days prior to commencement of work involving the management of regulated items, the Contractor shall submit to the Engineer for approval, the following documentation:

1. Copy of Spill Contractor Permit registration issued by the CTDEEP.
2. Hazard communication training for all employees performing this work.
3. Names of the treatment facilities, recycling facilities and/or disposal facilities the Contractor intends to use to receive each type of regulated item.
4. Hazardous Material Transporter USDOT Certificate of Registration for each transporter.
5. Hazardous Waste Transporter Permit for the State of Connecticut, the destination state(s), and all other applicable states for each transporter.
6. Request for an EPA Hazardous Waste Generators ID number, for use in manifesting hazardous waste above conditionally exempt small quantities (as applicable).

Contractor shall provide the Engineer with a minimum of 48 hours notice in advance of scheduling, changing or canceling work activities.

(3) Regulated Item Management Provisions

(a) General Requirements

The Contractor's OSHA Competent Person shall be in control on the job site at all times during hazardous material management work activities. This person must be capable of identifying existing hazards, possess the authority to implement corrective measures to reduce/eliminate the hazards, comply with applicable Federal, State and Local regulations that mandate work practices, and be capable of performing the work of this contract. All employees who perform regulated material management related work shall be properly trained and qualified to perform such duties.

All labor, materials, tools, equipment, services, testing, insurance, and incidentals which are necessary or required to perform the work in accordance with applicable governmental regulations, industry standards and codes, and these specifications, shall be provided by the Contractor.

Ladders and/or scaffolds shall be in compliance with OSHA requirements, and of adequate length, strength and sufficient quantity to support the scope of work. Use of ladders/scaffolds shall be in conformance with OSHA 29 CFR 1926 Subpart L and X requirements.

Work performed at heights exceeding six feet (6') shall be performed in accordance with the OSHA Fall Protection Standard 29 CFR 1926 Subpart M including the use of fall arrest systems as applicable.

Inventory data from investigative surveys throughout the buildings are included herein and are presented for informational purposes only. Under no circumstances shall this information be the sole means used by the Contractor for determining the quantities or extent of the regulated items to be managed. The Contractor shall be responsible for verification of all field conditions affecting performance of the work. The Contractor shall submit to the Engineer for concurrence any additional items not listed herein that it believes to be regulated items included under this item. However, compliance with applicable requirements is solely the responsibility of the Contractor.

The Engineer will provide a Project Monitor to monitor the activities of the Contractor and inspect the work required. Environmental sampling shall be conducted as deemed necessary by the Engineer. Spill areas shall be cleaned by the Contractor until accepted by the Engineer. The Engineer may sample the spill area to demonstrate Contractor compliance with an acceptable standard.

(b) Personnel Protection

Prior to commencing work, the Contractor shall provide hazard communication training to all employees as necessary in accordance with OSHA 29 CFR 1926.59 and 29 CFR 1910.1200 and instruct all workers in all aspects of personnel protection, work procedures, emergency procedures and use of equipment including procedures unique to this project. Worker health and safety protocols that address potential and/or actual risk of exposure to site specific hazards are solely the responsibility of the Contractor.

The Contractor shall provide respiratory protection that meets the requirements of OSHA as required in 29 CFR 1910.134 and 29 CFR 1926.1000. A formal respiratory protection program, including appropriate medical surveillance, must be implemented in accordance with OSHA

standards. The Contractor shall, as necessary, conduct exposure assessment air sampling, analysis and reporting to ensure the workers are afforded appropriate respiratory protection.

The Contractor shall provide and require all workers to wear appropriate personnel protective equipment, including protective clothing and respiratory protection, as required, within regulated work areas which exceed OSHA Personnel Exposure Limits (PELs) or when handling hazardous materials.

(c) Regulated Item Management Work Procedures

The Contractor shall not begin work until the Project Monitor is on-site.

Prior to beginning work on-site, the Contractor shall prepare waste characterization profile forms for each type of waste stream to be generated and forward such forms to the Engineer for review, approval and signature. Upon approval, the Contractor shall forward such forms to the appropriate disposal facilities for acceptance.

The Contractor shall utilize all appropriate engineering controls and safety and protective equipment while performing the work in accordance with OSHA, USEPA, USDOT, CTDEEP and Connecticut Department of Public Health DPH regulations.

The Contractor shall employ work practices so as to minimize the disturbance of the constituents in the regulated items, and prevent breakage and spills. In the event of a spill, the Contractor shall cordon off the area and notify the Engineer. The Contractor is responsible to have spills and the effected areas decontaminated to the acceptance of the Engineer by personnel trained in hazardous waste operator emergency response.

The Contractor shall carefully and properly remove, handle, pack, label and manifest all of the regulated items in waste containers specified and suitable to contain the waste in accordance with all federal and state regulations.

Prior to transportation and recycling and/or disposal, all proper USEPA, OSHA, CTDEEP and USDOT labels and placards shall be affixed to the waste containers and hazardous materials shipping papers such as waste manifests/bills of lading shall be completed.

Prior to demolition, properly remove, handle, pack, label, transport, manifest and recycle or dispose of the regulated items from those listed below:

The following hazardous/ regulated materials, wastes and items have been identified at the Noroton Heights Railroad Station, Darien, Connecticut.

- **Universal waste (UW) – used electronics, Hg lamps (signs) – Westbound side**
- **Universal waste (UW) – Hg lamps (sulfide bulbs) – East & Westbound side**
- **Connecticut Regulated Waste (CRW) – PCB Ballasts – East & Westbound side**

Upon discovery of any previously unidentified regulated items during demolition activities, the Contractor shall immediately notify the Engineer and work shall cease in that area until the Engineer can determine the extent of any impact and proper handling procedures are implemented.

(d) Waste Disposal

Efforts shall be made to recycle the constituents of the regulated items rather than dispose of them in accordance with the waste minimization efforts required under RCRA.

RCRA hazardous waste shall not be stored on the job site in excess of 90 calendar days from the accumulation start date.

Connecticut Regulated Waste shall not be transported to a RCRA or TSCA permitted facility for disposal, unless otherwise allowed by the Engineer in writing.

All non-RCRA hazardous waste materials, regulated waste materials and recyclable waste items shall be manifested separately from RCRA and TSCA hazardous waste, and documented properly on non-hazardous waste manifests, waste shipment records, bills of lading or other appropriate shipping papers for transportation to the recycling and/or disposal facility.

The Contractor shall prepare each lab pack list and shipping document (manifests, waste shipment records, bills of lading, etc.) with all of the required information completed (including types of waste, proper shipping name, categories, packing numbers, amounts of waste, etc.) in accordance with applicable federal and state regulations. The document will be signed by an authorized agent representing ConnDOT as the Generator for each load that is packed to leave the site.

The Contractor shall forward the appropriate original copies of shipping papers to the Engineer the same day the regulated items leave the project site.

All vehicles departing the site transporting hazardous materials shall display proper USDOT placards, as appropriate for the type of waste being transported.

(e) Project Closeout Documents:

Within thirty (30) days after completion of the on-site project work, the Contractor shall submit to the Engineer copies of the following completed documents:

1. Hazardous Waste Manifests
2. Waste Shipment Records/Bills of Lading
3. Recycling Receipts

Documents 1. through 3. must include the signature of an authorized disposal facility representative acknowledging receipt of hazardous materials.

Method of Measurement:

The work of "Handling and Disposal of Regulated Items" shall be provided for in accordance with Article 1.04.05 – Extra Work.

Basis of Payment:

The work of "Handling and Disposal of Regulated Items" shall be paid for in accordance with Article 1.04.05 – Extra Work, which price shall include the management, removal, handling, packing, labeling, transport, manifesting, recycling or disposal of the regulated constituents in the specific equipment/items scheduled for impact at the project site, and all equipment, materials, tools and labor incidental to the work.

Final payment will not be made until completed copies of all Manifest(s), Waste Shipment Records, Bills of Lading and/or Recycling Receipts have been provided to the Engineer. Once completed and facility-signed copies have been received in their entirety, the Engineer will make the final payment.

Pay Item	**Pay Unit**
Handling and Disposal of Regulated Items	Estimate

ITEM #0202455A – TEST PIT (ESTIMATED COST)

Description:

This work shall consist of the excavation of test pits where necessary to locate or examine utilities, subsurface structures, pipes, soils, groundwater, or any other obstacles or conditions.

This work shall consist of the satisfactory removal of all materials including, but not limited to, sawcutting pavements and sidewalks, pavement and sidewalk removal, excavation, shoring and bracing, water removal from within pit, stockpiling, satisfactory disposal of surplus or unsuitable material, backfilling, compacting, pavement repair, sidewalk repair, etc.

Test pits shall be dug as necessary for the Contractor to determine subsurface conditions as directed by the engineer. The contractor shall upon completion of “Non-Destructive Utility Investigations”, submit a work plan with locations of test pits for review by the engineer.

This work shall include the coordination with the affected utility companies or Metro-North. Any damage caused by the Contractor or Subcontractors, as determined by the Engineer, shall be corrected by the Contractor in accordance with these specifications.

Materials:

All materials shall be provided by the Contractor and shall meet the current standards of the affected service.

Construction Methods:

Coordinate excavation of test pits with respective utility company, or other owners having facilities in the vicinity. Check with "Call Before You Dig", 1/800/922-4455 before digging.

An estimate of cost shall be provided to the engineer prior to performing test pits.

Give sufficient notice and allow ample delay time for others to perform necessary work.

Notify the Owner’s Representative one-week in advance of digging each test pit.

Perform all work in conformance with applicable safety codes.

Sawcut pavement, sidewalk, curbs or other hard surface materials in neat and straight line.
Excavate pits providing clean-cut vertical sides. Provide sheeting, bracing and dewatering wherever necessary.

Dig test pits ensuring that underground utilities or structures are not damaged. The Contractor shall excavate by hand methods to a depth of four (4) feet to insure that underground utilities or structures are not damaged. It shall be the Contractor's sole responsibility for any damages incurred during excavation operations. Any damages shall be repaired or replaced by the Contractor to the satisfaction of the Owner/Responsible Agency/Owner's Representative at the Contractor's own expense.

The Contractor shall measure and record the size, configuration, exact horizontal and vertical location of all utilities, pipes or other obstacles uncovered in the pits. Submit information in written or sketch form to the Owner's Representative and respective utility companies for review. Notify the Owner's Representative of any revealed conflicts which may require design revisions, relocations and/or adjustments as early as possible to avoid unnecessary delays. No work shall be started within areas of conflict until so authorized.

Protect each pit with steel plates, other coverings, fences, barriers or other appropriate materials as deemed necessary.

Do not backfill pits until authorized. Compact backfill materials to at least 95% of maximum density to the subgrade elevation or as otherwise directed.

The surface of test pit areas shall be restored to a condition equal or better than original as approved by the Owner's Representative.

Method of Measurement:

When previously approved by the Engineer, the item, Test Pit, will be measured for payment based on actual detailed monthly invoices for test pits performed. An estimate of cost shall be provided to the engineer prior to performing test pits.

Corrective work required repairing damage caused by the Contractor or its Subcontractors shall not be measured for payment.

Basis of Payment:

The sum of money shown on the Estimate and in the itemized proposal as "Estimated Cost" for this work will be considered the bid price even though payment will be made as described below. The estimated cost figure is not to be altered in any manner by the bidder. Should the bidder alter the amount shown, the altered figures will be disregarded and the original price will be used to determine the total amount for the contract.

The item, "Test Pit (Estimated Cost)", will be paid for at the actual detailed monthly account history for services approved by the Engineer, plus a 5% markup.

Payment will include all materials, equipment, labor and tools necessary for or incidental to the satisfactory completion if this work.

Pay Item	**Pay Unit**
Test Pit (Estimated Cost)	est.

ITEM #0219005A – SEDIMENTATION CONTROL COMPOSITE FILTER SOCK SYSTEM

Description:

Work under this item shall consist of providing and maintaining a sedimentation control composite filter sock system in the locations indicated on the contract plans.

Materials:

The material for this work shall consist of the following:

Composite Filter Sock: Composite Filter Sock shall meet the requirement of the test methods shown on the table below:

Property	Test Method	
Material	-	Polyester
Fabric	-	Knitted
Permitivity (min.)	ASTM D4491	5.5 sec^{-1}
Puncture Resistance (min.)	ASTM D6241	1000 N
AOS (max.)	ASTM D4751	0.600 mm 30 U.S. Sieve
FOS (max.)	CAN/CGSB-148.1, M10-94	450 microns
Mass (relaxed)	ASTM D3887	3.0-3.9 oz/yd^2
Mass (applied minimum)		2.7-3.5 oz/yd^2
Thickness (min.)	ASTM D4491	24.0 mils
Permeability (K) (min.)	ASTM D4491	0.390 cm/sec
Burst Strength (min.)	ASTM D3887	830 kpa
Air Permeability (min.)	ASTM D737	700 $ft^3/ft^2/min$
Water Flow Rate (min.)	ASTM D4491 (2" constant head)	300 $gal/min/ft^2$
Yarn Denier	-	150
Specific Gravity	-	1.3
Melt Temperature	-	450° F

Composite Filter Media: Compost used for compost filter sock filler material (filter media) shall be weed free and derived from a well-decomposed source of organic matter. The compost shall be produced using an aerobic composting process meeting CFR 503 regulations including time and temperature data. The compost shall be free of any refuse, contaminants or other materials toxic to plant growth. Non-composted products will not be accepted. Test methods for the items below should follow US Composting Council Test Methods for the Examination of Composting and Compost guidelines for laboratory procedures:

A. PH – 5.0-8.0 in accordance with TMECC 04.11-A, "Electrometric pH Determinations for Compost"
B. Particle size – 99% passing a 2 in (50mm) sieve and a maximum of 40% passing a 3/8 in (9.5mm) sieve, in accordance with TMECC 02.02-B, "Sample Sieving for Aggregate Size Classification".
C. Moisture content of less than 60% in accordance with standardized test methods for moisture determination.
D. Material shall be relatively free (<1% by dry weight) of inert or foreign man made materials
E. A sample shall be submitted to the Engineer for approval prior to being used and must comply with all local, state and federal regulations.

Construction Methods:
The compost filter sock shall be installed according to this specification, as shown on the plans or as directed by the Engineer.

A. Compost filter socks should be installed parallel to the base of the slope or other disturbed area
B. Stakes shall be installed through the middle of the compost filter sock on 8 ft centers, using 2 in (50mm) by 2 in (50mm) by 3 ft (1m) wooden stakes. In the event staking is not possible, i.e., when compost filter socks are used on pavement, heavy concrete blocks shall be used behind and on the compost filter socks to help stabilize during rainfall/runoff events.
C. Staking depth for sand and silt loam soils shall be 12 in (300mm), and 8 in (200mm) for clay soils.
D. Loose compost may be backfilled along the upslope side of the compost filter sock, filling the seam between the soil surface and the device, improving filtration and sediment retention.

Method of Measurement:

This work will be measured by the actual number of linear feet of installed and accepted Sedimentation Control Composite Filter Sock System. Measurement shall be made along the center-line of the system. It is intended that the system shall last for the duration of the adjacent staging schedules (Stage 1 and 2 for southside system and Stage 3 and 4 for the northside system. Repair and replacement of the system as required or directed by the Engineer shall not be measured for payment.

Basis of Payment:

The work under this Item will be paid for at the contract unit price per linear foot for "Sedimentation Control Composite Filter Sock System", which price shall be include the installation; monitoring; replacement, removal and disposal of the system and surplus material. No payment shall be made for the clean out of accumulated sediment.

Pay Item	Pay Unit
Sedimentation Control Composite Filter Sock System	L.F.

ITEM #0219011A – SEDIMENT CONTROL SYSTEM AT CATCH BASIN

Description:

This work shall consist of furnishing, installing, cleaning, maintaining, replacing, and removing sedimentation control at catch basins at the locations and as shown on plans and as directed by the engineer.

Materials

Sack shall be manufactured from a specially designed woven polypropylene geotextile sewn by a double needle machine, using a high strength nylon thread. Sack shall be manufactured by one of the following or an approved equal:

Siltsack®
SI Geosolutions:
www.sigeosolutions.com
(800)621-0444

Dandy Sack™
Dandy Products Inc.
P.O. Box 1980
Westerville, Ohio 43086
Phone: 800-591-2284
Fax: 740-881-2791
Email: dlc@dandyproducts.com
Website: www.dandyproducts.com

FLeXstorm Inlet Filters
Inlet & Pipe Protection
24137 W. 111th St - Unit A
Naperville, IL 60564
Telephone: (866) 287-8655
Fax: (630) 355-3477

The sack will be manufactured to fit the opening of the catch basin or drop inlet. Sack will have the following features: two dump straps attached at the bottom to facilitate the emptying of sack and lifting loops as an integral part of the system to be used to lift sack from the basin. The sack shall have a restraint cord approximately halfway up the sack to keep the sides away from the catch basin walls, this cord is also a visual means of indicating when the sack should be emptied. Once the strap is covered with sediment, the sack should be emptied, cleaned and placed back into the basin.

Construction Methods:

Installation, removal, and maintenance shall be per manufacturer instructions and recommendations.

Method of Measurement:

Sediment Control System at Catch Basin will be measured as each installed, maintained, accepted, and removed. There will be no separate measurement for maintenance or replacement associated with this item.

Basis of Payment:

Sediment Control System at Catch Basin will be paid for at the contract unit price each complete in place and accepted, which price shall include all maintenance throughout construction, materials, equipment, tools, and labor incidental thereto.

ITEM #0601106A – CONCRETE STAIR LANDING

Description:

This item shall consist of concrete stair landings constructed on a gravel base course in the locations and to the dimensions and details shown on the plans or as ordered and in accordance with these specifications.

Materials:

Materials for this work shall conform to the requirements of CTDOT Form 816 Article M.03.02 for Class "F" Concrete.

Gravel for base shall conform to Article M.02.01 for granular fill.

Steel Reinforcement: Unless noted otherwise, all reinforcement, where and when specified, shall be four inches X four inches (4” x 4”) - W4.0 Welded Wire Fabric and conform to A.S.T.M. "Standard Specifications for Welded Wire Fabric for Concrete Reinforcement".

Construction Methods:

1. **Excavation:** Excavation, including removal of any existing pavement (bituminous or concrete) and curbing, shall be made to the required depths below the finished grade, as shown on the plans or as directed. All soft and yielding material shall be removed and replaced with suitable material.

   The Contractor shall establish the limits required to achieve grades for each landing prior to removal of existing pavement.

2. **Gravel Base:** The gravel or base shall be placed in layers not to exceed 6 inches in depth and to such a depth that after compaction it shall be at the specified depth below the finished grade of the walk. The base shall be wetted and rolled or tamped after the spreading of each layer.

3. **Forms:** Forms shall be of metal or wood, straight, free from warp and of sufficient strength to resist springing from the pressure of the concrete. If made of wood, they shall be of 2-inch surfaced plank except that at sharp curves thinner material may be used. If made of metal, they shall be of approved section and shall have a flat surface on the top. Forms shall be of a depth equal to the depth of the stair landing. Forms shall be securely staked, braced and held firmly to the required line and grade and shall be sufficiently tight to prevent leakage of mortar. All forms shall be cleaned and oiled or wetted before concrete is placed against them.

4. **Concrete:** The concrete shall be proportioned, mixed, placed, etc., in accordance with the provisions of Section 6.01 for Class "F" Concrete, except as modified herein. Concrete shall be cured in accordance with the provisions of Article 4.01.03 for Concrete Pavement.

5. **Finishing:** The surface of the concrete shall be finished with a wood float or by other approved means. The outside edges of the slab and all joints shall be edged with a 1/4-inch radius edging tool.

6. **Backfilling and Removal of Surplus Material:** The sides of the landing shall be backfilled with suitable material thoroughly compacted to permit the pavement repair as shown on the plans. All surplus material shall be removed and the site left in a neat and presentable condition to the satisfaction of the Engineer.

Method of Measurement:

This work will be measured for payment as follows:

1. **Concrete Stair Landing:** This work will be measured by the actual number of square feet of completed and accepted concrete stair landing.

2. **Excavation:** Excavation below the finished grade of the concrete stair landing, backfilling, and disposal of surplus material will not be measured for payment, but the cost shall be included in the price bid for the concrete stair landing. Excavation above the finished grade of the stair landing will be measured and paid for in accordance with Section 2.02.

3. **Gravel or Reclaimed Miscellaneous Aggregate Base:** This work will not be measured for payment, but the cost shall be considered as included in the price bid for the concrete stair landing.

4. **Steel Reinforcement:** This work will not be measured for payment but the cost shall be considered as included in the price bid for the concrete stair landing.

Basis of Payment:

Construction of a concrete stair landing will be paid for at the Contract unit price per square foot for "Concrete Stair Landing" complete in place, which price shall include all excavation as specified above, backfill, disposal of surplus material, curb removal when required for the concrete stair landing as shown on the plans, gravel base, steel reinforcement, equipment, tools, materials and labor incidental thereto.

Pay Item	**Pay Unit**
Concrete Stair Landing	s.f.

ITEM #0714999A – MONITORING STRUCTURES

Description:

Work under this item shall consist of providing horizontal and vertical monitoring of railroad tracks; existing catenary structures 434, 435, and 436; existing station building; the existing railroad platform piers which are remaining; and the existing pedestrian bridge (including its associated existing ramp structures), during the following construction activities:

- Demolition of the existing railroad platforms,
- Installation of the proposed railroad platform sections,
- Structure excavation activities.

In monitoring the existing catenary structures, special attention shall be paid to the attached existing conduits.

This work shall be performed as indicated in the Contract Drawings and as specified herein.

Materials:

The material for this work shall consist of the following:

Monitoring Points: These are to be used as targets in monitoring by conventional survey methods and shall have the following features:

- The target shall be the head of a 2-inch long masonry nail with an identification tag. The nail shall be manufactured from hardened, zinc-plated steel. The nail shall have ribbed threads along its shank and a conical point. It shall also have an indent in the center of its head to receive a surveyor's plumb bob.

- The identification tag shall be 2.5 inches in diameter by 0.1 inches thick with a punched number for identification. For rail road track monitoring, the masonry nail shall be placed through the central hole in the identification tag and driven into a rail tie such that the identification tag lies directly between the surface of rail tie and the head of the masonry nail.

Construction Methods:

All monitoring survey work shall be performed by a Land Surveyor registered in the State of Connecticut.

For rail road track monitoring:

- Monitoring points shall be located at 25-foot intervals along the centerline of all tracks within 50 feet of any of the construction activities identified under the "Description" section of this special provision.

For monitoring of the other station elements listed in this special provision (i.e. existing catenary structures 434, 435, and 436; existing station building; the existing railroad platform piers; and the existing pedestrian bridge and its associated existing ramp structures):

- At least two (2) monitoring points shall be located on each structure specified herein within 50 feet of any of the construction activities identified under the "Description" section of this special provision.

The proposed required monitoring point locations shall be shown on a plan provided by the Contractor. The Engineer reserves the right to modify the monitoring point layout.

Pre-construction activity survey: Prior to any construction activities (as identified under the "Description" section of this special provision) within 50 feet of any railroad tracks or other structures, perform a survey of the monitoring points -- determining the coordinates and elevations of the monitoring points.

Monitoring during construction activity: At the start, midday and end of daily construction activities, survey all monitoring points (determining coordinates and elevations) within 50 feet of any construction activities (as identified under the "Description" section of this special provision), to detect horizontal or vertical movements.

Establish the initial coordinates and elevation of each monitoring point to 0.1 inches or less.

The Contractor shall submit the monitoring point survey data to the Engineer within 24 hours of the survey data being obtained. When any reading indicating over 0.25 inches of movement (vertical or horizontal) is noted, the Contractor shall notify the Engineer and discuss possible remedial actions. When any reading indicating over 0.50 inches of movement (vertical or horizontal) is noted, the Contractor shall notify the Engineer and stop the construction activities identified under the "Description" section of this special provision until remedial actions have been implemented. The contractor shall submit for approval a work plan for remedial action to the engineer. No additional payment will be made for the remedial work required.

Method of Measurement:

The work covered under this Item shall be on lump sum basis and will not be measured for payment.

Basis of Payment:

The work under this Item will be paid for at the lump sum price for "Monitoring Structures", which price shall be compensation for monitoring plans; furnishing, maintaining and installing monitoring points; monitoring; and survey data including all tools, labor, and incidentals thereto.

Pay Item	**Pay Unit**
Monitoring Structures	L.S.

ITEM #0728020A – STONE BALLAST

Description:

This item includes furnishing and installing ballast for track construction. This item also includes furnishing and installing miscellaneous ballast as shown on the plans and as directed by the Engineer.

Materials:

Submittals:

Submit the following in accordance with Form 816 Article 1.20-1.05.02 and NOTICE TO CONTRACTOR - SUBMITTALS.

Compliance: Supplier's certification that the material delivered to the site is in compliance with the Specifications.

Samples: Submit as one representative sample and one sample of each new source of supply as requested by Engineer. Samples of not less then 150 lbs should be submitted. Field samples shall be secured in accordance with ASTM D75.

Test reports for testing specified herein.

References:

Comply with the latest provisions of Codes, Specifications, Standards, and recommended practices of the most recent edition and addenda thereto of:

AREMA: American Railway Engineering and Maintenance of Way Association,
Manual for Railway Engineering, Chapter 1, Part 2.

ASTM International (formerly American Society for Testing and Materials)

A. ASTM C29 - Standard Test Method for Bulk Density ("Unit Weight") and Voids in Aggregate.

B. ASTM C88 - Soundness of Aggregates by Use of Sodium Sulfate or Magnesium Sulfate.

C. ASTM C117 - Material finer than No. 200 Sieve in Mineral Aggregates by Washing.

D. ASTM C127 - Specific Gravity and Absorption of Coarse Aggregate.

E. ASTM C131 - Resistance to Abrasion of Small Size Coarse Aggregate by Use of the Los Angeles Machine.

F. ASTM C136 - Sieve or Screen Analysis of Fine and Coarse Aggregates.

G. ASTM C142 - Clay Lumps and Friable Particles in Aggregates.

H. ASTM C535 - Test Method for Resistance to Degradation of Large-Size Coarse Aggregate by Abrasion and Impact in the Los Angeles Machine.

I. ASTM C702 - Standard Practice for Reducing Samples of Aggregate to Testing Size

J. ASTM D75 - Standard Methods of Sampling Aggregates.

K. ASTM D1556-00 - Standard Test Method for Density and Unit Weight of Soil in Place by the Sand-Cone Method.

L. ASTM D 1557 – Laboratory Compaction Characteristics of Soil Using Modified Effort (56,000 ft-lbf/ft^3).

M. ASTM D2922 – Density of Soil and Soil-Aggregate in Place by Nuclear Methods (Shallow Depth)

N. ASTM D4318 - Determining the Liquid Limit, Plastic Limit and Plasticity Index of Soils.

O. ASTM D4791 - Standard Test Method for Flat Particles, Elongated Particles, or Flat and Elongated Particles in Coarse Aggregate.

P. ASTM E11 - Standard Specification for Wire Cloth and Sieves for Testing Purposes.

California Department of Transportation

California Test Method 217 - *Method of Test for Sand Equivalent* [Available at CalDOT website: http://www.dot.ca.gov/hq/esc/ctms/pdf/CT_217Nov99.pdf].

MNR: Metro-North Railroad

Publication MW-4 - Manual for Construction & Maintenance of Track.

Ballast Requirements:

Testing and inspection shall conform to the provisions as delineated in the AREMA Manual. Submit a quality control plan that addresses all requirements of this specification, including requirements and testing called out in referenced documents.

Submit qualifications of testing laboratory to perform required testing. Provide certified results of tests required by specifications. The Engineer reserves the right to witness the performance of tests.

Material not meeting the Specifications shall not be used in the work.

Furnish prepared ballast that is of crushed rock, hard, strong, angular, durable particles, containing no carbonates or slag, free from injurious amounts of deleterious substances.

Ballast shall have a minimum sand equivalent of 50 when measured by California Test 217.

Determination of weight per cubic yard shall be in accordance with ASTM C29.

All particles of the ballast shall have been broken by the crusher and have at least two broken surfaces.

All boulders which will pass through a 5-inch circular opening before crushing shall be rejected.

Type A ballast shall be crushed trap rock or granite. It shall: a) be composed of angular fragments which are clear and free from deleterious substance; b) have proper gradation; and c) meet all requirements of this specification. Additionally, ballast shall be in conformance with AREMA Chapter 1, Part 2 except as otherwise specified herein.

Ballast shall conform to the following scale when tested with laboratory sieves having square openings. (Sieves must conform to ASTM E11):

Size No.	Ballast Type	Nominal Size Sq. Openings	Amounts Finer Than Each Sieve (Sq. Opening Laboratory Sieve- Pct. by Wgt) 2”	1½”	1”	3/4”	½”	3/8”	No.4
4	A	1½” - 3/4”	100	90-100	20-55	0-15		0-5	
5	A	1” - 3/8”		100	90-100	40-75	15-35	0-15	0-5

Deleterious substances in ballast shall not be present in excess of the following amounts:

Description:	Percent by Weight:	Method of Test
Material finer than No. 200 Sieve	0.5 percent	ASTM C117
Clay lumps	0.5 percent	ASTM C142
Soft and friable pieces	3.0 percent	ASTM C142

Hardness shall be between 5.5 and 7.0 as measured on Moh Hardness scale.

Water absorption shall not exceed 1.2% when tested in accordance with ASTM C127.

Resistance to degradation shall be determined in accordance with ASTM C131 or ASTM C535. Materials having gradations containing particles retained on the 1 inch sieve shall be tested by ASTM C535. Materials having gradations with 100 percent passing the 1 inch sieve shall be tested by ASTM C131.

The Sieve Analysis shall be made in accordance with the ASTM C136.

Soundness shall be tested in accordance with ASTM C88. Average weighted loss shall not exceed 1.5 percent.

The percent of flat or elongated particles shall be determined in accordance with ASTM D4791. The dimension ratio shall be 1:3. Maximum allowable is 5 percent.

Be responsible for assuring ballast cleanliness. A suitable washing facility shall be provided at the quarry for this purpose. This facility shall consist of a high pressure spray over the ballast as it passes on the belt or other measures acceptable to the Engineer. Include washing procedures in the project quality control plan.

Prepared ballast shall be handled in such a manner that it is kept clean and free from segregation. It shall be only loaded into cars or trucks which are in good order, tight enough to prevent leakage and waste of material, and clean and free from rubbish or any substance which would foul the ballast.

The quality of stone for ballast from any quarry or new strata opened up, including its soundness, resistance to abrasion, chemical composition, absorption, impedance, hardness and weight per cubic foot, shall be determined prior to its acceptance at a testing laboratory selected by the purchaser. Each stratum or portion of quarry containing a variation of quality of stone shall be tested separately and not averaged. Quality tests and gradation tests shall subsequently be made from time to time as deemed necessary by the purchaser to control the quality and size of ballast furnished by the producer.

Sufficient visual observations, determinations of deleterious substances and analyses of gradation shall be made by the producer prior to shipment to assure compliance with these specifications.

Certify that ballast delivered to the Railroad is typical of that upon which specified tests have been made.

The selection of samples is as important as the laboratory testing; care shall be taken that the samples obtained show the true nature and conditions of the material to be examined.

Samples of all ballast and samples of stone at quarries for test to determine the acceptability of the source, as well as samples for quality control, shall be in accordance with ASTM D75 and C702.

Method of sampling shall be submitted. Sampling may be performed by the Engineer at his discretion. The quarry or producer may select samples for inspection or preliminary testing if such action is approved by the Engineer.

Samples of the finished product for gradation and other required tests shall be taken from each 1,000 tons of prepared ballast unless otherwise ordered by the Engineer. Samples shall be representative and shall weigh not less than 100 pounds. Where the acceptability of stone from a quarry is to be determined, a 150 pound sample consisting of pieces of approximately 6 by 6 by 4 inches should also be furnished.

No ballast shall be unloaded unless it has been accepted by the Engineer.

If material prior to, during or after being loaded, does not conform to specifications, stop operations until all faults have been corrected. Should ballast that does not meet specifications be unloaded, then payment will not be made to Contractor. Disposal and/or removal of defective material shall be done without any additional cost to the Department.

As it is impractical to inspect all ballast at quarry, the Engineer reserves the right to reject any car or truck load of ballast (whether previously inspected or not) that does not conform to specifications upon arrival at unloading site.

Handle prepared ballast at the production plant, during shipment, and at the work site so that it is kept clean and free of segregation.

Construction Methods:

Do not place ballast until the Engineer has approved the subgrade upon which the ballast is to be placed.

Place stone ballast to the limits and depths, and to the grade, shown on the plans, or as directed by the Engineer.

The ballast layer shall be thoroughly compacted until the surface is true and unyielding, displaying no deformation or movement under the compaction equipment. Compact ballast to 100-percent maximum density by vibratory compaction equipment specifically manufactured for compaction purposes, or self-propelled pneumatic-tired roller. Self-propelled, pneumatic-tired roller shall have a gross weight of 10- to 15-tons. Vibratory compactor shall have a weight of not less than 10-tons and be capable of applying a dynamic load of not less than 18,000-pounds at 1,300- to 1,500-cpm.

Tolerances: Leave top of ballast bed flat and level to within plus or minus 1-inch of the prescribed finished elevation across a 12-foot wide platform centered on the track centerline.

After installation of ballast layer, refrain from driving vehicles on the ballast layer that would foul or rut the ballast thereby potentially causing center-binding of ties. Replace any ballast that has become fouled by mud or fine materials at no cost to the Owner.

Determination of Thickness: The thickness shall be as indicated on the plans, or as ordered by the Engineer and within specified tolerances.

Measurements to determine the thickness will be taken by the Engineer at intervals of 500 feet or less, and shall be considered representative of the lane.

If a thickness measurement is taken and found deficient, the Engineer will take such additional measurements as he considers necessary to determine the longitudinal limits of the deficiency.

The Engineer may waive an occasional measurement outside the tolerances if in his judgment it is not representative of true conditions and providing that:

(a) Other thickness measurements taken nearby for the course are within acceptable limits;

(b) proper controls have been exercised by the Contractor; and

(c) if there would be no impairment to the serviceability of the complete construction.

Method of Measurement:

All aggregate required for this work shall be weighed on scale furnished by and at the expense of the Contractor, except as otherwise permitted herein. The scales shall be of a type satisfactory to the Engineer and shall be calibrated and sealed, at the expense of the Contractor, as often as the Engineer may require.

Adjustments to compensation shall be made for deficiencies in plan depth and cross section as specified herein.

Provide certified scale tickets for each load of ballast delivered. Cars or trucks shall be weighed and such weights shall be forwarded with car/truck numbers to the Engineer.

Measurements shall be subject to the following provisions:

No adjustment of the quantity accepted for payment will be made where the thickness is within the allowable plus or minus tolerances.

Where the thickness exceeds that indicated on the plans by more than the prescribed tolerance, that material which is in excess of the total planned depth, plus the tolerance, will not be included for payment.

Areas represented by measurements deficient in thickness in excess of the allowable minus deviation shall be corrected at the Contractor's expense, or with written permission of the Engineer, the deficient areas may remain, and payment will be made at an equitable adjusted price based on weight per cubic yard.

An adjustment in quantity will be made in the materials placed beyond the horizontal limits indicated on the plans by deducting the computed weight of that material extending more than three inches beyond the horizontal plan dimensions.

Basis of Payment:

This work will be paid for at the contract unit price per ton for "Stone Ballast", complete in place, which price shall include all materials, tools, equipment and work incidental thereto.

Pay Item	Pay Unit
Stone Ballast	TON

ITEM #0901005A – BOLLARD

Description: This item shall consist of furnishing and installing a bollard in a concrete footing, of the type specified, at the location, to the dimensions and details as shown on the plans in accordance with these specifications, or as directed by the Engineer. The purpose of the bollard is to protect an electrical control box against incidental damage from a motor vehicle.

Material: Material for this work shall conform to the following requirements:

Concrete	Article M.03.02 Class "C" Concrete.
6" Steel Post	ASTM Schedule 80. Galvanized in accordance with ASTM A 123.

If the steel post is not galvanized it shall be painted. Painting shall consist of one primer coat conforming to Federal Specification TT-P-615d, Type II. There shall be two finished coats of paint. The final finish coat shall conform to Federal Specification TT-E-527 Air Drying, and the color shall be yellow conforming to Article M.07.01

Construction Methods: The steel post shall have an exposed length of 4'. The post shall be installed to a depth of 3', set in a concrete footing of at least 18" in diameter and 18" deep. In lieu of a footing, the entire hole shall be filled with concrete. If installed in a grass area, the top 6" of the hole shall be backfilled with a comparable material.

The post shall be filled with concrete. The top shall be rounded to a convex surface. No sharp edges, burrs, threads or other defects shall be exposed.

Method of Measurement: This work shall be measured for payment by the number of steel bollards installed and accepted in place.

Basis of Payment: This work will be paid for at the contract unit price each for "Bollard", which price shall include the steel post, concrete footing, painting, all necessary tools, equipment and labor required for installation. Concrete sidewalk shall be paid for by square foot at the contract price.

Pay Item	Pay Unit
Bollard	ea.

ITEM #0913069A – TEMPORARY 8' CHAIN LINK FENCE
ITEM #0913984A – TEMPORARY PROTECTIVE FENCE

Description:

Work under this item shall consist of removing, transporting, storing and installing temporary chain link fencing and temporary protective fencing, of the type and height specified where indicated on the plans or as ordered and in conformity with these specifications. This item also includes the relocation of temporary chain link fence and temporary protective fence.

Materials:

Temporary chain link fence shall consist of 8-foot high surface mounted panels and shall include all required hardware as recommended by the manufacturer and/or supplier. Temporary Protective Fence shall consist of solid vinyl screening and shall include all required hardware as recommended by the manufacturer and/or supplier.

Construction Methods:

Furnish and install or relocate chain link fence panels, ties, and other materials for the height and locations specified in the contract documents. Place fence panels according to manufacturer's recommendations. Secure in place through use of sand bags or other approved methods. Driving stakes or posts into the exiting pavement shall not be allowed. Install privacy screening according to manufacturer's instructions.

Temporary protective fence shall securely be attached to the temporary chain link fence using heavy-duty 6-ply reinforced hems (1-1/2" wide minimum) on all outside edges – sewn with 4-ply black polyester tread, and brass tooth grommets – spaced 18" apart on all sides

Method of Measurement:

Temporary 8' Chain Link Fence and Temporary Protective Fence; will be measured for payment by the number of feet of completed and accepted fence, measured horizontally from outside-to-outside of terminal posts, as shown on the plans.

Basis of Payment:

The work will be paid for at the contract unit price per linear foot, for "Temporary 8' Chain Link Fence" and "Temporary Protective Fence" of the type and height specified, complete in place, which price shall include all materials, equipment, tools and labor, incidental thereto. Relocation of Temporary 8' Chain Link Fence shall only be paid for when fencing is initially placed for

each phase of the construction. Relocation of fencing as allowed during nightly shifts shall not be counted for payment.

Item No.	Item	Pay Unit
0913069A	Temporary 8’ Chain Link Fence	l.f.
0913984A	Temporary Protective Fence	l.f

ITEM #0971001A – MAINTENANCE AND PROTECTION OF TRAFFIC

Article 9.71.01 – Description is supplemented by the following:

The Contractor shall maintain and protect traffic as follows and as limited in the Special Provision "Prosecution and Progress":

HOLLOW TREE RIDGE ROAD, HEIGHTS ROAD, LEDGE ROAD, AND NOROTON AVENUE

The Contractor shall maintain and protect the existing number of lanes of traffic, including turning lanes, on Hollow Tree Ridge Road, Heights Road, Ledge Road, and Noroton Avenue.

PASSENGER DROP-OFF AREA AND PARKING LOT TO THE NORTH OF TRACKS

The Contractor shall maintain and protect the existing travel way and parking spaces within the passenger drop-off area to the north of the tracks.

Excepted therefrom will be those periods, during the allowable periods, when the Contractor is actively working, at which time the Contractor may close the western-most entrance to the one-way drive at Heights Road. At the same time, in order to protect and maintain the entering vehicular traffic flow to the parking lot located east of the drop-off area, the Contractor shall direct incoming vehicular traffic through the drop-off area exit (middle curb cut) located at Heights Road.

PARKING LOT TO THE SOUTH OF TRACK 4

The Contractor shall maintain and protect the existing travel way and parking spaces within the parking lot located to the south of Track 4. A number of existing paved parking spaces adjacent to the platform will be reserved for Contractor use during construction, at which time the Contractor will maintain a 24-foot minimum travel way between the edge of his work zone and the adjacent northern line of central parking spaces.

Excepted therefrom will be those periods, during the allowable periods, when the Contractor is actively working, at which time the Contractor may reserve during off-peak hours specific parking spaces in the parking lot for truck deliveries, and for the maneuvering of construction vehicles, as indicated in the contract plans. During this period, construction vehicles shall access and exit the parking area via the entrance/exit location at Ledge Road, at the southeastern corner of the parking lot. The Contractor shall be responsible for the method and materials used to reserve the allowable spaces. Costs for this work and associated materials shall be included in the cost for Maintenance and Protection of Traffic.

PEDESTRIAN ACCESS

Pedestrian access shall be maintained to all open platforms in accordance with the Maintenance and Protection of Traffic Plans, to allow for the safe passage of pedestrians during all construction phases with the following exception: The westbound platform will be closed for access during specific off-peak times. The access to the pedestrian overpass will be secured at different locations coming from the eastbound platform. A small section of sidewalk will also be constructed on the northern half of the station to allow platform access during staged construction. Please refer to pedestrian detour as detailed in the plans.

Construction barricades shall be provided along the railroad platforms at locations indicated in the contract drawings, for the protection of pedestrians during construction activities.

Temporary pedestrian crosswalks to provide pedestrian safety will be placed in two different locations in the parking lot to the south of track 4.

Article 9.71.03 - Construction Method is supplemented by the following:

SIGNING

The Contractor shall maintain all existing overhead and side-mounted signs throughout the project limits during the duration of the project. The Contractor shall temporarily relocate existing signs, temporary signs, and sign supports as many times as deemed necessary as shown on the Maintenance and Protection of Traffic Plans and as directed by the Engineer. The Contractor shall install temporary signs, sign supports, and foundations as called for in the Maintenance and Protection of Traffic Plans and as directed by the Engineer.

The temporary relocation of all signs and side-mounted supports shall be paid for under Item #0971001A – Maintenance and Protection of Traffic. The furnishing, installation, and removal of temporary side-mounted sign supports, and foundations shall also be paid for under Item #0971001A - Maintenance and Protection of Traffic. Unless they are adequately protected by guide rail or barrier, temporary side-mounted supports shall be breakaway supports conforming to specifications and details contained elsewhere in the contract.

Temporary signs, temporary overlay panels, and the temporary sign faces for side mounted and overhead signs shall be paid for under Item #1220027 - Construction Signs. The type of material, the type of sheeting, and the color of the sheeting for the temporary signs, temporary overlay panels, and temporary sign faces for side mounted and overhead signs shall be submitted to the Engineer for approval.

The Contractor may not install temporary sign posts in sidewalks. The Contractor must utilize existing sign posts, grassy areas or portable sign supports for the installation of temporary signing in areas of existing sidewalks.

CONSTRUCTION BARRICADES

At least 30 days prior to undertaking any work, the Contractor shall submit to the Engineer for review and approval all temporary construction barricades for use along the railroad platforms, at locations indicated in the contract drawings, for the protection of pedestrians during construction activities. No work shall begin until such plans have been approved by the Engineer.

REQUIREMENTS FOR WINTER

The Contractor shall schedule a meeting with representatives from the Department, including Maintenance and Traffic, and the Town to determine what interim traffic control measures the Contractor shall accomplish for the winter to provide safety to the motorists and permit adequate snow removal procedures. This meeting shall be held prior to October 31 of each year. The contractor, when ordered by the Engineer, shall remove snow and take care of icy conditions on restricted working areas, new and existing sidewalks on any part of the right-of-way within the limits of the project.

SIGNING PATTERNS

The Contractor shall erect and maintain all signing patterns in accordance with the traffic control plans contained herein. Proper distances between advance warning signs and proper taper lengths are mandatory.

SECTION 1. WORK ZONE SAFETY MEETINGS

1.a) Prior to the commencement of work, a work zone safety meeting will be conducted with representatives of DOT Construction, Connecticut State Police (Local Barracks), Municipal Police, the Contractor (Project Superintendent) and the Traffic Control Subcontractor (if different than the prime Contractor) to review the traffic operations, lines of responsibility, and operating guidelines which will be used on the project. Other work zone safety meetings during the course of the project should be scheduled as needed.

1.b) A Work Zone Safety Meeting Agenda shall be developed and used at the meeting to outline the anticipated traffic control issues during the construction of this project. Any issues that can't be resolved at these meetings will be brought to the attention of the District Engineer and the Office of Construction. The agenda should include:

- Review Project scope of work and time
- Review Section 1.08, Prosecution and Progress
- Review Section 9.71, Maintenance and Protection of Traffic
- Review Contractor's schedule and method of operations.

- Review areas of special concern: closed platforms, pedestrian detours.
- Open discussion of work zone questions and issues
- Discussion of review and approval process for changes in contract requirements as they relate to work zone areas

SECTION 2. GENERAL

2.a) If the required minimum number of signs and equipment are not available, the traffic control pattern shall not be installed.

2.b) Failure of the Contractor to have the required minimum number of signs, personnel and equipment, which results in the pattern not being installed, shall not be a reason for a time extension or claim for loss time.

2.c) In cases of legitimate differences of opinion between the Contractor and the Inspection staff, the Inspection staff shall err on the side of safety. The matter shall be brought to the District Office for resolution immediately or, in the case of work after regular business hours, on the next business day.

SECTION 3. INSTALLING AND REMOVING TRAFFIC CONTROL PATTERNS

3.a) The Contractor must adhere to using the proper signs, placing the signs correctly, and ensuring the proper spacing of signs.

3.b) Prior to installing a pattern, any conflicting existing signs shall be covered with an opaque material. Once the pattern is removed, the existing signs shall be uncovered.

SERIES 16 SIGNS

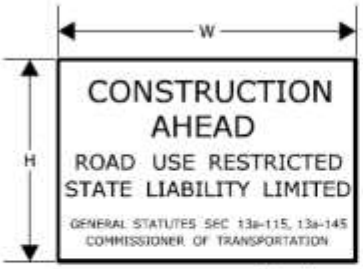

		W H
16-E	80-1605	84" x 60"
16-H	80-1608	60" x 42"
16-M	80-1613	30" x 24"

		W H
16-S	80-1619	48" x 30"

THE 16-S SIGN SHALL BE USED ON ALL PROJECTS THAT REQUIRE SIDEWALK RECONSTRUCTION OR RESTRICT PEDESTRIAN TRAVEL ON AN EXISTING SIDEWALK.

SERIES 16 SIGNS SHALL BE INSTALLED IN ADVANCE OF THE TRAFFIC CONTROL PATTERNS TO ALLOW MOTORISTS THE OPPORTUNITY TO AVOID A WORK ZONE. SERIES 16 SIGNS SHALL BE INSTALLED ON ANY MAJOR INTERSECTING ROADWAYS THAT APPROACH THE WORK ZONE. ON LIMITED-ACCESS HIGHWAYS, THESE SIGNS SHALL BE LOCATED IN ADVANCE OF THE NEAREST UPSTREAM EXIT RAMP AND ON ANY ENTRANCE RAMPS PRIOR TO OR WITHIN THE WORK ZONE LIMITS.

THE LOCATION OF SERIES 16 SIGNS CAN BE FOUND ELSEWHERE IN THE PLANS OR INSTALLED AS DIRECTED BY THE ENGINEER.

SIGNS 16-E AND 16-H SHALL BE POST-MOUNTED.

SIGN 16-E SHALL BE USED ON ALL EXPRESSWAYS.

SIGN 16-H SHALL BE USED ON ALL RAMPS, OTHER STATE ROADWAYS, AND MAJOR TOWN/CITY ROADWAYS.

SIGN 16-M SHALL BE USED ON OTHER TOWN ROADWAYS.

REGULATORY SIGN "ROAD WORK AHEAD, FINES DOUBLED"

THE REGULATORY SIGN "ROAD WORK AHEAD FINES DOUBLED" SHALL BE INSTALLED FOR ALL WORK ZONES THAT OCCUR ON ANY STATE HIGHWAY IN CONNECTICUT WHERE THERE ARE WORKERS ON THE HIGHWAY OR WHEN THERE IS OTHER THAN EXISTING TRAFFIC OPERATIONS.

THE "ROAD WORK AHEAD FINES DOUBLED" REGULATORY SIGN SHALL BE PLACED AFTER THE SERIES 16 SIGN AND IN ADVANCE OF THE "ROAD WORK AHEAD" SIGN.

31-1906

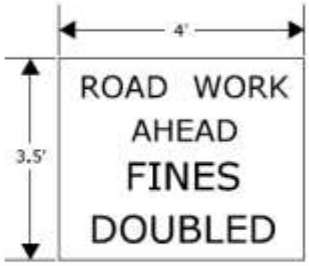

"END ROAD WORK" SIGN

THE LAST SIGN IN THE PATTERN MUST BE THE "END ROAD WORK" SIGN.

80-9612

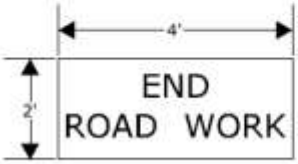

SCALE: NONE

CONSTRUCTION TRAFFIC CONTROL PLAN

REQUIRED SIGNS

CONNECTICUT DEPARTMENT OF TRANSPORTATION
BUREAU OF ENGINEERING & CONSTRUCTION

APPROVED Charles S. Harlow 2012.06.05 11:35:43-04'00'
PRINCIPAL ENGINEER

NOTES FOR TRAFFIC CONTROL PLANS

1. IF A TRAFFIC STOPPAGE OCCURS IN ADVANCE OF SIGN (A), THEN AN ADDITIONAL SIGN (A) SHALL BE INSTALLED IN ADVANCE OF THE STOPPAGE.

2. SIGNS (AA), (A), AND (D) SHOULD BE OMITTED WHEN THESE SIGNS HAVE ALREADY BEEN INSTALLED TO DESIGNATE A LARGER WORK ZONE THAN THE WORK ZONE THAT IS ENCOMPASSED ON THIS PLAN.

3. SEE TABLE 1 FOR ADJUSTMENT OF TAPERS IF NECESSARY.

4. IF THIS PLAN REMAINS IN CONTINUOUS OPERATION FOR MORE THAN 36 HOURS, THEN TRAFFIC DRUMS SHALL BE USED IN PLACE OF TRAFFIC CONES.

5. ANY LEGAL SPEED LIMIT SIGNS WITHIN THE LIMITS OF A ROADWAY / LANE CLOSURE AREA SHALL BE COVERED WITH AN OPAQUE MATERIAL WHILE THE CLOSURE IS IN EFFECT, AND UNCOVERED WHEN THE ROADWAY / LANE CLOSURE IS RE-OPENED TO ALL LANES OF TRAFFIC.

6. IF THIS PLAN REMAINS IN CONTINUOUS OPERATION FOR MORE THAN 36 HOURS, THEN ANY EXISTING CONFLICTING PAVEMENT MARKINGS SHALL BE ERADICATED OR COVERED, AND TEMPORARY PAVEMENT MARKINGS THAT DELINEATE THE PROPER TRAVELPATHS SHALL BE INSTALLED.

7. DISTANCES BETWEEN SIGNS IN THE ADVANCE WARNING AREA MAY BE REDUCED TO 100' ON LOW-SPEED URBAN ROADS (SPEED LIMIT < 40 MPH).

8. IF THIS PLAN IS TO REMAIN IN OPERATION DURING THE HOURS OF DARKNESS, INSTALL BARRICADE WARNING LIGHTS - HIGH INTENSITY ON ALL POST-MOUNTED DIAMOND SIGNS IN THE ADVANCE WARNING AREA.

9. A CHANGEABLE MESSAGE SIGN SHALL BE INSTALLED ONE HALF TO ONE MILE IN ADVANCE OF THE LANE CLOSURE TAPER.

10 SIGN (P) SHALL BE MOUNTED A MINIMUM OF 7 FEET FROM THE PAVEMENT SURFACE TO THE BOTTOM OF THE SIGN.

TABLE 1 - MINIMUM TAPER LENGTHS

POSTED SPEED LIMIT (MILES PER HOUR)	MINIMUM TAPER LENGTH FOR A SINGLE LANE CLOSURE
30 OR LESS	180' (55m)
35	250' (75m)
40	320' (100m)
45	540' (165m)
50	600' (180m)
55	660' (200m)
65	780' (240m)

METRIC CONVERSION CHART (1" = 25mm)

ENGLISH	METRIC	ENGLISH	METRIC	ENGLISH	METRIC
12"	300mm	42"	1050mm	72"	1800mm
18"	450mm	48"	1200mm	78"	1950mm
24"	600mm	54"	1350mm	84"	2100mm
30"	750mm	60"	1500mm	90"	2250mm
36"	900mm	66"	1650mm	96"	2400mm

SCALE: NONE

CONSTRUCTION TRAFFIC CONTROL PLAN

NOTES

CONNECTICUT DEPARTMENT OF TRANSPORTATION
BUREAU OF ENGINEERING & CONSTRUCTION

APPROVED Charles S. Harlow 2012.06.05 15:50:35-04'00'
PRINCIPAL ENGINEER

Article 9.71.05 – Basis of Payment is supplemented by the following:

The temporary relocation of signs and supports, the furnishing, installation and removal of any temporary supports, and the furnishing, installation and removal of the construction barricades along the railroad platforms, at locations indicated in the contract drawings, shall be paid for under the item "Maintenance and Protection of Traffic". Temporary overhead sign supports and foundations shall be paid for under the appropriate item(s).

ITEM #1003925A – REMOVE EXISTING LUMINAIRE

Description: Work under this item shall consist of the removal and storage of existing 277/120v, 70w MH Model No. MA17-1-FM luminaire used for lighting platforms as shown on the plans or as directed by the Engineer and in conformity with these specifications.

Materials: All materials required for this work shall conform to the requirements of these specifications or the special provisions for the material in question; or if not so specified, they shall be of a quality satisfactory to the Engineer.

Construction Methods: Existing luminaire shall be carefully removed in such a manner as to safeguard all parts from damage or loss. The Contractor shall replace, at his own expense, all equipment which becomes damaged due to his operations.

Removal of existing luminaire shall be coordinated with the installation of these luminaires with LED Retrofit and lighting equipment so as to maintain the appropriate lighting levels and safety for those pedestrians using the railroad station. The Contractor shall furnish and install temporary lights or other equipment necessary to provide safe lighting levels as directed by the Engineer.

Luminaire and all other materials shall be removed in their entirety.

Equipment shall be removed in such a manner as to cause no hazard to pedestrians, traffic or property. If necessary, flagmen shall be used to halt traffic briefly while work is in progress.

All removed luminaires and all other materials shall be removed and stored in safe and secure place. Existing items or surfaces to remain which are damaged as a result of this Work shall be re-finished, repaired, or replaced in accordance with the appropriate sections of the Standard Specifications.

Method of Measurement: This work will be measured for payment by the number of luminaires removed; and stored.

Basis of Payment: This work will be paid for at the Contract unit price each for the "Remove Existing Luminaire" which price shall include all removals, all material, equipment and labor incidental to completion of this item.

Pay Item	Pay Unit
Remove Existing Luminaire	Each

ITEM #1003926A – REINSTALL LIGHT POLE

Description:

Work under this item shall consist of reinstalling the earlier removed light poles from the platforms. These poles shall be installed at their original locations from where these were dismantled per the staging plans and shown on the plans or as directed by these specifications.

Materials:

All the materials are the same as were removed previously from the platforms and stored. If for some unforeseen reasons, the work requires additional poles, the contractor shall arrange and install the new ones similar to the existing.

Construction Methods:

The stored poles shall be carefully brought to the site and reinstalled at their original locations indicated on plans. The poles shall be installed on the platform using the correct size of the bolts. The poles shall be exactly perpendicular to the platform surface. If any scratches come up on any of the poles during the installation, these shall be repaired and painted with matching paint to the satisfaction of the engineer.

Method of Measurement:

This work will be measured for payment by the number of light poles installed.

Basis of Payment:

Payment will be made by the number of light poles installed.

Pay item	Pay unit
Reinstall Light Pole	Each

ITEM #1003997A – REMOVE POLE

Description: Work under this item shall consist of the removal of poles used for lighting as shown on the plans or as directed by the Engineer and in conformity with these specifications.

Storing of removed poles in a Safe and Secure manner and no damage.

Materials: All materials required for this work shall conform to the requirements of these specifications or the special provisions for the material in question; or if not so specified, they shall be of a quality satisfactory to the Engineer.

Construction Methods: Existing pole shall be carefully removed in such a manner as to safeguard all parts from damage or loss. The Contractor shall replace, at his own expense, all equipment including removed poles which becomes damaged due to his operations.

Removal of existing pole shall be coordinated with the installation of these stored poles and lighting equipment so as to maintain the appropriate lighting levels and safety for those pedestrians using the railroad station. The Contractor shall furnish and install temporary lights or other equipment necessary to provide safe lighting levels as directed by the Engineer.

Poles and all other materials shall be removed in their entirety. For those lighting poles that have a speaker attached to it, remove and save the speaker and its associated wiring. New Speakers are to be installed upon installation of the stored pole and stored luminaire fitted with LED Retrofit.

Equipment shall be removed in such a manner as to cause no hazard to pedestrians, traffic or property. If necessary, flagmen shall be used to halt traffic briefly while work is in progress. All removed poles and all other materials shall be removed to a Safe and Secure place. Existing items or surfaces to remain which are damaged as a result of this Work shall be re-finished, repaired, or replaced in accordance with the appropriate sections of the Standard Specifications.

Method of Measurement: This work will be measured for payment by the number of poles removed.

Basis of Payment: This work will be paid for at the Contract unit price each for the "Remove Pole" which price shall include all removals, Safe Storage all material, equipment and labor incidental to completion of this item.

Pay Item	Pay Unit
Remove Pole	Each

ITEM #1005600A – LED LUMINAIRE

Description:

The work under this item shall consist of furnishing and installing light emitting diode (LED) Retrofit luminaries kits in the existing metal halide (MH) luminaires heads for the platform lighting. The Retrofit kits shall be of two kinds.

50 LA LED Retrofit constant wattage RKL-Philips Gardco or approved equal appropriate to use in pre-existing Philips Gardco Lighting Form 10Round Semi-Spherical (MA) Cut-Off Luminaire, 17 inches diameter, Type IV Dist, 120V Model Number MA-17-1-FM-70MH-120-BRA-F-MF mounted on lighting poles on the platforms

RC-52-CNP-LED Retrofit constant wattage-60 watt low -profile adapter or approved equal for existing Lithonia Lighting 100W MH Prismatic Glass Reflector Canopy light luminaire model number KACM-100M-FP-120-LPISF

For eastbound platform shelter, furnish and install a new LED Luminaure TRAPEZOID-TLED-TC-48-VS-P-SURFACE 55W Total system watts and 102 lumens per watt LED LITE LOGIC LUMINAIRE OR Approved Equal.

Materials:

The LED Retrofit materials shall be delivered to the job site in original packages, containers bearing the name of the manufacturer, the brand name and product technical description. No damaged LED retrofit shall be used.

The delivery, storage, and handling shall be done in accordance with Form 816 Article 1.06.05 and Form 816 Article 1.20-1.06.03.

The LED retrofit kits should provide excellent performance with advanced LED thermal management technology. These features and the distinct styles of luminaires to provide outdoor area lighting and pedestrian scale lighting that is both energy efficient and aesthetically pleasing. The LED retrofit kits should be appropriate and compatible to the existing High quality Philips Gardco luminaires on the poles and Lithonia Lighting 100W MH Canopy Surface Light Fixtures. High performance Class 1 LED systems should offer the potential for energy savings up to 50 % when compared to HID systems.

The LED retrofit kits should provide extruded aluminum integral thermal radiation fins to provide the excellent thermal management so critical to long LED system life. The housing is to be fabricated using aluminium plate of appropriate thickness to provide strength and durability but also to act as a substantial heat sink for optimum performance and durability of LED light engine.

LED DRIVER ASSEMBLY: The retrofit kits to include an LED driver that accepts 120V through 277V, 50hz to 60hz, input. All retrofit kits would require removal of both the existing HID ballast assembly and the existing HID optical assembly. The retrofit kits to include a complete prewired LED driver assembly to replace the existing HID ballast assembly. For Form Ten Round LED area retrofit kits luminaires, the LED Driver is expected to be included in the optical system assembly.

Component-to-component wiring within the luminaire will carry no more than 80% of rated current and is listed by UL for use at 600 VAC at 302°F / 150°C or higher. Plug disconnects are listed by UL for use at 600 VAC, 15A or higher. Power factor is not to be less than 90%. Luminaires to consume 0.0 watts in the off state.

OPTICAL SYSTEMS: LED retrofit kits to include lensed LED arrays set to achieve IES Type I Type IV distributions. Individual LED arrays are to be replaceable. Optical systems are to be field rotatable. Luminaires to feature high performance Class 1 LED systems. Arrays are to be provided attached to the appropriate optic assembly based on the existing luminaire specified.

LABELS: When the LED retrofit is completed using the appropriate components supplied by Philips Gardco, then Philips Gardco luminaires retain UL or CUL (where applicable) Wet Location labels.

The LED should provide Reliability parameters as below:

PREDICTED LUMEN DEPRECIATION DATA

Ambient Temperature °C	Driver mA	L70 Hours[4]
25 °C	350 mA	150,000
	530 mA	100,000
40 °C	350 mA	100,000
	530 mA	70,000

[4]Predicted performance derived from LED manufacturer's data and engineering design estimates, based on IESNA LM-80 methodology. L70 is the predicted time when LED performance depreciates to 70% of initial lumen output.

WARRANTY: The LED retrofit kits to feature a 5 year warranty, including a 5 year limited warranty covering the LED arrays and LED drivers.

Construction Methods:

Prior to the installation of the LED Retrofit Kits in the luminaires, the Contractor should obtain product data and test reports and provide the following submittals:

(1) Submittals

Submit the following in accordance with Form 816 Article 1.20-1.05.02 and NOTICE TO CONTRACTOR – SUBMITTALS.
Product Data: For each type of product indicated.
Qualification Data: For testing agency.
Field quality - control test reports.
Quality Assurance Submittals:

Manufacturer Certification Letter in accordance with NOTICE TO CONTRACTOR - POTENTIAL FOR ASBESTOS CONTAINING MATERIALS.
Source quality - control test reports.
Field quality - control test reports.

Testing Agency Qualifications: An independent agency, with the experience and capability to conduct the testing indicated, that is a member company of the International Electrical Testing Association or is a nationally recognized testing laboratory (NRTL) as defined by OSHA in 29 CFR 1910.7, and that is acceptable to authorities having jurisdiction. Testing Agency's Field Supervisor: Person currently certified by the International Electrical Testing Association or the National Institute for Certification in Engineering Technologies to supervise on-site testing specified in Part 3.
Electrical Components, Devices, and Accessories: Listed and labeled as defined in NFPA 70, Article 100, by a testing agency acceptable to authorities having jurisdiction, and marked for intended use.
Comply with NFPA 70

(2) Lighting Requirements:

For platform lighting, the pre-existing Philips Gardco Lighting Form 10Round Semi-Spherical (MA) Cut-Off Luminaire, 17 inches diameter, Type IV Dist, 120V Model Number MA-17-1-FM-70MH-120-BRA-F-MF mounted on lighting poles on the platforms shall be fitted with RKL 50 LA LED Philips Gardco Lighting or approved equal retrofit kit per details below. This would require removal of both the existing HID ballast assembly and the existing HID optical assembly in the Philips Gardco Lighting Form 10Round Semi-Spherical (MA) Cut-Off Luminaire. RKL 50 LA LED TypE 4 Retrofitted Luminiaire shall have initial 6000 or better lumens output.

RKL 50 LA LED Retrofit For Form 10 Square PHILIPS GARDCO Luminaire

EXISTING LUMINAIRE

LED RETROFIT KIT	ORDER CODE	FOR USE WITH EXISTING PHILIPS GARDCO LUMINAIRES	LED WATTAGES	DISTRIBUTION
		ARM MT		
RKL Retrofit Kit - LED - Constant Wattage	C/M17	MA17	50LA	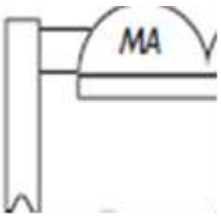 4 Type IV

For Canopy lighting, the existing fixtures for lighting under the Canopy of West Bound Platform are Lithonia Lighting Fixture Model KACM-100M-FP-120-LP1SF. These shall be fitted with LOUVERS LED Retrofit kit RC-52-CNP-LED Retrofit constant wattage -60 W SCOTTSDALE Low-Profile Adaptor Kit or approved equal with the following characteristics.
This would require removal of both the existing HID ballast assembly and the existing HID optical assembly in the existing Canopy Fixture.

"RC-52 –CNP – LED" Retrofit For LITHONIA Lighting CANOPY Light
100 W FIXTURES MODEL KACM-100M-FP-120-LP1SF

MODEL	DESC.	COLOR TEMP.	WATTS	LUMENS
RC-52-CNP-LED	LED Conversion Kit	5,000K	60	6,604

.
Platform Shelter Lighting: A new LED luminaire, TRAPEZOID-TLED-TC-48-VS-P-SURFACE 55W Total system watts and 102 lumens per watt LED LITE LOGIC LUMINAIRE OR Approved Equal should be furnished and installed in the Eastbound platform shelter .

Method of Measurement:

This work will be measured for payment by the number of LED luminaires of each kind installed, completed and accepted.

Basis of Payment:

This work will be paid for at the contract unit price each for each kind "LED Luminaire" of the type and the size specified, complete and accepted in place, which price shall include all materials including LED Retrofit kit for the existing luminaire,, driver, conductors, fuses identification sticker, connections, attachments, connections, and all labor, tools, equipment and work incidental thereto.

Pay Item	**Pay Unit**
LED Luminaire	Each

ITEM #1008183A – 3/4" PVC COATED CONDUIT

ITEM #1008184A – 1" PVC COATED CONDUIT

ITEM #1008186A – 4" PVC COATED CONDUIT

Description:

The work under this item consists of furnishing and installing the ¾", 1", and 4" PVC coated rigid metal conduit (RMC) as shown on the plans and specified herein for improvements at the rail line station. The rigid metal conduit shall meet the requirements of the National Electrical Code and the technical and safety recommendations of ANSI and IEEE.

Applicable Standards: Pertinent provisions of the following listed standards (latest edition) shall apply to the work of this Section, except as they may be modified herein, and are hereby made a part of this Specification to the extent required.

Organization	Number	Title
ANSI	C.80.1	Rigid Steel Conduit – PVC Coated
ANSI	C.80.3	Electrical Metallic Tubing – PVC Coated
NFPA	70	National Electrical Code
UL	1	Flexible Metal Conduit
UL	6	Rigid Metal Conduit
UL	50	Cabinets and Boxes
UL	67	Panelboards
UL	98	Test for Flammability of Plastic Materials for Parts for Devices and Appliances
UL	360	Liquid-Tight Flexible Steel Conduit
UL	467	Grounding and Bonding Equipment
UL	514A	Metallic Outlet Boxes
UL	514B	Fittings for Conduit and Outlet Boxes

Materials:

Materials, equipment, and devices shall, as a minimum, meet the requirements of UL where UL standards are established for those items and the requirements of the National Electrical Code (NEC), NFPA-70 and all state and local codes having jurisdiction.

Further, each item shall meet the requirements of these specifications and of the specifications and publications referenced herein.All items shall be new unless specified or indicated otherwise.

PVC Coated Rigid Metal Conduit: ANSI standard C80.1. Where to be embedded in concrete or run exposed, use rigid PVC coated galvanized steel conduit as manufactured by Wheatland Tube Company or Allied Tube & Conduit, or approved equal.

Flexible Metal Conduit: UL standard 1, PVC-coated steel only with liquid tight jacket.

Fittings for PVC Rigid Metal Conduit, Electrical Metallic Tubing, and Flexible Metal Conduit: UL standard 514. All ferrous fittings shall be PVC-coated per UL 514 as manufactured by Wheatland Tube Company or Allied Tube & Conduit, or approved equal.

Fittings for PVC coated galvanized rigid metal conduit shall be the threaded type. Split couplings are not acceptable. The conduits of all feeders and branch circuits shall be properly designated at all panelboards, switches and other equipment by an approved round yellow plastic tag, of 0.040- inch minimum thickness and one inch in diameter, Action craft Products, or approved equal. The lettering shall be black, 1/8-inch high. No. 18 morel wire, doubled, shall be used to secure the tag. A list of tag descriptions shall be submitted to the Engineer for approval before any lettering is done.

All conduits within enclosures shall be properly identified by Seton Name Plate Corporation "Setmark" markers, Brady Snap-On Pipe Markers, or approved equal. The lettering and color coding of the markers shall be black on an orange background or in conformance with the latest revision of the ANSI Z53.1 Scheme for Identification of Piping Systems.

UL standard 514, cadmium or zinc coated if of ferrous metal. Exterior outlet boxes and covers shall be coated with 40 mils of PVC, interiors shall be coated with 2 mil urethane and shall use Type 316 stainless steel screws as manufactured by Robroy Industries, Plastibond Series, or OCAL, Inc., OCAL Blue Series, or approved equal.
Clock outlet shall consist of an outlet box, a plaster cover where required, and a single receptacle with clock-outlet plate. The receptacle shall be recessed sufficiently within the box to allow the complete insertion of a standard cap, flush with the plate. A suitable clip or support for hanging the clock shall be secured to the top plate. Material and finish of the plate shall be as specified in paragraph 2.09, Device Plates.

Construction Methods:

The conduit shall be installed in the locations and to the dimensions shown on the plans or as directed by the Engineer. All conduit runs shall be installed in a neat and workmanlike manner in accordance with recognized trade practices. Trenching and backfilling of conduit shall conform to Article 10.01. All conduit shall be installed in strict accordance with the current NEC. Where conduit is to be capped, a commercial pipe or conduit cap shall be used.

An expansion fitting shall be used wherever required by an expansion joint in the structure. Upon completion of the work, all conduits shall be cleaned, swabbed and free from obstructions and burrs. For buried conduit, marking tape shall be installed in the trench at the depth and to the requirements as set forth in the Article 1.05.15. After all cable has

been installed, U.L. approved duct sealing compound shall be installed in the ends of all conduit which terminates in foundations, handholes, junction boxes and manholes.

1. **Conduit Surface:** Beam clamps or conduit strips with back spacers shall be provided at intervals in accordance with the NEC. Expansion fittings shall be installed at all expansion joints. All surface mounted conduit on wood poles shall be bonded to a driven ground rod. Stand-offs shall be installed in accordance with serving utility company regulations.

2. **Conduit in Trench:** Trenches shall be of the depth and cross section shown on the plans or as directed by the Engineer. All conduit shall have a minimum covering of 2 feet (600 millimeters).

3. **Conduit Under Roadway:** Installations shall be such as to avoid pockets in runs. Conduit shall have a minimum cover of 2 feet (600 millimeters). Each end of conduit runs shall terminate with a cap in a concrete handhole as shown on the plans. The Contractor shall coordinate the placement of the conduit prior to the placement of the pavement.

   Where conduit is to be installed under an existing roadway a trench shall be opened and conduit installed as shown on plans, or as directed by the Engineer. The trench shall be backfilled with suitable material and the surface shall be restored to original condition.

4. **Conduit in Structure:** It shall be the Contractor's responsibility to coordinate the setting of all conduit in structure prior to pouring concrete. Expansion fittings shall be installed at all expansion joints. Where shown on the plans, outlet boxes with the conduits properly connected and conduit hanger inserts with proper sized nuts installed, shall be accurately and securely placed in the forms for concrete. Care shall be taken during the placing of the concrete around these boxes and inserts to consolidate the concrete thoroughly, preventing voids and honeycomb and to prevent any material displacement of the boxes or inserts. Sealed bonding bushing shall be provided at each conduit outlet in all boxes.

5. **Conduit Under Slope Protection:** Conduit shall be installed in trench under bridge slope protection or between the slope protection and the edge of pavement at the locations and to the dimensions shown on the plans or as directed by the Engineer. The conduit shall have a minimum cover of two feet (600 millimeters) under finish grade and each end of the conduit shall extend 10 feet (3 meters) beyond the limits of the slope protection. All conduit shall terminate with a standard pipe cap and the trench shall be backfilled with suitable material. The Contractor shall coordinate the placement of the conduit prior to the placement of slope protection.

   Unless indicated otherwise, all conduit shall be concealed within finished walls, ceilings, under platforms and floors. Conduit that will be visible after completion of project shall be installed parallel with or at right angles to ceilings, walls, and structural members.

Keep conduit at least 12 inches away from parallel runs of flues and steam or water pipes.

For Exterior Installations:

1. Conduit shall be supported by Type 316 stainless steel wall brackets, hangers, or ceiling trapeze. Fastenings shall be by Type 316 stainless steel wood screws or screw-type nails to wood; by Type 316 stainless steel toggle bolts on hollow masonry units; by concrete inserts or Type 316 stainless steel expansions bolts on concrete or brick; by Type 316 stainless steel machine screws, welded threaded studs, or spring-tension clamps on steel work. Threaded studs driven in by a powder charge and provided with lock washers and nuts may be used in lieu of expansion bolts or machine or wood screws. Type 316 stainless steel threaded C-clamps may be used on 40 mil PVC coated rigid steel conduit only. Conduits or pipe straps shall not be welded to steel structures. The load applied to fasteners shall not exceed one fourth of the proof test load. Fasteners attached to concrete ceiling shall be vibration and shock resistant. Holes cut to a depth of more than 1-1/2 inches in reinforced concrete beams or to a depth of more than 3/4 inch in concrete. Joints shall not cut the main reinforcing bars. Holes not used shall be filled. In partitions of light steel construction, sheet-metal screws shall be used. Exposed risers in wire shafts of multistory buildings shall be supported by Type 316 stainless steel U-clamp hangers at each floor level and at intervals not to exceed 10 feet.

For Interior Installations:

1. Conduit shall be supported by pipe straps, wall brackets, hangers, or ceiling trapeze. Fastenings shall be by wood screws or screw-type nails to wood; by toggle bolts on hollow masonry units; by concrete inserts or expansion bolts on concrete or brick; by machine screws, welded threaded studs, or spring-tension clamps on steel work. Threaded studs driven in by a powder charge and provided with lock washers and nuts may be used in lieu of expansion bolts or machine or wood screws. Threaded C-clamps may be used on rigid steel conduit only. Conduits or pipe straps shall not be welded to steel structures. The load applied to fasteners shall not exceed one fourth of the proof test load. Fasteners attached to concrete ceiling shall be vibration and shock resistant. Holes cut to a depth of more than 1-1/2 inches in reinforced concrete beams or to a depth of more than 3/4 inch in concrete. Joints shall not cut the main reinforcing bars. Holes not used shall be filled. In partitions of light steel construction, sheet-metal screws shall be used. In suspended-ceiling construction, conduit shall be run above the ceiling. Spring steel fasteners may be used for lighting branch-circuit conduit supports in suspended ceilings in dry locations. Exposed risers in wire shafts of multi-story buildings shall be supported by U-clamp hangers at each floor level and at intervals not to exceed 10 feet.

Changes in direction of runs shall be made with symmetrical bends or cast-metal fittings. Field- made bends and offsets shall not be acceptable. Crushed or deformed conduit shall not be installed. Trapped conduits shall be avoided. Plaster, dirt, and trash shall be prevented from lodging in conduits, boxes, fittings, and equipment during construction. Clogged conduit shall be freed of all obstructions.

Conduits shall be fastened to all metal boxes and cabinets with two locknuts. Where insulated bushings are used and where bushings cannot be brought into firm contact with the box. at least two locknuts and bushing shall be used. Locknuts shall be the type with sharp edges for digging into the wall of metal enclosures. Bushings shall be installed on the ends of all conduits and shall be of the insulating type where required by the NEC.

Flexible connections of short length shall be provided for equipment subject to vibration, noise transmission, or movement and for all motors. Liquidtight flexible conduit shall be used in all exterior locations. A separate ground conductor shall be provided across all flexible connections.

Flexible metal conduit in general shall be the same size as the branch conduit. Where necessary for recessing devices, 1/2 inch flexible metal conduit may be used. In special circumstances and with approval of the Engineer, 3/8 inch flexible metal conduit may be used where permitted by Articles 350-3 and 410-67 of the NEC and in conformance with local codes.

Installation of the flexible metal conduit shall comply with Article 350 and applicable provisions of Articles 300, 333 and 346 of the NEC.

Approved conduit expansion joints shall be provided wherever conduit crosses a structural expansion joint, is attached between two separate structures, and wherever the conduit run is 100 feet or more in a single straight length. Joints shall be O.Z. Gedney Type DX, Crouse Hinds Type XD or approved equal.

Each piece of conduit installed shall be free from blisters and other defects. Each piece installed shall be cut square, taper reamed, and a coat of sealing compound applied to threads. Conduit connections shall be screwed tight with only incomplete threads exposed. All conduit joints shall be made with standard couplings and the ends of the conduit shall butt tightly into the couplings. In exposed work only, where standard couplings cannot be used, only Erickson couplings are permitted, or as otherwise acceptable to the Engineer.

Conduit threaded in the field shall have standard sizes and lengths.

The equivalent number of 90° bends in a single conduit run are limited to the following.

-	Runs in excess of 300 feet	0
-	Runs of 300 feet to 201 feet	1
-	Runs of 200 feet to 101 feet	2
-	Runs of 100 feet and less	3

Factory bent elbows or field bent elbows with approved tools may be used. Heating of conduit to facilitate bending is prohibited.

All exposed conduit shall be installed either parallel or perpendicular to structural members, unless impractical, and shall be grouped wherever possible. Conduit shall be attached to structural components with approved supports spaced a maximum of six (6) feet apart and shall form a neat rigid installation. Conduit supported from building walls shall be installed with at least 1/4 inch clearance from the walls to prevent the accumulation of dirt and moisture behind the conduit.

Conduit shall be protected immediately after installation by installing flat non-corrosive metallic discs and steel bushings, designed for this purpose, at each end. Discs shall not be removed until it is necessary to clean the conduit and pull wire and cable. Before wire or cable is pulled, insulated bushings shall be installed at each end of the conduit.

Where all thread nipples are used between fittings and electrical equipment, they shall be so installed that no threads are exposed.

Connections from rigid conduit to light fixtures, switches, etc., shall be made with short lengths of liquid-tight flexible PVC jacketed metal conduit equal to Type "LA" Electri-Flex, Type "ULTRATITE" Alflex Corporation, or Type "VA" Annaconda. These lengths shall be provided with appropriate connectors with devices which will provide an excellent electrical connection between equipment and the rigid conduit for the flow of ground current.

All threaded ends of conduits shall be coated with an approved conducting compound such as Thomas Betts prior to making up the point.

Conduit attachment to all electrical equipment, such as stainless steel junction boxes, pullboxes, switches, etc., shall be made with double steel locknuts. Threaded insulated bushings shall be used on the end of each conduit terminating in such equipment.

Conduits passing through sleeves in walls and floors shall be tightly caulked.

The use of two (2) locknuts and a grounding bushing will be required at all conduit terminations.

Conduit expansion fitting shall be equal to Crouse Hinds Type XD, OZ Gedney Type DX or equal for non-explosive areas.

Conduit penetrating fire rated wall shall be provided with fire seals equal to OZ Gedney Type CFS.

Conduits shall be supported with approved fittings. The support system shall not permit deflections to exceed 1/100 of the span.

All conduit and ducts, where indicated on the Contract Drawings, shall be caulked and sealed immediately after the wires and cables have been installed. The conduit bushings shall be thoroughly caulked with oakum, using wooden tools with rounded edges, and sealed with "Duxseal" waterproofing compound, Johns-Manville Corp. or approved equal. The compound shall be painted with one coat of approved insulated paint.

All conduits and their connections to electrical equipment shall be installed to make a continuous ground, except as indicated on the Contract Drawings, or as directed by the Engineer. All conduits connected to service end boxes, meter pans, panelboard boxes, current transformer cabinets, motor control center cabinets, automatic transfer switch enclosures, safety switch boxes, sheet metal boxes, troughs, etc., shall be installed on the outside of the box with electrogalvanized steel or malleable iron conduit locknuts, Thomas & Betts Corp. "42.56" series, or approved equal, and secured inside the box with electrogalvanized steel or malleable iron, 150 degree C. insulated grounding bushings, with solid copper alloy cradle lug type termination for copper ground conductor and hexagonal head screw (for conductors larger than No. 4) or slotted head screw (for No. 4 conductor or smaller), with a smooth spherical point and screw shank diameter equal in size to the largest diameter of copper conductor within the lug capacity, O.Z./GEDNEY Type IBC-L-BC series, or approved equal. Stranded copper conductors, with insulation colored dark green shall be used to bond the conduits to the boxes. No. 4/0 AWG, TYPE THWN ground wire shall be used on all service and distribution equipment, and panelboards.

Waterproof ferrules for electrical conduits shall be provided in the exterior walls, ceilings or floors of the enclosures. The Contractor shall submit drawings showing method of installation.

Ferrules shall consist of extra heavy galvanized steel pipe with flanges set in the wall or floor of the enclosures, waterproofed with brick in mastic in an approved manner. Sufficient membrane waterproofing shall be provided to properly lap over the waterproofing of the existing structure and to act as a base for the brick-in-mastic. Membrane waterproofing shall consist of three layers of treated cotton fabric mopped with asphalt.

Steel feed conduits shall be provided through ferrules. The space between the conduit and the ferrule shall be caulked with oakum and lead wool. The conduit shall be encased in concrete and shall extend to locations indicated on the Contract Drawings.

Boxes shall be provided in the wiring or raceway systems wherever required for pulling of wires, making connections, and mounting of devices or fixtures. Boxes for metallic raceways shall be of the cast-metal hub type coated with 40 mils of PVC when located in all wet locations, when surface mounted on outside of exterior surfaces, and when installed exposed up to 7 feet above interior floors and walkways. Each box shall have the volume required by the NEC for the number of conductors exposed in the box. Boxes for mounting lighting fixtures shall be not less than 4 inches square or octagonal except that smaller boxes may be installed as required by fixture configurations, as approved. Boxes installed for concealed wiring shall be provided with suitable extension rings or plastic covers, as required. Boxes for use in masonry-block or tile walls shall be square-cornered tile-type, or standard boxes having square-cornered tile-type covers. Cast metal PVC coated cast-metal boxes installed in all wet locations and boxes installed flush with the outside of exterior surfaces shall be gasketed.

Separate boxes shall be provided for flush or recessed fixtures when required by the fixture terminal operating temperature, and fixtures shall be readily removable for access to the boxes unless ceiling access panels are provided. Boxes and pendants for surface-mounted fixtures on suspended ceilings shall be supported independently of the ceiling supports, or adequate provisions shall be made for distributing the load over the ceiling support members in an approved manner.

For Exterior Installations:

1. Boxes and supports shall be fastened to wood with type 316 stainless steel wood screws or screw-type nails of equal holding strength, with Type 316 stainless steel bolts and expansion shields on concrete or brick, with Type 316 stainless steel toggle bolts on hollow masonry units, and with Type 316 stainless steel machine screws or welded studs on steel work. Threaded studs driven in by powder charge and provided with lockwashers and nuts may be used in lieu of wood screws, expansion shields, or machine screws. In open overhead spaces, PVC coated cast boxes threaded to raceways need not be separately supported except where used for fixture support; PVC coated cast-metal boxes having threadless connectors shall be supported directly from the building structure or by Type 316 stainless steel bar hangers. Where bar hangers are used, the bar shall be attached to raceways on opposite sides of the box and the raceway shall be supported with an approved fastener not more than 24 inches from the box. Penetration into reinforced concrete

members shall avoid cutting any reinforcing steel.

2. Boxes for use with raceway systems shall not be less than 1-1/2 inches deep except where shallower boxes required by structural conditions are approved. Boxes for other than
lighting-fixture outlets shall be not less than 4 inches square except that 4-inch-by-2-inch boxes may be used where only one raceway enters the outlet. Telephone outlets shall be a minimum of 4 inches square by 1-1/2 inches deep.

3. Pull boxes of not less than the minimum size required by the NEC shall be constructed of PVC coated cast-metal boxes. Boxes shall be furnished with Type 316 stainless steel screw-fastened covers. Where several feeders pass through a common pull box, the feeders shall be tagged to indicate clearly the electrical characteristics, circuit number, and panel designation.

For Interior Installations:

1. Boxes and supports shall be fastened to wood with wood screws or screw-type nails of equal holding strength, with bolts and expansion shields on concrete or brick, with toggle bolts on hollow masonry units, and with machine screws or welded studs on steel work. Threaded studs driven in by powder charge and provided with lockwashers and nuts may be used in lieu of wood screws, expansion shields, or machine screws. In open overhead spaces, cast boxes threaded to raceways need not be separately supported except where used for fixture support; cast-metal boxes having threadless connectors shall be supported directly from the building structure or by bar hangers. Where bar hangers are used, the bar shall be attached to raceways on opposite sides of the box and the raceway shall be supported with an approved fastener not more than 24 inches from the box. Penetration into reinforced concrete members shall avoid cutting any reinforcing steel.

2. Boxes for use with raceway systems shall not be less than 1-1/2 inches deep except where shallower boxes required by structural conditions are approved. Boxes for other than lighting-fixture outlets shall be not less than 4 inches square except that 4-inch-by-2-inch boxes may be used where only one raceway enters the outlet. Telephone outlets shall be a minimum of 4 inches square by 1-1/2 inches deep.

3. Pull boxes of not less than the minimum size required by the NEC shall be constructed of code-gauge galvanized sheet steel except where cast-metal boxes are required in locations specified above. Boxes shall be furnished with screw-fastened covers. Where several feeders pass through a common pull box, the feeders shall be tagged to indicate clearly the electrical characteristics, circuit number, and panel designation.

4. Where conduits are connected to boxes or equipment enclosures through drilled holes or full size knockout openings, electrical continuity for grounding shall be assured by the use of bonding type locknuts or copper grounding wedges having set screws made up tight to bushings. Where connections are at eccentric or concentric knockouts, jumper type grounding bushings and wire jumpers shall be installed. At pull and junction boxes having any box dimension in excess of 18 inches and

having a total of more than 4 conduit terminations, jumper type grounding bushings shall be installed on conduit ends and jumper wires shall be installed to bond all conduits and to bond conduits to boxes.

5. Should any structural difficulties prevent the setting of boxes at points shown on the plans, deviations therefrom as determined by the Engineer will be permitted and shall be made without additional cost.

6. A run of conduit between outlet and outlet, between fitting and fitting or between outlet and fitting shall not contain more than the equivalent of four quarter bends, including those bends located immediately at the outlet or fitting.

7. All junction boxes and pull boxes shall have identifying nameplates attached thereto, which when installed on sidewalk type boxes shall not extend above the surrounding concrete slabs.

Methods of Measurement:

Conduit will be measured for payment by the actual number of linear feet (meters) of the type and size installed and accepted. The measured length shall be from end to end along the centerline through all fittings.

Basis of Payment:

This work will be paid for at the Contract unit price per linear foot for "3/4", 1" and 4" PVC Coated Conduit."

This price shall include all materials required including expansion fittings, conduit fittings, locknuts, bonding bushings, bonding wire, hangers, clamps, duct seal, caps, inserts, equipment, tools, labor and work incidental thereto.

Trenching and backfilling shall be paid under Article 10.01.

No payment for trenching and backfilling will be made for conduit installed during construction under new pavement or in the fill area of new median barrier curb installations.

Pay Item	Pay Unit
3/4" PVC Coated Conduit	l.f.
1" PVC Coated Conduit	l.f.
4" PVC Coated Conduit	l.f.

ITEM #1008901A – REMOVE CONDUIT

Description:

Work under this item shall consist of removal of conduits:

- Used for lighting as shown on the plans or as directed by the Engineer and in conformity with these specifications.
- Used for Power Cable from the Utility Box at West end of E.B Platform to the Electric Panel Board in the shelter of E.B Platform.
- Used for Communication Cable of PA System and VMS System on Platforms.
- Any other identified conduit as directed by the Engineer.

Materials:

All materials required for this work shall conform to the requirements of these specifications or the special provisions for the material in question; or if not so specified, they shall be of a quality satisfactory to the Engineer.

Construction Methods:

Existing conduits shall be carefully removed together with all fittings and attachments in such a manner as to safeguard all parts from damage or loss. The Contractor shall replace, at his own expense, all equipment which becomes damaged due to his operations.

Removal of existing conduits shall be coordinated with the installation of new conduits and associated lighting, power and communication equipment so as to maintain the appropriate lighting levels, performance and safety for those pedestrians using the railroad station. The Contractor shall furnish and install temporary lights or other equipment necessary to provide safe lighting levels as directed by the Engineer.

Conduit, fittings, supports, and all other materials shall be removed in their entirety.
Equipment shall be removed in such a manner as to cause no hazard to pedestrians, traffic or property. If necessary, flagmen shall be used to halt traffic briefly while work is in progress.

All removed conduit, fittings, supports and all other materials shall be removed to a suitable dump. Existing items or surfaces to remain which are damaged as a result of this Work shall be re-finished, repaired, or replaced in accordance with the appropriate sections of the Standard Specifications.

Method of Measurement:

This work shall be measured by the actual number of linear feet of conduit removed. The measured length shall be from end to end along the centerline through all fittings.

Basis of Payment:

This work will be paid for at the Contract unit price per linear foot for "Remove Conduit" which price shall include all removals, all material, equipment and labor incidental to completion of this item.

Pay Item	Pay Unit
Remove Conduit	lf

ITEM #1014901A – REMOVE CABLE

Description:

Work under this item shall consist of phased removal of:

- Cables used for lighting.
- Power Cable from Utility Box on West end of EB platform.
- Twisted pair Communication Cable for PA Speakers.
- As shown on the plans or as directed by the Engineer and in conformity with these specifications.

Materials:

All materials required for this work shall conform to the requirements of these specifications or the special provisions for the material in question; or if not so specified, they shall be of a quality satisfactory to the Engineer.

Construction Methods:

Existing cables shall be carefully removed in such a manner as to safeguard all parts from damage or loss. The Contractor shall replace, at his own expense, all equipment which becomes damaged due to his operations.

Removal of existing cables shall be coordinated with the installation of new cables and lighting equipment so as to maintain the appropriate lighting levels and safety for those pedestrians using the railroad station. The Contractor shall furnish and install temporary lights or other equipment necessary to provide safe lighting levels as directed by the Engineer.

Removal of existing communication cable shall be coordinated with the installation of new communication cable and PA Speaker equipment; so as to maintain Public Announcement and information for the patrons using the railroad station. Cable and all other materials shall be removed in their entirety.

Equipment shall be removed in such a manner as to cause no hazard to pedestrians, traffic or property. If necessary, flagmen shall be used to halt traffic briefly while work is in progress.

All removed cable and all other materials shall be removed to a suitable dump. Existing items or surfaces to remain which are damaged as a result of this Work shall be re-finished, repaired, or replaced in accordance with the appropriate sections of the Standard Specifications.

Method of Measurement: The quantity of "Remove Cable" will be measured for payment by the actual number of linear feet of cable removed.

Basis of Payment: This work will be paid for at the Contract unit price per linear foot for "Remove Cable" which price shall include all removals, all material, equipment and labor incidental to completion of this item.

Pay Item	Pay Unit
Remove Cable	lf

ITEM #1020037A – TEMPORARY LIGHTING

Description:

Work under this item shall consist of providing the temporary lighting arrangements for the illumination of the non-staged part of the platform under construction for replacement of platform sections and other proposed works. Plan and execute the temporary lighting arrangements such that a minimum of Ten fc (10fc) of illumination is there on the platform.

Materials:

All the materials required for the temporary lighting such as wooden/ steel poles, Luminaires, wires, conduits if required are to be provided by the contractor. The contractor shall choose and arrange the source of electrical power-utility power or Generator for temporary lighting.

Construction Methods:

The poles with luminaire shall be erected as close to the platform as possible. The height of the luminaire from the top of platform surface shall be (ten) 10 feet and so placed that illumination level of the platform surface is a minimum. 10fc. The location of the temporary lighting poles to be such that these do not conflict or impact the re-installation of permanent poles on the platform. Proper grounding must be ensured for the temporary lighting arrangements.

Method of Measurement:

This work will be measured for payment as lump sum.

Basis of payment:

Payment will be made as lump sum.

Pay Item	Pay Unit
Temporary Lighting	Lump Sum

ITEM #1210101A – 4" WHITE EPOXY RESIN PAVEMENT MARKINGS

ITEM #1210105A – EPOXY RESIN PAVEMENT MARKINGS, SYMBOLS AND LEGENDS

SECTION 12.10 – EPOXY RESIN PAVEMENT MARKINGS, SYMBOLS AND LEGENDS is amended as follows:

*Delete "**SYMBOLS AND LEGENDS**" from the title of the section.*

SECTION 12.10.03 – Construction Methods is amended as follows:

*Delete the entire sections titled "**3. Performance and Warranty:**" and "**WARRANTY:**" and replace them with the following:*

3. Initial Performance: The retroreflectivity of the markings applied must be measured by the Contractor three (3) to fourteen (14) days after installation. A Certified Test Report (CTR), in accordance with Section 1.06.07, must be submitted to the Engineer no later than ten (10) days after the measurements are taken using the procedures and equipment detailed below:

Test Lots - The following test lots shall be randomly selected by the Engineer to represent the line markings applied:

Table 3.1: Line Test Lots

Length of line	Number of Lots	Length of Test Lot
< 1.0 mi. (1.5 km)	1	1000 ft. (300 m)
≥1.0 mi. (1.5 km)	1 per 1.0 mi. (1.5 km)	1000 ft. (300 m)

Measurement Equipment and Procedure

Portable Retroreflectometer

1. Skip line measurements shall be obtained for every other stripe, taking no more than two readings per stripe with readings no closer than 20 in. (0.5 m) from either end of the marking.
2. Solid line test lots shall be divided into ten sub-lots of 100 ft. (30 m) length and measurements obtained at one randomly select location within each sublot.
3. For symbols and legends, 10 percent of each type shall be measured by obtaining five (5) measurements at random locations on the symbol or legend.
4. The Apparatus and Measurements shall be made in accordance with ASTM E1710 (Standard Test Method for Measurement of Retroreflective Pavement Marking Materials with CEN-Prescribed Geometry Using a Portable Retroreflectometer) and evaluated in

accordance with ASTM D7585/D7585M (Standard Practice for Evaluating Retroreflective Pavement Markings Using Portable Hand-Operated Instruments).

Mobile Retroreflectometer

1. Calibration of the instruments shall be in accordance with the manufacturer's instructions.
2. Retroreflectivity shall be measured in a manner proposed by the Contractor and approved by the Engineer. The basis of approval of the test method will be conformance to a recognized standard test method or provisional standard test method.

The measurements shall be obtained when the pavement surface is clean and dry and shall be reported in millicandellas per square foot per foot candle - mcd/ft^2/fc (millicandelas per square meter per lux (mcd/m^2/lux)). Measurements shall be obtained sequentially in the direction of traffic flow.

Additional Contents of Certified Test Report

The CTR shall also list:

- Project and Route number
- Geographical location of the test site(s), including distance from the nearest reference point.
- Manufacturer and model of retroreflectometer used.
- Most recent calibration date for equipment used.
- Grand Average and standard deviation of the retroreflectivity readings for each line, symbol or legend.

Initial Performance:

In order to be accepted, all epoxy resin pavement markings must meet the following minimum retroreflectivity reading requirement:

White Epoxy: minimum retroreflectivity reading of 400 mcd/ft^2/fc (mcd/m^2/lux)

At the discretion of the Engineer, the Contractor shall replace, at its expense, such amount of lines, symbols and legends that the grand average reading falls below the minimum value for retro-reflectivity. The Engineer will determine the areas and lines to be replaced. The cost of replacement shall include all materials, equipment, labor and work incidental thereto.

CSI SPECIFICATIONS

INDEX OF CSI FORMATTED SPECIFICATIONS

NOROTON HEIGHTS RAILROAD STATION PLATFORM REPLACEMENT
DARIEN, CONNECTICUT
STATE PROJECT NO. 0301-0170

DCD SUBMISSION

NOTE: All the CSI-formatted Specifications listed below make up the Major Lump Sum Item (MLSI) and are included under the Form 816 ITEM #0063521A – RAIL FACILITY UPGRADE (SITE NO.1).

DIVISION 01 – GENERAL REQUIRMENTS

01 53 05 TEMPORARY PLATFORM
01 53 10 TEMPORARY SUPPORT SYSTEM
01 56 23 TEMPORARY BARRICADES AND GUARDRAIL

DIVISION 02 – EXISTING CONDITIONS

02 41 19 REMOVAL OF EXISTING MASONRY
02 42 00 REMOVAL AND SALVAGE OF CONSTRUCTION MATERIALS

DIVISION 03 - CONCRETE

03 21 15 DRILLING HOLES AND GROUTING DOWELS AND ANCHOR BOLTS
03 30 00 CAST-IN-PLACE CONCRETE
03 31 05 VARIABLE DEPTH PATCH
03 31 10 EPOXY INJECTION CRACK REPAIR
03 41 01 PRECAST STRUCTURAL CONCRETE
03 41 05 PLATFORM SECTION
03 53 20 MICROSILICA CONCRETE OVERLAY

DIVISION 05 - METALS

05 52 00 METAL HANDRAIL AND GUARDRAIL SYSTEMS
05 55 13 METAL STAIR TREADS

DIVISION 06 – WOOD, PLASTICS, COMPOSITES

06 64 00 POLYETHYLENE RUB RAIL

DIVISION 07 - THERMAL AND MOISTURE PROTECTION

07 62 00 SHEET METAL FLASHING AND TRIM

07 91 15 PLATFORM EXPANSION JOINT SYSTEM
07 92 00 JOINT SEALANTS
07 92 05 CONCRETE OVERLAY JOINT
07 92 10 FIXED PLATFORM JOINT
07 95 10 LONGITUDINAL JOINT SYSTEM

DIVISION 08 - OPENINGS

08 42 13 ALUMINUM-FRAMED ENTRANCES
08 80 00 GLAZING

DIVISION 09 - FINISHES

09 61 40 DETECTABLE/TACTILE WARNING SURFACES
09 67 10 RAILROAD PLATFORM WATERPROOFING

DIVISION 10 - SPECIALTIES

10 14 00 IDENTIFYING DEVICES

DIVISION 12 - FURNISHINGS

12 93 40 SITE FURNISHINGS

DIVISION 13 – SPECIAL CONSTRUCTION

13 34 19 PRE-ENGINEERED PLATFORM SHELTERS

DIVISION 23 – HEATING, VENTILATING, AND AIR CONDITIONING (HVAC)

23 82 46 ELECTRIC UNIT HEATERS

DIVISION 26 – ELECTRICAL

26 05 00 COMMON WORK RESULTS FOR ELECTRICAL
26 05 19 LOW-VOLTAGE ELECTRICAL POWER CONDUCTORS AND CABLES
26 05 20 NO. 10 SINGLE CONDUCTOR
26 05 26 GROUNDING AND BONDING FOR ELECTRICAL SYSTEMS
26 05 33 RACEWAY AND BOXES FOR ELECTRICAL SYSTEMS
26 05 53 IDENTIFICATION FOR ELECTRICAL SYSTEMS
26 27 26 WIRING DEVICES
26 28 16 ENCLOSED SWITCHES AND CIRCUIT BREAKERS
26 33 53 STATIC UNINTERRUPTIBLE POWER SUPPLY

DIVISION 27 - COMMUNICATIONS

27 05 00 COMMON WORK RESULTS FOR COMMUNICATIONS
27 51 16 PUBLIC ADDRESS AND MASS NOTIFICATION SYSTEMS

DIVISION 34 - TRANSPORTATION

34 82 05 ELASTOMERIC BEARING PADS
34 82 10 STEEL LAMINATED ELASTOMERIC BEARINGS

SECTION 01 53 05 - TEMPORARY PLATFORM

PART 1 - GENERAL

1.1 DESCRIPTION

A. Under this item the Contractor shall remove, temporarily store as required, and temporarily re-install, at a new location, one of three pre-approved reusable existing concrete double-tee platform sections, as shown on the plans or as directed by the Engineer.

B. The Contractor shall perform and submit to the Engineer a condition assessment of the three pre-approved reusable platform sections. The platform section found to be in the most satisfactory condition by the Engineer shall be used for the temporary platform.

C. Under this item the Contractor is also responsible for identifying and preparing a temporary storage location for the temporary platform.

D. The re-installation of the platform shall consist of placing the existing platform section onto new temporary platform supports, levelling the unit as required with metal shims, and installing a temporary silicone expansion joint system between the temporary platform section and the longitudinal edge plate of the adjacent proposed platform section, as shown on the plans or as directed by the Engineer.

E. The information shown on the plans pertaining to this work conveys the assumptions made by the designer and is for information only. The Contractor shall be responsible for selecting the means and methods for construction.

F. The Contractor shall also submit information in accordance with CTDOT Form 816 Article 1.05-02-3, and as noted below, and shall include design calculations, construction schematics, construction sequences and procedures to the Engineer for review.

G. The Contractor is to take measures to minimize noise in all project areas, as required under CTDOT Form 816: Section 1.10 – Environmental Compliance and Article 1.10.05 – Noise Pollution.

H. The temporary guardrail and attachments shall be furnished and constructed in accordance with the details shown on the plans and the CSI-formatted specification SECTION 01 56 23 - TEMPORARY BARRICADES AND GUARDRAIL.

I. The final removal and satisfactory disposal of the temporary platform section (including the temporary silicone expansion joint system) shall be performed in accordance with the details shown on the plans and under the CSI-formatted specification SECTION 02 41 19 – REMOVAL OF EXISTING MASONRY.

1.1 SUBMITTALS

A. **Working Drawings:** The Contractor shall, at least 30 calendar days prior to the start of construction of the temporary platform work, submit to the Engineer, for his review and approval, detailed temporary platform working drawings and computations of his proposal, in accordance with the requirements of CTDOT Form 816 Article 1.5.02 and the NOTICE TO CONTRACTOR – SUBMITTALS. At a minimum, the Working Drawings shall address the following:

1. The temporary storage location for the temporary platform, including the travel way to and from the storage site.

2. Means of handling and transporting the temporary platform to and from the temporary storage location without damaging or overstressing the unit.

3. Handling plans for the temporary platform, including lifting inserts, hardware, or devices and locations on the working drawings for Engineer's approval, including supporting calculations, type, and amount of any additional support required for lifting and transporting the temporary platform.

4. Codes and regulations of the jurisdictional authorities, including Metro-North, shall apply.

5. The temporary platform supports at both the storage location and re-installation location shall be designed to accommodate applicable load combinations in accordance with the latest *American Society of Civil Engineers, Minimum Design Loads for Buildings and Other Structures* (ASCE7-10) and *AASHTO Standard Specifications for Highway Bridges*.

6. The design of temporary platform supports at both the storage location and re-installation location shall be done using the service load method in accordance with the latest editions of the applicable *American Concrete Institute* (ACI) and *American Institute of Steel and Construction* (AISC) codes.

7. In case of conflicts between referenced standards and these Specifications, the most stringent requirements, as determined by the Engineer, shall govern in each instance.

8. The Contractor shall make all field measurements necessary to complete the work and shall submit copies of all field measurements for review by the Engineer.

9. The working drawings and calculations must be prepared, stamped, and signed by a Professional Engineer licensed in the State of Connecticut.

10. The furnishing of such plans, methods and calculations shall not serve to relieve the Contractor of his responsibility for the safety of the work and the successful completion of the project. The Contractor's proposal must meet all requirements established in regulatory permits for the project and must also conform to the requirements of CTDOT Form 816 Section 1.10.

PART 2 - PRODUCTS

2.1 MATERIALS

A. The materials for this work, including metal shims and temporary platform supports, shall meet the requirements of CTDOT Form 816 Sections M.03 and M.06, as applicable, and shall be of satisfactory quality for the purpose intended.

B. The material related to the temporary silicone expansion joint system shall meet the applicable requirements of the CSI-formatted specification SECTION 07 95 10 – LONGITUDINAL JOINT SYSTEM.

C. All material proposed for use that has been salvaged shall be subject to inspection by the Engineer. Material deemed to be damaged or otherwise unsuitable for use shall be removed from the site by the Contractor.

D. Chemical anchoring material, if required, shall conform to CTDOT Form 816 Subarticle M.03.07.

E. Proprietary products shall be used in accordance with the manufacturer's recommendations.

PART 3 - EXECUTION

3.1 CONSTRUCTION METHODS

A. The Contractor shall fabricate and construct all work related to this item in general conformance with the plans and these specifications, and in a workman like manner.

B. The work associated with installing the temporary silicone expansion joint system shall be performed in accordance with the applicable requirements of the CSI-formatted specification SECTION 07 95 10 – LONGITUDINAL JOINT SYSTEM.

C. If drilling holes and grouting dowels is required, this work shall be done in accordance with the requirements of SECTION 03 21 15 - DRILLING HOLES AND GROUTING DOWELS AND ANCHOR BOLTS.

D. Construction methods shall conform to the applicable requirements of CTDOT Form 816.

E. All work shall be done in accordance with the NOTICE TO CONTRACTOR – WORK ON RAILROAD PROPERTY.

END OF SECTION 01 53 05

SECTION 01 53 10 - TEMPORARY SUPPORT SYSTEM

PART 1 - GENERAL

1.1 DESCRIPTION

A. Work under this item shall consist of furnishing, installing, and removing a total of two (2) temporary support systems required to support existing stairways "A" and "F" during stage construction, as shown on the plans and as directed by the Engineer. The work shall be performed in accordance with these specifications.

B. The information shown on the plans pertaining to temporary support systems conveys the assumptions made by the designer and is for information only. The Contractor shall be responsible for selecting the means and methods for construction.

C. The Contractor shall also submit information in accordance with CTDOT Form 816 Article 1.05-02-3, and as noted below, and shall include design calculations, construction schematics, construction sequences and procedures to the Engineer for review.

D. The Contractor is to take measures to minimize noise in all project areas, as required under CTDOT Form 816: Section 1.10 – Environmental Compliance and Article 1.10.05 – Noise Pollution.

1.2 SUBMITTALS

A. **Working Drawings:** The Contractor shall, at least 30 calendar days prior to the start of construction of the temporary support systems, submit to the Engineer, for his review and approval, detailed final temporary support system working drawings and computations of his proposal, in accordance with the requirements of CTDOT Form 816 Article 1.5.02 and the NOTICE TO CONTRACTOR – SUBMITTALS.

1. Codes and regulations of the jurisdictional authorities, including Metro-North, shall apply.

2. The temporary support systems shall be designed to accommodate applicable load combinations in accordance with the latest *American Society of Civil Engineers, Minimum Design Loads for Buildings and Other Structures* (ASCE7-10) and *AASHTO Standard Specifications for Highway Bridges*.

3. The design of all temporary support system components shall be done using the service load method in accordance with the latest editions of the applicable *American Concrete Institute* (ACI) and *American Institute of Steel and Construction* (AISC) codes.

4. In case of conflicts between referenced standards and these Specifications, the most stringent requirements, as determined by the Engineer, shall govern in each instance.

5. The Contractor shall make all field measurements necessary to completely detail the support systems and shall submit copies of all field measurements for review by the Engineer.

6. The working drawings and calculations must be prepared, stamped, and signed by a Professional Engineer licensed in the State of Connecticut.

7. The furnishing of such plans, methods and calculations shall not serve to relieve the Contractor of his responsibility for the safety of the work and the successful completion of the project. The Contractor's proposal must meet all requirements established in regulatory permits for the project and must also conform to the requirements of CTDOT Form 816 Section 1.10.

PART 2 - PRODUCTS

2.1 MATERIALS

A. The materials for this work shall meet the requirements of CTDOT Form 816 Sections M.03 and M.06, as applicable, and shall be of satisfactory quality for the purpose intended.

B. All material proposed for use that has been salvaged shall be subject to inspection by the Engineer. Material deemed to be damaged or otherwise unsuitable for use shall be removed from the site by the Contractor.

C. Chemical anchoring material, if required, shall conform to CTDOT Form 816 Subarticle M.03.07.

D. Proprietary products shall be used in accordance with the manufacturer’s recommendations.

PART 3 - EXECUTION

3.1 CONSTRUCTION METHODS

A. The Contractor shall fabricate and construct the temporary support systems in general conformance with the plans and these specifications, and in a workman like manner.

B. The support system shall be installed prior to the partial demolition of the existing stairways “A” and “F”, as applicable, and shall be installed with a tight fit to ensure the existing stairways do not deflect prior to transferring load to the support system. Details on the Contractor’s proposed method for satisfying this requirement shall be included in the working drawing submission.

C. If drilling holes and grouting dowels is required, this work shall be done in accordance with the requirements of SECTION 03 21 15 - DRILLING HOLES AND GROUTING DOWELS AND ANCHOR BOLTS.

D. If attachments are made to existing concrete to remain in place, the attachments shall be removed and holes in the concrete shall be repaired in accordance with Specification SECTION 03 31 05 - VARIABLE DEPTH PATCH.

E. Construction methods shall conform to the applicable requirements of CTDOT Form 816.

F. All work shall be done in accordance with the NOTICE TO CONTRACTOR – WORK ON RAILROAD PROPERTY.

END OF SECTION 01 53 10

SECTION 01 56 23 - TEMPORARY BARRICADES AND GUARDRAIL

PART 1 - GENERAL

1.1 DESCRIPTION

A. Work under this item shall consist of furnishing, installing, and removing non-metallic temporary barricades and guardrail during construction, as shown on the plans and as directed by the Engineer. The work shall be performed in accordance with these specifications.

B. The information shown on the plans pertaining to temporary barricades and guardrail conveys the assumptions made by the designer and is for information only. The Contractor shall be responsible for selecting the means and methods for construction.

C. The Contractor shall also submit information in accordance with CTDOT Form 816 Article 1.05-02-3, and as noted below, and shall include design calculations, construction schematics, construction sequences and procedures to the Engineer for review.

D. The Contractor is to take measures to minimize noise in all project areas, as required under CTDOT Form 816: Section 1.10 – Environmental Compliance and Article 1.10.05 – Noise Pollution.

1.1 SUBMITTALS

A. **Working Drawings:** The Contractor shall, at least 30 calendar days prior to the start of construction of the temporary barricades, submit to the Engineer, for his review and approval, detailed final temporary barricade working drawings and computations of his proposal, in accordance with the requirements of CTDOT Form 816 Article 1.5.02 and the NOTICE TO CONTRACTOR – SUBMITTALS.

1. Codes and regulations of the jurisdictional authorities, including Metro-North, shall apply.

2. The temporary barricades and guardrail shall be designed to accommodate applicable load combinations in accordance with the latest *American Society of Civil Engineers, Minimum Design Loads for Buildings and Other Structures* (ASCE7-10) and *AASHTO Standard Specifications for Highway Bridges*.

3. The design of all temporary barricades and guardrail shall be done using the service load method in accordance with the latest editions of the applicable *American Concrete Institute* (ACI) and *American Institute of Steel and Construction* (AISC) codes.

4. In case of conflicts between referenced standards and these Specifications, the most stringent requirements, as determined by the Engineer, shall govern in each instance.

5. The Contractor shall make all field measurements necessary to completely detail the temporary barricades and guardrail, and shall submit copies of all field measurements for review by the Engineer.

6. The working drawings and calculations must be prepared, stamped, and signed by a Professional Engineer licensed in the State of Connecticut.

7. The furnishing of such plans, methods and calculations shall not serve to relieve the Contractor of his responsibility for the safety of the work and the successful completion of the project. The Contractor's proposal must meet all requirements established in regulatory permits for the project and must also conform to the requirements of CTDOT Form 816 Section 1.10.

PART 2 - PRODUCTS

2.1 MATERIALS

A. The materials for this work shall be **non-metallic** (except for fasteners and anchoring devices) and meet the requirements of the CTDOT Form 816, as applicable, and shall be of satisfactory quality for the purpose intended.

B. All material proposed for use that has been salvaged shall be subject to inspection by the Engineer. Material deemed to be damaged or otherwise unsuitable for use shall be removed from the site by the Contractor.

C. Chemical anchoring material, if required, shall conform to CTDOT Form 816 Subarticle M.03.07.

D. Proprietary products shall be used in accordance with the manufacturer’s recommendations.

PART 3 - EXECUTION

3.1 CONSTRUCTION METHODS

A. The Contractor shall fabricate and construct the temporary barricades and guardrail in general conformance with the plans and these specifications in a workman like manner.

B. The support system shall be installed in accordance with the construction staging plans.

C. If drilling holes and grouting dowels is required, this work shall be done in accordance with the requirements of SECTION 03 21 15 - DRILLING HOLES AND GROUTING DOWELS AND ANCHOR BOLTS.

D. If attachments are made to existing and proposed concrete to remain in place, the attachments shall be removed and holes in the concrete shall be repaired in accordance with Specification SECTION 03 31 05 - VARIABLE DEPTH PATCH. The barricades shall be tamper proof to prevent barriers from being vandalized.

E. Construction methods shall conform to the applicable requirements of CTDOT Form 816.

END OF SECTION 01 56 23

SECTION 02 41 19 – REMOVAL OF EXISTING MASONRY

PART 1 - GENERAL

1.1 DESCRIPTION

A. This work shall include the removal and satisfactory disposal of existing concrete (i.e. existing eastbound and westbound railroad double-tee platform sections, temporary double-tee platform section, full and partial removal of existing stairs, and existing ramps) at the locations and to the limits shown on the plans, the removal of which is necessary to the final completion of the work.

B. This work shall also include the removal of the temporary silicone expansion joint system at the temporary platform.

C. The Contractor is to take measures to minimize noise in all project areas, as required under CTDOT Form 816: Section 1.10 – Environmental Compliance and Article 1.10.05 – Noise Pollution.

PART 2 - PRODUCTS

2.1 MATERIALS

A. None

PART 3 - EXECUTION

3.1 CONSTRUCTION METHODS

A. Existing masonry shall be removed to the lines shown on the plans or as ordered by the Engineer, due precaution being taken to avoid injury to new construction, public utility installations or abutting property. The material excavated shall be disposed of as directed by the Engineer.

B. The concrete shall be removed to the limits shown on the plans. At locations where partial removal of concrete units is required, the Contractor shall perform the removal work using equipment and methods that minimizes damage to the concrete and reinforcing steel to remain in place unless such concrete is being abandoned in place.

C. At locations where partial removal is required adjacent to concrete to remain, the Contractor shall saw cut the concrete to a minimum depth of one inch at the removal limits and shall use pneumatic hammers or any other method approved by the Engineer to remove the concrete. Maximum 31-pound hammers shall be used for general removal while maximum 15.5-pound

hammers shall be used near reinforcing steel that is to remain. Pneumatic tools shall not be placed in direct contact with the reinforcing steel that is to remain.

D. Reinforcing steel shall be cut and removed as shown on the plans. Loose and small concrete fragments shall be cleaned from the reinforcing steel required to be left in place.

E. The Contractor shall take necessary precautions to prevent any damage to the portions of the structure to remain. Any damage shall be repaired by the Contractor, as directed by the Engineer, and at no cost to the State.

F. All debris shall be disposed of, from the site, by the Contractor.

END OF SECTION 02 41 19

SECTION 02 42 00 - REMOVAL AND SALVAGE OF CONSTRUCTION MATERIALS

PART 1 - GENERAL

1.1 SUMMARY

A. Removal and demolition of selected items from selected areas of the station platform as indicated on the drawings, and as required to complete the work and the project objectives.

1.2 RELATED SECTIONS

A. Section 12 93 40 – Site Furnishings

1.3 SELECTIVE DEMOLITION/SALVAGE

A. Provide selective demolition, removals, and salvage in accordance with the Contract Documents. The Work of this Section includes, but is not limited to, the following: platform benches, platform recycling bins, station signage, existing metal guard rail and handrails with associated hardware and connections, bridge plates, existing lighting, as indicated on the drawings.

1. Document with drawings and photographs keyed to drawings and label elements and materials designated for salvage.

2. Provide temporary shoring as required to ensure stability of building elements and fabric to remain.

3. Provide protection as required to protect both elements and materials to be removed and salvaged and elements and materials to remain from damage or deterioration.

4. Remove and salvage all items as indicated on drawings and in technical provisions.

5. Package and crate items to be salvaged, providing labels and tags.

6. Deliver items to be restored and reinstalled to locations indicated or designated for restoration or storage.

7. Deliver items to be salvaged but not reinstalled to locations designated by Owner.

1.4 DEFINITIONS

A. **Remove**: Detach items from existing construction and dispose of them off-site unless indicated to be salvaged or reinstalled.

B. **Remove and Salvage**: Detach items from existing construction, in a manner to prevent damage,

and deliver to Owner ready for reuse.

C. **Remove and Reinstall**: Detach items from existing construction, in a manner to prevent damage, prepare for reuse, and reinstall where indicated.

D. **Existing to Remain**: Leave existing items that are not to be removed and that are not otherwise indicated to be salvaged or reinstalled.

E. **Dismantle**: To remove by disassembling or detaching an item from a surface, using gentle methods and equipment to prevent damage to the item and surfaces; disposing of items unless indicated to be salvaged or reinstalled.

1.5 MATERIALS OWNERSHIP

A. Unless otherwise indicated, demolition waste becomes property of Contractor.

B. Historic items, relics, antiques, and similar objects including, but not limited to, cornerstones and their contents, commemorative plaques and tablets, and other items of interest or value to Owner that may be uncovered during demolition remain the property of Owner.

1. Carefully salvage in a manner to prevent damage and promptly return to Owner.

1.6 SUBMITTALS

A. **General**: Submit the following:

1. Submit a schedule indicating proposed methods and sequence of operations for selective removal and demolition work prior to commencement of operations.

2. Include details for dust and noise control operation. Provide a detailed sequence of removal and demolition work.

B. **Selective Demolition/Salvage**:

1. Qualification Data: Qualification data for firms and personnel that demonstrates that both firms and personnel have capabilities and experience complying with requirements specified for firm and foreman, provide a list of at least three completed projects within the Tri-State Area similar in size and scope to the work required on this project. For each project list project name, address, architect, scope of contractor's work, and other relevant information. This information shall be submitted with the bid.

2. Selective Demolition, Removal and Salvage Program: Detailed description of methods and procedures, equipment, tools, and materials proposed for use in removal and salvage operations including, but not limited to, the following:

a. Documenting and identifying elements and materials to be removed.

b. Procedures for controlling noise and dust.

c. Releasing or freeing materials and elements from existing construction.

d. Protection for elements to be removed and for elements to remain.

e. Handling and transporting materials and elements removed.

f. Packaging elements to be removed.

g. Storage locations.

h. Tools and methods of removing/salvaging items as indicated.

3. Documentation Photographs: Submit photographs electronically with a minimum resolution of 3 megapixels, recording condition of elements to be removed and salvaged (including overall views and close-up views of any cracks, damage, deterioration, or missing elements) before beginning selective demolition, removals, and salvage work.

4. Shoring and Bracing: The Contractor shall retain the services of a Professional Engineer registered in the State of Connecticut to provide design of all temporary bracing, shoring, etc. that may be required as part of selective demolition, removals, and salvage work.

5. It shall be the responsibility of the Contractor's Controlled Inspecting Agent to prepare detail drawings and associated calculations representing all shoring, bracing, or other temporary construction that may be required to maintain the structural stability and integrity of the existing construction during the course of the Work represented in these documents.

6. All drawings and calculations prepared by the Contractor's Controlled Inspecting Agent shall bear an original signature and seal indicating the inspector's Connecticut State Registration. Duplicate copies of all drawings and calculations shall be forwarded to the Engineer prior to commencing any of the temporary work represented in those documents.

C. **Inventory**: Submit a list of items that have been removed and salvaged.

1.7 PERFORMANCE REQUIREMENTS

A. **Protections**: Provide temporary barricades and other forms of protection required to protect railroad personnel, and general public from injury due to selective removals and demolition work.

1. Provide protective measures as required to provide free and safe passage of personnel.

2. Protect from damage existing finish work that is to remain in place and which becomes exposed during operations.

B. **Damages**:

1. Promptly repair any and all damages to all property and finishes caused by the removals and demolition work, to the Engineer's satisfaction.

1.8 FIELD CONDITIONS

A. **Hazardous Materials**: It is not expected that hazardous materials will be encountered in the Work.

1. If suspected hazardous materials are encountered, do not disturb; immediately notify Architect and Owner. Hazardous materials will be removed by Owner under a separate contract.

B. Storage or sale of removed items or materials on-site is not permitted.

1.9 COORDINATION

A. Arrange selective demolition schedule so as not to interfere with Owner's operations.

PART 2 - PRODUCTS

2.1 PEFORMANCE REQUIREMENTS

A. **Regulatory Requirements**: Comply with governing EPA notification regulations before beginning selective demolition. Comply with hauling and disposal regulations of authorities having jurisdiction.

B. **Standards**: Comply with ANSI/ASSE A10.6 and NFPA 241.

2.2 TOOLS

A. **Hand Tools for Joint Preparation**: Chisels, hammers, and mallets.

1. Thickness of Chisels: Chisels used in masonry joints shall have a maximum thickness of 5/8 times joint width extending back from tip of chisel at least two times depth at which chisel will be inserted into joint.

2. Specials Tools: Provide special knives or special thin cutter blades for use in joints less than 1/8 in. in width.

B. **Power Tools for Joint Preparation**: Small, hand-held electric grinders with diamond or abrasive blades no greater than 3/32 in. thick and a maximum of 4-1/2 in. diameter may be used to cut joints only under certain conditions as described in Part 3, below and if specifically approved by Engineer.

C. **Brushes**: Stiff, natural bristle brushes.

PART 3 - EXECUTION

3.1 EXAMINATION

A. Prior to commencement of the selective removals and demolition work, inspect the areas in which the work will be performed. Determine and list the existing conditions of rooms or area surfaces and equipment. After the Work in each respective area is completed, determine if adjacent surfaces or equipment have been damaged as a result of the Work; if so, the damage shall be corrected at the Contractor's expense.

B. Verify that utilities have been disconnected and capped before starting selective demolition operations.

3.2 PREPARATION

A. **Laws and Regulations**: All work shall comply with all safety requirements of the State of Connecticut and Town of Darien, Standard No. 241 "Safeguarding Building Construction and Demolition Operations," latest edition, of the National Fire Protection Association; and OSHA regulations.

B. **General**:

1. Protect against damage by water and fire, and injury to the public, workers, occupants, and contents of existing building, damage to adjacent property, and portions of platform not being selectively demolished. Contractor shall provide adequate protection to existing building, platform, utilities, and equipment, including temporary supports, dust and other enclosures, barricades, etc., as required to protect elements form damage or deterioration caused by work of this Section.

2. Use every possible precaution to prevent damage to streets, sidewalks, curbs, retaining walls and paving on or adjacent to the site of the work. Repair or replace to Engineer's satisfaction and at no expense to Owner any such item destroyed or damaged.

3. Protect all persons from injury and all public and private property and building contents from damage due to the operations under this Section. Adequate protection of persons and property shall be provided at all times, including Saturdays, Sundays, and holidays, during time period in which work is being performed, and after working hours.

4. Neatly cut openings and holes plumb, square, and true to dimensions required. Use cutting methods least likely to damage construction to remain or adjoining construction. Use hand tools or small power tools designed for sawing or grinding, not hammering and chopping. Temporarily cover openings to remain.

5. Cut or drill from the exposed or finished side into concealed surfaces to avoid marring existing finished surfaces.

6. Do not use cutting torches until work area is cleared of flammable materials. At concealed spaces, such as duct and pipe interiors, verify condition and contents of hidden

space before starting flame-cutting operations. Maintain portable fire-suppression devices during flame-cutting operations.

7. Maintain fire watch after flame-cutting operations. Verify with MNR PM for requirements

8. Maintain adequate ventilation when using cutting torches.

9. Remove decayed, vermin-infested, or otherwise dangerous or unsuitable materials and promptly dispose of off-site.

C. **Removed and Salvaged Items**:

1. Clean salvaged items.

2. Pack or crate items after cleaning. Identify contents of containers.

3. Store items in a secure area until delivery to Owner.

4. Transport items to Owner's storage area designated by Owner.

5. Protect items from damage during transport and storage.

D. **Removed and Reinstalled Items**:

1. Clean and repair items to functional condition adequate for intended reuse.

2. Pack or crate items after cleaning and repairing. Identify contents of containers.

3. Protect items from damage during transport and storage.

4. Reinstall items in locations indicated. Comply with installation requirements for new materials and equipment. Provide connections, supports, and miscellaneous materials necessary to make item functional for use indicated.

E. **Existing Items to Remain**: Protect construction indicated to remain against damage and soiling during selective demolition. When permitted by Architect, items may be removed to a suitable, protected storage location during selective demolition and cleaned and reinstalled in their original locations after selective demolition operations are complete.

3.3 REMOVALS AND DEMOLITION WORK

A. Perform selective demolition work in a systematic manner and use such methods as required to complete the work indicated on the Drawings and as needed for completion of the work and the project objectives in accordance with the requirements of the Project Specification and governing City, State and Federal regulations.

1. Demolish and remove existing construction only to extent required by new construction and as indicated. Use methods required to complete the Work within limitations of governing regulations and as specified herein.

2. Neatly cut openings and holes plumb, square, and true to dimensions required. Use cutting methods least likely to damage construction to remain or adjoining construction. Use hand tools or small power tools designed for sawing or grinding, not hammering and chopping, to minimize disturbance of adjacent surfaces. Temporarily cover openings to remain.

3. Remove all electrical wiring, to include, but not limited to, lighting and all related appurtenances, conduits, devices, fixtures, and other electrical items accessories occurring on or in the construction to be removed, disconnect power and remove wiring and conduit back to source. New electrical work shall be as indicated on Drawings and as needed for the completion of the work and the project objective as specified in the Electrical – Div. 16.

3.4 FIELD QUALITY CONTROL

A. Remove debris, rubbish and other materials resulting from the removals and demolitions from the building immediately; transport and legally dispose of materials off-site. Disposal method shall be in accordance with City, State, and Federal regulations.

B. Burning of removed materials is not permitted on the job site.

C. No materials shall be dropped or thrown from any height. Remove debris from building using suitable containers or conveyances.

D. Keep premises clean by removing accumulation of waste materials, rubbish, and debris from site daily. Dispose of waste, rubbish, and debris in a proper manner in accordance with all federal, state and local laws and regulations, to the satisfaction of all authorities having jurisdiction, and to the satisfaction of the Engineer. Keep site and public rights of way clear. Take all precautions necessary to keep dust resulting from work of this Section at an absolute minimum.

E. Do not store or permit excess debris to accumulate on site. If contractor fails to remove excess debris promptly, Engineer reserves the right to have debris removed at Contractor's expense.

3.5 TEMPORARY SHORING

A. Provide temporary shoring as required to maintain existing construction safely in position during removal and salvage.

B. Perform shoring in such a manner as to prevent any settlement or vertical or horizontal deformation of the existing building elements to remain. Before commencing with the work, the Contractor shall thoroughly investigate the existing structure to verify its present condition.

C. Execute shoring in best, substantial, workmanlike manner to avoid danger to workman and public and damage to the building.

3.6 CLEAN-UP AND REPAIR

A. Upon completion of removals and demolition Work, remove tools, equipment and all remaining demolished materials from the site.

B. Repair all damaged areas caused by the removals and demolition Work. Repair adjacent construction or surfaces soiled or damaged by selective demolition work at contractor's expense to the Engineer's approval.

C. All areas in which Work was performed under this Section shall be left "broomclean."

END OF SECTION 02 42 00

SECTION 03 21 15 - DRILLING HOLES AND GROUTING DOWELS AND ANCHOR BOLTS

PART 1 - GENERAL

1.1 DESCRIPTION

A. Work under this item shall consist of drilling or coring holes in concrete and grouting (by means of chemical anchoring) reinforcing steel dowels and anchor bolts at the locations shown on the plans, in accordance with the plans, the manufacturer's recommendations, and as directed by the Engineer.

B. The Contractor is to take measures to minimize noise in all project areas, as required under CTDOT Form 816: Section 1.10 – Environmental Compliance and Article 1.10.05 – Noise Pollution.

C. Reinforcing steel bars shall conform to the details shown on the plans and the applicable sections of the CSI-formatted specification SECTION 03 30 00 - CAST-IN-PLACE CONCRETE.

A. Anchor bolts shall conform to the details shown on the plans and the CSI-formatted specification SECTION 03 41 05 – PLATFORM SECTION.

1.2 SUBMITTALS

A. Before fabricating any materials, the Contractor shall submit manufacturer's specifications and installation requirements for the chemical anchoring material to the Engineer for review in accordance with CTDOT Form 816 Article 1.05.02.

PART 2 - PRODUCTS

2.1 MATERIALS

A. Chemical anchoring material shall conform to CTDOT Form 816 Subarticle M.03.07.

PART 3 - EXECUTION

3.1 CONSTRUCTION METHODS

A. Holes for the reinforcing steel dowels and anchor bolts shall be drilled or cored, and shall be located as shown on the plans. The holes shall clear the existing reinforcement and provide the minimum cover as shown on the plans. A pachometer shall be used to locate existing reinforcing steel. If existing reinforcing is encountered during the drilling operation, the holes

shall be relocated and the uncompleted holes shall be filled with the chemical anchoring material and finished smooth and flush with the adjacent surface.

B. The depth and diameter of each hole shall be as shown on the plans. If the diameter of a hole is not shown, the diameter of the hole shall conform to the manufacturer's recommendations for the diameter of the dowel being anchored. If the depth and diameter of a hole are not shown, the hole shall conform to the manufacturer's recommendations for the diameter of the dowel being anchored such that the grouted dowels will be able to develop, in tension, 100 percent of its specified yield strength.

C. Hole drilling methods shall not cause spalling, cracking, or other damage to the existing concrete. The weight of the drill shall not exceed 13 lbs. Those areas damaged by the Contractor shall be repaired by him in a manner suitable to the Engineer and at no expense to the State.

D. Prior to placing the chemical anchoring material in the holes, the holes shall be cleaned of all dirt, moisture, concrete dust and other foreign material. The dowel/anchor bolt and the chemical anchoring material shall be installed in the holes in accordance with the chemical anchoring material manufacturer's recommendations.

E. The Contractor, as directed by the Engineer, shall take adequate precautions to prevent any materials from dropping to the area below, which may result in damage to any existing construction or to adjoining property. Should any damage occur to the structure as a result of the Contractor's operations, the Contractor shall make repairs at his own expense. The repair work shall be approved in advance and shall be of a quality acceptable to the Engineer.

END OF SECTION 03 21 15

SECTION 03 30 00 - CAST-IN-PLACE CONCRETE

PART 1 - GENERAL

1.1 RELATED DOCUMENTS

A. The Contractor shall coordinate work with that of other trades affecting or affected by the work included under this Section and shall cooperate with such trades, the Engineer, the Designer and the Department to assure the steady and timely progress of the work.

1.2 DESCRIPTION

A. Provide all materials and labor necessary to complete all concrete, plain and reinforced as indicated on the Plans or called out for in these specifications within the limits of "Rail Facility Upgrade (Site No. 1)" and as required to complete the Project. Work includes, but is not limited to, the following:

1. The installation of cast-in-place concrete stairs and other elements indicated on the plans.

2. All forms, staging, bracing and other materials and equipment necessary and required to produce the concrete in place and for removal of same.

3. Installation of reinforcing steel, including accessories and supports.

4. Finishing of concrete as specified herein or as indicated on the plans.

1.3 RELATED WORK SPECIFIED ELSEWHERE

A. Carefully examine all of the Contract Documents for requirements which affect the work of this section.

1. Carefully review all of the Contract Documents for anchor bolts, inserts, conduits, sleeves, anchors, and all other items which must be cast into concrete construction, if required.

2. Items to be embedded in concrete work may or may not be described in detail and must be determined through careful coordination of all subcontractors and building trades.

B. Other specifications sections that directly relate to the work of this section include, but are not limited to, the following:

1. Section 07 92 00 – Joint Sealants and Caulking

1.4 SUBMITTALS

A. Submit the following in accordance with Form 816 Article 1.20-1.05.02 and the NOTICE TO CONTRACTOR - SUBMITTALS.

B. Shop Drawings: Submit shop drawings and schedules of all work under this Section for approval prior to fabrication of any material. Shop drawings shall include sufficient plans, sections and detail drawings to suitable scale to permit the erection of the reinforcing steel. Reinforcement: Submit shop drawings for fabrication, bending, and placement of concrete reinforcement. Comply with ACI 315 "Manual of Standard Practice for Detailing Reinforced Concrete Structures". Shop Drawings shall include but not be limited to the following:

1. Bar reinforcement shop drawings shall include setting plans, elevations, bending diagrams, cutting lists and other information so as to define and establish completely the location, spacing, size, length, bending, shape, splicing and keying at construction joints and all other pertinent information as required. Drawings shall show grades of reinforcing steel. Opposite hand reinforcing shall be detailed separately.

2. Type, size and location of all accessories required for proper assembling, placing and support of the reinforcement.

3. All openings, depressions, construction joints, control joints, trenches, sleeves, inserts, and all other project requirements affecting reinforcing details and placing.

4. Sizes, thickness of material, methods of assembly, anchorage, galvanizing, shop paint and all other information necessary.

C. Field and Laboratory Testing; Certified Test Reports: Field and laboratory testing shall be performed, and certified test reports provided, in accordance with the applicable requirements of CTDOT Form 816 “Section 6.01 Concrete for Structures” and “Section M.03 Portland Cement Concrete”.

D. Materials Certificates: Provide materials certificates in accordance with the applicable requirements of CTDOT Form 816 “Section M.03 Portland Cement Concrete”.

1.7 PRE-INSTALLATION MEETING

A. Conduct a Pre-Installation Meeting at the Project Site in compliance with the requirements of CTDOT Form 816 Subarticle 1.20-1.05.24-2.

B. Prior to submittal of the specified concrete design mixes, the Contractor shall schedule a meeting to review procedures for producing proper concrete construction.

C. The Contractor shall require attendance by responsible representatives of every party who is involved with the concrete work including, but not limited to, the following:

1. Contractor's superintendent.

2. Testing Agency responsible for the concrete mix design.

3. Testing Agency responsible for field quality control.

4. Concrete Sub-contractor.

5. Ready-mix concrete producer(s).

6. Admixture manufacturer.

7. Concrete pumping Contractor.

8. Formwork Contractor.

9. Concrete Finisher.

D. The Designer will be present at the meeting and must be notified at least 10 days prior to the scheduled date of the meeting.

E. Minutes of the meeting shall be recorded, published and distributed by the Contractor to all parties concerned within 5 working days of the meeting.

PART 2 - PRODUCTS

2.1 REINFORCING MATERIALS

A. Epoxy-Coated Reinforcing Bars: ASTM A 615, grade 60 epoxy coated in accordance with ASTM D 3963.

B. Epoxy-Coated Wire and Welded Wire Fabric: ASTM A 884 with Fy = 70ksi.

C. Supports for Reinforcement: Provide supports for reinforcement including bolsters, chairs, spacers, and other devices for spacing, supporting, and fastening reinforcing bars and welded wire fabric in place. Use wire bar type supports complying with CRSI specifications. Wire for tying shall be 18 gauge black annealed wire conforming to ASTM A 82.

1. For structural slabs, use supports with sand plates or horizontal runners where base material will not support chair legs.

2. For concrete surfaces exposed to view, where legs of supports are in contact with forms, provide supports with legs that are plastic protected (CRSI, Class 1) or stainless steel protected (CRSI, Class 2).

D. Fabrication: Reinforcement shall be accurately formed to dimensions of the plans, details and schedules. Fabrication shall not commence until details and schedules have been approved by the Designer in writing.

1. Reinforcement shall be bent cold, around a pin with a free revolving collar having a diameter ratio to the diameter of the bar not less than:

- Two times for stirrups
- Six times for bars up to and including 1 inch
- Eight times for bars over 1 inch

2. Reinforcement shall not be straightened or re-bent in a manner that will injure the material. Bars with kinks or bends not shown on the plans will not be used.

2.2 CONCRETE AND RELATED MATERIALS

The materials for this work, including aggregates, cement, water, admixtures; mix design requirements; producer equipment and production requirements; curing materials; non shrink, non-staining grout; chemical anchors; joint materials; protective compound/sealers; and formwork shall conform to the requirements of CTDOT Form 816 "Section M.03 Portland Cement Concrete". The grades of concrete shall be as shown on the contract plans.

PART 3 - EXECUTION

3.1 CONSTRUCTION METHODS:

A. The construction methods used for this work, including false work and forms; protection from environmental conditions; transportation and delivery of concrete; acceptance testing and test specimens; progression cylinders and compressive strength specimens; handling and placing concrete; bearing surfaces; curing concrete; finishing concrete surfaces; mortar, grout, epoxy and joint seal; application of loads; and dispute resolution shall conform to the applicable requirements of CTDOT Form 816 "Section 6.01 Concrete for Structures".

END OF SECTION 03 30 00

SECTION 03 31 05 - VARIABLE DEPTH PATCH

PART 1 - GENERAL

1.1 DESCRIPTION

A. Work under this item shall consist of removing loose, deteriorated concrete and concrete overlaying hollow areas and applying a cementitious mortar to these areas as well as spalled and scaled areas as shown on the plans, as directed by the Department, and in accordance with these specifications.

1.2 SUBMITTALS

A. **Certification:** A Materials Certificate and Certificate of Compliance shall be required for the Cementitious mortar and the zinc primer in accordance with Article 1.06.07, certifying the conformance of this material to the requirements started herein.

PART 2 - PRODUCTS

2.1 MATERIALS

A. The cementitious mortar shall be one of the following:

1. 5 Star Structural Concrete V/O
   Manufactured by:
   Dayton Superior Corp.
   401 Stillson Road
   Fairfield, CT 06430

2. Re-crete 20 Minutes Set
   Manufactured by:
   Dayton Superior Corp.
   3 Horne Drive
   Folcroft,PA 19032

3. Masterpatch 230 VP
   Manufactured by:
   Master Builders, Inc.
   23700 Chagrin Boulevard
   Cleveland, OH 44122

B. The single component zinc primer shall be one of the following:

1. Kolor-Zinc No. 0100
   Manufactured by:
   Keeler & Long, Inc.
   856 Echo Lake Road
   Watertown, CT 06795

2. Zinc Plate 49 Organic Primer Type 2
   Manufactured by:
   Con-Lux Coatings, Inc.
   Talmadge Road, Box 847
   Edison, NJ 08818

3. Carboline 676
   Manufactured by:
   Carboline
   350 Hanley Industrial Court
   St. Louis, MO 63144

PART 3 - EXECUTION

3.1 CONSTRUCTION METHODS

A. Before any concrete is removed, the Department shall perform an inspection to determine the exact limits and locations of all areas to be repaired.

B. The perimeter of each deteriorated area shall be squared up to a minimum of ½-inch deep by chiseling or sawcutting.

C. In areas where reinforcing steel is found to be surrounded by deteriorated concrete or has at least one-half its surface area exposed or has less than 1" cover, the depth of removal shall be such as to include all deteriorated concrete but not less than ¾" around the reinforcing steel.

D. Loose and deteriorated concrete and hollow areas shall be chipped away back to sound concrete. The exposed concrete surfaces shall be thoroughly sandblasted and vacuumed immediately prior to applying the mortar.

E. Hollow areas in the existing concrete shall be completely exposed by chipping away back to sound concrete and thoroughly sandblasted and vacuumed immediately prior to applying the mortar.

F. Care shall be taken not to cut existing reinforcing.

G. Spalled and scaled areas shall be cleaned of all loose and deteriorated concrete. The exposed surfaces shall be thoroughly sandblasted and vacuumed immediately prior to applying mortar.

H. All surfaces of exposed concrete and reinforcing steel shall be free of oil, solvent, grease, dirt, dust, bitumen, rust, loose particles, and foreign matter. Prior to sandblasting of the concrete and

steel surfaces, all petroleum contamination on these surfaces shall be removed by an appropriate solvent or detergent cleaning operation.

I. All compressed air equipment used in cleaning shall have properly sized and designed, attached and functional, oil separators to assure the delivery of oil-free air at the nozzle.

J. Extreme care shall be taken, where reinforcing steel is uncovered, not to damage the steel or its bond in the surrounding concrete. At substructure locations, pneumatic tools shall not be placed in direct contact with reinforcing steel. Maximum 30# size hammers shall be used for general chipping and removal while maximum 15# size shall be used behind reinforcing steel. Exposed reinforcing steel shall be sandblasted in accordance with SSPC-SP-6, Commercial Blast Cleaning, to remove all contaminants, rust and rust scale.

K. The exposed blast cleaned reinforcing steel shall be coated with the single component zinc primer brush. All application of the zinc primer shall be in accordance with the manufacturer's printed instructions.

L. If the existing reinforcing steel is severely corroded or damaged, the Department shall be notified immediately.

M. Adequate measures shall be taken by the Contractor to prevent concrete chips, tools and/or materials from migrating into adjacent track and pedestrian areas. When using sandblasting equipment, all work shall be shielded to prevent debris from migrating into adjacent track and pedestrian areas. Debris from sandblasting shall be collected, removed, and satisfactorily disposed of by the Contractor from the site.

N. All mixing and application of the mortar shall be done in strict accordance with the printed instructions supplied by the manufacturer and as directed by the Department.

O. At the same time of mortar application, the concrete surfaces against which this material is to be placed shall be sound, tight, and thoroughly roughened by the removal and sandblasting procedures specified above. The exposed concrete surfaces shall be dampened with fresh water (saturated surface dry) immediately prior to placement of the mortar. The minimum ambient and patch area surface temperatures shall be 45oF and rising at the time of mortar application.

P. The mortar shall be packed into the substrate, filling all pores and voids, then forced against the edges of the repair, working toward the center. After filling the voids, the mortar shall be compacted and the surfaces finished with a trowel to match the original contours of the existing concrete or to the specified build-out as detailed on the plans.

Q. A fine spray mist of water shall be used to aid the cure of the patches by preventing the surface from drying for a minimum of 2 hours.

R. Cured patches shall be sounded by the Department to detect the presence of any hollow areas. Such areas shall be removed and replaced by the Contractor at his own expense until an acceptable patch is in place.

END OF SECTION 03 31 05

SECTION 03 31 10 - EPOXY INJECTION CRACK REPAIR

PART 1 - GENERAL

1.1 DESCRIPTION

A. This item shall consist of re-bonding cracked concrete structures with a two component modified epoxy resin system injected in to the crack under low pressure using continuous positive displacement metering and mixing equipment, as shown on the plans or as directed in accordance with these specifications.

B. The Contractor shall not perform any repair work without prior approval by the Department for locations, limits, and type of repairs.

1.2 SUBMITTALS

A. **Certification:** A Material Certificate and a Certificate of Compliance in accordance with Article 1.06.07 shall accompany each batch or lot of the material delivered to the job site to verify the epoxy resin's conformance with the manufacturer supplied infrared spectroscopy test results. *NOTE: A batch of each component will be defined as that of material which has been subjected to the same unit chemical or physical mixing process intended to make the final product substantially uniform.*

1. A sample of liquid epoxy resin Components A and B shall be taken and shall consist of one pint per batch of each component represented in each shipment.

2. The samples shall be presented to the Laboratory a minimum of 14 calendar days before incorporation of any of the batch into the work.

3. The Laboratory shall conduct the Infrared Spectroscopy Test on the samples (see attached Appendix A).

4. Each test results shall be compared to the "Pre-qualification Procedures" test results on file with the Laboratory.

5. Two materials are considered to be identical if all of the absorption points agree as to wave length and relative magnitude of the peaks in comparison with the other points of absorptions.

PART 2 - PRODUCTS

2.1 MATERIALS

A. The epoxy resin shall be a pre-qualified material (see attached Appendix A).

B. Each component shall be packaged in steel containers not larger than 5 gallons in volume. The containers shall have lug type crimp lids with ring seals, shall be new, shall not be less than 0.024-inch nominal thickness, and shall be well sealed to prevent leakage. If a lining is used in the containers, it shall be of such character as to resists any action by the components. Each container shall be clearly labeled with the description (component A or B), the manufacturer's name, date of manufacture, batch number, and the following warning:

1. ***CAUTION:*** *This material will cause sever dermatitis if it is allowed to come in contact with the skin or eyes. Use gloves and protective creams on the hands. Should this material contact skin, wash thoroughly with soap and water. Do not attempt to remove this material from skin with solvents. If any gets in the eyes, flush for 10 minutes with water and secure immediate medical attention.*

C. Any material which shows evidence of crystallization or a permanent increase in viscosity or settling of pigments which cannot be readily re-dispersed with a paddle shall not be used.

PART 3 - EXECUTION

3.1 CONSTRUCTION METHODS

A. A survey shall be undertaken by the Department on the areas designated on the plans to determine the exact limits and location of the repair areas under this item. Cracks less than 1/8" in width need not be repaired under this item.

B. At the time of mixing, Components A and B and the substrate temperature shall be between 50°F and 85°F, unless the material has been prequalified at a temperature less than 77°F, in which case this lesser temperature shall govern the use of the material. Any heating of the adhesive components shall be done by application of the indirect heat. Immediately prior to filling the tanks of the mixing equipment, each component shall be thoroughly stirred with a paddle. Separate paddles shall be used to stir each component.

C. Prior to sealing, the crack shall be cleaned free of dust, silt and any other material which would impair bonding. Cleaning shall be done with oil-free compressed air jets or preferably by vacuum cleaning with an industrial vacuum cleaner.

D. Injection ports shall be inserted in the cracks at intervals recommended by the epoxy manufacturer. The Contractor may use either surface or insertable injection ports, whichever is recommended by the epoxy manufacturer. Spacing of the ports shall be such that the injected adhesive will substantially fill the crack without excessive waste. The spacing of the ports shall be adjusted as the injection process progresses in order to meet this requirement.

E. Drilling of the injection ports shall be done with a hollow drill bit to which vacuum is applied with an industrial vacuum cleaner. The Contractor shall avoid reinforcing steel during drilling operations. A pachometer may be used to located and avoid reinforcing steel.

F. The surface of the crack between ports shall be sealed with tape and/or temporary surface sealant which is capable of retaining the epoxy adhesive in the crack during pressure injection and shall remain in place until the epoxy adhesive has hardened. Sealant tape and/or other

temporary surface sealant shall be removed when no longer required and any spillage of epoxy shall be removed. No cleanup of surfaces not generally viewed by the public will be required unless the surface sealant will interfere with subsequent surface treatments.

G. Epoxy adhesive shall be pumped into the cracks through the injection ports. The pump, hose, injections gun and appurtenances shall properly proportion and mix the epoxy and shall be capable of injecting the epoxy at a sufficient rate and pressure to completely fill all designated cracks. A suitable gasket shall be used on the head of the injection gun to prevent the adhesive from running down the face of the concrete. Pumping pressure shall be kept as low as practicable.

H. The temperature of the concrete shall not be less than 50°F at the time epoxy is injected, unless the epoxy has been prequalified at a lower temperature as hereinbefore provided, in which case the lower temperature shall govern.

I. For a crack with a uniform thickness, the epoxy adhesive shall be forced into the first port at one end of the crack until adhesive runs in substantial quantity from the next adjacent port. The first port shall then be sealed and injection shall commence at the next port. Injection shall then continue from port to port in this manner until the crack is fully injected.

J. Cracks with varying thickness shall have the epoxy adhesive forced into the port at the widest gap in the crack until adhesive runs in substantial quantity from the two adjacent ports. The first port shall then be sealed and injection shall commence at the adjacent port corresponding to the shorter side of the crack. Injection shall then continue from port to port in this manner until the shorter side of the crack is fully injected. Similarly, injection shall continue from port to port on the longer side of the crack, beginning with the port that was filled with epoxy adhesive but not sealed, until the crack is fully injected.

K. For slanting or vertical cracks, pumping shall start at the lower end of the crack. Where approximately vertical and horizontal cracks intersect, the vertical crack below the intersection shall be injected first. The ports shall be sealed by removing the fitting, filling the void with epoxy and covering with tape or surface sealant.

L. Before starting injection work and at 2-hour intervals during injection work, whenever requested by the Department, a 3 fluid-ounce sample of mixed epoxy shall be taken from the injection gun. Should these samples show any evidence of improper proportioning or mixing, injection work shall be suspended until the equipment or procedure are corrected.

M. Samples obtained above shall be used directly, without further stirring, to make test pieces for the Slant Shear Strength on Dry Concrete. One test piece shall be made at the beginning, the middle, and the end of daily operations. The samples shall be allowed to cure for 7 days in the "Concrete Cylinder Curing Box". On the 7th day, the samples shall be removed to the Laboratory and tested in accordance with the requirement for the Slant Shear Strength (see attached Appendix A).

N. Each sample shall be numbered consecutively and dated (with a waterproof marker) and shall note which sample represents which part of the structure.

O. Technical Advisor: The Contractor shall provide the Department with a notarized statement showing a specific record of epoxy injections actually made by the Contractor and/or a specific

record of training of his employees in epoxy injection repairs taught by the epoxy manufacturer. If the statement is not produced or is deemed insufficient by the Department, the contractor shall obtain the services of a Technical Advisor who is employed by the epoxy manufacturer. The Technical Advisor shall assist the Department and the Contractor in the correct use of the injection resin. The Advisor shall be a qualified representative, approved by the Department, and shall be at the site of the work when the work begins in connections with the epoxy injection, and at such other times as the Department may request until completion of work under this item.

NOTE: APPENDIX A BEGINS ON NEXT PAGE.

APPENDIX A

Prequalification Procedure

The Prequalification Procedure shall consist of the following test procedures on the mixed epoxy resin at a temperature of 77°F, unless the Contractor desires to use the material at a lower temperature than 50°F, in which case the lower temperature shall be used to condition the material and test pieces.

Test: Viscosity
Requirement: 900 centipoise, maximum at 77°F (62°F)
4000 centipoise, maximum at any test temperature
Test Method: ASTM D2393

Test: Gel Time (Pot Life)
Requirement: 4 to 60 minutes
Test Method:

A. Apparatus:
   1. Unwaxed paper cups, 8 oz, 2 inches 4 $^1/_4$" at base.
   2. Wooden tongue depressor with ends cut square.
   3. Stainless steel spatula with 6"x1" blade and with end cut square.
   4. Stopwatch, 1 second or smaller divisions.
   5. Balance, 0.1 gram divisions.

B. Test Procedure:
   1. Condition both Components A and B to required temperature (62°F).
   2. Measure proper volumes of well mixed Components A and B into an 8-oz. unwaxed cup to yield total mass of 60 (62.0) grams.
   3. Start stopwatch immediately and mix components for 60 seconds, stirring with a wooden tongue depressor, taking care to scrape the sides and bottom of the cup periodically.
   4. Place the sample at the required temperature (62°F) on a wooden bench top which is free of excessive drafts.
   5. Probe the mixture with the tongue depressor once every 30 seconds starting 4 minutes from the time of mixing.
   6. The time at which a soft stringy mass forms in the cup is the gel time.

Test: Slant Shear Strength on Wet Concrete
Requirement: 1700 psi, minimum after 7 days of cure in air at the required temperature (62°F).

Test: Slant Shear Strength on Dry Concrete
Requirement: 4500 psi, minimum after 7 days of cure in air at the required temperature (62°F).

Test: Slant Shear Strength

A. Materials
   1. Ottawa sand, ASTM C109
   2. Portland cement Type II
   3. Water

B. Apparatus:
   1. Suitable mold to make diagonal concrete mortar block with a square base of 2-inch sides, and having one 2”x4” diagonal face, starting about ¾” above the base. The diagonal faces of two such blocks are bonded together producing a block of 2”x2”x5” dimensions.
   2. Blocks are made from the following composition:
      - Ottawa sand, ASTM C109 30.1 lbs.
      - Portland Cement Type II 12.1 lbs.
      - Water 4.8 lbs.

      Cure blocks 28 days in a fog room. Dry and lightly sandblast diagonal faces.
   3. Suitable test press.

C. Test Procedure:
   1. Condition the components for 4 hours at the required temperature (2°F). Without entrapping air, stir the separate components for 30 seconds and place the proper volumes of each component on a plate and mix with a spatula for 60 seconds. Apply a coat approximately 0.010-inch thick to each diagonal surface. Place four 1/8” square pieces of shim stock 0.012” thick on one block to control final film thickness.

   2. Before pressing the coated surface together, leave the blocks so that the coated surfaces are horizontal until the epoxy reacts slightly to prevent excessive flow. Press diagonal surfaces of each block together by hands and remove excess epoxy adhesive.

   3. Align the blocks so that the ends and sides are square and form a 2”x2”x5” block. Use blocks of wood or metal against each 2”x2” end to keep the diagonal faces from slipping until epoxy hardens.

   4. After the required cure time, apply a suitable capping compound to each of the 2”x2” suitable testing apparatus at the rate of 5000 lbs./min until failure.

      Report results in pounds per square inch = ¼ x (Load in Pounds)

   5. For wet shear strength, soak another set of block in water for 24 hours at the require temperature (62°F). Remove and wipe off excessive water. Prepare, cure and test sample according to above test procedure.

Test: Tensile Strength
Requirement: 4500 psi, minimum

Test: Elongation
Requirement: 15% maximum
Test Method: Tensile Strength and Elongation

A. Apparatus:
   1. Leveling table about 12”x8” with removable rim ¼” thick by ½” wide.
   2. Mylar or similar plastic sheeting 0.004” thick.
   3. Air circulation oven capable of maintaining 158°F (63°F).
   4. Cutting die, Figure 1.
   5. Thickness gauge, $^{1}/_{8}$”.
   6. Release agent, non-silicone type.

B. Procedure:
1. Place mylar sheet on leveling table.
2. Coat inside edge and bottom of rim with release agent and secure table with screws.
3. Level the table.
4. Mix sufficient volume of well-mixed Component A and well-mixed Component B in the proper volumes so as to be able to form a layer 1/8" deep when placed inside of the ring on the leveling table.
5. Introduce as few bubbles as possible during mixing.
6. Flush surface of epoxy with a heat gun or Bunsen burner to remove air bubbles on surface. Repeat if necessary.
7. Allow the specimen to cure for 18 hours at the required temperature (62°F).
8. Remove specimen from table and strip off mylar sheet. Cure specimen at 158°F (63°F) for 5 hours
9. Allow specimen to cool to the required temperature and cut specimens using using cutting die shown on Figure 1.
10. Proceed as specified in ASTM d638 using 0.2 inch/minute test rating, and 1" gauge length.

<u>Test: Infrared Curve</u>
Requirement: Infrared Curved shall be obtained of Components A and B
Test method: Recording Spectrophotometer

A. Apparatus:
1. Perkin-Elmer Model 137-B Infracord Spectrophotometer, automatic recording system from 2.5 to 15 microns, with a two-speed recorder. Comparable results can be obtained by other double-beam recording spectrophotometers with similar resolution.
2. Disk holder for a 1"-diameter disk.
3. Two sodium chloride crystal disks, one inch in diameter.
4. Sorvall SS-3 Automatic Superspeed Centrifuge, or a comparable centrifuge, which is able to separate the liquid and solid phases of the epoxy components without previous dilution with solvents.

B. Procedure:
1. Place about 15 grams of Component A into a stainless centrifuge tube.
2. Counterbalance with Component B in a second centrifuge tube.
3. Centrifuge the two components at 17.000rpm until there is a supernatant liquid layer present in each tube. This takes 20 – 30 minutes.
4. Place a drop of Component A liquid layer on a sodium chloride disk.
5. Place another sodium chloride disk over the drop, rotate and press down until the liquid has flowed into a uniform layer of proper thickness between the two sodium chloride disks.
6. Place the disk in the holder and run an absorption curve with the infrared spectrophotometer.
7. More or less liquid may be used between the disks so as to produce a maximum absorption of 0.7 to 1.0 for the strongest absorption point on the above.
8. Clean disks with toluene and dry.
9. Repeat steps 4 through 8 with the liquid layer from Component B.
10. Record each curve in order that they may be used for comparison purposed to lots of material delivered to the job site.

END OF SECTION 03 31 10

SECTION 03 41 01 – PRECAST STRUCTURAL CONCRETE

PART 1 - GENERAL

1.1 DESCRIPTION

A. The work specified in this section consists of the furnishing and installation of the precast structural concrete elements indicated on the plans, including platform stairs/landings, and platform ramps.

1.4 SUBMITTALS

A. Shop Drawings

a. The Contractor shall submit shop drawings in accordance with the requirements of CTDOT Form 816 Section 1.05.02, the NOTICE TO CONTRACTOR – SUBMITTALS, and the following.

B. Manufacturer's Product Data

C. Working Drawings

1. Working drawings shall be submitted for installation of precast elements. Drawings shall include crane size and location, lifting points and devices, sequence of installation and any other pertinent information. All calculations and drawings shall be stamped by a Professional Engineer registered in the State of Connecticut.

D. Design Calculations

1. All precast elements which require calculations shall have calculations submitted which have been stamped by a Professional Engineer registered in the State of Connecticut.

1.5 TESTING

A. The Contractor is responsible for all testing to ensure all components are in conformance with the specifications.

PART 2 – PRODUCTS

2.1 MATERIALS

A. Precast Concrete:

1. Conforming to CTDOT Form 816 Sections 8.21.02, 8.21.03-1, and 8.21.03-5.

B. Reinforcing steel:

1. Reinforcing steel shall conform to the requirements of CTDOT Form 816 Section M.06.01.

PART 3 - EXECUTION

3.1 PREPARATION

A. Prior to fabrication of any elements the Contractor shall furnish shop drawings for all elements included in this specification including precast elements, reinforcement, and associated hardware. Drawings shall include all dimensions of the finished pieces including reinforcement bending diagrams.

B. Marking: Each completed precast member shall be identified with the name of the manufacturer, CTDOT project number, structure number, casting date, and piece number. Markings shall be made by either casting directly into the member or by suitable stenciling. Marks shall be located such that they are not visible after installation.

3.2 INSTALLATION

A. Structural precast elements shall be installed at the locations shown on the plans. Elements to be placed on earth shall have all soil surfaces compacted prior to placement of the precast elements. Elements to be placed in contact with existing stone or masonry surfaces shall have the contact surface leveled with a bed of mortar prior to placement of the precast concrete. The mortar shall be wet when the precast is placed and the precast firmly seated with full contact. Backfill (if required) shall not be placed until the mortar has cured and, if called for, dowels drilled and anchored.

END OF SECTION 03 41 01

SECTION 03 41 05 – PLATFORM SECTION

PART 1 - GENERAL

1.1 DESCRIPTION

A. The work shall consist of furnishing, fabricating, transporting, storing, handling, and erecting all the elements that make up the platform sections, at the locations indicated on the Plans. This work includes all necessary materials and equipment to complete the work as shown on the plans, including all galvanized structural steel (girders, diaphragms, connection plates, bearing plates, load plates, keeper angles, embedded angles, edge plates, anchor rods at the fixed bearings of the piers, hold down clamps, high strength bolts for the hold down clamps), precast platform panels, epoxy-coated reinforcing steel, HSS (Hollow Structural Sections) and non-shrink grout for platform panel joint connections, galvanized threaded inserts at the hold down clamps, stainless steel inserts and anchor rods for the polyethylene rub rail, and premolded pads.

B. The cast-in-place microsilica concrete to be placed as an overlay to the precast platform panels shall be furnished and installed in accordance with the details shown on the plans and the CSI-formatted specification SECTION 03 53 20 – MICROSILICA CONCRETE OVERLAY.

C. The waterproofing system to be applied to the microsilica concrete overlay of the platform sections shall be a spray-applied, fast cure, high-build polymer system with a broadcast aggregate. It shall conform to the requirements shown on the plans and the CSI-formatted specification SECTION 09 67 10 – RAILROAD PLATFORM WATERPROOFING.

D. The tactile warning surfacing to be applied to the platform section microsilica concrete overlay shall be furnished and applied in accordance with the details shown on the plans and the CSI-formatted specification SECTION 09 61 40 - DETECTABLE / TACTILE WARNING SURFACES.

E. Joints for the platform sections shall be furnished and constructed in accordance with the details shown on the plans and the CSI-formatted specifications SECTION 07 91 15 – PLATFORM EXPANSION JOINT SYSTEM, SECTION 07 92 05 - CONCRETE OVERLAY JOINT, SECTION 07 92 10 – FIXED PLATFORM JOINT, and SECTION 07 95 10 – LONGITUDINAL JOINT SYSTEM.

F. Polyethylene rub rail units to be installed on the track sides of the platform sections shall be furnished and installed in accordance with the details shown on the plans and the CSI-formatted specification SECTION 06 64 00 – POLYETHYLENE RUB RAIL.

G. Steel laminated elastomeric bearing pads for the platform sections shall be furnished installed in accordance with the details shown on the plans and the CSI-formatted specification SECTION 34 82 10 – STEEL LAMINATED ELASTROMERIC BEARINGS.

1.2 SUBMITTALS

A. **Working Drawings:** The Contractor shall submit working drawings addressing all the elements that make up the platform sections, in accordance with the requirements of CTDOT Form 816 Sections 6.03.03-3 and 1.05.02, and the NOTICE TO CONTRACTOR – SUBMITTALS, and the following.

1. At a minimum, the Working Drawings shall include the following information:

a. Fabrication/Assembly Plan:
   1) Working drawings shall be stamped by a Professional Engineer licensed in the State of Connecticut.
   2) Tolerances and procedures for controlling tolerance limits both horizontally and vertically during assembly operations.
   3) Handling and transporting the structural steel and precast platform panels.
   4) Erection plans for the structural steel elements and precast platform panels, including lifting inserts, hardware, or devices and locations on the working drawings for Engineer's approval, including supporting calculations, type, and amount of any additional reinforcing required for lifting the precast platform panels.

B. **Shop Drawings:** The Contractor shall submit shop drawings addressing all the elements that make up the platform sections, in accordance with the pertinent requirements of CTDOT Form 816 Sections 5.14.03-1 and 6.03.03-2, and the NOTICE TO CONTRACTOR – SUBMITTALS, and the following.

1. At a minimum, the Shop Drawings shall include the following information:

a. Structural steel details, size, type and grade, in accordance with CTDOT Form 816 Section 6.03.03, including a cambering procedure and recalculated diagrams if required.
b. Reinforcement details in accordance with CTDOT Form 816 Section 6.02.03-1.
c. Locations of all inserts.

PART 2 - PRODUCTS

2.1 MATERIALS

A. **Structural Steel:** All structural steel shall be galvanized and of the type and grade designated on the plans and shall conform to the pertinent requirements of CTDOT Form 816 Section M.06.02.

B. **Anchor Rods (at the fixed bearings of the piers) and High Strength Bolts (for the hold down clamps):** The anchor rods (at the fixed bearings of the piers), high strength bolts (for the hold down clamps), and washers shall be galvanized and of the type and size designated on the plans and shall conform to the pertinent requirements of CTDOT Form 816 Sections M.06.02-2 and M.06.02-3, respectively.

C. **Galvanizing:** Zinc (hot-galvanized) coatings on structural steel, shear connectors, anchor rods (as required), high strength bolts, and washers shall meet the requirements of CTDOT Form 816 Article M.06.03.

D. **Concrete for Platform Sections:** Concrete for the platform sections shall be of the type and strength designated on the plans and shall conform to the pertinent requirements of CTDOT Form 816 Section 5.14 and Article M.14.01.

E. **Reinforcing Steel:** All reinforcing steel shall be epoxy coated and of the type and size designated on the plans and shall conform to the pertinent requirements of CTDOT Form 816 Section M.06.01.

F. **HSS (Hollow Structural Sections):** HSS for the platform panel joint connections shall be galvanized and of the size designated on the plans and shall conform to the requirements of ASTM A1085.

G. **Non-Shrink Grout:** Non-shrink grout for the platform panel joint connections shall conform to the requirements of CTDOT Form 816 Article M.03.05.

H. **Threaded Inserts for Hold Down Clamps:** Threaded inserts for the hold down clamps shall be galvanized and conform to the requirements of CTDOT Form 816 Article M.14.01-6.

I. **Stainless Steel Anchor Rods and Threaded Inserts for Polyethylene Rub Rails:** The anchor rods for supporting the polyethylene rub rail units to be installed on the track side vertical edge of the platform sections shall be 5/8" diameter ASTM A240 Type 304 stainless steel with washer, nut, and nylon lock nut. The stainless steel threaded inserts shall be compatible with the anchor rods and of the type recommended by the rub rail manufacturer.

J. **Premolded Pads:** Premolded pads shall conform to the requirements of CTDOT Form 816 Article M.17.01.

K. **Other Materials:** All other materials shall meet the requirements specified in the contract documents and are subject to the approval of the Engineer.

PART 3 - EXECUTION

3.1 CONSTRUCTION METHODS

A. **Platform Sections:** The construction methods associated with fabricating, transporting, storing, handling, and erecting all the elements that make up the platform sections shall conform to the applicable requirements of the CTDOT Form 816 sections outlined in this specification.

1. Panel joint connections shall be constructed as indicated on the plans.

B. **Precast Platform Panels:** The construction methods associated with fabricating, transporting, storing, handling, and erecting the precast platform panels (for the platform sections) shall conform to the applicable requirements of CTDOT Form 816 Section 5.14.

1. **Concrete for Precast Platform Panels:** The construction methods associated with the precast platform panel concrete shall conform to the pertinent requirements of CTDOT Form 816 Section 5.14.03.

2. **Reinforcing Steel for Precast Platform Panels:** The construction methods associated with the precast platform panel reinforcing steel shall conform to the pertinent requirements of CTDOT Form 816 Section 6.02.

3. **HSS for Precast Platform Panel Joint Connections:** HSS shall be cast within the precast platform panels as designated on the plans.

4. **Rejection of Precast Platform Panels:** Any precast platform panels not fabricated in accordance with the contract documents shall be subject to rejection.

5. **Marking of Precast Platform Panels:** Each precast platform panel shall be clearly and permanently labeled on the underside of the panel in accordance with the pertinent requirements of CTDOT Form 816 Section 5.14.03-11.

6. **Precast Platform Panel Fabrication Tolerances:** Precast platform panels shall be fabricated and comply with the tolerances designated on the plans.

7. **Layout of the Precast Platform Panels:** The panel fabricator shall supply to the Contractor detailed as-built plans of the fabricated precast platform panels. The Contractor shall lay out fabricated panels in accordance with the as-built drawings to facilitate proper fitting of the panels during erection.

C. **Structural Steel, Anchor Bolts, and High Strength Bolts:** The construction methods associated with the structural steel, anchor bolts, and high strength bolts (for the platform sections) shall conform to the pertinent requirements of CTDOT Form 816 Section 6.03.03. All structural steel to be embedded in concrete shall be clean and free from dirt, oil, grease or paint.

D. **Field Inspection:** The Contractor shall provide the Engineer with all facilities necessary to conduct thorough inspection of all the erection work associated with the platform sections.

E. **Bearing Surfaces:** Bearing surfaces shall be properly finished to the correct elevation to provide full and even supporting surfaces for the structural steel girder bearings.

END OF SECTION 03 41 05

SECTION 03 53 20 – MICROSILICA CONCRETE OVERLAY

PART 1 - GENERAL

1.1 DESCRIPTION

A. Drawings and general provisions of the Contract, including General Conditions of Division 1, State of Connecticut, Department of Transportation, Standard Specifications for Roads, Bridges, and Incidental Construction, Form 816 – 2004 and supplemental specifications thereto, shall be a part of this specification.

1.2 SUMMARY

A. This section specifies requirements for cast-in place microsilica concrete to be placed as an overlay to the precast concrete platform slabs and includes the following:

1. Performance requirements for the production of high strength concrete overlay with microsilica (silica fume) admixture for the reduction of concrete permeability to protect against intrusion by chlorides and other aggressive chemicals.

2. Cleaning, surface preparation, furnishing, placing, finishing and curing of the microsilica concrete (MSC), saw cutting and installing joints, and final clean-up.

3. Microsilica concrete overlay shall be provided where indicated on the contract drawings or as directed by the Engineer.

4. MSC overlay shall vary in thickness as indicated in the contract drawings.

5. Any damage to adjacent or remaining structures caused by Contractor's operations will be repaired by the Contractor at his expense in a manner approved by the Engineer.

1.3 SUBMITTALS

A. Product Data: Submit manufacturer's product data, installation instructions, use limitations and recommendations for each material indicated.

B. Field quality-control test reports.

C. Product Test Reports: Submit independent test data by a qualified testing agency substantiating the product's ability to reduce concrete permeability by chlorides and other aggressive chemicals.

D. Minutes of preinstallation conference.

1.4 QUALITY ASSURANCE

A. Testing Agency Qualifications: An independent agency qualified according to ASTM C 1077 and ASTM E 329 for testing indicated, as documented according to ASTM E 548.

B. Manufacturer: Concrete admixtures shall be manufactured by a firm with a minimum of 5 years experience in the production of similar products. Manufacturers proposed for use but not named in these specifications shall submit evidence of ability to meet all requirements specified, and include a list of projects of similar design and complexity completed within the past five years.

C. Materials: For each type of material required for the work of this Section, provide primary materials which are the products of one manufacturer.

D. Pre-Installation Conference: A pre-installation conference shall be held two weeks prior to commencement of field operations to install the specified project in order to establish procedures, maintain optimum working conditions and coordinate this work with related and adjacent work. Agenda for meeting shall include concrete and admixture handling, placing, finishing, and curing. Conduct conference at Project site to comply with requirements in Division 1 Section "Project Meetings."

E. Manufacturer's Representative: A representative of the manufacturer shall be present for project start-up during initial concrete placement. Engineer may waive requirement for manufacturer's representative if Contractor provides sufficient evidence that producer and finisher have adequate experience with admixtures required.

F. Trial Mix: Provide a minimum 4 cubic yard (3 m3) trial mix containing proposed concrete design mix placed at the job site in a location acceptable to the Engineer. Engineer may waive requirement for the trial mix if Contractor provides sufficient evidence that producer and finisher have adequate experience with low water cement ratio mixes.

1.5 DELIVERY, STORAGE, AND HANDLING

A. Deliver materials in original packages and containers, with seals unbroken, bearing manufacturer's labels indicating brand name and directions for storage, mixing with other components, and application.

B. Store materials to comply with manufacturer's written instructions to prevent deterioration from moisture or other detrimental effects.

1.6 PROJECT CONDITIONS

A. Environmental Limitations: Comply with manufacturer's written instructions for substrate temperature and moisture content, ambient temperature and humidity, ventilation, and other conditions affecting concrete overlay performance.

1. Place concrete overlay only when ambient temperature and temperature of base slabs are between 50 and 86 deg F or as required by the manufacturer.

B. Close areas to traffic during topping application and, after application, for time period recommended in writing by manufacturer.

PART 2 – PRODUCTS

2.1 STEEL REINFORCEMENT

A. Epoxy-Coated Reinforcing Bars: ASTM A 615/A 615M, Grade 60 (Grade 420), deformed bars, ASTM A 775/A 775M or ASTM A 934/A 934M, epoxy coated, with less than 2 percent damaged coating in each 12-inch bar length.

B. Epoxy-Coated Wire: ASTM A 884/A 884M, Class A. Type 1 coated, plain-steel wire, with less than 2 percent damaged coating in each 12-inch wire length.

C. Epoxy-Coated Welded Wire Reinforcement: ASTM A 884/A 884M, Class A coated, Type 1, deformed steel.

2.2 REINFORCEMENT ACCESSORIES

A. Epoxy Repair Coating: Liquid two-part, epoxy repair coating: compatible with epoxy coating on reinforcement and complying with ASTM A 775A/ 775M.

B. Bar Supports: Bolsters, chairs, spacers, and other devices for spacing, supporting, and fastening reinforcing bars and welded wire reinforcement in place. Manufacture bar supports from steel wire, plastic, or precast concrete according to CRSI's "Manual of Standard Practice," of greater compressive strength than concrete and as follows:

1. For concrete surfaces exposed to view where legs of wire bar supports contact forms, use CRSI Class 1 plastic-protected steel wire or CRSI Class 2 stainless-steel bar supports.
2. For epoxy-coated reinforcement, use epoxy-coated or other dielectric polymer-coated wire bar supports.

2.3 CONCRETE MATERIALS

A. Cementitious Material: Use the following cementitious materials, of the same type, brand, and source, throughout Project.

1. Portland Cement: ASTM C 150, Type I/II, gray. Supplement with the following:

a. Ground Granulated Blast-Furnace Slag: ASTM C 989, Grade 100 or 120.

B. Silica Fume: ASTM C 1240, amorphous silica.

C. Normal-Weight Aggregates: ASTM C 33, Class 3S course aggregate or better, graded. Provide aggregates from a single source with documented service record data of at least 10 years' satisfactory service in similar applications and service conditions using similar aggregates and cementitious materials.

1. Maximum Coarse-Aggregate Size: 3/8 inch nominal.
2. Fine Aggregate: Free of materials with deleterious reactivity to alkali in cement.

D. Water: ASTM C 94/C 94M and potable.

2.4 ADMIXTURES

A. Air-Entraining Admixture: ASTM C 260.

B. Chemical Admixtures: Provide admixtures certified by manufacturer to be compatible with other admixtures and that will not contribute water-soluble chloride ions exceeding those permitted in hardened concrete. Do not use calcium chloride or admixtures containing calcium chloride.

1. High-Range. Water-Reducing Admixture: ASTM C 494/C 494M, Type F.

2.5 CURING MATERIALS

A. Evaporation Retarder: Waterborne, monomolecular film forming: manufactured for application to fresh concrete.

B. Absorptive Cover: AASHTO M 182, Class 2, burlap cloth made from jute or kenaf, weighing approximately 9 oz./sq. yd. when dry.

C. Moisture-Retaining Cover: ASTM C 171, polyethylene film or white burlap-polyethylene sheet.

D. Water: Portable.

2.6 RELATED MATERIALS

A. Semirigid Joint Filler: Two-component, semirigid, 100 percent solids, epoxy resin with a Type A Shore durometer hardness of 80 per ASTM D 2240.

B. Joint-Filler Strips: ASTM D 1751, asphalt-saturated cellulosic fiber.

C. Portland Cement: ASTM C 150, Type I or II.

D. Sand: ASTM C 404, fine aggregate passing No. 16 sieve.

E. Water: Portable.

F. Acrylic-Bonding Agent: ASTM C 1059, Type II, non-redispersible, acrylic emulsion or styrene butadiene.

G. Epoxy Adhesive: ASTM C 881, Type V. two-component epoxy resin, capable of humid curing and bonding to damp surfaces, of class and grade to suite requirements.

2.7 CONCRETE MIXTURES, GENERAL

A. Prepare design mixtures for each type and strength of concrete, proportioned on the basis of laboratory trial mixture or field test data, or both, according to ACI 301.

1. Use a qualified independent testing agency for preparing and reporting proposed mixture designs based on laboratory trial mixtures.

B. Cementitious Materials: Limit percentage, by weight, of cementitious materials other than Portland cement in concrete as follows:

1. Silica Fume: 10 percent.
2. Combined Fly Ash, Pozzolans, and Silica Fume: 35 percent with fly ash or pozzolans not exceeding 25 percent and silica fume not exceeding 10 percent.
3. Combined Fly Ash or Pozzolans, Ground Granulated Blast-Furnace Slag, and Silica Fume: 50 percent with fly ash or pozzolans not exceeding 25 percent and silica fume not exceeding 10 percent.

C. Limit water-soluble, chloride-ion content in hardened concrete to 0.15 percent by weight of cement.

D. Admixtures: Use admixtures according to manufacturer's written instructions.

1. Use high-range water reducing or plasticizing admixture in concrete, as required, for placement and workability.

2.8 CONCRETE MIXTURES FOR MICROSILICA CONCRETE OVERLAY

A. Microsilica Concrete Overlay: Proportion normal-weight concrete mixture with microsilica to meet the following performance criteria:

1. Minimum Compressive Strength: 5000 psi at 28 days.
2. Maximum Permeability: 800 coulombs at 56 days, ASTM C 31 & ASTM C 1202
3. Minimum Bond strength: 150 psi at 28 days. ASTM C1042
4. Maximum Water-Cementitious Materials Ratio: 0.40.
5. Minimum Cementitious Materials Content: 700 lb/cu. yd. for 3/8" maximum aggregate.
6. Slump Limit: 6 inches for concrete with verified slump of 2 to 4 inches before adding high-range water-reducing admixture or plasticizing admixture, plus or minus 1 inch.
7. Air Content: 6 percent, plus or minus 1.5 percent at point of delivery for 3/8-inch nominal maximum aggregate size.

B. Microsilica, fly ash, blast furnace slag and cement are considered cementitious materials in calculations.

C. Add microsilica as a liquid slurry or in dry densified form in 25 lb Concrete Ready Bags packaging. The water content of slurry shall be included as mix design water.

D. Blended cements with interground microsilica will not be allowed.

E. Air Entrainment: For freeze-thaw durability comply with ACI 318 freezing and thawing exposure requirements, as determined by ASTM C 173 or ASTM C 281.

F. Concrete Admixtures: High-range water reducers meeting the requirements of ASTM C494, Type F are required to control slump, mixing, cementitious ratio and proper distribution of the microsilica, and shall be plant added. Additional water reducers may be added at the job site when required.

G. Additional Concrete Admixtures: Additional concrete admixtures conforming to ASTM C 494 or equivalent CSA 266 standards may be used as required.

2.9 FABRICATING REINFORCEMENT

A. Fabricate steel reinforcement according to CRSI's "Manual of Standard Practice."

2.10 CONCRETE MIXING

A. Microsilica Concrete shall be mixed in transit mixers only in accordance with microsilica manufacturer's written requirements.

B. Ready-Mixed Concrete: Measure, batch, mix and deliver concrete according to ASTM C 94/C 94M except as noted below, and furnish batch ticket information.

C. Special Mixing Requirements for Densified Microsilica: Densified microsilica requires enhanced mixing to ensure full dispersion. The following mix requirements shall be adhered to:

1. For all types of mixing equipment, mix times shall be increased by 40% over the minimum mix time required to achieve mix uniformity as defined by ASTM C 94.
2. For truck-mixed and central mixed concrete, maximum allowable batch size shall be 80% of the maximum as called out by ASTM C 94.

PART 3 – EXECUTION

1.1 EXAMINATION

A. Examine substrates, with Installer present, for conditions affecting performance of concrete overlay.

B. Verify that base concrete slabs comply with scratch finish requirements specified in Division 3 section "Cast-in-Place Concrete."

C. Notify Engineer in writing of circumstances detrimental to the proper completion of the work.

D. Proceed with application only after unsatisfactory conditions have been corrected.

1.2 EQUIPMENT

A. Microsilica concrete shall be mixed by transit mixers only.

B. Equipment used shall supply air and water free of oil so as not to contaminate the desk surface. (i.e. equipment with oil trap).

1.3 PREPARATION

A. Existing Concrete: Remove existing surface treatments and deteriorated and unsound concrete. Ensure that base slabs exhibit a heavily scarified surface profile with an amplitude of ¼ inch.

1. Prepare and clean existing base slabs. Fill voids, cracks, and cavities in base slabs.
2. Surface to receive MSC shall be cleaned no more than 24 hours prior to placement of overlay. The surface may require additional cleaning if placement is delayed.
3. Entire surface shall be cleaned by high-pressure water blasting or other approved method to remove any curing compound, loose concrete, laitance, oil or any other residue or contaminate that may be detrimental to achieving bond.
4. The surface shall be protected after cleaning but before placement of the MSC by covering all surfaces to receive the overlay with a minimum 6mil thick polyethylene film.
5. The concrete deck surface to receive the overlay shall be wetted for 12 hours prior to placement of the MSC or as required by the manufacturer of the bonding agent. Standing water shall be blown clear prior to placement of the overlay.

B. Install joint-filler strips where topping abuts vertical surfaces, such as columns, edging plates and other locations, as indicated.

1. Extend joint-filler strips full width and depth of joint, terminating flush with topping surface, unless otherwise indicated.
2. Terminate full-width, joint-filler strips, ½ inch below topping surface where joint sealants, specified in Division 7 Section “Joint Sealants,” are indicated.
3. Install joint-filler strips in lengths as long as practicable. Where more than one length is required, lace or clip sections together.

C. Epoxy=Coated Reinforcement: All reinforcing steel shall be epoxy coated. All reinforcing steel in contact with the overlay shall be cleaned of dirt, grease, concrete mortar and loose rust prior to placement. Repair cut and damaged epoxy coatings with epoxy repair coating according to ASTM D 3963/D 3963M. Use epoxy-coated steel wire ties to fasten epoxy-coated steel reinforcement. All damage to the epoxy coating shall be repaired prior to concrete placement.

3.4 OVERLAY APPLICATION

A. Start overlay application in presence of manufacturer’s technical representative.

B. Existing Concrete: Apply bonding adhesive, mixed according to manufacturer’s written instructions, and scrub into dry base slabs to a thickness of 1/16 to 1/8 inch, without puddling. Place overlay while adhesive is still tacky. All surfaces in contact with the microsilica concrete shall be evenly coated. No excess bonding adhesive shall be allowed to collect in pockets.

C. The application of bonding adhesive shall be limited to an area that can easily be covered with the MSC overlay before the adhesive begins to dry. If the Engineer determines that the bonding adhesive has dried before the application of the MSC, the contractor shall clean and re-prepare the surface as described above.

D. The MSC overlay and bonding adhesive shall not be placed in the rain.

E. Place concrete overlay continuously in a single layer, tamping and consolidating to achieve tight contact with bonding surface. Do not permit cold joints or seams to develop within pour strip.

1. Screed surface with a straightedge and strike off to correct elevations.
2. Slope surfaces uniformly where indicated.
3. Begin initial floating using bull floats to form a uniform and open-textured surface place free of bumps or hollows.

F. Concrete Cover: Minimum concrete cover over reinforcement shall be 1 ½”.

G. Finishing: Underfinish microsilica concrete by limiting finishing operation to screeding, bull-float, and broom finish. Curing shall be initiated within one hour of concrete placement.

1. Finish and measure surface so gap at any point between surface and an unleveled freestanding 10-foot-long straightedge, resting on 2 high spots and placed anywhere on the surface, does not exceed ¼ inch.

H. Expansion/Construction Joints: Construct joints true to line with faces perpendicular to surface plane of concrete overlay, at locations indicated or as approved by Architect.

I. Contraction Joints: Form weakened-plane contraction joints with power saws equipped with shatterproof abrasive or diamond-rimmed blades. Cut 1/8-inch-wide joints onto concrete overlay when cutting action will not tear, abrade, or otherwise damage surface and before random contraction cracks develop.

1. Form joints in concrete overlay over expansion/construction joints in base slabs, unless otherwise indicated.
2. Construct contraction joints for a depth equal to one=fourth of concrete overlay thickness, but not less than ½ inch deep.

3.5 PROTECTING AND CURING

A. General: Protect freshly placed concrete overlay from premature drying and excessive cold or hot temperatures.

B. Wind breaks, sun shades, and fog misting may be utilized to minimize the rate of evaporation at the concrete surface.

C. Fog misting shall be provided when the rate of evaporation at the concrete surface exceeds 0.1 pound per square foot per hour as determined by ACI 308 Section 1.2.1. Fogging shall continue

D. Evaporation Retarder: Apply evaporation retarded to concrete overlay surfaces in hot, dry or windy conditions before and during finishing operations. Apply according to manufacturer’s

written instructions after placing, screeding, and bull floating and during final finish to protect the concrete.

E. Begin curing immediately after finishing concrete overlay. Cure by one or a combination of the following methods, according to microsilica manufacturer's written instructions.

1. Moisture Carding: Keep surfaces continuously moist with water-fog spray and absorptive cover. The MSC shall be wet cured with prewetted burlap for a minimum of 7 days. The burlap shall be lapped a minimum of 12 inches and shall be protected from displacement. The burlap shall be presoaked for a minimum of 24 hours and shall be drained of excel water prior to application.
2. Moisture-Retaining-Cover Curing: Cover concrete surfaces with moisture-retaining cover for curing concrete, placed in widest practicable width, with sides and ends lapped at least 12 inches, and scaled by waterproof tape or adhesive. Cure for not less than seven days. Immediately repair any holes or tears during curing period using cover material and waterproof tape.

F. Protect completed work from damage and construction operations throughout finishing and curing operations.

G. Removal of the burlap should be done late in the day so as to reduce the thermal shock to the overlay.

3.6 JOINT FILLING

A. Prepare and clean contraction joints and install semirigid joint filler, according to manufacturer's written instructions, once topping has fully cured.

B. Remove dirt, debris, saw cuttings, curing compounds, and sealers from joints; leave contact faces of joint clean and dry.

C. Install semirigid joint filler full depth of contraction joints. Overfill joint and trim semirigid joint filler flush with top of joint after hardening.

3.7 REPAIRS

A. Defective Topping: Repair and patch defective concrete overlay areas, including areas that have not bonded to concrete substrate.

3.8 FIELD QUALITY CONTROL

A. Testing Agency: Engage a qualified independent testing and inspecting agency to perform field tests and inspections and prepare test reports.

B. Testing Services: Testing and inspecting of completed applications of concrete overlays shall take place in successive stages, in areas of extent and using methods as follows:

1. Sample Sets: At point of placement, a set of 4 molded-cube samples shall be taken from the topping mix for the first 1000 sq. ft. plus 1 set of samples for each subsequent 5000 sq. ft. of topping, or fraction thereof, but not less than 6 samples for each day's placement. Samples shall be tested according to ASTM C 109/C 109M for compliance with compressive-strength requirements.
2. Concrete overlay shall be tested for delamination by dragging a steel chain over the surface.
3. Concrete overlay shall be tested for compliance with surface flatness and levelness tolerances.

C. Remove and replace applications of concrete overlay where test results indicate that it does not comply with specified requirements.

D. Additional testing and inspecting, at Contractor's expense, will be performed to determine compliance of replaced or additional work with specified requirements.

SECTION 03 53 20

SECTION 05 52 00 - METAL HANDRAIL AND GUARDRAIL SYSTEMS

PART 1 - GENERAL

1.1 RELATED DOCUMENTS

A. Drawings and general provisions of the Contract, including General and Supplementary Conditions and Division 01 General Requirements, apply to this Section.

1.2 SUMMARY

A. **The work specified in this Section consists of furnishing and installing metal handrails, guardrails and railings as shown and as indicated on the Contract Drawings, including, but not limited to**:

1. Powder-Coated Galvanized Steel Guardrails
2. Anodized Aluminum Handrails
3. Powder-Coated Galvanized Steel Handrails

1.3 PERFORMANCE REQUIREMENTS

A. **American Society for Testing and Materials (ASTM)**:

1. A36, Specification for Carbon Structural Steel.
2. A53, Specification for Pipe, Steel, Black and Hot-Dipped, Zinc-Coated Welded and Seamless.
3. A153, Specification for Zinc Coating (Hot-Dip) on Iron and Steel Hardware.
4. A307, Specification for Carbon Steel Bolts and Studs, 60,000 psi Tensile Strength.
5. A320, Specification for Alloy Steel Bolting Materials for Low-Temperature Service.
6. A449, Specification for Quenched and Tempered Steel Bolts and Studs.
7. A563, Specification for Carbon and Alloy Steel Nuts.
8. E935, Test Methods for Performance of Permanent Metal Railing Systems and Rails for Buildings.

B. **American Welding Society (AWS)**:

1. ANSI/AWS D1.1 - Structural Welding Code.

C. **Steel Structures Painting Council (SSPC)**:

1. Steel Structures Painting Manual, Volume 2, "Systems and Specifications".

1.4 COORDINATION

A. Coordinate selection of shop primers with topcoats to be applied over them. Comply with paint and coating manufacturers' written recommendations to ensure that shop primers and topcoats are compatible with one another.

B. Coordinate installation of anchorages for railings. Furnish setting drawings, templates, and directions for installing anchorages, including sleeves, concrete inserts, anchor bolts, and items with integral anchors, that are to be embedded in concrete or masonry. Deliver such items to Project site in time for installation.

C. Schedule installation so wall attachments are made only to completed walls. Do not support railings temporarily by any means that do not satisfy structural performance requirements.

1.5 SUBMITTALS

A. **Submit the following**:

1. Shop Drawings: Show plans and sections; materials of construction; finishes; methods of fastening; locations of cuts, copes, connections, holes, and threaded fasteners; methods of joining components; type, size, and spacing of welds; and proposed marking of fabrications which will require field assembly.

2. The contractor has an absolute obligation to meet all applicable codes controlling the fabrication and installation of handrails and guardrails. Shop drawings which either omit information or show information which is in violation of applicable codes will not, even if approved, allow the contractor to install components which will not meet code. Any railing which does not conform to the applicable codes will be removed and replaced at no cost to owner.

3. Copies of manufacturer's catalog cuts and specifications for all products listed, including but not limited to mechanically connected railings and guardrails, railing brackets, grout, anchoring cement, and paint.

4. Certificates of welders' qualifications showing date of qualification, qualification grade and rating, and notarized signature of inspector.

B. **Delegated-Design Submittal**: For railings, including structural calculations signed and sealed by the qualified professional engineer licensed in the state of Connecticut responsible for their preparation.

C. **Samples:** Provide (3) 6" long or square samples which will show adequately the quality of fabrication and finish as specified herein. All finishes on the delivered products shall be judged against these samples. Half the guardrail sample shall be bare galvanized finish while the

remaining half will be painted over the galvanized finish to show both the galvanization and painting qualities.

1. Provide (3) samples of elbow, and tee, connections along with wall brackets, escutcheon, and end stops for the handrails.

2. Provide (3) samples of all fasteners including, washers, threaded rods, bolts, and nuts.

D. **Qualification Data**: For testing agency.

E. **Product Test Reports**: For pipe and tube railings, for tests performed by a qualified testing agency, according to ASTM E 894 and ASTM E 935.

F. **Evaluation Reports**: For post-installed anchors, from ICC-ES.

1.6 QUALITY ASSURANCE

A. **Installer Qualifications**: Installer of metal handrail and guardrail systems is a certified installer with documented history installing manufacturer's products according to manufacturer's specifications.

B. **Welding Qualifications**: Qualify procedures and personnel according to the following:

1. AWS D1.1/D1.1M, "Structural Welding Code - Steel."

2. AWS D1.2/D1.2M, "Structural Welding Code - Aluminum."

3. AWS D1.6/D1.6M, "Structural Welding Code - Stainless Steel."

C. **General**: In engineering handrails and railings to withstand structural loads indicated, determine allowable design working stresses of handrail and railing materials based on the following:

1. Stainless Steel: ASCE 8, "Specification for the Design of Cold-Formed Stainless Steel Structural Members."

2. Structural Steel: AISC S335, "Specification for Structural Steel Buildings Allowable Stress Design and Plastic Design with Commentary."

D. **Structural Performance of Handrails and Railings**: Provide handrails and railings complying with requirements of ASTM E 985 for structural performance, based on testing performed according to ASTM E 894 and ASTM E 935.

E. **Structural Performance of Handrails and Railings**: Provide handrails and railings capable of withstanding structural loads required by ASCE 7 without exceeding allowable design working stresses of materials for handrails, railings, anchors, and connections.

F. **Structural Performance of Handrails and Railings**: Provide handrails, railings, and attachments capable of withstanding the following structural loads without exceeding allowable

design working stresses of materials for handrails, railings, anchors, and connections:

1. Top Rail of Guards: Capable of withstanding the following loads applied as indicated:

   a. Concentrated load of 200 lbf (890 N) applied at any point and in any direction.

   b. Uniform load of 50 lbf/ft. (730 N/m) applied horizontally and concurrently with uniform load of 100 lbf/ft. (1460 N/m) applied vertically downward.

   c. Concentrated and uniform loads above need not be assumed to act concurrently.

2. Handrails Not Serving As Top Rails: Capable of withstanding the following loads applied as indicated:

   a. Concentrated load of 250 lbf (890 N) applied at any point and in any direction.

   b. Uniform load of 50 lbf/ft. (730 N/m) applied in any direction.

   c. Concentrated and uniform loads above need not be assumed to act concurrently.

3. Infill Area of Guards: Capable of withstanding a horizontal concentrated load of 250 lb applied to 1 sq. ft. (0.09 sq. m) at any point in system, including panels, intermediate rails, balusters, or other elements composing infill area.

   a. Load above need not be assumed to act concurrently with loads on top rails in determining stress on guard.

4. Where guard and handrails shall be installed in close proximity to overhead or third rail electrical services the assemblies shall be properly grounded and bonded by the electrical contractor. Note however, that the fabricator shall only be responsible for providing tabs, (2) per guard / handrail assembly, located at both ends of the bottom horizontal tube for the attachment of grounding cables. The responsibility for the installation of the hand and guardrails per the Electrical Drawings so that grounding and bonding will function as intended shall be the responsibility of the general contractor.

G. **Field Measurements**: Where handrails and railings are indicated to fit to other construction, check actual dimensions of other construction by accurate field measurements before fabrication; show recorded measurements on final shop drawings. Coordinate fabrication schedule with construction progress to avoid delaying the Work.

1. Where field measurements cannot be made without delaying the Work, guarantee dimensions and proceed with fabricating handrails and railing systems without field measurements. Coordinate other construction to ensure that actual dimensions correspond to guaranteed dimensions.

2. When steel fabrication will be installed into an existing structure, or where the guard and handrail are configured different from the standard platform module layouts; "A," "B," "C," and "D," as shown on the standard guard/handrail drawings then field measurements for shop drawings shall be required prior to beginning fabrication.

3. Any discrepancies between the drawings and what is in the field shall be brought to the attention of the project manager. It is assumed that slight variation may exist and this is to be expected. Extras associated with discrepancies shall only be granted where these discrepancies can be proved to be a major consequence on the design and fabrication.

H. **Thermal Movements**: Provide handrails and railings that allow for thermal movements resulting from the following maximum change (range) in ambient and surface temperatures by preventing buckling, opening of joints, overstressing of components, failure of connections, and other detrimental effects. Base engineering calculation on surface temperatures of materials due to both solar heat gain and nighttime-sky heat loss.

1. Temperature Change (Range): 120 deg F (67 deg C), ambient; 180 deg F (100 deg C), material surfaces.

I. **Control of Corrosion**: Prevent galvanic action and other forms of corrosion by insulating metals and other materials from direct contact with incompatible materials.

1.7 DELIVERY, STORAGE AND HANDLING

A. Protect mechanical finishes on exposed surfaces from damage by applying a strippable, temporary protective covering before shipping.

1.8 WARRANTY

A. All components shall be warranted for 5 year against frame failure, mill scale, rusting, corrosion, rust stains, chipping, pealing, and/or paint discoloration and/or fading.

PART 2 - PRODUCTS

2.1 MATERIALS

A. **Steel**:

1. Steel Pipe for Railings and Pipe Supports: Seamless steel pipe, conforming to ASTM A53, Type S, Grade A; 1-1/2 inch diameter; standard weight. Provide special instructions to the pipe manufacturer to provide Architectural Handrail Grade Pipe.

2. Tubing: ASTM A 500 (cold formed) or ASTM A 513

3. Pipe: ASTM A 53/A 53M, Type F or Type S, Grade A, Standard Weight (Schedule 40), unless another grade and weight are required by structural loads.

a. Provide galvanized finish for exterior installations and where indicated.

4. Plate: Steel plate for anchor plates shall be standard steel plate, conforming to ASTM A36, weldable quality.

B. **Aluminum, General**: Provide alloy and temper recommended by aluminum producer and finisher for type of use and finish indicated, and with not less than the strength and durability properties of alloy and temper designated below for each aluminum form required.

1. Extruded Tubing: ASTM B 221, Alloy 6063-T5/T52.

2. Extruded Structural Round Tubing: ASTM B 429/B 429M, Alloy 6063-T6.

   a. Provide Standard Weight (Schedule 40) pipe unless otherwise indicated.

3. Drawn Seamless Tubing: ASTM B 210 (ASTM B 210M), Alloy 6063-T832.

C. **Welding Electrodes and Filler Metal**: The Contractor shall use the type and alloy of filler metal and electrodes recommended by the producer of the metal to be welded, and as required to match colors, and strength and for compatibility with the individual components of fabricated items.

D. **Anchors, Fasteners, and Accessories**: Provide all required anchors, fasteners, miscellaneous components, and accessories as required for complete and finished railing installations. Bolts and studs, nuts, and washers shall conform to ASTM A307, A449, and A563.

1. Expansion Bolts: Where anchors are not included in the concrete construction, provide stainless steel expansion type anchors with matching stainless steel bolts or studs with nuts, of sizes as indicated or required. Provide washers under all bolt heads and nuts.

E. **Handrail Brackets**: stainless steel tubing, ASTM A 554, Grade MT 316L.

1. Provide non-metallic isolators between aluminum and all ferrous metals.

F. **Powder-Coat Finish**: Prepare, treat, and coat galvanized metal to comply with resin manufacturer's written instructions and as follows:

1. Prepare galvanized metal by thoroughly removing grease, dirt, oil, flux, and other foreign matter.

2. Treat prepared metal with zinc-phosphate pretreatment, rinse, and seal surfaces.

3. Apply thermosetting polyester. Gloss 60+/-5 units. Bake 10 minutes at 400 degrees Fahrenheit.

4. Color: Vulcan Black SD, P6SB56

G. **Fasteners for Anchoring Railings to Other Construction**: Select fasteners of the type, grade, and class required to produce connections that are suitable for anchoring railing to other types of construction indicated and capable of withstanding design loadings.

1. Provide fasteners fabricated from stainless steel, type 316

H. **Fasteners for Interconnecting Railing Components**: Use fasteners of same basic metal as the fastened metal, unless otherwise indicated. Do not use metals that are corrosive or incompatible

with materials joined.

1. Provide concealed fasteners for interconnecting handrail and railing components and for attaching them to other work, except where otherwise indicated.

2. Provide concealed fasteners for interconnecting handrail and railing components and for attaching them to other work, except where exposed fasteners are unavoidable or are the standard fastening method for handrail and railing system indicated. Provide tamper resistant machine screws for exposed fasteners, unless otherwise indicated.

3. Provide non-metallic isolators between aluminum and all ferrous metals.

4. All exposed fasteners shall be tamper resistant.

2.2 MISCELLANEOUS MATERIALS

A. **Welding Rods and Bare Electrodes**: Select according to AWS specifications for metal alloy welded.

1. For aluminum railings, provide type and alloy as recommended by producer of metal to be welded and as required for color match, strength, and compatibility in fabricated items.

B. **Bituminous Paint**: Cold-applied asphalt emulsion complying with ASTM D 1187/D 1187M.

C. **Nonshrink, Nonmetallic Grout**: Factory-packaged, nonstaining, noncorrosive, nongaseous grout complying with ASTM C 1107/C 1107M. Provide grout specifically recommended by manufacturer for exterior applications.

D. **Anchoring Cement**: Factory-packaged, nonshrink, nonstaining, hydraulic-controlled expansion cement formulation for mixing with water at Project site to create pourable anchoring, patching, and grouting compound.

1. Water-Resistant Product: At exterior locations and where indicated provide formulation that is resistant to erosion from water exposure without needing protection by a sealer or waterproof coating and that is recommended by manufacturer for exterior use.

2.3 FABRICATION

A. **General**: Fabricate railings to comply with requirements indicated for design, dimensions, member sizes and spacing, details, finish, and anchorage, but not less than that required to support structural loads.

B. Fabricate pipe railings to dimensions and details indicated with smooth bends and to other requirements specified herein.

C. **Welded Connections**: Fully weld connections, heat and bend bends without distorting metal. Cope intersections of rails and posts, weld joints and grind smooth. Butt-weld end-to-end joints

of railings. In all cases, fabricate top rail continuous over posts, and posts continuous from base to top rail. Welding procedures and welding operations shall conform to, and welders and tackers shall be qualified, in accordance with ANSI/AWS D1.1.

D. **Welded Connections for Aluminum Pipe**: Fabricate railings to interconnect members with concealed internal welds that eliminate surface grinding, using manufacturer's standard system of sleeve and socket fittings.

E. Form exposed work to line and level with angles and surface and with straight sharp edges. Ease exposed edges to radius of approximately 1/32 inch unless otherwise shown. Form bent-metal corners to the smallest radius possible without causing grain separation or otherwise impairing the work.

F. Form exposed connections with hairline joints to exclude water and which are flush and smooth, using concealed fasteners wherever possible. Use exposed fasteners of the type shown, or if not shown, Phillips flathead (countersunk) screws or bolts.

G. Assemble railing systems in shop to the greatest extent possible to minimize field splicing and assembly. Disassemble units only as necessary for shipping and handling limitations. Clearly mark units for reassembly and coordinated installation. Use connections that maintain structural value of joined pieces.

H. **Form changes in direction of railing members as follows:**

1. By radius bends of radius indicated.

2. By flush radius bends.

3. By bending.

4. By mitering at elbow bends.

5. By insertion of prefabricated flush elbow fittings.

6. By any method indicated above, applicable to change of direction involved.

I. **Brackets, Flanges, Fittings, and Anchors**: Provide wall brackets, flanges, miscellaneous fittings, and anchors to interconnect railing members to other work unless otherwise indicated.

J. Form simple and compound curves by bending members in jigs to produce uniform curvature for each repetitive configuration required; maintain profile of member throughout entire bend without buckling, twisting, cracking, or otherwise deforming exposed surfaces of handrail and railing components.

K. Provide inserts and other anchorage devices for connecting railings to concrete or masonry work. Fabricate anchorage devices capable of withstanding loads imposed by railings. Coordinate anchorage devices with supporting structure.

L. **Fabrication Tolerances:**

1. Max. Bow and Camber: 1/8" in 8 feet.

2. Max. Misalignment: 1/16" in 8 feet.

2.4 GALVANIZED STEEL FINISH

A. **Galvanized Guardrails and Handrails**:

1. Hot-dip galvanize steel railings, including hardware, after fabrication.

2. Comply with ASTM A 123/A 123M for hot-dip galvanized railings.

3. Comply with ASTM A 153/A 153M for hot-dip galvanized hardware.

4. Do not quench or apply post galvanizing treatments that might interfere with powder-coat adhesion.

5. Fill vent and drain holes that are exposed in the finished Work, unless indicated to remain as weep holes, by plugging with zinc solder and filing off smooth.

B. For galvanized railings, provide hot-dip galvanized fittings, brackets, fasteners, sleeves, and other ferrous components.

C. **Preparing Galvanized Railings for Shop Priming**: After galvanizing, thoroughly clean railings of grease, dirt, oil, flux, and other foreign matter, and treat with etching cleaner.

2.5 ALUMINUM FINISH

A. **Appearance of Finished Work**: Variations in appearance of abutting or adjacent pieces are acceptable if they are within one-half of the range of approved Samples. Noticeable variations in the same piece are unacceptable. Variations in appearance of other components are acceptable if they are within the range of approved Samples and are assembled or installed to minimize contrast.

B. **Clear Anodic Finish**: AAMA 611, AA-M12C22A41

2.6 CLEANING

A. **Corrosion Control**: Apply corrosion inhibitor to railing surface that will abut surfaces constituted of material other than that of the fabricated metal product.

PART 3 - EXECUTION

3.1 EXAMINATION

A. Install metal handrails and guardrails in accordance with the Contract Drawings and the

approved shop drawings.

B. Install metal handrails and guardrails with accessories furnished by the railing fabricator as required for complete and finished railing installations.

C. Install handrails and guardrails in accordance with approved shop drawings, true and horizontal, perpendicular, or at the required angle, as the case may be, level and square, with angles and edges parallel with related lines of the building or structure.

D. Adjust railing prior to securing in place to ensure proper matching of butting joints and correct alignment throughout their length. Secure posts not more than 8 feet on center, unless otherwise indicated. Plumb posts in each direction.

E. **Secure posts and rail ends as follows**:

1. Installation in new concrete:

a. Set posts in sleeves which have been set in concrete, and grout posts therein with non-shrink grout.

2. Anchor rail ends into concrete and masonry with steel round flanges welded to rail ends and anchored into the wall construction with expansion bolts.

3. Anchor rail ends to steel with steel oval or round flanges welded to rail ends and bolted to the structural steel members, unless otherwise indicated.

4. Provide removable railing sections as indicated. Furnish slip-fit metal socket or sleeve for casting into concrete. Accurately locate sleeve to match post spacings.

F. **Other than field welded connections**:

1. Assemble connections end-to-end and splice joints with internal sleeves.

2. Fitting assembly:

a. Assemble pipe at joints and drive together within 0.02 inch.

b. Assemble fittings into posts before pressing rails into fittings.

3.2 PREPARATION

A. Comply with AWS code for procedures of manual shielded metal-arc welding, appearance and quality of welds made, and methods used in correcting welding work.

B. All welds shall be subjected to a visual inspection by an independent inspection agency, provided by and paid by the Contractor, for conformance with ANSI/AWS D1.1.

3.3 INSTALLATION, GENERAL

A. Restore finishes damaged during installation and construction period so no evidence remains of correction work. Return items that cannot be refinished in the field to the shop; make required alterations and refinish entire unit, or provide new units.

B. Clean aluminum and stainless steel by washing thoroughly with clean water and soap and rinsing with clean water.

3.4 PROTECTION

A. Protect finishes of railings from damage during construction period with temporary protective coverings approved by railing manufacturer. Remove protective coverings at time of Substantial Completion.

END OF SECTION 05 52 00

SECTION 05 55 13 – METAL STAIR TREADS

PART 1 - GENERAL

1.1 RELATED DOCUMENTS

A. Drawings and general provisions of the Contract, including General and Supplementary Conditions and Division 01 General Requirements, apply to this Section.

1.2 SUMMARY

A. **This section includes the following**:

1. Furnish all labor, materials, tools and equipment, and perform all operations related to abrasive stair treads, set in locations as indicated on the Contract Drawings and herein specified. Work includes:

a. Furnish and install abrasive cast aluminum treads

B. **Related Sections**:

1. Section 03 30 00 Cast in Place Concrete

1.3 COORDINATION

A. Coordinate installation of anchorages for metal stair treads. Furnish setting drawings, templates, and directions for installing anchorages, concrete inserts, anchor bolts, and items with integral anchors that are to be embedded in concrete or masonry.

1.4 SUBMITTALS

A. Submit shop drawings showing plan and installation details including fastening for review.

B. Submit manufacturer's specifications, product data, and installation instructions for review.

C. Warranty Certificate.

1.5 QUALITY ASSURANCE

A. Metal stair treads shall be in compliance with Department of Transportation ADA Standards for Transportation Facilities (2006 edition).

1.6 DELIVERY, STORAGE, AND HANDLING

A. Deliver, store, and handle materials as recommended by the Manufacturer, to protect from damage.

1.7 WARRANTY

A. Manufacturer's standard warranty: Products will be free of manufacturing and material defects. Any defective product will be replaced or repaired free of any charge. Claim have to be brought to manufacturer's attention, in writing, within *One Year* following the date of Final Acceptance.

PART 2 - PRODUCTS

2.1 MANUFACTURERS

A. **List of recommended manufactures**:

1. Safe-T-Metal Company, Inc., Aluminum, Style B4
2. Wooster Products Inc., ALUMOGRIT; Type 101
3. Westfield Sheet Metal Works, Inc
4. American Safety Tread Co, Inc., ALUMACAST
5. American Abrasive Metals Company; Style A.
6. Or Engineer's Approved Equal

2.2 MATERIALS

A. **Provide Cast Aluminum abrasive stair treads and landings, 3/8" thick for all stairs**:

1. Abrasive shall be #20 virgin grain Aluminum Oxide (AL2O3) abrasive, integrally cast into the walking surface to a minimum depth of 1/32 inch (0.79 mm).
2. Concealed type anchors shall be slotted rivet type, integrally cast into the body of the nosing a minimum of 3/8". (Not mushroom type.)
3. Cast metals used shall conform to the following specification:
   a. Abrasive Cast Aluminum:
      1) No. 43 prime and secondary ingot; low copper content; corrosion resistant.
4. Any holes or countersinks shall be machine-made; cored holes or countersinks are not acceptable. Screw heads shall not protrude above tread surface.

5. Cross hatching and fluting shall be 1/16 inch (1.59 mm) deep minimum and shall be clean and well defined; treads and nosing's shall be manufactured, packed and shipped so as to arrive at the jobsite in good condition.

PART 3 - EXECUTION

3.1 PREPARATION

A. Transmit Submittals required by this Section

B. Furnish products as indicated

C. Ensure substrates are in suitable condition to receive work.

1. Installer shall examine conditions under which work is to be performed and shall notify the contractor in writing of unsatisfactory conditions. Installer shall not proceed until unsatisfactory conditions have been corrected in a manner acceptable to the installer.

3.2 INSTALLATION

A. Install stair nosings in accordance with the governing regulations, the industry standards applicable to the work, and the manufacturer's written installation instructions.

B. Work shall be aligned plumb, level, and, where required, flush with adjacent surfaces and rigidly anchored to the substrate.

C. Treads shall be installed in accordance with the manufacturer's instructions.

D. At the completion of the work, all damaged, improperly installed and marred work shall be replaced or repaired to the satisfaction of the Engineer.

E. Nosings shall terminate not more than 3" from ends of steps for poured concrete stairs; for steel stairs, nosings shall be full length of steps less 1/8" (3.05 mm) clearance.

F. NOTE: Safety nosing's going into new poured concrete or cement fill shall be installed before "Initial Set" of the concrete or cement occurs.

3.3 CLEANING

A. Clean exposed surfaces as recommended by the manufacturer.

3.4 PROTECTION

A. Contractor is to coordinate work within this Section with work of other Sections during the remainder of construction. Protect work within this Section to prevent damage.

B. Finished units shall be without damage. Units damaged during shipping or construction shall be repaired by the contractor at the expense of the party damaging the material, in accordance with the contract requirements.

END OF SECTION 05 55 13

SECTION 06 64 00 - POLYETHYLENE RUB RAIL

PART 1 - GENERAL

1.1 DESCRIPTION

A. Work under this item shall consist of furnishing, transporting, storing, handling, and installing polyethylene rub rail units on the track sides of the proposed platform sections. The work shall be performed in accordance with the plans and these specifications. This work includes all necessary materials and equipment to complete the work as shown on the plans, including all stainless steel anchor bolts.

B. The silicone joint sealant between the polyethylene rub rail units and both the cast-in-place microsilica concrete platform overlay (Section 03 53 20) and railroad platform waterproofing (Section 09 67 10) shall be furnished and installed in accordance with the CSI-formatted specification SECTION 07 92 05 - CONCRETE OVERLAY JOINT.

1.1 SUBMITTALS

A. **Shop Drawings:** The Contractor shall submit shop drawings addressing all the elements that make up the polyethylene rub rail units, in accordance with the pertinent requirements of CTDOT Form 816 Sections 5.14.03-1 and 6.03.03-2, and the NOTICE TO CONTRACTOR – SUBMITTALS, and the following.

1. At a minimum, the Shop Drawings shall include the following information:

a. Layout plan indicating unit dimensions, hole and groove spacing and dimensions, lengths of units, and fastening schedule.
b. Product data for review and approval.

1.2 MAINTENANCE MATERIAL SUBMITTALS

A. Furnish extra materials that match products installed and that are packaged with protective covering for storage and identified with labels describing contents.

1. Rub Rail Units: 4 full-length pieces.

2. Hardware: Adequate hardware for the replacement of four pieces.

1.3 QUALITY ASSURANCE

A. Source Limitations: Obtain products from a single manufacturer.

B. The coefficient of thermal expansion in degrees Fahrenheit, tested in accordance with ASTM D696, shall not be greater than:

1. 0 to 75 degrees: 1.1×10^{-4} inches per inch

2. 75 to 120 degrees: 1.87×10^{-4} inches per inch

C. Fabrication Tolerances:

1. The straightness tolerance on the concrete edge side of the rubbing board shall be 1/8 inch in a ten foot section.

2. The variation in width of the board shall not be more than 1/16 of an inch in any length section.

3. The Contractor shall coordinate the location of fasteners with the factory-drilled holes in the units prior to fabrication.

1.4 DELIVERY, STORAGE, AND HANDLING

A. Handle and store in compliance with manufacturer's written instructions.

1.5 FIELD CONDITIONS

A. Field Measurements: Verify all dimensions of related construction by field measurements before fabrication and indicate measurements on Shop Drawings. Coordinate fabrication schedule with construction progress to avoid delaying the Work.

PART 2 - PRODUCTS

2.1 POLYETHYLENE RUB RAIL UNITS

A. Size and shape shall be as indicated on the Contract Drawings. The rub rail units shall be fire-retardant ultra-high molecular weight polyethylene bar stock. The top surface shall be scarified to create a non-slip surface.

1. Manufacturers: Subject to compliance with requirements, provide one of the following:

a. Units fabricated by Polymer Industries, 2926 South Steel, Tacoma, WA 98409 distributed by TriStar Engineered Plastic Solutions. Contact: Brian Parath, Branch Manager, TriStar Plastics Corp. telephone: 508.925.7409, bparath@tstar.com.

b. Approved Equal.

2. Cross Section Dimensions: As indicated on drawings.

3. Holes for Fastening: Provide factory-cut recessed holes and spline grooves as described in the contract drawings or as recommended by the manufacturer.

4. Lengths: Fabricate product to the maximum length possible to suit job conditions, but at least 10’- 0” long.

5. Fasteners shall be Type 304 or Type 316 stainless steel.

6. Exterior Surface: Non-yellowing, UV Stable surfaces all sides.

7. Color: Safety Yellow.

8. Dry Coefficient of Friction (traffic surface): 0.80

9. Flammability: Flame Spread per ASTM E162-02: 35 Maximum Radiant Panel Index IS.

10. Smoke Generation per ASTM E662

    a. Flaming Mode: Specific Optical Density DS: 12 max., Maximum Specific Optical Density D_M: 430.
    b. Non-Flaming Mode: Specific Optical Density DS: 8 max., Maximum Specific Optical Density D_M: 246.
    c. Smoke Toxicity per ASTM E800:
        1) Carbon Monoxide (CO): 123 ppm max.
        2) Hydrogen Flouride (HF): 1.5 ppm max.
        3) Hydrogen Chloride (HCI): 12 ppm max.
        4) Hydrogen Cyanide (HCN): 2 ppm max.
        5) Nitrogen Oxides (NOX): 53 ppm max.
        6) Sulfur Dioxide (SO2): 1 ppm max.
        7) Carbon Dioxide (CO2): 10,000 ppm max.

B. Centering Splines: Use manufacturers recommended fiberglass centering splines and type 304 stainless steel screws as recommended by the manufacturer, whichever is more stringent.

PART 3 - EXECUTION

3.1 EXAMINATION

A. Examine substrates and conditions, with Installer present, for compliance with requirements for installation tolerances and other conditions affecting performance of the Work.

B. Proceed with installation only after unsatisfactory conditions have been corrected.

3.2 PREPARATION

A. Clean substrates of projections and substances detrimental to application.

3.3 GENERAL INSTALLATION REQUIREMENTS

A. The Contractor shall gauge the track side edge of the platform sections with the center line of track and dress the platform section edge to provide the proper train clearance as follows:

1. If the centerline of the track is on a curve, this clearance shall be increased in accordance with AREMA clearance standards, unless other instructions are given on the Contract Drawings.

B. Attach polyethylene rub rail units after platforms sections have been erected and properly leveled. Do not shim units.

C. Install rub rail units true, straight, and plumb with no distortions.

D. Attach polyethylene rub rail units to platform sections with approved stainless steel, corrosion proof anchor rods.

E. Maintain uniform space between adjacent units and adjacent surfaces. Fill space with sealant as indicated on the plans.

3.4 ADJUSTING, CLEANING, AND REPLACEMENT

A. Adjust rub rail units vertically to match dimensions indicated on the plans. Align individual pieces both horizontally and vertically within 1/16”, with no more than 1/8” gap between pieces at butt joints.

B. Adjust rub rail units to account for thermal expansion in the long direction of the unit. Cut units and install 1/8” gapped butt joints as required to prevent buckling of the units during expansions.

C. Repair damaged and defective rub rail units to eliminate functional and visual defects; replace units where not possible to repair. Adjust joinery for uniform appearance.

D. If the rub rail units are struck by railroad traffic prior to substantial completion, the Contractor shall repair or replace the units to the Engineer’s satisfaction at the Contractor’s expense.

E. Remove smears as rub rail units are installed. Clean with solvent recommended by the rub rail manufacturer and then wipe with clean dry cloths until no residue remains.

F. Clean rub rail units on exposed and semi exposed surfaces.

END OF SECTION 06 64 00

SECTION 07 62 00 – SHEET METAL FLASHING AND TRIM

PART 1 - GENERAL

1.1 RELATED DOCUMENTS

A. Drawings and general provisions of the Contract, including General and Supplementary Conditions and Division 01 Specification Sections, apply to this Section.

1.2 SUMMARY

A. **Section Includes**:

1. Formed wall sheet metal fabrications.

B. **Related Requirements**:

1. Section 13 34 19 – Pre-engineered platform shelters and windscreens

1.3 COORDINATION

A. Coordinate sheet metal flashing and trim layout and seams with sizes and locations of penetrations to be flashed, and joints and seams in adjacent materials.

B. Coordinate sheet metal flashing and trim installation with adjoining roofing and wall materials, joints, and seams to provide leakproof, secure, and noncorrosive installation.

1.4 ACTION SUBMITTALS

A. **Product Data**: For each type of product.

1. Include construction details, material descriptions, dimensions of individual components and profiles, and finishes for each manufactured product and accessory.

B. **Shop Drawings**: For sheet metal flashing and trim.

1. Include plans, elevations, sections, and attachment details.

2. Detail fabrication and installation layouts, expansion-joint locations, and keyed details. Distinguish between shop- and field-assembled work.

3. Include identification of material, thickness, weight, and finish for each item and location in Project.

4. Include details for forming, including profiles, shapes, seams, and dimensions.

5. Include details for joining, supporting, and securing, including layout and spacing of fasteners, cleats, clips, and other attachments. Include pattern of seams.

6. Include details of termination points and assemblies.

7. Include details of expansion joints and expansion-joint covers, including showing direction of expansion and contraction from fixed points.

8. Include details of roof-penetration flashing.

9. Include details of special conditions.

10. Include details of connections to adjoining work.

C. **Samples for Initial Selection**: For each type of sheet metal and accessory indicated with factory-applied finishes.

1. Trim, Metal Closures, Expansion Joints, Joint Intersections, and Miscellaneous Fabrications: 12 inches long and in required profile. Include fasteners and other exposed accessories.

2. Unit-Type Accessories and Miscellaneous Materials: Full-size Sample.

3. Anodized Aluminum Samples: Samples to show full range to be expected for each color required.

1.5 INFORMATIONAL SUBMITTALS

A. **Qualification Data**: For fabricator.

B. **Sample Warranty**: For special warranty.

1.6 CLOSEOUT SUBMITTALS

A. **Maintenance Data**: For sheet metal trim, and its accessories, to include in maintenance manuals.

1.7 QUALITY ASSURANCE

A. **Fabricator Qualifications**: Employs skilled workers who custom fabricate sheet metal trim similar to that required for this Project and whose products have a record of successful in-service performance.

1.8 DELIVERY, STORAGE, AND HANDLING

A. Do not store sheet metal flashing and trim materials in contact with other materials that might cause staining, denting, or other surface damage. Store sheet metal flashing and trim materials

away from uncured concrete and masonry.

B. Protect strippable protective covering on sheet metal flashing and trim from exposure to sunlight and high humidity, except to extent necessary for period of sheet metal flashing and trim installation.

1.9 WARRANTY

A. **Special Warranty on Finishes**: Manufacturer agrees to repair finish or replace sheet metal flashing and trim that shows evidence of deterioration of factory-applied finishes within specified warranty period.

1. Finish Warranty Period: 10 years from date of Substantial Completion.

PART 2 - PRODUCTS

2.1 PERFORMANCE REQUIREMENTS

A. **General**: Sheet metal flashing and trim assemblies shall withstand wind loads, structural movement, thermally induced movement, and exposure to weather without failure due to defective manufacture, fabrication, installation, or other defects in construction. Completed sheet metal flashing and trim shall not rattle, leak, or loosen, and shall remain watertight.

B. **Thermal Movements**: Allow for thermal movements from ambient and surface temperature changes to prevent buckling, opening of joints, overstressing of components, failure of joint sealants, failure of connections, and other detrimental effects. Base calculations on surface temperatures of materials due to both solar heat gain and nighttime-sky heat loss.

1. Temperature Change: 120 deg F ambient; 180 deg F material surfaces.

2.2 SHEET METALS

A. **General:** Protect mechanical and other finishes on exposed surfaces from damage by applying strippable, temporary protective film before shipping.

B. **Aluminum Sheet**: ASTM B 209, alloy as standard with manufacturer for finish required, with temper as required to suit forming operations and performance required; with smooth, flat surface.

1. Color Anodic Finish, Coil Coated: AAMA 611, AA-M12C22A42/A44, Class I, 0.018 mm or thicker.

a. Color: Black.

2.3 MISCELLANEOUS MATERIALS

A. **General**: Provide materials and types of fasteners, protective coatings, sealants, and other miscellaneous items as required for complete sheet metal flashing and trim installation and as recommended by manufacturer of primary sheet metal unless otherwise indicated.

B. **Fasteners**: Wood screws, annular threaded nails, self-tapping screws, self-locking rivets and bolts, and other suitable fasteners designed to withstand design loads and recommended by manufacturer of primary sheet metal.

1. General: Blind fasteners or self-drilling screws, gasketed, with hex-washer head.

a. Exposed Fasteners: Heads matching color of sheet metal using plastic caps or factory-applied coating. Provide metal-backed EPDM or PVC sealing washers under heads of exposed fasteners bearing on weather side of metal.

b. Blind Fasteners: High-strength aluminum or stainless-steel rivets suitable for metal being fastened.

c. Spikes and Ferrules: Same material as gutter; with spike with ferrule matching internal gutter width.

2. Fasteners for Aluminum Sheet: Aluminum or Series 300 stainless steel.

C. **Elastomeric Sealant**: ASTM C 920, elastomeric silicone polymer sealant; of type, grade, class, and use classifications required to seal joints in sheet metal flashing and trim and remain watertight.

D. **Bituminous Coating**: Cold-applied asphalt emulsion according to ASTM D 1187.

E. **Asphalt Roofing Cement**: ASTM D 4586, asbestos free, of consistency required for application.

2.4 FABRICATION, GENERAL

A. **General**: Custom fabricate sheet metal flashing and trim to comply with details shown and recommendations in cited sheet metal standard that apply to design, dimensions, geometry, metal thickness, and other characteristics of item required. Fabricate sheet metal flashing and trim in shop to greatest extent possible.

1. Fabricate sheet metal flashing and trim in thickness or weight needed to comply with performance requirements, but not less than that specified for each application and metal.

2. Obtain field measurements for accurate fit before shop fabrication.

3. Form sheet metal flashing and trim to fit substrates without excessive oil canning, buckling, and tool marks; true to line, levels, and slopes; and with exposed edges folded back to form hems.

4. Conceal fasteners and expansion provisions where possible. Do not use exposed fasteners

on faces exposed to view.

B. **Fabrication Tolerances**: Fabricate sheet metal flashing and trim that is capable of installation to a tolerance of 1/4 inch in 20 feet on slope and location lines indicated on Drawings and within 1/8-inch offset of adjoining faces and of alignment of matching profiles.

C. **Expansion Provisions**: Form metal for thermal expansion of exposed flashing and trim.

1. Form expansion joints of intermeshing hooked flanges, not less than 1 inch deep, filled with butyl sealant concealed within joints.

D. **Sealant Joints**: Where movable, non-expansion-type joints are required, form metal to provide for proper installation of elastomeric sealant according to cited sheet metal standard.

E. **Seams for Aluminum**: Fabricate nonmoving seams with flat-lock seams. Form seams and seal with epoxy seam sealer.

F. Do not use graphite pencils to mark metal surfaces.

PART 3 - EXECUTION

3.1 EXAMINATION

A. Examine substrates, areas, and conditions, with Installer present, for compliance with requirements for installation tolerances, substrate, and other conditions affecting performance of the Work.

1. Verify compliance with requirements for installation tolerances of substrates.

2. Verify that substrate is sound, dry, smooth, clean, sloped for drainage, and securely anchored.

B. Proceed with installation only after unsatisfactory conditions have been corrected.

3.2 INSTALLATION, GENERAL

A. **General**: Anchor sheet metal flashing and trim and other components of the Work securely in place, with provisions for thermal and structural movement. Use fasteners, protective coatings, separators, sealants, and other miscellaneous items as required to complete sheet metal flashing and trim system.

1. Install sheet metal flashing and trim true to line, levels, and slopes. Provide uniform, neat seams with minimum exposure of solder, welds, and sealant.

2. Install sheet metal flashing and trim to fit substrates and to result in watertight performance. Verify shapes and dimensions of surfaces to be covered before fabricating sheet metal.

3. Install exposed sheet metal flashing and trim with limited oil canning, and free of buckling and tool marks.

4. Torch cutting of sheet metal flashing and trim is not permitted.

5. Do not use graphite pencils to mark metal surfaces.

B. **Metal Protection**: Where dissimilar metals contact each other, or where metal contacts pressure-treated wood or other corrosive substrates, protect against galvanic action or corrosion by painting contact surfaces with bituminous coating or by other permanent separation as recommended by sheet metal manufacturer or cited sheet metal standard.

1. Coat concealed side of uncoated-aluminum sheet metal flashing and trim with bituminous coating where flashing and trim contact wood, ferrous metal, or cementitious construction.

2. Underlayment: Where installing sheet metal flashing and trim directly on cementitious or wood substrates, install underlayment and cover with slip sheet.

C. **Expansion Provisions**: Provide for thermal expansion of exposed flashing and trim. Space movement joints at maximum of 10 feet with no joints within 24 inches of corner or intersection.

1. Form expansion joints of intermeshing hooked flanges, not less than 1 inch deep, filled with sealant concealed within joints.

D. **Fasteners**: Use fastener sizes that penetrate substrate not less than recommended by fastener manufacturer to achieve maximum pull-out resistance.

E. Conceal fasteners and expansion provisions where possible in exposed work and locate to minimize possibility of leakage. Cover and seal fasteners and anchors as required for a tight installation.

F. Seal joints as required for watertight construction.

1. Use sealant-filled joints unless otherwise indicated. Embed hooked flanges of joint members not less than 1 inch into sealant. Form joints to completely conceal sealant. When ambient temperature at time of installation is between 40 and 70 deg F set joint members for 50 percent movement each way. Adjust setting proportionately for installation at higher ambient temperatures. Do not install sealant-type joints at temperatures below 40 deg F.

2. Prepare joints and apply sealants to comply with requirements in Section 079200 "Joint Sealants."

3.3 ERECTION TOLERANCES

A. **Installation Tolerances**: Shim and align sheet metal flashing and trim within installed tolerance of 1/4 inch in 20 feet on slope and location lines indicated on Drawings and within 1/8-inch offset of adjoining faces and of alignment of matching profiles.

B. **Installation Tolerances**: Shim and align sheet metal flashing and trim within installed tolerances specified in MCA's "Guide Specification for Residential Metal Roofing."

3.4 CLEANING AND PROTECTION

A. Clean off excess sealants.

B. Remove temporary protective coverings and strippable films as sheet metal flashing and trim are installed unless otherwise indicated in manufacturers written installation instructions. On completion of sheet metal flashing and trim installation, remove unused materials and clean finished surfaces as recommended by sheet metal flashing and trim manufacturer. Maintain sheet metal flashing and trim in clean condition during construction.

C. Replace sheet metal flashing and trim that have been damaged or that have deteriorated beyond successful repair by finish touchup or similar minor repair procedures.

END OF SECTION 07 62 00

SECTION 07 91 15 – PLATFORM EXPANSION JOINT SYSTEM

PART 1 - GENERAL

1.1 DESCRIPTION

A. Work under this item shall consist of furnishing and installing preformed polychloroprene (neoprene) compression joint seals of the open-cell compression type, at the locations and of the size shown on the plans, as directed by the Engineer and in accordance with these specifications.

B. This specification also covers the lubricant-adhesive used when installing the seal.

1.2 SUBMITTALS

A. A Materials Certificate will be required in accordance with CTDOT Form 816 Article 1.06.07 certifying the conformance of the platform expansion joint system components to the requirements set forth in this specification.

PART 2 - PRODUCTS

2.1 MATERIALS

A. **Preformed Polychloroprene Compression Joint Seal**

1. The preformed polychloroprene compression joint seal shall be manufactured from a vulcanized elastomeric compound using polymerized chloroprene as the only base polymer. Polychloroprene shall make up at least 50% of the compound used in the manufacture of the seal.

2. The compression joint seal shall be as follows or an approved equal:

   a. Preformed Polychloroprene Compression Joint Seal, manufactured by:
      1) The D.S. Brown Company
         300 East Cherry Street
         North Baltimore, OH 45872
         Phone: (419) 257-3561

3. Physical Properties:

   a. The material shall conform to USACE CRD-C 548 for jet fuel and heat resistance.
   b. The material shall conform to the physical properties prescribed in the table below (ASTM D2628 modified).

Property	Requirements	ASTM Method
Tensile Strength, min psi	2000	D412
Elongation at break, min %	250	D412
Hardness, Type A Durometer	60 ± 5	D2240 a*
Oven Aging, 70 hrs. @ 212°F Tensile strength, loss, max., % Elongation, loss, max., % Hardness, Type A, points change	20 max. 20 max. 0 to +10	D573
Oil Swell, ASTM Oil IRM 903 70 hrs @ 212°F Weight change, max., %	45 max.	D471
Ozone Resistance 20% strain, 300 pphm, 70 hrs. @ 104°F	No cracks	D1149 b*

*a: The use of joint seal as the specimen source requires that more plies than specified in the procedure be used.
*b: Test in accordance with procedure A of D518.

4. Sampling:

   a. A lot shall consist of no more than one manufacturer's production day or 30,000 linear feet, whichever is less. Samples shall be taken at random from each lot to be shipped. A minimum of six linear feet shall constitute one sample for testing purposes.

5. Testing:

   a. Testing shall be completed on each lot by the manufacturer. Specimen preparation and testing shall follow the method explained in ASTM D2628 (modified). A copy of this method may be obtained from the manufacturer of the seal.

B. **Lubricant Adhesive**

1. The lubricant-adhesive used to install the preformed polychloroprene (neoprene) joint seal shall be a one-component Urethane compound. The lubricant-adhesive shall meet ASTM D4070 and shall have the following properties:

Lubricant-adhesive Properties
Solids Content 60%, by weight
The lubricant shall be uniform, contain no lumps, and have a drying time between ten and forty five minutes.
Viscosity shall be that the lubricant will perform suitably with the installation equipment.
The lubricant shall remain fluid from 5° to 120°F.
The lubricant should be kept from freezing and used within 360 days of manufacture.

2. Each lot of lubricant-adhesive shall be delivered in containers plainly marked with the manufacturer's name and trademark, lot number and date of manufacture and shall be accompanied by the manufacturer's certification as to conformance to this specification.

C. **Spall Repair Material**

1. Refer to "Repairing Spalls" under Section 3.1.A of this specification.

D. **Storage and Shipment**

1. The preformed polychloroprene (neoprene) compression joint seal is delivered either in cardboard boxes or on wooden cable reels. The proper storage of the cardboard boxes requires that the boxes be protected from moisture to keep the cardboard from deteriorating. The large wooden cable reels should be covered by a tarpaulin to keep the seal clean and free of damage.

2. The lubricant-adhesive shall be kept from freezing. The containers of lubricant-adhesive should be labeled with the manufacturer's name, catalog number, lot number and manufacture date. Also, an MSDS must accompany all shipments for the safety of the user.

PART 3 - EXECUTION

3.1 CONSTRUCTION METHODS

A. Installation:

1. The platform expansion joints shall be installed at the locations shown on the plans and in stages in accordance with the plans.

2. Tools, equipment, and techniques used to prepare the joints shall be approved by the Engineer and the manufacturer's technical representative prior to the start of construction.

3. Before installation of the compression joint seal, the vertical surfaces in the expansion joint opening receiving the seal shall be cleaned of dust, dirt, debris and other loose

materials as recommended by the manufacturer. Additionally, the vertical surfaces shall be blast cleaned if recommended by the manufacturer.

4. The lubricant-adhesive is used mainly to facilitate the installation of the preformed polychloroprene (neoprene) compression joint seal. The lubricant-adhesive will begin to thicken at 40°F. When sealing operations occur where the air temperature falls below 40°F, the lubricant-adhesive must be stored in a heated warehouse until immediately prior to use. **The Contractor shall contact the compression seal manufacturer if installing seal when temperatures are below 32°F**.

5. Repairing Spalls: Some spall repair to the vertical concrete surfaces receiving the joint seal may be necessary. For small spalls (5/8" wide or smaller and less than 3" long) the contractor shall use Sika 1A (Black), Sika Non-Sag Silicone Sealant, or an approved equal that meets ASTM D5893. As directed by the engineer, the liquid seal material will be used to fill in any small voids along the preformed polychloroprene (neoprene) compression joint seal and vertical concrete faces. Spalls larger than 5/8" wide and 3" long shall be repaired with Delpatch Elastomeric Concrete, manufactured by the D.S. Brown Company, or an approved equal.

6. Any portion of the compression joint seal that is punctured, ruptured, or damaged in any other way shall be removed and replaced by the Contractor at no additional cost to the State.

7. All work shall be done in accordance with the NOTICE TO CONTRACTOR – WORK ON RAILROAD PROPERTY.

B. Inspection:

1. Stretching the seal during installation is the major cause of premature failure of the preformed polychloroprene (neoprene) compression joint seal.

2. Inspecting for stretch should be done very early in the sealing process. The inspection involves loosely laying a piece of preformed polychloroprene (neoprene) compression joint seal the entire width of the pavement and cutting it at the exact width of the pavement. The seal is then installed in the joint. Any excess amount of seal remaining at the end of the joint is due to stretch. The length of this excess is measured and a stretch percentage is calculated by dividing the excess length by the original length. Stretch greater than 2% is unacceptable. The depth of the seal shall be 0.125 inches (± .0625 inches) below the bottom of the chamfer. The seal shall not be twisted or have any deformity that interferes with the seal making complete contact with the joint face.

C. Manufacturers Technical Representative:

1. A manufacturer's technical representative of the preformed polychloroprene (neoprene) compression joint seal must be on site for the first two days during its installation to provide guidance to the Contractor in the proper installation procedures to the satisfaction of the Engineer.

END OF SECTION 07 91 15

SECTION 07 92 00 – JOINT SEALANTS

PART 1 - GENERAL

1.1 RELATED DOCUMENTS

A. Drawings and general provisions of the Contract, including General and Supplementary Conditions and Division 01 Specification Sections, apply to this Section.

1.2 SUMMARY

A. **Section Includes**:

1. Silicone joint sealants.
2. Nonstaining silicone joint sealants.
3. Urethane joint sealants.
4. Latex joint sealants.

1.3 SUBMITTALS

A. **Product Data**: For each joint-sealant product.

B. **Samples for Verification**: For each kind and color of joint sealant required, provide Samples with joint sealants in 1/2-inch- wide joints formed between two 6-inch- long strips of material matching the appearance of exposed surfaces adjacent to joint sealants.

C. **Joint-Sealant Schedule**: Include the following information:

1. Joint-sealant application, joint location, and designation.
2. Joint-sealant manufacturer and product name.
3. Joint-sealant formulation.
4. Joint-sealant color.

D. **Qualification Data**: For qualified testing agency.

E. **Product Test Reports**: For each kind of joint sealant, for tests performed by a qualified testing agency.

F. **Preconstruction Laboratory Test Schedule**: Include the following information for each joint sealant and substrate material to be tested:

1. Joint-sealant location and designation.

2. Manufacturer and product name.

3. Type of substrate material.

4. Proposed test.

5. Number of samples required.

G. **Preconstruction Laboratory Test Reports**: From sealant manufacturer, indicating the following:

1. Materials forming joint substrates and joint-sealant backings have been tested for compatibility and adhesion with joint sealants.

2. Interpretation of test results and written recommendations for primers and substrate preparation are needed for adhesion.

H. **Preconstruction Field-Adhesion-Test Reports**: Indicate which sealants and joint preparation methods resulted in optimum adhesion to joint substrates based on testing specified in "Preconstruction Testing" Article.

I. **Field-Adhesion-Test Reports**: For each sealant application tested.

J. **Sample Warranties**: For special warranties.

1.4 QUALITY ASSURANCE

A. **Installer Qualifications**: An authorized representative who is trained and approved by manufacturer.

B. **Product Testing**: Test joint sealants using a qualified testing agency.

1. Testing Agency Qualifications: Qualified according to ASTM C 1021 to conduct the testing indicated.

C. **Mockups:** Install sealant in mockups of assemblies specified in other Sections that are indicated to receive joint sealants specified in this Section. Use materials and installation methods specified in this Section.

1.5 PRECONSTRUCTION TESTING

A. **Preconstruction Laboratory Testing**: Submit to joint-sealant manufacturers, for testing indicated below, samples of materials that will contact or affect joint sealants.

1. Adhesion Testing: Use ASTM C 794 to determine whether priming and other specific joint preparation techniques are required to obtain rapid, optimum adhesion of joint sealants to joint substrates.

2. Compatibility Testing: Use ASTM C 1087 to determine sealant compatibility when in contact with glazing and gasket materials.

3. Submit manufacturer's recommended number of pieces of each type of material, including joint substrates, joint-sealant backings, and miscellaneous materials.

4. Schedule sufficient time for testing and analyzing results to prevent delaying the Work.

5. For materials failing tests, obtain joint-sealant manufacturer's written instructions for corrective measures, including use of specially formulated primers.

6. Testing will not be required if joint-sealant manufacturers submit data that are based on previous testing, not older than 24 months, of sealant products for adhesion to, staining of, and compatibility with joint substrates and other materials matching those submitted.

B. **Preconstruction Field-Adhesion Testing**: Before installing sealants, field test their adhesion to Project joint substrates as follows:

1. Locate test joints where indicated on Project or, if not indicated, as directed by Architect.

2. Conduct field tests for each kind of sealant and joint substrate.

3. Notify Architect (7) seven days in advance of dates and times when test joints will be erected.

4. Arrange for tests to take place with joint-sealant manufacturer's technical representative present.

a. Test Method: Test joint sealants according to Method A, Field-Applied Sealant Joint Hand Pull Tab, in Appendix X1.1 in ASTM C 1193 or Method A, Tail Procedure, in ASTM C 1521.

1) For joints with dissimilar substrates, verify adhesion to each substrate separately; extend cut along one side, verifying adhesion to opposite side. Repeat procedure for opposite side.

5. Report whether sealant failed to adhere to joint substrates or tore cohesively. Include data on pull distance used to test each kind of product and joint substrate. For sealants that fail adhesively, retest until satisfactory adhesion is obtained.

6. Evaluation of Preconstruction Field-Adhesion-Test Results: Sealants not evidencing adhesive failure from testing, in absence of other indications of noncompliance with requirements, will be considered satisfactory. Do not use sealants that fail to adhere to joint substrates during testing.

1.6 FIELD CONDITIONS

A. Do not proceed with installation of joint sealants under the following conditions:

1. When ambient and substrate temperature conditions are outside limits permitted by joint-

sealant manufacturer or are below 40 deg F.

2. When joint substrates are wet.

3. Where joint widths are less than those allowed by joint-sealant manufacturer for applications indicated.

4. Where contaminants capable of interfering with adhesion have not yet been removed from joint substrates.

1.7 DELIVERY, STORAGE, AND HANDLING

A. Deliver, store, and handle joint sealer materials as recommended by the Manufacturer, to protect from damage.

1.8 WARRANTY

A. **Special Installer's Warranty**: Installer agrees to repair or replace joint sealants that do not comply with performance and other requirements specified in this Section within specified warranty period.

1. Warranty Period: (2) Two years from date of Final Acceptance.

B. **Special Manufacturer's Warranty**: Manufacturer agrees to furnish joint sealants to repair or replace those joint sealants that do not comply with performance and other requirements specified in this Section within specified warranty period.

1. Warranty Period: (5) Five years from date of Final Acceptance.

C. **Special warranties specified in this article exclude deterioration or failure of joint sealants from the following**:

1. Movement of the structure caused by stresses on the sealant exceeding sealant manufacturer's written specifications for sealant elongation and compression.

2. Disintegration of joint substrates from causes exceeding design specifications.

3. Mechanical damage caused by individuals, tools, or other outside agents.

4. Changes in sealant appearance caused by accumulation of dirt or other atmospheric contaminants.

PART 2 - PRODUCTS

2.1 JOINT SEALANTS, GENERAL

A. **Compatibility**: Provide joint sealants, backings, and other related materials that are compatible

with one another and with joint substrates under conditions of service and application, as demonstrated by joint-sealant manufacturer, based on testing and field experience.

B. VOC Content of Interior Sealants: Sealants and sealant primers used inside the weatherproofing system shall comply with the following:

1. Architectural sealants shall have a VOC content of 250 g/L or less.

2. Sealants and sealant primers for nonporous substrates shall have a VOC content of 250 g/L or less.

3. Sealants and sealant primers for nonporous substrates shall have a VOC content of 775 g/L or less.

C. **Low-Emitting Interior Sealants**: Sealants and sealant primers shall comply with the testing and product requirements of the State of Connecticut

D. **Colors of Exposed Joint Sealants**: As selected by Architect from manufacturer's full range.

E. **Available Products**: Subject to compliance with requirements, products that may be incorporated into the Work include products of the following manufacturers:

1. Tremco

2. Dow Corning Corporation

3. Pecora

4. GE Silicon

5. Or Approved Equal

2.2 SINGLE-PART URETHANE SEALANT (Sealant No. 1)

A. **Polyurethane Sealant**: Single component, chemical during, non-staining, non-bleeding, capable of continuous water immersion, non-sagging, self-leveling type; complying with Class A ASTM C 920, Type S, Grade NS, Class 25, Use NT, M, A, O.

B. **Products**: Subject to compliance with requirements, provide the following:

1. Low Modulus Expansion Joint Sealant: Dymonic, product of Tremco or Engineer’s approved equal

2.3 SINGLE-PART SILICONE SEALANTS (Sealant No. 2)

A. **Silicone Sealant**: Single component, neutral-cure, solvent curing, cold-applied, non-sagging, non-staining, fungus resistant, non-bleeding; complying with ASTM C 920, Type S, NS, Class 25.

B. **Products**: Subject to compliance with requirements, provide one of the following:

1. Silicone Sealant:

a. Dow 795 Silicone Building Sealant, product of Dow Corning Corporation.

b. Silpruf Silicone Sealant, product of GE Silicones.

c. Pecora 864 Silicone Sealant, product of Pecora.

d. Or Engineer's approved equal

2.4 ACRYLIC LATEX SEALANT (Sealant No. 3)

A. **Sealant for interior joints, exposed or paint-finished**: Tremco Acrylic Latex sealant manufactured by the Tremco Manufacturing Company or Engineer's Approved Equal meeting the requirements of ASTM C-834.

2.5 JOINT-SEALANT BACKING

A. **Sealant Backing Material, General**: Nonstaining; compatible with joint substrates, sealants, primers, and other joint fillers; and approved for applications indicated by sealant manufacturer based on field experience and laboratory testing.

B. **Cylindrical Sealant Backings**: ASTM C 1330, Type C (closed-cell material with a surface skin)or any of the preceding types, as approved in writing by joint-sealant manufacturer for joint application indicated], and of size and density to control sealant depth and otherwise contribute to producing optimum sealant performance.

C. **Bond-Breaker Tape**: Polyethylene tape or other plastic tape recommended by sealant manufacturer for preventing sealant from adhering to rigid, inflexible joint-filler materials or joint surfaces at back of joint. Provide self-adhesive tape where applicable.

2.6 MISCELLANEOUS MATERIALS

A. **Primer:** Material recommended by joint-sealant manufacturer where required for adhesion of sealant to joint substrates indicated, as determined from preconstruction joint-sealant-substrate tests and field tests.

B. **Cleaners for Nonporous Surfaces**: Chemical cleaners acceptable to manufacturers of sealants and sealant backing materials, free of oily residues or other substances capable of staining or harming joint substrates and adjacent nonporous surfaces in any way, and formulated to promote optimum adhesion of sealants to joint substrates.

C. **Masking Tape**: Nonstaining, nonabsorbent material compatible with joint sealants and surfaces adjacent to joints.

PART 3 - EXECUTION

3.1 EXAMINATION

A. Examine joints indicated to receive joint sealants, with Installer present, for compliance with requirements for joint configuration, installation tolerances, and other conditions affecting performance of the Work.

B. Proceed with installation only after unsatisfactory conditions have been corrected.

3.2 PREPARATION

A. **Surface Cleaning of Joints**: Clean out joints immediately before installing joint sealants to comply with joint-sealant manufacturer's written instructions and the following requirements:

1. Remove all foreign material from joint substrates that could interfere with adhesion of joint sealant, including dust, paints (except for permanent, protective coatings tested and approved for sealant adhesion and compatibility by sealant manufacturer), old joint sealants, oil, grease, waterproofing, water repellents, water, surface dirt, and frost.

2. Clean porous joint substrate surfaces by brushing, grinding, mechanical abrading, or a combination of these methods to produce a clean, sound substrate capable of developing optimum bond with joint sealants. Remove loose particles remaining after cleaning operations above by vacuuming or blowing out joints with oil-free compressed air. Porous joint substrates include the following:

   a. Concrete.

   b. Masonry.

   c. Unglazed surfaces of ceramic tile.

   d. Exterior insulation and finish systems.

3. Remove laitance and form-release agents from concrete.

4. Clean nonporous joint substrate surfaces with chemical cleaners or other means that do not stain, harm substrates, or leave residues capable of interfering with adhesion of joint sealants. Nonporous joint substrates include the following:

   a. Metal.

   b. Glass.

   c. Porcelain enamel.

   d. Glazed surfaces of ceramic tile.

B. **Joint Priming**: Prime joint substrates where recommended by joint-sealant manufacturer or as

indicated by preconstruction joint-sealant-substrate tests or prior experience. Apply primer to comply with joint-sealant manufacturer's written instructions. Confine primers to areas of joint-sealant bond; do not allow spillage or migration onto adjoining surfaces.

C. **Masking Tape**: Use masking tape where required to prevent contact of sealant or primer with adjoining surfaces that otherwise would be permanently stained or damaged by such contact or by cleaning methods required to remove sealant smears. Remove tape immediately after tooling without disturbing joint seal.

3.3 INSTALLATION OF JOINT SEALANTS

A. **General:** Comply with joint-sealant manufacturer's written installation instructions for products and applications indicated, unless more stringent requirements apply.

B. **Sealant Installation Standard**: Comply with recommendations in ASTM C 1193 for use of joint sealants as applicable to materials, applications, and conditions indicated.

C. Install sealant backings of kind indicated to support sealants during application and at position required to produce cross-sectional shapes and depths of installed sealants relative to joint widths that allow optimum sealant movement capability.

1. Do not leave gaps between ends of sealant backings.

2. Do not stretch, twist, puncture, or tear sealant backings.

3. Remove absorbent sealant backings that have become wet before sealant application, and replace them with dry materials.

D. Install bond-breaker tape behind sealants where sealant backings are not used between sealants and backs of joints.

E. **Install sealants using proven techniques that comply with the following and at the same time backings are installed**:

1. Place sealants so they directly contact and fully wet joint substrates.

2. Completely fill recesses in each joint configuration.

3. Produce uniform, cross-sectional shapes and depths relative to joint widths that allow optimum sealant movement capability.

F. **Tooling of Nonsag Sealants**: Immediately after sealant application and before skinning or curing begins, tool sealants according to requirements specified in subparagraphs below to form smooth, uniform beads of configuration indicated; to eliminate air pockets; and to ensure contact and adhesion of sealant with sides of joint.

1. Remove excess sealant from surfaces adjacent to joints.

2. Use tooling agents that are approved in writing by sealant manufacturer and that do not discolor sealants or adjacent surfaces.

3. Provide concave joint profile per Figure 8A in ASTM C 1193 unless otherwise indicated.

4. Provide flush joint profile at locations indicated on Drawings according to Figure 8B in ASTM C 1193.

5. Provide recessed joint configuration of recess depth and at locations indicated on Drawings according to Figure 8C in ASTM C 1193.

   a. Use masking tape to protect surfaces adjacent to recessed tooled joints.

3.4 FIELD QUALITY CONTROL

A. **Field-Adhesion Testing**: Field test joint-sealant adhesion to joint substrates as follows:

1. Extent of Testing: Test completed and cured sealant joints as follows:

   a. Perform 10 tests for the first 1000 feet of joint length for each kind of sealant and joint substrate.

   b. Perform one test for each 1000 feet of joint length thereafter or one test per each floor per elevation.

2. Test Method: Test joint sealants according to Method A, Field-Applied Sealant Joint Hand Pull Tab, in Appendix X1 in ASTM C 1193 or Method A, Tail Procedure, in ASTM C 1521.

   a. For joints with dissimilar substrates, verify adhesion to each substrate separately; extend cut along one side, verifying adhesion to opposite side. Repeat procedure for opposite side.

3. Inspect tested joints and report on the following:

   a. Whether sealants filled joint cavities and are free of voids.

   b. Whether sealant dimensions and configurations comply with specified requirements.

   c. Whether sealants in joints connected to pulled-out portion failed to adhere to joint substrates or tore cohesively. Include data on pull distance used to test each kind of product and joint substrate. Compare these results to determine if adhesion complies with sealant manufacturer's field-adhesion hand-pull test criteria.

4. Record test results in a field-adhesion-test log. Include dates when sealants were installed, names of persons who installed sealants, test dates, test locations, whether joints were primed, adhesion results and percent elongations, sealant material, sealant configuration, and sealant dimensions.

5. Repair sealants pulled from test area by applying new sealants following same procedures used originally to seal joints. Ensure that original sealant surfaces are clean and that new sealant contacts original sealant.

B. **Evaluation of Field-Adhesion-Test Results**: Sealants not evidencing adhesive failure from testing or noncompliance with other indicated requirements will be considered satisfactory. Remove sealants that fail to adhere to joint substrates during testing or to comply with other requirements. Retest failed applications until test results prove sealants comply with indicated requirements.

3.5 CLEANING

A. Clean off excess sealant or sealant smears adjacent to joints as the Work progresses by methods and with cleaning materials approved in writing by manufacturers of joint sealants and of products in which joints occur.

3.6 PROTECTION

A. Protect joint sealants during and after curing period from contact with contaminating substances and from damage resulting from construction operations or other causes so sealants are without deterioration or damage at time of Substantial Completion. If, despite such protection, damage or deterioration occurs, cut out, remove, and repair damaged or deteriorated joint sealants immediately so installations with repaired areas are indistinguishable from original work.

3.7 SEALANT SCHEDULE

A. **Interior and exterior joints requiring sealant work include, but are not limited to, the following**:

1. Metal/metal joints: Sealant No. 2.
2. Masonry joints: Sealant No. 1.
3. Concrete joints: Sealant No. 1.
4. Glass/metal joints: Sealant No. 2.
5. Metal/concrete: Sealant No. 1.
6. Metal/wood joints: Sealant No. 3.

END OF SECTION 07 92 00

SECTION 07 92 05 - CONCRETE OVERLAY JOINT

PART 1 - GENERAL

1.1 DESCRIPTION

A. This work shall consist of the following:

1. Creating transverse concrete overlay joints by sawing and sealing grooves in the finished surface of the concrete overlay and waterproofing top coat for the new railroad platform sections, at the dimensions and at the spacing and lines shown on the plans.

2. Creating longitudinal concrete overlay joints in the concrete overlay and waterproofing top coat for the new railroad platform sections -- adjacent to the proposed rubrail and edge plate – by blocking out and sealing the overlay/waterproofing to the depth and width shown on the plans.

3. The overlay sawcut grooves and block outs shall be sealed with silicone joint sealant.

1.2 SUBMITTALS

A. A Materials Certificate for the silicone joint sealant shall be submitted by the Contractor in accordance with the requirements of CTDOT Form 816, Part 3 Section 1.06.07

PART 2 - PRODUCTS

2.1 MATERIALS

A. **Silicone Joint Seal:** Silicone joint sealant shall be one of the following or an approved equal:

1. Sealant, manufactured by the Dow Corning Corporation, Midland, Michigan Dow Corning 888 Silicone Joint Sealant, or

2. Dow Corning 888-SL Self-Leveling Silicone Joint 48686-0994

PART 3 - EXECUTION

3.1 CONSTRUCTION METHODS

A. **Sawing Transverse Grooves In Overlay/Waterproofing:**

1. Transverse concrete overlay joints shall be created by sawing grooves in the surface of the finished surface of the concrete overlay and waterproofing system of the new railroad

platform sections, of the dimensions and at the spacing and lines shown on the plans with an approved concrete saw.

2. After each joint is sawed, the saw cut and adjacent waterproofing system surface shall be thoroughly cleaned.

3. Sawing of the joints shall commence as soon as the waterproofing system and concrete overlay has hardened sufficiently to permit sawing without raveling, in accordance with the waterproofing and overlay manufacturers' instructions.

4. All transverse joints shall be sawed before uncontrolled shrinkage cracking takes place.

5. If necessary, the sawing operations shall be carried on both during the day and night, regardless of weather conditions, in accordance with the NOTICE TO CONTRACTOR – WORK ON RAILROAD PROPERTY.

6. The sawing of any joint shall be omitted if a crack occurs at or near the joint location prior to the time of sawing.

7. Sawing shall be discontinued when a crack develops ahead of the saw.

8. In general, all transverse joints shall be sawed in sequence.

B. **Creating Longitudinal Block Outs In Overlay/Waterproofing:**

1. The Contractor shall blockout the overlay/waterproofing to the depth and width shown on the plans, in order to delineate the locations to receive the silicone joint seal.

2. The block outs shall be thoroughly cleaned prior to joint sealant installation.

C. **Sealing Joints:**

1. Joints shall be sealed as soon after completion of the waterproofing/overlay curing period as feasible and before the platform is opened to pedestrian traffic, including the Contractor's equipment.

2. Just prior to sealing, each joint shall be thoroughly cleaned of all foreign material, and the joint-faces shall be clean and surface dry when the seal is applied.

3. The sealing material shall be applied to each joint opening to conform to the details shown on the plans or as directed by the Engineer.

4. Material for seal applied hot shall be stirred during heating so that localized overheating does not occur.

5. The pouring shall be done in such a manner that the material will not be spilled on the exposed surfaces of the waterproofing system, rub rail, and edge plate.

6. The use of sand or similar material as a cover for the seal will not be permitted.

7. Poured joint-sealing material shall not be placed when the air temperature in the shade is less than 50° F (10° C), unless approved by the Engineer.

END OF SECTION 07 92 05

SECTION 07 92 10 – FIXED PLATFORM JOINT

PART 1 - GENERAL

1.1 DESCRIPTION

A. Work under this item shall consist of furnishing and installing a fixed platform joint (FPJ) in conformance with ASTM D6297, as shown on the plans, and as specified herein.

1.2 SUBMITTALS

A. A Materials Certificate for the leveling material, backer rod, and silicone joint sealant shall be submitted by the Contractor in accordance with the requirements of CTDOT Form 816, Part 3 Section 1.06.07

PART 2 - PRODUCTS

2.1 MATERIALS

A. The FPJ component materials shall conform to ASTM D6297 and the following:

1. **Backer Rod:** All backer rods shall satisfy the requirements of ASTM D5249, Type 1.

2. **Silicone Joint Seal:** Silicone joint sealant shall be one of the following or an approved equal:

   a. Sealant, manufactured by the Dow Corning Corporation, Midland, Michigan Dow Corning 888 Silicone Joint Sealant, or
   b. Dow Corning 888-SL Self-Leveling Silicone Joint 48686-0994

3. **Concrete Leveling Material:** Shall be a cementitious-based material that conforms to ASTM C928 Standard Specification for Packaged, Dry, Rapid-Hardening Cementitious Materials for Concrete Repair, for R3 performance requirements in Table 1 and achieve the following:

   a. Final set in 45 Minutes
   b. 2500 psi compressive strength in 24 hours
   c. 5000 psi compressive strength in 7 days

4. **Bridging Plate:** The bridging plates shall be steel conforming to the requirements of ASTM A36 and be a minimum ¼” thick and 8” wide. For joint openings in excess of 3” the minimum plate dimensions shall be ⅜” thick by 12” wide. Individual sections of plate shall not exceed 4’ in length. Steel locating pins for securing the plates shall be size 16d minimum, hot-dip galvanized, and spaced no more than 12” apart.

PART 3 - EXECUTION

3.1 CONSTRUCTION METHODS

A. The FPJ shall be installed at the locations shown on the plans and in stages in accordance with the plans.

B. At least 30 days prior to start of the work, the Contractor shall submit to the Department for approval a detailed Quality Control Plan for the installation of the FPJ. The submittal shall include:

1. A list of all manufactured materials and their properties to be incorporated in the joint system, including, but not limited to the backer rod, silicone joint sealant, and leveling material.

2. A detailed step by step installation procedure and a list of the specific equipment to be used for the installation. The Quality Control Plan must fully comply with the specifications and address all anticipated field conditions, including periods of inclement weather.

C. The FPJ shall not be installed when the joint block out is wet.

D. Concrete surfaces of the platform sections that will support the bridging plates shall be smooth and form a plane along and across the joint. Rough or damaged concrete surfaces shall be repaired with a leveling compound meeting the requirements of this specification. The existing and repaired concrete surfaces shall provide continuous uniform support for the bridging plate and prevent the plate from rocking and deflecting.

E. The platform section fixed joint shall be thoroughly cleaned, sound, and dry just prior to receiving the backer rod and silicone joint sealant.

F. A single backer rod, with a diameter at least 25% greater than the joint opening, shall be installed at an inch below the bridging plate in the platform section fixed joint opening between the concrete edges.

G. The silicone joint sealant shall be applied to each joint opening to conform to the details shown on the plans or as directed by the Engineer.

H. Material for seal applied hot shall be stirred during heating so that localized overheating does not occur.

I. Poured joint-sealing material shall not be placed when the air temperature in the shade is less than 50° F (10° C), unless approved by the Engineer.

J. Bridging plates shall be placed over the platform section joint opening. The plates shall be centered over the joint opening and secured with locating pins along its centerline. The plates shall be placed end to end, without overlap, such that the gap between plates does not exceed ¼”. The plates shall extend between the rub rail and edge plate. Installed bridging plates shall not rock or deflect in any way.

K. All work shall be done in accordance with the NOTICE TO CONTRACTOR – WORK ON RAILROAD PROPERTY.

END OF SECTION 07 92 10

SECTION 07 95 10 - LONGITUDINAL JOINT SYSTEM

PART 1 - GENERAL

1.1 DESCRIPTION

A. Work under this item shall consist of furnishing and installing an elastomeric silicone expansion joint system as shown on the plans, as directed by the Engineer, and in accordance with these specifications.

1.2 SUBMITTALS

A. A Materials Certificate will be required in accordance with CTDOT Form 816 Article 1.06.07 certifying the conformance of the elastomeric silicone expansion joint system components to the requirements set forth in this specification.

PART 2 - PRODUCTS

2.1 MATERIALS

A. The following elastomeric silicone joint system manufacturers and their associated component materials have been approved for use:

1. Silicon Specialists Corp.
   P.O. Box 5009
   Tulsa, OK 74150
   Phone: (918) 587-5567

2. TPS Expansion Joint System
   Wabocrete II
   Watson Bowman Acme
   2-Part Silicone Sealant

3. Watson Bowman & Acme Corp.
   95 Pineview Drive
   Amherst, NY 14120
   Phone: (716) 691-7566

4. XJS Expansion System
   Silspec 900 PNS Nosing System
   Dow Corning 902 RCS Silicone Sealant

B. Each container of product furnished shall be delivered to the job site in the manufacturer's original sealed container. Each container shall be labeled to include the name of material, manufacturer's name, and the manufacturer's lot/batch number. All materials must be stored in

accordance with the manufacturer's written recommendations and as approved by the Engineer. Materials whose shelf life has expired shall not be used in the project.

PART 3 - EXECUTION

3.1 CONSTRUCTION METHODS

A. A technical representative of the silicone expansion joint system approved by the manufacturer shall be present during the installation of the expansion joint to provide guidance to the Contractor in the proper installation procedures to the satisfaction of the Engineer.

B. The silicone joint system shall be installed at the locations shown on the plans and in stages in accordance with the plans.

C. Tools, equipment, and techniques used to prepare the joints shall be approved by the Engineer and the manufacturer's technical representative prior to the start of construction.

D. Before installation of the silicone sealant, the vertical surfaces in the expansion joint opening to which the silicone sealant will bond shall be cleaned of a dust, dirt, debris and other loose materials as recommended by the manufacturer. Additionally, the bonding surfaces shall be blast cleaned if recommended by the manufacturer. Following blast cleaning when required, a backer rod of a diameter 25% larger than the joint opening shall be installed in the joint opening. The backer rod shall be comprised of closed-cell expanded polyethylene foam, compatible with cold applied seals unless otherwise approved by the manufacturer. The backer rod shall be installed to a clear depth of one inch (1”) below the top surface of the waterproofing top coat as shown on the plans.

E. Primer, if required by the manufacturer, shall be applied to the vertical surfaces of the overlay on which the silicone sealant will bond. The primer shall be allowed to cure undisturbed for a minimum of one hour prior to installation of the silicone adhesive, as required by the manufacturer and as directed by the Engineer.

F. The mixing and installation of the two-part silicone sealant should be in strict conformance with the manufacturer's written recommendations. Pedestrian traffic or construction vehicles must not be allowed on the newly sealed joint for 60 minutes after sealant installation unless otherwise specified by the manufacturer.

G. Any portion of the silicone expansion joint system that is punctured, ruptured, debonded, delaminated, or damaged in any other way shall be removed and replaced by the Contractor at no additional cost to the State.

H. All work shall be done in accordance with the NOTICE TO CONTRACTOR – WORK ON RAILROAD PROPERTY.

END OF SECTION 07 95 10

SECTION 08 42 13 - ALUMINUM-FRAMED ENTRANCES

PART 1 - GENERAL

1.1 SUMMARY

A. **Section Includes**:

1. Exterior manual-swing entrance doors and door-frame units.

2. Sidelights.

3. Transoms.

1.2 RELATED SECTIONS

A. 08 80 00 – Glazing

1.3 SUBMITTALS

A. **Product Data**: For each type of product.

1. Include construction details, material descriptions, dimensions of individual components and profiles, and finishes.

B. **Shop Drawings**: For aluminum-framed entrances. Include plans, elevations, sections, full-size details, and attachments to other work.

1. Include details of provisions for assembly expansion and contraction and for draining moisture occurring within the assembly to the exterior.

2. Include full-size isometric details of each vertical-to-horizontal intersection of aluminum-framed entrances, showing the following:

a. Joinery, including concealed welds.

b. Anchorage.

c. Expansion provisions.

d. Glazing.

e. Flashing and drainage.

3. Show connection to and continuity with adjacent thermal, weather, air, and vapor barriers.

C. **Samples for Verification**: For each type of exposed finish required, in manufacturer's standard sizes.

D. **Entrance Door Hardware Schedule**: Prepared by or under supervision of supplier, detailing fabrication and assembly of entrance door hardware, as well as procedures and diagrams. Coordinate final entrance door hardware schedule with doors, frames, and related work to ensure proper size, thickness, hand, function, and finish of entrance door hardware.

E. **Qualification Data**: For Installer and field testing agency.

F. **Energy Performance Certificates**: For aluminum-framed entrances, accessories, and components, from manufacturer.

1. Basis for Certification: NFRC-certified energy performance values for each aluminum-framed entrance.

G. **Product Test Reports**: For aluminum-framed entrances.

H. Field quality-control reports.

I. **Sample Warranties**: For special warranties.

J. **Maintenance Data**: For aluminum-framed entrances to include in maintenance manuals.

1.4 QUALITY ASSURANCE

A. **Installer Qualifications**: An entity that employs installers and supervisors who are trained and approved by manufacturer.

B. **Testing Agency Qualifications**: Qualified according to ASTM E 699 for testing indicated and accredited by IAS or ILAC Mutual Recognition Arrangement as complying with ISO/IEC 17025.

1.5 DELIVERY**, STORAGE, AND HANDLING**

A. Deliver, store, and handle materials as recommended by the Manufacturer, to protect from damage.

1.6 WARRANTY

A. **Special Warranty**: Manufacturer agrees to repair or replace components of aluminum-framed entrances that do not comply with requirements or that fail in materials or workmanship within specified warranty period.

1. Warranty Period: 10 years from date of Substantial Completion.

B. **Special Finish Warranty**: Standard form in which manufacturer agrees to repair finishes or replace aluminum that shows evidence of deterioration of factory-applied finishes within

specified warranty period.

1. Deterioration includes, but is not limited to, the following:

    a. Color fading more than 5 Hunter units when tested according to ASTM D 2244.

    b. Chalking in excess of a No. 8 rating when tested according to ASTM D 4214.

    c. Cracking, checking, peeling, or failure of paint to adhere to bare metal.

2. Warranty Period: 20 years from date of Substantial Completion.

PART 2 - PRODUCTS

2.1 PERFORMANCE REQUIREMENTS

A. **General Performance**: Comply with performance requirements specified, as determined by testing of aluminum-framed entrances representing those indicated for this Project without failure due to defective manufacture, fabrication, installation, or other defects in construction.

B. **Structural Loads**:

1. Wind Loads: As indicated on Drawings.

2. Other Design Loads: As indicated on Drawings

C. **Structural**: Test according to ASTM E 330 as follows:

1. When tested at positive and negative wind-load design pressures, assemblies do not evidence deflection exceeding specified limits.

2. When tested at 150 percent of positive and negative wind-load design pressures, assemblies, including anchorage, do not evidence material failures, structural distress, or permanent deformation of main framing members exceeding 0.2 percent of span.

3. Test Durations: As required by design wind velocity, but not less than 10 seconds.

D. **Air Infiltration**: Test according to ASTM E 283 for infiltration as follows:

1. Entrance Doors:

    a. Single Doors: Maximum air leakage of 0.5 cfm/sq. ft. at a static-air-pressure differential of 1.57 lbf/sq. ft.

E. **Water Penetration under Static Pressure**: Test according to ASTM E 331 as follows:

1. No evidence of water penetration through fixed glazing and framing areas when tested according to a minimum static-air-pressure differential of 20 percent of positive wind-load design pressure, but not less than 6.24 lbf/sq. ft.

F. **Energy Performance**: Certify and label energy performance according to NFRC as follows:

1. Thermal Transmittance (U-factor): Fixed glazing and framing areas shall have U-factor of not more than 0.45 Btu/sq. ft. x h x deg F as determined according to NFRC 100.

2. Solar Heat Gain Coefficient: Fixed glazing and framing areas shall have a solar heat gain coefficient of no greater than 0.35 as determined according to NFRC 200.

3. Condensation Resistance: Fixed glazing and framing areas shall have an NFRC-certified condensation resistance rating of no less than 45 as determined according to NFRC 500.

G. **Noise Reduction**: Test according to ASTM E 90, with ratings determined by ASTM E 1332, as follows.

1. Outdoor-Indoor Transmission Class: Minimum 26

H. **Thermal Movements**: Allow for thermal movements resulting from ambient and surface temperature changes:

1. Temperature Change: 120 deg F, ambient; 180 deg F, material surfaces.

2.2 MANUFACTURERS

A. Thomas Manufacturing Inc.

B. Kawneer North America; an Alcoa company.

C. YKK AP America Inc.

D. Or approved equal

2.3 ENTRANCE DOOR SYSTEMS

A. **Entrance Doors**: Manufacturer's standard glazed entrance doors for manual-swing operation.

1. Door Construction: 1-3/4-inch overall thickness, with minimum 0.125-inch- thick, extruded-aluminum tubular rail and stile members. Mechanically fasten corners with reinforcing brackets that are deeply penetrated and fillet welded or that incorporate concealed tie rods.

2. Door Design: Match existing.

3. Glazing Stops and Gaskets: match existing, snap-on, extruded-aluminum stops and preformed gaskets.

a. Provide nonremovable glazing stops on outside of door.

B. **Framing Members**: Manufacturer's standard extruded aluminum, minimum 0.125 inch thick and reinforced as required to support imposed loads.

1. Nominal Size: 1-3/4 by 4-1/2 inches.

C. **Backer Plates**: Manufacturer's standard, continuous backer plates for framing members, if not integral, where framing abuts adjacent construction.

D. **Brackets and Reinforcements**: Manufacturer's standard high-strength aluminum with nonstaining, nonferrous shims for aligning system components.

E. **Materials**:

1. Aluminum: Alloy and temper recommended by manufacturer for type of use and finish indicated.

a. Sheet and Plate: ASTM B 209.

b. Extruded Bars, Rods, Profiles, and Tubes: ASTM B 221.

c. Extruded Structural Pipe and Tubes: ASTM B 429/B 429M.

d. Structural Profiles: ASTM B 308/B 308M.

2. Steel Reinforcement: Manufacturer's standard zinc-rich, corrosion-resistant primer complying with SSPC-PS Guide No. 12.00; applied immediately after surface preparation and pretreatment. Select surface preparation methods according to recommendations in SSPC-SP COM, and prepare surfaces according to applicable SSPC standard.

a. Structural Shapes, Plates, and Bars: ASTM A 36/A 36M.

b. Cold-Rolled Sheet and Strip: ASTM A 1008/A 1008M.

c. Hot-Rolled Sheet and Strip: ASTM A 1011/A 1011M.

2.4 ENTRANCE DOOR HARDWARE

A. **General**: Provide entrance door hardware for each entrance door to comply with requirements in this Section.

1. Entrance Door Hardware Sets: Provide quantity, item, size, finish or color indicated, and products complying with BHMA standard referenced.

2. Opening-Force Requirements:

a. Egress Doors: Not more than 15 lbf to release the latch and not more than 30 lbf to set the door in motion and not more than 15 lbf to open the door to its minimum required width.

b. Accessible Interior Doors: Not more than 5 lbf to fully open door.

B. **Designations**: Requirements for design, grade, function, finish, size, and other distinctive qualities of each type of entrance door hardware are indicated in "Entrance Door Hardware

Sets" Article. Products are identified by using entrance door hardware designations as follows:

1. References to BHMA Standards: Provide products complying with these standards and requirements for description, quality, and function.

C. **Continuous-Gear Hinges**: Manufacturer's standard with stainless-steel bearings between knuckles, fabricated to full height of door and frame.

D. **Mortise Auxiliary Locks**: BHMA A156.5, Grade 1.

E. **Cylinders**: BHMA A156.5, Grade 1.

1. Keying: Master key system. Permanently inscribe each key with a visual key control number and include notation to be furnished by Owner.

F. **Strikes**: Provide strike with black-plastic dust box for each latch or lock bolt; fabricated for aluminum framing.

G. **Operating Trim**: BHMA A156.6.

H. **Closers**: BHMA A156.4, Grade 1, with accessories required for a complete installation, sized as required by door size, exposure to weather, and anticipated frequency of use; adjustable to comply with field conditions and requirements for opening force.

I. **Door Stops**: BHMA A156.16, Grade 1, floor or wall mounted, as appropriate for door location indicated, with integral rubber bumper.

J. **Weather Stripping**: Manufacturer's standard replaceable components.

1. Compression Type: Made of ASTM D 2000, molded neoprene, or ASTM D 2287, molded PVC.

K. **Weather Sweeps**: Manufacturer's standard exterior-door bottom sweep with concealed fasteners on mounting strip.

L. **Silencers**: BHMA A156.16, Grade 1.

M. **Thresholds**: BHMA A156.21, raised thresholds beveled with a slope of not more than 1:2, with maximum height of 1/2 inch.

2.5 GLAZING

A. **Glazing**: Comply with Section 08 80 00 "Glazing."

B. **Glazing Gaskets**: Manufacturer's standard sealed-corner pressure-glazing system of black, resilient elastomeric glazing gaskets, setting blocks, and shims or spacers.

C. **Glazing Sealants**: As recommended by manufacturer.

2.6 ACCESSORIES

A. **Fasteners and Accessories**: Manufacturer's standard corrosion-resistant, nonstaining, nonbleeding fasteners and accessories compatible with adjacent materials.

1. Use self-locking devices where fasteners are subject to loosening or turning out from thermal and structural movements, wind loads, or vibration.

2. Reinforce members as required to receive fastener threads.

3. Use exposed fasteners with countersunk Phillips screw heads, finished to match framing system.

B. **Anchors**: Three-way adjustable anchors with minimum adjustment of 1 inch that accommodate fabrication and installation tolerances in material and finish compatible with adjoining materials and recommended by manufacturer.

1. Concrete and Masonry Inserts: Hot-dip galvanized cast-iron, malleable-iron, or steel inserts complying with ASTM A 123/A 123M or ASTM A 153/A 153M requirements.

C. **Concealed Flashing**: Manufacturer's standard corrosion-resistant, nonstaining, nonbleeding flashing compatible with adjacent materials.

D. **Bituminous Paint**: Cold-applied asphalt-mastic paint complying with SSPC-Paint 12 requirements except containing no asbestos, formulated for 30-mil thickness per coat.

2.7 FABRICATION

A. Form or extrude aluminum shapes before finishing.

B. Weld in concealed locations to greatest extent possible to minimize distortion or discoloration of finish. Remove weld spatter and welding oxides from exposed surfaces by descaling or grinding.

C. Fabricate components that, when assembled, have the following characteristics:

1. Profiles that are sharp, straight, and free of defects or deformations.

2. Accurately fitted joints with ends coped or mitered.

3. Physical and thermal isolation of glazing from framing members.

4. Accommodations for thermal and mechanical movements of glazing and framing to maintain required glazing edge clearances.

5. Fasteners, anchors, and connection devices that are concealed from view to greatest extent possible.

D. **Entrance Door Frames**: Reinforce as required to support loads imposed by door operation and for installing entrance door hardware.

1. At exterior doors, provide compression weather stripping at fixed stops.

E. **Entrance Doors**: Reinforce doors as required for installing entrance door hardware.

1. At exterior doors, provide weather sweeps applied to door bottoms.

F. **Entrance Door Hardware Installation**: Factory install entrance door hardware to the greatest extent possible. Cut, drill, and tap for factory-installed entrance door hardware before applying finishes.

G. After fabrication, clearly mark components to identify their locations in Project according to Shop Drawings.

2.8 ALUMINUM FINISHES

A. **Color Anodic Finish**: AAMA 611, AA-M12C22A42/A44, Class I, 0.018 mm or thicker.

1. Color: Match existing

PART 3 - EXECUTION

3.1 EXAMINATION

A. Examine areas, with Installer present, for compliance with requirements for installation tolerances and other conditions affecting performance of the Work.

B. Proceed with installation only after unsatisfactory conditions have been corrected.

3.2 INSTALLATION

A. **General**:

1. Comply with manufacturer's written instructions.

2. Do not install damaged components.

3. Fit joints to produce hairline joints free of burrs and distortion.

4. Rigidly secure nonmovement joints.

5. Install anchors with separators and isolators to prevent metal corrosion and electrolytic deterioration and to prevent impeding movement of moving joints.

6. Seal perimeter and other joints watertight unless otherwise indicated.

B. **Metal Protection**:

1. Where aluminum is in contact with dissimilar metals, protect against galvanic action by painting contact surfaces with materials recommended by manufacturer for this purpose or installing nonconductive spacers.

2. Where aluminum is in contact with concrete or masonry, protect against corrosion by painting contact surfaces with bituminous paint.

C. Set continuous sill members and flashing in full sealant bed as specified by Aluminum-Framed Entrance manufacturer to produce weathertight installation.

D. Install components plumb and true in alignment with established lines and grades.

E. Install glazing as specified in Section 088000 "Glazing."

F. **Entrance Doors**: Install doors to produce smooth operation and tight fit at contact points.

1. Exterior Doors: Install to produce weathertight enclosure and tight fit at weather stripping.

2. Field-Installed Entrance Door Hardware: Install surface-mounted entrance door hardware according to entrance door hardware manufacturers' written instructions using concealed fasteners to greatest extent possible.

3.3 FIELD QUALITY CONTROL

A. **Testing Agency**: Engage a qualified testing agency to perform tests and inspections.

B. **Field Quality-Control Testing**: Perform the following test on aluminum-framed entrances.

1. Water-Spray Test: Before installation of interior finishes has begun, areas designated by Architect shall be tested according to AAMA 501.2 and shall not evidence water penetration.

C. Aluminum-framed entrances will be considered defective if they do not pass tests and inspections.

D. Prepare test and inspection reports.

3.4 MAINTENANCE SERVICE

A. **Entrance Door Hardware**:

1. Maintenance Tools and Instructions: Furnish a complete set of specialized tools and maintenance instructions as needed for Owner's continued adjustment, maintenance, and removal and replacement of entrance door hardware.

3.5 ENTRANCE DOOR HARDWARE SETS

A. To be determined

END OF SECTION 08 42 13

SECTION 08 80 00 - GLAZING

PART 1 - GENERAL

1.1 SUMMARY

A. **Section includes**:

1. Glass for aluminum framed entrances.

2. Glazing sealants and accessories.

3. Vandal Film

1.2 RELATED SECTIONS

A. Section 08 42 13 – Aluminum Framed Entrances

1.3 DEFINITIONS

A. **Glass Manufacturers**: Firms that produce primary glass, fabricated glass, or both, as defined in referenced glazing publications.

B. **Glass Thicknesses**: Indicated by thickness designations in millimeters according to ASTM C 1036.

C. **IBC**: International Building Code.

D. **Interspace**: Space between lites of an insulating-glass unit.

1.4 COORDINATION

A. Coordinate glazing channel dimensions to provide necessary bite on glass, minimum edge and face clearances, and adequate sealant thicknesses, with reasonable tolerances.

1.5 ACTION SUBMITTALS

A. **Product Data**: For each type of product.

B. **Glass Samples**: For each type of the following products; 12 inches square.

1. Laminated, insulating glass.

C. **Glazing Accessory Samples**: For sealants and colored spacers, in 12-inch lengths. Install

sealant samples between two strips of material representative in color of the adjoining framing system.

D. **Glazing Schedule**: List glass types and thicknesses for each size opening and location. Use same designations indicated on Drawings.

E. **Qualification Data**: For Installer, manufacturers of insulating-glass units with sputter-coated, low-E coatings, glass testing agency and sealant testing agency.

F. **Product Certificates**: For glass.

G. **Product Test Reports**: For insulating glass and glazing sealants, for tests performed by a qualified testing agency.

1. For glazing sealants, provide test reports based on testing current sealant formulations within previous 36-month period.

H. Preconstruction adhesion and compatibility test report.

I. **Sample Warranties**: For special warranties.

1.6 QUALITY ASSURANCE

A. **Installer Qualifications**: A qualified installer who employs glass installers for this Project who are certified under the National Glass Association's Certified Glass Installer Program.

B. **Glass Testing Agency Qualifications**: A qualified independent testing agency accredited according to the NFRC CAP 1 Certification Agency Program.

C. **Sealant Testing Agency Qualifications**: An independent testing agency qualified according to ASTM C 1021 to conduct the testing indicated.

1.7 PRECONSTRUCTION TESTING

A. Preconstruction Adhesion and Compatibility Testing: Test each glass product, tape sealant, gasket, glazing accessory, and glass-framing member for adhesion to and compatibility with elastomeric glazing sealants.

1. Testing is not required if data are submitted based on previous testing of current sealant products and glazing materials matching those submitted.

2. Use ASTM C 1087 to determine whether priming and other specific joint-preparation techniques are required to obtain rapid, optimum adhesion of glazing sealants to glass, tape sealants, gaskets, and glazing channel substrates.

3. Test no fewer than eight Samples of each type of material, including joint substrates, shims, sealant backings, secondary seals, and miscellaneous materials.

4. Schedule enough time for testing and analyzing results to prevent delaying the Work.

5. For materials failing tests, submit sealant manufacturer's written instructions for corrective measures including the use of specially formulated primers.

1.8 DELIVERY, STORAGE, AND HANDLING

A. Protect glazing materials according to manufacturer's written instructions. Prevent damage to glass and glazing materials from condensation, temperature changes, direct exposure to sun, or other causes.

1.9 FIELD CONDITIONS

A. **Environmental Limitations**: Do not proceed with glazing when ambient and substrate temperature conditions are outside limits permitted by glazing material manufacturers and when glazing channel substrates are wet from rain, frost, condensation, or other causes.

1. Do not install glazing sealants when ambient and substrate temperature conditions are outside limits permitted by sealant manufacturer or are below 40 deg F.

1.10 WARRANTY

A. **Manufacturer's Special Warranty for Laminated Insulated Glass**:

1. Manufacturer agrees to replace laminated-insulated glass units that deteriorate within specified warranty period.

a. Deterioration of laminated glass is defined as defects developed from normal use that are not attributed to glass breakage or to maintaining and cleaning laminated glass contrary to manufacturer's written instructions. Defects include edge separation, delamination materially obstructing vision through glass, and blemishes exceeding those allowed by referenced laminated-glass standard.

b. Deterioration of insulating glass is defined as failure of hermetic seal under normal use that is not attributed to glass breakage or to maintaining and cleaning insulating glass contrary to manufacturer's written instructions. Evidence of failure is the obstruction of vision by dust, moisture, or film on interior surfaces of glass.

2. Warranty Period: 10 years from date of Substantial Completion.

PART 2 - PRODUCTS

2.1 MANUFACTURERS

A. **Manufacturers**: Subject to compliance with requirements, available manufacturers offering products that may be incorporated into the Work include, but are not limited to, the following:

1. Old Castle

2. PPG Industries

3. Pilkington Glass

4. Or Approved Equal

B. **Source Limitations for Glass**: Obtain from single source from single manufacturer for each glass type.

C. **Source Limitations for Glazing Accessories**: Obtain from single source from single manufacturer for each product and installation method.

2.2 PERFORMANCE REQUIREMENTS

A. **General**: Installed glazing systems shall withstand normal thermal movement and wind and impact loads (where applicable) without failure, including loss or glass breakage attributable to the following: defective manufacture, fabrication, or installation; failure of sealants or gaskets to remain watertight and airtight; deterioration of glazing materials; or other defects in construction.

B. **Delegated Design**: Engage a qualified professional engineer, as defined in Section 014000 "Quality Requirements," to design glazing.

C. **Structural Performance**: Glazing shall withstand the following design loads within limits and under conditions indicated determined according to the IBC and ASTM E 1300.

1. Design Wind Pressures: Determine design wind pressures applicable to Project according to ASCE/SEI 7, based on heights above grade indicated on Drawings.

a. Basic Wind Speed: As indicated on Drawings.

b. Importance Factor: As indicated on Drawings.

c. Exposure Category: AS indicated on drawings

2. Maximum Lateral Deflection: For glass supported on all four edges, limit center-of-glass deflection at design wind pressure to not more than 1/50 times the short-side length or 1 inch, whichever is less.

D. **Safety Glazing**: Where safety glazing is indicated, provide glazing that complies with 16 CFR 1201, Category II.

E. **Thermal and Optical Performance Properties**: Provide glass with performance properties specified, as indicated in manufacturer's published test data, based on procedures indicated below:

1. For insulating-glass units, properties are based on units of thickness indicated for overall unit and for each lite.

2. U-Factors: Center-of-glazing values, according to NFRC 100 and based on LBL's

WINDOW 5.2 computer program, expressed as Btu/sq. ft. x h x deg F.

3. Solar Heat-Gain Coefficient and Visible Transmittance: Center-of-glazing values, according to NFRC 200 and based on LBL's WINDOW 5.2 computer program.

4. Visible Reflectance: Center-of-glazing values, according to NFRC 300.

2.3 GLASS PRODUCTS, GENERAL

A. **Glazing Publications**: Comply with published recommendations of glass product manufacturers and organizations below unless more stringent requirements are indicated. See these publications for glazing terms not otherwise defined in this Section or in referenced standards.

1. GANA Publications: "Laminated Glazing Reference Manual" and "Glazing Manual."

2. IGMA Publication for Insulating Glass: SIGMA TM-3000, "North American Glazing Guidelines for Sealed Insulating Glass Units for Commercial and Residential Use."

B. **Insulating-Glass Certification Program**: Permanently marked either on spacers or on at least one component lite of units with appropriate certification label of IGCC.

C. **Thickness**: Where glass thickness is indicated, it is a minimum. Provide glass that complies with performance requirements and is not less than the thickness indicated.

2.4 GLASS PRODUCTS

A. **Fully Tempered Float Glass**: ASTM C 1048, Kind FT (fully tempered), Condition A (uncoated) unless otherwise indicated, Type I, Class 1 (clear).

2.5 LAMINATED GLASS

A. **Laminated Glass**: ASTM C 1172. Use materials that have a proven record of no tendency to bubble, discolor, or lose physical and mechanical properties after fabrication and installation.

1. Construction: Laminate glass with polyvinyl butyral interlayer to comply with interlayer manufacturer's written instructions.

2. Interlayer Thickness: Provide thickness not less than that indicated and as needed to comply with requirements.

3. Interlayer Color: Clear unless otherwise indicated.

2.6 INSULATING GLASS

A. **Insulating-Glass Units**: Factory-assembled units consisting of sealed lites of glass separated by a dehydrated interspace, qualified according to ASTM E 2190.

1. Sealing System: Dual seal, with manufacturer's standard primary and secondary sealants.

2. Perimeter Spacer: Manufacturer's standard spacer material and construction

3. Desiccant: Molecular sieve or silica gel, or a blend of both.

2.7 GLAZING SEALANTS

A. **General**:

1. Compatibility: Compatible with one another and with other materials they contact, including glass products, seals of insulating-glass units, and glazing channel substrates, under conditions of service and application, as demonstrated by sealant manufacturer based on testing and field experience.

2. Suitability: Comply with sealant and glass manufacturers' written instructions for selecting glazing sealants suitable for applications indicated and for conditions existing at time of installation.

3. Colors of Exposed Glazing Sealants: As selected by Architect from manufacturer's full range.

B. **Glazing Sealant**: Neutral-curing silicone glazing sealant complying with ASTM C 920, Type S, Grade NS, Class 100/50, Use NT.

1. Products: Subject to compliance with requirements, available products that may be incorporated into the Work include, but are not limited to, the following:

a. Dow Corning Corporation; 790.

b. GE Advanced Materials - Silicones; SilPruf LM SCS2700.

c. May National Associates, Inc.; Bondaflex Sil 290.

d. Pecora Corporation; 890.

e. Sika Corporation, Construction Products Division; SikaSil-C990.

f. Tremco Incorporated; Spectrem 1.

g. Or Engineer’s Approved Equal

2.8 GLAZING TAPES

A. **Back-Bedding Mastic Glazing Tapes**: Preformed, butyl-based, 100 percent solids elastomeric tape; nonstaining and nonmigrating in contact with nonporous surfaces; with or without spacer rod as recommended in writing by tape and glass manufacturers for application indicated; and complying with ASTM C 1281 and AAMA 800 for products indicated below:

1. AAMA 807.3 tape, for glazing applications in which tape is not subject to continuous pressure.

B. **Expanded Cellular Glazing Tapes**: Closed-cell, PVC foam tapes; factory coated with adhesive on both surfaces; and complying with AAMA 800 for the following types:

1. AAMA 810.1, Type 1, for glazing applications in which tape acts as the primary sealant.

2. AAMA 810.1, Type 2, for glazing applications in which tape is used in combination with a full bead of liquid sealant.

2.9 MISCELLANEOUS GLAZING MATERIALS

A. **General**: Provide products of material, size, and shape complying with referenced glazing standard, with requirements of manufacturers of glass and other glazing materials for application indicated, and with a proven record of compatibility with surfaces contacted in installation.

B. Cleaners, Primers, and Sealers: Types recommended by sealant or gasket manufacturer.

C. **Setting Blocks**: Elastomeric material with a Shore, Type A durometer hardness of 85, plus or minus 5.

D. **Spacers**: Elastomeric blocks or continuous extrusions of hardness required by glass manufacturer to maintain glass lites in place for installation indicated.

E. **Edge Blocks**: Elastomeric material of hardness needed to limit glass lateral movement (side walking).

F. **Cylindrical Glazing Sealant Backing**: ASTM C 1330, Type O (open-cell material), of size and density to control glazing sealant depth and otherwise produce optimum glazing sealant performance.

2.10 FABRICATION OF GLAZING UNITS

A. Fabricate glazing units in sizes required to fit openings indicated for Project, with edge and face clearances, edge and surface conditions, and bite complying with written instructions of product manufacturer and referenced glazing publications, to comply with system performance requirements.

1. Allow for thermal movements from ambient and surface temperature changes acting on glass framing members and glazing components.

a. Temperature Change: 120 deg F, ambient; 180 deg F, material surfaces.

2.11 VANDAL FILM

A. **Manufacturers**:

1. GPFilms Inc., 575 Maryville Centre, Drive. St. Louis, MO 63141; 800-851-7781; www.llumar.com.

2. Graffiti Removal Inc., PO Box 2991, La Habra, CA 90632; 909-464-2700; www.vandalshield.com

3. Madico Inc, 65 Industrial Pky, Woburn, MA 01801; 800-225-1926; www.madico.com

4. Or engineer's approved equal

B. **Product Description**: Multi-layered product, 7 mils thick, applied to glass surfaces, from outboard surface to inboard surface:

1. Removable release liner.

2. Pressure sensitive adhesive.

3. Clear, dyed or metalized layers of polyester film.

4. Scratch resistant coating.

C. **Colors:** Clear.

D. **Glazing Film Accessories**:

1. General: Provide products complying with requirements of glazing film manufacturer for application indicated, and with a proven record of compatibility with surfaces contacted in installation.

2. Adhesive: Pressure sensitive acrylic adhesive system.

3. Cleaners, Primers, and Sealers: Types recommended by glazing film manufacturer.

E. **Location**: Window film is required to be installed at all locations accessible to the public throughout the area of work. Window film is to be installed to a minimum height of 7'-0" above any accessible walking surface. Any glazed window that receives the scratch resistant film shall be covered in its entirety. Refer to Quality Assurance within this section for additional requirements.

PART 3 - EXECUTION

3.1 EXAMINATION

A. Examine framing, glazing channels, and stops, with Installer present, for compliance with the following:

1. Manufacturing and installation tolerances, including those for size, squareness, and offsets at corners.

2. Presence and functioning of weep systems.

3. Minimum required face and edge clearances.

4. Effective sealing between joints of glass-framing members.

B. **Window Film**:

1. Examine glass and surrounding adjacent surfaces for conditions affecting installation.

a. Report conditions that may adversely affect installation. In report, include description of any glass that is broken, chipped, cracked, abraded, or damaged in any way.

C. Proceed with installation only after unsatisfactory conditions have been corrected.

D. Beginning of installation means acceptance of conditions

3.2 PREPARATION

A. Clean glazing channels and other framing members receiving glass immediately before glazing. Remove coatings not firmly bonded to substrates.

B. Examine glazing units to locate exterior and interior surfaces. Label or mark units as needed so that exterior and interior surfaces are readily identifiable. Do not use materials that leave visible marks in the completed Work.

3.3 GLAZING, GENERAL

A. Comply with combined written instructions of manufacturers of glass, sealants, gaskets, and other glazing materials, unless more stringent requirements are indicated, including those in referenced glazing publications.

B. Protect glass edges from damage during handling and installation. Remove damaged glass from Project site and legally dispose of off Project site. Damaged glass includes glass with edge damage or other imperfections that, when installed, could weaken glass, impair performance, or impair appearance.

C. Apply primers to joint surfaces where required for adhesion of sealants, as determined by preconstruction testing.

D. Install setting blocks in sill rabbets, sized and located to comply with referenced glazing publications, unless otherwise required by glass manufacturer. Set blocks in thin course of compatible sealant suitable for heel bead.

E. Do not exceed edge pressures stipulated by glass manufacturers for installing glass lites.

F. Provide spacers for glass lites where length plus width is larger than 50 inches.

1. Locate spacers directly opposite each other on both inside and outside faces of glass. Install correct size and spacing to preserve required face clearances, unless gaskets and glazing tapes are used that have demonstrated ability to maintain required face clearances and to comply with system performance requirements.

2. Provide 1/8-inch minimum bite of spacers on glass and use thickness equal to sealant width. With glazing tape, use thickness slightly less than final compressed thickness of tape.

G. Provide edge blocking where indicated or needed to prevent glass lites from moving sideways in glazing channel, as recommended in writing by glass manufacturer and according to requirements in referenced glazing publications.

H. Set glass lites in each series with uniform pattern, draw, bow, and similar characteristics.

I. Set glass lites with proper orientation so that coatings face exterior or interior as specified.

J. **Window film**:

1. Comply with manufacturer's written instructions for surface preparation.

2. Immediately before beginning installation of films, clean glass surfaces of substances that could impair glazing film's bond, including mold, mildew, oil grease, dirt, and other foreign materials.

3. Protect window frames and surrounding conditions from damage during installation.

3.4 TAPE GLAZING

A. Position tapes on fixed stops so that, when compressed by glass, their exposed edges are flush with or protrude slightly above sightline of stops.

B. Install tapes continuously, but not necessarily in one continuous length. Do not stretch tapes to make them fit opening.

C. Cover vertical framing joints by applying tapes to heads and sills first, then to jambs. Cover horizontal framing joints by applying tapes to jambs, then to heads and sills.

D. Place joints in tapes at corners of opening with adjoining lengths butted together, not lapped. Seal joints in tapes with compatible sealant approved by tape manufacturer.

E. Do not remove release paper from tape until right before each glazing unit is installed.

F. Center glass lites in openings on setting blocks, and press firmly against tape by inserting dense compression gaskets formed and installed to lock in place against faces of removable stops. Start gasket applications at corners and work toward centers of openings.

3.5 SEALANT GLAZING (WET)

A. Install continuous spacers, or spacers combined with cylindrical sealant backing, between glass lites and glazing stops to maintain glass face clearances and to prevent sealant from extruding into glass channel and blocking weep systems until sealants cure. Secure spacers or spacers and backings in place and in position to control depth of installed sealant relative to edge clearance for optimum sealant performance.

B. Force sealants into glazing channels to eliminate voids and to ensure complete wetting or bond of sealant to glass and channel surfaces.

C. Tool exposed surfaces of sealants to provide a substantial wash away from glass.

3.6 CLEANING AND PROTECTION

A. Immediately after installation remove nonpermanent labels and clean surfaces.

B. Protect glass from contact with contaminating substances resulting from construction operations. Examine glass surfaces adjacent to or below exterior concrete and other masonry surfaces at frequent intervals during construction, but not less than once a month, for buildup of dirt, scum, alkaline deposits, or stains.

1. If, despite such protection, contaminating substances do come into contact with glass, remove substances immediately as recommended in writing by glass manufacturer. Remove and replace glass that cannot be cleaned without damage to coatings.

C. Remove and replace glass that is damaged during construction period.

D. Wash glass on both exposed surfaces not more than four days before date scheduled for inspections that establish date of Substantial Completion. Wash glass as recommended in writing by glass manufacturer.

3.7 INSULATING-LAMINATED-GLASS

A. **Glass Type**: Clear insulating laminated glass.

1. Overall Unit Thickness: 1 inch

2. Minimum Thickness of Outdoor Lite: 6 mm

3. Outdoor Lite: Fully tempered float glass.

4. Interspace Content: Air.

5. Indoor Lite: Clear laminated glass with two plies of fully tempered float glass.

a. Minimum Thickness of Each Glass Ply: 6 mm

6. Winter Nighttime U-Factor: 0.80 maximum.

7. Summer Daytime U-Factor: 0.80 maximum.

8. Solar Heat Gain Coefficient: 0.40 maximum.

9. Safety glazing required.

END OF SECTION 08 80 00

SECTION 09 61 40 - DETECTABLE / TACTILE WARNING SURFACES

PART 1 - GENERAL

1.1 SUMMARY

A. The Contractor shall provide all labor, materials, equipment and services necessary for and incidental to, furnishing and installing cast-in-place tactile warning surface as shown on the drawings and as specified herein.

B. This Section specifies furnishing and installing a two-part cast-in-place in-line dome tactile warning surface on new concrete platforms, as indicated on the Drawings. The Work also includes required coordination of the Work with work of other Sections, surface/substrate preparations, and tactile warning system installations, and includes coordination with and transitions to adjacent systems and surfaces, complete. The Work also includes such related and accessory work as may be required for the successful completion of the Work of this Section.

C. Related Documents

1. Drawings and general provisions of the Contract, including General and Special Provisions, apply to this Section.

D. Correlation of Contract Documents

1. Refer to General and Special Provisions for additional requirements affecting the interpretation of Drawings and Specifications and affecting the Work of this Section.

1.2 SUBMITTALS

A. Product Data: Submit manufacturer's literature describing products, installation procedures and routine maintenance, including appropriate Material Safety Data Sheets (MSDS).

B. Samples for Verification Purposes: Submit three (3) samples of full size cast-in-place in-line dome tactile warning surface, of the kind proposed for use, with all installation accessories required for the project.

C. Shop drawings are required for products specified showing fabrication details; panel surface profile; composite structural system; plans of panel placement including joints; and material to be used as well as outlining installation materials and procedure.

D. Material Test Reports: Submit test reports from qualified independent testing laboratory indicating that materials proposed for use are in compliance with requirements and meet the properties indicated. All test reports shall be conducted on a cast-in-place tactile panel system as certified by a qualified independent testing laboratory.

E. Maintenance Instructions: Submit copies of manufacturer's specified maintenance practices for each type of tactile panel and accessory as required.

1.3 QUALITY ASSURANCE

A. Provide cast-in-place in-line dome tactile panels and accessories as produced by a single manufacturer.

B. Installer's Qualifications: Engage an experienced Installer trained and certified in writing by tactile surface manufacturer as qualified for installation, who has successfully completed installations similar in material, design, and extent to that indicated for Project. Manufacturer's supervisor shall be present at all times.

C. Americans with Disabilities Act (ADA): Provide tactile warning surfaces which comply with the detectable warnings on walking surfaces and platform edge detectable warnings, section of the Americans with Disabilities Act, latest version.

D. All applicable building codes, latest versions.

1.4 DELIVERY, STORAGE AND HANDLING

A. Deliver materials to the job site in sealed, undamaged containers with labels intact and legible, indicating the material name, date of manufacture and lot number.

B. Store materials in a dry location at temperatures not exceeding 90° F, or lower than 35° F.

1.5 SITE CONDITIONS

A. Environmental Conditions and Protection: Maintain minimum temperature prior to installations, during installation, and after completion of installation in strict compliance with the manufacturer’s written instructions.

1. All materials individually or mixed shall have zero volatile organic content.

2. Do not apply materials if rain is anticipated within three hours of application.

3. Substrate and air temperature must remain above 40° F for at least 4 hours after application of materials and remain above freezing for 24 hours.

4. All materials are non-hazardous and Class A fire-rated.

B. Install materials in accordance with all safety and weather conditions required by manufacturer or as modified by applicable rules and regulations of local, state and federal authorities having jurisdiction.

C. The use of water for work, cleaning or dust control, etc. shall be contained and controlled and shall not be allowed to come into contact with the passengers or public. Provide barricades or screens to protect passengers or public.

D. Disposal of any liquids or other materials of possible contamination shall be made in accordance with federal state and local laws and ordinances.

E. Cleaning materials shall have code acceptable low VOC solvent content and low flammability if used on the site.

F. Coordinate phasing and flagging personnel operations as specified elsewhere.

1.6 GUARANTEE

A. The certified applicator and the manufacturer shall provide the Owner with a five (5) year joint guarantee on the products, specification and installation

1.7 MAINTENANCE

A. Wash with soap and water with a bristle brush or pressure washer of 1000 psi.

B. Chemical spills should be removed to avoid possible damage.

PART 2 - PRODUCTS

2.1 MANUFACTURERS

A. Project standard of quality for the Cast-in Place Tactile Warning Surface materials, chemical composition, fabrication, appearance, color, performance, installation and warranty is based on: Strongwarn SWADA-1000/2000, Detectable Warning Surfaces, manufactured by Strongwall Industries Inc., 107 Chestnut Street, Ridgewood, New Jersey 07450, (201-445-4633). Existing engineered ADA and field tested products which are subject to compliance with requirements, may be incorporated in the work and shall meet or exceed the specified test criteria and characteristics.

1. Color: Canary Yellow conforming to Owners standards. Sample of colors shall be submitted to Owner and the Engineer for review.

B. Alternate product: Provide CRYL-A-FLEX TWS Tactile Warning Strip, as manufactured by DUR-A-FLEX, Inc., 95 Goodwin Street, East Hartford, Ct. 06108 (800-253-3539).

C. Or approved equal.

2.2 MATERIALS

A. #82 Truncated Dome: A blend of carboxylated latex emulsion with a factory apportioned powder catalyst. #82 is injected, or hand applied, onto the mold array, to form the required tactile warning surface.

B. One 5 gallon pail #82 liquid and eight 32.5lb bags of #82 powder form one unit. Average yield, Domes: SWADA-1000/2000- 400 square feet per unit.

1. Mixing Ratio: 5.5 quarts (maximum) of #82 latex emulsion and two 32.5 lb bags of #82 catalyst powder. Micro-adjust in the field, for the quantity of liquid used, to achieve optimum handling.

C. #32 Field: A two-component blend of latex vinyl copolymer with a factory apportioned catalyst powder and pigments, which is used to form the required field.

1. Mixing Ratio: One 5-gallon pail of #32 Emulsion and two 55-lb bags of #32 Catalyst Powder form one unit.

2. Average Yield: 400 square feet of field. One coat at 30 mils wet.

D. #4 Pigmented Sealer: Used to enhance color quality, it is applied directly from the container. #4 will yield 700 square feet per 5-gallon pail. Stir for 30 seconds and apply with a long nap roller or brush. Apply in two coats

2.3 SUPPLEMENTAL MATERIALS

A. EM-100-N Crack Treatment Component: Elastomeric rubber emulsion.

B. Strongcrete SW-81: SBR modified structural repair mortar material.

C. Cleaning agent: Water

2.4 EQUIPMENT

A. Flexible and reusable molds

B. Strongwarn material injector

PART 3 - EXECUTION

3.1 EXAMINATION

A. Concrete:

1. Inspect the top surface of the substrate. Perform all necessary substrate repairs and remove laitance, grease, oil, paint and other contaminants, which will affect system adhesion.

2. Commencement of system installation only implies the acceptance of the top surface, as suitable to accept the system.

3.2 PREPARATION

A. Equipment options:

1. Shotblast or scarify, and vacuum so that the surface is clean, then water blast machine capable of delivering a minimum water pressure of 4000 psi to the substrate.

B. Procedure

1. Make as many passes as required with shotblast or scarifying machine and vacuum surface clean.

2. Pretreat areas of oil drippings with a penetrating oil remover and rinse. Spray concrete deck with HD cleaner, allow to soak for 30 minutes without drying, and water blast with 4000 psi.

3.3 APPLICATION

A. #82 Truncated domes:

1. Mixing:

   a. Place #82 Emulsion in an appropriate size container. Add the appropriate amount of #82 Catalyst Powder, while mixing continuously with a paddle mixer and a heavy duty slow speed (400-600 rpm) drill. Continue mixing until uniform mixture consistency is achieved, but, do not mix for more than 2 minutes. Mixture working time is 20 minutes at 70°F.

2. Placement:

   a. With clean water, dampen concrete and all porous substrate surfaces to a dull finish. Immediately place mold segments onto the work area.
   b. Place #82 mixture onto the molds using a squeegee and a trowel, to help work the material into the mold openings and remove excess material from exposed surfaces of the molds.
   c. Caution: Do not touch or move the mold, since it may break the bond.
   d. #82 mixture must be cured sufficiently to resist pressure with index finger before mold segments can be removed without causing damage.

3. Minimum Curing Time:

   a. 45°F - 55°F allow to cure for 12 hours minimum.
   b. 55°F - 70°F allow to cure for 6 hours minimum.
   c. Above 70°F allow to cure for 3 hours minimum.
   d. Do not apply at temperatures below 45°F

B. #32 Field: (two coats required)

1. Mixing:

   a. Stir #32 Emulsion for about 30 seconds using a heavy-duty drill and a Jiffy blade.
   b. Pour #32 Emulsion into a clean container. Gradually add #32 Catalyst Powder, mixing continuously as the powder is added. Never reverse this procedure.
   c. After all powder has been added, continue mixing for a minimum of three minutes until the materials form a lump-free mixture. The pot life at 70°F is approximately 25 minutes. Do not attempt to remix or use any material that has begun to set.

2. Application:

   a. With clean water, dampen concrete and all porous surfaces to a dull finish.
   b. Apply mixture with a long nap roller and allow to cure for one hour (minimum) at 70°F prior to application of additional coats.

C. #4 Sealer (two coats required)

1. Stir material for 20 seconds using a heavy drill and a Jiffy blade.

2. Apply to a dry #32 surface with a long nap roller. Allow to cure for one hour (minimum) at 70°F prior to application of additional coats.

3. Allow to cure overnight before accepting traffic.

3.4 INSTALLATION

A. During all procedures, ensure adequate safety guidelines are in place and that they are in accordance with the applicable industry and government standards.

B. The specifications of the tactile warning surface and related materials shall be in strict accordance with the contract documents and the guidelines set by their respective manufacturers.

C. Prior to placement of the Cast-in-place system, the manufacturer’s shop drawings shall be reviewed and a layout drawing prepared by the installation Design-Builder to resolve the issues related to pattern repeat, tile cuts, expansion joints, control joints, platform curves, platform end returns and platform surface interferences.

D. During and after the warning surface installation and the curing stage, it is imperative that there is no walking, leaning or external forces placed on the warning surface. The Design-Builder shall provide adequate protection of the work areas completed.

3.5 CLEANING AND PROTECTING

A. Protect warning surface against damage during construction period to comply with tactile warning surface manufacturer's specification.

B. Protect warning surface against damage from rolling loads following installation by covering with plywood or hardwood.

C. Clean tactile warning surface not more than four days prior to date scheduled for inspection intended to establish date of substantial completion in each area of project. Clean tactile warning surface by method specified by manufacturer.

3.6 DEMONSTRATION / TRAINING

A. Instruct Owner's personnel in proper use, operations, and maintenance of tactile warning surfaces. Review and instruct Owner’s selected personnel in the use of all necessary equipment to properly install or repair tactile warning surfaces. Train Owner's personnel in procedures to follow in identifying sources of installation failures and emergencies associated with the improper use, storage or handling of all materials.

END OF SECTION 09 61 40

SECTION 09 67 10 – RAILROAD PLATFORM WATERPROOFING

PART 1 - GENERAL

1.1 DESCRIPTION

A. The work under this item consists of all work shown on the plans to prepare the surfaces of, and apply a waterproofing system to, the proposed microsilica concrete overlay of the new eastbound and westbound platform sections -- full length and full width. Also included is the application of "Watch the Gap" signage on the new platform surfaces (near the track-side edges) at the locations shown on the plans.

B. The work under this item also includes all work shown on the plans to mill and apply a waterproofing system to the existing platform landing area surfaces identified on the plans.

C. The waterproofing system shall be a spray applied, fast cure, high-build polymer system with a broadcast aggregate for skid resistance and a top sealer coat. The "Watch the Gap" signage on the platforms shall consist of a compatible skid resistant colored coating.

D. The color and texture of the waterproofing system and signage products shall be as approved by the Engineer. The "Watch the Gap" signage shall consist of black lettering on a rectangular high visibility yellow background. The products shall be applied to the prepared platform areas as defined in the plans in strict accordance with the Manufacturer's recommendations.

1.2 SUBMITTALS

A. The contractor shall submit proposed product data sheets for the waterproofing system and the signage skid resistant system, surface preparation procedures, installation procedures, two sample coupons (4"x4") that are representative of the finished surface, texture and colors, and Material Safety Data Sheets for approval.

B. Copies of the Material Safety Data Sheets for all products used shall be kept on site and made available to personal performing the work.

PART 2 - PRODUCTS

2.1 MATERIALS

A. The waterproofing system shall be the following or an approved equal:

1. Top Coat
   Manufacturer: Bridge Preservation, LLC
   686 S. Adams St.
   Kansas City, KS 66105
   Tel: 913-321-9000

B. Provide a waterproofing system that meets or achieves all of the following requirements:

1. For the Multi-Component Polymer Primer:
   a. Gel Time > 5 minutes
   b. Tack Free Time < 2.5 hours at 77°F or below
   c. Adhesion to Concrete > 150 psi (per ASTM D 4541)

2. For the Base Coat of Spray Applied Waterproofing Membrane, Rapid Curing Elastomer:
   a. Gel Time < 10 seconds
   b. Cure Time < 30 seconds
   c. Tack Free Time < 30 minutes
   d. Shore Hardness > 40D per ASTM D 2240
   e. Adhesion to Concrete > 150 psi per ASTM D 4541
   f. Tensile Strength > 2,000 psi per ASTM D 638
   g. Elongation at Break > 150% per ASTM D 638
   h. Crack Bridging Ability Pass at 40 Cycles per ASTM C 836
   i. The surface thickness that is applied on the platforms shall be at least the same thickness as that used for the tests above.

3. For the Spray Applied Aggregate Membrane, Rapid Curing Elastomer:
   a. Open to Light Traffic 1 Hour
   b. Gel Time > 30 seconds
   c. Tack Free Time > 5 minutes
   d. Tensile Strength > 2,000 psi per ASTM D 638
   e. Elongation at Break > 150% per ASTM D 638
   f. Crack Bridging Ability Pass at 40 Cycles per ASTM C 836
   g. The surface thickness that is applied on the platforms shall be at least the same thickness as that used for the tests above.

4. Broadcast aggregate shall consist of clean, hard (Moh's hardness range 6 to 7), dry, rounded, non-angular aggregate meeting the following gradation:

Fine Mesh Aggregate					
Fine Mesh	#10	#16	#20	#30	#50
% Passing	98-100	30-45	8-18	2-10	0-2

5. For the Aliphatic Coating Top Coat:
   a. Gel Time > 20 minutes
   b. Tack Free Time 1 hour
   c. Shore Hardness 60-65 D per ASTM D 2240
   d. Tensile Strength 3,500 – 4,500 psi per ASTM D 638
   e. Elongation 2.5 – 5 % per ASTM D 638
   f. Taber Abrasion 39 mg loss per ASTM D 4060

C. The "Watch the Gap" signage skid resistant system shall be compatible with the railroad platform waterproofing system previously applied and consist of a colored aliphatic coating with the properties listed above and the colors listed below. Broadcast aggregate shall be included in the signage.

PART 3 - EXECUTION

3.1 CONSTRUCTION METHODS

A. The contractor shall provide the services of a technical representative of the manufacturer. This representative shall be on the project site at the start of the waterproofing-related work and remain until released by the Engineer. The representative shall provide advice on prepping, mixing, and placing the waterproofing system products and the "Watch the Gap" signage. The technical representative, upon consultation with the Engineer, may suspend any item of work that is suspect and does not meet the requirements of this specification. Resumption of work will occur only after the manufacturer's representative and the Engineer are satisfied that appropriate remedial action has been taken by the contractor.

B. The contractor shall submit for review a detailed, written sequence and procedure for performing the waterproofing-related work in accordance with the plans and the NOTICE TO CONTRACTOR - WORK ON RAILROAD PROPERTY.

C. The application of the waterproofing system to the new platform sections shall be accomplished in uninterrupted sections between platform "expansion joints" in accordance with the plans and the NOTICE TO CONTRACTOR - WORK ON RAILROAD PROPERTY.

D. The application of the waterproofing system to the new platform sections shall be done before both the "tactile warning strips" and the platform "concrete overlay joints" are installed.

E. Application of the waterproofing system to the new platforms shall take place immediately after the microsilica overlay surface has been prepared, i.e. made free of oil, grease, curing compounds, loose particles, moss, algae growth, laitance, friable matter, dirt, and bituminous products; and prior to any public access being granted to that portion of platform.

F. Application of the waterproofing system to the existing platform landing areas indicated on the plans shall take place immediately after the existing surface is milled, shotblasted, or ground and prior to any public access being granted to that landing area. Surfaces shall be free of oil, grease, curing compounds, loose particles, moss, algae growth, laitance, friable matter, dirt, bituminous products and previous waterproofing materials. Shotblasting, grinding, or milling shall be used to provide a sound substrate free from laitance. The surface profile is not to exceed 1/8" (3 mm) (peak to valley).

G. If required, degreasing of surfaces to receive the waterproofing system shall be performed via detergent washing in accordance with ASTM D4258.

H. All waterproofing system related work, including shotblasting, grinding, and milling operations for the platform landing areas shall cease prior to a train entering the station on an adjacent track, to prevent damage to the train and injury to commuters. Sufficient distance between the surface preparation process and waterproofing system application shall be provided to prevent any injury or discomfort to commuters on the platform or train. Vacuum shotblasting is anticipated as a means to minimize the spread of debris.

I. Remove excess loose aggregate prior to applying the final top binder surface. Apply an aliphatic coating for the top binder surface, or an approved equal, to lock the aggregate into place. The

material type and cure time shall be chosen so as to meet the maximum closure windows required by the plans and the NOTICE TO CONTRACTOR - WORK ON RAILROAD PROPERTY.

J. The "Watch the Gap" signage shall be installed in the specified areas after the new waterproofing system has cured. Before applying the signage, the area shall be clean and free of any contamination. One coat of an approved high visibility yellow color shall be installed in a rectangle shape at a minimum thickness of 50 mils. Once cured a second coat of an approved black color shall be used to stencil "Watch the Gap" centered properly over the first rectangular coat at a minimum 50 mils. Both coats shall be applied in accordance with manufacturer's recommendations to provide a neat finish and edges. Do not feather edge.

K. If an area is left untreated or the binder becomes damaged, a patch repair shall be carried out to restore the integrity of the system. The damaged area shall be cut back to sound material and wiped with solvent (e.g. acetone) up to a width of at least 4" on the periphery. The area shall then be repaired using the same procedures and steps to restore a uniform, continuous appearance. One coat of sealer shall be applied with a 4" minimum overlap onto the existing area.

END OF SECTION 09 67 10

SECTION 10 14 00 – IDENTIFYING DEVICES

PART 1 - GENERAL

1.1 SUMMARY

A. **Section Includes**:

1. Panel signs

1.2 DEFINITIONS

A. **Accessible**: In accordance with the accessibility standard.

1.3 SUBMITTALS

A. **Product Data**: For each type of product.

B. **Shop Drawings**: For panel signs.

1. Include fabrication and installation details and attachments to other work.

2. Show sign mounting heights, locations of supplementary supports to be provided by other installers, and accessories.

3. Show message list, typestyles, graphic elements, and layout for each sign at least half size.

C. **Product Schedule**: For panel signs. Use same designations indicated on Drawings or specified.

D. **Qualification Data**: For Installer and manufacturer.

E. **Sample Warranty**: For special warranty.

F. **Maintenance Data**: For signs to include in maintenance manuals.

1.4 QUALITY ASSURANCE

A. **Installer Qualifications**: An entity that employs installers and supervisors who are trained and approved by manufacturer.

1.5 DELIVERY, STORAGE, AND HANDLING

A. Deliver, store, and handle materials as recommended by the Manufacturer, to protect from

damage.

1.6 WARRANTY

A. **Special Warranty**: Manufacturer agrees to repair or replace components of signs that fail in materials or workmanship within specified warranty period.

1. Failures include, but are not limited to, the following:

a. Deterioration of finishes beyond normal weathering.

b. Deterioration of embedded graphic image.

c. Separation or delamination of sheet materials and components.

2. Warranty Period: Five years from date of Substantial Completion.

PART 2 - PRODUCTS

2.1 PERFORMANCE REQUIREMENTS

A. **Thermal Movements**: For exterior signs, allow for thermal movements from ambient and surface temperature changes.

1. Temperature Change: 120 deg F ambient; 180 deg F, material surfaces.

B. **Accessibility Standard**: Comply with applicable provisions in the USDOJ's "2010 ADA Standards for Accessible Design and ICC A117.1.

2.2 PANEL SIGNS

A. **Panel Sign**: Sign with smooth, uniform surfaces; with message and characters having uniform faces, sharp corners, and precisely formed lines and profiles; and as follows:

1. Solid-Sheet Sign: Aluminum sheet with finish specified in "Surface Finish and Applied Graphics" Subparagraph and as follows:

a. Thickness: Manufacturer's standard for size of sign

b. Surface-Applied, Flat Graphics: Applied vinyl film.

2. Sign-Panel Perimeter: Finish edges smooth.

a. Edge Condition: As indicated on Drawings

b. Corner Condition in Elevation: As indicated on Drawings

3. Mounting: As indicated on Drawings.

4. Surface Finish and Applied Graphics:

   a. Integral Aluminum Finish: Clear anodized

5. Text and Typeface: typeface as selected by Architect from manufacturer's full range

2.3 PANEL-SIGN MATERIALS

A. **Aluminum Sheet and Plate**: ASTM B 209, alloy and temper recommended by aluminum producer and finisher for type of use and finish indicated.

B. **Vinyl Film**: UV-resistant vinyl film of nominal thickness indicated, with pressure-sensitive, permanent adhesive on back; die cut to form characters or images as indicated on Drawings and suitable for exterior applications.

2.4 ACCESSORIES

A. **Fasteners and Anchors**: Manufacturer's standard as required for secure anchorage of signs, noncorrosive and compatible with each material joined, and complying with the following unless otherwise indicated:

1. Use concealed fasteners and anchors unless indicated to be exposed.

2. For exterior exposure, furnish stainless-steel devices unless otherwise indicated.

3. Exposed Metal-Fastener Components, General:

   a. Fabricated from same basic metal and finish of fastened metal unless otherwise indicated.

   b. Fastener Heads: For nonstructural connections, use flathead or oval countersunk screws and bolts with tamper-resistant Allen-head, or spanner-head slots unless otherwise indicated.

4. Sign Mounting Fasteners:

   a. Through Fasteners: Exposed metal fasteners matching sign finish, with type of head indicated, and installed in predrilled holes.

B. **Bituminous Paint**: Cold-applied asphalt emulsion complying with ASTM D 1187/D 1187M.

2.5 FABRICATION

A. **General**: Provide manufacturer's standard sign assemblies according to requirements indicated.

1. Preassemble signs in the shop to greatest extent possible. Disassemble signs and

assemblies only as necessary for shipping and handling limitations. Clearly mark units for reassembly and installation; apply markings in locations concealed from view after final assembly.

2. Mill joints to a tight, hairline fit. Form assemblies and joints exposed to weather to resist water penetration and retention.

3. Comply with AWS for recommended practices in welding and brazing. Provide welds and brazes behind finished surfaces without distorting or discoloring exposed side. Clean exposed welded and brazed connections of flux, and dress exposed and contact surfaces.

4. Conceal connections if possible; otherwise, locate connections where they are inconspicuous.

5. Internally brace signs for stability, to meet structural performance loading without oil-canning or other surface deformation, and for securing fasteners.

6. Provide rabbets, lugs, and tabs necessary to assemble components and to attach to existing work. Drill and tap for required fasteners. Use concealed fasteners where possible; use exposed fasteners that match sign finish.

B. **Shop-Applied Vinyl**: Align vinyl film in final position and apply to surface. Firmly press film from the middle outward to obtain good bond without blisters or fishmouths.

2.6 GENERAL FINISH REQUIREMENTS

A. Protect mechanical finishes on exposed surfaces from damage by applying a strippable, temporary protective covering before shipping.

B. **Appearance of Finished Work**: Noticeable variations in same piece are not acceptable. Variations in appearance of adjoining components are acceptable if they are within the range of approved Samples and are assembled or installed to minimize contrast.

C. **Directional Finishes**: Run grain with long dimension of each piece and perpendicular to long dimension of finished trim or border surface unless otherwise indicated.

D. **Organic, Anodic, and Chemically Produced Finishes**: Apply to formed metal after fabrication but before applying contrasting polished finishes on raised features unless otherwise indicated.

2.7 ALUMINUM FINISHES

A. **Clear Anodic Finish**: AAMA 611, Class I, 0.018 mm or thicker.

PART 3 - EXECUTION

3.1 EXAMINATION

A. Examine substrates, areas, and conditions, with Installer present, for compliance with requirements for installation tolerances and other conditions affecting performance of the Work.

B. Verify that sign-support surfaces are within tolerances to accommodate signs without gaps or irregularities between backs of signs and support surfaces unless otherwise indicated.

C. Proceed with installation only after unsatisfactory conditions have been corrected.

3.2 INSTALLATION

A. **General**: Install signs using mounting methods indicated and according to manufacturer's written instructions.

1. Install signs level, plumb, true to line, and at locations and heights indicated, with sign surfaces free of distortion and other defects in appearance.

2. Install signs so they do not protrude or obstruct according to the accessibility standard.

3. Before installation, verify that sign surfaces are clean and free of materials or debris that would impair installation.

4. Corrosion Protection: Coat concealed surfaces of exterior aluminum in contact with grout, concrete, masonry, wood, or dissimilar metals, with a heavy coat of bituminous paint.

B. **Accessible Signage**: Install in locations on walls as indicated on Drawings and according to the accessibility standard.

C. **Mounting Methods**:

1. Through Fasteners: Drill holes in substrate using predrilled holes in sign as template. Countersink holes in sign if required. Place sign in position and flush to surface. Install through fasteners and tighten.

3.3 ADJUSTING AND CLEANING

A. Remove and replace damaged or deformed signs and signs that do not comply with specified requirements. Replace signs with damaged or deteriorated finishes or components that cannot be successfully repaired by finish touchup or similar minor repair procedures.

B. Remove temporary protective coverings and strippable films as signs are installed.

C. On completion of installation, clean exposed surfaces of signs according to manufacturer's written instructions, and touch up minor nicks and abrasions in finish. Maintain signs in a clean condition during construction and protect from damage until acceptance by Owner.

END OF SECTION 10 14 00

SECTION 12 93 40 - SITE FURNISHINGS

PART 1 - GENERAL

1.1 SUMMARY

A. **Work of this section includes**:

1. Recycling Centers, in the color and finish selected by Metro-North, and in the length and quality shown indicated on contract drawings and herein. Install

2. Anchoring requirements for reinstallation of salvaged benches

1.2 REFERENCES

A. American Institute of Steel Construction (ASIC) - Applicable standards.

B. AWS D1.1 Structural Welding Code

C. Industrial Fasteners Institute (IFI) Fastener Standard Book

D. American Society of Testing Materials.

1.3 SUBMITTALS

A. Submit samples of all materials and products for approval.

B. **Submit shop drawings showing the following**:

1. Types of materials, including sizes and weights of members.

2. Location, types and details of connections.

C. **Product data**: For each type of product

D. Submit manufacturers' literature for all accessories including but not limited to fasteners, bolts and weld rods.

E. **Warranty**: Manufacturer's standard warranty.

F. **Maintenance data**: for site furnishings to include in maintenance manuals.

1.4 QUALITY ASSURANCE

A. **Installer Qualifications**: Installer of site furnishings is a certified installer with documented

history installing manufacturer's products according to manufacturer's specifications.

1.5 PRODUCT HANDLING

A. The Contractor shall be responsible for replacing all materials damaged up until the time of completion and final acceptance of the work of this section.

1.6 DELIVERY, STORAGE, AND HANDLING

A. Deliver, store, and handle materials as recommended by the Manufacturer, to protect from damage.

1.7 WARRANTY

A. Manufacturer to warrant its products to be free from material defects and/or workmanship for a period of three years from the date of Owner acceptance. This warranty does not apply to damage resulting from accident, alteration, misuse, tampering, negligence or abuse. The Manufacturer shall repair, replace, or refund the purchase price, of any items found defective upon inspection by Owner.

PART 2 - PRODUCTS

2.1 MATERIALS

A. Anchors for reinstallation of salvaged benches

1. Stainless steel screws and bolts

2. All assembling bolts shall be type 316 stainless steel and tamper proof.

B. MNR Recycling Center

1. MNR Recycling centers are to be furnished by the contractor and installed by MNR.

2. Recycling center is to be affixed to the platform with epoxy threaded rods, washers, and nuts. Quantity and size per manufacturer's requirements.

a. 316 stainless steel

3. Recycling center advertising is to be provided by others.

4. Finish: powder coat

PART 3 - EXECUTION

3.1 EXAMINATION

A. Examine areas and conditions, with Installer present, for compliance with requirements for correct and level finished grade, mounting surfaces, installation tolerances, and other conditions affecting performance of the Work.

B. Proceed with installation only after unsatisfactory conditions have been corrected.

3.2 SURFACE PREPARATION

A. Ensure surfaces to receive furnishings are clean, flat, and level

B. Prepare drilled holes for anchors as recommended by anchor manufacturer.

3.3 INSTALLATION

A. Install site furnishings in accordance with manufacturer's instructions at locations indicated on drawings.

B. Install furnishings level, plumb, square, accurately aligned, correctly located, and without warp. Provide leveling grout pads.

C. Anchor furnishings securely in place to concrete with concrete anchor bolts through holes in predrilled flanges. All fasteners to be tamper proof.

D. Use hardware and fasteners in accordance with manufacturer's instructions.

3.4 CLEANING

A. Clean furnishings in accordance with manufacturer's instructions.

B. Remove temporary protective coverings.

C. Do not use harsh cleaning materials or methods that would damage finish.

3.5 PROTECTION

A. Protect installed furnishings from damage during construction.

END OF SECTION 12 93 40

SECTION 13 34 19 - PRE-ENGINEERED PLATFORM SHELTERS

PART 1 - GENERAL

1.1 SUMMARY

A. **Description**: Fabrication and installation of platform shelter as indicated on the Drawings, and as required to complete the work and the project objectives, including, but not limited to, aluminum and glass on concrete platforms.

1.2 SUMMARY

A. **Section Includes**:

1. Permanent platform shelter
2. Temporary platform shelter
3. TVM shelter

1.3 REFERENCES

A. ASTM B209 Aluminum and Aluminum Alloy Sheet and Plate.

B. SMACNA Architectural Sheet Metal Manual.

C. AAMA 607.1 Voluntary Guide Specification and Inspection Methods for Clear Anodic Finishes for Architectural Aluminum.

D. AAMA 608.1 Voluntary Guide Specification and Inspection Methods for Electrolytically Deposited Color Anodic Finishes for Architectural Aluminum.

E. ANSI X97.1 Safety performance Specifications and Methods of Test for Safety Glazing Used in Buildings.

F. ASTM E330 Structural Performance of Exterior Windows, Curtain Walls and Doors by Uniform Static Air Pressure Difference.

G. FGMA Glazing Manual

H. CTDOT Standard Specifications, Construction and Materials

1.4 DESIGN REQUIREMENTS

A. Design shall comply with the requirements of applicable codes and receive approval of Factory

Mutual Research Corporation. Shelters shall conform to the Connecticut Fire Prevention and Building Code and Factory Mutual FM Standard 4880 Class 1 guidelines.

B. **Loadings**: Design loads shall be developed using the procedures contained in Design Practices and Design Practice Commentary in the MBMA publications, Metal Building Systems Manual, and the Building Code of Connecticut, current edition. The following data shall be used in developing design loads:

1. The maximum factored load combination as defined in Chapter 16, Structural Design, of the Building Code of Connecticut.

2. The Contractor may, at his option, use either Load and Resistance Factor Design (LRFD) or Allowable Stress Design (ASD), using the appropriate load combinations for each method.

C. **Framing and Structural Members**:

1. Welding of steel shall conform to the requirements of AWS D1.1, current edition. The welding of aluminum shall conform to the requirements of AWS D1.2, current edition.

a. Primary framing shall be continuous aluminum members supported by exterior and interior columns at bay spacing indicated on drawings.

b. Wind uplift ratings for metal roof panel system: Obtain from UL testing conducted in accordance with "Tests for Wind Uplift Resistance of Roof Assemblies", UL580. Specific information shall be obtained in UL "Building Material Directory" and applicable state codes.

1.5 SUBMITTALS

A. **General**: Refer to Section Division 1 Procedures

B. Shop drawings consisting of catalog cuts; design and erection drawings; complete design analysis for lateral loads, uplift, shop painting and finishing specifications; instruction manuals; and other data to clearly describe design, materials, sizes, layouts, construction details, fasteners, and erection.

C. Shop drawings shall be accompanied by engineering design calculations for structural framing and covering components, signed and sealed by a Professional Engineer registered and licensed in the State of Connecticut stating the design criteria and procedures used and attesting to the adequacy and accuracy of the design.

D. **Samples and Descriptive Data**:

1. Accessories: One sample of each type of flashing, trim, closures, caps and similar items. Size shall be sufficient to show construction and configurations.

2. Covering, Roof and Wall: one piece of each type to be used, 9-inches long, full width if less than 6" wide; 6" wide if larger. Sample for factory color finished covering shall be

accompanied by certified laboratory test reports showing that the sheets are produced under a continuing quality control program and that a representative sample has been tested within the past 12 months and has met the quality standards specified.

3. Fasteners: Two samples of each type to be used with statement regarding intended use.

4. Gaskets and Insulating Compounds: Descriptive data.

5. Sealant: One sample, approximately 1 pound, and descriptive data.

E. **Product Data**: Submit manufacturer's specifications, data, and installation instructions for review.

1.6 QUALITY ASSURANCE

A. The manufacturer must demonstrate acceptable expertise in said product and acceptable to Railroad.

B. For the actual fabrication of the platform shelters, use only mechanics that are thoroughly trained and experienced in the skills required in the manufacture and fabrication of the units.

C. **Installer Qualifications**: Installer of pre-engineered platform shelters is a certified installer with documented history installing manufacturer’s products according to manufacturer’s specifications.

D. In acceptance or rejection of the manufacture units, no allowance will be made for lack of skill on the part of the fabricator/manufacturer.

E. The materials must be in full compliance with the contract documents and approved shop drawings.

F. **Closeout**:

1. Maintenance Data: Manufacturer's instructions.

2. Manufacturer is to provide a two (2) year unconditional guarantee for said units against any defects in workmanship or design, in required form, from date of final acceptance by CTDOT.

1.7 PRODUCT HANDLING

A. **Protection**: Use all means necessary to protect the platform shelters prior to delivery. The preassembled units are to be shipped in protective crating, palletized.

B. **Replacements**: In the event of damage, repair will be subject to CTDOT’s discretion as to whether replacement or repair will be the procedure for damaged units.

C. **Shipping**: All windowpanes glass to be shipped separately with protective materials to prevent damages

1.8 DELIVERY, STORAGE, AND HANDLING

A. Deliver, store, and handle materials as recommended by the Manufacturer, to protect from damage.

PART 2 - PRODUCTS

2.1 SHELTER

A. **Shelter Enclosure Components**:

1. General:

a. Acceptable manufacturer's:

1) Thomas Manufacturing Inc., (908)-810-0030
2) Columbia Equipment Co., Inc. (716)-658-5900
3) Or Approved Equal

2. Materials:

a. All materials metal shall be extruded aluminum from 6063-T5 alloy and shall be finished throughout.

b. Aluminum panels to be .060 gauge anodized.

c. All glass to be ¼" tempered as per Fed Spec DD-G01403C.

1) The glass shall be covered with a sacrificial 7 mil. Clear film on both sides to protect against vandalism.

d. Aluminum structure surfaces shall be scratch resistant, and be able to have graffiti removed easily.

3. The Contractor shall furnish and install complete shelters as shown on the drawings.

B. **Finishes**:

1. Factory finish extruded Shelter wall framed panels and components so that any part exposed to view upon completion of installation will be uniform in finish and color.

2. Color Anodic Coating: Comply with AAMA 608.1.

a. Class 1, AA<12C22A44 color coating electrolytically deposited, 0.7 mil thickness minimum.

3. Anodic Coating: Comply with AAMA 607.1.

4. Class 1, AAM10C22A31 clear coating electrolytically deposited, 0.7 mil thickness

minimum.

C. **Aluminum Shelter Walls**:

1. Flush Glazing frame system to meet sizes indicated on the drawings, no snap together glazing or framing will be accepted.

2. The standard shelter shall be fire and vandal resistant, and consist of an anodized aluminum frame.

D. **Roof Panels**:

a. Permanent shelter

1) As shown on drawings

b. Temporary and TVM shelter:

1) Standard Flat Roof: Comprised of white, roll formed interlocking pan sections with a 6” fascia/gutter. Standard full perimeter overhang is 4”.

E. **Concrete Curb**:

1. The shelter’s base frame shall be anchored to a full width, minimum 12 inch high concrete curb (above top of platform) which is to be installed to deter structural corrosion from snow melting chemicals.

PART 3 - EXECUTION

3.1 PREPARATION

A. Transmit submittals required by this Section.

B. Furnish products as indicated.

C. Ensure substrates are in suitable condition to receive the work of this Section.

3.2 INSPECTION

A. Building tolerances on the panel system shall not exceed those defined by the panel manufacturer.

1. 3/8 inch in any 20 foot length.

2. 3/4 inch over any single roof plane.

B. Alignment of the panel support system should be checked and defects corrected prior to installing panels.

3.3 ERECTION

A. Erection shall be in accordance with the approved erection instructions and drawings. Finished structure shall be proven weather-tight. Stained, discolored or damaged sheets shall be removed.

B. Anchoring system complete per final accepted shop drawings and in full accordance with the manufacturer's specifications and instructions. Minor adjustments to the shelter may be required at time of installation, due to possible variances and irregularities in poured concrete curb.

C. **Framing and Structural Members**: Uniform bearing under base plates and sill members shall be provided using a non-shrinking grout.

D. **Metal wall and roof panels**: Wall and roof panels shall be installed to provide proper drainage with the installation of weeps as recommended by the manufacturer and shall be designed with adequate provisions for expansion and contraction, where required.

E. Caulking and sealant shall be used in joints with surrounding construction to provide watertight construction.

F. **Field Painting**:

1. Abraded or corroded spots on shop-painted surfaces shall be wire brushed and touched up with the same material used for the shop coat.

3.4 ROOF AND WALL PANEL INSTALLATION

A. Panels shall be installed plumb and true in proper alignment and relation to the structural framing. Panel erector shall demonstrate at least five years of experience installing similar products and applications.

B. Manufacturer shall provide detailed instructions covering the tools, fasteners, sealants, and assembly procedures required to achieve the structural, thermal, and weathering performance specified.

C. Wall covering shall be applied with the longitudinal configurations in the vertical position. Roof panels shall be applied with the longitudinal configurations in the direction of the roof slope.

D. End laps shall be made over framing members with fasteners into framing members approximately 2 inches from the end of the overlapping sheet.

E. Side laps shall be laid away from the prevailing winds.

F. Side lap distances, end lap distances, joint sealing, spacing and fastening of fasteners shall be in accordance with the manufacturer's standard practice insofar as the maximum spacing specified is not exceeded and provided such standard practice will result in a structure that will be free from water leaks and meet design requirements.

G. Panels, trim, accessories, and sealants shall be installed in accordance with approved shop

drawings to insure a functional and weather tight installation.

H. No exposed roof fasteners will be permitted as part of the structural system.

I. Dry wipe-down of the exterior surface should be done as the panels are installed.

J. Remove all strippable coating and provide a dry wipe-down cleaning of the panels as they are erected.

K. Metal filings caused by cutting and drilling shall be immediately removed from finished surfaces to prevent rusting and staining.

L. The wall panel systems contractor shall coordinate work with other trades as required to insure proper flashing and seals with adjoining construction.

3.5 DAMAGED MATERIAL

A. Upon determination of responsibility, repair or replace damaged metal panels and trim to the satisfaction of the architect and/or owner at no additional cost to owner.

END OF SECTION 13 34 19

SECTION 23 82 46 - ELECTRIC UNIT HEATERS

PART 1 - GENERAL

1.1 DESCRIPTION

A. This work shall consist of providing a wall-mounted heavy-duty electric unit heater, as indicated in the contract plans, and arranging for discharge of air as indicated.

1.2 SUBMITTALS

A. Submit the following in accordance with the NOTICE TO CONTRACTOR – SUBMITTALS:

1. Product Data

   a. Equipment and Performance Data
   b. Electric Unit Heaters

2. Manufacturer's Instructions

   a. Manufacturer's Instructions

1.3 QUALITY ASSURANCE

A. Codes, Regulations, Reference Standards and Specifications:

1. The publications listed below form a part of this specification to the extent referenced. The publications are referred to within the text by the basic designation only.

   a. UNDERWRITERS LABORATORIES (UL)
      1) UL 1025 : UL Standard for Safety Electric Air Heaters

1.4 RELATED DOCUMENTS

A. SECTION 26 05 00 - COMMON WORK RESULTS FOR ELECTRICAL applies to work specified in this section.

PART 2 - PRODUCTS

2.1 PRODUCT STANDARDS

A. Provide products conforming to the requirements of UL 1025 for electric unit heaters.

B. Unit heaters shall be manufactured by Trane, Reznor, TPI Corporation or approved equal.

2.2 PRODUCT DESCRIPTION

A. Provide wall-mounted heavy-duty electric unit heaters and arrange for discharge of air as indicated.

B. Provide electric unit heaters with not less than the indicated capacity and conform to requirements specified herein. Ensure electric unit heaters are factory prewired, ready for field terminal connections. Ensure compatibility of unit heater with existing electrical system voltage and phase. Wall-mounted heater shall extend no more than 6" from finished wall surface.

2.3 CASINGS

A. Construct casings with smoothly contoured metal of not less than 16-gage cold-rolled carbon steel. Provide casing surface finish with phosphate pretreatment, prime coating, and high gloss baked-enamel finish.

B. Front enclosure shall be able to withstand 10.8 ft-lbs impact and 400 lbs static force applied to an 8-inch square area at center grille location with less than 1/16” distortion. Combination supply and return grille assembly shall be constructed of 1/16” by 3/8” rounded edge horizontal steel. Louvers shall be spaced for a maximum opening of ¼”. Louvers shall be welded at every intersection to three evenly spaced vertical members, completely framed with an anodized aluminum extrusion.

2.4 AIR DISTRIBUTION

A. Heater shall provide an even distribution of air to the space by drawing return air across heating element and discharged from center section of the heater by means of an electric motor and axial flow fan blade.

2.5 HEATING ELEMENT

A. Construct heating element of a resistance wire insulated by highly compacted refractory insulation protected by a sealed metallic-finned sheath. Component materials are as follows:

1. Element shall consist of two or three corrosion resistant steel sheathed type elements mechanically bonded to corrosion-resistant steel fins.

2. Each sheathed element shall consist of helically coiled nickel chrome alloy wire completely embedded in and surrounded by magnesium oxide, enclosed and wedged into corrosion-resistant steel sheaths.

3. Elements shall have 2" cold conductor pins extending into the sheath and shall have a density of no more than 60 watts per inch.

2.6 CONTROLS

A. Provide unit with a remote unfused disconnect switch that opens ungrounded conductors in the OFF position and a thermostat with integral controls including thermal overload cutout switches, magnetic contactors, necessary transformers, and thermostat protection as required. Provide automatically resettable cutout switches.

B. Provide integrally mounted thermostat heavy-duty hydraulic-type with a range of 40° F to 80° F with sensing bulb placed in the return air.

C. Thermostat can also serve as a disconnect by breaking all ungrounded conductors in the OFF position, if in compliance with NEC requirements.

D. Thermostat control knob shall be covered by a 16 gauge tamper-resistant access plate to prevent adjustment by anyone other than authorized personnel.

2.7 FANS AND MOTORS

A. Provide propellers with mill-aluminized statically and dynamically balanced to within 0.5 percent. Provide units with fan-inlet safety guards.

B. AMCA certify propellers and motors for air performance and noise level.

C. Protect motors against damage by the heating element and resilient mount.

D. Motors shall be permanently lubricated unit bearing, totally enclosed, shaded pole type with impedance protection. Motors shall operate at 1400 RPM maximum and shall be same voltage as the heater.

E. Provide motor identification plate per manufacturer's standard.

2.8 THERMAL OVERLOAD

A. Heaters shall be equipped with ‘zero voltage reset’ thermal overload to disconnect elements and motor in the event that normal operating temperatures are exceeded.

2.9 WARRANTY

A. Heater shall be warranted for a period of 5 years.

PART 3 - EXECUTION

3.1 INSTALLATION

A. Install unit heaters in accordance with the manufacturer's instructions at the mounting height indicated.

3.2 FIELD TESTING

A. Demonstrate in the presence of the Department's representative that the unit heaters operate satisfactorily.

B. Cycle unit heaters five times, from start to operating thermal conditions to off, to verify adequacy of construction, system controls, and component performance.

C. Conduct an operational test for a minimum of 6 hours.

END OF SECTION 23 82 46

SECTION 26 05 00 - COMMON WORK RESULTS FOR ELECTRICAL

PART 1 - GENERAL

1.1 SUMMARY

A. Section Includes:

1. Electrical equipment coordination and installation.
2. Sleeves for raceways and cables.
3. Sleeve seals.
4. Grout.
5. Common electrical installation requirements.

1.2 DEFINITIONS

A. EPDM: Ethylene-propylene-diene terpolymer rubber.

B. NBR: Acrylonitrile-butadiene rubber.

1.3 SUBMITTALS

A. Submit the following in accordance with Form 816 Article 1.20-1.05.02 and NOTICE TO CONTRACTOR – SUBMITTALS.

B. Product Data: For sleeve seals.

C. Quality Assurance Submittals:

1. Manufacturer Certification Letter in accordance with NOTICE TO CONTRACTOR - POTENTIAL FOR ASBESTOS CONTAINING MATERIALS.
2. Source quality-control test reports.
3. Field quality-control test reports.

1.4 COORDINATION

A. Coordinate arrangement, mounting, and support of electrical equipment:

1. To allow maximum possible headroom unless specific mounting heights that reduce headroom are indicated.
2. To provide for ease of disconnecting the equipment with minimum interference to other installations.
3. To allow right of way for piping, duct, and conduit installed at required slope.
4. So connecting raceways, cables, wireways, cable trays, and busways will be clear of obstructions and of the working and access space of other equipment per NFPA 70.

B. Coordinate installation of required supporting devices and set sleeves in cast-in-place concrete, masonry walls, and other structural components as they are constructed.

C. Coordinate location of access panels and doors for electrical items that are behind finished surfaces or otherwise concealed.

D. Coordinate sleeve selection and application with selection and application of firestopping.

1.5 WARRANTY

A. Refer to Form 816 Article 1.20-1.06.08 and NOTICE TO CONTRACTOR – WARRANTIES

for additional information.

1.6 DELIVERY, STORAGE, AND HANDLING

A. Refer to Form 816 Article 1.06.03 and Form 816 Article 1.20-1.06.03 for additional information.

PART 2 - PRODUCTS

2.1 SLEEVES FOR RACEWAYS AND CABLES

A. Steel Pipe Sleeves: ASTM A 53/A 53M, Type E, Grade B, Schedule 80, galvanized steel, plain ends.

2.2 SLEEVE SEALS

A. Description: Modular sealing device, designed for field assembly, to fill annular space between sleeve and raceway or cable.

1. Available Manufacturers: Subject to compliance with requirements, manufacturers offering products that may be incorporated into the Work include, but are not limited to, the following:

a. Advance Products & Systems, Inc.
b. Calpico, Inc.
c. Metraflex Co.
d. Or approved equal.

2. Sealing Elements: EPDM interlocking links shaped to fit surface of cable or conduit. Include type and number required for material and size of raceway or cable.
3. Pressure Plates: Stainless steel. Include two for each sealing element.
4. Withstand Pressure: Use sealing compound and plugs to withstand at least 15-psig hydrostatic pressure.
5. Connecting Bolts and Nuts: Stainless steel of length required to secure pressure plates to sealing elements. Include one for each sealing element.

2.3 GROUT

A. Nonmetallic, Shrinkage-Resistant Grout: ASTM C 1107, factory-packaged, nonmetallic aggregate grout, noncorrosive, nonstaining, mixed with water to consistency suitable for application and a 30-minute working time.

1. Withstand Pressure: Use sealing compound and plugs to withstand at least 15-psig hydrostatic pressure.

PART 3 – EXECUTION

3.1 COMMON REQUIREMENTS FOR ELECTRICAL INSTALLATION

A. Comply with NECA 1.

B. All electrical components shall be installed per requirements of NFPA 70, NFPA 70E, and other codes identified in the Contract Documents.

C. Measure indicated mounting heights to bottom of unit for suspended items and to center of unit for wall-mounting items.

D. Headroom Maintenance: If mounting heights or other location criteria are not indicated, arrange and install components and equipment to provide maximum possible headroom consistent with these requirements.

E. Equipment: Install to facilitate service, maintenance, and repair or replacement of components of both electrical equipment and other nearby installations. Connect in such a way as to facilitate future disconnecting with minimum interference with other items in the vicinity.

F. Right of Way: Give to piping systems installed at a required slope.

3.2 FIELD QUALITY CONTROL

A. Testing Agency: Engage a qualified testing agency to perform tests and inspections.

B. Manufacturer's Field Service: Engage a factory-authorized service representative to inspect, test, and adjust components, assemblies, and equipment installations, including connections.

C. Perform tests and inspections.

1. Manufacturer's Field Service: Engage a factory-authorized service representative to inspect components, assemblies, and equipment installations, including connections, and to assist in testing.

D. Acceptance Testing Preparation:

1. Test continuity of each circuit.

E. Tests and Inspections:

1. Perform each visual and mechanical inspection and electrical test stated in NETA Acceptance Testing Specification. Certify compliance with test parameters.
2. Correct malfunctioning units on-site, where possible, and retest to demonstrate compliance; otherwise, replace with new units and retest.

3.3 INSTALLATION FOR ELECTRICAL PENETRATIONS

A. Use type and number of sealing elements recommended by manufacturer for raceway or cable material and size. Position raceway or cable in center of sleeve for all electrical applications. Assemble mechanical sleeve seals and install in annular space between cable and sleeve. Tighten bolts against pressure plates that cause sealing elements to expand and make a watertight seal for all below grade penetrations.

B. Electrical penetrations occur when raceways, cables, wireways, cable trays, or busways penetrate concrete slabs, concrete or masonry walls, or fire-rated floor and wall assemblies.

C. Concrete Slabs and Walls: Install sleeves for penetrations unless core-drilled holes or formed openings are used. Install sleeves during erection of slabs and walls.

D. Use pipe sleeves unless penetration arrangement requires rectangular sleeved opening.

E. Fire-Rated Assemblies: Install sleeves for penetrations of fire-rated floor and wall assemblies unless openings compatible with firestop system used are fabricated during construction of floor or wall.

F. Cut sleeves to length for mounting flush with both surfaces of walls.

G. Extend sleeves installed in floors 4 inches above finished floor level unless otherwise indicated.

H. Size pipe sleeves to provide 1/4-inch annular clear space between sleeve and raceway or cable, unless indicated otherwise or unless seismic criteria require different clearance.

I. Seal space outside of sleeves with grout for penetrations of concrete, masonry, and with approved joint compound for gypsum board assemblies.

1. Promptly pack grout solidly between sleeve and wall so no voids remain. Tool exposed surfaces smooth; protect grout while curing.

J. Interior Penetrations of Non-Fire-Rated Walls and Floors: Seal annular space between sleeve and raceway or cable, using joint sealant appropriate for size, depth, and location of joint. Comply with requirements in Division 07 Section 07 92 00 "Joint Sealants."

K. Fire-Rated-Assembly Penetrations: Maintain indicated fire rating of walls, partitions, ceilings, and floors at raceway and cable penetrations. Install sleeves and seal raceway and cable penetration sleeves with firestop materials.

L. Roof-Penetration Sleeves: Seal penetration of individual raceways and cables with flexible boot-type flashing units applied in coordination with roofing work.

M. Aboveground, Exterior-Wall Penetrations: Provide insulation equal to the architectural indicated “R” factor of the assembly and seal penetrations using non-shrink grout. Grout shall be applied on both the interior and exterior building face.

N. Underground, Exterior-Wall Penetrations: Install fiberglass reinforced epoxy pipe sleeves. Size sleeves to allow for 1-inch annular clear space between raceway or cable and sleeve for installing mechanical sleeve seals. Assemble mechanical sleeve seals and install in annular space between raceway or cable and sleeve. Tighten bolts against pressure plates that cause sealing elements to expand and make watertight seal. The conduit shall be sealed on both the interior and exterior foundation face with the ability to withstand a minimum of 30 psig.

O. Underground, Floor Penetrations: See electrical details on plans for requirements.

3.4 SLEEVE-SEAL INSTALLATION

A. Install to seal underground, exterior wall penetrations.

B. Use type and number of sealing elements recommended by manufacturer for raceway material and size. Position raceway in center of sleeve. Assemble mechanical sleeve seals and install in annular space between raceway and sleeve. Tighten bolts against pressure plates that cause sealing elements to expand and make watertight seal.

3.5 FIRESTOPPING

A. Apply firestopping to penetrations of fire-rated floor and wall assemblies for electrical installations to restore original fire-resistance rating of assembly.

END OF SECTION 26 05 00

SECTION 26 05 19 - LOW-VOLTAGE ELECTRICAL POWER CONDUCTORS AND CABLES

PART I – GENERAL

1.1 SUMMARY

A. This Section includes the following:

1. Building wires and cables rated 600 V and less.
2. Connectors, splices, and terminations rated 600 V and less.
3. Sleeves and sleeve seals for cables.

B. Related Sections include the following:

1. Division 27 Section 27 51 16, Public Address and Mass Notification Systems.

C. DEFINITIONS

1. EPDM: Ethylene-propylene-dieneterpolymer rubber.
2. NBR: Acrylonitrile-butadiene rubber.

D. SUBMITTALS

E. Submit the following in accordance with Form 816 Article 1.20-1.05.02 and NOTICE TO CONTRACTOR – SUBMITTALS.

F. Product Data: For each type of product indicated.

G. Qualification Data: For testing agency.

H. Field quality-control test reports.

I. Quality Assurance Submittals:

1. Manufacturer Certification Letter in accordance with NOTICE TO CONTRACTOR - POTENTIAL FOR ASBESTOS CONTAINING MATERIALS.
2. Source quality-control test reports.
3. Field quality-control test reports.

J. QUALITY ASSURANCE

1. Testing Agency Qualifications: An independent agency, with the experience and capability to conduct the testing indicated, that is a member company of the InterNational Electrical Testing Association or is a nationally recognized testing laboratory (NRTL) as defined by OSHA in 29 CFR 1910.7, and that is acceptable to authorities having jurisdiction.
2. Testing Agency's Field Supervisor: Person currently certified by the InterNational Electrical Testing Association or the National Institute for Certification in Engineering Technologies to supervise on-site testing specified in Part 3.
3. Electrical Components, Devices, and Accessories: Listed and labeled as defined in NFPA 70, Article 100, by a testing agency acceptable to authorities having jurisdiction, and marked for intended use.
4. Comply with NFPA 70.

K. COORDINATION

1. Set sleeves in cast-in-place concrete, masonry walls, and other structural components as they are constructed.

L. WARRANTY

1. Refer to Form 816 Article 1.20-1.06.08 and NOTICE TO CONTRACTOR – WARRANTIES for additional information.

M. DELIVERY, STORAGE, AND HANDLING

1. Refer to Form 816 Article 1.06.03 and Form 816 Article 1.20-1.06.03 for additional information.

PART 2 – PRODUCTS

2.1 NON-EMERGENCY CONDUCTORS AND CABLES

A. Available Manufacturers: Subject to compliance with requirements, manufacturers offering products that may be incorporated into the Work include, but are not limited to, the following:

B. American Insulated Wire Corp.; a Leviton Company.
General Cable Corporation.
Southwire Company.
Or approved equal.

C. Copper Conductors: Comply with NEMA WC 70.

D. Conductor Insulation: Comply with NEMA WC 70 and UL 44 for Types XHHW-2.

E. Multiconductor Cable: Comply with NEMA WC 70 for metal-clad cable, Type MC; Type MC cable shall be allowed on and above the third floor only.

2.2 EMERGENCY CONDUCTORS AND CABLES

A. Available Manufacturers: Subject to compliance with requirements, manufacturers offering products that may be incorporated into the Work include, but are not limited to, the following:

1. Raychem.
2. BICC General.
3. Or approved equal.

B. Copper Conductors: Annealed copper designed to ensure tensile strength under fire conditions.

C. Conductor Insulation: Thermoset, low smoke, zero halogen silicone rubber, with cross-linked polyolefin jacket Type RHW, listed per UL 44 or compacted refractory magnesium oxide with seamless, phosphorous deoxidized copper sheath Type MI (mineral insulated). Individual ground conductor(s) shall be provided for each circuit.

D. The conductor shall be at a minimum listed 600V, 90 degree C dry or 75 degree C wet with ampacities derived from NFPA 70 Tables 310.16, 75 degree C Column. Termination temperatures shall be rated 90 degree C.

E. Two (2) hour fire-rated per UL 2196 and UL Fire Resistance Directory either installed in conduit or in free air and meeting the requirements of an "Electrical Circuit Protective System" as referred in NFPA 70 Articles 695 and 700. Either type material shall be capable of being installed in conduit sleeves.

F. The Contractor shall install the conductor or cable in accordance to all manufacturer recommendations which include but not limited to providing all terminations, junction boxes, and fittings. Support spacing shall be at maximum five (5) foot intervals.

G. Required emergency conductors are defined in the IBC, NFPA 70, NFPA 72, and NFPA 101. Additional emergency conductors are indicated on the Contract Plans.

A. Available Manufacturers: Subject to compliance with requirements, manufacturers offering products that may be incorporated into the Work include, but are not limited to, the following:

1. O-Z/Gedney; EGS Electrical Group LLC.
2. 3M; Electrical Products Division.
3. Tyco Electronics Corp.
4. Or approved equal.

B. Description: Factory-fabricated connectors and splices of size, ampacity rating, material, type, and class for application and service indicated.

PART 3 - EXECUTION

3.1 CONDUCTOR MATERIAL APPLICATIONS

A. Feeders: Copper. All conductors shall be Stranded.

B. Branch Circuits: Copper. All conductors shall be Stranded.

3.2 CONDUCTOR INSULATION AND MULTICONDUCTOR CABLE APPLICATIONS AND WIRING METHODS

A. Service Entrance: Type XHHW or Type XHHW-2, single conductors in raceway; Type RHW, or Type MI for emergency circuits, listed as 2-hour fire rated when installed in conduit or free air for Type MI.

B. Feeders Exposed: Type XHHW or Type XHHW-2, single conductors in raceway; Type RHW, listed UL 44 or Type MI for emergency circuits, listed as 2-hour fire rated when installed in conduit or free air for Type MI.

C. Feeders Concealed in Ceilings, Walls, Partitions: Type XHHW or Type XHHW-2, single conductors in raceway; Type RHW or Type MI for emergency circuits, listed as 2-hour fire rated when installed in conduit or free air for Type MI.

D. Feeders Concealed in Concrete, below Slabs-on-Grade, and Underground: Type XHHW or Type XHHW-2, single conductors in raceway; Type RHW for emergency circuits, listed as 2-hour fire rated when installed in conduit.

E. Branch Circuits Exposed: Type XHHW or Type XHHW-2, single conductors in raceway; Type RHW or Type MI for emergency circuits, listed as 2-hour fire rated when installed in conduit or free air for Type MI.

F. Branch Circuits Concealed above Acoustic Ceilings: Type XHHW or Type XHHW-2, single conductors in raceway or Type MC metal-clad listed UL 1596; Type RHW or Type MI for emergency circuits, listed as 2-hour fire rated when installed in conduit or free air for Type MI.

G. Branch Circuits Concealed in Concrete, below Slabs-on-Grade, and Underground: Type XHHW or Type XHHW-2, single conductors in raceway; Type RHW for emergency circuits, listed as 2-hour fire rated when installed in conduit or free air for Type MI.

H. Cord Drops and Portable Appliance Connections: Type SO, hard service cord with stainless-steel, wire-mesh, strain relief device at terminations to suit application.

3.3 INSTALLATION OF CONDUCTORS AND CABLES

A. Conceal cables in finished walls, ceilings, and floors, unless otherwise indicated.

B. Use manufacturer-approved pulling compound or lubricant where necessary; compound used must not deteriorate conductor or insulation. Do not exceed manufacturer's recommended maximum pulling tensions and sidewall pressure values.

C. Use pulling means; including fish tape, cable, rope, and basket-weave wire/cable grips that will not damage cables or raceway.

D. Install exposed cables parallel and perpendicular to surfaces of exposed structural members, and follow surface contours where possible.

E. Support the exposed cables appropriately per the Industry Standards.

F. Identify and color-code conductors and cables according to Division 26 Section 26 05 53 "Identification for Electrical Systems."

G. Install through walls and floors according to Division 26 Section 26 05 00 “Common Work Results for Electrical”.

3.4 CONNECTIONS

A. Tighten electrical connectors and terminals according to manufacturer's published torque-tightening values. If manufacturer's torque values are not indicated, use those specified in UL 486A and UL 486B.

B. Make splices and taps that are compatible with conductor material and that possess equivalent or better mechanical strength and insulation ratings than unspliced conductors.

C. Wiring at Outlets: Install conductor at each outlet, with at least 6 inches of slack.

3.5 FIELD QUALITY CONTROL

A. Inspect and test conductors and cables in accordance with Form 816 Article 1.20-1.05.10 and as follows:

B. Testing Agency: Engage a qualified testing agency to perform tests and inspections and prepare test reports.

C. Tests and Inspections:

1. After installing conductors and cables and before electrical circuitry has been energized, test service entrance and feeder conductors to all equipment indicated on the one-line diagram including the critical equipment.
2. Perform each visual and mechanical inspection and electrical test stated in NETA Acceptance Testing Specification. Certify compliance with test parameters.

D. Test Reports: Prepare a written report to record the following:

1. Test procedures used.
2. Test results that comply with requirements.

3. Test results that do not comply with requirements and corrective action taken to achieve compliance with requirements.

a. Remove and replace malfunctioning units and retest as specified above.

END OF SECTION 26 05 19

SECTION 26 05 20 – NO. 10 SINGLE CONDUCTOR

PART 1 - GENERAL

1.1 DESCRIPTION

A. The work under this item consists of furnishing and installing the No. 10 single conductors as shown on the plans and specified herein for improvements at the rail line station. The No. 10 single conductors shall be placed in conduit and shall comply with the specifications for conduits, outlet boxes, pull and junction boxes, wires and cables, grounding, etc. and meet the requirements of the National Electrical Code and the technical and safety recommendations of ANSI and IEEE.

B. Applicable Standards: Pertinent provisions of the following listed standards (latest edition) shall apply to the work of this Section, except as they may be modified herein, and are hereby made a part of this Specification to the extent required.

Organization	Number	Title
NFPA	70	National Electrical Code
UL	44	Rubber-Insulated Wires and Cables
UL	83	Thermoplastic-Insulated Wires and Cables
UL	98	Test for Flammability of Plastic Materials for Parts for Devices and Appliances
UL	486A	Wire Connector and Soldering Lugs for Use with Copper Conductors
UL	486C	Splicing Wire Connectors
UL	514A	Metallic Outlet Boxes
UL	514B	Fittings for Conduit and Outlet Boxes
UL	719	Nonmetallic-Sheathed Cables
ASTM	B1	1990 Hard-Drawn Copper Wire
ASTM	B8	Concentric lay-stranded copper conductors, hard, medium hard or soft

1.2 S
UBMITTALS

A. **Product Data:**

1. The Contractor shall submit product data for all components of this Section, which shall include shop/working drawings, material/procurement specifications and other related information for each component.

B. **Test Reports:**

1. Reports of all field tests shall be submitted to the Engineer as required by these specifications and reference standards.

2. Certified copies of test results on cables and other materials, supplied under this Section, as per relevant standards.

C. **Certifications:**

1. The Contractor shall furnish from each manufacturer supplying cable certification that the cable shall have a qualified life equal to 40 years. Certifications shall be signed by an officer of the manufacturing company. The Contractor shall, as part of the shop drawings required for each cable type, submit basic type tests. These tests shall comply with all applicable standards. Test acceptance criteria is established in the applicable standard unless otherwise specified.

PART 2 - PRODUCTS

2.1 MATERIALS

A. Conductors for lighting shall be ASTM B8, Class B stranded annealed copper and sized as indicated on the plans.

B. Conductors for lighting shall be 600 volt and shall be annealed, uncoated, stranded copper conductors with polyvinyl chloride (PVC) insulation. The cables shall be Type THHN, THWN, VW-1 with a 90°C dry/75°C wet rating. A nylon jacket shall be applied over the insulation.

C. The conductors shall be annealed, uncoated copper with Class B stranding per ASTM B-8. The insulation shall be PVC, shall meet UL 83 and shall have the following thicknesses:

Cable Size	Insulation Thickness
10 AWG	20 Mils

D. The jacket shall be nylon and shall meet UL 83. The jacket shall have the following thicknesses:

Cable Size	Jacket Wall Thickness
12-8 AWG	4 Mils

E. Manufacturers and their particular products are as follows: Okonite "N-Type", Rome "THWN or THHN", Other Manufacturers who meet the above requirements, or approved equal.

PART 3 - EXECUTION

3.1 CONSTRUCTION METHODS

A. Electrical installation shall, as a minimum, meet the requirements of the National Electrical Code (NEC), local codes and the requirements specified herein.

B. The locations and routings of conduit, unless specifically dimensioned, are diagrammatic. The Contractor shall make adjustments to conduit routings to suit field conditions as required.

C. The locations shown on drawings of electrical equipment may be adjusted to suit specific dimensions of a particular manufacturer.

D. Wiring method shall be insulated conductors installed in conduit except where specifically indicated or specified otherwise or required by the NEC to be installed otherwise.

E. Where stranded wires are terminated at panels, and/or devices connections shall be made by solderless lug, crimp type ferrule or solder dipped.

F. Cable shall not be flexed or pulled when the temperature of the insulation or of the jacket is such that damage will occur due to low temperature embrittlement.

G. When cable will be pulled with an ambient temperature within a three day period prior to pulling of 40oF or lower, cable reels shall be stored during the three day period prior to pulling in a protected storage with an ambient temperature not lower than 55oF and pulling shall be completed during the work day for which the cable is removed from the protected storage.

H. Conductor jacket shall be color coded as follows:

AC Power 480V and above	**208Y/120V System**
Phase A - Brown	Phase A - Black
Phase B - Orange	Phase B - Red
Phase C - Yellow	Phase C - Blue
Neutral - White	Neutral - White
Ground - Green	Ground – Green

I. The wires and cables shall be installed in conduits along the underside of rail line platforms, racked on walls, on columns, between columns, as specified herein and as indicated on the Contract Drawings or as directed by the Engineer.

J. The method of pulling cable through conduits shall be subject to the approval of the Engineer. Cable reels shall be set upon jacks in such position that the cable can be fed from them freely, without distortion or injury, into the ducts or conduits through an approved type bell or shield. Extreme care must be used in installing cable so as to avoid twisting, kinking, or in any way injuring the cable or its sheath.

K. Cables must not be installed until all supports and housings are in place, completely installed. Where required, shields of heavy fiberglass or approved equal, shall be provided to prevent cables from touching or rubbing against walls, concrete surfaces or columns. The heavy phenoic boards shall be painted with two coats of approved fire retardant paint.

L. Where more than one wire or cable is installed in any one conduit run, all such wires and cables shall be pulled in at the same time.

M. Cable pulling compounds shall be non-injurious to the cable and shall be approved by the Engineer.

N. After the cable has been installed, the ends of the cable shall be immediately sealed until such time as the cable is spliced or otherwise terminated.

O. Cables entering at the top of vertical conduits shall be held rigidly in place by the use of O.Z./Gedney Company type cable wedges, or approved equal, oakum and insulating compound, or other approved means. Horizontal runs and bottoms of vertical conduits shall be packed with oakum only. The ends of all conduits shall be terminated by means of suitable bushings. Where cables emerge from ducts, said ducts shall be effectively blocked by approved means to prevent access of rodents.

P. A nonmetallic sheathed cable shall not be bent to a radius less than eight times its diameter, a lead covered cable shall not be bent to a radius less than ten times its diameter and a shielded power or control cable shall not be bent to a radius less than fifteen times its diameter. Wire and cable less than one-half inch diameter may be bent to smaller radii if so directed by the Engineer. Making short bends in any cable, or bending such cable over corners of structures, timbers, or the ends of conduit, will not be permitted.

Q. All wire and cable lengths shall be continuous and without splices in conduits between the points of connections, and sufficient slack shall be provided for the proper make-up of such connections. In duct manholes, splices shall be provided as required by the Engineer. Where

cables are installed in ducts or conduits from manholes to other manholes or enclosures, splices in manholes shall be centrally located, except where otherwise specified.

R. Splices shall not be made in any wires or cables unless approved by the Engineer. Every splice shall have conductivity at least equal to that of the wire or cable. New and existing cables shall be spliced or otherwise connected as indicated on the Contract Drawings.

S. Splices shall be made in accordance with Metro-North Railroad standards, copies of which may be obtained at the office of Metro-North. Where no such standards exist, splices shall be made in accordance with the cable manufacturer's recommendations and shall be approved by the Engineer. The Contractor shall submit for approval splicing kits, and also drawings if required, in accordance with such standards or recommendations. Solid conductors, and stranded conductors, No. 4 AWG and smaller, shall have their ends neatly stripped of insulation, and the said ends shall be provided with self-insulated, mechanical terminals, T&B "Sta-Kon", or approved equal, and securely fastened to study by clamping nuts or other approved means. An individual nut shall be used for each conductor. These terminals shall be installed with a tool which automatically insures the correct depth of indentation, T&B No. WT-145A, or approved equal. All wiring to terminal connectors shall be neatly dressed, and there shall be no nicks in the conductors where the insulation has been stripped. All terminal connections shall be made up in such manner that no loose connections shall exist or develop when the wires or cables are put into service. Cable connections shall be made in accordance with the connection diagrams in the Contract Drawings. Where required, wires shall be bundled together with non-combustible nylon tie straps, T&B, or approved equal. Before cutting any existing cable, the Contractor shall make sure the cable has been properly identified, de-energized and grounded or otherwise made safe. The ends of cables that are cut made idle and left in place shall be sealed in an approved manner. Lead covered splices or other connections shall become the property of the Contractor. Where necessary, existing cables will be tested before any work is done on them by the Contractor. These tests and any phase rotation tests before and proof tests after will be made by the forces and with the equipment of Metro- North. Splices failing under proof tests shall be replaced at the Contractor's expense. Where the Contractor disturbs existing circuits, all wires shall be disconnected in the boxes and the exposed ends taped and tagged. Field testing shall be thorough, continuing throughout the installation, and fully documented, with the following as a minimum:

T. The Contractor shall show by demonstration in service that all circuits and devices are in operating condition. Tests shall be such that each item of control equipment will function not less than 5 times.

U. Test all 600-volt wiring to verify that no short circuits or accidental grounds exist. Tests shall be made using an instrument that applies a voltage of approximately 500 volts to provide a direct reading of resistance.

END OF SECTION 26 05 20

SECTION 26 05 26 - GROUNDING AND BONDING FOR ELECTRICAL SYSTEMS

PART 1 - GENERAL

1.1 DESCRIPTION:

A. The work under this item consists of furnishing and installing the grounding and bonding systems as shown on the plans and specified herein for improvements at the rail line station. The grounding and bonding systems shall meet the requirements of the National Electrical Code and the technical and safety recommendations of ANSI and IEEE.

B. Applicable Standards: Pertinent provisions of the following listed standards (latest edition) shall apply to the work of this Section, except as they may be modified herein, and are hereby made a part of this Specification to the extent required.

Organization	Number	Title
NFPA	70	National Electrical Code
NFPA	78	Lighting Protection Code
IEEE	81	Ground Resistance and Potential Gradients in the Earth, Recommended Guide for Measuring
IEEE	142	IEEE Recommend Practice for Grounding of Industrial and Commercial Power Systems
UL	467	Grounding and Equipment
ASTM	B8	Concentric lay-stranded copper conductors, hard, medium hard or soft

1.2 SUBMITTALS:

A Submit the following in accordance with Form 816 Article 1.20-1.05.02 and NOTICE TO CONTRACTOR – SUBMITTALS.

B Product Data: For each type of product indicated.

C Other Information Submittals:

1. Including the pedestrian bridge , canopy structures

D Qualification Data: For testing agency and testing agency's field supervisor.

E Field quality-control test reports.

F Operation and Maintenance Data: For grounding to include the following in emergency, operation, and maintenance manuals**:**

1. Instructions for periodic testing and inspection of grounding features.

   a. Tests shall be to determine if ground resistance or impedance values remain within specified maximums, and instructions shall recommend corrective action if they do not.
   b. Include recommended testing intervals and reference standards

G Test Reports: Reports of all field tests shall be submitted to the Engineer as required by these specifications.

H Certified copies of test results on cables and other materials, supplied under this Section, as per relevant standards.

I. The Contractor shall submit product data for all components of this Section, which shall include shop/working drawings, material/procurement specifications and other related information for each component.

1.3 MATERIALS:

A. Conductor's for grounding, bonding and rail return cables shall be ASTM B8, Class B stranded annealed copper and sized as indicated on the plans.

B. Connector's and Clamps: Bolts, washers and stop nuts shall be of high-copper alloy, Everdur, Durium, Duronze or silicone bronze Ferrous hardware will not be acceptable.

C. Ground wire shall be 4/0 AWG Copperweld - copper conductor, Type "E" Messenger Wire as indicated on the plans.

a. Tests shall be done to determine if the ground resistance or impedance values remain within specified maximums, and instructions shall recommend corrective action if they do not.

b. Include recommended testing Intervals

1.4 METHODS:

A. Ground tap connections from the equipment to the grounding structural members shall be provided as required. All paint, scale, rust, oxidation, or other foreign material shall be thoroughly removed from the points of contact on all metal surfaces before any ground connections are made.

B. Field testing shall be thorough, continuing throughout the installation, and fully documented, with the following as a minimum:

C. Electrical resistance tests shall be made during installation to verify continuity of the grounding system.

D. Measure, record, and report the ground resistance at each location where grounding system is installed. The required ground resistance of the completed system shall be 5 ohms or less.

E. Corrective measures shall be taken by the Contractor to achieve the specified ground resistance.

F. Resistance-to-earth tests shall be witnessed by the Engineer and written results of these tests shall be submitted to him for evaluation and approval.

1.5 QUALITY ASSURANCE

A. Testing Agency Qualifications: An independent agency, with the experience and capability to conduct the testing indicated, that is a member company of the InterNational Electrical Testing Association or is a nationally recognized testing laboratory (NRTL) as defined by OSHA in 29 CFR 1910.7, and that is acceptable to authorities having jurisdiction.

1. Testing Agency's Field Supervisor: Person currently certified by the InterNational Electrical Testing Association to supervise on-site testing specified in Part 3.

B. Electrical Components, Devices, and Accessories: Listed and labeled as defined in NFPA 70, Article 100, by a testing agency acceptable to authority having jurisdiction, and marked for intended use.

C. Comply with UL 467 for grounding and bonding materials and equipment.

1.6 WARRANTY

A. Refer to Form 816 Article 1.20-1.06.08 and NOTICE TO CONTRACTOR – WARRANTIES for additional information.

1.7 DELIVERY, STORAGE, AND HANDLING

A. Refer to Form 816 Article 1.06.03 and Form 816 Article 1.20-1.06.03 for additional information.

PART 2 - PRODUCTS

2.1 CONDUCTORS

A. Insulated Conductors for other than bonding the rail (train track): Single conductor copper wire insulated for 600 V shall be sized as indicated on the Contract Plans and in accordance to the NFPA 70. The conductors shall be Type XHHW or XHHW-2

B. Bare Copper Conductors (grounding and bonding):

Solid Conductors: ASTM B 3.

1. Stranded Conductors: ASTM B 8.
2. Tinned Conductors: ASTM B 33.
3. Bonding Cable: 4/0 AWG min. or as indicated on the Contract Plans, whichever is larger.
4. Bonding Conductor: 4/0 AWG min. or as indicated on the Contract Drawing, whichever is larger.
5. Bonding Jumper: Copper tape, braided conductors, terminated with copper ferrules; 1-5/8 inches wide and 1/16 inch thick or insulated conductor per NFPA 70.
6. Tinned Bonding Jumper: Tinned-copper tape, braided conductors, terminated with copper ferrules; 1-5/8 inches wide and 1/16 inch thick.

C. Grounding Bus: Rectangular bars of annealed copper, 1/4 by 2 inches in cross section, unless otherwise indicated; with insulators, see details on plans.

2.2 CONNECTORS

A. Listed and labeled by a nationally recognized testing laboratory acceptable to authorities having jurisdiction for applications in which used, and for specific types, sizes, and combinations of conductors and other items connected.

B. Bolted Connectors for Conductors and Pipes: Copper or copper alloy, bolted pressure-type, with at least two bolts.

1. Pipe Connectors: Clamp type, sized for pipe.

C. Welded Connectors: Exothermic-welding kits of types recommended by kit manufacturer for materials being joined and installation conditions.

2.3 GROUNDING RODS

A. Ground Rods: Copper-clad steel; 3/4 inch diameter by10 feet long.

PART 3 - EXECUTION

3.1 APPLICATIONS

A. Conductors: Install stranded conductors, unless otherwise indicated.

B. Underground Grounding Conductors: Install bare copper conductor, No. 4/0 AWG minimum unless otherwise indicated n the Contract Plans.

1. Bury at least 24 inches below grade.

C. Isolated Grounding Conductors: Green-colored insulation with continuous yellow stripe. On feeders with isolated ground, identify grounding conductor where visible to normal inspection, with alternating bands of green and yellow tape, with at least three bands of green and two bands of yellow.

D. Grounding Bus: Install in Electrical, Emergency Electrical, IT/Communication, and Security Rooms, in rooms housing service equipment, and elsewhere as indicated on the Contract Documents.

1. Install bus as indicated on the Contract Plan details.

E. Conductor Terminations and Connections:

1. Pipe and Equipment Grounding Conductor Terminations: Bolted connectors.
2. Underground Connections: Exothermic welds.
3. Connections to Ground Rods at Test Wells: Exothermic welds.
4. Connections to Structural Steel: Exothermic welds.

3.2 EQUIPMENT GROUNDING

A. Install insulated equipment grounding conductors with all feeders and branch circuits.

B. Install insulated equipment grounding conductors with the following items, in addition to those required by NFPA 70:

1. Feeders and branch circuits.
2. Lighting circuits.
3. Receptacle circuits.
4. Single-phase motor and appliance branch circuits.
5. Three-phase motor and appliance branch circuits.
6. Flexible raceway runs.
7. Armored and metal-clad cable runs.
8. Busway Supply Circuits: Install insulated equipment grounding conductor from grounding bus in the switchgear, switchboard, or distribution panel to equipment grounding bar terminal on busway.

3.3 INSTALLATION

A. Grounding Conductors: Route along shortest and straightest paths possible, unless otherwise indicated or required by Code. Avoid obstructing access or placing conductors where they may be subjected to strain, impact, or physical damage.

B. Ground Rods: Drive rods until tops are 6 inches below finished floor or final grade, unless otherwise indicated.

1. Interconnect ground rods with grounding electrode conductor below grade and as otherwise indicated. Make connections without exposing steel or damaging coating, if any.

2. For grounding electrode system, install rods spaced at least one-rod length from each other and located in at least the locations as indicated on the Drawings; provide additional grounding electrodes per the requirements of the National Electrical Code. Connect to the service grounding electrode conductor.

C. Bonding Straps and Jumpers: Install in locations accessible for inspection and maintenance, except where routed through short lengths of conduit.

1. Bonding to Structure: Bond straps directly to basic structure, taking care not to penetrate any adjacent parts.

2. Bonding to Equipment Mounted on Vibration Isolation Hangers and Supports: Install so vibration is not transmitted to rigidly mounted equipment.

3. Use exothermic-welded connectors for outdoor locations, but if a disconnect-type connection is required, use a bolted clamp.

D. Grounding and Bonding for Piping:

1. Domestic Metal Water Service Pipe: Install insulated copper grounding conductors, in conduit, from building's main service equipment, or grounding bus, to main metal water service entrances to building. Connect grounding conductors to main metal water service pipes, using a bolted clamp connector or by bolting a lug-type connector to a pipe flange, using one of the lug bolts of the flange. Where a dielectric main water fitting is installed, connect grounding conductor on street side of fitting. Bond metal grounding conductor conduit or sleeve to conductor at each end.

E. Bonding Interior Metal Ducts: Bond metal air ducts to equipment grounding conductors of associated fans, blowers, electric heaters, and air cleaners. Install bonding jumper to bond across flexible duct connections to achieve continuity. Coordinate locations with the Mechanical Contractor.

F. Grounding for Steel Building Structure: Install bonding jumpers as indicated on the Contract Plans.

3.4 FIELD QUALITY CONTROL

A. Inspect and test grounding and bonding systems in accordance with Form 816 Article 1.20-1.05.10 and as follows:

B. Testing Agency: The Contractor shall engage a qualified testing and inspecting agency to perform field tests and inspections and prepare test reports.

1. Test completed grounding system at each location where a maximum ground-resistance level is specified, at service disconnect enclosure grounding terminal, at ground test wells, and at individual ground rods. Make tests at ground rods before any conductors are connected.

a. Measure ground resistance not less than two full days after last trace of precipitation and without soil being moistened by any means other than natural drainage or seepage and without chemical treatment or other artificial means of reducing natural ground resistance.
b. Perform tests by fall-of-potential method according to IEEE 81.

2. Prepare dimensioned plans locating each test well, ground rod and ground rod assembly, and other grounding electrodes. Identify each by letter in alphabetical order, and key to the record of tests and observations. Include the number of rods driven and their depth at each location, and include observations of weather and other phenomena that may affect test results. Describe measures taken to improve test results.

C. Report measured ground resistances that exceed the following values:

1. Power and Lighting Equipment or System with Capacity 500 kVA and Less: 5 ohms.
2. Power and Lighting Equipment or System with Capacity 500 to 1000 kVA: 5 ohms.
3. Power and Lighting Equipment or System with Capacity More Than 1000 kVA: 5 ohms.
4. Power Distribution Units or Panelboards Serving Electronic Equipment: 5 ohms.
5. Substations and Pad-Mounted Equipment: 5 ohms.
6. Manhole Grounds: 5 ohms.

D. Excessive Ground Resistance: If resistance to ground exceeds specified values mentioned above, notify Engineer promptly and include recommendations to reduce ground resistance.

END OF SECTION 26 05 26

SECTION 26 05 33 - RACEWAY AND BOXES FOR ELECTRICAL SYSTEMS

PART 1 - GENERAL

1.1 SUMMARY

A. This Section includes raceways, fittings, boxes, enclosures, and cabinets for electrical wiring.

B. Related Sections include the following: None.

1.2 DEFINITIONS

A. RMC: Rigid Metal Conduit (also known as RGS; Rigid Galvanized Steel Conduit).

B. EMT: Electrical Metallic Tubing.

C. RNC: Rigid Nonmetallic Conduit.

D. PVC: Polyvinyl Chloride.

E. FRE: Fiberglass Reinforced Epoxy.

F. LFMC: Liquidtight Flexible Metal Conduit.

G. LFNC: Liquidtight Flexible Nonmetallic Conduit.

1.3 SUBMITTALS

A. Submit the following in accordance with Form 816 Article 1.20-1.05.02 and NOTICE TO CONTRACTOR – SUBMITTALS.

B. Product Data: For surface raceways, wireways and fittings, floor boxes, hinged-cover enclosures, and cabinets.

C. Shop Drawings: For the following raceway components. Include plans, elevations, sections, details, and attachments to other work.

1. Custom enclosures and cabinets.

D. Coordination Plans: Conduit routing plans, drawn to scale, on which the following items are shown and coordinated with each other, based on input from installers of the items involved:

1. Structural members in the paths of conduit groups with common supports.
2. HVAC and plumbing items and architectural features in the paths of conduit groups with common supports.

E. Quality Assurance Submittals:

1. Manufacturer Certification Letter in accordance with NOTICE TO CONTRACTOR - POTENTIAL FOR ASBESTOS CONTAINING MATERIALS.
2. Source quality-control test reports.
3. Field quality-control test reports.

1.4 QUALITY ASSURANCE

A. Electrical Components, Devices, and Accessories: Listed and labeled as defined in NFPA 70, Article 100, by a testing agency acceptable to authorities having jurisdiction, and marked for intended use.

B. Comply with NFPA 70.

1.5 WARRANTY

A. Refer to Form 816 Article 1.20-1.06.08 and NOTICE TO CONTRACTOR – WARRANTIES for additional information.

1.6 DELIVERY, STORAGE, AND HANDLING

A. Refer to Form 816 Article 1.06.03 and Form 816 Article 1.20-1.06.03 for additional information.

PART 2 - PRODUCTS

2.1 METAL CONDUIT AND TUBING

A. Available Manufacturers: Subject to compliance with requirements, manufacturers offering products that may be incorporated into the Work include, but are not limited to, the following:

1. Allied Tube & Conduit; a Tyco International Ltd. Co.
2. Anamet Electrical, Inc.; Anaconda Metal Hose.
3. Electri-Flex Co.
4. Manhattan/CDT/Cole-Flex.
5. O-Z Gedney; a unit of General Signal.
6. Wheatland Tube Company.
7. Or approved equal.

B. RMC: Galvanized Steel, ANSI C80.1, UL 6.

C. EMT: Steel, ANSI C80.3, UL 797.

D. PVC-Coated Rigid Metal Conduit:
1. Comply with NEMA RN 1.
2. Coating Thickness: 0.040 inch, minimum.

E. LFMC: Flexible steel conduit with PVC jacket, UL 360.

F. Fittings for Conduit (Including all Types and Liquidtight), EMT and Cable: NEMA FB 1; listed for type and size raceway with which used, and for application and environment in which installed.

1. Conduit Fittings for Hazardous (Classified) Locations as indicated on the Contract Plans: Comply with UL 886.
2. Fittings for EMT: Steel, set-screw or compression type.
3. Coating for Fittings for PVC-Coated Conduit: Minimum thickness, 0.040 inch, with overlapping sleeves protecting threaded joints.

G. Joint Compound for RMC or PVC-Coated Rigid Metal Conduit: Listed for use in cable connector assemblies, and compounded for use to lubricate and protect threaded raceway joints from corrosion and enhance their conductivity.

2.2 NONMETALLIC CONDUIT AND TUBING

A. Available Manufacturers: Subject to compliance with requirements, manufacturers offering products that may be incorporated into the Work include, but are not limited to, the following:

1. Electri-Flex Co.
2. Lamson & Sessions; Carlon Electrical Products.
3. RACO; a Hubbell Company.
4. Champion.
5. Or approved equal.

B. RNC: NEMA TC 2, Type EPC-80-PVC, UL 651, unless otherwise indicated.

C. FRE: Extra Heavy Wall type, all joints shall be inside tapered bell end and of even socket depth throughout the raceway.

D. LFNC: UL 1660.

E. Fittings for RNC: NEMA TC 3; match to conduit or tubing type and material.

F. Fittings for LFNC: UL 514B.

2.3 METAL WIREWAYS

A. Available Manufacturers: Subject to compliance with requirements, manufacturers offering products that may be incorporated into the Work include, but are not limited to, the following:

1. Cooper B-Line, Inc.
2. Hoffman.
3. Square D; Schneider Electric.
4. Or approved equal.

B. Description: Sheet metal sized and shaped as indicated, UL 870, NEMA 250, Type 12 in dry locations and 3R for wet or damp locations and as defined per NFPA 70, unless otherwise indicated.

C. Fittings and Accessories: Include couplings, offsets, elbows, expansion joints, adapters, hold-down straps, end caps, and other fittings to match and mate with wireways as required for complete system.

D. Wireway Covers: Screw-cover type or Flanged-and-gasketed type, as defined per NFPA 70, unless otherwise indicated.

E. Finish: Manufacturer's standard enamel finish.

2.4 BOXES, ENCLOSURES, AND CABINETS

A. Available Manufacturers: Subject to compliance with requirements, manufacturers offering products that may be incorporated into the Work include, but are not limited to, the following:

1. Cooper Crouse-Hinds; Div. of Cooper Industries, Inc.
2. Hoffman.
3. Hubbell Incorporated; Killark Electric Manufacturing Co. Division.
4. Or approved equal.

B. Sheet Metal Outlet and Device Boxes: NEMA OS 1.

C. Cast-Metal Outlet and Device Boxes: NEMA FB 1, ferrous alloy, Type FD, with gasketed cover.

D. Nonmetallic Outlet and Device Boxes: NEMA OS 2.

E. Small Sheet Metal Pull and Junction Boxes: NEMA OS 1.

F. Cast-Metal Access, Pull, and Junction Boxes: NEMA FB 1, galvanized, with gasketed cover.

G. Hinged-Cover Enclosures: NEMA 250, Type 1, with continuous-hinge cover with flush latch, unless otherwise indicated.

1. Metal Enclosures: Steel, finished inside and out with manufacturer's standard enamel.

H. Cabinets:

1. NEMA 250, Type 1, galvanized-steel box with removable interior panel and removable front, finished inside and out with manufacturer's standard enamel.

2. Hinged door in front cover with flush latch and concealed hinge.
3. Key latch to match panelboards.
4. Metal barriers to separate wiring of different systems and voltage.
5. Accessory feet where required for freestanding equipment.

2.5 HANDHOLES AND BOXES FOR UNDERGROUND WIRING

A. Description: Comply with SCTE 77.

1. Color of Frame and Cover: Gray.
2. Configuration: Units shall be designed for flush burial and have open bottom, unless otherwise indicated.
3. Cover: Weatherproof, secured by tamper-resistant locking devices and having structural load rating consistent with enclosure.
4. Cover Finish: Nonskid finish shall have a minimum coefficient of friction of 0.50.
5. Cover Legend: Molded lettering, "ELECTRIC", "COMMUNICATION, or as identified on the Contract Plans.
6. Conduit Entrance Provisions: Conduit-terminating fittings shall mate with entering ducts for secure, fixed installation in enclosure wall.
7. Handholes 12 inches wide by 24 inches long and larger shall have inserts for cable racks and pulling-in irons installed before concrete is poured.

B. Polymer-Concrete Handholes and Boxes with Polymer-Concrete Cover: Molded of sand and aggregate, bound together with polymer resin, and reinforced with steel or fiberglass or a combination of the two.

1. Available Manufacturers: Subject to compliance with requirements, manufacturers offering products that may be incorporated into the Work include, but are not limited to, the following:
   a. Manufacturers: Subject to compliance with requirements, provide products by one of the following:
   b. Basis-of-Design Product: Subject to compliance with requirements, provide product by one of the following:
      1) Armorcast Products Company.
      2) Carson Industries LLC.
      3) CDR Systems Corporation.
      4) Or approved equal.

C. Fiberglass Handholes and Boxes with Polymer-Concrete Frame and Cover: Sheet-molded, fiberglass-reinforced, polyester-resin enclosure joined to polymer-concrete top ring or frame.

1. Available Manufacturers: Subject to compliance with requirements, manufacturers offering products that may be incorporated into the Work include, but are not limited to, the following:
2. Manufacturers: Subject to compliance with requirements, provide products by one of the following:
3. Basis-of-Design Product: Subject to compliance with requirements, provide product by one of the following:
   a. Armorcast Products Company.
   b. Carson Industries LLC.
   c. Synertech Moulded Products, Inc.; a division of Oldcastle Precast.
   d. Or approved equal.

2.6 SLEEVES FOR RACEWAYS

A. Steel Pipe Sleeves: ASTM A 53/A 53M, Type E, Grade B, Schedule 40, galvanized steel, plain ends.

B. Cast-Iron Pipe Sleeves: Cast or fabricated "wall pipe," equivalent to ductile-iron pressure pipe, with plain ends and integral waterstop, unless otherwise indicated.

C. Sleeves for Rectangular Openings: Galvanized sheet steel with minimum 0.052- or 0.138-inch thickness as indicated and of length to suit application.

D. Coordinate sleeve selection and application with selection and application of firestopping.

2.7 SLEEVE SEALS

A. Available Manufacturers: Subject to compliance with requirements, manufacturers offering products that may be incorporated into the Work include, but are not limited to, the following:

1. Advance Products & Systems, Inc.
2. Metraflex Co.
3. Pipeline Seal and Insulator, Inc.
4. Or approved equal.

B. Description: Modular sealing device, designed for field assembly, to fill annular space between sleeve and cable.

1. Sealing Elements: EPDM interlocking links shaped to fit surface of cable or conduit. Include type and number required for material and size of raceway or cable.
2. Pressure Plates: Stainless steel. Include two for each sealing element.
3. Connecting Bolts and Nuts: Stainless steel of length required to secure pressure plates to sealing elements. Include one for each sealing element.

PART 3 - EXECUTION

3.1 RACEWAY APPLICATION

A. Exterior: Apply raceway products as specified below, unless otherwise indicated:

1. Exposed Conduit: RMC.
2. Concealed Conduit, Aboveground: RMC.
3. Concealed Conduit, Belowground: RMC or PVC. However, identified emergency and stand-by circuits shall always be in RMC.
4. Boxes and Enclosures, Aboveground: NEMA 250, Type 3R unless otherwise indicated.

B. Interior: Comply with the following applications, unless otherwise indicated:

1. Exposed: RMC from finished grade to at least ten (10) feet above finished floor. EMT may be substituted when mounted greater than ten (10) feet above finished floor.
2. Concealed in Ceilings and Interior Walls or partitions: RMC or EMT and as identified per Codes.
3. Risers between Floors: RMC.
4. Third floor and above, EMT unless otherwise indicated.
5. Connection to Vibrating Equipment (Including but not limited to Transformers, damp or wet locations, Hydraulic, Electric Solenoid, or Motor-Driven Equipment): LFMC, below ten (10) feet from finished floor and LFNC may be substituted when above ten (10) feet from finished floor and as identified per Codes.
6. Damp or Wet Locations: RMC.

C. Minimum Raceway Size: 3/4-inch trade size.

D. Minimum Flexible Conduit Size: 1/2-inch trade size.

E. Raceway Fittings: Compatible with raceways and suitable for use and location.

1. RMC: Use threaded rigid galvanized steel conduit fittings, unless otherwise indicated.
2. PVC Externally Coated, rigid galvanized steel conduits: Use only fittings listed for use with that material. Patch and seal all joints, nicks, and scrapes in PVC coating after installing conduits and fittings. Use sealant recommended by fitting manufacturer.

3.2 INSTALLATION

A. Comply with NECA 1 for installation requirements applicable to products specified in Part 2 except where requirements on Plans or in this Article are stricter.

B. Keep raceways at least 6 inches away from parallel runs of flues and steam or hot-water pipes. Install horizontal raceway runs above water and steam piping.

C. Complete raceway installation before starting conductor installation.

D. Support raceways appropriately per the industry standards

E. Arrange stub-ups so curved portions of bends are not visible above the finished slab.

F. Conceal conduit within finished walls, ceilings, and floors, unless otherwise indicated. Conduits in the shop area that travel perpendicular to the roof joists shall be mounted at least ten (10) feet above finished floor.

G. Raceways Embedded in Slabs:

1. Run conduit larger than 1-inch trade size, parallel or at right angles to main reinforcement. Where at right angles to reinforcement, place conduit close to slab support.
2. Arrange raceways to cross building expansion joints at right angles with expansion fittings; see architectural and structural plans for maximum anticipated expansion.
3. Change from Type EPC-80-PVC to RMC before rising above the floor.

H. Threaded Conduit Joints, Exposed to Wet, Damp, Corrosive, or Exterior Conditions: Apply listed compound to threads of raceway and fittings before making up joints. Follow compound manufacturer's written instructions.

I. Raceway Terminations at Locations Subject to Moisture or Vibration: Use insulating grounding bushings to protect conductors, including conductors smaller than No. 4 AWG.

J. Install pull wires in empty raceways. Use polypropylene or monofilament plastic line with not less than 200-lb tensile strength. Leave at least 12 inches of slack at each end of pull wire.

K. Install raceway sealing fittings at suitable, approved, and accessible locations and fill them with listed sealing compound. For concealed raceways, install each fitting in a flush steel box with a blank cover plate having a finish similar to that of adjacent plates or surfaces. Install raceway sealing fittings at the following points:

1. Where conduits travel from interior to exterior locations.
2. Where otherwise required by NFPA 70.

L. Expansion/Deflection-Joint Fittings for RNC or EMT: Install in each run of conduit that has straight-run length that exceeds 100 feet. Install additional fittings as required per NEC.

1. Install expansion-joint fittings for each of the following locations:

a. At building expansion locations indicated on the Electrical Plans, see architectural and structural plans for maximum anticipated expansion.

2. Install fitting(s) that provide expansion and contraction for at least 0.00041 inch per foot of length of straight run per deg F of temperature change.

3. Install each expansion-joint fitting with position, mounting, and piston setting selected according to manufacturer's written instructions for conditions at specific location at the time of installation.

4. Install fitting(s) that provide deflection of at least one (1) inch for each 100 foot run.

M. Recessed Boxes in Masonry Walls: Saw-cut opening for box in center of cell of masonry block, and install box flush with surface of wall.

3.3 PROTECTION

A. Provide final protection and maintain conditions that ensure coatings, finishes, and cabinets are without damage or deterioration at time of Issuance of Certificate of Compliance.

1. Repair damage to galvanized finishes with zinc-rich paint recommended by manufacturer.
2. Repair damage to PVC or paint finishes with matching touchup coating recommended by manufacturer.

END OF SECTION 26 05 33

SECTION 26 05 53 - IDENTIFICATION FOR ELECTRICAL SYSTEMS

PART 1 - GENERAL

1.1 SUMMARY

A. The work of this Section Includes furnishing and installation of the following:

1. Identification for raceways.
2. Identification of power and control cables.
3. Identification for conductors.
4. Underground –line warning tape.
5. Warning labels and signs.
6. Instruction signs.
7. Equipment identification labels.

1.2 SUBMITTALS

A. Submit the following in accordance with Form 816 Article 1.20-1.05.02 and NOTICE TO CONTRACTOR - SUBMITTALS.

B. Product Data: For each electrical identification product indicated.

C. Samples: For each type of label and sign to illustrate size, colors, lettering style, mounting provisions, and graphic features of identification products.

D. Identification Schedule: An index of nomenclature of electrical equipment and system components used in identification signs and labels.

1.3 QUALITY ASSURANCE

A. Comply with ANSI A13.1.

B. Comply with NFPA 70.

C. Comply with 29 CFR 1910.144 and 29 CFR 1910.145.

D. Comply with ANSI Z535.4 for safety signs and labels.

E. Adhesive-attached labeling materials, including label stocks, laminating adhesives, and inks used by label printers, shall comply with UL 969.

1.4 COORDINATION

A. Coordinate identification names, abbreviations, colors, and other features with requirements in other Sections requiring identification applications, Plans, Shop Drawings, manufacturer's wiring diagrams, and the Operation and Maintenance Manual; and with those required by codes, standards, and 29 CFR 1910.145. Use consistent designations throughout Project.

B. Coordinate installation of identifying devices with completion of covering and painting of surfaces where devices are to be applied.

C. Coordinate installation of identifying devices with location of access panels and doors.

D. Install identifying devices before installing acoustical ceilings and similar concealment.

1.5 WARRANTY

A. Refer to Form 816 Article 1.20-1.06.08 and NOTICE TO CONTRACTOR – CLOSEOUT DOCUMENTS for additional information.

1.6 DELIVERY, STORAGE, AND HANDLING

A. Refer to Form 816 Article 1.06.03 and Form 816 Article 1.20-1.06.03 for additional information.

PART 2 - PRODUCTS

2.1 POWER RACEWAY IDENTIFICATION MATERIALS

A. Comply with ANSI A13.1 for minimum size of letters for legend and for minimum length of color field for each raceway size.

B. Colors for Raceways Carrying Circuits at 600 V or Less:

1. Black letters on an orange field
2. Legend: Indicate voltage and service.

C. Metal Tags: Brass or aluminum, 2 by 2 by 0.05 inch, with stamped legend, punched for use with self-locking cable tie fastener.

2.2 ARMORED AND METAL-CLAD CABLE IDENTIFICATION MATERIALS

A. Comply with ANSI A13.1 for minimum size of letters for legend and for minimum length of color field for each raceway and cable size.

B. Colors for Raceways Carrying Circuits at 600 V and Less:

1. Black letters on an orange field.
2. Legend: Indicate voltage.

C. Self-Adhesive Vinyl Labels: Preprinted, flexible label laminated with a clear, weather- and chemical-resistant coating and matching wraparound adhesive tape for securing ends of legend label.

2.3 POWER AND CONTROL CABLE IDENTIFICATION MATERIALS

A. Comply with ANSI A13.1 for minimum size of letters for legend and for minimum length of color field for each raceway and cable size.

B. Self-Adhesive Vinyl Labels: Preprinted, flexible label laminated with a clear, weather- and chemical-resistant coating and matching wraparound adhesive tape for securing ends of legend label.

C. Snap-Around Labels: Slit, pretensioned, flexible, preprinted, color-coded acrylic sleeve, with diameter sized to suit diameter of raceway or cable it identifies and to stay in place by gripping action.

2.4 CONDUCTOR IDENTIFICATION MATERIALS

A. Color-Coding Conductor Tape: Colored, self-adhesive vinyl tape not less than 3 mils thick by 1 to 2 inches wide.

B. Snap-Around Labels: Slit, pretensioned, flexible, preprinted, color-coded acrylic sleeve, with diameter sized to suit diameter of raceway or cable it identifies and to stay in place by gripping action.

2.5 UNDERGROUND-LINE WARNING TAPE or BELOW CONCRETE SLAB

A. Tape:

1. Recommended by manufacturer for the method of installation and suitable to identify and locate underground electrical and communications lines.

2. Printing on tape shall be permanent and shall not be damaged by burial operations.
3. Tape material and ink shall be chemically inert, and not subject to degrading when exposed to acids, alkalis, and other destructive substances commonly found in soils.

B. Color and Printing:

1. Comply with ANSI Z535.1 through ANSI Z535.5.
2. Inscriptions for Red-Colored Tapes: ELECTRIC LINE and HIGH VOLTAGE.
3. Inscriptions for Orange-Colored Tapes:TELEPHONE CABLE, CCTV CABLE, COMMUNICATIONS CABLE, SECURITY CABLE, and OPTICAL FIBER CABLE.

C. Tag: Type I:

1. Pigmented polyolefin, bright-colored, continuous-printed on one side with the inscription of the line, compounded for direct-burial service.
2. Thickness: 4 mils.
3. Weight: 18.5 lb/1000 sq. ft.
4. 3-Inch Tensile According to ASTM D 882: 30 lbf, and 2500 psi.

2.6 WARNING LABELS AND SIGNS

A. Comply with NFPA 70 and 29 CFR 1910.145.

B. Self-Adhesive Warning Labels: Factory-printed, multicolor, pressure-sensitive adhesive labels, configured for display on front cover, door, or other access to equipment unless otherwise indicated.

C. Rigid Plastic Warning Signs:

1. Weather-resistant, nonfading, preprinted, .050 inch thick polystyrene material; and with colors, legend, and size required for application.
2. Standard with radius corners and pre-drilled corner mounting holes for self tapping stainless screws.
3. Standard size, 10 inches high by 14 inches wide.
4. Oversized custom signs size, 20” high by 28 inches wide, lettering shall be minimum 2 inch high.

D. Standard size warning label and sign shall include, but are not limited to, the following legends:

1. Multiple Power Source Warning: "DANGER - ELECTRICAL SHOCK HAZARD - EQUIPMENT HAS MULTIPLE POWER SOURCES."
2. Workspace Clearance Warning: "WARNING - OSHA REGULATION - AREA IN FRONT OF ELECTRICAL EQUIPMENT MUST BE KEPT CLEAR FOR 36 INCHES."
3. Equipment Warning per NEC: "DANGER - ELECTRICAL SHOCK HAZARD.”

E. Oversized warning signs shall include, but are not limited to, the following legends:

1. “FIRE ALARM CONTROL PANEL AND FIRE PUMP ROOM”
2. “BUILDING ELECTRIC DISCONNECT ROOM”
3. “DC POWER SYSTEM SHUNT TRIP DISCONNECT PUSH BUTTON”

2.7 INSTRUCTION SIGNS

A. Engraved, laminated acrylic or melamine plastic, minimum 1/16 inch thick for signs up to 20 sq. inches and 1/8 inch thick for larger sizes.

1. Self-Adhesive engraved legend with black letters on white face.
2. Punched or drilled for stainless steel self-tapping screws.

2.8 EQUIPMENT IDENTIFICATION LABELS

A. Self-Adhesive, Engraved, Laminated Acrylic or Melamine Label: Adhesive backed and punched or drilled for stainless steel self-tapping screws, with white letters on a dark-gray background. Minimum letter height shall be 3/8 inch.

2.9 CABLE TIES

A. UV-Stabilized Cable Ties: Fungus inert, designed for continuous exposure to exterior sunlight, self-extinguishing, one piece, self-locking, Type 6/6 nylon.

1. Minimum Width: 3/16 inch.
2. Tensile Strength at 73 deg F, According to ASTM D 638: 12,000 psi.
3. Temperature Range: Minus 40 to plus 185 deg F.
4. Color: Black.

PART 3 - EXECUTION

3.1 INSTALLATION

A. Verify identity of each item before installing identification products.

B. Location: Install identification materials and devices at locations for most convenient viewing without interference with operation and maintenance of equipment.

C. Apply identification devices to surfaces that require finish after completing finish work.

D. Self-Adhesive Identification Products: Clean surfaces before application, using materials and methods recommended by manufacturer of identification device.

E. Attach signs and plastic labels that are not self-adhesive type with mechanical fasteners appropriate to the location and substrate.

F. System Identification Color-Coding Bands for Raceways and Cables: Each color-coding band shall completely encircle cable or conduit. Place adjacent bands of two-color markings in contact, side by side. Locate bands at changes in direction, at penetrations of walls and floors, at 50-foot maximum intervals in straight runs, and at 25-foot maximum intervals in congested areas.

G. Aluminum Wraparound Marker Labels and Metal Tags: Secure tight to surface of conductor or cable at a location with high visibility and accessibility.

H. Cable Ties: For attaching tags. Use general-purpose type, except as listed below:

1. Exterior: UV-stabilized nylon.
2. In Spaces Handling Environmental Air: Plenum rated.

3.2 IDENTIFICATION SCHEDULE

A. Accessible Raceways and Metal-Clad Cables, 600 V or Less, for Service, Feeder, and Branch Circuits More Than 30A, and 120V to ground: Identify with self-adhesive vinyl tape applied in bands. Install labels at 10-foot maximum intervals.

B. Power-Circuit Conductor Identification, 600 V or Less: For conductors in vaults, pull and junction boxes, manholes, and handholes, use color-coding conductor tape to identify the phase.

1. Color-Coding for Phase and Voltage Level Identification, 600 V or Less: Use colors listed below for feeder and branch-circuit conductors.

a. Color shall be factory applied or field applied for sizes larger than No. 8 AWG, if

authorities having jurisdiction permit.

b. Colors for 208Y/120-V Circuits:

1) Phase A: Black.
2) Phase B: Red.
3) Phase C: Blue.
4) Neutral: White.
5) Ground: Green.

c. Colors for 480Y/277-V Circuits:

1) Phase A: Brown.
2) Phase B: Orange.
3) Phase C: Yellow.
4) Neutral: Natural Gray.
5) Ground: Green.

d. Field-Applied, Color-Coding Conductor Tape: Apply in half-lapped turns for a minimum distance of 6 inches from terminal points and in boxes where splices or taps are made. Apply last two turns of tape with no tension to prevent possible unwinding. Locate bands to avoid obscuring factory cable markings.

C. Install instructional sign including the color-code for grounded and ungrounded conductors using adhesive-film-type labels.

D. Auxiliary Electrical Systems Conductor Identification: Identify field-installed alarm, control, and signal connections.

1. Identify conductors, cables, and terminals in enclosures and at junctions, terminals, and pull points. Identify by system and circuit designation.
2. Use system of marker tape designations that is uniform and consistent with system used by manufacturer for factory-installed connections.
3. Coordinate identification with Project Plans, manufacturer's wiring diagrams, and the Operation and Maintenance Manual.

E. Workspace Indication: Workspace shall be as required by NFPA 70 and 29 CFR 1926.403 unless otherwise indicated.

F. Warning Labels for Interior Cabinets, Boxes, and Enclosures for Power and Lighting: Self-adhesive warning labels punched or drilled for stainless steel self-tapping screws.

1. Comply with 29 CFR 1910.145.
2. Identify system voltage with black letters on an orange background.
3. Apply to exterior of door, cover, or other access.
4. For equipment with multiple power or control sources, apply to door or cover of equipment including, but not limited to, the following:

a. Power transfer switches.
b. Controls with external control power connections.
c. Disconnects.
d. UPS.

G. Operating Instruction Signs: Install instruction signs to facilitate proper operation and maintenance of electrical systems and items to which they connect. Install instruction signs with approved legend where instructions are needed for system or equipment operation.

H. Emergency Operating Instruction Signs: Install instruction signs with white legend on a red background with minimum 3/8-inch high letters for emergency instructions at equipment used for power transfer.

I. Equipment Identification Labels: On each unit of equipment, install unique designation label that is consistent with wiring diagrams, schedules, and the Operation and Maintenance Manual. Apply labels to disconnect switches and protection equipment, central or master units, control panels, control stations, terminal cabinets, and racks of each system. Systems include power, lighting, control, communication, signal, monitoring, and alarm systems unless equipment is provided with its own identification.

1. Labeling Instructions:

   a. Interior Equipment: Self-adhesive, engraved, laminated acrylic or melamine label punched or drilled for stainless steel self-tapping screws. Unless otherwise indicated, provide a single line of text with 1/2-inch high letters on 1-1/2-inch-high label; where two lines of text are required, use labels 2 inches high.
   b. Exterior Equipment: Self-adhesive, engraved, laminated acrylic or melamine label punched or drilled for stainless steel self-tapping screws.
   c. Elevated Components: Increase sizes of labels and letters to those appropriate for viewing from the floor.
   d. Unless provided with self-adhesive means of attachment, fasten labels with appropriate mechanical fasteners that do not change the NEMA or NRTL rating of the enclosure.

2. Equipment to be Labeled:

   a. Panelboards: Typewritten directory of circuits in the location provided by panelboard manufacturer. Panelboard identification.
   b. Enclosures and electrical cabinets.
   c. Transformers: Label that includes tag designation shown on Plans for the transformer, feeder, and panelboards or equipment supplied by the secondary.
   d. Enclosed switches and disconnects.
   e. Enclosed circuit breakers.

END OF SECTION 26 05 53

SECTION 26 27 26 - WIRING DEVICES

PART 1 - GENERAL

1.1 SUMMARY

A. This Section includes the following:

1. Receptacles, receptacles with integral GFCI, and associated device plates.
2. Snap switches and wall-box dimmers.
3. Wall-switch and exterior occupancy sensors.

B. Related Sections includes the following:

1. NONE

1.2 DEFINITIONS

A. EMI: Electromagnetic interference.

B. GF or GFCI: Ground-fault circuit interrupter.

C. Pigtail: Short lead used to connect a device to a branch-circuit conductor.

D. RFI: Radio-frequency interference.

E. TVSS: Transient voltage surge suppressor.

F. UTP: Unshielded twisted pair.

1.3 SUBMITTALS

A. Submit the following in accordance with Form 816 Article 1.20-1.05.02 and NOTICE TO CONTRACTOR – SUBMITTALS.

B. Product Data: For each type of product indicated.

C. Shop Drawings: List of legends and description of materials and process used for pre-marking wall plates.

D. Samples: One for each type of device and wall plate specified, in each color specified.

E. Field quality-control test reports.

F. Operation and Maintenance Data: For wiring devices to include in all manufacturers' packing label warnings and instruction manuals that include labeling conditions.

1.4 QUALITY ASSURANCE

A. Source Limitations: Obtain each type of wiring device and associated wall plate through one source from a single manufacturer in accordance with Form 816 Article 1.20-1.06.01. Insofar as they are available, obtain all wiring devices and associated wall plates from a single manufacturer and one source.

B. Electrical Components, Devices, and Accessories: Listed and labeled as defined in NFPA 70, Article 100, by a testing agency acceptable to authorities having jurisdiction, and marked for intended use.

C. Comply with NFPA 70.

1.5 COORDINATION

A. Receptacles for Equipment furnished under other sections of the Contract Documents: Match plug configurations.

1. Cord and Plug Sets: Match equipment requirements.

1.6 WARRANTY

A. Refer to Form 816 Article 1.20-1.06.08 and NOTICE TO CONTRACTOR – WARRANTIES for additional information.

1.7 DELIVERY, STORAGE, AND HANDLING

A. Refer to Form 816 Article 1.06.03 and Form 816 Article 1.20-1.06.03 for additional information.

PART 2 - PRODUCTS

2.1 MANUFACTURERS

A. Available Manufacturers: Subject to the compliance with requirements, manufacturers offering products that may be incorporated into the Work include, but are not limited to, the following:

1. Cooper Wiring Devices; a division of Cooper Industries, Inc. (Cooper).
2. Hubbell Incorporated; Wiring Device-Kellems (Hubbell).
3. Pass & Seymour/Legrand; Wiring Devices & Accessories (Pass & Seymour).
4. Or approved equal.

2.2 STRAIGHT BLADE RECEPTACLES

A. Industrial Grade Convenience Receptacles, 125 V, 20 A: Comply with NEMA WD 1, NEMA WD 6 configuration 5-20R, and UL 498.

1. Available Manufacturers: Subject to compliance with requirements, products that may be incorporated into the Work include, but are not limited to, the following:

a. Cooper; Catalog Nos. 5251 (single), 5342 (duplex).
b. Hubbell.
c. Pass & Seymour.
d. Or approved equal.

B. Industrial Grade Isolated-Ground, Duplex Convenience Receptacles, 125 V, 20 A: Comply with NEMA WD 1, NEMA WD 6 configuration 5-20R, and UL 498.

1. Available Manufacturers: Subject to compliance with requirements, products that may be incorporated into the Work include, but are not limited to, the following:

a. Cooper; Catalog No. 5262 (color orange).
b. Hubbell.
c. Pass & Seymour.
d. Or approved equal.

2. Description: Straight blade; equipment grounding contacts shall be connected only to the green grounding screw terminal of the device and with inherent electrical isolation from mounting strap. Isolation shall be integral to receptacle construction and not dependent on removable parts.

2.3 GFCI RECEPTACLES

A. General Description: Straight blade, non-feed-through type. Comply with NEMA WD 1, NEMA WD 6 configuration 5-20R, and UL 498, and UL 943, Class A, and include indicator light that is lighted when device is tripped.

B. Industrial Grade Duplex GFCI Convenience Receptacles, 125 V, 20 A:

1. Available Manufacturers: Subject to compliance with requirements, products that may be incorporated into the Work include, but are not limited to, the following:

   a. Cooper; Catalog No. GF20.
   b. Pass & Seymour.
   c. Hubbell
   d. Or approved equal.

C. Hospital-Grade, Duplex GFCI Convenience Receptacles, 125 V, 20 A (located in the second floor medical suite spaces only, see Dwg E1-223: Comply with UL 498 Supplement SD.

1. Available Manufacturers: Subject to compliance with requirements, products that may be incorporated into the Work include, but are not limited to, the following:

   a. Cooper; Catalog No. HGF20 (color blue).
   b. Hubbell.
   c. Pass & Seymour.
   d. Or approved equal.

2. Available Manufacturers: Subject to compliance with requirements, products that may be incorporated into the Work include, but are not limited to, the following:

   a. Cooper; Catalog No. IG8300HG (color blue).
   b. Hubbell.
   c. Leviton.
   d. Or approved equal.

2.4 HAZARDOUS (CLASSIFIED) LOCATION RECEPTACLES

A. Wiring Devices for Hazardous (Classified) Locations: Comply with NEMA FB 11 and UL 1010.

1. Available Manufacturers: Subject to compliance with requirements, manufacturers offering products that may be incorporated into the Work include, but are not limited to, the following:

   a. Cooper Crouse-Hinds.
   b. EGS/Appleton Electric.
   c. Killark; a division of Hubbell Inc.
   d. Or approved equal.

2.5 SNAP SWITCHES

A. Comply with NEMA WD 1 and UL 20.

B. Industrial Grade Switches, 120/277 V, 20 A:

1. Available Products: Subject to compliance with requirements, products that may be incorporated into the Work include, but are not limited to, the following:

   a. Cooper; Catalog Nos.2221 (single pole), 2222 (two pole), 2223 (three way), 2224 (four way).
   b. Hubbell.
   c. Pass & Seymour.
   d. Or approved equal.

C. Industrial Grade Pilot Light Switches, 20 A:

1. Available Products: Subject to compliance with requirements, products that may be incorporated into the Work include, but are not limited to, the following:

a. Cooper; Catalog No. 2221PL for 120 V and 277 V.
b. Hubbell.
c. Pass & Seymour.
d. Or approved equal.

2. Description: Single pole, with neon-lighted handle, illuminated when switch is "ON."

2.6 WALL-BOX DIMMERS

A. Dimmer Switches: Modular, full-wave, solid-state units with integral, quiet on-off switches, with audible frequency and EMI/RFI suppression filters.

B. Control: Continuously adjustable slider; with single-pole or three-way switching. Comply with UL 1472.

C. Fluorescent Lamp Dimmer Switches: Modular; compatible with dimmer ballasts; trim potentiometer to adjust low-end dimming; dimmer-ballast combination capable of consistent dimming with low end not greater than 20 percent of full brightness.

2.7 WALL PLATES

A. Single and combination types to match corresponding wiring devices.

1. Plate-Securing Screws: Metal with head color to match plate finish.
2. Material: 0.035-inch-thick, satin-finished stainless steel.
3. Material for Damp Locations: Thermoplastic with spring-loaded lift cover, and listed and labeled for use in "wet locations."

B. Wet-Location, Weatherproof Cover Plates: NEMA 250, complying with type 3R weather-resistant thermoplastic with lockable cover rated for “in use” operation.

2.8 MULTIOUTLET ASSEMBLIES

A. Available Manufacturers: Subject to compliance with requirements, manufacturers offering products that may be incorporated into the Work include, but are not limited to, the following:

1. Hubbell Incorporated; Wiring Device-Kellems.
2. Wiremold Company (The).
3. Or approved equal.

B. Components of Assemblies: Products from a single manufacturer designed for use as a complete, matching assembly of raceways and receptacles, UL 498.

C. Raceway Material: Metal, with manufacturer's standard finish.

D. Wire: No. 10 AWG.

2.9 FINISHES

A. Color: Wiring device catalog numbers in Section Text do not designate device color.

1. Wiring Devices Connected to Normal Power System: Ivory, unless otherwise indicated or required by NFPA 70.
2. Wiring Devices Connected to Emergency Power System: Ivory.
3. TVSS Devices: Blue.
4. Isolated-Ground Receptacles: Orange

PART 3 - EXECUTION

3.1 INSTALLATION

A. Comply with NECA 1, including the mounting heights listed in that standard, unless otherwise noted.

B. Coordination with Other Trades:

1. Take steps to insure that devices and their boxes are protected. Do not place wall finish materials over device boxes and do not cut holes for boxes with routers that are guided by riding against outside of the boxes.
2. Keep outlet boxes free of plaster, drywall joint compound, mortar, cement, concrete, dust, paint, and other material that may contaminate the raceway system, conductors, and cables.
3. Install device boxes in brick or block walls so that the cover plate does not cross a joint unless the joint is troweled flush with the face of the wall.
4. Install wiring devices after all wall preparation, including painting, is complete.

C. Conductors:

1. Do not strip insulation from conductors until just before they are spliced or terminated on devices.
2. Strip insulation evenly around the conductor using tools designed for the purpose. Avoid scoring or nicking of solid wire or cutting strands from stranded wire.
3. The length of free conductors at outlets for devices shall meet provisions of NFPA 70, Article 300, without pigtails.
4. Existing Conductors:

a. Cut back and pigtail, or replace all damaged conductors.
b. Straighten conductors that remain and remove corrosion and foreign matter.
c. Pigtailing existing conductors is permitted provided the outlet box is large enough.

D. Device Installation:

1. Replace all devices that have been in temporary use during construction or that show signs that they were installed before building finishing operations were complete.
2. Keep each wiring device in its package or otherwise protected until it is time to connect conductors.
3. Do not remove surface protection, such as plastic film and smudge covers, until the last possible moment.
4. Connect devices to branch circuits using pigtails that are not less than 6 inches in length.
5. When there is a choice, use side wiring with binding-head screw terminals. Wrap solid conductor tightly clockwise, 2/3 to 3/4 of the way around terminal screw.
6. Use a torque screwdriver when a torque is recommended or required by the manufacturer.
7. When conductors larger than No. 12 AWG are installed on 20-A circuit, splice No. 12 AWG pigtails for device connections.
8. Tighten unused terminal screws on the device.
9. When mounting into metal boxes, remove the fiber or plastic washers used to hold device mounting screws in yokes, allowing metal-to-metal contact.

E. Receptacle Orientation:

1. Install ground pin of vertically mounted receptacles up.

F. Device Plates: Do not use oversized or extra-deep plates. Repair wall finishes and remount outlet boxes when standard device plates do not fit flush or do not cover rough wall opening.

G. Dimmers:

1. Install dimmers within terms of their listing.
2. Verify that dimmers used for fan speed control are listed for that application.
3. Install unshared neutral conductors on line and load side of dimmers according to manufacturers' device listing conditions in the written instructions.

H. Arrangement of Devices: Unless otherwise indicated, mount flush, with long dimension vertical and with grounding terminal of receptacles on top. Group adjacent switches under single, multi-gang wall plates.

I. Adjust locations of floor service outlets and service poles to suit arrangement of partitions.

3.2 IDENTIFICATION

A. Comply with Division 26 Section 26 05 53 "Identification for Electrical Systems."

1. Receptacles: Identify panelboard and circuit number from which served. Use hot, stamped or engraved machine printing with white-filled lettering on face of plate, and durable wire markers or tags inside outlet boxes.

3.3 FIELD QUALITY CONTROL

A. Perform tests and inspections and prepare test reports in accordance with Form 816 Article 1.20-1.05.10 and as follows:

1. Test Instruments: Use instruments that comply with UL 1436.
2. Test Instrument for Convenience Receptacles: Digital wiring analyzer with digital readout or illuminated LED indicators of measurement.

B. Tests for Convenience Receptacles:

1. Line Voltage: Acceptable range is 105 to 132 V.
2. Percent Voltage Drop under 20-A Load: A value of 6 percent or higher is not acceptable.
3. Ground Impedance: Values of up to 2 ohms are acceptable.
4. GFCI Trip: Test for tripping values specified in UL 1436 and UL 943.
5. Using the test plug, verify that the device and its outlet box are securely mounted.
6. The tests shall be diagnostic, indicating damaged conductors, high resistance at the circuit breaker, poor connections, inadequate fault current path, defective devices, or similar problems. Correct circuit conditions, remove malfunctioning units and replace with new ones, and retest as specified above.

END OF SECTION 26 27 26

SECTION 26 28 16 - ENCLOSED SWITCHES AND CIRCUIT BREAKERS

PART 1 - GENERAL

1.1 SUMMARY

A. Section Includes:

1. Fusible switches.
2. Non-fusible switches.
3. Receptacle switches.
4. Molded-case circuit breakers (MCCBs).
5. Molded-case switches.
6. Enclosures.

1.2 DEFINITIONS

A. NC: Normally closed.

B. NO: Normally open.

C. SPDT: Single pole, double throw.

1.3 PERFORMANCE REQUIREMENTS

A. Seismic Performance: Enclosed switches and circuit breakers shall withstand the effects of earthquake motions determined according to ASCE/SEI 7.

1. The term "withstand" means "the unit will remain in place without separation of any parts from the device when subjected to the seismic forces specified and the unit will be fully operational after the seismic event."

1.4 SUBMITTALS

A. Submit the following in accordance with Form 816 Article 1.20-1.05.02 and NOTICE TO CONTRACTOR – SUBMITTALS.

B. Product Data: For each type of enclosed switch, circuit breaker, accessory, and component indicated. Include dimensioned elevations, sections, weights, and manufacturers' technical data on features, performance, electrical characteristics, ratings, accessories, and finishes.

1. Enclosure types and details for types other than NEMA 250, Type 1.
2. Current and voltage ratings.
3. Short-circuit current ratings (interrupting and withstand, as appropriate).
4. Include evidence of NRTL listing for series rating of installed devices.
5. Detail features, characteristics, ratings, and factory settings of individual overcurrent protective devices, accessories, and auxiliary components.
6. Include time-current coordination curves (average melt) for each type and rating of overcurrent protective device; include selectable ranges for each type of overcurrent protective device. Submit on translucent log-log graph paper.

C. Shop Drawings: For enclosed switches and circuit breakers. Include plans, elevations, sections, details, and attachments to other work.

1. Wiring Diagrams: For power, signal, and control wiring.

D. Qualification Data: For qualified testing agency.

E. Seismic Qualification Certificates: For enclosed switches and circuit breakers, accessories, and components, from manufacturer.

1. Basis for Certification: Indicate whether withstand certification is based on actual test of assembled components or on calculation.
2. Dimensioned Outline Plans of Equipment Unit: Identify center of gravity and locate and describe mounting and anchorage provisions.
3. Detailed description of equipment anchorage devices on which the certification is based and their installation requirements.

F. Field quality-control reports.

1. Test procedures used.
2. Test results that comply with requirements.
3. Results of failed tests and corrective action taken to achieve test results that comply with requirements.

G. Operation and Maintenance Data: For enclosed switches and circuit breakers to include in emergency, operation, and maintenance manuals. In addition to items specified in Division 01 Section "Operation and Maintenance Data," include the following:

1. Manufacturer's written instructions for testing and adjusting enclosed switches and circuit breakers.
2. Time-current coordination curves (average melt) for each type and rating of overcurrent protective device; include selectable ranges for each type of overcurrent protective device. Submit on translucent log-log graph paper.

1.5 QUALITY ASSURANCE

A. Testing Agency Qualifications: Member company of NETA or an NRTL.

1. Testing Agency's Field Supervisor: Currently certified by NETA to supervise on-site testing.

B. Source Limitations: Obtain enclosed switches and circuit breakers, overcurrent protective devices, components, and accessories, within same product category, from single source from single manufacturer in accordance with Form 816 Article 1.20-1.06.01.

C. Product Selection for Restricted Space: Plans indicate maximum dimensions for enclosed switches and circuit breakers, including clearances between enclosures, and adjacent surfaces and other items. Comply with indicated maximum dimensions.

D. Electrical Components, Devices, and Accessories: Listed and labeled as defined in NFPA 70, by a qualified testing agency, and marked for intended location and application.

E. Comply with NFPA 70.

1.6 PROJECT CONDITIONS

A. Environmental Limitations: Rate equipment for continuous operation under the following conditions unless otherwise indicated:

1. Ambient Temperature: Not less than minus 22 deg F and not exceeding 104 deg F.
2. Altitude: Not exceeding 6,600 feet.

1.7 COORDINATION

A. Coordinate layout and installation of switches, circuit breakers, and components with equipment served and adjacent surfaces. Maintain required workspace clearances and required clearances for equipment access doors and panels.

1.8 WARRANTY

A. Refer to Form 816 Article 1.20-1.06.08 and NOTICE TO CONTRACTOR – WARRANTIES for additional information.

1.9 SPARE PARTS

A. Furnish spare parts that match products installed and that are packaged with protective covering for storage and identified with labels describing contents.

1. Fuses: Equal to 10 percent of quantity installed for each size and type, but no fewer than three of each size and type.
2. Fuse Pullers: Two for each size and type.

1.10 DELIVERY, STORAGE, AND HANDLING

A. Refer to Form 816 Article 1.06.03 and Form 816 Article 1.20-1.06.03 for additional information.

PART 2 - PRODUCTS

2.1 FUSIBLE SWITCHES

A. Available Manufacturers: Subject to compliance with requirements, available manufacturers offering products that may be incorporated into the Work include, but are not limited to, the following:

1. General Electric Company; GE Consumer & Industrial - Electrical Distribution.
2. Siemens Energy & Automation, Inc.
3. Square D; a brand of Schneider Electric.
4. Or approved equal.

B. Type HD, Heavy Duty, Single Throw, 600-V ac, 1200 A and Smaller: UL 98 and NEMA KS 1, horsepower rated, with clips or bolt pads to accommodate specified and indicated fuses, lockable handle with capability to accept three padlocks, and interlocked with cover in closed position.

C. Type HD, Heavy Duty, Double Throw, 600-V ac, 1200 A and Smaller: UL 98 and NEMA KS 1, horsepower rated, with clips or bolt pads to accommodate specified and indicated fuses, lockable handle with capability to accept three padlocks, and interlocked with cover in closed position.

D. Accessories:

1. Equipment Ground Kit: Internally mounted and labeled for copper and aluminum ground conductors.
2. Neutral Kit: Internally mounted; insulated, capable of being grounded and bonded; labeled for copper and aluminum neutral conductors.
3. Isolated Ground Kit: Internally mounted; insulated, capable of being grounded and bonded; labeled for copper and aluminum neutral conductors.
4. Class R Fuse Kit: Provides rejection of other fuse types when Class R fuses are specified.
5. Auxiliary Contact Kit: Two NO/NC (Form "C") auxiliary contact(s), arranged to activate before switch blades open.
6. Hookstick Handle: Allows use of a hookstick to operate the handle.
7. Lugs: Mechanical type, suitable for number, size, and conductor material.
8. Service-Rated Switches: Labeled for use as service equipment.
9. Accessory Control Power Voltage: Remote mounted and powered; 120-V ac, 24-V dc.

2.2 NONFUSIBLE SWITCHES

A. Available Manufacturers: Subject to compliance with requirements, available manufacturers offering products that may be incorporated into the Work include, but are not limited to, the following:

1. General Electric Company; GE Consumer & Industrial - Electrical Distribution.
2. Siemens Energy & Automation, Inc.
3. Square D; a brand of Schneider Electric.
4. Or approved equal.

B. Type HD, Heavy Duty, Single Throw, 600-V ac, 1200 A and Smaller: UL 98 and NEMA KS 1, horsepower rated, lockable handle with capability to accept three padlocks, and interlocked with cover in closed position.

C. Type HD, Heavy Duty, Double Throw, 600-V ac, 1200 A and Smaller: UL 98 and NEMA KS 1, horsepower rated, lockable handle with capability to accept three padlocks, and interlocked with cover in closed position.

D. Accessories:

1. Equipment Ground Kit: Internally mounted and labeled for copper and aluminum ground conductors.
2. Neutral Kit: Internally mounted; insulated, capable of being grounded and bonded; labeled for copper and aluminum neutral conductors.
3. Isolated Ground Kit: Internally mounted; insulated, capable of being grounded and bonded; labeled for copper and aluminum neutral conductors.
4. Auxiliary Contact Kit: Two NO/NC (Form "C") auxiliary contact(s), arranged to activate before switch blades open.
5. Hookstick Handle: Allows use of a hookstick to operate the handle.
6. Lugs: Mechanical type, suitable for number, size, and conductor material.
7. Accessory Control Power Voltage: Remote mounted and powered; 120-V ac, 24-V dc.

2.3 RECEPTACLE SWITCHES

A. Available Manufacturers: Subject to compliance with requirements, available manufacturers offering products that may be incorporated into the Work include, but are not limited to, the following:

1. General Electric Company, GE Consumer & Industrial - Electrical Distribution.
2. Siemens Energy & Automation, Inc.
3. Square D; a brand of Schneider Electric.
4. Or approved equal.

B. Type HD, Heavy-Duty, Single-Throw Nonfusible Switch: 600-V ac, size as indicated on the Contract Plans A; UL 98 and NEMA KS 1; horsepower rated, lockable handle with capability to accept three padlocks; interlocked with cover in closed position.

C. Interlocking Linkage: Provided between the receptacle and switch mechanism to prevent inserting or removing plug while switch is in the on position, inserting any plug other than specified and turning switch on if an incorrect plug is inserted or correct plug has not been fully inserted into the receptacle.

D. Receptacle: Polarized, three-phase, four-wire receptacle (fourth wire connected to enclosure ground lug).

2.4 MOLDED-CASE CIRCUIT BREAKERS

A. Available Manufacturers: Subject to compliance with requirements, manufacturers offering products that may be incorporated into the Work include, but are not limited to, the following:

1. General Electric Company; GE Consumer & Industrial - Electrical Distribution.
2. Siemens Energy & Automation, Inc.
3. Square D; a brand of Schneider Electric.
4. Or approved equal.

B. General Requirements: Comply with UL 489, NEMA AB 1, and NEMA AB 3, with interrupting capacity to comply with available fault currents.

C. Thermal-Magnetic Circuit Breakers: Inverse time-current element for low-level overloads and instantaneous magnetic trip element for short circuits. Adjustable magnetic trip setting for circuit-breaker frame sizes 250 A and larger.

D. Adjustable, Instantaneous-Trip Circuit Breakers: Magnetic trip element with front-mounted, field-adjustable trip setting.

E. Electronic Trip Circuit Breakers: Field-replaceable rating plug, rms sensing, with the following field-adjustable settings:

1. Instantaneous trip.
2. Long- and short-time pickup levels.
3. Long- and short-time time adjustments.
4. Ground-fault pickup level, time delay, and I2t response.

F. Current-Limiting Circuit Breakers: Frame sizes 400 A and smaller, and let-through ratings less than NEMA FU 1, RK-5.

G. Integrally Fused Circuit Breakers: Thermal-magnetic trip element with integral limiter-style fuse listed for use with circuit breaker and trip activation on fuse opening or on opening of fuse compartment door.

H. Ground-Fault, Circuit-Interrupter (GFCI) Circuit Breakers: Single- and two-pole configurations with Class A ground-fault protection (6-mA trip).

I. Ground-Fault, Equipment-Protection (GFEP) Circuit Breakers: With Class B ground-fault protection (30-mA trip).

J. Features and Accessories:

1. Standard frame sizes, trip ratings, and number of poles.
2. Lugs: Compression type, suitable for number, size, trip ratings, and conductor material.
3. Application Listing: Appropriate for application; Type SWD for switching fluorescent lighting loads; Type HID for feeding fluorescent and high-intensity discharge lighting circuits.
4. Ground-Fault Protection: Comply with UL 1053; integrally mounted, self-powered type with mechanical ground-fault indicator; relay with adjustable pickup and time-delay settings, push-to-test feature, internal memory, and shunt trip unit; and three-phase, zero-sequence current transformer/sensor.
5. Communication Capability: Circuit-breaker-mounted communication module with functions and features compatible with power monitoring and control system specified in Division 26 Section 26 09 13 "Electrical Power Monitoring and Control."
6. Shunt Trip: Trip coil energized from separate circuit, with coil-clearing contact.
7. Undervoltage Trip: Set to operate at 35 to 75 percent of rated voltage without intentional time delay.
8. Auxiliary Contacts: Two SPDT switches with "a" and "b" contacts; "a" contacts mimic circuit-breaker contacts, "b" contacts operate in reverse of circuit-breaker contacts.
9. Alarm Switch: One NO contact that operates only when circuit breaker has tripped.
10. Key Interlock Kit: Externally mounted to prohibit circuit-breaker operation; key shall be

removable only when circuit breaker is in off position.

11. Zone-Selective Interlocking: Integral with electronic trip unit; for interlocking ground-fault protection function.
12. Electrical Operator: Provide remote control for on, off, and reset operations.
13. Accessory Control Power Voltage: integrally mounted, self-powered; 120-V ac, 24-V dc.

2.5 MOLDED-CASE SWITCHES

A. Available Manufacturers: Subject to compliance with requirements, manufacturers offering products that may be incorporated into the Work include, but are not limited to, the following:

1. General Electric Company; GE Consumer & Industrial - Electrical Distribution.
2. Siemens Energy & Automation, Inc.
3. Square D; a brand of Schneider Electric.
4. Or approved equal.

B. General Requirements: MCCB with fixed, high-set instantaneous trip only, and short-circuit withstand rating equal to equivalent breaker frame size interrupting rating. Comply with UL 489.

C. Features and Accessories:

1. Standard frame sizes and number of poles.
2. Lugs: Mechanical type, suitable for number, size, trip ratings, and conductor material.
3. Ground-Fault Protection: Comply with UL 1053; remote-mounted and powered type with mechanical ground-fault indicator; relay with adjustable pickup and time-delay settings, push-to-test feature, internal memory, and shunt trip unit; and three-phase, zero- sequence current transformer/sensor.
4. Shunt Trip: Trip coil energized from separate circuit, with coil-clearing contact.
5. Undervoltage Trip: Set to operate at 35 to 75 percent of rated voltage without intentional time delay.
6. Auxiliary Contacts: Two SPDT switches with "a" and "b" contacts; "a" contacts mimic switch contacts, "b" contacts operate in reverse of switch contacts.
7. Alarm Switch: One NO contact that operates only when switch has tripped.
8. Key Interlock Kit: Externally mounted to prohibit switch operation; key shall be removable only when switch is in off position.
9. Zone-Selective Interlocking: Integral with ground-fault shunt trip unit; for interlocking ground-fault protection function.
10. Electrical Operator: Provide remote control for on, off, and reset operations.
11. Accessory Control Power Voltage: Integrally mounted, self-powered; 120-V ac, 24-V dc.

2.6 ENCLOSURES

A. Enclosed Switches and Circuit Breakers: NEMA AB 1, NEMA KS 1, NEMA 250, UL 489, and UL 50, to comply with environmental conditions at installed location.

1. Interior, Dry and Clean Locations: NEMA 250, Type 1.
2. Exterior Locations: NEMA 250, Type 3R.
3. Other Wet or Damp, Interior Locations: NEMA 250, Type 4.
4. Interior Locations Subject to Dust, Falling Dirt, and Dripping Non-corrosive Liquids: NEMA 250, Type 12.
5. Hazardous Areas Indicated on Plans: NEMA 250, Type 7.

PART 3 - EXECUTION

3.1 EXAMINATION

A. Examine elements and surfaces to receive enclosed switches and circuit breakers for compliance with installation tolerances and other conditions affecting performance of the Work.

B. Proceed with installation only after unsatisfactory conditions have been corrected.

3.2 INSTALLATION

A. Install individual wall-mounted switches and circuit breakers with tops at uniform height unless otherwise indicated.

B. Comply with mounting and anchoring requirements specified in Division 26 Section 26 05 48 "Vibration and Seismic Controls for Electrical Systems."

C. Temporary Lifting Provisions: Remove temporary lifting eyes, channels, and brackets and temporary blocking of moving parts from enclosures and components.

D. Install fuses in fusible devices.

E. Comply with NECA 1.

3.3 IDENTIFICATION

A. Comply with requirements in Division 26 Section 26 05 53 "Identification for Electrical Systems."

1. Identify field-installed conductors, interconnecting wiring, and components; provide warning signs.
2. Label each enclosure with engraved metal or laminated-plastic nameplate.

3.4 FIELD QUALITY CONTROL

A. Testing Agency: Engage a qualified testing agency to perform tests and inspections.

B. Perform tests and inspections in accordance with Form 816 Article 1.20-1.05.10 and as follows:

C. Acceptance Testing Preparation:

1. Test insulation resistance for each enclosed switch and circuit breaker, component, connecting supply, feeder, and control circuit.
2. Test continuity of each circuit.

D. Tests and Inspections:

1. Perform each visual and mechanical inspection and electrical test stated in NETA Acceptance Testing Specification. Certify compliance with test parameters.
2. Correct malfunctioning units on-site, where possible, and retest to demonstrate compliance; otherwise, replace with new units and retest.
3. Perform the following infrared scan tests and inspections and prepare reports:

a. Initial Infrared Scanning: After issuance of Certificate of Compliance, but not more than 60 days after issuance of Certificate of Compliance, perform an infrared scan of each enclosed switch and circuit breaker. Remove front panels so joints and connections are accessible to portable scanner.
b. Follow-up Infrared Scanning: Perform an additional follow-up infrared scan of each enclosed switch and circuit breaker 11 months after date of issuance of Certificate of Compliance.
c. Instruments and Equipment: Use an infrared scanning device designed to measure temperature or to detect significant deviations from normal values. Provide calibration record for device.

4. Test and adjust controls, remote monitoring, and safeties. Replace damaged and

malfunctioning controls and equipment.

E. Enclosed switches and circuit breakers will be considered defective if they do not pass tests and inspections.

F. Prepare test and inspection reports, including a certified report that identifies enclosed switches and circuit breakers and that describes scanning results. Include notation of deficiencies detected, remedial action taken, and observations after remedial action.

3.5 ADJUSTING

A. Adjust moving parts and operable components to function smoothly, and lubricate as recommended by manufacturer.

B. Set field-adjustable circuit-breaker trip ranges as specified in Division 26 Section 26 05 73 "Overcurrent Protective Device Coordination Study".

END OF SECTION 26 28 16

SECTION 26 33 53 - STATIC UNINTERRUPTIBLE POWER SUPPLY

PART 1 GENERAL

1.1 RELATED DOCUMENTS

A. Drawings and general provisions of the Contract, including General Conditions of Division 1, State of Connecticut, Department of Transportation, Standard Specifications for Roads, Bridges, and Incidental Construction, Form 816 - 2004 and supplemental specifications thereto, shall be a part of this specification.

1.2 SUMMARY

A. Section includes the furnishing and installation of a static uninterruptible power supply system for the purpose of providing emergency lighting.

1.3 REFERENCES

A. Institute of Electrical and Electronics Engineers:

1. IEEE 1184 - Guide for the Selection and Sizing of Batteries for Uninterruptible Power Systems.

B. National Electrical Manufacturers Association:

1. NEMA 250 - Enclosures for Electrical Equipment (1000 Volts Maximum).
2. NEMA PE 1 - Uninterruptible Power Systems.

C. International Electrical Testing Association:

1. NETA ATS - Acceptance Testing Specifications for Electrical Power. Distribution Equipment and Systems.

1.4 SUBMITTALS

A. Submit the following in accordance with Form 816, Section 1.20 and NOTICE TO CONTRACTOR-SUBMITTALS.

B. Shop Drawings: Indicate electrical characteristics and connection requirements. Indicate battery rack dimensions; battery type, size, dimensions, and weight; detailed equipment outlines, weight, and dimensions; location of conduit entry and exit; single-line diagram indicating metering, control, and external wiring requirements; heat rejection and air flow requirements.

C. Product Data: Submit catalog sheets and technical data sheets to indicate physical data and electrical performance, electrical characteristics, and connection requirements.

D. Manufacturer's Field Reports: Indicate inspections, findings, and recommendations.

E. Quality assurance submittals:

1. Manufacturer's certification letter in accordance with NOTICE TO CONTRACTOR POTENTIAL FOR ASBESTORS CONTAINING MATERIALS.
2. Seismic qualifications certificates.
3. Field quality control reports.

1.5 CLOSEOUT SUBMITTALS

A. Submit the following in accordance with Form 816 Article 1.20-1.05.02 and NOTICE TO CONTRACTOR – SUBMITTALS.

B. Operation and Maintenance Data: Submit description of operating procedures; servicing procedures; list of major components; recommended remedial and preventive maintenance procedures; and spare parts list.

1.6 QUALITY ASSURANCE

A. Source Limitations: Obtain products from a single manufacturer in accordance with Form 816 Article 1.20-1.06.01

B. Source limitations: Obtain the UPS system from a single manufacturer in accordance with the requirements of Form 816 article 1.20-1.05.24. Manufacturer: Company specializing in manufacturing products specified in this section with minimum twenty years of documented experience.

C. Conduct and pre-installation meeting at the project site.

D. Testing agency qualifications: Member of NETA or and NRTL.

E. Comply with the requirements of the following standards:

1. CSA Listing C22.2 No107.1-95, UL 1778, UL924/A- Underwriters Laboratories Inc. standard for UPS systems and rectifying equipment and specialty transformers.
2. IEEE C62.41-1991- IEEE Recommended Practice on Surge Voltages in Low-voltage AC Power Circuits
3. ANSI NFPA 70-National Electrical Code.
4. UL50 and NEMA 250-1991- Enclosures for electrical Equipment
5. CSA C22.1-94_Canadian Electrical Code, Part I
6. UL1449_UL Standard for Safety Transient Voltage Surge Suppressors.

1.7 DELIVERY, STORAGE, AND HANDLING

A. Refer to Form 816 Article 1.06.03 and Form 816 Article 1.20-1.06.03 for additional information.

B. Comply with Form 816 Article 1.06.03 and Form 816 Article 1.20-1.06.03 for additional information.

C. Protect equipment from extreme temperature and humidity by storing in conditioned space.

D. Protect equipment from dust and debris by wrapping unit in dust tight cover and storing away from construction activity.

1.8 WARRANTY

A. Refer to Form 816 Article 1.20-1.06.08 and NOTICE TO CONTRACTOR – CLOSEOUT DOCUMENTS for additional information.

B. Furnish one year manufacturer warranty for parts and labor.

PART 2 PRODUCTS

2.1 SCOPE:

A. The UPS shall be a solid-state single phase UPS system designed to provide regulated and conditioned sinusoidal power to both linear and non-linear type loads. The UPS shall provide uninterruptible power during all modes of operation. There shall be no interruption of power to the critical load when the UPS transfer to and from battery operation. The specified equipment herein shall be referred to as Harsh Environment UPS or HE UPS.

B. The UPS and batteries shall be designed to fit into a NEMA 3R enclosure intended for outdoor installations. It shall be of modular construction for ease of servicing in the field.

C. The primary input power source to the UPS shall be utility power.

2.2 MODES OF OPERATION

A. NORMAL: During normal operation, utility power is converted to DC, drawing sinusoidal input AC current at utility power factor under all load conditions, this converter supplies DC power to the Inverter and Battery Charger sections. The inverter supplied the load through the Static Bypass Switch without using the energy stored in the battery.

B. EMERGENCY: Upon loss of input power or when power exceeds the specified input limits, the control logic shall allow the inverter to draw energy from the battery without interruption to the load and disconnect the input line. The transfer to battery shall be uninterrupted-"NO BREAK" power transfer. The inverter shall supply power from the batteries, through the Static Bypass Switch, to the critical load. The output shall be sinusoidal and within specified limits.

C. FAILURE: In the event of a component failure in either the Rectifier/Converter or the Inverter the unit's SBS will transfer the load, without interruption to the utility power and will alarm providing visual and closed contacts for remote annunciation.

D. RECHARGE: Upon restoration of input utility power and before the batteries are completely exhausted, the UPS shall automatically return to normal operation. This retransfer to normal operation shall be uninterrupted. The battery charger shall automatically recharge the batteries to full capacity.

2.3 MAJOR SYSTEM COMPONENTS:

A. The UPS and batteries shall be designed to fit into NEMA 3R enclosure intended for outdoor installation.

B. The NEMA 3R cabinet is made of stainless steel ensuring suitability for outdoor harsh environments.

C. BATTERY SUBSYSTEM: Sealed, maintenance-free batteries shall be provided. The batteries shall have an expected life of ten(10) years. The batteries shall be fully wired and contained within either the UPS cabinet or a separate battery cabinet. Battery run time (based on 100%) full load) shall be no less than the specified time. Optional extended battery run times shall be available.

D. INVERTER: The inverter shall convert power supplied, from the utility, when within specified limits or from the batteries, when within the battery manufacturer's specified limits, to AC power. It should be a pulse width modulation(PWM) type design without the need of a transformer. The unit shall have a single power PCB for maximum reliability.

E. STATIC BYPASS SWITCH: The unit shall contain a static Bypass Switch as a standard feature.

F. CHARGER: The battery charger shall maintain the batteries at full charge. The standard battery charger shall recharge the battery in 10 times the discharge time maximum.

G. POWER CONNECTIONS: The UPS shall be hard wired input and output.

H. SYSTEM OPTIONS:

1. Provide the system with the following options:

a. Internal manual maintenance bypass switch

b. Five(5) form “c” contacts alarms

c. Heater strip with thermostat control

d. TVSS

e. Computer monitoring via RS 232.

f. Stainless Steel Cabinet for UPS and battery

2.4 INPUT SPECIFICATIONS

A. System Ratings and Operating Characteristics:

1. System Continuous Rating: As indicated on Drawings, over entire battery voltage range at specified power factor. Maintain output voltage within specified limits at load from full load to no-load.
2. Battery Capacity: As indicated on drawings.
3. Voltage Rating: 120/208 volts, 3 phase, 4wire.
4. Input Voltage Operating Range: Plus or minus 3 percent.
5. Input Frequency Operating Range: 60 Hz, plus or minus 0.5 Hz.
6. Input Current Limit: Adjustable to maximum of 125 percent required to operate at full load with battery bank on float charge.
7. Current Walk-in: 25 to 100 percent in fifteen seconds.
8. UPS Power Factor Over Full Range of Loads and Input Voltages: 95 percent, lagging.
9. Harmonic Distortion of Input Current Wave Form: 5 percent maximum at full load.
10. Output Free Running Frequency: 60 Hz Plus or minus 0.5 percent.
11. Output Harmonic Distortion: Maximum 5 percent rms total harmonic distortion (THD) and maximum 3 percent any single harmonic, at rated frequency and voltage, from 10 percent load to full load and over battery voltage range, measured into linear load.
12. Voltage Transient Response for Application of 0 to 50 Percent, 50 to 100 Percent, 100 to 50 Percent, and 50 to 0 Percent Step Loads, and Transfer To and From Bypass Line:
    a. Plus 8, minus 10 percent for maximum of 8.3 milliseconds.
    b. Plus or minus 5 percent for maximum of 25 milliseconds.
    c. Plus or minus 3 percent for maximum of 50 milliseconds.
13. Phase Displacement:
    a. 120 plus or minus 1 degrees for balanced loads.
    b. 120 plus or minus 4 degrees for 50 percent unbalanced loads.
14. Three-phase Overload Ratings:
    a. 1000 percent for 5 cycles; via static switch.
    b. 150 percent for 10 seconds.

c. 125 percent for 10 minutes.

15. Output Current Limit: 150 percent of rated output current.
16. Voltage Unbalance: 3 percent maximum line-line with 100 percent load unbalance.
17. Efficiency: 92 percent at full load.
18. Standard Run time: 7~12 minutes(Unit dependent)
19. Optional run time: 180 minutes
20. Battery type: Sealed, Maintenance free, lead acid.
21. Expected life: 10 years.
22. Protection: Circuit Breaker.

2.5 MONITORING AND COMMUNICATION

A. Computer Communications
1. RS-232 Interface Port
2. RS-485 Interface Port

B. Agency Listings:
1. UL 1778, CSA Listed to UL924/A for outdoor application

C. Surge Withstand ability: ANSI C62.41-1980 Categories A & B.

D. Temperature:
1. 0~40ºC (Operating)
2. -20~40ºC (Storage)

E. Relative Humidity: 0 to 95% Non-condensing

2.6 MANUFACTURERS:

A. On Line ETERNALIGHT Plus Power

B. Crucial Power Products

C. Liebert

2.7 FABRICATION

A. All materials and components making up the UPS shall be new, of current manufacturer, and shall not have been in prior service except as required during factory testing. The UPS shall be constructed of replaceable subassemblies. All active electronic devices shall be solid state.

B. Wiring: Wiring practices, and cooling shall be in accordance with the requirements of National Electrical Code(NFPA 70) and other applicable codes and standards.

C. Cabinet: The UPS unit shall comprised of: power module, battery module, control module, system interconnect module and user interface module housed in a single freestanding enclosure and meets the requirements if IP20. The UPS cabinet shall be stainless steel to meet the NEMA 3R requirements.

D. Cooling: The UPS and battery cabinets shall be forced air cooled by internally mounted fans. The fans shall be redundant in nature to ensure maximum reliability. The fans shall be easily replaceable without the use of special tools.

2.8 COMPONENTS

A. Input Converter:
1. General: Incoming AC power shall be converted to a regulated DC output by the input converter for supplying DC power to the inverter. The input converter shall provide input power factor correction to 0.95 or greater regardless of the nature

of the load and input current shall be sinusoidal with less than 7% total harmonic distortion regardless of load.

2. AC Input current limit: The input converter shall be provided with AC input over current protection. The unit has the input circuit breaker.
3. Input protection: The UPS shall have built-in protection against under voltage, over current, and over voltage conditions including low energy surges introduced on the primary AC source and the bypass source. The UPS cabinet shall contain an input breaker sized to supply full rated load and to recharge the battery at the same time.
4. Input converter: Input converter shall automatically monitor and correct the input current to be sinusoidal with power factor correction.
5. Battery recharge: To prolong battery life, the UPS shall contain battery charging. When an equal number of power modules and battery modules are fitted the battery charger shall be able to recharge the internal batteries to 90% charge in less than ten hours at normal input voltage and normal ambient temperature.

B. Inverter:

1. General: The inverter shall convert DC power from the input converter output, or the battery, into precise regulated sine wave AC power for supporting the critical AC load.
2. Overload: The inverter shall be capable of supplying current and voltage for overloads exceeding 100% and up to 125% of full load current. A visual indicator/alarm shall indicate overload operation. For greater currents or longer time duration, the inverter shall have electronic current-limiting protection to prevent damage to components. The inverter shall be self-protecting against any magnitude of connected output overload. Inverter control logic shall sense and disconnect the inverter from the critical AC load without the requirement to clear protective fuses. The load shall be transferred to bypass when any of the above conditions are exceeded.
3. Maximum load alarm: The user receives an alarm when the unit is overloaded (greater than 100%) such that the UPS will alarm before an overload condition.
4. Output frequency: A microprocessor-controlled oscillator shall maintain the output frequency of the inverter. The oscillator shall hold the inverter output frequency to +/- 0.5% for steady state and transient conditions. The inverter shall track the bypass continuously providing the bypass source maintains a frequency within the user selected synchronization range. If the bypass source fails to remain within the selected range, the inverter shall revert to the internal oscillator.
5. Output protection: The UPS inverter shall employ electronic current limiting.
6. Battery over discharge protection: To prevent battery damage from over discharging, the UPS control logic shall control the shutdown voltage set point. This point is dependent on the levels set by the manufacturer of particular battery system employed.

C. Display and controls

1. General: An internal panel will consist of a four line by twenty-character LCD display for additional alarm/configuration. The unit shall also provide data via RS232/RS485. If there is a fault condition, the UPS shall attempt to maintain conditioned power to the load, or at minimum transfer bypass. There shall also be

D. Automatic battery test:

1. The UPS shall initiate an automatic battery testing periodically, at a programmed day and time of day.

E. Bypass:

1. General: A bypass circuit shall be provided as an internal part of the UPS. The bypass shall have an overload rating of 300% rated full load for 10 cycles and 1000% for sub-cycle fault clearing. The bypass control logic shall contain an automatic transfer control circuit that senses the status of the inverter logic signals, and operating and alarm conditions. This control circuit shall provide a transfer of the load to the bypass source, without exceeding the transient limits specified herein, when an overload or malfunction occurs within the UPS.
2. Automatic transfers: The transfer control logic shall automatically activate the bypass, transferring the critical AC load to the bypass source, after the transfer logic senses one of the following conditions:
   a. Inverter overload capacity exceeded
   b. Inverter over temperature
   c. UPS fault condition
3. For inverter overload conditions, the transfer control logic shall inhibit an automatic transfer of the critical load to the bypass source if one of the following conditions exists:
   a. Inverter/Bypass voltage difference exceeding preset limits (±15% of nominal)
   b. Bypass frequency out of preset limits (±5% of nominal frequency)
   c. UPS fault condition present.

F. Internal battery:
   1. General: Flame retardant, valve regulated, gas recombination, lead acid batteries shall be used as a stored-energy source for the specified UPS system.

2.9 COMMUNICATIONS

A. General: The UPS shall allow for flexibility in communications. The UPS shall be able to communicate through two communications ports simultaneously; the media of either communications port may change without affecting the operation of the UPS. The use of relay contacts shall not affect the operation of the two communications ports.

B. Relay contacts: The relay contacts shall be available through at least one DB-9F communication connector, and shall be compatible with the AS 400 system. The UPS shall communicate via relay contact closure the following information: Low battery, on bypass, summary alarm, UPS on and input fail. One connector to provide relay contacts shall be fitted on all UPS models as standard. Relay contacts shall be rated 48VDC, 1A. Additional signals such as on bypass and summary alarm shall be provided.

C. UPS status information: The software shall be able to retrieve all status information present in the UPS (and available on the display). Retrieval of data shall be through either serial communications or through a network connection via RS 232/RS485.SOURCE QUALITY CONTROL

D. Furnish shop inspection and testing of components and completed UPS assembly.

E. Make completed UPS available for inspection at manufacturer's factory prior to packaging for shipment. Notify Owner at least seven days before inspection is allowed.

F. Allow witnessing of factory inspections and tests at manufacturer's test facility. Notify Owner at least seven days before inspections and tests are scheduled.

PART 3 EXECUTION

3.1 FIELD QUALITY CONTROL

A. Factory trained field service personnel shall perform the following inspections and test procedures during the UPS start-up.

B. Inspect and test in accordance with NETA ATS, except Section 4.

C. Perform inspections and tests listed in NETA ATS, Section 7.22.

D. Verify specification performance criteria.

E. Measure battery discharge and recharge times.

F. Simulate fault in each system component and utility power.

G. Operate unit at 77 degrees F (25 degrees C) for eight hours.

H. Perform other tests as recommended by manufacturer.

3.2 MANUFACTURER'S FIELD SERVICES

A. Quality Requirements: Manufacturer's field services.

B. Prepare and start up UPS.

3.3 ADJUSTING

A. Execution and Closeout Requirements: Testing, adjusting, and balancing.

B. Adjust output voltage to within 1 percent of nominal.

C. Adjust output frequency to within 0.6 percent of nominal.

END OF SECTION 26 33 53

SECTION 27 05 00 - COMMON WORK RESULTS FOR COMMUNICATIONS

PART 1 - GENERAL

1.1 SUMMARY

A. Section Includes:

1. Communications equipment coordination and installation.
2. Sleeves for pathways and cables.
3. Sleeve seals.
4. Grout.
5. Common communications installation requirements.

1.2 DEFINITIONS

A. EPDM: Ethylene-propylene-diene terpolymer rubber.

B. NBR: Acrylonitrile-butadiene rubber.

1.3 SUBMITTALS

A. Submit the following in accordance with Form 816 Article 1.20-1.05.02 and NOTICE TO CONTRACTOR – SUBMITTALS.

1. Product Data: For sleeve seals.

1.4 COORDINATION

A. Coordinate arrangement, mounting, and support of communications equipment:

1. To allow maximum possible headroom unless specific mounting heights that reduce headroom are indicated.
2. To provide for ease of disconnecting the equipment with minimum interference to other installations.
3. To allow right of way for piping and conduit installed at required slope.
4. So connecting pathways, cables, wireways, cable trays, and busways will be clear of obstructions and of the working and access space of other equipment.

B. Coordinate installation of required supporting devices and set sleeves in cast-in-place concrete, masonry walls, and other structural components as they are constructed.

C. Coordinate location of access panels and doors for communications items that are behind finished surfaces or otherwise concealed.

D. Coordinate sleeve selection and application with selection and application of firestopping.

1.5 WARRANTY

A. Refer to Form 816 Article 1.20-1.06.08 and NOTICE TO CONTRACTOR – WARRANTIES for additional information.

1.6 DELIVERY, STORAGE, AND HANDLING

A. Refer to Form 816 Article 1.06.03 and Form 816 Article 1.20-1.06.03 for additional information.

PART 2 - PRODUCTS

2.1 SLEEVES FOR PATHWAYS AND CABLES

A. Steel Pipe Sleeves: ASTM A 53/A 53M, Type E, Grade B, Schedule 40, galvanized steel, plain ends.

B. Sleeves for Rectangular Openings: Galvanized sheet steel.

1. Minimum Metal Thickness:

a. For sleeve cross-section rectangle perimeter less than 50 inches and no side more than 16 inches, thickness shall be 0.052 inch.
b. For sleeve cross-section rectangle perimeter equal to, or more than, 50 inches and 1 or more sides equal to, or more than, 16 inches, thickness shall be 0.138 inch.

2.2 SLEEVE SEALS

A. Description: Modular sealing device, designed for field assembly, to fill annular space between sleeve and pathway or cable.

B. Basis-of-Design Product: Subject to compliance with requirements, provide comparable product by one of the following:

1. Advance Products & Systems, Inc.
2. Calpico, Inc.
3. Metraflex Co.
4. Pipeline Seal and Insulator, Inc.
5. Or Approved equal.

C. Sealing Elements: EPDM interlocking links shaped to fit surface of cable or conduit. Include type and number required for material and size of pathway or cable.

D. Pressure Plates: Include two for each sealing element.

E. Connecting Bolts and Nuts: Stainless steel of length required to secure pressure plates to sealing elements. Include one for each sealing element.

2.3 GROUT

A. Nonmetallic, Shrinkage-Resistant Grout: ASTM C 1107, factory-packaged, nonmetallic aggregate grout, noncorrosive, nonstaining, mixed with water to consistency suitable for application and a 30-minute working time.

PART 3 - EXECUTION

3.1 COMMON REQUIREMENTS FOR COMMUNICATIONS INSTALLATION

A. Comply with the latest version of NECA 1.

B. Measure indicated mounting heights to bottom of unit for suspended items and to center of unit for wall-mounting items.

C. Headroom Maintenance: If mounting heights or other location criteria are not indicated, arrange and install components and equipment to provide maximum possible headroom consistent with these requirements.

D. Equipment: Install to facilitate service, maintenance, and repair or replacement of components of both communications equipment and other nearby installations. Connect in such a way as to facilitate future disconnecting with minimum interference with other items in the vicinity.

E. Right of Way: Give to piping systems installed at a required slope.

3.2 SLEEVE INSTALLATION FOR COMMUNICATIONS PENETRATIONS

A. Communications penetrations occur when pathways, cables, wireways, or cable trays penetrate concrete slabs, concrete or masonry walls, or fire-rated floor and wall assemblies.

B. Concrete Slabs and Walls: Install sleeves for penetrations unless core-drilled holes or formed openings are used. Install sleeves during erection of slabs and walls.

C. Use pipe sleeves unless penetration arrangement requires rectangular sleeved opening.

D. Fire-Rated Assemblies: Install sleeves for penetrations of fire-rated floor and wall assemblies unless openings compatible with firestop system used are fabricated during construction of floor or wall.

E. Cut sleeves to length for mounting flush with both surfaces of walls.

F. Extend sleeves installed in floors 6 inches above finished floor level.

G. Size pipe sleeves to provide 1/4-inch annular clear space between sleeve and pathway or cable, unless indicated otherwise.

H. Seal space outside of sleeves with grout for penetrations of concrete and masonry.

I. Promptly pack grout solidly between sleeve and wall so no voids remain. Tool exposed surfaces smooth; protect grout while curing.

J. Interior Penetrations of Non-Fire-Rated Walls and Floors: Seal annular space between sleeve and pathway or cable, using joint sealant appropriate for size, depth, and location of joint. Comply with requirements in Division 07 Section 07 92 00 "Joint Sealants".

K. Fire-Rated-Assembly Penetrations: Maintain indicated fire rating of walls, partitions, ceilings, and floors at pathway and cable penetrations. Install sleeves and seal pathway and cable penetration sleeves with firestop materials.

L. Roof-Penetration Sleeves: Seal penetration of individual pathways and cables with flexible boot-type flashing units applied in coordination with roofing work.

M. Aboveground, Exterior-Wall Penetrations: Seal penetrations using steel pipe sleeves and mechanical sleeve seals. Select sleeve size to allow for 1-inch annular clear space between pipe and sleeve for installing mechanical sleeve seals.

N. Underground, Exterior-Wall Penetrations: Install cast-iron pipe sleeves. Size sleeves to allow for 1-inch annular clear space between pathway or cable and sleeve for installing mechanical sleeve seals.

3.3 SLEEVE-SEAL INSTALLATION

A. Install to seal exterior wall penetrations.

B. Use type and number of sealing elements recommended by manufacturer for pathway or cable material and size. Position pathway or cable in center of sleeve. Assemble mechanical sleeve seals and install in annular space between pathway or cable and sleeve. Tighten bolts against pressure plates that cause sealing elements to expand and make watertight seal.

3.4 FIRESTOPPING

A. Apply firestopping to penetrations of fire-rated floor and wall assemblies for communications installations to restore original fire-resistance rating of assembly.

END OF SECTION 27 05 00

SECTION 27 51 16 - PUBLIC ADDRESS AND MASS NOTIFICATION SYSTEMS

PART 1 - GENERAL

1.1 SUMMARY

A. The work of this section provides for the furnishing and installation of speakers, ambient noise microphone/sensors, raceway and cabling in the areas indicated, as well as providing infrastructure, space and fit up in the communications/IT rooms for paging equipment to be provided and installed by MNR.

B. Speaker types and locations are generally shown in the required spaces on the Contract Drawings. The Contractor shall further refine placement within these locations using an acoustical designer to determine final locations and placement of speaker units to optimize system performance and avoid nuisance echoing and reverberation, especially in open shop floor areas. Final locations and placement of speaker units, based upon evaluation of the Contractor's acoustical designer, shall be submitted for review and approval, prior to installation.

C. Work also includes field testing for installed sound measurement levels for speaker systems to calibrate and determine optimum signals levels for areas indicated with speakers on the Contract Drawings. Testing shall be conducted by the acoustical designer utilized by the Contractor that determined the final placement of speaker units. Test results and calibrations performed on equipment to optimize signal levels shall be tabulated and presented in a report to be submitted for approval.

D. Section Includes:

1. Loudspeakers.
2. Ambient noise microphones/sensors
3. Conductors and cables.
4. Raceways.

E. Speaker and types for the platform and on the extension part of the pedestrian bridge shall be same as those existing.

1.2 DEFINITIONS

A. Channels: Separate parallel signal paths, from sources to loudspeakers or loudspeaker zones, with separate amplification and switching that permit selection between paths for speaker alternative program signals.

B. VU: Volume unit.

C. Zone: Separate group of loudspeakers and associated supply wiring that may be arranged for selective switching between different channels.

1.3 PERFORMANCE REQUIREMENTS

A. Delegated Design: Design supports and seismic restraints for control consoles, equipment cabinets and racks, and components, including comprehensive engineering analysis by a qualified professional engineer, using performance requirements and design criteria indicated.

B. Seismic Performance: Supports and seismic restraints for control consoles, equipment cabinets and racks, and components shall withstand the effects of earthquake motions determined according to SEI/ASCE 7.

1. The term "withstand" means "the unit will remain in place without separation of any parts from the device when subjected to the seismic forces specified and the unit will be fully operational after the seismic event".

1.4 SUBMITTALS

A. Submit the following in accordance with Form 816 Article 1.20-1.05.02 and NOTICE TO CONTRACTOR – SUBMITTALS.

B. Product Data: For each type of product indicated.

C. Shop Drawings: For supports and seismic restraints for control consoles, equipment cabinets and racks, and components. Include plans, elevations, sections, details, and attachments to other work.

1. Detail equipment assemblies and indicate dimensions, weights, required clearances, method of field assembly, components, and location and size of each field connection.
2. Console layouts.
3. Control panels.
4. Rack arrangements.
5. Calculations: For sizing backup battery.
6. Wiring Diagrams: For power, signal, and control wiring.

a. Identify terminals to facilitate installation, operation, and maintenance.
b. Single-line diagram showing interconnection of components.
c. Cabling diagram showing cable routing.

D. Final Speaker Placement Locations: Submit for approval final locations and placement of speaker units to optimize system performance and avoid nuisance echoing and reverberation, especially in open shop floor areas. Submittal format shall consist of speaker locations and types used shown on full size floor plan drawings.

E. Delegated-Design Submittal: For supports and seismic restraints for control consoles, equipment cabinets and racks, and components indicated to comply with performance requirements and design criteria, including analysis data signed and sealed by the qualified professional engineer responsible for their preparation.

1. Detail fabrication and assembly of supports and seismic restraints for control consoles, equipment cabinets and racks, and components.

F. Coordination Plans: Reflected ceiling plans, drawn to scale, on which ceiling-mounted items including lighting fixtures, diffusers, grilles, speakers, sprinklers, access panels, and special moldings are shown and coordinated with each other, using input from installers of the items involved.

G. Qualification Data: For qualified Installer and testing agency.

H. Seismic Qualification Certificates: For control consoles, equipment cabinets and racks, accessories, and components, from manufacturer.

1. Basis for Certification: Indicate whether withstand certification is based on actual test of assembled components or on calculation.
2. Dimensioned Outline Plans of Equipment Unit: Identify center of gravity and locate and describe mounting and anchorage provisions.
3. Detailed description of equipment anchorage devices on which the certification is based and their installation requirements.

I. Field quality-control reports.

J. Field test report for installed sound measurement levels for speaker systems. Report shall include sound level test results and calibrations performed on equipment to optimize signal levels.

K. Operation and Maintenance Data: For public address and mass notification systems to include in emergency, operation, and maintenance manuals.

1.5 QUALITY ASSURANCE

A. Installer Qualifications: Manufacturer's authorized representative who is trained and approved for installation of units required for this Project.

1. Personnel certified by NICET as Audio Systems Level II Technician.

B. Testing Agency Qualifications: Qualified agency, with the experience and capability to conduct testing indicated.

1. Testing Agency's Field Supervisor: Currently certified by NICET at Level III to supervise on-site testing.

C. Source Limitations: Obtain public address and mass notification systems from single source from single manufacturer.

D. Electrical Components, Devices, and Accessories: Listed and labeled as defined in NFPA 70, by a qualified testing agency, and marked for intended location and application.

E. Comply with NFPA 70.

1.6 COORDINATION

A. Coordinate layout and installation of system components and suspension system with other construction that penetrates ceilings or is supported by them, including light fixtures, HVAC equipment, fire-suppression system, and partition assemblies.

1.7 SPARE PARTS

A. Furnish spare parts that match products installed and that are packaged with protective covering for storage and identified with labels describing contents.

1. Speaker: One of each type.

1.8 WARRANTY

A. Refer to Form 816 Article 1.20-1.06.08 and NOTICE TO CONTRACTOR – WARRANTIES for additional information.

1.9 DELIVERY, STORAGE, AND HANDLING

A. Refer to Form 816 Article 1.06.03 and Form 816 Article 1.20-1.06.03 for additional information.

PART 2 - PRODUCTS

2.1 MANUFACTURERS

A. Manufacturers: Subject to compliance with requirements, available manufacturers offering products that may be incorporated into the Work include, but are not limited to, the following:

1. Alpha Communications.
2. Altec Lansing Technologies, Inc.
3. Atlas Sound LP.
4. Bogen Communications, Inc.
5. Dukane Communication Systems; part of GE Infrastructure, Security.
6. Edwards Signaling & Security Systems; part of GE Infrastructure, Security.
7. Electro-Voice; Telex Communications, Inc.
8. Federal Signal Corporation; Electrical Products Division.
9. Peavey Electronics.
10. Rauland-Borg Corporation.
11. Whelen Engineering Company, Inc.
12. Or approved equal.

2.2 FUNCTIONAL DESCRIPTION OF SYSTEM

A. System Functions (Head end equipment to be provided and installed by MNR):

1. Selectively connect any zone to any available signal channel.
2. Selectively control sound from microphone outlets and other inputs.
3. "All-call" feature shall connect the all-call sound signal simultaneously to all zones regardless of zone or channel switch settings.
4. Telephone paging adapter shall allow paging by dialing an extension from any local telephone instrument and speaking into the telephone.
5. Produce a program-signal tone that is amplified and sounded over all speakers, overriding signals currently being distributed.
6. Reproduce high-quality sound that is free of noise and distortion at all loudspeakers at all times during equipment operation including standby mode with inputs off; output free of non-uniform coverage of amplified sound.

2.3 GENERAL EQUIPMENT AND MATERIAL REQUIREMENTS

A. Compatibility of Components: Coordinate component features to form an integrated system. Match components and interconnections for optimum performance of specified functions.

B. Equipment: Comply with UL 813. Equipment shall be modular, using solid-state components, and fully rated for continuous duty unless otherwise indicated. Select equipment for normal operation on input power usually supplied at 110 to 130 V, 60 Hz.

C. Equipment Mounting: Where rack, cabinet, or console mounting is indicated, equipment shall be designed to mount in a 19-inch housing complying with TIA/EIA-310-D.

D. Weather-Resistant Equipment: Listed and labeled by a qualified testing agency for duty outdoors or in damp locations.

2.4 EQUIPMENT CABINET

A. Comply with TIA/EIA-310-D.

B. House amplifiers and auxiliary equipment at each location.

C. Cabinet Housing:

1. Constructed of 0.0478-inch steel, minimum, with front- and rear-locking doors and standard TIA/EIA-310-D-compliant, 19-inch racks.
2. Arranged for floor or wall mounting as indicated.

3. Sized to house all equipment indicated, plus spare capacity.
4. Include 20 percent minimum spare capacity for future equipment in addition to space required for future cassette deck and CD player.

D. Power Provisions: A single switch in cabinet shall disconnect cabinet power distribution system and electrical outlets, which shall be uniformly spaced to accommodate ac-power cords for each item of equipment.

E. Ventilation: A low-noise fan for forced-air cabinet ventilation. Fan shall be equipped with a filtered input vent and shall be connected to operate from 105- to 130-V ac, 60 Hz; separately fused and switched; arranged to be powered when main cabinet power switch is on.

2.5 EQUIPMENT RACK

A. Racks: 19 inches standard, complying with TIA/EIA-310-D.

B. Power-Supply Connections: Compatible plugs and receptacles.

C. Enclosure Panels: Ventilated rear and sides and solid top. Use louvers in panels to ensure adequate ventilation.

D. Finish: Uniform, baked-enamel factory finish over rust-inhibiting primer.

E. Power-Control Panel: On front of equipment housing, with master power on-off switch and pilot light; and with socket for 5-A cartridge fuse for rack equipment power.

F. Service Light: At top rear of rack with an adjacent control switch.

G. Vertical Plug Strip: Grounded receptacles, 12 inches o.c.; the full height of rack.

H. Maintenance Receptacles: Duplex convenience outlets supplied independent of vertical plug strip and located in front and bottom rear of rack.

I. Spare Capacity: 20 percent in rack for future equipment.

2.6 LOUDSPEAKERS

A. Cone-Type Loudspeakers:

1. Minimum Axial Sensitivity: 91 dB at one meter, with 1-W input.
2. Frequency Response: Within plus or minus 3 dB from 50 to 15,000 Hz.
3. Size: 8 inches with 1-inch voice coil and minimum 5-oz. ceramic magnet.
4. Minimum Dispersion Angle: 100 degrees.
5. Rated Output Level: 10 W.
6. Matching Transformer: Full-power rated with four taps. Maximum insertion loss of 0.5 dB.
7. Surface-Mounting Units: Ceiling, wall, or pendant mounting, as indicated, in steel back boxes, acoustically dampened. Front face of at least 0.0478-inch steel and whole assembly rust proofed and shop primed for field painting.
8. Flush-Ceiling-Mounting Units: In steel back boxes, acoustically dampened. Metal ceiling grille with white baked enamel.

B. Horn-Type Loudspeakers:

1. Type: Single-horn units, double-reentrant design, with minimum full-range power rating of 15 W.
2. Matching Transformer: Full-power rated with four standard taps. Maximum insertion loss of 0.5 dB.

3. Frequency Response: Within plus or minus 3 dB from 250 to 12,000 Hz.

4. Dispersion Angle: 130 by 110 degrees.

5. Mounting: Integral bracket.

6. Units in Hazardous (Classified) Locations: Listed and labeled for environment in which they are located.

2.7 OUTLETS

A. Volume Attenuator Stations for use in office space areas: Wall-plate-mounted autotransformer type with paging priority feature.

1. Wattage Rating: 10 W unless otherwise indicated.
2. Attenuation per Step: 3 dB, with positive off position.
3. Insertion Loss: 0.4 dB maximum.
4. Attenuation Bypass Relay: Single pole, double throw. Connected to operate and bypass attenuation when all-call, paging, program signal, or prerecorded message features are used. Relay returns to normal position at end of priority transmission.
5. Label: "PA Volume".

B. Ambient Noise Microphone/Sensor: Control module shall be Bogen model ANS501 or approved equal. Microphone module shall be Bogen ANS500M or approved equal with 12 V/0.4 A wall mounted power supply.

1. System shall electronically adjust level of page announcement in an area where ambient noise levels are continuously changing.

2. System shall continuously monitor ambient noise level through microphone modules located in maintenance shop floor areas and change page signal level to make pages audible over the noise.

3. Control module shall include controls for maximum boost, activity threshold, relative gain; AUX input level, ramp speed and ambient MIC input threshold. Module shall also be provided with mode switch and status LEDS.

4. System shall be powered by 12V power supply, supplied by 120VAC with 400 mA draw maximum.

2.8 BATTERY BACKUP POWER UNIT

A. Unit shall be rack mounted, consisting of time-delay relay, sealed lead-calcium battery, battery charger, on-off switch, "normal" and "emergency" indicating lights, and adequate capacity to supply maximum equipment power requirements for one hour of continuous full operation.

B. Unit shall supply public address equipment with 12- to 15-V dc power automatically during an outage of normal 120-V ac power.

C. Battery shall be on float charge when not supplying system and to transfer automatically to supply system after three to five seconds of continuous outage of normal power, as sensed by time-delay relay.

D. Unit shall automatically retransfer system to normal supply when normal power has been reestablished for three to five seconds continuously.

2.9 CONDUCTORS AND CABLES

A. Jacketed, twisted pair and twisted multipair, untinned solid copper.

1. Insulation for Wire in Conduit: Thermoplastic, not less than 1/32 inch thick.

2. Microphone Cables: Neoprene jacketed, not less than 2/64 inch thick, over shield with filled interstices. Shield No. 34 AWG, tinned, soft-copper strands formed into a braid or approved equivalent foil. Shielding coverage on conductors is not less than 60 percent.
3. Plenum Cable: Listed and labeled for plenum installation.

2.10 RACEWAYS

A. Conduit and Boxes: Comply with Division 26 Section "Raceway and Boxes for Electrical Systems." Flexible metal conduit shall not be used.

1. Outlet boxes shall be not less than 2 inches wide, 3 inches high, and 2-1/2 inches deep.

PART 3 - EXECUTION

3.1 WIRING METHODS

A. Wiring Method: Install cables in raceways and cable trays except within consoles, cabinets, desks, and counters. Conceal raceway and cables except in unfinished spaces. Comply with requirements for raceways and boxes specified in Division 26 Section "Raceway and Boxes for Electrical Systems".

B. Wiring Method: Conceal conductors and cables in accessible ceilings, walls, and floors where possible.

C. Wiring within Enclosures: Bundle, lace, and train cables to terminal points with no excess and without exceeding manufacturer's limitations on bending radii. Provide and use lacing bars and distribution spools.

3.2 INSTALLATION OF RACEWAYS

A. Comply with requirements in Division 26 Section "Raceway and Boxes for Electrical Systems" for installation of conduits and wireways.

B. Install manufactured conduit sweeps and long-radius elbows whenever possible.

3.3 INSTALLATION OF CABLES

A. Comply with NECA 1.

B. General Cable Installation Requirements:

1. Terminate conductors; no cable shall contain unterminated elements. Make terminations only at outlets and terminals.

2. Splices, Taps, and Terminations: Arrange on numbered terminal strips in junction, pull, and outlet boxes; terminal cabinets; and equipment enclosures. Cables may not be spliced.

3. Secure and support cables at intervals not exceeding 30 inches and not more than 6 inches from cabinets, boxes, fittings, outlets, racks, frames, and terminals.

4. Bundle, lace, and train conductors to terminal points without exceeding manufacturer's limitations on bending radii. Install lacing bars and distribution spools.

5. Do not install bruised, kinked, scored, deformed, or abraded cable. Do not splice cable between termination, tap, or junction points. Remove and discard cable if damaged during installation and replace it with new cable.

6. Cold-Weather Installation: Bring cable to room temperature before dereeling. Heat lamps shall not be used.

C. Open-Cable Installation:

1. Install cabling with horizontal and vertical cable guides in telecommunications spaces with terminating hardware and interconnection equipment.

2. Suspend speaker cable not in a wireway or pathway a minimum of 8 inches above ceiling by cable supports not more than 60 inches apart.

3. Cable shall not be run through structural members or be in contact with pipes, ducts, or other potentially damaging items.

D. Separation of Wires: Separate speaker-microphone, line-level, speaker-level, and power wiring runs. Install in separate raceways or, where exposed or in same enclosure, separate conductors at least 12 inches apart for speaker microphones and adjacent parallel power and telephone wiring. Separate other intercommunication equipment conductors as recommended by equipment manufacturer.

3.4 INSTALLATION

A. Match input and output impedances and signal levels at signal interfaces. Provide matching networks where required.

B. Identification of Conductors and Cables: Color-code conductors and apply wire and cable marking tape to designate wires and cables so they identify media in coordination with system wiring diagrams.

C. Equipment Cabinets and Racks:

1. Group items of same function together, either vertically or side by side, and arrange controls symmetrically. Mount monitor panel above the amplifiers.

2. Arrange all inputs, outputs, interconnections, and test points so they are accessible at rear of rack for maintenance and testing, with each item removable from rack without disturbing other items or connections.

3. Blank Panels: Cover empty space in equipment racks so entire front of rack is occupied by panels.

D. Wall-Mounted Volume Attenuator Station Outlets: Flush mounted at each private office space and open floor office spaces.

E. Floor-Mounted Outlets: Conceal in floor and install cable nozzles through outlet covers. Secure outlet covers in place. Trim with carpet in carpeted areas.

F. Conductor Sizing: Unless otherwise indicated, size speaker circuit conductors from racks to loudspeaker outlets not smaller than No. 18 AWG and conductors from microphone receptacles to amplifiers not smaller than No. 22 AWG.

G. Weatherproof Equipment: For units that are mounted outdoors, in damp locations, or where exposed to weather, install consistent with requirements of weatherproof rating.

H. Speaker-Line Matching Transformer Connections: Make initial connections using tap settings indicated on Plans.

I. Connect wiring according to Division 26 Section "Low-Voltage Electrical Power Conductors and Cables".

J. Ambient Noise Microphones/sensors: Four (4) microphone modules shall be installed in the maintenance shop track area, one in each quadrant of the rectangular area comprised of tracks 94, 95 and 96, wall mounted approximately 10-0” AFF using vendor provided adjustable mounting

bracket for precise positioning. The control module shall be located in main COMM/IT room 278, mounted on the paging equipment backboard.

3.5 GROUNDING

A. Ground cable shields and equipment to eliminate shock hazard and to minimize ground loops, common-mode returns, noise pickup, cross talk, and other impairments.

B. Signal Ground Terminal: Locate at main equipment cabinet. Isolate from power system and equipment grounding.

C. Install grounding electrodes as specified in Division 26 Section "Grounding and Bonding for Electrical Systems".

3.6 FIELD QUALITY CONTROL

A. Testing Agency: Engage a qualified testing agency to perform tests and inspections.

B. Manufacturer's Field Service: Engage a factory-authorized service representative to inspect, test, and adjust components, assemblies, and equipment installations, including connections.

C. Perform tests and inspections in accordance with Form 816 Article 1.20-1.05.10 and as follows:

1. Manufacturer's Field Service: Engage a factory-authorized service representative to inspect components, assemblies, and equipment installations, including connections, and to assist in testing.

D. Tests and Inspections:

1. Schedule tests with at least seven days' advance notice of test performance.

2. After installing public address and mass notification systems and after electrical circuitry has been energized, test for compliance with requirements.

3. Operational Test: Perform tests that include originating program and page messages at microphone outlets, preamplifier program inputs, and other inputs. Verify proper routing and volume levels and that system is free of noise and distortion.

4. Signal-to-Noise Ratio Test: Measure signal-to-noise ratio of complete system at normal gain settings as follows:

a. Disconnect microphone at connector or jack closest to it and replace it in the circuit with a signal generator using a 1000-Hz signal. Replace all other microphones at corresponding connectors with dummy loads, each equal in impedance to microphone it replaces. Measure signal-to-noise ratio.

b. Repeat test for each separately controlled zone of loudspeakers.

c. Minimum acceptance ratio is 50 dB.

5. Distortion Test: Measure distortion at normal gain settings and rated power. Feed signals at frequencies of 50, 200, 400, 1000, 3000, 8000, and 12,000 Hz into each preamplifier channel. For each frequency, measure distortion in the paging and all-call amplifier outputs. Maximum acceptable distortion at any frequency is 3 percent total harmonics.

6. Acoustic Coverage Test: Feed pink noise into system using octaves centered at 500 and 4000 Hz. Use sound-level meter with octave-band filters to measure level at five locations in each zone. For spaces with seated audiences, maximum permissible variation in level is plus or minus 2 dB. In addition, the levels between locations in same zone and between locations in adjacent zones must not vary more than plus or minus 3 dB.

7. Power Output Test: Measure electrical power output of each power amplifier at normal gain settings of 50, 1000, and 12,000 Hz. Maximum variation in power output at these frequencies must not exceed plus or minus 1 dB.

8. Signal Ground Test: Measure and report ground resistance at pubic address equipment signal ground. Comply with testing requirements specified in Division 26 Section "Grounding and Bonding for Electrical Systems".

9. Installed sound measurement level field testing for speaker systems: Test to determine installed speaker system sound levels and calibrate to optimum signals levels to deliver page announcements that are audible over normal ambient sound level for the various areas. Testing shall be conducted by the acoustical designer utilized by the Contractor for determining the final placement of speaker units.

E. Inspection: Verify that units and controls are properly labeled and interconnecting wires and terminals are identified. Prepare a list of final tap settings of paging speaker-line matching transformers.

F. Public address and mass notification systems will be considered defective if they do not pass tests and inspections.

G. Prepare test and inspection reports.

1. Include a record of final speaker-line matching transformer-tap settings, and signal ground-resistance measurement certified by Installer.

3.7 STARTUP SERVICE

A. Engage a factory-authorized service representative to perform startup service.

1. Verify that electrical wiring installation complies with manufacturer's submittal and installation requirements.

2. Complete installation and startup checks according to manufacturer's written instructions.

3.8 ADJUSTING

A. On-Site Assistance: Engage a factory-authorized service representative to provide on-site assistance in adjusting sound levels, resetting transformer taps, and adjusting controls to meet occupancy conditions.

B. Occupancy Adjustments: When requested within 12 months of date of Issuance of Certificate of Compliance, provide on-site assistance in adjusting system to suit actual occupied conditions. Provide up to two visits to Project during other-than-normal occupancy hours for this purpose.

3.9 DEMONSTRATION

A. Refer to Form 816 Article 1.20-1.08.14 subsection 3 for additional information.

B. Engage a factory-authorized service representative to train Department's maintenance personnel to adjust, operate, and maintain the public address and mass notification systems and equipment.

END OF SECTION 27 51 16

SECTION 34 82 05 - ELASTOMERIC BEARING PADS

PART 1 - GENERAL

1.1 DESCRIPTION

A. Work under this item shall consist of furnishing and installing elastomeric bearing pads and all other necessary materials and equipment to complete the work as shown on the plans.

1.2 SUBMITTALS

A. **Shop Drawings:** Before fabricating any materials, the Contractor shall submit shop drawings to the Engineer, for review and approval, in accordance with CTDOT Form 816 Subarticle 1.05.02-3, and the NOTICE TO CONTRACTOR – SUBMITTALS. These drawings shall include, but not be limited to, the following information: The name of manufacturer, complete details of the pads, and pertinent material designations.

PART 2 - PRODUCTS

2.1 MATERIALS

A. **Elastomeric Bearing Pads:** Elastomeric bearing pads shall conform to the requirements of CTDOT Form 816 Article M.17.01.

PART 3 - EXECUTION

3.1 CONSTRUCTION METHODS

A. **Setting the Bearing Pads:** The Contractor shall set the elastomeric bearing pads in accordance with the following requirements for concrete bearing areas: The bearing areas of the masonry upon which the elastomeric bearing pads are to rest shall be carefully finished, by grinding if necessary, to a smooth, even level surface of the required elevation, and shall show no variations from a true plane greater than 1/16 inch (1.5 millimeter) over the entire area upon which the elastomeric bearing pads are to rest.

END OF SECTION 34 82 05

SECTION 34 82 10 – STEEL LAMINATED ELASTOMERIC BEARINGS

PART 1 - GENERAL

1.1 DESCRIPTION

A. Work under this item shall consist of furnishing and installing steel-laminated elastomeric bearings as shown on the plans, as directed by the Engineer and in accordance with these specifications.

1.2 SUBMITTALS

A. **Shop Drawings:** Before fabricating any materials, the Contractor shall submit shop drawings to the Engineer, for review and approval, in accordance with CTDOT Form 816 Subarticle 1.05.02, and the NOTICE TO CONTRACTOR – SUBMITTALS. These drawings shall include, but not be limited to, the following information: manufacturers name, complete details of the bearings, material designations, nominal hardness of the elastomer, the quantity of bearings required, including test bearings, and the location of the bearing identification.

B. **Certification:** The Contractor shall furnish a Certified Test Report, confirming that the elastomeric bearings satisfy the requirements of these specifications, in conformance with the requirements set forth in CTDOT Form 816 Article 1.06.07.

PART 2 - PRODUCTS

2.1 MATERIALS

A. **Elastomer:** The elastomeric compound, used in the construction of the bearings, shall contain only virgin polychloroprene (Neoprene) as the raw polymer. The elastomer compound shall be low temperature grade 3 (as defined by the testing requirements), have a Shore "A" Durometer hardness as shown on the plans and meet the requirements of the AASHTO Standard Specifications for Highway Bridges, Division II - Construction.

B. **Steel Laminates:** The internal steel laminates, used for reinforcement, shall be a mild rolled steel conforming to AASHTO M 270 Grade 250, or an approved equal.

C. **External Load Plates & Connection Plates:** The external load plates and connection plates shall conform to the requirements shown on the plans.

1. All surfaces of the external load plates and connection plates shall be abrasive blast cleaned prior to be being hot bonded to the bearing during vulcanization. For bearings used on painted steel structures, the surfaces of the external load plates and connection plates shall be prepared in accordance with the requirements of the special provision "Structural Steel" contained elsewhere within these specifications. For bearings used on

weathering steel structures, the surfaces of the external load plates and connection plates shall be blast cleaned in accordance with the requirements of SSPC-SP6 "Commercial Blast Cleaning".

2. After fabrication, the external load plates and connection plates of bearings used on painted steel structures shall be shop painted in accordance with the requirements of the special provision "Structural Steel" contained elsewhere within these specifications.

3. Adhesive bonding of the elastomer portion of the bearings to the external load plates and connection plates is not permitted.

D. **Cap Screws:** Cap screws shall be stainless steel.

E. **Sealant:** Silicone joint sealant shall conform to the requirements of CTDOT Form 816 Section M.03.08. Structural Steel: All structural steel shall be galvanized and of the type and grade designated on the plans.

PART 3 - EXECUTION

3.1 CONSTRUCTION METHODS

A. **Fabrication and Fabrication Tolerances:** The fabrication and fabrication tolerances of elastomeric bearings shall conform to the requirements of the AASHTO Standard Specifications for Highway Bridges, Division II - Construction.

1. If guide pins or other devices are used to control the side cover over the steel laminates, any exposed portions of the steel laminates shall be sealed by vulcanized patching.

B. **Testing:** The materials for the elastomeric bearing and the finished bearings themselves shall be subjected to testing. The testing shall conform to the requirements of the AASHTO Standard Specifications for Highway Bridges, Division II - Construction.

1. Test bearings, in addition to the bearings shown on the plans, shall be furnished for each type (size and thickness) of bearing for destructive testing. The test bearings shall be furnished without external load plates.

C. **Marking:** Each steel-laminated elastomeric bearing shall have marked on it, with indelible ink, the following: the manufacturer's identification code or symbol, and the month and year of manufacture, the orientation, order number, lot number, bearing identification number, and elastomer type and grade (Neoprene, Grade 3). The markings should be placed on a side of the bearing that is visible after installation.

D. **Installation:**

1. Bearing areas, upon which the elastomeric bearings will be set, shall be cleaned of all debris. Bearing areas shall be carefully finished, by grinding, if necessary, to a smooth, even, level surface of the required elevation, and shall show no variations from a true plane greater than 1/16 over the entire area upon which the elastomeric bearings are to rest.

2. The elastomeric bearings shall be installed as shown on the plans. The elastomeric bearings shall be installed when the temperature of the ambient air and the bearings is between 40 deg. F to 60 deg. F and has been within this range for at least 2 hours.

3. Adhesive bonding of the elastomeric bearings to steel and concrete surfaces is not permitted.

4. Welding, with the elastomeric bearings in place, will not be permitted unless there is more than 1½" of steel between the weld and the elastomer. In no case shall the elastomer be exposed to temperatures greater than 158 deg. F. Welding shall conform to the requirements of CTDOT Form 816 Subarticle 6.03.03-4(e).

5. Assembly with high strength bolts shall conform to the requirements of CTDOT Form 816 Subarticle 6.03.03-4(f).

6. The elastomeric bearings shall bear uniformly on all surfaces under full dead load.

END OF SECTION 34 82 10

PERMITS AND/OR SUPPLEMENTAL TO FORM 816 AND REQUIRED PROVISIONS

The following Permits and/or Supplemental to Form 816 and Required Provisions follow this page and are hereby made part of this Contract.

- **PERMITS AND/OR PERMIT APPLICATIONS**

  No Permits are required for this contract.

- **SUPPLEMENTAL SPECIFICATIONS TO STANDARD SPECIFICATIONS FORM 816**

- **Construction Contracts - Required Contract Provisions (State Funded Only Contracts)**