CONNECTICUT DEPARTMENT OF TRANSPORTATION

Plans For

INTERSTATE 95 RESURFACING AND SAFETY IMPROVEMENTS

Town of

OLD SAYBROOK, OLD LYME AND EAST LYME

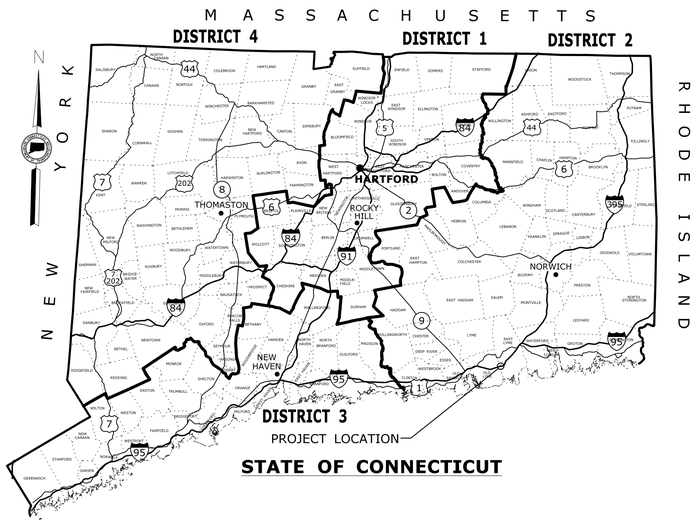

STATE OF CONNECTICUT

ROAD	MAINTENANCE RESPONSIBILITY	LENGTH
INTERSTATE 95	STATE OF CONNECTICUT	29,040 FT.

F.A.P. #	MAINTENANCE RESPONSIBILITY	PROJECT #
	STATE OF CONNECTICUT	104-164

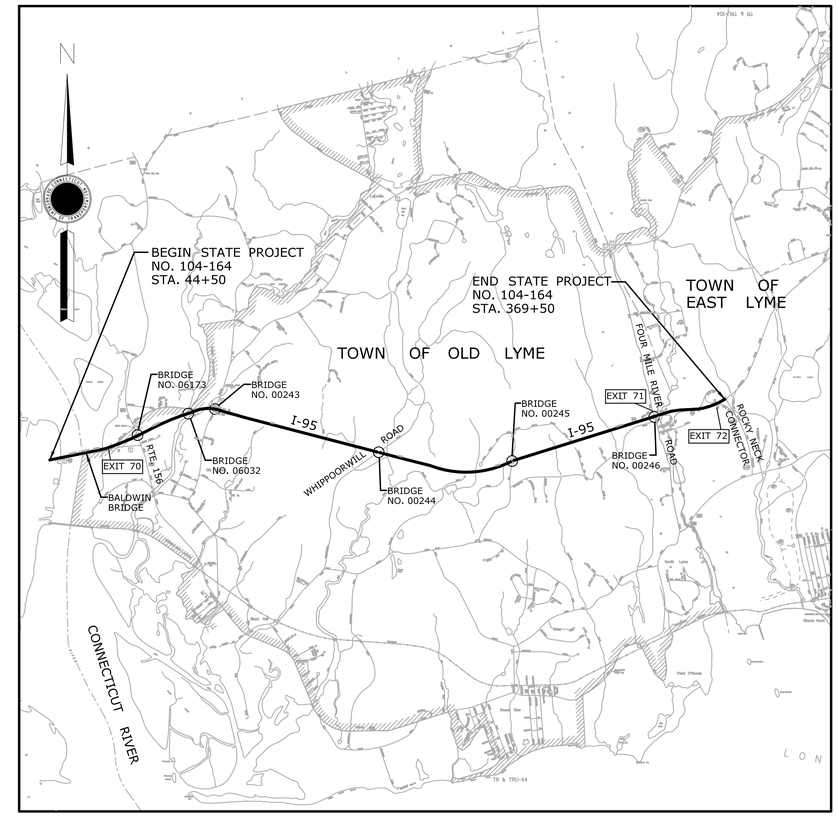

LOCATION PLAN

NOT TO SCALE

GENERAL NOTES:

1. FEDERAL AID PROJECT NO.
2. CONSTRUCTION SPECIFICATIONS:
   Connecticut Department of Transportation, Standard Specifications for Roads, Bridges and Incidental Construction, Form 816, dated 2004; Supplemental Specifications, dated January 2014; and Special Provisions
3. 400 FOOT GRID BASED ON CONNECTICUT COORDINATE SYSTEM N.A.D. 1983
4. VERTICAL DATUM BASED ON NGVD 1929

DISCLAIMER

IT IS THE RESPONSIBILITY OF EACH BIDDER AND ALL OTHER INTERESTED PARTIES TO OBTAIN ALL BIDDING RELATED INFORMATION AND DOCUMENTS FROM OFFICAL SOURCES WITHIN THE DEPARTMENT.

PERSONS AND/OR ENTITIES WHICH REPRODUCE AND/OR MAKE SUCH INFORMATION AVAILABLE BY ANY MEANS ARE NOT AUTHORIZED BY THE DEPARTMENT TO DO SO AND MAY BE LIABLE FOR CLAIMS RESULTING FROM THE DISSEMINATION OF UNOFFICAL, INCOMPLETE AND/OR INACCURATE INFORMATION.

LIST OF SUBSETS

SUBSET NO.	SUBSET TITLE	*SUBSET SHEET COUNT
01	GENERAL	1
02	REVISIONS	1
03	HIGHWAY	90
04	TRAFFIC	9
05	STRUCTURES	15
	CTDOT HIGHWAY STANDARD SHEETS	29
	CTDOT TRAFFIC STANDARD SHEETS	10

*THE INITIAL SUBSET SHEET COUNT DOES NOT INCLUDE ADDENDUMS AND CHANGE ORDERS

SEMI FINAL DESIGN REVIEW

LIST OF DRAWINGS SUBSET 01 - GENERAL

DRAWING TITLE	DRAWING NO.
TITLE SHEET	G-1
DETAIL ESTIMATE SHEET	EST-1
DETAIL ESTIMATE SHEET	EST-2
DETAIL ESTIMATE SHEET	EST-3
DETAIL ESTIMATE SHEET	EST-4
DETAIL ESTIMATE SHEET	EST-5

STANDARD CONVENTIONS

North Arrow W/No. Coor.
Edge Of Road
Concrete Pavement
Dirt Road
B.C.L.C.
Granite Curb
Guide Rail
Concrete Median Barrier
Bit. Walk
Conc. Sidewalk
Railroad Tracks
Grid Arrow
Limit Of Marsh
Stone Wall
Ledge Outcrop
Inland Wetland Limits
STATE LINE
Power Line
Swamp
Building
Transmission Tower
Chain Link Fence
Rustic Fence
Pipe Fence
Board Fence
Water Edge
Stream
Ditch
TOWN LINE
Riprap
Hedge Row
Tree Line
Shrub
Evergreen Tree
Deciduous Tree
Retaining Wall
Highway Line
Street Line
Property Line
Lot Line
Easement Line

THE DESIGN APPEARS TO CONFORM TO APPLICABLE CRITERIA. APPROVAL IS NOT TO BE CONSTRUED TO MEAN THAT ALL ASPECTS OF THE DESIGN HAVE BEEN PERSONALLY CHECKED BY THE UNDERSIGNED.

DESIGNED BY:

Luchs CONSULTING ENGINEERS
89 COLONY STREET
MERIDEN, CONNECTICUT 06451

Plans For
INTERSTATE 95
RESURFACING AND SAFETY IMPROVEMENTS

Town of
OLD SAYBROOK,
OLD LYME AND EAST LYME

STATE PROJECT NO.
104-164

DRAWING NO. **G-1**
SHEET NO. **01.01**

	GRADING				EARTHWORK					PAVEMENT												ROADWAY ITEMS																								
ITEM NUMBER	0202000 P	0202351 P		P	0202000 P	P	P	0202100 P	0202351 P	0209001 P	0212000 P	0213000 P	0304002 P	0305001 P	0406157 P	0406158 P	0406159 P	0406170 P	0406236 P	0406385A P	0201001 P	0202503 P	0202529 P	0202531 P	0401152A P	0404100A P	0404101A P	0406125A P	0406178A P	0406192A P	0406500 P	0601192A P	0755014 P	0815091 P	0815200 P	0821127 P	0821163 P	0821501 P	0821502 P	0821503 P	0821505 P	0821513 P	0822001 P
ITEM	EARTH EXCAVATION	UNSUITABLE MATERIAL EXCAVATION	FILL	**EARTH WORK SUMMARY**	EARTH EXCAVATION	FILL	SURPLUS (EARTH)	ROCK EXCAVATION	UNSUITABLE MATERIAL EXCAVATION	FORMATION OF SUBGRADE	SUBBASE	GRANULAR FILL	PROCESSED AGGREGATE BASE	PROCESSED AGGREGATE	PMA S0.25	PMA S0.375	PMA S0.5	HMA S1	MATERIAL FOR TACK COAT	FINE MILLING OF HOT MIX ASPHALT (HMA) (0 TO 4 INCHES)	CLEARING AND GRUBBING	REMOVAL OF CONCRETE CURBING	CUT BITUMINOUS CONCRETE PAVEMENT	REMOVAL OF BITUMINOUS CONCRETE	CONCRETE PAVEMENT REPLACEMENT FOR ROADWAY (FULL-DEPTH)	BITUMINOUS CONCRETE PATCHING - FULL DEPTH	BITUMINOUS CONCRETE PATCHING - PARTIAL DEPTH	BITUMINOUS CONCRETE SURFACE PATCH	ULTRA-THIN BONDED HMA PAVEMENT (TYPE B)	POLYMER MODIFIED ASPHALT EMULSION (TYPE 1)	MATERIAL TRANSFER VEHICLE	SURFACE PATCHING	GEOTEXTILE (SEPARATION - HIGH SURVIVABILITY)	REMOVAL OF BITUMINOUS CONCRETE LIP CURBING	BITUMINOUS CONCRETE PARK CURBING	REMOVAL OF PRECAST CONCRETE BARRIER CURB	CONCRETE CAP	F-SHAPE PRECAST CONCRETE BARRIER CURB (30"x45")	F-SHAPE PRECAST CONCRETE BARRIER CURB (21"x45")	F-SHAPE PRECAST CONCRETE BARRIER CURB WITH DRAINAGE SLOTS (30"x45")	F-SHAPE PRECAST CONCRETE BARRIER CURB WITH DRAINAGE SLOTS (21"x45")	VERTICAL FACE PRECAST CONCRETE BARRIER CURB (21"x54")	TEMPORARY PRECAST CONCRETE BARRIER CURB
UNIT	CU. YD.	CU. YD.	CU. YD.		CU. YD.	CU. YD.	CU. YD.	CU. YD.	CU. YD.	SQ. YD.	CU. YD.	CU. YD.	CU. YD.	CU. YD.	TON	TON	TON	TON	GAL.	SQ.YD.	LS	LF	LF	SQ.YD.	CU.YD.	SQ.YD.	SQ.YD.	SQ.YD.	SQ.YD.	GAL.	TON	SF	SF	LF	LF	LF	CU. YD.	LF	LF	LF	LF	LF	LF
I-95																																													
STA. 44+00 TO STA. 52+00 (PLN-1)															682				1186	11859			144							11859	2372													
STA. 52+00 TO STA. 61+50 (PLN-2)				SUBTOTAL	16789	2895									818				1423	14227										14227	2845													
STA. 61+50 TO STA. 71+00 (PLN-3)				MISCELLANEOUS (5%)+/-	841	145									910				1582	15822										15822	3164													
STA. 71+00 TO STA. 78+00 (PLN-4)				SUBTOTAL	17630	3040								30	630		1752		1096	15237																									
STA. 78+00 TO STA. 85+00 (PLN-5)														32	522		1433		908	12461			230											135	157									
STA. 85+00 TO STA. 97+00 (PLN-6)														62	904		1809		1573	15729																									
STA. 97+00 TO STA. 141+00 (PLN-7)				LESS SHRINKAGE (10%)+/-	1760									106	591		1182		1027	10275														865	875									
STA. 141+00 TO STA. 152+00 (PLN-8)				PLUS ROCK SWELL (30%)+/-	5300									129	472		1106		820	9617			125											905	905									
STA. 152+00 TO STA. 163+00 (PLN-9)	279		58	AVAIABLE FOR FILL	10570					842			159	112	398	373	1570	251	1080	13018			1060	265										1275	1275	115		40	115	400			
STA. 163+00 TO STA. 174+00 (PLN-10)	743		143	SURPLUS			7675			2278			424	41		860	1059	680	921	7482			2200	244										1100	1100	180		60	285	1100			
STA. 174+00 TO STA. 185+00 (PLN-11)	743		154							2322			424	15		844	1048	696	911	7341			2200	794										985	985	120		60	300	1100			
STA. 185+00 TO STA. 196+00 (PLN-12)	743		259							2322			424	105		849	1053	696	916	7385			2200	794										1005	945	80		100	380	1100			
STA. 196+00 TO STA. 207+00 (PLN-13)	743		377							2322			424	41		842	1046	696	909	7321			2200	794										750	725	680		60	760	1100			
STA. 207+00 TO STA. 218+00 (PLN-14)	743		126							2397			424	142		836	1049	722	912	7271			2200	794										1100	1100	80		40	160	1100			
STA. 218+00 TO STA. 230+00 (PLN-15)	789									4216		313	451	93		685	1095	1312	952	5960			2400	2400										845	837		28	100	1120	660		200	
STA. 230+00 TO STA. 242+00 (PLN-16)	810		57							2533			463	36		923	1145	759	996	8026			2400	867										700	700			20	40	1200			
STA. 242+00 TO STA. 254+00 (PLN-17)	981		269							3170			561			780	1138	997	989	7676			3600	1142										965	965	140		540	400	700			
STA. 254+00 TO STA. 265+00 (PLN-18)	743		143							2872			424	28		594	1059	886	921	6885			4400	1344										1480	1560			40	180	1100			
STA. 265+00 TO STA. 275+00 (PLN-19)	858		257							3023			490	11		535	952	968	828	6133			4400	1222										1000	800			480	430	520			
STA. 275+00 TO STA. 285+00 (PLN-20)	586		106							3371		500	335	112		637	960	1024	835	5539			2000	2000										600	545		44	60	1150		415		
STA. 285+00 TO STA. 296+00 (PLN-21)	705									2492			403	30		821	1046	752	909	7143			230	939										505	505			20	200	980			
STA. 296+00 TO STA. 307+00 (PLN-22)	743		200							2322			424	11		852	1056	696	918	7411			2200	794										367	367				200	1100			
STA. 307+00 TO STA. 317+00 (PLN-23)	675		414							2111			386	64		762	948	633	824	6630			2200	722										1000	1000			60	790	1000			
STA. 317+00 TO STA. 328+00 (PLN-24)	743									2322			424	81		836	1040	696	904	7268			2200	794										1100	1100					1100			
STA. 328+00 TO STA. 339+00 (PLN-25)	898		110							2322	590		474	67		995	1266	780	1042	8944			2200	794										1510	1415	90		20	150	1100			
STA. 339+00 TO STA. 350+00 (PLN-26)	2505		222							3693	573	600	968	218		744	1895	2204	925	10343			2385	2044										2785	2785	525	44	140	1980	390		440	
RAMP "G" & "H"																																													
STA. 1+00 TO STA. 10+00 (PLN-27)														68			4977		4328	43281			68											3440	3440									
I-95																																													
STA. 350+00 TO STA. 361+00 (PLN-28)	1092									2807	75		563	29		777	1615	1012	1127	11340		40	1700	947										1995	2035	40				1100			
STA. 361+00 TO STA. 373+00 (PLN-29)	667									1737		67	381			949	2023	503	986	16349			1500	360										5432	5432		5	40		960		160	
RAMP "K", "I" &"J"																																													
STA. 40+50 TO STA. 48+00 (PLN-30)																	168		146	1464			26											850	850									
SUBTOTAL	16789		2895		17630					51474	1238	1480	9026	1663	5927	15494	36490	16963	32894	315437	LS	40	46468	20054	200	334	179	80	41908	8381	45000	500	-	32694	32403	2050	121	1880	8640	17810	415	800	5000
UNASSIGNED					370			500	500	526	62	120	74	37	73	106	210	137	606	1563	-	-	1032	446	-	16	21	-	92	119	-		350	306	597	50	9	80	60	390	45	40	-
TOTAL					18000			500	500	52000	1300	1600	9100	1700	6000	15600	36700	17100	33500	317000	LS	40	47500	20500	200	350	200	80	42000	8500	45000	500	350	33000	33000	2100	130	1960	8700	18200	460	840	5000

P = FEDERAL AID PARTICIPATING
NP= FEDERAL AID NON PARTICIPATING

NOT A LEGAL DEFINITION

=FOR INTERNAL USE ONLY

SEMI FINAL DESIGN REVIEW

REV.	DATE	REVISION DESCRIPTION	SHEET NO.
-	-	-	-
-	-	-	-
-	-	-	-
-	-	-	-
-	-	-	-
-	-	-	-

THE INFORMATION, INCLUDING ESTIMATED QUANTITIES OF WORK, SHOWN ON THESE SHEETS IS BASED ON LIMITED INVESTIGATIONS BY THE STATE AND IS IN NO WAY WARRANTED TO INDICATE THE CONDITIONS OF ACTUAL QUANTITIES OF WORK WHICH WILL BE REQUIRED.

Plotted Date: 4/3/2014

DESIGNER/DRAFTER: RL/ETK
CHECKED BY: DD

STATE OF CONNECTICUT
DEPARTMENT OF TRANSPORTATION

Filename: ...\Plan\HW_MSH_EST-1.dgn

SIGNATURE/ BLOCK:

PROJECT TITLE:
INTERSTATE 95 RESURFACING AND SAFETY IMPROVEMENTS

TOWN: **OLD SAYBROOK, OLD LYME & EAST LYME**

DRAWING TITLE: **DETAILED ESTIMATE SHEET**

PROJECT NO. **104-164**
DRAWING NO. **EST-1**
SHEET NO. **01.02**

	ROADWAY ITEMS							DRAINAGE																																					
ITEM NUMBER	0822002 P	0822064A P	0822999A P	P	P	P	P	0205003 P	0216012A P	0507001 P	0507006 P	0507167 P	0507201 P	0507224 P	0507254 P	0507449 P	0507453 P	0507495A P	0507500 P	0507601 P	0507701 P	0507721 P	0507754 P	0507781 P	0507824 P	0507830 P	0507831 P	0601000 P	0651001 P	0651012 P	0651013 P	0651649A P	0651746 P	0651837 P	0652109 P	0653001 P	0653010 P	0653100 P	0703012 P	0803000 P	P	P	P	P	P
ITEM	RELOCATED TEMPORARY PRECAST CONCRETE BARRIER CURB	MOVEABLE TEMPORARY BARRIER	MEDIAN BARRIER GATE					TRENCH EXCAVATION (0'-10' DEEP)	CONTROLLED LOW STRENGTH MATERIAL	TYPE "C" CATCH BASIN	TYPE "C" CATCH BASIN TOP	TYPE "C-M" CATCH BASIN TOP	TYPE "C-L" CATCH BASIN	TYPE "C-L" CATCH BASIN TOP	TYPE "C" CATCH BASIN DOUBLE GRATE - TYPE II TOP	TYPE "C-M" CATCH BASIN	TYPE "C-M-2" CATCH BASIN	MODIFY EXISTING CATCH BASIN	TYPE "D-G" ENDWALL	MANHOLE	RESET TYPE "C" CATCH BASIN	RESET TYPE "C-L" CATCH BASIN	RESET TYPE "C" CATCH BASIN DOUBLE GRATE TYPE II	RESET MANHOLE	CONVERT TYPE "C" CATCH BASIN TO TYPE "C-L" CATCH BASIN	CONVERT MANHOLE TO TYPE "C-L" CATCH BASIN	CONVERT CATCH BASIN TO MANHOLE	CLASS "A" CONCRETE	BEDDING MATERIAL	15" R.C. PIPE	18" R.C. PIPE	CURED IN PLACE PIPE LINING	12" POLYVINYL CHLORIDE PIPE	15" C.C.M. PIPE	12" METAL CULVERT END	CLEAN EXISTING CATCH BASIN	CLEAN EXISTING MANHOLE	CLEAN EXISTING CULVERT 12" TO 42" DIAMETER	MODIFIED RIPRAP	PAVED DITCH					
UNIT	LF	LS	EA					CU. YD.	CU. YD.	EA	EA	EA	EA	EA	EA	EA	EA	EA	EA	EA	EA	EA	EA	EA	EA	EA	EA	CU. YD.	CU. YD.	LF	LF	LF	LF	LF	EA	EA	EA	LF	CU. YD.	SQ. YD.					
I-95																																													
STA. 44+00 TO STA. 52+00 (PLN-1)																																				4									
STA. 52+00 TO STA. 61+50 (PLN-2)																																				4									
STA. 61+50 TO STA. 71+00 (PLN-3)																																				8									
STA. 71+00 TO STA. 78+00 (PLN-4)																																				4		801							
STA. 78+00 TO STA. 85+00 (PLN-5)																																				8	1	1002							
STA. 85+00 TO STA. 97+00 (PLN-6)											1									1																7		925							
STA. 97+00 TO STA. 141+00 (PLN-7)											6				1					6		1										136			1	16		539							
STA. 141+00 TO STA. 152+00 (PLN-8)											3									3																11		360							
STA. 152+00 TO STA. 163+00 (PLN-9)										1			1			1														4			12	8		1		117							
STA. 163+00 TO STA. 174+00 (PLN-10)											3			3		3		3			3							3					36			6		253		30					
STA. 174+00 TO STA. 185+00 (PLN-11)											2			3		3		4			1										8		36			5		448		30					
STA. 185+00 TO STA. 196+00 (PLN-12)										1	2			2		2		1			1	2								8			24			4		174		20					
STA. 196+00 TO STA. 207+00 (PLN-13)											4			4		3	1	7			1											36	36			9		704		30					
STA. 207+00 TO STA. 218+00 (PLN-14)										1	1			2		2		3															24			3		140		20					
STA. 218+00 TO STA. 230+00 (PLN-15)											2			3		4		3			2			1		1							36			6	2	533		30					
STA. 230+00 TO STA. 242+00 (PLN-16)											2			3		3		4			1												36			5		215		30					
STA. 242+00 TO STA. 254+00 (PLN-17)											3			2		2	1	3			2									4			24			6		178		20					
STA. 254+00 TO STA. 265+00 (PLN-18)											6			2		2	2	5			3												24			8	2	682		20					
STA. 265+00 TO STA. 275+00 (PLN-19)											3			3		2	1	5			1									8			22			6	1	564		20					
STA. 275+00 TO STA. 285+00 (PLN-20)											2			2		4	1	3			1						1						48			6		247		20					
STA. 285+00 TO STA. 296+00 (PLN-21)											2			4		3		6															36			6		276		30					
STA. 296+00 TO STA. 307+00 (PLN-22)														2		2		2															24			2		212		20					
STA. 307+00 TO STA. 317+00 (PLN-23)										1	2			3			3	3			2															5		902		30					
STA. 317+00 TO STA. 328+00 (PLN-24)											3			4		4		4			3												48			7		370		40					
STA. 328+00 TO STA. 339+00 (PLN-25)											5			4		3		3			5	1						3					36			9		266	2	30					
STA. 339+00 TO STA. 350+00 (PLN-26)											5	2		4		5	1	7	1	1	4			1	2			1			4		60	9		12	5	1194		30					
RAMP "G" & "H"																																													
STA. 1+00 TO STA. 10+00 (PLN-27)											4							2			2															4		355							
I-95																																													
STA. 350+00 TO STA. 361+00 (PLN-28)											6			4		4		4			5	1										55	51			12		639		30					
STA. 361+00 TO STA. 373+00 (PLN-29)										1	7			4		3		2			7	2										40	36			12		769		20					
RAMP "K", "I" &"J"																																													
STA. 40+50 TO STA. 48+00 (PLN-30)											1										1															1		15							
SUBTOTAL	20000	LS	1					1454		5	75	2	1	58	1	55	10	74	1	1	55	6	1	2	2	1	1	7	43	24	12	267	649	17	1	197	11	12880	2	500					
UNASSIGNED		-	-					46	30	-	-	-	-	-	-	-	-	-	-	-	-	-	-	-	-	-	-	-	2	-	-	13	51	3	-	-	-	120	38	-					
TOTAL	20000	LS	1					1500	30	5	75	2	1	58	1	55	10	74	1	1	55	6	1	2	2	1	1	7	45	24	12	280	700	20	1	197	11	13000	40	500					

P = FEDERAL AID PARTICIPATING
NP= FEDERAL AID NON PARTICIPATING
=FOR INTERNAL USE ONLY
NOT A LEGAL DEFINITION

FINAL DESIGN REVIEW

REV.	DATE	REVISION DESCRIPTION	SHEET NO.
-	-	-	-
-	-	-	-
-	-	-	-
-	-	-	-
-	-	-	-
-	-	-	-

THE INFORMATION, INCLUDING ESTIMATED QUANTITIES OF WORK, SHOWN ON THESE SHEETS IS BASED ON LIMITED INVESTIGATIONS BY THE STATE AND IS IN NO WAY WARRANTED TO INDICATE THE CONDITIONS OF ACTUAL QUANTITIES OF WORK WHICH WILL BE REQUIRED.

Plotted Date: 4/2/2014

DESIGNER/DRAFTER: RL/ETK
CHECKED BY: DD

STATE OF CONNECTICUT
DEPARTMENT OF TRANSPORTATION

Filename: ...\Plan\HW_MSH_EST-2.dgn

SIGNATURE/
BLOCK:

PROJECT TITLE:
INTERSTATE 95
RESURFACING AND SAFETY
IMPROVEMENTS

TOWN: OLD SAYBROOK, OLD LYME & EAST LYME

DRAWING TITLE: DETAILED ESTIMATE SHEET

PROJECT NO. 104-164
DRAWING NO. EST-2
SHEET NO. 01.03

MISCELLANEOUS

ITEM NUMBER	0218001 P	0219001 P	0219011A P	0406287A P	0406288A P	0406314A P	0406315A P	0406316A P	0406317A P	0944002 P	0950019A P	0969000A P	0969036A P	0971001A P	0975004A P	0978002 P	0979003A P	0980001A P	0981100 P	1111401A P	1111451A P	1113050 P	1130000 P	1131002A P	1205201 P	1205202 P	1205203 P	1205214 P	1209114 P	1209124 P	1209126 P	1209128 P	1209131 P	1210101A P	1210102A P	1210103A P	1210104A P	1210105A P	1211001 P	1212001 P	1212002 P	1212003 P	1216020A P	1220013A P	P
ITEM	SEDIMENTATION CONTROL BALES	SEDIMENTATION CONTROL SYSTEM	SEDIMENTATION CONTROL SYSTEM AT CATCH BASIN	RUMBLE STRIPS - AUTOMATED	RUMBLE STRIPS - MANUAL	80 MIL PAVEMENT MARKING GROOVE 5" WIDE	80 MIL PAVEMENT MARKING GROOVE 7" WIDE	80 MIL PAVEMENT MARKING GROOVE 9" WIDE	80 MIL PAVEMENT MARKING GROOVE 13" WIDE	FURNISHING AND PLACING TOPSOIL	TURF ESTABLISHMENT LAWN	PROJECT COORDINATOR	CONSTRUCTION FIELD OFFICE, EXTRA LARGE	MAINTENANCE AND PROTECTION OF TRAFFIC	MOBILIZATION AND PROJECT CLOSEOUT	TRAFFIC DRUM	CONSTRUCTION BARRICADE TYPE III	CONSTRUCTION STAKING	42 INCH TRAFFIC CONE	LOOP VEHICLE DETECTOR	LOOP DETECTOR SAWCUT	2 CONDUCTOR NO. 14 CABLE	HIGH MOUNTED INTERNALLY ILLUMINATED FLASHING ARROWS	REMOTE CONTROLLED CHANGEABLE MESSAGE SIGN	TYPE DE-1 DELINEATOR	TYPE DE-2 DELINEATOR	TYPE DE-3 DELINEATOR	TYPE DE-7A DELINEATOR	HOT-APPLIED PAINTED PAVEMENT MARKINGS - 4" YELLOW	HOT-APPLIED PAINTED PAVEMENT MARKINGS - 4" WHITE	HOT-APPLIED PAINTED PAVEMENT MARKINGS - 6" WHITE	HOT-APPLIED PAINTED PAVEMENT MARKINGS - 8" WHITE	HOT-APPLIED PAINTED LEGEND, ARROWS AND MARKINGS	4" WHITE EPOXY RESIN PAVEMENT MARKINGS	4" YELLOW EPOXY RESIN PAVEMENT MARKINGS	6" WHITE EPOXY RESIN PAVEMENT MARKINGS	8" WHITE EPOXY RESIN PAVEMENT MARKINGS	EPOXY RESIN PAVEMENT MARKINGS - SYMBOLS AND LEGEND	REMOVAL OF PAVEMENT MARKINGS	TEMPORARY PLASTIC PAVEMENT MARKING TAPE - 4" YELLOW	TEMPORARY PLASTIC PAVEMENT MARKING TAPE - 4" WHITE	TEMPORARY PLASTIC PAVEMENT MARKING TAPE - 6" WHITE	6" BLACK AGGREGATE COVER-UP RESIN PAVEMENT MARKINGS	CONSTRUCTION SIGNS - BRIGHT FLUORESCENT SHEETING	
UNIT	LF	LF	LF	LF	LF	LF	LF	LF	LF	SQ. YD	SQ. YD.	LS	MO.	LS	LS	EA	EA	LS	EA	EA	LF	LF	DAY	DAY	EA	EA	EA	EA	LF	LF	LF	LF	SQ. FT.	LF	LF	LF	LF	SQ. FT.	SQ. FT.	LF	LF	LF	LF	SQ. FT.	
I-95																																														
STA. 44+00 TO STA. 52+00 (PLN-1)			4	3000		3000	1125																											1500	1500	1125										
STA. 52+00 TO STA. 61+50 (PLN-2)			4	3800		3800	2650																											1900	1900	2650										
STA. 61+50 TO STA. 71+00 (PLN-3)		33	8	3800		3800	2138																											1900	1900	2138										
STA. 71+00 TO STA. 78+00 (PLN-4)		530		3765		3765	1525	1320																										2325	1440	1525	1320									
STA. 78+00 TO STA. 85+00 (PLN-5)		480	2	3740		4100	1475		35																									2260	1840	1475		194								
STA. 85+00 TO STA. 97+00 (PLN-6)	24	960	6	4800		4800	1800																											2400	2400	1800		210								
STA. 97+00 TO STA. 141+00 (PLN-7)		1875	16	3200	1000	4400	550																											2200	2200	550										
STA. 141+00 TO STA. 152+00 (PLN-8)		1280	6	2580	2200	5160	550																											2580	2580	550		154								
STA. 152+00 TO STA. 163+00 (PLN-9)		2460	4	5980		5930	800	1200		333	333																							2980	2950	800	1200	36								
STA. 163+00 TO STA. 174+00 (PLN-10)	36	2030	6	4400		4400	550			833	833																							2200	2200	550										
STA. 174+00 TO STA. 185+00 (PLN-11)	36	885	6	4400		4400	550			833	833																							2200	2200	550										
STA. 185+00 TO STA. 196+00 (PLN-12)	24	1390	5	4400		4400	550			833	833																							2200	2200	550										
STA. 196+00 TO STA. 207+00 (PLN-13)	48	520	9	4400		4400	550			833	833																							2200	2200	550										
STA. 207+00 TO STA. 218+00 (PLN-14)	24	1910	4	4400		4400	550			833	833																							2200	2200	550										
STA. 218+00 TO STA. 230+00 (PLN-15)	48	2125	5	4400		4400	550			542	542																							2200	2200	550										
STA. 230+00 TO STA. 242+00 (PLN-16)	36	920	5	4800		4800	600			1000	1000																							2400	2400	600										
STA. 242+00 TO STA. 254+00 (PLN-17)	24	1050	7	4800		4800	600			583	583																							2400	2400	600										
STA. 254+00 TO STA. 265+00 (PLN-18)	48	795	10	4400		4400	550			833	833																							2200	2200	550										
STA. 265+00 TO STA. 275+00 (PLN-19)	36	520	7	4000		4000	500			833	833																							2000	2000	500										
STA. 275+00 TO STA. 285+00 (PLN-20)	24	1450	8	4000		4000	500			536	536																							2000	2000	500										
STA. 285+00 TO STA. 296+00 (PLN-21)	36	1015	6	4400		4400	550			917	917																							2200	2200	550										
STA. 296+00 TO STA. 307+00 (PLN-22)	24	150	2	4400		4400	550			917	917																							2200	2200	550										
STA. 307+00 TO STA. 317+00 (PLN-23)	36	415	9	4000		4000	500			833	833																							2000	2000	500										
STA. 317+00 TO STA. 328+00 (PLN-24)	48	1160	6	4400		4400	730	720		917	917																							2200	2200	730	720									
STA. 328+00 TO STA. 339+00 (PLN-25)	36	1245	9	4400		4400	550			917	917																							2200	2200	550										
STA. 339+00 TO STA. 350+00 (PLN-26)	72	2985	13	6600		6600	110	440		433	433																							3300	3300	110	440	36								
RAMP "G" & "H"																																														
STA. 1+00 TO STA. 10+00 (PLN-27)		1090	4	4000		4000																												2000	2000			36								
I-95																																														
STA. 350+00 TO STA. 361+00 (PLN-28)	72	485	10	5320		5320	565	1940		917	917																							2600	2720	565	1940									
STA. 361+00 TO STA. 373+00 (PLN-29)	60	1390	11	10200		10200	625	940		683	683																							5100	5100	625	940									
RAMP "K", "I" &"J"																																														
STA. 40+50 TO STA. 48+00 (PLN-30)		290	1	1000		1000																												500	500											
SUBTOTAL	792	31438	193	131785	3200	135875	22843	6560	35	15359	15359	LS	30	LS	LS	150	4	LS	250	4	895	652	900	900	64	224	66	53	58200	58200	14550	3000	1000	68545	67330	22843	6560	666	5337	21100	21100	5275	26375	895	
UNASSIGNED	48	562	7	1215	100	1125	357	140	5	641	641	-	-	-	-	-	2	-	-	-	25	48	-	-	6	26	14	7	2800	2800	1450	500	-	455	670	357	140	34	663	1900	1900	725	625	55	
TOTAL	840	32000	200	133000	3300	137000	23200	6700	40	16000	16000	LS	30	LS	LS	150	6	LS	250	4	920	700	900	900	70	250	80	60	61000	61000	16000	3500	1000	69000	68000	23200	6700	700	6000	23000	23000	6000	27000	950	

P = FEDERAL AID PARTICIPATING
NP= FEDERAL AID NON PARTICIPATING
=FOR INTERNAL USE ONLY
NOT A LEGAL DEFINITION

FINAL DESIGN REVIEW

REV.	DATE	REVISION DESCRIPTION	SHEET NO.
-	-	-	-
-	-	-	-
-	-	-	-
-	-	-	-
-	-	-	-
-	-	-	-

THE INFORMATION, INCLUDING ESTIMATED QUANTITIES OF WORK, SHOWN ON THESE SHEETS IS BASED ON LIMITED INVESTIGATIONS BY THE STATE AND IS IN NO WAY WARRANTED TO INDICATE THE CONDITIONS OF ACTUAL QUANTITIES OF WORK WHICH WILL BE REQUIRED.

Plotted Date: 4/2/2014

DESIGNER/DRAFTER: RL/ETK
CHECKED BY: DD

STATE OF CONNECTICUT
DEPARTMENT OF TRANSPORTATION

Filename: ...\Plan\HW_MSH_EST-3.dgn

SIGNATURE/
BLOCK:

PROJECT TITLE:
INTERSTATE 95
RESURFACING AND SAFETY
IMPROVEMENTS

TOWN: OLD SAYBROOK, OLD LYME & EAST LYME

DRAWING TITLE: DETAILED ESTIMATE SHEET

PROJECT NO. 104-164
DRAWING NO. EST-3
SHEET NO. 01.04

ITEM NUMBER	MISCELLANEOUS																	RAILING																														
	1803070A	1806200	1807010	1807011	1807012	1807013	1807014	1807101	1809000									0910177	0910187	0910188	0910189	0910194	0911925	0911927	0912103	0912503	0912509	0912605A	0912614A	0912800	0918001	0918011																
ITEM	TYPE B ATTENUATION SYSTEM (FLARED)	TYPE D PORTABLE IMPACT ATTENUATION SYSTEM	TEMPORARY IMPACT ATTENUATION SYSTEM TYPE A MODULE 200 LB	TEMPORARY IMPACT ATTENUATION SYSTEM TYPE A MODULE 400 LB	TEMPORARY IMPACT ATTENUATION SYSTEM TYPE A MODULE 700 LB	TEMPORARY IMPACT ATTENUATION SYSTEM TYPE A MODULE 1400 LB	TEMPORARY IMPACT ATTENUATION SYSTEM TYPE A MODULE 2100 LB	RELOCATION OF TEMPORARY IMPACT ATTENUATION SYSTEM TYPE A	REMOVE IMPACT ATTENUATION DEVICE									MD-B 350 MEDIAN BARRIER JERSEY SHAPE ATTACHMENT (TYPE I)	R-B 350 BRIDGE ATTACHMENT TRAILING END (10 GA.)	R-B 350 BRIDGE ATTACHMENT VERTICAL SHAPE PARAPET (10 GA.)	R-B 350 BRIDGE ATTACHMENT - JERSEY SHAPE PARAPET (10 GA.)	METAL BEAM RAIL (TYPE R-B 350 10 GA.)	R-B END ANCHORAGE (TYPE I - 10 GA.)	ANCHOR IN EARTH CUT SLOPE 10 GA.	DRILLING HOLE FOR GUIDE RAIL POST	REMOVE METAL BEAM RAIL	REMOVE THREE CABLE GUIDE RAILING	RESET METAL BEAM RAIL (TYPE R-B 350)	RESET METAL BEAM RAIL (TYPE MD-B)	RESET R-B 350 BRIDGE SAFETY SHAPED ATTACHMENT (TYPE I)	THREE CABLE GUIDE RAILING (I-BEAM POSTS)	END ANCHORAGE - TYPE I																		
UNIT	EA	HR	EA	EA	EA	EA	EA	EA	EA									EA	EA	EA	EA	LF	EA	EA	EA	LF	LF	LF	LF	EA	LF	EA															
I-95																																																
STA. 44+00 TO STA. 52+00 (PLN-1)																																																
STA. 52+00 TO STA. 61+50 (PLN-2)																																																
STA. 61+50 TO STA. 71+00 (PLN-3)																			1																													
STA. 71+00 TO STA. 78+00 (PLN-4)																				1		406	3			475																						
STA. 78+00 TO STA. 85+00 (PLN-5)																				2		430				225																						
STA. 85+00 TO STA. 97+00 (PLN-6)																						842	3			685																						
STA. 97+00 TO STA. 141+00 (PLN-7)																			2	2		1435				1808																						
STA. 141+00 TO STA. 152+00 (PLN-8)																			2	2		1740				1677	145																					
STA. 152+00 TO STA. 163+00 (PLN-9)																			1			1520	2			1665	310																					
STA. 163+00 TO STA. 174+00 (PLN-10)	1																		1		2	550				1900																						
STA. 174+00 TO STA. 185+00 (PLN-11)	1																				2	200				1260																						
STA. 185+00 TO STA. 196+00 (PLN-12)	1																		2		3	1425				2950																						
STA. 196+00 TO STA. 207+00 (PLN-13)	1																		2		2	550	1			1805																						
STA. 207+00 TO STA. 218+00 (PLN-14)																			1		1	1960				2140																						
STA. 218+00 TO STA. 230+00 (PLN-15)																			1	1	1	1260				2745																						
STA. 230+00 TO STA. 242+00 (PLN-16)	1																		1			480				1700		960																				
STA. 242+00 TO STA. 254+00 (PLN-17)	1																				2	25				1435																						
STA. 254+00 TO STA. 265+00 (PLN-18)	2																		1		1	375	2			1555																						
STA. 265+00 TO STA. 275+00 (PLN-19)	1																				1	150				1470																						
STA. 275+00 TO STA. 285+00 (PLN-20)																			1		1	1520	1			1540	120				48	1																
STA. 285+00 TO STA. 296+00 (PLN-21)	1																					405				1535																						
STA. 296+00 TO STA. 307+00 (PLN-22)	1																					150				1255																						
STA. 307+00 TO STA. 317+00 (PLN-23)	1																		1		2	865				2785																						
STA. 317+00 TO STA. 328+00 (PLN-24)																						1100				2200																						
STA. 328+00 TO STA. 339+00 (PLN-25)																						900				2100																						
STA. 339+00 TO STA. 350+00 (PLN-26)	2																		2	2	1	2940	2	3		2235	515																					
RAMP "G" & "H"																																																
STA. 1+00 TO STA. 10+00 (PLN-27)																						925	1	1		1040																						
I-95																																																
STA. 350+00 TO STA. 361+00 (PLN-28)	2																					387				387		200																				
STA. 361+00 TO STA. 373+00 (PLN-29)																		1	1							960		1565	1275	1																		
RAMP "K", "I" &"J"																																																
STA. 40+50 TO STA. 48+00 (PLN-30)																																																
SUBTOTAL	16	3600	4	2	6	8	4	4	4									1	20	10	19	22540	15	4	250	41532	1090	2725	1275	1	48	1																
UNASSIGNED	-	-	-	-	-	-	-	-	-									-	-	-	-	160	-	-	-	168	10	75	25	-	2	-																
TOTAL	16	3600	4	2	6	8	4	4	4									1	20	10	19	22700	15	4	250	41700	1100	2800	1300	1	50	1																

P = FEDERAL AID PARTICIPATING
NP= FEDERAL AID NON PARTICIPATING
=FOR INTERNAL USE ONLY
NOT A LEGAL DEFINITION

FINAL DESIGN REVIEW

REV.	DATE	REVISION DESCRIPTION	SHEET NO.
-	-	-	-
-	-	-	-
-	-	-	-
-	-	-	-
-	-	-	-
-	-	-	-

THE INFORMATION, INCLUDING ESTIMATED QUANTITIES OF WORK, SHOWN ON THESE SHEETS IS BASED ON LIMITED INVESTIGATIONS BY THE STATE AND IS IN NO WAY WARRANTED TO INDICATE THE CONDITIONS OF ACTUAL QUANTITIES OF WORK WHICH WILL BE REQUIRED.

Plotted Date: 3/20/2014

DESIGNER/DRAFTER: **RL/ETK**
CHECKED BY: **DD**

STATE OF CONNECTICUT
DEPARTMENT OF TRANSPORTATION

Filename: ...\Plan\HW_MSH_EST-4.dgn

SIGNATURE/ BLOCK:

PROJECT TITLE: **INTERSTATE 95 RESURFACING AND SAFETY IMPROVEMENTS**

TOWN: **OLD SAYBROOK, OLD LYME & EAST LYME**

DRAWING TITLE: **DETAILED ESTIMATE SHEET**

PROJECT NO. **104-164**
DRAWING NO. **EST-4**
SHEET NO. **01.05**

STRUCTURES

ITEM NUMBER	0202479 P	0520036A P	0601091A P	0601201 P	0601270A P	0601318A P	0602006 P	0602936A P	0707001 P	0904051 P	0904997A P	0974001A P	1303230A P
ITEM	REMOVAL OF HMA WEARING SURFACE	ASPHALTIC PLUG EXPANSION JOINT SYSTEM	SIMULATED STONE MASONRY	CLASS "F" CONCRETE	FULL DEPTH PATCH (HIGH EARLY STRENGTH CONCRETE)	PARTIAL DEPTH PATCH	DEFORMED STEEL BARS - EPOXY COATED	DRILLING AND GROUTING REINFORCING BARS	MEMBRANE WATERPROOFING (WOVEN GLASS FABRIC)	3 TUBE CURB MOUNTED BRIDGE RAIL	REMOVAL OF EXISTING METAL BRIDGE RAIL	REMOVAL OF EXISTING MASONRY	FIRE SUPPRESSION STANDPIPE SYSTEM
UNIT	SQ. YD.	CU. FT.	SQ. YD.	CU. YD.	CU. YD.	CU. FT.	LB	LF	SQ. YD.	LF	CU. YD.	EA	EA
BRIDGE NO. 06173	1800	115		1	2	55	110	12	1650			1	
BRIDGE NO. 06032	1600	70		2	4	280	200	32	1650			2	
BRIDGE NO. 00243	1100		15	3			300	43		360	375		
BRIDGE NO. 00244													2
SUBTOTAL	4500	185	15	6	6	335	610	87	3300	360	375	3	2
UNASSIGNED	-	-	-	-	-	-	-	-	-	-	-	-	-
TOTAL	4500	185	15	6	6	335	610	87	3300	360	375	3	2

P = FEDERAL AID PARTICIPATING
NP= FEDERAL AID NON PARTICIPATING
=FOR INTERNAL USE ONLY
NOT A LEGAL DEFINITION

FINAL DESIGN REVIEW

REV.	DATE	REVISION DESCRIPTION	SHEET NO.
-	-	-	-
-	-	-	-
-	-	-	-
-	-	-	-
-	-	-	-
-	-	-	-

THE INFORMATION, INCLUDING ESTIMATED QUANTITIES OF WORK, SHOWN ON THESE SHEETS IS BASED ON LIMITED INVESTIGATIONS BY THE STATE AND IS IN NO WAY WARRANTED TO INDICATE THE CONDITIONS OF ACTUAL QUANTITIES OF WORK WHICH WILL BE REQUIRED.

Plotted Date: 3/24/2014

DESIGNER/DRAFTER: **RL/ETK**
CHECKED BY: **DD**

STATE OF CONNECTICUT
DEPARTMENT OF TRANSPORTATION

Filename: ...\Plan\HW_MSH_EST-5.dgn

SIGNATURE/
BLOCK:

PROJECT TITLE:
INTERSTATE 95 RESURFACING AND SAFETY IMPROVEMENTS

TOWN:
OLD SAYBROOK, OLD LYME & EAST LYME

DRAWING TITLE:
DETAILED ESTIMATE SHEET

PROJECT NO. **104-164**
DRAWING NO. **EST-5**
SHEET NO. **01.06**

03 - HIGHWAY
INDEX OF DRAWINGS

DRAWING NUMBER	DRAWING TITLE	DRAWING NUMBER	DRAWING TITLE
INX-1 TO INX-6	INDEX PLANS		
TYP-1 TO TYP-9	TYPICAL SECTIONS		
MDS-1 TO MDS-14	MISCELLANEOUS DETAILS		
PLN-1 TO PLN-30	ROADWAY PLANS		
SED-1 TO SED-30	SEDIMENTATION AND EROSION CONTROL PLANS		

DESIGNED BY:
Luchs
CONSULTING ENGINEERS
89 COLONY STREET
MERIDEN, CONNECTICUT 06451

FINAL DESIGN REVIEW

REV.	DATE	REVISION DESCRIPTION	SHEET NO.
-	-	-	-
-	-	-	-
-	-	-	-
-	-	-	-
-	-	-	-
-	-	-	-

THE INFORMATION, INCLUDING ESTIMATED QUANTITIES OF WORK, SHOWN ON THESE SHEETS IS BASED ON LIMITED INVESTIGATIONS BY THE STATE AND IS IN NO WAY WARRANTED TO INDICATE THE CONDITIONS OF ACTUAL QUANTITIES OF WORK WHICH WILL BE REQUIRED.

Plotted Date: 2/13/2014

DESIGNER/DRAFTER: **RL/ETK/MF**
CHECKED BY: **D. DAGAN**

STATE OF CONNECTICUT
DEPARTMENT OF TRANSPORTATION

Filename: ...\Plan\HW_MSH_Subset03.dgn

SIGNATURE/
BLOCK:

PROJECT TITLE:
INTERSTATE 95 RESURFACING AND SAFETY IMPROVEMENTS

TOWN: **OLD SAYBROOK, OLD LYME & EAST LYME**

DRAWING TITLE: **SUBSET 03 COVER SHEET**

PROJECT NO. **104-164**
DRAWING NO. **HWY-00**
SHEET NO. **03.01**

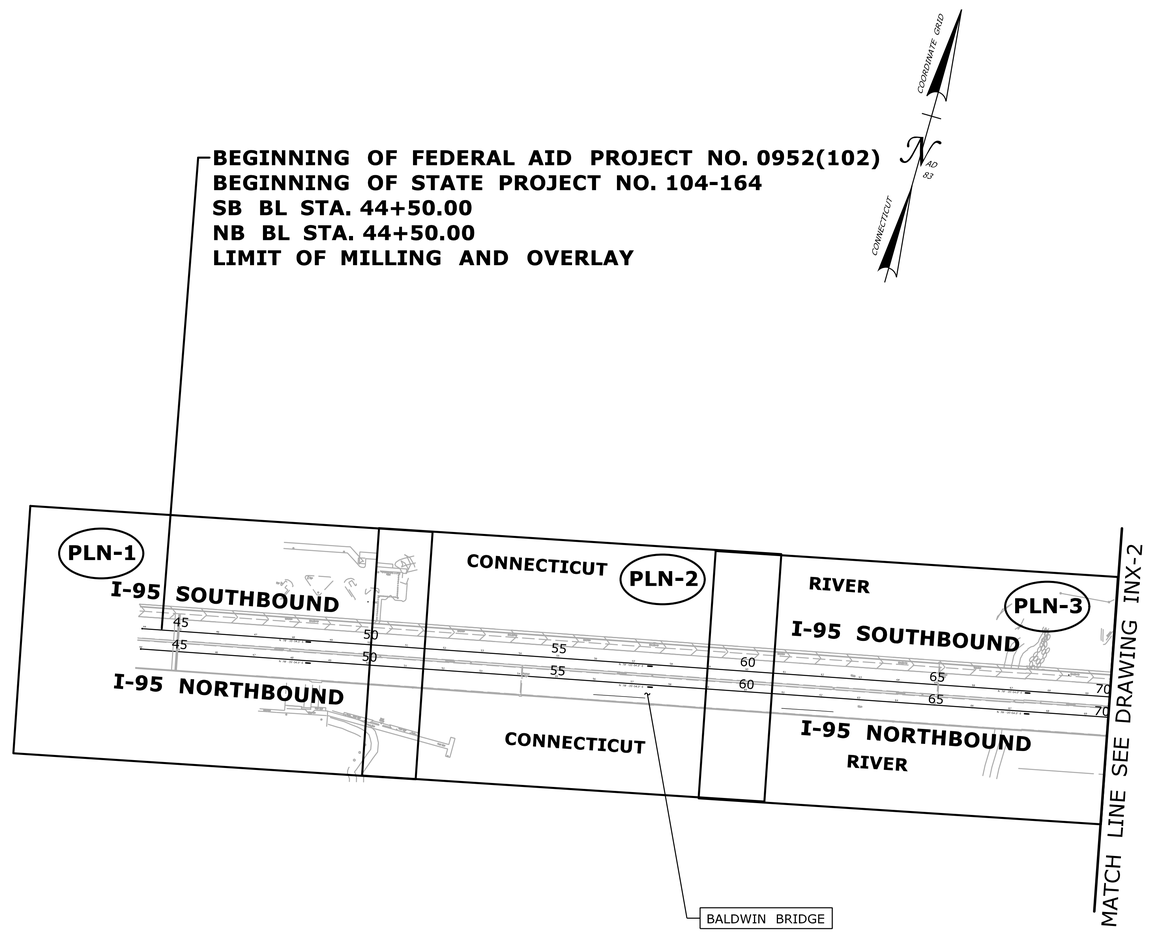

NOTE
REFER TO HIGHWAY PLANS FOR SURVEY CONTROL DATA

FINAL DESIGN REVIEW

REV.	DATE	REVISION DESCRIPTION	SHEET NO.
-	-	-	-
-	-	-	-
-	-	-	-
-	-	-	-
-	-	-	-
-	-	-	-

THE INFORMATION, INCLUDING ESTIMATED QUANTITIES OF WORK, SHOWN ON THESE SHEETS IS BASED ON LIMITED INVESTIGATIONS BY THE STATE AND IS IN NO WAY WARRANTED TO INDICATE THE CONDITIONS OF ACTUAL QUANTITIES OF WORK WHICH WILL BE REQUIRED.

Plotted Date: 2/13/2014

DESIGNER/DRAFTER: RL/MF/EK
CHECKED BY: D. DAGAN
SCALE IN FEET
0 200 400
SCALE 1"=200'

STATE OF CONNECTICUT
DEPARTMENT OF TRANSPORTATION

Filename: ...\Plan\HW_MSH_INX-1.dgn

SIGNATURE/
BLOCK:

PROJECT TITLE:
INTERSTATE 95
RESURFACING AND SAFETY
IMPROVEMENTS

TOWN:
OLD SAYBROOK,
OLD LYME & EAST LYME

DRAWING TITLE:
INDEX PLAN
STA. 44 TO STA. 70

PROJECT NO. 104-164
DRAWING NO. INX-1
SHEET NO. 03.02

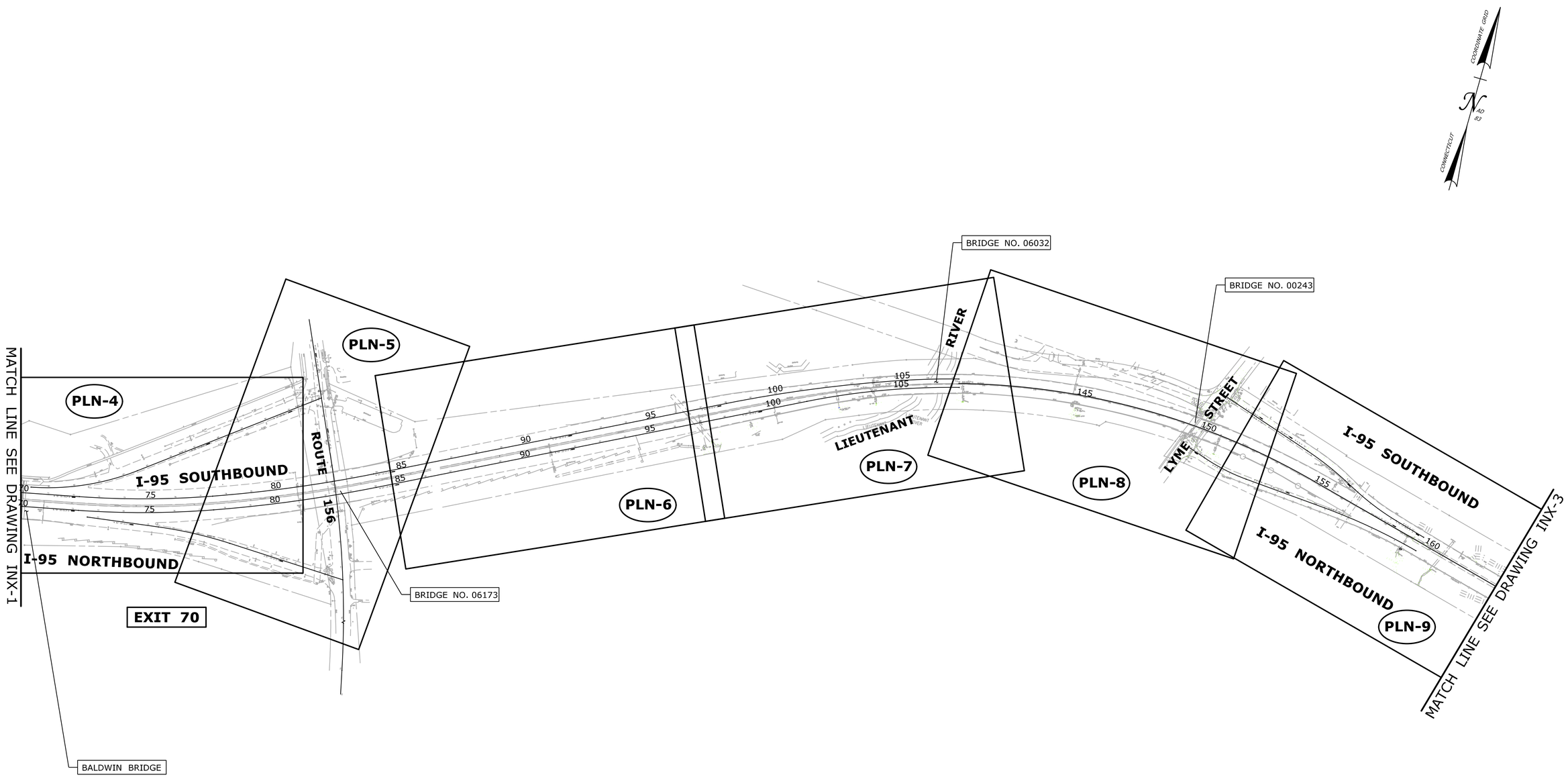

NOTE
REFER TO HIGHWAY PLANS FOR SURVEY CONTROL DATA

FINAL DESIGN REVIEW

REV.	DATE	REVISION DESCRIPTION	SHEET NO.
-	-	-	-
-	-	-	-
-	-	-	-
-	-	-	-
-	-	-	-
-	-	-	-

THE INFORMATION, INCLUDING ESTIMATED QUANTITIES OF WORK, SHOWN ON THESE SHEETS IS BASED ON LIMITED INVESTIGATIONS BY THE STATE AND IS IN NO WAY WARRANTED TO INDICATE THE CONDITIONS OF ACTUAL QUANTITIES OF WORK WHICH WILL BE REQUIRED.

Plotted Date: 2/13/2014

DESIGNER/DRAFTER: RL/MF/EK
CHECKED BY: D. DAGAN
SCALE IN FEET
0 200 400
SCALE 1"=200'

STATE OF CONNECTICUT
DEPARTMENT OF TRANSPORTATION

Filename: ...\Plan\HW_MSH_INX-2.dgn

SIGNATURE/ BLOCK:

PROJECT TITLE:
INTERSTATE 95
RESURFACING AND SAFETY
IMPROVEMENTS

TOWN:
OLD SAYBROOK,
OLD LYME & EAST LYME

DRAWING TITLE:
INDEX PLAN
STA. 70 TO STA. 164

PROJECT NO. 104-164
DRAWING NO. INX-2
SHEET NO. 03.03

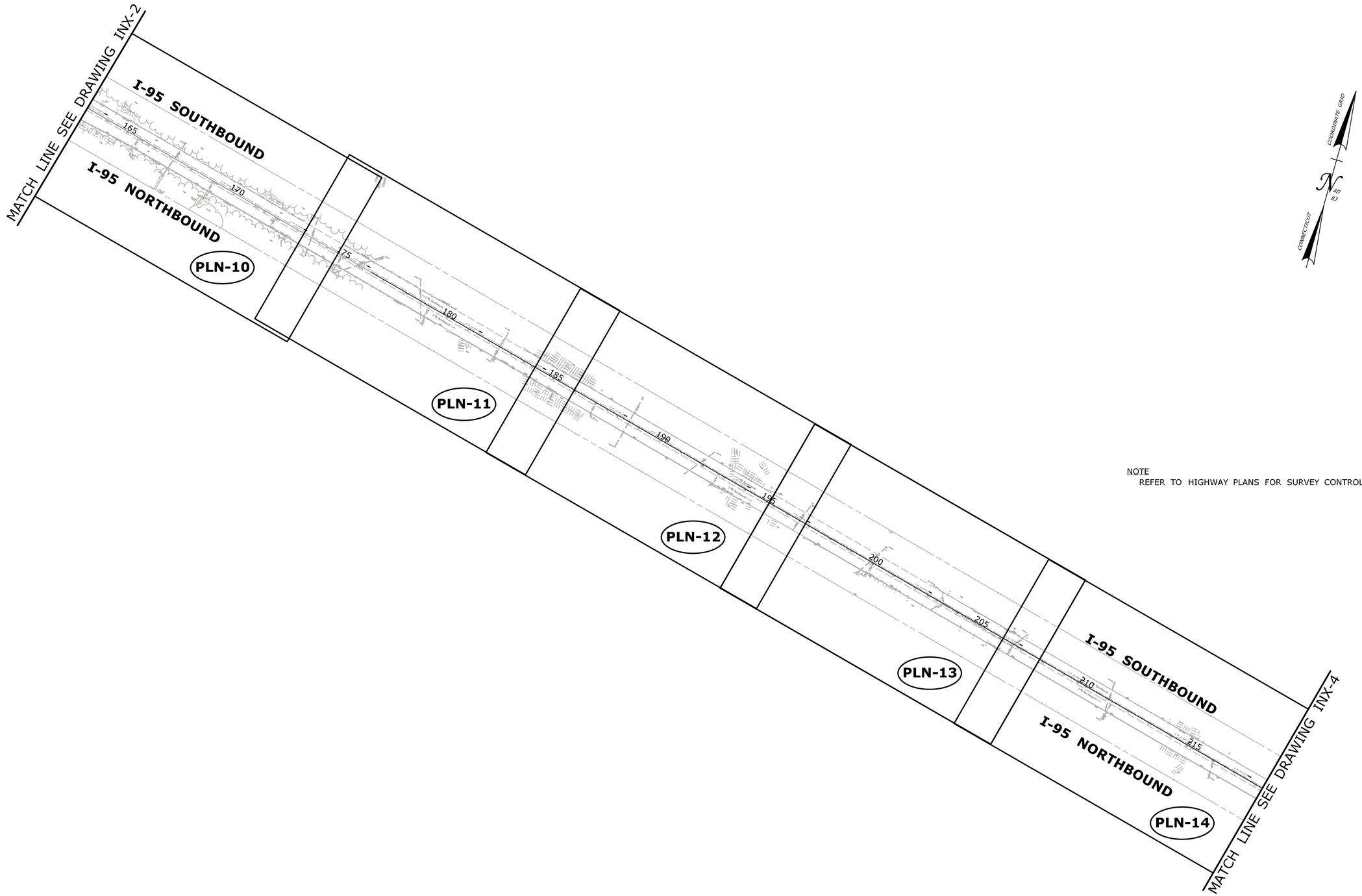

NOTE
REFER TO HIGHWAY PLANS FOR SURVEY CONTROL DATA

FINAL DESIGN REVIEW

REV.	DATE	REVISION DESCRIPTION	SHEET NO.
-	-	-	-
-	-	-	-
-	-	-	-
-	-	-	-
-	-	-	-
-	-	-	-

THE INFORMATION, INCLUDING ESTIMATED QUANTITIES OF WORK, SHOWN ON THESE SHEETS IS BASED ON LIMITED INVESTIGATIONS BY THE STATE AND IS IN NO WAY WARRANTED TO INDICATE THE CONDITIONS OF ACTUAL QUANTITIES OF WORK WHICH WILL BE REQUIRED.

Plotted Date: 2/13/2014

DESIGNER/DRAFTER: **RL/MF/EK**
CHECKED BY: **D. DAGAN**
SCALE IN FEET
0 200 400
SCALE 1"=200'

STATE OF CONNECTICUT
DEPARTMENT OF TRANSPORTATION

Filename: ...\Plan\HW_MSH_INX-3.dgn

SIGNATURE/
BLOCK:

PROJECT TITLE:
INTERSTATE 95 RESURFACING AND SAFETY IMPROVEMENTS

TOWN:
OLD SAYBROOK, OLD LYME & EAST LYME

DRAWING TITLE:
INDEX PLAN STA. 164 TO STA. 219

PROJECT NO. **104-164**
DRAWING NO. **INX-3**
SHEET NO. **03.04**

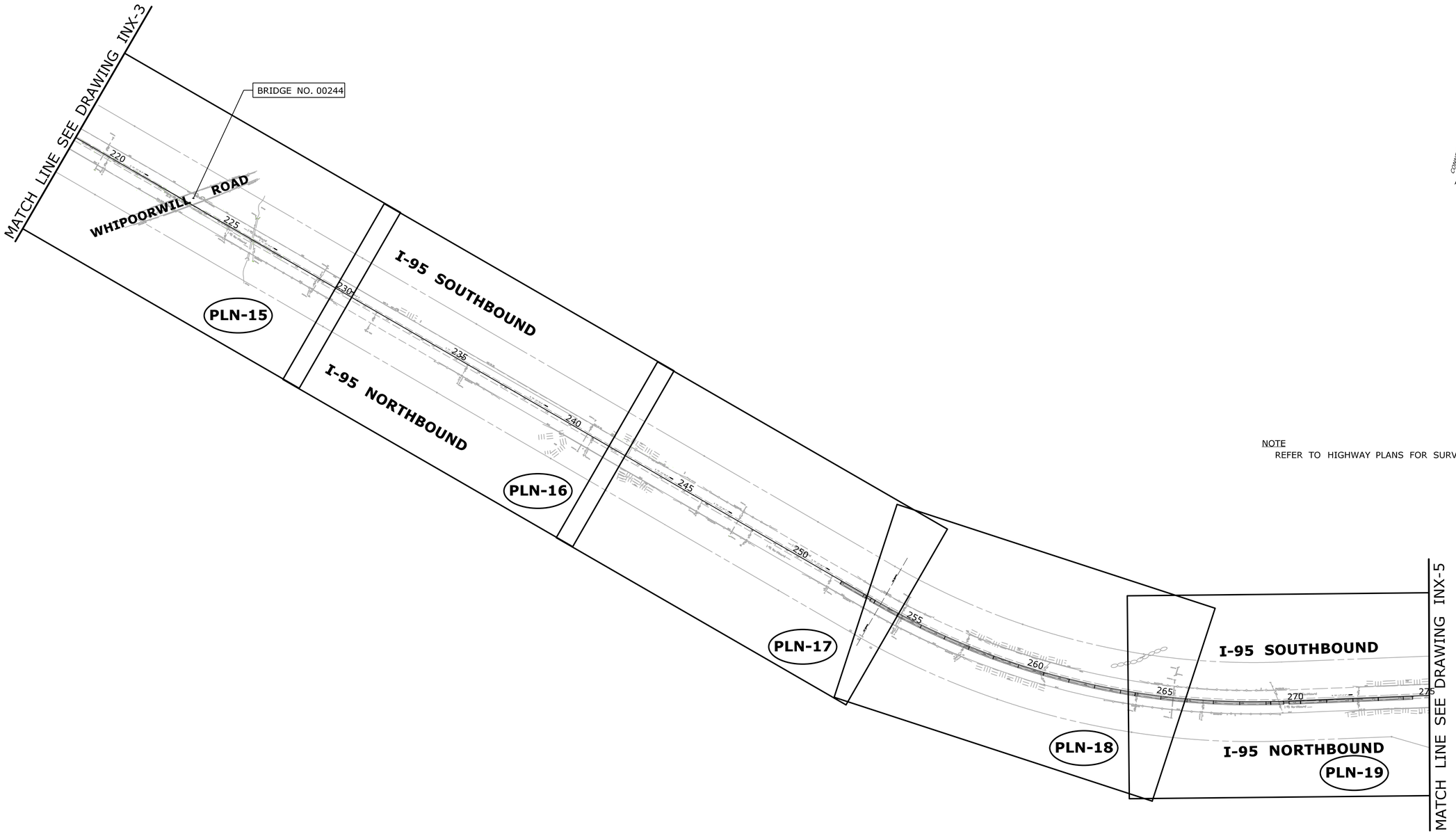

NOTE
REFER TO HIGHWAY PLANS FOR SURVEY CONTROL DATA

FINAL DESIGN REVIEW

REV.	DATE	REVISION DESCRIPTION	SHEET NO.
-	-	-	-
-	-	-	-
-	-	-	-
-	-	-	-
-	-	-	-
-	-	-	-

THE INFORMATION, INCLUDING ESTIMATED QUANTITIES OF WORK, SHOWN ON THESE SHEETS IS BASED ON LIMITED INVESTIGATIONS BY THE STATE AND IS IN NO WAY WARRANTED TO INDICATE THE CONDITIONS OF ACTUAL QUANTITIES OF WORK WHICH WILL BE REQUIRED.

Plotted Date: 2/13/2014

DESIGNER/DRAFTER: RL/MF/EK
CHECKED BY: D. DAGAN
SCALE IN FEET
0 200 400
SCALE 1"=200'

STATE OF CONNECTICUT
DEPARTMENT OF TRANSPORTATION

Filename: ...\Plan\HW_MSH_INX-4.dgn

SIGNATURE/
BLOCK:

PROJECT TITLE:
INTERSTATE 95
RESURFACING AND SAFETY
IMPROVEMENTS

TOWN:
OLD SAYBROOK,
OLD LYME & EAST LYME

DRAWING TITLE:
INDEX PLAN
STA. 219 TO STA. 275

PROJECT NO. 104-164
DRAWING NO. INX-4
SHEET NO. 03.05

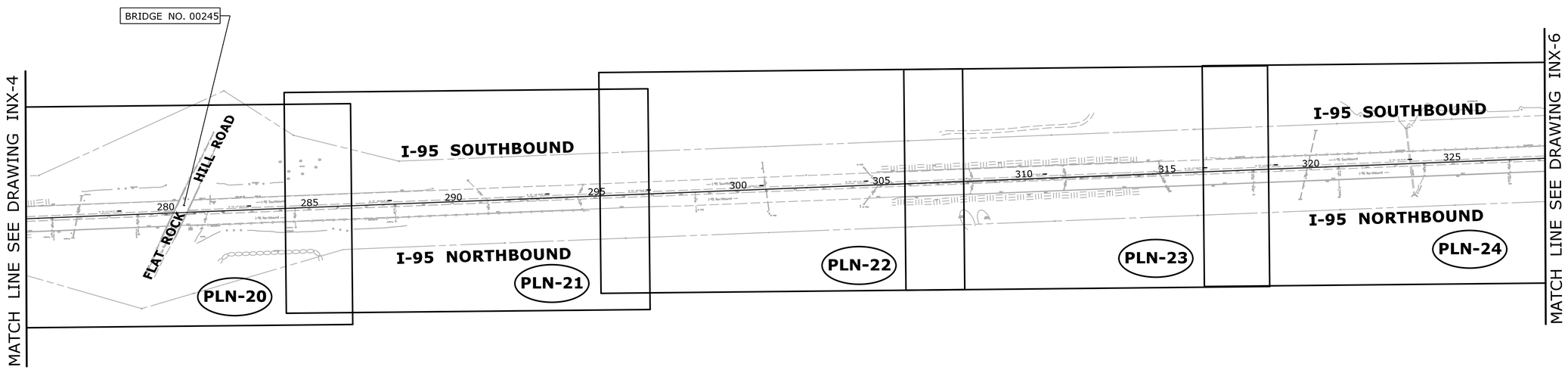

NOTE
REFER TO HIGHWAY PLANS FOR SURVEY CONTROL DATA

FINAL DESIGN REVIEW

REV.	DATE	REVISION DESCRIPTION	SHEET NO.
-	-	-	-
-	-	-	-
-	-	-	-
-	-	-	-
-	-	-	-
-	-	-	-

THE INFORMATION, INCLUDING ESTIMATED QUANTITIES OF WORK, SHOWN ON THESE SHEETS IS BASED ON LIMITED INVESTIGATIONS BY THE STATE AND IS IN NO WAY WARRANTED TO INDICATE THE CONDITIONS OF ACTUAL QUANTITIES OF WORK WHICH WILL BE REQUIRED.

Plotted Date: 2/13/2014

DESIGNER/DRAFTER: RL/MF/EK
CHECKED BY: D. DAGAN
SCALE IN FEET 0 200 400
SCALE 1"=200'

STATE OF CONNECTICUT
DEPARTMENT OF TRANSPORTATION

Filename: ...\Plan\HW_MSH_INX-5.dgn

SIGNATURE/ BLOCK:

PROJECT TITLE: INTERSTATE 95 RESURFACING AND SAFETY IMPROVEMENTS

TOWN: OLD SAYBROOK, OLD LYME & EAST LYME

DRAWING TITLE: INDEX PLAN STA. 275 TO STA. 328

PROJECT NO. 104-164
DRAWING NO. INX-5
SHEET NO. 03.06

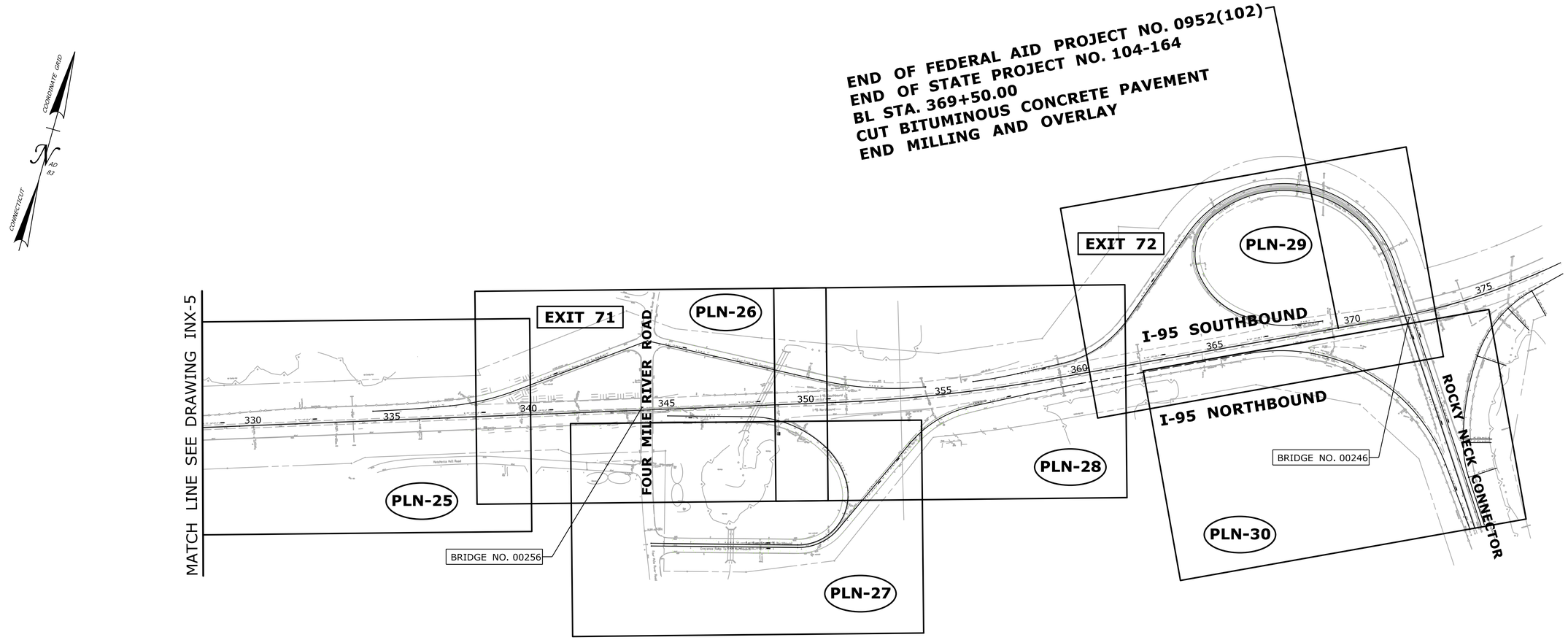

NOTE
REFER TO HIGHWAY PLANS FOR SURVEY CONTROL DATA

FINAL DESIGN REVIEW

REV.	DATE	REVISION DESCRIPTION	SHEET NO.
-	-	-	-
-	-	-	-
-	-	-	-
-	-	-	-
-	-	-	-
-	-	-	-

THE INFORMATION, INCLUDING ESTIMATED QUANTITIES OF WORK, SHOWN ON THESE SHEETS IS BASED ON LIMITED INVESTIGATIONS BY THE STATE AND IS IN NO WAY WARRANTED TO INDICATE THE CONDITIONS OF ACTUAL QUANTITIES OF WORK WHICH WILL BE REQUIRED.

Plotted Date: 2/13/2014

DESIGNER/DRAFTER: RL/MF/EK
CHECKED BY: D. DAGAN
SCALE IN FEET
0 200 400
SCALE 1"=200'

STATE OF CONNECTICUT
DEPARTMENT OF TRANSPORTATION

Filename: ...\Plan\HW_MSH_INX-6.dgn

SIGNATURE/
BLOCK:

PROJECT TITLE:
INTERSTATE 95
RESURFACING AND SAFETY
IMPROVEMENTS

TOWN:
OLD SAYBROOK
OLD LYME & EAST LYME

DRAWING TITLE:
INDEX PLAN
STA. 328 TO STA. 370

PROJECT NO. 104-164
DRAWING NO. INX-6
SHEET NO. 03.07

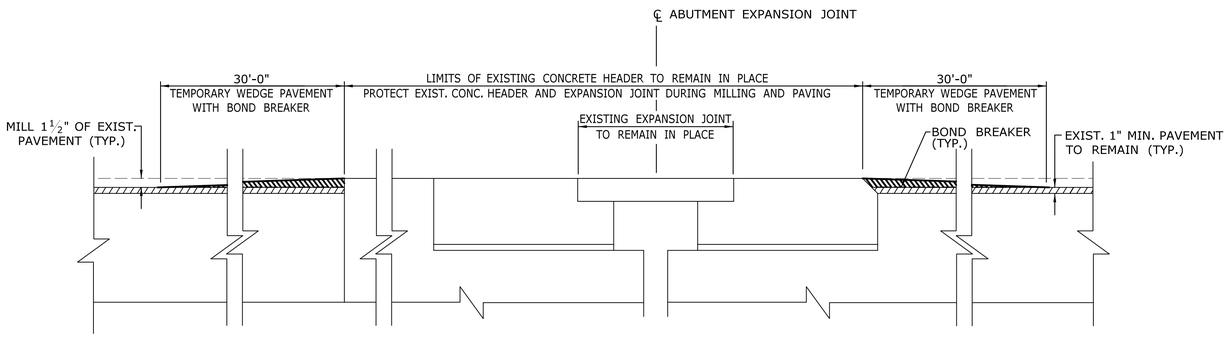

TEMPORARY PAVEMENT TREATMENT AT EXPANSION JOINT (TYP.)

NOT TO SCALE

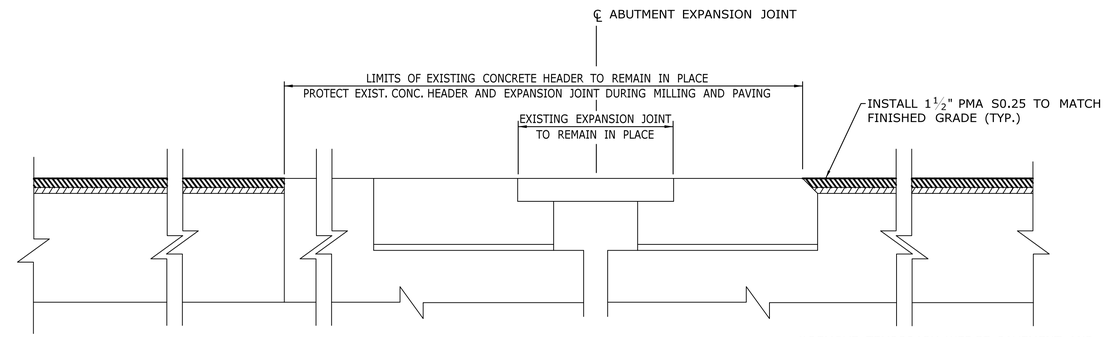

*REMOVE TEMPORARY WEDGE PAVEMENT AND BOND BREAKER PRIOR TO THE PLACEMENT OF THE PMA S0.25 PAVEMENT

PROPOSED PAVEMENT TREATMENT AT EXPANSION JOINT (TYP.)

NOT TO SCALE

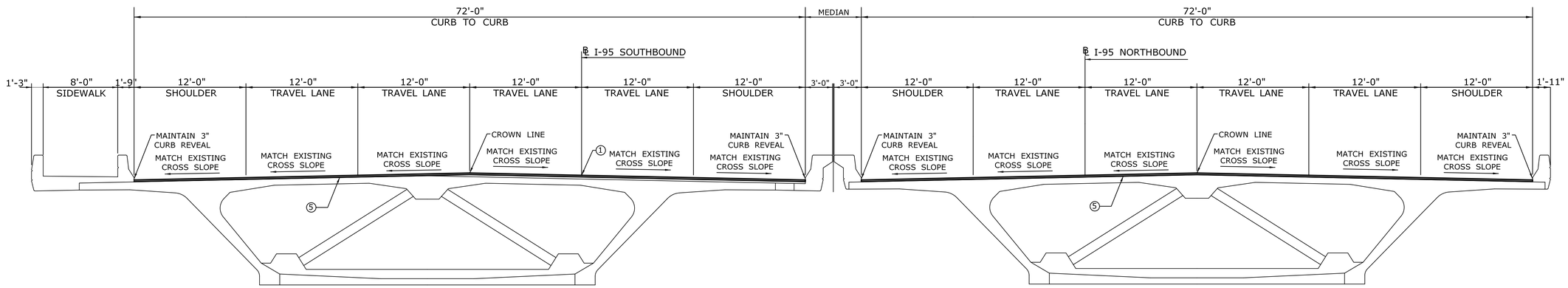

I-95 BALDWIN TYPICAL BRIDGE SECTION
STA. 44+50 TO STA. 70+50

NOT TO SCALE

1. POINT OF APPLICATION OF GRADE
2. FINE MILLING (3" DEPTH)
3. FINE MILLING (2" DEPTH)
4. 2" PMA S0.5 ON 1" PMA S0.25
5. MATERIAL FOR TACK COAT
6. GUIDE RAILING (SEE PLANS FOR LOCATIONS AND TYPE)
7. EXISTING METAL BEAM RAIL TO BE REMOVED (SEE PLANS FOR LOCATIONS)
8. EXISTING ROADWAY PARAPET WALL TO REMAIN (SEE PLANS FOR LOCATION)
9. BITUMINOUS CONCRETE LIP CURB TO BE REMOVED (SEE PLANS FOR LOCATIONS)
10. BITUMINOUS CONCRETE PARK CURB (SEE PLANS FOR LOCATIONS)
11. CUT BITUMINOUS CONCRETE PAVEMENT AT EDGE OF PCC, REMOVE BITUMINOUS CONCRETE PAVEMENT FROM CUT TO EXIST. EGDE OF PAVEMENT
12. 7.5" HMA S1 (TWO EQUAL LIFTS)
13. 10" PROCESSED AGGREGATE BASE
14. F-SHAPE PRECAST CONCRETE BARRIER CURB WITH DRAINAGE SLOTS (30"x45")
15. 4" TOPSOIL AND TURF ESTABLISHMENT
16. 6" PROCESSED AGGREGATE (4' WIDE)
17. F-SHAPE PRECAST CONCRETE BARRIER CURB (21"x45")
18. VERTICAL FACE PRECAST CONCRETE BARRIER CURB (21"x45")
19. VERTICAL SHAPE PRECAST CONCRETE BARRIER CURB (21"x54")
20. 4" CONCRETE CAP (SEE PLANS FOR LOCATIONS)
21. GRAVEL FILL
22. CUT BITUMINOUS CONCRETE PAVEMENT AT EDGE OF REINFORCED CONCRETE PAVEMENT (PCC). IF NO PCC EXISTS, CUT 4" INSIDE ANY LONGITUDINAL JOINT WITHIN 2' OF WHITE LINE MARKING SHOULDER. IF NO PCC AND NO LONGITUDINAL JOINT NEAR WHITE LINE, CUT AT WHITE LINE. REMOVE EXISTING BITUMINOUS CONCRETE PAVEMENT FROM CUT TO EDGE OF ROAD.
23. CUT BITUMINOUS CONCRETE PAVEMENT AS SHOWN ON THE ROADWAY PLANS
24. 2" PMA S0.5
25. 6" HMA S1
26. 4" PMA S0.5 IN TWO EQUAL LIFTS ON 5" HMA S1
27. 6" PROCESSED AGGREGATE BASE ON 6" SUBBASE
28. F-SHAPE PRECAST CONCRETE BARRIER CURB (30"x45")

NOTE
FOR MILLING AND PAVING OPERATIONS ON THE BALDWIN BRIDGE SEE SPECIAL PROVISION "NOTICE TO CONTRACTOR - BALDWIN BRIDGE FINE MILLING, PATCHING AND PAVING"

FINAL DESIGN REVIEW

REV.	DATE	REVISION DESCRIPTION	SHEET NO.
-	-	-	-
-	-	-	-
-	-	-	-
-	-	-	-
-	-	-	-
-	-	-	-

THE INFORMATION, INCLUDING ESTIMATED QUANTITIES OF WORK, SHOWN ON THESE SHEETS IS BASED ON LIMITED INVESTIGATIONS BY THE STATE AND IS IN NO WAY WARRANTED TO INDICATE THE CONDITIONS OF ACTUAL QUANTITIES OF WORK WHICH WILL BE REQUIRED.

Plotted Date: 4/2/2014

DESIGNER/DRAFTER: RL/MF/EK
CHECKED BY: D. DAGAN
SCALE AS NOTED

STATE OF CONNECTICUT
DEPARTMENT OF TRANSPORTATION

Filename: ...\Sections\HW_MSH_TYP-01.DGN

SIGNATURE/ BLOCK:

PROJECT TITLE: INTERSTATE 95 RESURFACING AND SAFETY IMPROVEMENTS

TOWN: OLD SAYBROOK, OLD LYME & EAST LYME

DRAWING TITLE: TYPICAL SECTIONS

PROJECT NO. 104-164
DRAWING NO. TYP-1
SHEET NO. 03.08

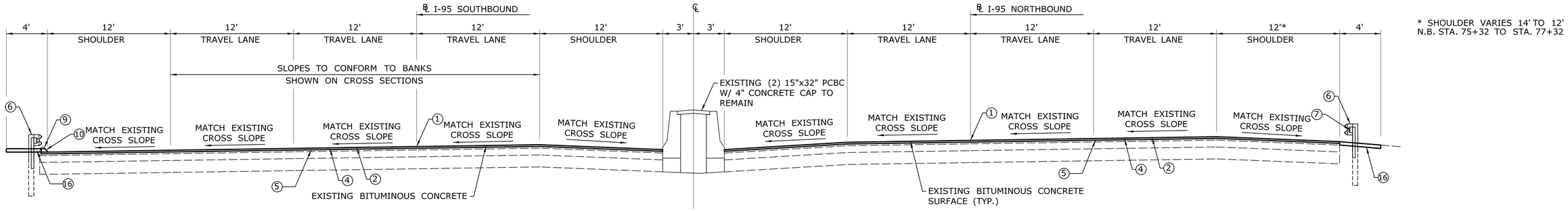

I-95 BANKED SECTION - 6 LANES
N.B. STA. 75+30 TO STA. 84+00

NOT TO SCALE

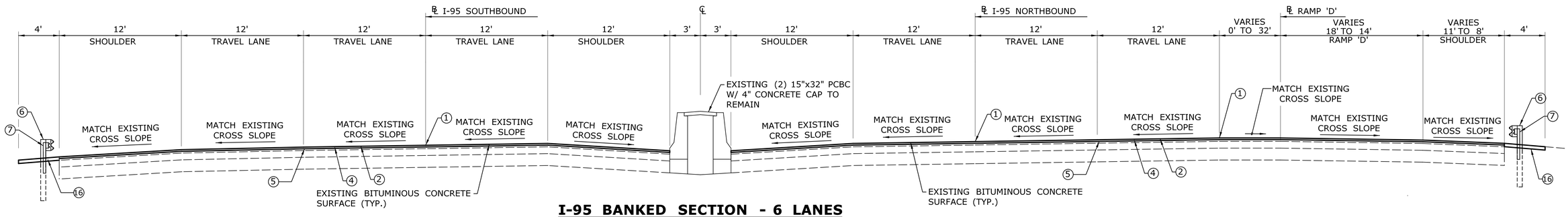

I-95 BANKED SECTION - 6 LANES
N.B. STA. 72+22 TO STA. 75+30

NOT TO SCALE

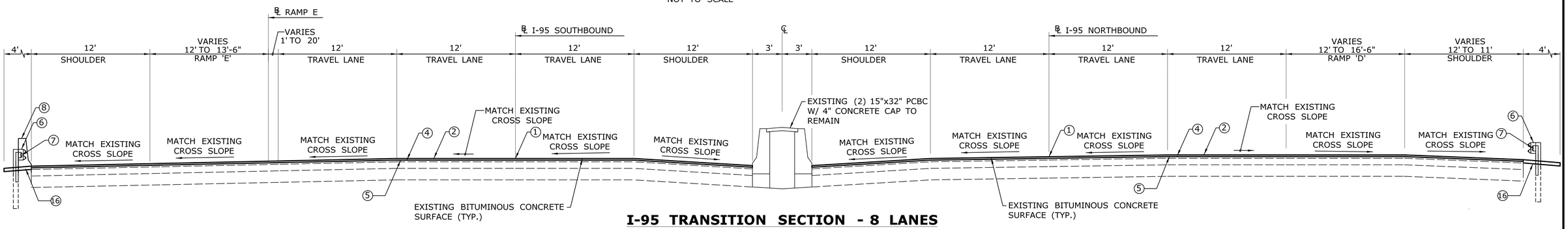

I-95 TRANSITION SECTION - 8 LANES
N.B. STA. 70+50 TO STA. 72+22

NOT TO SCALE

LEGEND

1. POINT OF APPLICATION OF GRADE
2. FINE MILLING (3" DEPTH)
3. FINE MILLING (2" DEPTH)
4. 2" PMA S0.5 ON 1" PMA S0.25
5. MATERIAL FOR TACK COAT
6. GUIDE RAILING (SEE PLANS FOR LOCATIONS AND TYPE)
7. EXISTING METAL BEAM RAIL TO BE REMOVED (SEE PLANS FOR LOCATIONS)
8. EXISTING ROADWAY PARAPET WALL TO REMAIN (SEE PLANS FOR LOCATION)
9. BITUMINOUS CONCRETE LIP CURB TO BE REMOVED (SEE PLANS FOR LOCATIONS)
10. BITUMINOUS CONCRETE PARK CURB (SEE PLANS FOR LOCATIONS)
11. CUT BITUMINOUS CONCRETE PAVEMENT AT EDGE OF PCC, REMOVE BITUMINOUS CONCRETE PAVEMENT FROM CUT TO EXIST. EGDE OF PAVEMENT
12. 7.5" HMA S1 (TWO EQUAL LIFTS)
13. 10" PROCESSED AGGREGATE BASE
14. F-SHAPE PRECAST CONCRETE BARRIER CURB WITH DRAINAGE SLOTS (30"x45")
15. 4" TOPSOIL AND TURF ESTABLISHMENT
16. 6" PROCESSED AGGREGATE (4' WIDE)
17. F-SHAPE PRECAST CONCRETE BARRIER CURB (21"x45")
18. VERTICAL FACE PRECAST CONCRETE BARRIER CURB (21"x45")
19. VERTICAL SHAPE PRECAST CONCRETE BARRIER CURB (21"x54")
20. 4" CONCRETE CAP (SEE PLANS FOR LOCATIONS)
21. GRAVEL FILL
22. CUT BITUMINOUS CONCRETE PAVEMENT AT EDGE OF REINFORCED CONCRETE PAVEMENT (PCC). IF NO PCC EXISTS, CUT 4" INSIDE ANY LONGITUDINAL JOINT WITHIN 2' OF WHITE LINE MARKING SHOULDER. IF NO PCC AND NO LONGITUDINAL JOINT NEAR WHITE LINE, CUT AT WHITE LINE. REMOVE EXISTING BITUMINOUS CONCRETE PAVEMENT FROM CUT TO EDGE OF ROAD.
23. CUT BITUMINOUS CONCRETE PAVEMENT AS SHOWN ON THE ROADWAY PLANS
24. 2" PMA S0.5
25. 6" HMA S1
26. 4" PMA S0.5 IN TWO EQUAL LIFTS ON 5" HMA S1
27. 6" PROCESSED AGGREGATE BASE ON 6" SUBBASE
28. F-SHAPE PRECAST CONCRETE BARRIER CURB (30"x45")

NOTES

1. THE FINAL COURSE OF PMA S0.5 SHALL BE THE LAST PAVING OPERATION FOR THE ENTIRE LENGTH OF THE PROJECT.

FINAL DESIGN REVIEW

REV.	DATE	REVISION DESCRIPTION	SHEET NO.
-	-	-	-
-	-	-	-
-	-	-	-
-	-	-	-
-	-	-	-
-	-	-	-

THE INFORMATION, INCLUDING ESTIMATED QUANTITIES OF WORK, SHOWN ON THESE SHEETS IS BASED ON LIMITED INVESTIGATIONS BY THE STATE AND IS IN NO WAY WARRANTED TO INDICATE THE CONDITIONS OF ACTUAL QUANTITIES OF WORK WHICH WILL BE REQUIRED.

Plotted Date: 4/2/2014

DESIGNER/DRAFTER: RL/MF/EK
CHECKED BY: D. DAGAN
SCALE AS NOTED

STATE OF CONNECTICUT
DEPARTMENT OF TRANSPORTATION

Filename: ...\Sections\HW_MSH_TYP-02.DGN

SIGNATURE/ BLOCK:

PROJECT TITLE: INTERSTATE 95 RESURFACING AND SAFETY IMPROVEMENTS

TOWN: OLD SAYBROOK, OLD LYME & EAST LYME

DRAWING TITLE: TYPICAL SECTIONS

PROJECT NO. 104-164
DRAWING NO. TYP-2
SHEET NO. 03.09

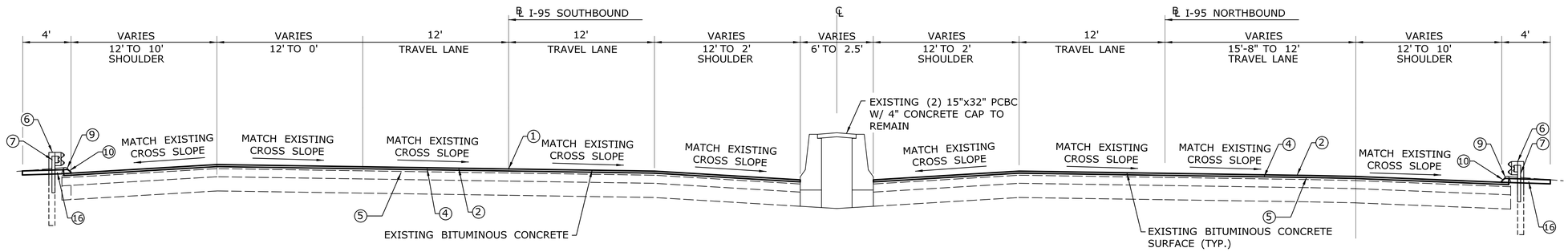

I-95 BANKED SECTION - TRANSITION TO 4 LANES
N.B. STA. 98+17 TO STA. 107+32(= STA. 140+0 AHEAD)

NOT TO SCALE

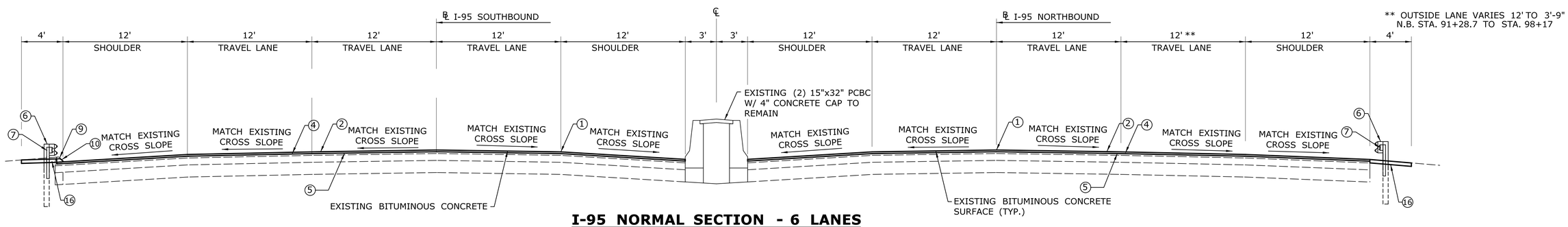

I-95 NORMAL SECTION - 6 LANES
N.B. STA. 84+00 TO STA. 98+17

NOT TO SCALE

LEGEND

1. POINT OF APPLICATION OF GRADE
2. FINE MILLING (3" DEPTH)
3. FINE MILLING (2" DEPTH)
4. 2" PMA S0.5 ON 1" PMA S0.25
5. MATERIAL FOR TACK COAT
6. GUIDE RAILING (SEE PLANS FOR LOCATIONS AND TYPE)
7. EXISTING METAL BEAM RAIL TO BE REMOVED (SEE PLANS FOR LOCATIONS)
8. EXISTING ROADWAY PARAPET WALL TO REMAIN (SEE PLANS FOR LOCATION)
9. BITUMINOUS CONCRETE LIP CURB TO BE REMOVED (SEE PLANS FOR LOCATIONS)
10. BITUMINOUS CONCRETE PARK CURB (SEE PLANS FOR LOCATIONS)
11. CUT BITUMINOUS CONCRETE PAVEMENT AT EDGE OF PCC, REMOVE BITUMINOUS CONCRETE PAVEMENT FROM CUT TO EXIST. EGDE OF PAVEMENT
12. 7.5" HMA S1 (TWO EQUAL LIFTS)
13. 10" PROCESSED AGGREGATE BASE
14. F-SHAPE PRECAST CONCRETE BARRIER CURB WITH DRAINAGE SLOTS (30"x45")
15. 4" TOPSOIL AND TURF ESTABLISHMENT
16. 6" PROCESSED AGGREGATE (4' WIDE)
17. F-SHAPE PRECAST CONCRETE BARRIER CURB (21"x45")
18. VERTICAL FACE PRECAST CONCRETE BARRIER CURB (21"x45")
19. VERTICAL SHAPE PRECAST CONCRETE BARRIER CURB (21"x54")
20. 4" CONCRETE CAP (SEE PLANS FOR LOCATIONS)
21. GRAVEL FILL
22. CUT BITUMINOUS CONCRETE PAVEMENT AT EDGE OF REINFORCED CONCRETE PAVEMENT (PCC). IF NO PCC EXISTS, CUT 4" INSIDE ANY LONGITUDINAL JOINT WITHIN 2' OF WHITE LINE MARKING SHOULDER. IF NO PCC AND NO LONGITUDINAL JOINT NEAR WHITE LINE, CUT AT WHITE LINE. REMOVE EXISTING BITUMINOUS CONCRETE PAVEMENT FROM CUT TO EDGE OF ROAD.
23. CUT BITUMINOUS CONCRETE PAVEMENT AS SHOWN ON THE ROADWAY PLANS
24. 2" PMA S0.5
25. 6" HMA S1
26. 4" PMA S0.5 IN TWO EQUAL LIFTS ON 5" HMA S1
27. 6" PROCESSED AGGREGATE BASE ON 6" SUBBASE
28. F-SHAPE PRECAST CONCRETE BARRIER CURB (30"x45")

NOTES

1. THE FINAL COURSE OF PMA S0.5 SHALL BE THE LAST PAVING OPERATION FOR THE ENTIRE LENGTH OF THE PROJECT.

FINAL DESIGN REVIEW

REV.	DATE	REVISION DESCRIPTION	SHEET NO.
-	-	-	
-	-	-	
-	-	-	
-	-	-	
-	-	-	
-	-	-	

THE INFORMATION, INCLUDING ESTIMATED QUANTITIES OF WORK, SHOWN ON THESE SHEETS IS BASED ON LIMITED INVESTIGATIONS BY THE STATE AND IS IN NO WAY WARRANTED TO INDICATE THE CONDITIONS OF ACTUAL QUANTITIES OF WORK WHICH WILL BE REQUIRED.

Plotted Date: 4/2/2014

DESIGNER/DRAFTER: RL/MF/EK
CHECKED BY: D. DAGAN
SCALE AS NOTED

STATE OF CONNECTICUT
DEPARTMENT OF TRANSPORTATION

Filename: ...\Sections\HW_MSH_TYP-03.DGN

SIGNATURE/ BLOCK:

PROJECT TITLE: INTERSTATE 95 RESURFACING AND SAFETY IMPROVEMENTS

TOWN: OLD SAYBROOK, OLD LYME & EAST LYME

DRAWING TITLE: TYPICAL SECTIONS

PROJECT NO. 104-164
DRAWING NO. TYP-3
SHEET NO. 03.10

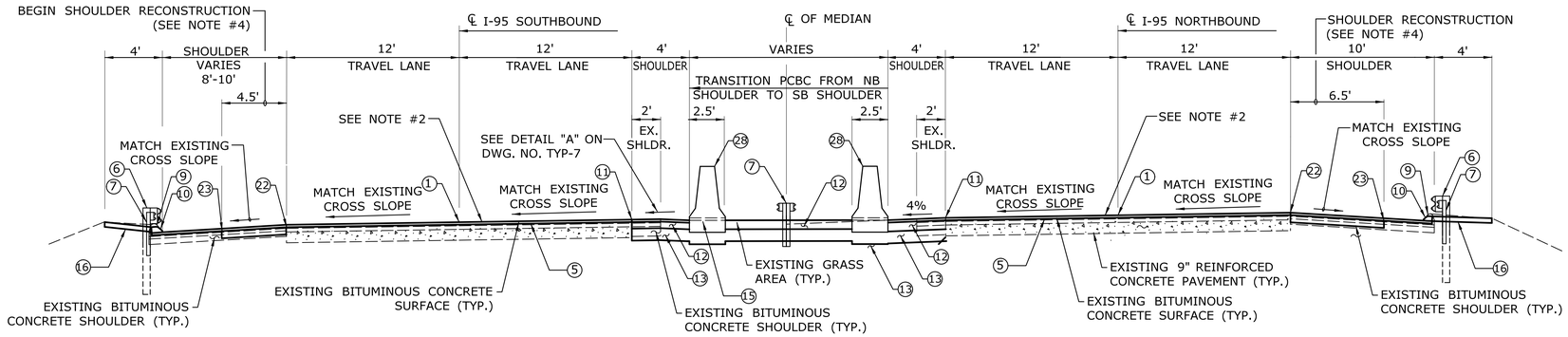

I-95 SUPERELEVATED SECTION
STA. 248+20 TO STA. 253+20

NOT TO SCALE

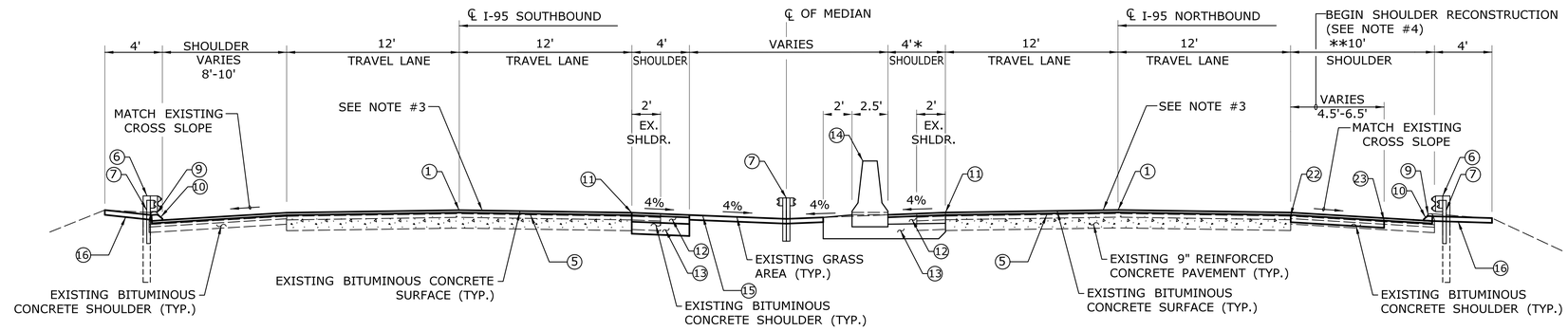

* WIDTH VARIES STA. 159+00 TO STA. 161+60 FROM 10'+/- TO 4'

** FULL DEPTH SHOULDER RECONSTRUCTION (10' WIDE) STA. 217+50 TO STA. 229+50

I-95 NORMAL SECTION
STA. 159+00 TO STA. 248+20

NOT TO SCALE

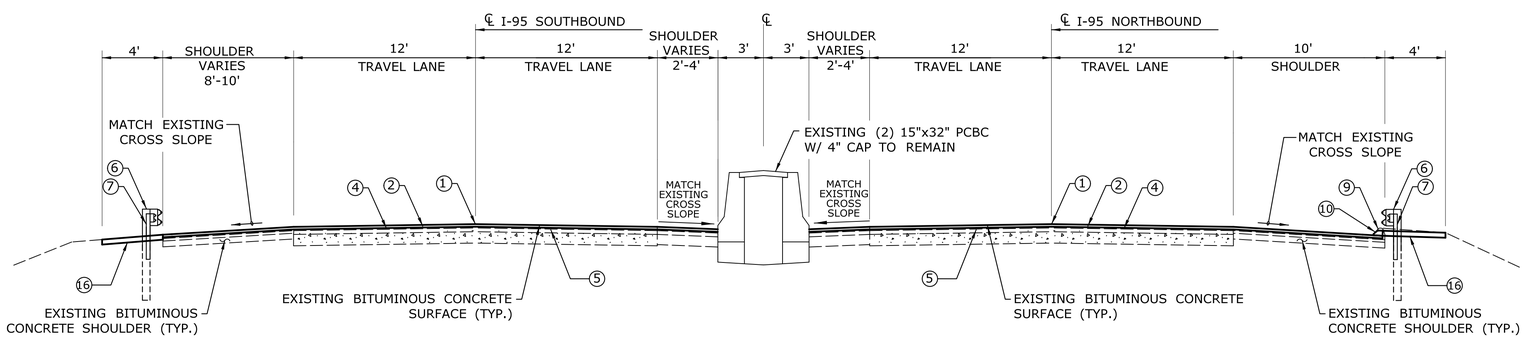

I-95 NORMAL SECTION - 4 LANES
STA. 107+32(=STA. 140+00 AHEAD) TO STA. 159+00

NOT TO SCALE

LEGEND

1. POINT OF APPLICATION OF GRADE
2. FINE MILLING (3" DEPTH)
3. FINE MILLING (2" DEPTH)
4. 2" PMA S0.5 ON 1" PMA S0.25
5. MATERIAL FOR TACK COAT
6. GUIDE RAILING (SEE PLANS FOR LOCATIONS AND TYPE)
7. EXISTING METAL BEAM RAIL TO BE REMOVED (SEE PLANS FOR LOCATIONS)
8. EXISTING ROADWAY PARAPET WALL TO REMAIN (SEE PLANS FOR LOCATION)
9. BITUMINOUS CONCRETE LIP CURB TO BE REMOVED (SEE PLANS FOR LOCATIONS)
10. BITUMINOUS CONCRETE PARK CURB (SEE PLANS FOR LOCATIONS)
11. CUT BITUMINOUS CONCRETE PAVEMENT AT EDGE OF PCC, REMOVE BITUMINOUS CONCRETE PAVEMENT FROM CUT TO EXIST. EGDE OF PAVEMENT
12. 7.5" HMA S1 (TWO EQUAL LIFTS)
13. 10" PROCESSED AGGREGATE BASE
14. F-SHAPE PRECAST CONCRETE BARRIER CURB WITH DRAINAGE SLOTS (30"x45")
15. 4" TOPSOIL AND TURF ESTABLISHMENT
16. 6" PROCESSED AGGREGATE (4' WIDE)
17. F-SHAPE PRECAST CONCRETE BARRIER CURB (21"x45")
18. VERTICAL FACE PRECAST CONCRETE BARRIER CURB (21"x45")
19. VERTICAL SHAPE PRECAST CONCRETE BARRIER CURB (21"x54")
20. 4" CONCRETE CAP (SEE PLANS FOR LOCATIONS)
21. GRAVEL FILL
22. CUT BITUMINOUS CONCRETE PAVEMENT AT EDGE OF REINFORCED CONCRETE PAVEMENT (PCC). IF NO PCC EXISTS, CUT 4" INSIDE ANY LONGITUDINAL JOINT WITHIN 2' OF WHITE LINE MARKING SHOULDER. IF NO PCC AND NO LONGITUDINAL JOINT NEAR WHITE LINE, CUT AT WHITE LINE. REMOVE EXISTING BITUMINOUS CONCRETE PAVEMENT FROM CUT TO EDGE OF ROAD.
23. CUT BITUMINOUS CONCRETE PAVEMENT AS SHOWN ON THE ROADWAY PLANS
24. 2" PMA S0.5
25. 6" HMA S1
26. 4" PMA S0.5 OIN TWO EQUAL LIFTS ON 5" HMA S1
27. 6" PROCESSED AGGREGATE BASE ON 6" SUBBASE
28. F-SHAPE PRECAST CONCRETE BARRIER CURB (30"x45")

NOTES

1. THE FINAL COURSE OF PMA S0.5 SHALL BE THE LAST PAVING OPERATION FOR THE ENTIRE LENGTH OF THE PROJECT.
2. NB AND SB TRAVELWAY (SUPERELEVATED SECTIONS)
   - PERFORM PCC JOINT AND MID-SLAB CRACKING REPAIRS (FOR DETAIL SEE DRAWING MDS-14)
   - FINE MILL 1.5" AND IN SAME NIGHT PAVE WITH FIRST LIFT LEVELING COURSE INCLUDING:
     - FILL AND COMPACT ANY DEPRESSIONS (SUCH AS OPEN LONGITUDINAL JOINTS AND POTHOLES) IN THE PAVEMENT SURFACE OVER 1" DEEP WITH ITEM 0601192A - SURFACE PATCH, BEFORE PLACING LEVELING COURSE
     - ADDITIONAL MILLED SURFACE CLEANING PROVISIONS APPLY TO ANY MILLED AREA THAT WILL NOT BE EXPOSED TO LIVE TRAFFIC FOR A MINIMUM OF 48 HOURS, AS SPECIFIED IN ITEM NO. 0406285A FINE MILLING
     - TACK COAT
     - PLACE 1.5" PMA S0.375 LEVELING COURSE
   - PLACE 2" PMA S0.5 SURFACE COURSE
3. NB AND SB TRAVELWAY (NORMAL SECTIONS/WEDGE SECTIONS WHERE CROSS SLOPE IS LESS THAN 1.5%)
   - PERFORM PCC JOINT AND MID-SLAB CRACKING REPAIRS (FOR DETAIL SEE DRAWING MDS-14)
   - FINE MILL 1.5" AND IN SAME NIGHT PAVE WITH FIRST LIFT WEDGE COURSE INCLUDING:
     - FILL AND COMPACT ANY DEPRESSIONS (SUCH AS OPEN LONGITUDINAL JOINTS AND POTHOLES) IN THE PAVEMENT SURFACE OVER 1" DEEP WITH ITEM 0601192A - SURFACE PATCH, BEFORE PLACING WEDGE COURSE
     - ADDITIONAL MILLED SURFACE CLEANING PROVISIONS APPLY TO ANY MILLED AREA THAT WILL NOT BE EXPOSED TO LIVE TRAFFIC FOR A MINIMUM OF 48 HOURS, AS SPECIFIED IN ITEM NO. 0406285A FINE MILLING
     - TACK COAT
     - PLACE PMA S0.375 WEDGE COURSE WITH THICKNESS OF 1.50" ON LOW SIDE (EDGE OF ROAD) AND THICKNESS OF UP TO 2.5" ON THE HIGH SIDE (MIDDLE OF ROAD) TO INCREASE CROSS SLOPE. HOWEVER DO NOT INCREASE FINAL ROAD CROSS SLOPE ABOVE 2%
   - PLACE 2" PMA S0.5 SURFACE COURSE
4. SHOULDER RECONSTRUCTION (ALL WORK TO DONE SAME NIGHT)
   - REMOVE EXISTING BITUMINOUS PAVEMENT FROM EDGE OF PCC TO FRONT OF CATCH BASINS (4' TO 6.5' TYP.) (DEPTH VARIES 5.5" TO 6.25")
   - COMPACT EXISTING GRANULAR BASE
   - PLACE 5.5" TO 6.25" HMA S1 IN A SINGLE LIFT
5. FULL DEPTH CONCRETE PATCHES
   - FULL DEPTH CONCRETE PATCHING SHOULD BE PERFORMED BEFORE MILLING 1.5 INCHES OF THE EXISTING PAVEMENT SURFACE. USE ITEM NO. 0401152A, "CONCRETE REPLACEMENT FOR ROADWAY (FULL-DEPTH)"

   STRUCTURE OF FULL DEPTH CONCRETE PATCHES
   - PLACE ROUGHLY 9 TO 14 INCHES OF PORTLAND CEMENT CONCRETE (PCC) AS NEEDED SO THAT THE TOP OF THE PCC IS EVEN WITH THE TOP OF THE EXISTING SURFACE. BOTTOM OF NEW PCC TO BE EVEN WITH THE BOTTOM OF EXISTING PCC IN EXISTING COMPOSITE PAVEMENT.
   - WHEN THE TRAVELWAY IS MILLED 1.5" THE TOP 1.5" OF THE PATCH WILL BE MILLED OFF
6. PAVEMENT STRUCTURE FOR BRIDGE NO. 06173 (I-95 OVER ROUTE 156) AND BRIDGE NO. 06032 (I-95 OVER LIEUTENANT RIVER)
   - PLACE 2" PMA S0.5 ON 1" PMA S0.25 AND ASPHALTIC PLUG JOINTS
7. PAVEMENT STRUCTURE FOR BRIDGE NO. 00243 (I-95 OVER LYME STREET)
   - USE SAME STRUCTURE AS TYPICAL PAVEMENT SURROUNDING BRIDGE.
8. PAVEMENT STRUCTURE FOR BRIDGE UNDERPASSES
   - SEE DRAWINGS PLN-15, PLN-20 AND PLN-26

FINAL DESIGN REVIEW

REV.	DATE	REVISION DESCRIPTION	SHEET NO.
-	-	-	-
-	-	-	-
-	-	-	-
-	-	-	-
-	-	-	-
-	-	-	-

THE INFORMATION, INCLUDING ESTIMATED QUANTITIES OF WORK, SHOWN ON THESE SHEETS IS BASED ON LIMITED INVESTIGATIONS BY THE STATE AND IS IN NO WAY WARRANTED TO INDICATE THE CONDITIONS OF ACTUAL QUANTITIES OF WORK WHICH WILL BE REQUIRED.

Plotted Date: 4/2/2014

DESIGNER/DRAFTER: RL/MF/EK
CHECKED BY: D. DAGAN
SCALE AS NOTED

STATE OF CONNECTICUT
DEPARTMENT OF TRANSPORTATION

Filename: ...\Sections\HW_MSH_TYP-04.DGN

SIGNATURE/ BLOCK:

PROJECT TITLE: INTERSTATE 95 RESURFACING AND SAFETY IMPROVEMENTS

TOWN: OLD SAYBROOK, OLD LYME & EAST LYME

DRAWING TITLE: TYPICAL SECTIONS

PROJECT NO. 104-164
DRAWING NO. TYP-4
SHEET NO. 03.11

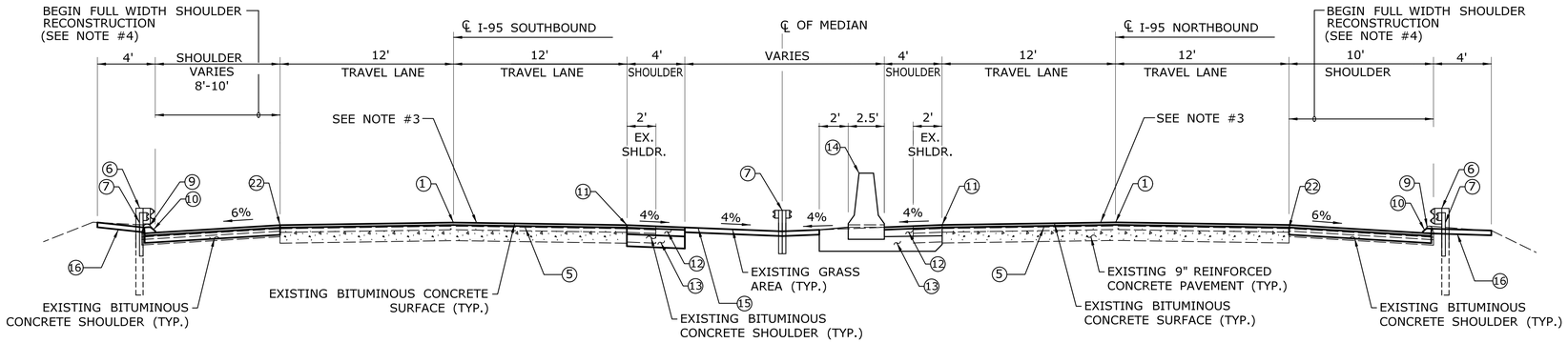

I-95 NORMAL SECTION
STA. 274+60 TO STA. 279+35

NOT TO SCALE

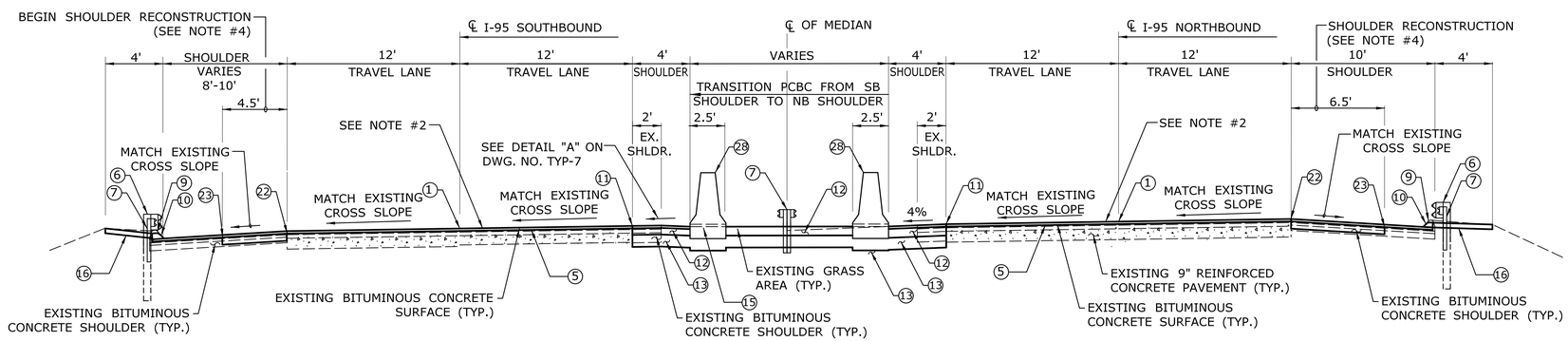

I-95 SUPERELEVATED SECTION
STA. 269+80 TO STA. 274+60

NOT TO SCALE

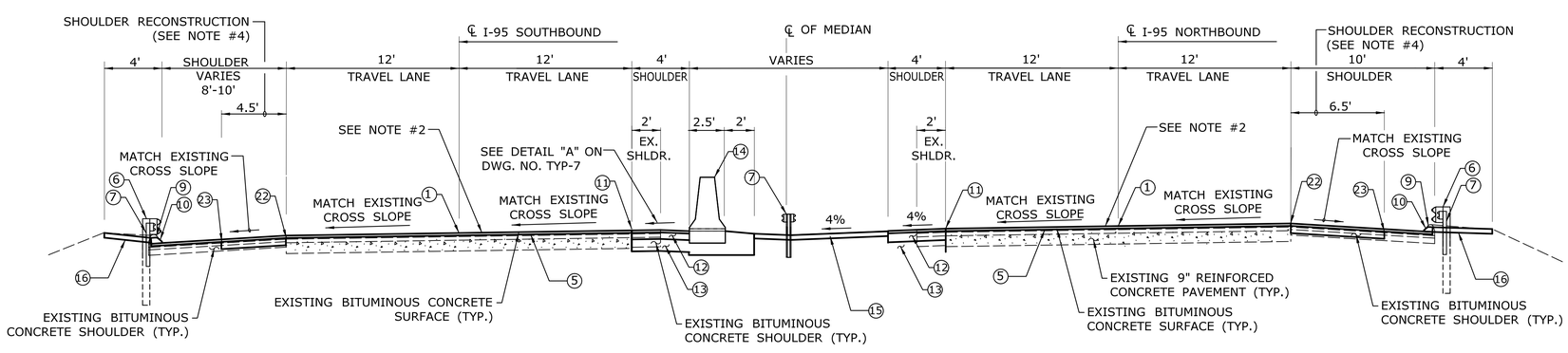

I-95 SUPERELEVATED SECTION
STA. 253+20 TO STA. 269+80

NOT TO SCALE

LEGEND

1. POINT OF APPLICATION OF GRADE
2. FINE MILLING (3" DEPTH)
3. FINE MILLING (2" DEPTH)
4. 2" PMA S0.5 ON 1" PMA S0.25
5. MATERIAL FOR TACK COAT
6. GUIDE RAILING (SEE PLANS FOR LOCATIONS AND TYPE)
7. EXISTING METAL BEAM RAIL TO BE REMOVED (SEE PLANS FOR LOCATIONS)
8. EXISTING ROADWAY PARAPET WALL TO REMAIN (SEE PLANS FOR LOCATION)
9. BITUMINOUS CONCRETE LIP CURB TO BE REMOVED (SEE PLANS FOR LOCATIONS)
10. BITUMINOUS CONCRETE PARK CURB (SEE PLANS FOR LOCATIONS)
11. CUT BITUMINOUS CONCRETE PAVEMENT AT EDGE OF PCC, REMOVE BITUMINOUS CONCRETE PAVEMENT FROM CUT TO EXIST. EGDE OF PAVEMENT
12. 7.5" HMA S1 (TWO EQUAL LIFTS)
13. 10" PROCESSED AGGREGATE BASE
14. F-SHAPE PRECAST CONCRETE BARRIER CURB WITH DRAINAGE SLOTS (30"x45")
15. 4" TOPSOIL AND TURF ESTABLISHMENT
16. 6" PROCESSED AGGREGATE (4' WIDE)
17. F-SHAPE PRECAST CONCRETE BARRIER CURB (21"x45")
18. VERTICAL FACE PRECAST CONCRETE BARRIER CURB (21"x45")
19. VERTICAL SHAPE PRECAST CONCRETE BARRIER CURB (21"x54")
20. 4" CONCRETE CAP (SEE PLANS FOR LOCATIONS)
21. GRAVEL FILL
22. CUT BITUMINOUS CONCRETE PAVEMENT AT EDGE OF REINFORCED CONCRETE PAVEMENT (PCC). IF NO PCC EXISTS, CUT 4" INSIDE ANY LONGITUDINAL JOINT WITHIN 2' OF WHITE LINE MARKING SHOULDER. IF NO PCC AND NO LONGITUDINAL JOINT NEAR WHITE LINE, CUT AT WHITE LINE. REMOVE EXISTING BITUMINOUS CONCRETE PAVEMENT FROM CUT TO EDGE OF ROAD.
23. CUT BITUMINOUS CONCRETE PAVEMENT AS SHOWN ON THE ROADWAY PLANS
24. 2" PMA S0.5
25. 6" HMA S1
26. 4" PMA S0.5 OIN TWO EQUAL LIFTS ON 5" HMA S1
27. 6" PROCESSED AGGREGATE BASE ON 6" SUBBASE
28. F-SHAPE PRECAST CONCRETE BARRIER CURB (30"x45")

NOTES

1. THE FINAL COURSE OF PMA S0.5 SHALL BE THE LAST PAVING OPERATION FOR THE ENTIRE LENGTH OF THE PROJECT.
2. NB AND SB TRAVELWAY (SUPERELEVATED SECTIONS)
   - PERFORM PCC JOINT AND MID-SLAB CRACKING REPAIRS (FOR DETAIL SEE DRAWING MDS-14)
   - FINE MILL 1.5" AND IN SAME NIGHT PAVE WITH FIRST LIFT LEVELING COURSE INCLUDING:
     - FILL AND COMPACT ANY DEPRESSIONS (SUCH AS OPEN LONGITUDINAL JOINTS AND POTHOLES) IN THE PAVEMENT SURFACE OVER 1" DEEP WITH ITEM 0601192A - SURFACE PATCH, BEFORE PLACING LEVELING COURSE
     - ADDITIONAL MILLED SURFACE CLEANING PROVISIONS APPLY TO ANY MILLED AREA THAT WILL NOT BE EXPOSED TO LIVE TRAFFIC FOR A MINIMUM OF 48 HOURS, AS SPECIFIED IN ITEM NO. 0406285A FINE MILLING
     - TACK COAT
     - PLACE 1.5" PMA S0.375 LEVELING COURSE
   - PLACE 2" PMA S0.5 SURFACE COURSE
3. NB AND SB TRAVELWAY (NORMAL SECTIONS/WEDGE SECTIONS WHERE CROSS SLOPE IS LESS THAN 1.5%)
   - PERFORM PCC JOINT AND MID-SLAB CRACKING REPAIRS (FOR DETAIL SEE DRAWING MDS-14)
   - FINE MILL 1.5" AND IN SAME NIGHT PAVE WITH FIRST LIFT WEDGE COURSE INCLUDING:
     - FILL AND COMPACT ANY DEPRESSIONS (SUCH AS OPEN LONGITUDINAL JOINTS AND POTHOLES) IN THE PAVEMENT SURFACE OVER 1" DEEP WITH ITEM 0601192A - SURFACE PATCH, BEFORE PLACING WEDGE COURSE
     - ADDITIONAL MILLED SURFACE CLEANING PROVISIONS APPLY TO ANY MILLED AREA THAT WILL NOT BE EXPOSED TO LIVE TRAFFIC FOR A MINIMUM OF 48 HOURS, AS SPECIFIED IN ITEM NO. 0406285A FINE MILLING
     - TACK COAT
     - PLACE PMA S0.375 WEDGE COURSE WITH THICKNESS OF 1.50" ON LOW SIDE (EDGE OF ROAD) AND THICKNESS OF UP TO 2.5" ON THE HIGH SIDE (MIDDLE OF ROAD) TO INCREASE CROSS SLOPE. HOWEVER DO NOT INCREASE FINAL ROAD CROSS SLOPE ABOVE 2%
   - PLACE 2" PMA S0.5 SURFACE COURSE
4. SHOULDER RECONSTRUCTION (ALL WORK TO DONE SAME NIGHT)
   - REMOVE EXISTING BITUMINOUS PAVEMENT FROM EDGE OF PCC TO FRONT OF CATCH BASINS (4' TO 6.5' TYP.) (DEPTH VARIES 5.5" TO 6.25")
   - COMPACT EXISTING GRANULAR BASE
   - PLACE 5.5" TO 6.25" HMA S1 IN A SINGLE LIFT
5. FULL DEPTH CONCRETE PATCHES
   - FULL DEPTH CONCRETE PATCHING SHOULD BE PERFORMED BEFORE MILLING 1.5 INCHES OF THE EXISTING PAVEMENT SURFACE. USE ITEM NO. 0401152A, "CONCRETE REPLACEMENT FOR ROADWAY (FULL-DEPTH)"

   STRUCTURE OF FULL DEPTH CONCRETE PATCHES
   - PLACE ROUGHLY 9 TO 14 INCHES OF PORTLAND CEMENT CONCRETE (PCC) AS NEEDED SO THAT THE TOP OF THE PCC IS EVEN WITH THE TOP OF THE EXISTING SURFACE. BOTTOM OF NEW PCC TO BE EVEN WITH THE BOTTOM OF EXISTING PCC IN EXISTING COMPOSITE PAVEMENT.
   - WHEN THE TRAVELWAY IS MILLED 1.5" THE TOP 1.5" OF THE PATCH WILL BE MILLED OFF
6. PAVEMENT STRUCTURE FOR BRIDGE NO. 06173 (I-95 OVER ROUTE 156) AND BRIDGE NO. 06032 (I-95 OVER LIEUTENANT RIVER)
   - PLACE 2" PMA S0.5 ON 1" PMA S0.25 AND ASPHALTIC PLUG JOINTS
7. PAVEMENT STRUCTURE FOR BRIDGE NO. 00243 (I-95 OVER LYME STREET)
   - USE SAME STRUCTURE AS TYPICAL PAVEMENT SURROUNDING BRIDGE.
8. PAVEMENT STRUCTURE FOR BRIDGE UNDERPASSES
   - SEE DRAWINGS PLN-15, PLN-20 AND PLN-26

FINAL DESIGN REVIEW

REV.	DATE	REVISION DESCRIPTION	SHEET NO.
-	-	-	-
-	-	-	-
-	-	-	-
-	-	-	-
-	-	-	-
-	-	-	-

THE INFORMATION, INCLUDING ESTIMATED QUANTITIES OF WORK, SHOWN ON THESE SHEETS IS BASED ON LIMITED INVESTIGATIONS BY THE STATE AND IS IN NO WAY WARRANTED TO INDICATE THE CONDITIONS OF ACTUAL QUANTITIES OF WORK WHICH WILL BE REQUIRED.

Plotted Date: 4/2/2014

DESIGNER/DRAFTER: RL/MF/EK
CHECKED BY: D. DAGAN
SCALE AS NOTED

STATE OF CONNECTICUT
DEPARTMENT OF TRANSPORTATION

Filename: ...\Sections\HW_MSH_TYP-05.DGN

SIGNATURE/ BLOCK:

PROJECT TITLE: INTERSTATE 95 RESURFACING AND SAFETY IMPROVEMENTS

TOWN: OLD SAYBROOK, OLD LYME & EAST LYME

DRAWING TITLE: TYPICAL SECTIONS

PROJECT NO. 104-164
DRAWING NO. TYP-5
SHEET NO. 03.12

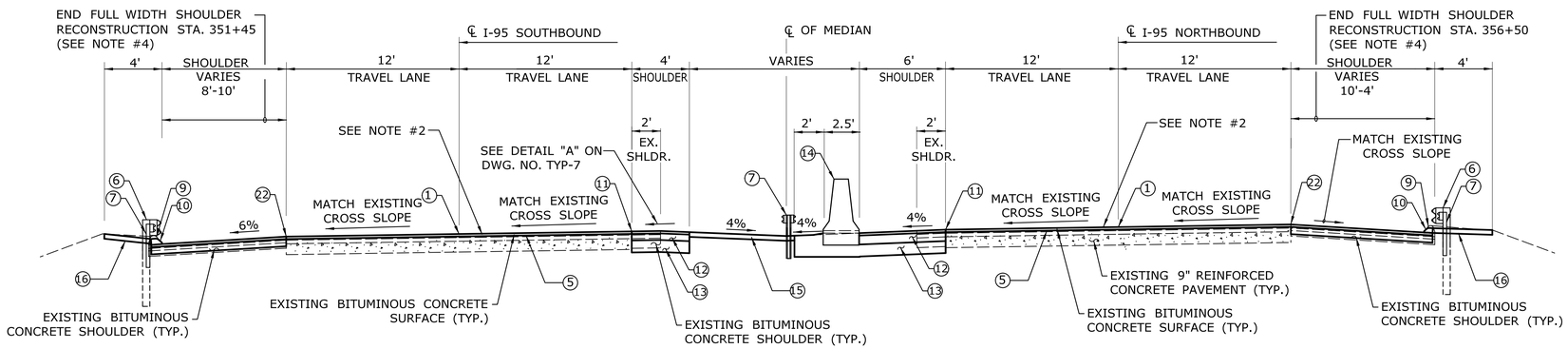

I-95 SUPERELEVATED SECTION
STA. 351+00 TO STA. 359+00

NOT TO SCALE

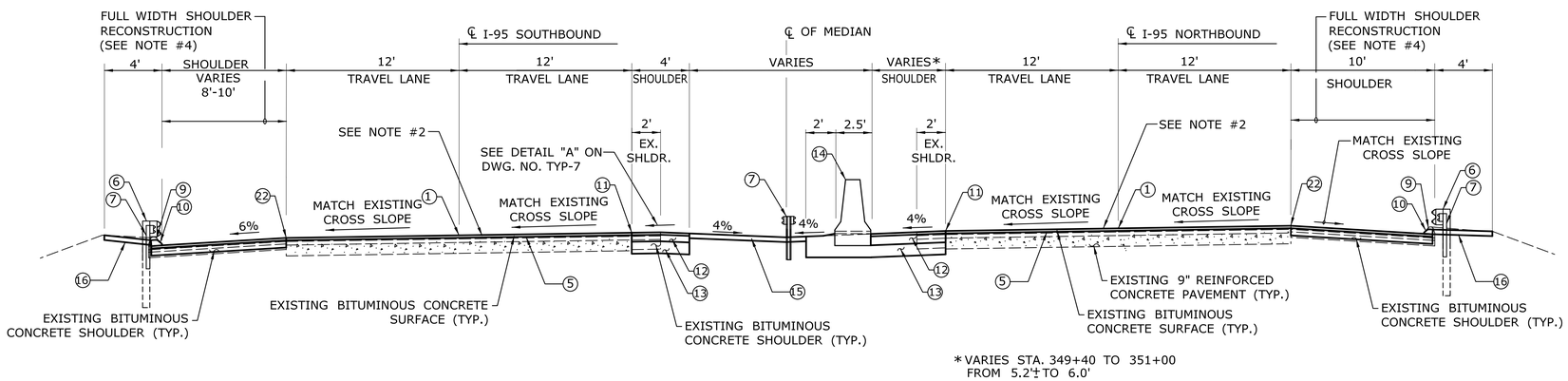

*VARIES STA. 349+40 TO 351+00
FROM 5.2'± TO 6.0'

I-95 SUPERELEVATED SECTION
STA. 349+40 TO STA. 351+00

NOT TO SCALE

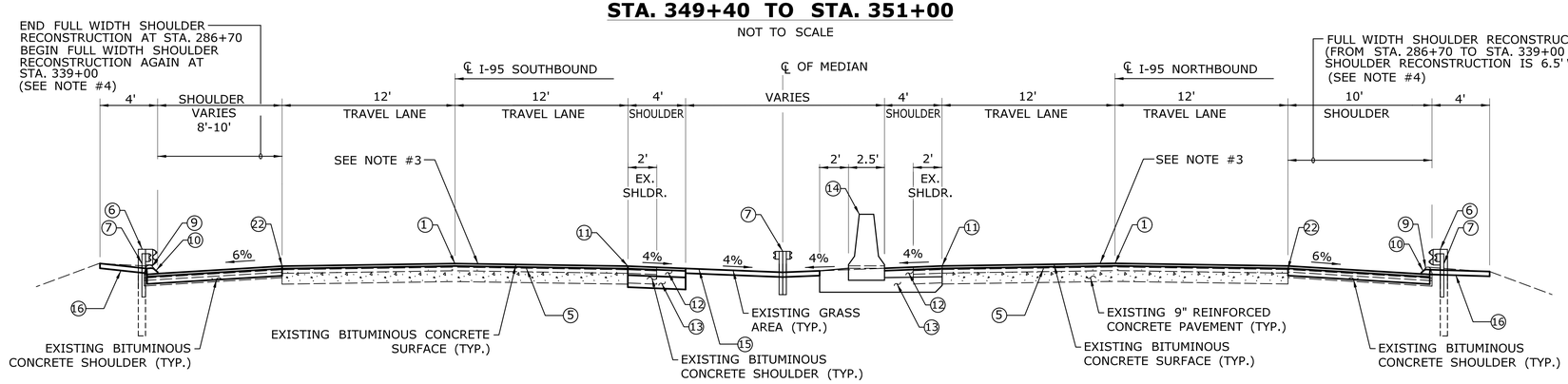

I-95 NORMAL SECTION
STA. 286+20 TO STA. 343+10

NOT TO SCALE

LEGEND

1. POINT OF APPLICATION OF GRADE
2. FINE MILLING (3" DEPTH)
3. FINE MILLING (2" DEPTH)
4. 2" PMA S0.5 ON 1" PMA S0.25
5. MATERIAL FOR TACK COAT
6. GUIDE RAILING (SEE PLANS FOR LOCATIONS AND TYPE)
7. EXISTING METAL BEAM RAIL TO BE REMOVED (SEE PLANS FOR LOCATIONS)
8. EXISTING ROADWAY PARAPET WALL TO REMAIN (SEE PLANS FOR LOCATION)
9. BITUMINOUS CONCRETE LIP CURB TO BE REMOVED (SEE PLANS FOR LOCATIONS)
10. BITUMINOUS CONCRETE PARK CURB (SEE PLANS FOR LOCATIONS)
11. CUT BITUMINOUS CONCRETE PAVEMENT AT EDGE OF PCC, REMOVE BITUMINOUS CONCRETE PAVEMENT FROM CUT TO EXIST. EGDE OF PAVEMENT
12. 7.5" HMA S1 (TWO EQUAL LIFTS)
13. 10" PROCESSED AGGREGATE BASE
14. F-SHAPE PRECAST CONCRETE BARRIER CURB WITH DRAINAGE SLOTS (30"x45")
15. 4" TOPSOIL AND TURF ESTABLISHMENT
16. 6" PROCESSED AGGREGATE (4' WIDE)
17. F-SHAPE PRECAST CONCRETE BARRIER CURB (21"x45")
18. VERTICAL FACE PRECAST CONCRETE BARRIER CURB (21"x45")
19. VERTICAL SHAPE PRECAST CONCRETE BARRIER CURB (21"x54")
20. 4" CONCRETE CAP (SEE PLANS FOR LOCATIONS)
21. GRAVEL FILL
22. CUT BITUMINOUS CONCRETE PAVEMENT AT EDGE OF REINFORCED CONCRETE PAVEMENT (PCC). IF NO PCC EXISTS, CUT 4" INSIDE ANY LONGITUDINAL JOINT WITHIN 2' OF WHITE LINE MARKING SHOULDER. IF NO PCC AND NO LONGITUDINAL JOINT NEAR WHITE LINE, CUT AT WHITE LINE. REMOVE EXISTING BITUMINOUS CONCRETE PAVEMENT FROM CUT TO EDGE OF ROAD.
23. CUT BITUMINOUS CONCRETE PAVEMENT AS SHOWN ON THE ROADWAY PLANS
24. 2" PMA S0.5
25. 6" HMA S1
26. 4" PMA S0.5 OIN TWO EQUAL LIFTS ON 5" HMA S1
27. 6" PROCESSED AGGREGATE BASE ON 6" SUBBASE
28. F-SHAPE PRECAST CONCRETE BARRIER CURB (30"x45")

NOTES

1. THE FINAL COURSE OF PMA S0.5 SHALL BE THE LAST PAVING OPERATION FOR THE ENTIRE LENGTH OF THE PROJECT.
2. NB AND SB TRAVELWAY (SUPERELEVATED SECTIONS)
   - PERFORM PCC JOINT AND MID-SLAB CRACKING REPAIRS (FOR DETAIL SEE DRAWING MDS-14)
   - FINE MILL 1.5" AND IN SAME NIGHT PAVE WITH FIRST LIFT LEVELING COURSE INCLUDING:
     - FILL AND COMPACT ANY DEPRESSIONS (SUCH AS OPEN LONGITUDINAL JOINTS AND POTHOLES) IN THE PAVEMENT SURFACE OVER 1" DEEP WITH ITEM 0601192A - SURFACE PATCH, BEFORE PLACING LEVELING COURSE
     - ADDITIONAL MILLED SURFACE CLEANING PROVISIONS APPLY TO ANY MILLED AREA THAT WILL NOT BE EXPOSED TO LIVE TRAFFIC FOR A MINIMUM OF 48 HOURS, AS SPECIFIED IN ITEM NO. 0406285A FINE MILLING
     - TACK COAT
     - PLACE 1.5" PMA S0.375 LEVELING COURSE
   - PLACE 2" PMA S0.5 SURFACE COURSE
3. NB AND SB TRAVELWAY (NORMAL SECTIONS/WEDGE SECTIONS WHERE CROSS SLOPE IS LESS THAN 1.5%)
   - PERFORM PCC JOINT AND MID-SLAB CRACKING REPAIRS (FOR DETAIL SEE DRAWING MDS-14)
   - FINE MILL 1.5" AND IN SAME NIGHT PAVE WITH FIRST LIFT WEDGE COURSE INCLUDING:
     - FILL AND COMPACT ANY DEPRESSIONS (SUCH AS OPEN LONGITUDINAL JOINTS AND POTHOLES) IN THE PAVEMENT SURFACE OVER 1" DEEP WITH ITEM 0601192A - SURFACE PATCH, BEFORE PLACING WEDGE COURSE
     - ADDITIONAL MILLED SURFACE CLEANING PROVISIONS APPLY TO ANY MILLED AREA THAT WILL NOT BE EXPOSED TO LIVE TRAFFIC FOR A MINIMUM OF 48 HOURS, AS SPECIFIED IN ITEM NO. 0406285A FINE MILLING
     - TACK COAT
     - PLACE PMA S0.375 WEDGE COURSE WITH THICKNESS OF 1.50" ON LOW SIDE (EDGE OF ROAD) AND THICKNESS OF UP TO 2.5" ON THE HIGH SIDE (MIDDLE OF ROAD) TO INCREASE CROSS SLOPE. HOWEVER DO NOT INCREASE FINAL ROAD CROSS SLOPE ABOVE 2%
   - PLACE 2" PMA S0.5 SURFACE COURSE
4. SHOULDER RECONSTRUCTION (ALL WORK TO DONE SAME NIGHT)
   - REMOVE EXISTING BITUMINOUS PAVEMENT FROM EDGE OF PCC TO FRONT OF CATCH BASINS (4' TO 6.5' TYP.) (DEPTH VARIES 5.5" TO 6.25")
   - COMPACT EXISTING GRANULAR BASE
   - PLACE 5.5" TO 6.25" HMA S1 IN A SINGLE LIFT
5. FULL DEPTH CONCRETE PATCHES
   - FULL DEPTH CONCRETE PATCHING SHOULD BE PERFORMED BEFORE MILLING 1.5 INCHES OF THE EXISTING PAVEMENT SURFACE. USE ITEM NO. 0401152A, "CONCRETE REPLACEMENT FOR ROADWAY (FULL-DEPTH)"

   STRUCTURE OF FULL DEPTH CONCRETE PATCHES
   - PLACE ROUGHLY 9 TO 14 INCHES OF PORTLAND CEMENT CONCRETE (PCC) AS NEEDED SO THAT THE TOP OF THE PCC IS EVEN WITH THE TOP OF THE EXISTING SURFACE. BOTTOM OF NEW PCC TO BE EVEN WITH THE BOTTOM OF EXISTING PCC IN EXISTING COMPOSITE PAVEMENT.
   - WHEN THE TRAVELWAY IS MILLED 1.5" THE TOP 1.5" OF THE PATCH WILL BE MILLED OFF
6. PAVEMENT STRUCTURE FOR BRIDGE NO. 06173 (I-95 OVER ROUTE 156) AND BRIDGE NO. 06032 (I-95 OVER LIEUTENANT RIVER)
   - PLACE 2" PMA S0.5 ON 1" PMA S0.25 AND ASPHALTIC PLUG JOINTS
7. PAVEMENT STRUCTURE FOR BRIDGE NO. 00243 (I-95 OVER LYME STREET)
   - USE SAME STRUCTURE AS TYPICAL PAVEMENT SURROUNDING BRIDGE.
8. PAVEMENT STRUCTURE FOR BRIDGE UNDERPASSES
   - SEE DRAWINGS PLN-15, PLN-20 AND PLN-26

FINAL DESIGN REVIEW

REV.	DATE	REVISION DESCRIPTION	SHEET NO.
-	-	-	-
-	-	-	-
-	-	-	-
-	-	-	-
-	-	-	-
-	-	-	-

THE INFORMATION, INCLUDING ESTIMATED QUANTITIES OF WORK, SHOWN ON THESE SHEETS IS BASED ON LIMITED INVESTIGATIONS BY THE STATE AND IS IN NO WAY WARRANTED TO INDICATE THE CONDITIONS OF ACTUAL QUANTITIES OF WORK WHICH WILL BE REQUIRED.

Plotted Date: 4/2/2014

DESIGNER/DRAFTER: RL/MF/EK
CHECKED BY: D. DAGAN
SCALE AS NOTED

STATE OF CONNECTICUT
DEPARTMENT OF TRANSPORTATION

Filename: ...\Sections\HW_MSH_TYP-06.DGN

SIGNATURE/ BLOCK:

PROJECT TITLE: INTERSTATE 95 RESURFACING AND SAFETY IMPROVEMENTS

TOWN: OLD SAYBROOK, OLD LYME & EAST LYME

DRAWING TITLE: TYPICAL SECTIONS

PROJECT NO. 104-164
DRAWING NO. TYP-6
SHEET NO. 03.13

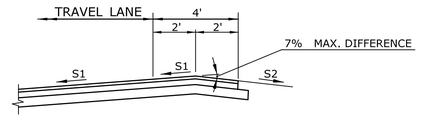

NOTES:
1. MAY REQUIRE ATTACHABLE EXTENSIONS OR CUT-OFF PLATES ON PAVING EQUIPMENT.
2. WHERE S2 IS FLATTER THAN 2%, THE CONTRACTOR SHALL VERIFY THE CROSS SLOPE AT EACH 25' INTERVAL (PAYMENT TO BE INCLUDED IN THE COST OF THE SUPERPAVE PAY ITEM - THERE WILL BE NO DIRECT PAYMENT.)
3. S2 SHALL BE 1% MINIMUM.

DETAIL "A"
SHOULDER TREATMENT AT HIGH SIDE OF BANK
NOT TO SCALE

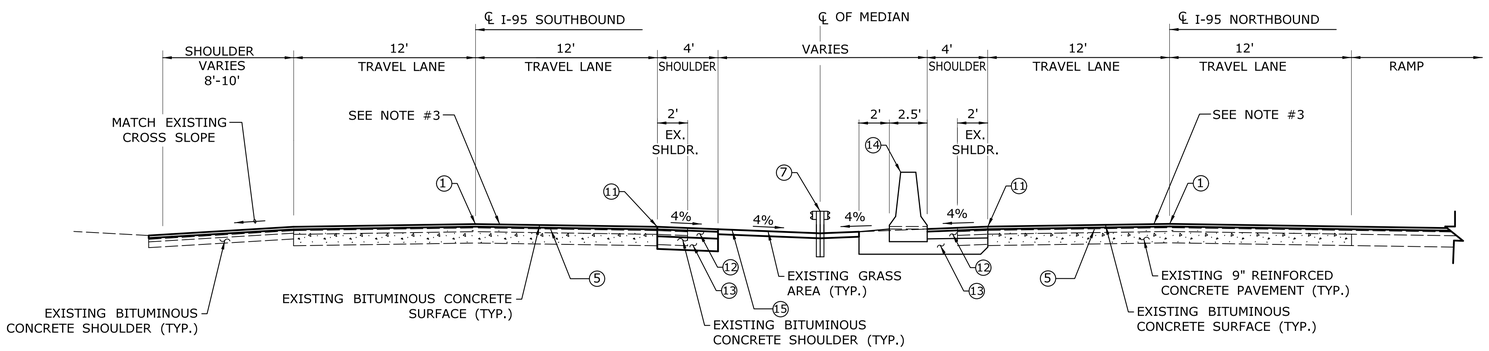

I-95 NORMAL SECTION
STA. 362+80 TO STA. 370+00
NOT TO SCALE

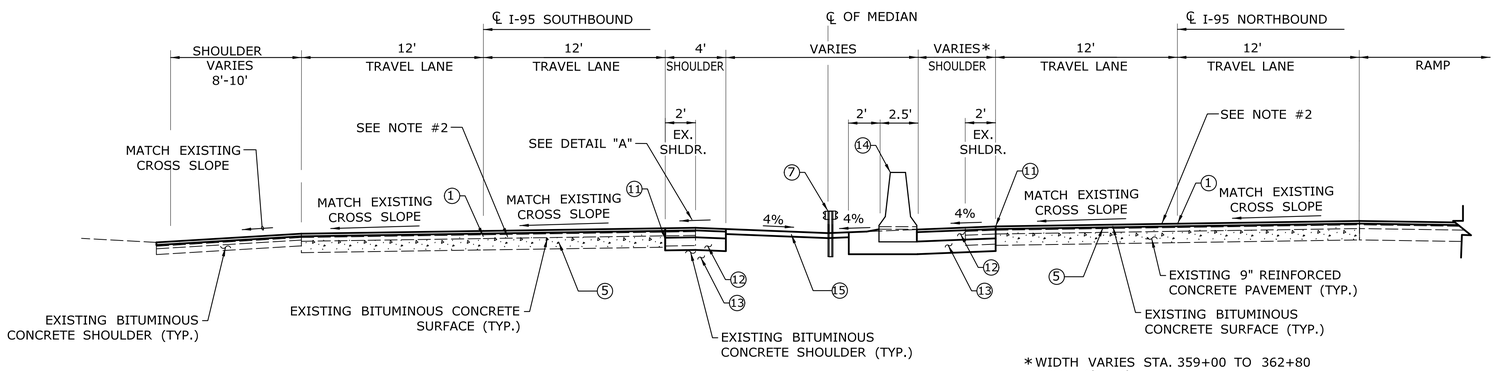

*WIDTH VARIES STA. 359+00 TO 362+80 FROM 6' to 4'

I-95 SUPERELEVATED SECTION
STA. 359+00 TO STA. 362+80
NOT TO SCALE

LEGEND
1. POINT OF APPLICATION OF GRADE
2. FINE MILLING (3" DEPTH)
3. FINE MILLING (2" DEPTH)
4. 2" PMA S0.5 ON 1" PMA S0.25
5. MATERIAL FOR TACK COAT
6. GUIDE RAILING (SEE PLANS FOR LOCATIONS AND TYPE)
7. EXISTING METAL BEAM RAIL TO BE REMOVED (SEE PLANS FOR LOCATIONS)
8. EXISTING ROADWAY PARAPET WALL TO REMAIN (SEE PLANS FOR LOCATION)
9. BITUMINOUS CONCRETE LIP CURB TO BE REMOVED (SEE PLANS FOR LOCATIONS)
10. BITUMINOUS CONCRETE PARK CURB (SEE PLANS FOR LOCATIONS)
11. CUT BITUMINOUS CONCRETE PAVEMENT AT EDGE OF PCC, REMOVE BITUMINOUS CONCRETE PAVEMENT FROM CUT TO EXIST. EGDE OF PAVEMENT
12. 7.5" HMA S1 (TWO EQUAL LIFTS)
13. 10" PROCESSED AGGREGATE BASE
14. F-SHAPE PRECAST CONCRETE BARRIER CURB WITH DRAINAGE SLOTS (30"x45")
15. 4" TOPSOIL AND TURF ESTABLISHMENT
16. 6" PROCESSED AGGREGATE (4' WIDE)
17. F-SHAPE PRECAST CONCRETE BARRIER CURB (21"x45")
18. VERTICAL FACE PRECAST CONCRETE BARRIER CURB (21"x45")
19. VERTICAL SHAPE PRECAST CONCRETE BARRIER CURB (21"x54")
20. 4" CONCRETE CAP (SEE PLANS FOR LOCATIONS)
21. GRAVEL FILL
22. CUT BITUMINOUS CONCRETE PAVEMENT AT EDGE OF REINFORCED CONCRETE PAVEMENT (PCC). IF NO PCC EXISTS, CUT 4" INSIDE ANY LONGITUDINAL JOINT WITHIN 2' OF WHITE LINE MARKING SHOULDER. IF NO PCC AND NO LONGITUDINAL JOINT NEAR WHITE LINE, CUT AT WHITE LINE. REMOVE EXISTING BITUMINOUS CONCRETE PAVEMENT FROM CUT TO EDGE OF ROAD.
23. CUT BITUMINOUS CONCRETE PAVEMENT AS SHOWN ON THE ROADWAY PLANS
24. 2" PMA S0.5
25. 6" HMA S1
26. 4" PMA S0.5 OIN TWO EQUAL LIFTS ON 5" HMA S1
27. 6" PROCESSED AGGREGATE BASE ON 6" SUBBASE
28. F-SHAPE PRECAST CONCRETE BARRIER CURB (30"x45")

NOTES
1. THE FINAL COURSE OF PMA S0.5 SHALL BE THE LAST PAVING OPERATION FOR THE ENTIRE LENGTH OF THE PROJECT.
2. NB AND SB TRAVELWAY (SUPERELEVATED SECTIONS)
   - PERFORM PCC JOINT AND MID-SLAB CRACKING REPAIRS (FOR DETAIL SEE DRAWING MDS-14)
   - FINE MILL 1.5" AND IN SAME NIGHT PAVE WITH FIRST LIFT LEVELING COURSE INCLUDING:
     - FILL AND COMPACT ANY DEPRESSIONS (SUCH AS OPEN LONGITUDINAL JOINTS AND POTHOLES) IN THE PAVEMENT SURFACE OVER 1" DEEP WITH ITEM 0601192A - SURFACE PATCH, BEFORE PLACING LEVELING COURSE
     - ADDITIONAL MILLED SURFACE CLEANING PROVISIONS APPLY TO ANY MILLED AREA THAT WILL NOT BE EXPOSED TO LIVE TRAFFIC FOR A MINIMUM OF 48 HOURS, AS SPECIFIED IN ITEM NO. 0406285A FINE MILLING
     - TACK COAT
     - PLACE 1.5" PMA S0.375 LEVELING COURSE
   - PLACE 2" PMA S0.5 SURFACE COURSE
3. NB AND SB TRAVELWAY (NORMAL SECTIONS/WEDGE SECTIONS WHERE CROSS SLOPE IS LESS THAN 1.5%)
   - PERFORM PCC JOINT AND MID-SLAB CRACKING REPAIRS (FOR DETAIL SEE DRAWING MDS-14)
   - FINE MILL 1.5" AND IN SAME NIGHT PAVE WITH FIRST LIFT WEDGE COURSE INCLUDING:
     - FILL AND COMPACT ANY DEPRESSIONS (SUCH AS OPEN LONGITUDINAL JOINTS AND POTHOLES) IN THE PAVEMENT SURFACE OVER 1" DEEP WITH ITEM 0601192A - SURFACE PATCH, BEFORE PLACING WEDGE COURSE
     - ADDITIONAL MILLED SURFACE CLEANING PROVISIONS APPLY TO ANY MILLED AREA THAT WILL NOT BE EXPOSED TO LIVE TRAFFIC FOR A MINIMUM OF 48 HOURS, AS SPECIFIED IN ITEM NO. 0406285A FINE MILLING
     - TACK COAT
     - PLACE PMA S0.375 WEDGE COURSE WITH THICKNESS OF 1.50" ON LOW SIDE (EDGE OF ROAD) AND THICKNESS OF UP TO 2.5" ON THE HIGH SIDE (MIDDLE OF ROAD) TO INCREASE CROSS SLOPE. HOWEVER DO NOT INCREASE FINAL ROAD CROSS SLOPE ABOVE 2%
   - PLACE 2" PMA S0.5 SURFACE COURSE
4. SHOULDER RECONSTRUCTION (ALL WORK TO DONE SAME NIGHT)
   - REMOVE EXISTING BITUMINOUS PAVEMENT FROM EDGE OF PCC TO FRONT OF CATCH BASINS (4' TO 6.5' TYP.) (DEPTH VARIES 5.5" TO 6.25")
   - COMPACT EXISTING GRANULAR BASE
   - PLACE 5.5" TO 6.25" HMA S1 IN A SINGLE LIFT
5. FULL DEPTH CONCRETE PATCHES
   - FULL DEPTH CONCRETE PATCHING SHOULD BE PERFORMED BEFORE MILLING 1.5 INCHES OF THE EXISTING PAVEMENT SURFACE. USE ITEM NO. 0401152A, "CONCRETE REPLACEMENT FOR ROADWAY (FULL-DEPTH)"

   STRUCTURE OF FULL DEPTH CONCRETE PATCHES
   - PLACE ROUGHLY 9 TO 14 INCHES OF PORTLAND CEMENT CONCRETE (PCC) AS NEEDED SO THAT THE TOP OF THE PCC IS EVEN WITH THE TOP OF THE EXISTING SURFACE. BOTTOM OF NEW PCC TO BE EVEN WITH THE BOTTOM OF EXISTING PCC IN EXISTING COMPOSITE PAVEMENT.
   - WHEN THE TRAVELWAY IS MILLED 1.5" THE TOP 1.5" OF THE PATCH WILL BE MILLED OFF
6. PAVEMENT STRUCTURE FOR BRIDGE NO. 06173 (I-95 OVER ROUTE 156) AND BRIDGE NO. 06032 (I-95 OVER LIEUTENANT RIVER)
   - PLACE 2" PMA S0.5 ON 1" PMA S0.25 AND ASPHALTIC PLUG JOINTS
7. PAVEMENT STRUCTURE FOR BRIDGE NO. 00243 (I-95 OVER LYME STREET)
   - USE SAME STRUCTURE AS TYPICAL PAVEMENT SURROUNDING BRIDGE.
8. PAVEMENT STRUCTURE FOR BRIDGE UNDERPASSES
   - SEE DRAWINGS PLN-15, PLN-20 AND PLN-26

FINAL DESIGN REVIEW

REV.	DATE	REVISION DESCRIPTION	SHEET NO.
-	-	-	-
-	-	-	-
-	-	-	-
-	-	-	-
-	-	-	-
-	-	-	-

THE INFORMATION, INCLUDING ESTIMATED QUANTITIES OF WORK, SHOWN ON THESE SHEETS IS BASED ON LIMITED INVESTIGATIONS BY THE STATE AND IS IN NO WAY WARRANTED TO INDICATE THE CONDITIONS OF ACTUAL QUANTITIES OF WORK WHICH WILL BE REQUIRED.

Plotted Date: 4/2/2014

DESIGNER/DRAFTER: RL/MF/EK
CHECKED BY: D. DAGAN
SCALE AS NOTED

STATE OF CONNECTICUT
DEPARTMENT OF TRANSPORTATION

Filename: ...\Sections\HW_MSH_TYP-07.DGN

SIGNATURE/BLOCK:

PROJECT TITLE: INTERSTATE 95 RESURFACING AND SAFETY IMPROVEMENTS

TOWN: OLD SAYBROOK, OLD LYME & EAST LYME

DRAWING TITLE: TYPICAL SECTIONS

PROJECT NO. 104-164
DRAWING NO. TYP-7
SHEET NO. 03.14

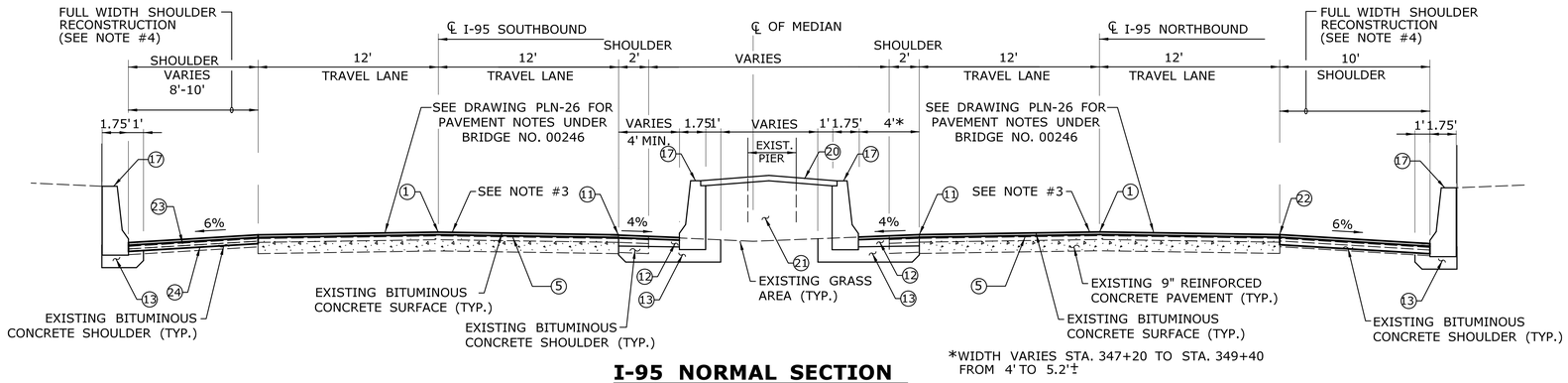

*WIDTH VARIES STA. 347+20 TO STA. 349+40 FROM 4' TO 5.2'±

I-95 NORMAL SECTION
SPLIT MEDIAN BARRIER CURB (PIER PROTECTION)
BRIDGE NO. 00246 - FOUR MILE RIVER ROAD
STA. 343+10 TO STA. 349+40

NOT TO SCALE

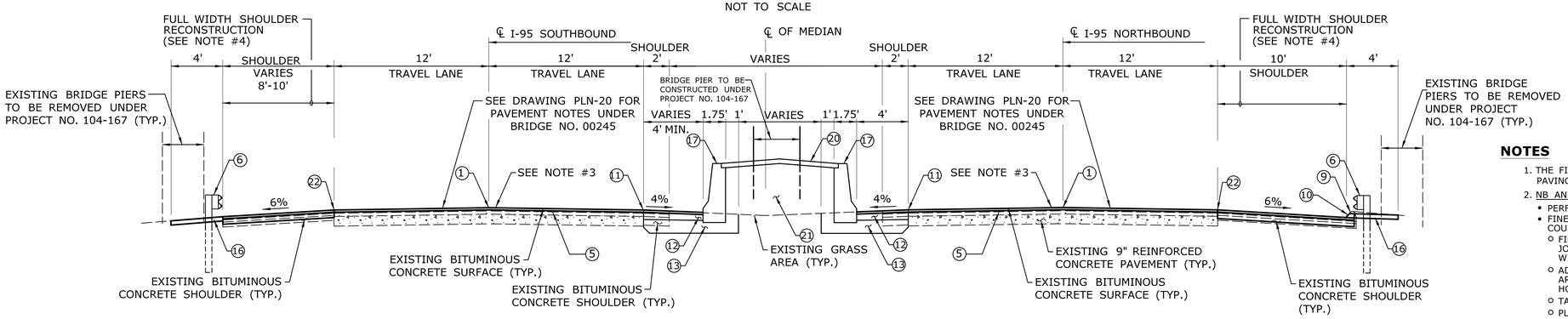

I-95 NORMAL SECTION
SPLIT MEDIAN BARRIER CURB (PIER PROTECTION)
BRIDGE NO. 00245 - FLAT ROCK HILL ROAD
STA. 279+35 TO STA. 286+20

NOT TO SCALE

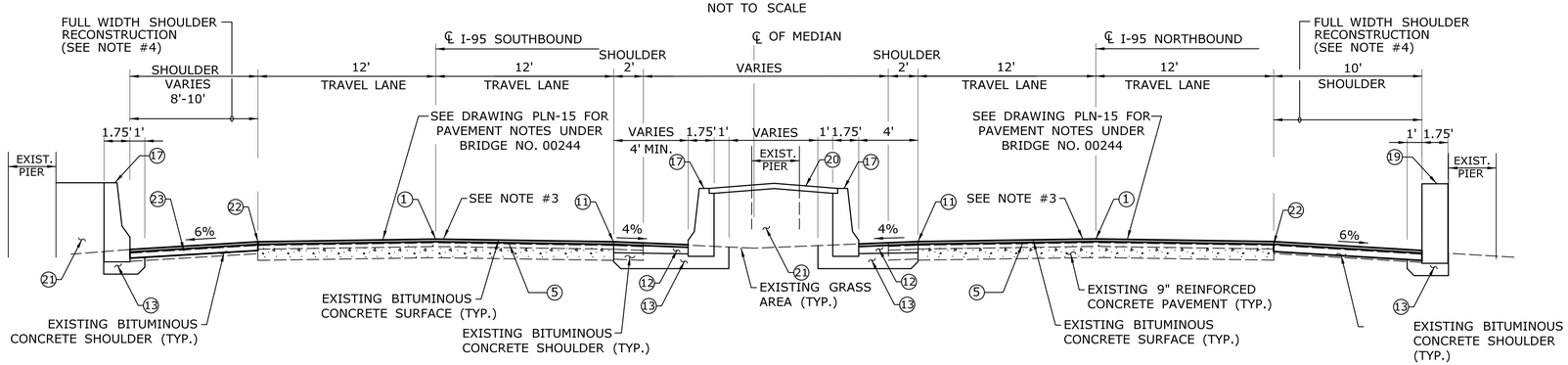

I-95 NORMAL SECTION
SPLIT MEDIAN BARRIER CURB (PIER PROTECTION)
BRIDGE NO. 00244 - WHIPPOORWILL ROAD
STA. 222+32 TO STA. 227+27

NOT TO SCALE

LEGEND

1. POINT OF APPLICATION OF GRADE
2. FINE MILLING (3" DEPTH)
3. FINE MILLING (2" DEPTH)
4. 2" PMA S0.5 ON 1" PMA S0.25
5. MATERIAL FOR TACK COAT
6. GUIDE RAILING (SEE PLANS FOR LOCATIONS AND TYPE)
7. EXISTING METAL BEAM RAIL TO BE REMOVED (SEE PLANS FOR LOCATIONS)
8. EXISTING ROADWAY PARAPET WALL TO REMAIN (SEE PLANS FOR LOCATION)
9. BITUMINOUS CONCRETE LIP CURB TO BE REMOVED (SEE PLANS FOR LOCATIONS)
10. BITUMINOUS CONCRETE PARK CURB (SEE PLANS FOR LOCATIONS)
11. CUT BITUMINOUS CONCRETE PAVEMENT AT EDGE OF PCC, REMOVE BITUMINOUS CONCRETE PAVEMENT FROM CUT TO EXIST. EGDE OF PAVEMENT
12. 7.5" HMA S1 (TWO EQUAL LIFTS)
13. 10" PROCESSED AGGREGATE BASE
14. F-SHAPE PRECAST CONCRETE BARRIER CURB WITH DRAINAGE SLOTS (30"x45")
15. 4" TOPSOIL AND TURF ESTABLISHMENT
16. 6" PROCESSED AGGREGATE (4' WIDE)
17. F-SHAPE PRECAST CONCRETE BARRIER CURB (21"x45")
18. VERTICAL FACE PRECAST CONCRETE BARRIER CURB (21"x45")
19. VERTICAL SHAPE PRECAST CONCRETE BARRIER CURB (21"x54")
20. 4" CONCRETE CAP (SEE PLANS FOR LOCATIONS)
21. GRAVEL FILL
22. CUT BITUMINOUS CONCRETE PAVEMENT AT EDGE OF REINFORCED CONCRETE PAVEMENT (PCC). IF NO PCC EXISTS, CUT 4" INSIDE ANY LONGITUDINAL JOINT WITHIN 2' OF WHITE LINE MARKING SHOULDER. IF NO PCC AND NO LONGITUDINAL JOINT NEAR WHITE LINE, CUT AT WHITE LINE. REMOVE EXISTING BITUMINOUS CONCRETE PAVEMENT FROM CUT TO EDGE OF ROAD.
23. CUT BITUMINOUS CONCRETE PAVEMENT AS SHOWN ON THE ROADWAY PLANS
24. 2" PMA S0.5
25. 6" HMA S1
26. 4" PMA S0.5 OIN TWO EQUAL LIFTS ON 5" HMA S1
27. 6" PROCESSED AGGREGATE BASE ON 6" SUBBASE
28. F-SHAPE PRECAST CONCRETE BARRIER CURB (30"x45")

NOTES

1. THE FINAL COURSE OF PMA S0.5 SHALL BE THE LAST PAVING OPERATION FOR THE ENTIRE LENGTH OF THE PROJECT.
2. NB AND SB TRAVELWAY (SUPERELEVATED SECTIONS)
   - PERFORM PCC JOINT AND MID-SLAB CRACKING REPAIRS (FOR DETAIL SEE DRAWING MDS-14)
   - FINE MILL 1.5" AND IN SAME NIGHT PAVE WITH FIRST LIFT LEVELING COURSE INCLUDING:
     - FILL AND COMPACT ANY DEPRESSIONS (SUCH AS OPEN LONGITUDINAL JOINTS AND POTHOLES) IN THE PAVEMENT SURFACE OVER 1" DEEP WITH ITEM 0601192A - SURFACE PATCH, BEFORE PLACING LEVELING COURSE
     - ADDITIONAL MILLED SURFACE CLEANING PROVISIONS APPLY TO ANY MILLED AREA THAT WILL NOT BE EXPOSED TO LIVE TRAFFIC FOR A MINIMUM OF 48 HOURS, AS SPECIFIED IN ITEM NO. 0406285A FINE MILLING
     - TACK COAT
     - PLACE 1.5" PMA S0.375 LEVELING COURSE
   - PLACE 2" PMA S0.5 SURFACE COURSE
3. NB AND SB TRAVELWAY (NORMAL SECTIONS/WEDGE SECTIONS WHERE CROSS SLOPE IS LESS THAN 1.5%)
   - PERFORM PCC JOINT AND MID-SLAB CRACKING REPAIRS (FOR DETAIL SEE DRAWING MDS-14)
   - FINE MILL 1.5" AND IN SAME NIGHT PAVE WITH FIRST LIFT WEDGE COURSE INCLUDING:
     - FILL AND COMPACT ANY DEPRESSIONS (SUCH AS OPEN LONGITUDINAL JOINTS AND POTHOLES) IN THE PAVEMENT SURFACE OVER 1" DEEP WITH ITEM 0601192A - SURFACE PATCH, BEFORE PLACING WEDGE COURSE
     - ADDITIONAL MILLED SURFACE CLEANING PROVISIONS APPLY TO ANY MILLED AREA THAT WILL NOT BE EXPOSED TO LIVE TRAFFIC FOR A MINIMUM OF 48 HOURS, AS SPECIFIED IN ITEM NO. 0406285A FINE MILLING
     - TACK COAT
     - PLACE PMA S0.375 WEDGE COURSE WITH THICKNESS OF 1.50" ON LOW SIDE (EDGE OF ROAD) AND THICKNESS OF UP TO 2.5" ON THE HIGH SIDE (MIDDLE OF ROAD) TO INCREASE CROSS SLOPE. HOWEVER DO NOT INCREASE FINAL ROAD CROSS SLOPE ABOVE 2%
   - PLACE 2" PMA S0.5 SURFACE COURSE
4. SHOULDER RECONSTRUCTION (ALL WORK TO DONE SAME NIGHT)
   - REMOVE EXISTING BITUMINOUS PAVEMENT FROM EDGE OF PCC TO FRONT OF CATCH BASINS (4' TO 6.5' TYP.) (DEPTH VARIES 5.5" TO 6.25")
   - COMPACT EXISTING GRANULAR BASE
   - PLACE 5.5" TO 6.25" HMA S1 IN A SINGLE LIFT
5. FULL DEPTH CONCRETE PATCHES
   - FULL DEPTH CONCRETE PATCHING SHOULD BE PERFORMED BEFORE MILLING 1.5 INCHES OF THE EXISTING PAVEMENT SURFACE. USE ITEM NO. 0401152A, "CONCRETE REPLACEMENT FOR ROADWAY (FULL-DEPTH)"

   STRUCTURE OF FULL DEPTH CONCRETE PATCHES
   - PLACE ROUGHLY 9 TO 14 INCHES OF PORTLAND CEMENT CONCRETE (PCC) AS NEEDED SO THAT THE TOP OF THE PCC IS EVEN WITH THE TOP OF THE EXISTING SURFACE. BOTTOM OF NEW PCC TO BE EVEN WITH THE BOTTOM OF EXISTING PCC IN EXISTING COMPOSITE PAVEMENT.
   - WHEN THE TRAVELWAY IS MILLED 1.5" THE TOP 1.5" OF THE PATCH WILL BE MILLED OFF
6. PAVEMENT STRUCTURE FOR BRIDGE NO. 06173 (I-95 OVER ROUTE 156) AND BRIDGE NO. 06032 (I-95 OVER LIEUTENANT RIVER)
   - PLACE 2" PMA S0.5 ON 1" PMA S0.25 AND ASPHALTIC PLUG JOINTS
7. PAVEMENT STRUCTURE FOR BRIDGE NO. 00243 (I-95 OVER LYME STREET)
   - USE SAME STRUCTURE AS TYPICAL PAVEMENT SURROUNDING BRIDGE.
8. PAVEMENT STRUCTURE FOR BRIDGE UNDERPASSES
   - SEE DRAWINGS PLN-15, PLN-20 AND PLN-26

FINAL DESIGN REVIEW

REV.	DATE	REVISION DESCRIPTION	SHEET NO.
-	-	-	-
-	-	-	-
-	-	-	-
-	-	-	-
-	-	-	-
-	-	-	-

THE INFORMATION, INCLUDING ESTIMATED QUANTITIES OF WORK, SHOWN ON THESE SHEETS IS BASED ON LIMITED INVESTIGATIONS BY THE STATE AND IS IN NO WAY WARRANTED TO INDICATE THE CONDITIONS OF ACTUAL QUANTITIES OF WORK WHICH WILL BE REQUIRED.

Plotted Date: 4/2/2014

DESIGNER/DRAFTER: RL/MF/EK
CHECKED BY: D. DAGAN
SCALE AS NOTED

STATE OF CONNECTICUT
DEPARTMENT OF TRANSPORTATION

Filename: ..\Sections\HW_MSH_TYP-08.DGN

SIGNATURE/BLOCK:

PROJECT TITLE: INTERSTATE 95 RESURFACING AND SAFETY IMPROVEMENTS

TOWN: OLD SAYBROOK, OLD LYME, EAST LYME

DRAWING TITLE: TYPICAL SECTIONS

PROJECT NO. 104-164
DRAWING NO. TYP-8
SHEET NO. 03.15

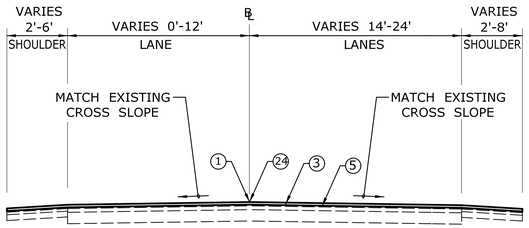

TYPICAL RAMP SECTION
EXIT 70 NB OFF-RAMP
NOT TO SCALE

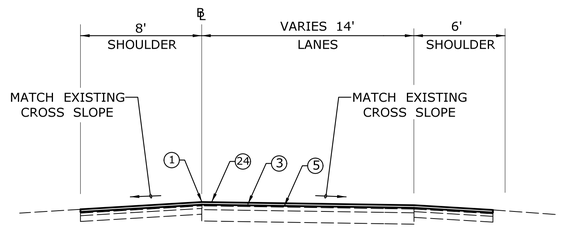

TYPICAL RAMP SECTION
EXIT 70 NB ON-RAMP
NOT TO SCALE

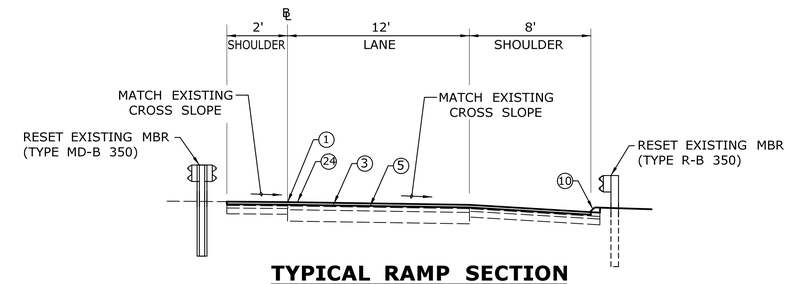

TYPICAL RAMP SECTION
EXIT 72 SB OFF-RAMP
NOT TO SCALE

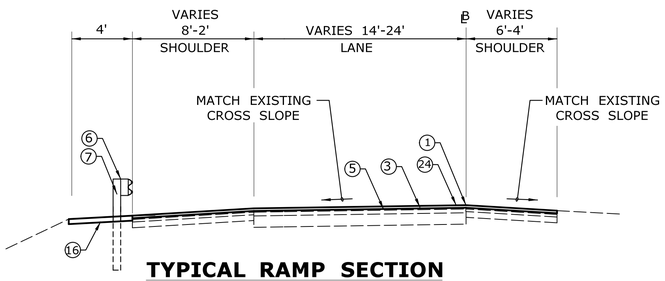

TYPICAL RAMP SECTION
EXIT 70 SB OFF-RAMP
NOT TO SCALE

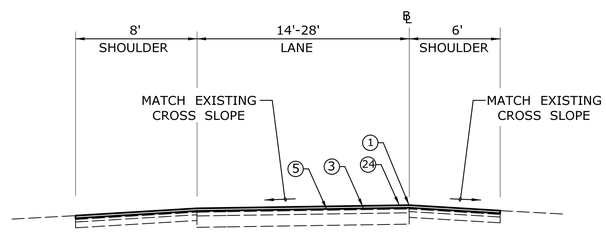

TYPICAL RAMP SECTION
EXIT 70 SB ON-RAMP
NOT TO SCALE

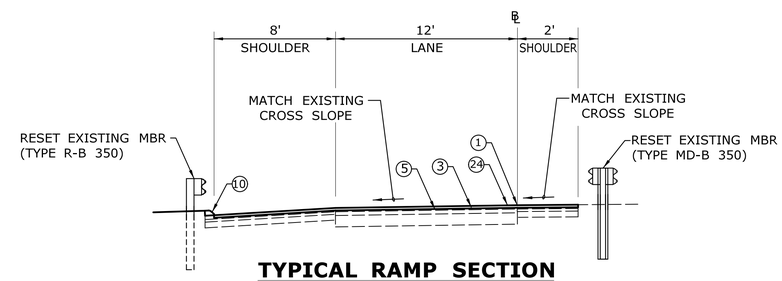

TYPICAL RAMP SECTION
EXIT 72 SB ON-RAMP
NOT TO SCALE

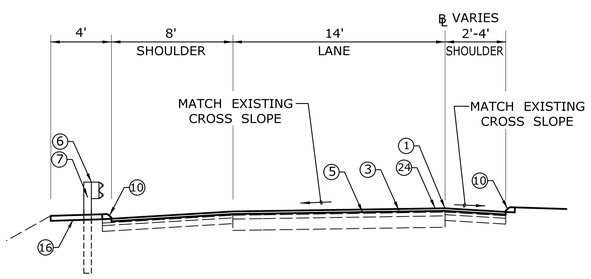

TYPICAL RAMP SECTION
EXIT 71 NB OFF-RAMP
NOT TO SCALE

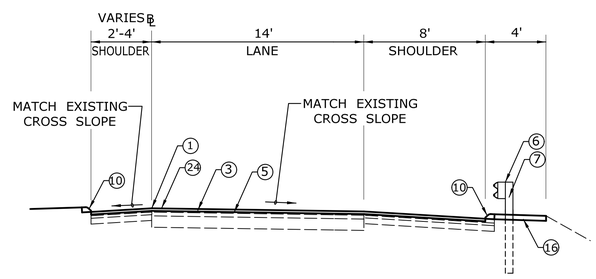

TYPICAL RAMP SECTION
EXIT 71 NB ON-RAMP
NOT TO SCALE

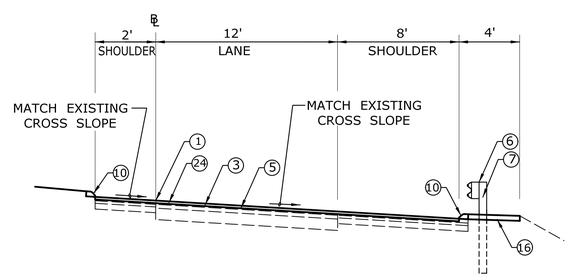

TYPICAL RAMP SECTION (SUPERELEVATED)
EXIT 72 NB ON-RAMP AND OFF-RAMP
NOT TO SCALE

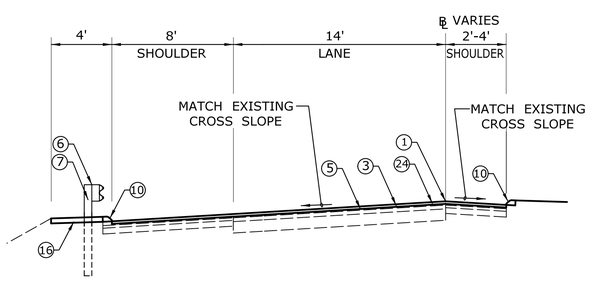

TYPICAL RAMP SECTION (SUPERELEVATED)
EXIT 71 NB OFF-RAMP
NOT TO SCALE

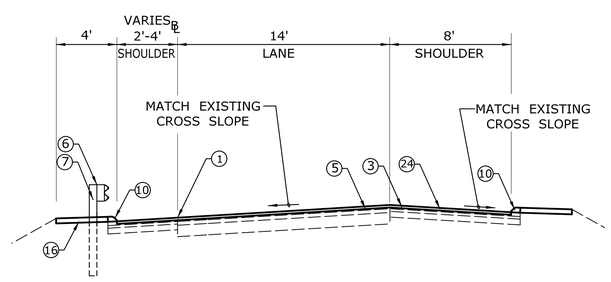

TYPICAL RAMP SECTION (SUPERELEVATED)
EXIT 71 NB ON-RAMP
NOT TO SCALE

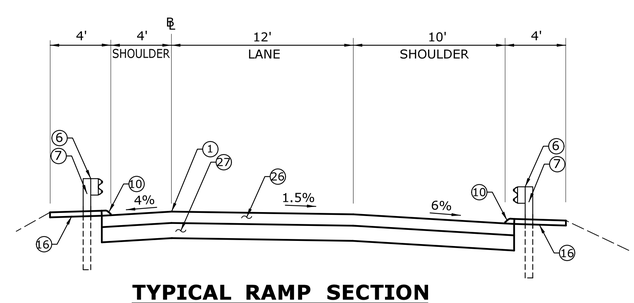

TYPICAL RAMP SECTION
EXIT 71 SB ON-RAMP & SB OFF-RAMP
FULL DEPTH RECONSTRUCTION
NOT TO SCALE

LEGEND

1. POINT OF APPLICATION OF GRADE
2. FINE MILLING (3" DEPTH)
3. FINE MILLING (2" DEPTH)
4. 2" PMA S0.5 ON 1" PMA S0.25
5. MATERIAL FOR TACK COAT
6. GUIDE RAILING (SEE PLANS FOR LOCATIONS AND TYPE)
7. EXISTING METAL BEAM RAIL TO BE REMOVED (SEE PLANS FOR LOCATIONS)
8. EXISTING ROADWAY PARAPET WALL TO REMAIN (SEE PLANS FOR LOCATION)
9. BITUMINOUS CONCRETE LIP CURB TO BE REMOVED (SEE PLANS FOR LOCATIONS)
10. BITUMINOUS CONCRETE PARK CURB (SEE PLANS FOR LOCATIONS)
11. CUT BITUMINOUS CONCRETE PAVEMENT AT EDGE OF PCC, REMOVE BITUMINOUS CONCRETE PAVEMENT FROM CUT TO EXIST. EGDE OF PAVEMENT
12. 7.5" HMA S1 (TWO EQUAL LIFTS)
13. 10" PROCESSED AGGREGATE BASE
14. F-SHAPE PRECAST CONCRETE BARRIER CURB WITH DRAINAGE SLOTS (30"x45")
15. 4" TOPSOIL AND TURF ESTABLISHMENT
16. 6" PROCESSED AGGREGATE (4' WIDE)
17. F-SHAPE PRECAST CONCRETE BARRIER CURB (21"x45")
18. VERTICAL FACE PRECAST CONCRETE BARRIER CURB (21"x45")
19. VERTICAL SHAPE PRECAST CONCRETE BARRIER CURB (21"x54")
20. 4" CONCRETE CAP (SEE PLANS FOR LOCATIONS)
21. GRAVEL FILL
22. CUT BITUMINOUS CONCRETE PAVEMENT AT EDGE OF REINFORCED CONCRETE PAVEMENT (PCC). IF NO PCC EXISTS, CUT 4" INSIDE ANY LONGITUDINAL JOINT WITHIN 2' OF WHITE LINE MARKING SHOULDER. IF NO PCC AND NO LONGITUDINAL JOINT NEAR WHITE LINE, CUT AT WHITE LINE. REMOVE EXISTING BITUMINOUS CONCRETE PAVEMENT FROM CUT TO EDGE OF ROAD.
23. CUT BITUMINOUS CONCRETE PAVEMENT AS SHOWN ON THE ROADWAY PLANS
24. 2" PMA S0.5
25. 6" HMA S1
26. 4" PMA S0.5 IN TWO EQUAL LIFTS ON 5" HMA S1
27. 6" PROCESSED AGGREGATE BASE ON 6" SUBBASE
28. F-SHAPE PRECAST CONCRETE BARRIER CURB (30"x45")

FINAL DESIGN REVIEW

REV.	DATE	REVISION DESCRIPTION	SHEET NO.
-	-	-	-
-	-	-	-
-	-	-	-
-	-	-	-
-	-	-	-
-	-	-	-

THE INFORMATION, INCLUDING ESTIMATED QUANTITIES OF WORK, SHOWN ON THESE SHEETS IS BASED ON LIMITED INVESTIGATIONS BY THE STATE AND IS IN NO WAY WARRANTED TO INDICATE THE CONDITIONS OF ACTUAL QUANTITIES OF WORK WHICH WILL BE REQUIRED.

Plotted Date: 4/2/2014

DESIGNER/DRAFTER: RL/MF/EK
CHECKED BY: D. DAGAN
SCALE AS NOTED

STATE OF CONNECTICUT
DEPARTMENT OF TRANSPORTATION

Filename: ..\Sections\HW_MSH_TYP-09.DGN

SIGNATURE/ BLOCK:

PROJECT TITLE: INTERSTATE 95 RESURFACING AND SAFETY IMPROVEMENTS

TOWN: OLD SAYBROOK, OLD LYME & EAST LYME

DRAWING TITLE: TYPICAL SECTIONS

PROJECT NO. 104-164
DRAWING NO. TYP-9
SHEET NO. 03.16

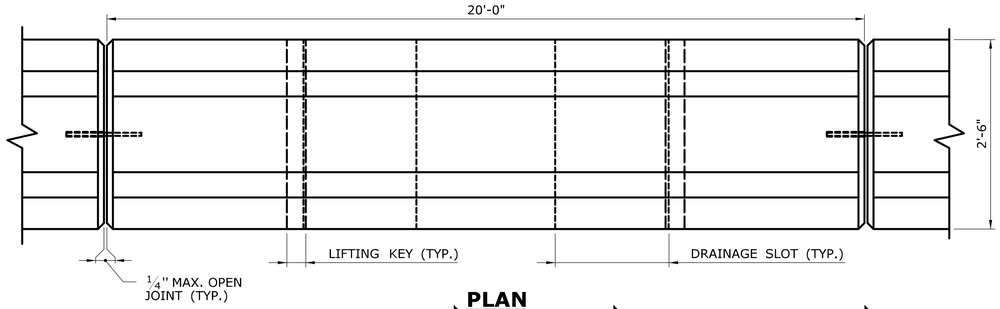

PLAN

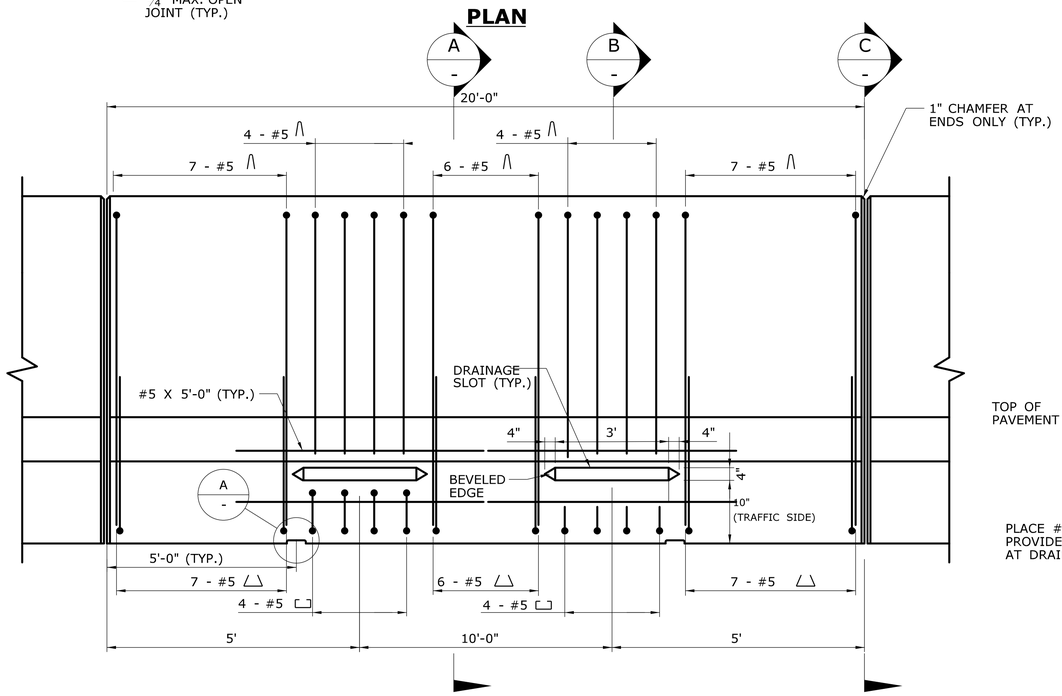

ELEVATION

30" x 45" PRECAST CONCRETE BARRIER CURB UNIT

VERTICAL SCALE: 1" = 1'-0"
HORIZONTAL SCALE: 1/2" = 1'-0"

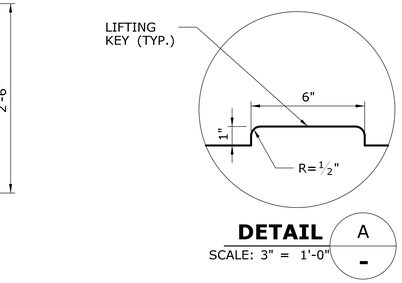

DETAIL A
SCALE: 3" = 1'-0"

GENERAL NOTES:

1. ALTERNATE DESIGNS FOR THE FOLLOWING ITEMS MAY BE SUBSTITUTED TO THE ENGINEER FOR APPROVAL :
   A) UNIT END CONNECTIONS SIMILAR TO DESIGNS SHOWN.
   B) LIFTING KEYS OR OTHER HANDLING DEVICES.
2. TERMINAL END TREATMENTS SHALL BE CONSTRUCTED AS SHOWN ON THE PLANS OR AS DIRECTED BY THE ENGINEER.

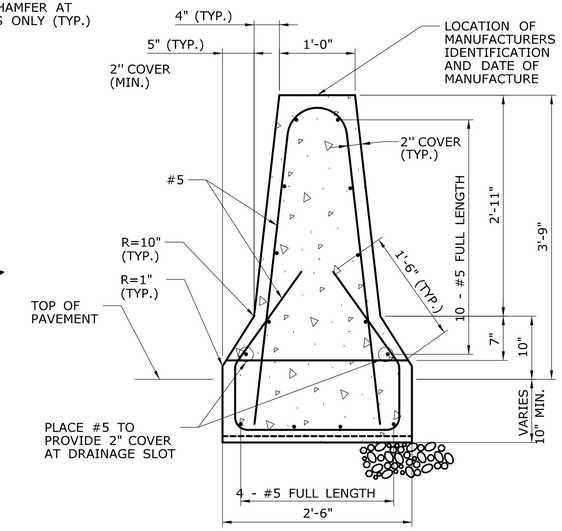

SECTION A
SCALE: 1" = 1'-0"

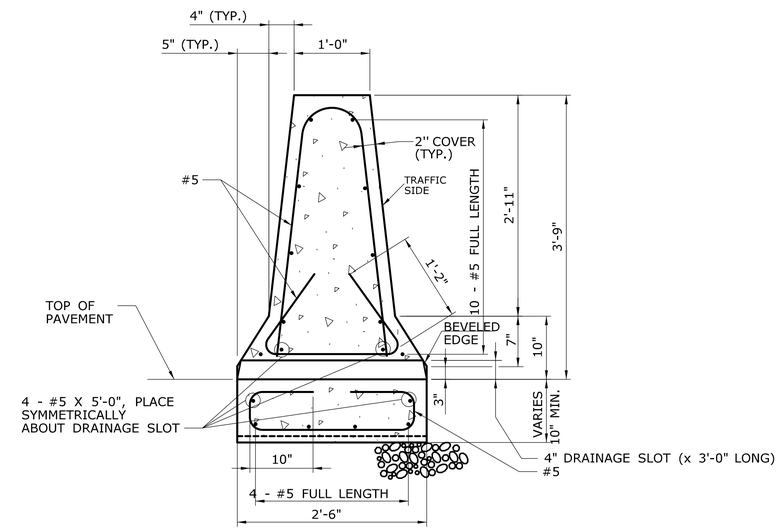

SECTION B
SCALE: 1" = 1'-0"

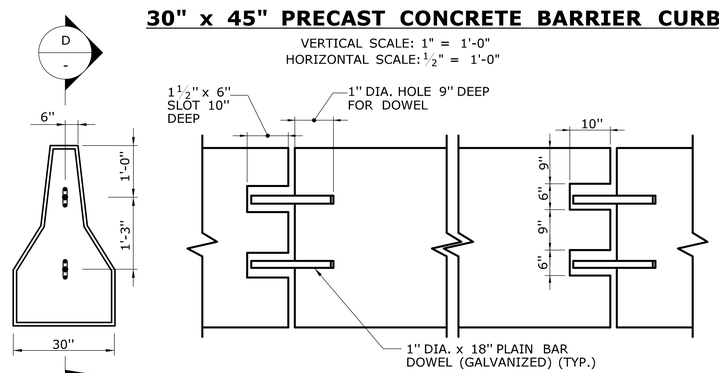

SECTION C
NTS

SECTION D
NTS

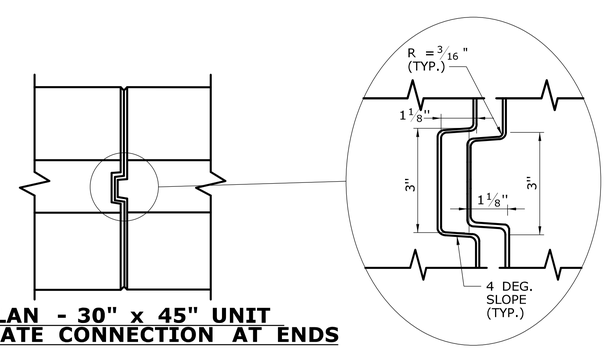

PLAN - 30" x 45" UNIT
ALTERNATE CONNECTION AT ENDS
NTS

FINAL DESIGN REVIEW

REV.	DATE	REVISION DESCRIPTION	SHEET NO.
-	-	-	-
-	-	-	-
-	-	-	-
-	-	-	-
-	-	-	-
-	-	-	-

THE INFORMATION, INCLUDING ESTIMATED QUANTITIES OF WORK, SHOWN ON THESE SHEETS IS BASED ON LIMITED INVESTIGATIONS BY THE STATE AND IS IN NO WAY WARRANTED TO INDICATE THE CONDITIONS OF ACTUAL QUANTITIES OF WORK WHICH WILL BE REQUIRED.

Plotted Date: 2/13/2014

DESIGNER/DRAFTER: RL/EK/MF
CHECKED BY: D. DAGAN
SCALE AS NOTED

STATE OF CONNECTICUT
DEPARTMENT OF TRANSPORTATION

Filename: ...\HW_MSH_MDS-1_FShapePCBCWithDS30X45.dgn

SIGNATURE/ BLOCK:

PROJECT TITLE:
INTERSTATE 95 RESURFACING AND SAFETY IMPROVEMENTS

TOWN:
OLD SAYBROOK, OLD LYME & EAST LYME

DRAWING TITLE:
F-SHAPE PRECAST CONCRETE BARRIER CURB WITH DRAINAGE SLOTS (30" x 45")

PROJECT NO. 104-164
DRAWING NO. MDS-1
SHEET NO. 03.17

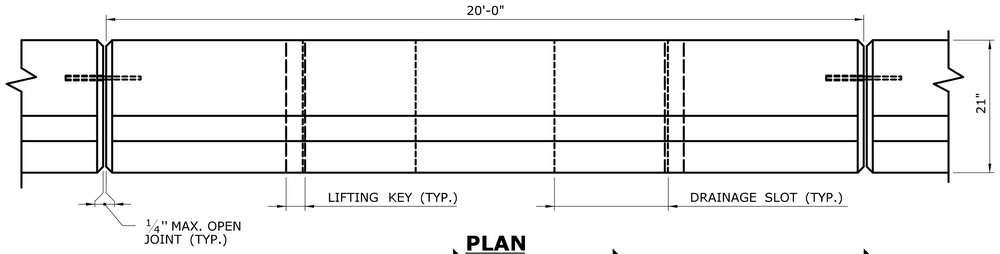

PLAN

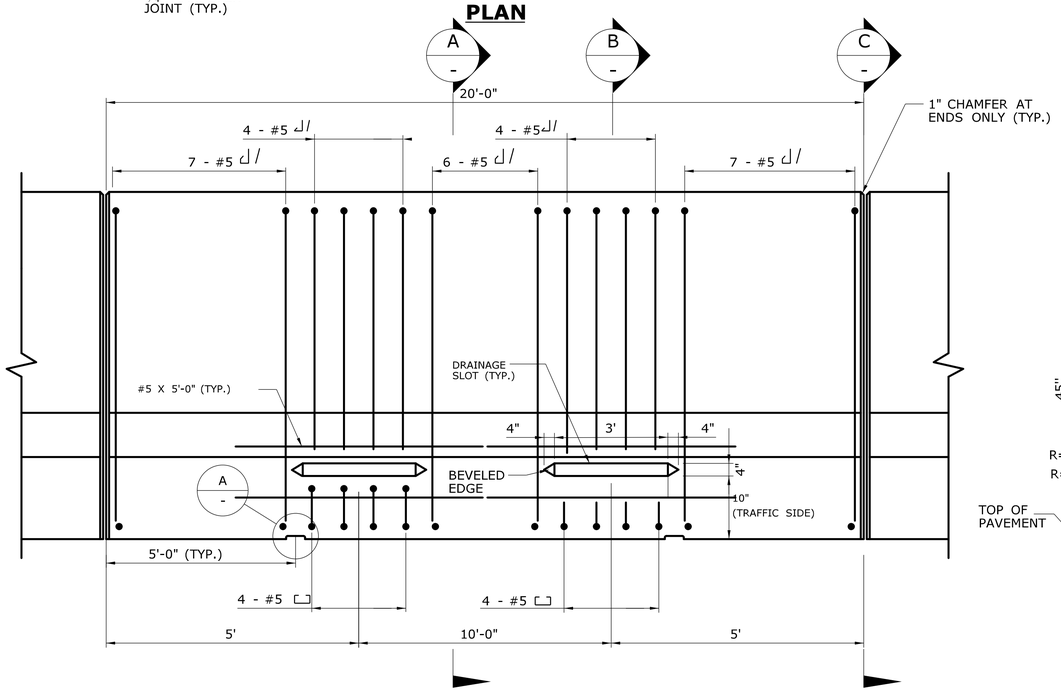

ELEVATION

30" x 45" PRECAST CONCRETE BARRIER CURB UNIT

VERTICAL SCALE: 1" = 1'-0"
HORIZONTAL SCALE: ½" = 1'-0"

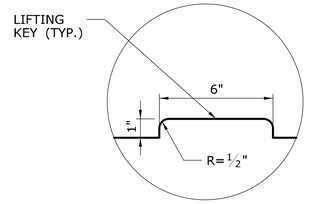

DETAIL A

SCALE: 3" = 1'-0"

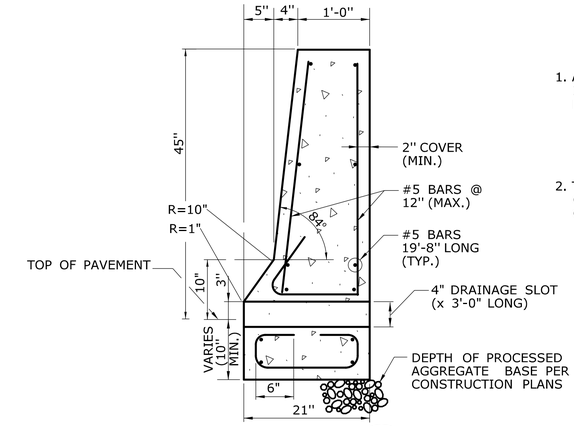

SECTION B

SCALE: 1" = 1'-0"

GENERAL NOTES:

1. ALTERNATE DESIGNS FOR THE FOLLOWING ITEMS MAY BE SUBSTITUTED TO THE ENGINEER FOR APPROVAL :
   A) UNIT END CONNECTIONS SIMILAR TO DESIGNS SHOWN.
   B) LIFTING KEYS OR OTHER HANDLING DEVICES.
2. TERMINAL END TREATMENTS SHALL BE CONSTRUCTED AS SHOWN ON THE PLANS OR AS DIRECTED BY THE ENGINEER.

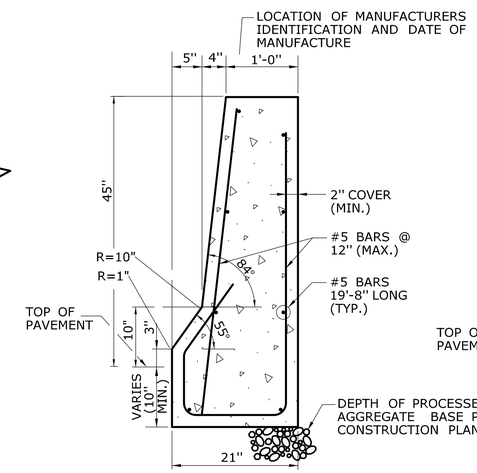

SECTION A

SCALE: 1" = 1'-0"

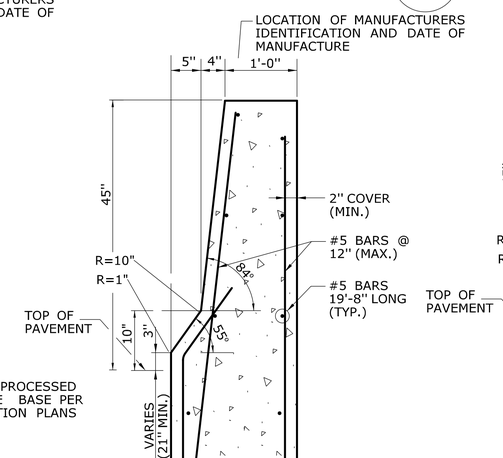

21" EMBEDMENT DEPTH

PROPOSED AT LOCATIONS SHOWN ON THE PLANS OR AS DIRECTED BY THE ENGINEER

SECTION A

SCALE: 1" = 1'-0"

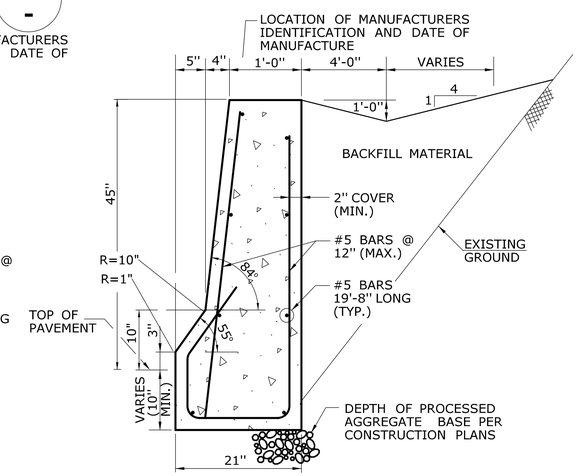

WITH BACKFILL

PROPOSED AT LOCATIONS SHOWN ON THE PLANS OR AS DIRECTED BY THE ENGINEER

SECTION A

SCALE: 1" = 1'-0"

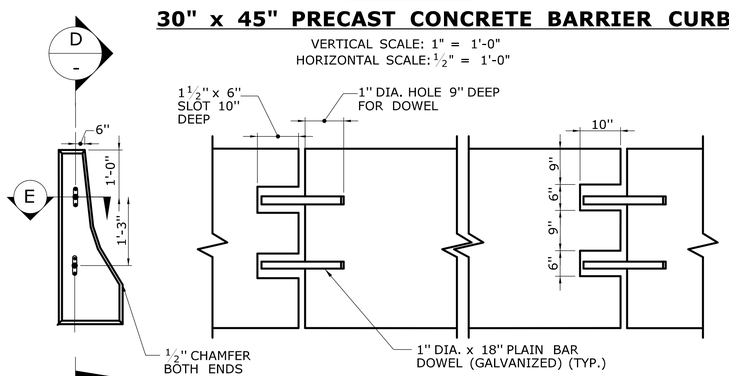

SECTION C

NTS

SECTION D

NTS

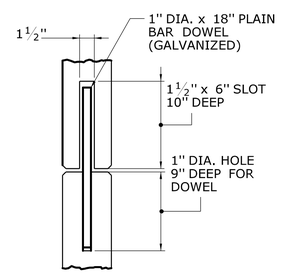

SECTION E

NTS

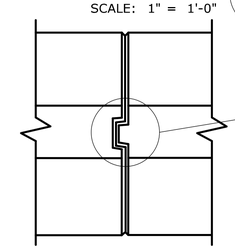

PLAN

ALTERNATE CONNECTION AT ENDS

NTS

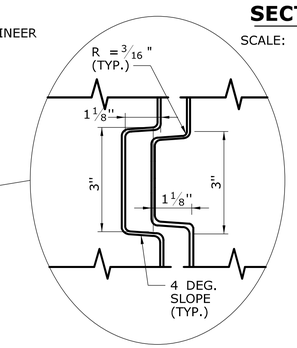

FINAL DESIGN REVIEW

REV.	DATE	REVISION DESCRIPTION	SHEET NO.
-	-	-	-
-	-	-	-
-	-	-	-
-	-	-	-
-	-	-	-
-	-	-	-

THE INFORMATION, INCLUDING ESTIMATED QUANTITIES OF WORK, SHOWN ON THESE SHEETS IS BASED ON LIMITED INVESTIGATIONS BY THE STATE AND IS IN NO WAY WARRANTED TO INDICATE THE CONDITIONS OF ACTUAL QUANTITIES OF WORK WHICH WILL BE REQUIRED.

Plotted Date: 2/13/2014

DESIGNER/DRAFTER: RL/EK/MF
CHECKED BY: D. DAGAN
SCALE AS NOTED

STATE OF CONNECTICUT
DEPARTMENT OF TRANSPORTATION

Filename: ...\HW_MSH_MDS-2_FShapePCBCWithDS21X45.dgn

SIGNATURE/ BLOCK:

PROJECT TITLE: INTERSTATE 95 RESURFACING AND SAFETY IMPROVEMENTS

TOWN: OLD SAYBROOK, OLD LYME & EAST LYME

DRAWING TITLE: F-SHAPE PRECAST CONCRETE BARRIER CURB WITH DRAINAGE SLOTS (21" x 45")

PROJECT NO. 104-164
DRAWING NO. MDS-2
SHEET NO. 03.18

GENERAL NOTES :

1. ALTERNATE DESIGNS FOR THE LIFTING KEYS OR OTHER HANDLING DEVICES MAY BE SUBMITTED TO THE ENGINEER FOR APPROVAL.
2. COST OF THIS BARRIER SHALL BE PAID UNDER THE ITEM "F-SHAPE PRECAST CONCRETE BARRIER CURB (30"x45")".
3. 100' LENGTH OF 54" VERTICAL FACE BARRIER REQUIRED PRIOR TO OBJECT.

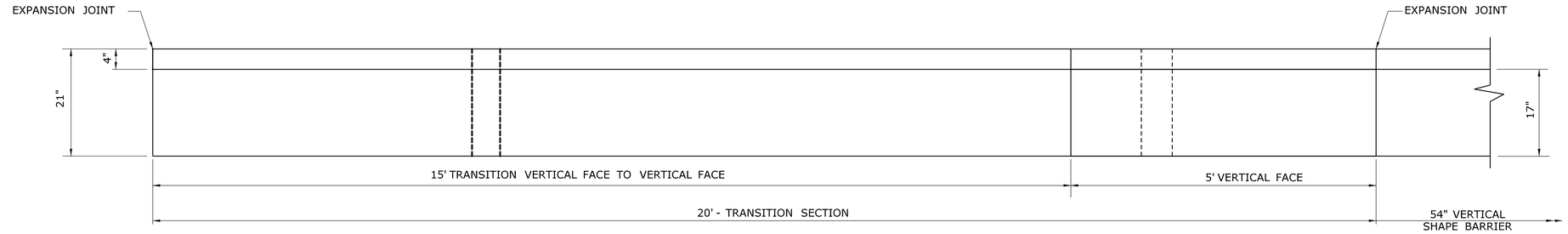

PLAN - BARRIER TRANSITION

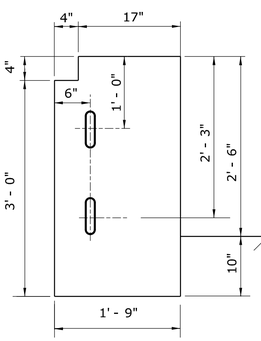

SECTION "A-A"

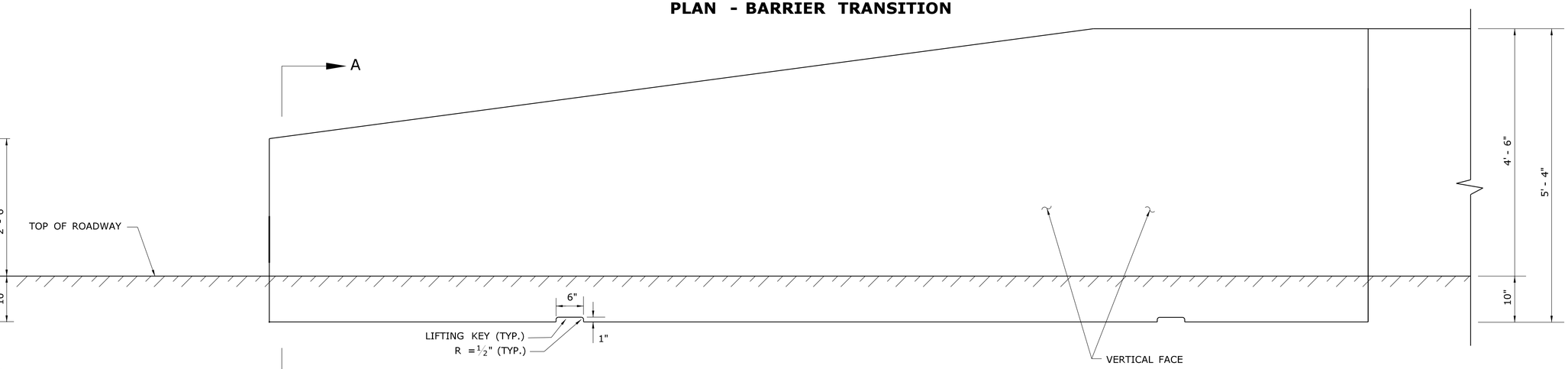

FRONT ELEVATION - BARRIER TRANSITION

NOTE:
REINFORCEMENT BARS NOT SHOWN
SEE SHEET MDS-6 FOR REINFORCING.

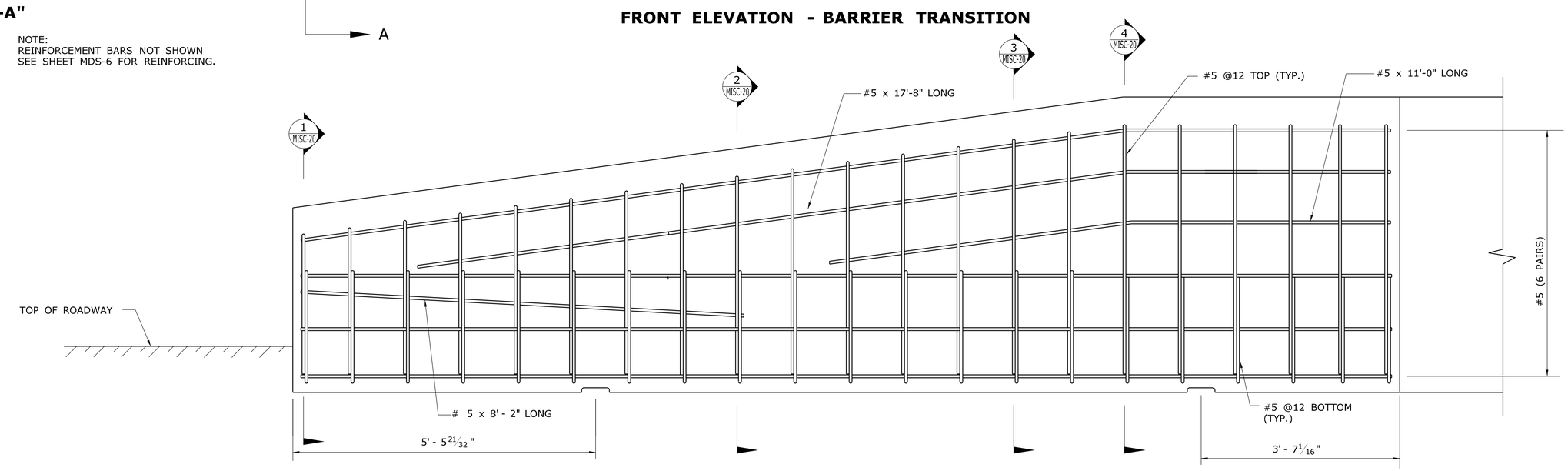

FRONT ELEVATION - TRANSITION BARRIER REINFORCEMENT

FINAL DESIGN REVIEW

REV.	DATE	REVISION DESCRIPTION	SHEET NO.
-	-	-	-
-	-	-	-
-	-	-	-
-	-	-	-
-	-	-	-
-	-	-	-

THE INFORMATION, INCLUDING ESTIMATED QUANTITIES OF WORK, SHOWN ON THESE SHEETS IS BASED ON LIMITED INVESTIGATIONS BY THE STATE AND IS IN NO WAY WARRANTED TO INDICATE THE CONDITIONS OF ACTUAL QUANTITIES OF WORK WHICH WILL BE REQUIRED.

Plotted Date: 2/13/2014

DESIGNER/DRAFTER: RL/EK/MF
CHECKED BY: D. DAGAN
SCALE AS NOTED

STATE OF CONNECTICUT
DEPARTMENT OF TRANSPORTATION

Filename: ...\HW_MSH_MDS-3_54VertTo30Vert.dgn

SIGNATURE/ BLOCK:

PROJECT TITLE: INTERSTATE 95 RESURFACING AND SAFETY IMPROVEMENTS

TOWN: OLD SAYBROOK, OLD LYME & EAST LYME

DRAWING TITLE: TRANSITION OF 30" HIGH VERTICAL TO 54" VERTICAL-SHAPE CONCRETE BARRIER

PROJECT NO. 104-164
DRAWING NO. MDS-3
SHEET NO. 03.19

NOTE:

MINIMUM SPLICE LENGTH FOR ALL BARS IS 1'-9"

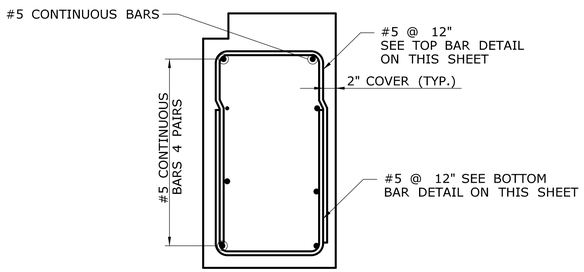

SECTION - BAR 1 (1 / MISC-19)

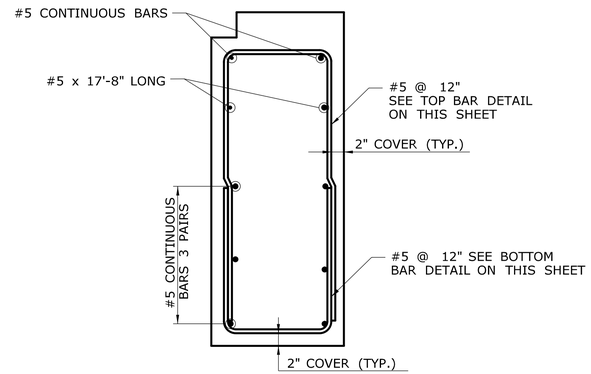

SECTION - BAR 9 (2 / MISC-19)

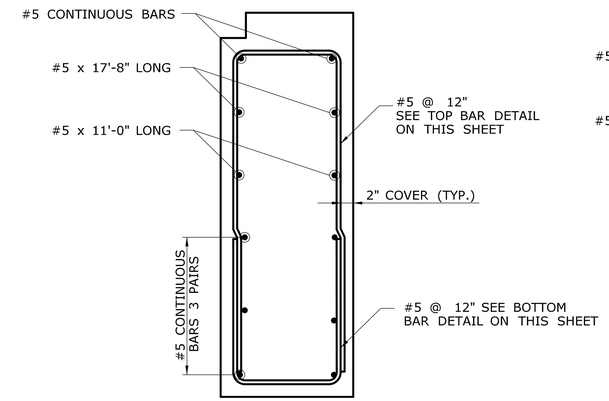

SECTION - BAR 14 (3 / MISC-19)

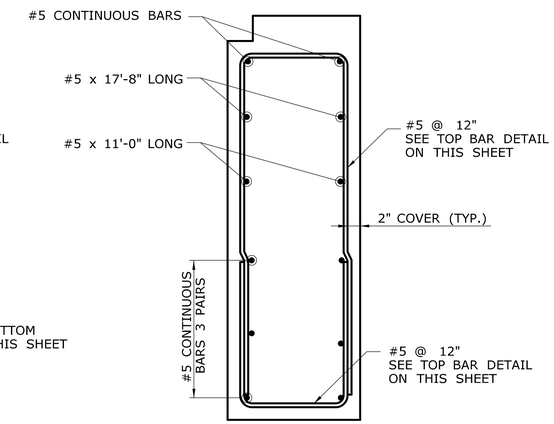

SECTION - BAR 16 (4 / MISC-19)

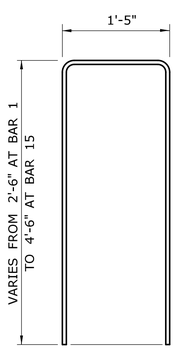

TOP BARS
BARS 1 TO 15

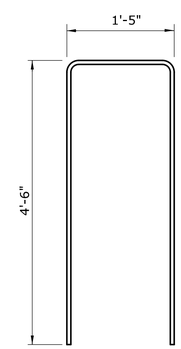

TOP BARS
BARS 16 TO 21

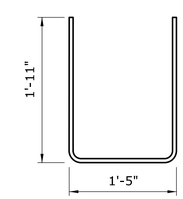

BOTTOM BARS
BARS 1 TO 21

FINAL DESIGN REVIEW

REV.	DATE	REVISION DESCRIPTION	SHEET NO.
-	-	-	-
-	-	-	-
-	-	-	-
-	-	-	-
-	-	-	-
-	-	-	-

THE INFORMATION, INCLUDING ESTIMATED QUANTITIES OF WORK, SHOWN ON THESE SHEETS IS BASED ON LIMITED INVESTIGATIONS BY THE STATE AND IS IN NO WAY WARRANTED TO INDICATE THE CONDITIONS OF ACTUAL QUANTITIES OF WORK WHICH WILL BE REQUIRED.

Plotted Date: 2/13/2014

DESIGNER/DRAFTER: RL/EK/MF
CHECKED BY: D. DAGAN
SCALE AS NOTED

STATE OF CONNECTICUT
DEPARTMENT OF TRANSPORTATION

Filename: ...\HW_MSH_MDS-4_54VertTo30Vert2.dgn

SIGNATURE/
BLOCK:

PROJECT TITLE:
INTERSTATE 95
RESURFACING AND SAFETY
IMPROVEMENTS

TOWN:
OLD SAYBROOK,
OLD LYME & EAST LYME

DRAWING TITLE:
TRANSITION OF 30" HIGH VERTICAL
TO 54" VERTICAL-SHAPE CONCRETE BARRIER

PROJECT NO. 104-164
DRAWING NO. MDS-4
SHEET NO. 03.20

GENERAL NOTES:

1. ALTERNATE DESIGNS FOR UNIT END CONNECTIONS SIMILAR TO THE DESIGNS SHOWN MAY BE SUBMITTED TO THE ENGINEER FOR APPROVAL.
2. TERMINAL END TREATMENTS SHALL BE CONSTRUCTED AS SHOWN ON THE PLANS OR AS DIRECTED BY THE ENGINEER.
3. THE JOINT SEAL, JOINT FILLER FOR BRIDGES, AND WELDED STEEL WIRE FABRIC SHALL BE PAID FOR AS PART OF CLASS "A" CONCRETE.

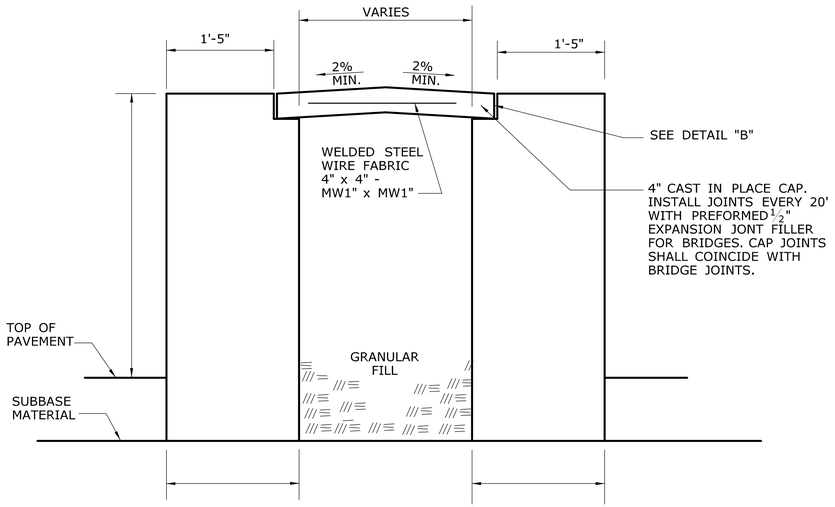

SECTION "A-A"

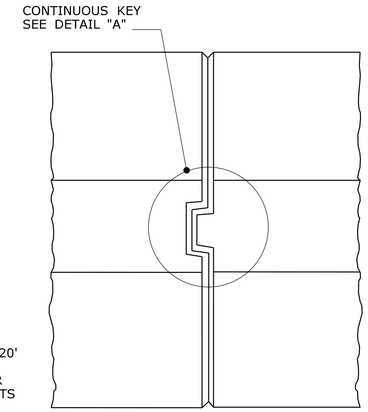

KEY CONNECTION AT ENDS PLAN VIEW

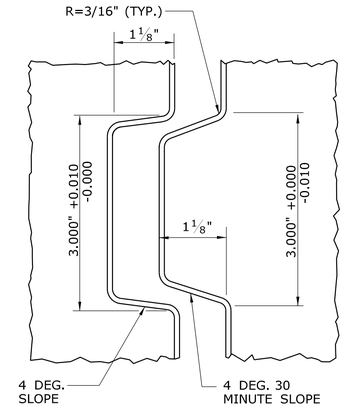

DETAIL "A"

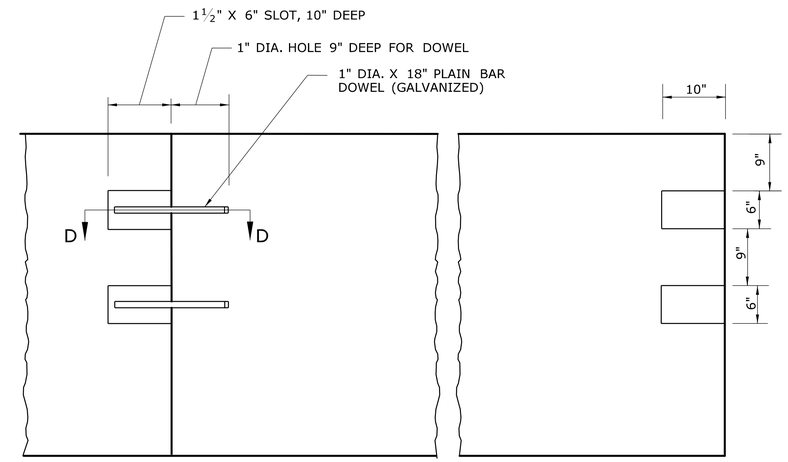

DOWEL CONNECTION AT ENDS PROFILE VIEW

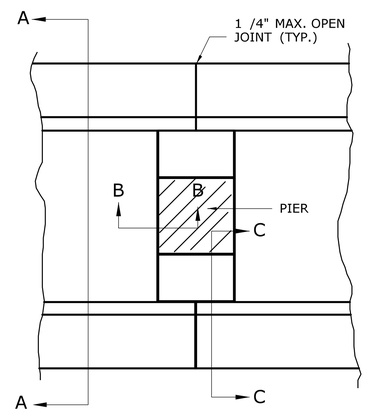

PLAN VIEW AT PIER

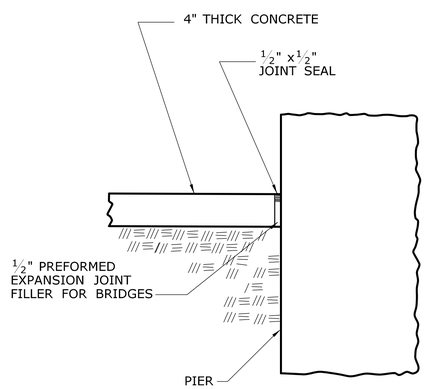

SECTION "B-B"

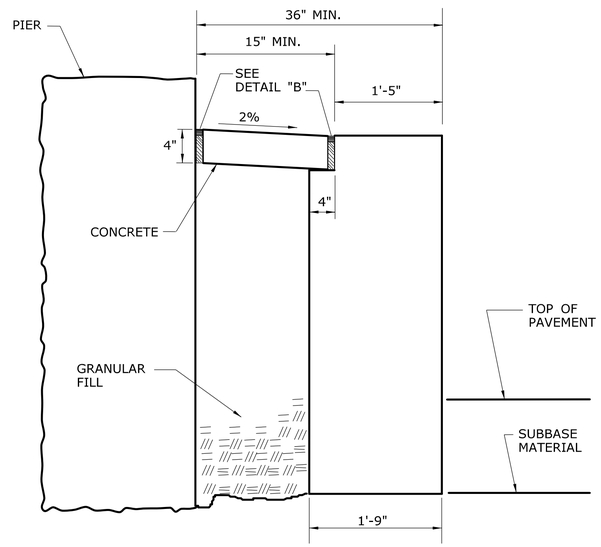

SECTION "C-C"

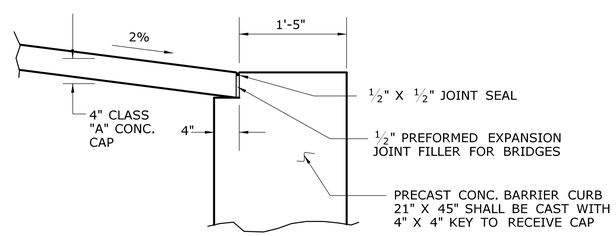

DETAIL "B"

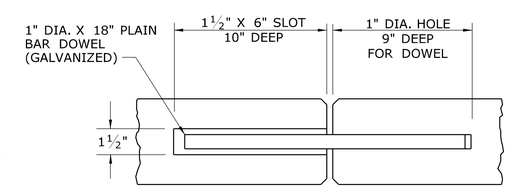

SECTION "D-D"

FINAL DESIGN REVIEW

REV.	DATE	REVISION DESCRIPTION	SHEET NO.
-	-	-	-
-	-	-	-
-	-	-	-
-	-	-	-
-	-	-	-
-	-	-	-

THE INFORMATION, INCLUDING ESTIMATED QUANTITIES OF WORK, SHOWN ON THESE SHEETS IS BASED ON LIMITED INVESTIGATIONS BY THE STATE AND IS IN NO WAY WARRANTED TO INDICATE THE CONDITIONS OF ACTUAL QUANTITIES OF WORK WHICH WILL BE REQUIRED.

Plotted Date: 2/13/2014

DESIGNER/DRAFTER: **RL/EK/MF**

CHECKED BY: **D. DAGAN**

SCALE AS NOTED

STATE OF CONNECTICUT
DEPARTMENT OF TRANSPORTATION

Filename: ...\HW_MSH_MDS-5_54VertTo30Vert3.dgn

SIGNATURE/ BLOCK:

PROJECT TITLE:

INTERSTATE 95 RESURFACING AND SAFETY IMPROVEMENTS

TOWN: **OLD SAYBROOK, OLD LYME & EAST LYME**

DRAWING TITLE: **TRANSITION OF 30" HIGH VERTICAL TO 54" VERTICAL-SHAPE CONCRETE BARRIER**

PROJECT NO. **104-164**

DRAWING NO. **MDS-5**

SHEET NO. **03.21**

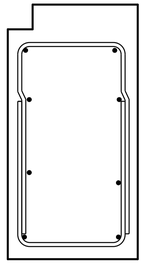

BAR 1

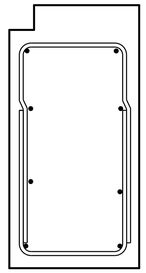

BAR 2

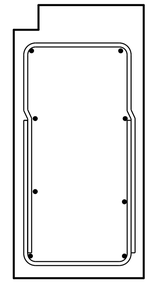

BAR 3

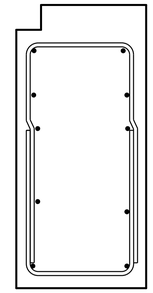

BAR 4

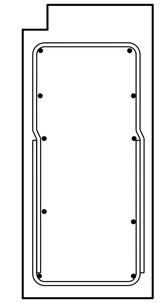

BAR 5

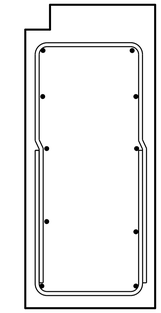

BAR 6

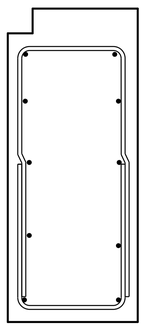

BAR 7

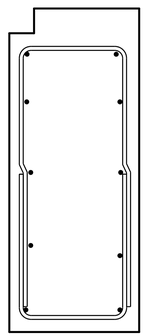

BAR 8

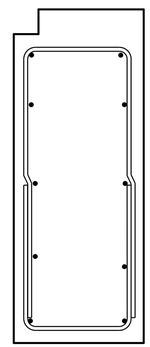

BAR 9

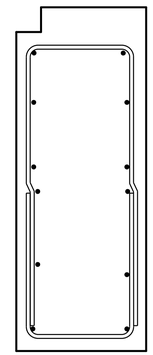

BAR 10

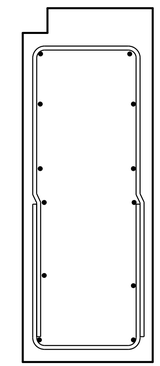

BAR 11

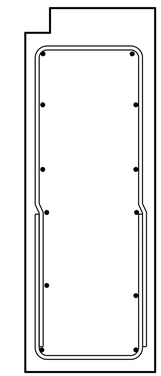

BAR 12

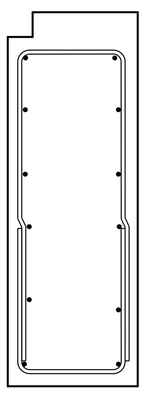

BAR 13

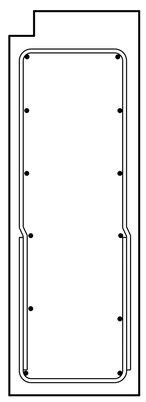

BAR 14

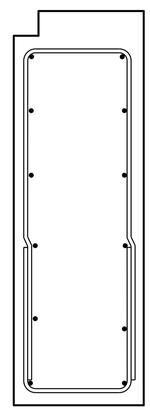

BAR 15

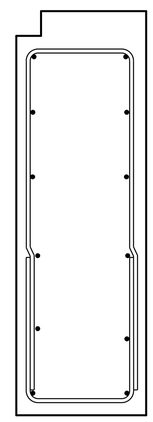

BAR 16

FINAL DESIGN REVIEW

REV.	DATE	REVISION DESCRIPTION	SHEET NO.
-	-	-	-
-	-	-	-
-	-	-	-
-	-	-	-
-	-	-	-
-	-	-	-

THE INFORMATION, INCLUDING ESTIMATED QUANTITIES OF WORK, SHOWN ON THESE SHEETS IS BASED ON LIMITED INVESTIGATIONS BY THE STATE AND IS IN NO WAY WARRANTED TO INDICATE THE CONDITIONS OF ACTUAL QUANTITIES OF WORK WHICH WILL BE REQUIRED.

Plotted Date: 2/13/2014

DESIGNER/DRAFTER: RL/EK/MF

CHECKED BY: D. DAGAN

SCALE AS NOTED

STATE OF CONNECTICUT
DEPARTMENT OF TRANSPORTATION

Filename: ...\HW_MSH_MDS-6_54VertTo30Vert4.dgn

SIGNATURE/ BLOCK:

PROJECT TITLE:
INTERSTATE 95 RESURFACING AND SAFETY IMPROVEMENTS

TOWN:
OLD SAYBROOK, OLD LYME & EAST LYME

DRAWING TITLE:
TRANSITION OF 30" HIGH VERTICAL TO 54" VERTICAL-SHAPE CONCRETE BARRIER

PROJECT NO. 104-164

DRAWING NO. MDS-6

SHEET NO. 03.22

ALL TRANSITIONS SHALL BE PAID UNDER THE ITEM "F-SHAPE PRECAST CONCRETE BARRIER CURB (30"x45")

GENERAL NOTES:

1. ALTERNATE DESIGNS FOR THE FOLLOWING ITEMS MAY BE SUBSTITUTED TO THE ENGINEER FOR APPROVAL :
   A) UNIT END CONNECTIONS SIMILAR TO DESIGNS SHOWN.
   B) LIFTING KEYS OR OTHER HANDLING DEVICES.
2. TERMINAL END TREATMENTS SHALL BE CONSTRUCTED AS SHOWN ON THE PLANS OR AS DIRECTED BY THE ENGINEER.

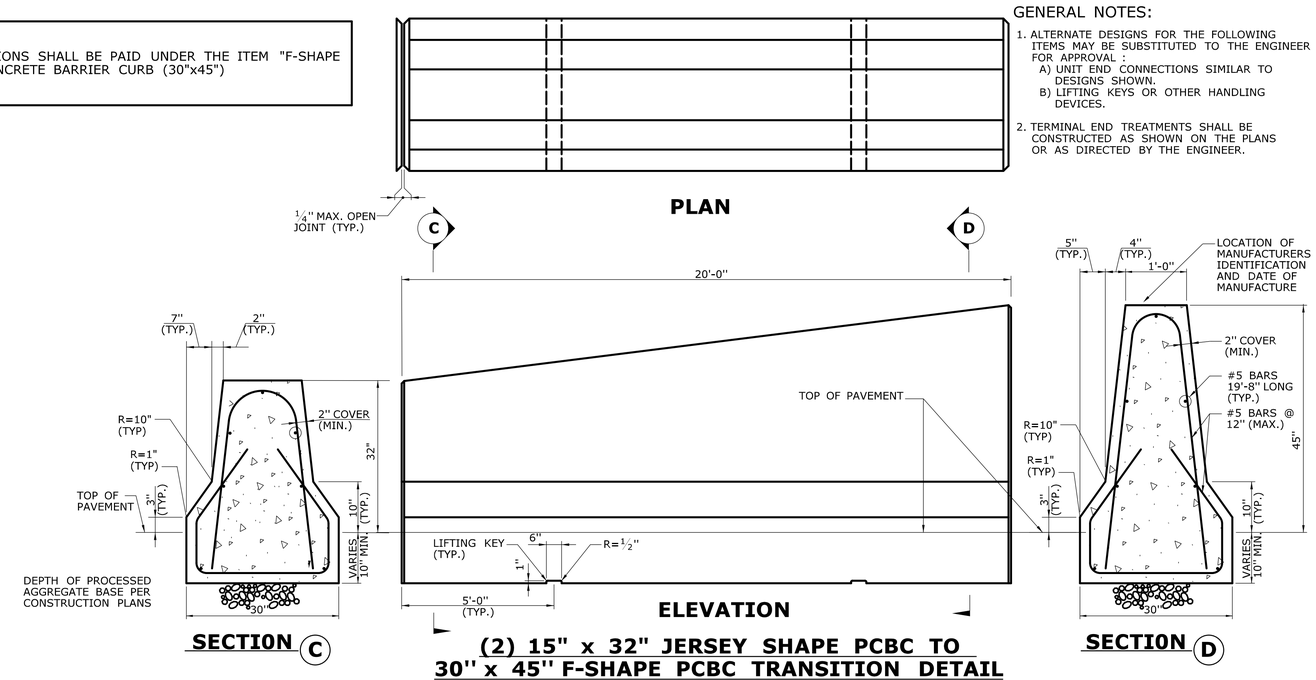

(2) 15" x 32" JERSEY SHAPE PCBC TO 30" x 45" F-SHAPE PCBC TRANSITION DETAIL

FINAL DESIGN REVIEW

REV.	DATE	REVISION DESCRIPTION	SHEET NO.
-	-	-	
-	-	-	
-	-	-	
-	-	-	
-	-	-	
-	-	-	
-	-	-	

THE INFORMATION, INCLUDING ESTIMATED QUANTITIES OF WORK, SHOWN ON THESE SHEETS IS BASED ON LIMITED INVESTIGATIONS BY THE STATE AND IS IN NO WAY WARRANTED TO INDICATE THE CONDITIONS OF ACTUAL QUANTITIES OF WORK WHICH WILL BE REQUIRED.

Plotted Date: 2/13/2014

DESIGNER/DRAFTER: **RL/EK/MF**

CHECKED BY: **D. DAGAN**

SCALE AS NOTED

STATE OF CONNECTICUT
DEPARTMENT OF TRANSPORTATION

Filename: ...\HW_MSH_MDS-7_MiscConcreteBCTransitions.dgn

SIGNATURE/ BLOCK:

PROJECT TITLE:
INTERSTATE 95 RESURFACING AND SAFETY IMPROVEMENTS

TOWN:
OLD SAYBROOK, OLD LYME & EAST LYME

DRAWING TITLE:
MISCELLANEOUS CONCRETE BARRIER CURB TRANSITIONS

PROJECT NO. **104-164**

DRAWING NO. **MDS-7**

SHEET NO. **03.23**

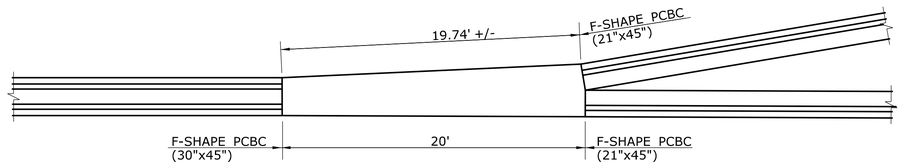

C-I-P CONCRETE MEDIAN BARRIER TRANSITION

(APPROXIMATE STA. 222+08 TO STA. 222+28)

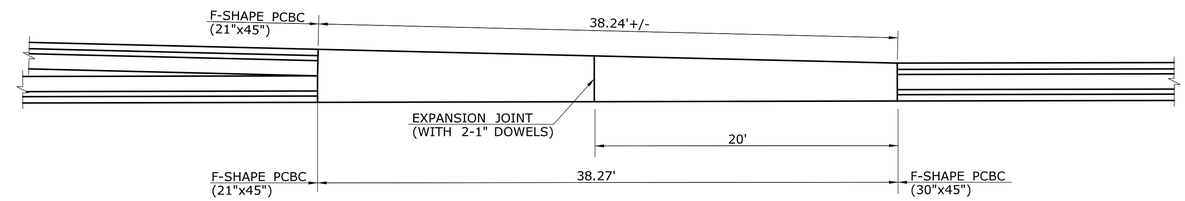

C-I-P CONCRETE MEDIAN BARRIER TRANSITION

(APPROXIMATE STA. 227+26 TO STA. 227+64)

ALL TRANSITIONS FROM F-SHAPE PCBC (30"x45") TO F-SHAPE PCBC (21"x45") SHALL BE PAID UNDER THE ITEM "F-SHAPE PRECAST CONCRETE BARRIER CURB (30"x45")

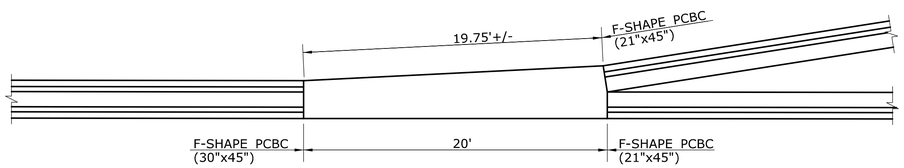

C-I-P CONCRETE MEDIAN BARRIER TRANSITION

(APPROXIMATE STA. 279+16 TO STA. 279+36)

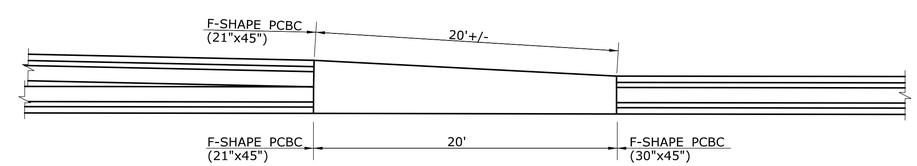

C-I-P CONCRETE MEDIAN BARRIER TRANSITION

(APPROXIMATE STA. 285+97 TO STA. 286+17)

FINAL DESIGN REVIEW

REV.	DATE	REVISION DESCRIPTION	SHEET NO.
-	-	-	
-	-	-	
-	-	-	
-	-	-	
-	-	-	
-	-	-	

THE INFORMATION, INCLUDING ESTIMATED QUANTITIES OF WORK, SHOWN ON THESE SHEETS IS BASED ON LIMITED INVESTIGATIONS BY THE STATE AND IS IN NO WAY WARRANTED TO INDICATE THE CONDITIONS OF ACTUAL QUANTITIES OF WORK WHICH WILL BE REQUIRED.

Plotted Date: 2/13/2014

DESIGNER/DRAFTER: **RL/EK/MF**
CHECKED BY: **D. DAGAN**
SCALE AS NOTED

STATE OF CONNECTICUT
DEPARTMENT OF TRANSPORTATION

Filename: ...\HW_MSH_MDS-8_MiscF_ShapeTransitions.dgn

SIGNATURE/
BLOCK:

PROJECT TITLE:
INTERSTATE 95 RESURFACING AND SAFETY IMPROVEMENTS

TOWN:
OLD SAYBROOK, OLD LYME & EAST LYME

DRAWING TITLE:
MISCELLANEOUS F-SHAPE PCBC (30"x45") TRANSITIONS TO F-SHAPE PCBC (21"x45")

PROJECT NO. **104-164**
DRAWING NO. **MDS-8**
SHEET NO. **03.24**

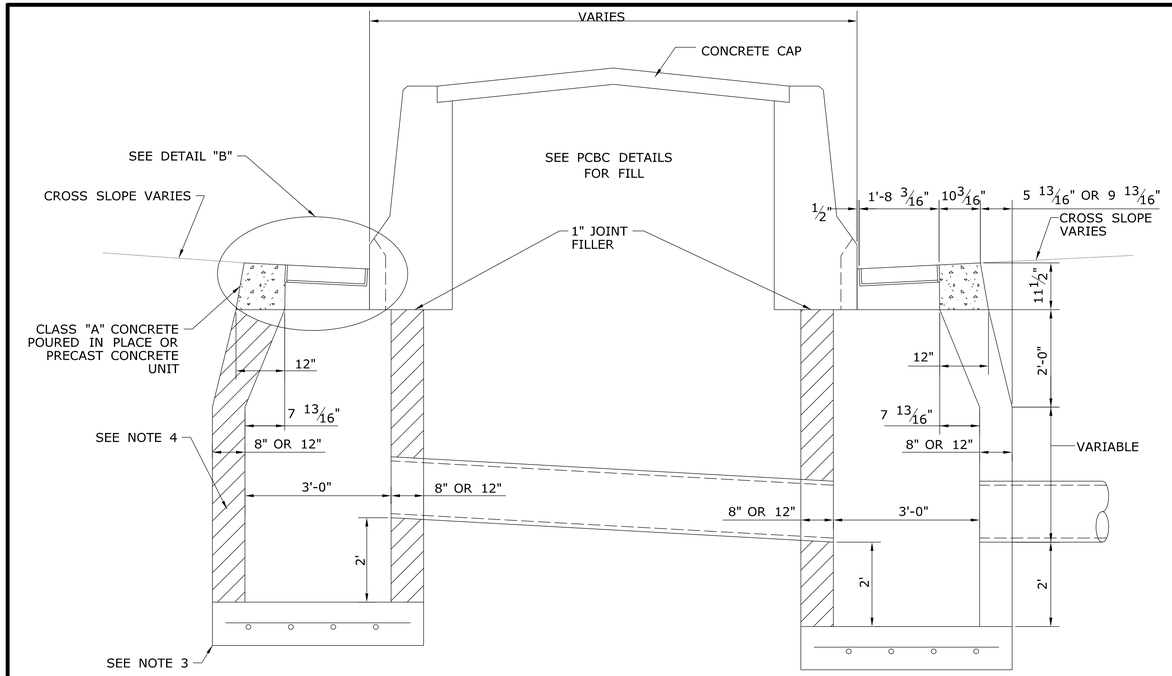

SECTION A - A

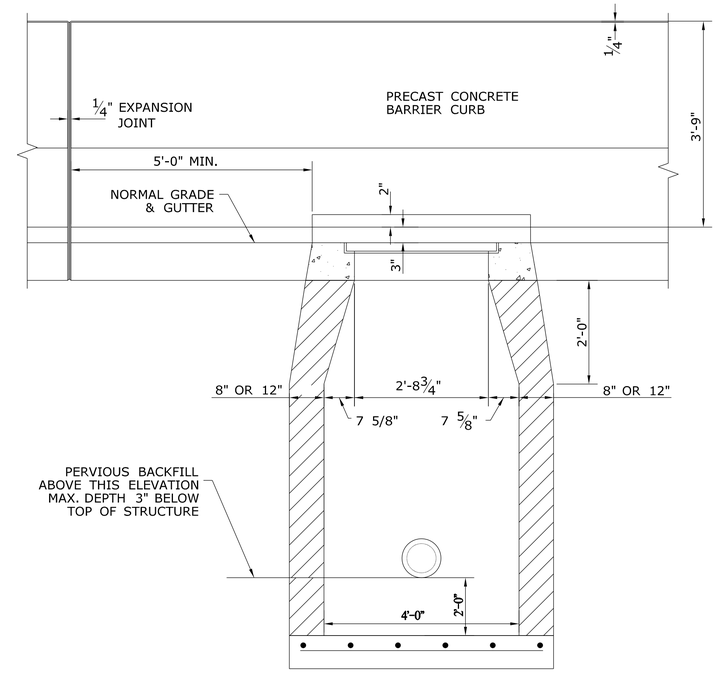

SECTION B - B

NOTES:

1.) FOR OTHER PERTINENT DETAILS AND DIMENSIONS NOT SHOWN SEE CDOT STANDARD SHEET NO. 507-K AND MISCELLANEOUS DETAILS.

2.) FOR CATCH BASINS UP TO 10' DEEP USE 8" REINFORCED CONCRETE SLAB BASE, #6 SHORT BARS AT 12" ON CENTER AND #5 LONG BARSAT 12" ON CENTER (MIN. 3" COVER). FOR CATCH BASINS OVER 10' DEEP USE 12" REINFORCED CONCRETE SLAB BASE, #6 SHORT BAR AT 12" ON CENTER AND #5 LONG BARS AT 12" ON CENTER (MIN. 3" COVER).

3.) FOR CATCH BASINS UP TO 10' DEEP USE 8" CLASS "A" CONCRETE WALLS, REINFORCED WITH #4 BARS AT 9" HORIZONTAL AND #4 BARS AT 12" VERTICAL (ONE LAYER AT C.L. OF WALL) (REINFORCEMENT TO BE CONTINUOUS AROUND CORNERS), OR 12" CONCRETE MASONRY UNITS. FOR CATCH BASINS OVER 10' DEEP USE 12" CLASS "A" CONCRETE WALLS, REINFORCED WITH #5 BARS AT 12" ON CENTER E.F. HORIZONTAL AND #4 BARS AT 12" ON CENTER E.F. VERTICAL (REINFORCEMENT TO HAVE 2" COVER AND TO BE CONTINUOUS AROUND CORNERS).

4.) ALL GRATES SHALL BE TYPE B. FOR DETAILS OF FRAME & GRATE SEE STANDARD DETAIL SHEET 507-K.

5.) THE COST OF MORTAR FILL AND JOINT SEAL SHALL BE INCLUDED IN THE CONTRACT UNIT PRICE FOR EACH 'C-M' CATCH BASIN.

6.) THE COST OF CASTING THROAT SHALL BE INCLUDED IN CONTRACT UNIT PRICE PER L.F. FOR PRECAST CONCRETE BARRIER CURB OF THE APPROPRIATE SHAPE AND SIZE.

7.) FOR DETAILS AND DIMENSIONS OF PRECAST CONCRETE BARRIER CURB INCLUDING REINFORCING STEEL NOT SHOWN, SEE MISCELLANEOUS DETAILS.

8.) THE COST OF PERMANENT CATCH BASIN TOPS AND THEIR INITIALINSTALLATION SHALL BE INCLUDED IN THE CONTRACT UNIT PRICE FOR EACH TYPE 'C-M' CATCH BASIN.

9.) THE COST OF THE PERVIOUS BACKFILL SHALL BE INCLUDED IN THE CONTRACT UNIT PRICE FOR EACH TYPE 'C-M' CATCH BASIN.

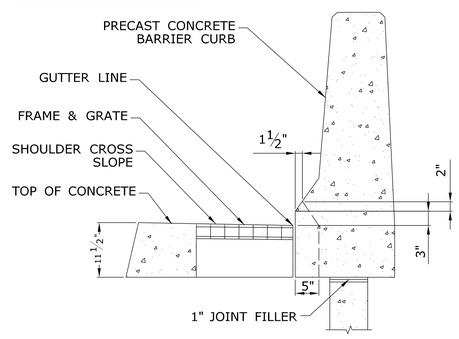

DETAIL "B"

NOTE:
TYPE 'CM-1' CATCH BASINS ARE LOCATED IN WIDE MEDIAN AREAS WHERE ONLY ONE PRECAST CONCRETE BARRIER CURB CROSSES THE TOP SLAB. THEREFORE, TOP SLABS SHALL ONLY HAVE ONE OPENING AS SHOWN ON ROADWAY SECTIONS.

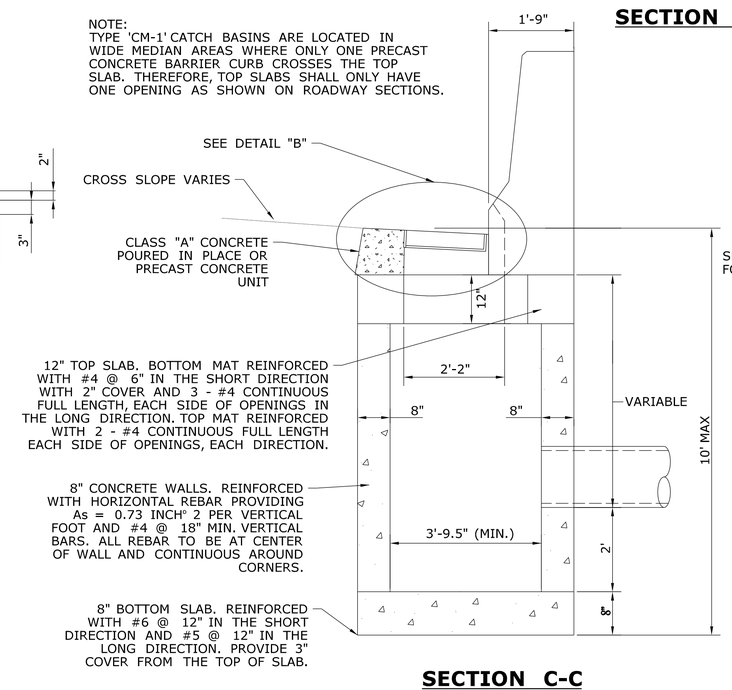

SECTION C-C

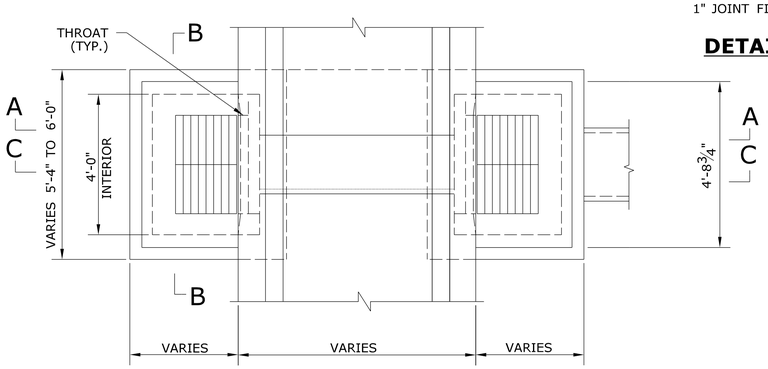

PLAN

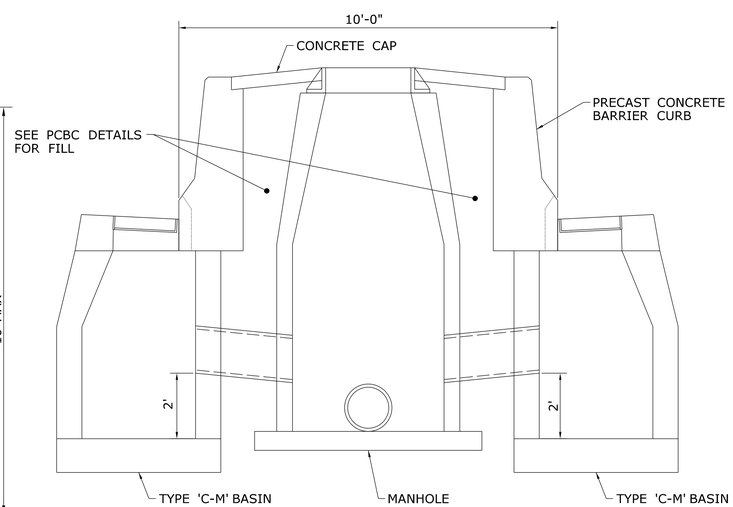

TYPE "C-M" CATCH BASIN WITH CONCRETE CAP AND MANHOLE

NOT TO SCALE

TYPE 'C-M' CATCH BASIN

NOT TO SCALE

FINAL DESIGN REVIEW

REV.	DATE	REVISION DESCRIPTION	SHEET NO.
-	-	-	-
-	-	-	-
-	-	-	-
-	-	-	-
-	-	-	-
-	-	-	-

THE INFORMATION, INCLUDING ESTIMATED QUANTITIES OF WORK, SHOWN ON THESE SHEETS IS BASED ON LIMITED INVESTIGATIONS BY THE STATE AND IS IN NO WAY WARRANTED TO INDICATE THE CONDITIONS OF ACTUAL QUANTITIES OF WORK WHICH WILL BE REQUIRED.

Plotted Date: 2/13/2014

DESIGNER/DRAFTER: RL/EK/MF
CHECKED BY: D.DAGAN
SCALE AS NOTED

STATE OF CONNECTICUT
DEPARTMENT OF TRANSPORTATION

Filename: ...\HW_MSH_MDS-9_Type C-M Catch Basin.dgn

SIGNATURE/ BLOCK:

PROJECT TITLE: INTERSTATE 95 RESURFACING AND SAFETY IMPROVEMENTS

TOWN: OLD SAYBROOK, OLD LYME & EAST LYME

DRAWING TITLE: TYPE "C-M" CATCH BASIN

PROJECT NO. 104-164
DRAWING NO. MDS-9
SHEET NO. 03.25

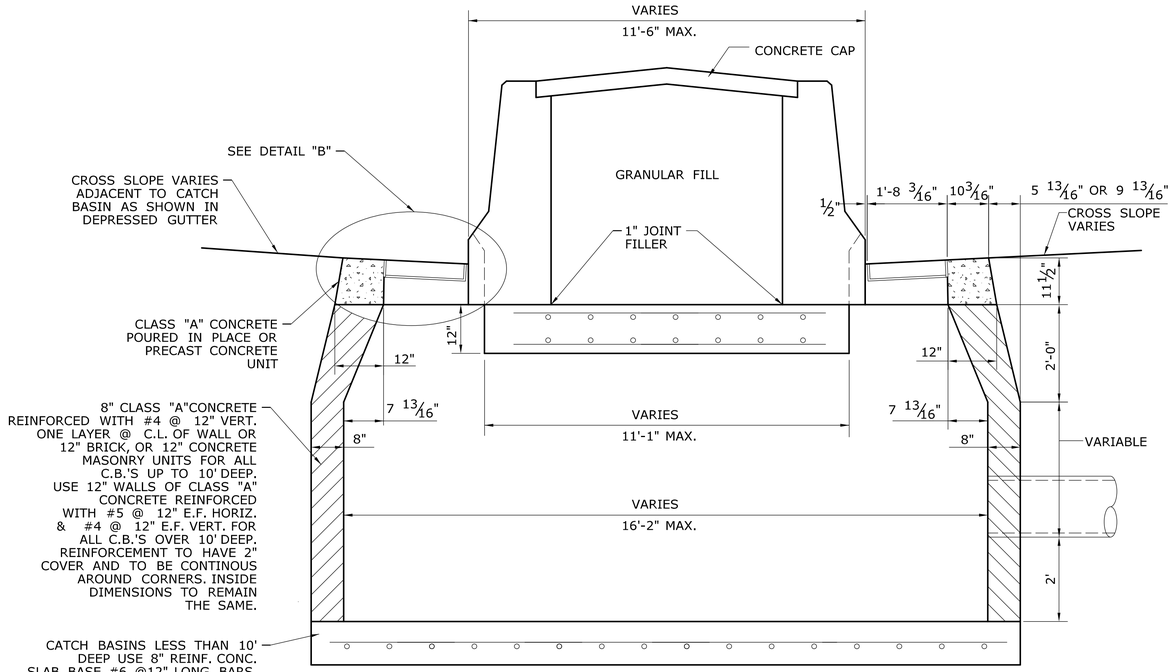

SECTION A - A

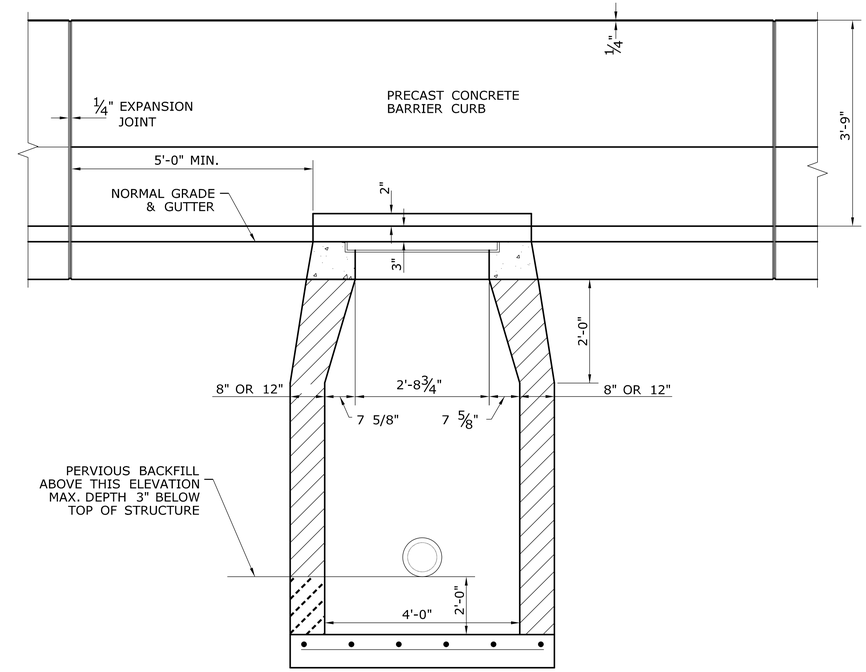

SECTION B - B

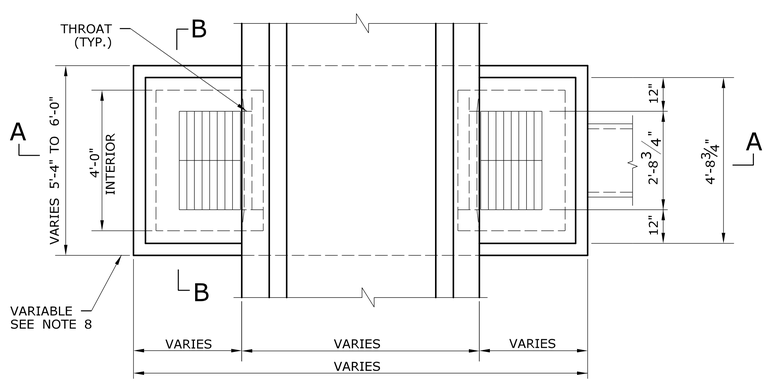

PLAN

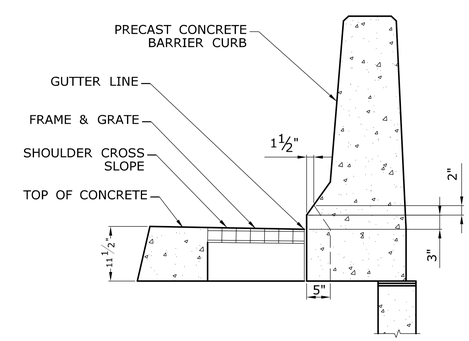

DETAIL "B"

NOTES:

1.) FOR OTHER PERTINENT DETAILS AND DIMENSIONS NOT SHOWN SEE CDOT STANDARD SHEET NO. 507-K AND MISCELLANEOUS DETAILS.

2.) IF CONCRETE BARRIER CURB IS TO BE CAST IN PLACE, IT SHALL BE PAID FOR AT THE CONTRACT UNIT PRICE PER LINEAR FOOT FOR "F" SHAPE BARRIER CURB (21"x45"). WHICH PRICE SHALL INCLUDE ALL MATERIALS, EQUIPMENT, TOOLS, LABOR AND WORK INCIDENTAL THERETO.

3.) FOR CATCH BASINS UP TO 10' DEEP USE 8" REINFORCED CONCRETE SLAB BASE, #6 SHORT BARS AT 12" ON CENTER AND #5 LONG BARS AT 12" ON CENTER (MIN. 3" COVER). FOR CATCH BASINS OVER 10' DEEP USE 12" REINFORCED CONCRETE SLAB BASE, #6 SHORT BAR AT 12" ON CENTER AND #5 LONG BARS AT 12" ON CENTER (MIN. 3" COVER).

4.) FOR CATCH BASINS UP TO 10' DEEP USE 8" CLASS "A" CONCRETE WALLS, REINFORCED WITH #4 BARS AT 9" HORIZONTAL AND #4 BARS AT 12" VERTICAL (ONE LAYER AT C.L. OF WALL) (REINFORCEMENT TO BE CONTINUOUS AROUND CORNERS), OR 12" CONCRETE MASONRY UNITS. FOR CATCH BASINS OVER 10' DEEP USE 12" CLASS "A" CONCRETE WALLS, REINFORCED WITH #5 BARS AT 12" ON CENTER E.F. HORIZONTAL AND #4 BARS AT 12" ON CENTER E.F. VERTICAL (REINFORCEMENT TO HAVE 2" COVER AND TO BE CONTINUOUS AROUND CORNERS).

5.) ALL GRATES SHALL BE TYPE B. FOR DETAILS OF FRAME & GRATE SEE STANDARD DETAIL SHEET 507-K.

6.) THE COST OF MORTAR FILL AND JOINT SEAL SHALL BE INCLUDED IN THE CONTRACT UNIT PRICE FOR EACH 'C-M' CATCH BASIN.

7.) THE COST OF CASTING THROAT SHALL BE INCLUDED IN CONTRACT UNIT PRICE PER L.F. FOR "F" SHAPE BARRIER CURB (21"x45").

8.) FOR DETAILS AND DIMENSIONS OF PRECAST CONCRETE BARRIER CURB INCLUDING REINFORCING STEEL NOT SHOWN, SEE MISCELLANEOUS DETAILS.

9.) THE COST OF PERMANENT CATCH BASIN TOPS AND THEIR INITIALINSTALLATION SHALL BE INCLUDED IN THE CONTRACT UNIT PRICE FOR EACH TYPE 'C-M' CATCH BASIN.

10.) THE COST OF THE PERVIOUS BACKFILL SHALL BE INCLUDED IN THE CONTRACT UNIT PRICE FOR EACH TYPE 'C-M-2' CATCH BASIN.

TYPE 'C-M-2' CATCH BASIN

NOT TO SCALE

FINAL DESIGN REVIEW

REV.	DATE	REVISION DESCRIPTION	SHEET NO.
-	-	-	-
-	-	-	-
-	-	-	-
-	-	-	-
-	-	-	-
-	-	-	-

THE INFORMATION, INCLUDING ESTIMATED QUANTITIES OF WORK, SHOWN ON THESE SHEETS IS BASED ON LIMITED INVESTIGATIONS BY THE STATE AND IS IN NO WAY WARRANTED TO INDICATE THE CONDITIONS OF ACTUAL QUANTITIES OF WORK WHICH WILL BE REQUIRED.

Plotted Date: 2/13/2014

DESIGNER/DRAFTER: RL/EK/MF
CHECKED BY: D.DAGAN
SCALE AS NOTED

STATE OF CONNECTICUT
DEPARTMENT OF TRANSPORTATION

Filename: ...\HW_MSH_MDS-10_Type C-M-2 Catch Basin.dgn

SIGNATURE/ BLOCK:

PROJECT TITLE: INTERSTATE 95 RESURFACING AND SAFETY IMPROVEMENTS

TOWN: OLD SAYBROOK, OLD LYME & EAST LYME

DRAWING TITLE: TYPE "C-M-2" CATCH BASIN

PROJECT NO. 104-164
DRAWING NO. MDS-10
SHEET NO. 03.26

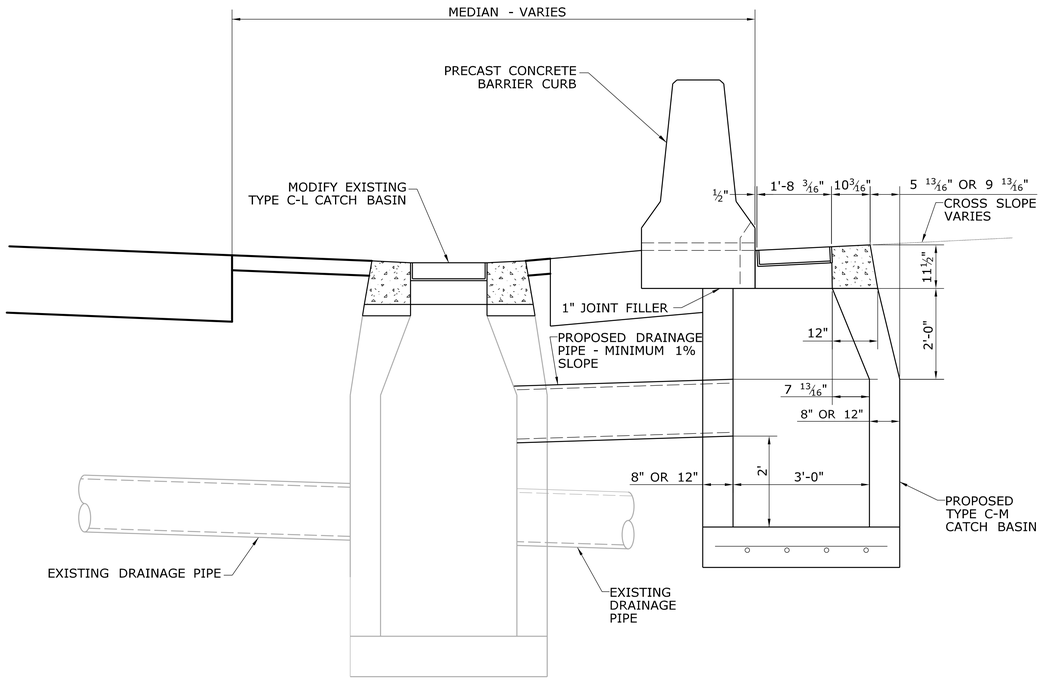

SECTION
NOT TO SCALE

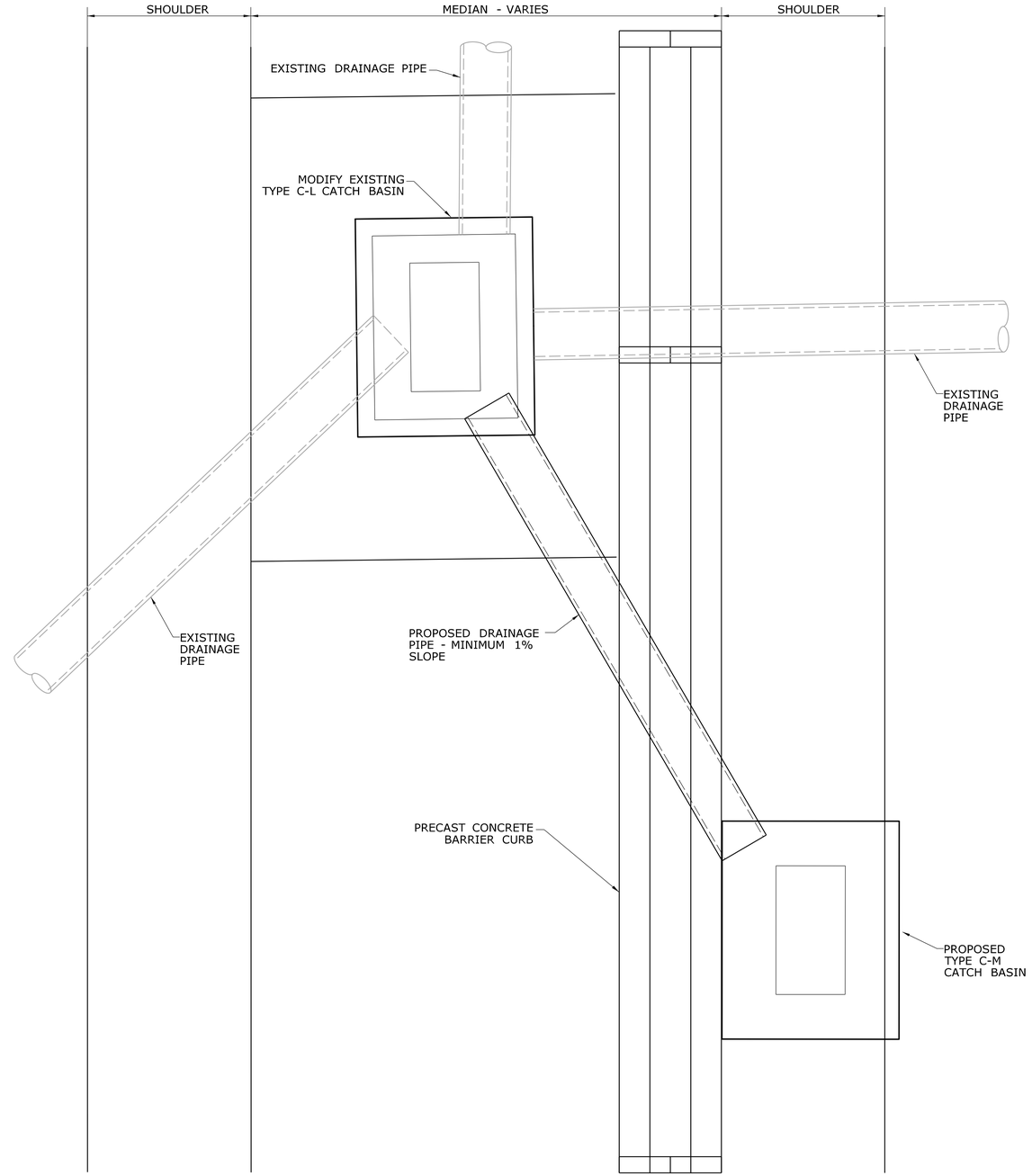

PLAN
NOT TO SCALE

FINAL DESIGN REVIEW

REV.	DATE	REVISION DESCRIPTION	SHEET NO.
-	-	-	-
-	-	-	-
-	-	-	-
-	-	-	-
-	-	-	-
-	-	-	-

THE INFORMATION, INCLUDING ESTIMATED QUANTITIES OF WORK, SHOWN ON THESE SHEETS IS BASED ON LIMITED INVESTIGATIONS BY THE STATE AND IS IN NO WAY WARRANTED TO INDICATE THE CONDITIONS OF ACTUAL QUANTITIES OF WORK WHICH WILL BE REQUIRED.

Plotted Date: 2/13/2014

DESIGNER/DRAFTER: **RL/EK/MF**
CHECKED BY: **D.DAGAN**
SCALE AS NOTED

STATE OF CONNECTICUT
DEPARTMENT OF TRANSPORTATION

Filename: ...\HW_MSH_MDS-11_Type C-M to Ex C-L CB.dgn

SIGNATURE/ BLOCK:

PROJECT TITLE:
INTERSTATE 95 RESURFACING AND SAFETY IMPROVEMENTS

TOWN:
OLD SAYBROOK, OLD LYME & EAST LYME

DRAWING TITLE:
TYPE "C-M" CATCH BASIN TO MODIFIED EXISTING TYPE C-L CATCH BASIN

PROJECT NO. **104-164**
DRAWING NO. **MDS-11**
SHEET NO. **03.27**

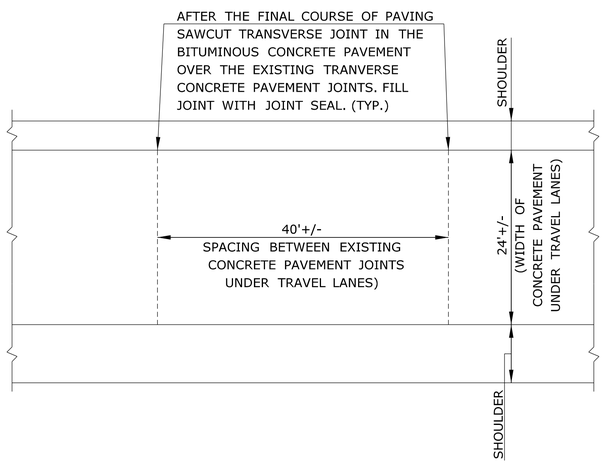

NOTE:
THE TRANSVERSE SAWCUT SHALL BE PAID FOR UNDER THE ITEM "SAWING AND SEALING JOINTS IN BITUMINOUS CONCRETE PAVEMENT".

TRANSVERSE SAWCUT DETAIL

NOT TO SCALE

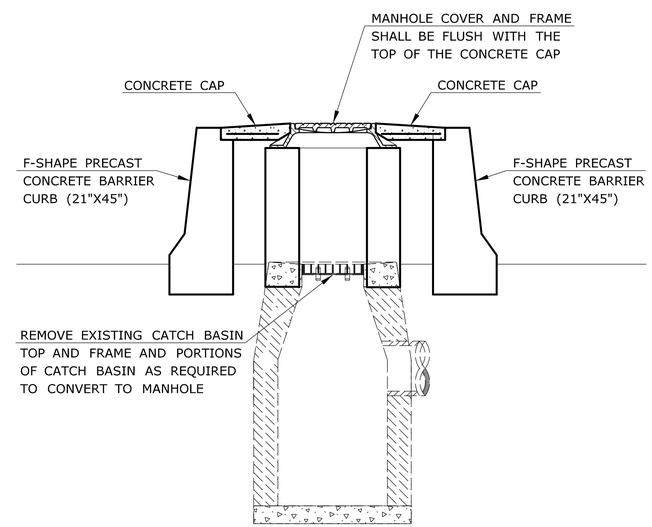

NOTE:
FOR DETAILS OF MANHOLE COVER AND FRAME, ETC., SEE APPROPRIATE STANDARD AND MISCELLANEOUS DETAIL.

CONVERT CATCH BASIN TO MANHOLE

NOT TO SCALE

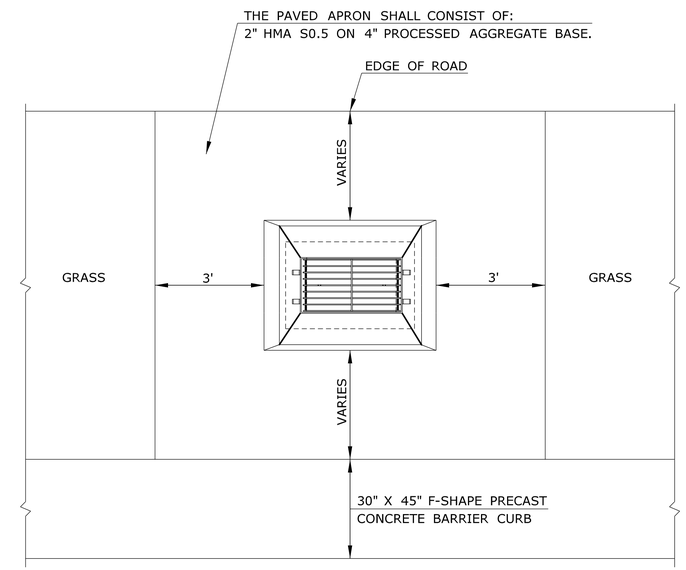

NOTE:
PAVED APRON SHALL BE PAID FOR UNDER THE ITEM "PAVED DITCH".

PAVED APRON DETAIL

NOT TO SCALE

FINAL DESIGN REVIEW

REV.	DATE	REVISION DESCRIPTION	SHEET NO.
-	-	-	-
-	-	-	-
-	-	-	-
-	-	-	-
-	-	-	-
-	-	-	-

THE INFORMATION, INCLUDING ESTIMATED QUANTITIES OF WORK, SHOWN ON THESE SHEETS IS BASED ON LIMITED INVESTIGATIONS BY THE STATE AND IS IN NO WAY WARRANTED TO INDICATE THE CONDITIONS OF ACTUAL QUANTITIES OF WORK WHICH WILL BE REQUIRED.

Plotted Date: 2/13/2014

DESIGNER/DRAFTER: **RL/EK/MF**
CHECKED BY: **D. DAGAN**
SCALE AS NOTED

STATE OF CONNECTICUT
DEPARTMENT OF TRANSPORTATION

Filename: ...\HW_MSH_MDS-12_MiscPvmt.dgn

SIGNATURE/ BLOCK:

PROJECT TITLE:
INTERSTATE 95 RESURFACING AND SAFETY IMPROVEMENTS

TOWN: **OLD SAYBROOK, OLD LYME & EAST LYME**

DRAWING TITLE: **CONVERT CB TO MH, PAVED APRON & TRANSVERSE SAWCUT**

PROJECT NO. **104-164**
DRAWING NO. **MDS-12**
SHEET NO. **03.28**

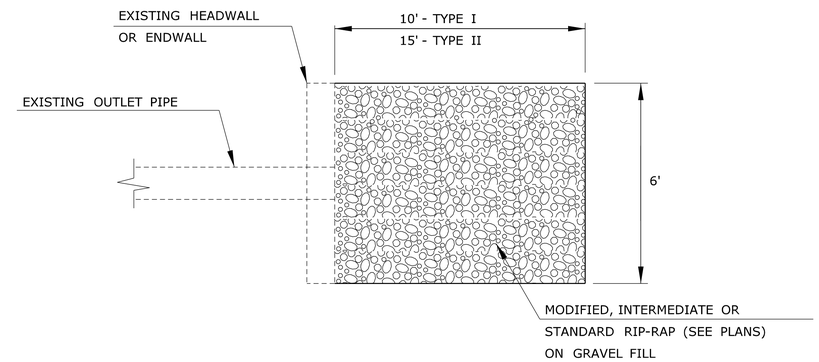

PLAN

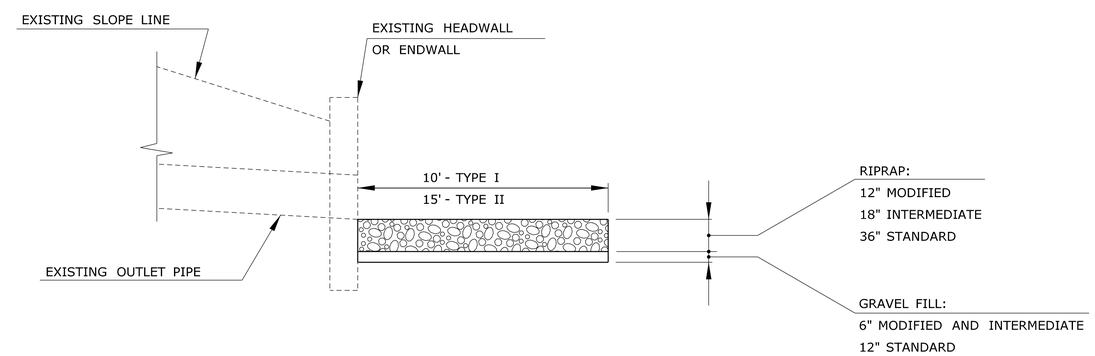

SIDE VIEW

RIP-RAP SPLASH PAD

NOT TO SCALE

FINAL DESIGN REVIEW

REV.	DATE	REVISION DESCRIPTION	SHEET NO.
-	-	-	-
-	-	-	-
-	-	-	-
-	-	-	-
-	-	-	-
-	-	-	-

THE INFORMATION, INCLUDING ESTIMATED QUANTITIES OF WORK, SHOWN ON THESE SHEETS IS BASED ON LIMITED INVESTIGATIONS BY THE STATE AND IS IN NO WAY WARRANTED TO INDICATE THE CONDITIONS OF ACTUAL QUANTITIES OF WORK WHICH WILL BE REQUIRED.

Plotted Date: 2/13/2014

DESIGNER/DRAFTER: RL/EK/MF
CHECKED BY: D. DAGAN
SCALE AS NOTED

STATE OF CONNECTICUT
DEPARTMENT OF TRANSPORTATION

Filename: ...\HW_MSH_MDS-13_Riprap.dgn

SIGNATURE/
BLOCK:

PROJECT TITLE:
INTERSTATE 95
RESURFACING AND SAFETY
IMPROVEMENTS

TOWN:
OLD SAYBROOK,
OLD LYME & EAST LYME

DRAWING TITLE:
RIPRAP SPLASH AND SCOUR PAD

PROJECT NO. 104-164
DRAWING NO. MDS-13
SHEET NO. 03.29

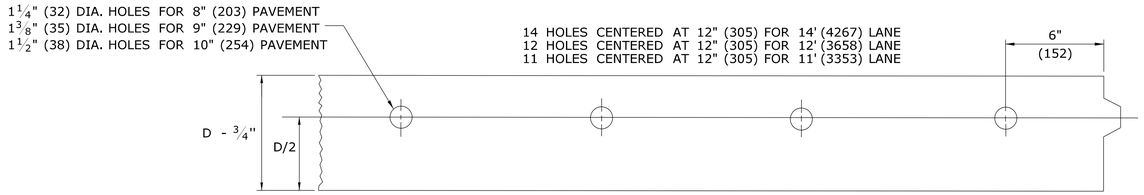

DETAIL OF JOINT FILLER IN EXPANSION JOINT

GENERAL NOTES:

1. MATERIALS FOR SIDE FRAMES AND CENTER SUPPORTS SHALL MEET THE REQUIREMENTS OF AASHTO M-31. ALTERNATE FRAME DESIGN MAY BE APPROVED BY THE ENGINEER.
2. DOWEL BAR DIAMETER SIZES ARE EXCLUSIVE OF COATINGS. ALL DIMENSIONS SUBJECT TO MANUFACTURING TOLERANCES.
3. LENGTH OF LOAD TRANSFER UNIT AND NUMBER OF DOWELS FOR VARIOUS LANE WIDTHS SHALL BE AS FOLLOWS:

LANE WIDTH	OVERALL LENGTH	NO. OF DOWELLS
11'-0" (3353)	10'-9" (3277)	11
12'-0" (3658)	11'-9" (3581)	12
14'-0" (4267)	13'-6" (4115)	14

4. D = DEPTH OF PAVEMENT
5. ALL SIDE FRAMES AND CENTER SUPPORTS SHALL BE 1 GAUGE WIRE OR 5/16" (8) BARS THROUGHOUT.
6. AT FIRST POURING, THE JOINT SEAL MATERIAL SHALL FILL THE JOINT FLUSH WITH THE PAVEMENT SURFACE. AFTER THIS MATERIAL HAS COOLED AND CONTRACTED, THE REMAINING JOINT OPENING SHALL BE FILLED TO WITHIN ⅛" (3) OF THE PAVEMENT SURFACE.
7. WHEN AN EXISTING TRANSVERSE CONTRACTION OR EXPANSION JOINT FALLS WITHIN THE LIMITS OF THE PATCH, THE CONTRACTION OR EXPANSION JOINT SHALL BE REPLACED WITH A JOINT OF THE SAME TYPE, ALONG THE SAME PLANE AS THE ADJACENT TRANSVERSE JOINTS.
8. WHEN IT IS DETERMINED BY THE ENGINEER THAT A PATCH GREATER THAN 12' (3658) IN LENGTH IS NECESSARY, THE CONTRACTOR SHALL SUBMIT A PLAN FOR THE PROPOSED METHOD OF OPERATIONS FOR APPROVAL BY THE ENGINEER.
9. WHERE DISTRESS IS LIMITED TO ONLY ONE SIDE OF THE TRANSVERSE JOINT, EXTEND PATCH BOUNDARY 3' (914) ON GOOD SIDE OF JOINT TO REMOVE AND REPLACE EXISTING DOWEL BAR SYSTEM.
10. WHERE DISTRESS IN ADJACENT LANES IS SIMILAR, THE PATCH BOUNDARY SHALL BE EXTENDED TO AVOID OFFSETS < 2' (610) BETWEEN PATCHES IN ADJACENT LANES.
11. THE TERMS: CONCRETE PAVEMENT REPLACEMENT FOR ROADWAY (FULL DEPTH), CONCRETE PATCH, AND PATCH SHALL BE USED INTERCHANGEABLY.

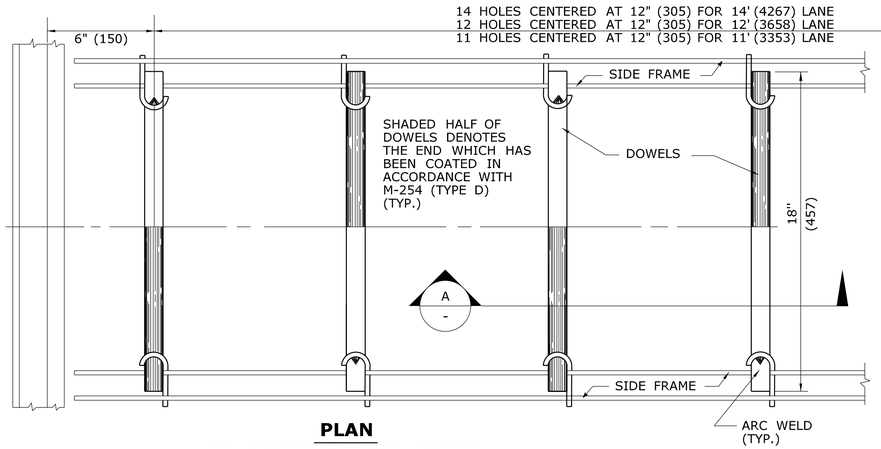

PLAN IN CONTRACTION JOINT

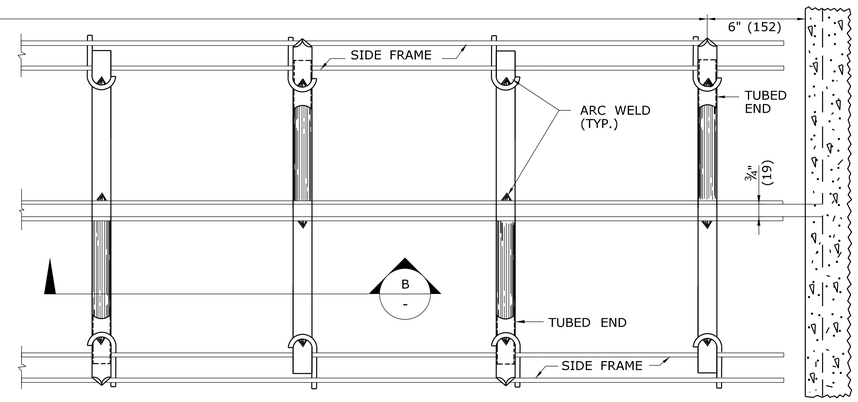

PLAN IN EXPANSION JOINT

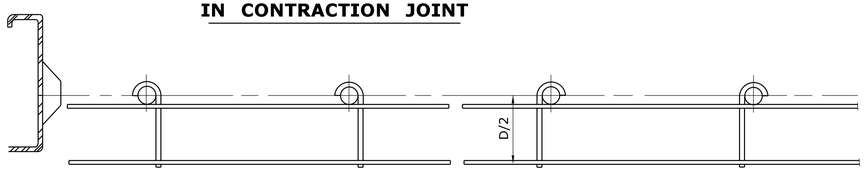

SIDE VIEW

SECTION A -

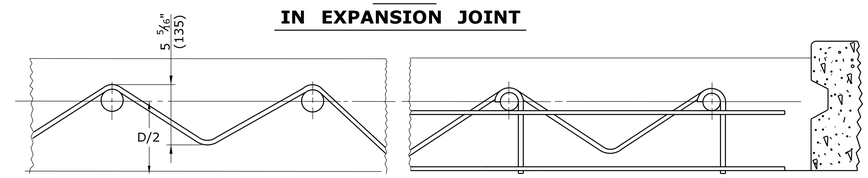

SECTION B -

SIDE VIEW

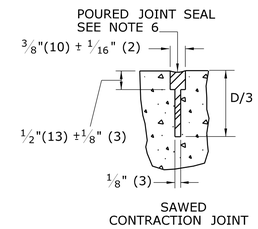

DETAIL B

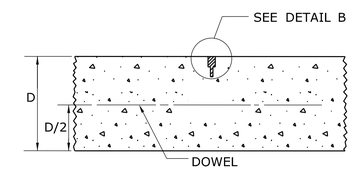

SECTION THRU TRANSVERSE CONTRACTION JOINT

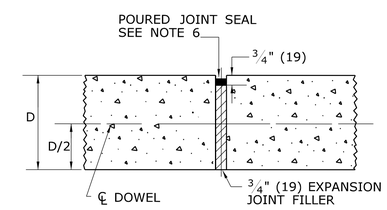

SECTION THRU TRANSVERSE EXPANSION JOINT

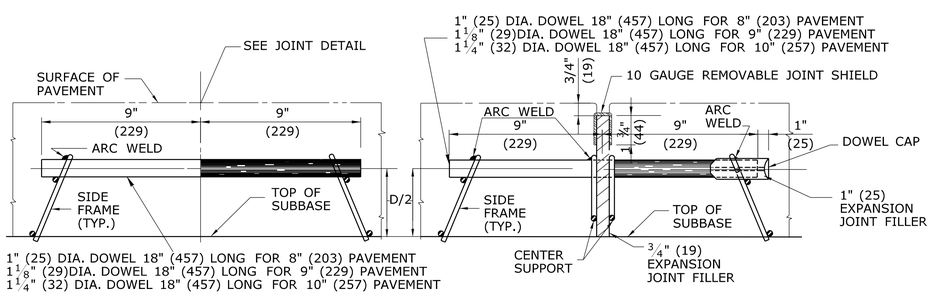

HALF SIZE SECTION THRU UNIT IN CONTRACTION

HALF SIZE SECTION THRU UNIT IN EXPANSION JOINT

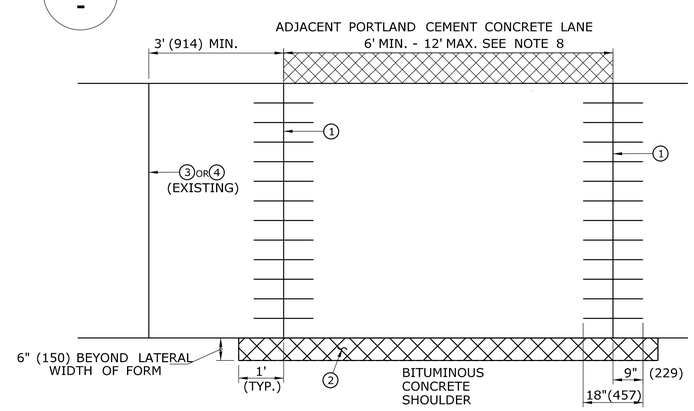

REPAIR METHOD FOR MID-SLAB DISTRESS (ONE LANE TYPICAL)

LEGEND:

1. SAW CUT CONCRETE PAVEMENT FULL DEPTH
2. SAW CUT AND REMOVE BITUMINOUS SHOULDER ANDINSTALL FORM
3. TRANSVERSE CONTRACTION JOINT
4. TRANSVERSE EXPANSION JOINT

ALL METRIC DIMENSIONS ARE IN MILLIMETERS (mm) UNLESS OTHERWISE NOTED.

FINAL DESIGN REVIEW

REV.	DATE	REVISION DESCRIPTION	SHEET NO.
-	-	-	-
-	-	-	-
-	-	-	-
-	-	-	-
-	-	-	-
-	-	-	-

THE INFORMATION, INCLUDING ESTIMATED QUANTITIES OF WORK, SHOWN ON THESE SHEETS IS BASED ON LIMITED INVESTIGATIONS BY THE STATE AND IS IN NO WAY WARRANTED TO INDICATE THE CONDITIONS OF ACTUAL QUANTITIES OF WORK WHICH WILL BE REQUIRED.

Plotted Date: 2/13/2014

DESIGNER/DRAFTER: RL/EK/MF
CHECKED BY: D. DAGAN
SCALE AS NOTED

STATE OF CONNECTICUT
DEPARTMENT OF TRANSPORTATION

Filename: ...\HW_MSH_MDS-14_Concrete Pavement.dgn

SIGNATURE/
BLOCK:

PROJECT TITLE: INTERSTATE 95 RESURFACING AND SAFETY IMPROVEMENTS

TOWN: OLD SAYBROOK, OLD LYME & EAST LYME

DRAWING TITLE: CONCRETE PAVEMENT REPLACEMENT (FULL DEPTH)

PROJECT NO. 104-164
DRAWING NO. MDS-14
SHEET NO. 03.30

GENERAL NOTES

1. ALL TYPE "C-L" CATCH BASINS IN THE MEDIAN WHERE F-SHAPE PRECAST CONCRETE BARRIER CURB IS TO BE INSTALLED, SHALL HAVED A PAVED APRON. PAVED APRONS TO BE PAID FOR UNDER ITEM "PAVED DITCH".
2. TYPE "C-L" CATCH BASINS IN THE MEDIAN THAT MAY REQUIRE REPLACEMENT, WILL BE DETERMINED IN THE FIELD. AN UNASSIGNED QUANTITIY FOR THIS ITEM HAS BEEN INCLUDED IN THE CONTRACT DOCUMENTS.
3. ALL TRANSITIONS BETWEEN THE VARIOUS TYPES OF PRECAST CONCRETE BARRIER CURB TO BE PAID FOR UNDER ITEM "F-SHAPE PRECAST CONCRETE BARRIER CURB (30" x 45")".
4. PAVED MEDIAN TO BE PAID FOR UNDER ITEM "PAVED DITCH".
5. CONTRACTOR TO BE AWARE OF EXISTING ELECTRICAL ILLUMINATION CONDUITS AND HANDHOLES ALONG NORTHBOUND AND SOUTHBOUND EDGE OF PAVEMENT WHEN INSTALLING GUIDE RAILING AND PRECAST CONCRETE BARRIER CURB.
6. ALL EXISTING DRAINAGE STRUCTURES AND DRAINAGE PIPES (EXCLUDING CROSS CULVERT STRUCTURES CARRYING WATERCOURSE) WITHIN THE PROJECT LIMITS SHALL BE CLEANED PRIOR TO START OF CONSTRUCTION AND AFTER CONSTRUCTION.
7. DRAINAGE INLETS AND OUTLETS WHERE NOTED ON THE PLANS CALLED FOR REMOVAL OF SEDIMENTATION MATERIAL SHALL BE PAID UNDER ITEM #026000 - DITCH EXCAVATION. AFTER THE DRAINAGE OUTLETS HAVE BEEN CLEARED OF SILT MATERIAL, THE ENGINEER WILL DETERMINE FROM FIELD CONDITIONS WHETHER OR NOT A RIPRAP STONE SPLASH PAD IS REQUIRED FOR SCOUR AND CHANNEL STABILITY.
8. THE TOP OF FRAME ELEVATION FOR ALL CATCH BASINS SHALL BE DETERMINED IN THE FIELD BY THE CONTRACTOR AND APPROVED BY THE ENGINEER.
9. UPON COMPLETION OF ALL WORK, THE CONTRACTOR SHALL INSTALL PERMANENT PAVEMENT MARKINGS WITHIN THE ENTIRE PROJECT LIMITS.
10. THE CONTRACTOR SHALL PROVIDE PERMANENT DELINEATION IN ACCORDANCE WITH CTDOT TRAFFICSTANDARD SHEET NO. TR-1205.01 "DELINEATION, DELINEATORS AND OBJECT MARKERS DETAILS".

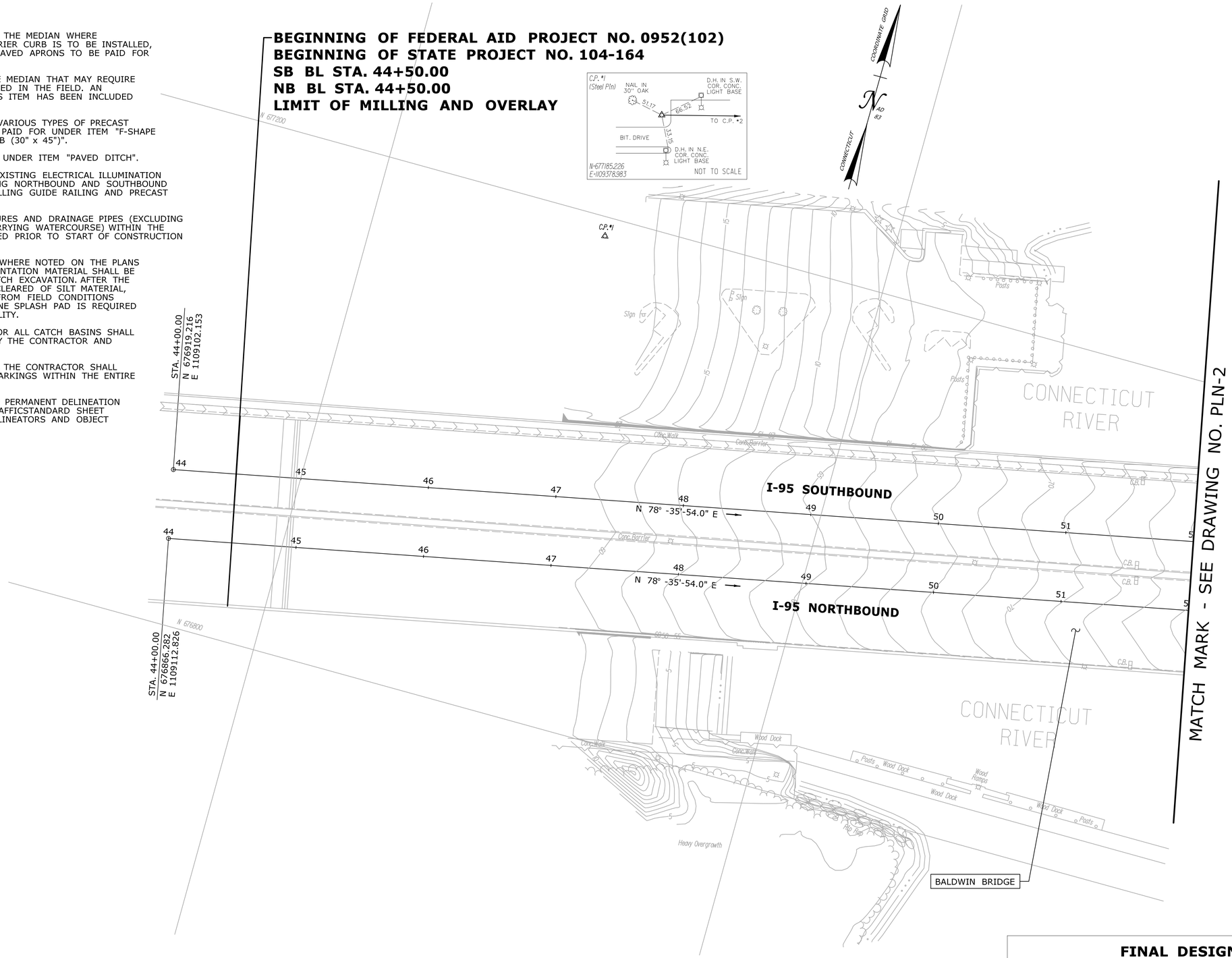

FINAL DESIGN REVIEW

REV.	DATE	REVISION DESCRIPTION	SHEET NO.
-	-	-	-
-	-	-	-
-	-	-	-
-	-	-	-
-	-	-	-
-	-	-	-

THE INFORMATION, INCLUDING ESTIMATED QUANTITIES OF WORK, SHOWN ON THESE SHEETS IS BASED ON LIMITED INVESTIGATIONS BY THE STATE AND IS IN NO WAY WARRANTED TO INDICATE THE CONDITIONS OF ACTUAL QUANTITIES OF WORK WHICH WILL BE REQUIRED.

Plotted Date: 3/19/2014

DESIGNER/DRAFTER: **RL/MF/EK**
CHECKED BY: **D. DAGAN**
SCALE IN FEET 0 40 80
SCALE 1"=40'

STATE OF CONNECTICUT
DEPARTMENT OF TRANSPORTATION

Filename: ...\Plan\HW_MSH_PLN-1.dgn

SIGNATURE/ BLOCK:

PROJECT TITLE:
INTERSTATE 95 RESURFACING AND SAFETY IMPROVEMENTS

TOWN: **OLD SAYBROOK, OLD LYME & EAST LYME**

DRAWING TITLE: **ROADWAY PLAN STA. 44 TO STA. 52**

PROJECT NO. **104-164**
DRAWING NO. **PLN-1**
SHEET NO. **03.31**

FINAL DESIGN REVIEW

REV.	DATE	REVISION DESCRIPTION	SHEET NO.
-	-	-	-
-	-	-	-
-	-	-	-
-	-	-	-
-	-	-	-
-	-	-	-

THE INFORMATION, INCLUDING ESTIMATED QUANTITIES OF WORK, SHOWN ON THESE SHEETS IS BASED ON LIMITED INVESTIGATIONS BY THE STATE AND IS IN NO WAY WARRANTED TO INDICATE THE CONDITIONS OF ACTUAL QUANTITIES OF WORK WHICH WILL BE REQUIRED.

Plotted Date: 2/13/2014

DESIGNER/DRAFTER: **RL/MF/EK**

CHECKED BY: **D. DAGAN**

SCALE IN FEET

0 40 80

SCALE 1"=40'

STATE OF CONNECTICUT
DEPARTMENT OF TRANSPORTATION

Filename: ...\Plan\HW_MSH_PLN-2.dgn

SIGNATURE/
BLOCK:

PROJECT TITLE:

INTERSTATE 95 RESURFACING AND SAFETY IMPROVEMENTS

TOWN: **OLD SAYBROOK, OLD LYME & EAST LYME**

DRAWING TITLE: **ROADWAY PLAN STA. 52 TO STA. 61+50**

PROJECT NO. **104-164**

DRAWING NO. **PLN-2**

SHEET NO. **03.32**

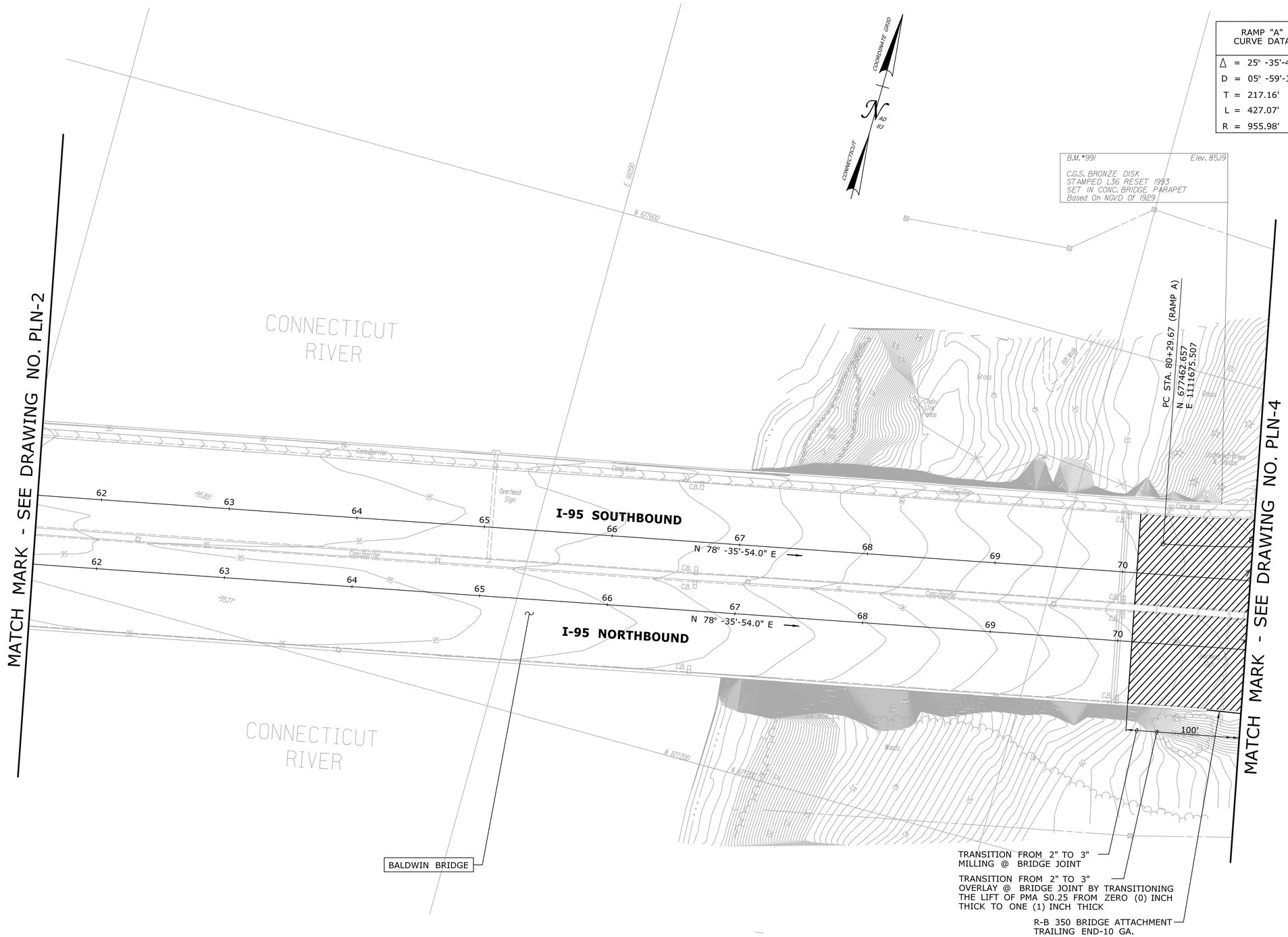

FINAL DESIGN REVIEW

REV.	DATE	REVISION DESCRIPTION	SHEET NO.
-	-	-	-
-	-	-	-
-	-	-	-
-	-	-	-
-	-	-	-
-	-	-	-

THE INFORMATION, INCLUDING ESTIMATED QUANTITIES OF WORK, SHOWN ON THESE SHEETS IS BASED ON LIMITED INVESTIGATIONS BY THE STATE AND IS IN NO WAY WARRANTED TO INDICATE THE CONDITIONS OF ACTUAL QUANTITIES OF WORK WHICH WILL BE REQUIRED.

Plotted Date: 3/19/2014

DESIGNER/DRAFTER: **RL/MF/EK**

CHECKED BY: **D. DAGAN**

SCALE IN FEET
0 40 80
SCALE 1"=40'

STATE OF CONNECTICUT
DEPARTMENT OF TRANSPORTATION

Filename: ...\Plan\HW_MSH_PLN-3.dgn

SIGNATURE/
BLOCK:

PROJECT TITLE:
INTERSTATE 95 RESURFACING AND SAFETY IMPROVEMENTS

TOWN:
OLD SAYBROOK, OLD LYME & EAST LYME

DRAWING TITLE:
ROADWAY PLAN STA. 61+50 TO STA. 70

PROJECT NO. **104-164**

DRAWING NO. **PLN-3**

SHEET NO. **03.33**

RAMP "A" CURVE DATA
Δ = 25° -35'-45.3"
D = 05° -59'-36.3"
T = 217.16'
L = 427.07'
R = 955.98'

I-95 NB CURVE # 1
Δ = 08° -28'-39.4"
D = 01° -35'-29.6"
T = 266.82'
L = 532.66'
R = 3600.00'

I-95 SB CURVE # 2
Δ = 08° -28'-39.8"
D = 01° -36'-56.8"
T = 262.82'
L = 524.68'
R = 3546.00'

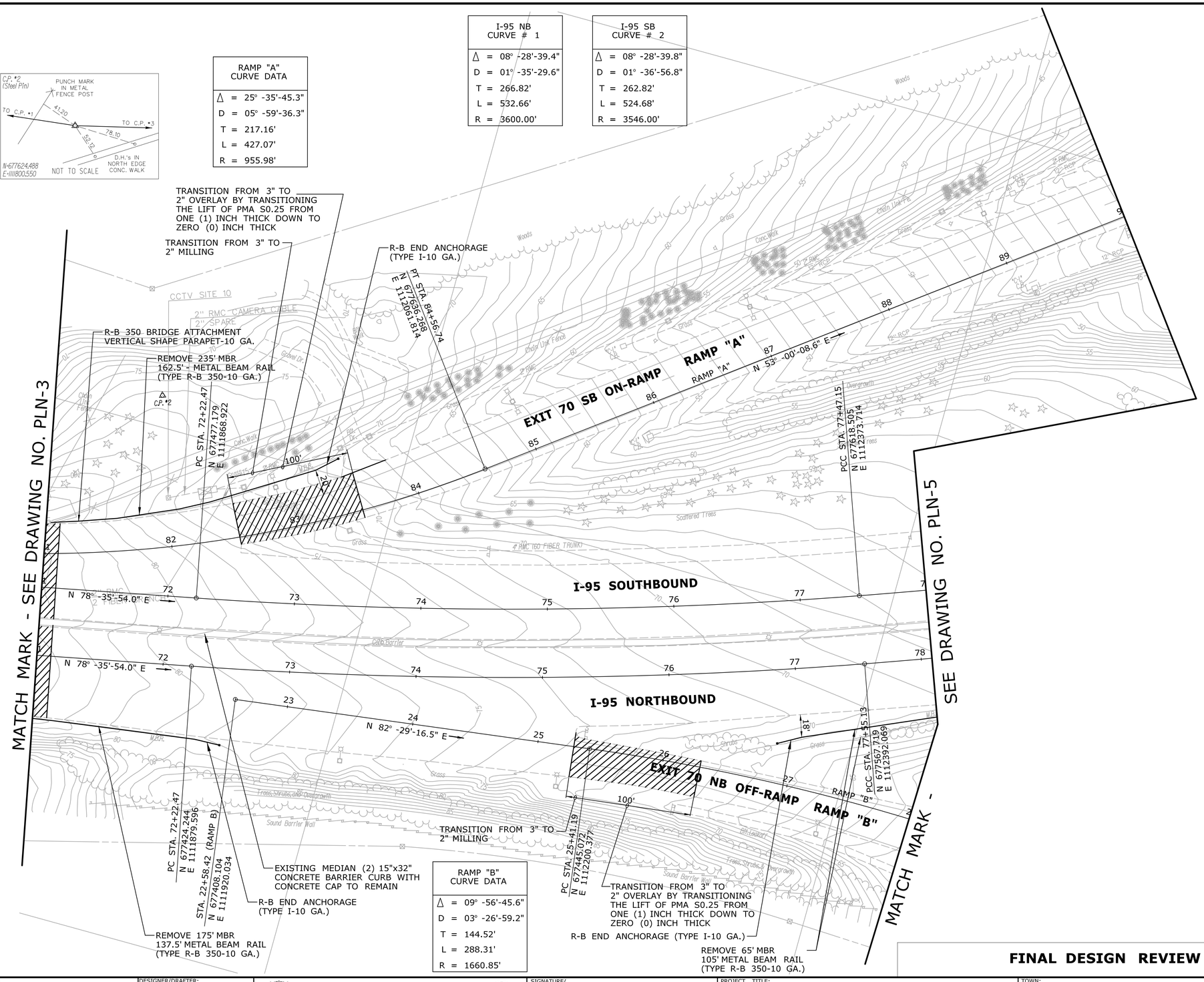

RAMP "B" CURVE DATA
Δ = 09° -56'-45.6"
D = 03° -26'-59.2"
T = 144.52'
L = 288.31'
R = 1660.85'

FINAL DESIGN REVIEW

REV.	DATE	REVISION DESCRIPTION	SHEET NO.
-	-	-	-
-	-	-	-
-	-	-	-
-	-	-	-
-	-	-	-
-	-	-	-

THE INFORMATION, INCLUDING ESTIMATED QUANTITIES OF WORK, SHOWN ON THESE SHEETS IS BASED ON LIMITED INVESTIGATIONS BY THE STATE AND IS IN NO WAY WARRANTED TO INDICATE THE CONDITIONS OF ACTUAL QUANTITIES OF WORK WHICH WILL BE REQUIRED.

Plotted Date: 3/20/2014

DESIGNER/DRAFTER: **RL/MF/EK**
CHECKED BY: **D. DAGAN**
SCALE IN FEET 0 40 80
SCALE 1"=40'

STATE OF CONNECTICUT
DEPARTMENT OF TRANSPORTATION

Filename: ...\Plan\HW_MSH_PLN-4.dgn

SIGNATURE/ BLOCK:

PROJECT TITLE:
INTERSTATE 95 RESURFACING AND SAFETY IMPROVEMENTS

TOWN: **OLD SAYBROOK, OLD LYME & EAST LYME**

DRAWING TITLE: **ROADWAY PLAN STA. 71 TO STA. 78**

PROJECT NO. **104-164**
DRAWING NO. **PLN-4**
SHEET NO. **03.34**

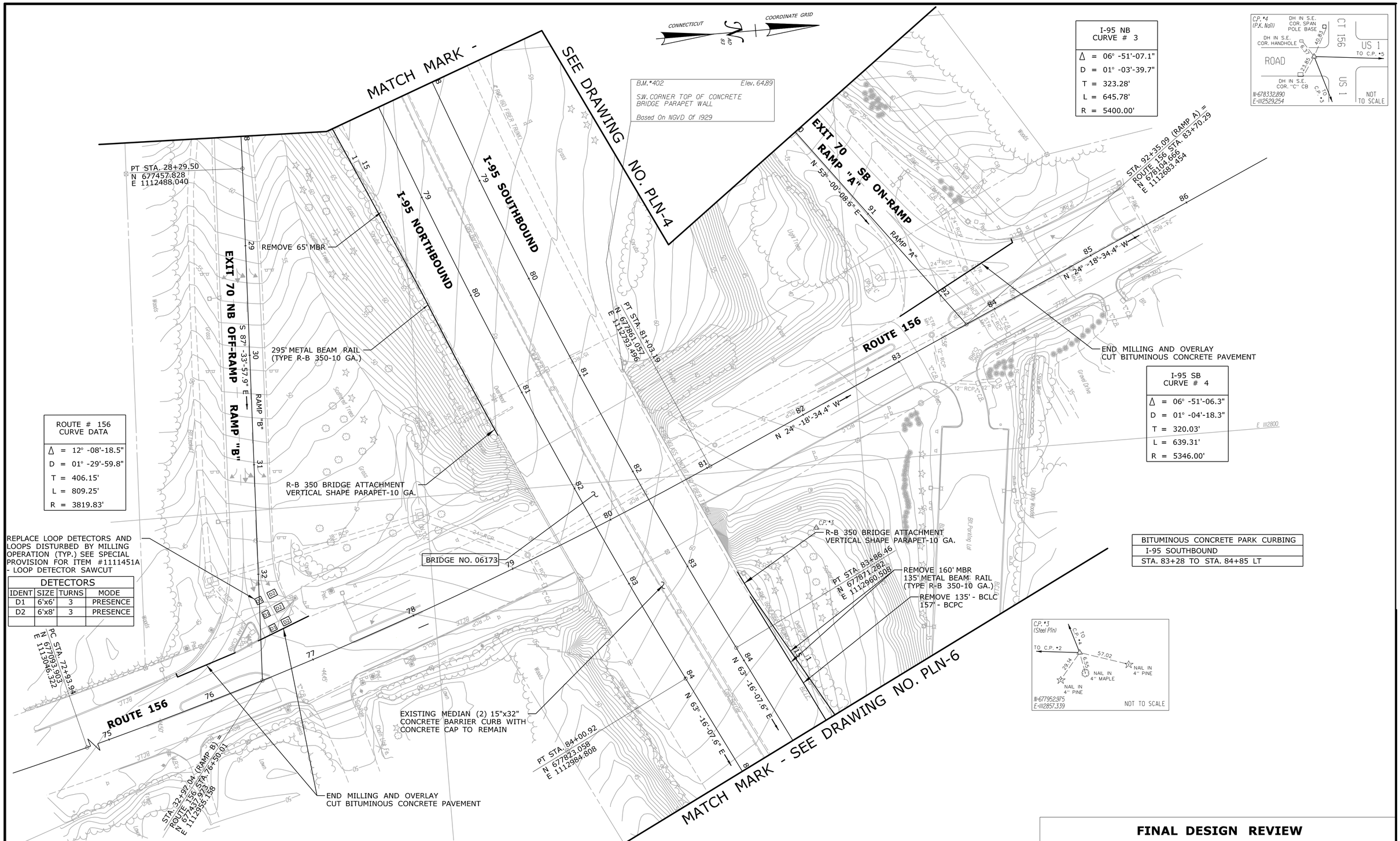

FINAL DESIGN REVIEW

REV.	DATE	REVISION DESCRIPTION	SHEET NO.
-	-	-	-
-	-	-	-
-	-	-	-
-	-	-	-
-	-	-	-
-	-	-	-

THE INFORMATION, INCLUDING ESTIMATED QUANTITIES OF WORK, SHOWN ON THESE SHEETS IS BASED ON LIMITED INVESTIGATIONS BY THE STATE AND IS IN NO WAY WARRANTED TO INDICATE THE CONDITIONS OF ACTUAL QUANTITIES OF WORK WHICH WILL BE REQUIRED.

Plotted Date: 2/13/2014

DESIGNER/DRAFTER: RL/MF/EK
CHECKED BY: D. DAGAN
SCALE IN FEET 0 40 80
SCALE 1"=40'

STATE OF CONNECTICUT
DEPARTMENT OF TRANSPORTATION

Filename: ...\Plan\HW_MSH_PLN-5.dgn

SIGNATURE/ BLOCK:

PROJECT TITLE: INTERSTATE 95 RESURFACING AND SAFETY IMPROVEMENTS

TOWN: OLD SAYBROOK, OLD LYME & EAST LYME

DRAWING TITLE: ROADWAY PLAN STA. 78+0 TO STA. 84+85

PROJECT NO. 104-164
DRAWING NO. PLN-5
SHEET NO. 03.35

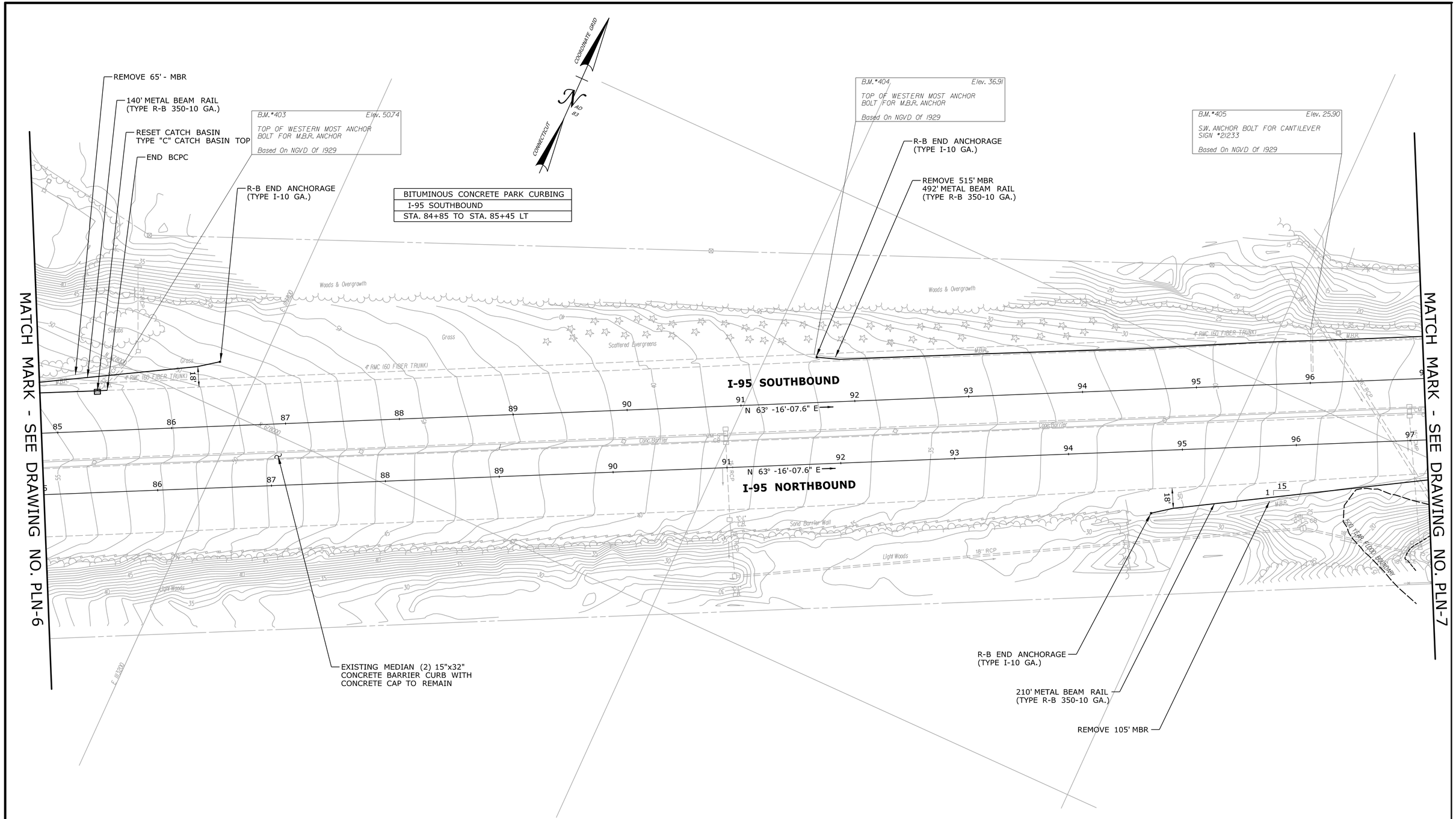

FINAL DESIGN REVIEW

REV.	DATE	REVISION DESCRIPTION	SHEET NO.
-	-	-	-
-	-	-	-
-	-	-	-
-	-	-	-
-	-	-	-
-	-	-	-

THE INFORMATION, INCLUDING ESTIMATED QUANTITIES OF WORK, SHOWN ON THESE SHEETS IS BASED ON LIMITED INVESTIGATIONS BY THE STATE AND IS IN NO WAY WARRANTED TO INDICATE THE CONDITIONS OF ACTUAL QUANTITIES OF WORK WHICH WILL BE REQUIRED.

Plotted Date: 2/13/2014

DESIGNER/DRAFTER: RL/MF/EK
CHECKED BY: D. DAGAN
SCALE IN FEET 0 40 80
SCALE 1"=40'

STATE OF CONNECTICUT
DEPARTMENT OF TRANSPORTATION

Filename: ...\Plan\HW_MSH_PLN-6.dgn

SIGNATURE/ BLOCK:

PROJECT TITLE: INTERSTATE 95 RESURFACING AND SAFETY IMPROVEMENTS

TOWN: OLD SAYBROOK, OLD LYME & EAST LYME

DRAWING TITLE: ROADWAY PLAN STA. 85 TO STA. 97

PROJECT NO. 104-164
DRAWING NO. PLN-6
SHEET NO. 03.36

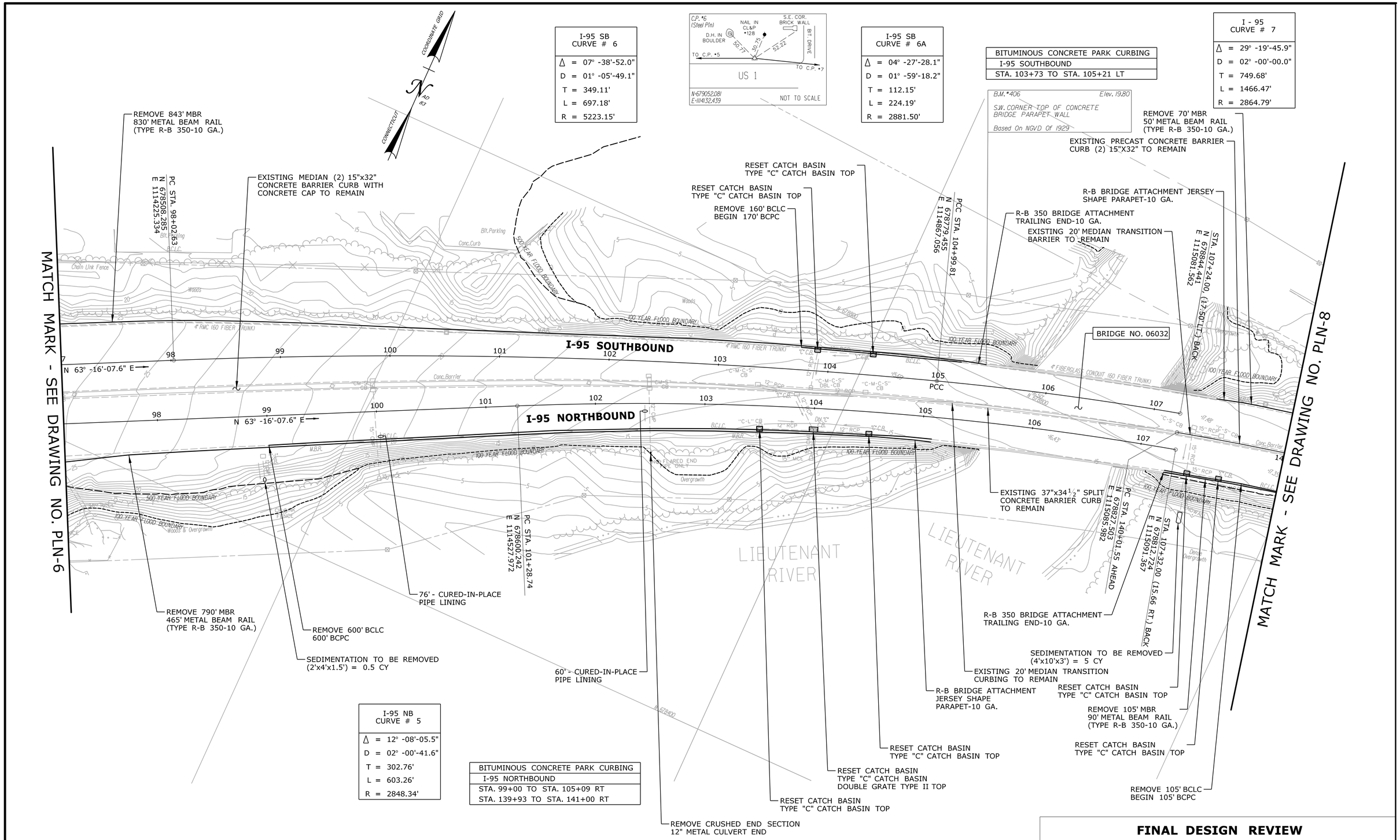

FINAL DESIGN REVIEW

REV.	DATE	REVISION DESCRIPTION	SHEET NO.
-	-	-	-
-	-	-	-
-	-	-	-
-	-	-	-
-	-	-	-
-	-	-	-

THE INFORMATION, INCLUDING ESTIMATED QUANTITIES OF WORK, SHOWN ON THESE SHEETS IS BASED ON LIMITED INVESTIGATIONS BY THE STATE AND IS IN NO WAY WARRANTED TO INDICATE THE CONDITIONS OF ACTUAL QUANTITIES OF WORK WHICH WILL BE REQUIRED.

Plotted Date: 2/13/2014

DESIGNER/DRAFTER: **RL/MF/EK**

CHECKED BY: **D. DAGAN**

SCALE IN FEET 0 40 80

SCALE 1"=40'

STATE OF CONNECTICUT
DEPARTMENT OF TRANSPORTATION

Filename: ...\Plan\HW_MSH_PLN-7.dgn

SIGNATURE/ BLOCK:

PROJECT TITLE:

INTERSTATE 95 RESURFACING AND SAFETY IMPROVEMENTS

TOWN: **OLD SAYBROOK, OLD LYME & EAST LYME**

DRAWING TITLE: **ROADWAY PLAN STA. 97 TO STA. 141**

PROJECT NO. **104-164**

DRAWING NO. **PLN-7**

SHEET NO. **03.37**

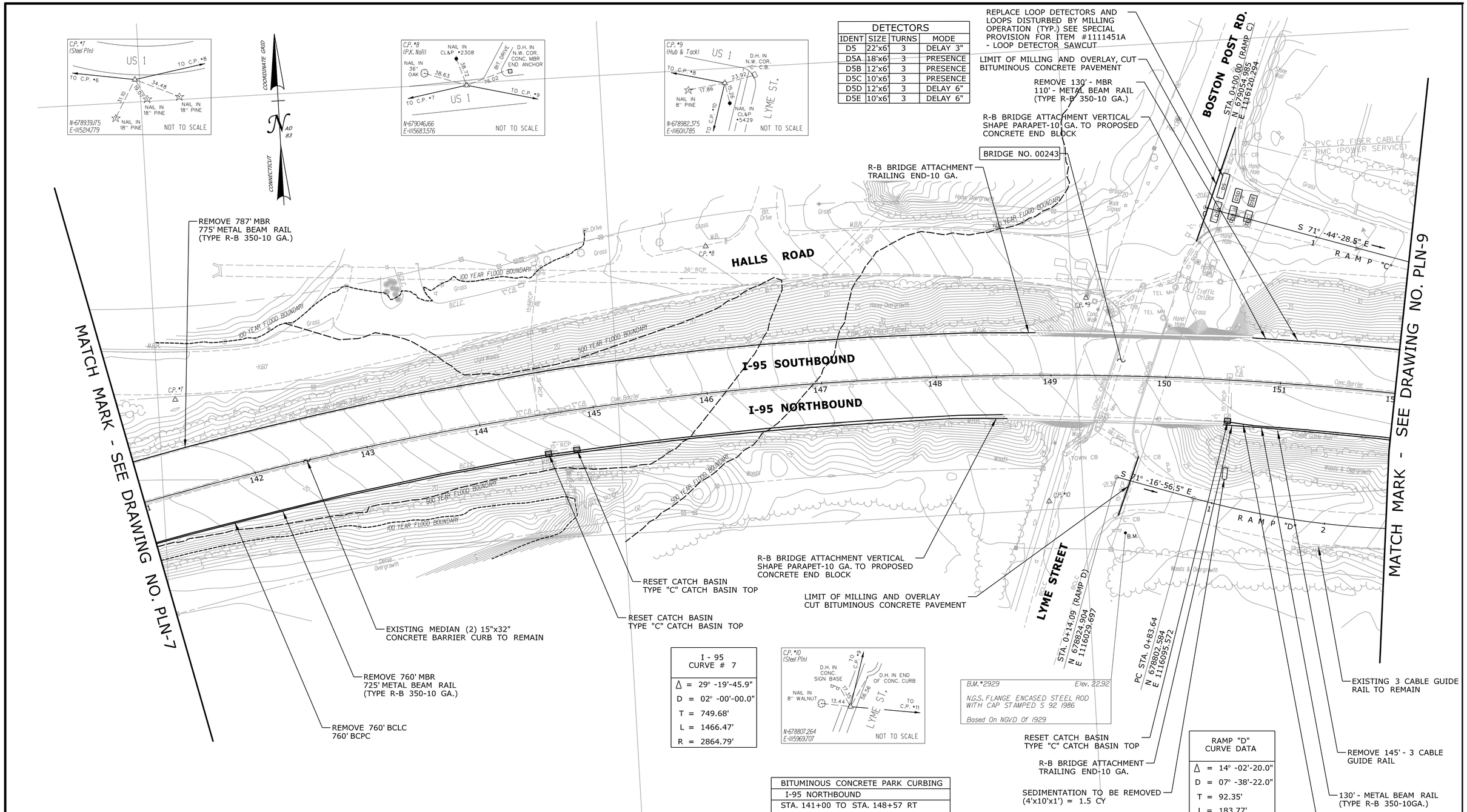

DETECTORS			
IDENT	SIZE	TURNS	MODE
D5	22'x6'	3	DELAY 3"
D5A	18'x6'	3	PRESENCE
D5B	12'x6'	3	PRESENCE
D5C	10'x6'	3	PRESENCE
D5D	12'x6'	3	DELAY 6"
D5E	10'x6'	3	DELAY 6"

REPLACE LOOP DETECTORS AND LOOPS DISTURBED BY MILLING OPERATION (TYP.) SEE SPECIAL PROVISION FOR ITEM #1111451A - LOOP DETECTOR SAWCUT

REMOVE 130' - MBR
110' - METAL BEAM RAIL
(TYPE R-B 350-10 GA.)

BRIDGE NO. 00243

I - 95 CURVE # 7
Δ = 29° -19'-45.9"
D = 02° -00'-00.0"
T = 749.68'
L = 1466.47'
R = 2864.79'

BITUMINOUS CONCRETE PARK CURBING
I-95 NORTHBOUND
STA. 141+00 TO STA. 148+57 RT
STA. 150+53 TO STA. 152+00 RT

RAMP "D" CURVE DATA
Δ = 14° -02'-20.0"
D = 07° -38'-22.0"
T = 92.35'
L = 183.77'
R = 750.00'

FINAL DESIGN REVIEW

REV.	DATE	REVISION DESCRIPTION	SHEET NO.
-	-	-	-
-	-	-	-
-	-	-	-
-	-	-	-
-	-	-	-
-	-	-	-

THE INFORMATION, INCLUDING ESTIMATED QUANTITIES OF WORK, SHOWN ON THESE SHEETS IS BASED ON LIMITED INVESTIGATIONS BY THE STATE AND IS IN NO WAY WARRANTED TO INDICATE THE CONDITIONS OF ACTUAL QUANTITIES OF WORK WHICH WILL BE REQUIRED.

Plotted Date: 2/13/2014

DESIGNER/DRAFTER: **RL/MF/EK**
CHECKED BY: **D. DAGAN**
SCALE IN FEET 0 40 80
SCALE 1"=40'

STATE OF CONNECTICUT
DEPARTMENT OF TRANSPORTATION

Filename: ...\Plan\HW_MSH_PLN-8.dgn

SIGNATURE/
BLOCK:

PROJECT TITLE:
INTERSTATE 95 RESURFACING AND SAFETY IMPROVEMENTS

TOWN:
OLD SAYBROOK, OLD LYME & EAST LYME

DRAWING TITLE:
ROADWAY PLAN STA. 141 TO STA. 152

PROJECT NO. **104-164**
DRAWING NO. **PLN-8**
SHEET NO. **03.38**

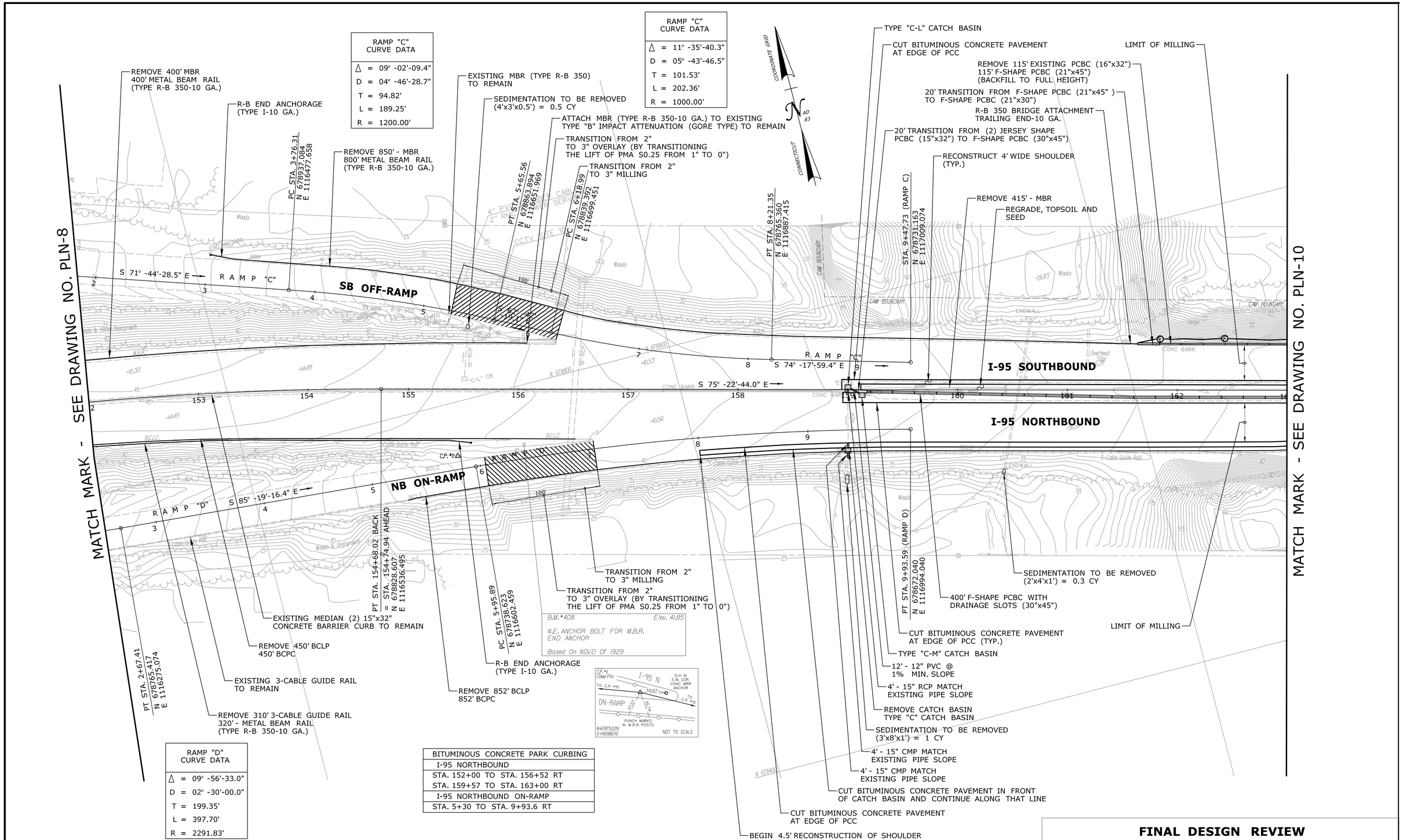

FINAL DESIGN REVIEW

REV.	DATE	REVISION DESCRIPTION	SHEET NO.
-	-	-	-
-	-	-	-
-	-	-	-
-	-	-	-
-	-	-	-
-	-	-	-

THE INFORMATION, INCLUDING ESTIMATED QUANTITIES OF WORK, SHOWN ON THESE SHEETS IS BASED ON LIMITED INVESTIGATIONS BY THE STATE AND IS IN NO WAY WARRANTED TO INDICATE THE CONDITIONS OF ACTUAL QUANTITIES OF WORK WHICH WILL BE REQUIRED.

Plotted Date: 3/20/2014

DESIGNER/DRAFTER: RL/MF/EK
CHECKED BY: D. DAGAN
SCALE IN FEET 0 40 80
SCALE 1"=40'

STATE OF CONNECTICUT
DEPARTMENT OF TRANSPORTATION

Filename: ...\Plan\HW_MSH_PLN-9.dgn

SIGNATURE/ BLOCK:

PROJECT TITLE: INTERSTATE 95 RESURFACING AND SAFETY IMPROVEMENTS

TOWN: OLD SAYBROOK, OLD LYME & EAST LYME

DRAWING TITLE: ROADWAY PLAN STA. 152 TO STA. 163

PROJECT NO. 104-164
DRAWING NO. PLN-9
SHEET NO. 03.39

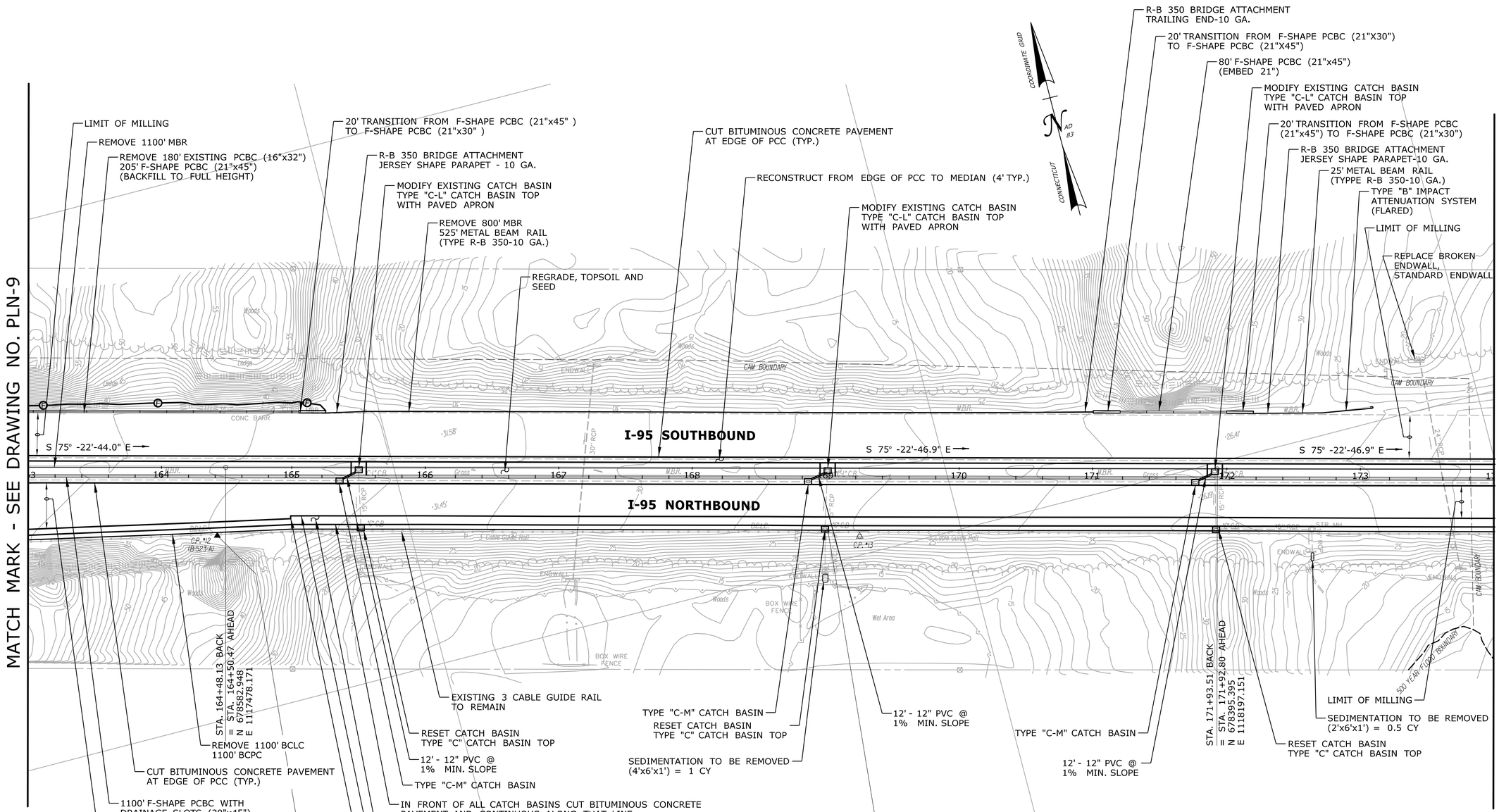

BITUMINOUS CONCRETE PARK CURBING
I-95 NORTHBOUND
STA. 163+00 TO STA. 174+00 RT

FINAL DESIGN REVIEW

REV.	DATE	REVISION DESCRIPTION	SHEET NO.
-	-	-	-
-	-	-	-
-	-	-	-
-	-	-	-
-	-	-	-
-	-	-	-

THE INFORMATION, INCLUDING ESTIMATED QUANTITIES OF WORK, SHOWN ON THESE SHEETS IS BASED ON LIMITED INVESTIGATIONS BY THE STATE AND IS IN NO WAY WARRANTED TO INDICATE THE CONDITIONS OF ACTUAL QUANTITIES OF WORK WHICH WILL BE REQUIRED.

Plotted Date: 2/20/2014

DESIGNER/DRAFTER: **RL/MF/EK**
CHECKED BY: **D. DAGAN**
SCALE IN FEET
0 40 80
SCALE 1"=40'

STATE OF CONNECTICUT
DEPARTMENT OF TRANSPORTATION

Filename: ...\Plan\HW_MSH_PLN-10.dgn

SIGNATURE/
BLOCK:

PROJECT TITLE:
INTERSTATE 95 RESURFACING AND SAFETY IMPROVEMENTS

TOWN:
OLD SAYBROOK, OLD LYME & EAST LYME

DRAWING TITLE:
ROADWAY PLAN STA. 163 TO STA. 174

PROJECT NO. **104-164**
DRAWING NO. **PLN-10**
SHEET NO. **03.40**

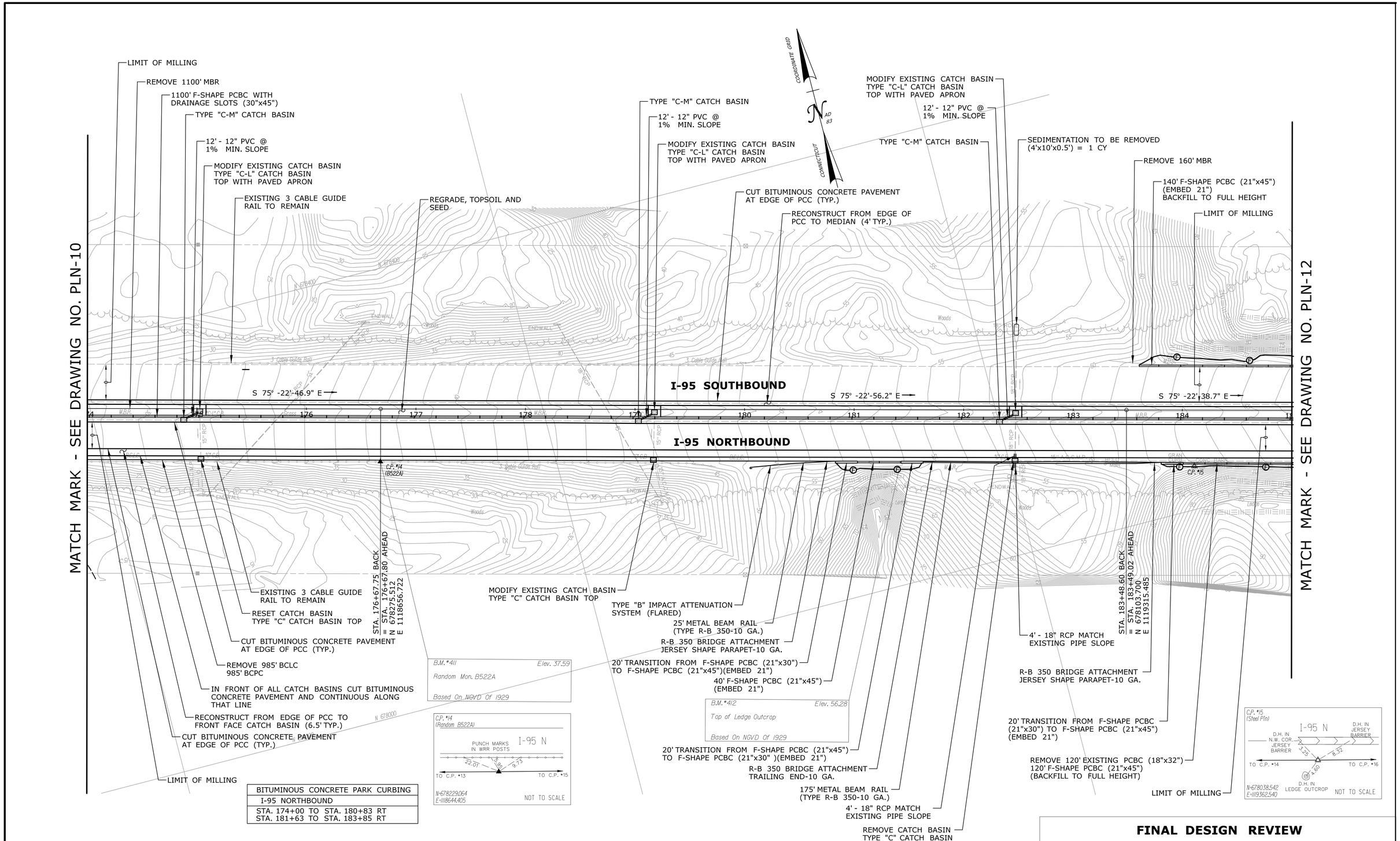

BITUMINOUS CONCRETE PARK CURBING
I-95 NORTHBOUND
STA. 174+00 TO STA. 180+83 RT STA. 181+63 TO STA. 183+85 RT

FINAL DESIGN REVIEW

REV.	DATE	REVISION DESCRIPTION	SHEET NO.
-	-	-	-
-	-	-	-
-	-	-	-
-	-	-	-
-	-	-	-
-	-	-	-

THE INFORMATION, INCLUDING ESTIMATED QUANTITIES OF WORK, SHOWN ON THESE SHEETS IS BASED ON LIMITED INVESTIGATIONS BY THE STATE AND IS IN NO WAY WARRANTED TO INDICATE THE CONDITIONS OF ACTUAL QUANTITIES OF WORK WHICH WILL BE REQUIRED.

Plotted Date: 3/20/2014

DESIGNER/DRAFTER: **RL/MF/EK**
CHECKED BY: **D. DAGAN**
SCALE IN FEET 0 40 80
SCALE 1"=40'

STATE OF CONNECTICUT
DEPARTMENT OF TRANSPORTATION

Filename: ...\Plan\HW_MSH_PLN-11.dgn

SIGNATURE/ BLOCK:

PROJECT TITLE:
INTERSTATE 95 RESURFACING AND SAFETY IMPROVEMENTS

TOWN: **OLD SAYBROOK, OLD LYME & EAST LYME**

DRAWING TITLE: **ROADWAY PLAN STA. 174 TO STA. 185**

PROJECT NO. **104-164**
DRAWING NO. **PLN-11**
SHEET NO. **03.41**

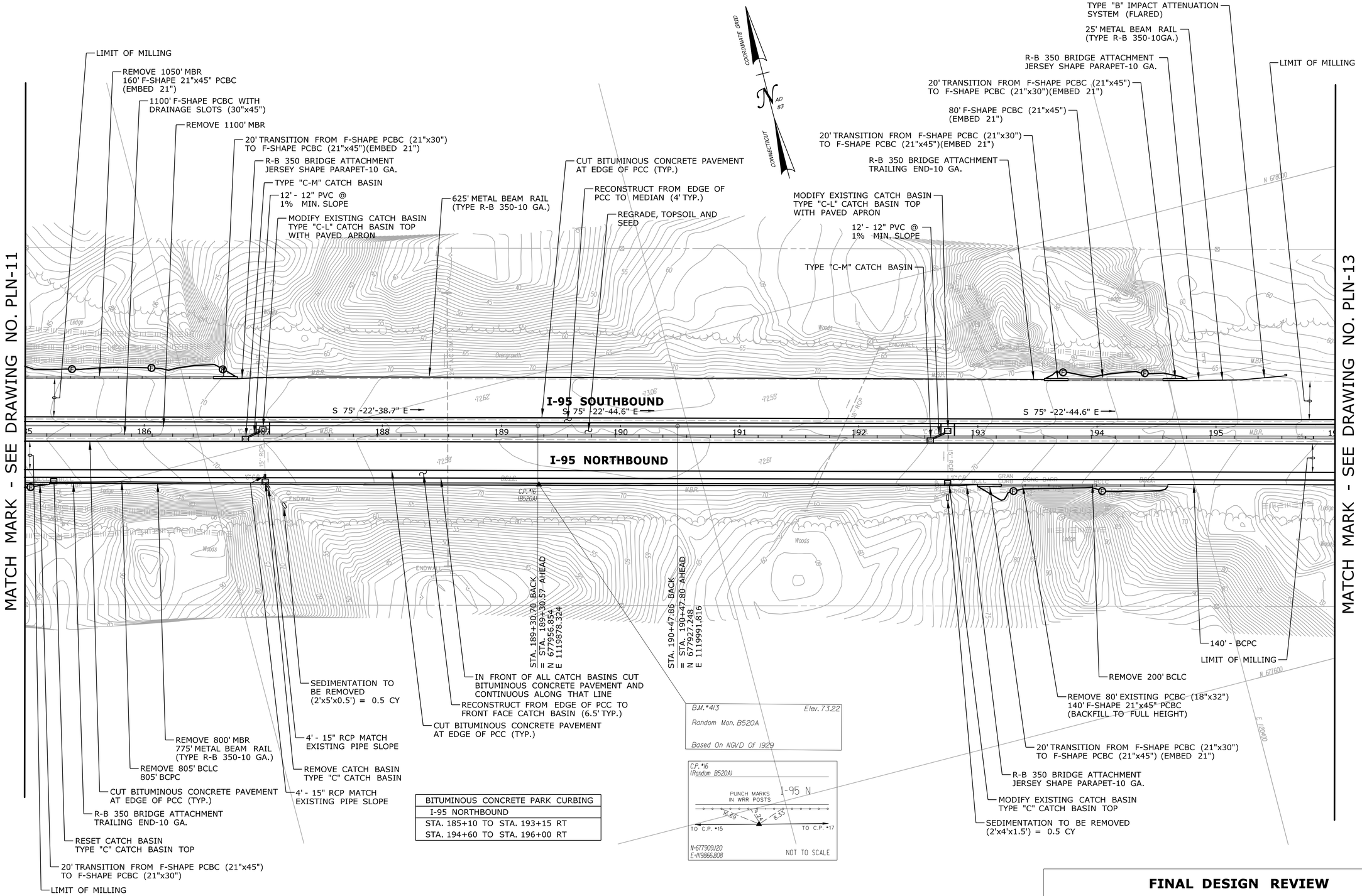

BITUMINOUS CONCRETE PARK CURBING
I-95 NORTHBOUND
STA. 185+10 TO STA. 193+15 RT
STA. 194+60 TO STA. 196+00 RT

FINAL DESIGN REVIEW

REV.	DATE	REVISION DESCRIPTION	SHEET NO.
-	-	-	-
-	-	-	-
-	-	-	-
-	-	-	-
-	-	-	-
-	-	-	-

THE INFORMATION, INCLUDING ESTIMATED QUANTITIES OF WORK, SHOWN ON THESE SHEETS IS BASED ON LIMITED INVESTIGATIONS BY THE STATE AND IS IN NO WAY WARRANTED TO INDICATE THE CONDITIONS OF ACTUAL QUANTITIES OF WORK WHICH WILL BE REQUIRED.

Plotted Date: 2/14/2014

DESIGNER/DRAFTER: RL/MF/EK
CHECKED BY: D. DAGAN
SCALE IN FEET 0 40 80
SCALE 1"=40'

STATE OF CONNECTICUT
DEPARTMENT OF TRANSPORTATION

Filename: ...\Plan\HW_MSH_PLN-12.dgn

SIGNATURE/
BLOCK:

PROJECT TITLE:
INTERSTATE 95 RESURFACING AND SAFETY IMPROVEMENTS

TOWN:
OLD SAYBROOK, OLD LYME & EAST LYME

DRAWING TITLE:
ROADWAY PLAN STA. 185 TO STA. 196

PROJECT NO. 104-164
DRAWING NO. PLN-12
SHEET NO. 03.42

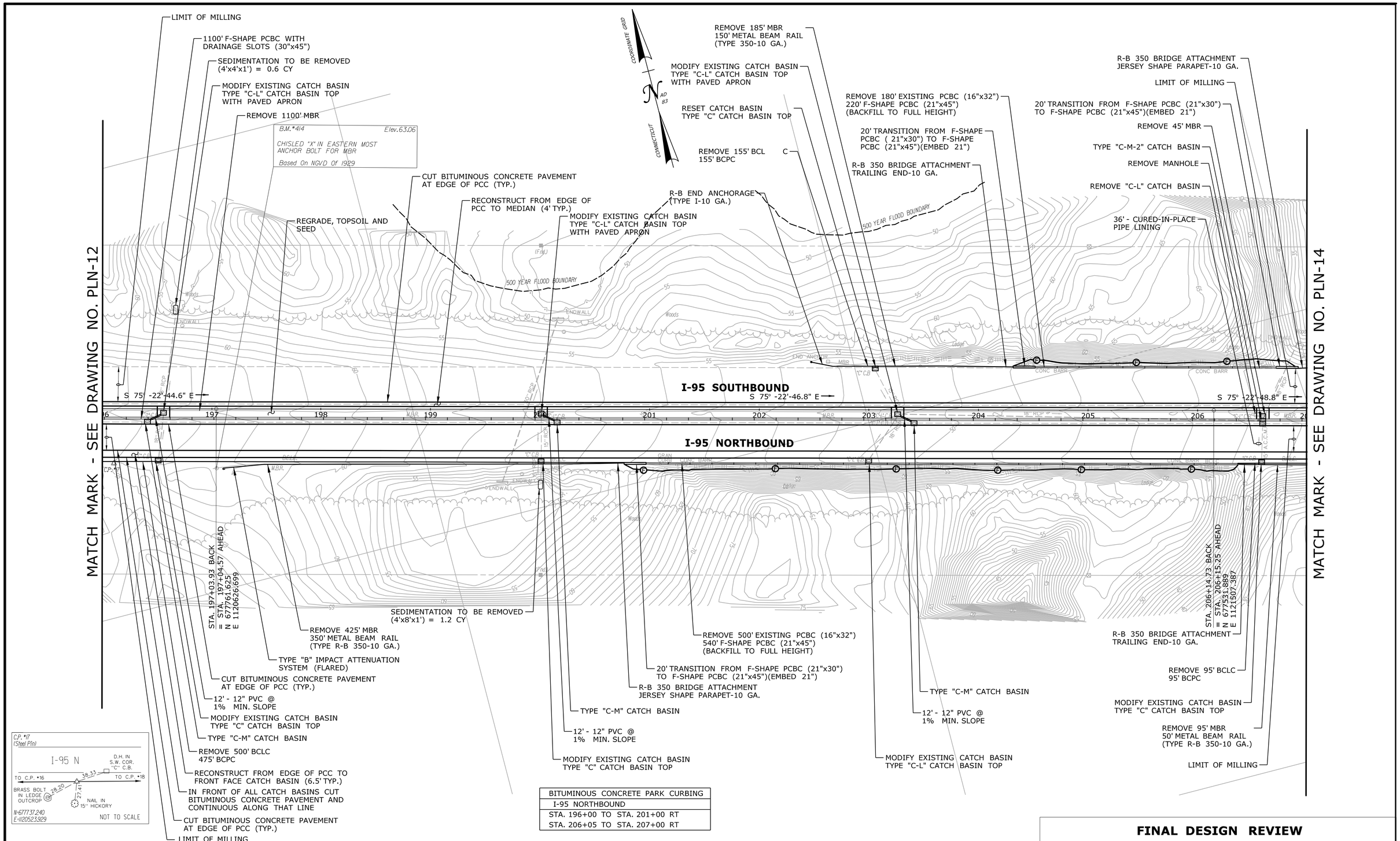

BITUMINOUS CONCRETE PARK CURBING
I-95 NORTHBOUND
STA. 196+00 TO STA. 201+00 RT
STA. 206+05 TO STA. 207+00 RT

FINAL DESIGN REVIEW

REV.	DATE	REVISION DESCRIPTION	SHEET NO.
-	-	-	-
-	-	-	-
-	-	-	-
-	-	-	-
-	-	-	-
-	-	-	-

THE INFORMATION, INCLUDING ESTIMATED QUANTITIES OF WORK, SHOWN ON THESE SHEETS IS BASED ON LIMITED INVESTIGATIONS BY THE STATE AND IS IN NO WAY WARRANTED TO INDICATE THE CONDITIONS OF ACTUAL QUANTITIES OF WORK WHICH WILL BE REQUIRED.

Plotted Date: 2/14/2014

DESIGNER/DRAFTER: **RL/MF/EK**
CHECKED BY: **D. DAGAN**
SCALE IN FEET 0 40 80
SCALE 1"=40'

STATE OF CONNECTICUT
DEPARTMENT OF TRANSPORTATION

Filename: ...\Plan\HW_MSH_PLN-13.dgn

SIGNATURE/ BLOCK:

PROJECT TITLE: **INTERSTATE 95 RESURFACING AND SAFETY IMPROVEMENTS**

TOWN: **OLD SAYBROOK, OLD LYME & EAST LYME**

DRAWING TITLE: **ROADWAY PLAN STA. 196 TO STA. 207**

PROJECT NO. **104-164**
DRAWING NO. **PLN-13**
SHEET NO. **03.43**

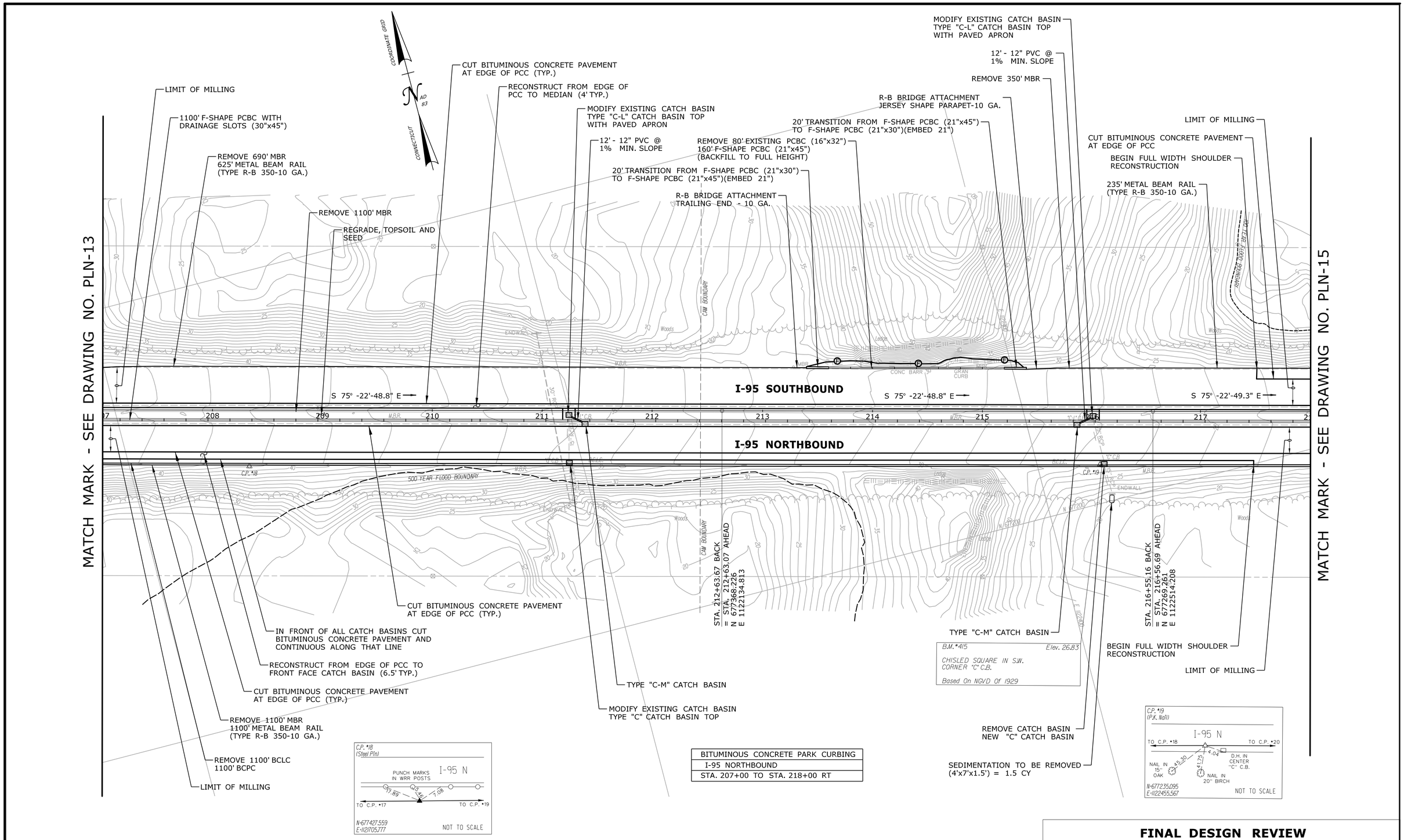

BITUMINOUS CONCRETE PARK CURBING
I-95 NORTHBOUND
STA. 207+00 TO STA. 218+00 RT

FINAL DESIGN REVIEW

REV.	DATE	REVISION DESCRIPTION	SHEET NO.
-	-	-	-
-	-	-	-
-	-	-	-
-	-	-	-
-	-	-	-
-	-	-	-

THE INFORMATION, INCLUDING ESTIMATED QUANTITIES OF WORK, SHOWN ON THESE SHEETS IS BASED ON LIMITED INVESTIGATIONS BY THE STATE AND IS IN NO WAY WARRANTED TO INDICATE THE CONDITIONS OF ACTUAL QUANTITIES OF WORK WHICH WILL BE REQUIRED.

Plotted Date: 2/14/2014

DESIGNER/DRAFTER: **RL/MF/EK**
CHECKED BY: **D. DAGAN**
SCALE IN FEET 0 40 80
SCALE 1"=40'

STATE OF CONNECTICUT
DEPARTMENT OF TRANSPORTATION

Filename: ...\Plan\HW_MSH_PLN-14.dgn

SIGNATURE/ BLOCK:

PROJECT TITLE:
INTERSTATE 95 RESURFACING AND SAFETY IMPROVEMENTS

TOWN:
OLD SAYBROOK, OLD LYME & EAST LYME

DRAWING TITLE:
ROADWAY PLAN STA. 207 TO STA. 218

PROJECT NO. **104-164**
DRAWING NO. **PLN-14**
SHEET NO. **03.44**

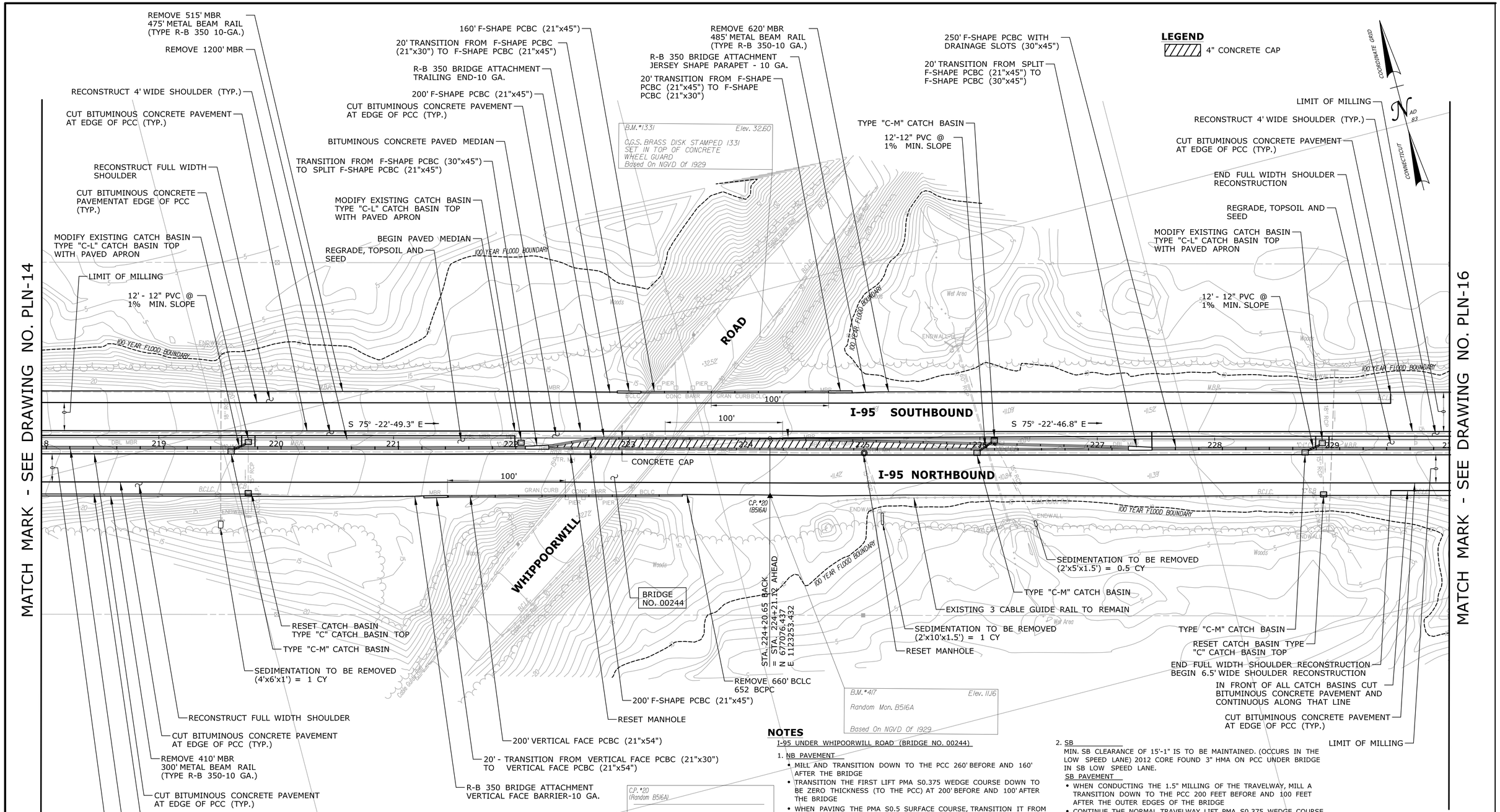

BITUMINOUS CONCRETE PARK CURBING
I-95 NORTHBOUND
STA. 218+00 TO STA. 219+85 RT
STA. 223+45 TO STA. 230+00 RT

NOTES

I-95 UNDER WHIPOORWILL ROAD (BRIDGE NO. 00244)

1. NB PAVEMENT
   - MILL AND TRANSITION DOWN TO THE PCC 260' BEFORE AND 160' AFTER THE BRIDGE
   - TRANSITION THE FIRST LIFT PMA S0.375 WEDGE COURSE DOWN TO BE ZERO THICKNESS (TO THE PCC) AT 200' BEFORE AND 100' AFTER THE BRIDGE
   - WHEN PAVING THE PMA S0.5 SURFACE COURSE, TRANSITION IT FROM 2" THICK TO 1.5" THICK OVER THE DISTANCE FROM 200 TO 185 FEET BEFORE AND FROM 85 TO 100 FEET AFTER THE BRIDGE

2. SB
   MIN. SB CLEARANCE OF 15'-1" IS TO BE MAINTAINED. (OCCURS IN THE LOW SPEED LANE) 2012 CORE FOUND 3" HMA ON PCC UNDER BRIDGE IN SB LOW SPEED LANE.
   SB PAVEMENT
   - WHEN CONDUCTING THE 1.5" MILLING OF THE TRAVELWAY, MILL A TRANSITION DOWN TO THE PCC 200 FEET BEFORE AND 100 FEET AFTER THE OUTER EDGES OF THE BRIDGE
   - CONTINUE THE NORMAL TRAVELWAY LIFT PMA S0.375 WEDGE COURSE THROUGH THE UNDERPASS, BUT LIMIT IT TO BE NO MORE THAN 1.25" THICK ALONG THE SECTION MILLED DOWN TO THE PCC
   - CONTINUE THE NORMAL PMA S0.5 SURFACE COURSE THROUGH THE UNDERPASS, BUT REDUCE THE THICKNESS TO 1.75" FOR 200 FEET BEFORE AND 100 FEET AFTER THE BRIDGE
   - EXISTING CLEARANCE UNDER THE BRIDGE MUST BE MAINTAINED

FINAL DESIGN REVIEW

REV.	DATE	REVISION DESCRIPTION	SHEET NO.
-	-	-	-
-	-	-	-
-	-	-	-
-	-	-	-
-	-	-	-
-	-	-	-

THE INFORMATION, INCLUDING ESTIMATED QUANTITIES OF WORK, SHOWN ON THESE SHEETS IS BASED ON LIMITED INVESTIGATIONS BY THE STATE AND IS IN NO WAY WARRANTED TO INDICATE THE CONDITIONS OF ACTUAL QUANTITIES OF WORK WHICH WILL BE REQUIRED.

Plotted Date: 3/20/2014

DESIGNER/DRAFTER: RL/MF/EK
CHECKED BY: D. DAGAN
SCALE IN FEET 0 40 80
SCALE 1"=40'

STATE OF CONNECTICUT
DEPARTMENT OF TRANSPORTATION

Filename: ..\Plan\HW_MSH_PLN-15.dgn

SIGNATURE/
BLOCK:

PROJECT TITLE:
INTERSTATE 95
RESURFACING AND SAFETY
IMPROVEMENTS

TOWN: OLD SAYBROOK, OLD LYME & EAST LYME

DRAWING TITLE: ROADWAY PLAN
STA. 218 TO STA. 230

PROJECT NO. 104-164
DRAWING NO. PLN-15
SHEET NO. 03.45

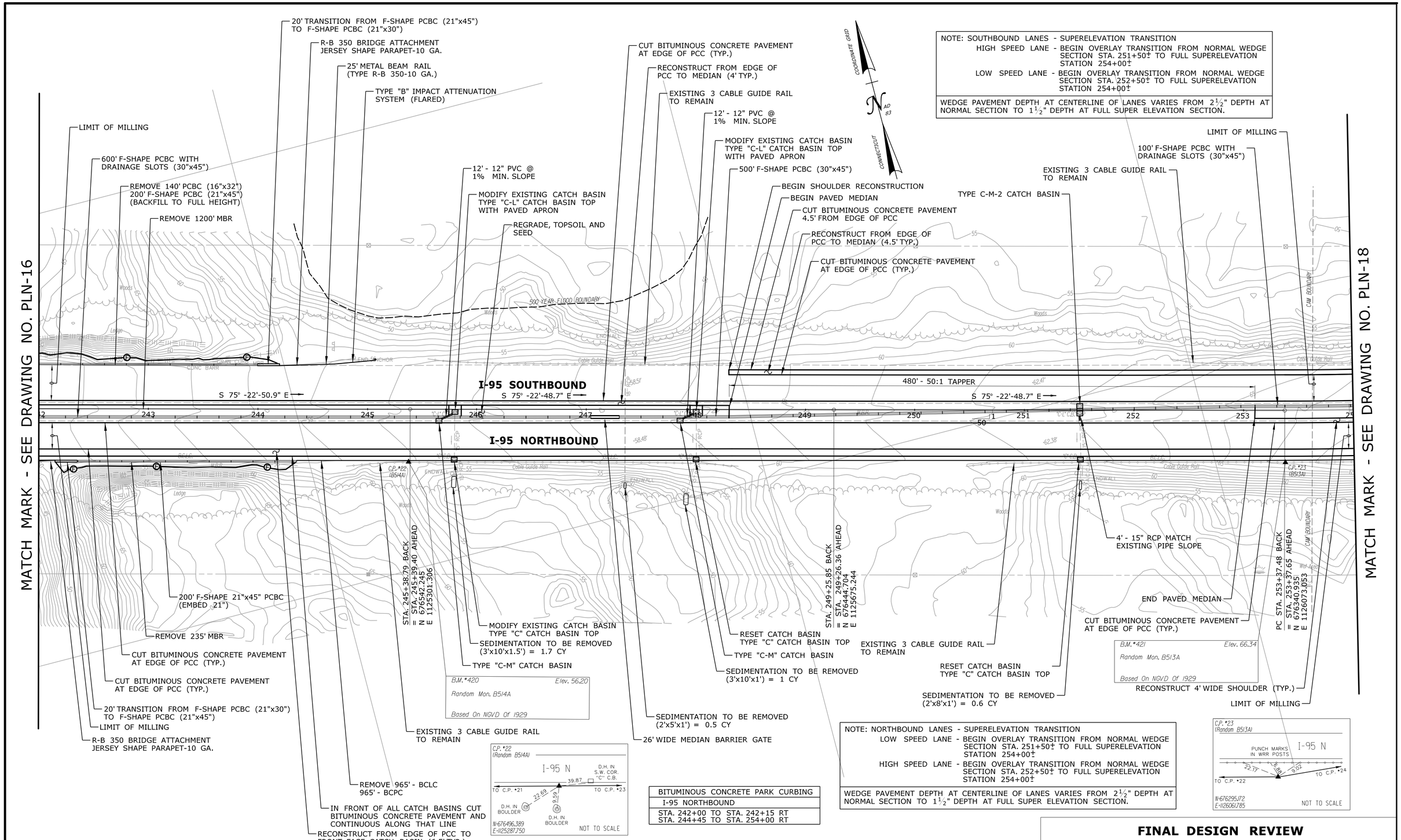

BITUMINOUS CONCRETE PARK CURBING
I-95 NORTHBOUND
STA. 242+00 TO STA. 242+15 RT
STA. 244+45 TO STA. 254+00 RT

FINAL DESIGN REVIEW

REV.	DATE	REVISION DESCRIPTION	SHEET NO.
-	-	-	-
-	-	-	-
-	-	-	-
-	-	-	-
-	-	-	-
-	-	-	-

THE INFORMATION, INCLUDING ESTIMATED QUANTITIES OF WORK, SHOWN ON THESE SHEETS IS BASED ON LIMITED INVESTIGATIONS BY THE STATE AND IS IN NO WAY WARRANTED TO INDICATE THE CONDITIONS OF ACTUAL QUANTITIES OF WORK WHICH WILL BE REQUIRED.

Plotted Date: 2/17/2014

DESIGNER/DRAFTER: **RL/MF/EK**
CHECKED BY: **D. DAGAN**
SCALE IN FEET 0 40 80
SCALE 1"=40'

STATE OF CONNECTICUT
DEPARTMENT OF TRANSPORTATION

Filename: ...\Plan\HW_MSH_PLN-17.dgn

SIGNATURE/
BLOCK:

PROJECT TITLE:
INTERSTATE 95 RESURFACING AND SAFETY IMPROVEMENTS

TOWN:
OLD SAYBROOK, OLD LYME & EAST LYME

DRAWING TITLE:
ROADWAY PLAN STA. 242 TO STA. 254

PROJECT NO. **104-164**
DRAWING NO. **PLN-17**
SHEET NO. **03.47**

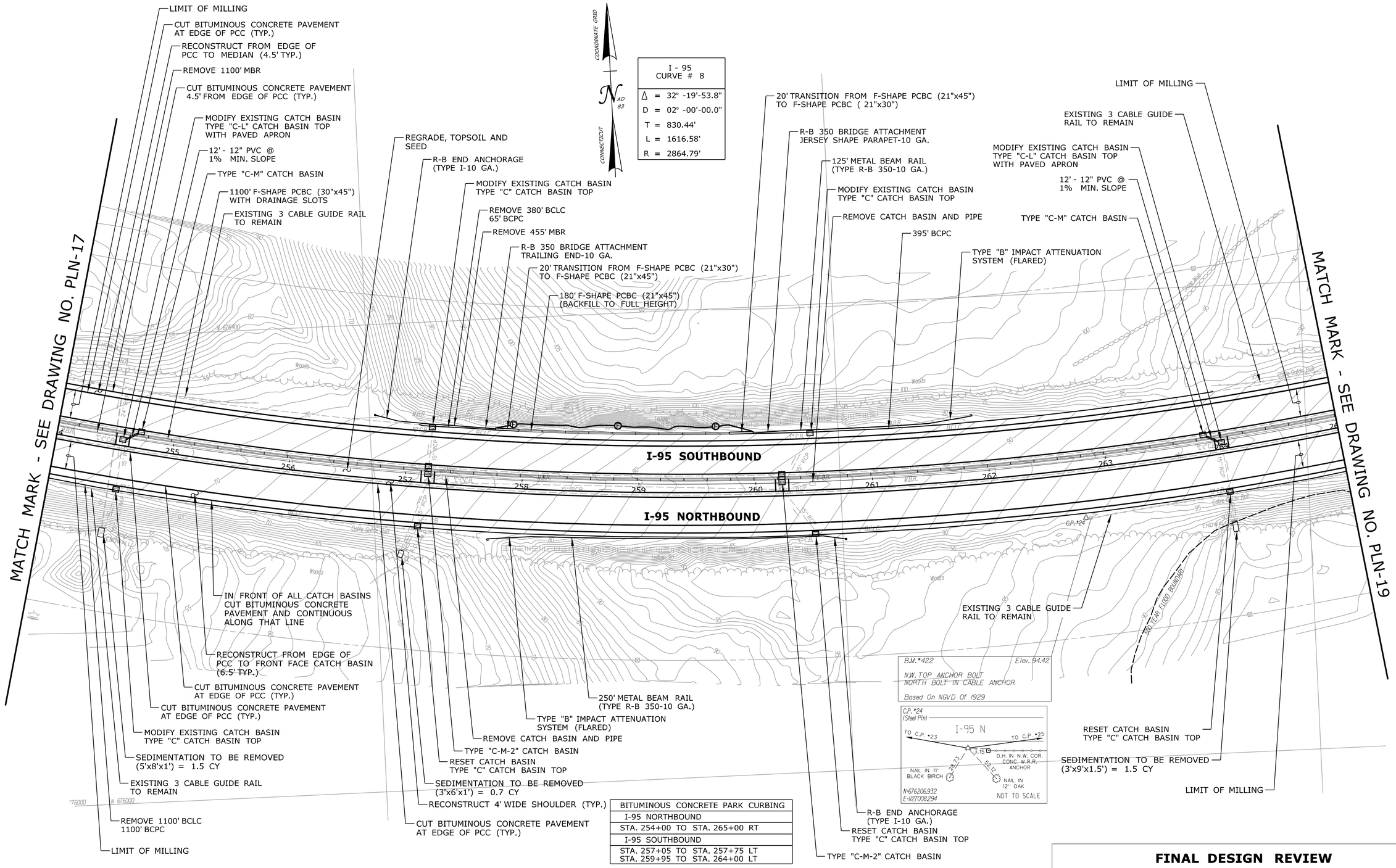

BITUMINOUS CONCRETE PARK CURBING
I-95 NORTHBOUND
STA. 254+00 TO STA. 265+00 RT
I-95 SOUTHBOUND
STA. 257+05 TO STA. 257+75 LT STA. 259+95 TO STA. 264+00 LT

FINAL DESIGN REVIEW

REV.	DATE	REVISION DESCRIPTION	SHEET NO.
-	-	-	-
-	-	-	-
-	-	-	-
-	-	-	-
-	-	-	-
-	-	-	-

THE INFORMATION, INCLUDING ESTIMATED QUANTITIES OF WORK, SHOWN ON THESE SHEETS IS BASED ON LIMITED INVESTIGATIONS BY THE STATE AND IS IN NO WAY WARRANTED TO INDICATE THE CONDITIONS OF ACTUAL QUANTITIES OF WORK WHICH WILL BE REQUIRED.

Plotted Date: 2/17/2014

DESIGNER/DRAFTER: **RL/MF/EK**
CHECKED BY: **D. DAGAN**
SCALE IN FEET 0 40 80
SCALE 1"=40'

STATE OF CONNECTICUT
DEPARTMENT OF TRANSPORTATION

Filename: ...\Plan\HW_MSH_PLN-18.dgn

SIGNATURE/ BLOCK:

PROJECT TITLE:
INTERSTATE 95 RESURFACING AND SAFETY IMPROVEMENTS

TOWN: **OLD SAYBROOK, OLD LYME & EAST LYME**

DRAWING TITLE: **ROADWAY PLAN STA. 254 TO STA. 265**

PROJECT NO. **104-164**
DRAWING NO. **PLN-18**
SHEET NO. **03.48**

I - 95 CURVE # 8
Δ = 32° -19'-53.8"
D = 02° -00'-00.0"
T = 830.44'
L = 1616.58'
R = 2864.79'

NOTE: SOUTHBOUND LANES - SUPERELEVATION TRANSITION
HIGH SPEED LANE - BEGIN OVERLAY TRANSITION FROM FULL SUPERELAVATION SECTION STA. 269+00± TO NORMAL WEDGE SECTION STATION 271+50±
LOW SPEED LANE - BEGIN OVERLAY TRANSITION FROM FULL SUPERELEVATION SECTION STA. 269+00± TO NORMAL WEDGE SECTION STATION 270+50±

WEDGE PAVEMENT DEPTH AT CENTERLINE OF LANES VARIES FROM $2\frac{1}{2}$" DEPTH AT NORMAL SECTION TO $1\frac{1}{2}$" DEPTH AT FULL SUPER ELEVATION SECTION.

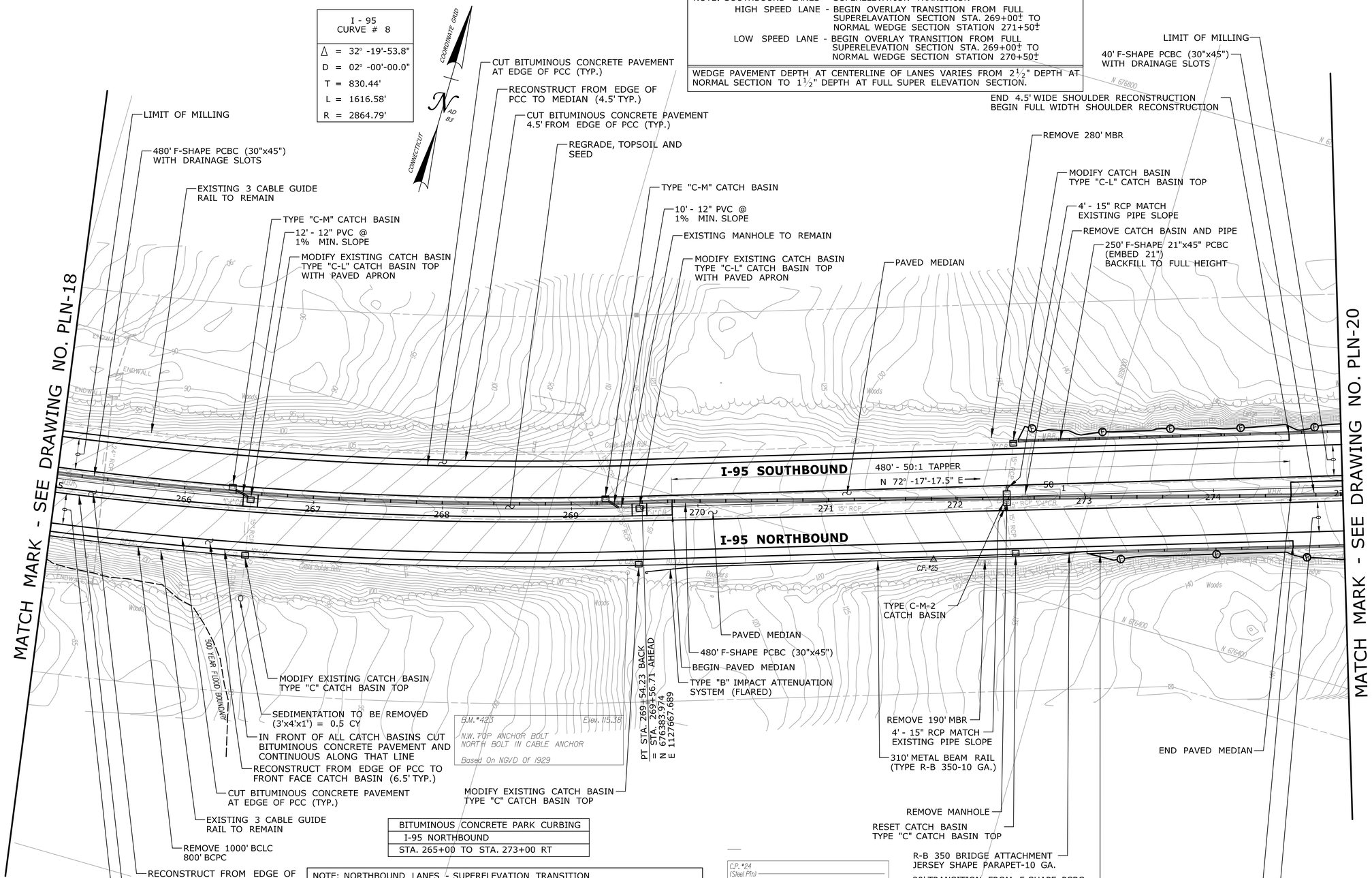

BITUMINOUS CONCRETE PARK CURBING
I-95 NORTHBOUND
STA. 265+00 TO STA. 273+00 RT

NOTE: NORTHBOUND LANES - SUPERELEVATION TRANSITION
LOW SPEED LANE - BEGIN OVERLAY TRANSITION FROM FULL SUPERELAVATION SECTION STA. 269+00± TO NORMAL WEDGE SECTION STATION 271+50±
HIGH SPEED LANE - BEGIN OVERLAY TRANSITION FROM FULL SUPERELEVATION SECTION STA. 269+00± TO NORMAL WEDGE SECTION STATION 270+50±

WEDGE PAVEMENT DEPTH AT CENTERLINE OF LANES VARIES FROM $2\frac{1}{2}$" DEPTH AT NORMAL SECTION TO $1\frac{1}{2}$" DEPTH AT FULL SUPER ELEVATION SECTION.

FINAL DESIGN REVIEW

REV.	DATE	REVISION DESCRIPTION	SHEET NO.
-	-	-	-
-	-	-	-
-	-	-	-
-	-	-	-
-	-	-	-
-	-	-	-

THE INFORMATION, INCLUDING ESTIMATED QUANTITIES OF WORK, SHOWN ON THESE SHEETS IS BASED ON LIMITED INVESTIGATIONS BY THE STATE AND IS IN NO WAY WARRANTED TO INDICATE THE CONDITIONS OF ACTUAL QUANTITIES OF WORK WHICH WILL BE REQUIRED.

Plotted Date: 3/20/2014

DESIGNER/DRAFTER: RL/MF/EK
CHECKED BY: D. DAGAN
SCALE IN FEET 0 40 80
SCALE 1"=40'

STATE OF CONNECTICUT
DEPARTMENT OF TRANSPORTATION

Filename: ...\Plan\HW_MSH_PLN-19.dgn

SIGNATURE/ BLOCK:

PROJECT TITLE: INTERSTATE 95 RESURFACING AND SAFETY IMPROVEMENTS

TOWN: OLD SAYBROOK, OLD LYME & EAST LYME

DRAWING TITLE: ROADWAY PLAN STA. 265 TO STA. 275

PROJECT NO. 104-164
DRAWING NO. PLN-19
SHEET NO. 03.49

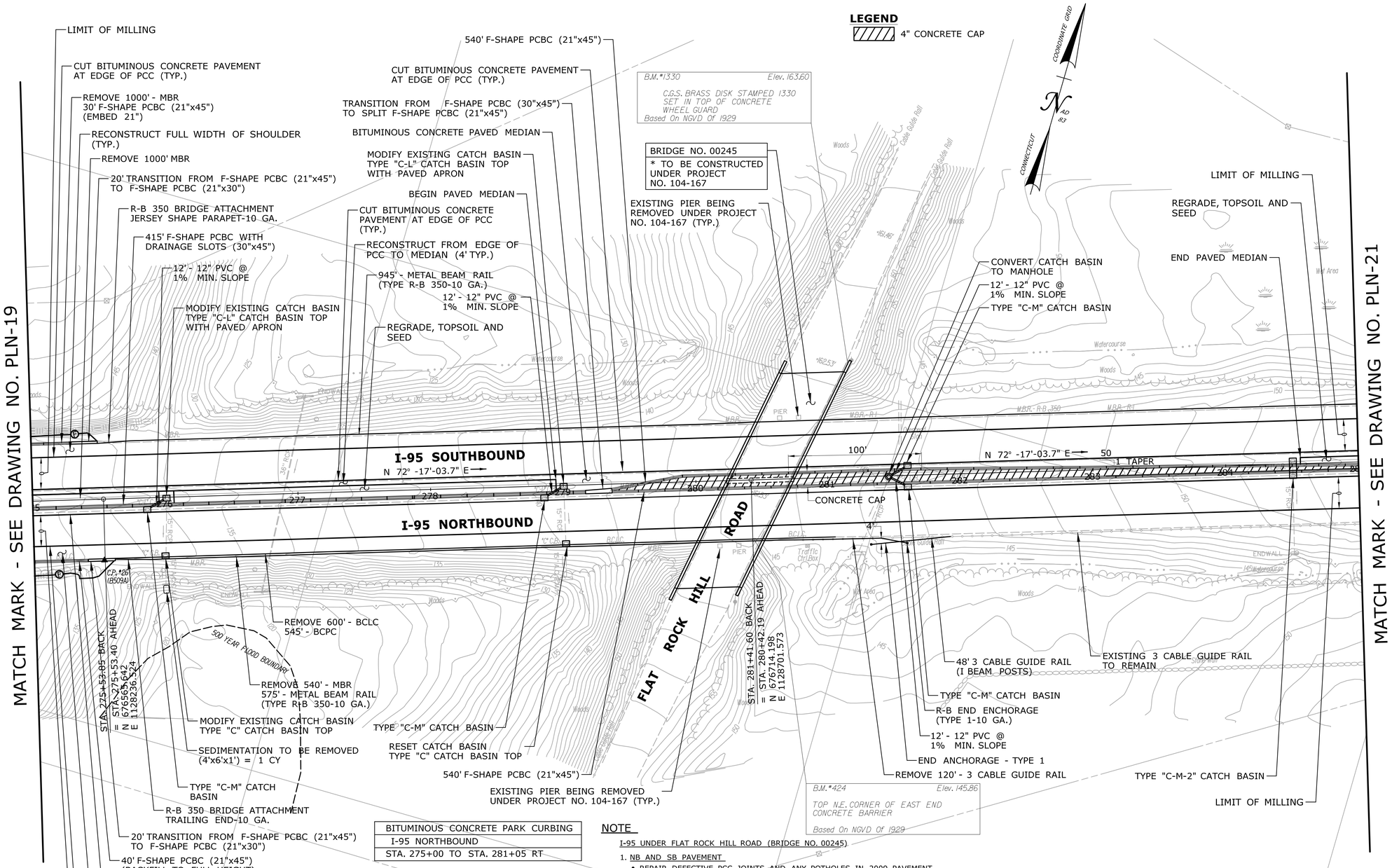

BITUMINOUS CONCRETE PARK CURBING
I-95 NORTHBOUND
STA. 275+00 TO STA. 281+05 RT

NOTE

I-95 UNDER FLAT ROCK HILL ROAD (BRIDGE NO. 00245)

1. NB AND SB PAVEMENT
   - REPAIR DEFECTIVE PCC JOINTS AND ANY POTHOLES IN 2009 PAVEMENT, BRINGING THE TOP OF THEM TO MATCH THE EXISTING PAVEMENT SURFACE
   - DO NOT MILL THE 300 FEET OF 2009 PAVEMENT APPROACHING AND UNDER THE BRIDGE. THE PAVEMENT CHANGE IS CLEARLY VISIBLE
   - STOP THE NORMAL 1.5" MILLING AT THE JUNCTION OF THE 2009 PAVEMENT. MILL KEYWAYS AT EITHER END OF THE 2009 PAVEMENT SO THAT THE WEDGE COURSE ON THE REST OF THE ROAD TERMINATES WITH ITS SURFACE EVEN WITH THE 2009 PAVEMENT SURFACE
   - DO NOT PLACE THE WEDGE COURSE OF PMA S0.375 ON THE 300 FEET OF 2009 PAVEMENT
   - OVERLAY WITH THE SAME 2" PMA S0.5 SURFACE LIFT THE REST OF THE ROAD IS RECIEVING

FINAL DESIGN REVIEW

REV.	DATE	REVISION DESCRIPTION	SHEET NO.
-	-	-	-
-	-	-	-
-	-	-	-
-	-	-	-
-	-	-	-
-	-	-	-

THE INFORMATION, INCLUDING ESTIMATED QUANTITIES OF WORK, SHOWN ON THESE SHEETS IS BASED ON LIMITED INVESTIGATIONS BY THE STATE AND IS IN NO WAY WARRANTED TO INDICATE THE CONDITIONS OF ACTUAL QUANTITIES OF WORK WHICH WILL BE REQUIRED.

Plotted Date: 3/20/2014

DESIGNER/DRAFTER: **RL/MF/EK**
CHECKED BY: **D. DAGAN**
SCALE IN FEET 0 40 80
SCALE 1"=40'

STATE OF CONNECTICUT
DEPARTMENT OF TRANSPORTATION

Filename: ...\Plan\HW_MSH_PLN-20.dgn

SIGNATURE/ BLOCK:

PROJECT TITLE: **INTERSTATE 95 RESURFACING AND SAFETY IMPROVEMENTS**

TOWN: **OLD SAYBROOK, OLD LYME & EAST LYME**

DRAWING TITLE: **ROADWAY PLAN STA. 275 TO STA. 285**

PROJECT NO. **104-164**
DRAWING NO. **PLN-20**
SHEET NO. **03.50**

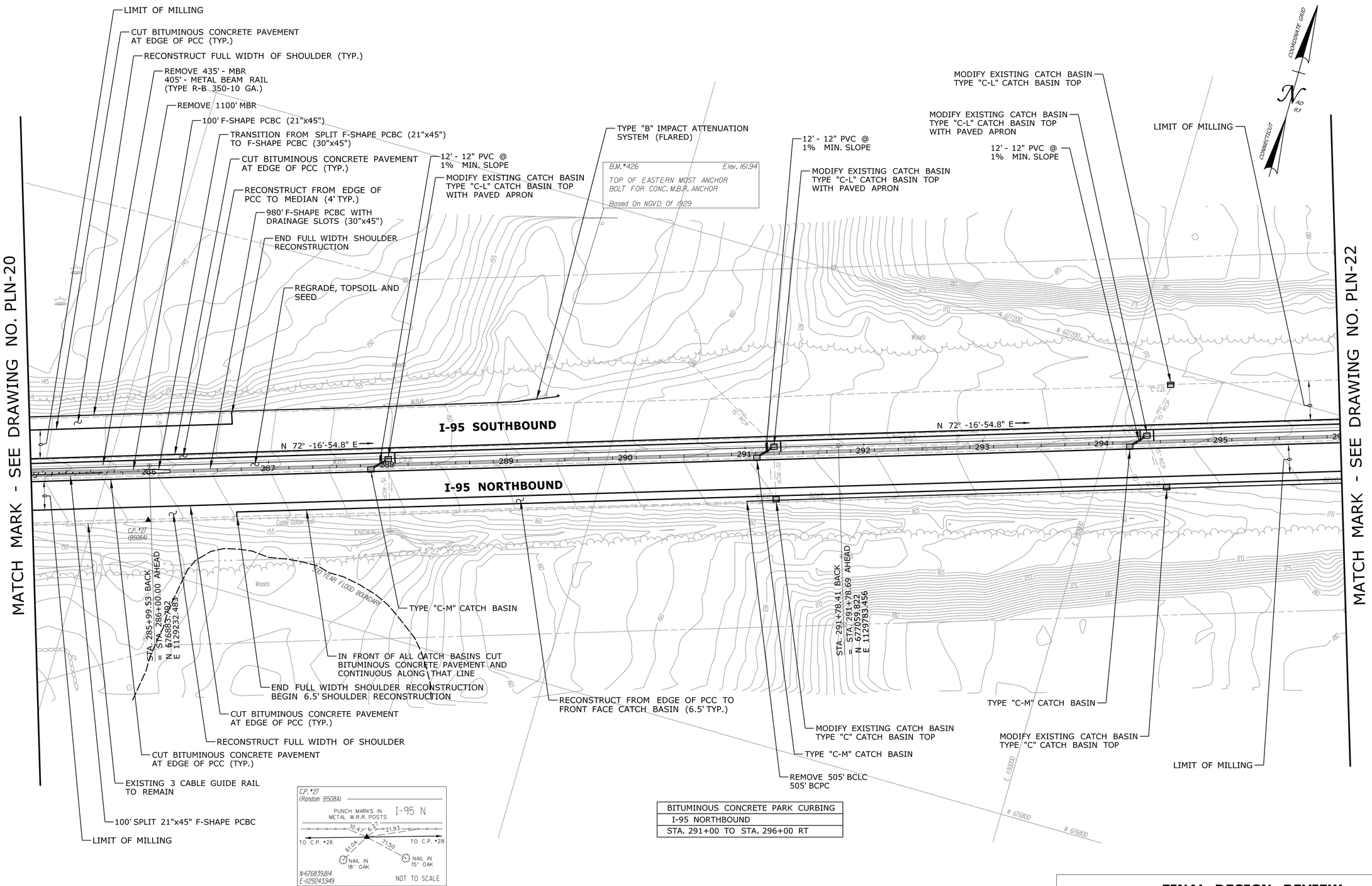

BITUMINOUS CONCRETE PARK CURBING
I-95 NORTHBOUND
STA. 291+00 TO STA. 296+00 RT

FINAL DESIGN REVIEW

REV.	DATE	REVISION DESCRIPTION	SHEET NO.
-	-	-	-
-	-	-	-
-	-	-	-
-	-	-	-
-	-	-	-
-	-	-	-

THE INFORMATION, INCLUDING ESTIMATED QUANTITIES OF WORK, SHOWN ON THESE SHEETS IS BASED ON LIMITED INVESTIGATIONS BY THE STATE AND IS IN NO WAY WARRANTED TO INDICATE THE CONDITIONS OF ACTUAL QUANTITIES OF WORK WHICH WILL BE REQUIRED.

Plotted Date: 2/17/2014

DESIGNER/DRAFTER: **RL/MF/EK**
CHECKED BY: **D. DAGAN**
SCALE IN FEET 0 40 80
SCALE 1"=40'

STATE OF CONNECTICUT
DEPARTMENT OF TRANSPORTATION

Filename: ...\Plan\HW_MSH_PLN-21.dgn

SIGNATURE/ BLOCK:

PROJECT TITLE:
INTERSTATE 95 RESURFACING AND SAFETY IMPROVEMENTS

TOWN: **OLD SAYBROOK, OLD LYME & EAST LYME**

DRAWING TITLE: **ROADWAY PLAN STA. 285 TO STA. 296**

PROJECT NO. **104-164**
DRAWING NO. **PLN-21**
SHEET NO. **03.51**

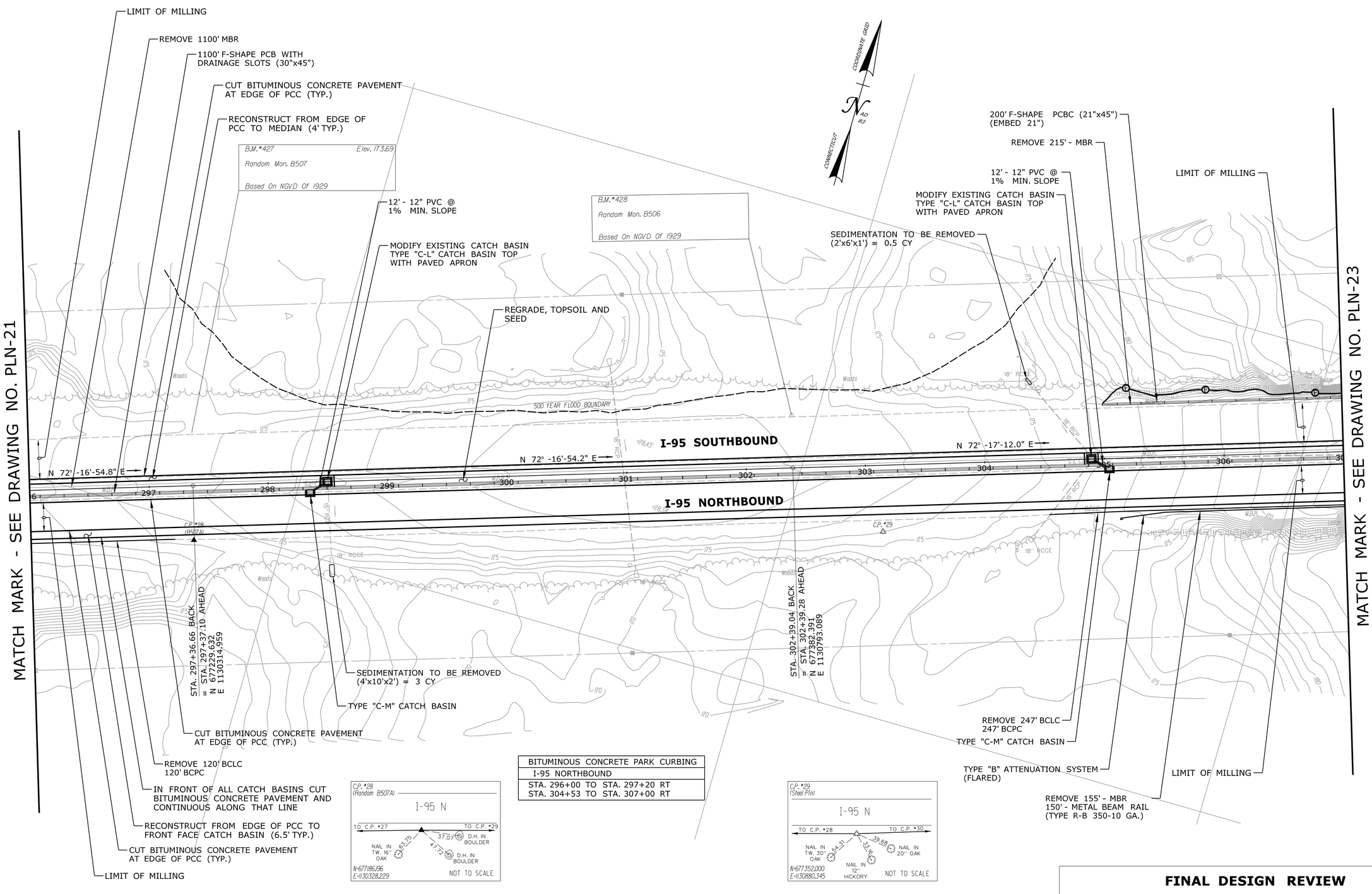

BITUMINOUS CONCRETE PARK CURBING
I-95 NORTHBOUND
STA. 296+00 TO STA. 297+20 RT
STA. 304+53 TO STA. 307+00 RT

FINAL DESIGN REVIEW

REV.	DATE	REVISION DESCRIPTION	SHEET NO.
-	-	-	-
-	-	-	-
-	-	-	-
-	-	-	-
-	-	-	-
-	-	-	-

THE INFORMATION, INCLUDING ESTIMATED QUANTITIES OF WORK, SHOWN ON THESE SHEETS IS BASED ON LIMITED INVESTIGATIONS BY THE STATE AND IS IN NO WAY WARRANTED TO INDICATE THE CONDITIONS OF ACTUAL QUANTITIES OF WORK WHICH WILL BE REQUIRED.

Plotted Date: 2/17/2014

DESIGNER/DRAFTER: **RL/MF/EK**
CHECKED BY: **D. DAGAN**
SCALE IN FEET 0 40 80
SCALE 1"=40'

STATE OF CONNECTICUT
DEPARTMENT OF TRANSPORTATION

Filename: ...\Plan\HW_MSH_PLN-22.dgn

SIGNATURE/
BLOCK:

PROJECT TITLE:
INTERSTATE 95 RESURFACING AND SAFETY IMPROVEMENTS

TOWN:
OLD SAYBROOK, OLD LYME & EAST LYME

DRAWING TITLE:
ROADWAY PLAN STA. 296 TO STA. 307

PROJECT NO. **104-164**
DRAWING NO. **PLN-22**
SHEET NO. **03.52**

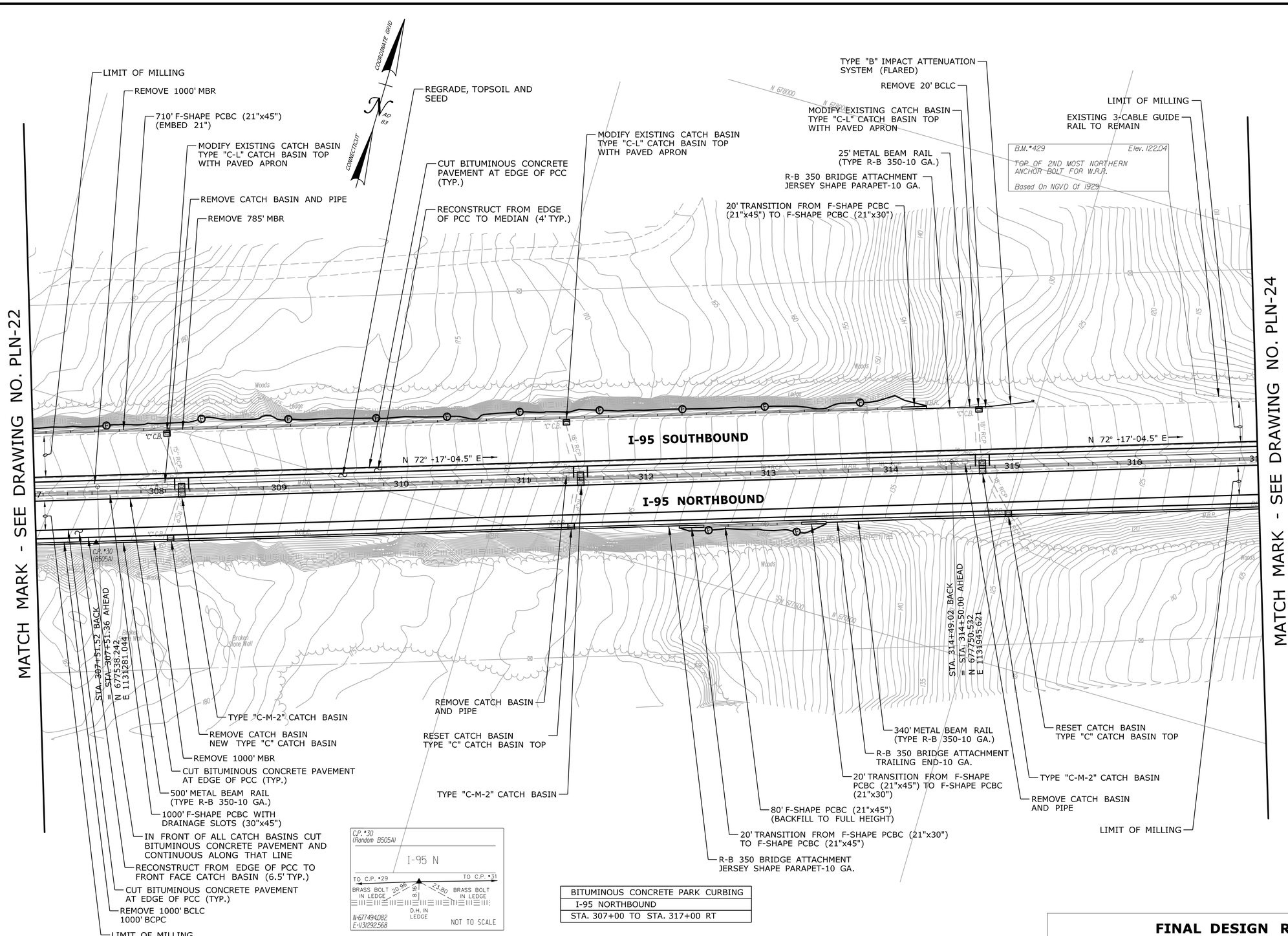

BITUMINOUS CONCRETE PARK CURBING
I-95 NORTHBOUND
STA. 307+00 TO STA. 317+00 RT

FINAL DESIGN REVIEW

REV.	DATE	REVISION DESCRIPTION	SHEET NO.
-	-	-	-
-	-	-	-
-	-	-	-
-	-	-	-
-	-	-	-
-	-	-	-

THE INFORMATION, INCLUDING ESTIMATED QUANTITIES OF WORK, SHOWN ON THESE SHEETS IS BASED ON LIMITED INVESTIGATIONS BY THE STATE AND IS IN NO WAY WARRANTED TO INDICATE THE CONDITIONS OF ACTUAL QUANTITIES OF WORK WHICH WILL BE REQUIRED.

Plotted Date: 2/17/2014

DESIGNER/DRAFTER: **RL/MF/EK**
CHECKED BY: **D. DAGAN**
SCALE IN FEET
0 40 80
SCALE 1"=40'

STATE OF CONNECTICUT
DEPARTMENT OF TRANSPORTATION

Filename: ...\Plan\HW_MSH_PLN-23.dgn

SIGNATURE/ BLOCK:

PROJECT TITLE: **INTERSTATE 95 RESURFACING AND SAFETY IMPROVEMENTS**

TOWN: **OLD SAYBROOK, OLD LYME & EAST LYME**

DRAWING TITLE: **ROADWAY PLAN STA. 307 TO STA. 317**

PROJECT NO. **104-164**
DRAWING NO. **PLN-23**
SHEET NO. **03.53**

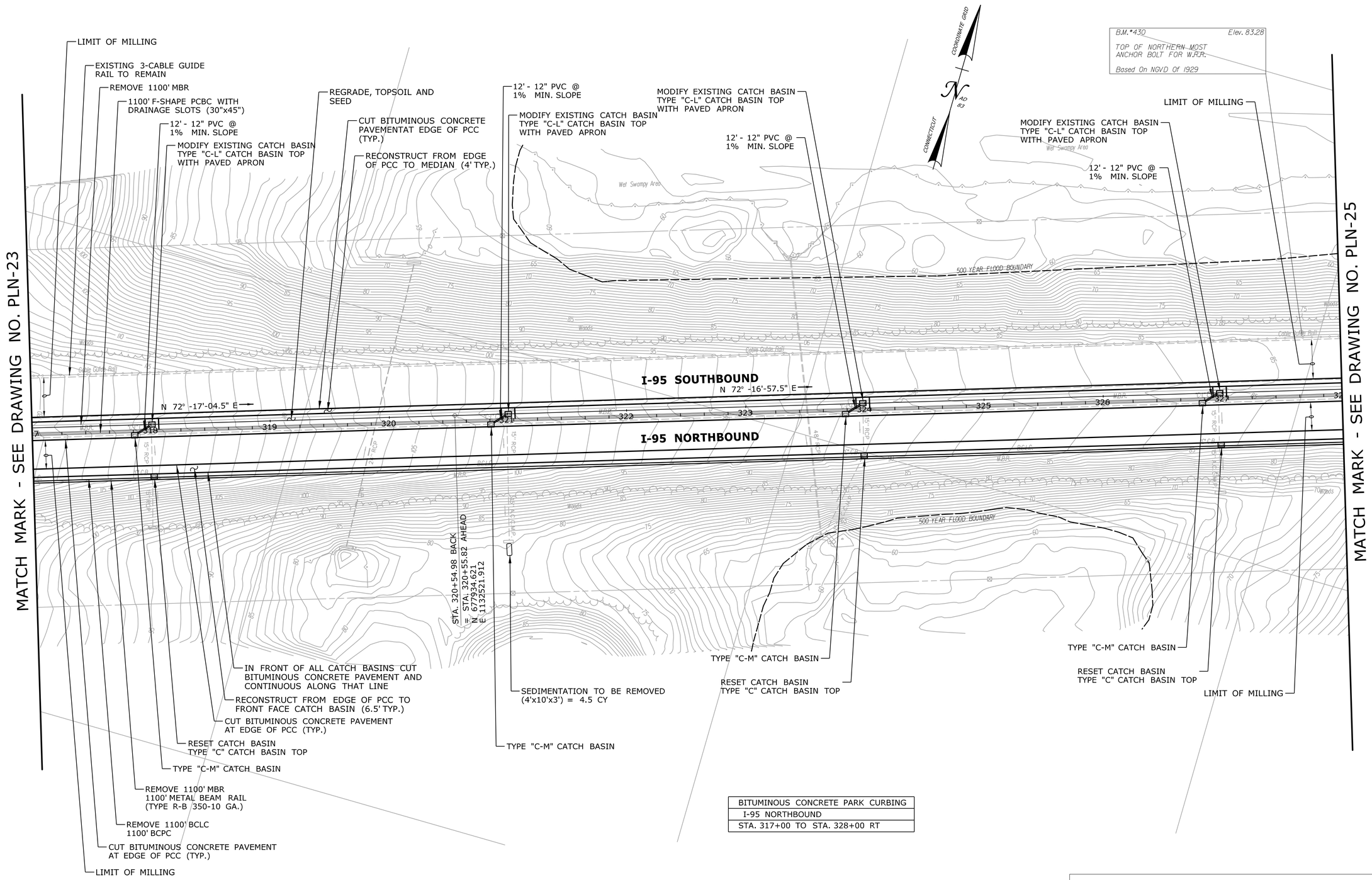

BITUMINOUS CONCRETE PARK CURBING
I-95 NORTHBOUND
STA. 317+00 TO STA. 328+00 RT

FINAL DESIGN REVIEW

REV.	DATE	REVISION DESCRIPTION	SHEET NO.
-	-	-	-
-	-	-	-
-	-	-	-
-	-	-	-
-	-	-	-
-	-	-	-

THE INFORMATION, INCLUDING ESTIMATED QUANTITIES OF WORK, SHOWN ON THESE SHEETS IS BASED ON LIMITED INVESTIGATIONS BY THE STATE AND IS IN NO WAY WARRANTED TO INDICATE THE CONDITIONS OF ACTUAL QUANTITIES OF WORK WHICH WILL BE REQUIRED.

Plotted Date: 2/17/2014

DESIGNER/DRAFTER: **RL/MF/EK**
CHECKED BY: **D. DAGAN**
SCALE IN FEET
0 40 80
SCALE 1"=40'

STATE OF CONNECTICUT
DEPARTMENT OF TRANSPORTATION

Filename: ...\Plan\HW_MSH_PLN-24.dgn

SIGNATURE/ BLOCK:

PROJECT TITLE:
INTERSTATE 95 RESURFACING AND SAFETY IMPROVEMENTS

TOWN:
OLD SAYBROOK, OLD LYME & EAST LYME

DRAWING TITLE:
ROADWAY PLAN STA. 317 TO STA. 328

PROJECT NO. **104-164**
DRAWING NO. **PLN-24**
SHEET NO. **03.54**

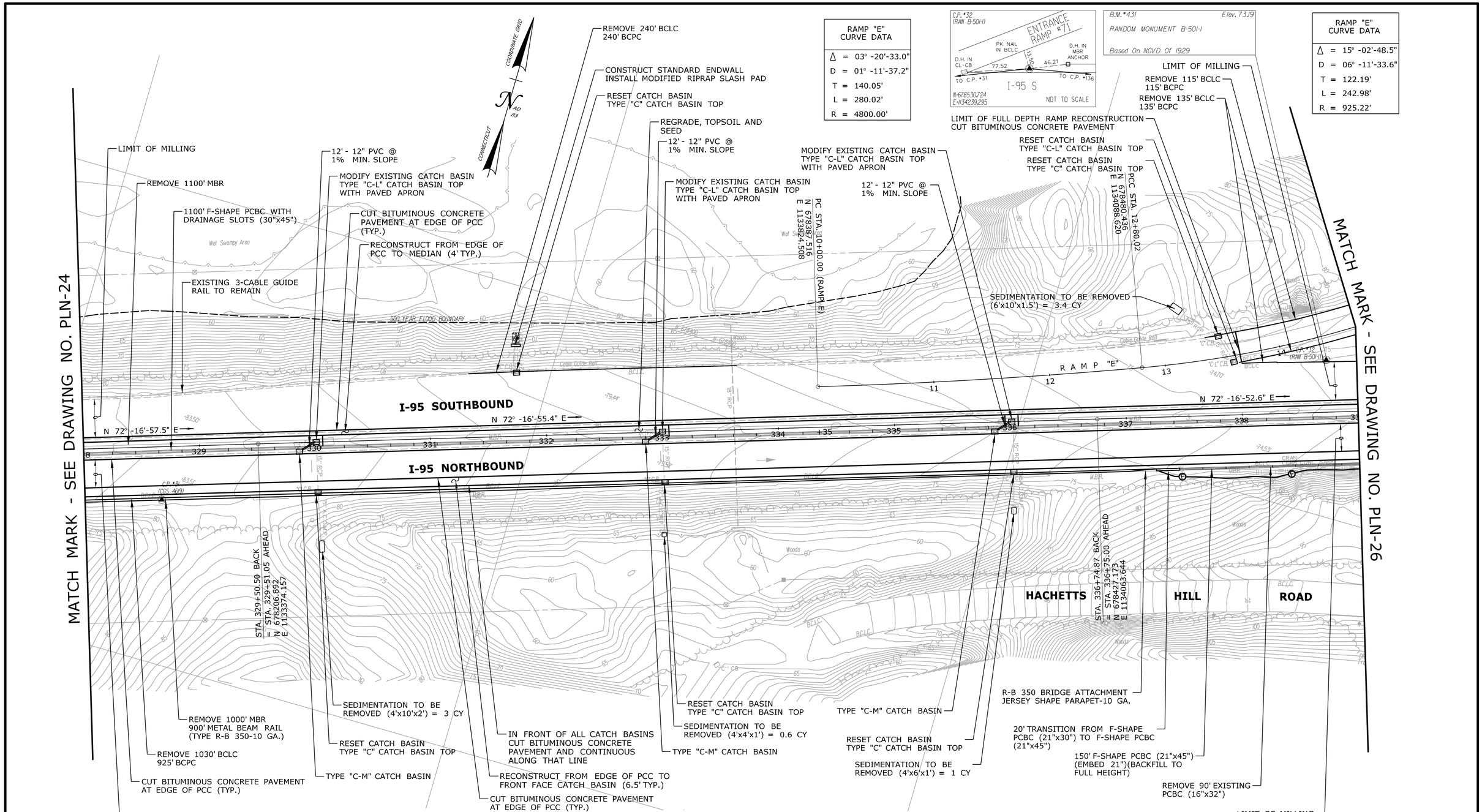

BITUMINOUS CONCRETE PARK CURBING
I-95 NORTHBOUND
STA. 328+00 TO STA. 337+25 RT
I-95 SOUTHBOUND RAMP "E"
STA. 13+35 TO STA. 14+68 LT

FINAL DESIGN REVIEW

REV.	DATE	REVISION DESCRIPTION	SHEET NO.
-	-	-	-
-	-	-	-
-	-	-	-
-	-	-	-
-	-	-	-
-	-	-	-

THE INFORMATION, INCLUDING ESTIMATED QUANTITIES OF WORK, SHOWN ON THESE SHEETS IS BASED ON LIMITED INVESTIGATIONS BY THE STATE AND IS IN NO WAY WARRANTED TO INDICATE THE CONDITIONS OF ACTUAL QUANTITIES OF WORK WHICH WILL BE REQUIRED.

Plotted Date: 2/17/2014

DESIGNER/DRAFTER: **RL/MF/EK**
CHECKED BY: **D. DAGAN**
SCALE IN FEET 0 40 80
SCALE 1"=40'

STATE OF CONNECTICUT
DEPARTMENT OF TRANSPORTATION

Filename: ...\Plan\HW_MSH_PLN-25.dgn

SIGNATURE/
BLOCK:

PROJECT TITLE:
INTERSTATE 95 RESURFACING AND SAFETY IMPROVEMENTS

TOWN:
OLD SAYBROOK, OLD LYME & EAST LYME

DRAWING TITLE:
ROADWAY PLAN STA. 328 TO STA. 339

PROJECT NO. **104-164**
DRAWING NO. **PLN-25**
SHEET NO. **03.55**

NOTES

I-95 UNDER FOUR MILE RIVER ROAD (BRIDGE NO. 00246)

SB PAVEMENT

- WHEN CONDUCTING THE 1.5" MILLING OF THE TRAVELWAY, MILL A TRANSITION DOWN TO THE PCC 200 FEET BEFORE AND 100 FEET AFTER THE OUTER EDGES OF THE BRIDGE.
- CONTINUE THE NORMAL TRAVELWAY LIFT PMA S0.375 WEDGE COURSE THROUGH THE UNDERPASS, BUT LIMIT IT TO BE NO MORE THAN 1.25" THICK ALONG THE SECTION MILLED DOWN TO THE PCC.
- CONTINUE THE NORMAL PMA S0.5 SURFACE COURSE THROUGH THE UNDERPASS, BUT REDUCE THE THICKNESS TO 1.75" FOR 200 FEET BEFORE AND 100 FEET AFTER THE BRIDGE.
- EXISTING CLEARANCE UNDER THE BRIDGE MUST BE MAINTAINED.

NB PAVEMENT

- CORE FOUND ONLY 1" HMA OVER PCC UNDER BRIDGE IN LOW SPEED LANE. CLEARANCE MUST BE MAINTAINED.
- WHEN MILLING FOR THE WEDGE COURSE, MILL A TRANSITION IN THE EXISTING PAVEMENT DOWN TO THE PCC 180 FEET BEFORE AND AFTER THE BRIDGE - REMOVE ALL HMA UNDER BRIDGE. MAKE ANY PCC REPAIRS NECESSARY.
- WHEN PLACING THE FIRST LIFT OF PMA S0.375 WEDGE COURSE TRANSITION IT DOWN TO ZERO THICKNESS (TO THE PCC) AT 135 FEET BEFORE AND AFTER THE BRIDGE.
- WHEN PLACING THE 2" SURFACE COURSE OF PMA S0.5 TRANSITION IT DOWN TO ZERO THICKNESS (TO THE PCC) AT 75 FEET BEFORE AND AFTER THE BRIDGE.
- CUT KEYWAYS IN THE PMA S0.5 TRANSITIONS BEFORE AND AFTER THE BRIDGE WHERE THE PMA S0.5 IS 1" THICK (ABOUT 105 FEET BEFORE AND AFTER THE BRIDGE) AND REMOVE THE PMA BETWEEN THE KEYWAYS AND THE BRIDGE.
- PLACE 1" OF PMA S0.25, SUPERPAVE LEVEL 3 UNDER THE BRIDGE.

RAMP "E" CURVE DATA	
Δ	= 15° -02'-48.5"
D	= 06° -11'-33.6"
T	= 122.19'
L	= 242.98'
R	= 925.22'

BITUMINOUS CONCRETE PARK CURBING
I-95 SOUTHBOUND ON-RAMP "E"
STA. 14+70 TO STA. 19+60 LT STA. 14+70 TO STA. 20+00 RT

BITUMINOUS CONCRETE PARK CURBING
I-95 SOUTHBOUND OFF-RAMP "F"
STA. 31+30 TO STA. 36+40 LT STA. 30+85 TO STA. 36+40 RT

BITUMINOUS CONCRETE PARK CURBING
I-95 NORTHBOUND OFF-RAMP "G"
STA. 11+00 TO STA. 17+00LT STA. 11+00 TO STA. 11+75 RT

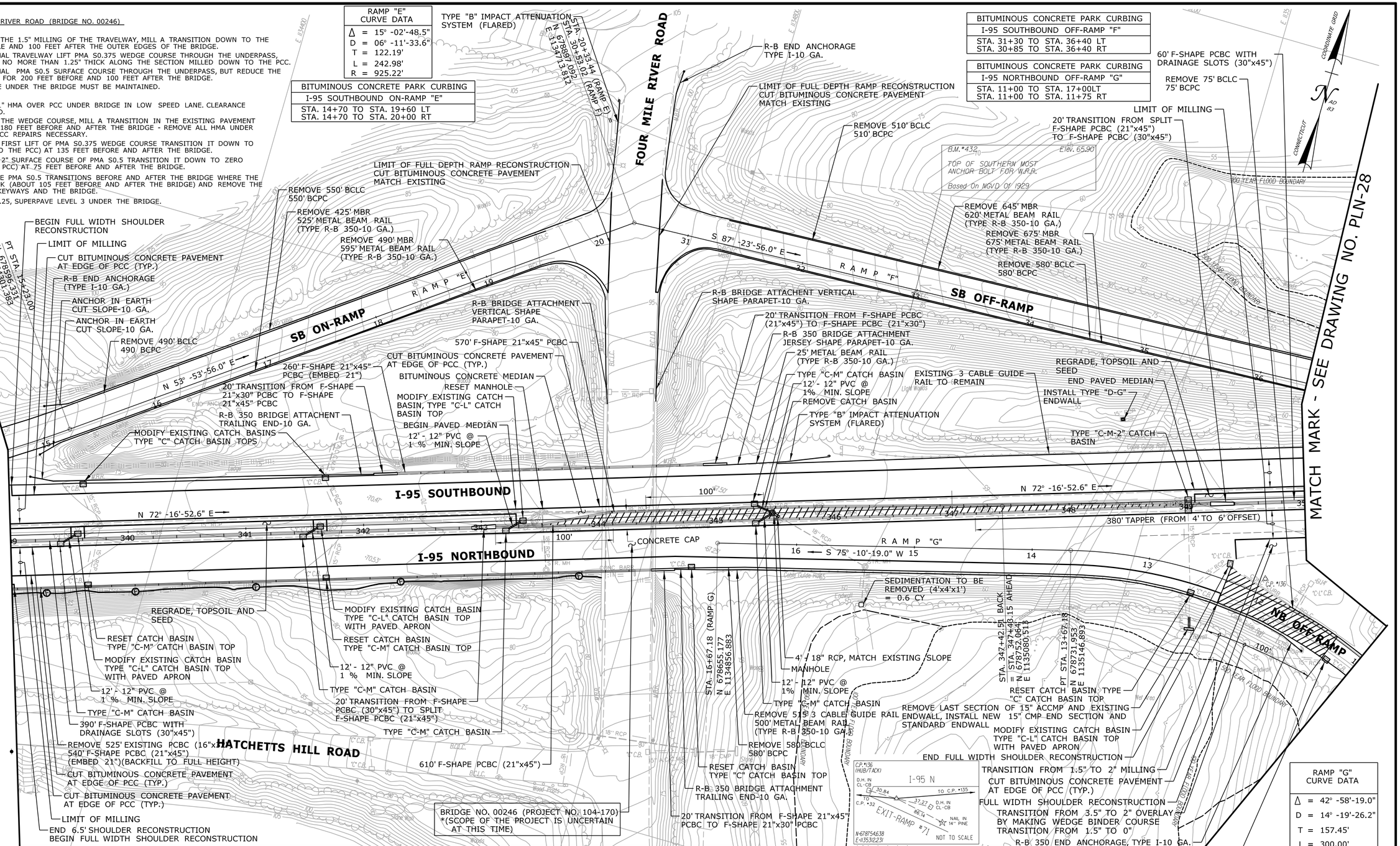

RAMP "G" CURVE DATA	
Δ	= 42° -58'-19.0"
D	= 14° -19'-26.2"
T	= 157.45'
L	= 300.00'
R	= 400.00'

FINAL DESIGN REVIEW

REV.	DATE	REVISION DESCRIPTION	SHEET NO.
-	-	-	-
-	-	-	-
-	-	-	-
-	-	-	-
-	-	-	-
-	-	-	-

THE INFORMATION, INCLUDING ESTIMATED QUANTITIES OF WORK, SHOWN ON THESE SHEETS IS BASED ON LIMITED INVESTIGATIONS BY THE STATE AND IS IN NO WAY WARRANTED TO INDICATE THE CONDITIONS OF ACTUAL QUANTITIES OF WORK WHICH WILL BE REQUIRED.

Plotted Date: 2/17/2014

DESIGNER/DRAFTER: **RL/MF/EK**

CHECKED BY: **D. DAGAN**

SCALE IN FEET 0 40 80

SCALE 1"=40'

STATE OF CONNECTICUT
DEPARTMENT OF TRANSPORTATION

Filename: ...\Plan\HW_MSH_PLN-26.dgn

SIGNATURE/ BLOCK:

PROJECT TITLE:

INTERSTATE 95 RESURFACING AND SAFETY IMPROVEMENTS

TOWN: **OLD SAYBROOK, OLD LYME & EAST LYME**

DRAWING TITLE: **ROADWAY PLAN STA. 339 TO STA. 350**

PROJECT NO. **104-164**

DRAWING NO. **PLN-26**

SHEET NO. **03.56**

RAMP "G" CURVE DATA
Δ = 31° -49'-52.0"
D = 21° -13'-14.4"
T = 76.99'
L = 150.00'
R = 270.00'

RAMP "G" CURVE DATA
Δ = 105° -11'-49.0"
D = 31° -49'-51.6"
T = 235.42'
L = 330.49'
R = 180.00'

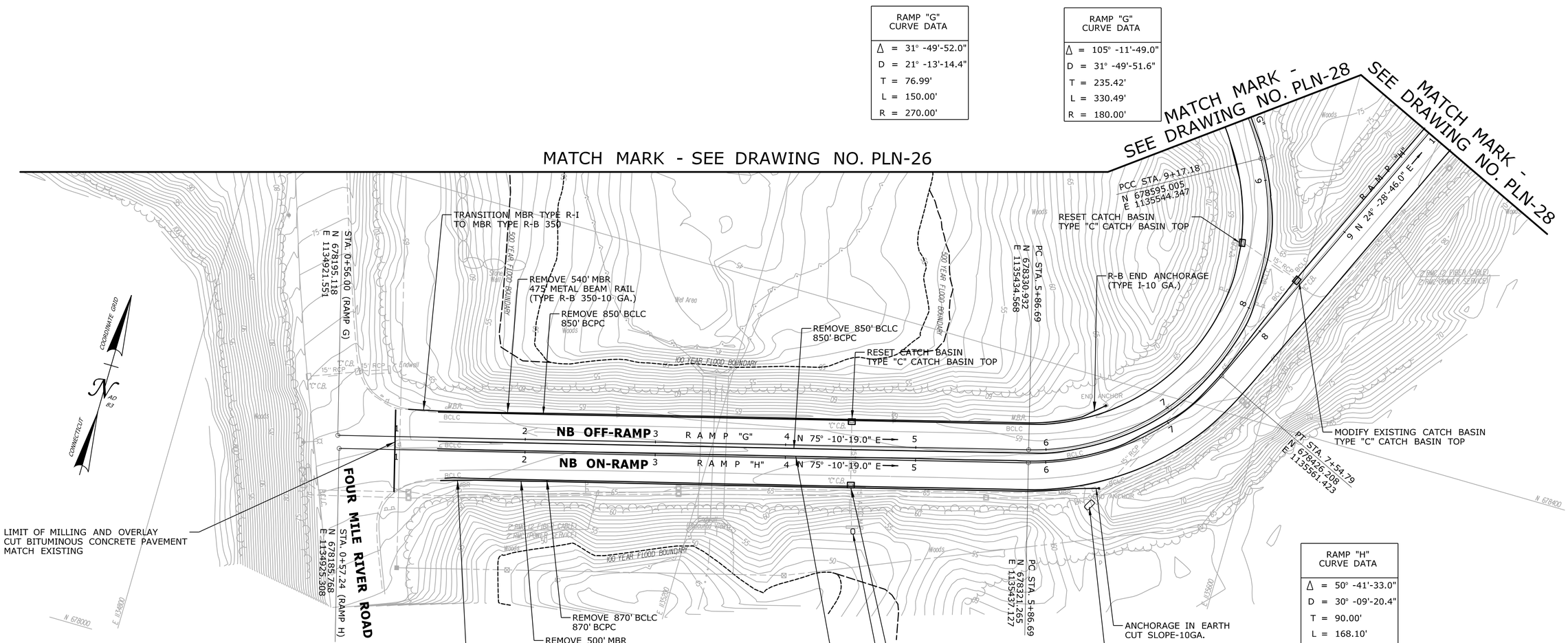

RAMP "H" CURVE DATA
Δ = 50° -41'-33.0"
D = 30° -09'-20.4"
T = 90.00'
L = 168.10'
R = 190.00'

BITUMINOUS CONCRETE PARK CURBING
I-95 NORTHBOUND OFF-RAMP "G"
STA. 1+33 TO STA. 9+50 LT STA. 1+33 TO STA. 9+50 RT
I-95 NORTHBOUND ON-RAMP "H"
STA. 1+33 TO STA. 10+00 LT STA. 1+36 TO STA. 10+00 RT

FINAL DESIGN REVIEW

REV.	DATE	REVISION DESCRIPTION	SHEET NO.
-	-	-	-
-	-	-	-
-	-	-	-
-	-	-	-
-	-	-	-
-	-	-	-

THE INFORMATION, INCLUDING ESTIMATED QUANTITIES OF WORK, SHOWN ON THESE SHEETS IS BASED ON LIMITED INVESTIGATIONS BY THE STATE AND IS IN NO WAY WARRANTED TO INDICATE THE CONDITIONS OF ACTUAL QUANTITIES OF WORK WHICH WILL BE REQUIRED.

Plotted Date: 2/17/2014

DESIGNER/DRAFTER: **RL/MF/EK**

CHECKED BY: **D. DAGAN**

SCALE IN FEET 0 40 80

SCALE 1"=40'

STATE OF CONNECTICUT
DEPARTMENT OF TRANSPORTATION

Filename: ...\Plan\HW_MSH_PLN-27.dgn

SIGNATURE/ BLOCK:

PROJECT TITLE: **INTERSTATE 95 RESURFACING AND SAFETY IMPROVEMENTS**

TOWN: **OLD SAYBROOK, OLD LYME & EAST LYME**

DRAWING TITLE: **ROADWAY PLAN STA. 1 TO STA. 10**

PROJECT NO. **104-164**

DRAWING NO. **PLN-27**

SHEET NO. **03.57**

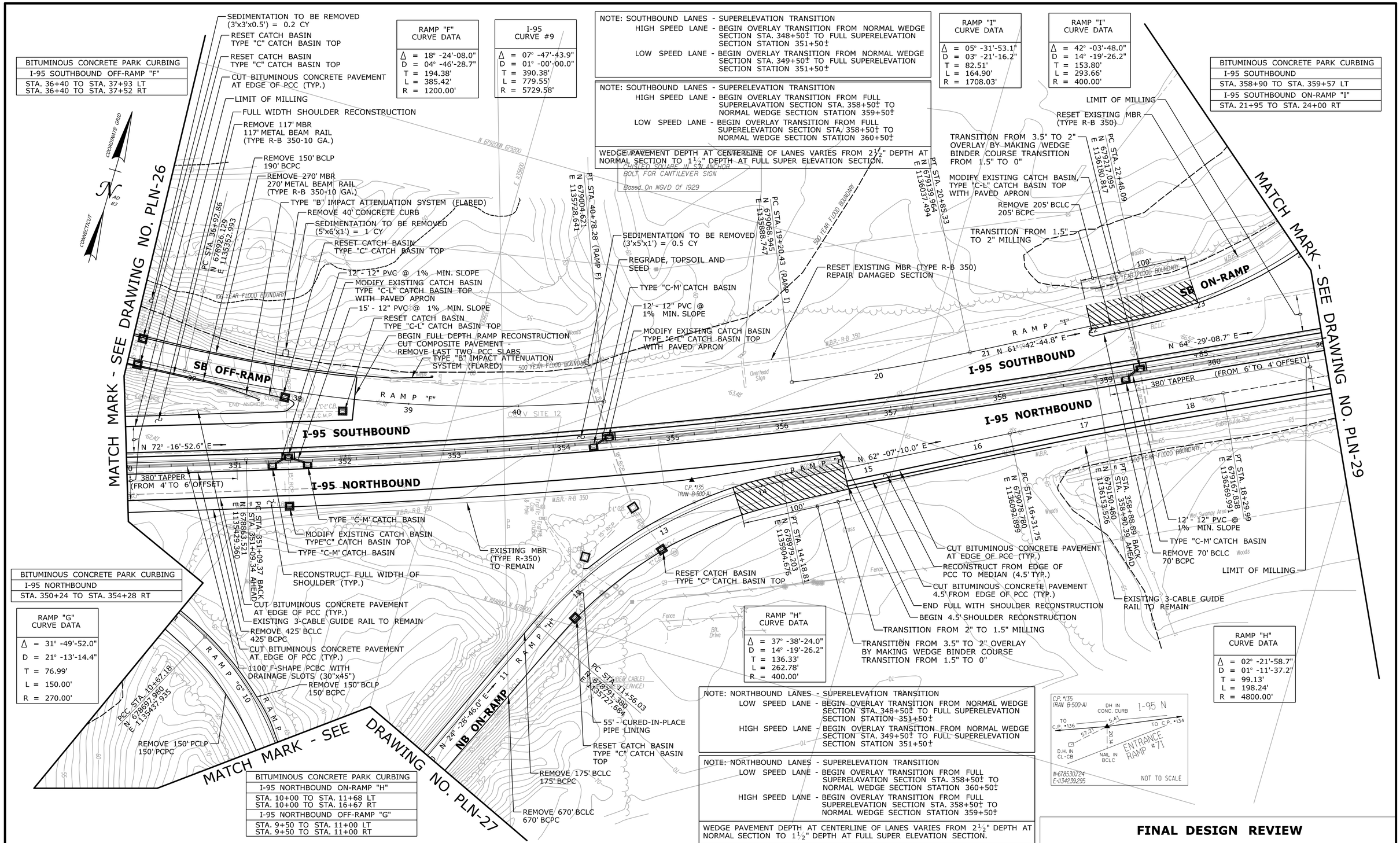

BITUMINOUS CONCRETE PARK CURBING
I-95 SOUTHBOUND OFF-RAMP "F"
STA. 36+40 TO STA. 37+93 LT STA. 36+40 TO STA. 37+52 RT

RAMP "F" CURVE DATA
Δ = 18° -24'-08.0"
D = 04° -46'-28.7"
T = 194.38'
L = 385.42'
R = 1200.00'

I-95 CURVE #9
Δ = 07° -47'-43.9"
D = 01° -00'-00.0"
T = 390.38'
L = 779.55'
R = 5729.58'

NOTE: SOUTHBOUND LANES - SUPERELEVATION TRANSITION
HIGH SPEED LANE - BEGIN OVERLAY TRANSITION FROM NORMAL WEDGE SECTION STA. 348+50± TO FULL SUPERELEVATION SECTION STATION 351+50±
LOW SPEED LANE - BEGIN OVERLAY TRANSITION FROM NORMAL WEDGE SECTION STA. 349+50± TO FULL SUPERELEVATION SECTION STATION 351+50±

NOTE: SOUTHBOUND LANES - SUPERELEVATION TRANSITION
HIGH SPEED LANE - BEGIN OVERLAY TRANSITION FROM FULL SUPERELAVATION SECTION STA. 358+50± TO NORMAL WEDGE SECTION STATION 359+50±
LOW SPEED LANE - BEGIN OVERLAY TRANSITION FROM FULL SUPERELEVATION SECTION STA. 358+50± TO NORMAL WEDGE SECTION STATION 360+50±

WEDGE PAVEMENT DEPTH AT CENTERLINE OF LANES VARIES FROM 2½" DEPTH AT NORMAL SECTION TO 1½" DEPTH AT FULL SUPER ELEVATION SECTION.

CHISELED SQUARE IN SW ANCHOR BOLT FOR CANTILEVER SIGN
Based On NGVD Of 1929

RAMP "I" CURVE DATA
Δ = 05° -31'-53.1"
D = 03° -21'-16.2"
T = 82.51'
L = 164.90'
R = 1708.03'

RAMP "I" CURVE DATA
Δ = 42° -03'-48.0"
D = 14° -19'-26.2"
T = 153.80'
L = 293.66'
R = 400.00'

BITUMINOUS CONCRETE PARK CURBING
I-95 SOUTHBOUND
STA. 358+90 TO STA. 359+57 LT
I-95 SOUTHBOUND ON-RAMP "I"
STA. 21+95 TO STA. 24+00 RT

BITUMINOUS CONCRETE PARK CURBING
I-95 NORTHBOUND
STA. 350+24 TO STA. 354+28 RT

RAMP "G" CURVE DATA
Δ = 31° -49'-52.0"
D = 21° -13'-14.4"
T = 76.99'
L = 150.00'
R = 270.00'

RAMP "H" CURVE DATA
Δ = 37° -38'-24.0"
D = 14° -19'-26.2"
T = 136.33'
L = 262.78'
R = 400.00'

RAMP "H" CURVE DATA
Δ = 02° -21'-58.7"
D = 01° -11'-37.2"
T = 99.13'
L = 198.24'
R = 4800.00'

NOTE: NORTHBOUND LANES - SUPERELEVATION TRANSITION
LOW SPEED LANE - BEGIN OVERLAY TRANSITION FROM NORMAL WEDGE SECTION STA. 348+50± TO FULL SUPERELEVATION SECTION STATION 351+50±
HIGH SPEED LANE - BEGIN OVERLAY TRANSITION FROM NORMAL WEDGE SECTION STA. 349+50± TO FULL SUPERELEVATION SECTION STATION 351+50±

NOTE: NORTHBOUND LANES - SUPERELEVATION TRANSITION
LOW SPEED LANE - BEGIN OVERLAY TRANSITION FROM FULL SUPERELAVATION SECTION STA. 358+50± TO NORMAL WEDGE SECTION STATION 360+50±
HIGH SPEED LANE - BEGIN OVERLAY TRANSITION FROM FULL SUPERELEVATION SECTION STA. 358+50± TO NORMAL WEDGE SECTION STATION 359+50±

WEDGE PAVEMENT DEPTH AT CENTERLINE OF LANES VARIES FROM 2½" DEPTH AT NORMAL SECTION TO 1½" DEPTH AT FULL SUPER ELEVATION SECTION.

BITUMINOUS CONCRETE PARK CURBING
I-95 NORTHBOUND ON-RAMP "H"
STA. 10+00 TO STA. 11+68 LT STA. 10+00 TO STA. 16+67 RT
I-95 NORTHBOUND OFF-RAMP "G"
STA. 9+50 TO STA. 11+00 LT STA. 9+50 TO STA. 11+00 RT

FINAL DESIGN REVIEW

REV.	DATE	REVISION DESCRIPTION	SHEET NO.
-	-	-	-
-	-	-	-
-	-	-	-
-	-	-	-
-	-	-	-
-	-	-	-

THE INFORMATION, INCLUDING ESTIMATED QUANTITIES OF WORK, SHOWN ON THESE SHEETS IS BASED ON LIMITED INVESTIGATIONS BY THE STATE AND IS IN NO WAY WARRANTED TO INDICATE THE CONDITIONS OF ACTUAL QUANTITIES OF WORK WHICH WILL BE REQUIRED.

Plotted Date: 2/18/2014

DESIGNER/DRAFTER: RL/MF/EK
CHECKED BY: D. DAGAN
SCALE IN FEET 0 40 80
SCALE 1"=40'

STATE OF CONNECTICUT
DEPARTMENT OF TRANSPORTATION

Filename: ...\Plan\HW_MSH_PLN-28.dgn

SIGNATURE/ BLOCK:

PROJECT TITLE: INTERSTATE 95 RESURFACING AND SAFETY IMPROVEMENTS

TOWN: OLD SAYBROOK, OLD LYME & EAST LYME

DRAWING TITLE: ROADWAY PLAN STA. 350 TO STA. 361

PROJECT NO. 104-164
DRAWING NO. PLN-28
SHEET NO. 03.58

NOTE:

1. RESET OF METAL BEAM RAIL (TYPE MD-B 350) TO BE PAID UNDER ITEM #0912614 - RESET METAL BEAM RAIL (TYPE MD-B)
2. RESET OF MD-B 350 MEDIAN BARRIER SAFETY SHAPE ATTACHMENT (TYPE 1) TO BE PAID UNDER ITEM #0910177 - MD-B MEDIAN BARRIER-JERSEY SHAPE ATTACHMENT (TYPE 1)

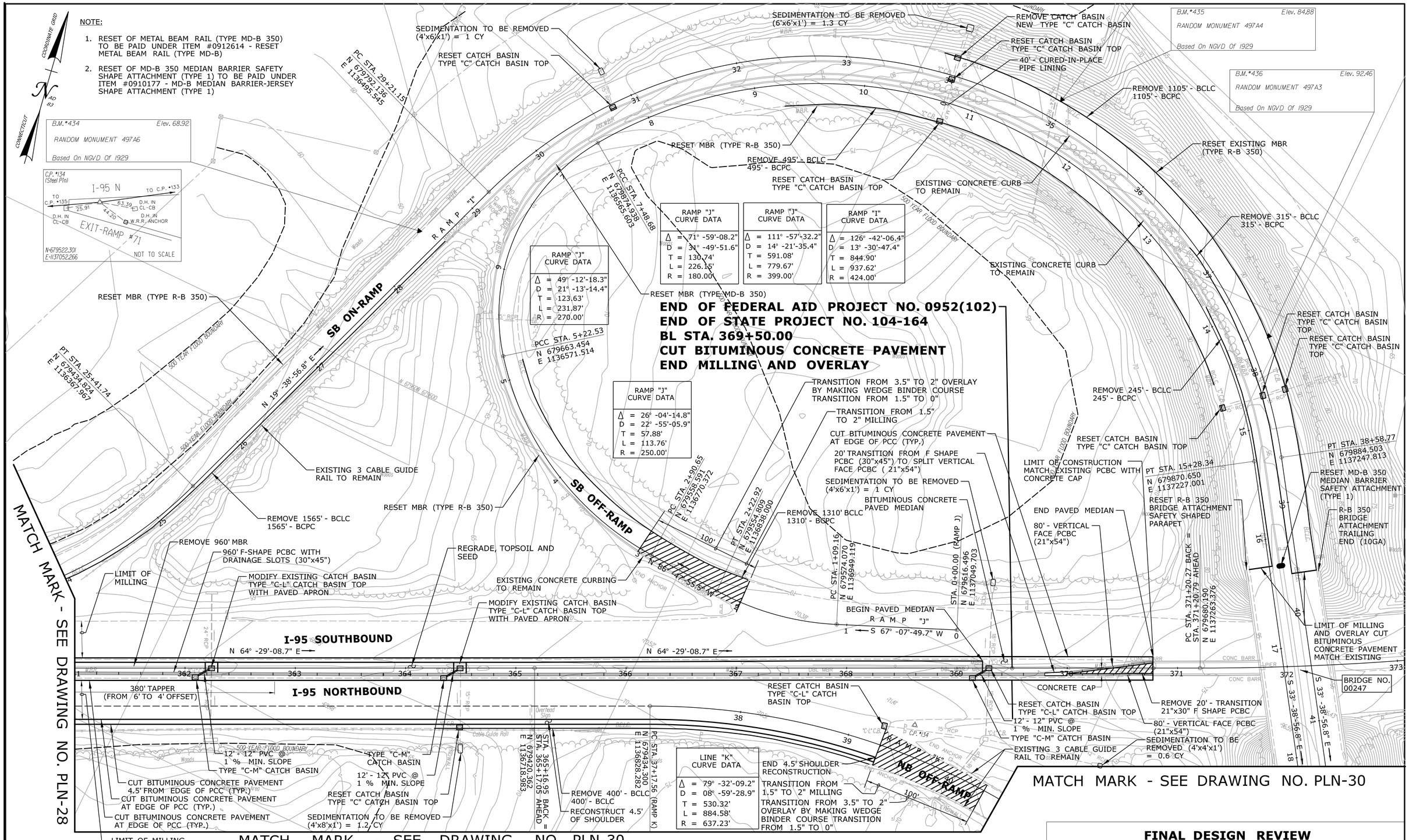

FINAL DESIGN REVIEW

REV.	DATE	REVISION DESCRIPTION	SHEET NO.
-		-	-
-		-	-
-		-	-
-		-	-
-		-	-
-		-	-

THE INFORMATION, INCLUDING ESTIMATED QUANTITIES OF WORK, SHOWN ON THESE SHEETS IS BASED ON LIMITED INVESTIGATIONS BY THE STATE AND IS IN NO WAY WARRANTED TO INDICATE THE CONDITIONS OF ACTUAL QUANTITIES OF WORK WHICH WILL BE REQUIRED.

Plotted Date: 2/20/2014

DESIGNER/DRAFTER: RL/MF/EK
CHECKED BY: D. DAGAN
SCALE IN FEET 0 40 80
SCALE 1"=40'

STATE OF CONNECTICUT
DEPARTMENT OF TRANSPORTATION

Filename: ...\Plan\HW_MSH_PLN-29.dgn

SIGNATURE/ BLOCK:

PROJECT TITLE: INTERSTATE 95 RESURFACING AND SAFETY IMPROVEMENTS

TOWN: OLD SAYBROOK, OLD LYME & EAST LYME

DRAWING TITLE: ROADWAY PLAN STA. 361 TO STA. 373

PROJECT NO. 104-164
DRAWING NO. PLN-29
SHEET NO. 03.59

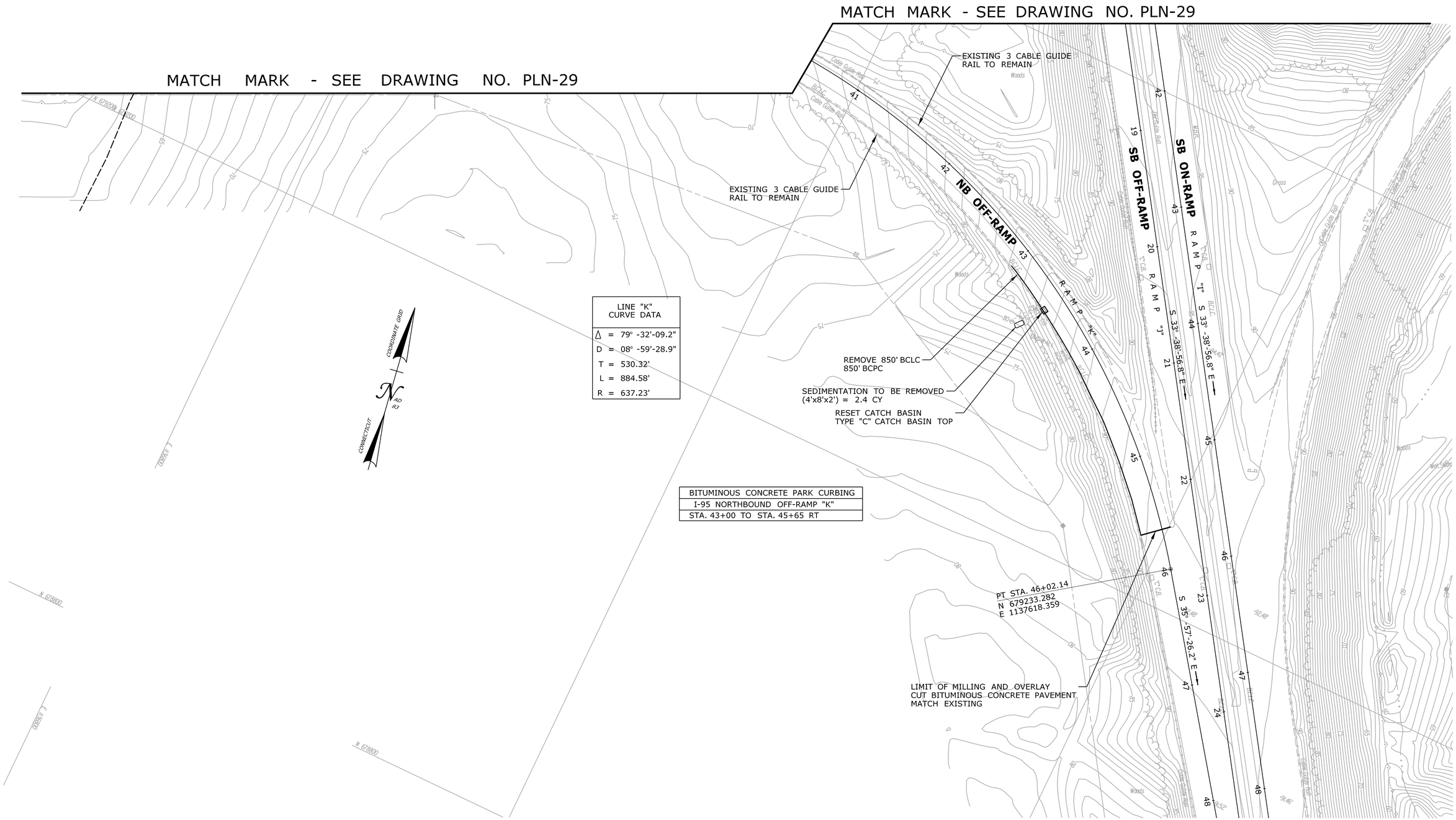

LINE "K" CURVE DATA
Δ = 79° -32'-09.2"
D = 08° -59'-28.9"
T = 530.32'
L = 884.58'
R = 637.23'

BITUMINOUS CONCRETE PARK CURBING
I-95 NORTHBOUND OFF-RAMP "K"
STA. 43+00 TO STA. 45+65 RT

FINAL DESIGN REVIEW

REV.	DATE	REVISION DESCRIPTION	SHEET NO.
-	-		-
-	-		-
-	-		-
-	-		-
-	-		-
-	-		-

THE INFORMATION, INCLUDING ESTIMATED QUANTITIES OF WORK, SHOWN ON THESE SHEETS IS BASED ON LIMITED INVESTIGATIONS BY THE STATE AND IS IN NO WAY WARRANTED TO INDICATE THE CONDITIONS OF ACTUAL QUANTITIES OF WORK WHICH WILL BE REQUIRED.

Plotted Date: 2/20/2014

DESIGNER/DRAFTER: **RL/MF/EK**

CHECKED BY: **D. DAGAN**

SCALE IN FEET 0 40 80

SCALE 1"=40'

STATE OF CONNECTICUT
DEPARTMENT OF TRANSPORTATION

Filename: ...\Plan\HW_MSH_PLN-30.dgn

SIGNATURE/
BLOCK:

PROJECT TITLE:
INTERSTATE 95 RESURFACING AND SAFETY IMPROVEMENTS

TOWN: **OLD SAYBROOK, OLD LYME & EAST LYME**

DRAWING TITLE: **ROADWAY PLAN STA. 40+50 TO STA. 48**

PROJECT NO. **104-164**

DRAWING NO. **PLN-30**

SHEET NO. **03.60**

GENERAL NOTES

1. THE CONTRACTOR SHALL INSTALL AND MAINTAIN THE EROSION CONTROL SYSTEM PRIOR TO INITIATING ANY CONSTRUCTION ACTIVITY WHICH MAY DISTURB EXISTING VEGETATIVE GROUND COVER.
2. THE CONTRACTOR SHALL INSTALL SEDIMENTATION CONTROL AT CATCH BASINS AT LOCATIONS SHOWN ON THE PLANS IN ACCORDANCE WITH SPECIAL PROVISION ITEM #0219011A - SEDIMENTATION CONTROL AT CATCH BASINS.
3. THE CONTRACTOR SHALL INSTALL SEDIMENTATION CONTROL SYSTEM (HAYBALES) IN THE GRASS MEDIAN AS SHOWN ON THE PLANS.
4. THE SEDIMENTATION AND EROSION CONTROL MEASURES SHOWN ON THESE SHEETS ARE THE MINIMUM REQUIRED. THE CONTRACTOR SHALL INSTALL AND MAINTAIN ADDITIONAL MEASURES, AS REQUIRED, TO CONTROL EROSION AS THE CONSTRUCTION PROJECT PROGRESSES.
5. THE CONTRACTOR SHALL DIRECT THE DISCHARGE FROM DEWATERING ACTIVITIES TO APPROPIATE VELOCITY REDUCTION AND SEDIMENTATION CONTROL DEVICES.
6. THE CONTRACTOR SHALL CONDUCT HIS CONSTRUCTION ACTIVITIES TO MINIMIZE THE DISCHARGE OF TURBID RUNOFF.
7. THE CONTRACTOR SHALL, DAILY, OR AS DIRECTED BY THE ENGINEER, SWEEP THE PAVED ROADWAYS ADJACENT TO THE WORK AREA AND CONDUCT HIS ACTIVITIES TO MINIMIZE THE TRACKING OF SOIL ONTO PAVED ROADWAYS.
8. THE CONTRACTOR SHALL SUBMIT A SEDIMENTATION AND EROSION CONTROL PLAN FOR THE PROJECT FOR REVIEW AND APPROVAL PRIOR TO STARTING ANY WORK.
9. THE CONTRACTOR SHALL BE RESPONSIBLE FOR REPLACING ANY SEDIMENTATION AND EROSION CONTROL MEASURES THAT ARE DAMAGED OR DESTROYED DURING CONSTRUCTION AT NO ADDITIONAL COST.

SEQUENCE OF CONSTRUCTION

1. INSTALL SEDIMENTATION CONTROL SYSTEMS INCLUDING AT PIPE OUTLETS AT THE REQUIRED LOCATIONS AS INDICATED ON THE PLANS AND DETAILS.
2. FLUSH AND CLEAN ALL EXISTING DRAINAGE SYSTEMS, INCLUDING CULVERTS, MANHOLES, CATCH BASINS, AND DROP INLETS THROUGHOUT THE PROJECT LIMITS.
3. REMOVE ACCUMULATED SEDIMENT AND/OR BRUSH AND DEBRIS WITHIN 25 FEET OF THE OUTLET SIDE OF THE EXISTING DRAINAGE PIPES AND/OR CULVERTS.
4. SEDIMENT, BRUSH OR DEBRIS SHALL BE REMOVED BY HAND, OR WITH EQUIPMENT AS NECESSARY, WITH MINIMAL DISRUPTION TO THE WATERCOURSE OR DRAINAGE WAY. NO EQUIPMENT SHALL BE ALLOWED WITHIN THE WETLAND AREAS.
5. SEDIMENT AND DEBRIS SHALL BE DISPOSED OF AT A DOT APPROVED UPLAND DISPOSAL SITE WITHIN THE PROJECT LIMITS.
6. PERFORM ALL ROADWAY WORK AS SHOWN ON THE CONSTRUCTION ROADWAY PLANS.
7. AFTER ALL WORK HAS BEEN COMPLETED, FLUSH AND CLEAN DRAINAGE SYSTEMS THROUGHOUT THE PROJECT LIMITS.
8. INSTALL PERMANENT RIPRAP (IF REQUIRED) AND TURF ESTABLISHMENT FOR OUTLET PROTECTION AS SHOWN ON THE PLANS AND DETAILS.
9. AFTER VEGETATION HAS BEEN ESTABLISHED, REMOVE ALL TEMPORARY SEDIMENTATION CONTROL SYSTEMS.

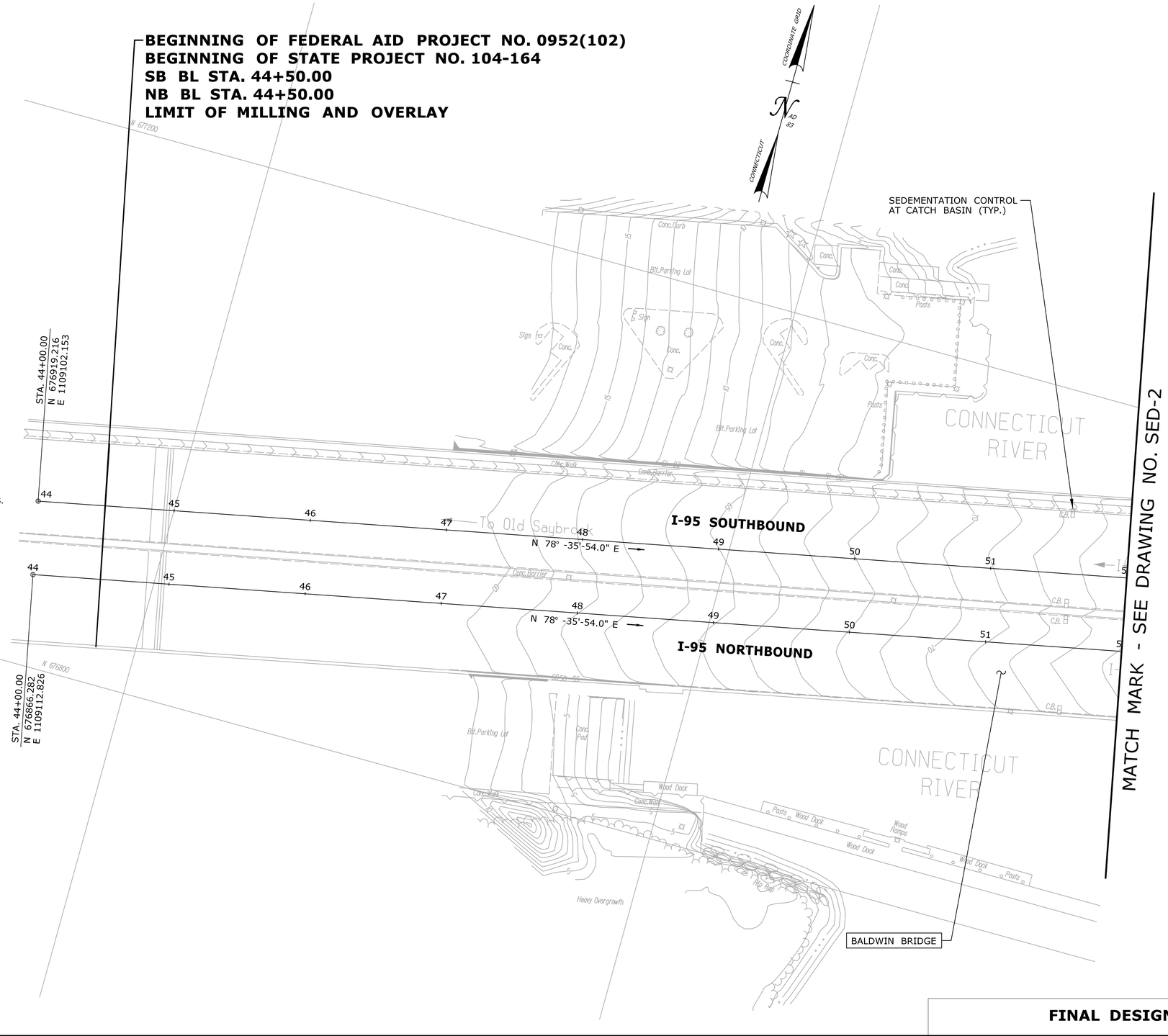

FINAL DESIGN REVIEW

REV.	DATE	REVISION DESCRIPTION	SHEET NO.
-	-	-	-
-	-	-	-
-	-	-	-
-	-	-	-
-	-	-	-
-	-	-	-

THE INFORMATION, INCLUDING ESTIMATED QUANTITIES OF WORK, SHOWN ON THESE SHEETS IS BASED ON LIMITED INVESTIGATIONS BY THE STATE AND IS IN NO WAY WARRANTED TO INDICATE THE CONDITIONS OF ACTUAL QUANTITIES OF WORK WHICH WILL BE REQUIRED.

Plotted Date: 3/19/2014

DESIGNER/DRAFTER: **RL/MF/EK**
CHECKED BY: **D. DAGAN**
SCALE IN FEET
0 40 80
SCALE 1"=40'

STATE OF CONNECTICUT
DEPARTMENT OF TRANSPORTATION

Filename: ...\Plan\HW_MSH_SED-1.dgn

SIGNATURE/
BLOCK:

PROJECT TITLE:
INTERSTATE 95 RESURFACING AND SAFETY IMPROVEMENTS

TOWN:
OLD SAYBROOK, OLD LYME & EAST LYME

DRAWING TITLE:
SEDIMENTATION AND EROSION CONTROL PLAN STA. 44 TO STA. 52

PROJECT NO. **104-164**
DRAWING NO. **SED-1**
SHEET NO. **03.61**

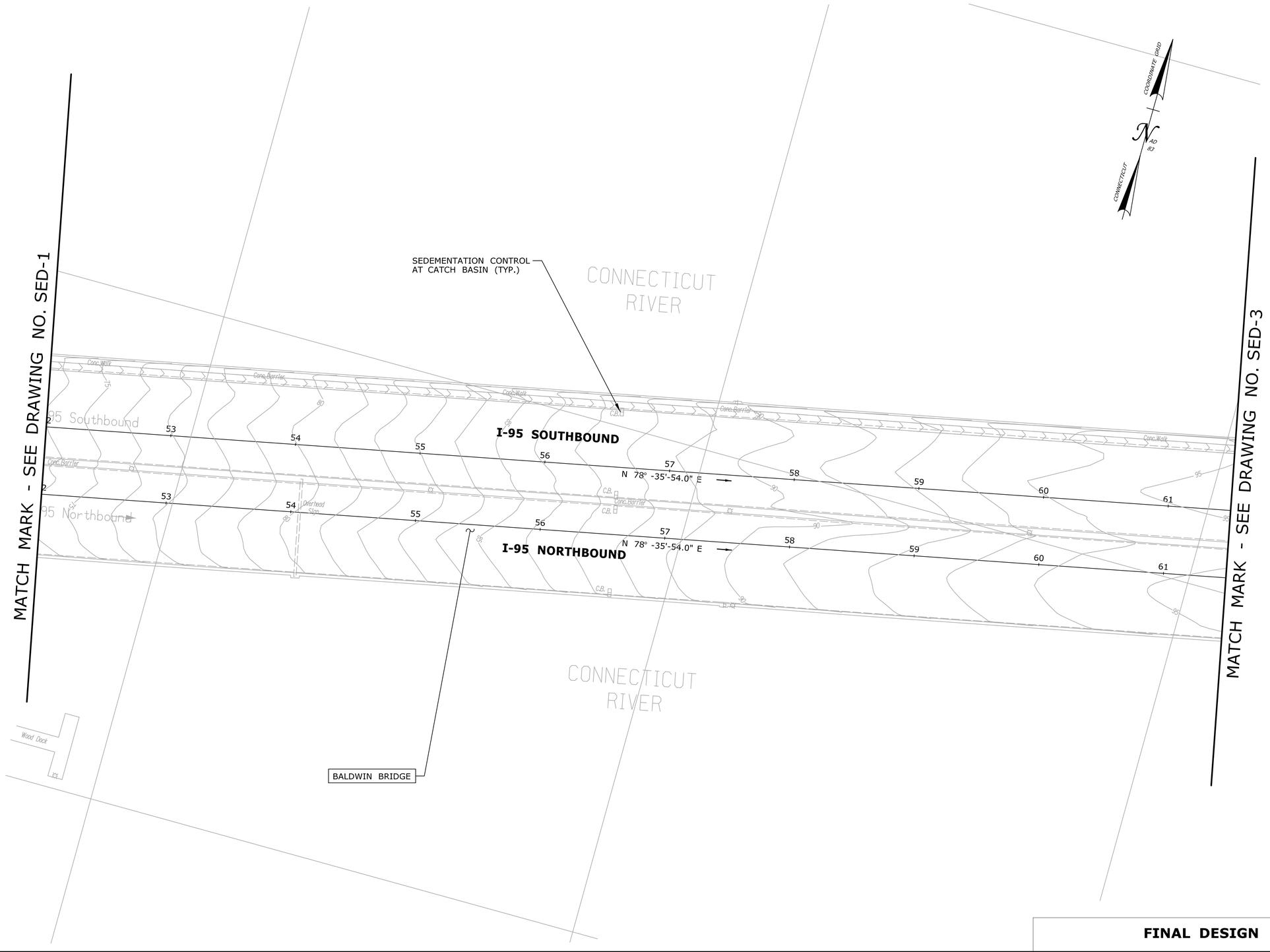

FINAL DESIGN REVIEW

REV.	DATE	REVISION DESCRIPTION	SHEET NO.
-	-	-	-
-	-	-	-
-	-	-	-
-	-	-	-
-	-	-	-
-	-	-	-

THE INFORMATION, INCLUDING ESTIMATED QUANTITIES OF WORK, SHOWN ON THESE SHEETS IS BASED ON LIMITED INVESTIGATIONS BY THE STATE AND IS IN NO WAY WARRANTED TO INDICATE THE CONDITIONS OF ACTUAL QUANTITIES OF WORK WHICH WILL BE REQUIRED.

Plotted Date: 3/19/2014

DESIGNER/DRAFTER: **RL/MF/EK**

CHECKED BY: **D. DAGAN**

SCALE IN FEET
0 40 80
SCALE 1"=40'

STATE OF CONNECTICUT
DEPARTMENT OF TRANSPORTATION

Filename: ...\Plan\HW_MSH_SED-2.dgn

SIGNATURE/
BLOCK:

PROJECT TITLE:
INTERSTATE 95 RESURFACING AND SAFETY IMPROVEMENTS

TOWN:
OLD SAYBROOK, OLD LYME & EAST LYME

DRAWING TITLE:
SEDIMENTATION AND EROSION CONTROL PLAN STA. 52 TO STA. 61+50

PROJECT NO. **104-164**

DRAWING NO. **SED-2**

SHEET NO. **03.62**

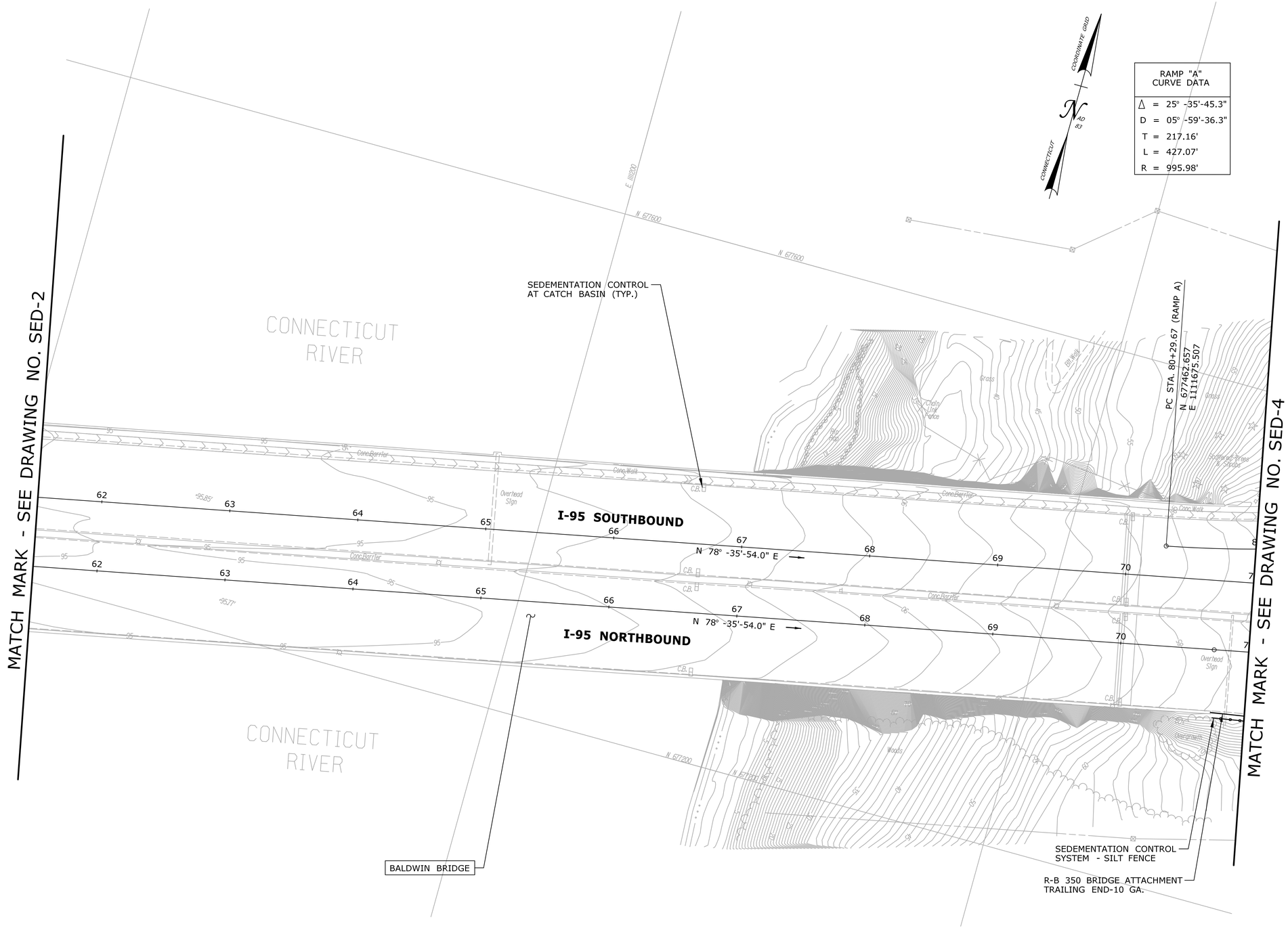

FINAL DESIGN REVIEW

REV.	DATE	REVISION DESCRIPTION	SHEET NO.
-	-	-	-
-	-	-	-
-	-	-	-
-	-	-	-
-	-	-	-
-	-	-	-

THE INFORMATION, INCLUDING ESTIMATED QUANTITIES OF WORK, SHOWN ON THESE SHEETS IS BASED ON LIMITED INVESTIGATIONS BY THE STATE AND IS IN NO WAY WARRANTED TO INDICATE THE CONDITIONS OF ACTUAL QUANTITIES OF WORK WHICH WILL BE REQUIRED.

Plotted Date: 3/19/2014

DESIGNER/DRAFTER: **RL/MF/EK**

CHECKED BY: **D. DAGAN**

SCALE IN FEET 0 40 80

SCALE 1"=40'

STATE OF CONNECTICUT
DEPARTMENT OF TRANSPORTATION

Filename: ...\Plan\HW_MSH_SED-3.dgn

SIGNATURE/ BLOCK:

PROJECT TITLE:
INTERSTATE 95 RESURFACING AND SAFETY IMPROVEMENTS

TOWN: **OLD SAYBROOK, OLD LYME & EAST LYME**

DRAWING TITLE: **SEDIMENTATION AND EROSION CONTROL PLAN STA. 61+50 TO STA. 70**

PROJECT NO. **104-164**

DRAWING NO. **SED-3**

SHEET NO. **03.63**

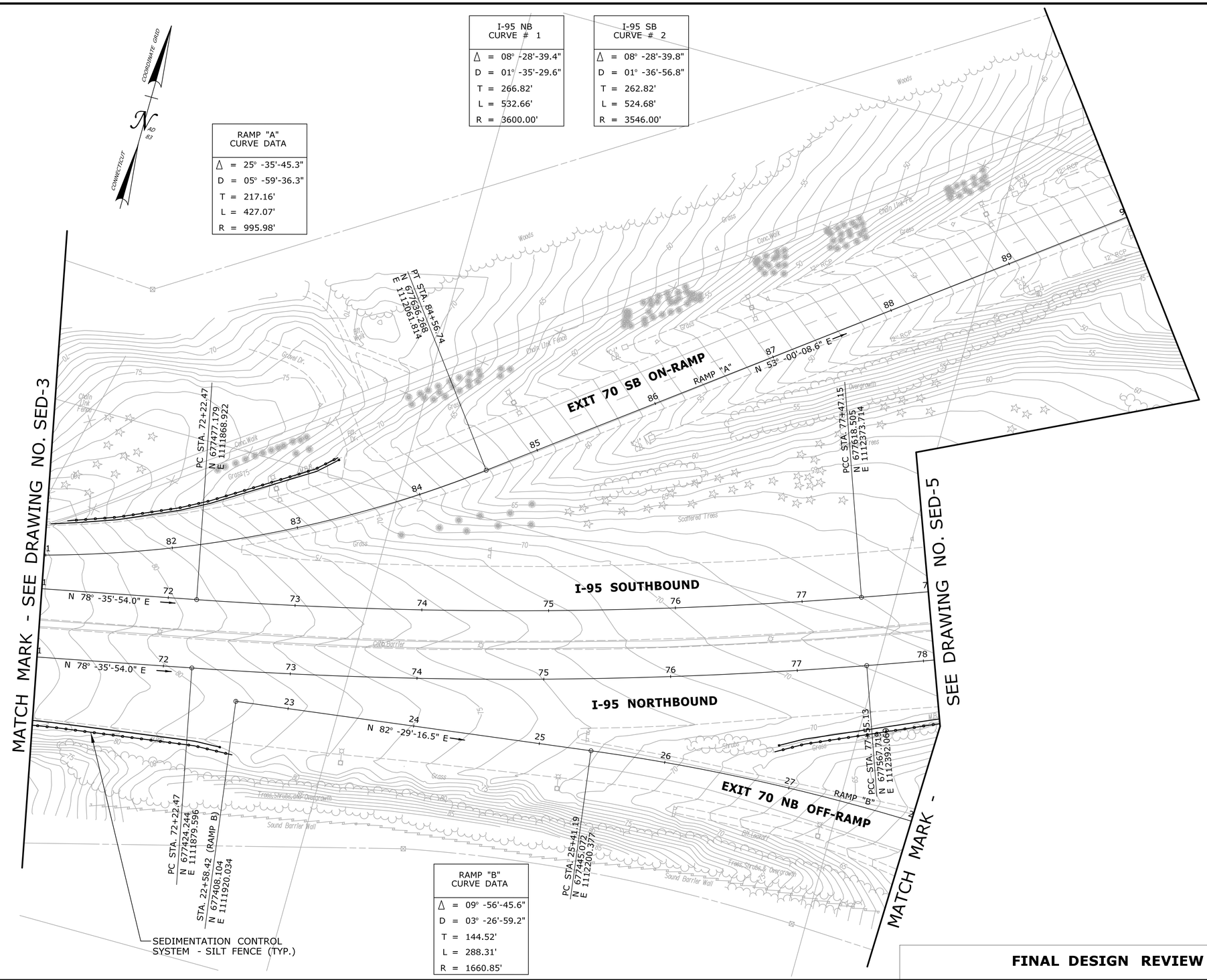

I-95 NB CURVE # 1	
Δ	= 08° -28'-39.4"
D	= 01° -35'-29.6"
T	= 266.82'
L	= 532.66'
R	= 3600.00'

I-95 SB CURVE # 2	
Δ	= 08° -28'-39.8"
D	= 01° -36'-56.8"
T	= 262.82'
L	= 524.68'
R	= 3546.00'

RAMP "A" CURVE DATA	
Δ	= 25° -35'-45.3"
D	= 05° -59'-36.3"
T	= 217.16'
L	= 427.07'
R	= 995.98'

RAMP "B" CURVE DATA	
Δ	= 09° -56'-45.6"
D	= 03° -26'-59.2"
T	= 144.52'
L	= 288.31'
R	= 1660.85'

FINAL DESIGN REVIEW

REV.	DATE	REVISION DESCRIPTION	SHEET NO.
-	-	-	-
-	-	-	-
-	-	-	-
-	-	-	-
-	-	-	-
-	-	-	-

THE INFORMATION, INCLUDING ESTIMATED QUANTITIES OF WORK, SHOWN ON THESE SHEETS IS BASED ON LIMITED INVESTIGATIONS BY THE STATE AND IS IN NO WAY WARRANTED TO INDICATE THE CONDITIONS OF ACTUAL QUANTITIES OF WORK WHICH WILL BE REQUIRED.

Plotted Date: 3/19/2014

DESIGNER/DRAFTER: **RL/MF/EK**
CHECKED BY: **D. DAGAN**
SCALE IN FEET 0 40 80
SCALE 1"=40'

STATE OF CONNECTICUT
DEPARTMENT OF TRANSPORTATION

Filename: ...\Plan\HW_MSH_SED-4.dgn

SIGNATURE/ BLOCK:

PROJECT TITLE:
INTERSTATE 95 RESURFACING AND SAFETY IMPROVEMENTS

TOWN: **OLD SAYBROOK, OLD LYME & EAST LYME**

DRAWING TITLE: **SEDIMENTATION AND EROSION CONTROL PLAN STA. 69 TO STA. 78**

PROJECT NO. **104-164**
DRAWING NO. **SED-4**
SHEET NO. **03.64**

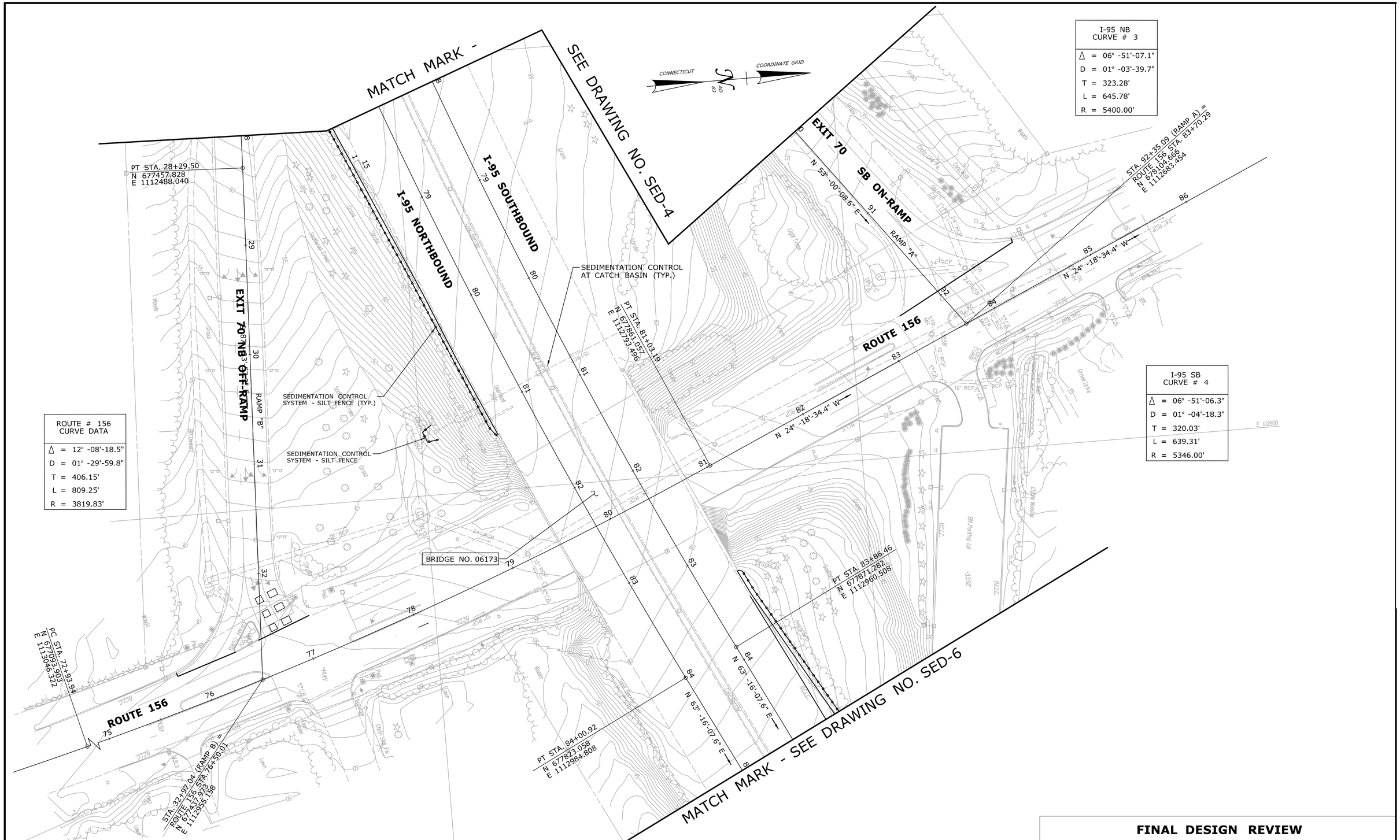

FINAL DESIGN REVIEW

REV.	DATE	REVISION DESCRIPTION	SHEET NO.
-	-	-	-
-	-	-	-
-	-	-	-
-	-	-	-
-	-	-	-
-	-	-	-

THE INFORMATION, INCLUDING ESTIMATED QUANTITIES OF WORK, SHOWN ON THESE SHEETS IS BASED ON LIMITED INVESTIGATIONS BY THE STATE AND IS IN NO WAY WARRANTED TO INDICATE THE CONDITIONS OF ACTUAL QUANTITIES OF WORK WHICH WILL BE REQUIRED.

Plotted Date: 3/19/2014

DESIGNER/DRAFTER: **RL/MF/EK**
CHECKED BY: **D. DAGAN**
SCALE IN FEET
0 40 80
SCALE 1"=40'

STATE OF CONNECTICUT
DEPARTMENT OF TRANSPORTATION

Filename: ...\Plan\HW_MSH_SED-5.dgn

SIGNATURE/
BLOCK:

PROJECT TITLE:
INTERSTATE 95 RESURFACING AND SAFETY IMPROVEMENTS

TOWN:
OLD SAYBROOK, OLD LYME & EAST LYME

DRAWING TITLE:
SEDIMENTATION AND EROSION CONTROL PLAN STA. 78+0 TO STA. 84+85

PROJECT NO. **104-164**
DRAWING NO. **SED-5**
SHEET NO. **03.65**

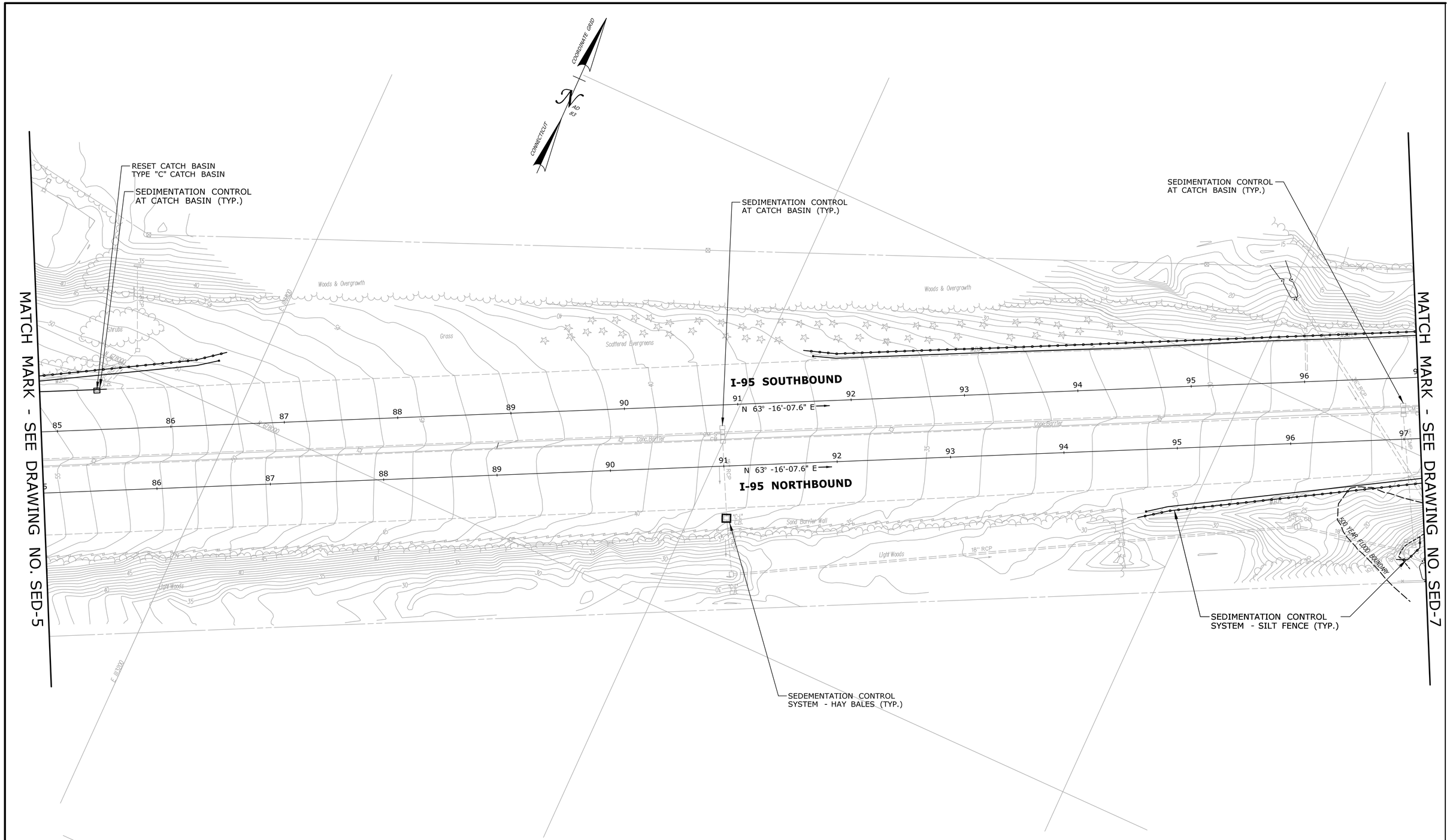

FINAL DESIGN REVIEW

REV.	DATE	REVISION DESCRIPTION	SHEET NO.
-	-	-	-
-	-	-	-
-	-	-	-
-	-	-	-
-	-	-	-
-	-	-	-

THE INFORMATION, INCLUDING ESTIMATED QUANTITIES OF WORK, SHOWN ON THESE SHEETS IS BASED ON LIMITED INVESTIGATIONS BY THE STATE AND IS IN NO WAY WARRANTED TO INDICATE THE CONDITIONS OF ACTUAL QUANTITIES OF WORK WHICH WILL BE REQUIRED.

Plotted Date: 3/19/2014

DESIGNER/DRAFTER: **RL/MF/EK**

CHECKED BY: **D. DAGAN**

SCALE IN FEET 0 40 80

SCALE 1"=40'

STATE OF CONNECTICUT
DEPARTMENT OF TRANSPORTATION

Filename: ...\Plan\HW_MSH_SED-6.dgn

SIGNATURE/
BLOCK:

PROJECT TITLE:
INTERSTATE 95 RESURFACING AND SAFETY IMPROVEMENTS

TOWN:
OLD SAYBROOK, OLD LYME & EAST LYME

DRAWING TITLE:
SEDIMENTATION AND EROSION CONTROL PLAN STA. 85 TO STA. 97

PROJECT NO. **104-164**

DRAWING NO. **SED-6**

SHEET NO. **03.66**

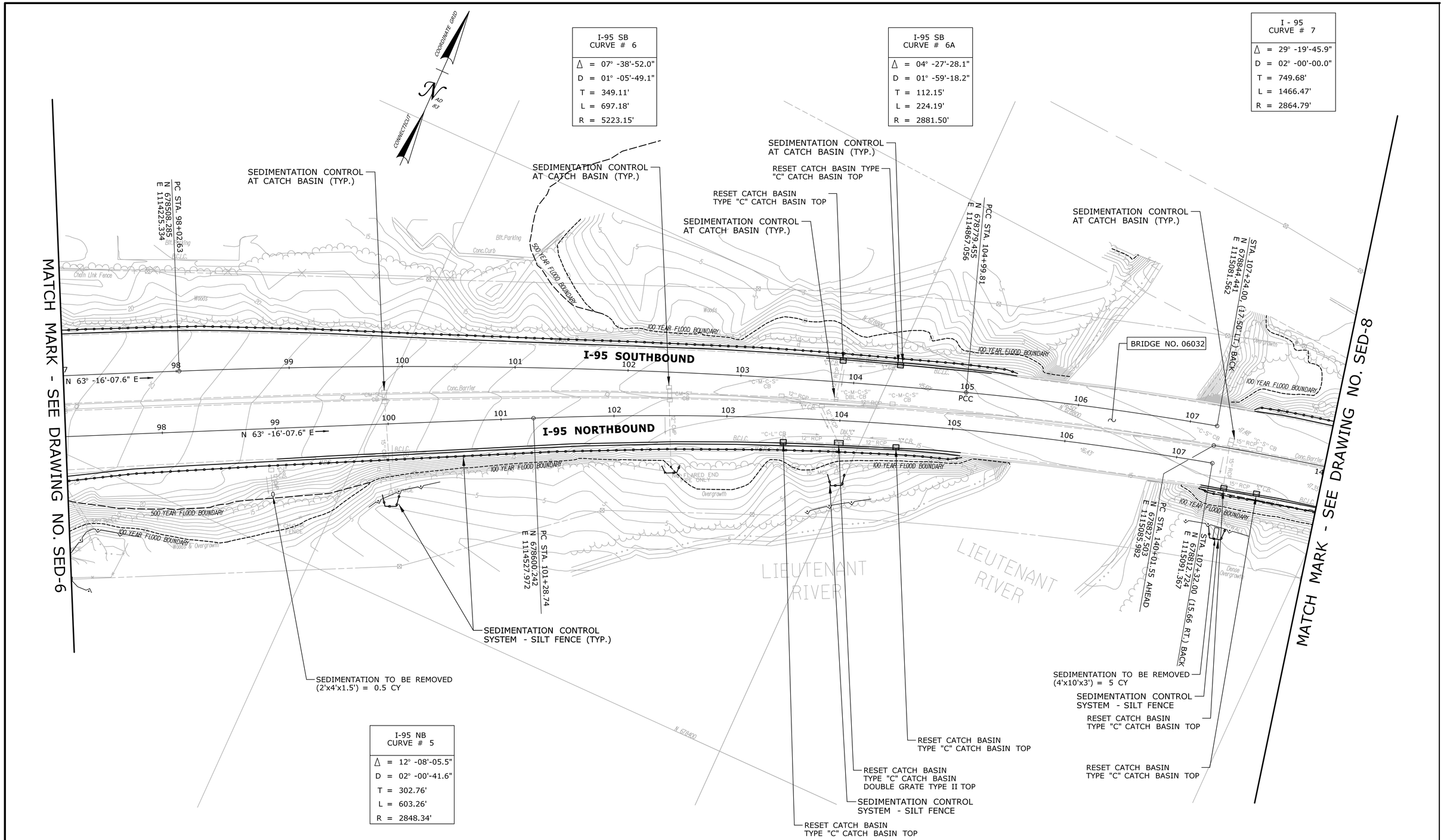

FINAL DESIGN REVIEW

REV.	DATE	REVISION DESCRIPTION	SHEET NO.
-	-	-	-
-	-	-	-
-	-	-	-
-	-	-	-
-	-	-	-
-	-	-	-

THE INFORMATION, INCLUDING ESTIMATED QUANTITIES OF WORK, SHOWN ON THESE SHEETS IS BASED ON LIMITED INVESTIGATIONS BY THE STATE AND IS IN NO WAY WARRANTED TO INDICATE THE CONDITIONS OF ACTUAL QUANTITIES OF WORK WHICH WILL BE REQUIRED.

Plotted Date: 3/19/2014

DESIGNER/DRAFTER: **RL/MF/EK**

CHECKED BY: **D. DAGAN**

SCALE IN FEET 0 40 80

SCALE 1"=40'

STATE OF CONNECTICUT
DEPARTMENT OF TRANSPORTATION

Filename: ...\Plan\HW_MSH_SED-7.dgn

SIGNATURE/ BLOCK:

PROJECT TITLE:

INTERSTATE 95 RESURFACING AND SAFETY IMPROVEMENTS

TOWN: **OLD SAYBROOK, OLD LYME & EAST LYME**

DRAWING TITLE: **SEDIMENTATION AND EROSION CONTROL PLAN STA. 97 TO STA. 141**

PROJECT NO. **104-164**

DRAWING NO. **SED-7**

SHEET NO. **03.67**

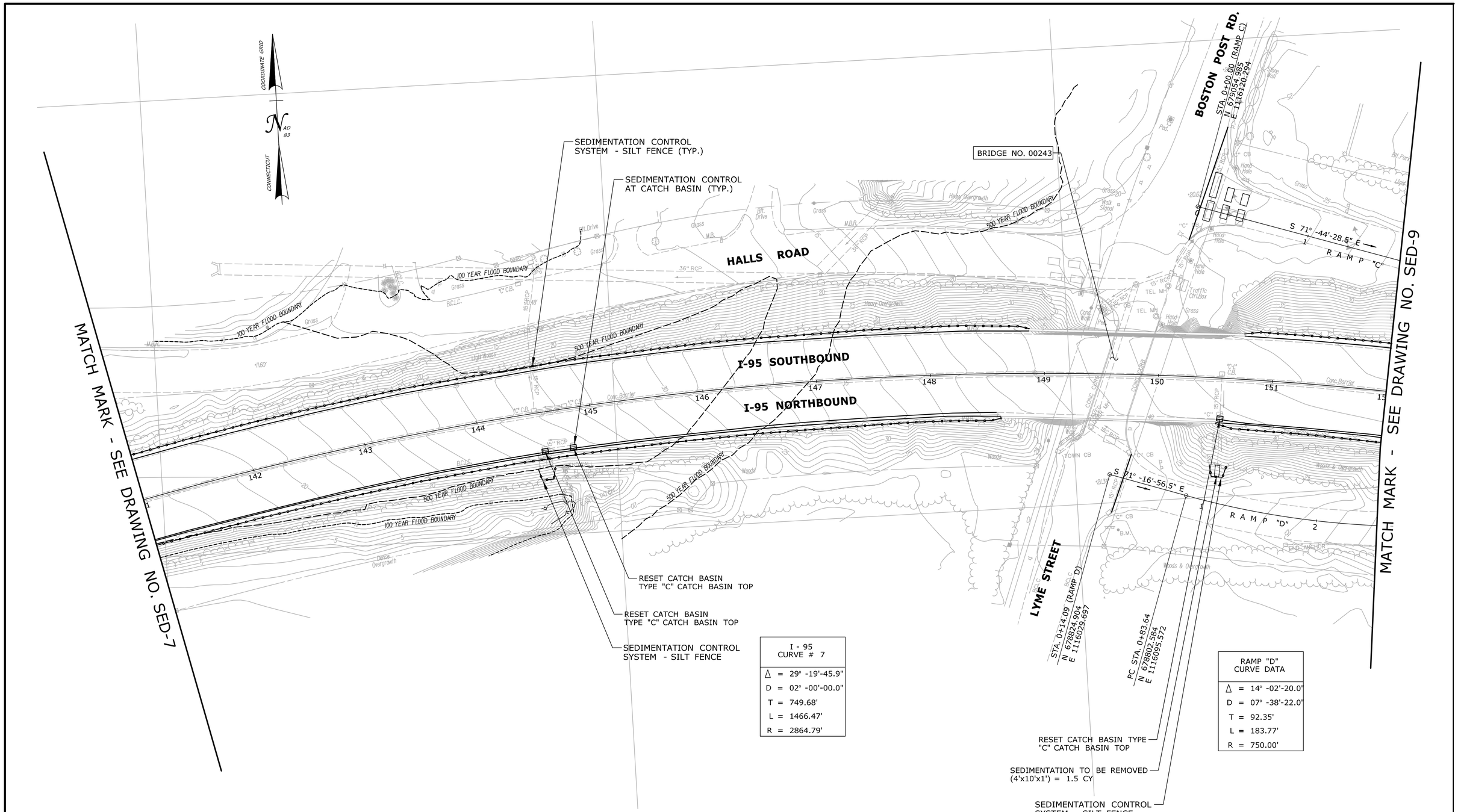

I - 95 CURVE # 7
Δ = 29° -19'-45.9"
D = 02° -00'-00.0"
T = 749.68'
L = 1466.47'
R = 2864.79'

RAMP "D" CURVE DATA
Δ = 14° -02'-20.0"
D = 07° -38'-22.0"
T = 92.35'
L = 183.77'
R = 750.00'

FINAL DESIGN REVIEW

REV.	DATE	REVISION DESCRIPTION	SHEET NO.
-	-	-	-
-	-	-	-
-	-	-	-
-	-	-	-
-	-	-	-
-	-	-	-

THE INFORMATION, INCLUDING ESTIMATED QUANTITIES OF WORK, SHOWN ON THESE SHEETS IS BASED ON LIMITED INVESTIGATIONS BY THE STATE AND IS IN NO WAY WARRANTED TO INDICATE THE CONDITIONS OF ACTUAL QUANTITIES OF WORK WHICH WILL BE REQUIRED.

Plotted Date: 3/19/2014

DESIGNER/DRAFTER: **RL/MF/EK**

CHECKED BY: **D. DAGAN**

SCALE IN FEET 0 40 80

SCALE 1"=40'

STATE OF CONNECTICUT
DEPARTMENT OF TRANSPORTATION

Filename: ...\Plan\HW_MSH_SED-8.dgn

SIGNATURE/ BLOCK:

PROJECT TITLE:

INTERSTATE 95 RESURFACING AND SAFETY IMPROVEMENTS

TOWN: **OLD SAYBROOK, OLD LYME & EAST LYME**

DRAWING TITLE: **SEDIMENTATION AND EROSION CONTROL PLAN STA. 141 TO STA. 152**

PROJECT NO. **104-164**

DRAWING NO. **SED-8**

SHEET NO. **03.68**

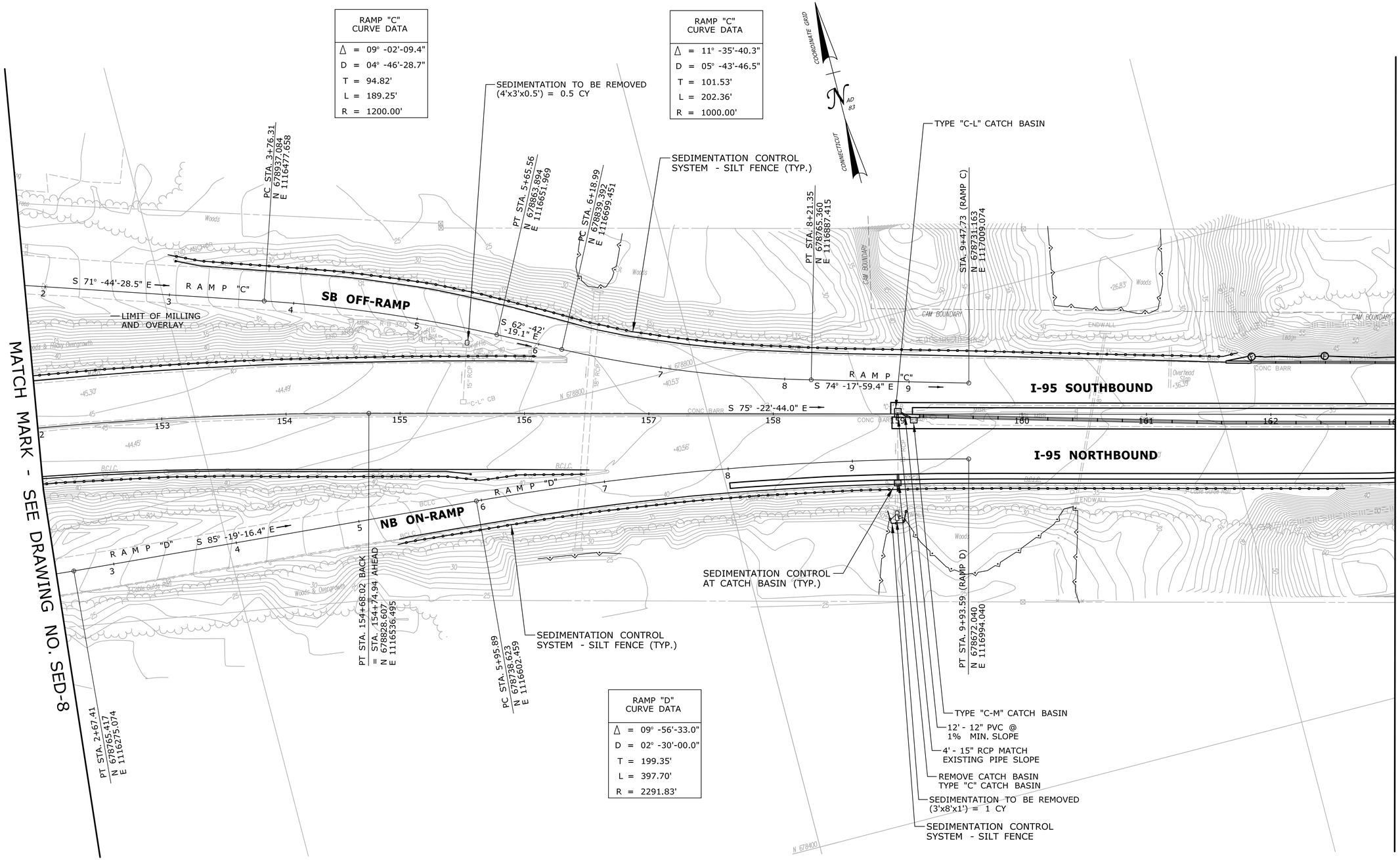

FINAL DESIGN REVIEW

REV.	DATE	REVISION DESCRIPTION	SHEET NO.
-	-	-	-
-	-	-	-
-	-	-	-
-	-	-	-
-	-	-	-
-	-	-	-

THE INFORMATION, INCLUDING ESTIMATED QUANTITIES OF WORK, SHOWN ON THESE SHEETS IS BASED ON LIMITED INVESTIGATIONS BY THE STATE AND IS IN NO WAY WARRANTED TO INDICATE THE CONDITIONS OF ACTUAL QUANTITIES OF WORK WHICH WILL BE REQUIRED.

Plotted Date: 3/19/2014

DESIGNER/DRAFTER: **RL/MF/EK**
CHECKED BY: **D. DAGAN**
SCALE IN FEET 0 40 80
SCALE 1"=40'

STATE OF CONNECTICUT
DEPARTMENT OF TRANSPORTATION

Filename: ...\Plan\HW_MSH_SED-9.dgn

SIGNATURE/ BLOCK:

PROJECT TITLE: **INTERSTATE 95 RESURFACING AND SAFETY IMPROVEMENTS**

TOWN: **OLD SAYBROOK, OLD LYME & EAST LYME**

DRAWING TITLE: **SEDIMENTATION AND EROSION CONTROL PLAN STA. 152 TO STA. 163**

PROJECT NO. **104-164**
DRAWING NO. **SED-9**
SHEET NO. **03.69**

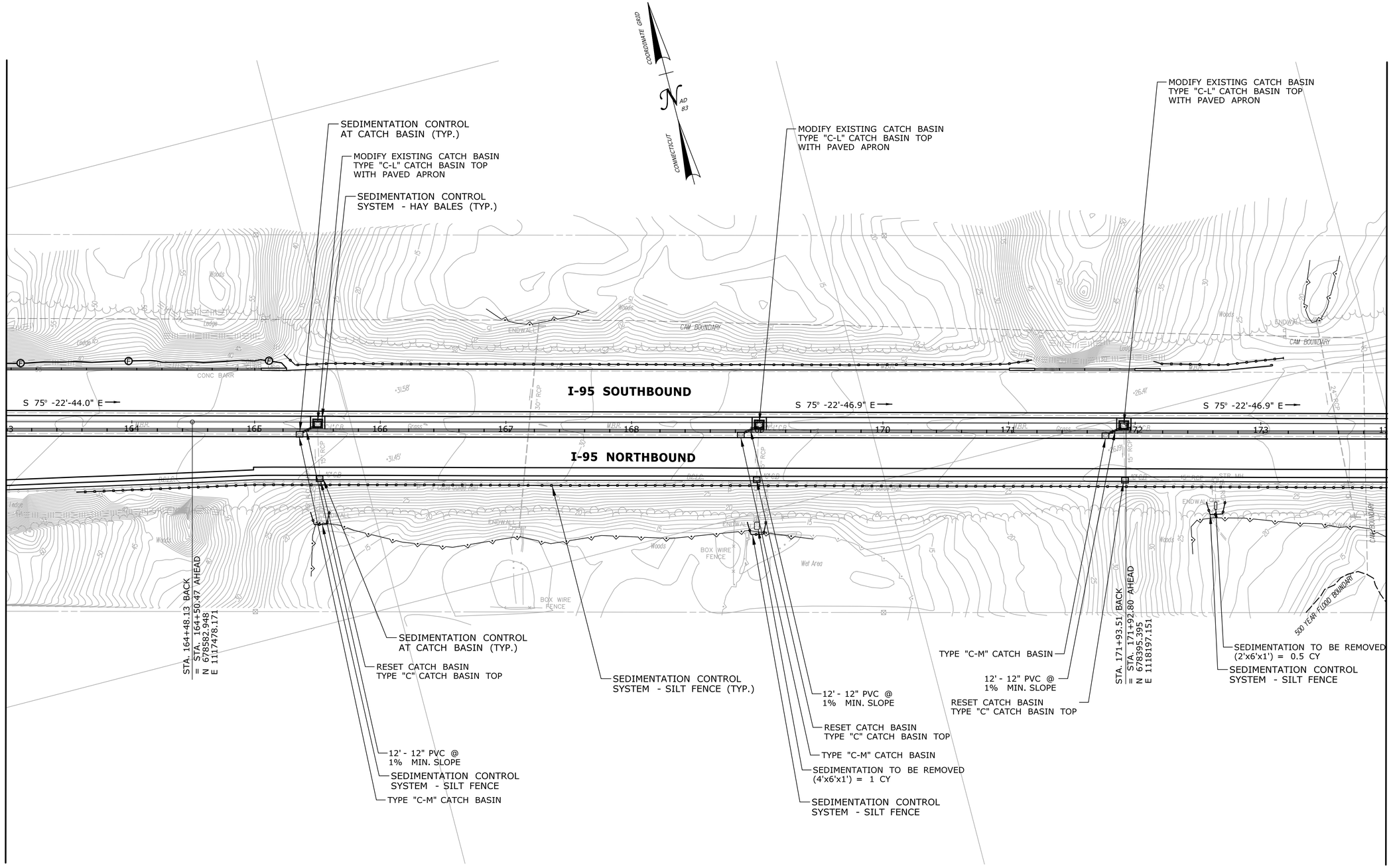

FINAL DESIGN REVIEW

REV.	DATE	REVISION DESCRIPTION	SHEET NO.
-	-	-	-
-	-	-	-
-	-	-	-
-	-	-	-
-	-	-	-
-	-	-	-

THE INFORMATION, INCLUDING ESTIMATED QUANTITIES OF WORK, SHOWN ON THESE SHEETS IS BASED ON LIMITED INVESTIGATIONS BY THE STATE AND IS IN NO WAY WARRANTED TO INDICATE THE CONDITIONS OF ACTUAL QUANTITIES OF WORK WHICH WILL BE REQUIRED.

Plotted Date: 3/19/2014

DESIGNER/DRAFTER: **RL/MF/EK**

CHECKED BY: **D. DAGAN**

SCALE IN FEET 0 40 80

SCALE 1"=40'

STATE OF CONNECTICUT
DEPARTMENT OF TRANSPORTATION

Filename: ...\Plan\HW_MSH_SED-10.dgn

SIGNATURE/ BLOCK:

PROJECT TITLE:
INTERSTATE 95 RESURFACING AND SAFETY IMPROVEMENTS

TOWN:
OLD SAYBROOK, OLD LYME & EAST LYME

DRAWING TITLE:
SEDIMENTATION AND EROSION CONTROL PLAN STA. 163 TO STA. 174

PROJECT NO. **104-164**

DRAWING NO. **SED-10**

SHEET NO. **03.70**

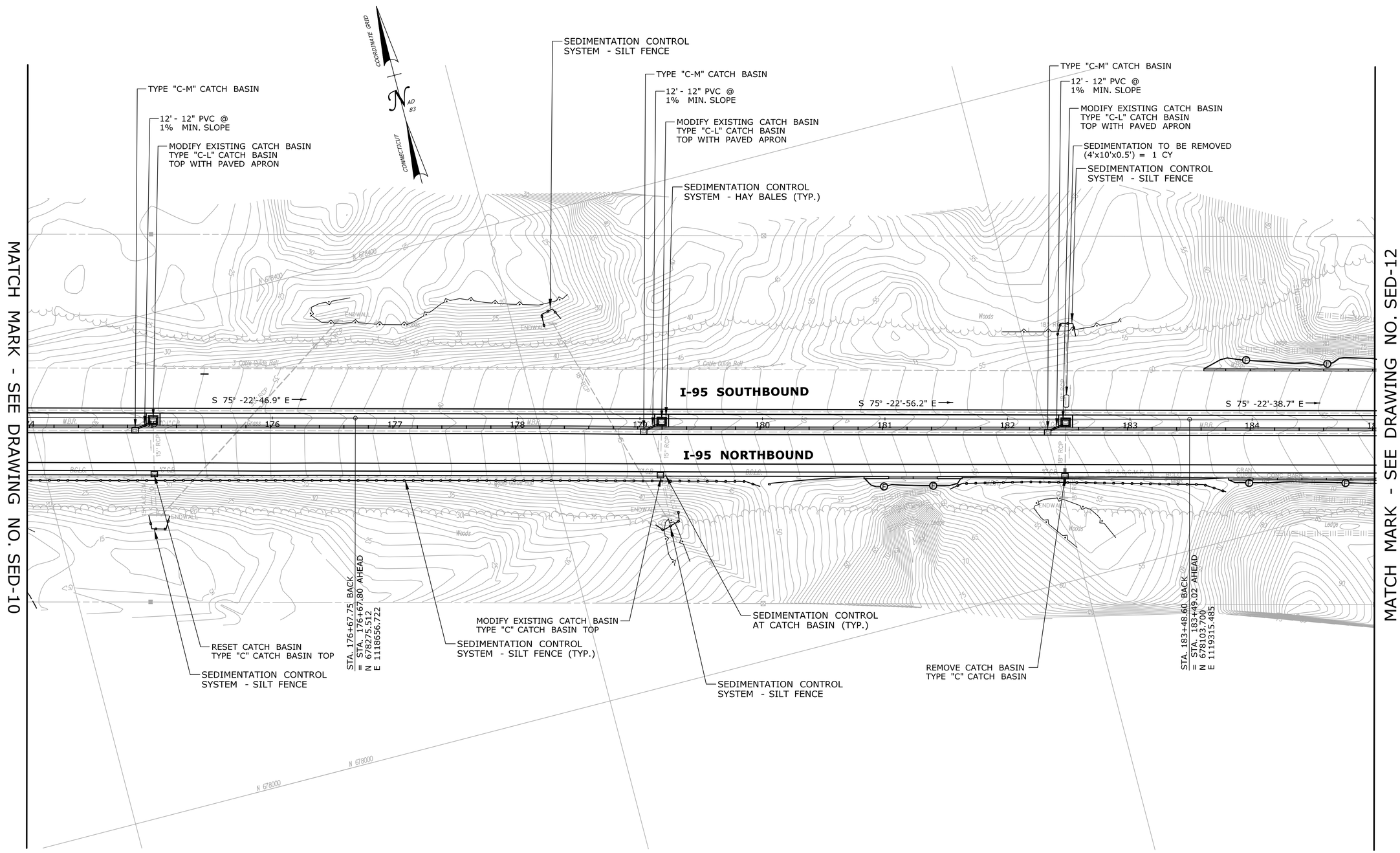

FINAL DESIGN REVIEW

REV.	DATE	REVISION DESCRIPTION	SHEET NO.
-	-	-	-
-	-	-	-
-	-	-	-
-	-	-	-
-	-	-	-
-	-	-	-

THE INFORMATION, INCLUDING ESTIMATED QUANTITIES OF WORK, SHOWN ON THESE SHEETS IS BASED ON LIMITED INVESTIGATIONS BY THE STATE AND IS IN NO WAY WARRANTED TO INDICATE THE CONDITIONS OF ACTUAL QUANTITIES OF WORK WHICH WILL BE REQUIRED.

Plotted Date: 3/24/2014

DESIGNER/DRAFTER: **RL/MF/EK**

CHECKED BY: **D. DAGAN**

SCALE IN FEET 0 40 80

SCALE 1"=40'

STATE OF CONNECTICUT
DEPARTMENT OF TRANSPORTATION

Filename: ...\Plan\HW_MSH_SED-11.dgn

SIGNATURE/ BLOCK:

PROJECT TITLE:
INTERSTATE 95 RESURFACING AND SAFETY IMPROVEMENTS

TOWN: **OLD SAYBROOK, OLD LYME & EAST LYME**

DRAWING TITLE: **SEDIMENTATION AND EROSION CONTROL PLAN STA. 174 TO STA. 185**

PROJECT NO. **104-164**

DRAWING NO. **SED-11**

SHEET NO. **03.71**

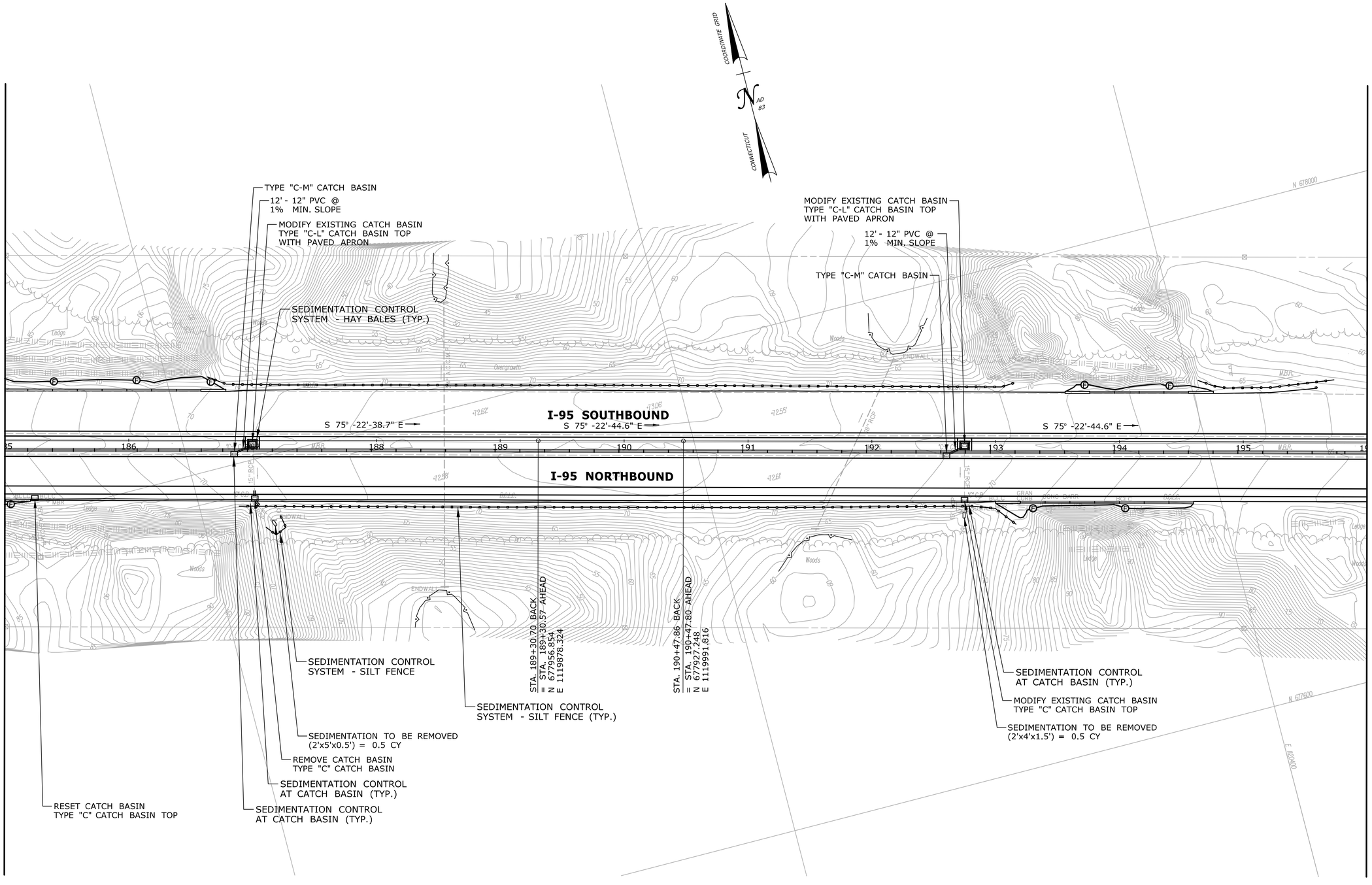

MATCH MARK - SEE DRAWING NO. SED-11

MATCH MARK - SEE DRAWING NO. SED-13

FINAL DESIGN REVIEW

REV.	DATE	REVISION DESCRIPTION	SHEET NO.
-	-	-	-
-	-	-	-
-	-	-	-
-	-	-	-
-	-	-	-
-	-	-	-

THE INFORMATION, INCLUDING ESTIMATED QUANTITIES OF WORK, SHOWN ON THESE SHEETS IS BASED ON LIMITED INVESTIGATIONS BY THE STATE AND IS IN NO WAY WARRANTED TO INDICATE THE CONDITIONS OF ACTUAL QUANTITIES OF WORK WHICH WILL BE REQUIRED.

Plotted Date: 3/24/2014

DESIGNER/DRAFTER: **RL/MF/EK**

CHECKED BY: **D. DAGAN**

SCALE IN FEET
0 40 80
SCALE 1"=40'

STATE OF CONNECTICUT
DEPARTMENT OF TRANSPORTATION

Filename: ...\Plan\HW_MSH_SED-12.dgn

SIGNATURE/
BLOCK:

PROJECT TITLE:
INTERSTATE 95 RESURFACING AND SAFETY IMPROVEMENTS

TOWN:
OLD SAYBROOK, OLD LYME & EAST LYME

DRAWING TITLE:
SEDIMENTATION AND EROSION CONTROL PLAN STA. 185 TO STA. 196

PROJECT NO. **104-164**

DRAWING NO. **SED-12**

SHEET NO. **03.72**

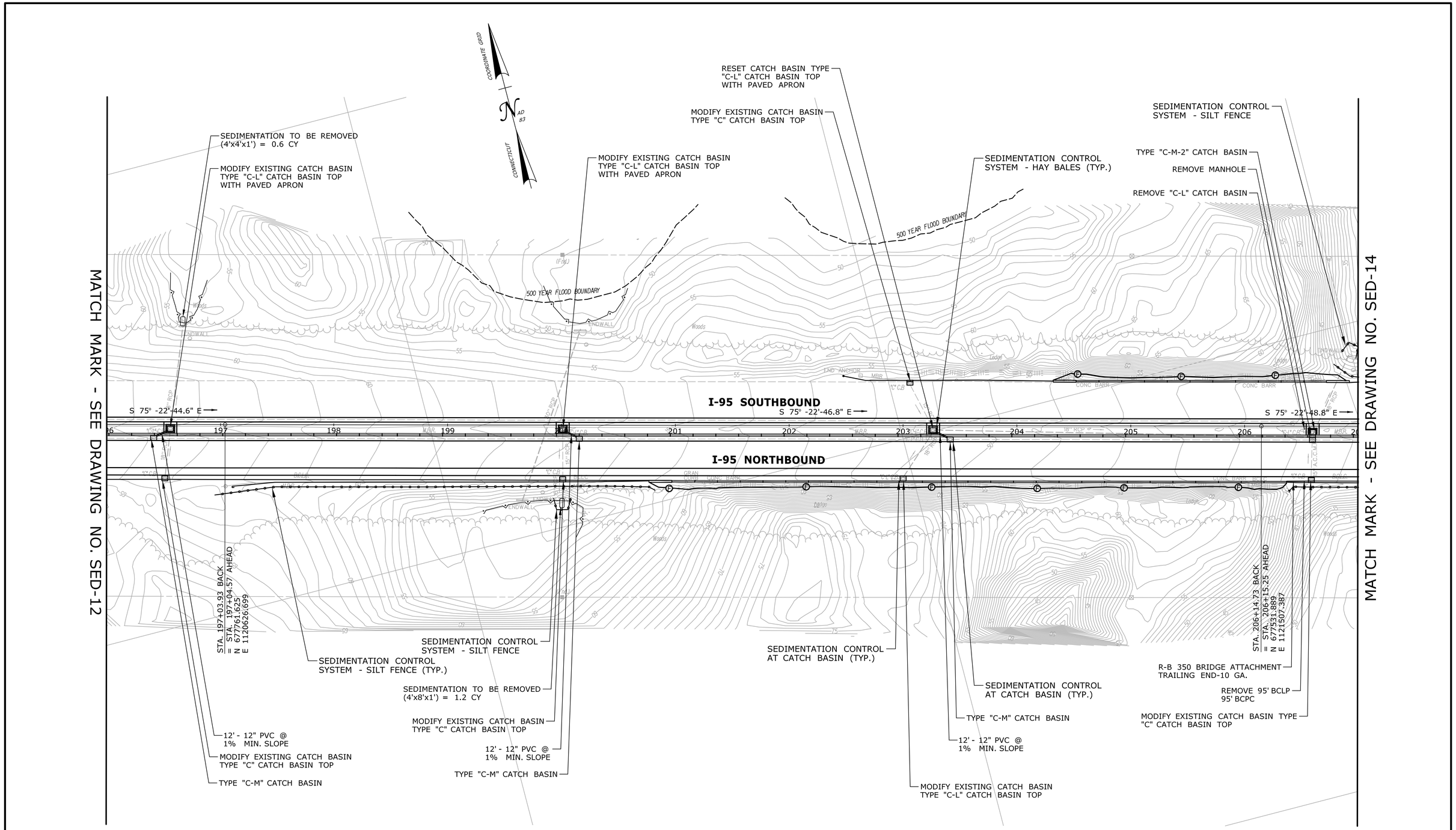

FINAL DESIGN REVIEW

REV.	DATE	REVISION DESCRIPTION	SHEET NO.
-	-	-	-
-	-	-	-
-	-	-	-
-	-	-	-
-	-	-	-
-	-	-	-

THE INFORMATION, INCLUDING ESTIMATED QUANTITIES OF WORK, SHOWN ON THESE SHEETS IS BASED ON LIMITED INVESTIGATIONS BY THE STATE AND IS IN NO WAY WARRANTED TO INDICATE THE CONDITIONS OF ACTUAL QUANTITIES OF WORK WHICH WILL BE REQUIRED.

Plotted Date: 3/24/2014

DESIGNER/DRAFTER: **RL/MF/EK**

CHECKED BY: **D. DAGAN**

SCALE IN FEET 0 40 80

SCALE 1"=40'

STATE OF CONNECTICUT
DEPARTMENT OF TRANSPORTATION

Filename: ...\Plan\HW_MSH_SED-13.dgn

SIGNATURE/ BLOCK:

PROJECT TITLE:

INTERSTATE 95 RESURFACING AND SAFETY IMPROVEMENTS

TOWN: **OLD SAYBROOK, OLD LYME & EAST LYME**

DRAWING TITLE: **SEDIMENTATION AND EROSION CONTROL PLAN STA. 196 TO STA. 207**

PROJECT NO. **104-164**

DRAWING NO. **SED-13**

SHEET NO. **03.73**

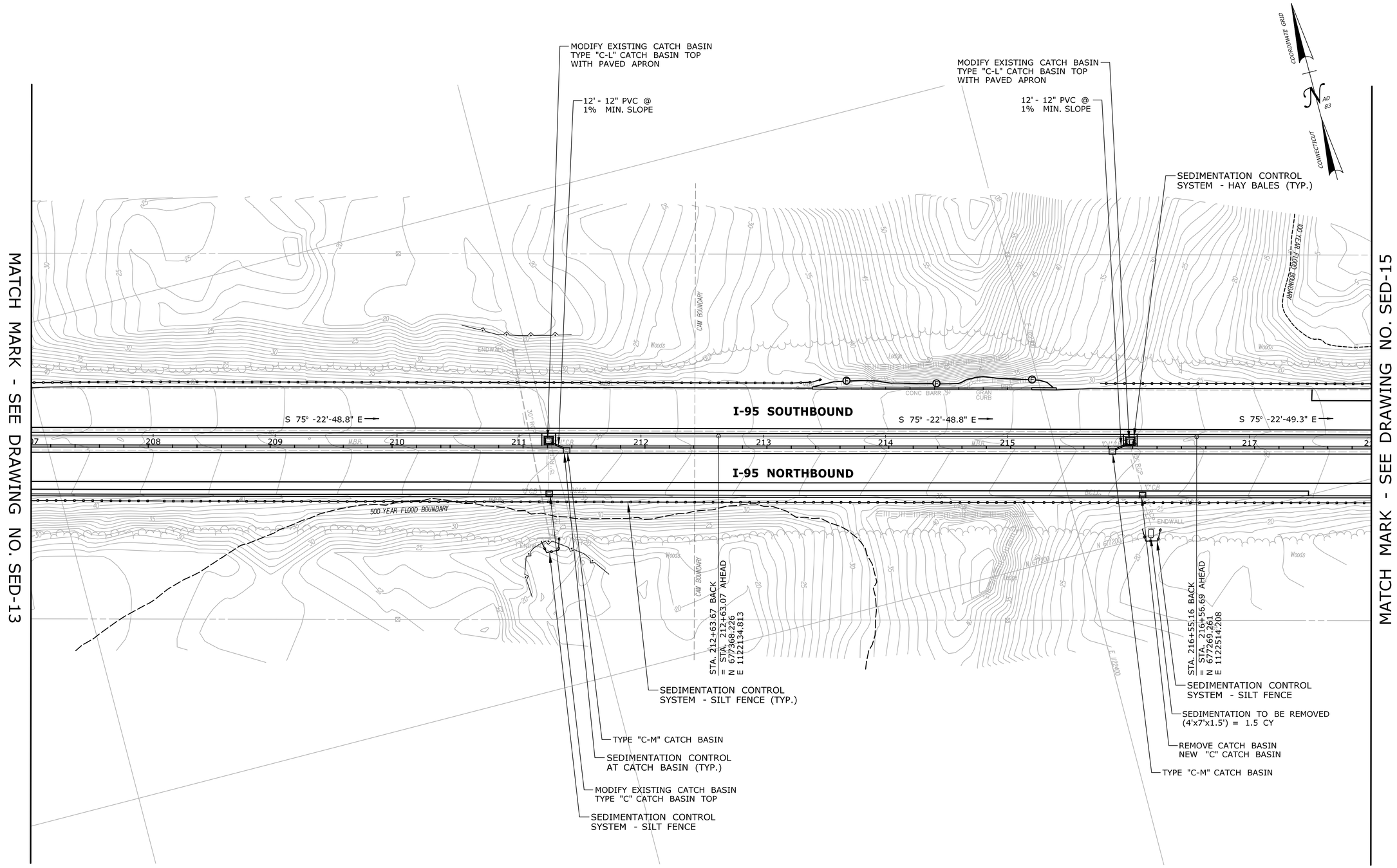

MATCH MARK - SEE DRAWING NO. SED-13

MATCH MARK - SEE DRAWING NO. SED-15

FINAL DESIGN REVIEW

REV.	DATE	REVISION DESCRIPTION	SHEET NO.
-	-	-	-
-	-	-	-
-	-	-	-
-	-	-	-
-	-	-	-
-	-	-	-

THE INFORMATION, INCLUDING ESTIMATED QUANTITIES OF WORK, SHOWN ON THESE SHEETS IS BASED ON LIMITED INVESTIGATIONS BY THE STATE AND IS IN NO WAY WARRANTED TO INDICATE THE CONDITIONS OF ACTUAL QUANTITIES OF WORK WHICH WILL BE REQUIRED.

Plotted Date: 3/24/2014

DESIGNER/DRAFTER: **RL/MF/EK**

CHECKED BY: **D. DAGAN**

SCALE IN FEET

0 40 80

SCALE 1"=40'

STATE OF CONNECTICUT
DEPARTMENT OF TRANSPORTATION

Filename: ...\Plan\HW_MSH_SED-14.dgn

SIGNATURE/ BLOCK:

PROJECT TITLE:

INTERSTATE 95 RESURFACING AND SAFETY IMPROVEMENTS

TOWN: **OLD SAYBROOK, OLD LYME & EAST LYME**

DRAWING TITLE: **SEDIMENTATION AND EROSION CONTROL PLAN STA. 207 TO STA. 218**

PROJECT NO. **104-164**

DRAWING NO. **SED-14**

SHEET NO. **03.74**

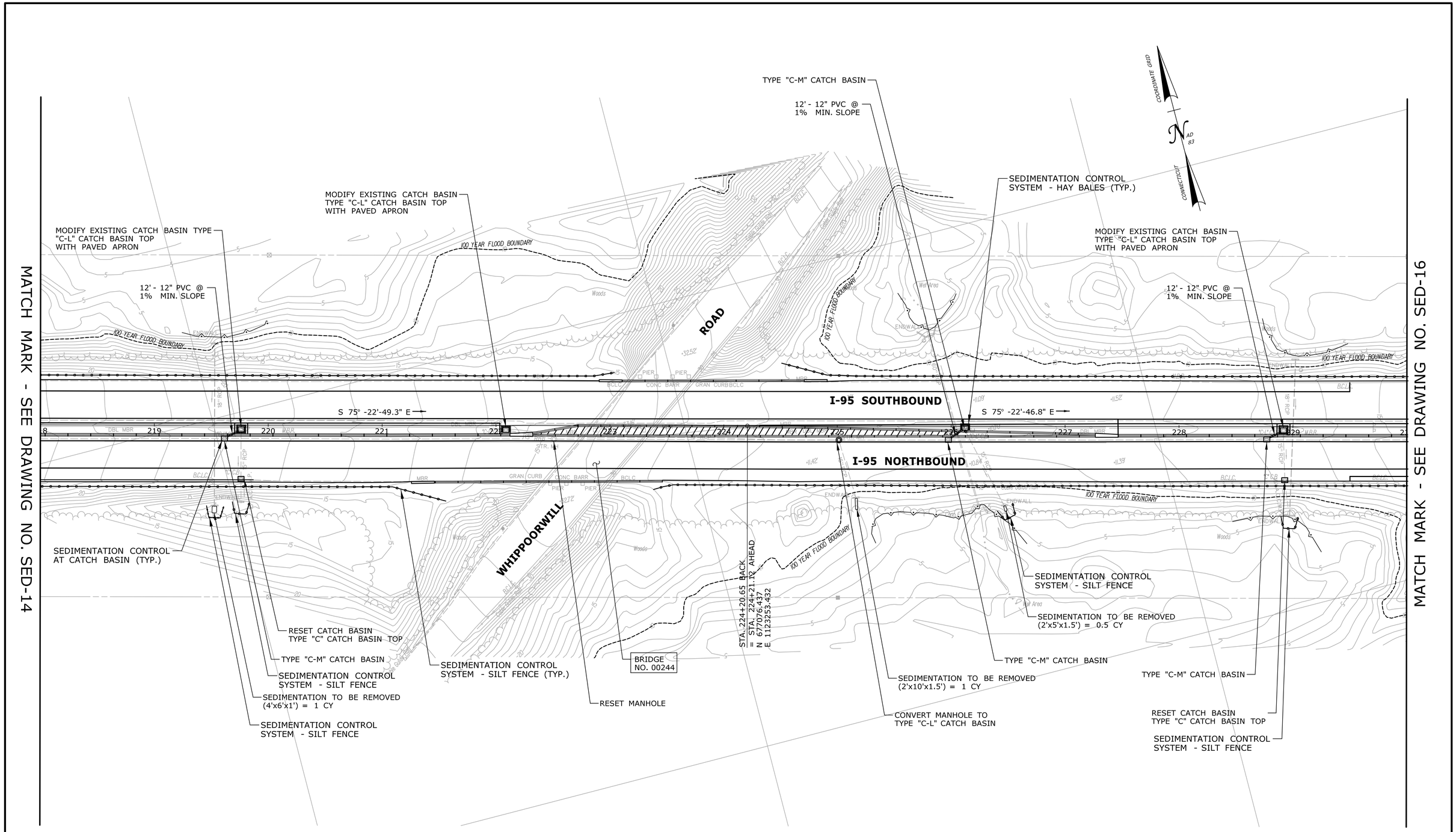

FINAL DESIGN REVIEW

REV.	DATE	REVISION DESCRIPTION	SHEET NO.
-	-	-	-
-	-	-	-
-	-	-	-
-	-	-	-
-	-	-	-
-	-	-	-

THE INFORMATION, INCLUDING ESTIMATED QUANTITIES OF WORK, SHOWN ON THESE SHEETS IS BASED ON LIMITED INVESTIGATIONS BY THE STATE AND IS IN NO WAY WARRANTED TO INDICATE THE CONDITIONS OF ACTUAL QUANTITIES OF WORK WHICH WILL BE REQUIRED.

Plotted Date: 3/24/2014

DESIGNER/DRAFTER: **RL/MF/EK**
CHECKED BY: **D. DAGAN**
SCALE IN FEET
0 40 80
SCALE 1"=40'

STATE OF CONNECTICUT
DEPARTMENT OF TRANSPORTATION

Filename: ..\Plan\HW_MSH_SED-15.dgn

SIGNATURE/ BLOCK:

PROJECT TITLE:
INTERSTATE 95 RESURFACING AND SAFETY IMPROVEMENTS

TOWN:
OLD SAYBROOK, OLD LYME & EAST LYME

DRAWING TITLE:
SEDIMENTATION AND EROSION CONTROL PLAN STA. 218 TO STA. 230

PROJECT NO. **104-164**
DRAWING NO. **SED-15**
SHEET NO. **03.75**

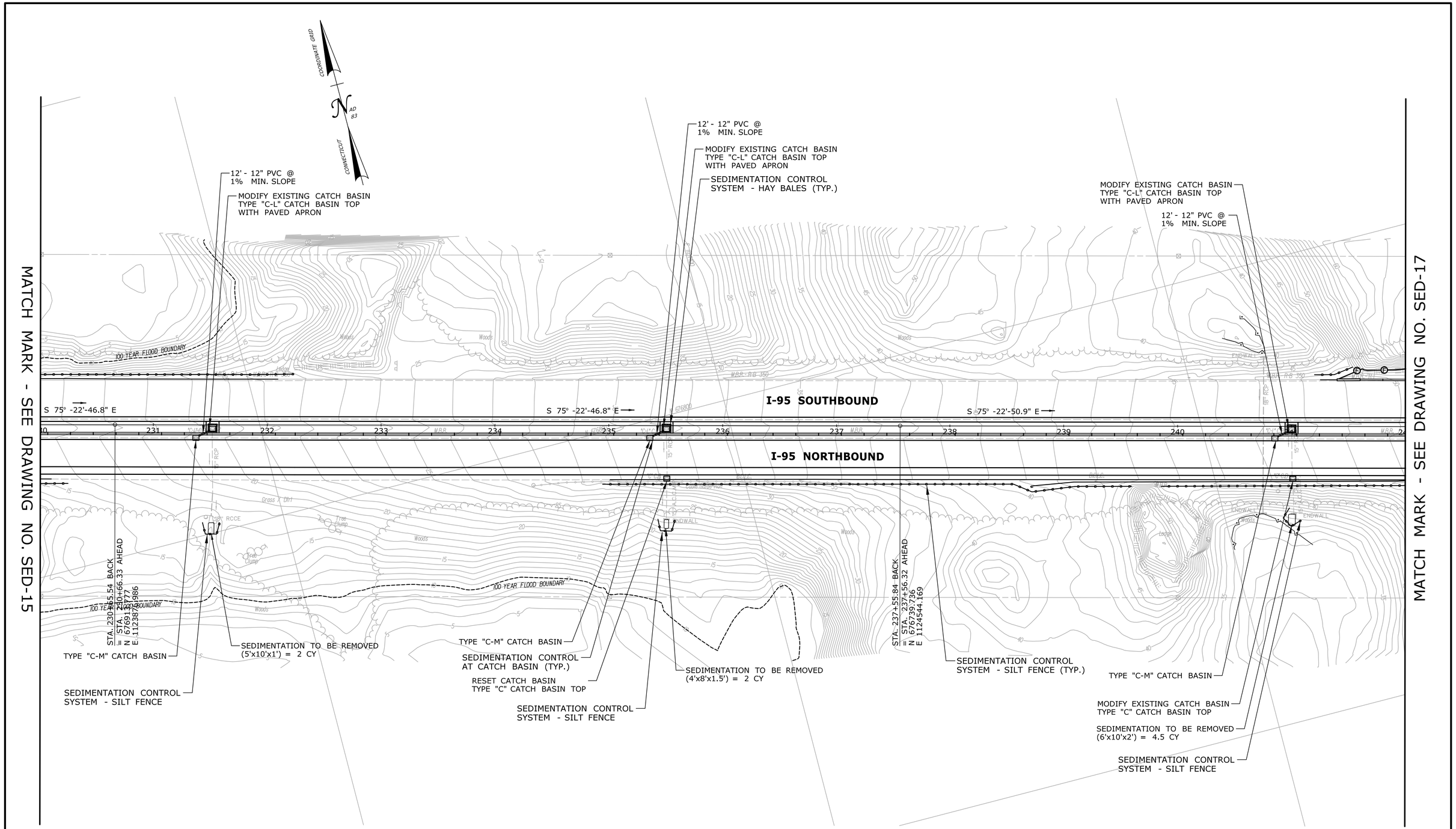

FINAL DESIGN REVIEW

REV.	DATE	REVISION DESCRIPTION	SHEET NO.
-	-	-	-
-	-	-	-
-	-	-	-
-	-	-	-
-	-	-	-
-	-	-	-

THE INFORMATION, INCLUDING ESTIMATED QUANTITIES OF WORK, SHOWN ON THESE SHEETS IS BASED ON LIMITED INVESTIGATIONS BY THE STATE AND IS IN NO WAY WARRANTED TO INDICATE THE CONDITIONS OF ACTUAL QUANTITIES OF WORK WHICH WILL BE REQUIRED.

Plotted Date: 3/24/2014

DESIGNER/DRAFTER: **RL/MF/EK**

CHECKED BY: **D. DAGAN**

SCALE IN FEET 0 40 80

SCALE 1"=40'

STATE OF CONNECTICUT
DEPARTMENT OF TRANSPORTATION

Filename: ...\Plan\HW_MSH_SED-16.dgn

SIGNATURE/ BLOCK:

PROJECT TITLE:

INTERSTATE 95 RESURFACING AND SAFETY IMPROVEMENTS

TOWN: **OLD SAYBROOK, OLD LYME & EAST LYME**

DRAWING TITLE: **SEDIMENTATION AND EROSION CONTROL PLAN STA. 230 TO STA. 242**

PROJECT NO. **104-164**

DRAWING NO. **SED-16**

SHEET NO. **03.76**

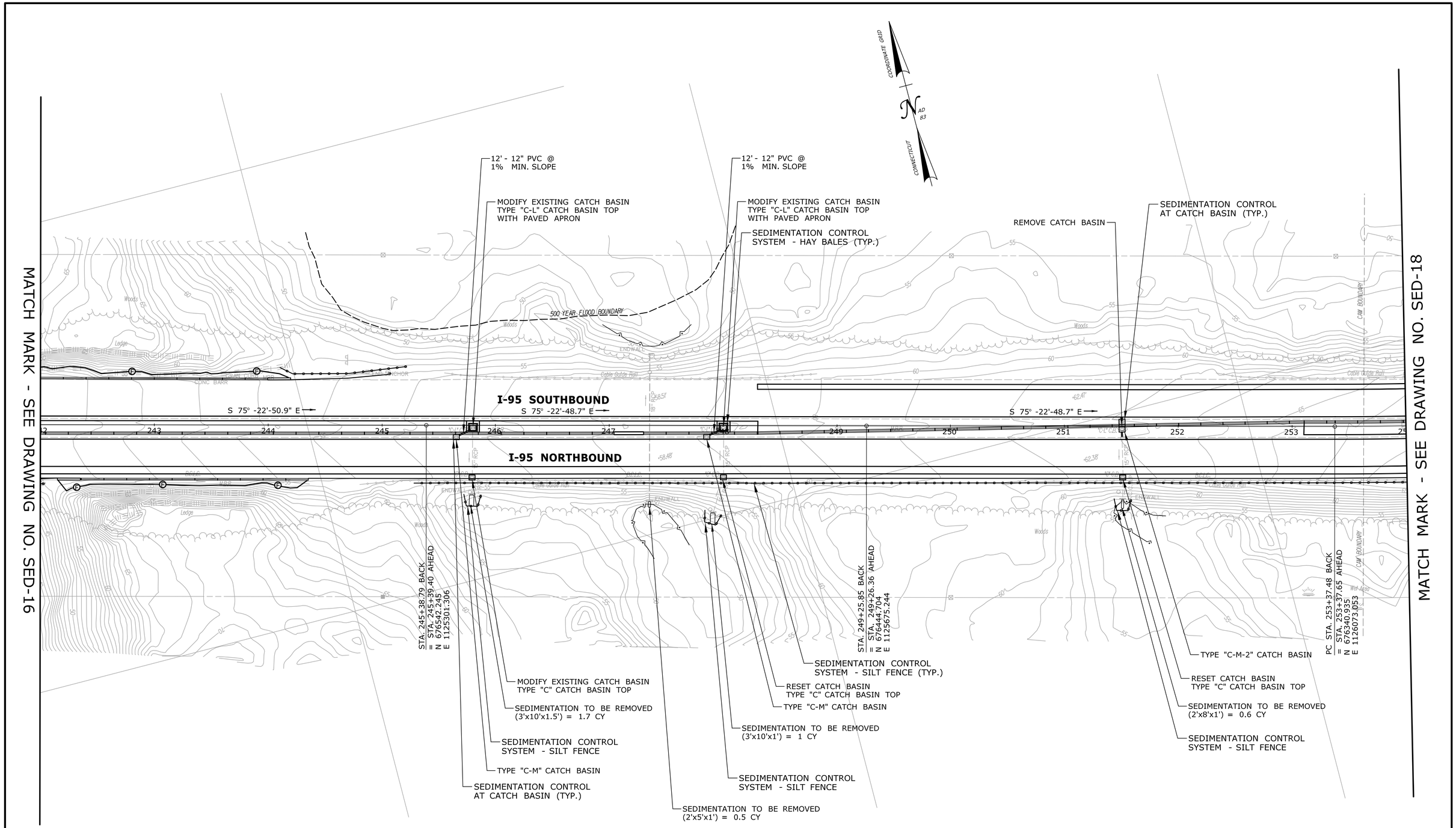

FINAL DESIGN REVIEW

REV.	DATE	REVISION DESCRIPTION	SHEET NO.
-	-	-	-
-	-	-	-
-	-	-	-
-	-	-	-
-	-	-	-
-	-	-	-

THE INFORMATION, INCLUDING ESTIMATED QUANTITIES OF WORK, SHOWN ON THESE SHEETS IS BASED ON LIMITED INVESTIGATIONS BY THE STATE AND IS IN NO WAY WARRANTED TO INDICATE THE CONDITIONS OF ACTUAL QUANTITIES OF WORK WHICH WILL BE REQUIRED.

Plotted Date: 3/24/2014

DESIGNER/DRAFTER: RL/MF/EK
CHECKED BY: D. DAGAN
SCALE IN FEET 0 40 80
SCALE 1"=40'

STATE OF CONNECTICUT
DEPARTMENT OF TRANSPORTATION

Filename: ...\Plan\HW_MSH_SED-17.dgn

SIGNATURE/ BLOCK:

PROJECT TITLE:
INTERSTATE 95 RESURFACING AND SAFETY IMPROVEMENTS

TOWN:
OLD SAYBROOK, OLD LYME & EAST LYME

DRAWING TITLE:
SEDIMENTATION AND EROSION CONTROL PLAN STA. 242 TO STA. 254

PROJECT NO. 104-164
DRAWING NO. SED-17
SHEET NO. 03.77

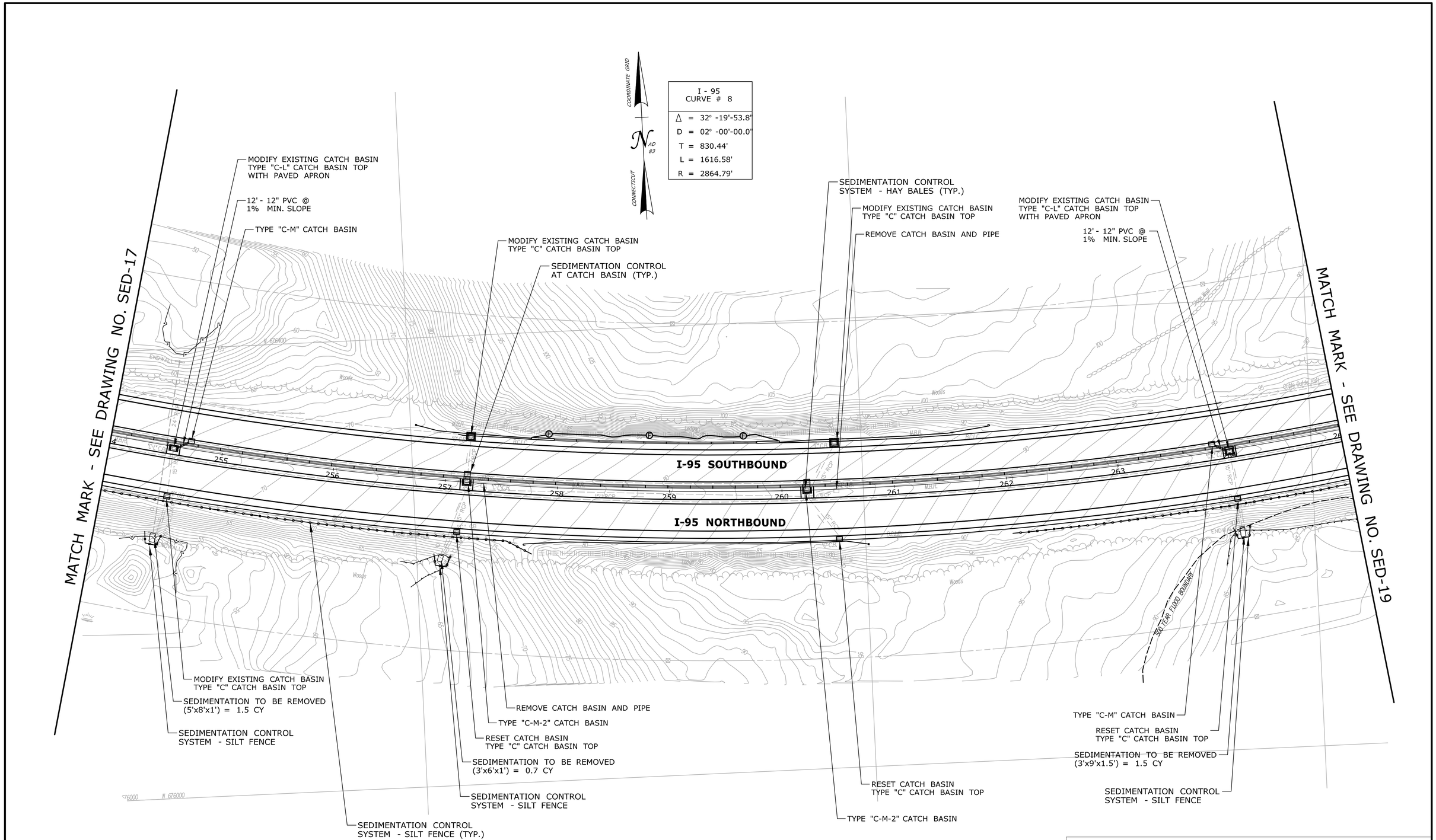

FINAL DESIGN REVIEW

REV.	DATE	REVISION DESCRIPTION	SHEET NO.
-	-	-	-
-	-	-	-
-	-	-	-
-	-	-	-
-	-	-	-
-	-	-	-

THE INFORMATION, INCLUDING ESTIMATED QUANTITIES OF WORK, SHOWN ON THESE SHEETS IS BASED ON LIMITED INVESTIGATIONS BY THE STATE AND IS IN NO WAY WARRANTED TO INDICATE THE CONDITIONS OF ACTUAL QUANTITIES OF WORK WHICH WILL BE REQUIRED.

Plotted Date: 3/24/2014

DESIGNER/DRAFTER: **RL/MF/EK**

CHECKED BY: **D. DAGAN**

SCALE IN FEET
0 40 80
SCALE 1"=40'

STATE OF CONNECTICUT
DEPARTMENT OF TRANSPORTATION

Filename: ...\Plan\HW_MSH_SED-18.dgn

SIGNATURE/ BLOCK:

PROJECT TITLE:
INTERSTATE 95 RESURFACING AND SAFETY IMPROVEMENTS

TOWN:
OLD SAYBROOK, OLD LYME & EAST LYME

DRAWING TITLE:
SEDIMENTATION AND EROSION CONTROL PLAN STA. 254 TO STA. 265

PROJECT NO. **104-164**

DRAWING NO. **SED-18**

SHEET NO. **03.78**

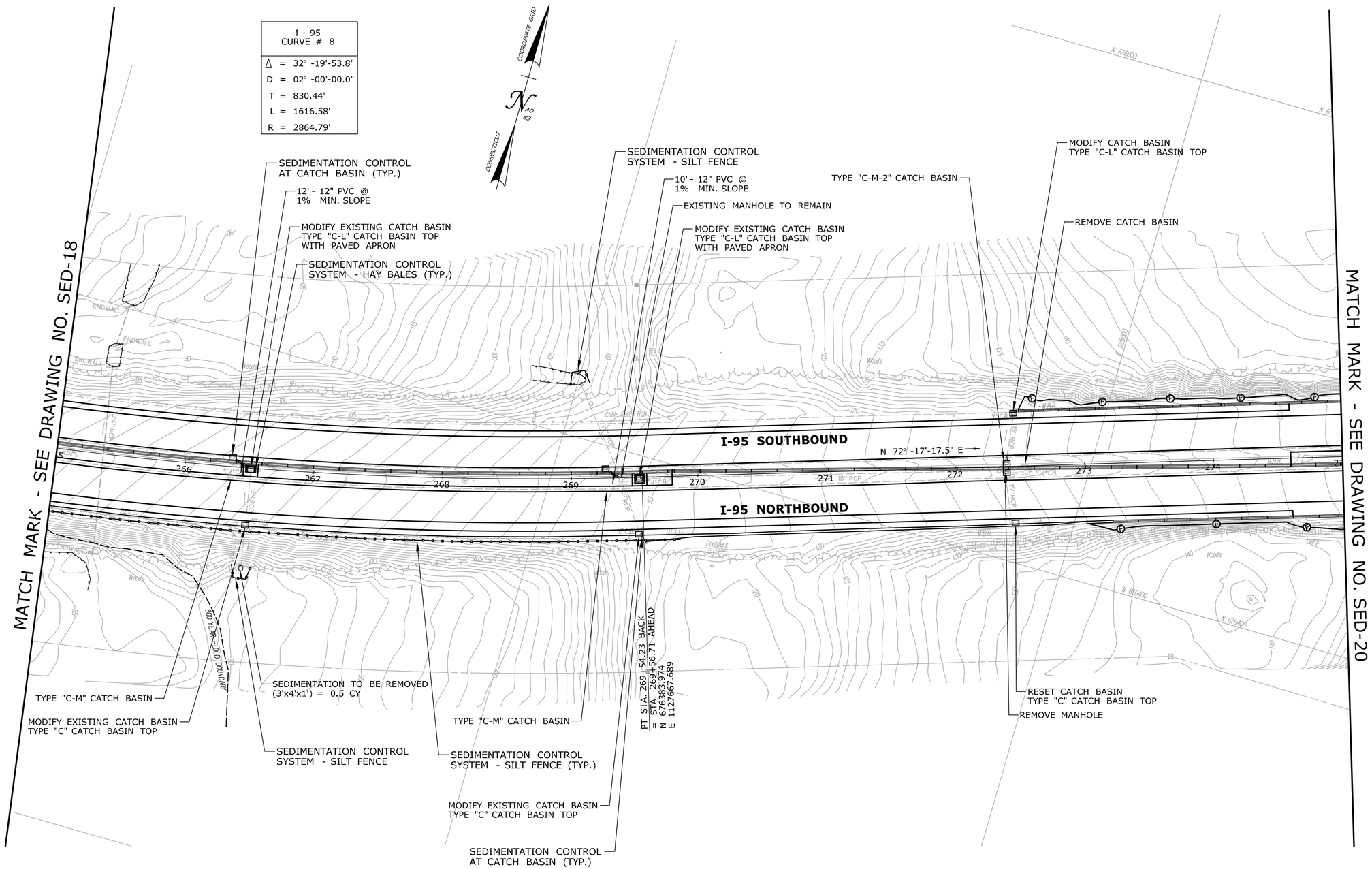

FINAL DESIGN REVIEW

REV.	DATE	REVISION DESCRIPTION	SHEET NO.
-	-	-	-
-	-	-	-
-	-	-	-
-	-	-	-
-	-	-	-
-	-	-	-

THE INFORMATION, INCLUDING ESTIMATED QUANTITIES OF WORK, SHOWN ON THESE SHEETS IS BASED ON LIMITED INVESTIGATIONS BY THE STATE AND IS IN NO WAY WARRANTED TO INDICATE THE CONDITIONS OF ACTUAL QUANTITIES OF WORK WHICH WILL BE REQUIRED.

Plotted Date: 3/24/2014

DESIGNER/DRAFTER: **RL/MF/EK**

CHECKED BY: **D. DAGAN**

SCALE IN FEET 0 40 80

SCALE 1"=40'

STATE OF CONNECTICUT
DEPARTMENT OF TRANSPORTATION

Filename: ...\Plan\HW_MSH_SED-19.dgn

SIGNATURE/ BLOCK:

PROJECT TITLE:
INTERSTATE 95 RESURFACING AND SAFETY IMPROVEMENTS

TOWN:
OLD SAYBROOK, OLD LYME & EAST LYME

DRAWING TITLE:
SEDIMENTATION AND EROSION CONTROL PLAN STA. 265 TO STA. 275

PROJECT NO. **104-164**

DRAWING NO. **SED-19**

SHEET NO. **03.79**

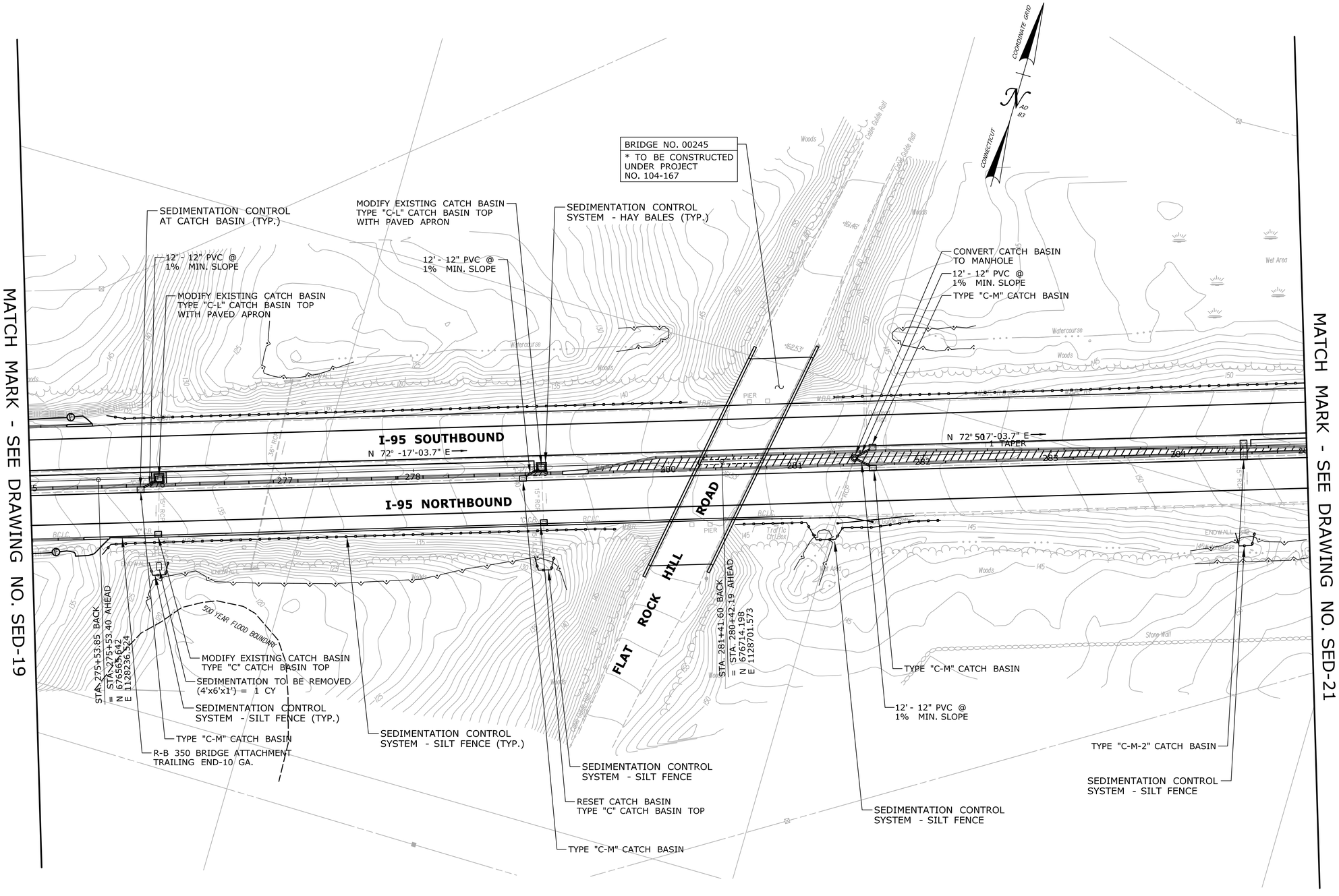

FINAL DESIGN REVIEW

REV.	DATE	REVISION DESCRIPTION	SHEET NO.
-	-	-	-
-	-	-	-
-	-	-	-
-	-	-	-
-	-	-	-
-	-	-	-

THE INFORMATION, INCLUDING ESTIMATED QUANTITIES OF WORK, SHOWN ON THESE SHEETS IS BASED ON LIMITED INVESTIGATIONS BY THE STATE AND IS IN NO WAY WARRANTED TO INDICATE THE CONDITIONS OF ACTUAL QUANTITIES OF WORK WHICH WILL BE REQUIRED.

Plotted Date: 3/24/2014

DESIGNER/DRAFTER: **RL/MF/EK**
CHECKED BY: **D. DAGAN**
SCALE IN FEET
0 40 80
SCALE 1"=40'

STATE OF CONNECTICUT
DEPARTMENT OF TRANSPORTATION

Filename: ...\Plan\HW_MSH_SED-20.dgn

SIGNATURE/ BLOCK:

PROJECT TITLE:
INTERSTATE 95 RESURFACING AND SAFETY IMPROVEMENTS

TOWN: **OLD SAYBROOK, OLD LYME & EAST LYME**

DRAWING TITLE: **SEDIMENTATION AND EROSION CONTROL PLAN STA. 275 TO STA. 285**

PROJECT NO. **104-164**
DRAWING NO. **SED-20**
SHEET NO. **03.80**

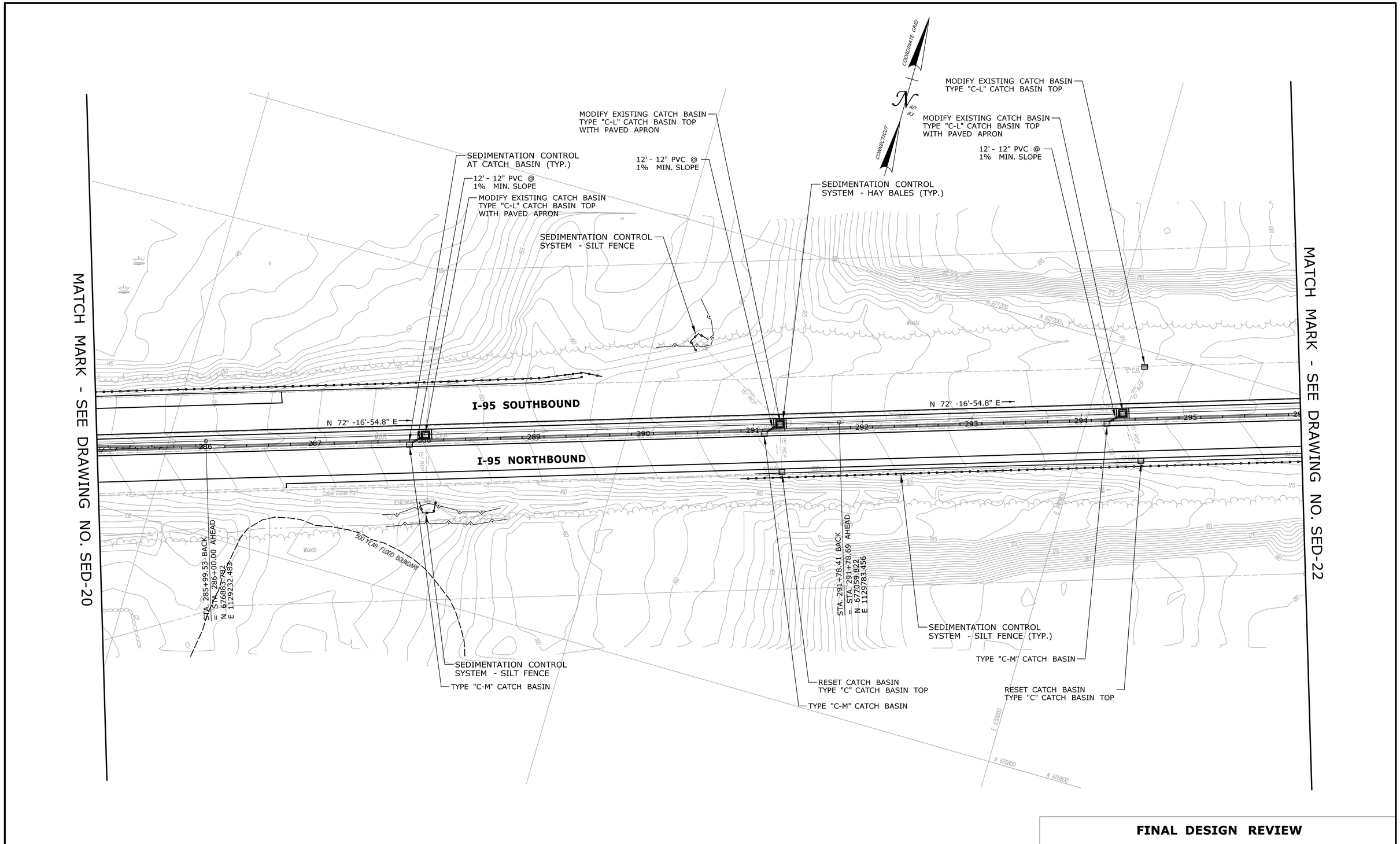

FINAL DESIGN REVIEW

REV.	DATE	REVISION DESCRIPTION	SHEET NO.
-	-	-	-
-	-	-	-
-	-	-	-
-	-	-	-
-	-	-	-
-	-	-	-

THE INFORMATION, INCLUDING ESTIMATED QUANTITIES OF WORK, SHOWN ON THESE SHEETS IS BASED ON LIMITED INVESTIGATIONS BY THE STATE AND IS IN NO WAY WARRANTED TO INDICATE THE CONDITIONS OF ACTUAL QUANTITIES OF WORK WHICH WILL BE REQUIRED.

Plotted Date: 3/24/2014

DESIGNER/DRAFTER: **RL/MF/EK**

CHECKED BY: **D. DAGAN**

SCALE IN FEET 0 40 80

SCALE 1"=40'

STATE OF CONNECTICUT
DEPARTMENT OF TRANSPORTATION

Filename: ...\Plan\HW_MSH_SED-21.dgn

SIGNATURE/ BLOCK:

PROJECT TITLE:
INTERSTATE 95 RESURFACING AND SAFETY IMPROVEMENTS

TOWN:
OLD SAYBROOK, OLD LYME & EAST LYME

DRAWING TITLE:
SEDIMENTATION AND EROSION CONTROL PLAN STA. 285 TO STA. 296

PROJECT NO. **104-164**

DRAWING NO. **SED-21**

SHEET NO. **03.81**

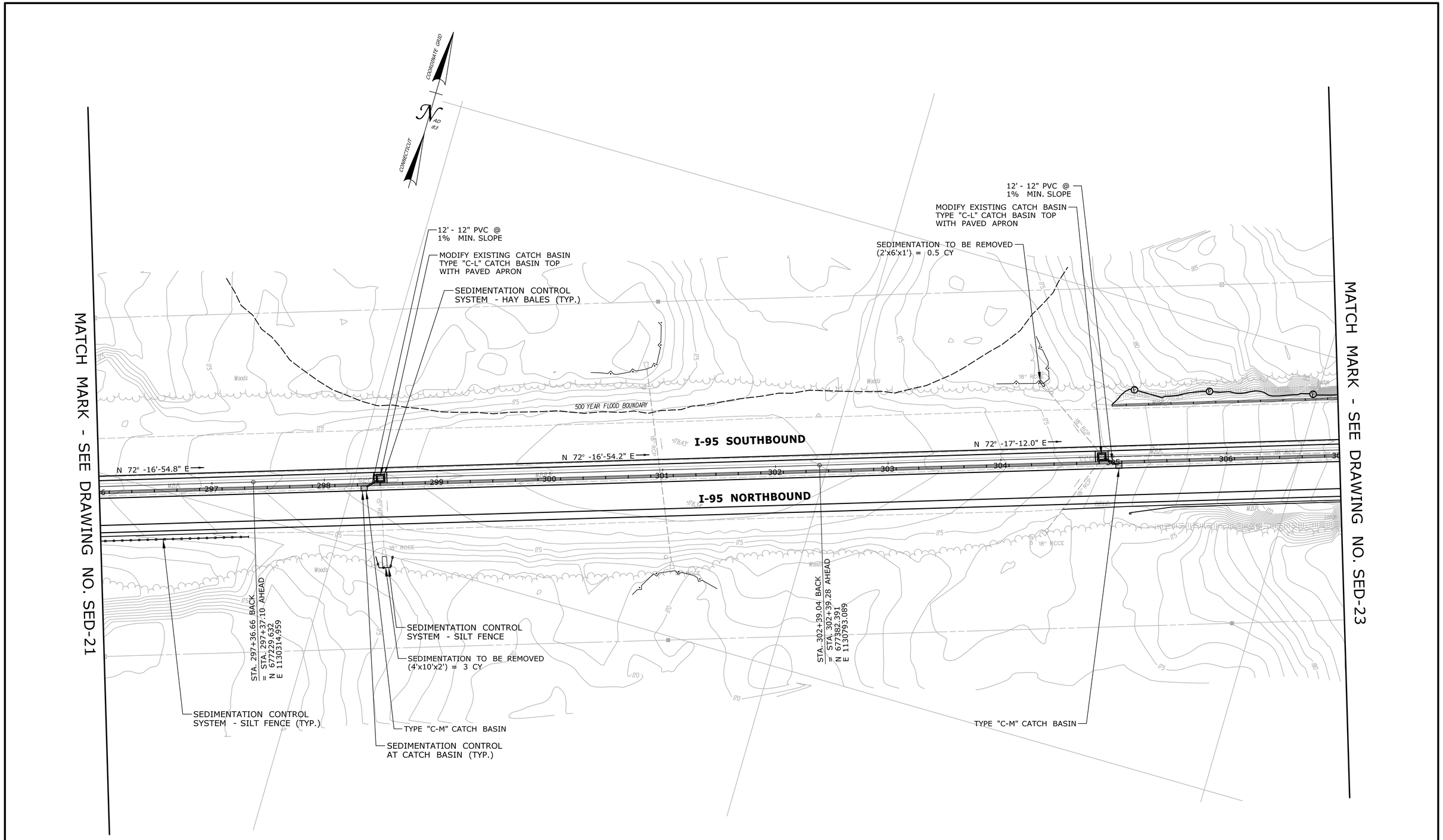

FINAL DESIGN REVIEW

REV.	DATE	REVISION DESCRIPTION	SHEET NO.
-	-	-	-
-	-	-	-
-	-	-	-
-	-	-	-
-	-	-	-
-	-	-	-

THE INFORMATION, INCLUDING ESTIMATED QUANTITIES OF WORK, SHOWN ON THESE SHEETS IS BASED ON LIMITED INVESTIGATIONS BY THE STATE AND IS IN NO WAY WARRANTED TO INDICATE THE CONDITIONS OF ACTUAL QUANTITIES OF WORK WHICH WILL BE REQUIRED.

Plotted Date: 3/19/2014

DESIGNER/DRAFTER: **RL/MF/EK**

CHECKED BY: **D. DAGAN**

SCALE IN FEET 0 40 80

SCALE 1"=40'

STATE OF CONNECTICUT
DEPARTMENT OF TRANSPORTATION

Filename: ...\Plan\HW_MSH_SED-22.dgn

SIGNATURE/ BLOCK:

PROJECT TITLE:

INTERSTATE 95 RESURFACING AND SAFETY IMPROVEMENTS

TOWN: **OLD SAYBROOK, OLD LYME & EAST LYME**

DRAWING TITLE: **SEDIMENTATION AND EROSION CONTROL PLAN STA. 296 TO STA. 307**

PROJECT NO. **104-164**

DRAWING NO. **SED-22**

SHEET NO. **03.82**

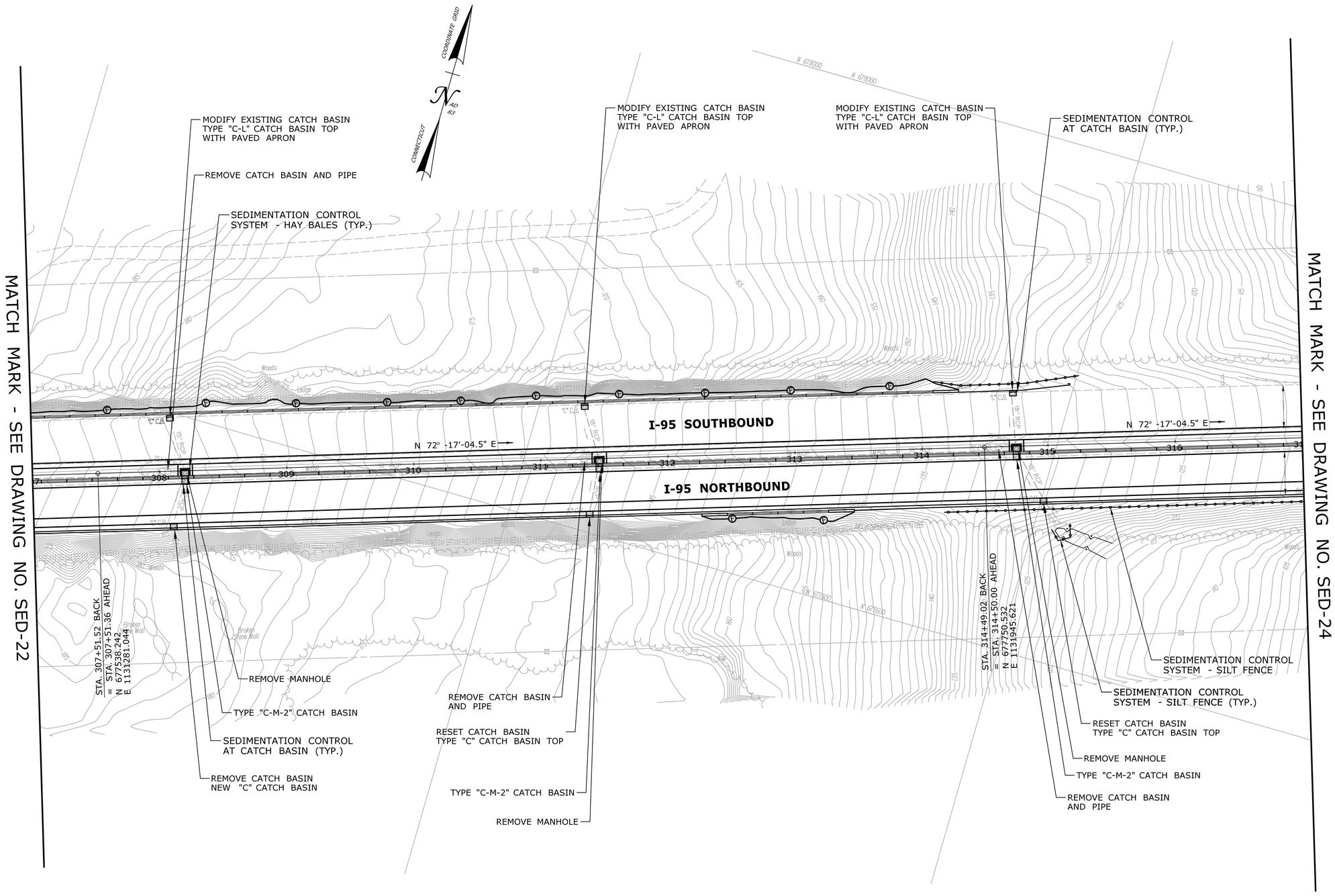

FINAL DESIGN REVIEW

REV.	DATE	REVISION DESCRIPTION	SHEET NO.
-	-	-	-
-	-	-	-
-	-	-	-
-	-	-	-
-	-	-	-
-	-	-	-

THE INFORMATION, INCLUDING ESTIMATED QUANTITIES OF WORK, SHOWN ON THESE SHEETS IS BASED ON LIMITED INVESTIGATIONS BY THE STATE AND IS IN NO WAY WARRANTED TO INDICATE THE CONDITIONS OF ACTUAL QUANTITIES OF WORK WHICH WILL BE REQUIRED.

Plotted Date: 3/24/2014

DESIGNER/DRAFTER: **RL/MF/EK**

CHECKED BY: **D. DAGAN**

SCALE IN FEET

0 40 80

SCALE 1"=40'

STATE OF CONNECTICUT
DEPARTMENT OF TRANSPORTATION

Filename: ...\Plan\HW_MSH_SED-23.dgn

SIGNATURE/ BLOCK:

PROJECT TITLE:

INTERSTATE 95 RESURFACING AND SAFETY IMPROVEMENTS

TOWN: **OLD SAYBROOK, OLD LYME & EAST LYME**

DRAWING TITLE: **SEDIMENTATION AND EROSION CONTROL PLAN STA. 307 TO STA. 317**

PROJECT NO. **104-164**

DRAWING NO. **SED-23**

SHEET NO. **03.83**

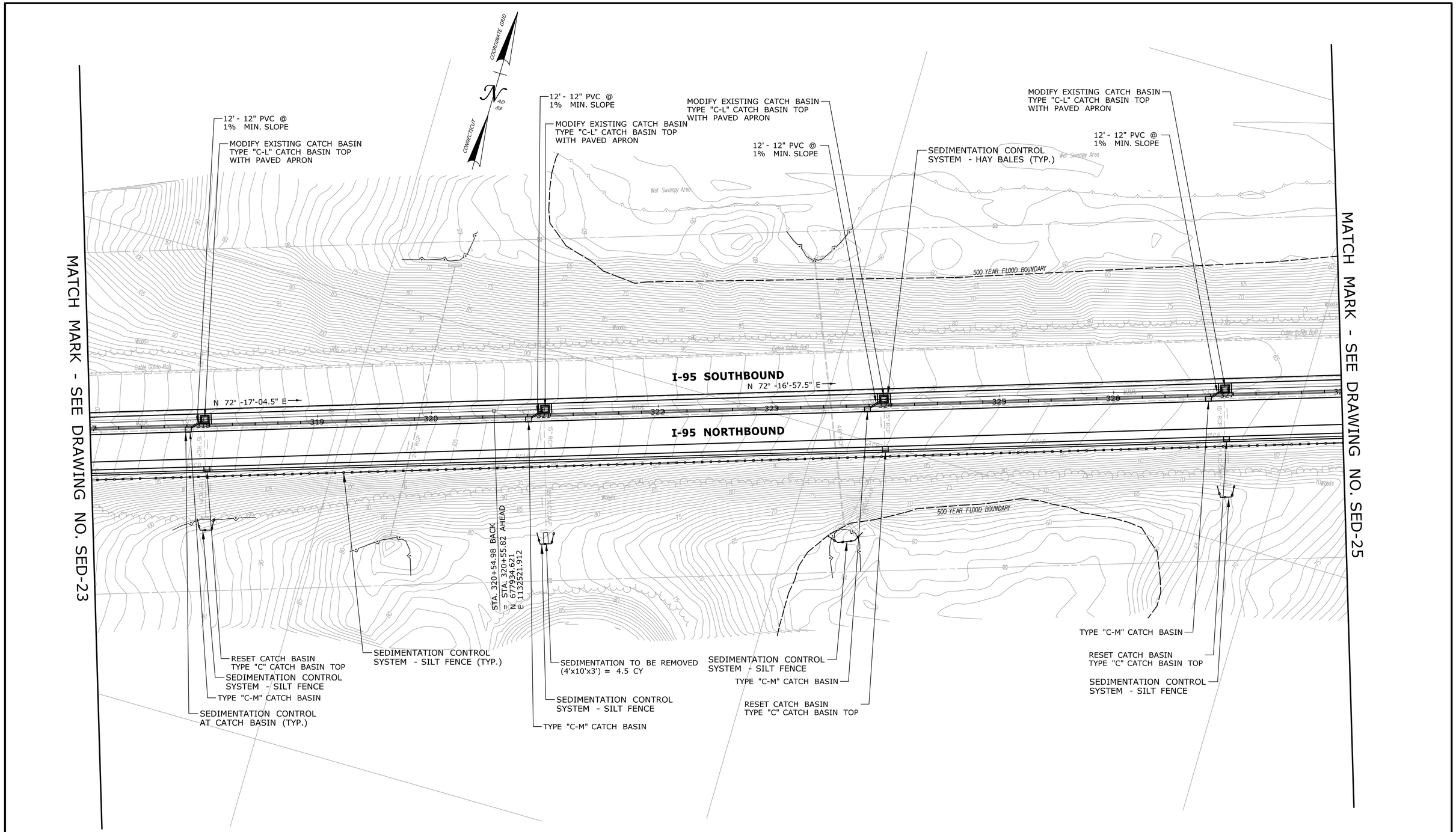

FINAL DESIGN REVIEW

REV.	DATE	REVISION DESCRIPTION	SHEET NO.
-	-	-	-
-	-	-	-
-	-	-	-
-	-	-	-
-	-	-	-
-	-	-	-

THE INFORMATION, INCLUDING ESTIMATED QUANTITIES OF WORK, SHOWN ON THESE SHEETS IS BASED ON LIMITED INVESTIGATIONS BY THE STATE AND IS IN NO WAY WARRANTED TO INDICATE THE CONDITIONS OF ACTUAL QUANTITIES OF WORK WHICH WILL BE REQUIRED.

Plotted Date: 3/24/2014

DESIGNER/DRAFTER: RL/MF/EK
CHECKED BY: D. DAGAN
SCALE IN FEET 0 40 80
SCALE 1"=40'

STATE OF CONNECTICUT
DEPARTMENT OF TRANSPORTATION

Filename: ..\Plan\HW_MSH_SED-24.dgn

SIGNATURE/ BLOCK:

PROJECT TITLE: INTERSTATE 95 RESURFACING AND SAFETY IMPROVEMENTS

TOWN: OLD SAYBROOK, OLD LYME & EAST LYME

DRAWING TITLE: SEDIMENTATION AND EROSION CONTROL PLAN STA. 317 TO STA. 328

PROJECT NO. 104-164
DRAWING NO. SED-24
SHEET NO. 03.84

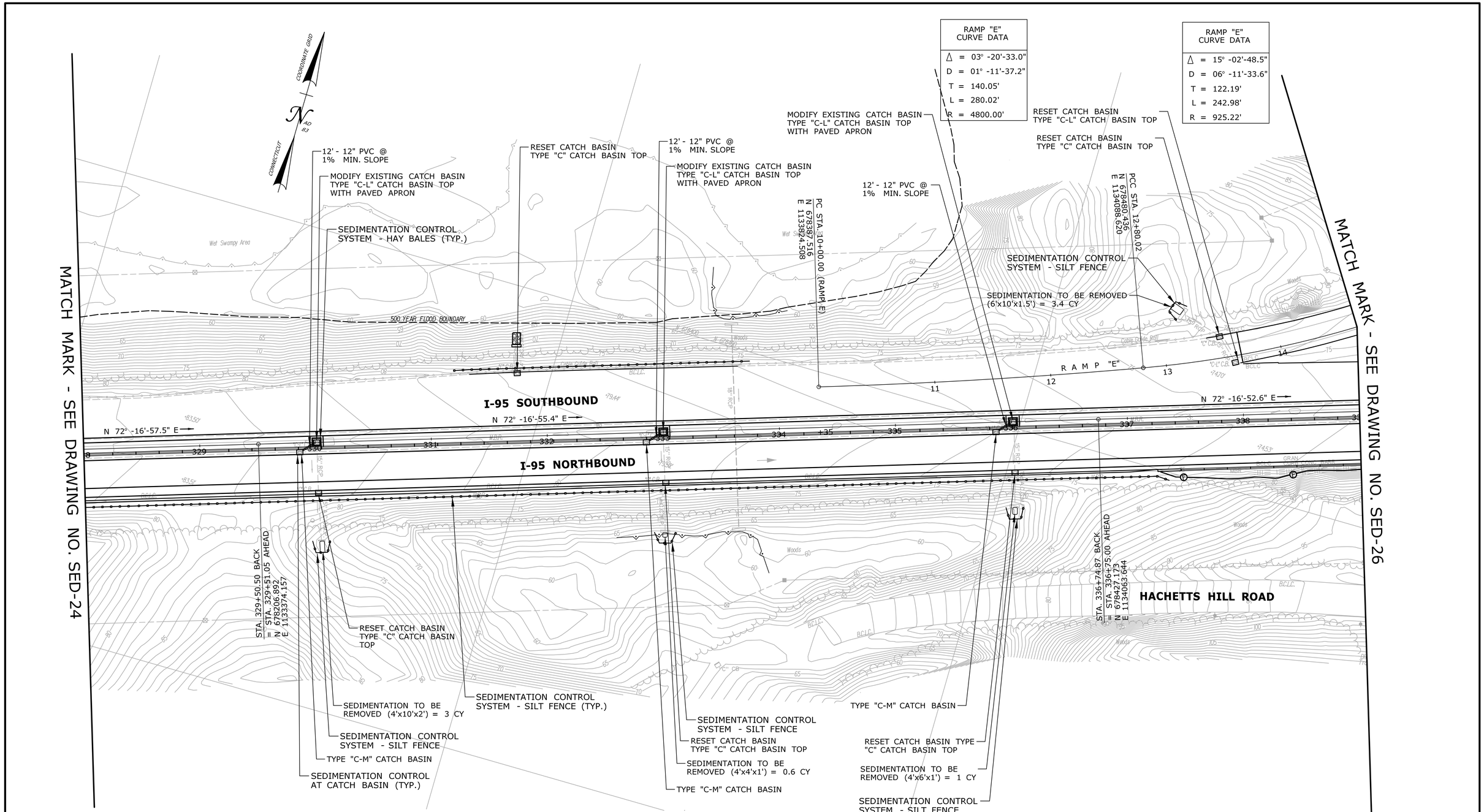

FINAL DESIGN REVIEW

REV.	DATE	REVISION DESCRIPTION	SHEET NO.
-	-	-	-
-	-	-	-
-	-	-	-
-	-	-	-
-	-	-	-
-	-	-	-

THE INFORMATION, INCLUDING ESTIMATED QUANTITIES OF WORK, SHOWN ON THESE SHEETS IS BASED ON LIMITED INVESTIGATIONS BY THE STATE AND IS IN NO WAY WARRANTED TO INDICATE THE CONDITIONS OF ACTUAL QUANTITIES OF WORK WHICH WILL BE REQUIRED.

Plotted Date: 3/24/2014

DESIGNER/DRAFTER: **RL/MF/EK**
CHECKED BY: **D. DAGAN**
SCALE IN FEET 0 40 80
SCALE 1"=40'

STATE OF CONNECTICUT
DEPARTMENT OF TRANSPORTATION

Filename: ...\Plan\HW_MSH_SED-25.dgn

SIGNATURE/ BLOCK:

PROJECT TITLE:
INTERSTATE 95 RESURFACING AND SAFETY IMPROVEMENTS

TOWN:
OLD SAYBROOK, OLD LYME & EAST LYME

DRAWING TITLE:
SEDIMENTATION AND EROSION CONTROL PLAN STA. 328 TO STA. 339

PROJECT NO. **104-164**
DRAWING NO. **SED-25**
SHEET NO. **03.85**

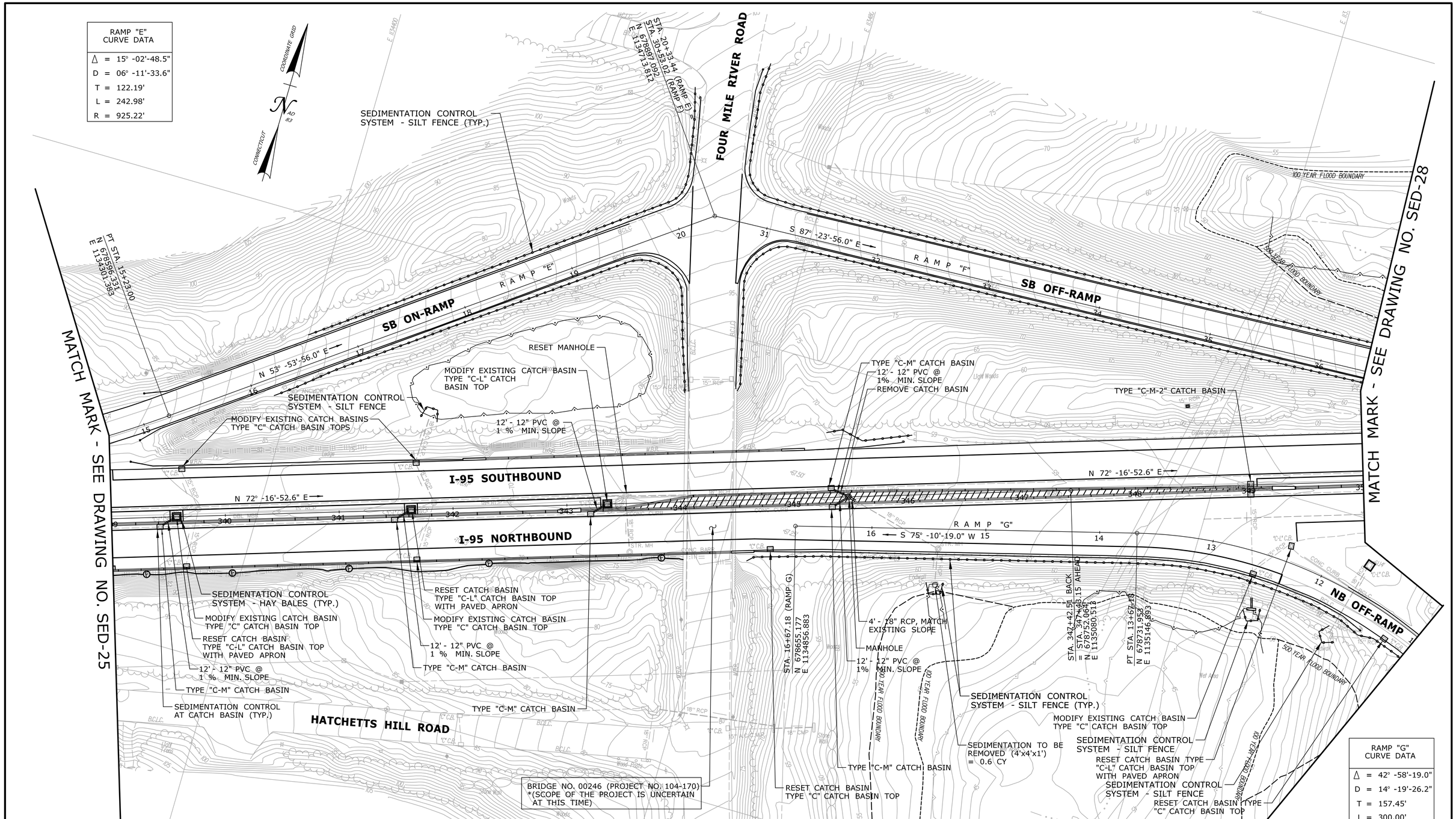

MATCH LINE - SEE DRAWING NO. SED-27

FINAL DESIGN REVIEW

REV.	DATE	REVISION DESCRIPTION	SHEET NO.
-	-	-	-
-	-	-	-
-	-	-	-
-	-	-	-
-	-	-	-
-	-	-	-

THE INFORMATION, INCLUDING ESTIMATED QUANTITIES OF WORK, SHOWN ON THESE SHEETS IS BASED ON LIMITED INVESTIGATIONS BY THE STATE AND IS IN NO WAY WARRANTED TO INDICATE THE CONDITIONS OF ACTUAL QUANTITIES OF WORK WHICH WILL BE REQUIRED.

Plotted Date: 3/24/2014

DESIGNER/DRAFTER: **RL/MF/EK**
CHECKED BY: **D. DAGAN**
SCALE IN FEET 0 40 80
SCALE 1"=40'

STATE OF CONNECTICUT
DEPARTMENT OF TRANSPORTATION

Filename: ...\Plan\HW_MSH_SED-26.dgn

SIGNATURE/ BLOCK:

PROJECT TITLE:
INTERSTATE 95 RESURFACING AND SAFETY IMPROVEMENTS

TOWN:
OLD SAYBROOK, OLD LYME & EAST LYME

DRAWING TITLE:
SEDIMENTATION AND EROSION CONTROL PLAN STA. 339 TO STA. 350

PROJECT NO. **104-164**
DRAWING NO. **SED-26**
SHEET NO. **03.86**

RAMP "G" CURVE DATA
Δ = 31° -49'-52.0"
D = 21° -13'-14.4"
T = 76.99'
L = 150.00'
R = 270.00'

RAMP "G" CURVE DATA
Δ = 105° -11'-49.0"
D = 31° -49'-51.6"
T = 235.42'
L = 330.49'
R = 180.00'

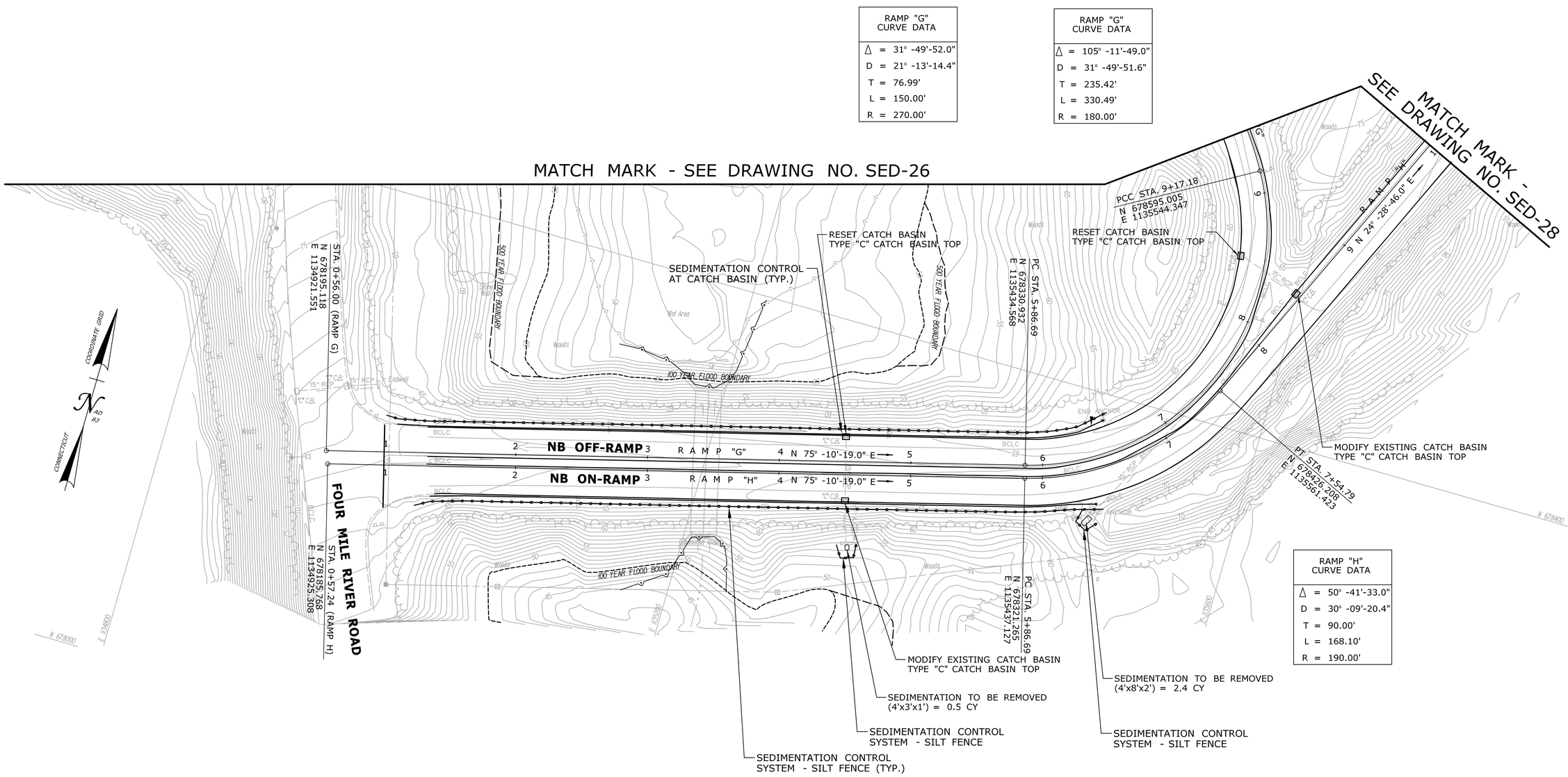

RAMP "H" CURVE DATA
Δ = 50° -41'-33.0"
D = 30° -09'-20.4"
T = 90.00'
L = 168.10'
R = 190.00'

FINAL DESIGN REVIEW

REV.	DATE	REVISION DESCRIPTION	SHEET NO.
-	-	-	-
-	-	-	-
-	-	-	-
-	-	-	-
-	-	-	-
-	-	-	-

THE INFORMATION, INCLUDING ESTIMATED QUANTITIES OF WORK, SHOWN ON THESE SHEETS IS BASED ON LIMITED INVESTIGATIONS BY THE STATE AND IS IN NO WAY WARRANTED TO INDICATE THE CONDITIONS OF ACTUAL QUANTITIES OF WORK WHICH WILL BE REQUIRED.

Plotted Date: 3/24/2014

DESIGNER/DRAFTER: **RL/MF/EK**

CHECKED BY: **D. DAGAN**

SCALE IN FEET 0 40 80

SCALE 1"=40'

STATE OF CONNECTICUT
DEPARTMENT OF TRANSPORTATION

Filename: ...\Plan\HW_MSH_SED-27.dgn

SIGNATURE/ BLOCK:

PROJECT TITLE:

INTERSTATE 95 RESURFACING AND SAFETY IMPROVEMENTS

TOWN: **OLD SAYBROOK, OLD LYME & EAST LYME**

DRAWING TITLE: **SEDIMENTATION AND EROSION CONTROL PLAN STA. 1 TO STA. 10**

PROJECT NO. **104-164**

DRAWING NO. **SED-27**

SHEET NO. **03.87**

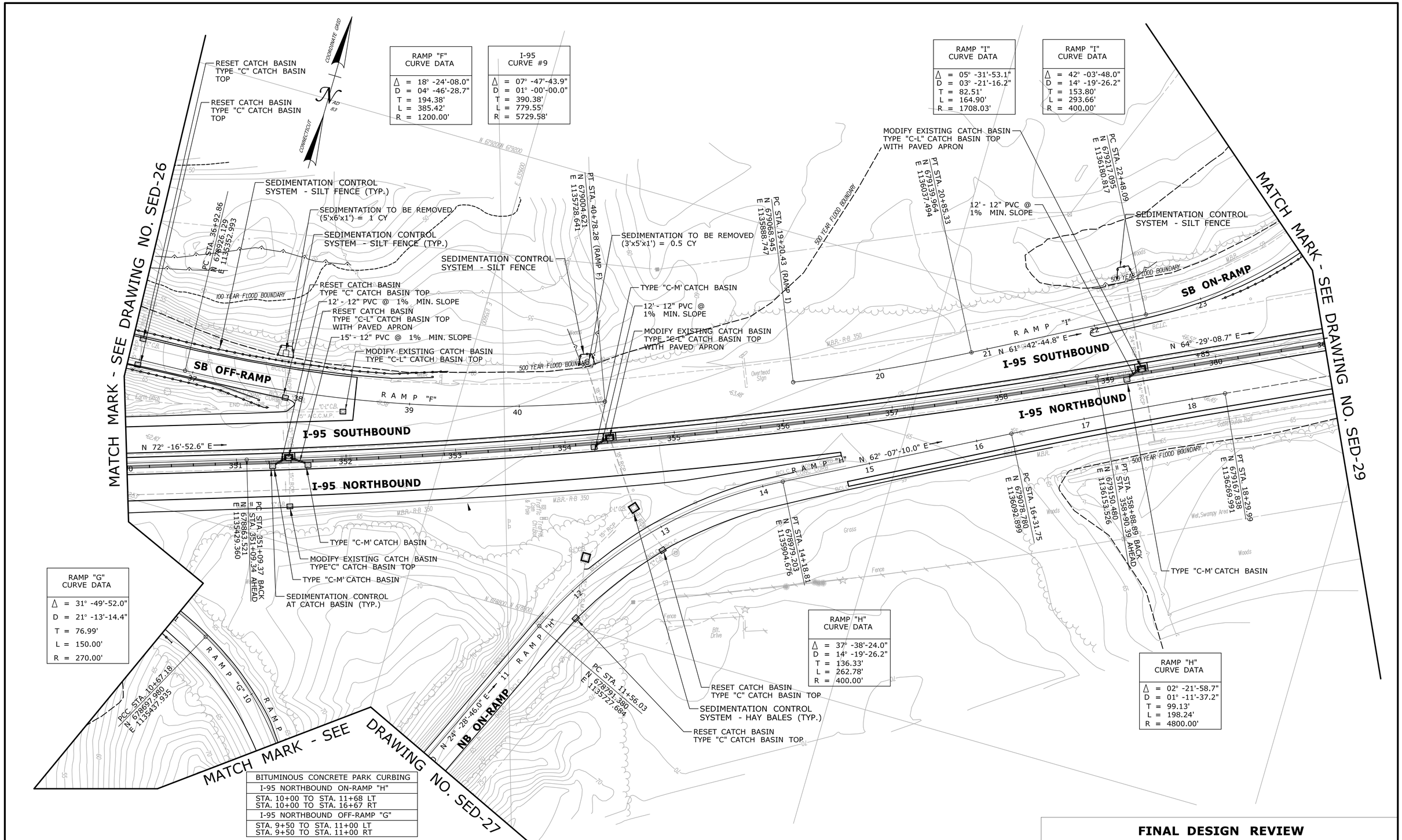

BITUMINOUS CONCRETE PARK CURBING
I-95 NORTHBOUND ON-RAMP "H"
STA. 10+00 TO STA. 11+68 LT STA. 10+00 TO STA. 16+67 RT
I-95 NORTHBOUND OFF-RAMP "G"
STA. 9+50 TO STA. 11+00 LT STA. 9+50 TO STA. 11+00 RT

FINAL DESIGN REVIEW

REV.	DATE	REVISION DESCRIPTION	SHEET NO.
-	-	-	-
-	-	-	-
-	-	-	-
-	-	-	-
-	-	-	-
-	-	-	-

THE INFORMATION, INCLUDING ESTIMATED QUANTITIES OF WORK, SHOWN ON THESE SHEETS IS BASED ON LIMITED INVESTIGATIONS BY THE STATE AND IS IN NO WAY WARRANTED TO INDICATE THE CONDITIONS OF ACTUAL QUANTITIES OF WORK WHICH WILL BE REQUIRED.

Plotted Date: 3/24/2014

DESIGNER/DRAFTER: **RL/MF/EK**
CHECKED BY: **D. DAGAN**
SCALE IN FEET 0 40 80
SCALE 1"=40'

STATE OF CONNECTICUT
DEPARTMENT OF TRANSPORTATION

Filename: ...\Plan\HW_MSH_SED-28.dgn

SIGNATURE/ BLOCK:

PROJECT TITLE:
INTERSTATE 95 RESURFACING AND SAFETY IMPROVEMENTS

TOWN:
OLD SAYBROOK, OLD LYME & EAST LYME

DRAWING TITLE:
SEDIMENTATION AND EROSION CONTROL PLAN STA. 350 TO STA. 361

PROJECT NO. **104-164**
DRAWING NO. **SED-28**
SHEET NO. **03.88**

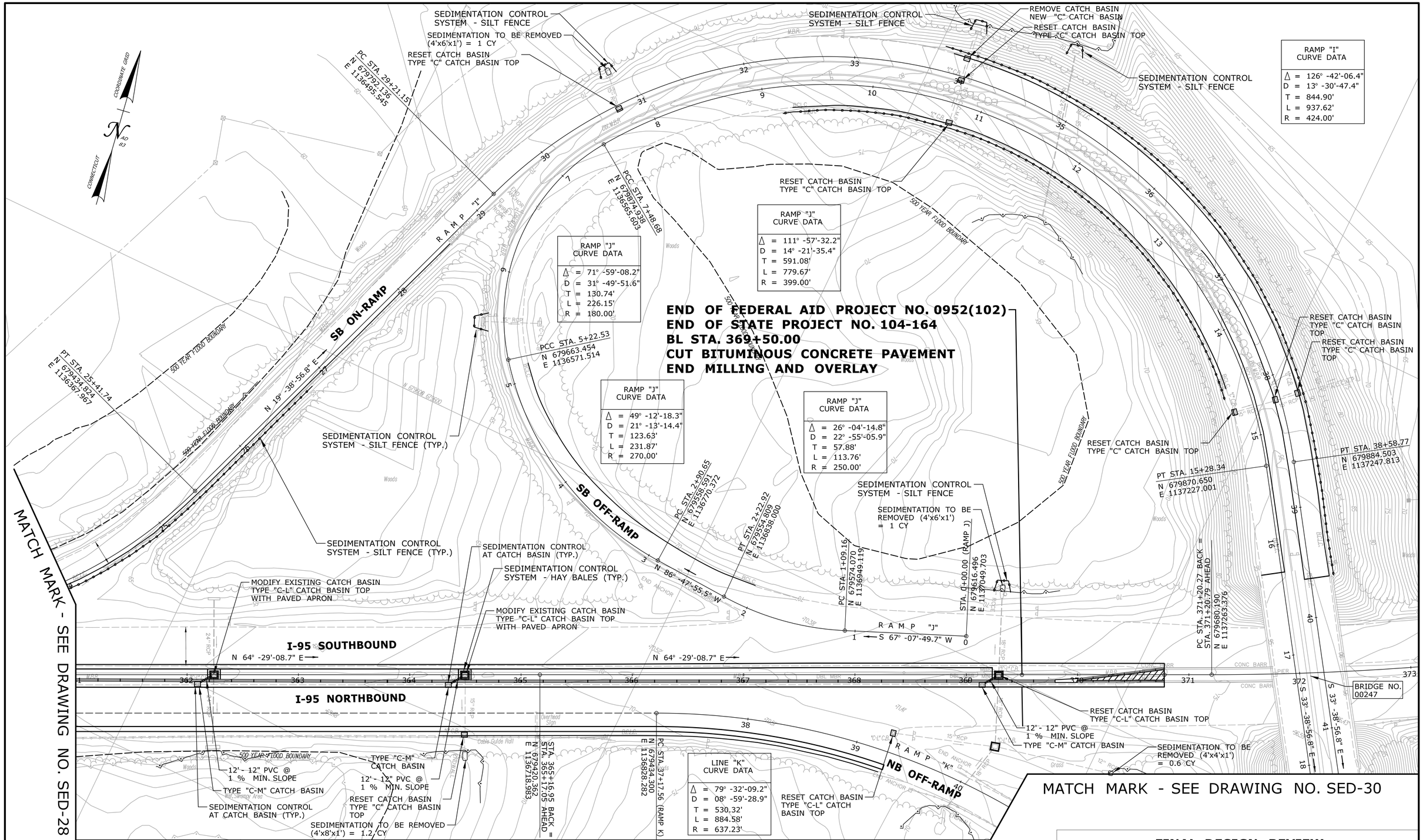

FINAL DESIGN REVIEW

REV.	DATE	REVISION DESCRIPTION	SHEET NO.
-	-		-
-	-		-
-	-		-
-	-		-
-	-		-
-	-		-

THE INFORMATION, INCLUDING ESTIMATED QUANTITIES OF WORK, SHOWN ON THESE SHEETS IS BASED ON LIMITED INVESTIGATIONS BY THE STATE AND IS IN NO WAY WARRANTED TO INDICATE THE CONDITIONS OF ACTUAL QUANTITIES OF WORK WHICH WILL BE REQUIRED.

Plotted Date: 3/24/2014

DESIGNER/DRAFTER: **RL/MF/EK**
CHECKED BY: **D. DAGAN**
SCALE IN FEET 0 40 80
SCALE 1"=40'

STATE OF CONNECTICUT
DEPARTMENT OF TRANSPORTATION

Filename: ...\Plan\HW_MSH_SED-29.dgn

SIGNATURE/ BLOCK:

PROJECT TITLE:
INTERSTATE 95 RESURFACING AND SAFETY IMPROVEMENTS

TOWN: **OLD SAYBROOK, OLD LYME & EAST LYME**

DRAWING TITLE: **SEDIMENTATION AND EROSION CONTROL PLAN STA. 361 TO STA. 373**

PROJECT NO. **104-164**
DRAWING NO. **SED-29**
SHEET NO. **03.89**

MATCH MARK - SEE DRAWING NO. SED-29

MATCH MARK - SEE DRAWING NO. SED-29

LINE "K" CURVE DATA
Δ = 79° -32'-09.2"
D = 08° -59'-28.9"
T = 530.32'
L = 884.58'
R = 637.23'

SEDIMENTATION TO BE REMOVED (4'x8'x2') = 2.4 CY

SEDIMENTATION CONTROL SYSTEM - SILT FENCE

RESET CATCH BASIN TYPE "C" CATCH BASIN TOP

SEDIMENTATION CONTROL AT CATCH BASIN (TYP.)

SEDIMENTATION CONTROL SYSTEM - SILT FENCE (TYP.)

PT STA. 46+02.14
N 679233.282
E 1137618.359

NB OFF-RAMP

SB OFF-RAMP

SB ON-RAMP

RAMP "K"

RAMP "J"

RAMP "I"

S 33° -38'-56.8" E

S 35° -57'-26.2" E

COORDINATE GRID

NAD 83

CONNECTICUT

FINAL DESIGN REVIEW

REV.	DATE	REVISION DESCRIPTION	SHEET NO.
	-	-	-
	-	-	-
	-	-	-
	-	-	-
	-	-	-
	-	-	-

THE INFORMATION, INCLUDING ESTIMATED QUANTITIES OF WORK, SHOWN ON THESE SHEETS IS BASED ON LIMITED INVESTIGATIONS BY THE STATE AND IS IN NO WAY WARRANTED TO INDICATE THE CONDITIONS OF ACTUAL QUANTITIES OF WORK WHICH WILL BE REQUIRED.

Plotted Date: 3/24/2014

DESIGNER/DRAFTER: **RL/MF/EK**

CHECKED BY: **D. DAGAN**

SCALE IN FEET 0 40 80

SCALE 1"=40'

STATE OF CONNECTICUT
DEPARTMENT OF TRANSPORTATION

Filename: ...\Plan\HW_MSH_SED-30.dgn

SIGNATURE/ BLOCK:

PROJECT TITLE:

INTERSTATE 95 RESURFACING AND SAFETY IMPROVEMENTS

TOWN: **OLD SAYBROOK, OLD LYME & EAST LYME**

DRAWING TITLE: **SEDIMENTATION AND EROSION CONTROL PLAN STA. 40+50 TO STA. 48**

PROJECT NO. **104-164**

DRAWING NO. **SED-30**

SHEET NO. **03.90**

04 - TRAFFIC
INDEX OF DRAWINGS

DRAWING NUMBER	DRAWING TITLE	DRAWING NUMBER	DRAWING TITLE
MPT-1 TO MPT-6	STAGE CONSTRUCTION PLANS		
DTR-1 TO DTR-2	DETOUR PLANS		

DESIGNED BY:

Luchs
CONSULTING ENGINEERS
89 COLONY STREET
MERIDEN, CONNECTICUT 06451

FINAL DESIGN REVIEW

REV.	DATE	REVISION DESCRIPTION	SHEET NO.
-	-	-	-
-	-	-	-
-	-	-	-
-	-	-	-
-	-	-	-
-	-	-	-

THE INFORMATION, INCLUDING ESTIMATED QUANTITIES OF WORK, SHOWN ON THESE SHEETS IS BASED ON LIMITED INVESTIGATIONS BY THE STATE AND IS IN NO WAY WARRANTED TO INDICATE THE CONDITIONS OF ACTUAL QUANTITIES OF WORK WHICH WILL BE REQUIRED.

Plotted Date: 2/20/2014

DESIGNER/DRAFTER: **RL/ETK/MF**
CHECKED BY: **D. DAGAN**

STATE OF CONNECTICUT
DEPARTMENT OF TRANSPORTATION

Filename: ...\Plan\HW_MSH_Subset04.dgn

SIGNATURE/
BLOCK:

PROJECT TITLE:
INTERSTATE 95 RESURFACING AND SAFETY IMPROVEMENTS

TOWN:
OLD SAYBROOK, OLD LYME & EAST LYME

DRAWING TITLE:
SUBSET 04 COVER SHEET

PROJECT NO. **104-164**
DRAWING NO. **TRA-00**
SHEET NO. **04.01**

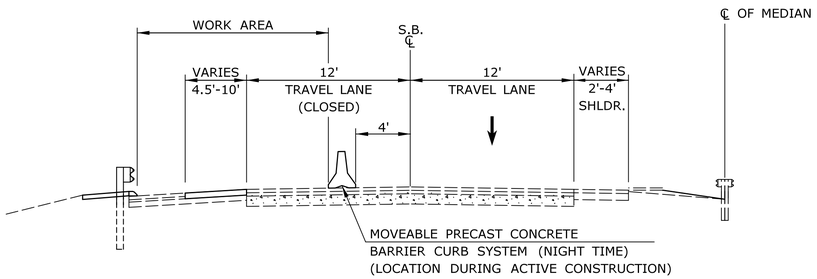

TYPICAL SECTION - SHOULDER RECONSTRUCTION (SB)
NIGHT TIME LANE OPERATION
NOT TO SCALE

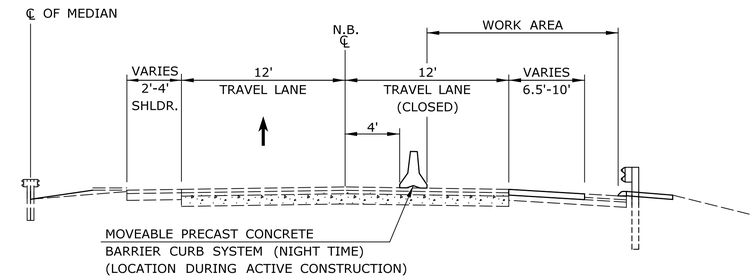

TYPICAL SECTION - SHOULDER RECONSTRUCTION (NB)
NIGHT TIME LANE OPERATION
NOT TO SCALE

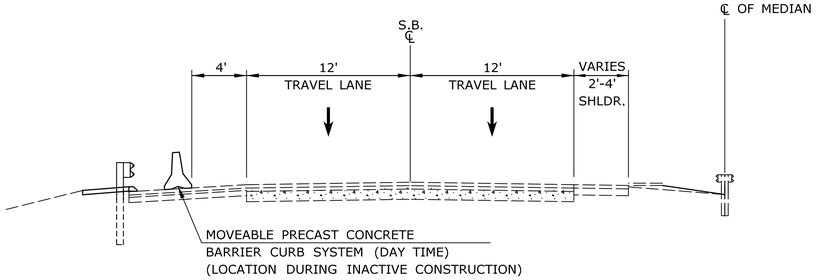

TYPICAL SECTION - SHOULDER RECONSTRUCTION (SB)
DAY TIME LANE OPERATION
NOT TO SCALE

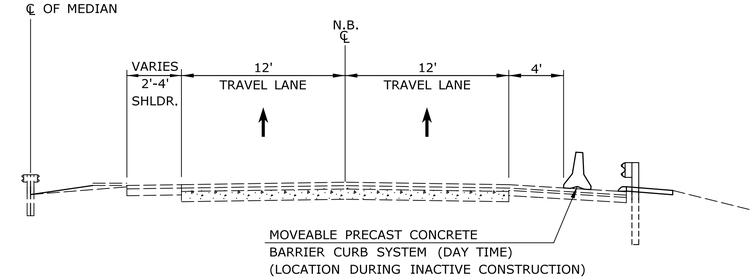

TYPICAL SECTION - SHOULDER RECONSTRUCTION (NB)
DAY TIME LANE OPERATION
NOT TO SCALE

FINAL DESIGN REVIEW

REV.	DATE	REVISION DESCRIPTION	SHEET NO.
-	-	-	-
-	-	-	-
-	-	-	-
-	-	-	-
-	-	-	-
-	-	-	-

THE INFORMATION, INCLUDING ESTIMATED QUANTITIES OF WORK, SHOWN ON THESE SHEETS IS BASED ON LIMITED INVESTIGATIONS BY THE STATE AND IS IN NO WAY WARRANTED TO INDICATE THE CONDITIONS OF ACTUAL QUANTITIES OF WORK WHICH WILL BE REQUIRED.

Plotted Date: 4/8/2014

DESIGNER/DRAFTER: **RL/EK/MF**
CHECKED BY: **D. DAGAN**
SCALE AS NOTED

STATE OF CONNECTICUT
DEPARTMENT OF TRANSPORTATION

Filename: ...\HW_MSH_MPT-1_TypeSections.dgn

SIGNATURE/
BLOCK:

PROJECT TITLE:
INTERSTATE 95 RESURFACING AND SAFETY IMPROVEMENTS

TOWN:
OLD SAYBROOK, OLD LYME & EAST LYME

DRAWING TITLE:
MAINTENANCE AND PROTECTION OF TRAFFIC SHOULDER RECONSTRUCTION

PROJECT NO. **104-164**
DRAWING NO. **MPT-1**
SHEET NO. **04.02**

RAMP "C" CURVE DATA	
Δ	= 09° -02'-09.4"
D	= 04° -46'-28.7"
T	= 95.07'
L	= 189.25'
R	= 1200.00'

RAMP "C" CURVE DATA	
Δ	= 11° -35'-40.3"
D	= 05° -43'-46.5"
T	= 101.44'
L	= 202.36'
R	= 1000.00'

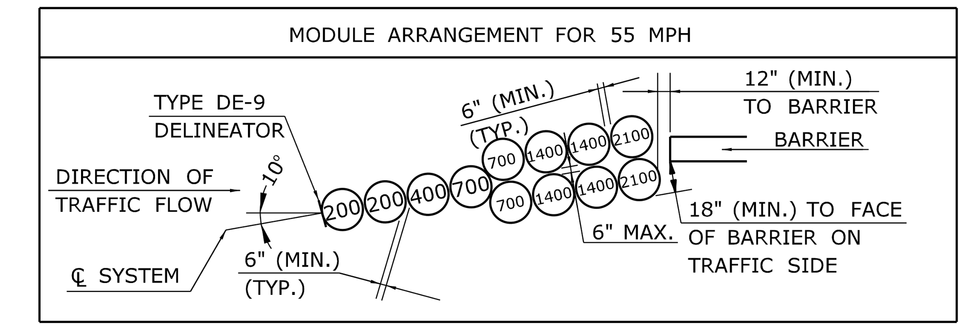

LEGEND

(400) TYPE A - IMPACT ATTENUATION MODULE, NUMBER IN CIRCLE (400) INDICATES MODULE MASS IN POUNDS.

TEMPORARY IMPACT ATTENUATION SYSTEM - TYPE A

NOT TO SCALE

RAMP "D" CURVE DATA	
Δ	= 09° -56'-33"
D	= 02° -30'-00"
T	= 199.35'
L	= 397.70'
R	= 2291.83'

NOTES:

1. EXISTING CONFLICTING PAVEMENT MARKINGS SHALL BE COVERED WITH BLACK LINE MASK PAVEMENT MARKING TAPE, INCLUDING THOSE PAVEMENT MARKINGS OUTSIDE OF THE TRAVELWAY.
2. THE APPROPRIATE TYPE DE-7 AND DE-7A DELINEATORS SHALL BEE INSTALLED ON THE TPCBC AS SPECIFIED ON THE TYPICAL SHEET "TYPICAL DELINEATION AND DELINEATOR AND OBJECT MARKER DETAILS". TYPE DE-9 DELINEATOR SHALL BE SECURELY FASTENED TO THE LEAD MODULE OF THE TEMPORARY IMPACT ATTENUATION SYSTEM.
3. THE CONTRACTOR SHALL ERECT AND MAINTAIN ALL SIGNING PATTERNS IN ACCORDANCE WITH TRAFFIC CONTROL PLANS CONTAINED IN THE SPECIAL PROVISION "MAINTENANCE AND PROTECTION OF TRAFFIC".
4. TEMPORARY SIGNS SHALL BE MOUNTED ON POSTS WHEN FEASIBLE.
5. ALL TEMPORARY SIGNS SHALL BE PAID UNDER ITEM NO. 1220013A - "CONSTRUCTION SIGNS - BRIGHT FLUORESCENT SHEETING".

FINAL DESIGN REVIEW

REV.	DATE	REVISION DESCRIPTION	SHEET NO.
-	-	-	-
-	-	-	-
-	-	-	-
-	-	-	-
-	-	-	-
-	-	-	-

THE INFORMATION, INCLUDING ESTIMATED QUANTITIES OF WORK, SHOWN ON THESE SHEETS IS BASED ON LIMITED INVESTIGATIONS BY THE STATE AND IS IN NO WAY WARRANTED TO INDICATE THE CONDITIONS OF ACTUAL QUANTITIES OF WORK WHICH WILL BE REQUIRED.

Plotted Date: 2/20/2014

DESIGNER/DRAFTER: **RL/MF/EK**

CHECKED BY: **D. DAGAN**

SCALE IN FEET 0 40 80 SCALE 1"=40'

STATE OF CONNECTICUT DEPARTMENT OF TRANSPORTATION

Filename: ...\Plan\HW_MSH_MPT-1 PLN.dgn

SIGNATURE/ BLOCK:

PROJECT TITLE: **INTERSTATE 95 RESURFACING AND SAFETY IMPROVEMENTS**

TOWN: **OLD SAYBROOK, OLD LYME & EAST LYME**

DRAWING TITLE: **MAINTENANCE AND PROTECTION OF TRAFFIC TYPICAL STAGING PLAN**

PROJECT NO. **104-164**

DRAWING NO. **MPT-2**

SHEET NO. **04.03**

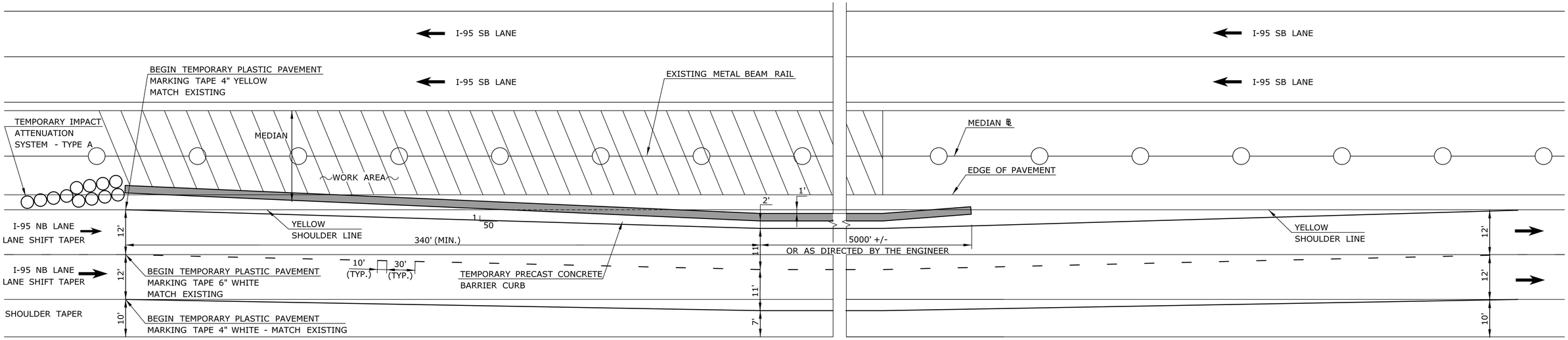

TYPICAL TPCBC NB LAYOUT PLAN

NOT TO SCALE

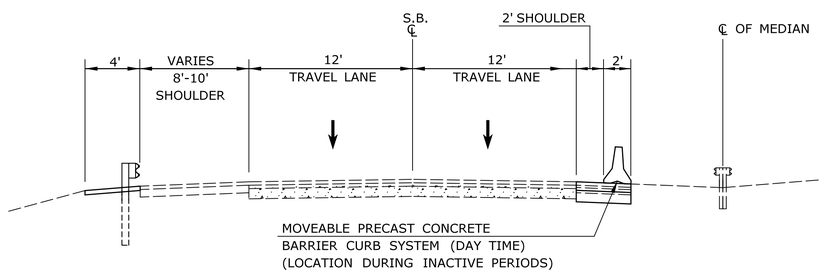

DAYTIME LANE OPERATION

NOT TO SCALE

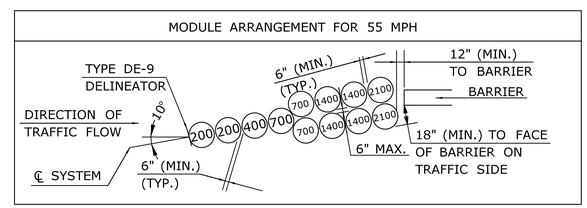

LEGEND

(400) TYPE A - IMPACT ATTENUATION MODULE, NUMBER IN CIRCLE (400) INDICATES MODULE MASS IN POUNDS.

TEMPORARY IMPACT ATTENUATION SYSTEM - TYPE A

NOT TO SCALE

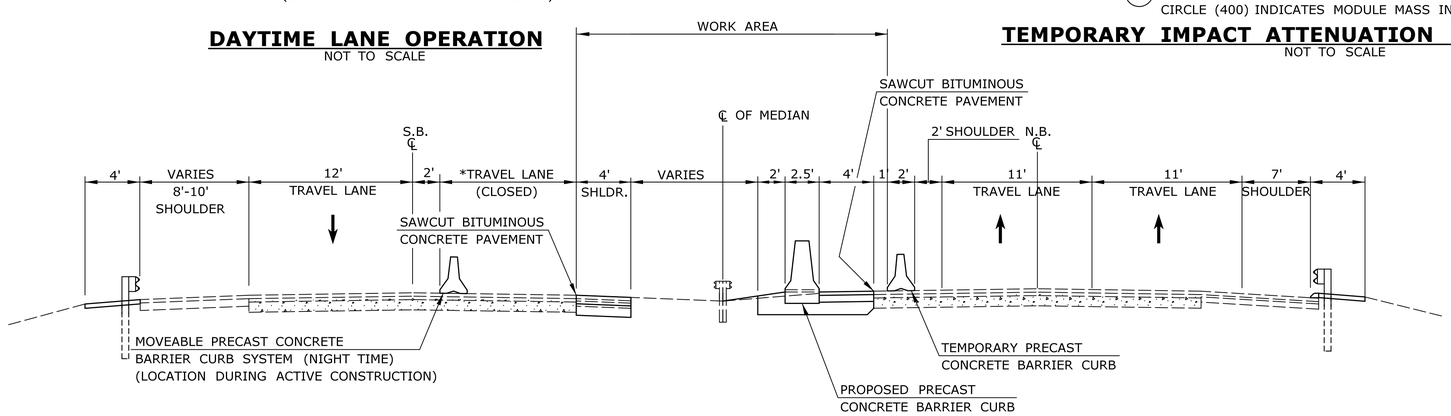

*LEFT LANE TO BE CLOSED IN ACCORDANCE WITH TRAFFIC CONTROL PLAN -3 SHOWN IN SPECIAL PROVISION " ITEM # 0971001A - MAINTENANCE AND PROTECTION OF TRAFFIC"

TYPICAL SECTION - MEDIAN WORK

NOT TO SCALE
STA. 159+00 TO STA. 248+40
STA. 274+00 TO STA. 370+75

NOTES:

1. THE CONTRACTOR SHALL INSTALL APPROXIMATELY 5000 LF OF TPCBC OR AS DIRECTED BY THE ENGINEER FOR EACH PHASE OF WORK.
2. THE CONTRACTOR SHALL INSTALL TEMPORARY PRECAST CONCRETE BARRIER CURB (STRUCTURE) WHEN WORKING ON BRIDGE DECKS.
3. THE CONTRACTOR SHALL RELOCATE THE TEMPORARY IMPACT ATTENUATION SYSTEMS - TYPE A, TPCBC AND TPCBC (STRUCTURE) AS MANY TIMES AS REQUIRED FOR WORK IN THE MEDIAN.
4. EXISTING CONFLICTING PAVEMENT MARKINGS SHALL BE COVERED WITH BLACK LINE MASK PAVEMENT MARKING TAPE, INCLUDING THOSE PAVEMENT MARKINGS OUTSIDE OF THE TRAVELWAY.
5. THE APPROPRIATE TYPE DE-7 AND DE-7A DELINEATORS SHALL BE INSTALLED ON THE TPCBC AS SPECIFIED ON THE TYPICAL SHEET "TYPICAL DELINEATION AND DELINEATOR AND OBJECT MARKER DETAILS". TYPE DE-9 DELINEATOR SHALL BE SECURELY FASTENED TO THE LEAD MODULE OF THE TEMPORARY IMPACT ATTENUATION SYSTEM.
6. THE CONTRACTOR SHALL INSTALL LANE SHIFT CONSTRUCTION SIGNS (#80-9445R, #80-9446R AND #80-9444L) AT LOCATION DETERMINED BY THE ENGINEER.
7. THE CONTRACTOR SHALL ERECT AND MAINTAIN ALL SIGNING PATTERNS IN ACCORDANCE WITH TRAFFIC CONTROL PLANS CONTAINED IN THE SPECIAL PROVISION " MAINTENANCE AND PROTECTION OF TRAFFIC".
8. TEMPORARY SIGNS SHALL BE MOUNTED ON POSTS WHEN FEASIBLE.
9. ALL TEMPORARY SIGNS SHALL BE PAID UNDER ITEM NO. 1220013A - "CONSTRUCTION SIGNS - BRIGHT FLUORSCENT SHEETING".

FINAL DESIGN REVIEW

REV.	DATE	REVISION DESCRIPTION	SHEET NO.
-	-	-	-
-	-	-	-
-	-	-	-
-	-	-	-
-	-	-	-
-	-	-	-

THE INFORMATION, INCLUDING ESTIMATED QUANTITIES OF WORK, SHOWN ON THESE SHEETS IS BASED ON LIMITED INVESTIGATIONS BY THE STATE AND IS IN NO WAY WARRANTED TO INDICATE THE CONDITIONS OF ACTUAL QUANTITIES OF WORK WHICH WILL BE REQUIRED.

Plotted Date: 3/20/2014

DESIGNER/DRAFTER: RL/EK/MF
CHECKED BY: D. DAGAN
SCALE AS NOTED

STATE OF CONNECTICUT
DEPARTMENT OF TRANSPORTATION

Filename: ...\HW_MSH_MPT-3_TypeSections.dgn

SIGNATURE/
BLOCK:

PROJECT TITLE:
INTERSTATE 95
RESURFACING AND SAFETY
IMPROVEMENTS

TOWN:
OLD SAYBROOK,
OLD LYME & EAST LYME

DRAWING TITLE:
MAINTENANCE AND
PROTECTION OF TRAFFIC
TYPICAL STAGING SECTION AND PLAN

PROJECT NO. 104-164
DRAWING NO. MPT-3
SHEET NO. 04.04

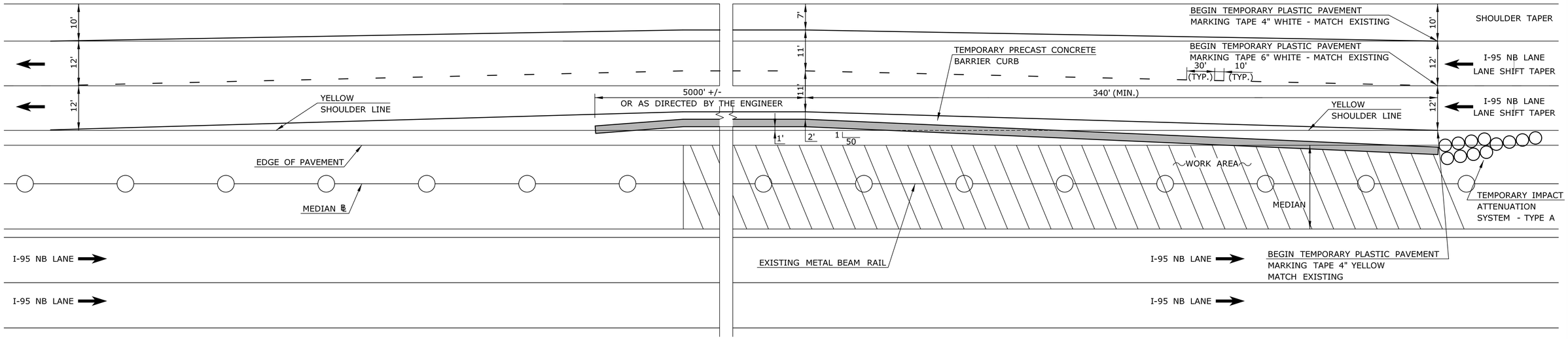

TYPICAL TPCBC SB LAYOUT PLAN

NOT TO SCALE

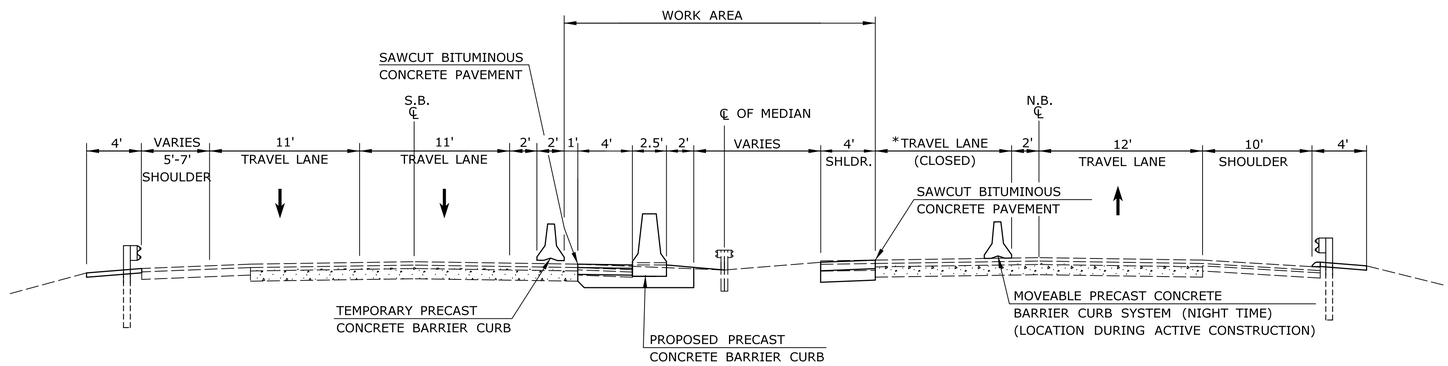

TYPICAL SECTION

NOT TO SCALE

*LEFT LANE TO BE CLOSED IN ACCORDANCE WITH TRAFFIC CONTROL PLAN -3 SHOWN IN SPECIAL PROVISION " ITEM # 0971001A - MAINTENANCE AND PROTECTION OF TRAFFIC"

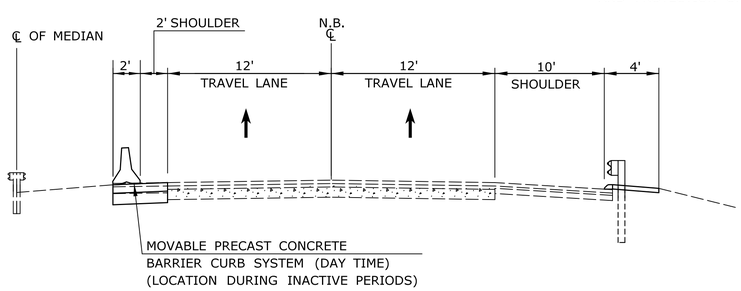

DAYTIME LANE OPERATION

NOT TO SCALE

NOTES:

1. THE CONTRACTOR SHALL INSTALL APPROXIMATELY 5000 LF OF TPCBC OR AS DIRECTED BY THE ENGINEER FOR EACH PHASE OF WORK.
2. THE CONTRACTOR SHALL INSTALL TEMPORARY PRECAST CONCRETE BARRIER CURB (STRUCTURE) WHEN WORKING ON BRIDGE DECKS.
3. THE CONTRACTOR SHALL RELOCATE THE TEMPORARY IMPACT ATTENUATION SYSTEMS - TYPE A, TPCBC AND TPCBC (STRUCTURE) AS MANY TIMES AS REQUIRED FOR WORK IN THE MEDIAN.
4. EXISTING CONFLICTING PAVEMENT MARKINGS SHALL BE COVERED WITH BLACK LINE MASK PAVEMENT MARKING TAPE, INCLUDING THOSE PAVEMENT MARKINGS OUTSIDE OF THE TRAVELWAY.
5. THE APPROPRIATE TYPE DE-7 AND DE-7A DELINEATORS SHALL BE INSTALLED ON THE TPCBC AS SPECIFIED ON THE TYPICAL SHEET "TYPICAL DELINEATION AND DELINEATOR AND OBJECT MARKER DETAILS". TYPE DE-9 DELINEATOR SHALL BE SECURELY FASTENED TO THE LEAD MODULE OF THE TEMPORARY IMPACT ATTENUATION SYSTEM.
6. THE CONTRACTOR SHALL INSTALL LANE SHIFT CONSTRUCTION SIGNS (#80-9445R, #80-9446R AND #80-9444L) AT LOCATION DETERMINED BY THE ENGINEER.
7. THE CONTRACTOR SHALL ERECT AND MAINTAIN ALL SIGNING PATTERNS IN ACCORDANCE WITH TRAFFIC CONTROL PLANS CONTAINED IN THE SPECIAL PROVISION " MAINTENANCE AND PROTECTION OF TRAFFIC"
8. TEMPORARY SIGNS SHALL BE MOUNTED ON POSTS WHEN FEASIBLE.
9. ALL TEMPORARY SIGNS SHALL BE PAID UNDER ITEM NO. 1220013A - "CONSTRUCTION SIGNS - BRIGHT FLUORSCENT SHEETING".

FINAL DESIGN REVIEW

REV.	DATE	REVISION DESCRIPTION	SHEET NO.
-	-	-	-
-	-	-	-
-	-	-	-
-	-	-	-
-	-	-	-
-	-	-	-

THE INFORMATION, INCLUDING ESTIMATED QUANTITIES OF WORK, SHOWN ON THESE SHEETS IS BASED ON LIMITED INVESTIGATIONS BY THE STATE AND IS IN NO WAY WARRANTED TO INDICATE THE CONDITIONS OF ACTUAL QUANTITIES OF WORK WHICH WILL BE REQUIRED.

Plotted Date: 3/20/2014

DESIGNER/DRAFTER: RL/EK/MF

CHECKED BY: D. DAGAN

SCALE AS NOTED

STATE OF CONNECTICUT
DEPARTMENT OF TRANSPORTATION

Filename: ...\HW_MSH_MPT-4_TypeSections.dgn

SIGNATURE/
BLOCK:

PROJECT TITLE:
INTERSTATE 95
RESURFACING AND SAFETY
IMPROVEMENTS

TOWN:
OLD SAYBROOK,
OLD LYME & EAST LYME

DRAWING TITLE:
MAINTENANCE AND
PROTECTION OF TRAFFIC
TYPICAL STAGING SECTION AND PLAN

PROJECT NO. 104-164

DRAWING NO. MPT-4

SHEET NO. 04.05

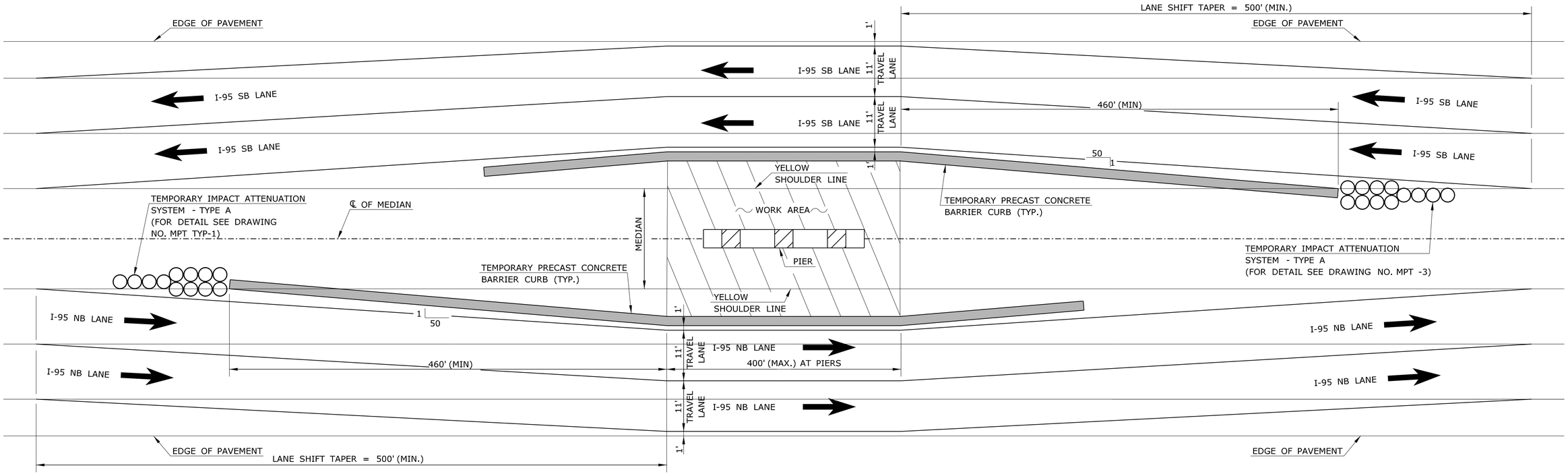

TYPICAL TPCBC LAYOUT PLAN

NOT TO SCALE

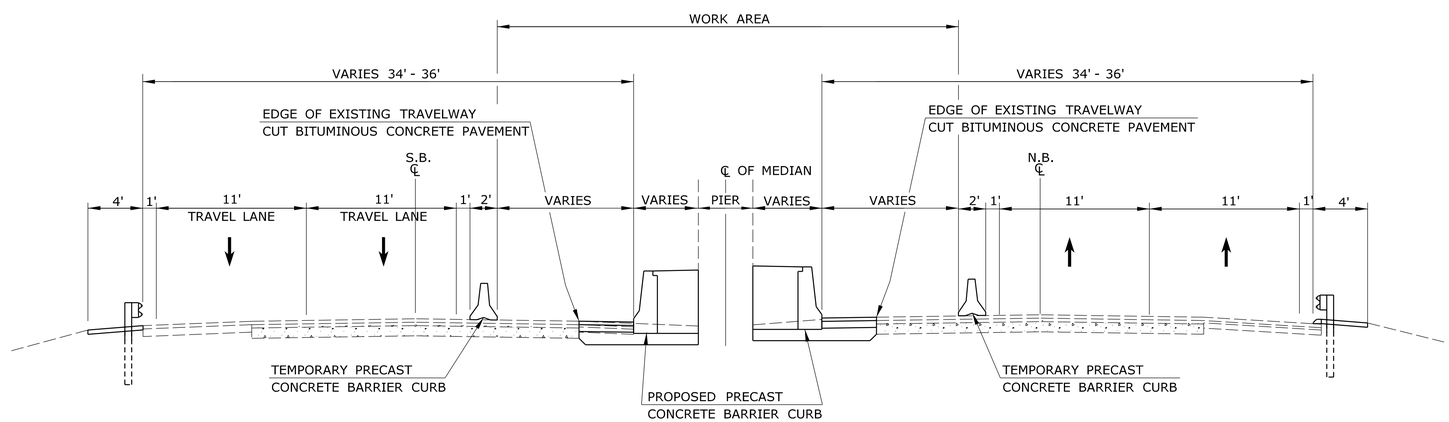

TYPICAL SECTION AT BRIDGE PIERS

NOT TO SCALE

NOTES:

1. EXISTING CONFLICTING PAVEMENT MARKINGS SHALL BE COVERED WITH BLACK LINE MASK PAVEMENT MARKING TAPE, INCLUDING THOSE PAVEMENT MARKINGS OUTSIDE OF THE TRAVELWAY.
2. THE APPROPRIATE TYPE DE-7 AND DE-7A DELINEATORS SHALL BE INSTALLED ON THE TPCBC AS SPECIFIED ON THE TYPICAL SHEET "TYPICAL DELINEATION AND DELINEATOR AND OBJECT MARKER DETAILS". TYPE DE-9 DELINEATOR SHALL BE SECURELY FASTENED TO THE LEAD MODULE OF THE TEMPORARY IMPACT ATTENUATION SYSTEM.
3. THE CONTRACTOR SHALL INSTALL LANE SHIFT CONSTRUCTION SIGNS (#80-9445R, #80-9446R AND #80-9444L) AT LOCATION DETERMINED BY THE ENGINEER
4. THE CONTRACTOR SHALL ERECT AND MAINTAIN ALL SIGNING PATTERNS IN ACCORDANCE WITH TRAFFIC CONTROL PLANS CONTAINED IN THE SPECIAL PROVISION " MAINTENANCE AND PROTECTION OF TRAFFIC"
5. TEMPORARY SIGNS SHALL BE MOUNTED ON POSTS WHEN FEASIBLE.
6. ALL TEMPORARY SIGNS SHALL BE PAID UNDER ITEM NO. 1220013A - "CONSTRUCTION SIGNS - BRIGHT FLUORSCENT SHEETING".

FINAL DESIGN REVIEW

REV.	DATE	REVISION DESCRIPTION	SHEET NO.
-	-	-	-
-	-	-	-
-	-	-	-
-	-	-	-
-	-	-	-
-	-	-	-

THE INFORMATION, INCLUDING ESTIMATED QUANTITIES OF WORK, SHOWN ON THESE SHEETS IS BASED ON LIMITED INVESTIGATIONS BY THE STATE AND IS IN NO WAY WARRANTED TO INDICATE THE CONDITIONS OF ACTUAL QUANTITIES OF WORK WHICH WILL BE REQUIRED.

Plotted Date: 2/20/2014

DESIGNER/DRAFTER: RL/EK/MF
CHECKED BY: D. DAGAN
SCALE AS NOTED

STATE OF CONNECTICUT
DEPARTMENT OF TRANSPORTATION

Filename: ...\HW..MSH..MPT-5..TypeSections.dgn

SIGNATURE/ BLOCK:

PROJECT TITLE:
INTERSTATE 95 RESURFACING AND SAFETY IMPROVEMENTS

TOWN:
OLD SAYBROOK, OLD LYME & EAST LYME

DRAWING TITLE:
MAINTENANCE AND PROTECTION OF TRAFFIC TYPICAL STAGING SECTION AND PLAN

PROJECT NO. 104-164
DRAWING NO. MPT-5
SHEET NO. 04.06

RAMP "F" CURVE DATA	
Δ	= 18° -24'-08.0"
D	= 04° -46'-28.7"
T	= 194.38'
L	= 385.42'
R	= 1200.00'

I-95 CURVE #9	
Δ	= 07° -47'-43.9"
D	= 01° -00'-00.0"
T	= 390.38'
L	= 779.55'
R	= 5729.58'

RAMP "I" CURVE DATA	
Δ	= 05° -31'-53.1"
D	= 03° -21'-16.2"
T	= 82.51'
L	= 164.90'
R	= 1708.03'

RAMP "I" CURVE DATA	
Δ	= 42° -03'-48.0"
D	= 14° -19'-26.2"
T	= 153.80'
L	= 293.66'
R	= 400.00'

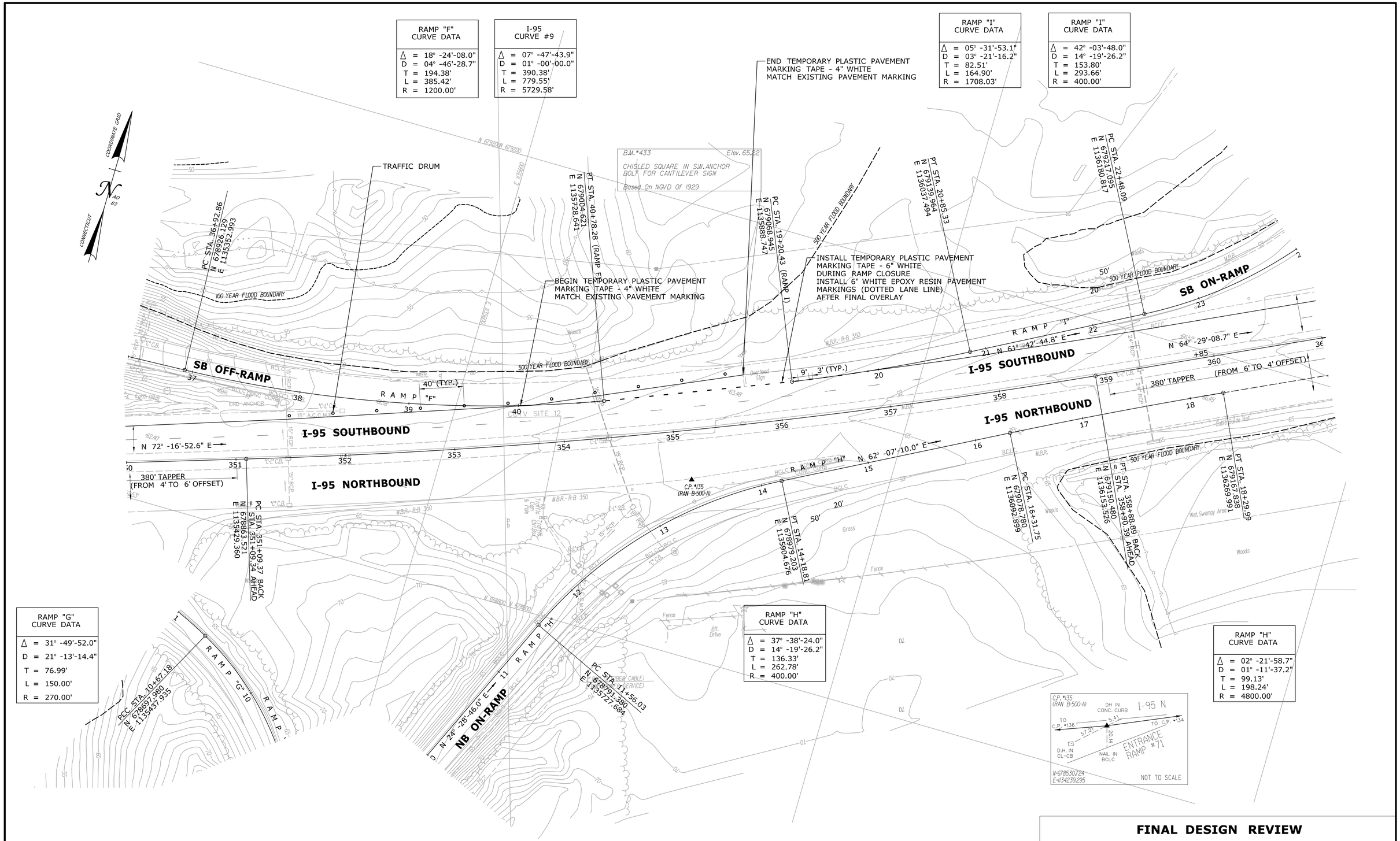

RAMP "G" CURVE DATA	
Δ	= 31° -49'-52.0"
D	= 21° -13'-14.4"
T	= 76.99'
L	= 150.00'
R	= 270.00'

RAMP "H" CURVE DATA	
Δ	= 37° -38'-24.0"
D	= 14° -19'-26.2"
T	= 136.33'
L	= 262.78'
R	= 400.00'

RAMP "H" CURVE DATA	
Δ	= 02° -21'-58.7"
D	= 01° -11'-37.2"
T	= 99.13'
L	= 198.24'
R	= 4800.00'

FINAL DESIGN REVIEW

REV.	DATE	REVISION DESCRIPTION	SHEET NO.
-	-	-	-
-	-	-	-
-	-	-	-
-	-	-	-
-	-	-	-
-	-	-	-

THE INFORMATION, INCLUDING ESTIMATED QUANTITIES OF WORK, SHOWN ON THESE SHEETS IS BASED ON LIMITED INVESTIGATIONS BY THE STATE AND IS IN NO WAY WARRANTED TO INDICATE THE CONDITIONS OF ACTUAL QUANTITIES OF WORK WHICH WILL BE REQUIRED.

Plotted Date: 3/20/2014

DESIGNER/DRAFTER: **RL/MF/EK**
CHECKED BY: **D. DAGAN**
SCALE IN FEET 0 40 80
SCALE 1"=40'

STATE OF CONNECTICUT
DEPARTMENT OF TRANSPORTATION

Filename: ...\MPT Sections\HW_MSH_MPT-6.dgn

SIGNATURE/ BLOCK:

PROJECT TITLE:
INTERSTATE 95 RESURFACING AND SAFETY IMPROVEMENTS

TOWN: **OLD SAYBROOK, OLD LYME & EAST LYME**

DRAWING TITLE: **ROADWAY PLAN STA. 350 TO STA. 361**

PROJECT NO. **104-164**
DRAWING NO. **MPT-6**
SHEET NO. **04.07**

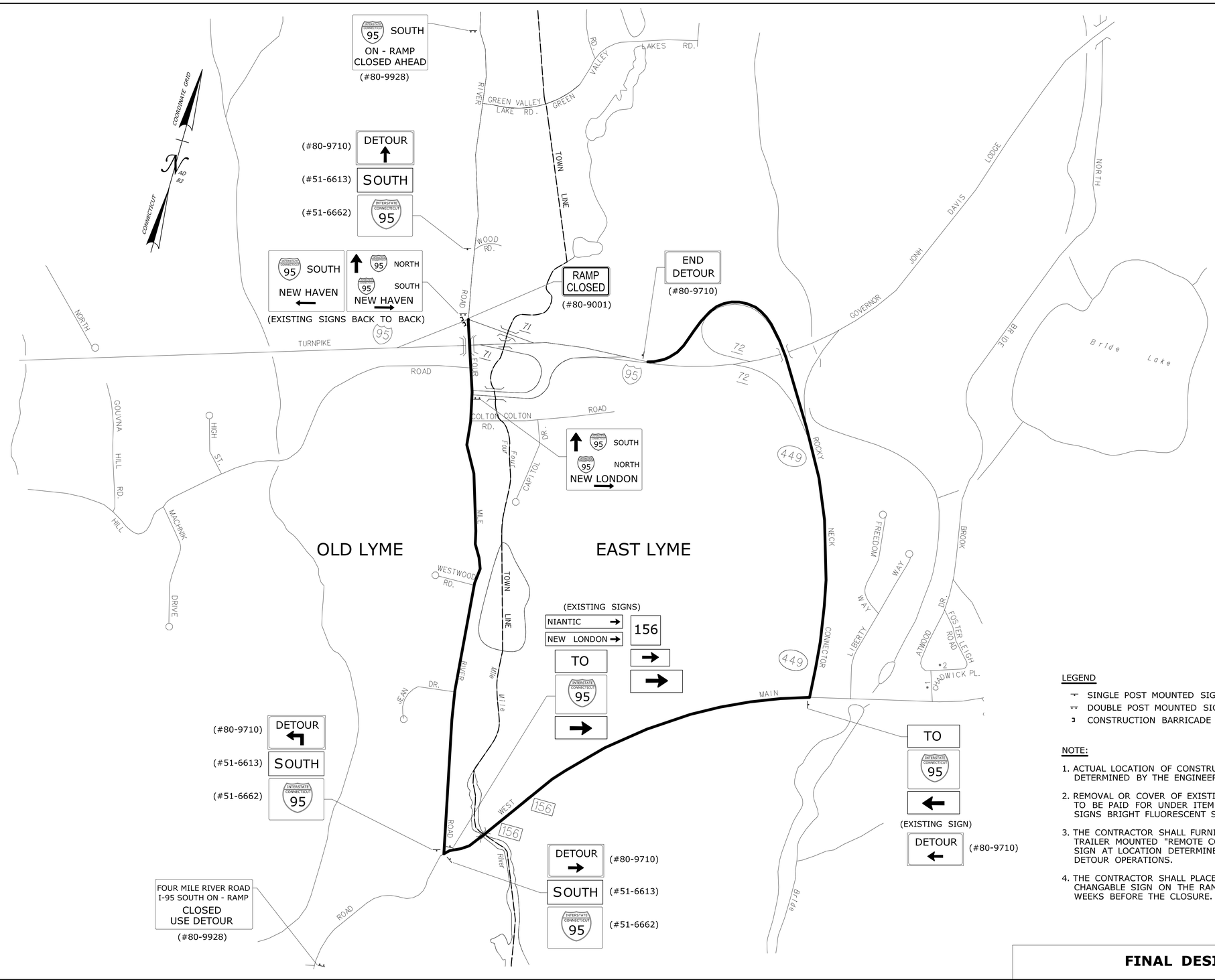

LEGEND

- SINGLE POST MOUNTED SIGN
- DOUBLE POST MOUNTED SIGN
- CONSTRUCTION BARRICADE TYPE III

NOTE:

1. ACTUAL LOCATION OF CONSTRUCTION SIGNS SHALL BE DETERMINED BY THE ENGINEER.
2. REMOVAL OR COVER OF EXISTING CONFLICTING SIGNS TO BE PAID FOR UNDER ITEM #1220017A - CONSTRUCTION SIGNS BRIGHT FLUORESCENT SHEETING.
3. THE CONTRACTOR SHALL FURNISH AND MAINTAIN A TRAILER MOUNTED "REMOTE CONTROLLED CHANGEABLE SIGN AT LOCATION DETERMINED BY THE ENGINEER DURING DETOUR OPERATIONS.
4. THE CONTRACTOR SHALL PLACE THE REMOTE CONTROLLED CHANGABLE SIGN ON THE RAMPS TO BE CLOSED 1 TO 2 WEEKS BEFORE THE CLOSURE.

FINAL DESIGN REVIEW

REV.	DATE	REVISION DESCRIPTION	SHEET NO.
-	-	-	-
-	-	-	-
-	-	-	-
-	-	-	-
-	-	-	-
-	-	-	-

THE INFORMATION, INCLUDING ESTIMATED QUANTITIES OF WORK, SHOWN ON THESE SHEETS IS BASED ON LIMITED INVESTIGATIONS BY THE STATE AND IS IN NO WAY WARRANTED TO INDICATE THE CONDITIONS OF ACTUAL QUANTITIES OF WORK WHICH WILL BE REQUIRED.

Plotted Date: 3/20/2014

DESIGNER/DRAFTER: RL/MF/EK
CHECKED BY: D. DAGAN
SCALE IN FEET 0 500 1000
SCALE 1"=500'

STATE OF CONNECTICUT
DEPARTMENT OF TRANSPORTATION

Filename: ...\Plan\HW_MSH_DTR-1.DGN

SIGNATURE/ BLOCK:

PROJECT TITLE:
INTERSTATE 95 RESURFACING AND SAFETY IMPROVEMENTS

TOWN: **OLD SAYBROOK, OLD LYME & EAST LYME**

DRAWING TITLE: **DETOUR PLAN SOUTHBOUND EXIT 71 ON-RAMP**

PROJECT NO. 104-164
DRAWING NO. DTR-1
SHEET NO. 04.08

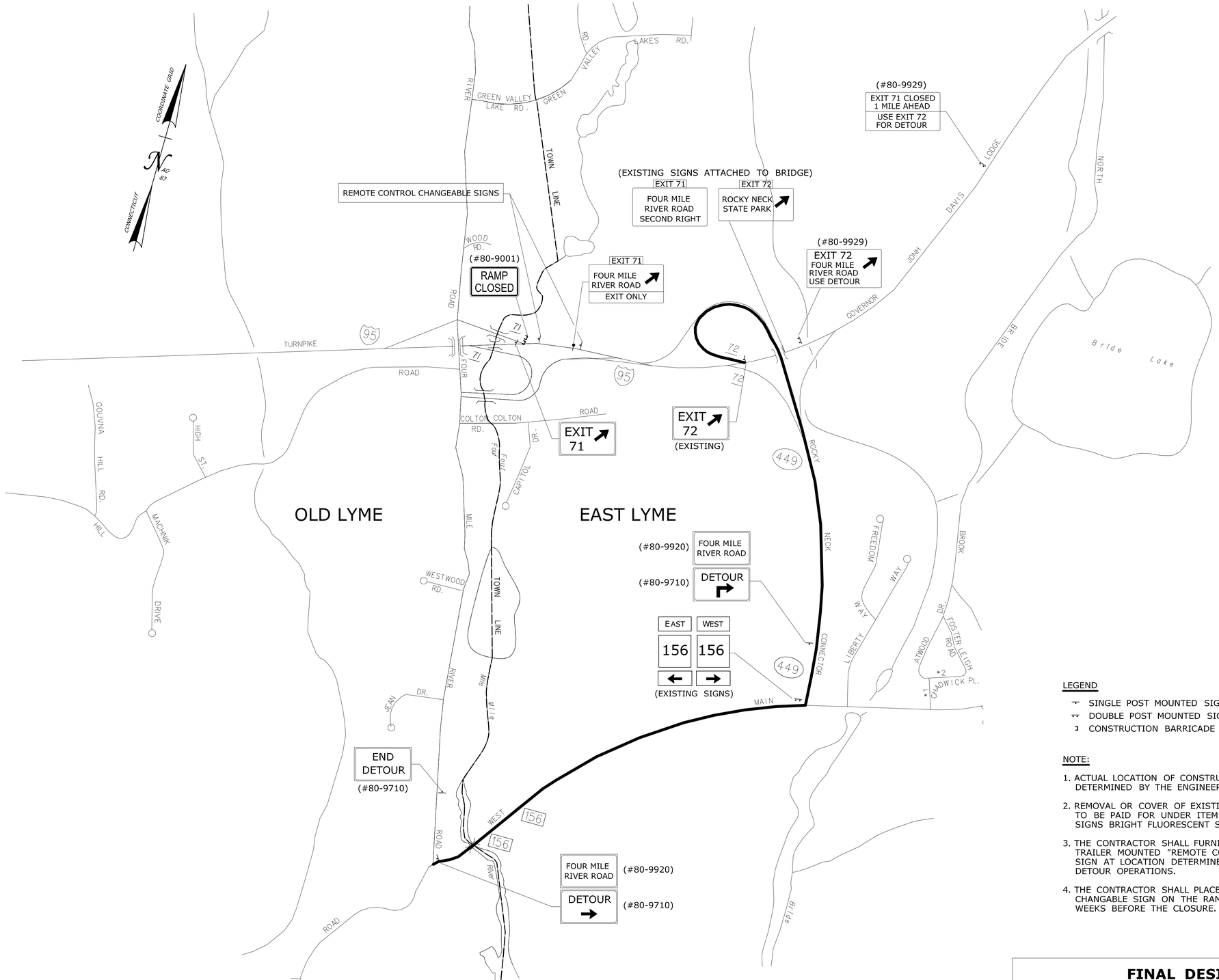

LEGEND

- SINGLE POST MOUNTED SIGN
- DOUBLE POST MOUNTED SIGN
- CONSTRUCTION BARRICADE TYPE III

NOTE:

1. ACTUAL LOCATION OF CONSTRUCTION SIGNS SHALL BE DETERMINED BY THE ENGINEER.
2. REMOVAL OR COVER OF EXISTING CONFLICTING SIGNS TO BE PAID FOR UNDER ITEM #1220017A - CONSTRUCTION SIGNS BRIGHT FLUORESCENT SHEETING.
3. THE CONTRACTOR SHALL FURNISH AND MAINTAIN A TRAILER MOUNTED "REMOTE CONTROLLED CHANGEABLE SIGN AT LOCATION DETERMINED BY THE ENGINEER DURING DETOUR OPERATIONS.
4. THE CONTRACTOR SHALL PLACE THE REMOTE CONTROLLED CHANGABLE SIGN ON THE RAMPS TO BE CLOSED 1 TO 2 WEEKS BEFORE THE CLOSURE.

FINAL DESIGN REVIEW

REV.	DATE	REVISION DESCRIPTION	SHEET NO.
-	-	-	-
-	-	-	-
-	-	-	-
-	-	-	-
-	-	-	-
-	-	-	-

THE INFORMATION, INCLUDING ESTIMATED QUANTITIES OF WORK, SHOWN ON THESE SHEETS IS BASED ON LIMITED INVESTIGATIONS BY THE STATE AND IS IN NO WAY WARRANTED TO INDICATE THE CONDITIONS OF ACTUAL QUANTITIES OF WORK WHICH WILL BE REQUIRED.

Plotted Date: 3/20/2014

DESIGNER/DRAFTER: **RL/MF/EK**

CHECKED BY: **D. DAGAN**

SCALE IN FEET 0 500 1000

SCALE 1"=500'

STATE OF CONNECTICUT
DEPARTMENT OF TRANSPORTATION

Filename: ...\Plan\HW_MSH_DTR-2.DGN

SIGNATURE/ BLOCK:

PROJECT TITLE:

INTERSTATE 95 RESURFACING AND SAFETY IMPROVEMENTS

TOWN: **OLD SAYBROOK, OLD LYME & EAST LYME**

DRAWING TITLE: **DETOUR PLAN**
SOUTHBOUND EXIT 71 OFF-RAMP

PROJECT NO. **104-164**

DRAWING NO. **DTR-2**

SHEET NO. **04.09**

05 - STRUCTURES
INDEX OF DRAWINGS

DRAWING NUMBER	DRAWING TITLE	DRAWING NUMBER	DRAWING TITLE
S-1 TO S-14	STRUCTURE PLANS		

DESIGNED BY:
Luchs CONSULTING ENGINEERS
89 COLONY STREET
MERIDEN, CONNECTICUT 06451

SEMI FINAL DESIGN REVIEW

REV.	DATE	REVISION DESCRIPTION	SHEET NO.
-	-	-	-
-	-	-	-
-	-	-	-
-	-	-	-
-	-	-	-
-	-	-	-

THE INFORMATION, INCLUDING ESTIMATED QUANTITIES OF WORK, SHOWN ON THESE SHEETS IS BASED ON LIMITED INVESTIGATIONS BY THE STATE AND IS IN NO WAY WARRANTED TO INDICATE THE CONDITIONS OF ACTUAL QUANTITIES OF WORK WHICH WILL BE REQUIRED.

Plotted Date: 4/3/2014

DESIGNER/DRAFTER: **RL/ETK/MF**
CHECKED BY: **D. DAGAN**

STATE OF CONNECTICUT
DEPARTMENT OF TRANSPORTATION

Filename: ...\Plan\HW_MSH_Subset05.dgn

SIGNATURE/
BLOCK:

PROJECT TITLE:
INTERSTATE 95 RESURFACING AND SAFETY IMPROVEMENTS

TOWN:
OLD SAYBROOK, OLD LYME & EAST LYME

DRAWING TITLE:
SUBSET 05 COVER SHEET

PROJECT NO. **104-164**
DRAWING NO. **S-00**
SHEET NO. **05.01**

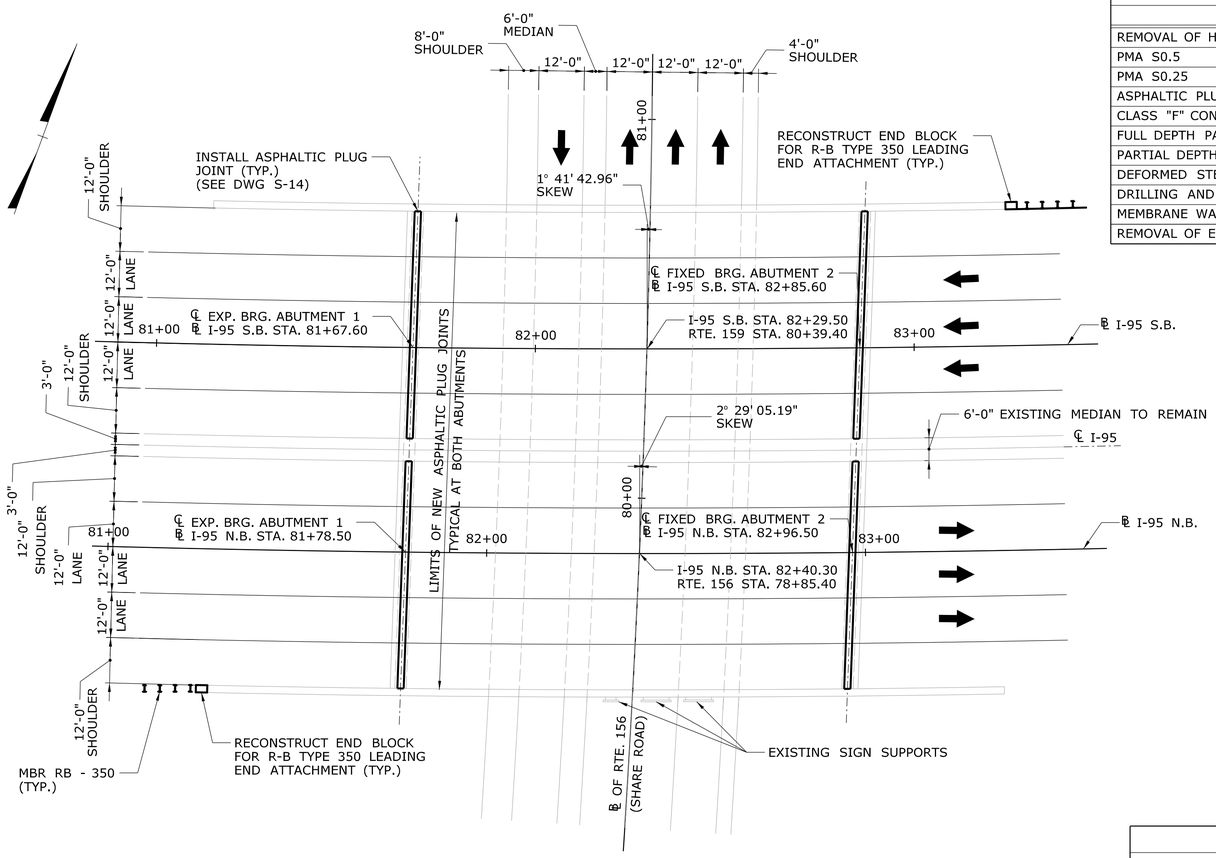

BRIDGE NO. 06173
GENERAL PLAN
SCALE: 1" = 20'

QUANTITIES

ITEM	UNIT	QUANTITY
REMOVAL OF HMA WEARING SURFACE	S.Y.	1800
PMA S0.5	TON	200
PMA S0.25	TON	100
ASPHALTIC PLUG EXPANSION JOINT SYSTEM	C.F.	115
CLASS "F" CONCRETE	C.Y.	1
FULL DEPTH PATH (HIGH EARLY STRENGTH CONCRETE)	C.Y.	2
PARTIAL DEPTH PATCH	C.F.	55
DEFORMED STEEL BARS - EPOXY COATED	LBS.	110
DRILLING AND GROUTING REINFORCING BARS	L.F.	12
MEMBRANE WATERPROOFING (WOVEN GLASS FABRIC)	S.Y.	1650
REMOVAL OF EXISTING MASONRY	C.Y.	1

INDEX OF DRAWINGS

DRAWING TITLE	DRAWING NO.
GENERAL PLAN, SECTION	S-1
END BLOCK MODIFICATIONS	S-2
MBR ATTACHMENT DETAILS	S-3
DECK PATCHING PLAN	S-4

GENERAL NOTES

SPECIFICATIONS: CONNECTICUT DEPARTMENT OF TRANSPORTATION FORM 816 (2004) INCLUDING SUPPLEMENTAL SPECIFICATIONS DATED JULY 2013 AND SPECIAL PROVISIONS.

DESIGN SPECIFICATIONS: AASHTO LRFD BRIDGE DESIGN SPECIFICATIONS - 6TH EDITION, 2012 WITH INTERIM SPECIFICATIONS AND AS SUPPLEMENTED BY THE CONNECTICUT DEPARTMENT OF TRANSPORTATION BRIDGE DESIGN MANUAL (2003).

ALLOWABLE DESIGN STRESSES:

CLASS "F" CONCRETE — BASED ON f'c = 4,000 PSI

REINFORCEMENT (ASTM A615 GRADE 60) — BASED ON fy = 60,000 PSI

LIVE LOAD: HL-93

FUTURE PAVING ALLOWANCE: NONE

PMA OVERLAY: THIS SHALL CONSIST OF TWO LIFTS. THE FIRST LIFT SHALL BE PMA S0.25 (1 INCH THICK) AND THE SECOND LIFT SHALL BE PMA S0.5 (2 INCHES THICK).

DIMENSIONS: ALL DIMENSIONS SHOWN ON THE PLANS ARE IN FEET UNLESS OTHERWISE NOTED. ALL ELEVATIONS ARE GIVEN IN FEET. WHEN ELEVATIONS ARE GIVEN TO LESS THAN THREE DECIMAL PLACES, THE OMITTED DIGITS SHALL BE ASSUMED TO BE ZERO.

EXISTING DIMENSIONS: DIMENSIONS OF THE EXISTING STRUCTURE SHOWN ON THESE PLANS ARE FOR GENERAL REFERENCE ONLY. THEY HAVE BEEN TAKEN FROM THE ORIGINAL DESIGN DRAWINGS AND ARE NOT GUARANTEED. THE CONTRACTOR SHALL TAKE ALL FIELD MEASUREMENTS NECESSARY TO ASSURE PROPER FIT OF THE FINISHED WORK AND SHALL ASSUME FULL RESPONSIBILITY FOR THEIR ACCURACY. WHEN SHOP DRAWINGS BASED ON FIELD MEASUREMENTS ARE SUBMITTED FOR APPROVAL, THE FIELD MEASUREMENTS SHALL ALSO BE SUBMITTED FOR REFERENCE BY THE REVIEWER.

DECK REPAIRS: THE DECK SLAB SHALL BE SOUNDED AND REPAIRED PRIOR TO THE PLACEMENT OF NEW PAVEMENT. THERE ARE NO RECORDS OF GROUND PENETRATION RADAR (GPR), CHLORIDE SAMPLING, OR ANY OTHER NON DESTRUCTIVE TESTING DONE ON THE EXISTING DECK SLAB TO DETERMINE THE LEVEL OF DETERIORATION. THE PARTIAL DEPTH PATCH QUANTITY WAS BASED ON THE CONDITION OF THE UNDERSIDE OF THE DECK AS STATED IN THE BRIDGE INSPECTION REPORT DATED 03/20/2012. FOR DECK REPAIR DETAILS, SEE DRAWING NO. S-13.

CONCRETE NOTES

REMAIN-IN-PLACE FORMS: THE USE OF REMAIN-IN-PLACE FORMS ON THIS STRUCTURE IS NOT ALLOWED.

CLASS "F" CONCRETE: CLASS "F" CONCRETE SHALL BE USED ON MODIFICATION OF END BLOCKS FOR THE ATTACHMENT OF MBR TYPE R-B 350.

EXPOSED EDGES: EXPOSED EDGES OF CONCRETE SHALL BE BEVELED 1" x 1" UNLESS DIMENSIONED OTHERWISE.

CONCRETE COVER: ALL REINFORCEMENT SHALL HAVE TWO INCHES COVER UNLESS DIMENSIONED OTHERWISE.

REINFORCEMENT: ALL REINFORCEMENT SHALL BE ASTM A615 GRADE 60.

EPOXY COATED REINFORCING BARS: ALL REINFORCEMENT SHALL BE EPOXY COATED. THESE BARS SHALL BE INCLUDED IN THE PAY ITEM "DEFORMED STEEL BARS - EPOXY COATED".

PREFORMED EXPANSION JOINT FILLER: THE COST OF FURNISHING AND INSTALLING PREFORMED EXPANSION JOINT FILLER SHALL BE INCLUDED UNDER THE COST OF THE ITEMS CLASS "F" CONCRETE.

CONSTRUCTION JOINTS: CONSTRUCTION JOINTS, OTHER THAN THOSE SHOWN ON THE PLANS, WILL NOT BE PERMITTED WITHOUT THE PRIOR APPROVAL OF THE ENGINEER.

GENERAL DESCRIPTION OF WORK

THE SCOPE OF WORK FOR THIS BRIDGE INCLUDES REMOVAL OF EXISTING PAVEMENT, DECK PATCHING, NEW MEMBRANE WATERPROOFING, NEW PMA OVERLAY, REPLACEMENT OF EXISTING ASPHALTIC PLUG EXPANSION JOINTS, AND RECONSTRUCTION OF EXISTING LEADING END BLOCKS TO ACCOMODATE NEW R-B 350 METAL BEAM RAIL.

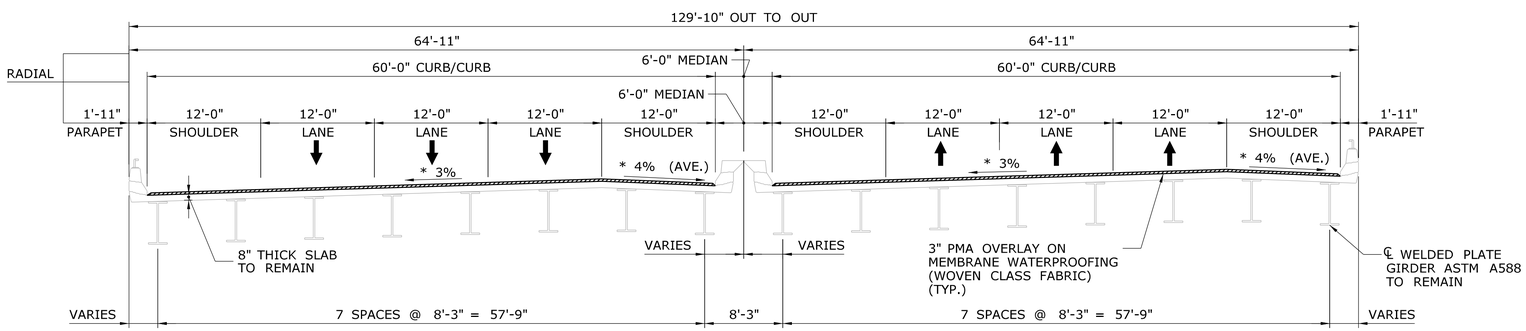

PROPOSED CROSS-SECTION
SCALE: 1/8" = 1'-0"

NOTE:

- WHEN EXISTING OVERLAY IS REMOVED, REPAIRS SHALL BE MADE TO THE DECK AREA AS DIRECTED BY THE ENGINEER.

* - MATCH EXISTING CROSS SLOPES

CONCRETE DISTRIBUTION

SUPERSTRUCTURE	4 C.Y.
SUBSTRUCTURE	1 C.Y.
FOOTINGS	0 C.Y.
TOTAL	5 C.Y.

INSPECTION OF FIELD WELDS

METHOD	UNIT	QUANTITY
ULTRASONIC	IN	0
MAGNETIC PARTICLE	FT	0

NOTICE TO BRIDGE INSPECTORS

THE DEPARTMENT'S BRIDGE SAFETY PROCEDURES REQUIRE THIS BRIDGE TO BE INSPECTED FOR, BUT NOT LIMITED TO, ALL APPROPRIATE COMPONENTS INDICATED IN THE GOVERNING MANUALS FOR BRIDGE INSPECTION. ATTENTION MUST BE GIVEN TO INSPECTING THE FOLLOWING SPECIAL COMPONENTS AND DETAILS. (THE LISTING OF COMPONENTS FOR SPECIFIC ATTENTION SHALL NOT BE CONSTRUED TO REDUCE THE IMPORTANCE OF INSPECTION OF ANY OTHER COMPONENT OF THE STRUCTURE). THE FREQUENCY OF INSPECTION OF THIS STRUCTURE SHALL BE IN ACCORDANCE WITH THE GOVERNING MANUALS FOR BRIDGE INSPECTION, UNLESS OTHERWISE DIRECTED BY THE MANAGER OF BRIDGE SAFETY AND EVALUATION.

COMPONENTS OR DETAILS	BRIDGE SHEET REFERENCE
NONE	NONE

TRANSPORTATION DIMENSIONS AND WEIGHT

MEMBER	SHIPPING LENGTH	SHIPPING HEIGHT	SHIPPING WEIGHT
-	-	-	-

REV.	DATE	REVISION DESCRIPTION	SHEET NO.
-	-	-	-
-	-	-	-
-	-	-	-
-	-	-	-
-	-	-	-
-	-	-	-

THE INFORMATION, INCLUDING ESTIMATED QUANTITIES OF WORK, SHOWN ON THESE SHEETS IS BASED ON LIMITED INVESTIGATIONS BY THE STATE AND IS IN NO WAY WARRANTED TO INDICATE THE CONDITIONS OF ACTUAL QUANTITIES OF WORK WHICH WILL BE REQUIRED.

Plotted Date: 3/11/2014

DESIGNER/DRAFTER: A.M, D.A.S
CHECKED BY: R. SALEH
SCALE AS NOTED

STATE OF CONNECTICUT
DEPARTMENT OF TRANSPORTATION

Filename: ...\SB_MSH_Br06173_104_164_GPE.dgn

SIGNATURE/BLOCK:

PROJECT TITLE: INTERSTATE 95 RESURFACING AND SAFETY IMPROVEMENTS

TOWN: OLD LYME

DRAWING TITLE: BRIDGE NO. 06173 GENERAL PLAN, SECTION

PROJECT NO. 104-164
DRAWING NO. S-1
SHEET NO. 05.02

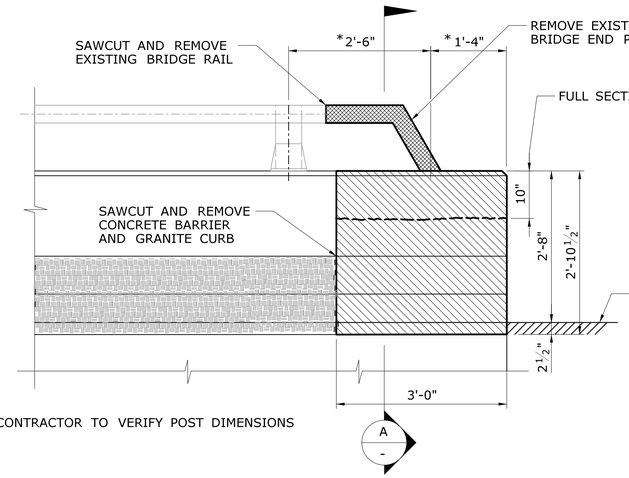

* - CONTRACTOR TO VERIFY POST DIMENSIONS

ELEVATION

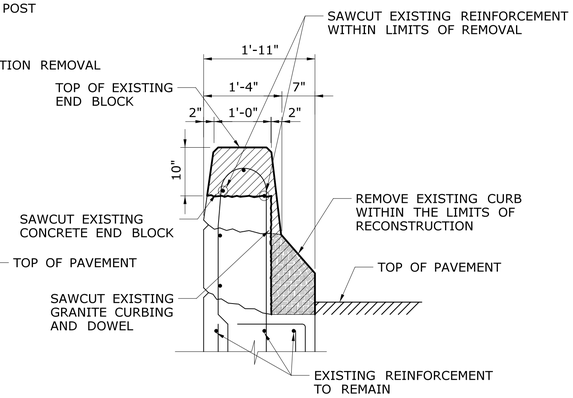

SECTION A

EXISTING

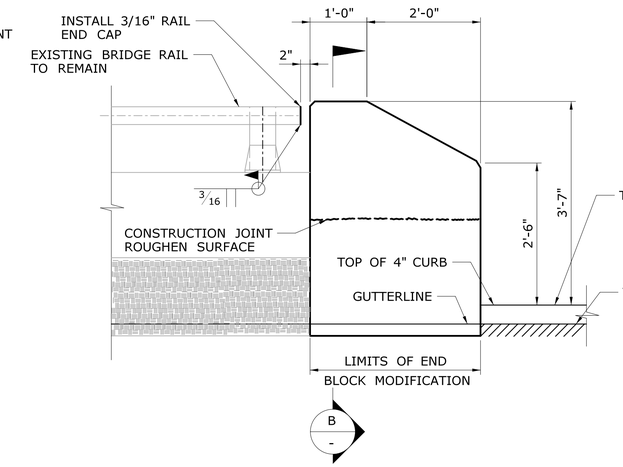

ELEVATION

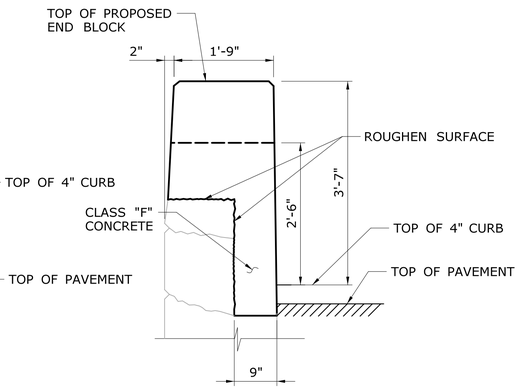

SECTION B

PROPOSED

END BLOCK MODIFICATION DETAILS AT LEADING END

SCALE: 3/4" = 1'-0"

NOTES

1. SAW CUTTING AND REMOVAL OF EXISTING GRANITE CURBING TO BE INCLUDED UNDER THE ITEM "REMOVAL OF EXISTING MASONRY".
2. ALL REINFORCEMENT SHALL BE EPOXY COATED AND PAID FOR UNDER THE ITEM "DEFORMED STEEL BARS - EPOXY COATED".
3. ALL SAW CUTTING IS TO BE PAID FOR UNDER THE ITEM "REMOVAL OF EXISTING MASONRY"
4. MINIMUM EMBEDMENT DEPTH SHOWN FOR GROUTING OF REINFORCEMENT IS PER KELKEN CONSTRUCTION SYSTEMS AND SHALL BE PER MANUFACTURER RECOMMENDATIONS OR APPROVED EQUAL.
5. WELDING OF THE ALUMINUM BRIDGE RAIL SHALL BE PER THE LATEST EDITION OF A.W.S. WELDING CODE D1.2.

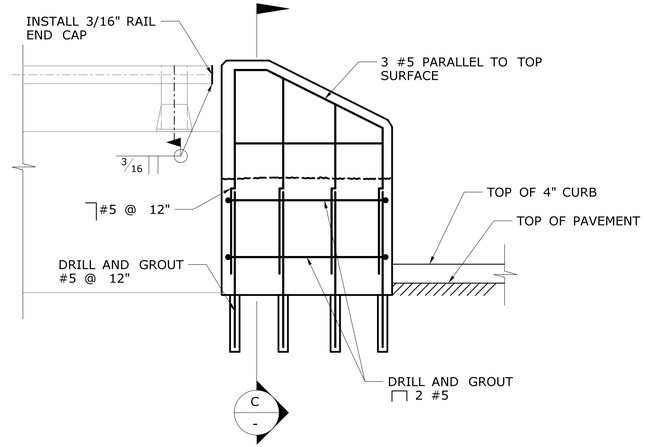

PROPOSED ELEVATION

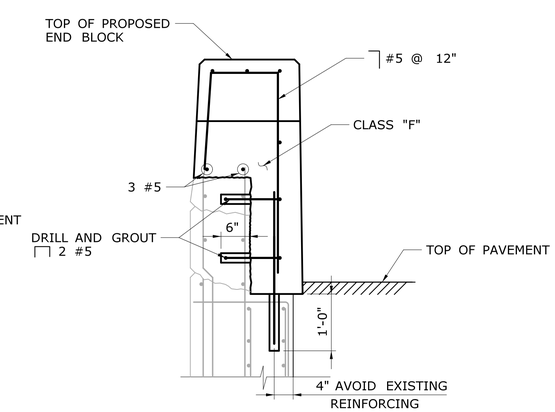

PROPOSED SECTION C

END BLOCK REINFORCEMENT AT LEADING END

SCALE: 3/4" = 1'-0"

LEGEND

- LIMITS OF CONCRETE AND GRANITE CURB REMOVAL TO BE PAID FOR UNDER THE ITEM "REMOVAL OF EXISTING MASONRY"
- LIMITS OF BRIDGE RAIL REMOVAL AND REINSTALLATION OF RAIL CAP TO BE PAID FOR UNDER THE ITEM "REMOVAL OF EXISTING MASONRY"

REV.	DATE	REVISION DESCRIPTION	SHEET NO.
-	-	-	-
-	-	-	-
-	-	-	-
-	-	-	-
-	-	-	-
-	-	-	-

THE INFORMATION, INCLUDING ESTIMATED QUANTITIES OF WORK, SHOWN ON THESE SHEETS IS BASED ON LIMITED INVESTIGATIONS BY THE STATE AND IS IN NO WAY WARRANTED TO INDICATE THE CONDITIONS OF ACTUAL QUANTITIES OF WORK WHICH WILL BE REQUIRED.

Plotted Date: 3/11/2014

DESIGNER/DRAFTER: **D.A.S., A.M.**

CHECKED BY: **R. SALEH**

SCALE AS NOTED

STATE OF CONNECTICUT
DEPARTMENT OF TRANSPORTATION

Filename: ..\SB_MSH_Br06173_104_164_END.dgn

SIGNATURE/
BLOCK:

PROJECT TITLE:
INTERSTATE 95 RESURFACING AND SAFETY IMPROVEMENTS

TOWN: **OLD LYME**

DRAWING TITLE:
BRIDGE NO. 06173 END BLOCK MODIFICATIONS

PROJECT NO. **104-164**

DRAWING NO. **S-2**

SHEET NO. **05.03**

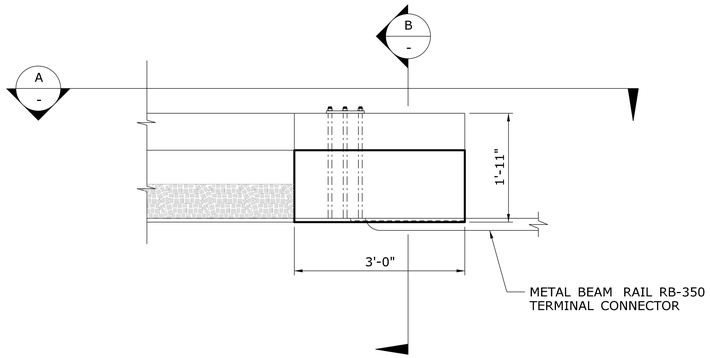

PLAN

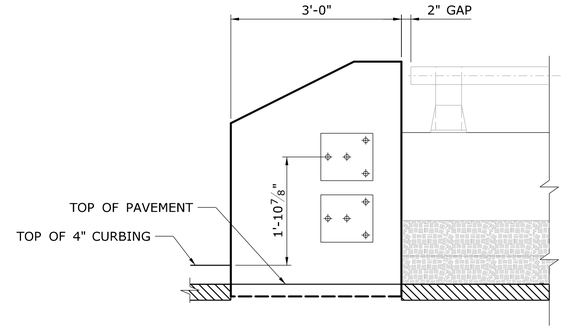

SECTION A

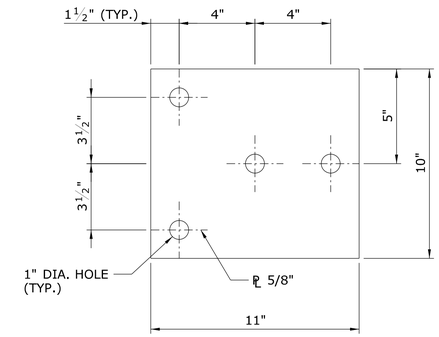

ANCHOR PLATE DETAIL

SCALE: 3" = 1'-0"

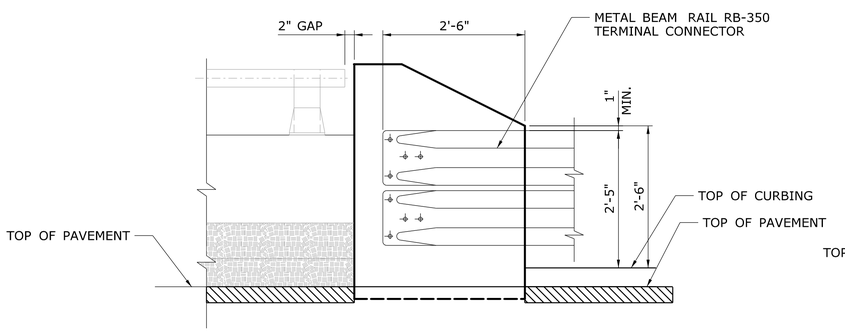

ELEVATION

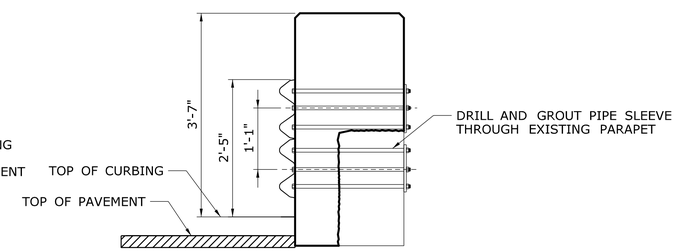

SECTION B

LEADING END RB-350 ATTACHMENT

SCALE: 3/4" = 1'-0"

NOTES

1. 1" DIA. PIPE SHALL CONFORM TO ASTM GR B OR ASTM A501.
2. ALL STEEL MATERIALS INCLUDING THE ANCHOR PLATE, 1" PIPE SLEEVE AND THE 7/8" DIA. BOLTS, NUTS, AND WASHERS SHALL BE IN ACCORDANCE WITH THE REQUIREMENTS OF ASTM A123.
3. RAIL HEIGHT SHALL BE TAKEN FROM TOP OF CURBING WHEN APPLICABLE. IF CURBING DOES NOT EXIST, THEN THE RAIL HEIGHT SHALL BE TAKEN FROM TOP OF PAVEMENT.

REV.	DATE	REVISION DESCRIPTION	SHEET NO.
-	-	-	-
-	-	-	-
-	-	-	-
-	-	-	-
-	-	-	-
-	-	-	-

THE INFORMATION, INCLUDING ESTIMATED QUANTITIES OF WORK, SHOWN ON THESE SHEETS IS BASED ON LIMITED INVESTIGATIONS BY THE STATE AND IS IN NO WAY WARRANTED TO INDICATE THE CONDITIONS OF ACTUAL QUANTITIES OF WORK WHICH WILL BE REQUIRED.

Plotted Date: 3/12/2014

DESIGNER/DRAFTER: D.A.S., A.M.

CHECKED BY: R. SALEH

SCALE AS NOTED

STATE OF CONNECTICUT
DEPARTMENT OF TRANSPORTATION

Filename: ...\SB_MSH_Br06173_104_164_MBR.dgn

SIGNATURE/
BLOCK:

PROJECT TITLE:
INTERSTATE 95
RESURFACING AND SAFETY
IMPROVEMENTS

TOWN: OLD LYME

DRAWING TITLE:
BRIDGE NO. 06173 MBR
ATTACHMENT DETAILS

PROJECT NO. 104-164

DRAWING NO. S-3

SHEET NO. 05.04

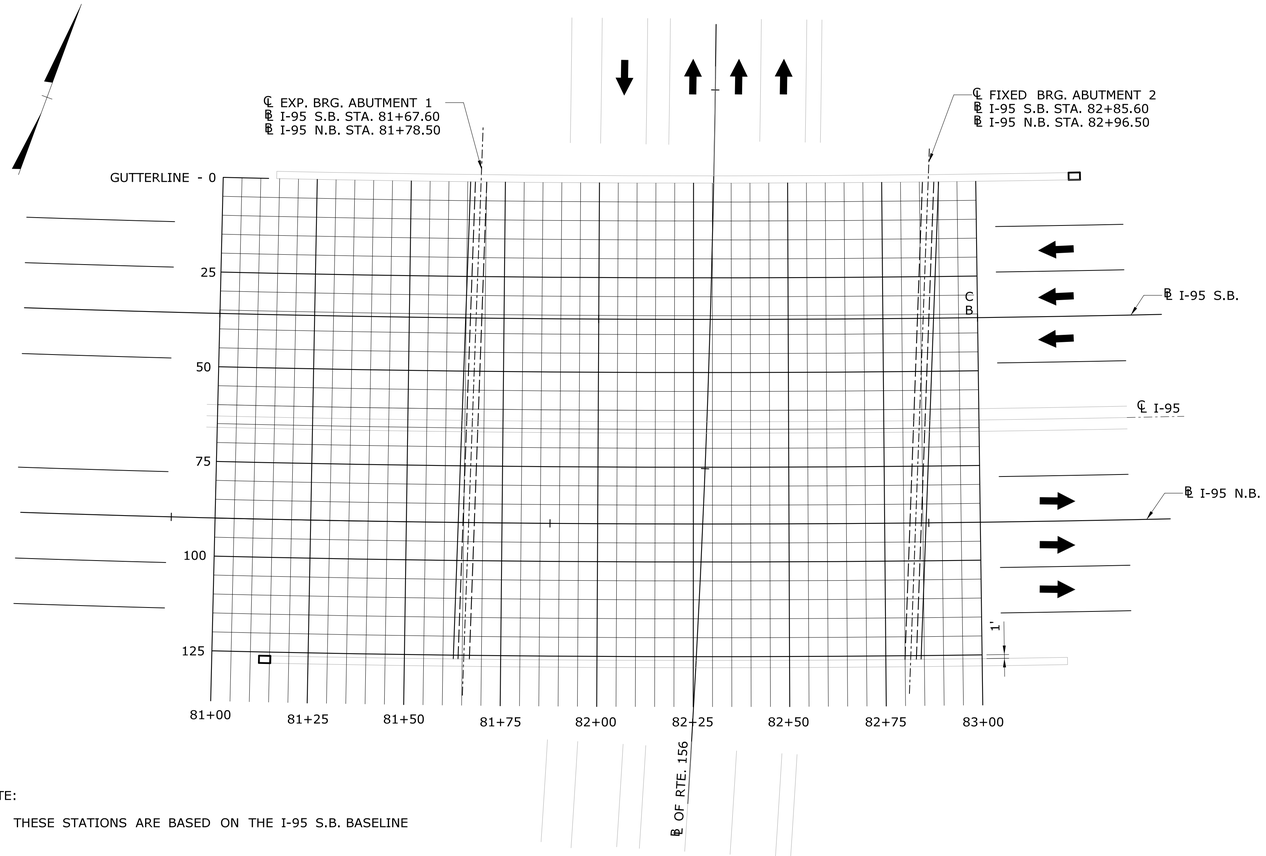

NOTE:

- THESE STATIONS ARE BASED ON THE I-95 S.B. BASELINE

BRIDGE NO. 06173 PLAN

SCALE: 1" = 20'

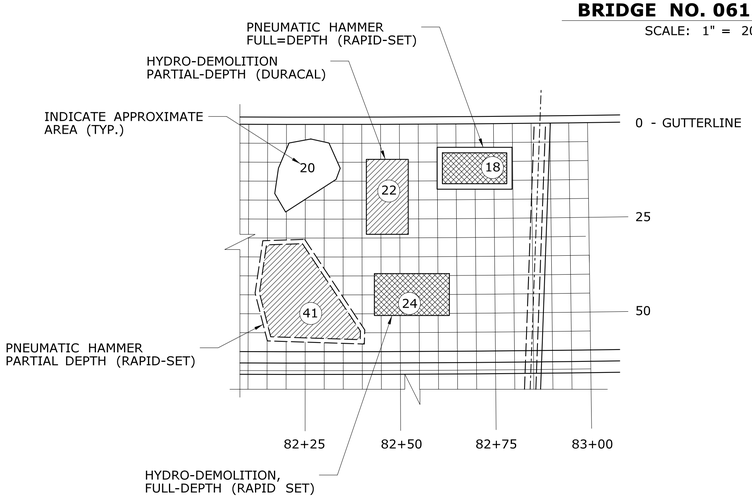

EXAMPLE PLAN

GENERAL NOTES

THIS SHEET IS FOR INFORMATION ONLY AND IS TO BE COMPLETED BY THE ENGINEER ON A FULL SIZE PAPER COPY OF THIS DRAWING. THE COMPLETED DRAWING SHALL BE FORWARDED TO THE MANAGER OF BRIDGE SAFETY AND EVALUATION.

THE ENGINEER SHALL INDICATE THE FOLLOWING:

- THE BEGINNING AND COMPLETION DATE OF REPAIRS.
- THE LIMITS OF EXISTING AND FINISHED PATCHED DECK AREAS ON THE PLAN USING THE PATTERN SHOWN IN THE DECK PATCHING LEGEND (SEE EXAMPLE PLAN).
- THE APPROXIMATE PERCENTAGE OF TOTAL DECK AREA REPAIRED WITH PARTIAL AND FULL-DEPTH PATCHES.
- THE FINAL QUANTITIES OF PARTIAL AND FULL-DEPTH PATCHING MATERIAL USED IN THE DECK REPAIRS.
- THE METHOD AND LIMITS OF REMOVAL OF THE DETERIORATED CONCRETE, IE. PNEUMATIC HAMMER OR HYDRO-DEMOLITION AS INDICATED ON THE DECK PLAN (SEE EXAMPLE PLAN).
- THE BRAND OF PATCHING MATERIAL USED AT EACH LOCATION ON THE DECK (DURACAL, CLASS "F" CONCRETE, ETC.) AS SHOWN IN THE EXAMPLE PLAN

DECK PATCHING LEGEND

- EXISTING PATCHED AREA (FULL DEPTH AND PARTIAL DEPTH) APPROXIMATE % OF TOTAL DECK AREA =
- DENOTES THE LIMITS OF REMOVAL BY HYDRO-DEMOLITION, REPLACE WITH PARTIAL-DEPTH PATCH
- DENOTES THE LIMITS OF REMOVAL BY PNEUMATIC HAMMER, REPLACE WITH PERTIAL-DEPTH PATCH
- DENOTES THE LIMITS OF REMOVAL BY HYDRO-DEMOLITION, REPLACE WITH FULL-DEPTH PATCH
- DENOTES THE LIMITS OF REMOVAL BY PNEUMATIC HAMMER, REPLACE WITH FULL-DEPTH PATCH

PERCENTAGES AND QUANTITIES

DATES	START OF REPAIRS		
	COMPLETION OF REPAIRS		
PARTIAL DEPTH PATCH		%	QUANTITY
HYDRO-DEMOLITION			
PNEUMATIC HAMMER			
TOTALS			

FULL DEPTH PATCH	%	QUANTITY
HYDRO-DEMOLITION		
PNEUMATIC HAMMER		
TOTALS		

INSPECTOR COMMENTS

REV.	DATE	REVISION DESCRIPTION	SHEET NO.
-	-	-	-
-	-	-	-
-	-	-	-
-	-	-	-
-	-	-	-
-	-	-	-

THE INFORMATION, INCLUDING ESTIMATED QUANTITIES OF WORK, SHOWN ON THESE SHEETS IS BASED ON LIMITED INVESTIGATIONS BY THE STATE AND IS IN NO WAY WARRANTED TO INDICATE THE CONDITIONS OF ACTUAL QUANTITIES OF WORK WHICH WILL BE REQUIRED.

Plotted Date: 3/11/2014

DESIGNER/DRAFTER: D. SCHMALTZ
CHECKED BY: R. SALEH
SCALE AS NOTED

STATE OF CONNECTICUT
DEPARTMENT OF TRANSPORTATION

Filename: ..\SB_MSH_Br06173_104_164_PATCH.dgn

SIGNATURE/
BLOCK:

PROJECT TITLE:
INTERSTATE 95
RESURFACING AND SAFETY
IMPROVEMENTS

TOWN: OLD LYME

DRAWING TITLE:
BRIDGE NO. 06173
DECK PATCHINIG PLAN

PROJECT NO. 104-164
DRAWING NO. S-4
SHEET NO. 05.05

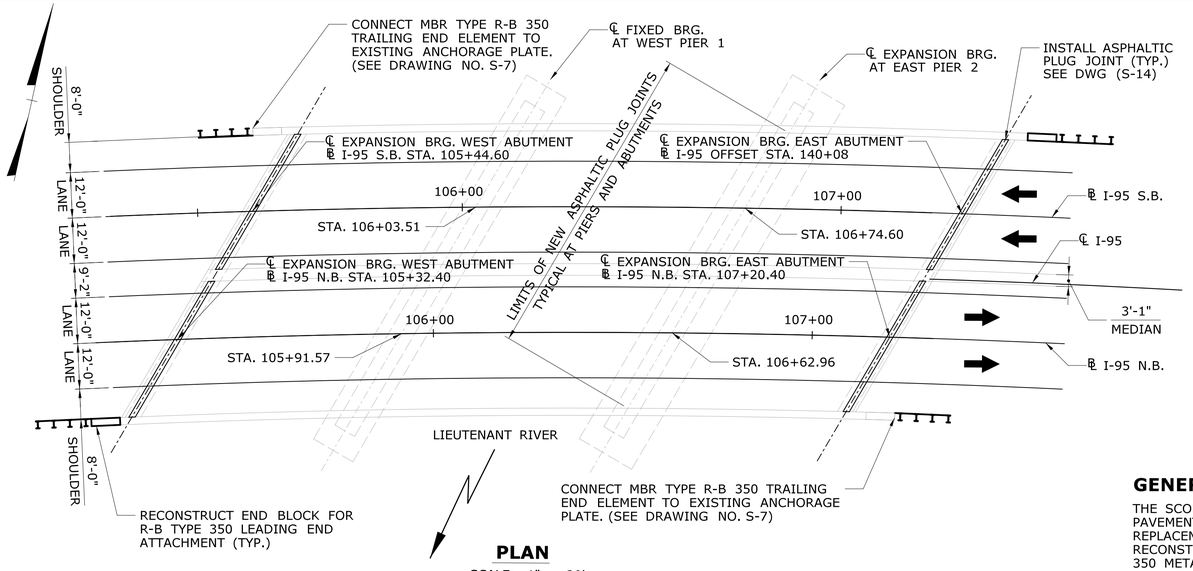

PLAN

SCALE: 1" = 20'

QUANTITIES

ITEM	UNIT	QUANTITY
REMOVAL OF HMA WEARING SURFACE	S.Y.	1600
PMA S0.5	TON	180
PMA S0.25	TON	90
ASPHALTIC PLUG EXPANSION JOINT SYSTEM	C.F.	70
CLASS "F" CONCRETE	C.Y.	2
FULL DEPTH PATCH (HIGH EARLY STRENGTH CONCRETE)	C.Y.	4
PARTIAL DEPTH PATCH	C.F.	280
DEFORMED STEEL BARS - EPOXY COATED	LBS.	200
DRILLING AND GROUTING REINFORCING BARS	L.F.	32
MEMBRANE WATERPROOFING (WOVEN GLASS FABRIC)	S.Y.	1650
REMOVAL OF EXISTING MASONRY	C.Y.	2

INDEX OF DRAWINGS

DRAWING TITLE	DRAWING NO.
GENERAL PLAN, SECTION	S-5
END BLOCK MODIFICATIONS	S-6
MBR ATTACHMENT DETAILS	S-7
DECK PATCHING PLAN	S-8

GENERAL DESCRIPTION OF WORK

THE SCOPE OF WORK FOR THIS BRIDGE INCLUDES REMOVAL OF EXISTING PAVEMENT, DECK PATCHING, NEW MEMBRANE WATERPROOFING, NEW PMA OVERLAY, REPLACEMENT OF EXISTING ASPHALTIC PLUG EXPANSION JOINTS, AND RECONSTRUCTION OF EXISTING LEADING END BLOCKS TO ACCOMMODATE NEW R-B 350 METAL BEAM RAIL.

GENERAL NOTES

SPECIFICATIONS: CONNECTICUT DEPARTMENT OF TRANSPORTATION FORM 816 (2004) INCLUDING SUPPLEMENTAL SPECIFICATIONS DATED JULY 2013 AND SPECIAL PROVISIONS.

DESIGN SPECIFICATIONS: AASHTO LRFD BRIDGE DESIGN SPECIFICATIONS - 6TH EDITION, 2012 WITH INTERIM SPECIFICATIONS AND AS SUPPLEMENTED BY THE CONNECTICUT DEPARTMENT OF TRANSPORTATION BRIDGE DESIGN MANUAL (2003).

ALLOWABLE DESIGN STRESSES:

CLASS "F" CONCRETE — BASED ON f'c = 4000 PSI

REINFORCEMENT (ASTM A615 GRADE 60) — BASED ON fy = 60000 PSI

LIVE LOAD: HL-93

FUTURE PAVING ALLOWANCE: NONE

PMA OVERLAY: THIS SHALL CONSIST OF TWO LIFTS. THE FIRST LIFT SHALL BE PMA S0.25 (1 INCH THICK) AND THE SECOND LIFT SHALL BE PMA S0.5 (2 INCHES THICK).

DIMENSIONS: ALL DIMENSIONS SHOWN ON THE PLANS ARE IN FEET UNLESS OTHERWISE NOTED. ALL ELEVATIONS ARE GIVEN IN FEET. WHEN ELEVATIONS ARE GIVEN TO LESS THAN THREE DECIMAL PLACES, THE OMITTED DIGITS SHALL BE ASSUMED TO BE ZERO.

EXISTING DIMENSIONS: DIMENSIONS OF THE EXISTING STRUCTURE SHOWN ON THESE PLANS ARE FOR GENERAL REFERENCE ONLY. THEY HAVE BEEN TAKEN FROM THE ORIGINAL DESIGN DRAWINGS AND ARE NOT GUARANTEED. THE CONTRACTOR SHALL TAKE ALL FIELD MEASUREMENTS NECESSARY TO ASSURE PROPER FIT OF THE FINISHED WORK AND SHALL ASSUME FULL RESPONSIBILITY FOR THEIR ACCURACY. WHEN SHOP DRAWINGS BASED ON FIELD MEASUREMENTS ARE SUBMITTED FOR APPROVAL, THE FIELD MEASUREMENTS SHALL ALSO BE SUBMITTED FOR REFERENCE BY THE REVIEWER.

DECK REPAIRS: THE DECK SLAB SHALL BE SOUNDED AND REPAIRED ACCORDINGLY PRIOR TO THE PLACEMENT OF NEW PAVEMENT. THERE ARE NO RECORDS OF GROUND PENETRATION RADAR (GPR), CHLORIDE SAMPLING, OR ANY OTHER NON DESTRUCTIVE TESTING DONE ON THE EXISTING DECK SLAB TO DETERMINE THE LEVEL OF DETERIORATION. THE PARTIAL DEPTH PATCH AND FULL DEPTH PATCH QUANTITIES WERE BASED ON THE CONDITION OF THE UNDERSIDE OF THE DECK AS STATED IN THE BRIDGE INSPECTION REPORT DATED 03/20/2012, SEE DRAWING NO. S-13.

DECK PROTECTION: THIS BRIDGE HAS A CATHODIC DECK PROTECTION SYSTEM INSTALLED. THE SYSTEM IS NOT ACTIVATED AND WILL NOT BE ACTIVATED IN THE FUTURE, THEREFORE, THERE IS NO NEED TO PROTECT ANY PART OF THE SYSTEM DURING DECK PATCHING.

CONCRETE NOTES

REMAIN-IN-PLACE FORMS: THE USE OF REMAIN-IN-PLACE FORMS ON THIS STRUCTURE IS NOT ALLOWED.

COMPOSITE CONSTRUCTION: NO TEMPORARY INTERMEDIATE SUPPORTS SHALL BE USED DURING THE PLACING AND SETTING OF THE CONCRETE DECK SLAB.

CLASS "F" CONCRETE: CLASS "F" CONCRETE SHALL BE USED FOR THE END BLOCK ATTACHMENTS OF MBR TYPE R-B 350.

JOINT SEAL: SEE SPECIAL PROVISIONS.

EXPOSED EDGES: EXPOSED EDGES OF CONCRETE SHALL BE BEVELED 1" x 1" UNLESS DIMENSIONED OTHERWISE.

CONCRETE COVER: ALL REINFORCEMENT SHALL HAVE TWO INCHES COVER UNLESS DIMENSIONED OTHERWISE.

REINFORCEMENT: ALL REINFORCEMENT SHALL BE ASTM A615 GRADE 60.

EPOXY COATED REINFORCING BARS: ALL REINFORCEMENT SHALL BE EPOXY COATED. THESE BARS SHALL BE INCLUDED IN THE PAY ITEM "DEFORMED STEEL BARS - EPOXY COATED".

PREFORMED EXPANSION JOINT FILLER: THE COST OF FURNISHING AND INSTALLING PREFORMED EXPANSION JOINT FILLER SHALL BE INCLUDED UNDER THE COST OF THE ITEMS CLASS "F" CONCRETE.

CONSTRUCTION JOINTS: CONSTRUCTION JOINTS, OTHER THAN THOSE SHOWN ON THE PLANS, WILL NOT BE PERMITTED WITHOUT THE PRIOR APPROVAL OF THE ENGINEER.

INSPECTION OF FIELD WELDS

METHOD	UNIT	QUANTITY
ULTRASONIC	IN	0
MAGNETIC PARTICLE	FT	0

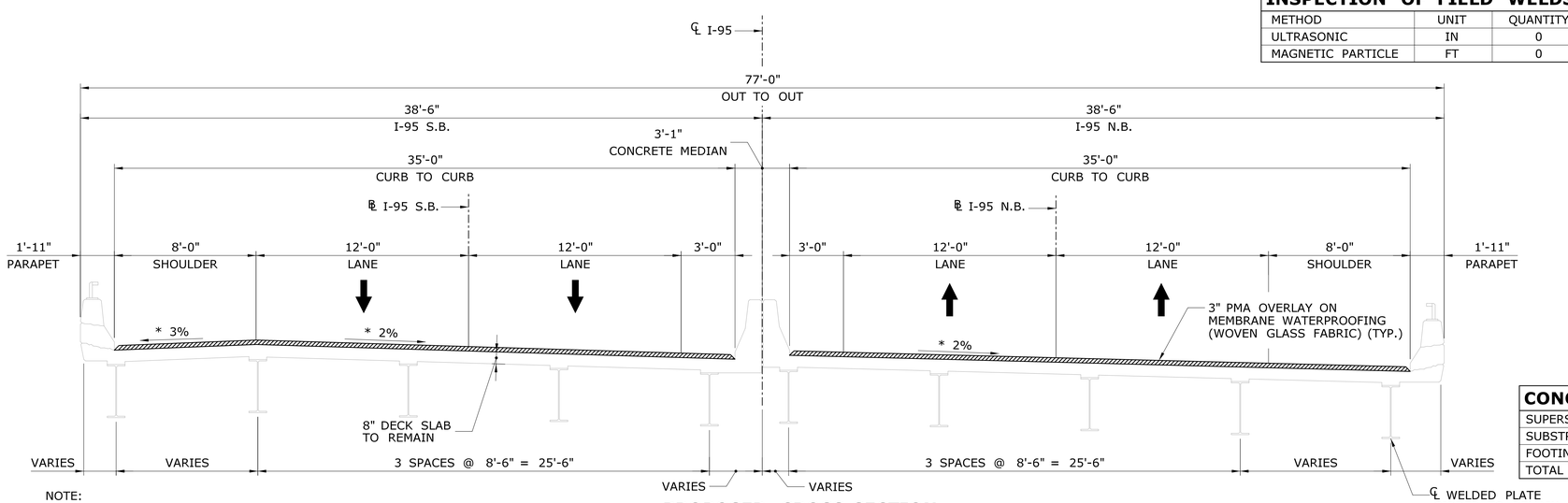

NOTE:

- WHEN EXISTING OVERLAY IS REMOVED, REPAIRS SHALL BE MADE TO THE DECK AREA AS DIRECTED BY THE ENGINEER.

PROPOSED CROSS-SECTION

SCALE: 1/4" = 1'-0"

* - MATCH EXISTING CROSS SLOPES

CONCRETE DISTRIBUTION

SUPERSTRUCTURE	15	C.Y.
SUBSTRUCTURE	2	C.Y.
FOOTINGS	0	C.Y.
TOTAL	17	C.Y.

NOTICE TO BRIDGE INSPECTORS

THE DEPARTMENT'S BRIDGE SAFETY PROCEDURES REQUIRE THIS BRIDGE TO BE INSPECTED FOR, BUT NOT LIMITED TO, ALL APPROPRIATE COMPONENTS INDICATED IN THE GOVERNING MANUALS FOR BRIDGE INSPECTION. ATTENTION MUST BE GIVEN TO INSPECTING THE FOLLOWING SPECIAL COMPONENTS AND DETAILS. (THE LISTING OF COMPONENTS FOR SPECIFIC ATTENTION SHALL NOT BE CONSTRUED TO REDUCE THE IMPORTANCE OF INSPECTION OF ANY OTHER COMPONENT OF THE STRUCTURE). THE FREQUENCY OF INSPECTION OF THIS STRUCTURE SHALL BE IN ACCORDANCE WITH THE GOVERNING MANUALS FOR BRIDGE INSPECTION, UNLESS OTHERWISE DIRECTED BY THE MANAGER OF BRIDGE SAFETY AND EVALUATION.

COMPONENTS OR DETAILS	BRIDGE SHEET REFERENCE
NONE	NONE

TRANSPORTATION DIMENSIONS AND WEIGHT

MEMBER	SHIPPING LENGTH	SHIPPING HEIGHT	SHIPPING WEIGHT
-	-	-	-

REV.	DATE	REVISION DESCRIPTION	SHEET NO.
-	-	-	-
-	-	-	-
-	-	-	-
-	-	-	-
-	-	-	-
-	-	-	-

THE INFORMATION, INCLUDING ESTIMATED QUANTITIES OF WORK, SHOWN ON THESE SHEETS IS BASED ON LIMITED INVESTIGATIONS BY THE STATE AND IS IN NO WAY WARRANTED TO INDICATE THE CONDITIONS OF ACTUAL QUANTITIES OF WORK WHICH WILL BE REQUIRED.

Plotted Date: 4/3/2014

DESIGNER/DRAFTER: D.A.S., A.M.
CHECKED BY: R. SALEH
SCALE AS NOTED

STATE OF CONNECTICUT
DEPARTMENT OF TRANSPORTATION

Filename: ...\SB_MSH_Br06032_104_164_GPE.dgn

SIGNATURE/ BLOCK:

PROJECT TITLE: INTERSTATE 95 RESURFACING AND SAFETY IMPROVEMENTS

TOWN: OLD LYME

DRAWING TITLE: BRIDGE NO. 06032 GENERAL PLAN, SECTION

PROJECT NO. 104-164
DRAWING NO. S-5
SHEET NO. 05.06

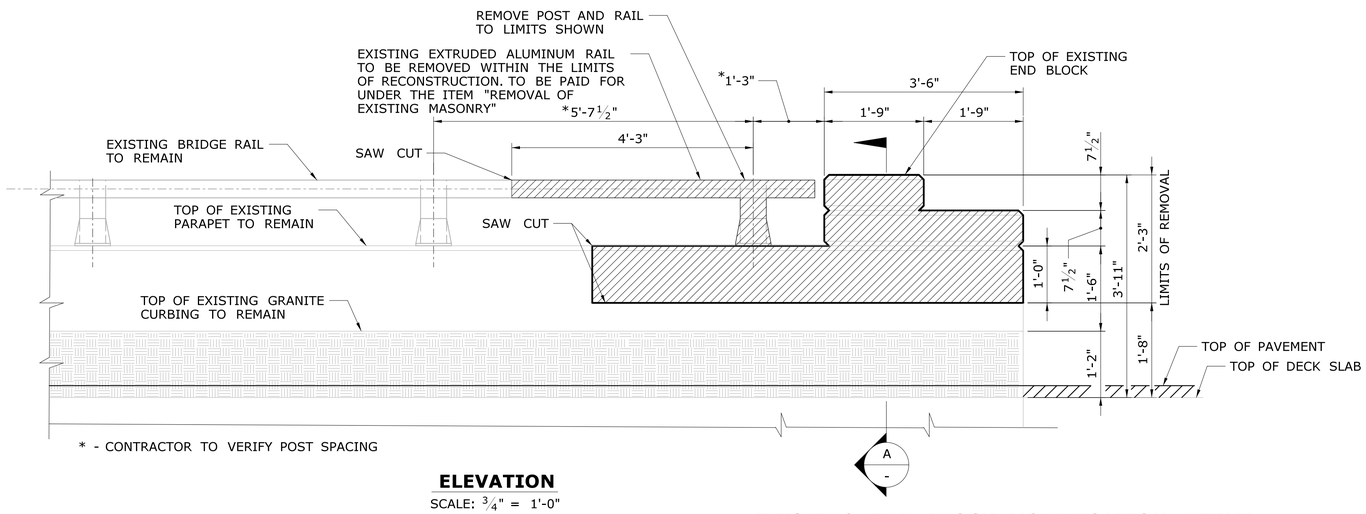

* - CONTRACTOR TO VERIFY POST SPACING

ELEVATION

SCALE: ¾" = 1'-0"

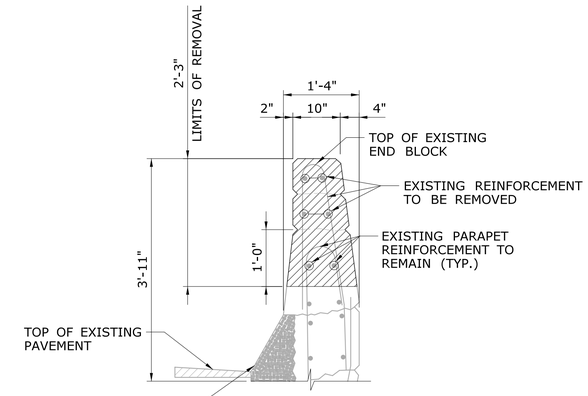

SECTION A

SCALE: ¾" = 1'-0"

EXISTING END BLOCK MODIFICATION DETAIL AT LEADING END

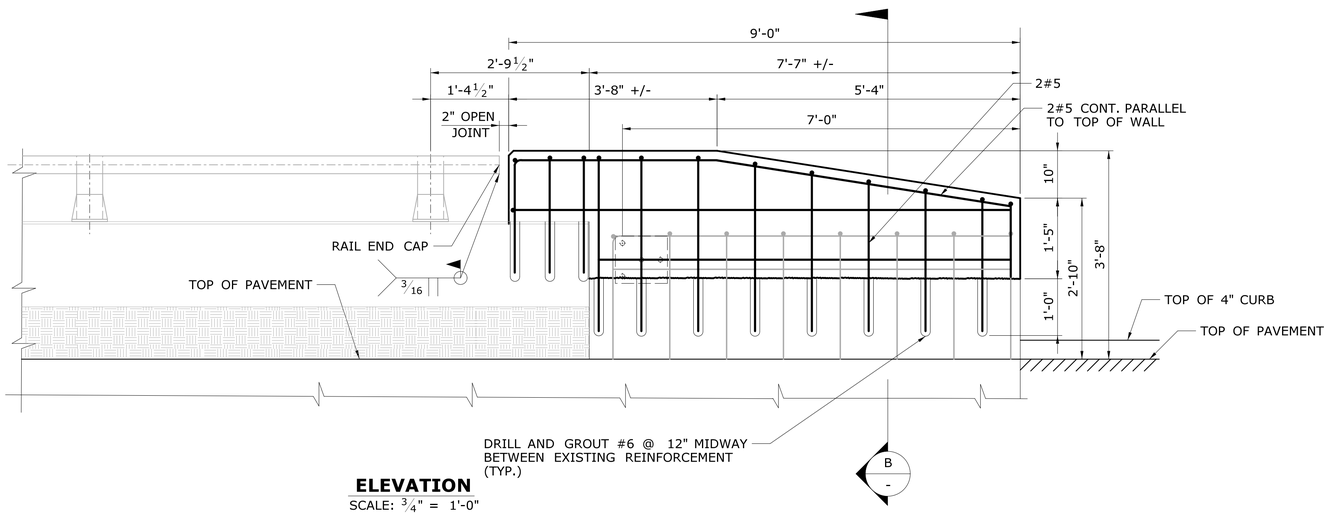

ELEVATION

SCALE: ¾" = 1'-0"

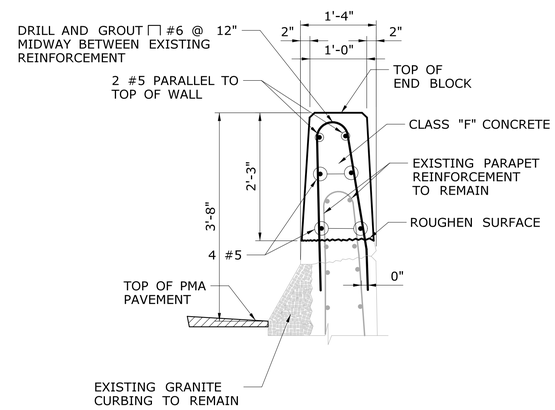

SECTION B

SCALE: ¾" = 1'-0"

PROPOSED END BLOCK REINFORCEMENT AT LEADING END

NOTES

1. REMOVE NEW BITUMINOUS CONCRETE OVERLAY AND MEMBRANE WATERPROOFING, REPLACE WITH ASPHALTIC PLUG EXPANSION JOINT SYSTEM. TO BE PAID FOR UNDER THE ITEM "ASPHALTIC PLUG EXPANSION JOINT SYSTEM". (SEE SPECIAL PROVISION).
2. MINIMUM EMBEDMENT DEPTH SHOWN FOR GROUTING OF REINFORCEMENT IS PER KELKEN CONSTRUCTION SYSTEMS AND SHALL BE PER MANUFACTURER RECOMMENDATIONS OR APPROVED EQUAL.
3. WELDING OF THE ALUMINUM BRIDGE RAIL SHALL BE PER A.W.S. WELDING CODE D1.2.

LEGEND

- LIMITS OF CONCRETE REMOVAL TO BE PAID FOR UNDER THE ITEM "REMOVAL OF EXISTING MASONRY"
- LIMITS OF BRIDGE RAIL REMOVAL AND RESET OF RAIL POST TO BE PAID FOR UNDER THE ITEM "REMOVAL OF EXISTING MASONRY"

REV.	DATE	REVISION DESCRIPTION	SHEET NO.
-	-	-	-
-	-	-	-
-	-	-	-
-	-	-	-
-	-	-	-
-	-	-	-

THE INFORMATION, INCLUDING ESTIMATED QUANTITIES OF WORK, SHOWN ON THESE SHEETS IS BASED ON LIMITED INVESTIGATIONS BY THE STATE AND IS IN NO WAY WARRANTED TO INDICATE THE CONDITIONS OF ACTUAL QUANTITIES OF WORK WHICH WILL BE REQUIRED.

Plotted Date: 3/11/2014

DESIGNER/DRAFTER: **D.A.S., A.M.**

CHECKED BY: **R. SALEH**

SCALE AS NOTED

STATE OF CONNECTICUT
DEPARTMENT OF TRANSPORTATION

Filename: ...\SB_MSH_Br06032_104_164_END.dgn

SIGNATURE/ BLOCK:

PROJECT TITLE:

INTERSTATE 95 RESURFACING AND SAFETY IMPROVEMENTS

TOWN: **OLD LYME**

DRAWING TITLE: **BRIDGE NO. 06032 END BLOCK MODIFICATION**

PROJECT NO. **104-164**

DRAWING NO. **S-6**

SHEET NO. **05.07**

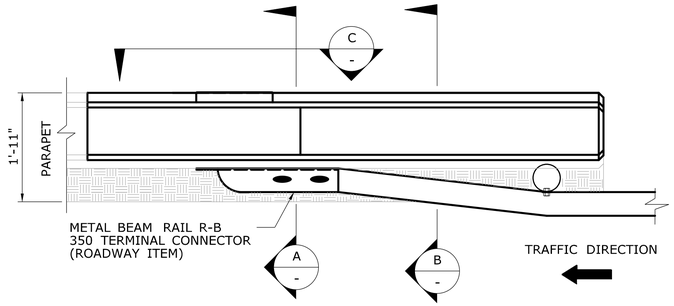

PLAN

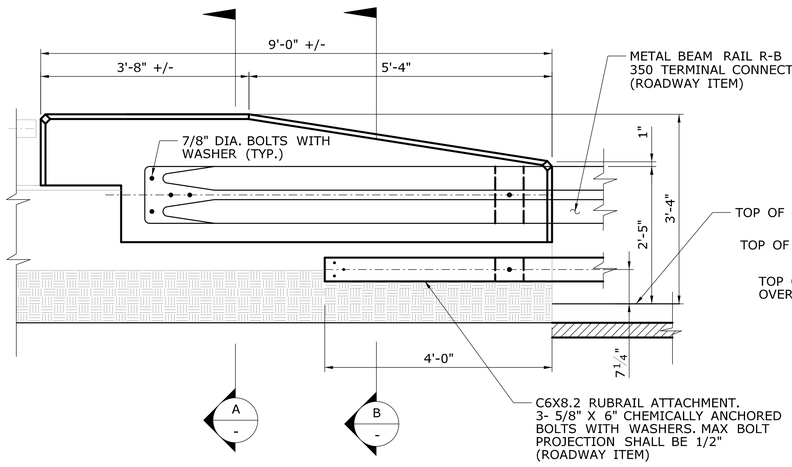

ELEVATION

LEADING END R-B 350 RAIL ATTACHMENT

SCALE: ¾" = 1'-0"

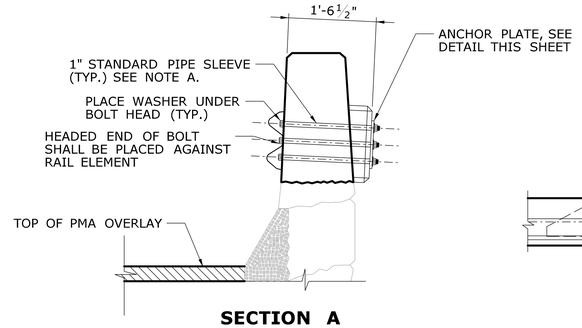

SECTION A

NOTE A: 1" DIA. PIPE SLEEVE SHALL CONFORM TO ASTM A53 AND SHALL BE GALVANIZED IN ACCORDANCE WITH THE REQUIREMENTS OF ASTM A123.

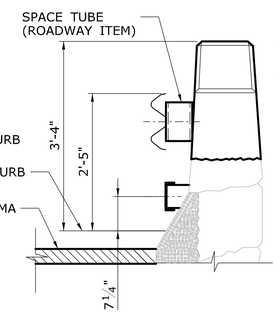

SECTION B

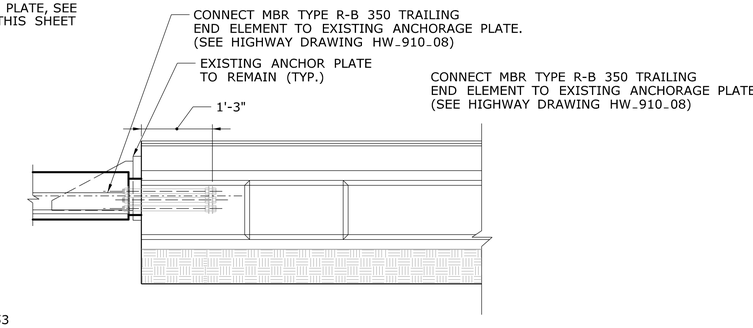

PLAN

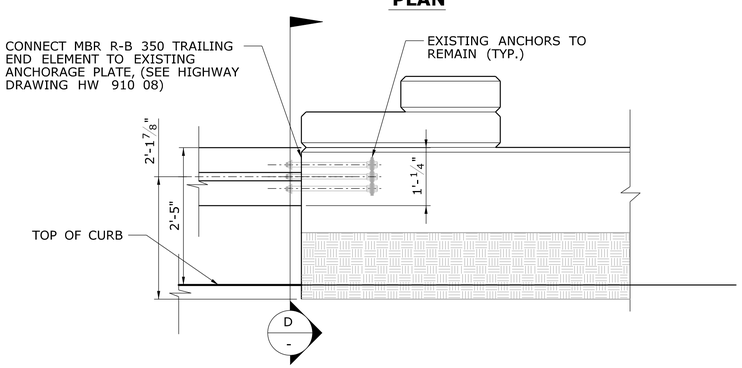

ELEVATION

TRAILING END R-B 350 RAIL ATTACHMENT

SCALE: ¾" = 1'-0"

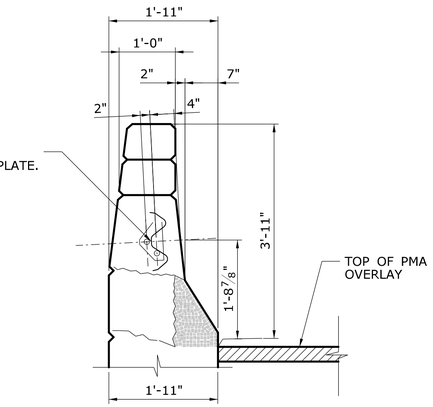

SECTION D

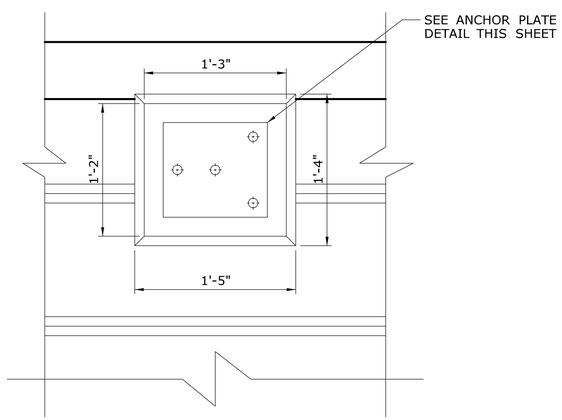

VIEW C

SCALE: 1½" = 1'-0"

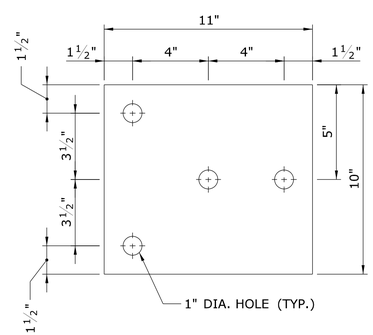

ANCHOR PLATE DETAIL

SCALE: 3" = 1'-0"

NOTES

1. 1" DIA. PIPE SHALL CONFORM TO ASTM GR B OR ASTM A501.
2. ALL STEEL MATERIALS INCLUDING THE ANCHOR PLATE, 1" PIPE SLEEVE AND THE 7/8" DIA. BOLTS, NUTS, AND WASHERS SHALL BE IN ACCORDANCE WITH THE REQUIREMENTS OF ASTM A123.
3. RAIL HEIGHT SHALL BE TAKEN FROM TOP OF CURBING WHEN APPLICABLE. IF CURBING DOES NOT EXIST, THEN THE RAIL HEIGHT SHALL BE TAKEN FROM TOP OF PAVEMENT.

REV.	DATE	REVISION DESCRIPTION	SHEET NO.
-	-	-	-
-	-	-	-
-	-	-	-
-	-	-	-
-	-	-	-
-	-	-	-

THE INFORMATION, INCLUDING ESTIMATED QUANTITIES OF WORK, SHOWN ON THESE SHEETS IS BASED ON LIMITED INVESTIGATIONS BY THE STATE AND IS IN NO WAY WARRANTED TO INDICATE THE CONDITIONS OF ACTUAL QUANTITIES OF WORK WHICH WILL BE REQUIRED.

Plotted Date: 3/12/2014

DESIGNER/DRAFTER: **D.A.S., A.M.**

CHECKED BY: **R. SALEH**

SCALE AS NOTED

STATE OF CONNECTICUT
DEPARTMENT OF TRANSPORTATION

Filename: ...\SB_MSH_Br06032_104_164_MBR.dgn

SIGNATURE/
BLOCK:

PROJECT TITLE:
INTERSTATE 95 RESURFACING AND SAFETY IMPROVEMENTS

TOWN: **OLD LYME**

DRAWING TITLE: **BRIDGE NO.06032 MBR ATTACHMENT DETAILS**

PROJECT NO. **104-164**

DRAWING NO. **S-7**

SHEET NO. **05.08**

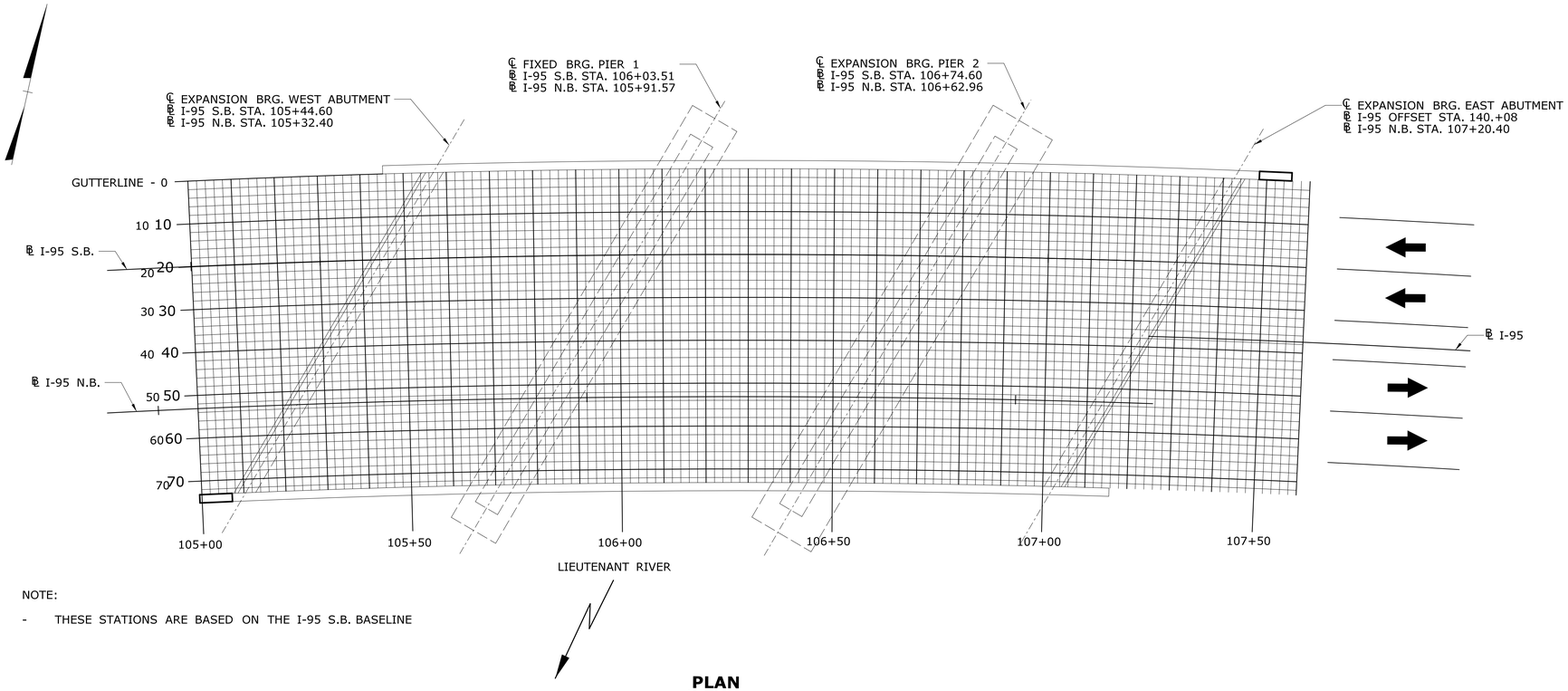

NOTE:

- THESE STATIONS ARE BASED ON THE I-95 S.B. BASELINE

PLAN

SCALE: 1/16" = 1'-0"

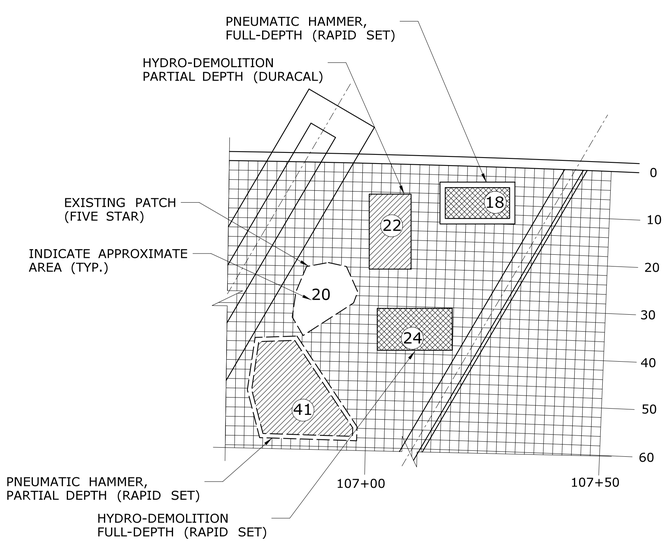

EXAMPLE PLAN

GENERAL NOTES

THIS SHEET IS FOR INFORMATION ONLY AND IS TO BE COMPLETED BY THE ENGINEER ON A FULL SIZE PAPER COPY OF THIS DRAWING. THE COMPLETED DRAWING SHALL BE FORWARDED TO THE MANAGER OF BRIDGE SAFETY AND EVALUATION.

THE ENGINEER SHALL INDICATE THE FOLLOWING:

- THE BEGINNING AND COMPLETION DATE OF REPAIRS.
- THE LIMITS OF EXISTING AND FINISHED PATCHED DECK AREAS ON THE PLAN USING THE PATTERN SHOWN IN THE DECK PATCHING LEGEND (SEE EXAMPLE PLAN).
- THE APPROXIMATE PERCENTAGE OF TOTAL DECK AREA REPAIRED WITH PARTIAL AND FULL-DEPTH PATCHES.
- THE FINAL QUANTITIES OF PARTIAL AND FULL-DEPTH PATCHING MATERIAL USED IN THE DECK REPAIRS.
- THE METHOD AND LIMITS OF REMOVAL OF THE DETERIORATED CONCRETE, IE. PNEUMATIC HAMMER OR HYDRO-DEMOLITION AS INDICATED ON THE DECK PLAN (SEE EXAMPLE PLAN).
- THE BRAND OF PATCHING MATERIAL USED AT EACH LOCATION ON THE DECK (DURACAL, CLASS "F" CONCRETE, ETC.) AS SHOWN IN THE EXAMPLE PLAN

DECK PATCHING LEGEND

- EXISTING PATCHED AREA (FULL DEPTH AND PARTIAL DEPTH) APPROXIMATE % OF TOTAL DECK AREA =
- DENOTES THE LIMITS OF REMOVAL BY HYDRO-DEMOLITION, REPLACE WITH PARTIAL-DEPTH PATCH
- DENOTES THE LIMITS OF REMOVAL BY PNEUMATIC HAMMER, REPLACE WITH PERTIAL-DEPTH PATCH
- DENOTES THE LIMITS OF REMOVAL BY HYDRO-DEMOLITION, REPLACE WITH FULL-DEPTH PATCH
- DENOTES THE LIMITS OF REMOVAL BY PNEUMATIC HAMMER, REPLACE WITH FULL-DEPTH PATCH

PERCENTAGES AND QUANTITIES

DATES	START OF REPAIRS
	COMPLETION OF REPAIRS

PARTIAL DEPTH PATCH	%	QUANTITY
HYDRO-DEMOLITION		
PNEUMATIC HAMMER		
TOTALS		

FULL DEPTH PATCH	%	QUANTITY
HYDRO-DEMOLITION		
PNEUMATIC HAMMER		
TOTALS		

INSPECTOR COMMENTS

REV.	DATE	REVISION DESCRIPTION	SHEET NO.
-	-	-	-
-	-	-	-
-	-	-	-
-	-	-	-
-	-	-	-
-	-	-	-

THE INFORMATION, INCLUDING ESTIMATED QUANTITIES OF WORK, SHOWN ON THESE SHEETS IS BASED ON LIMITED INVESTIGATIONS BY THE STATE AND IS IN NO WAY WARRANTED TO INDICATE THE CONDITIONS OF ACTUAL QUANTITIES OF WORK WHICH WILL BE REQUIRED.

Plotted Date: 3/10/2014

DESIGNER/DRAFTER: D. SCHMALTZ
CHECKED BY: R. SALEH
SCALE AS NOTED

STATE OF CONNECTICUT
DEPARTMENT OF TRANSPORTATION

Filename: ...\SB_MSH_Br06032_104_164_PATCH.dgn

SIGNATURE/
BLOCK:

PROJECT TITLE:
INTERSTATE 95
RESURFACING AND SAFETY
IMPROVEMENTS

TOWN: OLD LYME

DRAWING TITLE:
BRIDGE NO. 06032
DECK PATCHING PLAN

PROJECT NO. 104-164
DRAWING NO. S-8
SHEET NO. 05.09

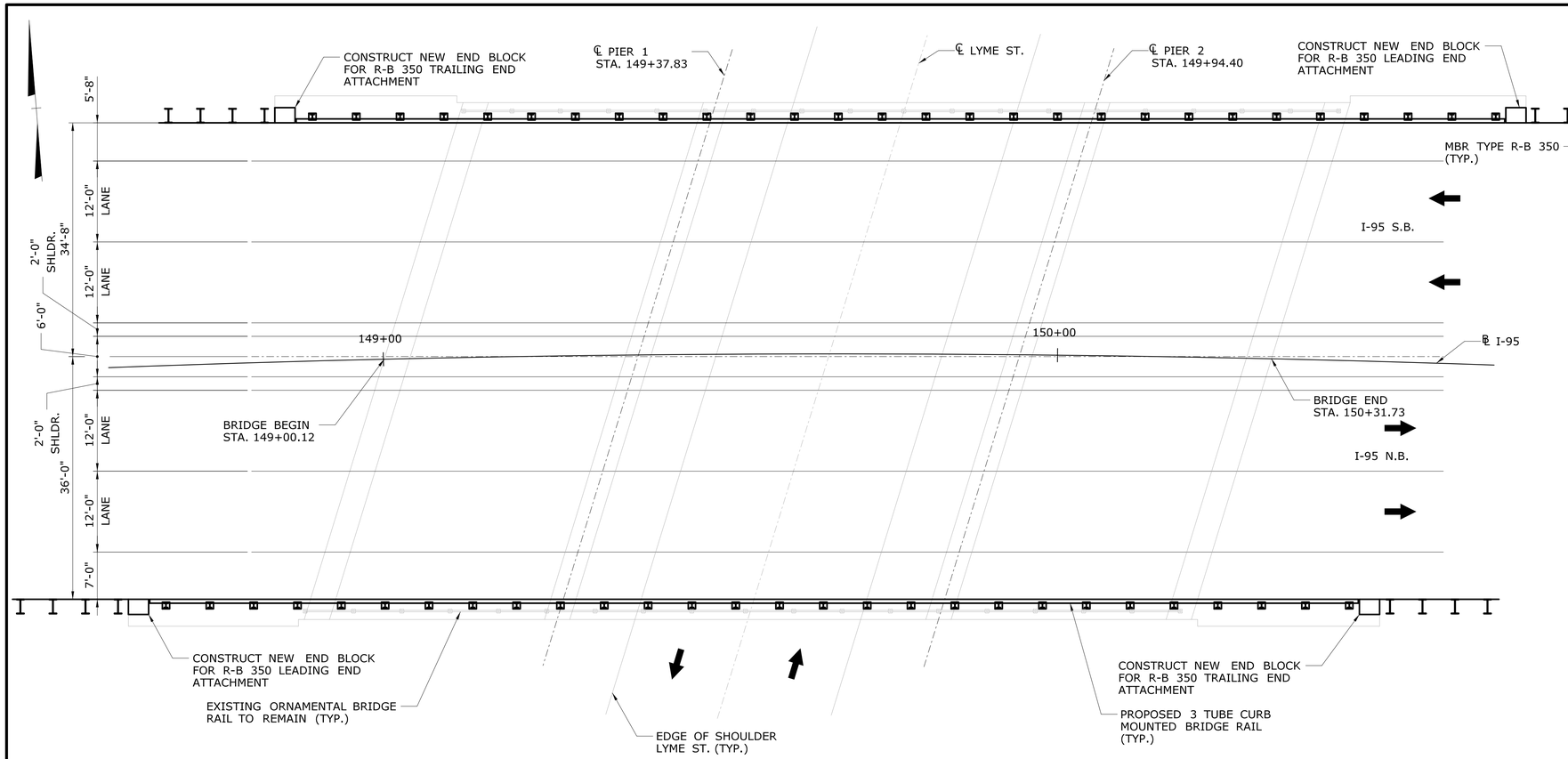

PLAN

SCALE: 1" = 10'

GENERAL NOTES

SPECIFICATIONS: CONNECTICUT DEPARTMENT OF TRANSPORTATION FORM 816 (2004) INCLUDING SUPPLEMENTAL SPECIFICATIONS DATED JULY 2013 AND SPECIAL PROVISIONS.

DESIGN SPECIFICATIONS: AASHTO LRDF BRIDGE DESIGN SPECIFICATIONS - 6TH EDITION, 2012 WITH INTERIM SPECIFICATIONS AND AS SUPPLEMENTED BY THE CONNECTICUT DEPARTMENT OF TRANSPORTATION BRIDGE DESIGN MANUAL (2003).

ALLOWABLE DESIGN STRESSES:

CLASS "F" CONCRETE — BASED ON f'c = 4000 PSI

REINFORCEMENT (ASTM A615 GRADE 60) — BASED ON fy = 60000 PSI

LIVE LOAD: HL-93

DIMENSIONS: ALL DIMENSIONS SHOWN ON THE PLANS ARE IN FEET UNLESS OTHERWISE NOTED. ALL ELEVATIONS ARE GIVEN IN FEET. WHEN ELEVATIONS ARE GIVEN TO LESS THAN THREE DECIMAL PLACES, THE OMITTED DIGITS SHALL BE ASSUMED TO BE ZERO.

EXISTING DIMENSIONS: DIMENSIONS OF THE EXISTING STRUCTURE SHOWN ON THESE PLANS ARE FOR GENERAL REFERENCE ONLY. THEY HAVE BEEN TAKEN FROM THE ORIGINAL DESIGN DRAWINGS AND ARE NOT GUARANTEED. THE CONTRACTOR SHALL TAKE ALL FIELD MEASUREMENTS NECESSARY TO ASSURE PROPER FIT OF THE FINISHED WORK AND SHALL ASSUME FULL RESPONSIBILITY FOR THEIR ACCURACY. WHEN SHOP DRAWINGS BASED ON FIELD MEASUREMENTS ARE SUBMITTED FOR APPROVAL, THE FIELD MEASUREMENTS SHALL ALSO BE SUBMITTED FOR REFERENCE BY THE REVIEWER.

CONCRETE NOTES

REMAIN-IN-PLACE FORMS: THE USE OF REMAIN-IN-PLACE FORMS ON THIS STRUCTURE IS NOT ALLOWED.

CLASS "F" CONCRETE: CLASS "F" CONCRETE SHALL BE USED FOR THE END BLOCK ATTACHMENTS OF MBR TYPE R-B 350.

JOINT SEAL: SEE SPECIAL PROVISIONS.

EXPOSED EDGES: EXPOSED EDGES OF CONCRETE SHALL BE BEVELED 1" x 1" UNLESS DIMENSIONED OTHERWISE.

CONCRETE COVER: ALL REINFORCEMENT SHALL HAVE TWO INCHES COVER UNLESS DIMENSIONED OTHERWISE.

REINFORCEMENT: ALL REINFORCEMENT SHALL BE ASTM A615 GRADE 60.

EPOXY COATED REINFORCING BARS: ALL REINFORCEMENT SHALL BE EPOXY COATED. THESE BARS SHALL BE INCLUDED IN THE PAY ITEM "DEFORMED STEEL BARS - EPOXY COATED".

PREFORMED EXPANSION JOINT FILLER: THE COST OF FURNISHING AND INSTALLING PREFORMED EXPANSION JOINT FILLER SHALL BE INCLUDED UNDER THE COST OF THE ITEMS CLASS "F" CONCRETE.

CONSTRUCTION JOINTS: CONSTRUCTION JOINTS, OTHER THAN THOSE SHOWN ON THE PLANS, WILL NOT BE PERMITTED WITHOUT THE PRIOR APPROVAL OF THE ENGINEER.

GENERAL DESCRIPTION OF WORK

THE SCOPE OF WORK FOR THIS BRIDGE INCLUDES PARTIAL DEPTH MILLING OF EXISTING PAVEMENT AND REPLACING WITH NEW PMA PAVEMENT, REMOVAL OF EXISTING STEEL BRIDGE RAIL, INSTALLATION OF 3 TUBE CURB MOUNTED BRIDGE RAIL, AND CONSTRUCTION OF NEW END BLOCKS TO ACCOMODATE THE ATTACHMENT OF R-B 350 METAL BEAM RAIL AT THE LEADING AND TRAILING ENDS.

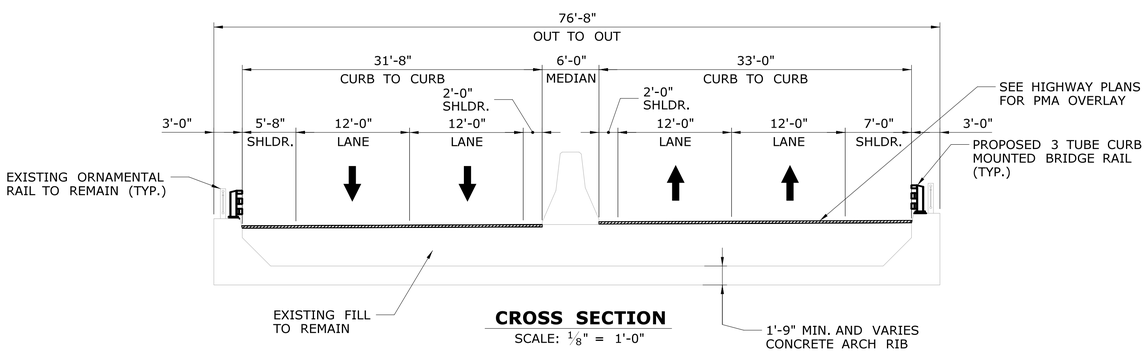

CROSS SECTION

SCALE: 1/8" = 1'-0"

INDEX OF DRAWINGS

DRAWING TITLE	DRAWING NO.
GENERAL PLAN, SECTION	S-9
END BLOCK MODIFICATIONS	S-10
3 TUBE CURB MOUNTED BRIDGE RAIL	S-11

INSPECTION OF FIELD WELDS

METHOD	UNIT	QUANTITY
ULTRASONIC	IN	0
MAGNETIC PARTICLE	FT	0

QUANTITIES

ITEM	UNIT	QUANTITY
REMOVAL OF HMA WEARING SURFACE	S.Y.	1100
SIMULATED STONE MASONRY	S.Y.	15
CLASS "F" CONCRETE	C.Y.	3
DEFORMED STEEL BARS - EPOXY COATED	LBS.	300
DRILLING AND GROUTING REINFORCING BARS	L.F.	43
3 TUBE CURB MOUNTED BRIDGE RAIL	L.F.	360
REMOVAL OF EXISTING METAL BRIDGE RAIL	L.F.	375

NOTICE TO BRIDGE INSPECTORS

THE DEPARTMENT'S BRIDGE SAFETY PROCEDURES REQUIRE THIS BRIDGE TO BE INSPECTED FOR, BUT NOT LIMITED TO, ALL APPROPRIATE COMPONENTS INDICATED IN THE GOVERNING MANUALS FOR BRIDGE INSPECTION. ATTENTION MUST BE GIVEN TO INSPECTING THE FOLLOWING SPECIAL COMPONENTS AND DETAILS. (THE LISTING OF COMPONENTS FOR SPECIFIC ATTENTION SHALL NOT BE CONSTRUED TO REDUCE THE IMPORTANCE OF INSPECTION OF ANY OTHER COMPONENT OF THE STRUCTURE). THE FREQUENCY OF INSPECTION OF THIS STRUCTURE SHALL BE IN ACCORDANCE WITH THE GOVERNING MANUALS FOR BRIDGE INSPECTION, UNLESS OTHERWISE DIRECTED BY THE MANAGER OF BRIDGE SAFETY AND EVALUATION.

COMPONENTS OR DETAILS	BRIDGE SHEET REFERENCE
NONE	NONE

CONCRETE DISTRIBUTION

SUPERSTRUCTURE	0 C.Y.
SUBSTRUCTURE	3 C.Y.
FOOTINGS	0 C.Y.
TOTAL	3 C.Y.

TRANSPORTATION DIMENSIONS AND WEIGHT

MEMBER	SHIPPING LENGTH	SHIPPING HEIGHT	SHIPPING WEIGHT
-	-	-	-

REV.	DATE	REVISION DESCRIPTION	SHEET NO.
-	-	-	-
-	-	-	-
-	-	-	-
-	-	-	-
-	-	-	-
-	-	-	-

THE INFORMATION, INCLUDING ESTIMATED QUANTITIES OF WORK, SHOWN ON THESE SHEETS IS BASED ON LIMITED INVESTIGATIONS BY THE STATE AND IS IN NO WAY WARRANTED TO INDICATE THE CONDITIONS OF ACTUAL QUANTITIES OF WORK WHICH WILL BE REQUIRED.

Plotted Date: 3/10/2014

DESIGNER/DRAFTER: D. SCHMALTZ
CHECKED BY: R. SALEH
SCALE AS NOTED

STATE OF CONNECTICUT
DEPARTMENT OF TRANSPORTATION

Filename: ...\SB_MSH_Br00243_104_164_GPE.dgn

SIGNATURE/ BLOCK:

PROJECT TITLE: INTERSTATE 95 RESURFACING AND SAFETY IMPROVEMENTS

TOWN: OLD LYME

DRAWING TITLE: BRIDGE NO. 00243 GENERAL PLAN, SECTION

PROJECT NO. 104-164
DRAWING NO. S-9
SHEET NO. 05.10

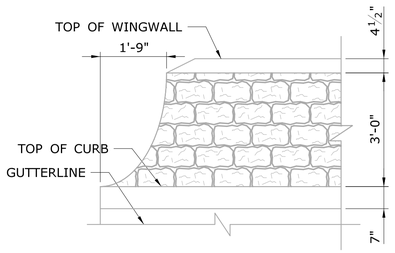

ELEVATION OF EXISTING WINGWALL END BLOCK

SCALE: 1/2" = 1'-0"

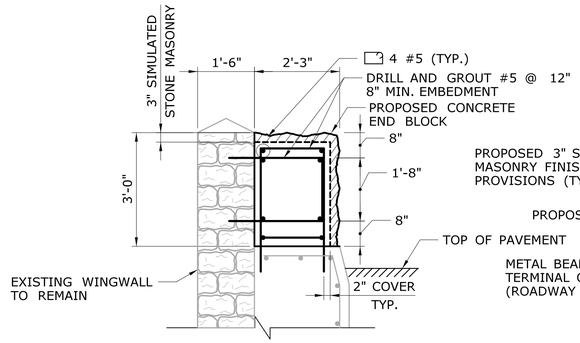

TYPICAL PROPOSED END BLOCK REINFORCEMENT

SCALE: 1/2" = 1'-0"

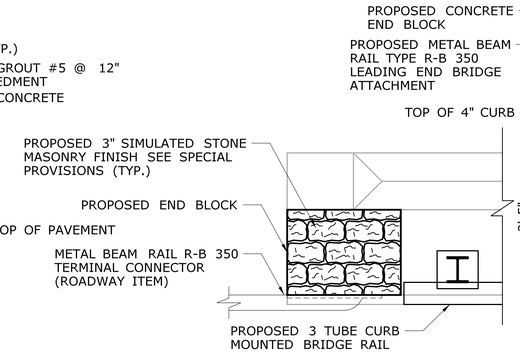

PLAN VIEW OF PROPOSED END BLOCK LEADING END

SCALE: 1/2" = 1'-0"

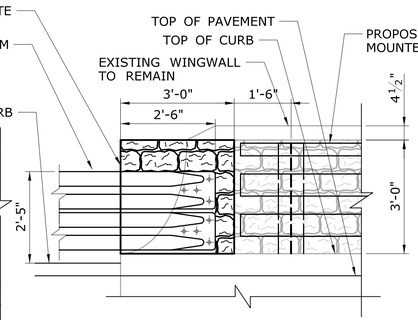

ELEVATION OF PROPOSED END BLOCK LEADING END

SCALE: 1/2" = 1'-0"

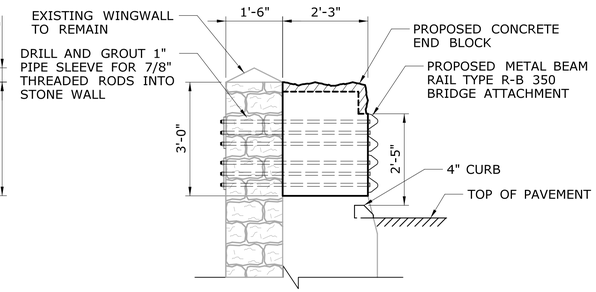

PROPOSED SECTION AT END BLOCK LEADING END

SCALE: 1/2" = 1'-0"

METAL BEAM RAIL LEADING END ATTACHMENT

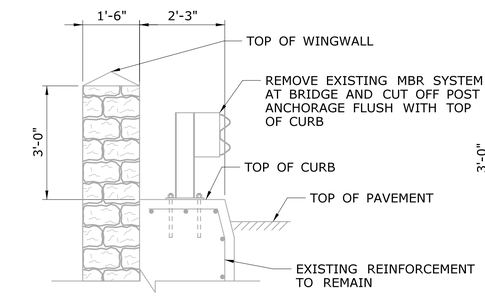

EXISTING SECTION AT WINGWALL CURB

SCALE: 1/2" = 1'-0"

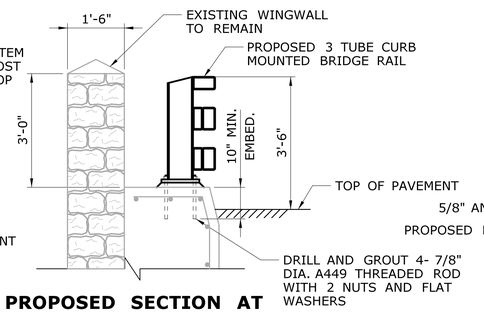

PROPOSED SECTION AT WINGWALL CURB

SCALE: 1/2" = 1'-0"

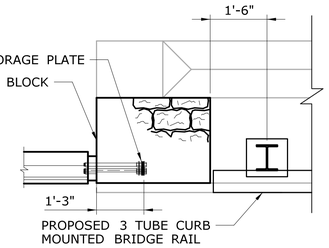

PLAN VIEW OF PROPOSED END BLOCK TRAILING END

SCALE: 1/2" = 1'-0"

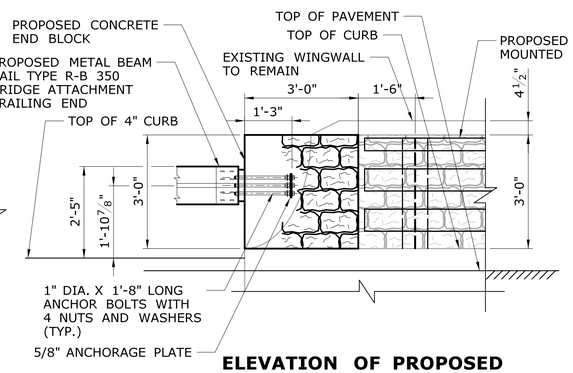

ELEVATION OF PROPOSED END BLOCK TRAILING END

SCALE: 1/2" = 1'-0"

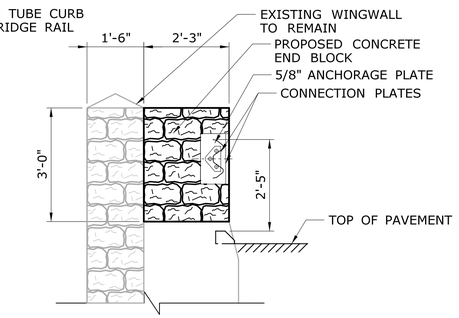

PROPOSED SECTION AT END BLOCK TRAILING END

SCALE: 1/2" = 1'-0"

METAL BEAM RAIL TRAILING END ATTACHMENT

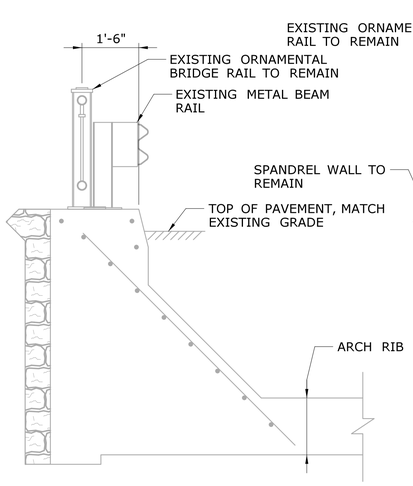

EXISTING CURB SECTION AT SPANDREL WALL

SCALE: 1/2" = 1'-0"

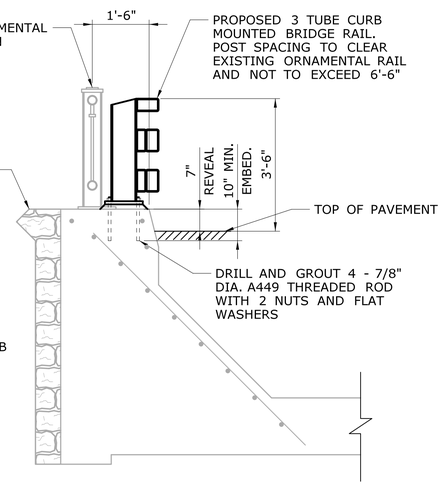

PROPOSED CURB SECTION AT SPANDREL WALL

SCALE: 1/2" = 1'-0"

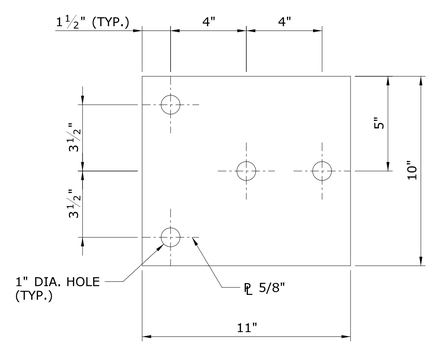

LEADING END ANCHOR PLATE DETAIL

SCALE: 3" = 1'-0"

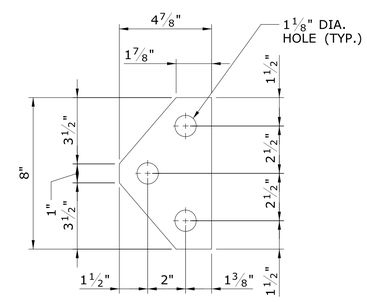

TRAILING END ANCHORAGE PLATE DETAIL

SCALE: 3" = 1'-0"

NOTES

1. PROPOSED RAIL POSTS SHALL BE PLACED TO AVOID CONFLICT WITH EXISTING ORNAMENTAL BRIDGE RAIL POSTS AND BASE PLATES.
2. CONCRETE FOR PROPOSED END BLOCKS SHALL BE PAID FOR UNDER THE ITEM "CLASS "F" CONCRETE".
2. ANCHOR BOLTS FOR THE EXISTING METAL BEAM RAIL SHALL BE ABANDONED. IF REQUIRED TO PLACE PROPOSED RAIL POST, THE EXISTING ANCHOR BOLTS SHALL BE CUT FLUSH WITH TOP OF CURB.
3. THE REMOVAL OF EXISTING METAL BEAM RAIL SHALL BE INCLUDED UNDER THE ITEM "REMOVAL OF EXISTING METAL BRIDGE RAIL".
4. ALL REINFORCEMENT SHALL CLEAR METAL BEAM RAIL SLEEVE INSERTS.
5. EPOXY GROUT PER MANUFACTURER RECOMMENDATIONS. EMBEDMENT DEPTH SHOWN IS PER KELKEN CONSTRUCTION SYSTEMS OR APPROVED EQUAL.
6. RAIL HEIGHT SHALL BE TAKEN FROM TOP OF SAFETY CURBING WHEN APPLICABLE. IF CURBING DOES NOT EXIST, THEN THE RAIL HEIGHT SHALL BE TAKEN FROM TOP OF PAVEMENT.
7. ALL EXPOSED FACES OF THE PROPOSED CONCRETE END BLOCK SHALL BE TREATED WITH A SIMULATED STONE MASONRY FINISH TO MATCH THE EXISTING STONE ARCHITECTURAL FINISH OF THE BRIDGE PARAPET AND WINGWALLS. THE AREAS WHERE METAL BEAM RAIL ATTACHES TO THE PROPOSED END BLOCK SHALL REMAIN SMOOTH.

REV.	DATE	REVISION DESCRIPTION	SHEET NO.
-	-	-	-
-	-	-	-
-	-	-	-
-	-	-	-
-	-	-	-
-	-	-	-

THE INFORMATION, INCLUDING ESTIMATED QUANTITIES OF WORK, SHOWN ON THESE SHEETS IS BASED ON LIMITED INVESTIGATIONS BY THE STATE AND IS IN NO WAY WARRANTED TO INDICATE THE CONDITIONS OF ACTUAL QUANTITIES OF WORK WHICH WILL BE REQUIRED.

Plotted Date: 3/11/2014

DESIGNER/DRAFTER: **D.A.S.**

CHECKED BY: **R. SALEH**

SCALE AS NOTED

STATE OF CONNECTICUT
DEPARTMENT OF TRANSPORTATION

Filename: ...\SB_MSH_Br00243_104_164_END.dgn

SIGNATURE/ BLOCK:

PROJECT TITLE:

INTERSTATE 95 RESURFACING AND SAFETY IMPROVEMENTS

TOWN: **OLD LYME & EAST LYME**

DRAWING TITLE: **BRIDGE 00243 END BLOCK MODIFICATIONS**

PROJECT NO. **104-164**

DRAWING NO. **S-10**

SHEET NO. **05.11**

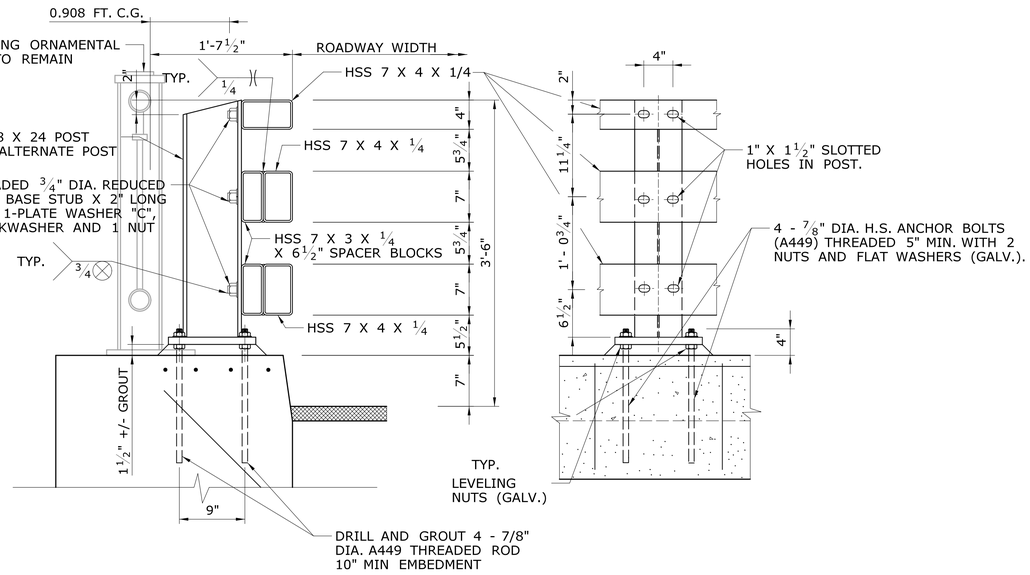

TYPICAL POST DETAILS

NO SCALE

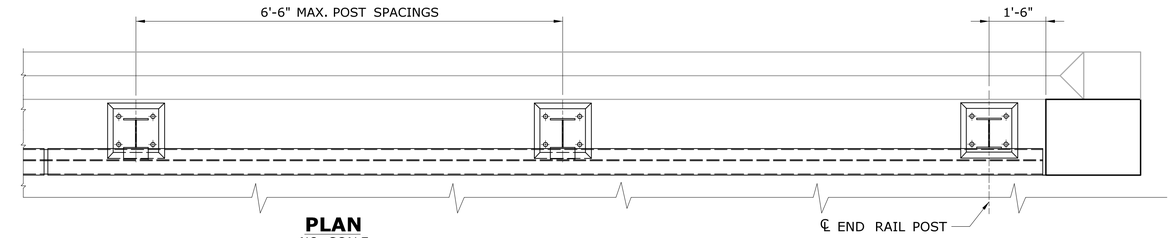

PLAN

NO SCALE

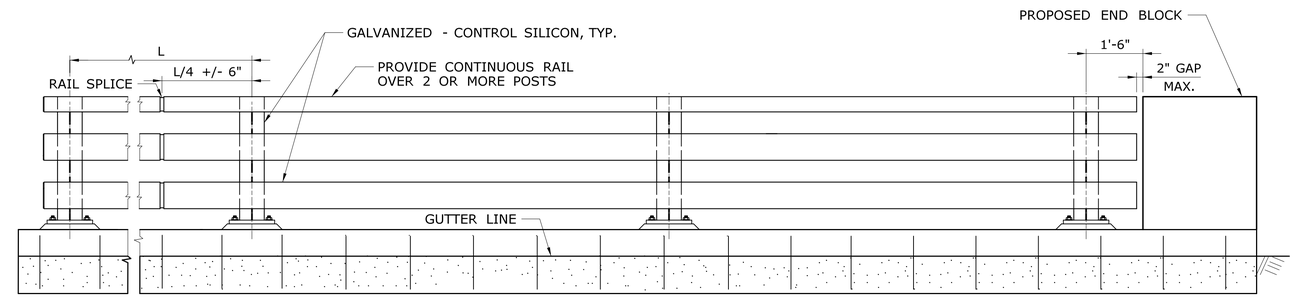

ELEVATION

NO SCALE

NOTE:

- SET TOP OF POST 3'-6" ABOVE FINISH GRADE.
- FOR CURB REINFORCEMENT, SEE DETAIL A ON SHEET S-18

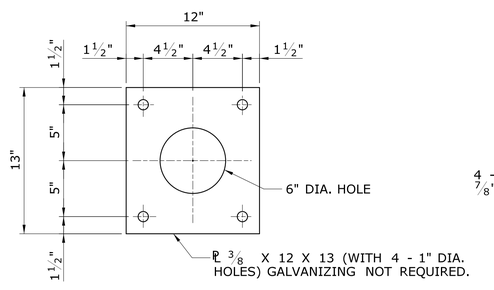

ANCHOR PLATE DETAILS

NO SCALE

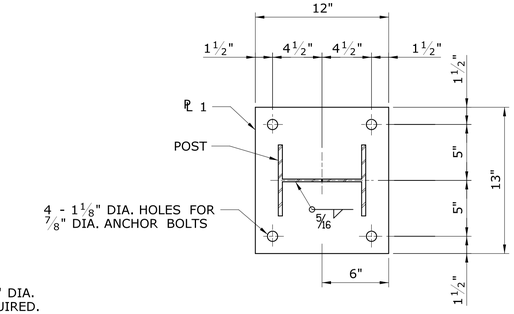

BASE PLATE DETAILS

NO SCALE

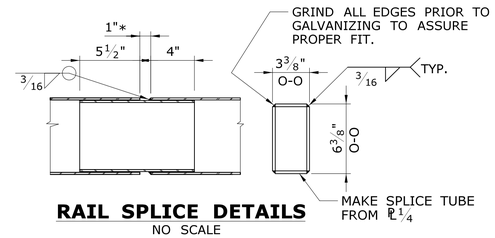

RAIL SPLICE DETAILS

NO SCALE

* NOTE:
1" GAP UNLESS NOTED OTHERWISE ON DETAIL PLANS. RAIL SPLICE WILL BE NEEDED IN PANEL THAT HAS A DECK EXPANSION JOINT.

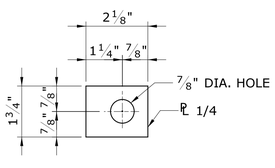

PLATE WASHER-"C"

NO SCALE

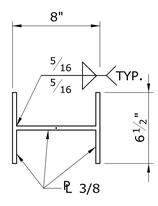

ALTERNATE POST

NO SCALE

DESIGN CAPACITIES
Pp (POST) = 41.2 KIPS
Mp (POST) = 62.7 KIP-FT
WGT. = 2.014 KIP/POST (INCLUDES CURB)
CENTER OF GRAVITY = 0.908 FT

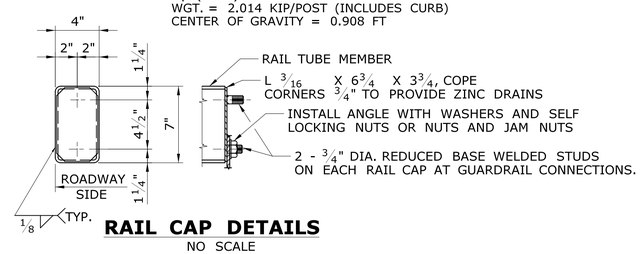

RAIL CAP DETAILS

NO SCALE

GENERAL NOTES

1. RAIL ELEMENTS FOR THE STRUCTURAL TUBING CONFORMING TO ASTM SPECIFICATION A500 GRADE B, A618 OR A501.
2. PROVIDE STEEL POSTS AND PLATES CONFORMING TO ASTM SPECIFICATION A500 GRADE B, A618, A501 OR UNLESS OTHERWISE NOTED.
3. FABRICATE RAILING TO THE HORIZONTAL AND VERTICAL ALIGNMENT OF THE STRUCTURE. INSTALL POSTS NORMAL TO GRADE.
4. PROVIDE REINFORCING STEEL CONFORMING TO ASTM 706 OR AASHTO M31 (ASTM A615) GRADE 60.
5. PAYMENT FOR THE RAILING WILL INCLUDE COMPENSATION FOR FURNISHING AND INSTALLING THE NECESSARY GUARDRAIL CONNECTION PLATES AND TERMINAL CONNECTORS.
6. ALL STRUCTURAL STEEL SHALL BE HOT-DIP GALVANIZED INCLUDING FASTENERS AFTER FABRICATION, EXCEPT AS NOTED. GALVANIZED - CONTROL SILICON MEANS SILICON CONTENT OF 0 TO 0.04% OR 0.15% TO 0.25%.

REV.	DATE	REVISION DESCRIPTION	SHEET NO.
-	-	-	-
-	-	-	-
-	-	-	-
-	-	-	-
-	-	-	-
-	-	-	-

THE INFORMATION, INCLUDING ESTIMATED QUANTITIES OF WORK, SHOWN ON THESE SHEETS IS BASED ON LIMITED INVESTIGATIONS BY THE STATE AND IS IN NO WAY WARRANTED TO INDICATE THE CONDITIONS OF ACTUAL QUANTITIES OF WORK WHICH WILL BE REQUIRED.

Plotted Date: 3/10/2014

DESIGNER/DRAFTER: D.A.S.
CHECKED BY: R. SALEH
SCALE AS NOTED

STATE OF CONNECTICUT
DEPARTMENT OF TRANSPORTATION

Filename: ...\SB_MSH_Br00243_104_164_RAI.dgn

SIGNATURE/ BLOCK:

PROJECT TITLE: INTERSTATE 95 RESURFACING AND SAFETY IMPROVEMENTS

TOWN: OLD LYME & EAST LYME

DRAWING TITLE: 3 TUBE CURB MOUNTED BRIDGE RAIL

PROJECT NO. 104-164
DRAWING NO. S-11
SHEET NO. 05.12

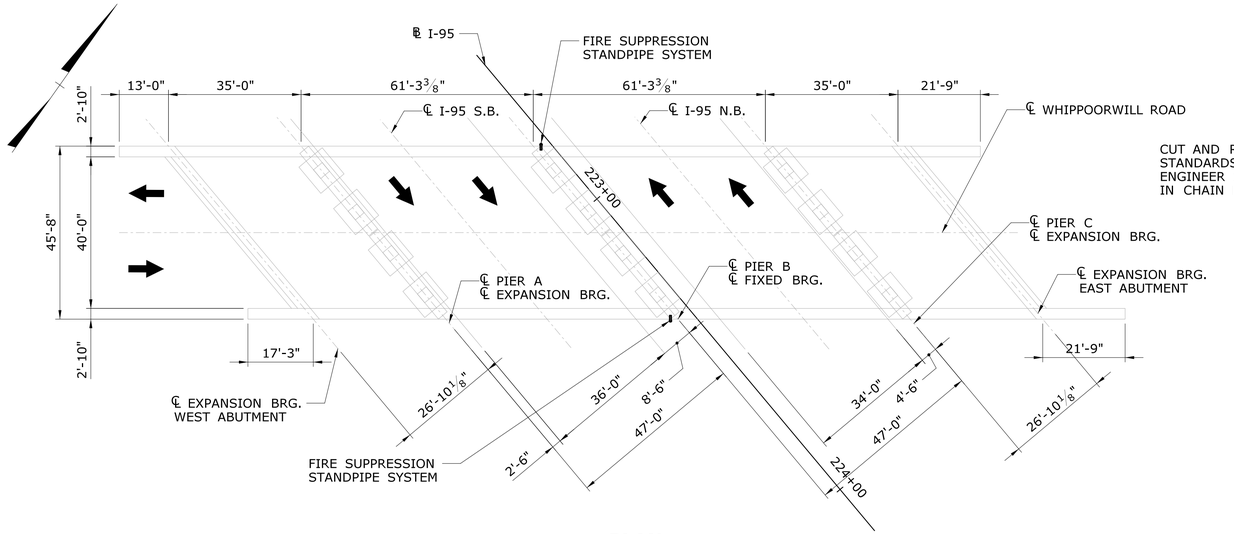

PLAN

SCALE: 1" = 20'

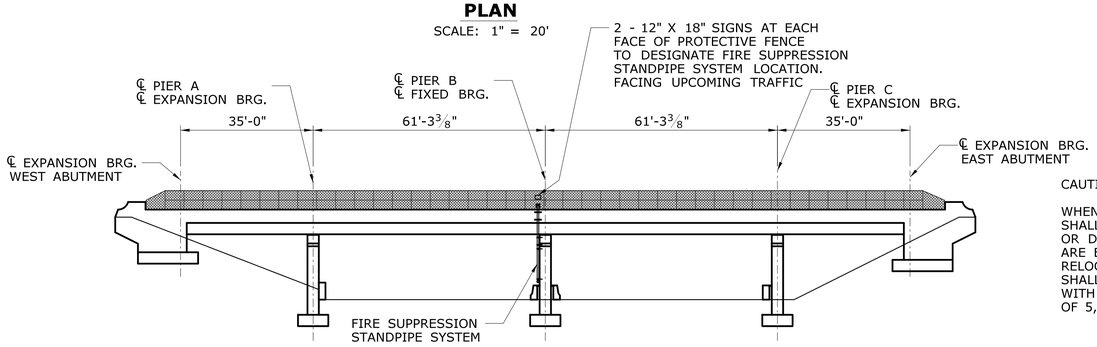

ELEVATION

SCALE: 1" = 20'

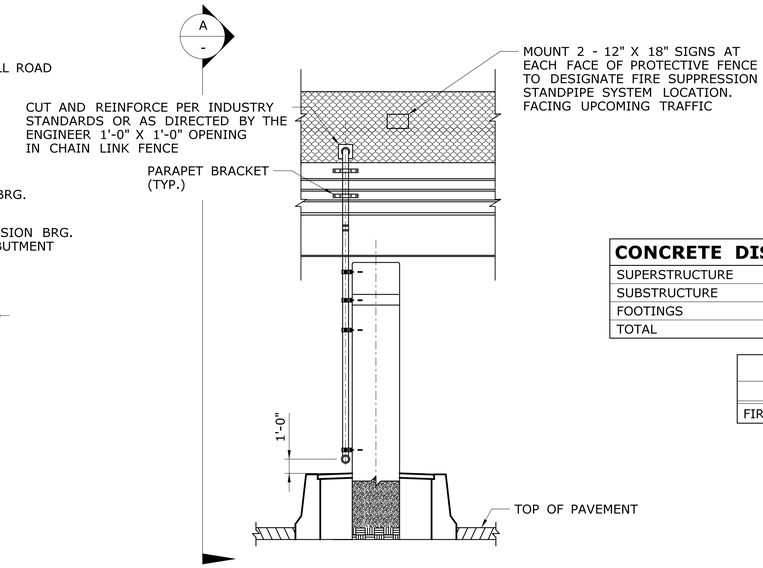

TYPICAL STANDPIPE ELEVATION AT PIER B LOOKING NORTH

SCALE: 3/16" = 1'-0"

CAUTION:

WHEN DRILLING INTO THE PIER CAP, CARE SHALL BE TAKEN NOT TO DRILL THROUGH OR DAMAGE REINFORCING BARS. IF BARS ARE ENCOUNTERED DURING DRILLING, RELOCATE THE HOLE. ABANDONED HOLES SHALL BE FILLED WITH NON SHRINK GROUT WITH A MINIMUM COMPRESSIVE STRENGTH OF 5,000 PSI.

NOTICE TO BRIDGE INSPECTORS

THE DEPARTMENT'S BRIDGE SAFETY PROCEDURES REQUIRE THIS BRIDGE TO BE INSPECTED FOR, BUT NOT LIMITED TO, ALL APPROPRIATE COMPONENTS INDICATED IN THE GOVERNING MANUALS FOR BRIDGE INSPECTION. ATTENTION MUST BE GIVEN TO INSPECTING THE FOLLOWING SPECIAL COMPONENTS AND DETAILS. (THE LISTING OF COMPONENTS FOR SPECIFIC ATTENTION SHALL NOT BE CONSTRUED TO REDUCE THE IMPORTANCE OF INSPECTION OF ANY OTHER COMPONENT OF THE STRUCTURE). THE FREQUENCY OF INSPECTION OF THIS STRUCTURE SHALL BE IN ACCORDANCE WITH THE GOVERNING MANUALS FOR BRIDGE INSPECTION, UNLESS OTHERWISE DIRECTED BY THE MANAGER OF BRIDGE SAFETY AND EVALUATION.

COMPONENTS OR DETAILS	BRIDGE SHEET REFERENCE
NONE	NONE

CONCRETE DISTRIBUTION

SUPERSTRUCTURE	0 C.Y.
SUBSTRUCTURE	0 C.Y.
FOOTINGS	0 C.Y.
TOTAL	0 C.Y.

INSPECTION OF FIELD WELDS

METHOD	UNIT	QUANTITY
ULTRASONIC	IN	0
MAGNETIC PARTICLE	FT	0

QUANTITIES

ITEM	UNIT	QUANTITY
FIRE SUPPRESSION STANDPIPE SYSTEM	E.A.	2

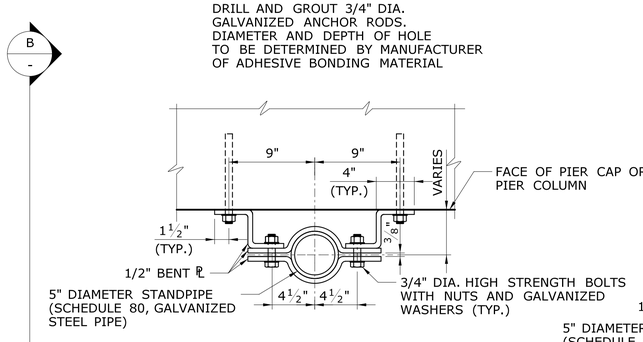

APPLIES AT VERTICAL FACE MOUNT

DETAIL A

SCALE: 1 1/2" = 1'-0"

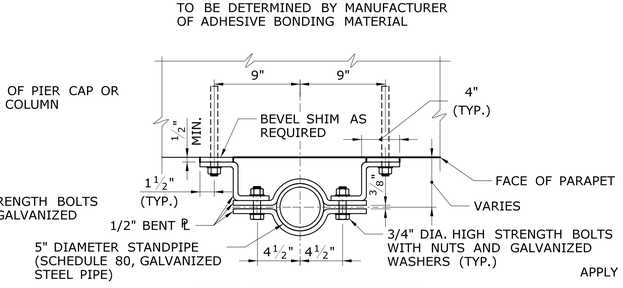

APPLIES AT SLOPED FACE MOUNT

DETAIL B

SCALE: 1 1/2" = 1'-0"

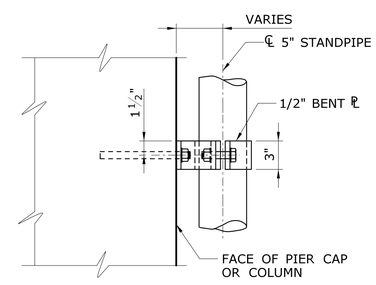

APPLY BEVEL SHIM AS REQUIRED AT SLOPED FACE MOUNT

SECTION B

SCALE: 1 1/2" = 1'-0"

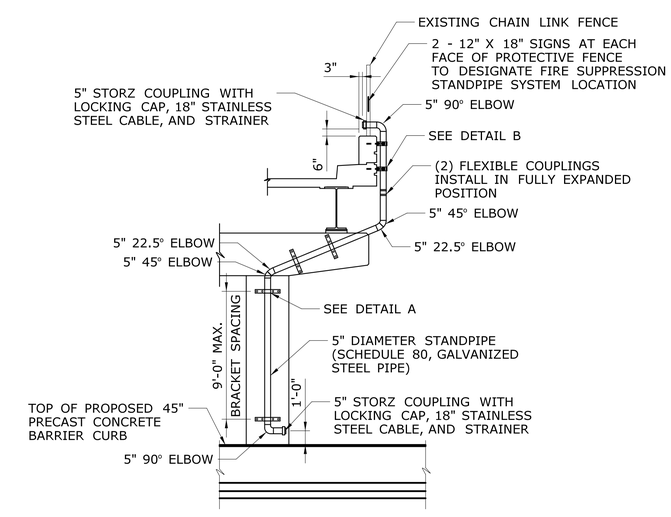

SECTION A AT PIER B

SCALE: 3/16" = 1'-0"

REV.	DATE	REVISION DESCRIPTION	SHEET NO.
-	-	-	-
-	-	-	-
-	-	-	-
-	-	-	-
-	-	-	-
-	-	-	-

THE INFORMATION, INCLUDING ESTIMATED QUANTITIES OF WORK, SHOWN ON THESE SHEETS IS BASED ON LIMITED INVESTIGATIONS BY THE STATE AND IS IN NO WAY WARRANTED TO INDICATE THE CONDITIONS OF ACTUAL QUANTITIES OF WORK WHICH WILL BE REQUIRED.

Plotted Date: 3/7/2014

DESIGNER/DRAFTER: D.A.S.

CHECKED BY: R. SALEH

SCALE AS NOTED

STATE OF CONNECTICUT
DEPARTMENT OF TRANSPORTATION

Filename: ...\SB_MSH_Br00244_104_164_FSS.dgn

SIGNATURE/ BLOCK:

PROJECT TITLE: INTERSTATE 95 RESURFACING AND SAFETY IMPROVEMENTS

TOWN: OLD LYME

DRAWING TITLE: BRIDGE NO. 00244 STANDPIPE SYSTEM

PROJECT NO. 104-164

DRAWING NO. S-12

SHEET NO. 05.13

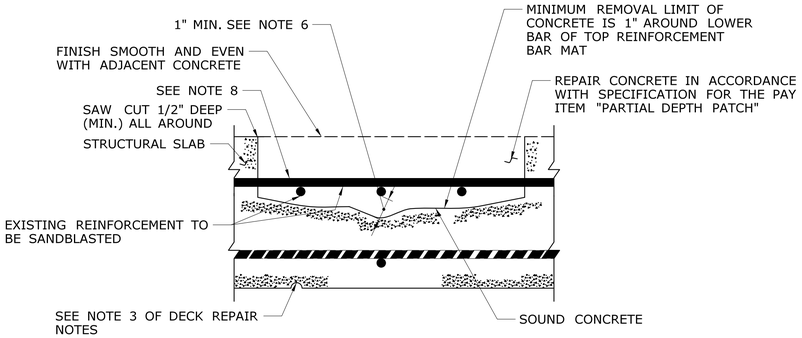

DETAIL 1
REINFORCING BAR EXPOSURE
BOTH BARS OF UPPER BAR MAT

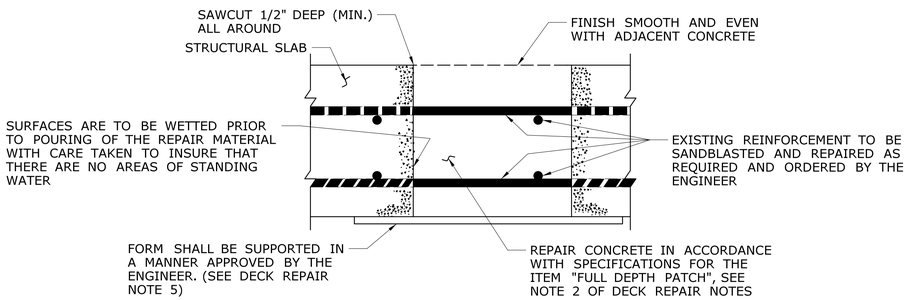

DETAIL 2
FULL DEPTH REPAIR PROCEDURE
LOCALIZED AREAS

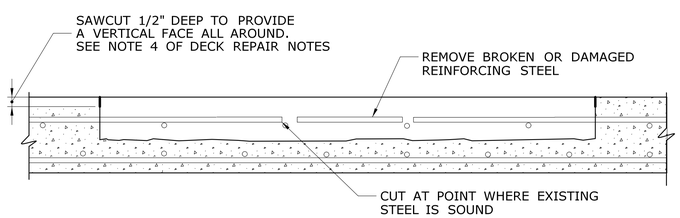

DETAIL 3
CONCRETE REMOVAL

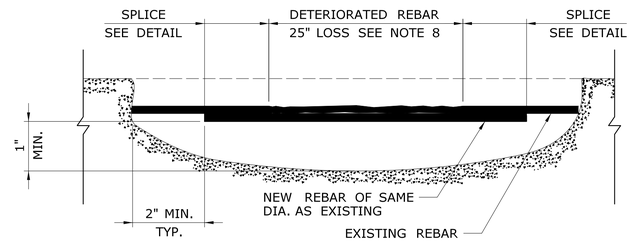

DETAIL 4
REINFORCEMENT REPAIR

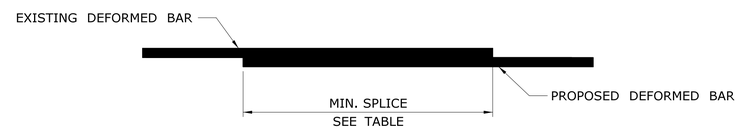

THE BARS SHALL BE WIRED TOGETHER FOR THE FULL LENGTH OF THE SPLICE. MINIMUM LAP SPLICE IS 15".

DETAIL 5
LAPPED, TIED SPLICE

LAP SPLICE LENGTHS

BAR SIZE	SPLICE LENGTH
#4	2'-0"
#5	2'-6"
#6	3'-0"

GENERAL NOTES

1. PATCH REPAIR WORK SHALL INCLUDE THE REMOVAL OF ALL DETERIORATED AREAS INCLUDING, SPALLED, HOLLOW SOUNDING, HONEYCOMBED AND MAP-CRACKED CONCRETE AND THE CLEANING OF EXPOSED REINFORCING BARS. IF APPLICABLE, TO THE SQUARED OFF LIMITS SHOWN. LOCATIONS AND MAGNITUDES OF PATCH REPAIRS WILL BE AS DELINEATED BY THE CONTRACTOR AND AS APPROVED OR DIRECTED BY THE ENGINEER.
2. AREAS TO BE REPAIRED SHOULD BE RECTANGULAR IN SHAPE. RE ENTRANT SHAPES AND SHAPES WITH INCLUDED ANGLES SHALL BE AVOIDED.
3. THE PERIPHERY OF THE AREAS TO BE REPAIRED SHALL BE SAW CUT TO A DEPTH OF ONE HALF INCH FOR ALL TYPES OF REPAIR. COST OF ONE HALF INCH DEEP SAW CUT TO BE INCLUDED IN THE CONTRACT BID PRICE FOR THE APPROPRIATE REPAIR ITEMS.
4. THE EDGES OF THE REPAIR AREA SHALL BE ON 1H:8V SLOPE TO PROVIDE A KEY FOR THE REPAIR MATERIAL. UPPER AREAS SHALL SLOPE EVENLY OUTWARD TO WITHIN ONE INCH OF THE FACE OF THE CONCRETE. WITHIN ONE INCH OF THE SURFACE, THE UPPER OUTLINE SHALL BE NORMAL (PERPENDICULAR) TO THE SURFACE.
5. THE DETERIORATED CONCRETE SHALL BE REMOVED FROM WITHIN THE REPAIR AREAS TO THE DEPTH SHOWN ON THE PLANS OR TO SOUND CONCRETE, WHICHEVER IS GREATER. THIS WILL REQUIRE THE REMOVAL OF ALL UNSOUND CONCRETE, AS WELL AS SOME SOUND CONCRETE. WHERE THE REINFORCING STEEL IS UNCOVERED. CARE SHALL BE TAKEN SO AS NOT TO DAMAGE THE STEEL OR ITS BOND TO THE SURROUNDING CONCRETE. MAXIMUM 15 LB. HAMMERS WITH CHISEL POINTS SHALL BE USED FOR CONCRETE REMOVAL.
6. IF, AFTER CONCRETE REMOVAL, THE REINFORCING STEEL HAS AT LEAST ONE HALF OF ITS SURFACE AREA EXPOSED OR LESS THAN ONE INCH ORIGINAL COVER, THE CONCRETE SHALL BE FURTHER REMOVED TO A DEPTH OF ONE INCH MINIMUM BELOW THE REINFORCING STEEL. THIS WILL REQUIRE THE REMOVAL OF SOUND CONCRETE.
7. ALL CONCRETE SURFACE AND ANY EXPOSED REINFORCING STEEL SHALL BE CLEANED BY SANDBLASTING PRIOR TO PATCHING. THE COST OF BLAST CLEANING SHALL BE INCLUDED IN THE REPAIR TYPE INDICATED"
8. EXISTING REINFORCING BARS WHICH HAVE LOST 25% OR MORE OF THEIR CROSS SECTIONAL AREA, ARE BROKEN, OR AS ORDERED BY THE ENGINEER, SHALL BE REPAIRED BY SPLICING IN NEW REINFORCING BARS OF THE SAME DIAMETER, AS SHOWN IN THE REINFORCING REPAIR DETAIL NO. 3, 4, AND 5. THE COST FOR FURNISHING AND INSTALLING REPLACEMENT REINFORCEMENT SHALL BE PAID FOR UNDER THE ITEMS "PARTIAL DEPTH PATCH" OR "FULL DEPTH PATCH (HIGH EARLY STRENGTH CONCRETE)".

DECK REPAIR NOTES

1. THE MINIMUM DEPTH OF REMOVAL SHALL BE SUCH THAT THE TOP MAT OF REINFORCEMENT IS COMPLETELY EXPOSED. IF A SURFACE SPALL EXISTS THAT MAY COMPROMISE THE INTEGRITY OF THE MEMBRANE WATERPROOFING, THEN THE CONTRACTOR SHALL REMOVE ENOUGH CONCRETE TO EXPOSE THE TOP MAT OF REINFORCEMENT BEFORE POURING NEW CONCRETE.
2. THE FULL DEPTH REPAIR PROCEDURE SHOWN IN DETAIL 2 SHOULD ONLY BE APPLICABLE IN THE EVENT OF PUNCH THROUGH DURING DECK REMOVAL.
3. ALL CONCRETE SURFACES SHALL BE THOROUGHLY WETTED PRIOR TO POURING OF THE REPAIR MATERIAL WITH CARE TAKEN TO INSURE THAT THERE ARE NO AREAS OF STANDING WATER. FOR POP-OUTS ON THE UNDERSIDE OF THE DECK, IF REBAR IS EXPOSED, THE REBAR SHOULD BE CLEANED BY SAND-BLASTING THEN COATED WITH AN EPOXY RESIN. IF NO REBAR IS EXPOSED, THEN NO ACTION IS REQUIRED TO BE TAKEN.
4. THE COST OF $\frac{1}{2}$" SAWCUT SHALL BE PAID FOR UNDER THE ITEMS "PARTIAL DEPTH PATCH" OR "FULL DEPTH PATCH (HIGH EARLY STRENGTH CONCRETE)", WHICHEVER IS APPLICABLE.
5. THE COST OF THE FORMWORK SHALL BE INCLUDED IN THE PRICE FOR THE ITEM "FULL DEPTH PATCH (HIGH EARLY STRENGTH CONCRETE)". ABSOLUTELY NO FORMWORK SHALL BE LEFT IN PLACE.

REV.	DATE	REVISION DESCRIPTION	SHEET NO.
-	-	-	-
-	-	-	-
-	-	-	-
-	-	-	-
-	-	-	-
-	-	-	-

THE INFORMATION, INCLUDING ESTIMATED QUANTITIES OF WORK, SHOWN ON THESE SHEETS IS BASED ON LIMITED INVESTIGATIONS BY THE STATE AND IS IN NO WAY WARRANTED TO INDICATE THE CONDITIONS OF ACTUAL QUANTITIES OF WORK WHICH WILL BE REQUIRED.

Plotted Date: 3/10/2014

DESIGNER/DRAFTER: **D. SCHMALTZ**
CHECKED BY: **R. SALEH**
NOT TO SCALE

STATE OF CONNECTICUT
DEPARTMENT OF TRANSPORTATION

Filename: ..\SB_MSH_104_164_DPD.dgn

SIGNATURE/ BLOCK:

PROJECT TITLE: **INTERSTATE 95 RESURFACING AND SAFETY IMPROVEMENTS**

TOWN: **OLD LYME**

DRAWING TITLE: **TYPICAL DECK PATCHING DETAILS**

PROJECT NO. **104-164**
DRAWING NO. **S-13**
SHEET NO. **05.14**

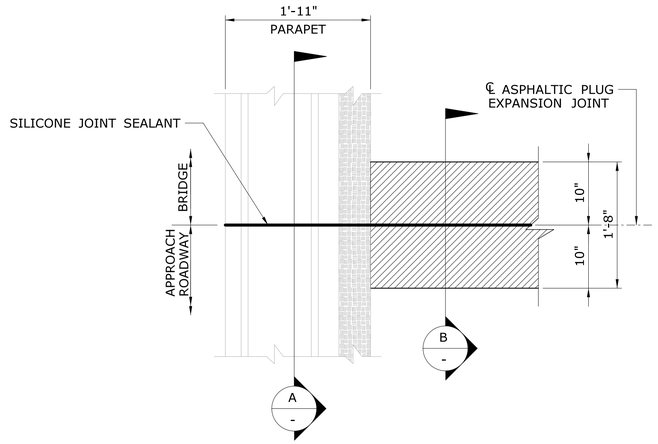

PLAN OF ASPHALTIC PLUG EXPANSION JOINT SYSTEM TREATMENT AT GUTTER LINE

SCALE: 1" = 1'-0"

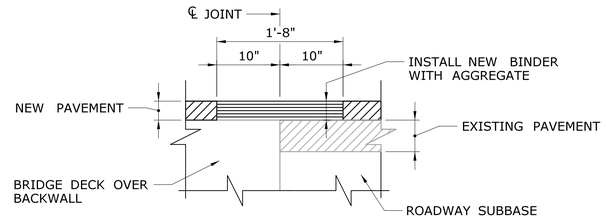

SECTION B

SCALE: 1" = 1'-0"

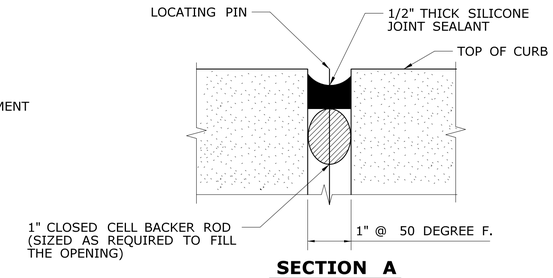

SECTION A

SCALE: NTS

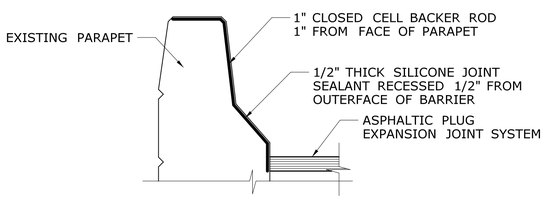

JOINT TREATMENT AT PARAPET

SCALE: 3/4" = 1'-0"

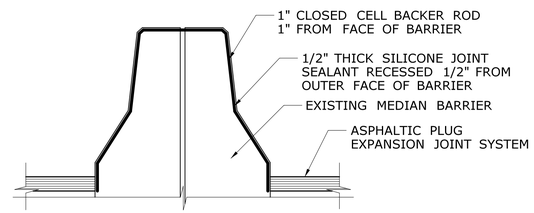

JOINT TREATMENT AT CONCRETE MEDIAN BARRIER

SCALE: 3/4" = 1'-0"

DESIGN DECK JOINT THERMAL MOVEMENT RANGE	BRIDGE SUPERSTRUCTURE SURFACE TEMPERATURE
0" TO 1"	45° F - 95° F
1 1/8"	45° F - 90° F
1 1/4"	45° F - 80° F
1 3/8"	45° F - 70° F
1 1/2"	45° F - 65° F

NOTES:

1. REMOVAL OF ALL EXISTING JOINT MATERIALS TO BE PAID FOR UNDER THE ITEM "APHALTIC PLUG EXPASNION JOINT SYSTEM".
2. PRIOR TO INSTALLING THE NEW BACKER ROD AND SILICONE JOINT SEALANT, REMOVE EXISTING JOINT MATERIAL, CLEAN JOINT SIDES BY SANDBLASTING. DUST SHALL BE REMOVED BY THE METHOD APPROVED BY THE ENGINEER. THIS WORK SHALL BE PAID FOR UNDER THE ITEM "ASPHALTIC PLUG EXPANSION JOINT SYSTEM".
3. ASPHALTIC PLUG EXPANSION JOINT REPLACEMENT DETAILS SHOWN ON THIS SHEET APPLIES TO BRIDGE NUMBERS 06032 AND 06173 ONLY.

REV.	DATE	REVISION DESCRIPTION	SHEET NO.
-	-	-	-
-	-	-	-
-	-	-	-
-	-	-	-
-	-	-	-
-	-	-	-

THE INFORMATION, INCLUDING ESTIMATED QUANTITIES OF WORK, SHOWN ON THESE SHEETS IS BASED ON LIMITED INVESTIGATIONS BY THE STATE AND IS IN NO WAY WARRANTED TO INDICATE THE CONDITIONS OF ACTUAL QUANTITIES OF WORK WHICH WILL BE REQUIRED.

Plotted Date: 3/11/2014

DESIGNER/DRAFTER: **D. SCHMALTZ**

CHECKED BY: **R. SALEH**

SCALE AS NOTED

STATE OF CONNECTICUT
DEPARTMENT OF TRANSPORTATION

Filename: ...\SB_MSH_104_164_PLUG.dgn

SIGNATURE/
BLOCK:

PROJECT TITLE:
INTERSTATE 95 RESURFACING AND SAFETY IMPROVEMENTS

TOWN: **OLD LYME**

DRAWING TITLE:
ASPHALTIC PLUG EXPANSION JOINT

PROJECT NO. **104-164**

DRAWING NO. **S-14**

SHEET NO. **05.15**